HOW TO USE THIS AUTOMATIC TRANSAXLE REPAIR MANUAL

0100T–01

GENERAL INFORMATION

1. GENERAL DESCRIPTION

(a) This manual is made in accordance with SAE J2008.

(b) Repair operations can be separated mainly in the following 3 processes:
1. Diagnosis
2. Removing and Installing, Replacing, Disassembling, Installing and Checking, Adjusting
3. Final Inspection

(c) This text explains the 1st process of ”Diagnosis” (placed in the ”Diagnostics” section) and the 2nd process, ”Removing & Installing, Replacing, Disassembling, Installing & Checking, Adjusting”, but the 3rd process of ”Final Inspection” are omitted.

(d) The following essential operations are not written down in the this manual, these operations, however, must be done in the practical situation.
(1) Operation with a jack and lift
(2) Cleaning of a removed part when necessary
(3) Visual check

2. INDEX

(a) An INDEX is provided on the first to page XX of each section to the guide you to the item to be repaired.

3. PREPARATION

(a) Use of special service tools (SST) and special service materials (SSM) may be required, depending on the repairing condition. Be sure to use SST and SSM when they are required and follow the working procedure properly. A list of SST and SSM is in the Preparation section in this manual.

4. REPAIR PROCEDURES

(a) Component drawing is placed as ”Component section.” It enables you to understand the fitting condition of the components.

(b) Illustrations of the parts catalog is placed as the component drawing. (In the illustration, parts code of the parts catalog is described.)

NOTICE:

The parts code described in this text is as of August, 2000. There is a case where the parts code or ten digits of the parts No. may change, so be sure to place an order using the parts catalog.

Example:

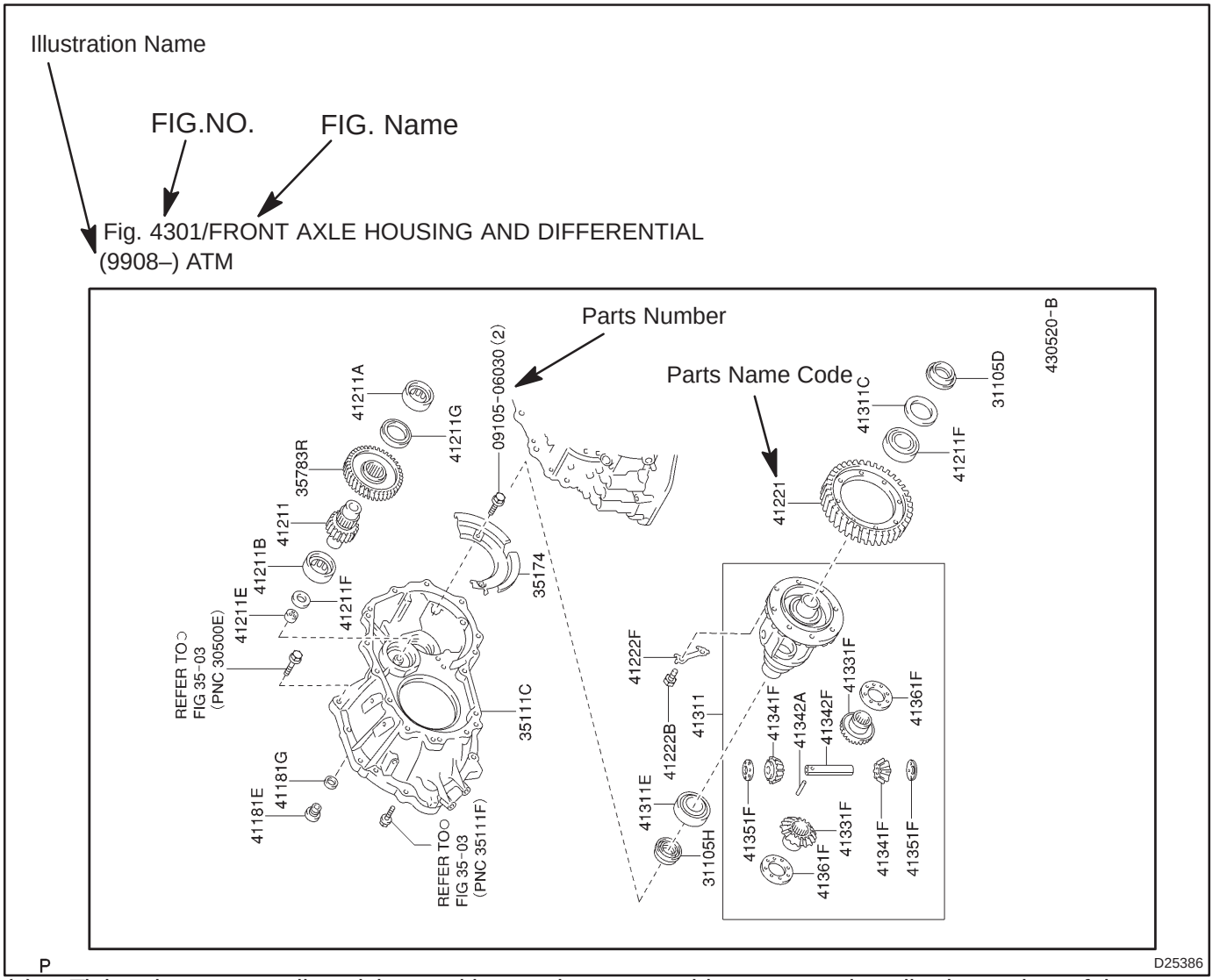

(c) Tightening torque, oil applying position, and non–reusable parts are described as points of the procedure.

NOTICE:

In case that the above items can be indicated only by an illustration, component drawing which describes the points is placed. In that case, all the information such as torque, oil, etc. are described in the illustration.

(d) Installing procedure of the operation items is performed in the reverse procedure of the removing and only the case with points is described.

(e) Only items with points are described in the procedure, and the operational portion and content are placed using an illustration. In the explanations, details of the operational method, standard value and notice are placed.

(f) There may be a case where the illustrations are used in common with similar models. Therefore there is a case where the details are different from one of the actual vehicle.

(g) The procedures are presented in a step–by–step format:
  (1) The illustration shows what to do and where to do it.
  (2) The task heading tells what to do.
  (3) The detailed text tells how to perform the task and gives other information such as specifications and warnings.

Example:

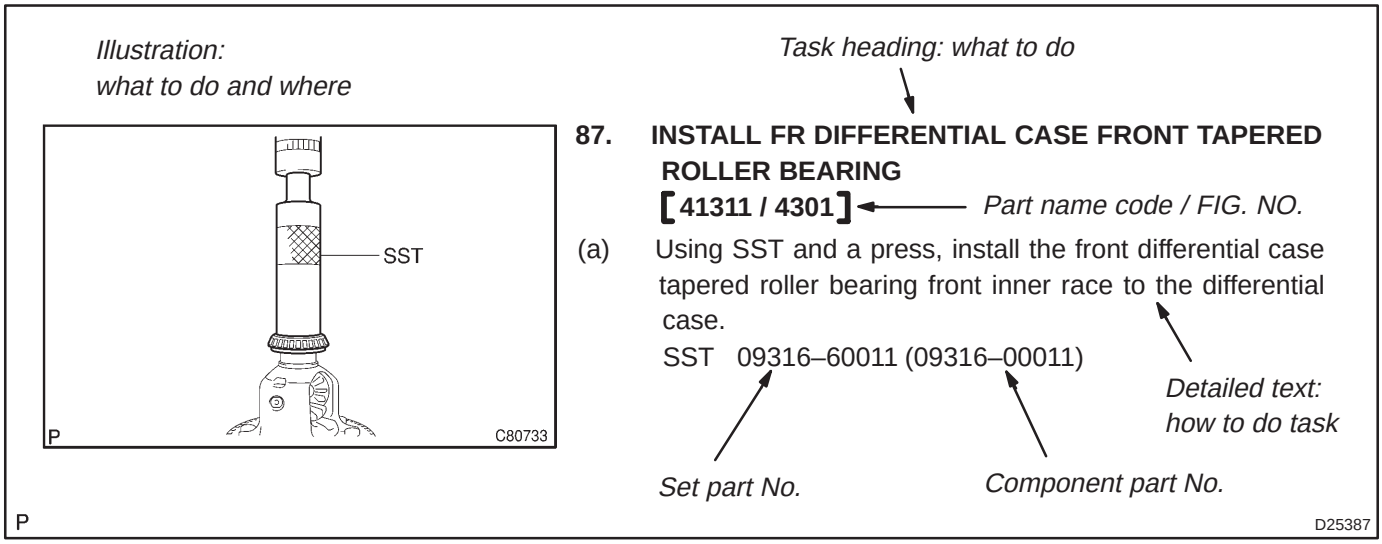

HINT:
This format provides an experienced technician with a FAST TRACK to the information needed. The upper case task heading can be read at a glance when necessary, and the text below it provides detailed information. Important specifications and warnings always stand out in bold type.

5. SERVICE SPECIFICATIONS

(a) Specifications are presented in bold type throughout the text where needed. You never have to leave the procedure to look up your specifications. They are also found in the Service Specifications section for a quick reference.

6. TERMS DEFINITION

CAUTION	Indicate the possibility of injury to you or other people.
NOTICE	Indicate the possibility of damage to the components being repaired.
HINT	Provide additional information to help you perform the repair efficiently.

7. SI UNIT

(a) The UNITS given in this manual are primarily expressed according to the SI UNIT (International System of Unit), and alternately expressed in the metric system and in the English System.
Example:
Torque: 30 N·m (310 kgf·cm, 22 ft·lbf)

REPAIR INSTRUCTION FOR AUTOMATIC TRANSAXLE REPAIR MANUAL

0100U–01

PRECAUTION

1. BASIC REPAIR HINT

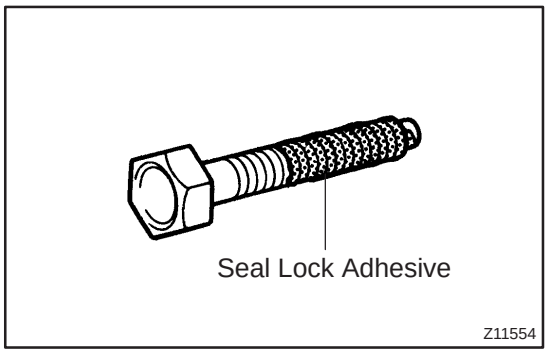

(a) PRECOATED PARTS

(1) Precoated parts are bolts, nuts, etc. that are coated with a seal lock adhesive at the factory.

(2) If a precoated part is retightened, loosened or caused to move in any way, it must be recoated with the specified adhesive.

(3) When reusing precoated parts, clean off the old adhesive and dry with compressed air. Then apply the specified seal lock adhesive to the bolt, nut or threads.

NOTICE:

Do the torque checking with the lower limit value of the torque tolerance.

(4) Depending on the seal lock agent to apply, there may be a case where it is necessary to leave it for a specified time until it hardens.

(b) GASKETS

When necessary, use a sealer on gaskets to prevent leaks.

(c) BOLTS, NUTS AND SCREWS

Carefully observe all specifications for bolt tightening torques. Always use a torque wrench.

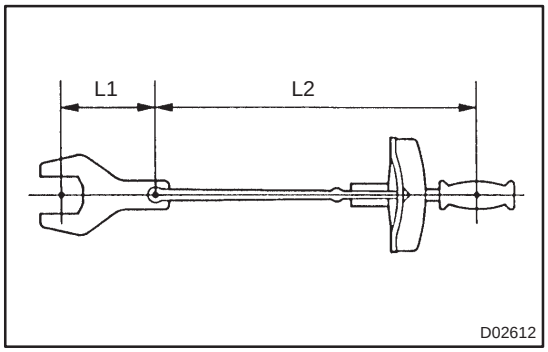

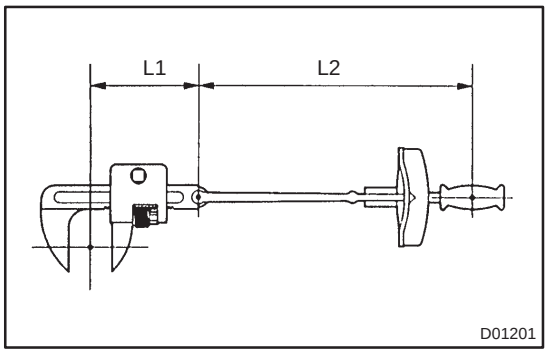

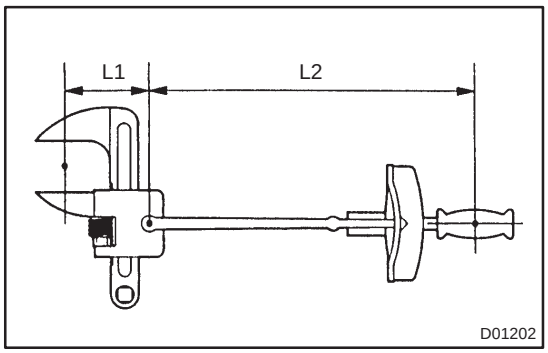

(d) TORQUE WHEN USING EXTENSION TOOL WITH TORQUE WRENCH

(1) In case of tightening by extending the entire length of the torque wrench combined with SST or tool, if you tighten until the reading of the torque wrench reached the specified torque value, the actual torque becomes excessive.

(2) In this text, only the specified torque is described. In case of using SST or extension tool, find the reading of the torque wrench by the formula.

(3) Formula T'=T x L2/(L1 + L2)

T'	Reading of torque wrench {N·m (kgf·cm, ft·lbf)}
T	Torque {N·m (kgf·cm, ft·lbf)}
L1	Length of SST or tool (cm)
L2	Length of torque wrench (cm)

TERMS FOR AUTOMATIC TRANSAXLE REPAIR MANUAL

0100V–01

ABBREVIATIONS USED IN THIS MANUAL

Abbreviations	Meaning
ASSY	Assembly
ATF	Automatic Transmission Fluid
B_2	2nd Brake
C_2	Direct Clutch
C_3	Reverse Clutch
FIPG	Formed In Place Gasket
O/D	Overdrive
SST	Special Service Tools
1ST	First
2ND	Second

0100W–01

GLOSSARY OF SAE AND TOYOTA(LEXUS) TERMS

This glossary lists all SAE–J1930 terms and abbreviations used in this manual in compliance with SAE recommendations, as well as their Toyota equivalents.

SAE ABBREVIATIONS	SAE TERMS	TOYOTA TERMS ( )—ABBREVIATIONS
A/C	Air Conditioning	Air Conditioner
ACL	Air Cleaner	Air Cleaner
AIR	Secondary Air Injection	Air Injection (AI)
AP	Accelerator Pedal	–
B+	Battery Positive Voltage	+B, Battery Voltage
BARO	Barometric Pressure	–
CAC	Charge Air Cooler	Inter cooler
CARB	Carburetor	Carburetor
CFI	Continuous Fuel Injection	–
CKP	Crankshaft Position	Crank Angle
CL	Closed Loop	Closed Loop
CMP	Camshaft position	Cam Angle
CPP	Clutch Pedal Position	–
CTOX	Continuous Trap Oxidizer	–
CTP	Closed Throttle Potion	–
DFI	Direct Fuel Injection (Diesel)	Direct Injection (DI)
DI	Distributor Ignition	–
DLC1 DLC2 DLC3	Data Link Connector 1 Data Link Connector 2 Data Link Connector 3	1: Check Connector 2: Total Diagnosis Communication Link (TDCL) 3: OBD II Diagnostic Connector
DTC	Diagnostic Trouble Code	Diagnostic Code
DTM	Diagnostic Test Mode	–
ECL	Engine Control Level	–
ECM	Engine Control Module	Engine ECU (Electronic Control Unit)
ECT	Engine Control Temperature	Coolant Temperature, Water Temperature (THW)
EEPROM	Electrically Erasable Programmable Read Only memory	Electrically Erasable Programmable Read Only memory (EEPROM), Erasable Programmable Read Only memory (EPROM)
EFE	Early Fuel Evaporation	Cold Mixture Heater (CMH), Heat Control Valve (HCV)
EGR	Exhaust Gas Recirculation	Exhaust Gas Recirculation (EGR)
EI	Electronic Ignition	Distributorless Ignition (DI)
EM	Engine Modification	Engine Modification (EM)
EPROM	Erasable Programmable Read Only Memory	Programmable Read Only Memory (PROM)
EVAP	Evaporative Emission	Evaporative Emission Control (EVAP)
FC	Fan Control	–
FEEPROM	Flash Electrically Erasable Programmable Read Only Memory	–
FEPROM	Flash Erasable Programmable Read Only Memory	–
FF	Flexible Fuel	–
FP	Fuel Pump	Fuel Pump
GEN	Generator	Alternator
GND	Ground	Ground (GND)
HO2S	Heated Oxygen Sensor	Heated Oxygen Sensor (HO2S)
IAC	Idol Air Control	Idol Speed Control (ISC)
IAT	Intake Air Temperature	Intake or Inlet Air Temperature
ICM	Ignition Control Module	–
IFI	Indirect Fuel Injection	Indirect Injection
IFS	Inertia Fuel–Shutoff	–

ISC	Idle Speed Control	–
KS	Knock Sensor	Knock Sensor
MAF	Mass Air Flow	Air Flow Meter
MAP	Manifold Absolute Pressure	Manifold Pressure Intake Vacuum
MC	Mixture Control	Electric Bleed Air Control Valve (EBCV) Mixture Control Valve (MCV) Electric Air Control Valve (EACV)
MDP	Manifold Differential Pressure	–
MFI	Multiport Fuel Injection	Electronic Fuel Injection (EFI)
MIL	Malfunction Indicator Lamp	Check Engine Light
MST	Manifold Surface temperature	–
MVZ	Manifold Vacuum Zone	–
NVRAM	Non–Volatile Random Access Memory	–
O2S	Oxygen Sensor	Oxygen Sensor, O_2 Sensor (O_{2S})
OBD	On–Board Diagnostic	On–Board Diagnostic (OBD)
OC	Oxidation Catalytic Converter	Oxidation Catalyst Converter (OC), CC_0
OP	Open Loop	Open Loop
PAIR	Pulsed Secondary Air Injection	Air Suction (AS)
PCM	Powertrain Control Module	–
PNP	Park/Neutral Position	–
PROM	Programmable Read Only Memory	–
PSP	Power Steering Pressure	–
PTOX	Periodic Trap Oxidizer	Diesel Particulate Filter (DPF) Diesel Particulate Trap (DPT)
RAM	Random Access Memory	Random Access Memory (RAM)
RM	Relay Module	–
ROM	Read Only Memory	Read Only Memory (ROM)
RPM	Engine Speed	Engine Speed
SC	Supercharger	Supercharger
SCB	Supercharger Bypass	–
SFI	Sequential Multiport Fuel Injection	Electronic Fuel Injection (EFI), Sequential Injection
SPL	Smoke Puff Limiter	–
SRI	Service Reminder Indicator	–
SRT	System Readiness Test	–
ST	Scan Tool	–
TB	Throttle Body	Throttle Body
TBI	Throttle Body Fuel Injection	Single Point Injection Central Fuel Injection (Ci)
TC	Turbocharger	Turbocharger
TCC	Torque Converter Clutch	Torque Converter
TCM	Transmission Control Module	Transmission ECU (Electronic Control Unit)
TP	Throttle Position	Throttle Position
TR	Transmission Range	–
TVV	Thermal Vacuum Valve	Bimetallic Vacuum Switching Valve (BVSV) Thermostatic Vacuum Switching Valve (TVSV)
TWC	Three–Way Catalytic Converter	Three–Way Catalytic (TWC) CC_{RO}
TWC+OC	Three–Way + Oxidation Catalytic Converter	$CC_R + CC_O$
VAF	Volume Air Flow	Air Flow Meter
VR	Voltage Regulator	Voltage Regulator
VSS	Vehicle Speed Sensor	Vehicle Speed Sensor (Read Switch Type)
WOT	Wide Open Throttle	Full Throttle

WU–OC	Warm Up Oxidation Catalytic Converter	–
WU–TWC	Warm Up Three–Way Catalytic Converter	Manifold Converter
3GR	Third Gear	–
4GR	Fourth Gear	–

AUTOMATIC TRANSMISSION / TRANS

02010–02

PREPARATION

SST

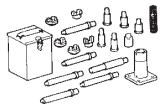	09221–25026	Piston Pin Remover & Replacer	FRONNT DIFFERENTIAL ASSY(U34#E Series)
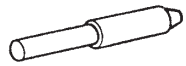	(09221–00071)	”Guide ””A”””	FRONNT DIFFERENTIAL ASSY(U34#E Series)
	09223–15030	Oil Seal & Bearing Replacer	AUTOMATIC TRANSAXLE ASSY(U34#E Series)
	09308–00010	Oil Seal Puller	AUTOMATIC TRANSAXLE ASSY(U34#E Series) OIL PUMP ASSY(U34#E Series)
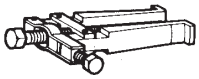	09308–10010	Oil Seal Puller	AUTOMATIC TRANSAXLE ASSY(U34#E Series)
	09320–89010	Transfer Clutch Spring Compressor	INPUT SHAFT ASSY(U34#E Series)
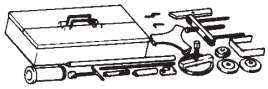	09350–36010	TOYOTA Automatic Transmission Tool Set	AUTOMATIC TRANSAXLE ASSY(U34#E Series) INTERMEDIATE SHAFT ASSY(U34#E Series)
	(09350–06110)	No.1 Measure Terminal	AUTOMATIC TRANSAXLE ASSY(U34#E Series) INTERMEDIATE SHAFT ASSY(U34#E Series)
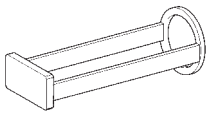	09387–00020	Direct Clutch Wrench	INTERMEDIATE SHAFT ASSY(U34#E Series)
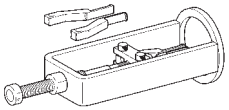	09387–00040	Bearing Puller Assembly	AUTOMATIC TRANSAXLE ASSY(U34#E Series) TRANSAXLE REAR COVER ASSY(U34#E Series)
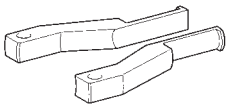	(09387–01020)	Claw No.2	TRANSAXLE REAR COVER ASSY(U34#E Series)
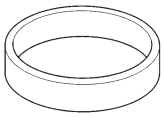	(09387–02010)	Oil Seal Replacer	AUTOMATIC TRANSAXLE ASSY(U34#E Series)

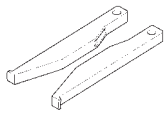	(09387–02020)	One–way Clutch Test Tool Set	AUTOMATIC TRANSAXLE ASSY(U34#E Series)
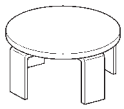	09387–00060	Second Brake Wrench	SECOND BRAKE PISTON ASSY(U34#E Series)
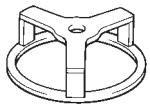	09387–00070	First & Reverse Brake Wrench	AUTOMATIC TRANSAXLE ASSY(U34#E Series) TRANSAXLE REAR COVER ASSY(U34#E Series)
	09387–00120	Counter Drive Gear Nut Wrench	AUTOMATIC TRANSAXLE ASSY(U34#E Series)
	09527–17011	Rear Axle Shaft Bearing Remover	AUTOMATIC TRANSAXLE ASSY(U34#E Series)
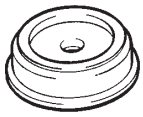	09554–14010	Differential Oil Seal Replacer	AUTOMATIC TRANSAXLE ASSY(U34#E Series)
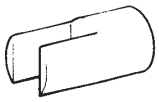	09564–32011	Differential Preload Adaptor	AUTOMATIC TRANSAXLE ASSY(U34#E Series)
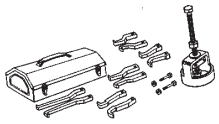	09612–65014	Steering Worm Bearing Puller	AUTOMATIC TRANSAXLE ASSY(U34#E Series)
	(09612–01010)	”Claw ””A”””	AUTOMATIC TRANSAXLE ASSY(U34#E Series)
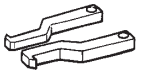	(09612–01040)	”Claw ””D”””	AUTOMATIC TRANSAXLE ASSY(U34#E Series)
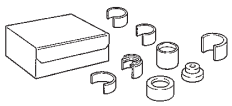	09726–27012	Front Suspension Arm Bushing Remover & Replacer	AUTOMATIC TRANSAXLE ASSY(U34#E Series)
	(09726–02041)	Replacer	AUTOMATIC TRANSAXLE ASSY(U34#E Series)
	09726–40010	Lower Control Shaft Bearing Replacer	AUTOMATIC TRANSAXLE ASSY(U34#E Series)

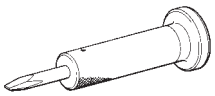	09930–00010	Drive Shaft Nut Chisel	AUTOMATIC TRANSAXLE ASSY(U34#E Series) FRONNT DIFFERENTIAL ASSY(U34#E Series)
	09950–40011	Puller B Set	AUTOMATIC TRANSAXLE ASSY(U34#E Series)
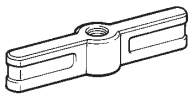	(09951–04010)	Hanger 150	AUTOMATIC TRANSAXLE ASSY(U34#E Series)
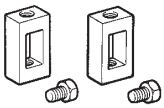	(09952–04010)	Slide Arm	AUTOMATIC TRANSAXLE ASSY(U34#E Series)
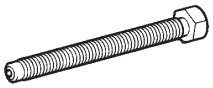	(09953–04020)	Center Bolt 150	AUTOMATIC TRANSAXLE ASSY(U34#E Series)
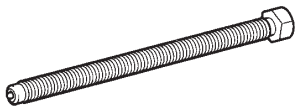	(09953–04030)	Center Bolt 200	AUTOMATIC TRANSAXLE ASSY(U34#E Series)
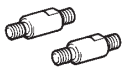	(09954–04010)	Arm 25	AUTOMATIC TRANSAXLE ASSY(U34#E Series)
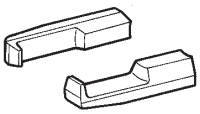	(09955–04061)	Claw No.6	AUTOMATIC TRANSAXLE ASSY(U34#E Series)
	(09957–04010)	Attachment	AUTOMATIC TRANSAXLE ASSY(U34#E Series)
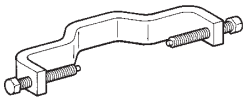	(09958–04011)	Holder	AUTOMATIC TRANSAXLE ASSY(U34#E Series)
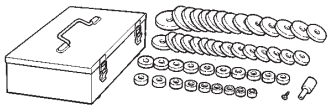	09950–60010	Replacer Set	AUTOMATIC TRANSAXLE ASSY(U34#E Series) OIL PUMP ASSY(U34#E Series) TRANSAXLE REAR COVER ASSY(U34#E Series) FRONNT DIFFERENTIAL ASSY(U34#E Series)
	(09951–00190)	Replacer 19	TRANSAXLE REAR COVER ASSY(U34#E Series)
	(09951–00220)	Replacer 22	AUTOMATIC TRANSAXLE ASSY(U34#E Series)

	(09951–00320) Replacer 32	AUTOMATIC TRANSAXLE ASSY(U34#E Series)
	(09951–00350) Replacer 35	FRONNT DIFFERENTIAL ASSY(U34#E Series)
	(09951–00390) Replacer 39	AUTOMATIC TRANSAXLE ASSY(U34#E Series)
	(09951–00400) Replacer 40	AUTOMATIC TRANSAXLE ASSY(U34#E Series)
	(09951–00430) Replacer 43	AUTOMATIC TRANSAXLE ASSY(U34#E Series)
	(09951–00460) Replacer 46	AUTOMATIC TRANSAXLE ASSY(U34#E Series)
	(09951–00480) Replacer 48	AUTOMATIC TRANSAXLE ASSY(U34#E Series)
	(09951–00530) Replacer 53	AUTOMATIC TRANSAXLE ASSY(U34#E Series)
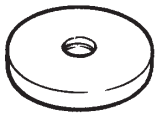	(09951–00550) Replacer 55	AUTOMATIC TRANSAXLE ASSY(U34#E Series) OIL PUMP ASSY(U34#E Series)
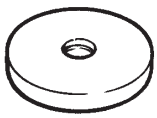	(09951–00610) Replacer 61	AUTOMATIC TRANSAXLE ASSY(U34#E Series)
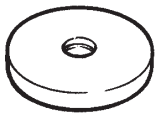	(09951–00650) Replacer 65	AUTOMATIC TRANSAXLE ASSY(U34#E Series)
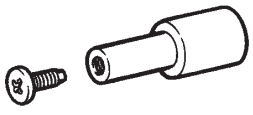	(09952–06010) Adapter	AUTOMATIC TRANSAXLE ASSY(U34#E Series) TRANSAXLE REAR COVER ASSY(U34#E Series)
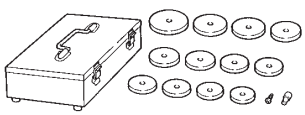	09950–60020 Replacer Set No.2	AUTOMATIC TRANSAXLE ASSY(U34#E Series)

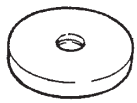	(09951–00680) Replacer 68	AUTOMATIC TRANSAXLE ASSY(U34#E Series)
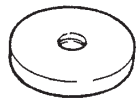	(09951–00720) Replacer 72	AUTOMATIC TRANSAXLE ASSY(U34#E Series)
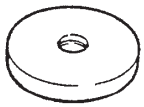	(09951–00790) Replacer 79	AUTOMATIC TRANSAXLE ASSY(U34#E Series)
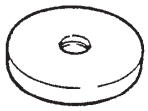	(09951–00890) Replacer 89	AUTOMATIC TRANSAXLE ASSY(U34#E Series)
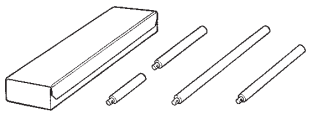	09950–70010 Handle Set	AUTOMATIC TRANSAXLE ASSY(U34#E Series) OIL PUMP ASSY(U34#E Series) SECOND BRAKE PISTON ASSY(U34#E Series) TRANSAXLE REAR COVER ASSY(U34#E Series) FRONNT DIFFERENTIAL ASSY(U34#E Series)
	(09951–07100) Handle 100	AUTOMATIC TRANSAXLE ASSY(U34#E Series) OIL PUMP ASSY(U34#E Series) SECOND BRAKE PISTON ASSY(U34#E Series) TRANSAXLE REAR COVER ASSY(U34#E Series)
	(09951–07150) Handle 150	AUTOMATIC TRANSAXLE ASSY(U34#E Series) FRONNT DIFFERENTIAL ASSY(U34#E Series)
	(09951–07200) Handle 200	AUTOMATIC TRANSAXLE ASSY(U34#E Series)

Recomended Tools

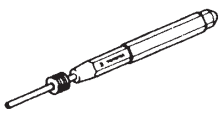	09031–00030 Pin Punch .	AUTOMATIC TRANSAXLE ASSY(U34#E Series) FRONNT DIFFERENTIAL ASSY(U34#E Series)
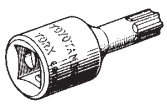	09042–00010 Torx Socket T30	OIL PUMP ASSY(U34#E Series)
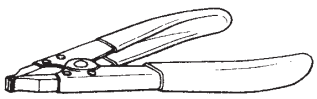	09905–00012 Snap Ring No.1 Expander .	INPUT SHAFT ASSY(U34#E Series) INTERMEDIATE SHAFT ASSY(U34#E Series)

Equipment

Dial indicator with magnetic base	
Feeler gauge	
Vernier calipers	
Torque wrench	
Plastic hammer	
Straight edge	

Lubricant

Automatic transaxle fluid Dry fill Drain and refill	 6.85 liters (7.24 US qts, 6.03 lmp. qts) 2.9 liters (3.1 US qts, 2.6 lmp. qts)	 ATF TYPE T–IV equivalent

SSM (Special Service Materials)

08826–00090	”Seal Packing 1281,” THREE BOND 1281 or equivalent (FIPG)	
08833–00080	Adhesive 1344 THREE BOND 1344 LOCTITE 242 or equivalent	

AUTOMATIC TRANSMISSION / TRANSAXLE

03012–01

SERVICE DATA

OIL PUMP		
Body clearance	STD	0.10 – 0.15 mm (0.0039 – 0.0059 in.)
	MAX	0.15 mm (0.0059 in.)
Tip clearance	STD	0.07 – 0.15 mm (0.0028 – 0.0059 in.)
	Max	0.15 mm (0.0059 in.)
Side clearance	STD	0.02 – 0.05 mm (0.0008 – 0.0020 in.)
	Max	0.05 mm (0.0020 in.)
Drive gear thickness	Mark	
	1	9.44 – 9.45 (0.3709 –0.3713)
	2	9.45 – 9.46 (0.3713 – 0.3717)
	3	9.46 – 9.47 (0.3717 – 0.3721)
	4	9.47 – 9.48 (0.3721 – 0.3725)
	5	9.48 – 9.49 (033725 – 0.3729)
Driven gear thickness	Mark	
	1	9.44 – 9.45 (0.3709 –0.3713)
	2	9.45 – 9.46 (0.3713 – 0.3717)
	3	9.46 – 9.47 (0.3717 – 0.3721)
	4	9.47 – 9.48 (0.3721 – 0.3725)
	5	9.48 – 9.49 (033725 – 0.3729)
Pump body bushing inside diameter	STD	38.113 – 38.138 mm (1.50050 – 1.50149 in.)
	Max	38.138 mm (1.50149 in.)
Oil seal in depth		0 ± 0.5 mm (0 ± 0.020 in.)
Stator shaft bushing inside diameter	STD	21.500 – 21.526 mm (0.84646 – 0.84748 in.)
	Max	21.526 mm (0.84748 in.)

FORWARD CLUTCH		
Pack clearance		1.406 – 1.806 mm (0.0553 – 0.0711 in.)
Piston return spring free length		21.69 mm (0.8540 in.)
Flange thickness	Mark	
	–	3.00 mm (0.1181 in.)
	1	3.20 mm (0.1260 in.)
	2	3.40 mm (0.1339 in.)
	3	3.60 mm (0.1417 in.)

DIRECT AND REVERSE CLUTCH		
Pack clearance	Direct clutch	0.62 – 1.02 mm (0.0244 – 0.0402 in.)
	Reverse clutch	0.86 – 1.26 mm (0.0339 – 0.0496 in.)
Piston return spring free length (Direct clutch)		32.9 mm (1.2953 in.)
Flange thickness (Direct clutch)	Mark	
	–	3.0 mm (0.118 in.)
	1	3.2 mm (0.126 in.)
	2	3.4 mm (0.134 in.)
	3	3.6 mm (0.142 in.)
Flange thickness (Reverse clutch)	Mark	
	–	3.0 mm (0.118 in.)
	1	3.2 mm (0.126 in.)
	2	3.4 mm (0.134 in.)
	3	3.6 mm (0.142 in.)

1ST AND REVERSE BRAKE		
Pack clearance		0.806 – 1.206 mm (0.0317 – 0.0475 in.)

Piston return spring free length		13.96 mm (0.5496 in.)
Flange thickness	Mark	
	–	3.4 mm (0.134 in.)
	1	3.6 mm (0.142 in.)
	2	3.8 mm (0.150 in.)
	3	4.0 mm (0.157 in.)

2ND COAST AND O/D BRAKE		
Pack clearance (O/D brake)		2.091 – 2.491 mm (0.0823 – 0.0981 in.)
Piston return spring free length (O/D brake)		17.88 mm (0.7039 in.)
Flange thickness	Mark	
	4	4.0 mm (0.1575 in.)
	5	4.2 mm (0.1654 in.)
	6	4.4 mm (0.1732 in.)
	7	4.6 mm (0.1811 in.)

2ND BRAKE		
Pack clearance		0.847 – 1.247 mm (0.0333 – 0.0491 in.)
Piston return spring free length		14.65 mm (0.5768 in.)
Flange thickness	Mark	
	–	3.0 mm (0.118 in.)
	1	3.2 mm (0.126 in.)
	2	3.4 mm (0.134 in.)
	3	3.6 mm (0.142 in.)

MANUAL VALVE LEVER SHAFT	
Manual valve lever shaft oil seal in depth	0 ± 0.5 mm (0 ± 0.020 in.)

INTERMEDIATE SHAFT	
Intermediate shaft clearance	0.204 – 0.966 mm (0.008 – 0.038 in.)

INPUT SHAFT	
End play	0.37 – 1.29 mm (0.0146 – 0.0508 in.)

ACCUMULATOR		
Spring	Free length/Outer diameter	Color
B_2	66.90 mm (2.6339 in.) / 15.50 mm (0.6102 in.)	Green
C_2	66.90 mm (2.6339 in.) / 17.20 mm (0.6772 in.)	–
C_3	80.20 mm (3.1575 in.) / 18.70 mm (0.7362 in.)	–

TRANSAXLE REAR COVER ASSY	
Needle roller bearing clearance	25.2 mm (0.992 in.)

TRANSMISSION VALVE BODY ASSY		
Valve body assy installation bolt length	A	32 mm (1.26 in.)
	B	22 mm (0.87 in.)
	C	55 mm (2.17 in.)
	D	45 mm (1.77 in.)
Detente spring installation bolt length	A	14 m m (0.55 in.)
	B	45 mm (1.77 in.)

COUNTER DRIVE GEAR	
Rotating torque	0.20 – 0.49 N·m (2 – 5 kgf·cm, 2 – 4 in.·lbf)

DIFFERENTIAL	
Differential drive pinion plug clearance	2.5 – 2.6 mm (0.0984 – 0.1023 in.)

Side gear backlash		0.05 – 0.20 mm (0.0020 – 0.0079 in.)
Thrust washer thickness	Mark	
	–	0.95 mm (0.0374 in.)
	–	1.00 mm (0.0394 in.)
	–	1.05 mm (0.0413 in.)
	–	1.10 mm (0.0433 in.)
	–	1.15 mm (0.0453 in.)
	–	1.20 mm (0.0472 in.)
Preload (at starting)		
New bearing		0.98 – 1.57 N·m (10.0 – 16.0 kgf·cm, 8.7 – 13.9 in.·lbf)
Used bearing		0.49 – 0.78 N·m (5.0 – 8.0 kgf·cm, 4.3 – 6.9 in.·lbf)
Shim thickness	Mark	
	01	1.90 mm (0.0748 in.)
	02	1.95 mm (0.0768 in.)
	03	2.00 mm (0.0787 in.)
	04	2.05 mm (0.0807 in.)
	05	2.10 mm (0.0827 in.)
	06	2.15 mm (0.0846 in.)
	07	2.20 mm (0.0866 in.)
	08	2.25 mm (0.0885 in.)
	09	2.30 mm (0.0906 in.)
	10	2.35 mm (0.0925 in.)
	11	2.40 mm (0.0945 in.)
	12	2.45 mm (0.0965 in.)
	13	2.50 mm (0.0984 in.)
	14	2.55 mm (0.1004 in.)
	15	2.60 mm (0.1024 in.)
	16	2.65 mm (0.1043 in.)
	17	2.70 mm (0.1063 in.)
	18	2.75 mm (0.1082 in.)
	19	2.80 mm (0.1102 in.)
Transaxle case side oil seal drive in depth		2 ± 0.5 mm (0.079 ± 0.020 in.)
Front transaxle case side oil seal drive in depth		5.9 ± 0.5 mm (0.232 ± 0.020 in.)

03013–01

TORQUE SPECIFICATION

Part Tightened		N·m	kgf·cm	ft·lbf
Parking lock pawl bracket x Transaxle case		20	200	14
Counter drive gear nut x Transaxle case		280	2,855	207
Transaxle rear cover assy x Transaxle case		24.5	250	18
Oil pump assy x Transaxle case		22	220	16
Bearing lock plate x Transaxle case		11	110	8
Transaxle housing oil separator x Transaxle case		9.8	100	7
Transaxle housing x Transaxle case	Bolt A	29	300	21
	Bolt B	22	220	16
Transmission wire x Transaxle case		5.4	55	48 in.·lbf
Transmission valve body assy x Transaxle case		11	110	8
Valve body oil strainer assy x Transaxle case		11	110	8
Automatic transaxle oil pan sub–assy x Transaxle case		7.8	80	71 in.·lbf
Transaxle case No. 1 plug x Transaxle		7.4	75	65 in.·lbf
Oil cooler tube union (Inlet oil cooler union) x Transaxle		27	275	20
Oil cooler tube union (Outlet oil cooler union) x Transaxle		27	275	20
Transmission revolution sensor x Transaxle		5.4	55	48 in.·lbf
Neutral start switch x Nut		6.9	70	61 in.·lbf
Neutral start switch x Transaxle		5.4	55	48 in.·lbf
Neutral start switch x Control shaft lever		13	130	10
Stator shaft assy x Oil pump body		9.8	100	87 in.·lbf
Transaxle rear cover plug x Transaxle rear cover		7.4	75	65 in.·lbf
Transmission 3 way solenoid assy x Transmission valve body		11	110	8
Transmission 3 way solenoid assy No. 2 x Transmission valve body		11	110	8
Lock up control solenoid assy x Transmission valve body		11	110	8
Transmission 3 way solenoid assy No. 3 x Transmission valve body		11	110	8
Line pressure control solenoid assy x Transmission valve body		11	110	8
TRANSMISSION VALVE BODY ASSY (U34#E Series)–OVERHAUL–TIGHTEN BOLT		11	110	8
Valve body assy x Transaxle case	8 mm bolt	6.6	67	58 in.·lbf
	10 mm bolt	11	110	8
Differential ring gear x Differential case		88	900	65

AUTOMATIC TRANSAXLE ASSY (U34#E Series)

4002G–01

OVERHAUL

1. REMOVE SPEEDOMETER (ATM) SENSOR
[83181E / 3505]

2. REMOVE SPEEDOMETER DRIVEN (ATM) GEAR SUB–ASSY
[33403G / 3505]

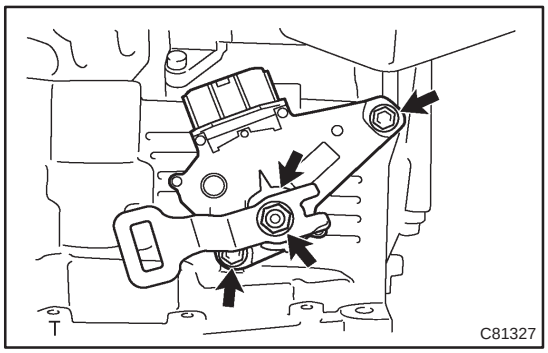

3. REMOVE NEUTRAL START SWITCH ASSY
[84540G / 3513]

(a) Remove the nut, washer and control lever.
(b) Using a screwdriver, unstake the lock nut and remove the lock washer and lock nut.
(c) Remove the 2 bolts and pull out the neutral position switch.

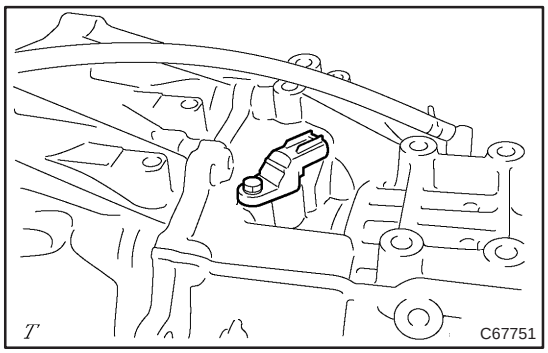

4. REMOVE TRANSMISSION REVOLUTION SENSOR
[89413E / 3512]

(a) Remove the bolt and transaxle revolution sensor.

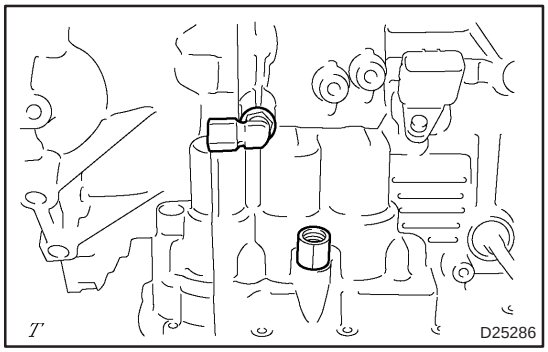

5. REMOVE OIL COOLER TUBE UNION(OUTLET OIL COOLER UNION)
[32921C / 3514]

(a) Remove the oil cooler tube union.
(b) Remove the O–ring from the oil cooler tube union.

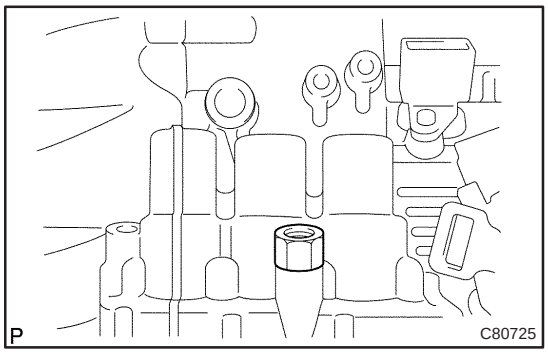

6. REMOVE OIL COOLER TUBE UNION(INLET OIL COOLER UNION)
[32921C / 3514]

(a) Remove the oil cooler tube union.
(b) Remove the O–ring from the oil cooler tube union.

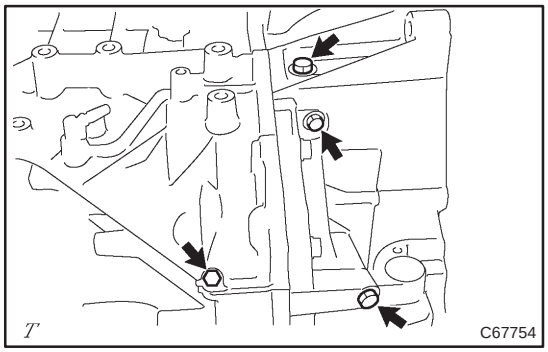

7. REMOVE TRANSAXLE CASE NO.1 PLUG
[35104Q / 3503]

(a) Remove the 4 transaxle case No.1 plugs from the transaxle housing and transaxle case.

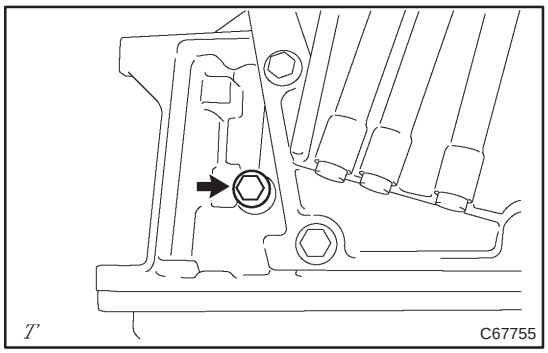

(b) Remove the transaxle case No.1 plug from the transaxle case.

(c) Remove the 5 O–rings from the transaxle cases.

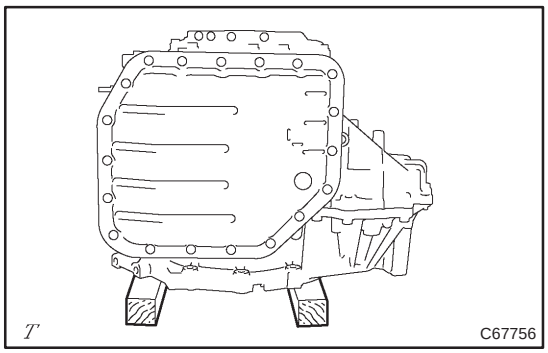

8. FIX AUTOMATIC TRANSAXLE ASSY
[30500 / 3501]

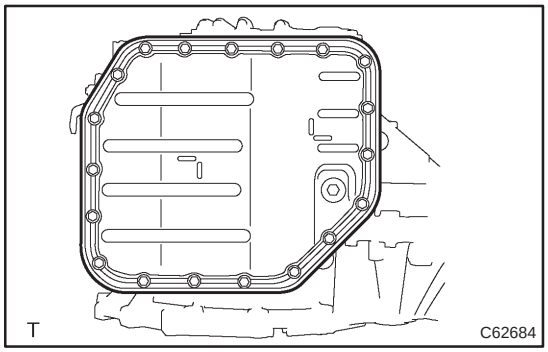

9. REMOVE AUTOMATIC TRANSAXLE OIL PAN SUB–ASSY
[35106D / 3503]

(a) Remove the drain plug and gasket from the oil pan.

(b) Remove the 19 bolts.

(c) Remove the oil pan and gasket.

10. REMOVE AUTOMATIC TRANSAXLE OIL PAN GASKET
[35168A / 3503]

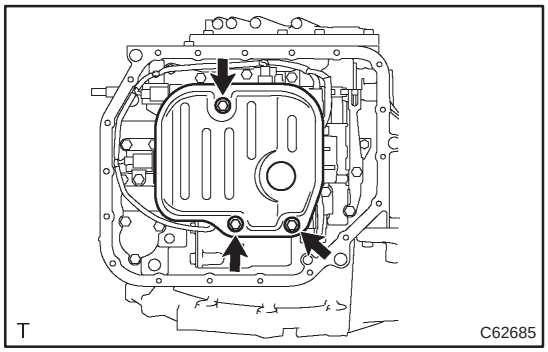

11. REMOVE VALVE BODY OIL STRAINER ASSY [35330 / 3512]

(a) Remove the 3 bolts and oil strainer assy.

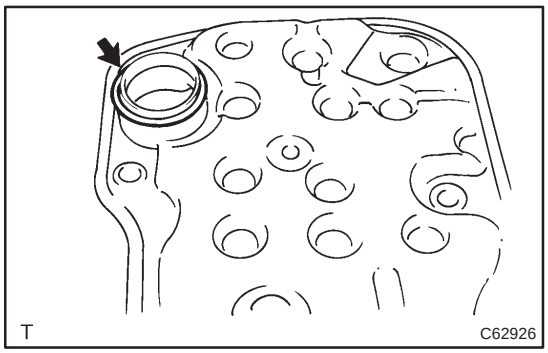

(b) Remove the O–ring from the oil stainer.

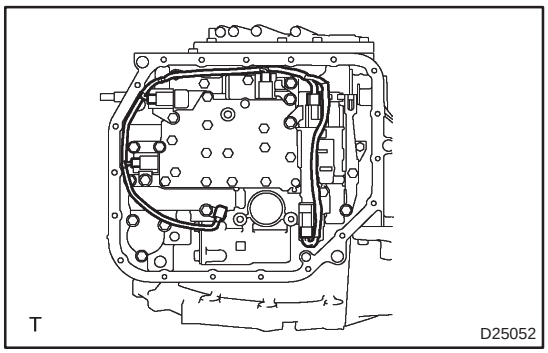

12. REMOVE TRANSMISSION VALVE BODY ASSY [35410 / 3512]

(a) Disconnect the 5 solenoid connectors.

(b) Remove the bolt, lock plate and ATF temperature sensor.

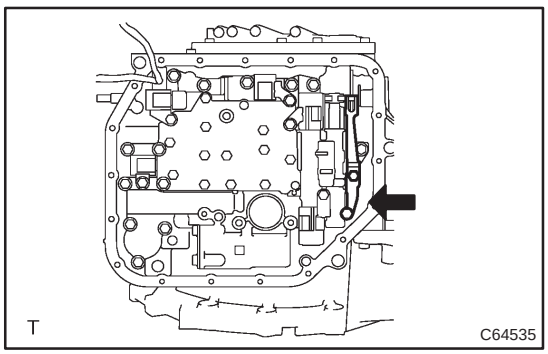

(c) Remove the 2 bolts, detente spring cover and detente spring.

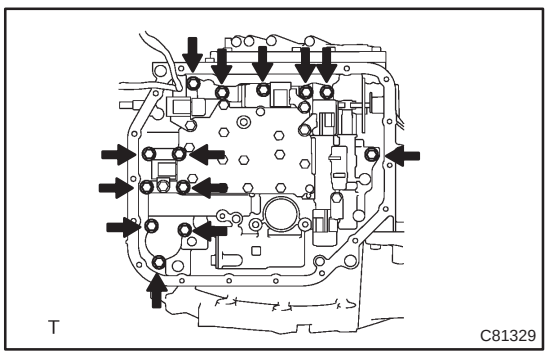

(d) Remove 13 bolts and valve body assy.

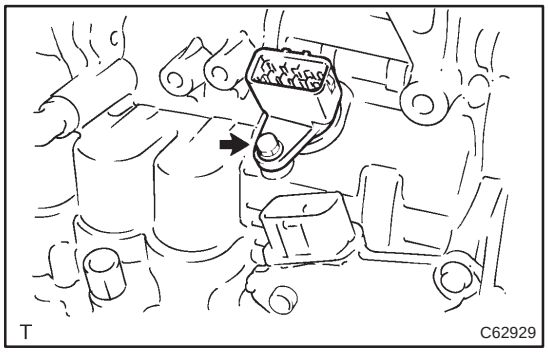

13. REMOVE TRANSMISSION WIRE
[82125J / 3512]

(a) Remove the bolt.
(b) Remove the transmission wire from the transaxle case.

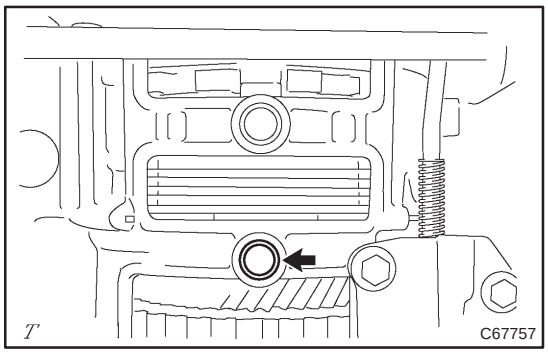

14. REMOVE TRANSAXLE CASE 2ND BRAKE GASKET
[35149B / 3503]

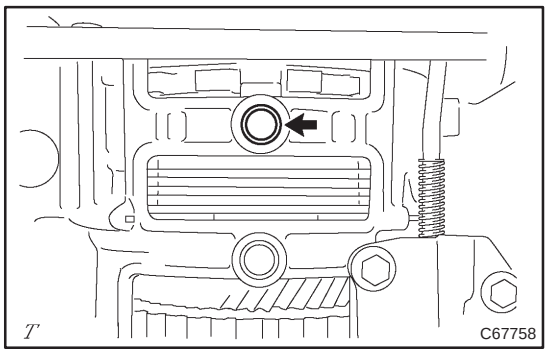

15. REMOVE TRANSAXLE CASE GASKET
[35145C / 3503]

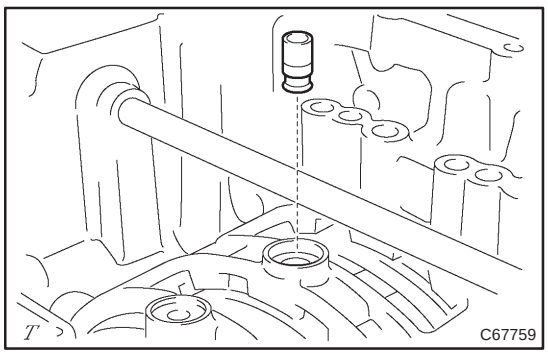

16. REMOVE BRAKE DRUM GASKET
[35159 / 3503]

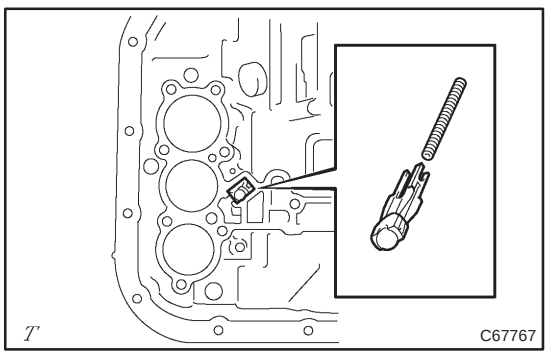

17. REMOVE CHECK BALL BODY
[35251 / 3512]

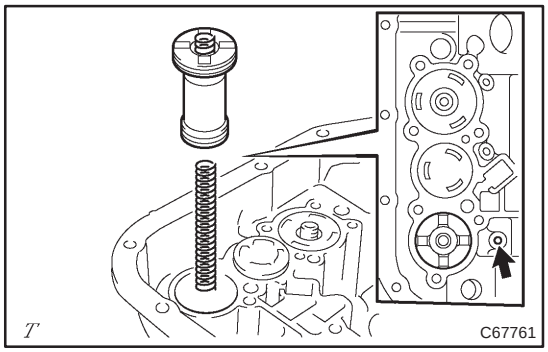

18. REMOVE B–2 ACCUMULATOR PISTON [35423 / 3512]

(a) Apply compressed air (392 kPa, 4.0 kgf·cm^2, 57 psi) to the oil hole and remove the B_2 accumulator piston and spring. Remove the spring.

NOTICE:

- **Blowing off the air may cause the piston's jump–out. When removing the piston, holding it with your hand using a waste cloth.**
- **Take care not to splash ATF when air–blowing.**

(b) Remove the 2 O–rings from the B_2 accumulator piston.

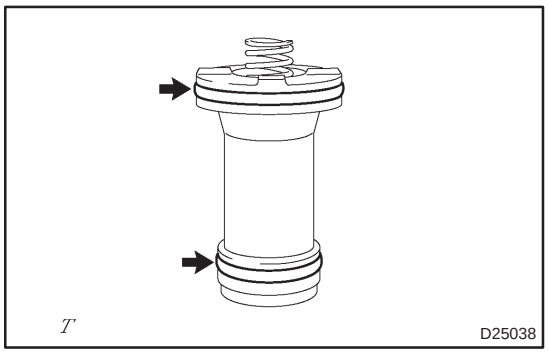

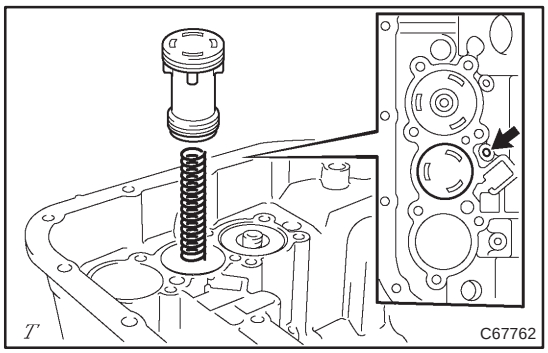

19. REMOVE C–3 ACCUMULATOR PISTON [35426D / 3512]

(a) Apply compressed air (392 kPa, 4.0 kgf·cm^2, 57 psi) to the oil hole and remove the C_3 accumulator piston and spring. Remove the spring.

NOTICE:

- **Blowing off the air may cause the piston's jump–out. When removing the piston, holding it with your hand using a waste cloth.**
- **Take care not to splash ATF when air–blowing.**

(b) Remove the 2 O–rings from the C_3 accumulator piston.

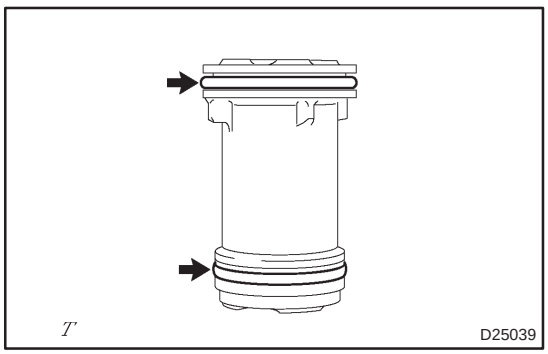

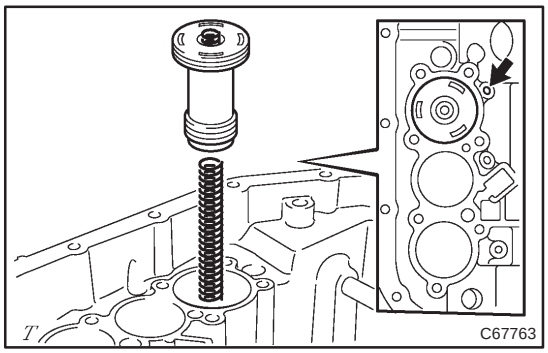

20. REMOVE C–2 ACCUMULATOR PISTON [35425A / 3512]

(a) Apply compressed air (392 kPa, 4.0 kgf·cm^2, 57 psi) to the oil hole and remove the C_2 accumulator piston and spring. Remove the spring.

NOTICE:

- **Blowing off the air may cause the piston's jump–out. When removing the piston, holding it with your hand using a waste cloth.**
- **Take care not to splash ATF when air–blowing.**

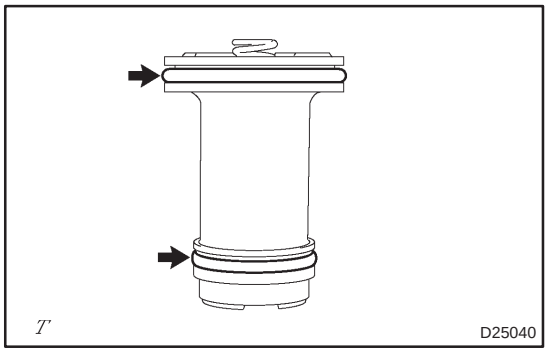

(b) Remove the 2 O–rings from the C_2 accumulator piston.

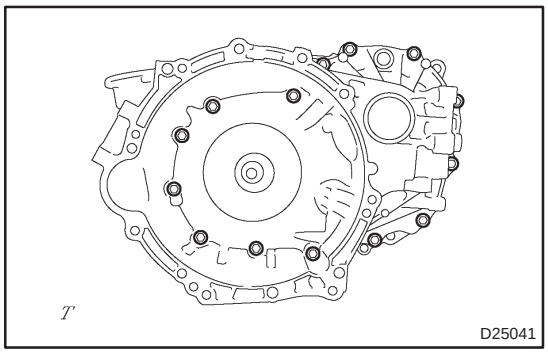

21. REMOVE TRANSAXLE HOUSING [35111C / 4301]

(a) Remove the 14 bolts.

(b) Tap on the circumference of the transaxle housing with a plastic hammer to remove the transaxle housing from the transaxle case.

NOTICE:

Differential gear assembly may be accidentally removed when the transaxle housing is removed.

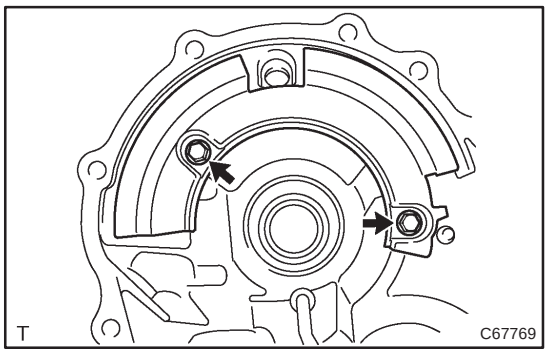

22. REMOVE TRANSAXLE HOUSING OIL SEPARATOR [35174 / 4301]

(a) Remove the 2 bolts and transaxle housing oil separator from the transaxle housing.

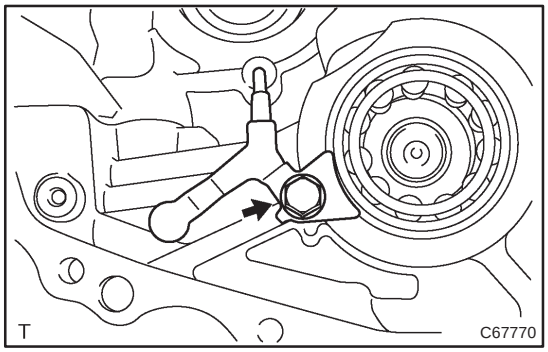

23. REMOVE BEARING LOCK PLATE [33326E / 3510]

(a) Remove the bolt.

(b) Remove the bearing lock plate.

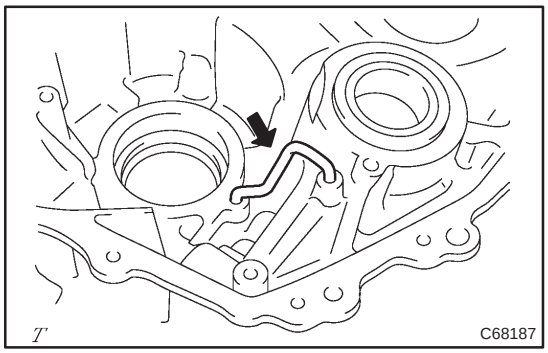

24. REMOVE DIFFERENTIAL GEAR LUBE APPLY TUBE [35882D / 3510]

(a) Remove the bolt and differential gear lube apply tube from the transaxle housing.

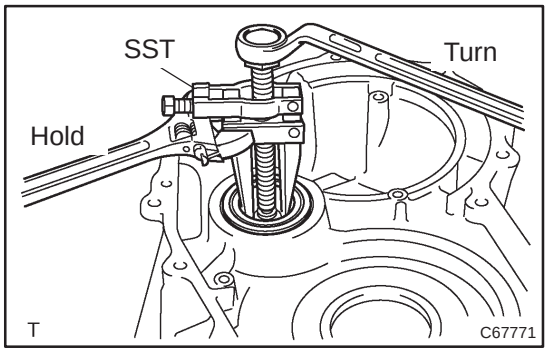

25. REMOVE FRONT DRIVE PINION FRONT TAPERED ROLLER BEARING
[41211A / 4301]

(a) Using SST, remove the RH cylindrical roller bearing from the transaxle housing.
SST 09308–10010

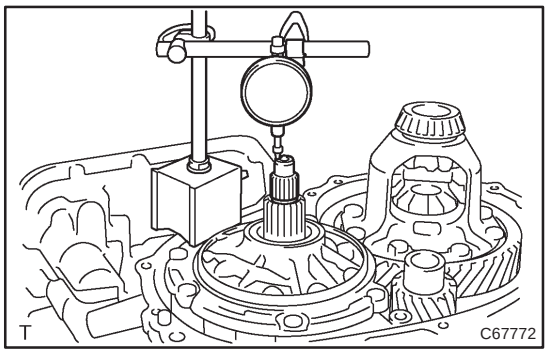

26. INSPECT INPUT SHAFT ENDPLAY

(a) Measure the end play in axial direction.
End play: 0.37 – 1.29 mm (0.0146 – 0.0508 in.)

If the end play is not as specified, select and replace the thrust needle roller bearing.

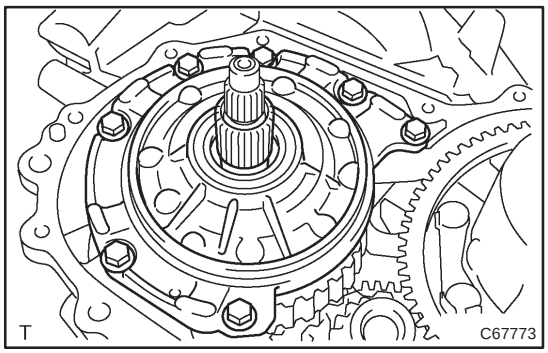

27. REMOVE OIL PUMP ASSEMBLY

(a) Remove the 7 bolts and oil pump assy.

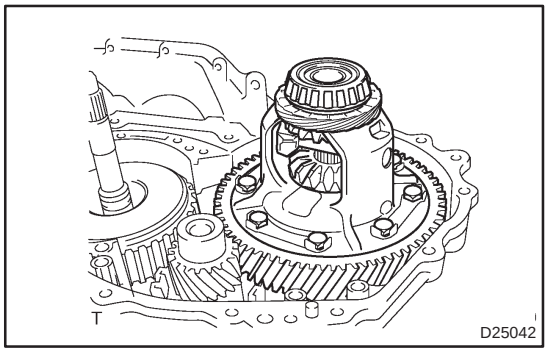

28. REMOVE DIFFERENTIAL GEAR ASSEMBLY

(a) Remove the differential gear assy.

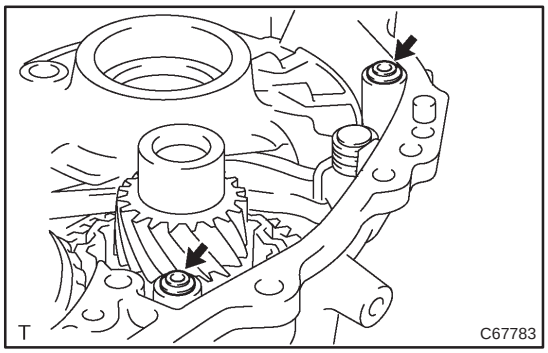

29. REMOVE OVERDRIVE BRAKE GASKET
[35179 / 3503]

(a) Using a screwdriver, remove the 2 O/D brake gaskets from the transaxle case.

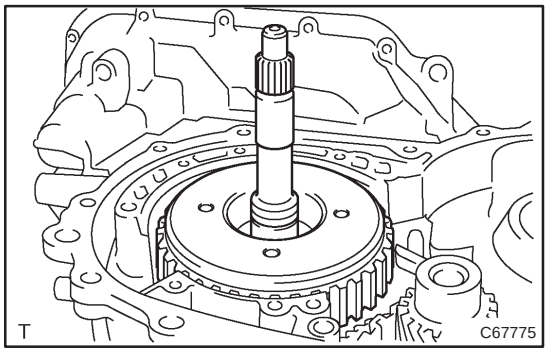

30. REMOVE INPUT SHAFT ASSY

(a) Remove the input shaft assy from the transaxle case.

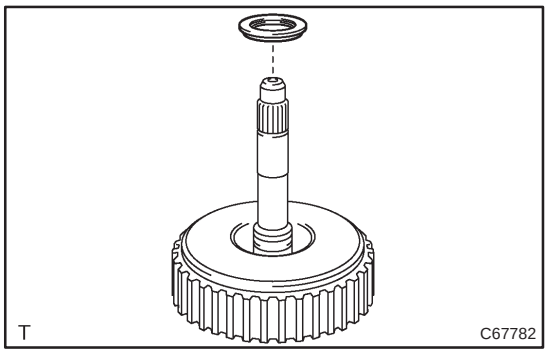

31. REMOVE STATOR SHAFT THRUST NEEDLE ROLLER BEARING

[35370A / 3502]

(a) Remove the thrust needle roller bearing from the input shaft.

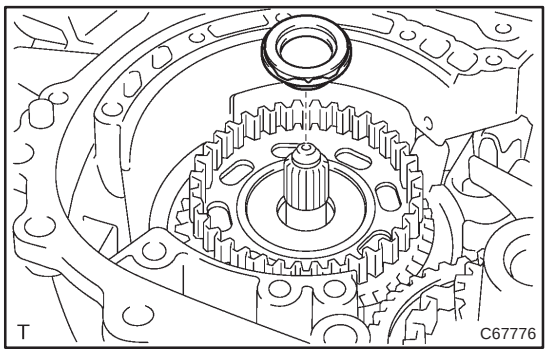

32. REMOVE FORWARD CLUTCH HUB THRUST NEEDLE ROLLER BEARING

[35061C / 3507]

(a) Remove the thrust needle roller bearing from the forward clutch hub.

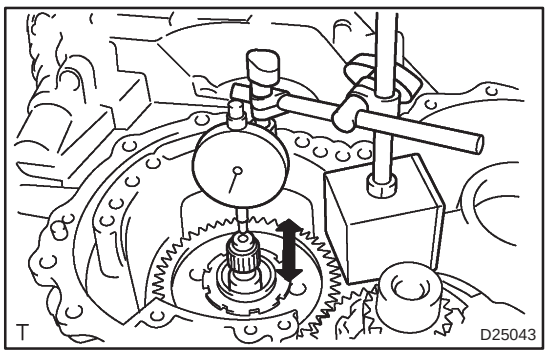

33. INSPECT INTERMEDIATE SHAFT ASSY

(a) Using a dial indicator, measure the rickety of inter mediate shaft.

Standard clearance:
0.204 – 0.966 mm (0.008 – 0.038 in.)

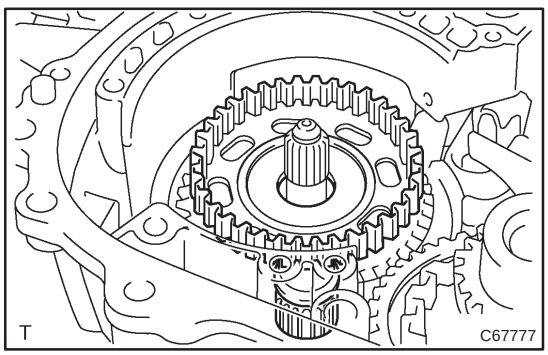

34. REMOVE FORWARD CLUTCH HUB SUB–ASSY

[35061 / 3507]

(a) Remove the forward clutch hub from the transaxle case.

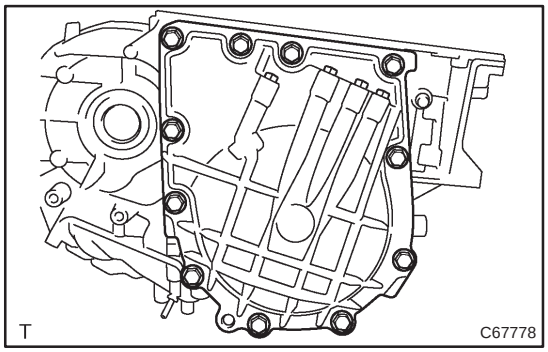

35. REMOVE TRANSAXLE REAR COVER ASSY

(a) Remove the 11 bolts.

(b) Tap on the circumference of the transaxle rear cover with a plastic hammer to remove the transaxle rear cover from the transaxle case.

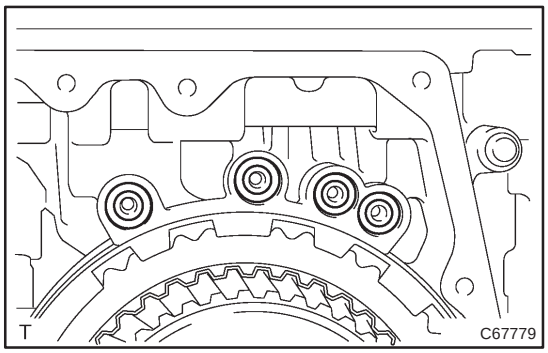

36. REMOVE TRANSAXLE CASE GASKET
[35145C / 3503]

(a) Remove the 4 transaxle case gaskets.

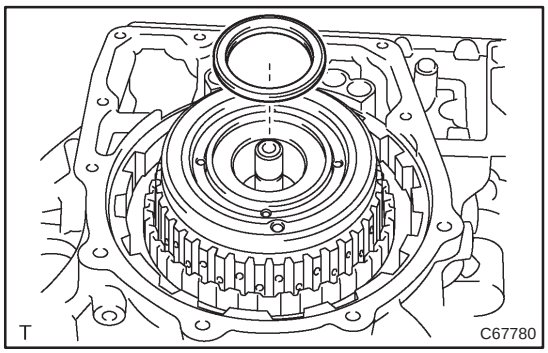

37. REMOVE REAR CLUTCH DRUM THRUST NEEDLE ROLLER BEARING
[35651B / 3507]

(a) Using a magnetic hand, remove the thrust needle roller bearing.

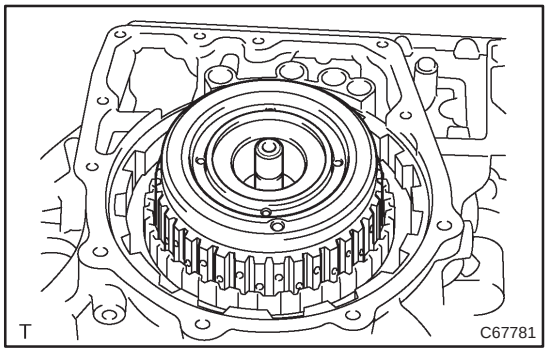

38. REMOVE INTERMEDIATE SHAFT ASSY

(a) Remove the intermediate shaft assy from the transaxle case.

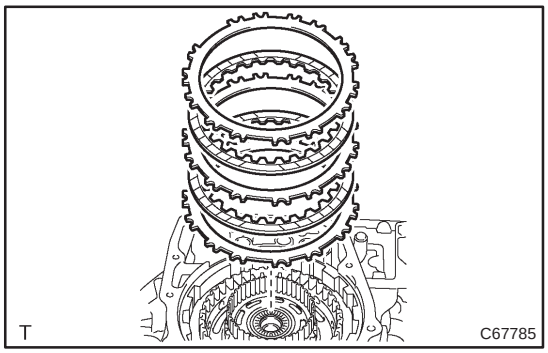

39. REMOVE 2ND COAST & OVERDRIVE BRAKE DISC
[34633 / 3509]

(a) Remove the flange, 2 discs and 2 flanges No.2 from the transaxle.

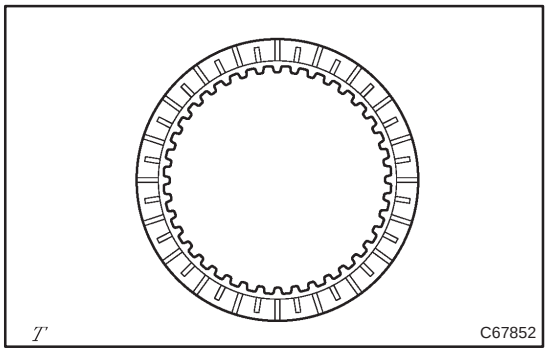

40. INSPECT 2ND COAST & OVERDRIVE BRAKE DISC [34633 / 3509]

(a) Check to see if the sliding surface of the disc, plate and flange are worn or burnt.
If necessary, replace them.

HINT:

- **If the lining of he disc is peeling off or discolored, or even if a part of the printed number is defaced, replace all discs.**
- **Before assembling new discs, soak them in ATF for at least 15 minutes.**

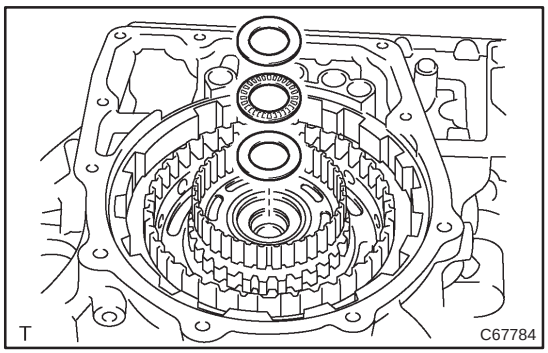

41. REMOVE THRUST NEEDLE ROLLER BEARING [35605B / 3507]

(a) Using a magnetic finger, remove the C_2 hub thrust bearing race, thrust needle roller bearing and thrust bearing race from the direct clutch hub.

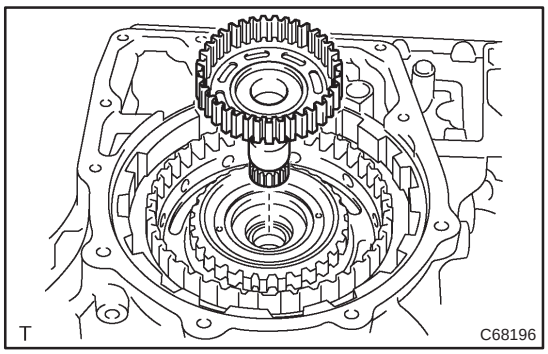

42. REMOVE DIRECT CLUTCH HUB [35654B / 3507]

(a) Remove the direct clutch hub from the transaxle case.

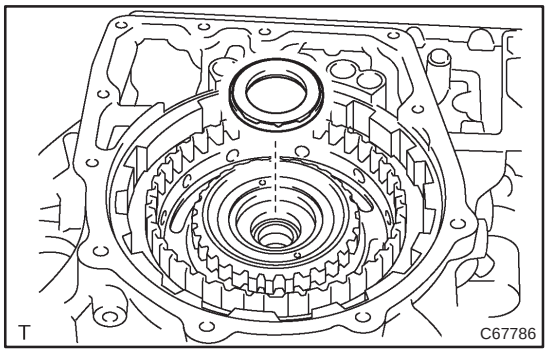

43. REMOVE REAR PLANETARY SUN GEAR, NO.2 THRUST NEEDLE BEARING [35730C / 3510]

(a) Using a magnet finger, remove the thrust bearing from the rear thrust needle bearing.

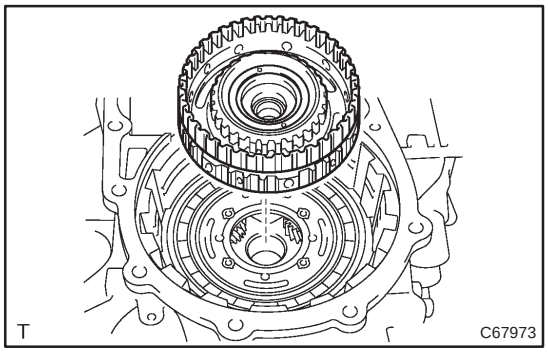

44. REMOVE REAR PLANETARY SUN GEAR ASSY
[35730 / 3510]

(a) Remove rear planetary sun gear from the transaxle case.

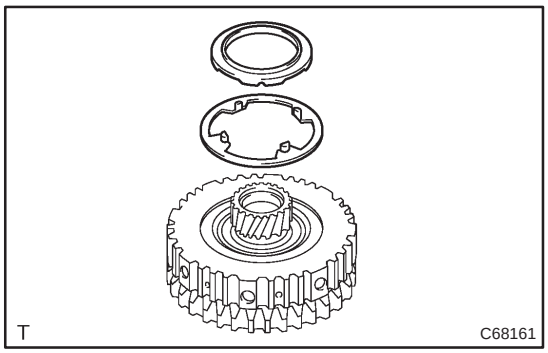

45. REMOVE REAR PLANERARY SUN GEAR THRUST NEEDLE ROLLER BEARING
[35730B / 3510]

(a) Remove rear planetary sun gear thrust needle roller bearing and thrust washer No.1 from the rear planetary sun gear.

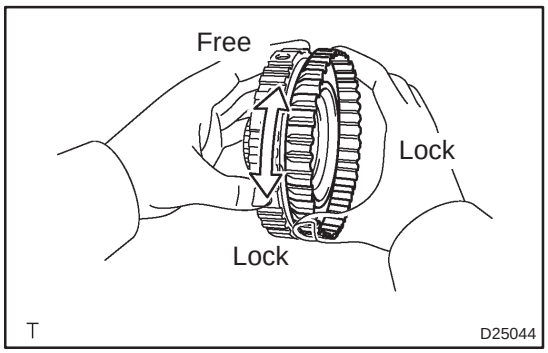

46. INSPECT 1 WAY CLUTCH ASSY
[35790A / 3510]

(a) Hold the rear planetary sun gear and turn the 1 way clutch. The 1 way clutch should turn freely clockwise and should lock counterclockwise.

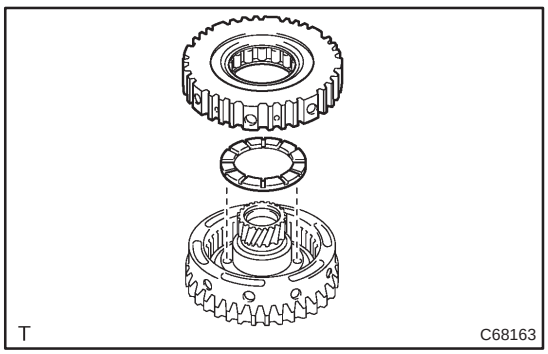

47. REMOVE 1 WAY CLUTCH ASSY
[35790A / 3510]

(a) Remove the 1 way clutch assy and planetary carrier thrust washer No.2 from the rear planetary sun gear.

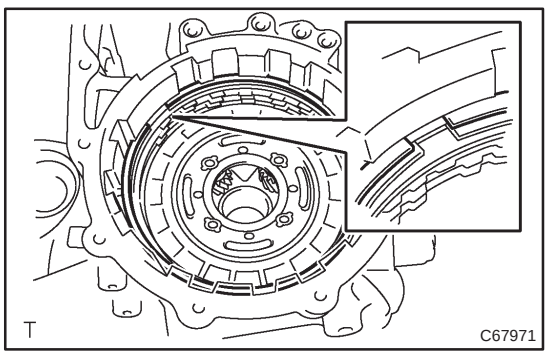

48. REMOVE 2ND COAST & OVERDRIVE BRAKE FLANGE HOLE SNAP RING
[34625E / 3509]

(a) Using a screwdriver, remove the snap ring from the transaxle case.

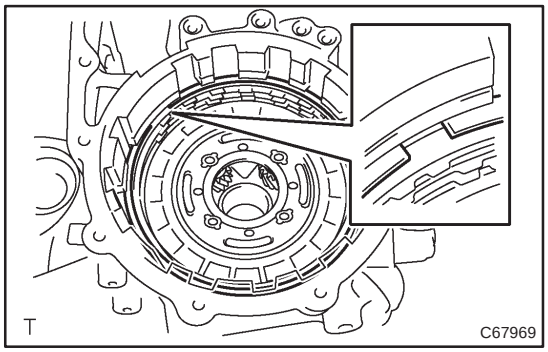

49. REMOVE 2ND BRAKE BRAKE DISC
[35682 / 3509]

(a) Using a screwdriver, remove the snap ring.
(b) Remove the flange, 3 discs and 3 plates from the transaxle.

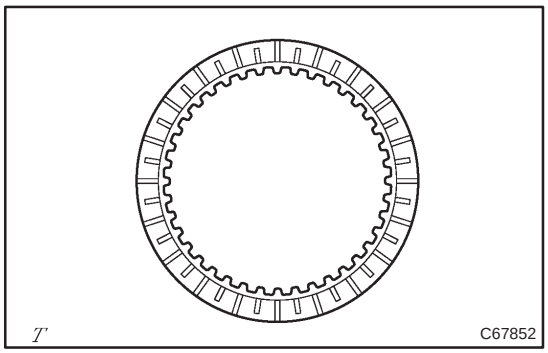

50. INSPECT 2ND BRAKE BRAKE DISC
[35682 / 3509]

(a) Check to see if the sliding surface of the disc, plate and flange are worn or burnt.
If necessary, replace them.

HINT:

- **If the lining of the disc is peeling off or discolored or even if a part of the printed mark is defaced, replace all discs.**
- **Before assembling new discs, soak them in ATF for at least 15 minutes.**

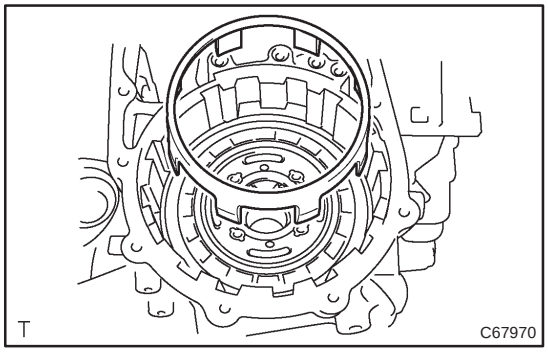

51. REMOVE 2ND BRAKE PISTON SLEEVE
[35626D / 3509]

(a) Remove the 2nd brake piston sleeve from the transaxle case.

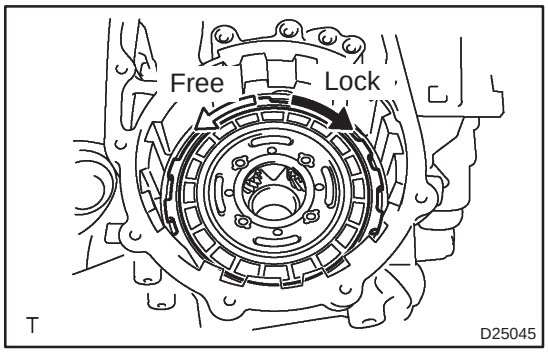

52. INSPECT 1 WAY CLUTCH NO.2
[35792C / 3509]

(a) Install the 1 way clutch and thrust washer to the rear planetary sun gear.
(b) Hold the rear planetary sun gear and turn the 1 way clutch. The 1 way clutch should turn freely clockwise and should lock counterclockwise.

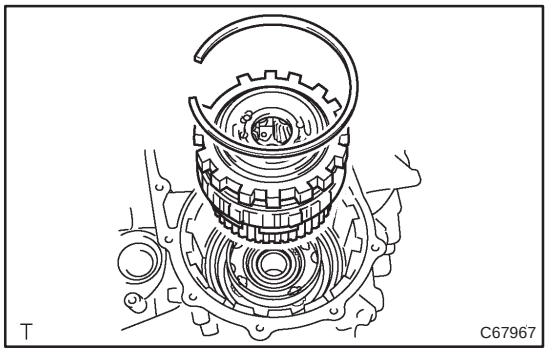

53. REMOVE REAR PLANETARY GEAR ASSY
[35760 / 3510]

(a) Using a screwdriver, remove the snap ring.
(b) Remove the rear planetary gear assy from the transaxle case.

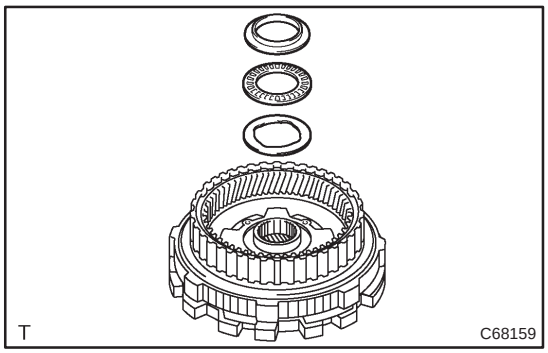

54. REMOVE PLANETARY GEAR REAR THRUST NEEDLE ROLLER BEARING
[35720K / 3510]

(a) Remove the thrust needle roller bearing and 2 bearing races from the rear planetary gear assy.

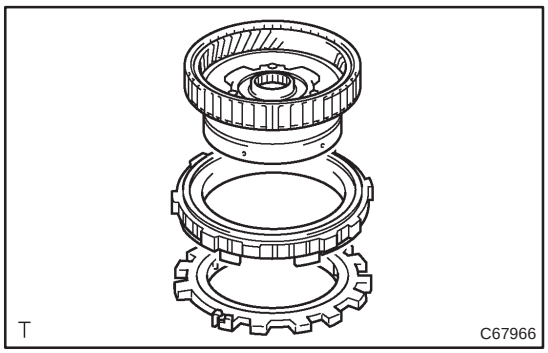

55. REMOVE 1 WAY CLUTCH NO.2
[35792C / 3509]

(a) Separate the 2nd brake cylinder, 1 way clutch No.2 and rear planetary gear.

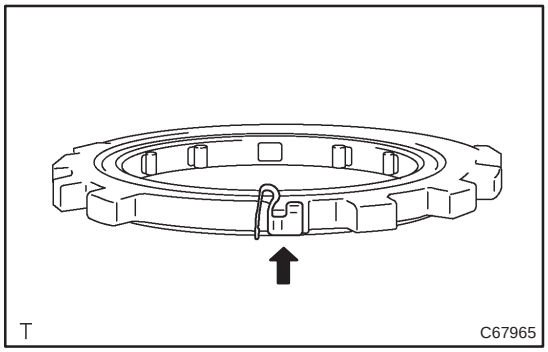

56. REMOVE OUTER RACE RETAINER
[34365A / 3503]

(a) Remove the retainer from the 1 way clutch No.2.

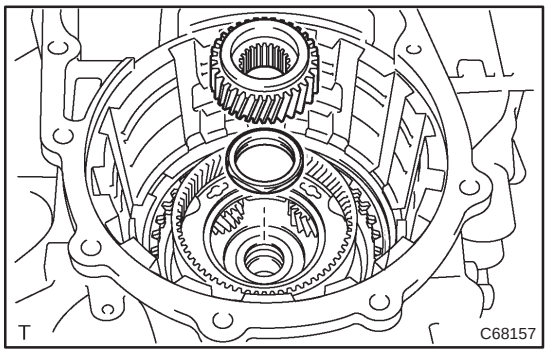

57. REMOVE FR PLANETARY SUN GEAR
[35714D / 3510]

(a) Remove the front planetary sun gear and thrust needle roller bearing from the transaxle case.

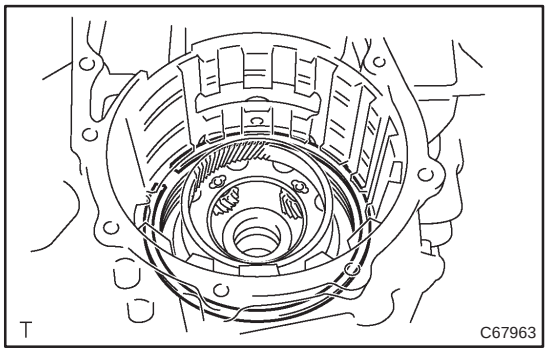

58. REMOVE 1ST & REVERSE BRAKE DISC
[35683 / 3509]

(a) Using a screwdriver, remove the snap ring.
(b) Remove the flange, 4 discs and 4 plates from the transaxle case.

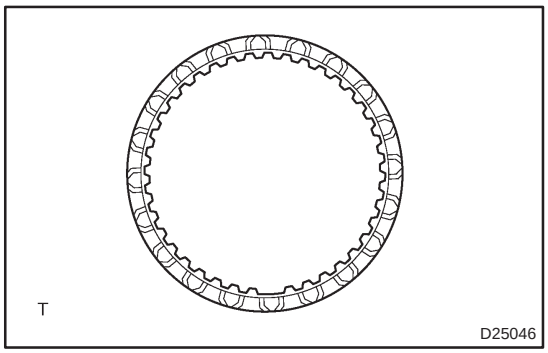

59. INSPECT 1ST & REVERSE BRAKE DISC
[35683 / 3509]

(a) Check to see if the sliding surface of the disc, plate and flange are worn or burnt.

If necessary, replace them.

HINT:

- **If the lining of the disc is peeling off or discolored, or even if a part of the printed mark is defaced, replace all discs.**
- **Before assembling new discs, soak in ATF for at least 15 minutes.**

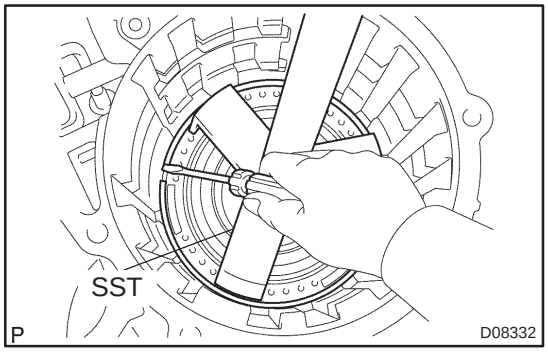

60. REMOVE 1ST & REVERSE BRAKE RETURN SPRING SUB–ASSY
[35068 / 3509]

(a) Using SST, a press and a screwdriver, remove the snap ring.
SST 09387–00070
(b) Remove the 1st & reverse brake return spring sub–assy.

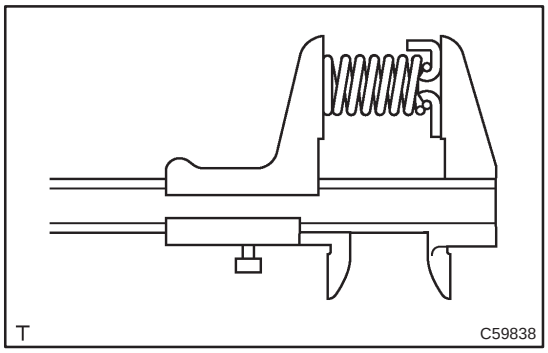

61. INSPECT 1ST & REVERSE BRAKE RETURN SPRING SUB–ASSY
[35068 / 3509]

(a) Using a vernier calipers, measure the free length of the spring together with the spring seat.
Standard free length: 13.96 mm (0.5496 in.)

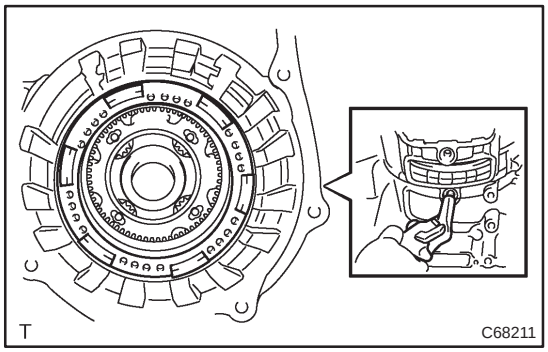

62. REMOVE 1ST & REVERSE BRAKE PISTON NO.2 [35623P / 3509]

(a) Apply compressed air (392 kPa, 4.0 kgf/cm^2, 57 psi) to the transaxle case to remove the 1st & reverse brake piston.

NOTICE:

- **Blowing off the air may cause the piston's jump–out. When removing the piston, hold it with your hand using a waste cloth.**
- **Take care not to splash ATF when air–blowing.**

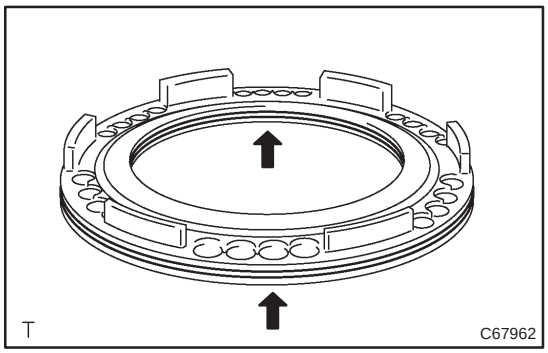

63. REMOVE 1ST & REVERSE BRAKE PISTON NO.2 O–RING [35623Q / 3509]

(a) Remove the 2 O–rings from the1st & reverse brake piston No.2.

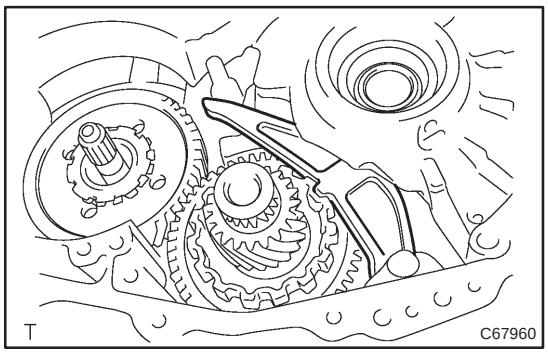

64. REMOVE COUNTER DRIVE GEAR NUT [35782H / 3510]

(a) Fix the counter driven gear with the parking lock pawl.

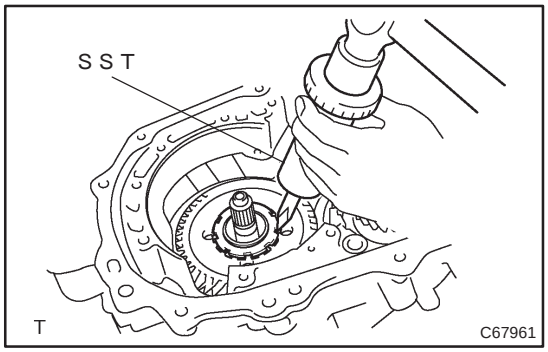

(b) Using SST and a hammer, unstake the lock washer.
SST 09930–00010

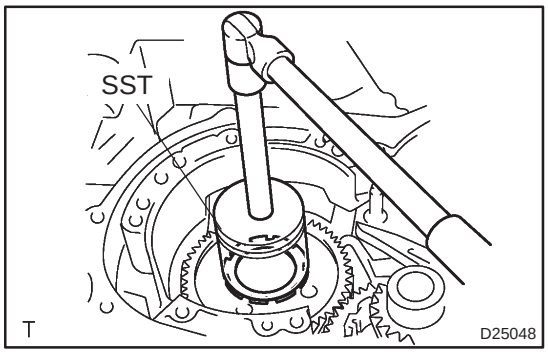

(c) Using SST, remove the nut and lock washer.
SST 09387–00120

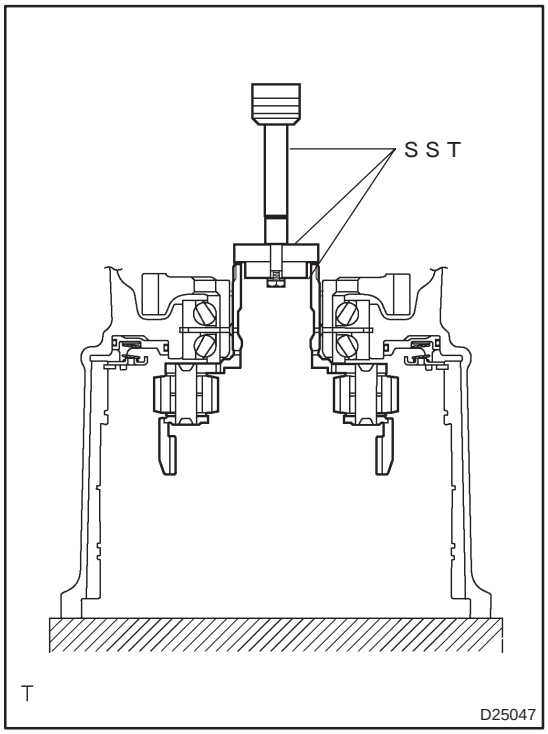

65. REMOVE PLANETARY GEAR ASSY
[35720G / 3510]

(a) Using SST and a press, remove the planetary gear assy from the transaxle case.
SST 09950–60010 (09951–00400, 09951–00320, 09952–06010), 09950–70010 (09951–07100)

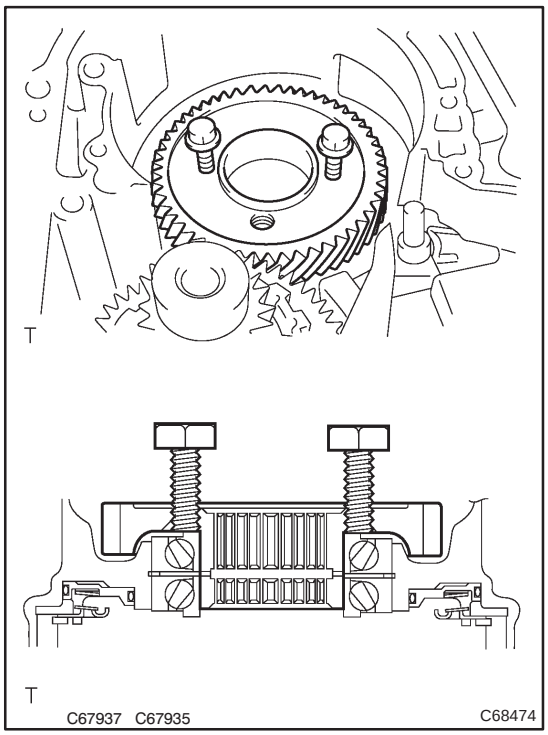

66. REMOVE COUNTER DRIVE GEAR
[35782C / 3510]

(a) Install the 2 bolts to the counter drive gear.
Bolt (M6):
L=40 – 80 mm
Pitch = 1.0 mm

(b) Rotate 2 bolts in order and remove the counter drive gear and front planetary sun gear.

(c) Remove 2 radial ball bearings from the counter drive gear and front planetary sun gear.

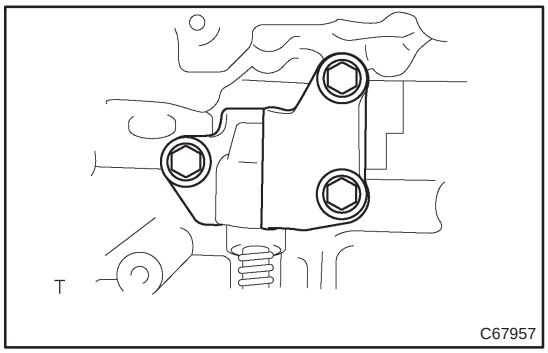

67. REMOVE PARKING LOCK PAWL BRACKET
[35595 / 3513]

(a) Remove the 3 bolts, cam guide and bracket.

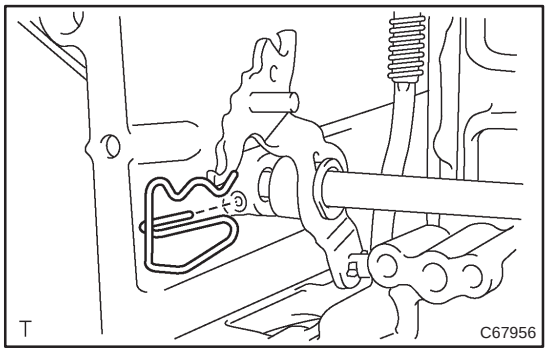

68. REMOVE MANUAL VALVE LEVER SHAFT RETAINER SPRING
[35506J / 3513]

(a) Remove the retainer spring.

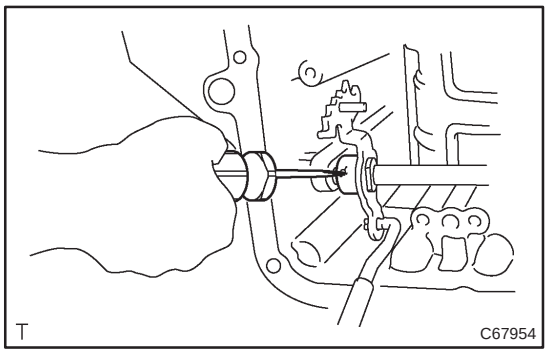

69. REMOVE MANUAL VALVE LEVER SUB–ASSY
[35505 / 3513]

(a) Using a screwdriver, unstake and remove the spacer.

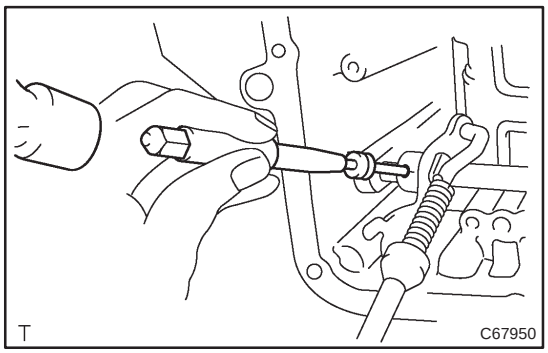

(b) Using a pin punch and hammer, drive out the pin.
(c) Remove the manual valve lever shaft and manual valve lever.

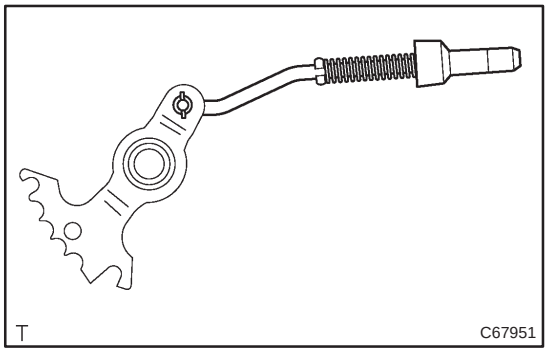

70. REMOVE PARKING LOCK ROD SUB–ASSY
[35501 / 3513]

(a) Remove the parking lock rod from the manual valve lever.

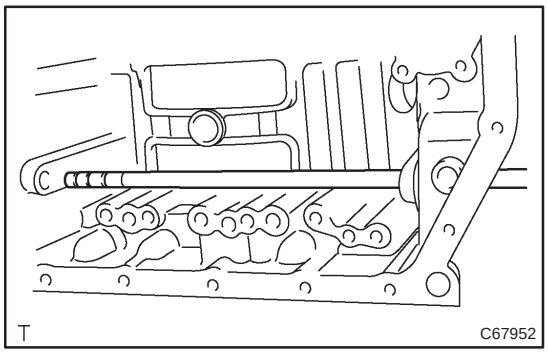

71. REMOVE MANUAL VALVE LEVER SHAFT
[35561 / 3513]

(a) Remove the manual valve lever shaft from the transaxle case.

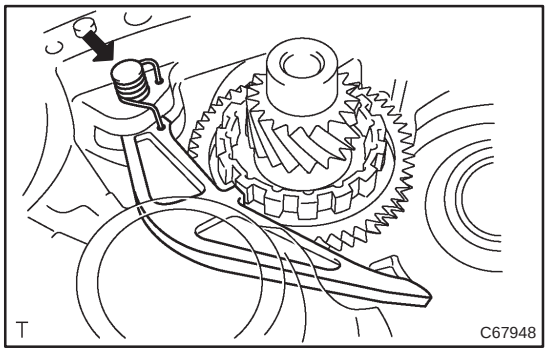

72. REMOVE PARKING LOCK PAWL
[35557 / 3513]

(a) Using a screwdriver, remove the parking lock pawl shaft.
(b) Remove the torsion spring and parking lock pawl.

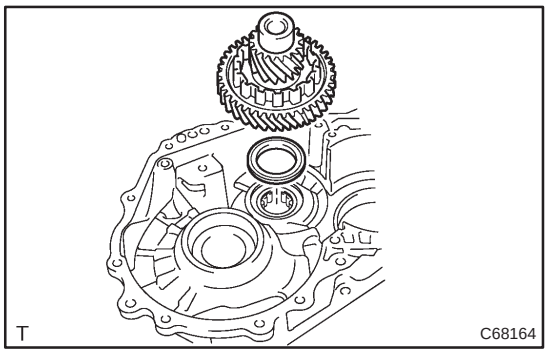

73. REMOVE COUNTER DRIVEN GEAR
[35783R / 4301]

(a) Remove the counter driven gear, drive pinion and thrust needle roller bearing from the transaxle case.

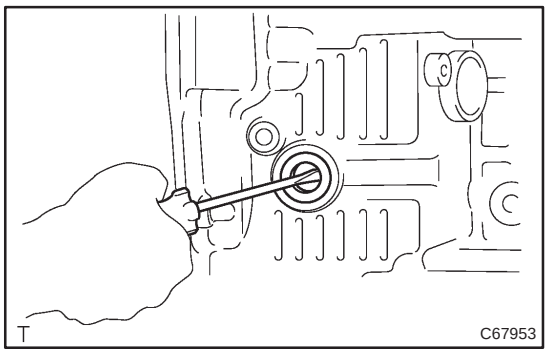

74. REMOVE MANUAL VALVE LEVER SHAFT OIL SEAL
[35506F / 3513]

(a) Using a screwdriver, remove the oil seal.

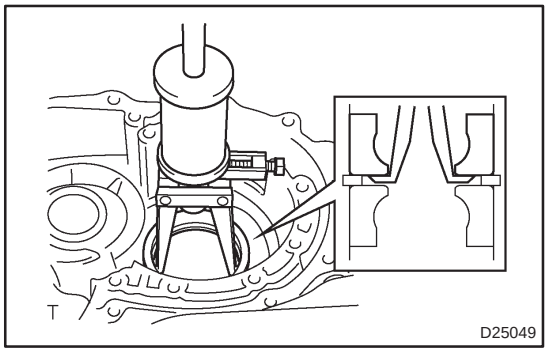

75. REMOVE COUNTER DRIVE GEAR BEARING
[35782E / 3510]

(a) Remove the 2 counter drive gear bearing inner races RH the transaxle case.
(b) Using SST, remove the counter drive gear bearing LH outer race from the transaxle case
SST 09308–00010

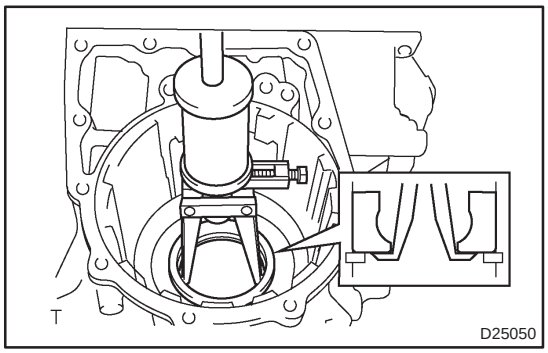

(c) Using SST, remove the counter drive gear bearing rear outer race from the transaxle case.
SST 09308–00010

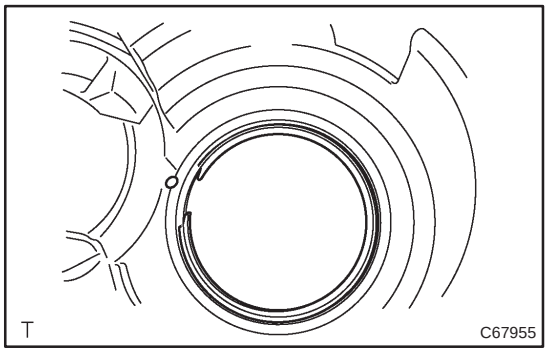

76. REMOVE COUNTER DRIVE GEAR HOLE SNAP RING [35782D / 3510]

(a) Using a screwdriver, remove the counter drive gear hole snap ring from the transaxle case.

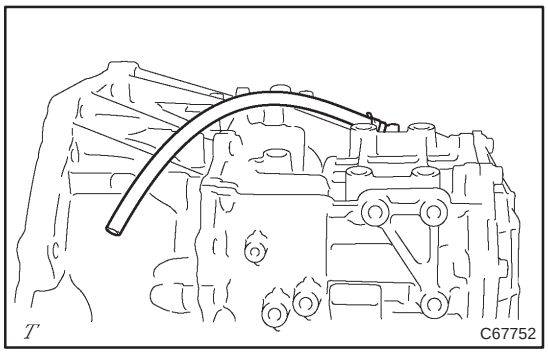

77. REMOVE BREATHER PLUG HOSE(U340E A/T) [35104V / 3503]

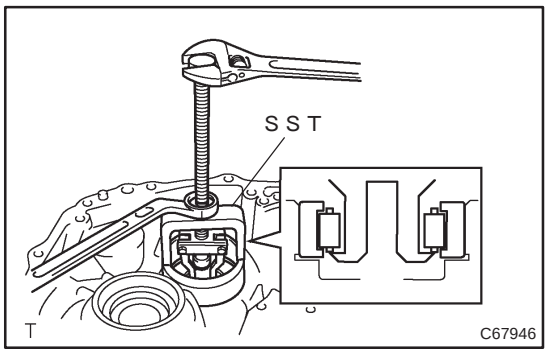

78. REMOVE FRONT DRIVE PINION REAR TAPERED ROLLER BEARING [41211B / 4301]

(a) Using SST, remove front drive pinion LH cylindrical roller bearing from the transaxle case.
SST 09612–65014 (09612–01040)

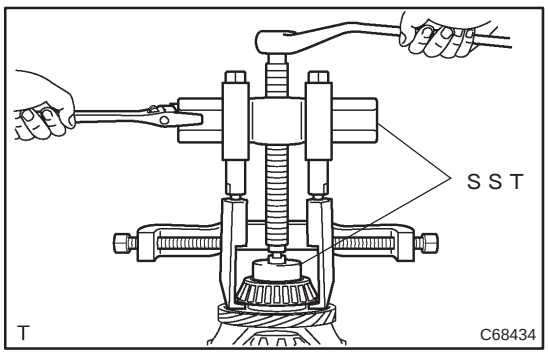

79. REMOVE FR DIFFERENTIAL CASE FRONT TAPERED ROLLER BEARING [41311E / 4301]

(a) Using SST, remove the front differential case RH tapered roller bearing from the differential case.
SST 09950–40011 (09951–04010, 09952–04010, 09953–04030, 09954–04010, 09955–04061, 09957–04010, 09958–04011), 09950–60010 (09951–00390)

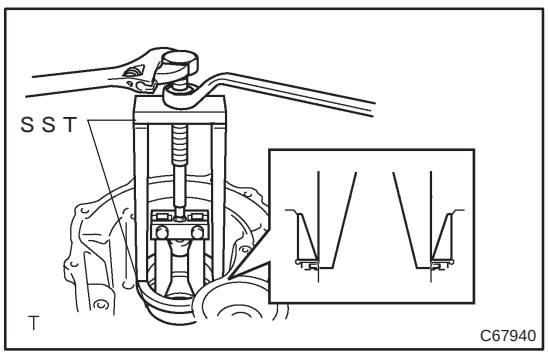

(b) Using SST, remove the front differential case RH tapered roller bearing outer race from the transaxle housing.
SST 09387–00040 (09387–02020, 09387–02010)

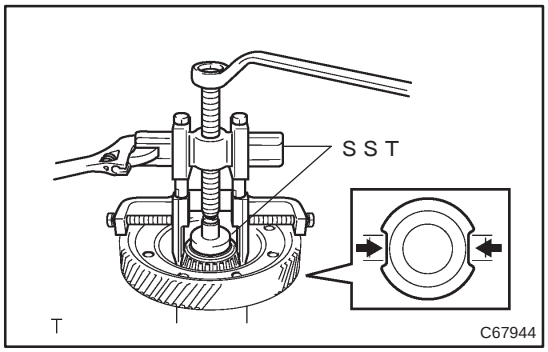

80. REMOVE FR DIFFERENTIAL CASE REAR TAPERED ROLLER BEARING
[41311F / 4301]

(a) Using SST, remove the front differential case tapered roller bearing from the differential case.
SST 09950–40011 (09951–04010, 09952–04010, 09953–04020, 09954–04010, 09955–04061, 09957–04010, 09958–04011), 09950–60010 (09951–00430)

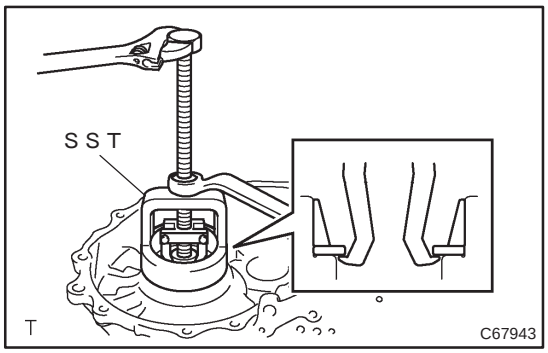

(b) Using SST, remove front differences.
SST 09612–65014 (09612–01010)

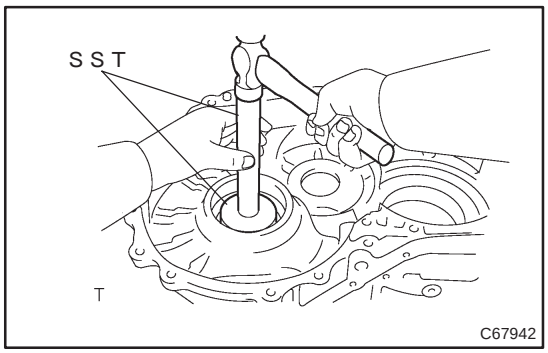

81. REMOVE FRONT TRANSAXLE CASE OIL SEAL
[31105D / 4301]

(a) Using SST and a hammer, remove the oil seal from the transaxle case.
SST 09950–60010 (09951–00550), 09950–70010 (09951–07100)

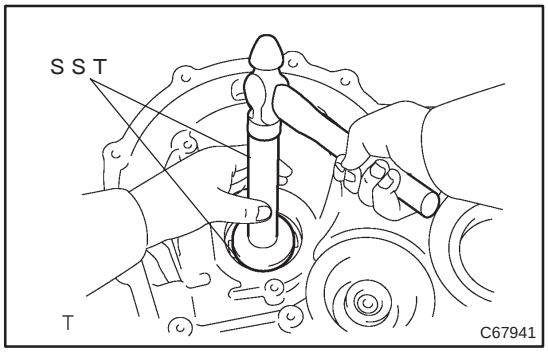

82. REMOVE TRANSAXLE CASE OIL SEAL
[31105H / 4301]

(a) Using SST and a hammer, remove the transaxle case oil seal from the transaxle housing.
SST 09950–60010 (09951–00530), 09950–70010 (09951–07100)

83. BEARING POSITION

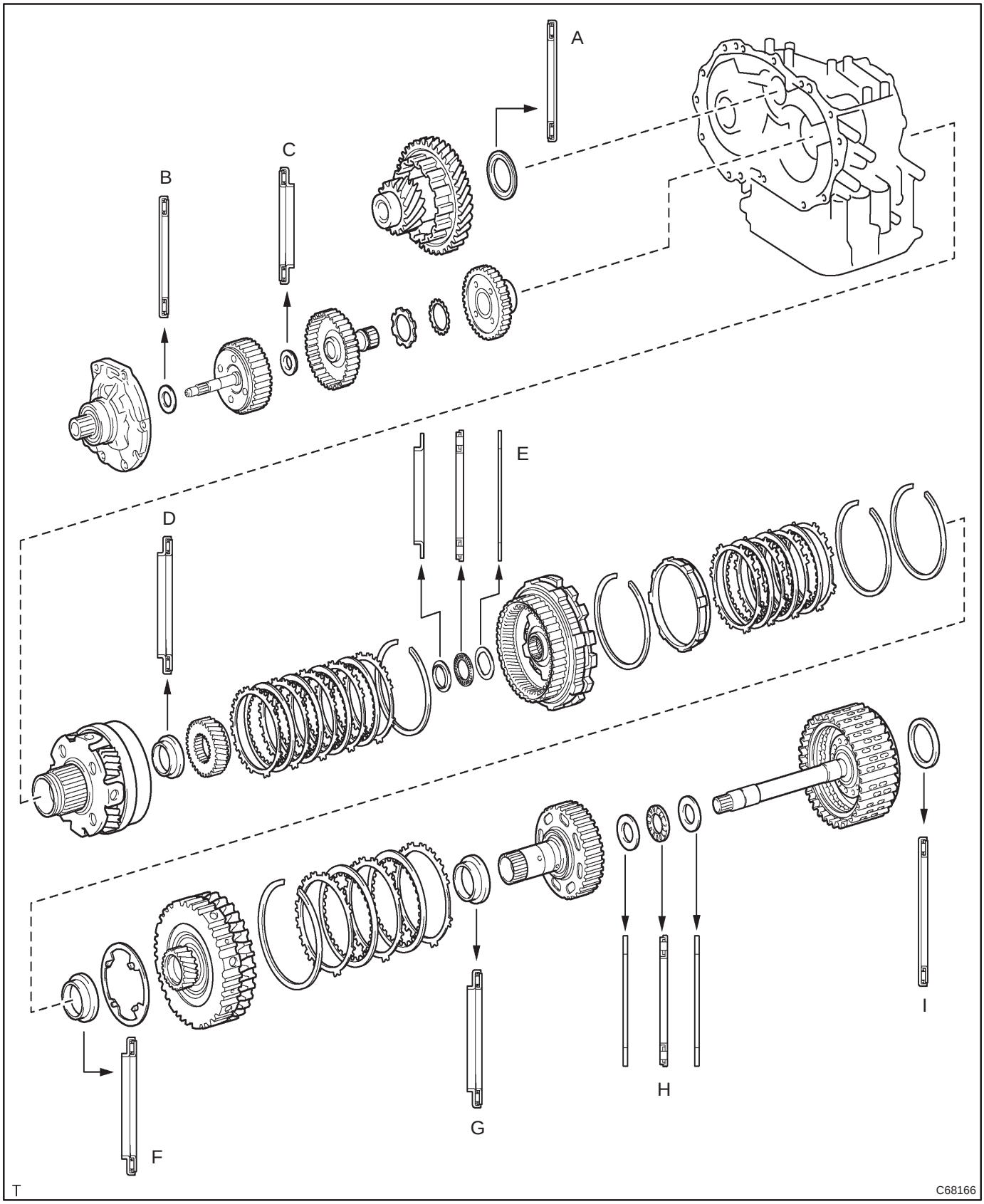

Mark	Front Race Diameter Inside / Outside mm (in.)	Thrust Bearing Diameter Inside / Outside mm (in.)	Rear Race Diameter Inside / Outside mm (in.)
A	–	45.1 (1.7756) / 65.1 (2.5630)	–
B	–	26 (1.0236) / 43.4 (1.7087)	–
C	–	21 (0.8268) / 34.85 (1.3721)	–
D	–	32.0 (1.260) / 48.0 (1.890)	–
E	36.75 (1.447) / 49.95 (1.967)	33.9 (1.335) / 52.0 (2.047)	– / 51.7 (2.035)
F	–	43.45 (1.7101) / 58.5 (2.3031)	–
G	–	29.4 (1.1574) / 44.4 (1.7480)	–
H	23.5 (0.9252) / 37.3 (1.4685)	22.5 (0.8858) / 37.3 (1.4685)	20.3 (0.7992) / 33.8 (1.3307)
I	–	43.45 (1.7101) / 61.2 (2.4094) or 43.45 (1.7101) / 61.74 (2.4307)	–

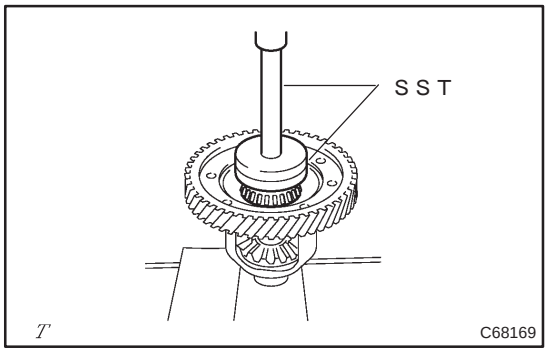

84. INSTALL FR DIFFERENTIAL CASE REAR TAPERED ROLLER BEARING
[41311F / 4301]

(a) Using SST and a press, install the front differential case LH tapered roller bearing inner race to the differential case.
SST 09726–40010, 09950–60020 (09951–00790)

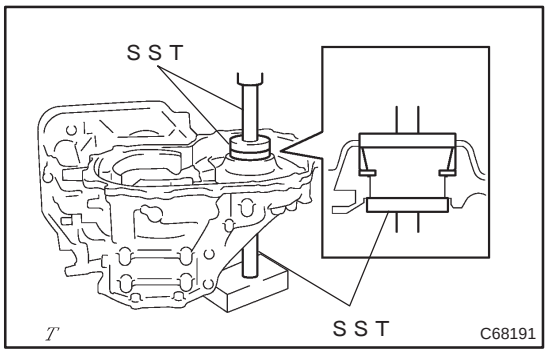

(b) Using SST and a press, install the shim and bearing outer race to the transaxle case.
SST 09950–60010 (09951–00650), 09950–60020 (09951–00720), 09950–70010 (09951–07100, 09951–07200)

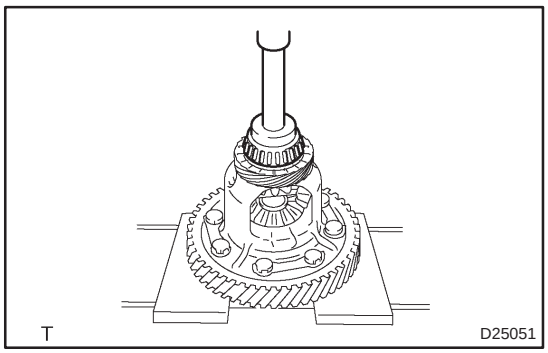

85. INSTALL FR DIFFERENTIAL CASE FRONT TAPERED ROLLER BEARING
[41311E / 4301]

(a) Using SST and a press, install the bearing inner race to the differential case.
SST 09950–60010 (09951–00460), 09950–70010 (09951–07100)

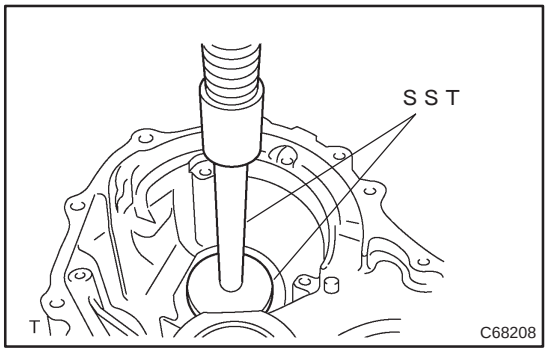

(b) Using SST and a press, install the tapered roller bearing to the transaxle housing.
SST 09950–60020 (09951–00680), 09950–70010 (09951–07150)

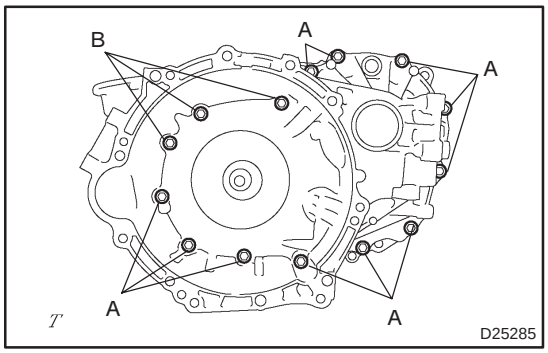

86. TAPERED POLLER BEARING PRELOAD

(a) Coat the front differential case and bearing with ATF and install them to the transaxle case.

(b) Install the 14 bolts and transaxle housing.
Torque:
Bolt A: 29 N·m (300 kgf·cm, 21 ft·lbf)
Bolt B: 22 N·m (220 kgf·cm, 16 ft·lbf)

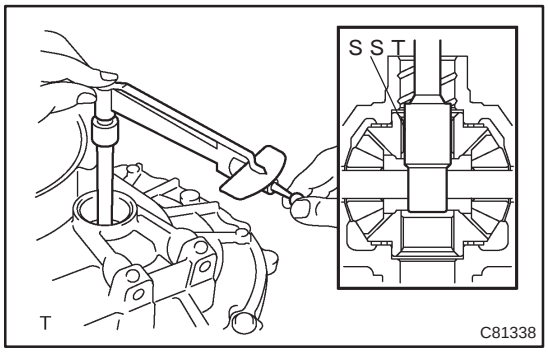

(c) Using SST and small torque wrench, measure the preload of the differential gear.
SST 09564–32011
Preload:
New bearing:
0.98 – 1.57 N·m (10.0 – 16.0 kgf·cm 8.7 – 13.9 in.·lbf)
Used bearing:
0.49 – 0.78 N·m (5.0 – 8.0 kgf·cm 4.3 – 6.9 in.·lbf)

If the preload is not within the specification, remove the differential from the transaxle case. Re–select the transaxle case side adjusting shim according to the following table.

Adjusting shim thickness: mm (in.)

Mark	Thickness	Mark	Thickness
01	1.90 (0.0748)	11	2.40 (0.0945)
02	1.95 (0.0768)	12	2.45 (0.0965)
03	2.00 (0.0787)	13	2.50 (0.0984)
04	2.05 (0.0807)	14	2.55 (0.1004)
05	2.10 (0.0827)	15	2.60 (0.1024)
06	2.15 (0.0846)	16	2.65 (0.1043)
07	2.20 (0.0866)	17	2.70 (0.1063)
08	2.25 (0.0885)	18	2.75 (0.1082)
09	2.30 (0.0906)	19	2.80 (0.1102)
10	2.35 (0.0925)	–	–

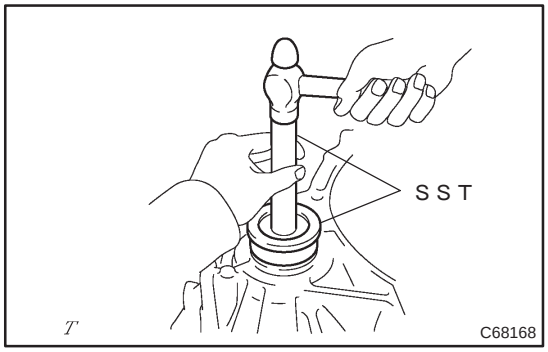

87. INSTALL TRANSAXLE CASE OIL SEAL [31105H / 4301]

(a) Using SST and a hammer, drive in a new oil seal.
SST 09554–14010, 09950–70010 (09951–07100)
Oil seal in depth:
2 ± 0.5 mm (0.079 ± 0.020 in.)

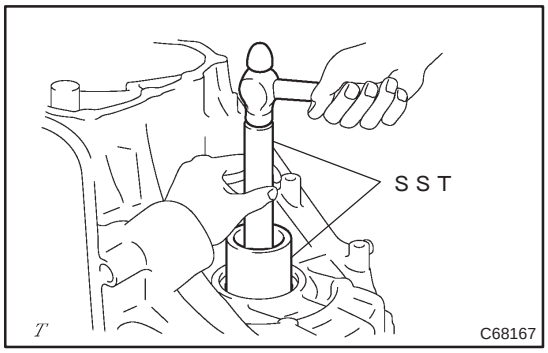

88. INSTALL FRONT TRANSAXLE CASE OIL SEAL [31105D / 4301]

(a) Using SST and a hammer, drive in a new oil seal.
SST 09726–27012 (09726–02041), 09950–70010 (09951–07150)
Oil seal in depth:
5.9 ± 0.5 mm (0.232 ± 0.020 in.)

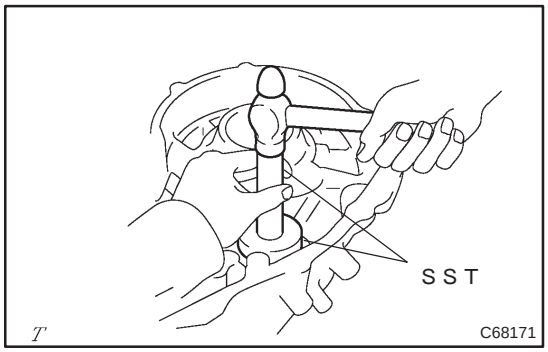

89. INSTALL FRONT DRIVE PINION REAR TAPERED ROLLER BEARING
[41211B / 4301]

(a) Using SST and a hammer, install the roller bearing in to the transaxle case.
SST 09950–60010 (09951–00610), 09950–70010 (09951–07150)

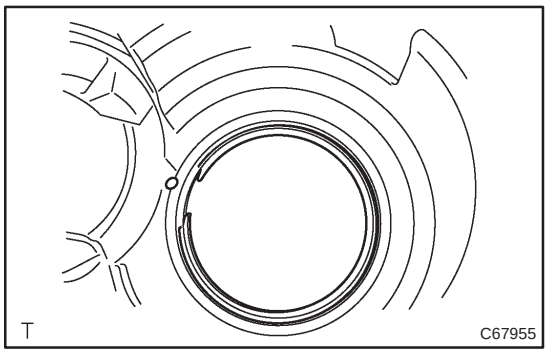

90. INSTALL COUNTER DRIVE GEAR HOLE SNAP RING
[35782D / 3510]

(a) Using a screwdriver, install the counter drive gear hole snap ring to the transaxle case.

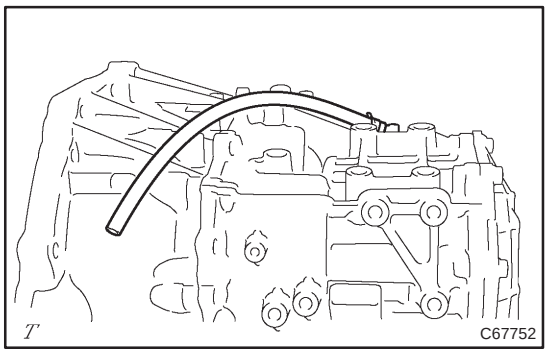

91. INSTALL BREATHER PLUG HOSE(U340E A/T)
[35104V / 3503]

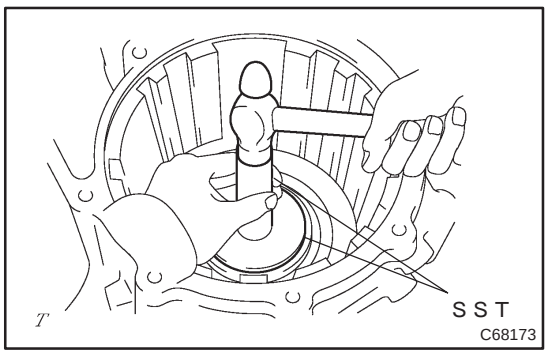

92. INSTALL COUNTER DRIVE GEAR BEARING
[35782E / 3510]

(a) Using SST and a hammer, install the counter drive gear bearing LH outer race to the transaxle case.
SST 09950–60020 (09951–00890), 09950–70010 (09951–07150)

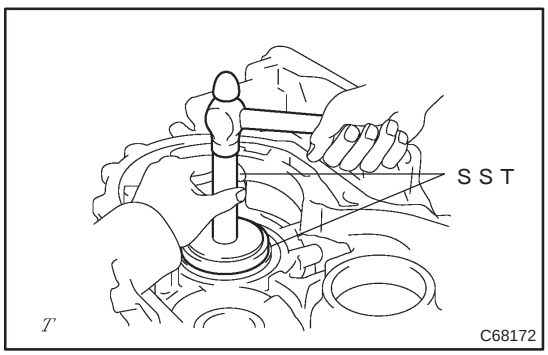

(b) Using SST and a hammer, install the counter drive gear bearing RH outer race to the transaxle case.
SST 09950–60020 (09951–00890), 09950–70010 (09951–07150)

(c) Install the counter drive gear bearing to the transaxle case.

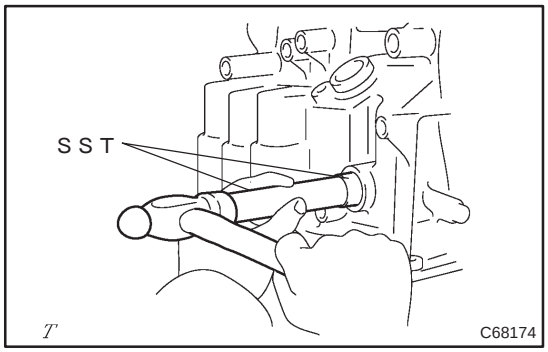

93. INSTALL MANUAL VALVE LEVER SHAFT OIL SEAL [35506F / 3513]

(a) Using SST and a hammer, install the new manual valve lever shaft oil seal.

SST 09950–60010 (09951–00220), 09950–70010 (09951–07100)

Oil seal in depth:
0 ± 0.5 mm (0 ± 0.020 in.)

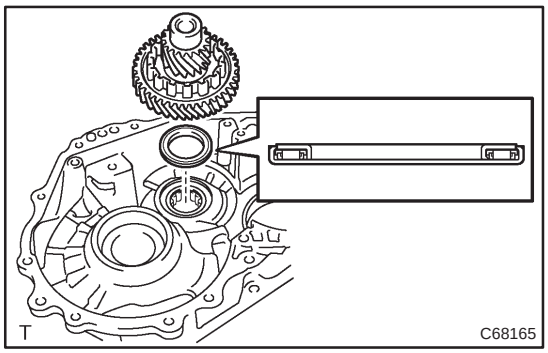

94. INSTALL COUNTER DRIVEN GEAR [35783R / 4301]

(a) Install the counter driven gear and drive pinion thrust bearing to the transaxle case.

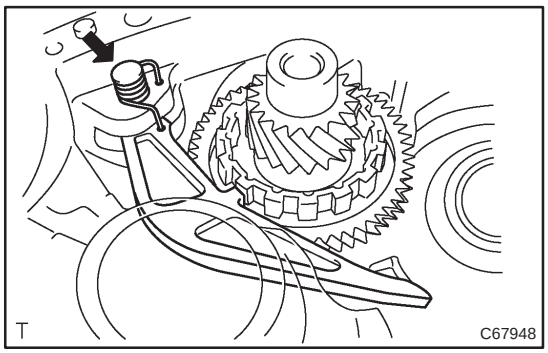

95. INSTALL PARKING LOCK PAWL [35557 / 3513]

(a) Coat the parking lock pawl shaft with ATF.

(b) Install the parking lock pawl, torsion spring and shaft to the transaxle case.

HINT:
Check that the parking lock pawl can move smoothly.

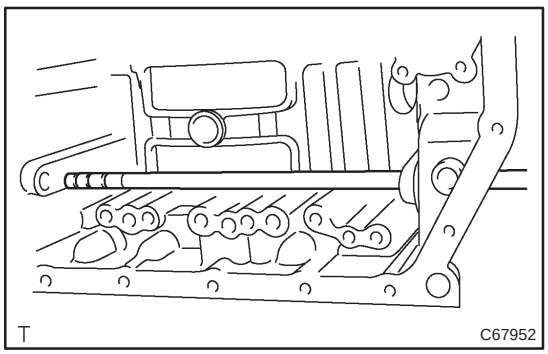

96. INSTALL MANUAL VALVE LEVER SHAFT [35561 / 3513]

(a) Install the manual valve lever shaft to the transaxle case.

NOTICE:
Be careful not to damage the oil seal lip.

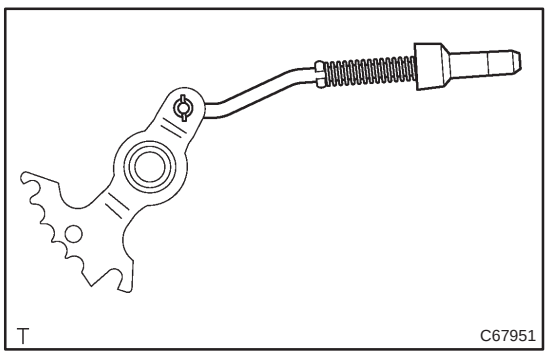

97. INSTALL PARKING LOCK ROD SUB–ASSY [35501 / 3513]

98. INSTALL MANUAL VALVE LEVER SUB–ASSY [35505 / 3513]

(a) Coat the manual valve lever sub–assy with ATF.

(b) Install the manual valve lever and a new manual valve lever spacer to the manual valve lever shaft.

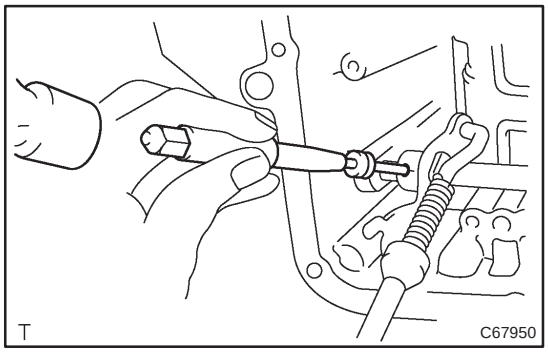

(c) Using a pin punch and hammer, drive in the pin.

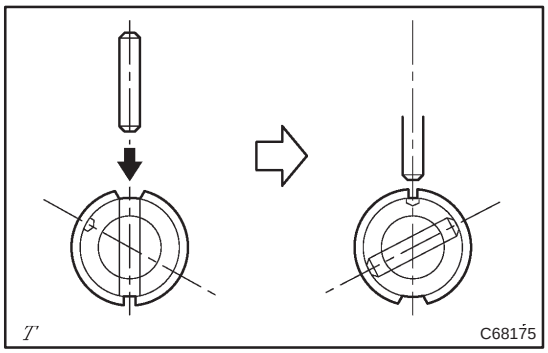

(d) Turn the spacer and lever shaft to align the small hole for locating the staking position in the spacer with the staking position mark on the lever shaft.
(e) Using a pin punch, stake the spacer through the small hole.
(f) Check that the space does not turn.

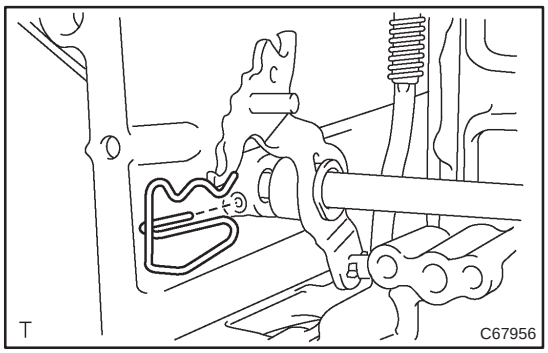

99. INSTALL MANUAL VALVE LEVER SHAFT RETAINER SPRING
[35506J / 3513]

(a) Install the retainer spring.

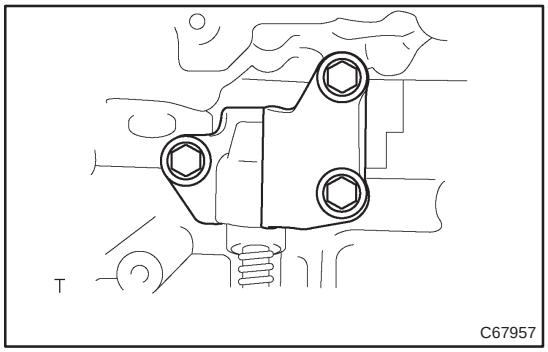

100. INSTALL PARKING LOCK PAWL BRACKET
[35595 / 3513]

(a) Install the cam guide, bracket and 3 bolts.
Torque: 20 N·m (200 kgf·cm, 14 ft·lbf)

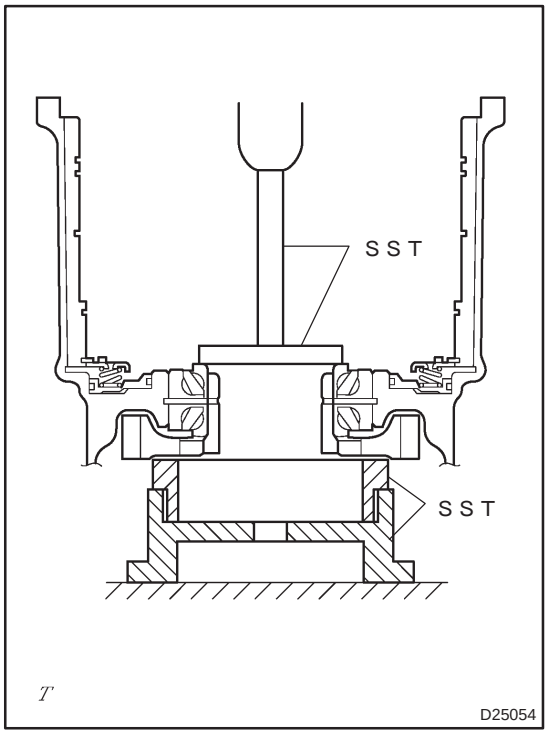

101. INSTALL COUNTER DRIVE GEAR
[35782C / 3510]

(a) Using SST and a press, install the counter drive gear to the transaxle case.
SST 09223–15030, 09527–17011, 09950–60010 (09951–00650), 09950–70010 (09951–07150)

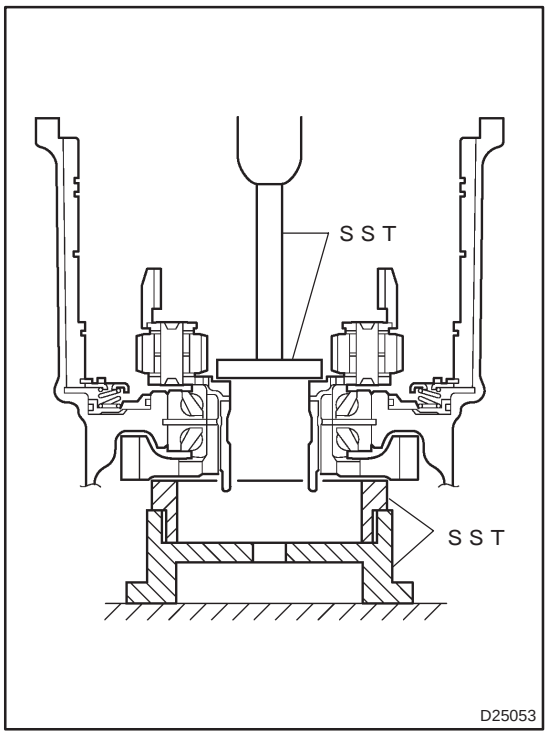

102. INSTALL PLANETARY GEAR ASSY
[35720G / 3510]

(a) Using SST and a press, install the planetary gear assy to the transaxle case.
SST 09950–60010 (09951–00480), 09223–15030, 09527–17011, 09950–70010 (09951–07150)

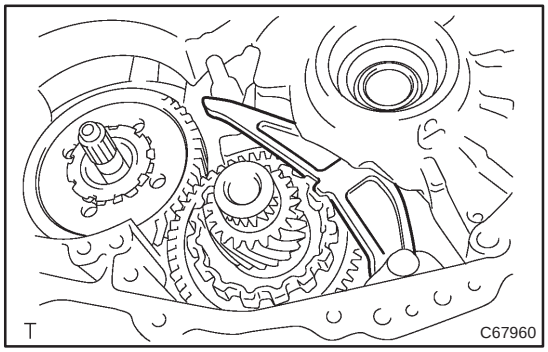

103. INSTALL COUNTER DRIVE GEAR NUT
[35782H / 3510]

(a) Fix the counter driven gear with the parking lock pawl.

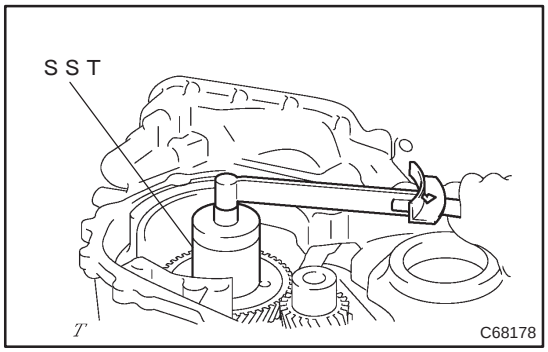

(b) Using SST, install a new lock washer and nut.
SST 09387–00120
Torque: 280 N·m (2,855 kgf·cm, 207 ft·lbf)

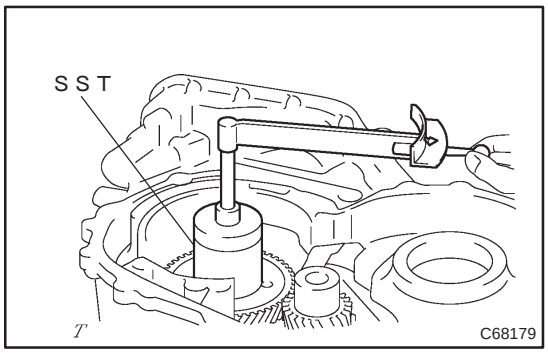

(c) Using SST and a small torque wrench, while turning to counter drive gear 60 turn par minute and measure the rotating torque.
SST 09387–00120
Rotating torque:
0.20 – 0.49 N·m (2 – 5 kgf·cm, 2 – 4 in.·lbf)

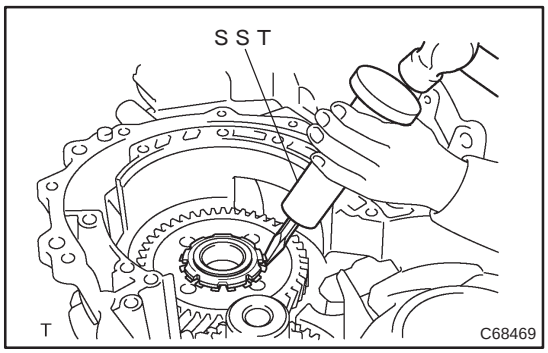

(d) Using SST and a hammer, stake the lock nut washer.
SST 09930–00010

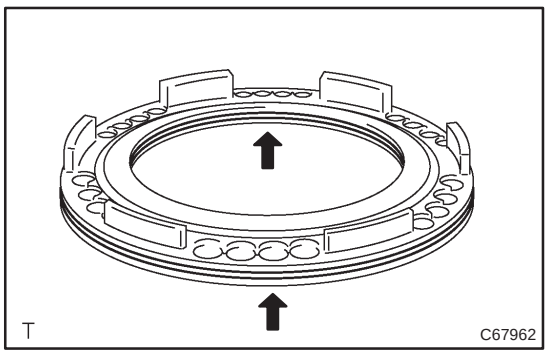

104. INSTALL 1ST & REVERSE BRAKE PISTON NO.2 O–RING
[35623Q / 3509]

(a) Install the 2 O–rings.

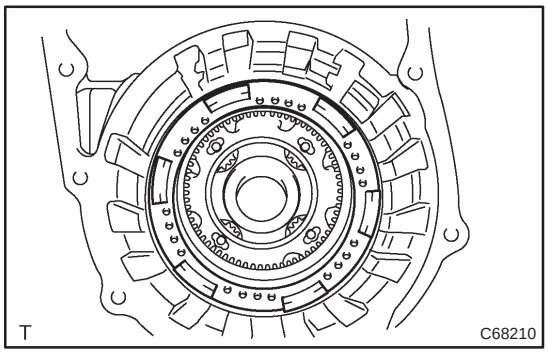

105. INSTALL 1ST & REVERSE BRAKE PISTON NO.2
[35623P / 3509]

(a) Install the 1st & reverse brake piston to the transaxle case.

NOTICE:
Be careful not to damage the oil seal lip.

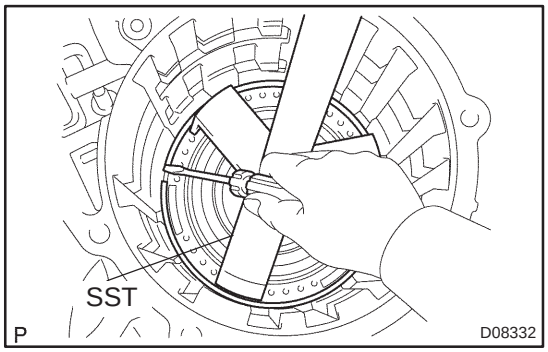

106. INSTALL 1ST & REVERSE BRAKE RETURN SPRING SUB–ASSY
[35068 / 3509]

(a) Install the 1st & reverse brake return spring sub–assy to the transaxle case.

(b) Using SST, a press and a screwdriver, install the snap ring.
SST 09387–00070

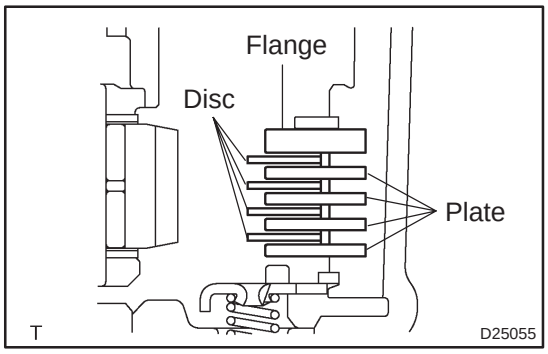

107. INSTALL 1ST & REVERSE BRAKE DISC
[35683 / 3509]

(a) Install the 4 plates, 4 discs and flange to the transaxle case.

(b) Using a screwdriver, install the snap ring.

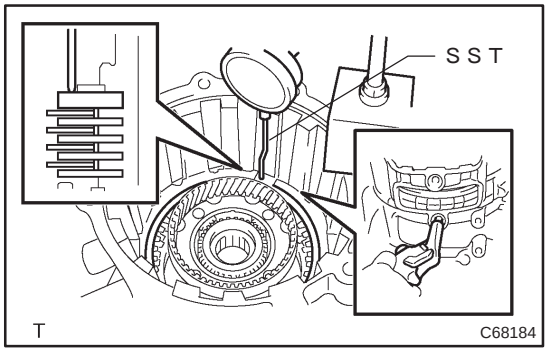

108. INSPECT PACK CLEARANCE OF FIRST & REVERSE BRAKE

(a) Using SST and a dial indicator, measure the dimension "A" in the illustration while pressing the disc and plate from the rear side.
SST 09350–36010 (09350–06110)
Pack clearance: 0.806 – 1.206 mm (0.0317 – 0.0475 in.)

HINT:
Pack clearance = Dimension A – Flange thickness – Snap ring thickness

Select flange thickness: mm (in.)

Mark	Thickness	Mark	Thickness
–	3.4 (0.134)	2	3.8 (0.150)
1	3.6 (0.142)	3	4.0 (0.157)

(b) Check that the 1st & reverse brake piston moves when applying compressed air (392 kPa, 4.0 kgf/cm^2, 57 psi) to the oil hole.

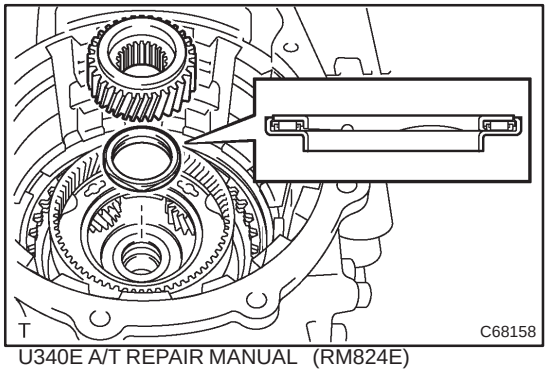

109. INSTALL FR PLANETARY SUN GEAR
[35714D / 3510]

(a) Install the planetary sun gear and needle roller bearing to the planetary gear assy.

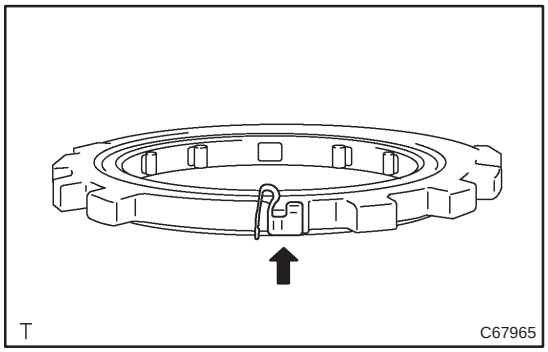

110. INSTALL OUTER RACE RETAINER
[34365A / 3503]

(a) Install outer retainer to the 1 way clutch No.2.

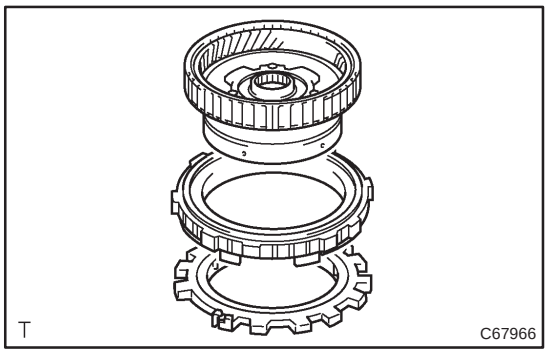

111. INSTALL 1 WAY CLUTCH NO.2
[35792C / 3509]

(a) Install the 1 way clutch and a 2nd brake piston assy to the rear planetary gear assy.

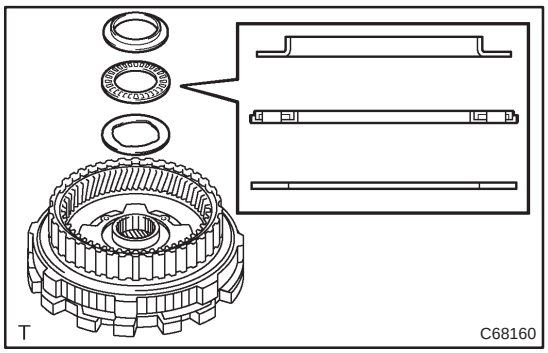

112. INSTALL PLANETARY GEAR REAR THRUST NEEDLE ROLLER BEARING
[35720K / 3510]

(a) Install the thrust bearing race No. 2, planetary gear thrust needle roller bearing and a thrust bearing race No.1 to the rear planetary gear assy.

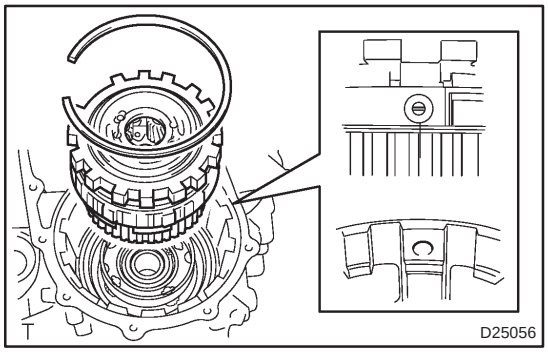

113. INSTALL REAR PLANETARY GEAR ASSY
[35760 / 3510]

(a) Install the rear planetary gear assy to the transaxle case to the transaxle case.

(b) Using a screwdriver, install the snap ring.

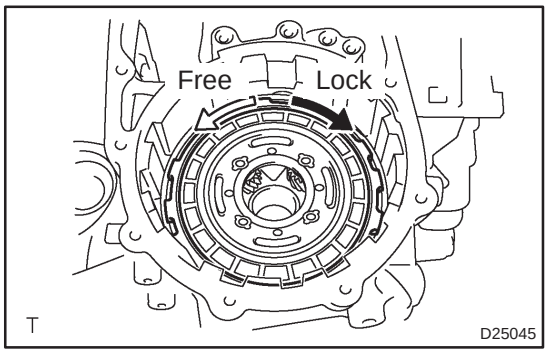

114. INSPECT 1 WAY CLUTCH NO.2
[35792C / 3509]

(a) Check that the rear planetary gear turns freely counter-clockwise and locks clockwise.

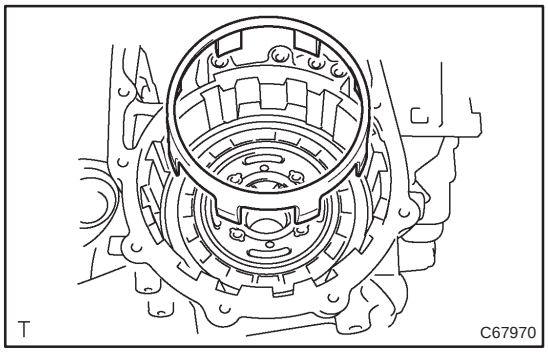

115. INSTALL 2ND BRAKE PISTON SLEEVE [35626D / 3509]

(a) Install the 2nd brake piston sleeve to the transaxle case.

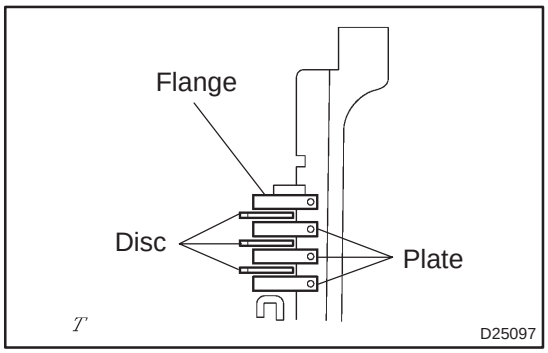

116. INSTALL 2ND BRAKE BRAKE DISC [35682 / 3509]

(a) Install the 3 discs, 3 plates and flange to the transaxle case.

(b) Using a screwdriver, install the snap ring to the transaxle case.

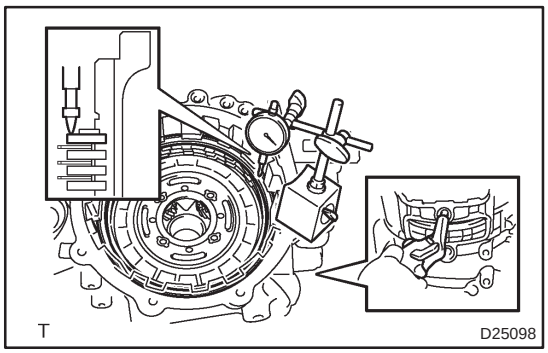

117. INSPECT PACK CLEARANCE OF SECOND BRAKE

(a) Using a dial indicator, measure the 2nd brake pack clearance while applying and releasing compressed air (392 – 785 kPa, 4 – 8 kgf·cm^2, 57 – 114 psi).

Pack clearance: 0.847 – 1.247 mm (0.0333 – 0.0491 in.)

HINT:

Pack clearance = Dimension A – Selected flange thickness – Snap ring thickness.

Selected flange thickness: mm (in.)

Mark	Thickness	Mark	Thickness
–	3.0 (0.118)	2	3.4 (0.134)
1	3.2 (0.126)	3	3.6 (0.142)

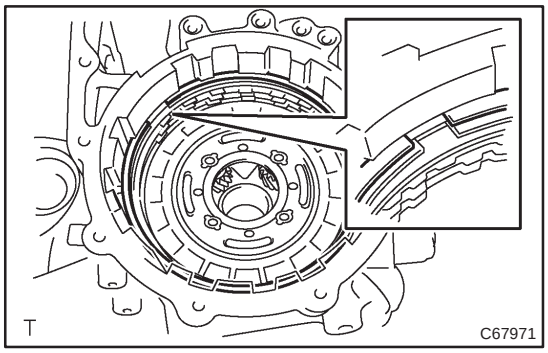

118. INSTALL 2ND COAST & OVERDRIVE BRAKE FLANGE HOLE SNAP RING [34625E / 3509]

(a) Using a screwdriver, install the snap ring to the transaxle case.

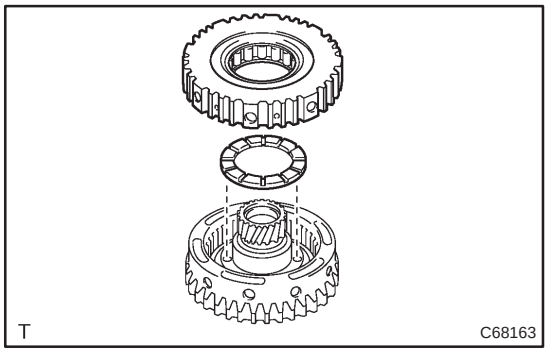

119. INSTALL 1 WAY CLUTCH ASSY
[35790A / 3510]

(a) Install the thrust washer No.2 to the rear planetary gear assy.

(b) Install the 1 way clutch assy to the rear planetary sun gear assy.

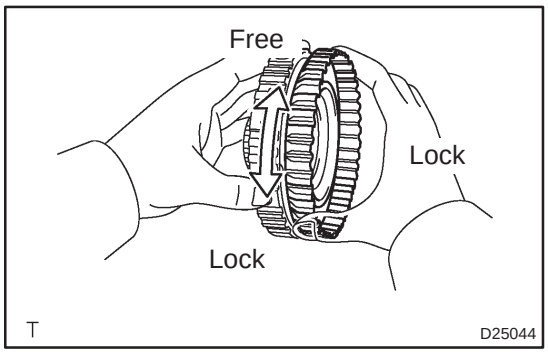

120. INSPECT 1 WAY CLUTCH ASSY
[35790A / 3510]

(a) Hold the rear planetary sun gear and turn the 1 way clutch. The 1 way clutch should turn freely clockwise and should lock counterclockwise.

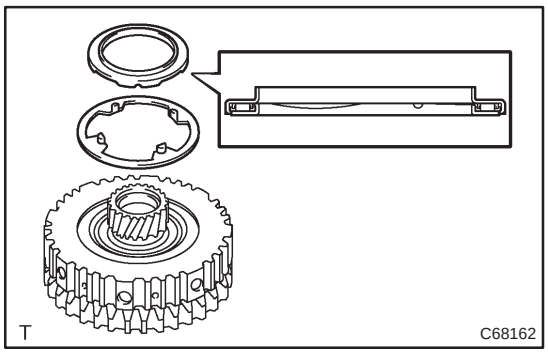

121. INSTALL REAR PLANERARY SUN GEAR THRUST NEEDLE ROLLER BEARING
[35730B / 3510]

(a) Install the thrust bearing and a washer to the rear planetary sun gear.

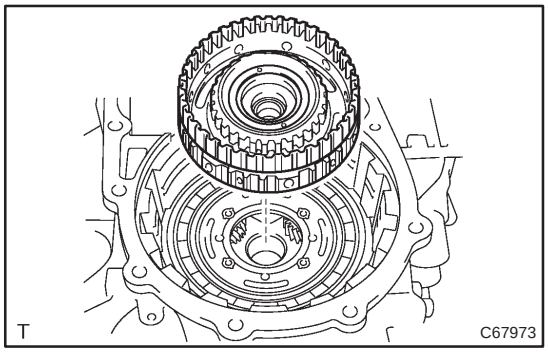

122. INSTALL REAR PLANETARY SUN GEAR ASSY
[35730 / 3510]

(a) Install the rear planetary sun gear assy.

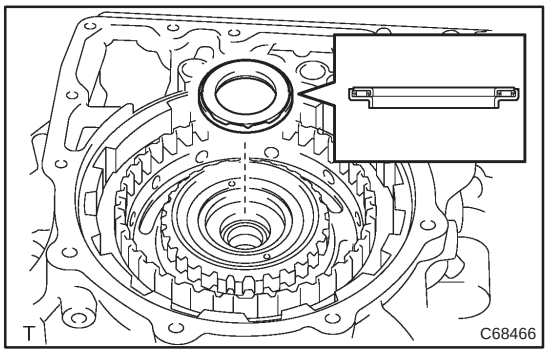

123. INSTALL REAR PLANETARY SUN GEAR, NO.2 THRUST NEEDLE BEARING
[35730C / 3510]

(a) Install the thrust bearing to the rear planetary sun gear.

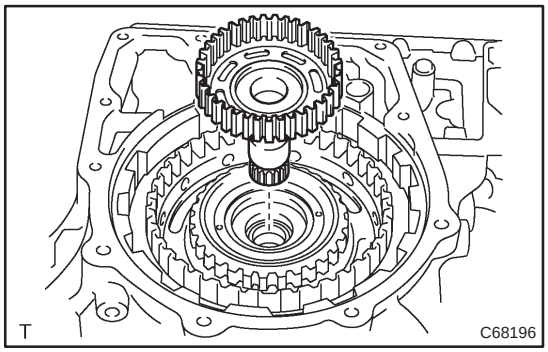

124. INSTALL DIRECT CLUTCH HUB [35654B / 3507]

(a) Install the direct clutch hub.

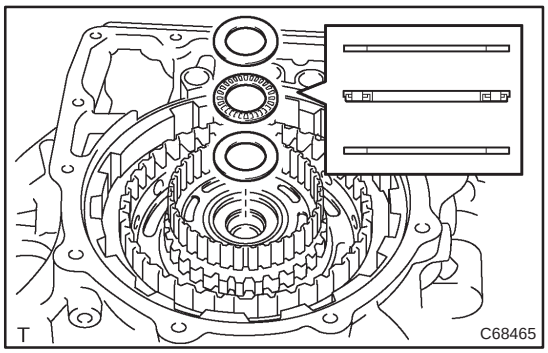

125. INSTALL THRUST NEEDLE ROLLER BEARING [35605B / 3507]

(a) Install the thrust bearing race No.3, thrust needle roller bearing and a C_2 hub thrust bearing race to the direct clutch hub.

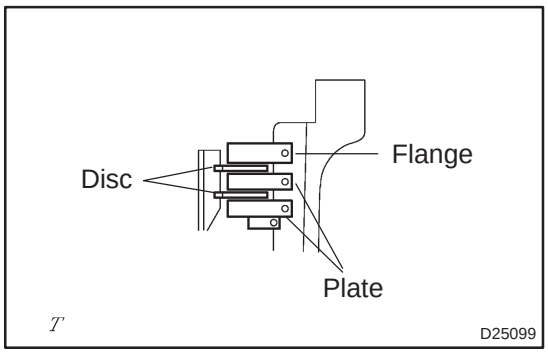

126. INSTALL 2ND COAST & OVERDRIVE BRAKE DISC [34633 / 3509]

(a) Install the 2 discs, 2 plates and a flange to the transaxle case.

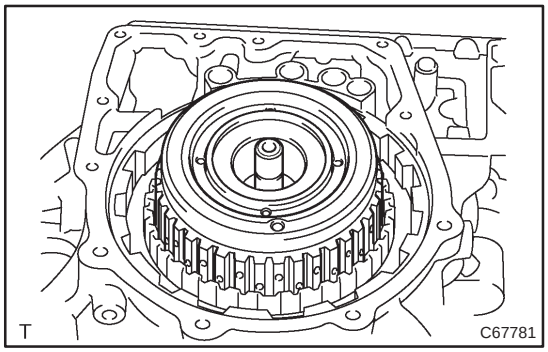

127. INSTALL INTERMEDIATE SHAFT ASSY

(a) Install the intermediate shaft assy to the transaxle case.

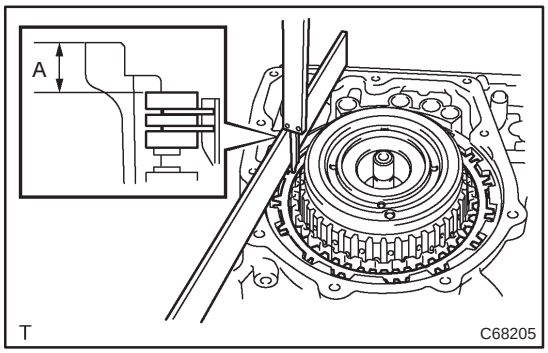

128. INSPECT PACK CLEARANCE OF SECOND COAST & OVER DRIVE BRAKE

(a) As shown in the illustration, place a straight edge on the transaxle case and measure the distance between the 2nd coast & O/D brake flange and straight edge using vernier calipers. (Dimension A)

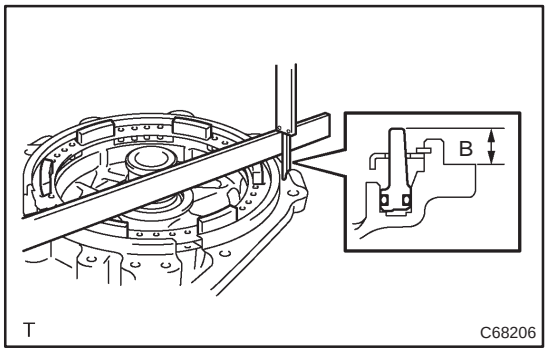

(b) As shown in the illustration, place a straight edge on the O/D brake piston and measure the distance between the transaxle rear cove and straight edge using vernier calipers. (Dimension B)
Calculate the piston stroke value using the following formula. Select a flange which satisfies the piston stroke value and install it.
Pack clearance: 2.091 – 2.491 mm (0.0823 – 0.0981 in)

HINT:
Pack clearance = Dimension ”A” – Dimension ”B” – Selected flange thickness.

Selected flange thickness: mm (in.)

Mark	Thickness	Mark	Thickness
4	4.0 (0.1575)	6	4.4 (0.1732)
5	4.2 (0.1654)	7	4.6 (0.1811)

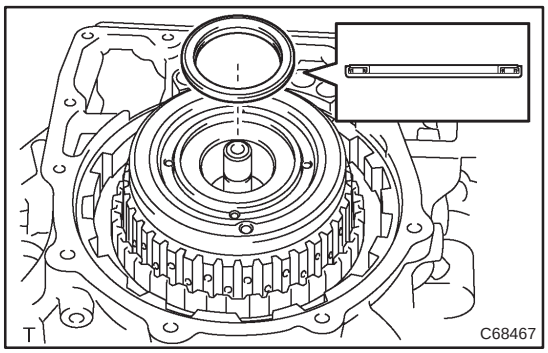

129. INSTALL REAR CLUTCH DRUM THRUST NEEDLE ROLLER BEARING
[35651B / 3507]

(a) Install the bearing to the intermediate shaft.

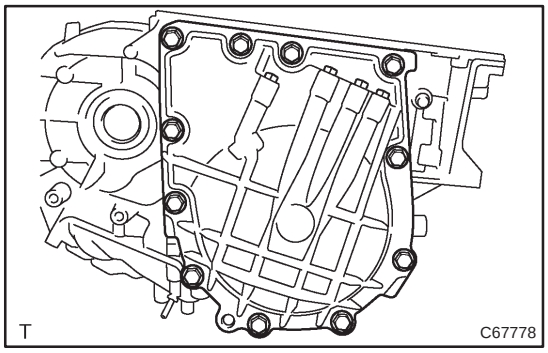

130. INSPECT INTERMEDIATE SHAFT ASSY

(a) Install the transaxle rear cover and 11 bolts.
Torque: 24.5 N·m (250 kgf·cm, 18 ft·lbf)

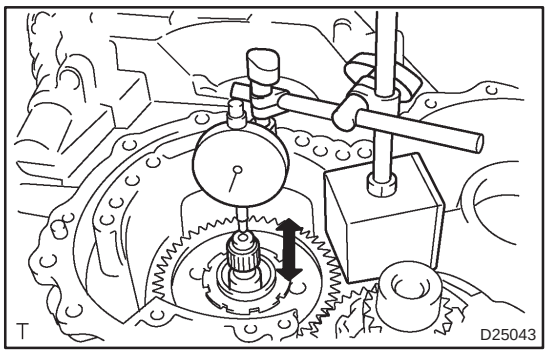

(b) Using a dial indicator, measure the rickety of intermediate shaft.
Standard clearance:
0.204 – 0.966 mm (0.008 – 0.038 in.)

(c) Remove 11 bolts and transaxle rear cover.

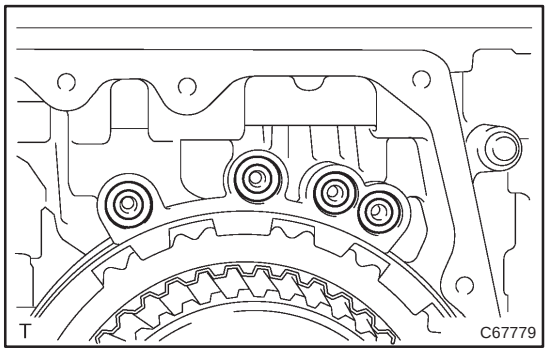

131. INSTALL TRANSAXLE CASE GASKET
[35145C / 3503]

(a) Install the 4 new gaskets to the transaxle case.

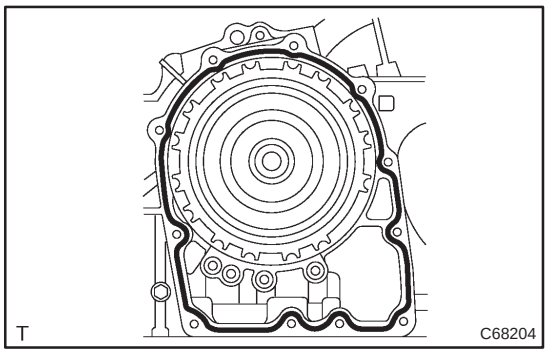

132. INSTALL TRANSAXLE REAR COVER ASSY

(a) Apply FIPG to the transaxle case.
FIPG:
Part NO. 08826–00090, THREE BOND 1281 or equivalent

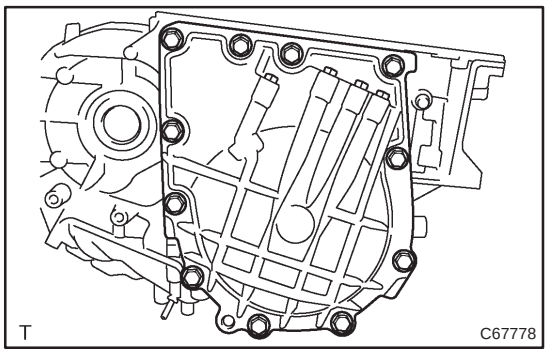

(b) Install the transaxle rear cover and 11 bolts.
Torque: 24.5 N·m (250 kgf·cm, 18 ft·lbf)

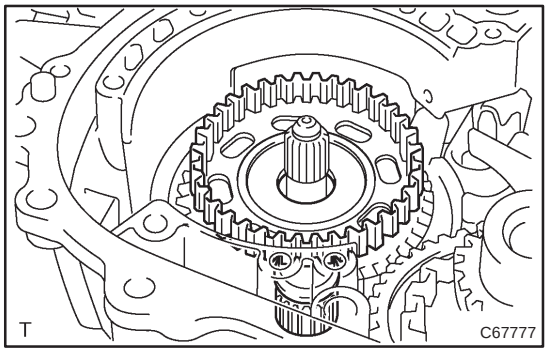

133. INSTALL FORWARD CLUTCH HUB SUB–ASSY
[35061 / 3507]

(a) Install the forward clutch hub sub–assy to the transaxle case.

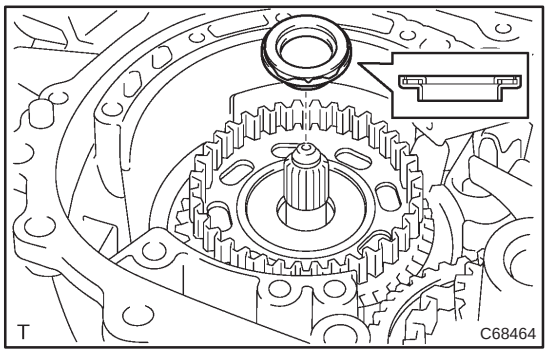

134. INSTALL FORWARD CLUTCH HUB THRUST NEEDLE ROLLER BEARING
[35061C / 3507]

(a) Install the bearing to the forward clutch hub.

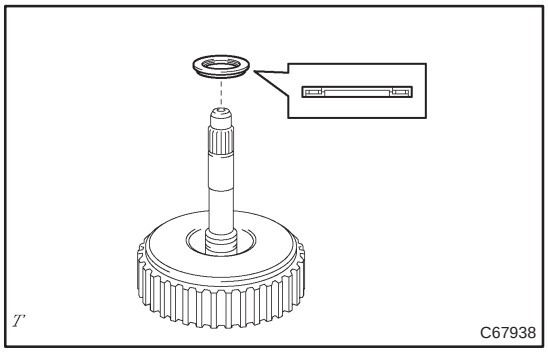

135. INSTALL STATOR SHAFT THRUST NEEDLE ROLLER BEARING
[35370A / 3502]

(a) Install the bearing to the input shaft assy.

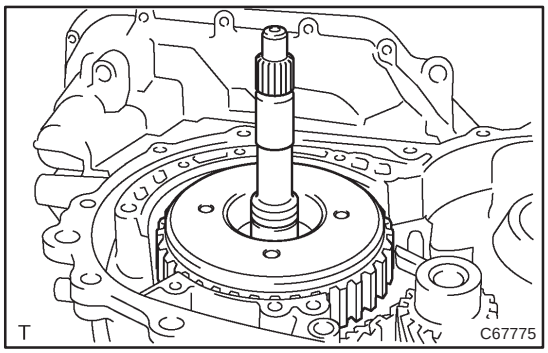

136. INSTALL INPUT SHAFT ASSY

(a) Install the input shaft assy to the transaxle case.

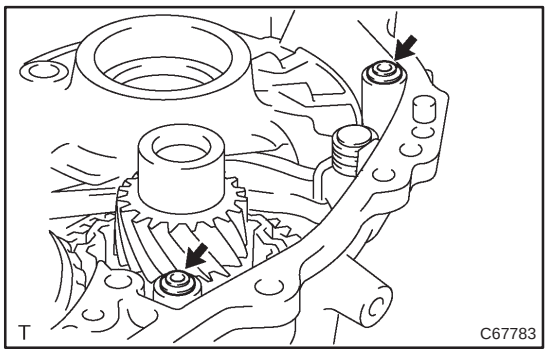

137. INSTALL OVERDRIVE BRAKE GASKET
[35179 / 3503]

(a) Install 2 new gaskets to the transaxle case.

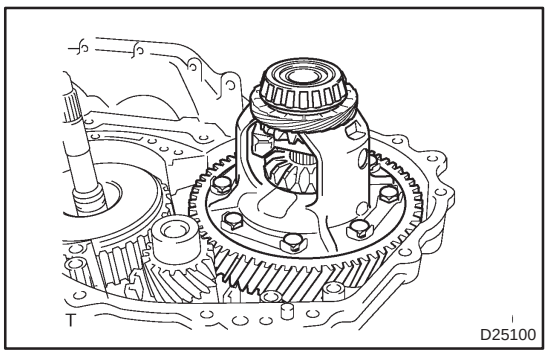

138. INSTALL DIFFERENTIAL GEAR ASSEMBLY

(a) Install the differential gear assy to the transaxle case.

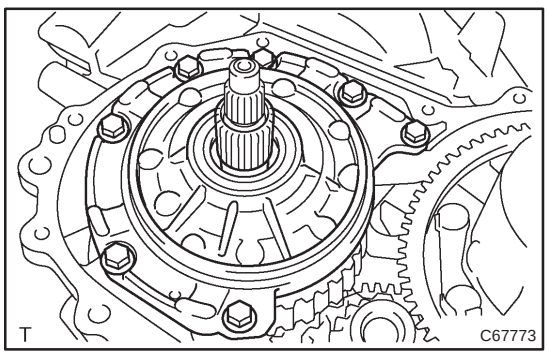

139. INSTALL OIL PUMP ASSEMBLY

(a) Install the 7 bolts and oil pump.
Torque: 22 N·m (220 kgf·cm, 16 ft·lbf)

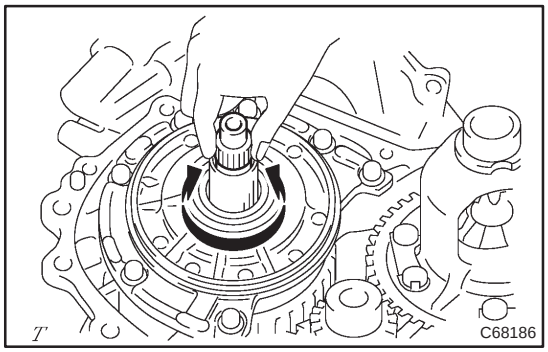

140. INSPECT INPUT SHAFT ASSY

(a) Make sure that the input shaft turns smoothly.

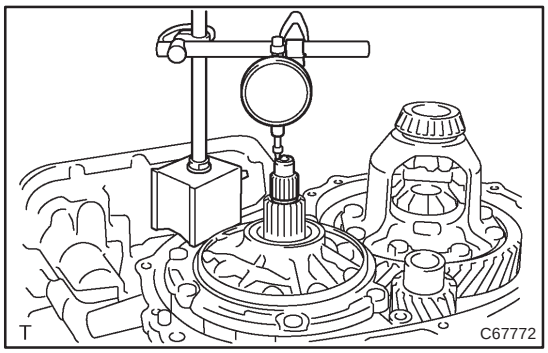

141. INSPECT INPUT SHAFT ENDPLAY

(a) Measure the end play in axial direction.

End play: 0.37 – 1.29 mm (0.0146 – 0.0508 in.)

If the end play is not as specified, select and replace the thrust needle roller bearing.

142. INSTALL FRONT DRIVE PINION FRONT TAPERED ROLLER BEARING
[41211A / 4301]

(a) Install the thrust bearing to the transaxle housing.

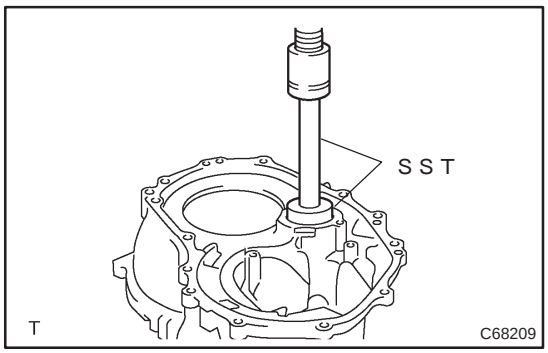

(b) Using SST and a press, install the cylindrical roller bearing to the transaxle housing.

SST 09950–60010 (09951–00650), 09950–70010 (09951–07150)

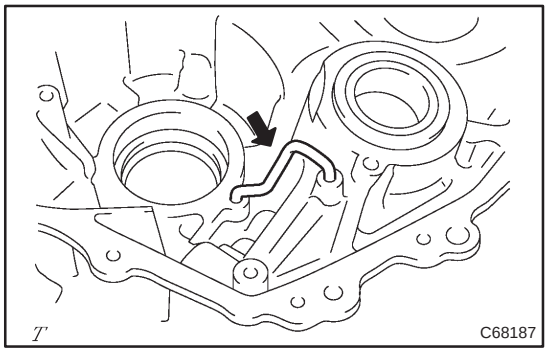

143. INSTALL DIFFERENTIAL GEAR LUBE APPLY TUBE
[35882D / 3510]

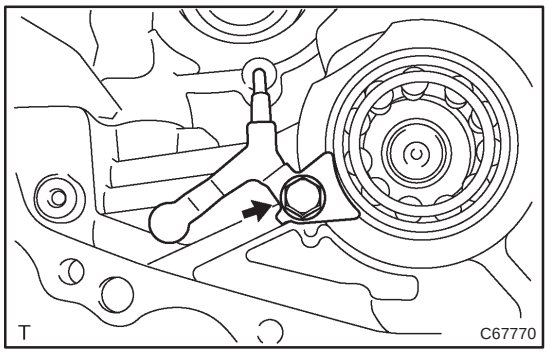

144. INSTALL BEARING LOCK PLATE
[33326E / 3510]

(a) Install the bolt and bearing lock plate to the transaxle housing.

Torque: 11 N·m (110 kgf·cm, 8 ft·lbf)

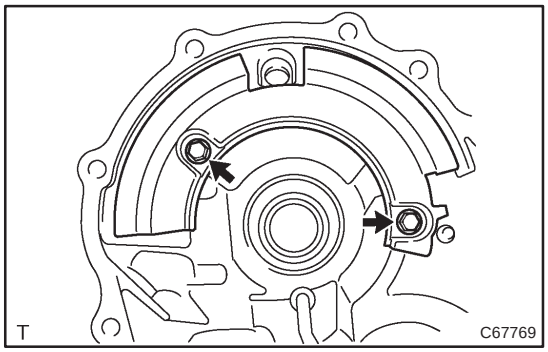

145. INSTALL TRANSAXLE HOUSING OIL SEPARATOR [35174 / 4301]

(a) Install the 2 bolts and oil separator to the transaxle housing.
Torque: 9.8 N·m (100 kgf·cm, 7 ft·lbf)

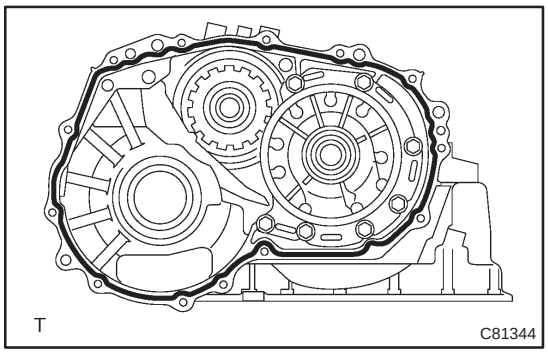

146. INSTALL TRANSAXLE HOUSING [35111C / 4301]

(a) Apply FIPG to the transaxle case.
FIPG:
Part No.08826–00090, THREE BOND 1281 or equivalent

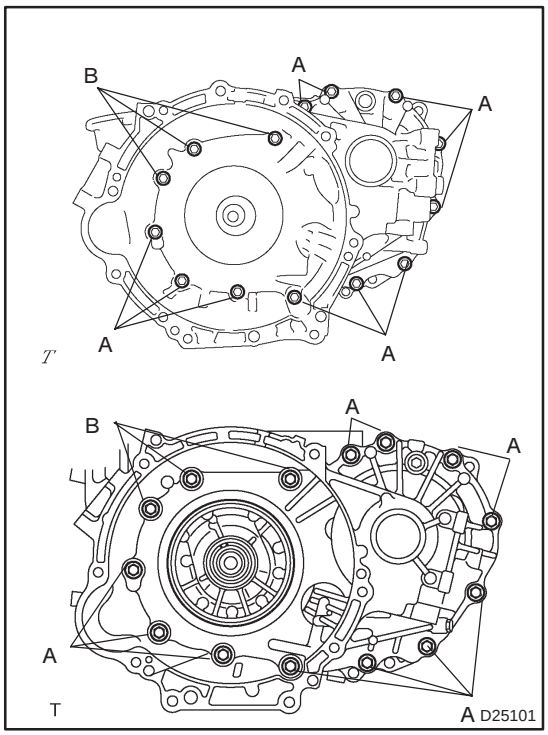

(b) Install the 14 bolts and transaxle housing.
Torque:
Bolt A: 29 N·m (300 kgf·cm, 21 ft·lbf)
Bolt B: 22 N·m (220 kgf·cm, 16 ft·lbf)

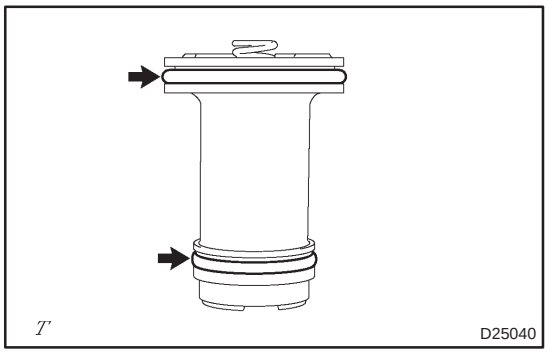

147. INSTALL C–2 ACCUMULATOR PISTON [35425A / 3512]

(a) Coat new 2 O–rings with ATF and install them to the C_2 Accumulator piston.

NOTICE:
Be careful not to damage the O–ring.

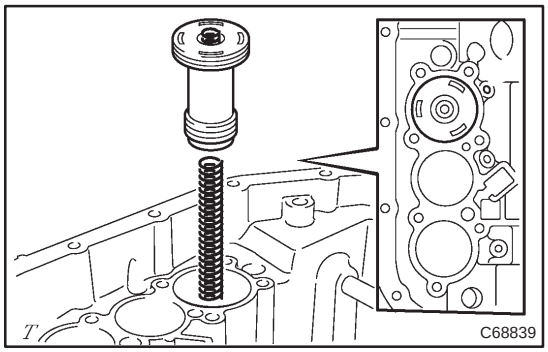

(b) Install the spring and C_2 accumulator piston.
Accumulator spring:

Spring	Free length/ Outer diameter mm (in.)	Color
C_2	66.90 (2.6339)/ 17.20 (0.6772)	–

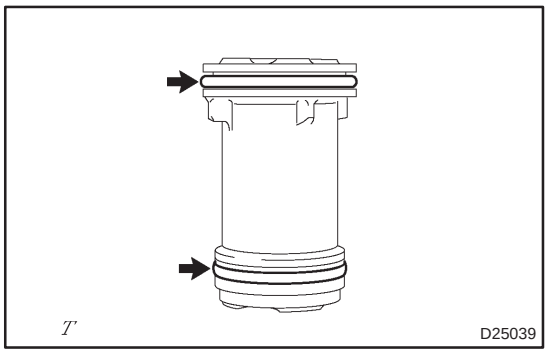

148. INSTALL C–3 ACCUMULATOR PISTON [35426D / 3512]

(a) Coat new 2 O–rings with ATF and install them to the C_3 accumulator piston.

NOTICE:
Be careful not to damage the O–ring.

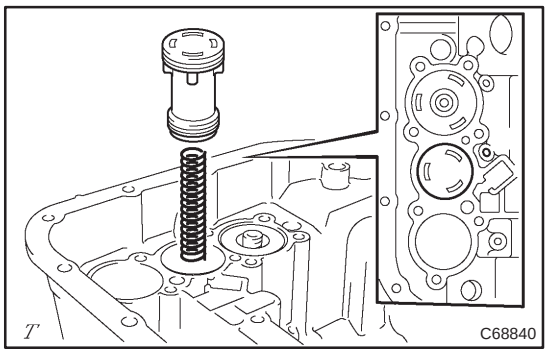

(b) Install the spring and C_3 accumulator piston.
Accumulator spring:

Spring	Free length/ Outer diameter mm (in.)	Color
C_3	80.20 (3.1575)/ 18.70 (0.7362)	Blue

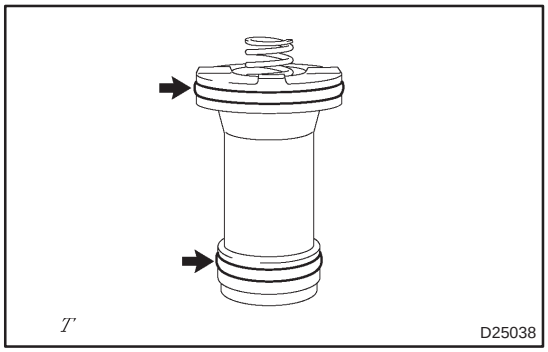

149. INSTALL B–2 ACCUMULATOR PISTON [35423 / 3512]

(a) Coat new 2 O–rings with ATF and install them to the B_2 accumulator piston.

NOTICE:
Be careful not to damage the O–ring.

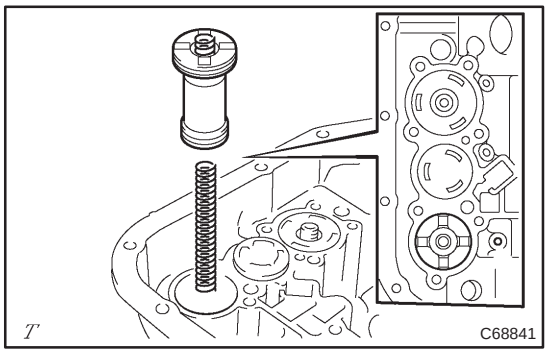

(b) Install the spring and B_2 accumulator piston.
Accumulator spring:

Spring	Free length/ Outer diameter mm (in.)	Color
B_2	66.90 (2.6339)/ 15.50 (0.6102)	Green

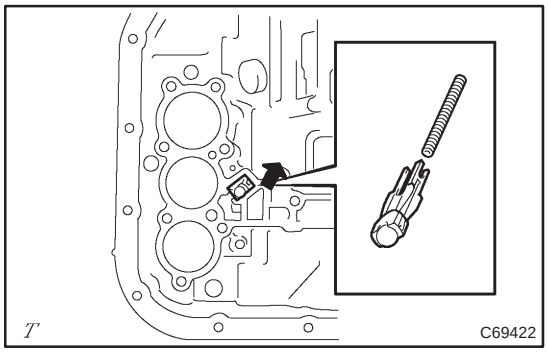

150. INSTALL CHECK BALL BODY
[35251 / 3512]

(a) Install the spring and check ball body.

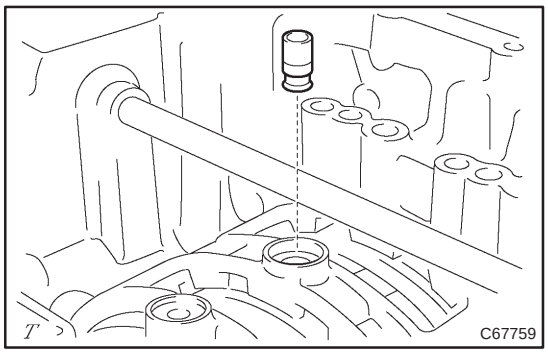

151. INSTALL BRAKE DRUM GASKET
[35159 / 3503]

(a) Install a new brake drum gasket.

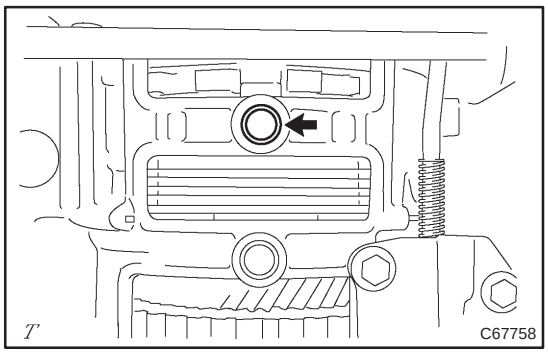

152. INSTALL TRANSAXLE CASE GASKET
[35145C / 3503]

(a) Install a new transaxle case gasket.

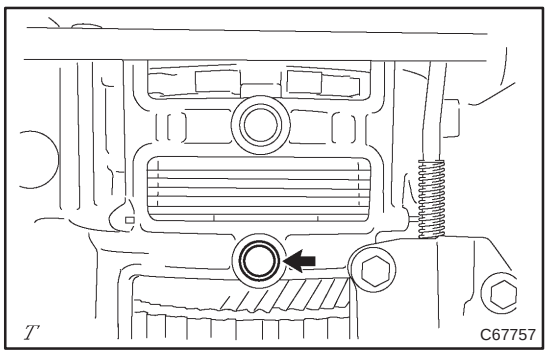

153. INSTALL TRANSAXLE CASE 2ND BRAKE GASKET
[35149B / 3503]

(a) Install a new transmission case 2nd brake gasket.

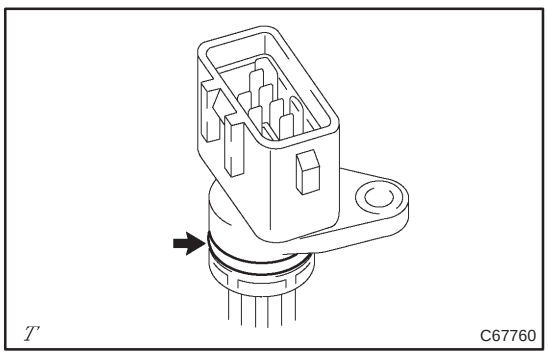

154. INSTALL TRANSMISSION WIRE
[82125J / 3512]

(a) Coat a new O–ring with ATF, install it to the transaxle wire.

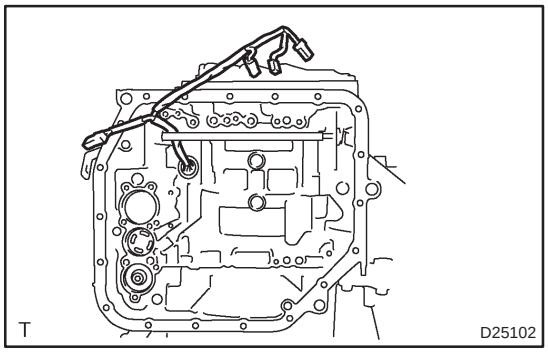

(b) Pierce the transmission wire to the transaxle.

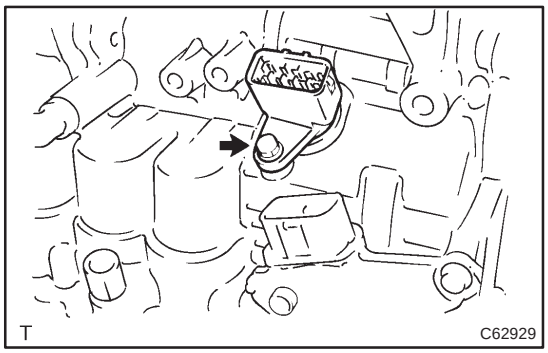

(c) Install the bolt and transaxle wire.
Torque: 5.4 N·m (55 kgf·cm, 48 ft·lbf)

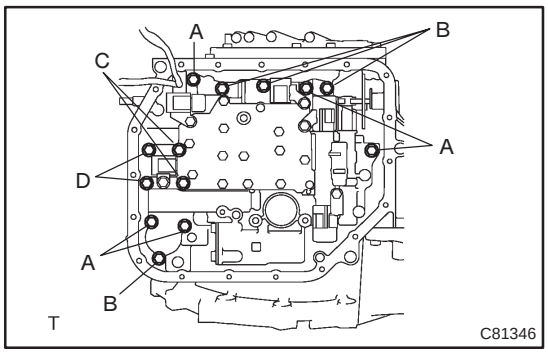

155. INSTALL TRANSMISSION VALVE BODY ASSY [35410 / 3512]

(a) Install the valve body assembly and 13 bolts.
Torque: 11 N·m (110 kgf·cm, 8 ft·lbf)
Bolt length:
Bolt A: 32 mm (1.26 in.)
Bolt B: 22 mm (0.87 in.)
Bolt C: 55 mm (2.17 in.)
Bolt D: 45 mm (1.77 in.)

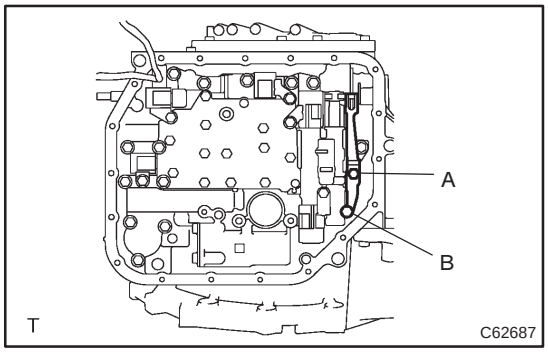

(b) Install the detente spring, detente spring cover and 2 bolts.
Torque: 11 N·m (110 kgf·cm, 8 ft·lbf)
Bolt length:
Bolt A: 14 mm (0.55 in.)
Bolt B: 45 mm (1.77 in.)

(c) Check that the manual valve lever is touching the center of the detente spring tip roller.

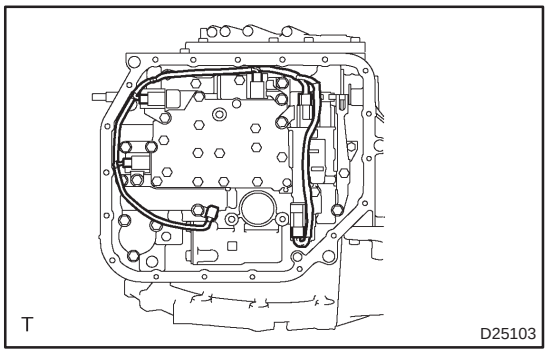

(d) Connect the 5 solenoid connectors.

(e) Coat a new O–ring with ATF, install it to the ATF temperature sensor.

(f) Install the ATF temperature sensor, lock plate and bolt.
Torque: 11 N·m (110 kgf·cm, 8 ft·lbf)
Bolt length: 55 mm (2.17 in.)

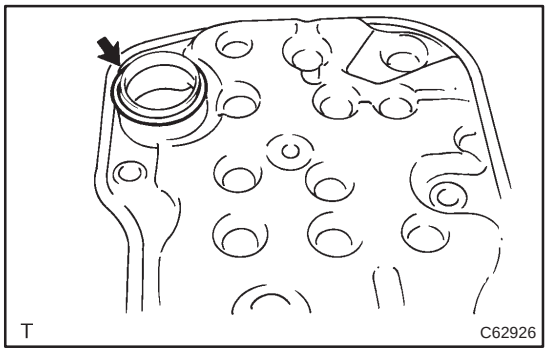

156. INSTALL VALVE BODY OIL STRAINER ASSY [35330 / 3512]

(a) Coat a new O–ring with ATF, install it to the oil strainer.

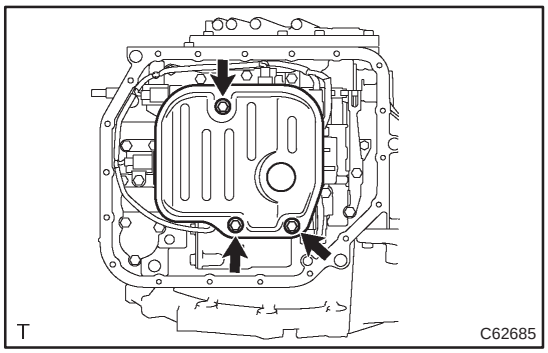

(b) Install the oil strainer and 3 bolts.
Torque: 11 N·m (110 kgf·cm, 8 ft·lbf)

157. INSTALL AUTOMATIC TRANSAXLE OIL PAN GASKET [35168A / 3503]

(a) Install the new gasket to the oil pan.

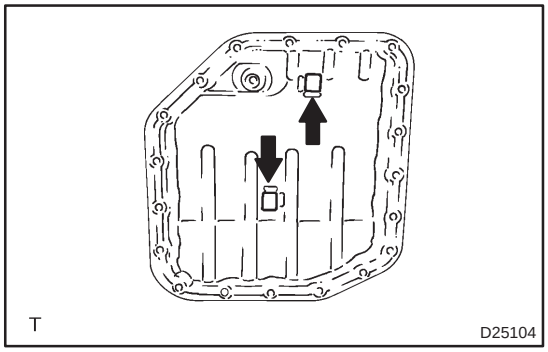

158. INSTALL AUTOMATIC TRANSAXLE OIL PAN SUB–ASSY [35106D / 3503]

(a) Install the 2 magnets in the oil pan.

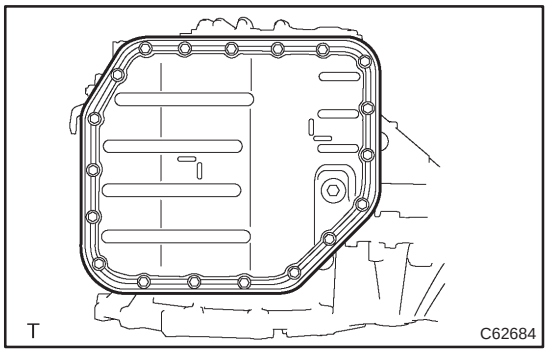

(b) Install the oil pan sub–assy and 19 bolts.
Torque: 7.8 N·m (80 kgf·cm, 71 in.·lbf)

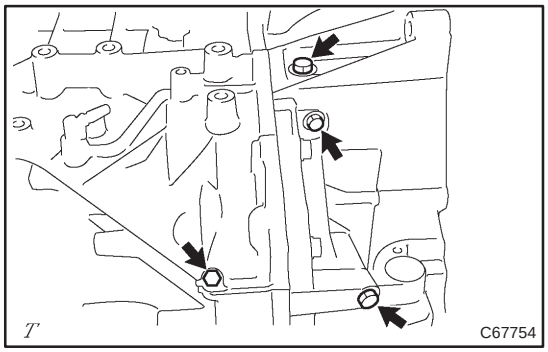

159. INSTALL TRANSAXLE CASE NO.1 PLUG
[35104Q / 3503]

(a) Coat 5 new O–rings with ATF, install them to the screw plugs.

(b) Install the 4 screw plugs.
Torque: 7.4 N·m (75 kgf·cm, 65 in.·lbf)

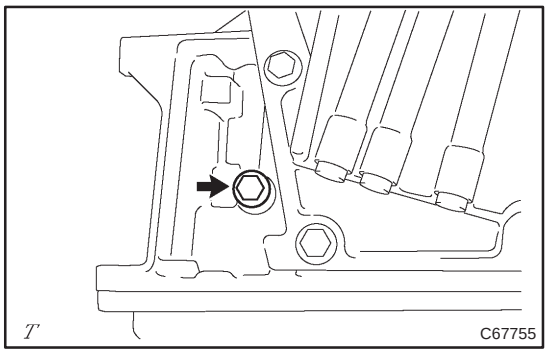

(c) Install the screw plug.
Torque: 7.4 N·m (75 kgf·cm, 65 in.·lbf)

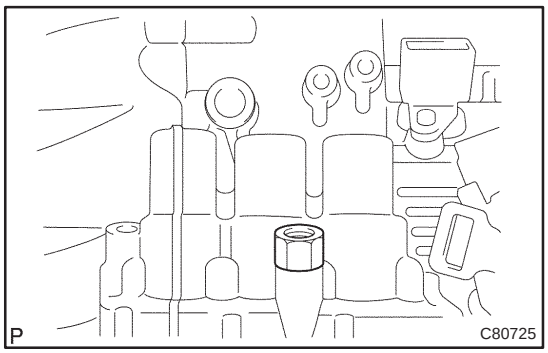

160. INSTALL OIL COOLER TUBE UNION(INLET OIL COOLER UNION)
[32921C / 3514]

(a) coat 2 new O–rings with ATF, install them to the union.

(b) Install the union.
Torque: 27 N·m (275 kgf·cm, 20 ft·lbf)

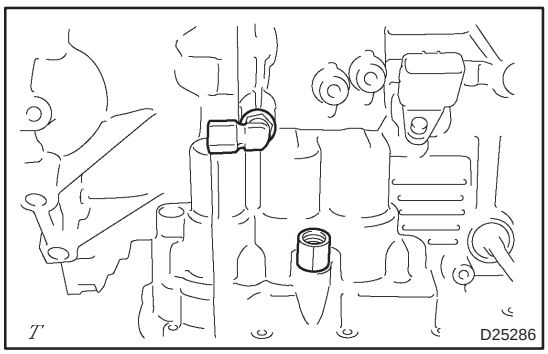

161. INSTALL OIL COOLER TUBE UNION(OUTLET OIL COOLER UNION)
[32921C / 3514]

(a) coat 2 new O–rings with ATF, install them to the elbow.

(b) Install the elbow.
Torque: 27 N·m (275 kgf·cm, 20 ft·lbf)

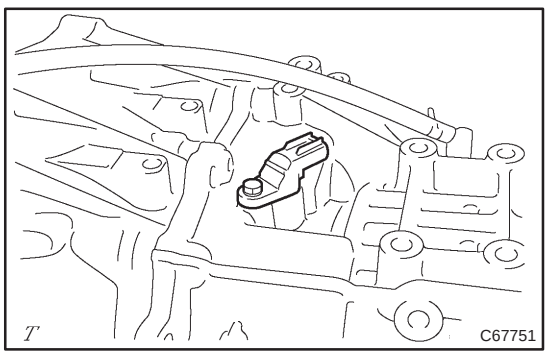

162. INSTALL TRANSMISSION REVOLUTION SENSOR
[89413E / 3512]

(a) Install the bolt and transmission revolution sensor.
Torque: 5.4 N·m (55 kgf·cm, 48 in.·lbf)

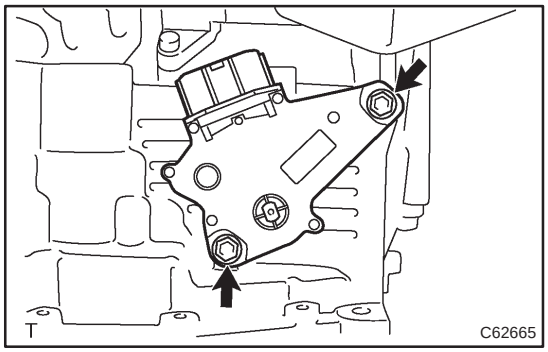

163. INSTALL NEUTRAL START SWITCH ASSY [84540G / 3513]

(a) Install the park/neutral position switch onto the manual valve lever shaft and temporarily install the 2 adjusting bolts.

(b) Install a new lock washer and nuts.
Torque: 6.9 N·m (70 kgf·cm, 61 in.·lbf)

(c) Temporarily install the control lever.

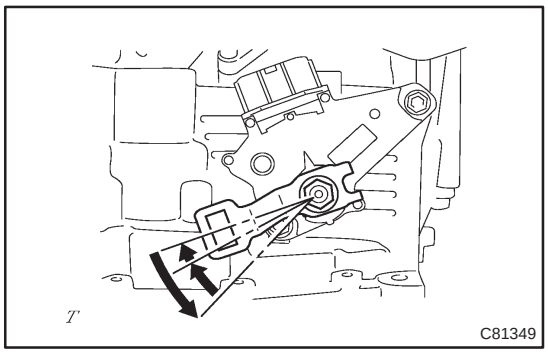

(d) Turn the lever counterclockwise until it stops, then turn it clockwise 2 notches.

(e) Remove the control lever.

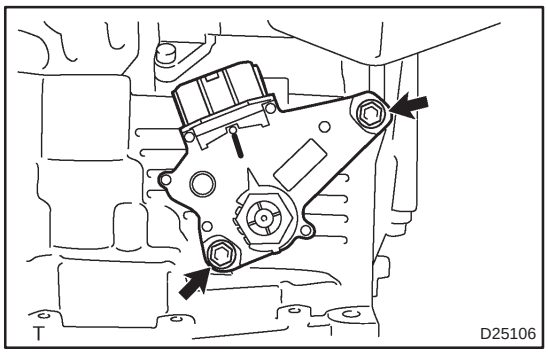

(f) Align the groove with neutral basic line.

(g) Tighten the 2 bolts.
Torque: 5.4 N·m (55 kgf·cm, 48 in.·lbf)

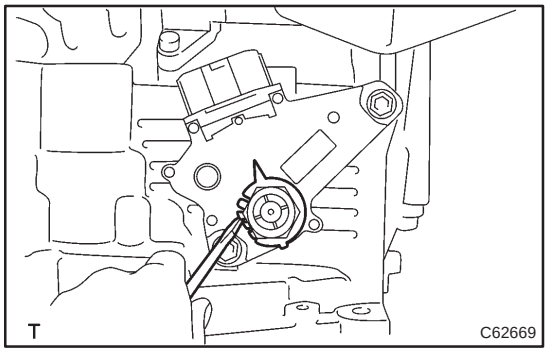

(h) Using a screwdriver, stake the nut with the lock washer.

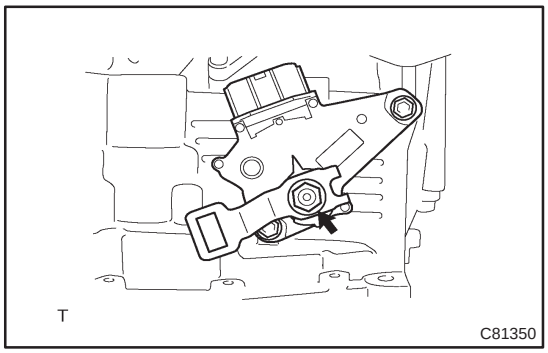

(i) Install the control lever, washer and nut.
Torque: 13 N·m (130 kgf·cm, 10 ft·lbf)

164. INSTALL SPEEDOMETER DRIVEN (ATM) GEAR SUB–ASSY
[33403G / 3505]

165. INSTALL SPEEDOMETER (ATM) SENSOR
[83181E / 3505]

OIL PUMP ASSY (U34#E Series)

4002H–01

OVERHAUL

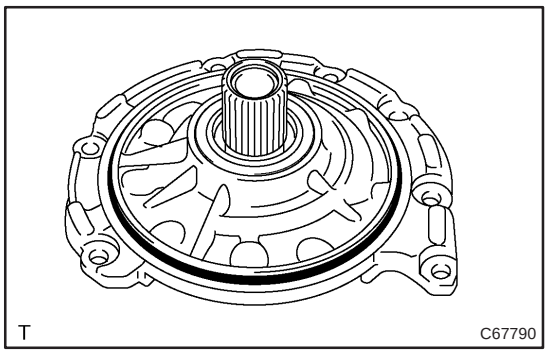

1. REMOVE FRONT OIL PUMP BODY O–RING [35301B / 3502]

(a) Remove the O–ring from the oil pump.

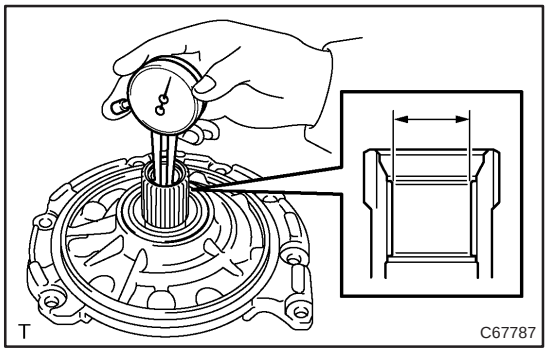

2. INSPECT STATOR SHAFT ASSY [35370 / 3502]

(a) Using a dial indicator, measure the inside diameter of the stator shaft bushings.

Standard inside diameter:
21.500 – 21.526 mm (0.84646 – 0.84748 in.)
Maximum inside diameter: 21.526 mm (0.84748 in.)

If the inside diameter is greater than the maximum, replace the stator shaft.

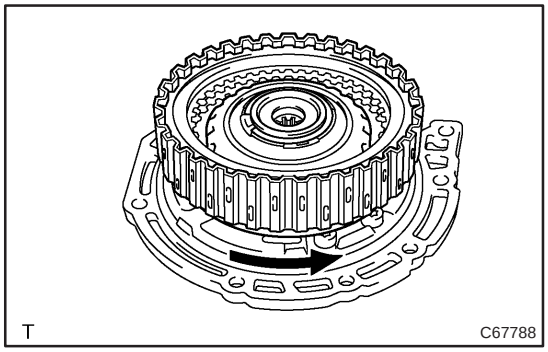

(b) Install the input shaft assy to the stator shaft assy, check that the input shaft assy turns smoothly.

NOTICE:
Replace the stator shaft assy with new one if rough movement or unusual noise is identified. When replacing, inspect the input shaft's contact surface with the bearing and if any damage or discolor is found, replace the input shaft with new one.

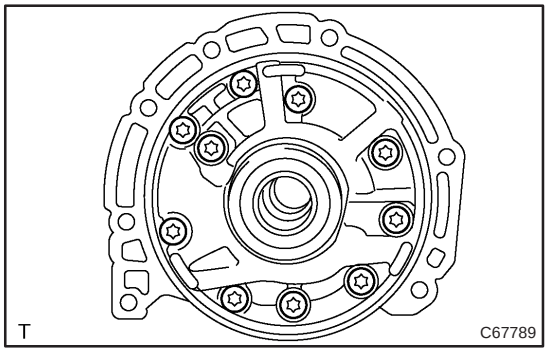

3. REMOVE STATOR SHAFT ASSY [35370 / 3502]

(a) Using a torx socket wrench (T30), remove the 10 torx screws.

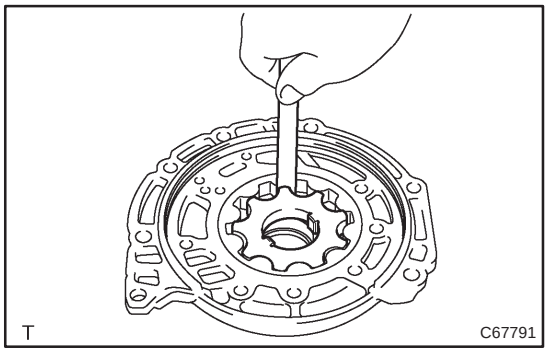

4. INSPECT CLEARANCE OF OIL PUMP ASSEMBLY

(a) Measure the tip clearance between the driven gear teeth and drive gear teeth.

Standard tip clearance:
0.07 – 0.15 mm (0.0028 – 0.0059 in.)
Maximum tip clearance: 0.15 mm (0.0059 in.)

If the tip clearance is greater than the maximum, replace the oil pump body sub–assembly.

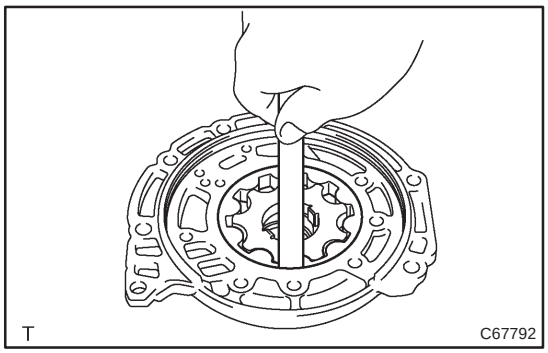

(b) Push the driven gear to one side of the body. Using a feeler gauge, measure the clearance.

Standard body clearance:
0.10 – 1.15 mm (0.0039 – 0.0059 in.)
Maximum body clearance: 0.15 mm (0.0059 in.)

If the body clearance is greater than the maximum, replace the oil pump body sub–assembly.

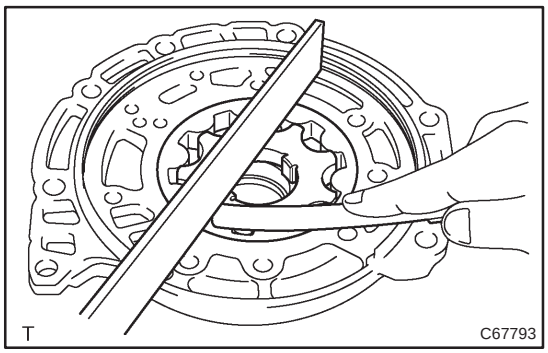

(c) Using a steel straight edge and feeler gauge, measure the side clearance of both gears.

Standard side clearance:
0.02 – 0.05 mm (0.0008 – 0.0020 in.)
Maximum side clearance: 0.05 mm (0.0020 in.)

If the side clearance is greater than the maximum, replace the drive gear, driven gear or pump body.

Drive gear thickness: mm (in.)

No.	Thickness
1	9.44 – 9.45 (0.3709 –0.3713)
2	9.45 – 9.46 (0.3713 – 0.3717)
3	9.46 – 9.47 (0.3717 – 0.3721)
4	9.47 – 9.48 (0.3721 – 0.3725)
5	9.48 – 9.49 (033725 – 0.3729)

Driven gear thickness: mm (in.)

No.	Thickness
1	9.44 – 9.45 (0.3709 –0.3713)
2	9.45 – 9.46 (0.3713 – 0.3717)
3	9.46 – 9.47 (0.3717 – 0.3721)
4	9.47 – 9.48 (0.3721 – 0.3725)
5	9.48 – 9.49 (033725 – 0.3729)

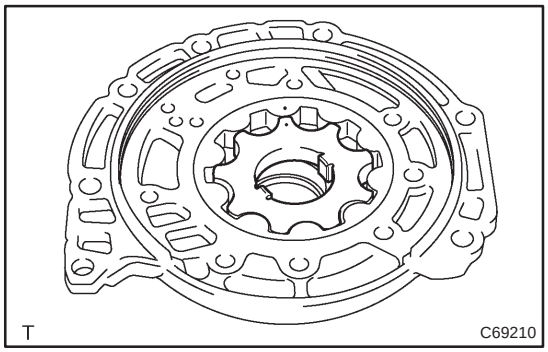

5. REMOVE FRONT OIL PUMP DRIVE GEAR [35321 / 3502]

(a) Remove the front oil pump drive gear from the oil pump body.

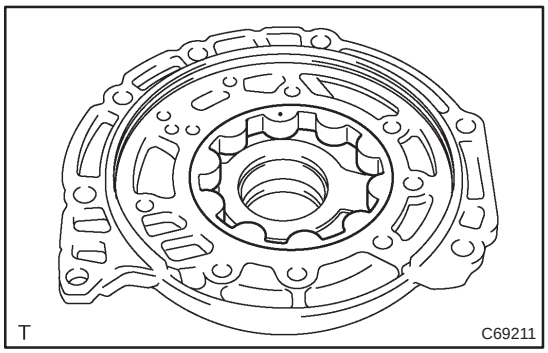

6. REMOVE FRONT OIL PUMP DRIVEN GEAR [35322 / 3502]

(a) Remove the front oil pump driven gear from the oil pump body.

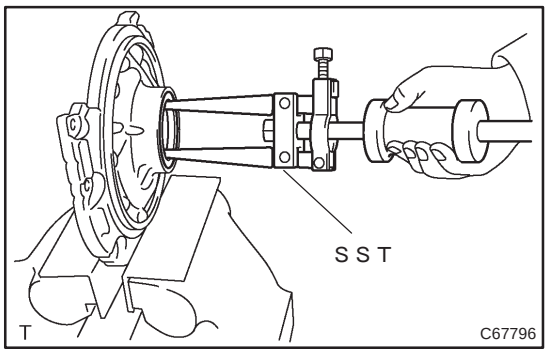

7. REMOVE FRONT OIL PUMP OIL SEAL [35301A / 3502]

(a) Using SST, remove the oil seal from the oil pump body.
SST 09308–00010

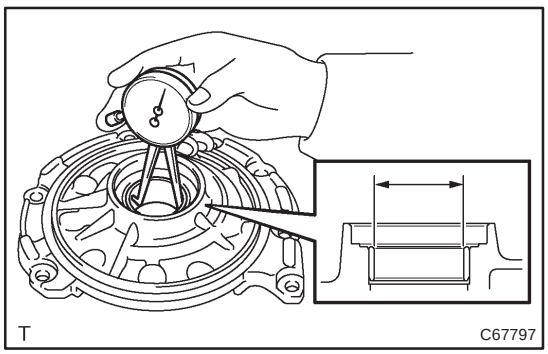

8. INSPECT FRONT OIL PUMP BODY SUB–ASSY [35301 / 3502]

(a) Using a dial indicator, measure the inside diameter of the oil pump body bushing.
Standard inside diameter:
38.113 – 38.138 mm (1.50050 – 1.50149 in.)
Maximum inside diameter: 38.138 mm (1.50149 in.)

If the inside diameter is greater than the maximum, replace the oil pump body sub–assy.

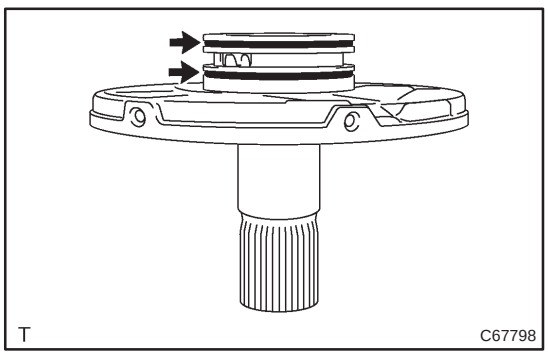

9. REMOVE CLUTCH DRUM OIL SEAL RING [35617 / 3502]

(a) Using a screwdriver, remove the 2 oil seals from the stator shaft assy.

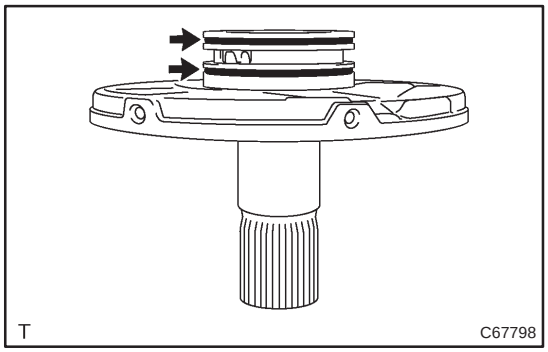

10. INSTALL CLUTCH DRUM OIL SEAL RING
[35617 / 3502]

(a) Install the 2 seal rings to the stator shaft assy.

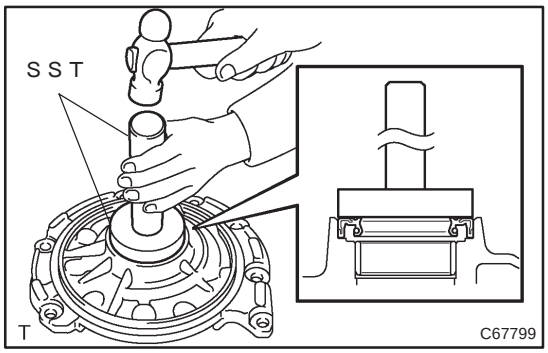

11. INSTALL FRONT OIL PUMP OIL SEAL
[35301A / 3502]

(a) Using SST, install the oil seal to the oil pump body.
SST 09950–60010 (09951–00550), 09950–70010 (09951–07100)
Oil seal in depth:
0 ± 0.5 mm (0 ± 0.020 in.)

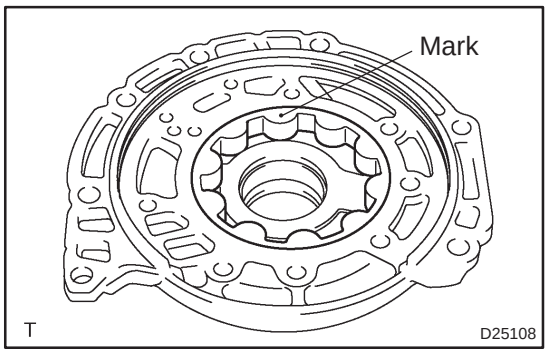

12. INSTALL FRONT OIL PUMP DRIVEN GEAR
[35322 / 3502]

(a) Apply ATF to the front oil pump driven gear and install it to the oil pump body with the marked side up.

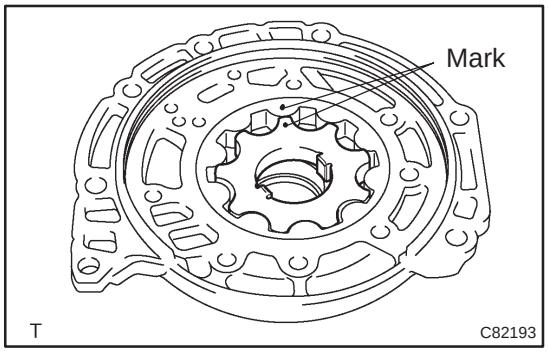

13. INSTALL FRONT OIL PUMP DRIVE GEAR
[35321 / 3502]

(a) Apply ATF to the front oil pump drive gear and install it to the oil pump body with the marked side up.

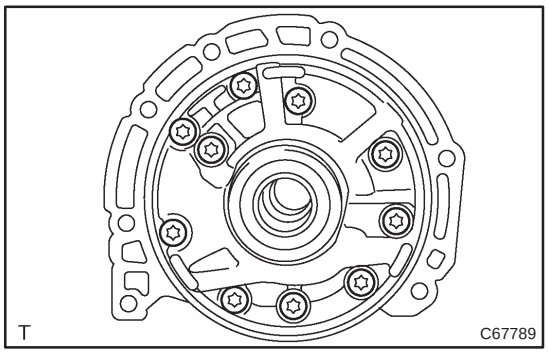

14. INSTALL STATOR SHAFT ASSY
[35370 / 3502]

(a) Using a torx socket wrench (T30), install the 10 torx screws.
Torque: 9.8 N·m (100 kgf·cm, 87 in.·lbf)

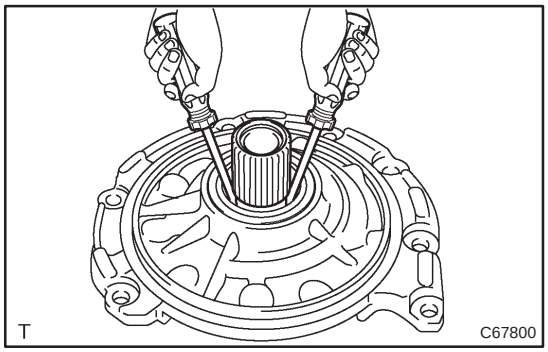

15. INSPECT OIL PUMP ASSEMBLY

(a) Turn the drive gear with 2 screwdrivers and make sure it rotates smoothly.

NOTICE:

Be careful not to damage the oil seal lip.

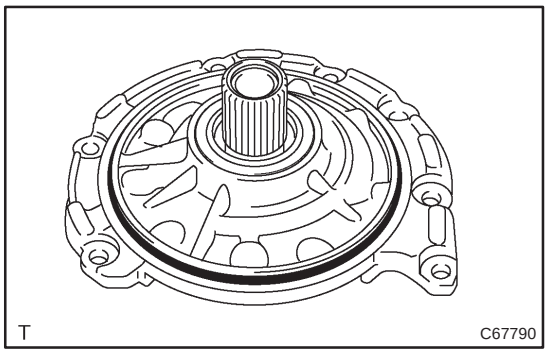

16. INSTALL FRONT OIL PUMP BODY O–RING [35301B / 3502]

(a) Apply ATF to the O–ring and install it to the oil pump sassy.

INPUT SHAFT ASSY (U34#E Series)

OVERHAUL

4002I–01

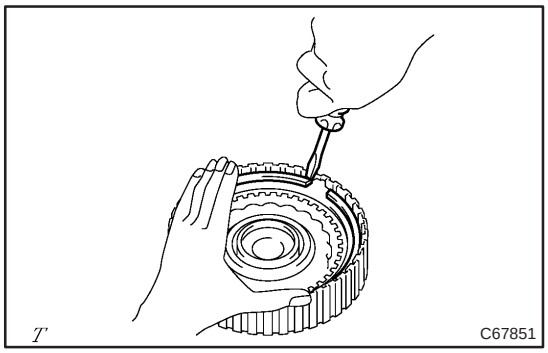

1. REMOVE FRONT CLUTCH CLUTCH DISC [35633 / 3507]

(a) Using a screwdriver, remove the snap ring.

(b) Remove the flange, 4 discs and 4 plates.

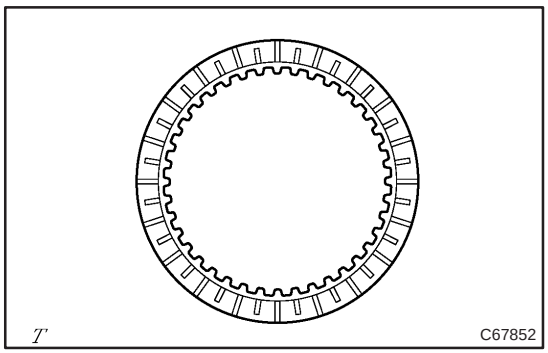

2. INSPECT FRONT CLUTCH CLUTCH DISC [35633 / 3507]

(a) Check to see if the sliding surface of the disc, plate and flange are worn or burnt.

If necessary, replace them.

HINT:

- **If the lining of the disc is peeling off or discolored, or even if a part of the printed number is defaced, replace all discs.**
- **Before assembling new discs, soak them in ATF for at least 15 minutes.**

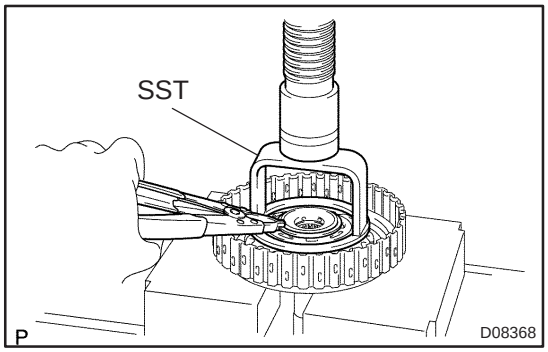

3. REMOVE FORWARD CLUTCH RETURN SPRING SUB–ASSY [35603A / 3507]

(a) Using SST on the clutch balancer, and compress the return spring with a press.

SST 09320–89010

NOTICE:

Do not compress the return spring excessively.

(b) Using a snap ring expander, remove the snap ring.

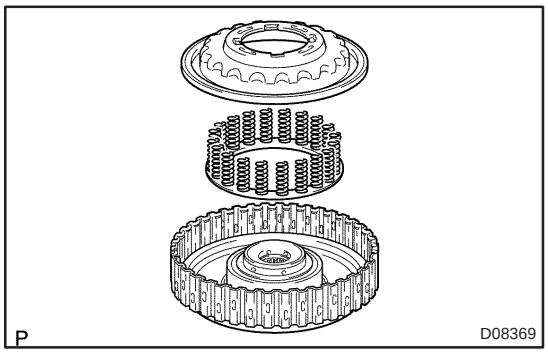

(c) Remove the clutch balancer and piston return spring.

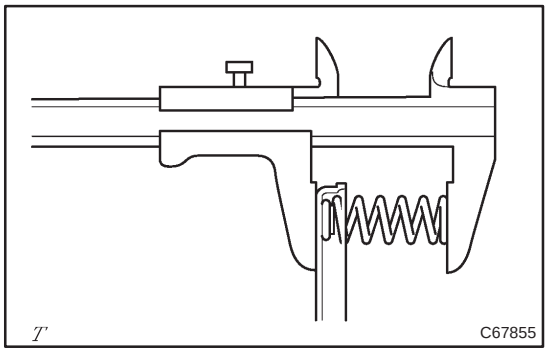

4. INSPECT FORWARD CLUTCH RETURN SPRING SUB–ASSY
[35603A / 3507]

(a) Using a vernier calipers, measure the free length of the spring together with the spring seat.
Standard free length: 21.69 mm (0.8540 in.)

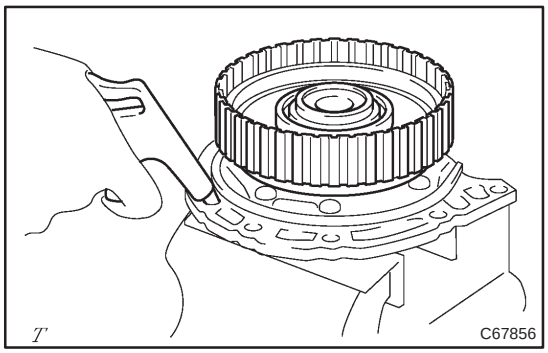

5. REMOVE FORWARD CLUTCH PISTON
[35612B / 3507]

(a) Place the input shaft onto the oil pump.
(b) Holding the forward clutch piston with your hand, apply compressed air (392 kPa, 4.0 kgf·cm^2, 57 psi) to the oil pump to remove the forward clutch piston.

HINT:
When the piston can not be removed as it is slanted, either blow the air again with the protruding side pushed or remove the piston using the needle nose plier with vinyl tape on the tip.

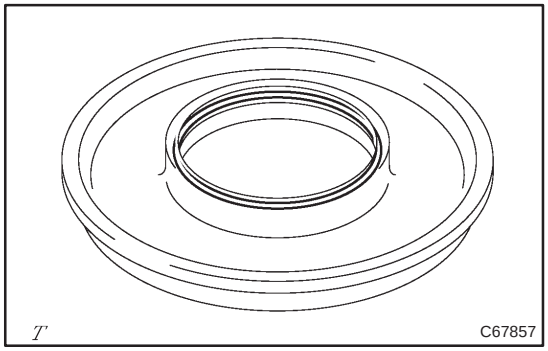

6. REMOVE FORWARD CLUTCH PISTON O–RING
[35612C / 3507]

(a) Using a screwdriver, remove the O–ring.

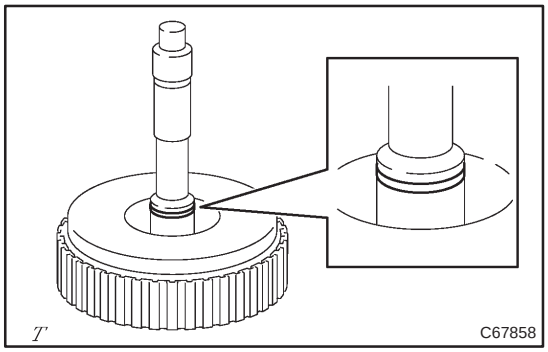

7. REMOVE INPUT SHAFT OIL SEAL RING
[35712A / 3507]

(a) Using a screwdriver, remove the oil seal ring from the input shaft.

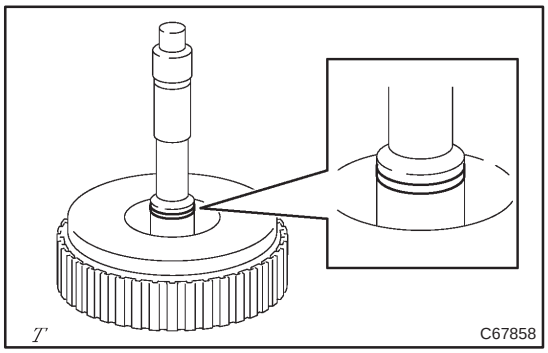

8. INSTALL INPUT SHAFT OIL SEAL RING
[35712A / 3507]

(a) Coat a new oil seal ring with ATF, and install it to the input shaft.

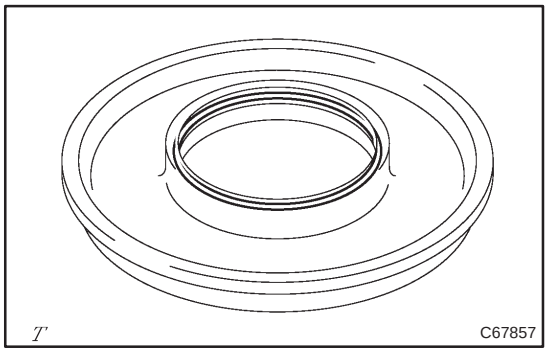

9. INSTALL FORWARD CLUTCH PISTON O–RING [35612C / 3507]

(a) Coat a new O–ring with ATF, and install it to the forward clutch piston.

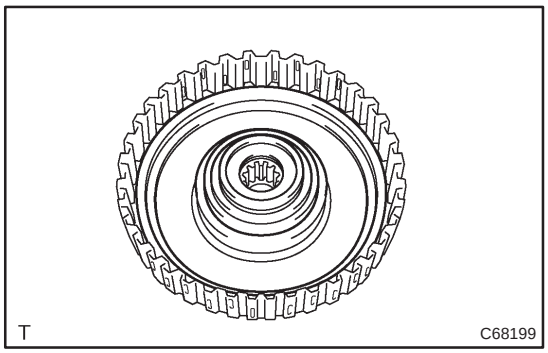

10. INSTALL FORWARD CLUTCH PISTON [35612B / 3507]

(a) Install the forward clutch piston to the input shaft.

NOTICE:

Be careful not to damage the O–ring.

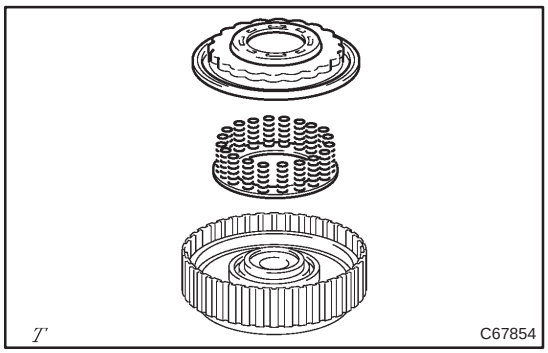

11. INSTALL FORWARD CLUTCH RETURN SPRING SUB–ASSY [35603A / 3507]

(a) Install the clutch balancer and return spring to the input shaft.

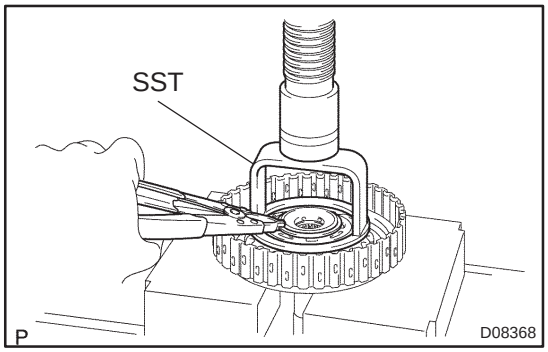

(b) Using SST, a press and a snap ring plier, install the snap ring to the forward clutch return spring.
SST 09320–89010

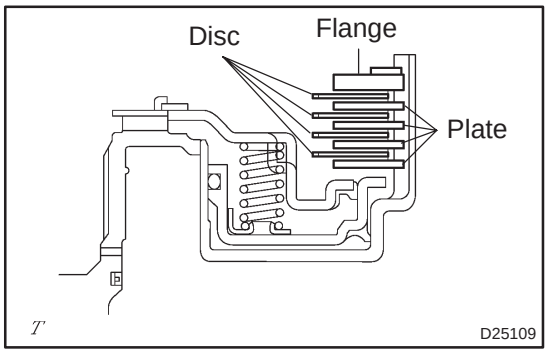

12. INSTALL FRONT CLUTCH CLUTCH DISC [35633 / 3507]

(a) Install the 4 plates, 4 discs and flange.

(b) Using a screwdriver, install the snap ring.

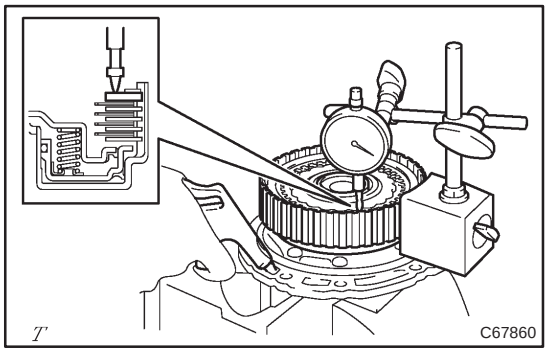

13. INSPECT PACK CLEARANCE OF FORWARD CLUTCH

(a) Using a dial indicator, measure the pack clearance while applying and releasing compressed air (392 kPa, 4.0 kgf·cm^2, 57 psi).

Pack clearance:

1.406 – 1.806 mm (0.05535 – 0.07110 in.)

If the piston stroke is less than the limit, parts may have been assembled incorrectly, check and reassemble again.

If the clearance is non–standard, select another flange.

HINT:

There are 4 different flanges in thickness.

Flange thickness: mm (in.)

No.	Thickness	No.	Thickness
–	3.00 (0.1181)	2	3.40 (0.1339)
1	3.20 (0.1260)	3	3.60 (0.1417)

SECOND BRAKE PISTON ASSY (U34#E Series)

4002J–01

OVERHAUL

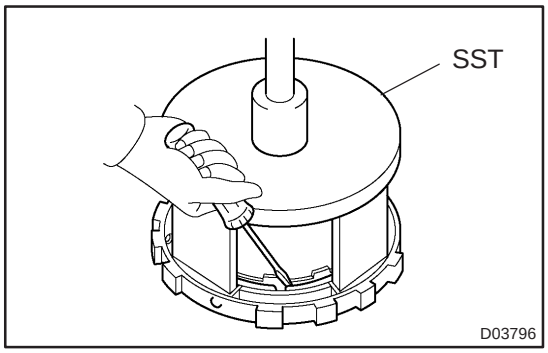

1. REMOVE 2ND BRAKE PISTON RETURN SPRING SUB–ASSY
[35608L / 3509]

(a) Place SST on the piston return spring and compress.
SST 09387–00060

(b) Using a screwdriver, remove the snap ring.

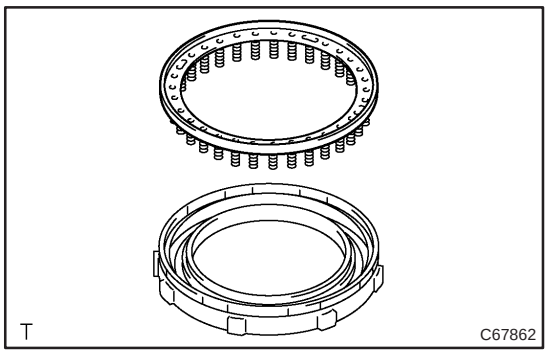

(c) Remove the 2nd brake return spring from the 2nd brake cylinder.

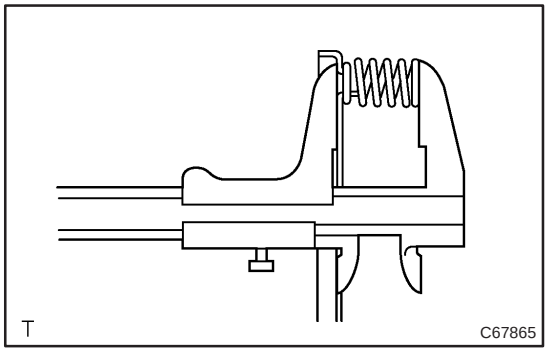

2. INSPECT 2ND BRAKE PISTON RETURN SPRING SUB–ASSY
[35608L / 3509]

(a) Using vernier calipers, measure the free length of the spring together with the spring seat.
Standard free length: 14.65 mm (0.5768 in.)

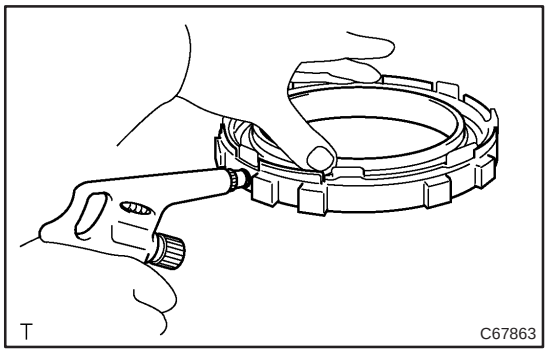

3. REMOVE 2ND BRAKE PISTON
[35624E / 3509]

(a) Hold the 2nd brake piston and apply compressed air (392 kPa, 4.0 kgf·cm^2, 57 psi) to the 2nd brake cylinder to remove the 2nd brake piston.

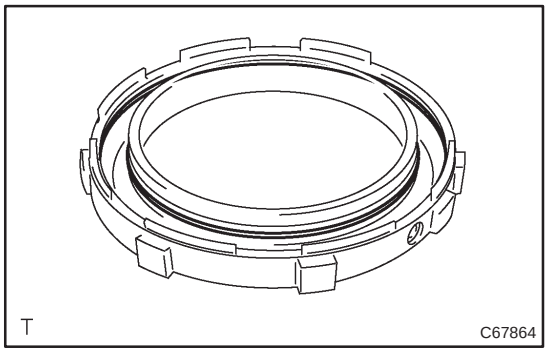

4. REMOVE 2ND BRAKE CYLINDER O–RING
[35664D / 3509]

(a) Using a screwdriver, remove the 2 O–rings from the 2nd brake cylinder.

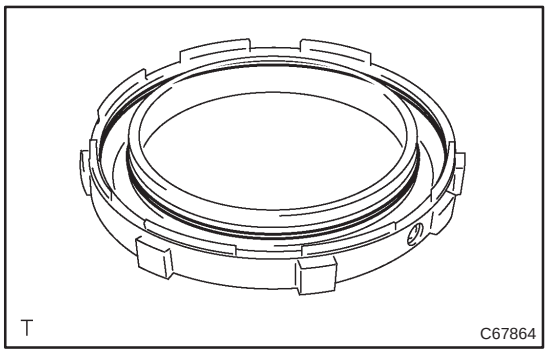

5. INSTALL 2ND BRAKE CYLINDER O–RING
[35664D / 3509]

(a) Install 2 new O–ring to the 2nd brake cylinder.

NOTICE:

Be careful not to damage the O–ring.

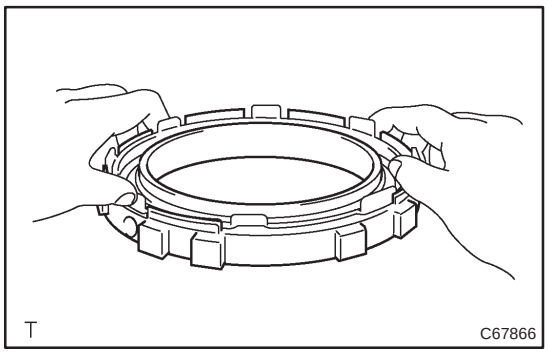

6. INSTALL 2ND BRAKE PISTON
[35624E / 3509]

(a) Coat 2 new O–rings with ATF and install them in the 2nd brake cylinder.

(b) Be careful not to damage the O–rings and press in the 2nd brake piston into the 2nd brake cylinder with a your hands.

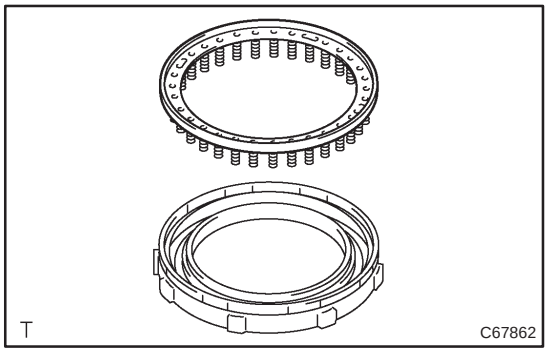

7. INSTALL 2ND BRAKE PISTON RETURN SPRING SUB–ASSY
[35608L / 3509]

(a) Install the piston return spring.

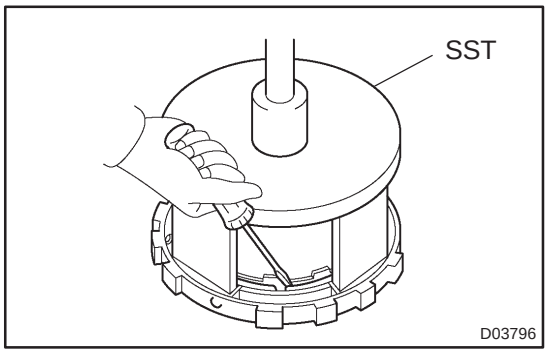

(b) Place SST on the piston return spring, and compress the piston return spring with a press.
SST 09387–00060

(c) Using a screwdriver, install the snap ring.

NOTICE:

Be sure the end gap of the snap ring is not aligned with the piston return spring claw.

INTERMEDIATE SHAFT ASSY (U34#E Series)

4002K–01

OVERHAUL

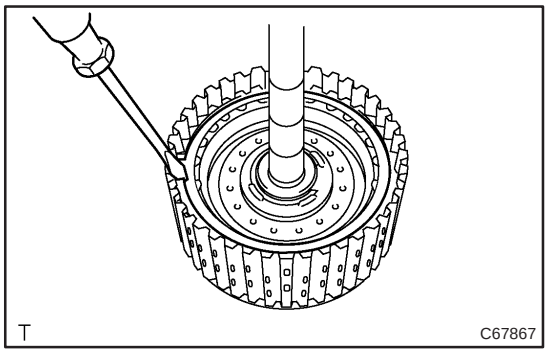

1. REMOVE FORWARD CLUTCH DISC [35677H / 3507]

(a) Using a screwdriver, remove the snap ring.
(b) Remove the flange, 2 discs and 2 plates.

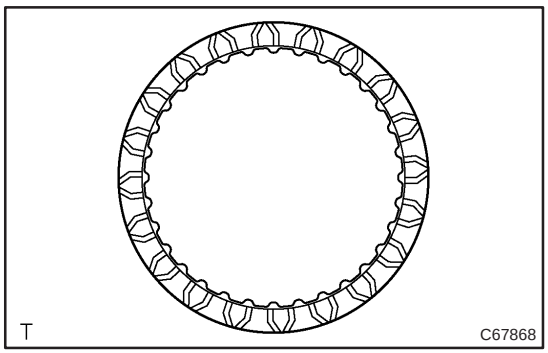

2. INSPECT FORWARD CLUTCH DISC [35677H / 3507]

(a) Check to see if the sliding surface of the disc, plate and flange are worn or burnt.

If necessary, replace them.

HINT:

- **If the lining of the disc is peeling off or discolored, or even if a part of the printed mark is defaced, replace all discs.**
- **Before assembling new discs, soak them in ATF for at least 15 minutes.**

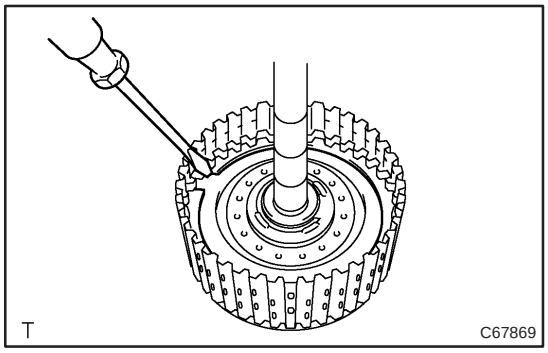

3. REMOVE DIRECT CLUTCH DISK [35667A / 3507]

(a) Using a screwdriver, remove the snap ring.
(b) Remove the 3 plates, flange and 3 discs.

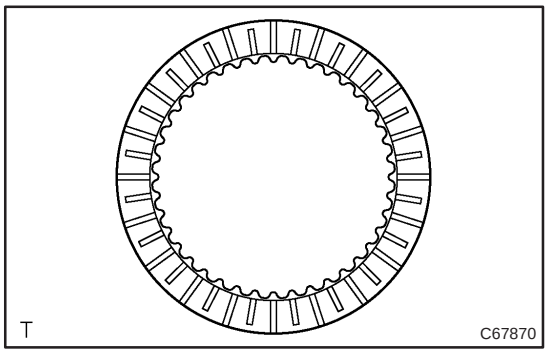

4. INSPECT DIRECT CLUTCH DISK [35667A / 3507]

(a) Check to see if the sliding surface of the disc, plate and flange are worn or burnt.

If necessary, replace them.

HINT:

- **If the lining of the disc is peeling off or discolored, or even if a part of the printed mark is defaced, replace all discs.**
- **Before assembling new discs, soak them in ATF for at least 15 minutes.**

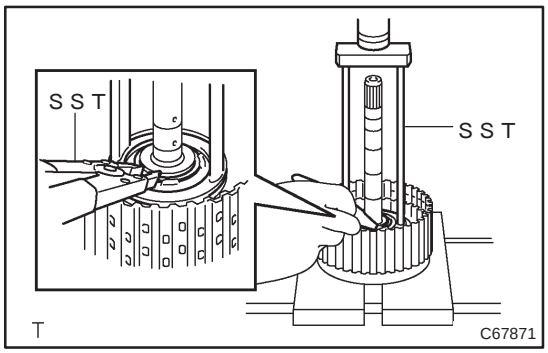

5. REMOVE DIRECT CLUTCH RETURN SPRING SUB–ASSY
[35604 / 3507]

(a) Using SST and a press, remove the snap ring and direct clutch return spring from the intermediate shaft.
SST 09387–00020

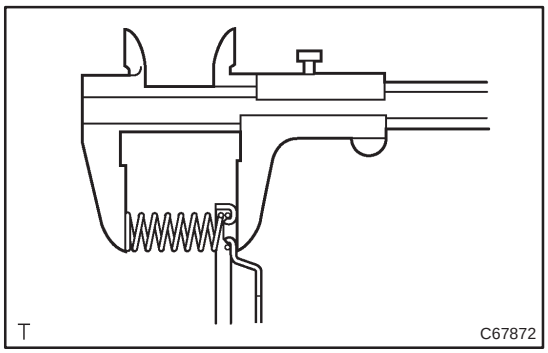

6. INSPECT DIRECT CLUTCH RETURN SPRING SUB–ASSY
[35604 / 3507]

(a) Using a vernier calipers, measure the free length of the spring together with the spring seat.
Standard free length: 32.9 mm (1.2953 in.)

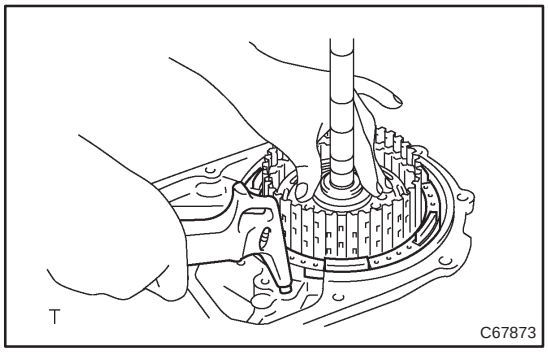

7. REMOVE DIRECT CLUTCH PISTON SUB–ASSY
[35606A / 3507]

(a) Install the direct and reverse clutch on the transaxle rear cover.

(b) Apply compressed air (392kPa, 4.0 kgf·cm^2, 57 psi) to the transaxle rear cover to remove the direct clutch drum and direct clutch piston.

NOTICE:

- **Blowing off the air may cause the piston's jump–out. When removing the piston, hold it with your hand using a waste cloth.**
- **Take care not to splash ATF when air–blowing**

HINT:

When the piston can not be removed as it is slanted, either blow the air again with the protruding side pushed or removed the piston using a needle nose pliers with vinyl tape on the tip.

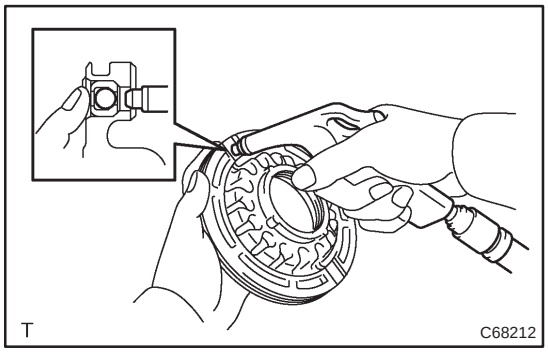

8. INSPECT DIRECT CLUTCH PISTON SUB–ASSY [35606A / 3507]

(a) Shake the direct clutch pin and check that a check ball is not stuck.

(b) Apply low pressure air to the check ball with compressed air and check that no air leak is identified.

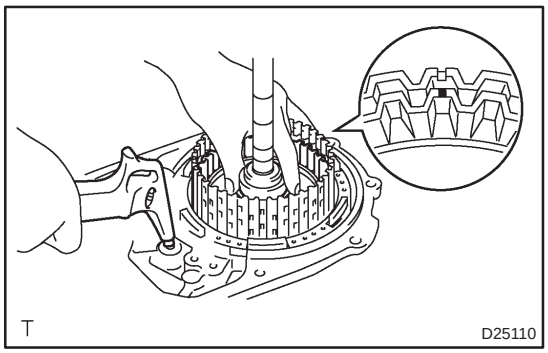

9. REMOVE DIRECT CLUTCH DRUM SUB–ASSY [35605A / 3507]

(a) Put a match–mark on the direct clutch drum at the same position with the cutout of the intermediate shaft assy.

(b) Apply compressed air into the oil hole shown in the illustration and remove the direct clutch drum from the intermediate shaft.

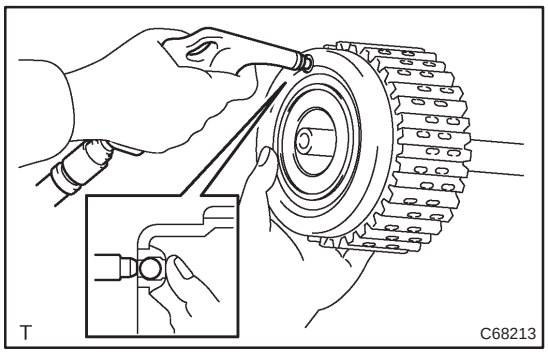

10. INSPECT INTERMEDIATE SHAFT SUB–ASSY [35708G / 3507]

(a) Shake the direct clutch pin and check that a check ball is not stuck.

(b) Apply low pressure air to the check ball with compressed air and check that no air leak is identified.

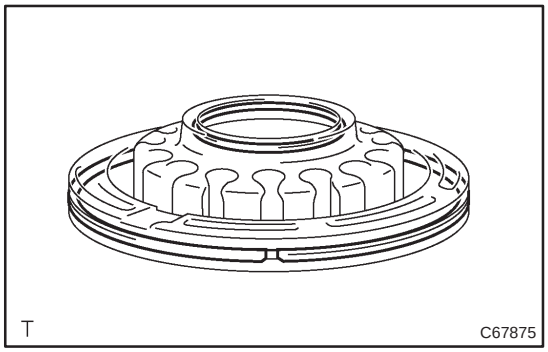

11. REMOVE DIRECT CLUTCH PISTON O–RING [35606C / 3507]

(a) Using a screwdriver, remove the 2 O–rings.

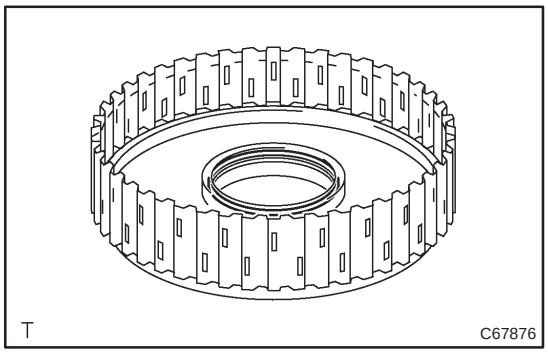

12. REMOVE DIRECT CLUTCH DRUM O–RING [35605D / 3507]

(a) Using a screwdriver, remove the O–ring.

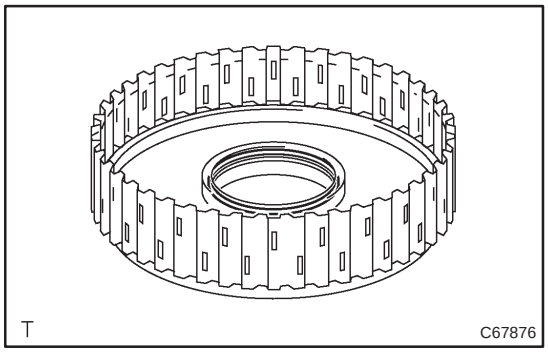

13. INSTALL DIRECT CLUTCH DRUM O–RING [35605D / 3507]

(a) Coat the O–ring with ATF, install it to the direct clutch drum.

NOTICE:

Be careful not to damage the O–ring.

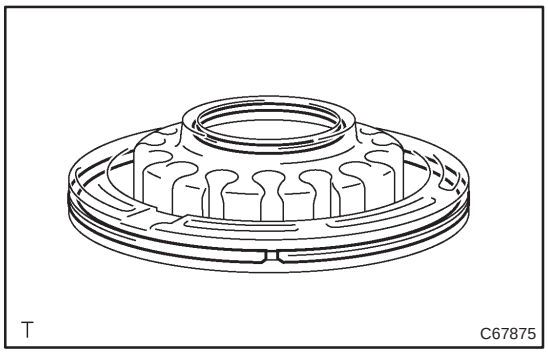

14. INSTALL DIRECT CLUTCH PISTON O–RING [35606C / 3507]

(a) Coat the 2 O–rings with ATF, install them to the direct clutch piston.

NOTICE:

Be careful not to damage the O–ring.

15. INSTALL DIRECT CLUTCH DRUM SUB–ASSY [35605A / 3507]

(a) Coat the direct clutch drum with ATF.

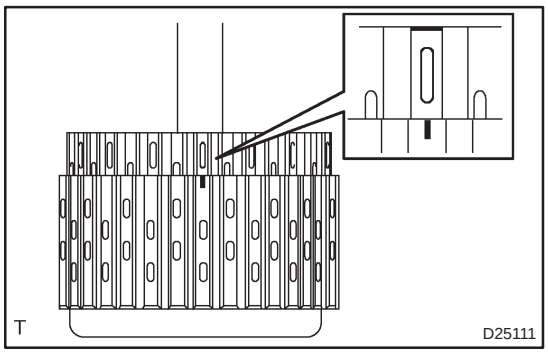

(b) Aligning the cutout in the intermediate shaft assy with the match–mark on the direct clutch drum, install the direct clutch drum to the intermediate shaft assy.

NOTICE:

Be careful not to damage the O–ring and clutch drum's lip.

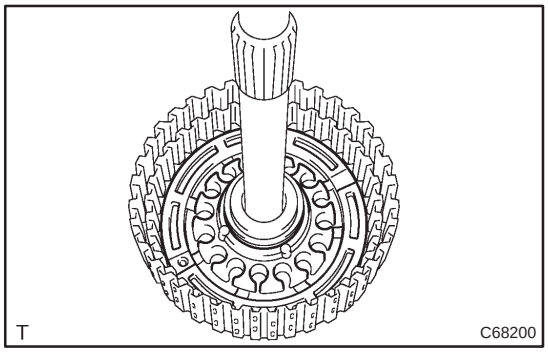

16. INSTALL DIRECT CLUTCH PISTON SUB–ASSY [35606A / 3507]

(a) Coat the direct clutch piston with ATF, install it to the intermediate shaft.

NOTICE:

- **Do not damage the O–ring the direct clutch piston's.**

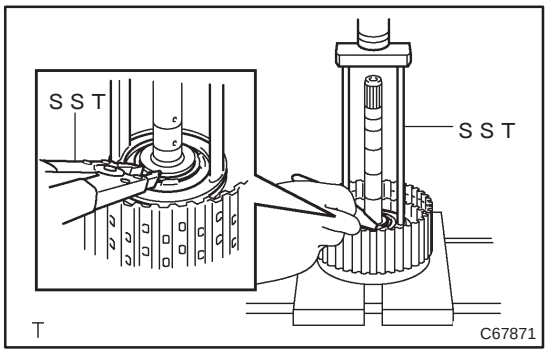

17. INSTALL DIRECT CLUTCH RETURN SPRING SUB–ASSY [35604 / 3507]

(a) Install the direct clutch return spring on the direct clutch piston.

(b) Place SST on the piston return spring and compress the springs with a press.
SST 09387–00020

(c) Using a snap ring expander , install the snap ring from the direct clutch drum.

NOTICE:

- **Stop the press when the spring sheet is lowered to the place 1 – 2 mm (0.039 – 0.078 in.) from the snap ring groove, preventing the spring sheet from the deforming.**
- **Do not expand the snap ring excessively.**

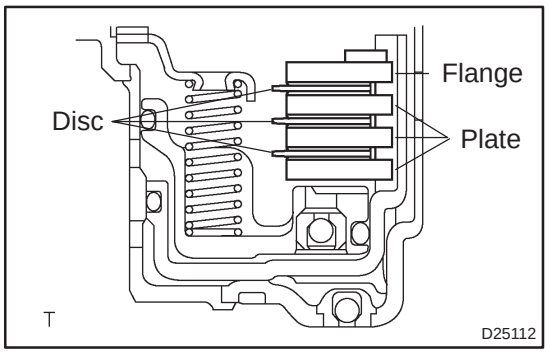

18. INSTALL DIRECT CLUTCH DISK
[35667A / 3507]

(a) Coat the 3 plates, 3 discs and flange with ATF, install them to the intermediate shaft.
(b) Install the snap ring.

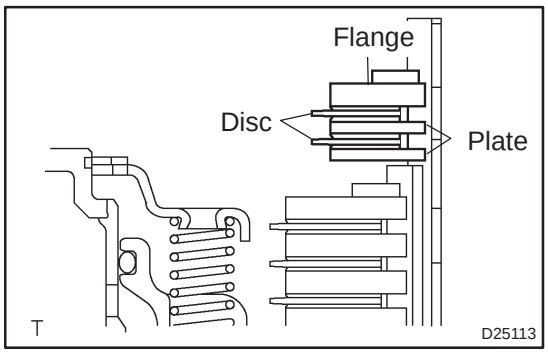

19. INSTALL FORWARD CLUTCH DISC
[35677H / 3507]

(a) Install the 2 plates, 2 discs and a flange.
(b) Install the snap ring.

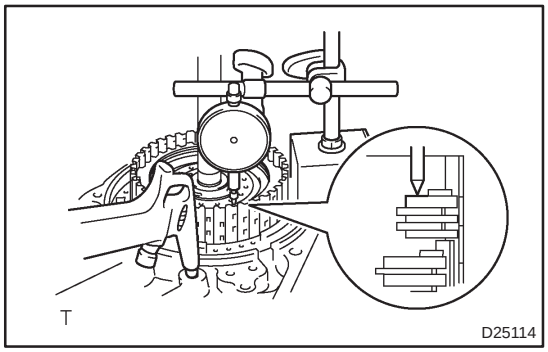

20. INSPECT PACK CLEARANCE OF REVERSE CLUTCH

(a) Install the forward and reverse clutch and thrust needle roller bearing on the transaxle rear cover.
(b) Using a dial indicator, measure the reverse clutch pack clearance while applying and releasing compressed air (392 kPa, 4.0 kgf·cm^2, 57 psi)

Pack clearance:
0.86 – 1.26 mm (0.0339 – 0.0496 in.)

If the pack clearance is less than the limit of pack clearance, parts may have been assembled incorrectly, so check and reassemble again.

If the pack clearance is non–standard, select another flange.

HINT:

There are 4 flanges in different thickness.

Flange Thickness: mm (in.)

No.	Thickness	No.	Thickness
–	3.0 (0.118)	2	3.4 (0.134)
1	3.2 (0.126)	3	3.6 (0.142)

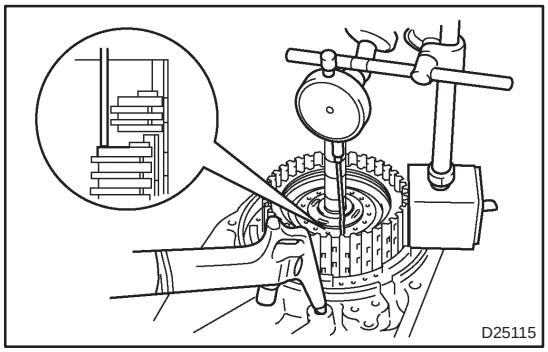

21. INSPECT PACK CLEARANCE OF DIRECT CLUTCH

(a) Install the direct and reverse clutch and thrust needle roller bearing on the transaxle rear cover.

(b) Using a dial indicator and measuring terminal (SST), measure the forward clutch pack clearance while applying and releasing compressed air (392 kPa, 4.0 kgf·cm^2, 57 psi)

SST 09350–36010 (09350–06110)

HINT:

The direct and reverse clutch will come out as you apply the compressed air. Therefore, while the checking is being done, press on the input shaft of the direct and reverse clutch using stamping machine or alike so that the pressure is not applied on the direct and reverse clutch.

Pack clearance:

0.62 – 1.02 mm (0.0244 – 0.0402 in.)

If the pack clearance is less than the limit of pack clearance, parts may have been assembled incorrectly, so check and reassemble again..

If the pack clearance is non–standard, select another flange.

HINT:

There are 4 flanges in different thickness.

Selected flange thickness: mm (in.)

No.	Thickness	No.	Thickness
–	3.0 (0.118)	2	3.4 (0.134)
1	3.2 (0.126)	3	3.6 (0.142)

TRANSAXLE REAR COVER ASSY (U34#E Series)

4002L–01

OVERHAUL

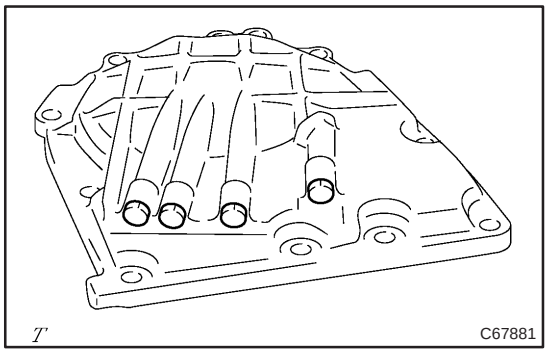

1. REMOVE TRANSAXLE REAR COVER PLUG
[35102B / 3503]

(a) Remove the 4 transaxle rear cover plug from the transaxle rear cover.

(b) Using a screwdriver, remove the O–ring from the transaxle rear cover plug.

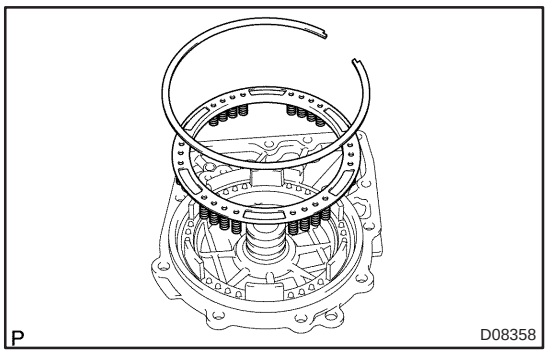

2. REMOVE OVERDRIVE BRAKE RETURN SPRING SUB–ASSY
[34603B / 3509]

(a) Using SST, a press and a screwdriver, remove the snap ring.
SST 09387–00070

NOTICE:

Stop the press when the O/D brake piston is lowered 1 – 2 mm (0.039 – 0.078 in.) from the snap ring groove, preventing the O/D brake piston from being deformed.

(b) Remove the O/D brake return spring.

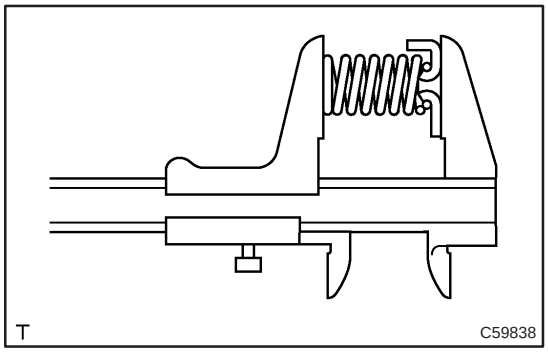

3. INSPECT OVERDRIVE BRAKE RETURN SPRING SUB–ASSY
[34603B / 3509]

(a) Using a vernier calipers, measure the free length of the spring together with the spring seat.
Standard free length: 17.88mm (0.7039 in.)

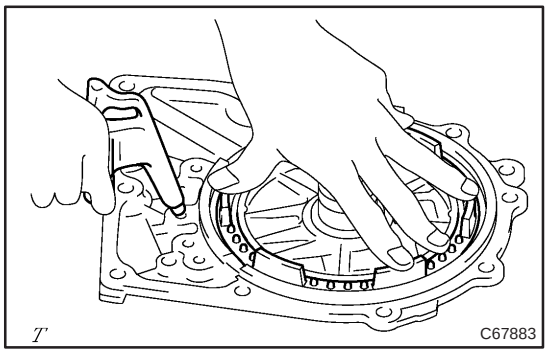

4. REMOVE 2ND COAST & OVERDRIVE BRAKE PISTON
[34622B / 3509]

(a) Apply compressed air (392 kPa, 4.0 kgf·cm^2, 57 psi) to the transaxle rear cover to remove the O/D brake piston.

NOTICE:

- **Blowing off the air may cause the piston's jump–out. When removing the piston, holding it with your hand using a waste cloth.**
- **Take care not to splash ATF when air–blowing.**

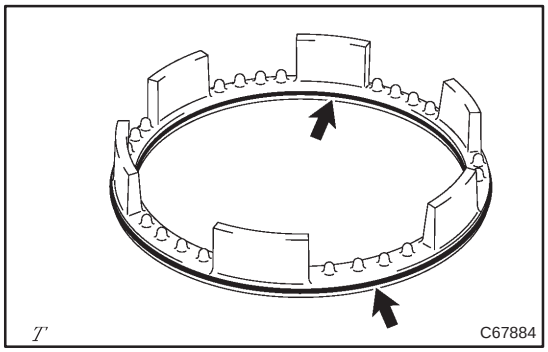

5. REMOVE 2ND COAST & OVERDRIVE O–RING
[34622C / 3509]

(a) Using a screwdriver, remove the 2 O–ring from the 2nd coast & O/D brake piston.

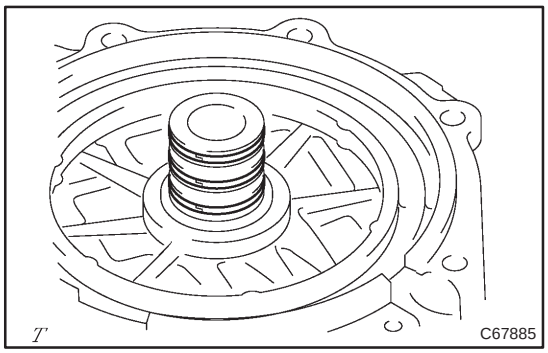

6. REMOVE CLUTCH DRUM OIL SEAL RING
[35617G / 3507]

(a) Remove the 3 oil seals.

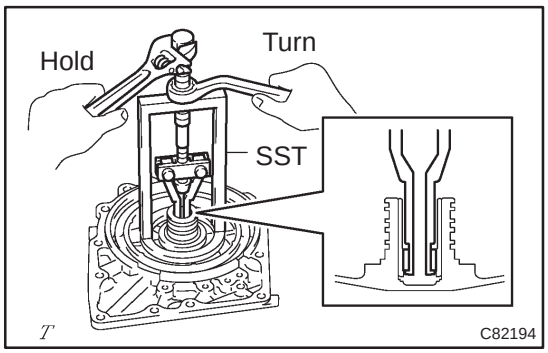

7. REMOVE TRANSAXLE REAR COVER NEEDLE ROLLER BEARING
[35102D / 3503]

(a) Using SST, remove the bearing.
SST 09387–00040 (09387–01020)

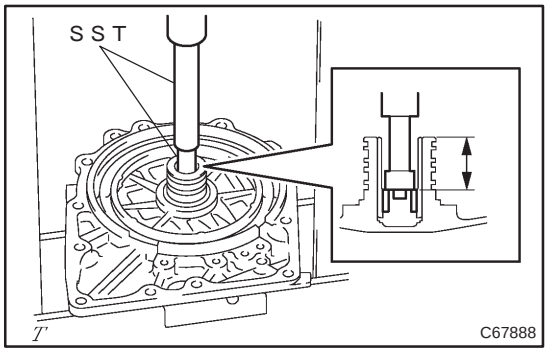

8. INSTALL TRANSAXLE REAR COVER NEEDLE ROLLER BEARING
[35102D / 3503]

(a) Using SST and a press, install the new bearing to the transaxle rear cover.
SST 09950–60010 (09951–00190, 09952–06010), 09950–70010 (09951–07100)
Standard clearance: 25.2 mm (0.992 in.)

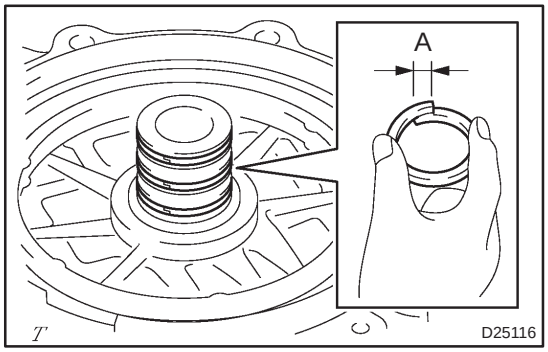

9. INSTALL CLUTCH DRUM OIL SEAL RING
[35617G / 3507]

(a) Compress the oil seal ring from both sides to reduce dimension A.
Dimension A: 5.0 mm (0.197 in.)

(b) Coat the oil seal ring with ATF and install it to the transaxle rear cover.

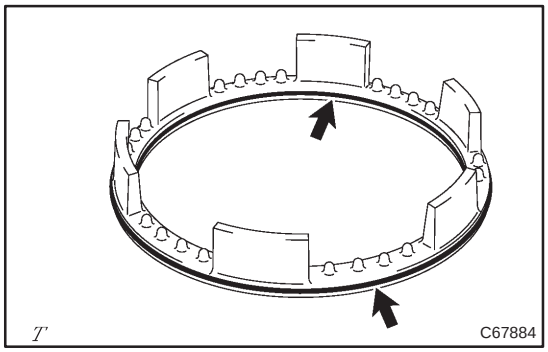

10. INSTALL 2ND COAST & OVERDRIVE O–RING [34622C / 3509]

(a) Coat the 2 new O–rings with ATF, install them to the transaxle rear cover.

NOTICE:

Be careful not to damage the oil seal lip.

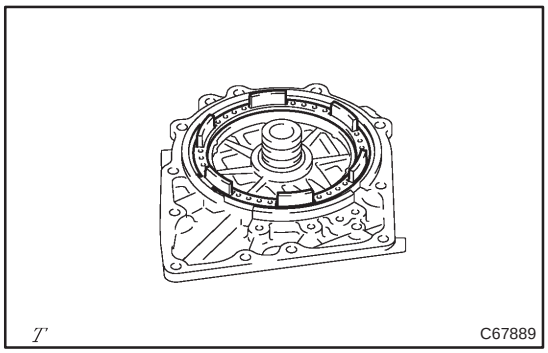

11. INSTALL 2ND COAST & OVERDRIVE BRAKE PISTON [34622B / 3509]

(a) Coat the piston with ATF, install it to the transaxle rear cover.

NOTICE:

Be careful not to damage the oil seal lip.

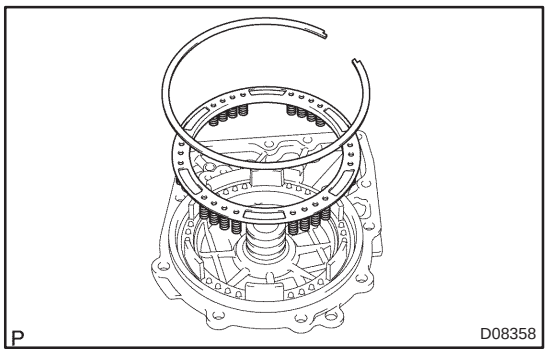

12. INSTALL OVERDRIVE BRAKE RETURN SPRING SUB–ASSY [34603B / 3509]

(a) Using SST and a press, install the O/D brake return spring and snap ring to the transaxle rear cover.
SST 09387–00070

NOTICE:

Stop the press when the O/D brake piston is lowered 1 – 2 mm (0.039 – 0.078 in.) from the snap ring groove, preventing the O/D brake piston from being deformed.

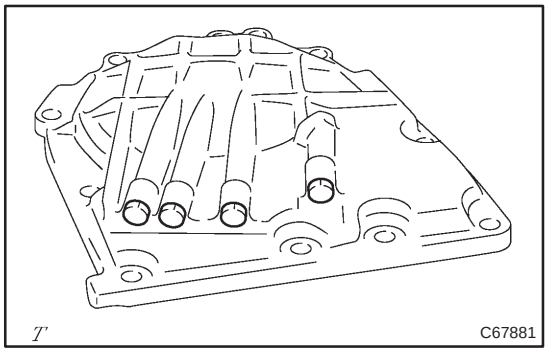

13. INSTALL TRANSAXLE REAR COVER PLUG [35102B / 3503]

(a) Install 4 new O–rings and the 4 screw plugs to the transaxle rear cover.
Torque: 7.4 N·m (75 kgf·cm, 65 in.·lbf)

NOTICE:

Be careful not to damage the oil seal lip.

TRANSMISSION VALVE BODY ASSY (U34#E Series)

4002M–01

OVERHAUL

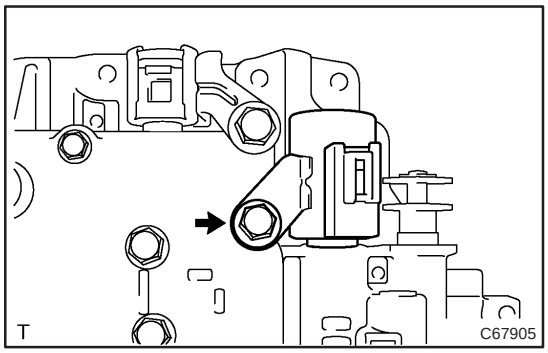

1. REMOVE LINE PRESSURE CONTROL SOLENOID ASSY
[35290A / 3512]

(a) Remove the bolt, and pull out the line pressure control solenoid assy.

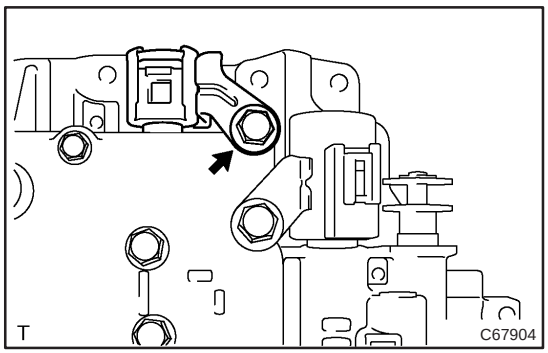

2. REMOVE TRANSMISSION 3WAY SOLENOID ASSY NO.3
[35250A / 3512]

(a) Remove the bolt, and pull out the transmission 3 way solenoid assy No. 3.

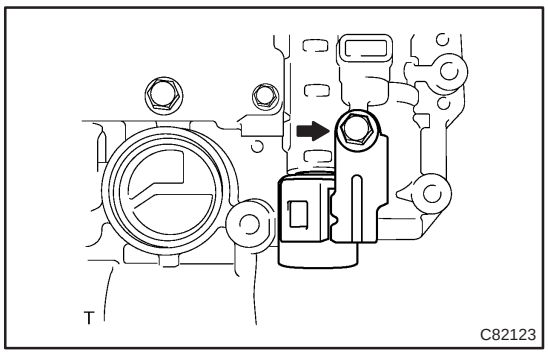

3. REMOVE LOCK UP CONTROL SOLENOID ASSY
[35280 / 3512]

(a) Remove the bolt, and pull out the lock up control solenoid assy.

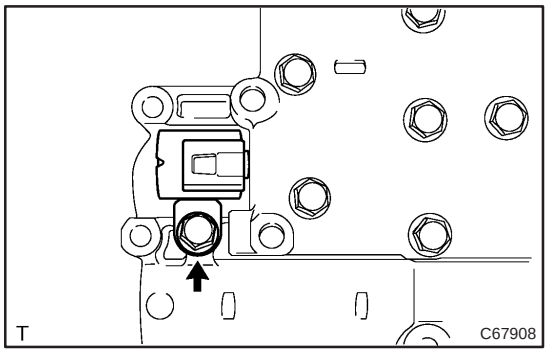

4. REMOVE TRANSMISSION 3WAY SOLENOID ASSY NO.2
[35230 / 3512]

(a) Remove the bolt, and pull out the transmission 3 way solenoid assy No. 2.

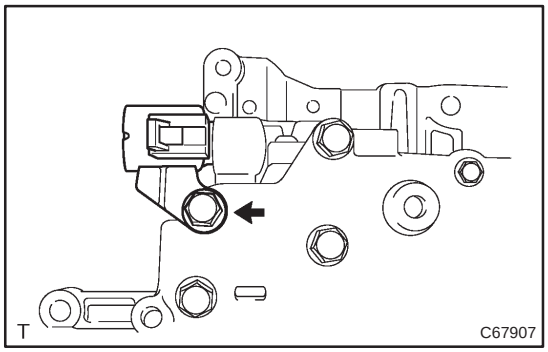

5. REMOVE AUTOMATIC TRANSMISSION 3WAY SOLENOID ASSY
[35240 / 3512]

(a) Remove the bolt, and pull out the automatic transmission 3 way solenoid assy.

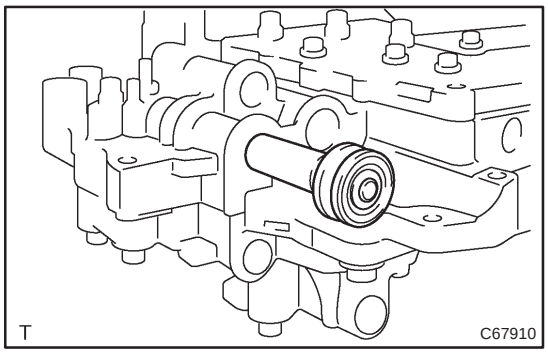

6. REMOVE MANUAL VALVE
[35418 / 3512]

(a) Remove the manual valve from the valve body assy.

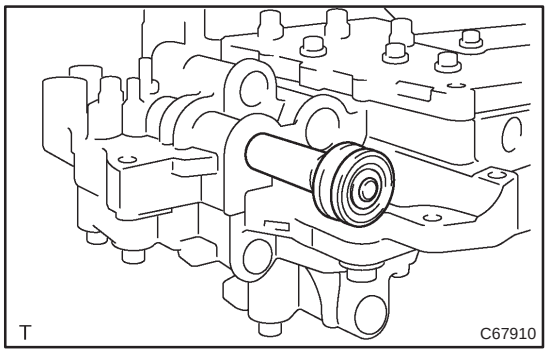

7. INSTALL MANUAL VALVE
[35418 / 3512]

(a) Coat the manual valve with ATF and install it to the valve body assy.

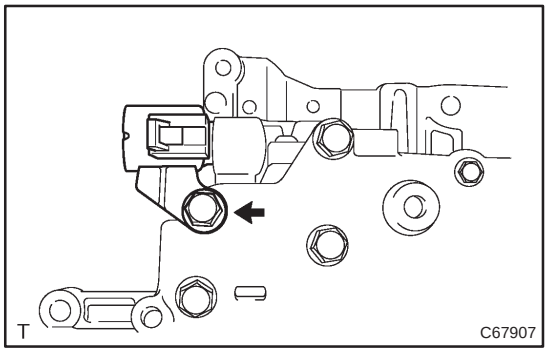

8. INSTALL AUTOMATIC TRANSMISSION 3WAY SOLENOID ASSY
[35240 / 3512]

(a) Install the automatic transmission 3 way solenoid assy with the bolt.
Torque: 11 N·m (110 kgf·cm, 8 ft·lbf)

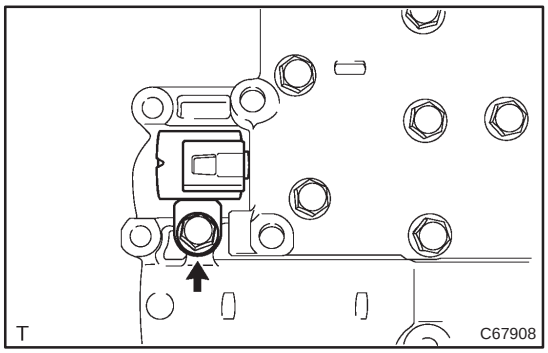

9. INSTALL TRANSMISSION 3WAY SOLENOID ASSY NO.2
[35230 / 3512]

(a) Install the transmission 3 way solenoid assy No. 2 with the bolt.
Torque: 11 N·m (110 kgf·cm, 8 ft·lbf)

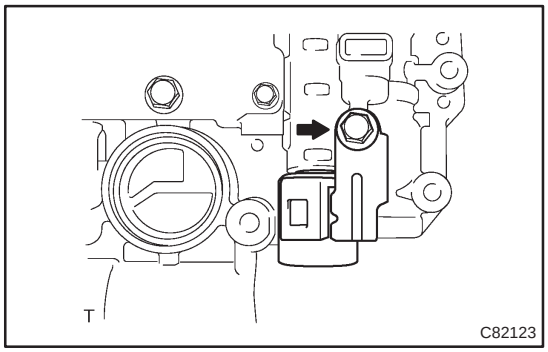

10. INSTALL LOCK UP CONTROL SOLENOID ASSY
[35280 / 3512]

(a) Install the lock up control solenoid assy with the bolt.
Torque: 11 N·m (110 kgf·cm, 8 ft·lbf)

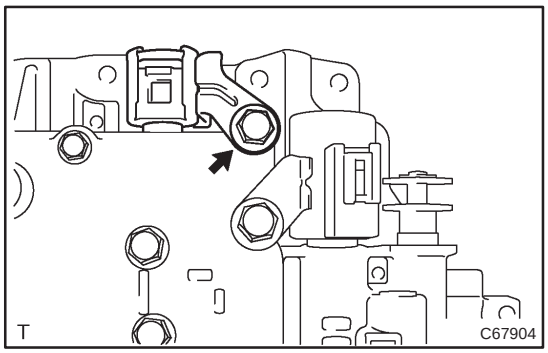

11. INSTALL TRANSMISSION 3WAY SOLENOID ASSY NO.3
[35250A / 3512]

(a) Install the transmission 3 way solenoid assy No. 3 with the bolt.
Torque: 11 N·m (110 kgf·cm, 8 ft·lbf)

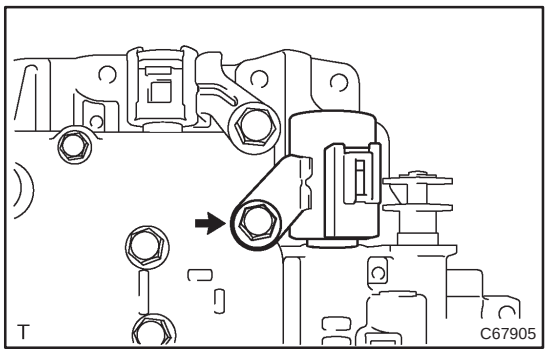

12. INSTALL LINE PRESSURE CONTROL SOLENOID ASSY
[35290A / 3512]

(a) Install the line pressure control solenoid assy with the bolt.
Torque: 11 N·m (110 kgf·cm, 8 ft·lbf)

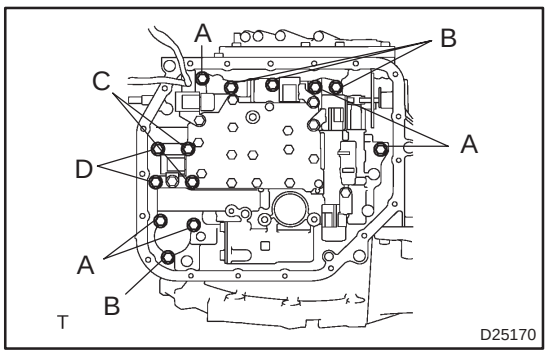

13. TIGHTEN BOLT

(a) Install the valve body assembly and 13 bolts.
Torque: 11 N·m (110 kgf·cm, 8 ft·lbf)
Bolt length:
Bolt A: 32 mm (1.26 in.)
Bolt B: 22 mm (0.87 in.)
Bolt C: 55 mm (2.17 in.)
Bolt D: 45 mm (1.77 in.)

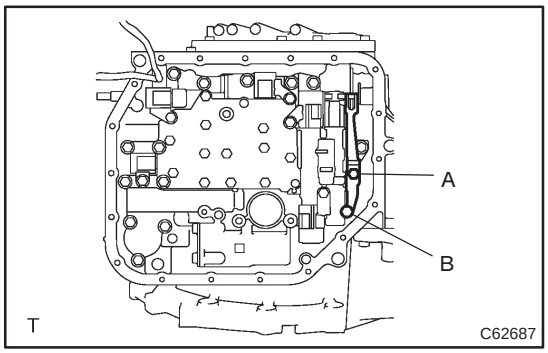

(b) Install the detente spring, detente spring cover and 2 bolts.
Torque: 11 N·m (110 kgf·cm, 8 ft·lbf)
Bolt length:
Bolt A: 14 mm (0.55 in.)
Bolt B: 45 mm (1.77 in.)

(c) Check that the manual valve lever is touching the center of the detente spring tip roller.

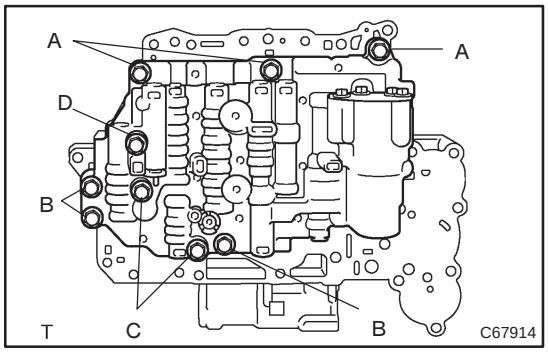

(d) Fasten the upper valve body with 9 bolts.
Torque: 11 N·m (110 kgf·cm, 8 ft·lbf)

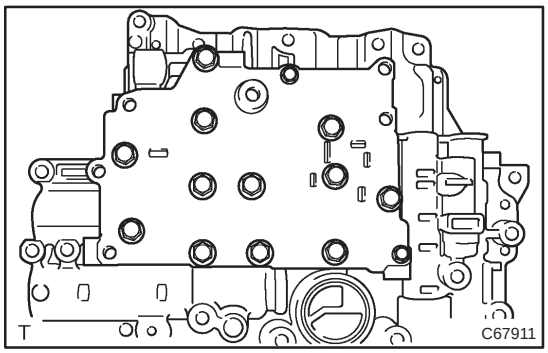

(e) Fasten the valve body cover lower with 14 bolts.
Torque:
8 mm bolt: 6.6 N·m (67 kgf·cm, 58 in.·lbf)
10 mm bolt: 11 N·m (110 kgf·cm, 8 ft·lbf)

(f) Fasten the solenoid with 5 bolts.
Torque: 11 N·m (110 kgf·cm, 8 ft·lbf)

FRONNT DIFFERENTIAL ASSY (U34#E Series)

4002N–01

OVERHAUL

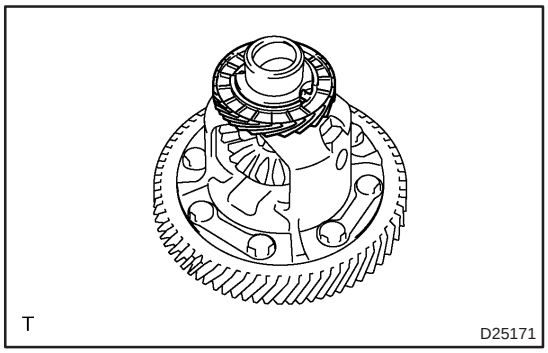

1. REMOVE SPEEDOMETER DRIVE (ATM) GEAR [33481X / 4301]

(a) Remove the speedometer drive gear from the differential case.

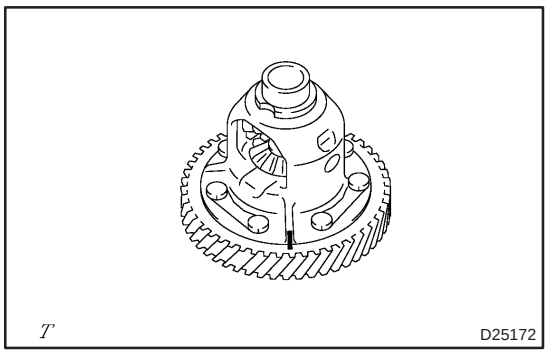

2. REMOVE FRONT DIFFERENTIAL RING GEAR [41221 / 4301]

(a) Put match–marks on the front differential ring gear and differential case.

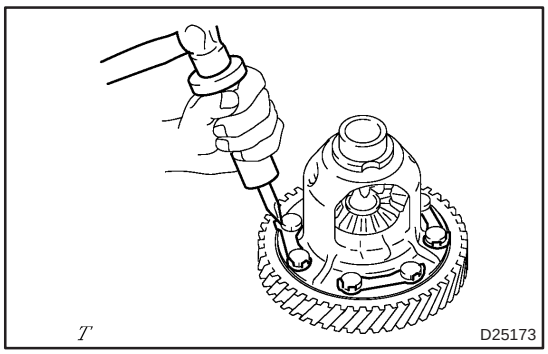

(b) Using SST and a hammer, unstake the lock plate.
SST 09930–00010

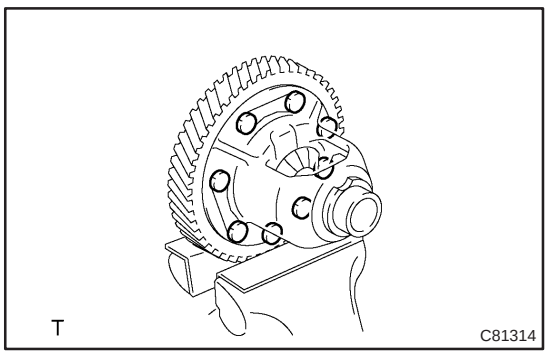

(c) Remove the 8 bolts and lock plate.

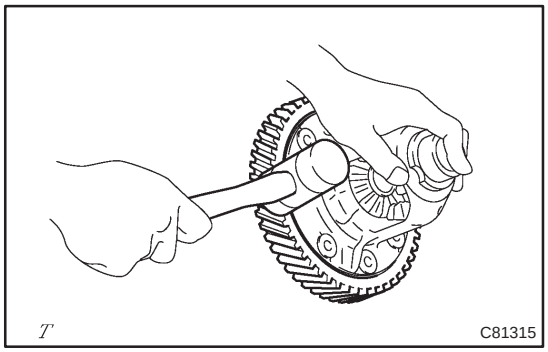

(d) Using a plastic hammer, remove the front differential ring gear from the differential case.

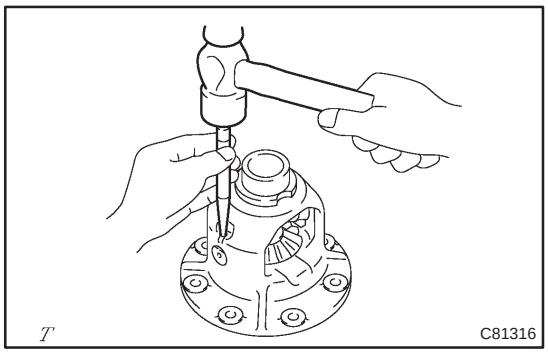

3. REMOVE FRONT DIFFERENTIAL PINION SHAFT STRAIGHT PIN
[41342A / 4301]

(a) Using a punch and a hammer, unstake the differential case.

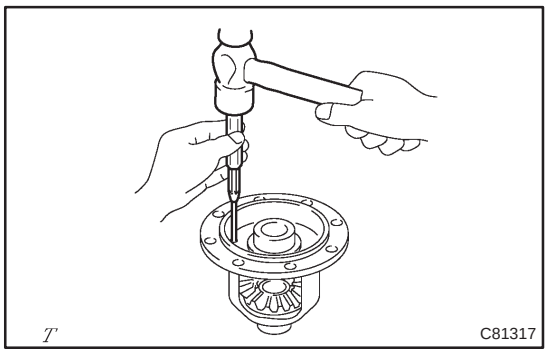

(b) Using a pin punch and a hammer, remove the straight pin.

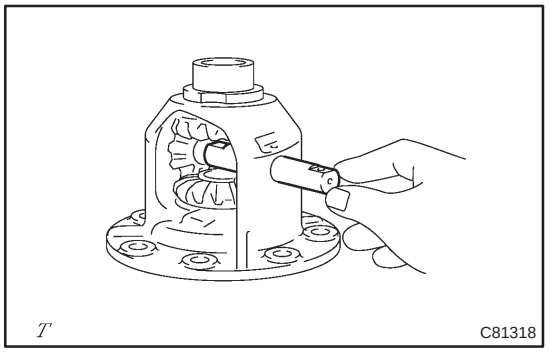

4. REMOVE FRONT DIFFERENTIAL PINION SHAFT NO.1
[41342F / 4301]

(a) Remove the pinion shaft from the front differential case.

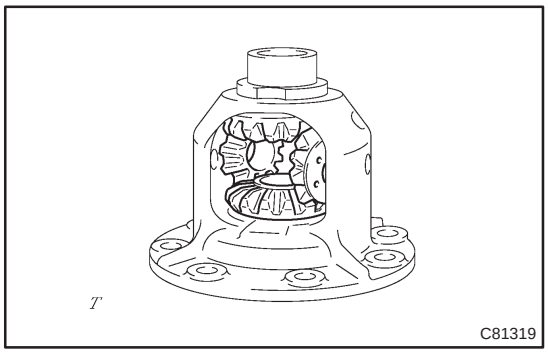

5. REMOVE FRONT DIFFERENTIAL SIDE GEAR
[41331F / 4301]

(a) Remove the 2 pinions, 2 thrust washers, 2 side gears and 2 thrust washers No.1 from the front differential case.

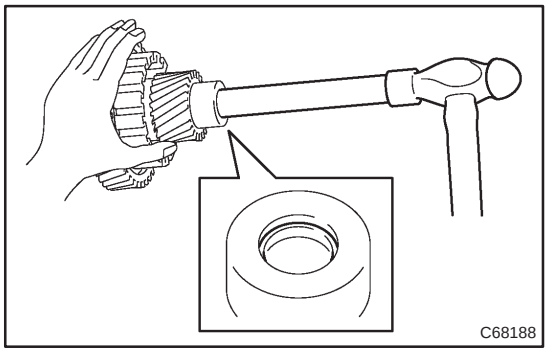

6. REMOVE DIFFERENTIAL DRIVE PINION PLUG [41211E / 4301]

(a) Using a brass bar and a hammer, remove the differential drive pinion plug.

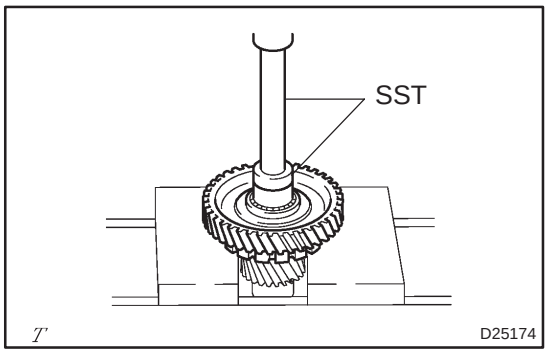

7. REMOVE COUNTER DRIVEN GEAR [35783R / 4301]

(a) Using SST and a press, remove the counter driven gear from the differential drive pinion.
SST 09950–60010 (09951–00350), 09950–70010 (09951–07150)

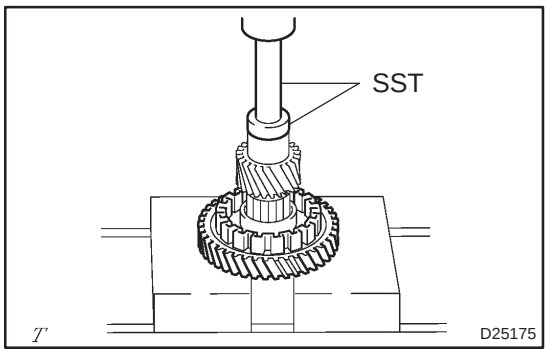

8. INSTALL COUNTER DRIVEN GEAR [35783R / 4301]

(a) Using SST and a press, install the counter driven gear to the differential drive pinion.
SST 09950–60010 (09951–00350), 09950–70010 (09951–07150)

NOTICE:
When replacing the counter driven gear, replace the counter drive gear in the transaxle case, too.

HINT:
The differential drive pinion shall be press–fit until it comes to contact with the counter driven gear.

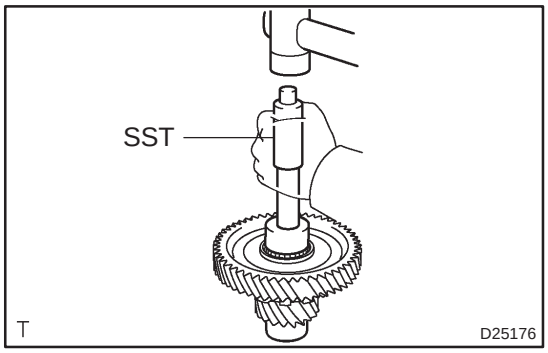

9. INSTALL DIFFERENTIAL DRIVE PINION PLUG [41211E / 4301]

(a) Using SST and a plastic hammer, install a new differential drive pinion plug to the differential drive pinion
SST 09221–25026 (09221–00071)
Standard clearance:
2.5 – 2.6 mm (0.0984 – 0.1023 in.)

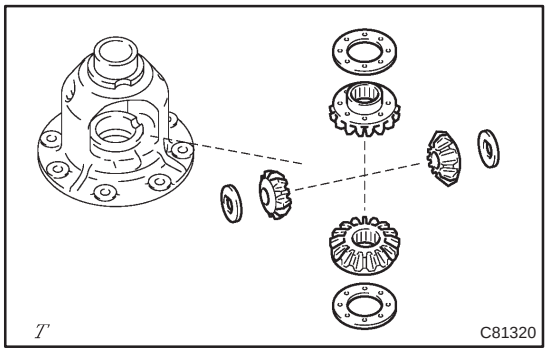

10. INSTALL FRONT DIFFERENTIAL SIDE GEAR [41331F / 4301]

(a) After applying ATF to the 2 front differential side gears, 2 side gear thrust washers No. 1, 2 front differential pinions and 2 pinion thrust washers, install them to the front differential case.

HINT:

At the time of installation, set the alignment of the front differential pinions perpendicular to that of the side gear and rotate them so that their holes will be aligned with the holes in the differential case.

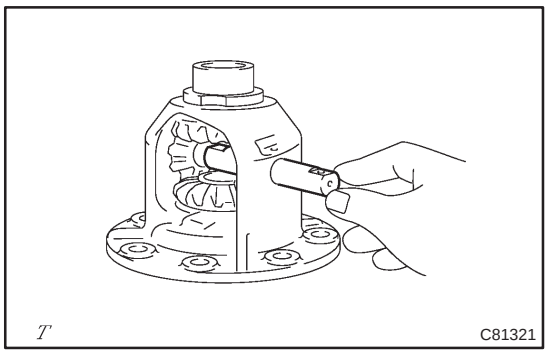

11. INSTALL FRONT DIFFERENTIAL PINION SHAFT NO.1 [41342F / 4301]

(a) Install the pinion shaft so as to align the lock pin holes on the pinion shaft and differential case.

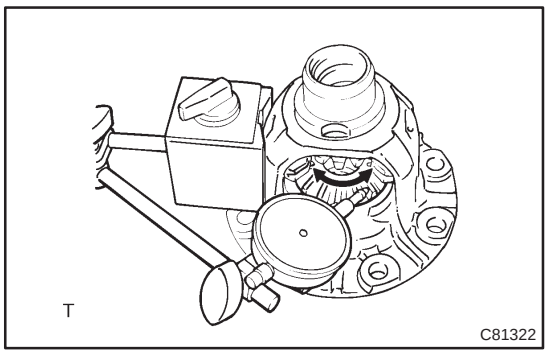

12. INSPECT BACKLASH

(a) Measure the side gear backlash while holding 1 pinion gear toward the case.

Standard backlash:

0.05 – 0.20 mm (0.0020 – 0.0079 in.)

If the backlash is out of specification, install the correct thrust washer to the side gear.

(b) Referring to the table below, select thrust washers which will ensure that the backlash is within for both sides.

Thrust washer thickness: mm (in.)

Thickness	Thickness
0.95 (0.0374)	1.10 (0.0433)
1.00 (0.0394)	1.15 (0.0453)
1.05 (0.0413)	1.20 (0.0472)

If the backlash is not within the specification, install a thrust washer of a different thickness.

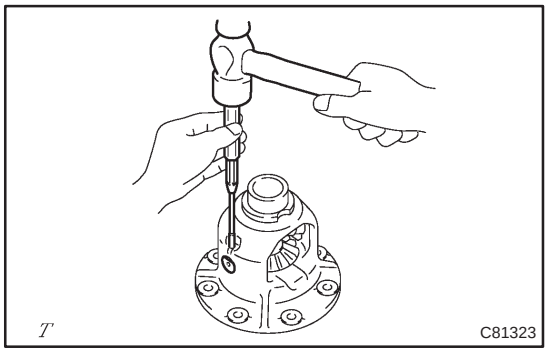

13. INSTALL FRONT DIFFERENTIAL PINION SHAFT STRAIGHT PIN
[41342A / 4301]

(a) Using a pin punch and a hammer, install the pinion shaft straight pin.

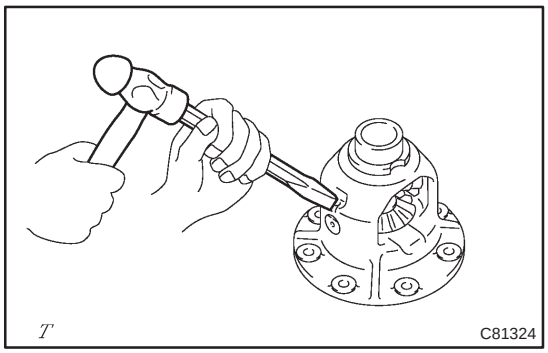

(b) Using a chisel and a hammer, stake the differential case.

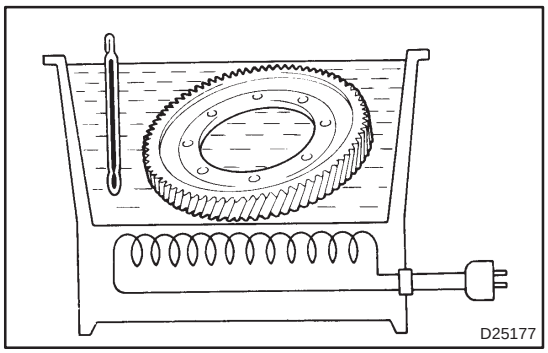

14. INSTALL FRONT DIFFERENTIAL RING GEAR
[41221 / 4301]

(a) Using ATF and heater, hear the front differential ring gear to 90 – 110 °C (194.0 – 230.0 °F).

(b) Clean the contact surface of the front differential case.

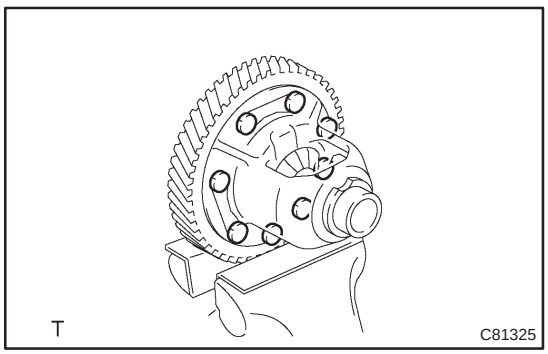

(c) Install the 4 lock plates and 8 bolts.
Torque: 88 N·m (900 kgf·cm, 65 ft·lbf)

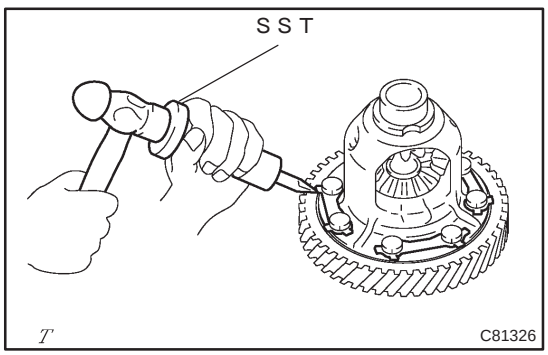

(d) Using SST, stake the ring gear lock plate.
SST 09930–00010

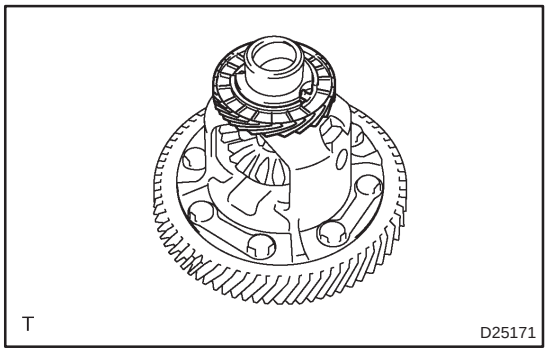

15. INSTALL SPEEDOMETER DRIVE (ATM) GEAR [33481X / 4301]

(a) Install the speedometer drive gear to the differential case.

9808J–01

3501/TRANSAXLE OR TRANSMISSION ASSY & GASKET KIT (ATM)

(0008–)NZE121..ATM **U340E**

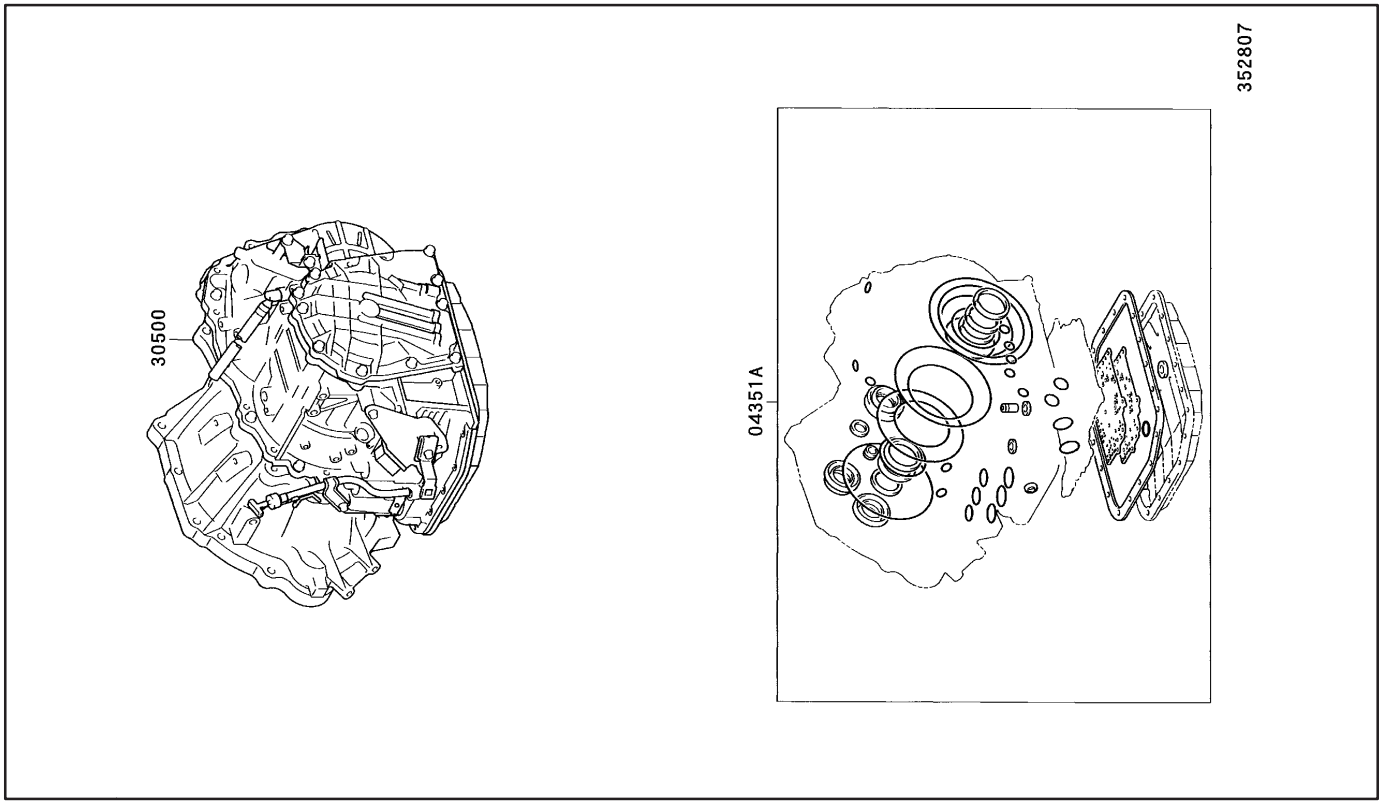

9808M–01

3502/TORQUE CONVERTER, FRONT OIL PUMP & CHAIN (ATM)

(0008–)NZE121..ATM **U340E**

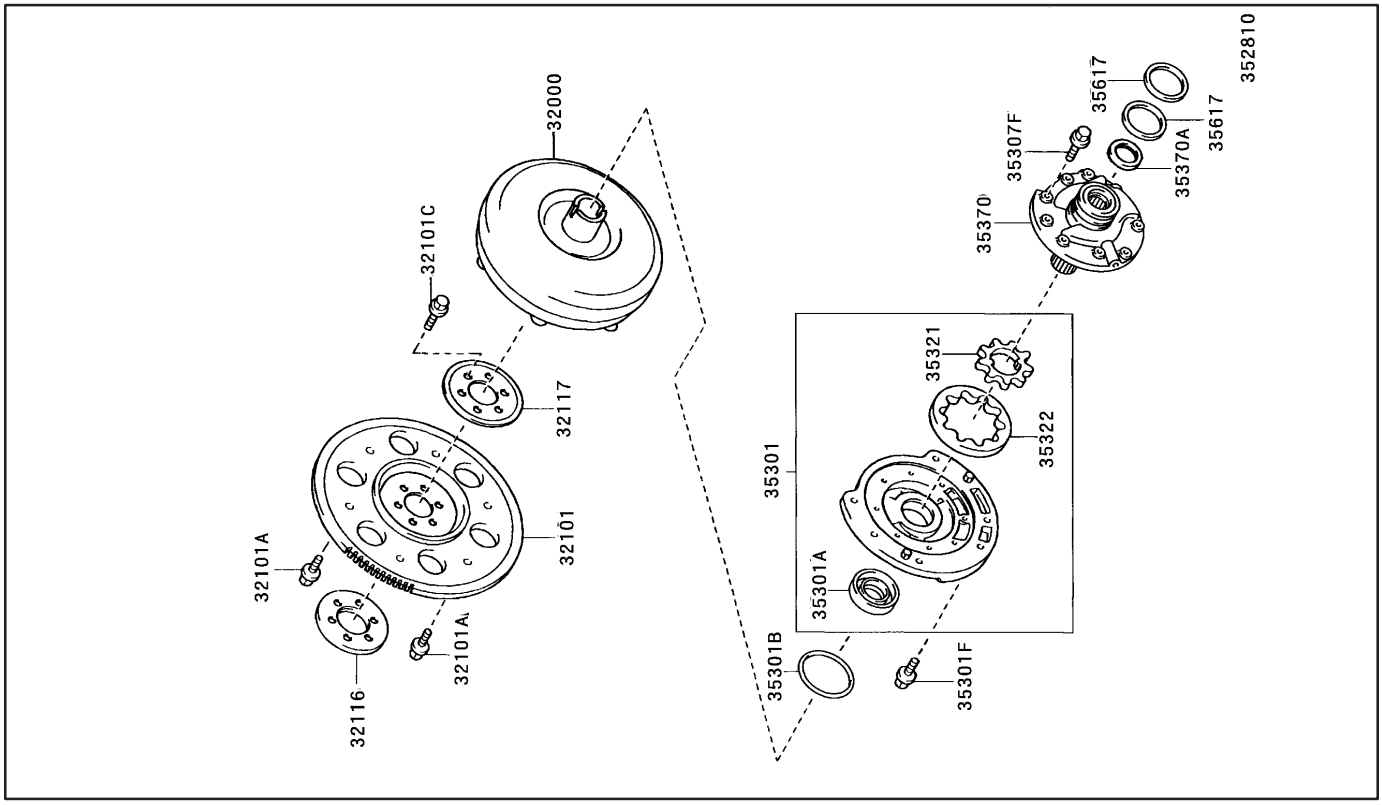

9808L–01

3503/TRANSMISSION CASE & OIL PAN (ATM)

(0008–)NZE121..ATM **U340E**

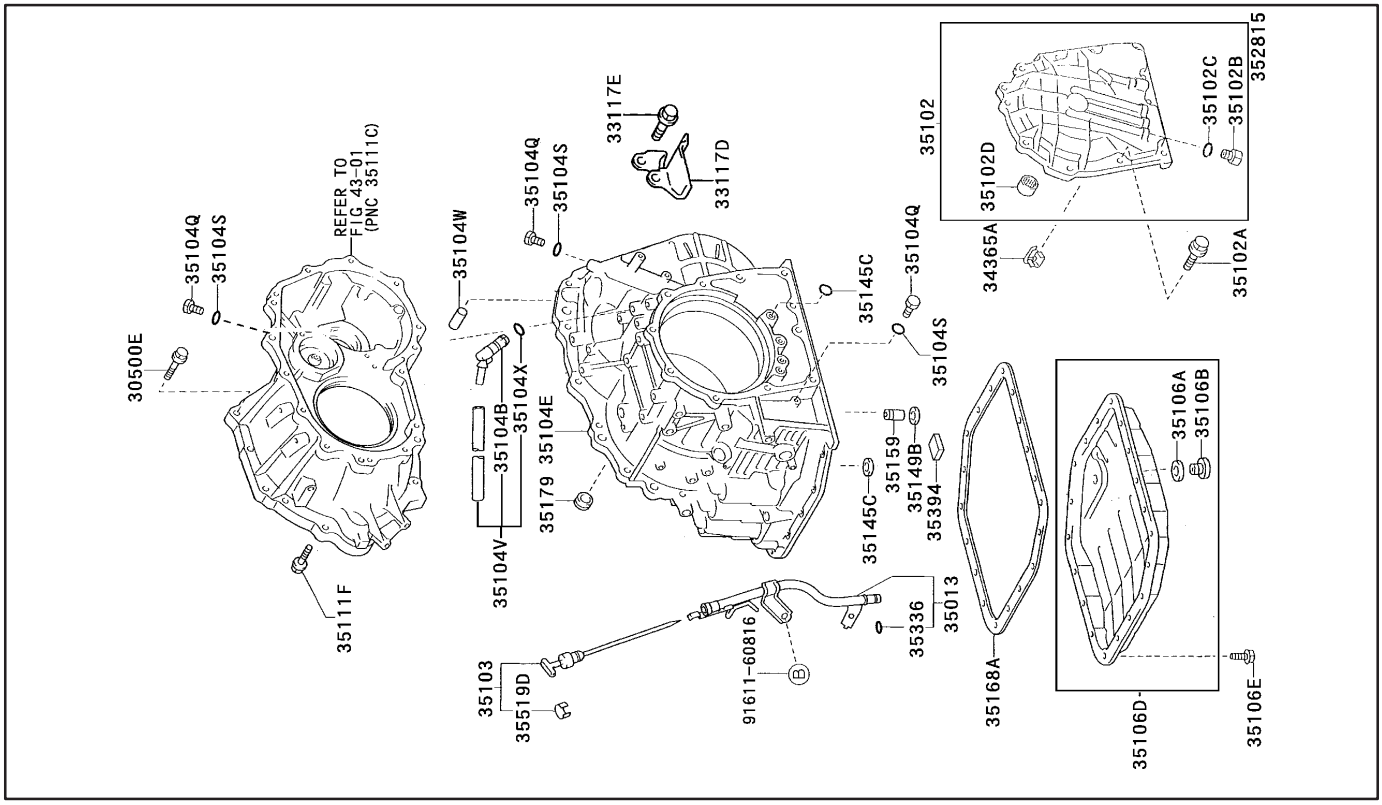

9808K–01

3505/SPEEDOMETER DRIVEN GEAR (ATM)

(0008–)NZE12#..ATM **U340E**

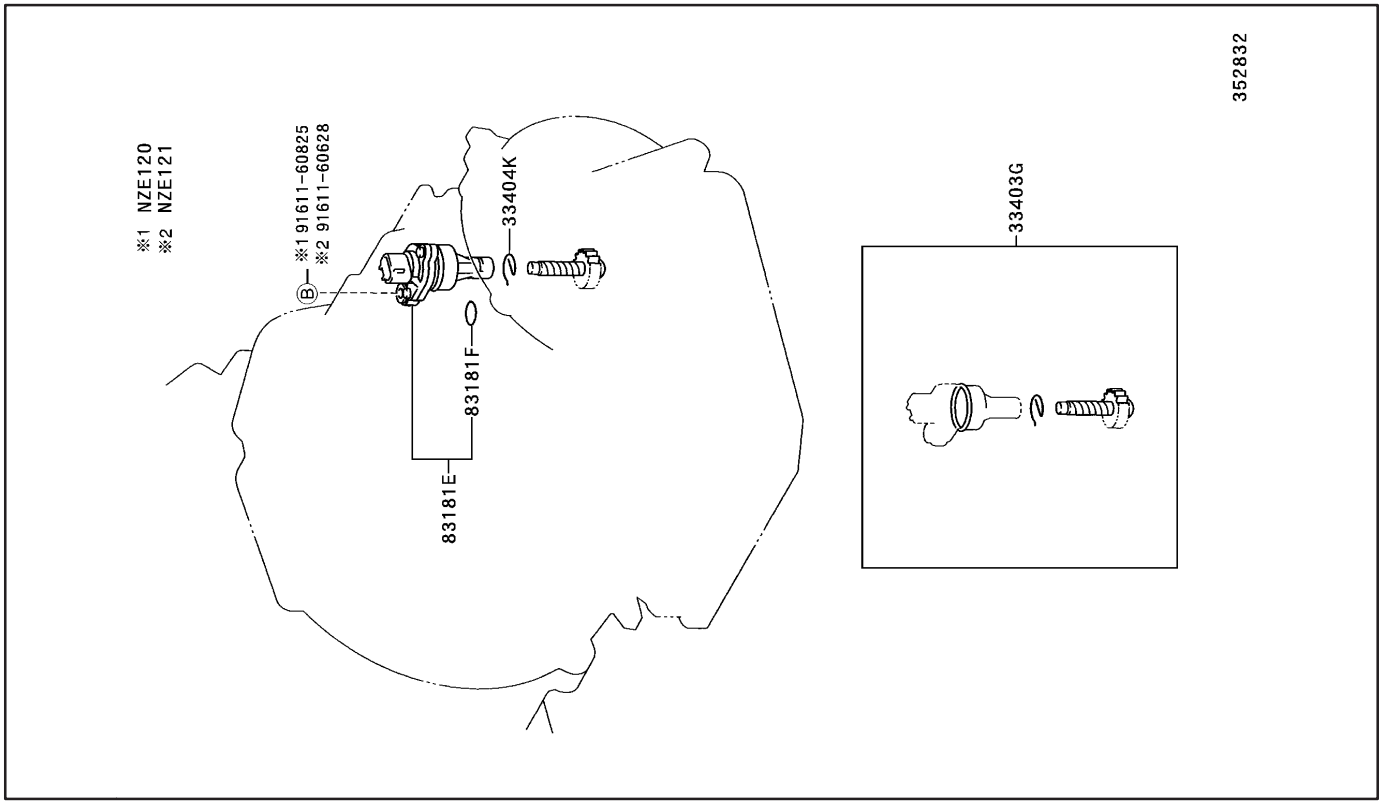

9808R–01

3507/BRAKE BAND & MULTIPLE DISC CLUTCH (ATM)

(0008–)NZE121..ATM **U340E**

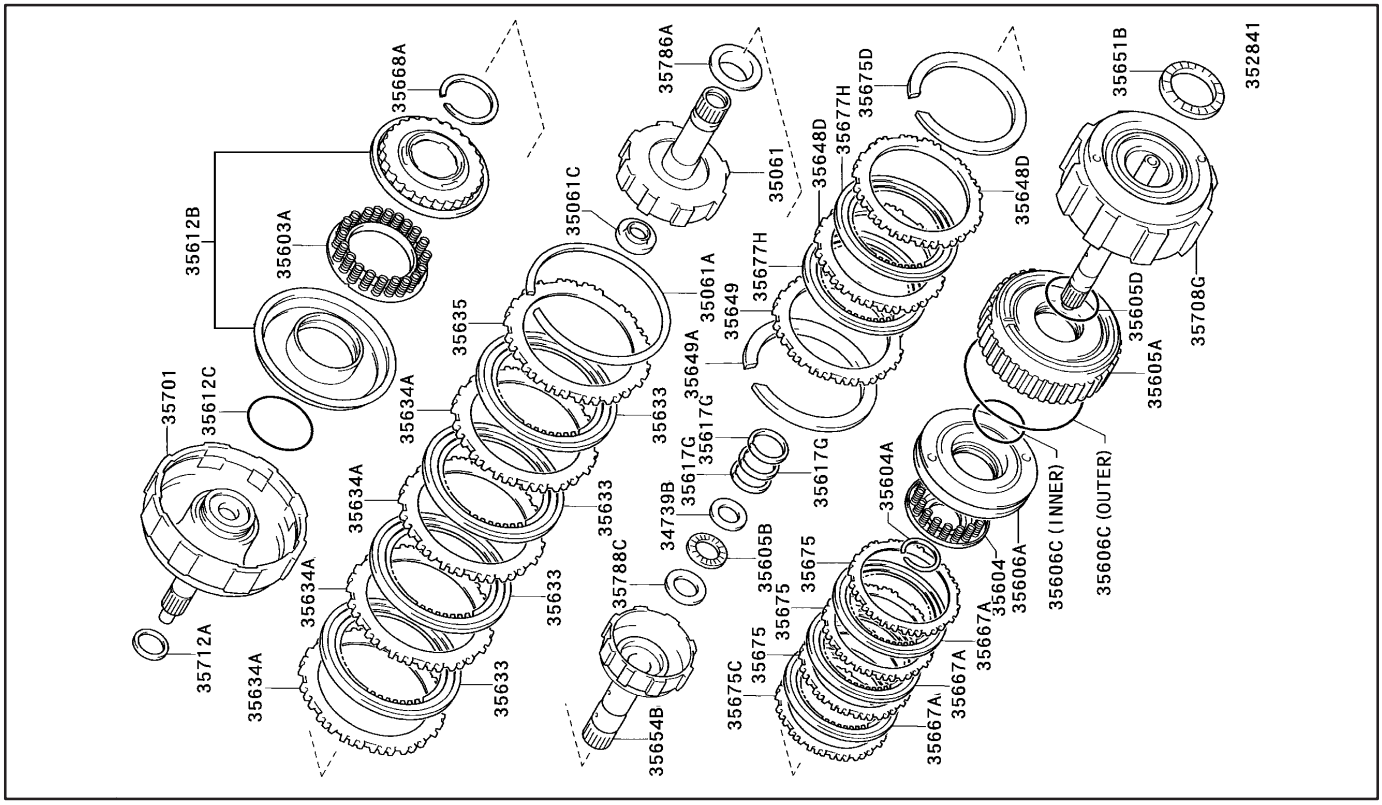

9808S–01

3509/BRAKE NO.3, 1ST & REVERSE BRAKE (ATM)

(0008–)NZE121..ATM **U340E**

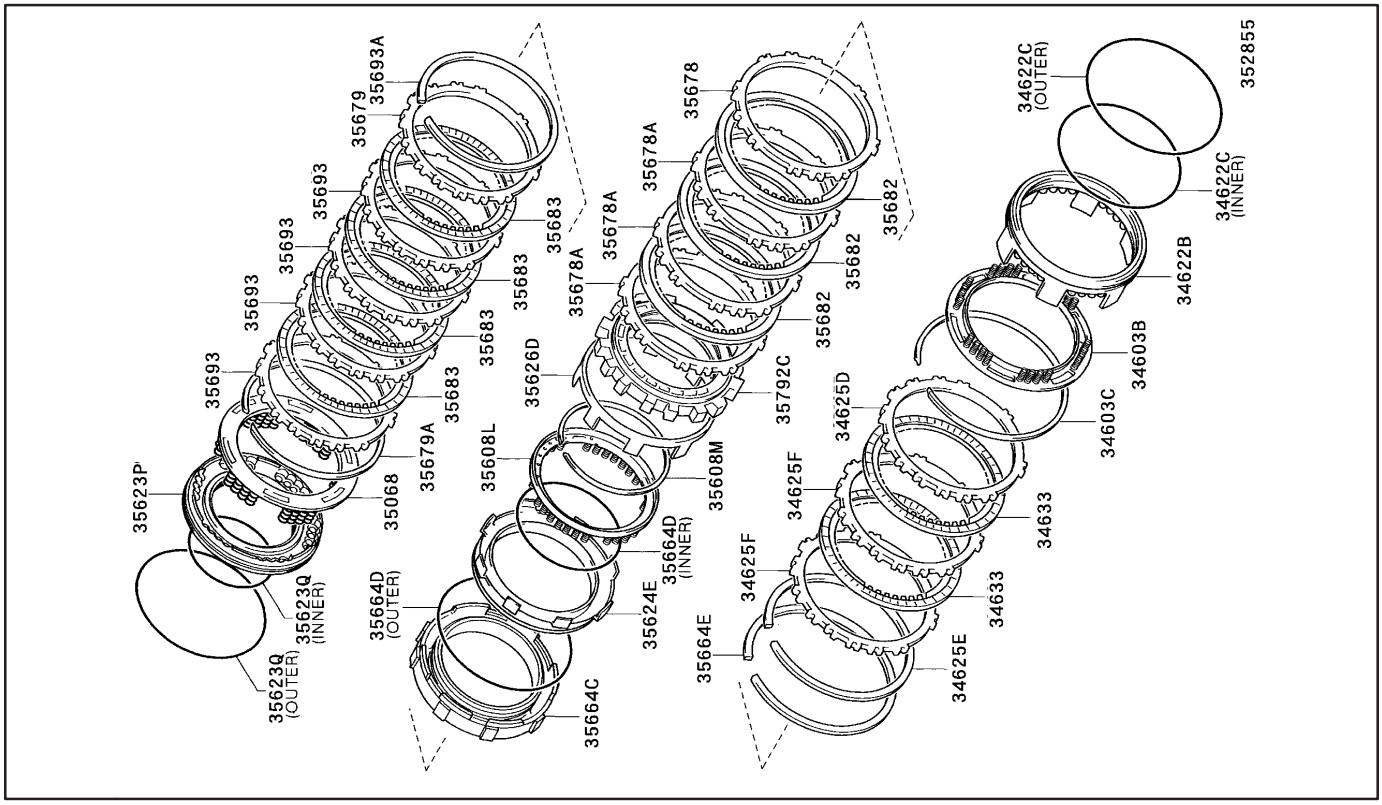

9808U–01

3510/PLANETARY GEAR, REVERSE PISTON & COUNTER GEAR(ATM)

(0008–)NZE121..ATM **U340E**

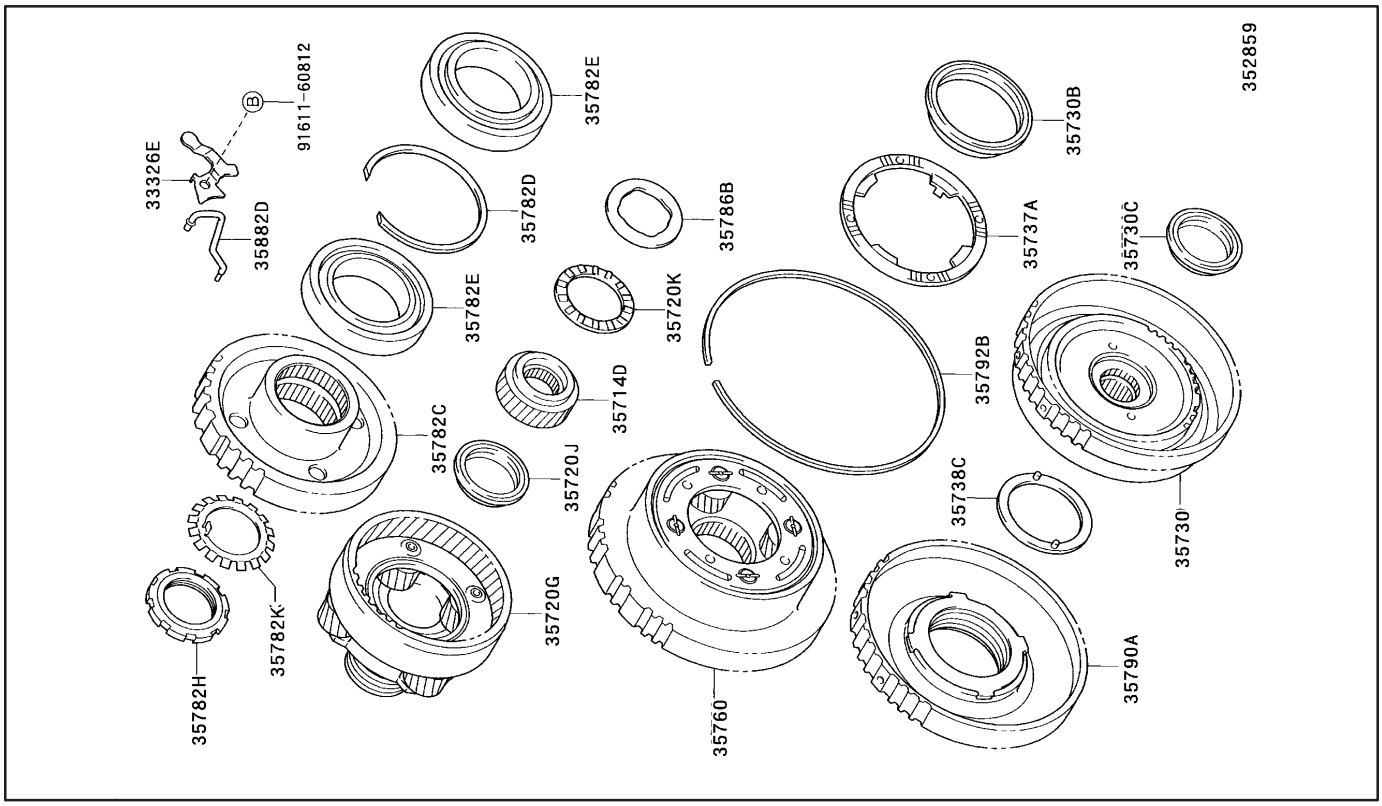

9808V–01

3512/VALVE BODY & OIL STRAINER (ATM)

(0008–)NZE121..ATM **U340E**

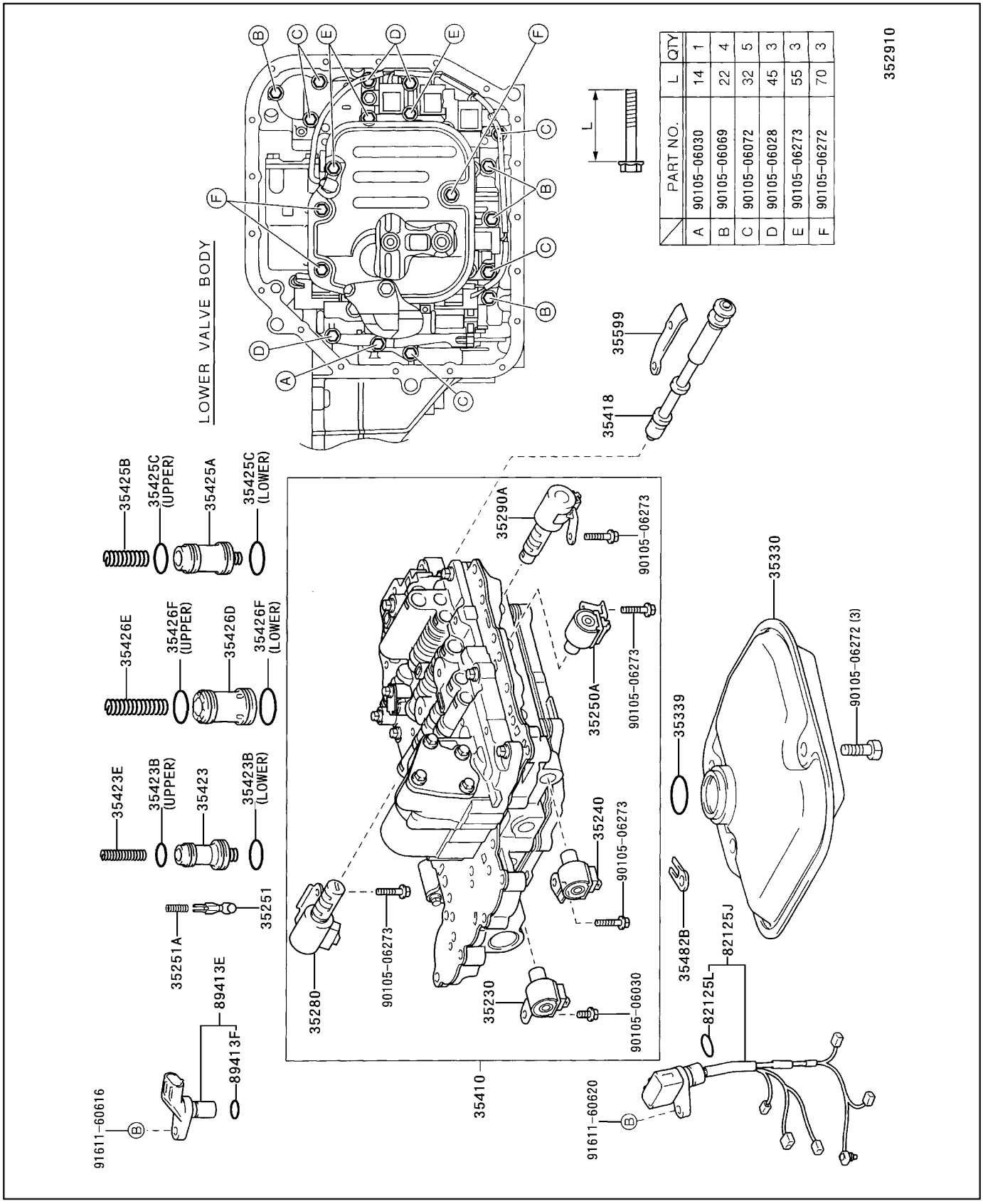

9808W–01

3513/THROTTLE LINK & VALVE LEVER (ATM)

(0008–)NZE121..ATM **U340E**

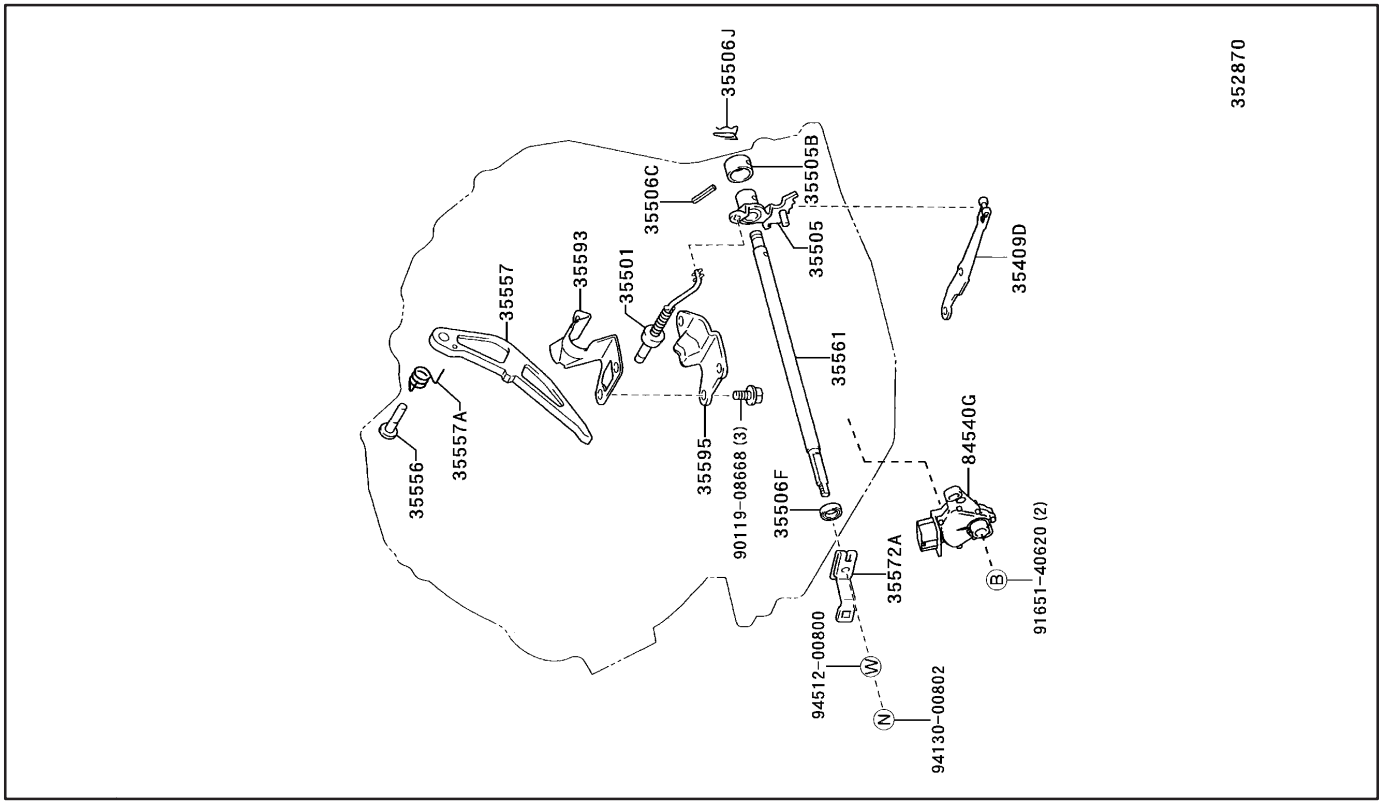

9808X–01

3514/OIL COOLER & TUBE (ATM)

(0008–)ATM **U340E**

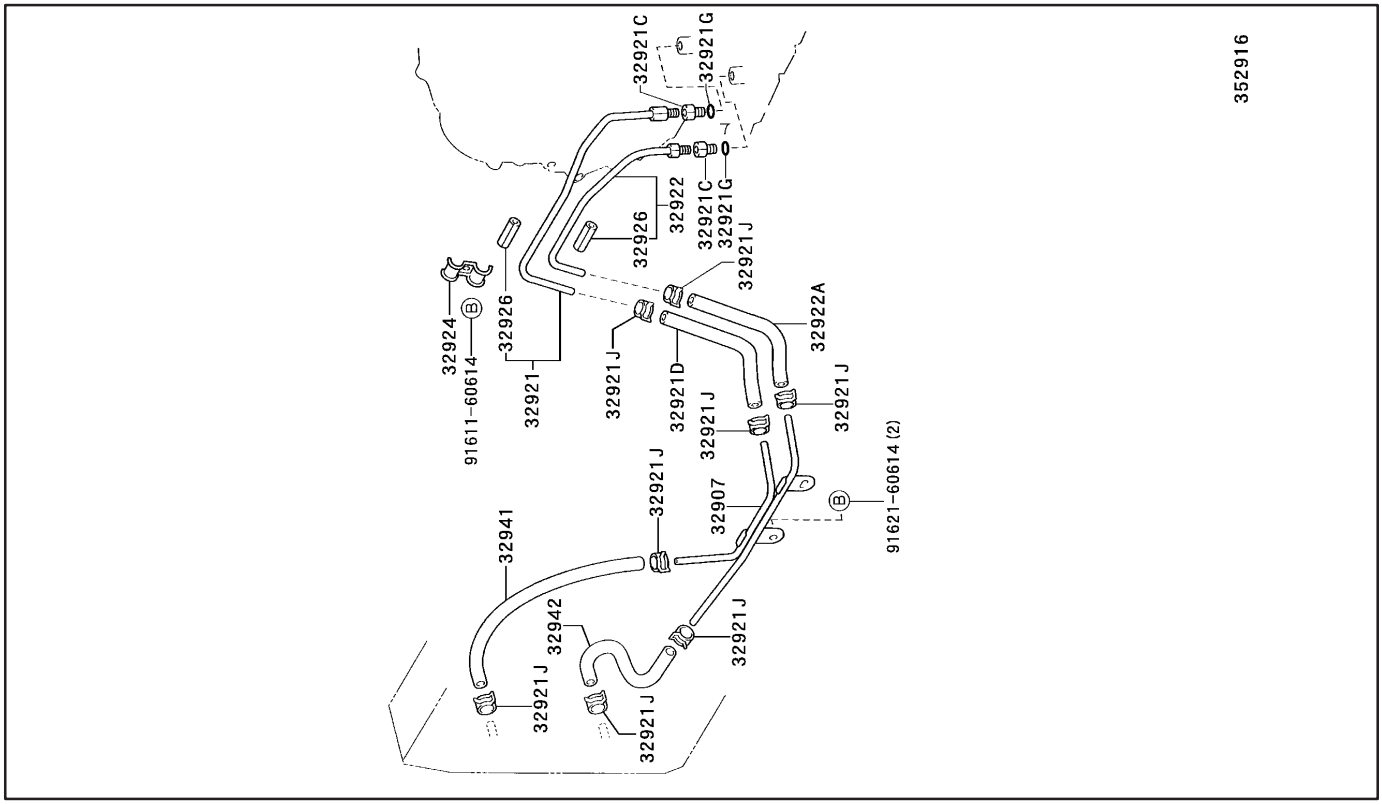

9808Y–01

4301/FRONT AXLE HOUSING & DIFFERENTIAL

(0008–)NZE121..ATM **U340E**

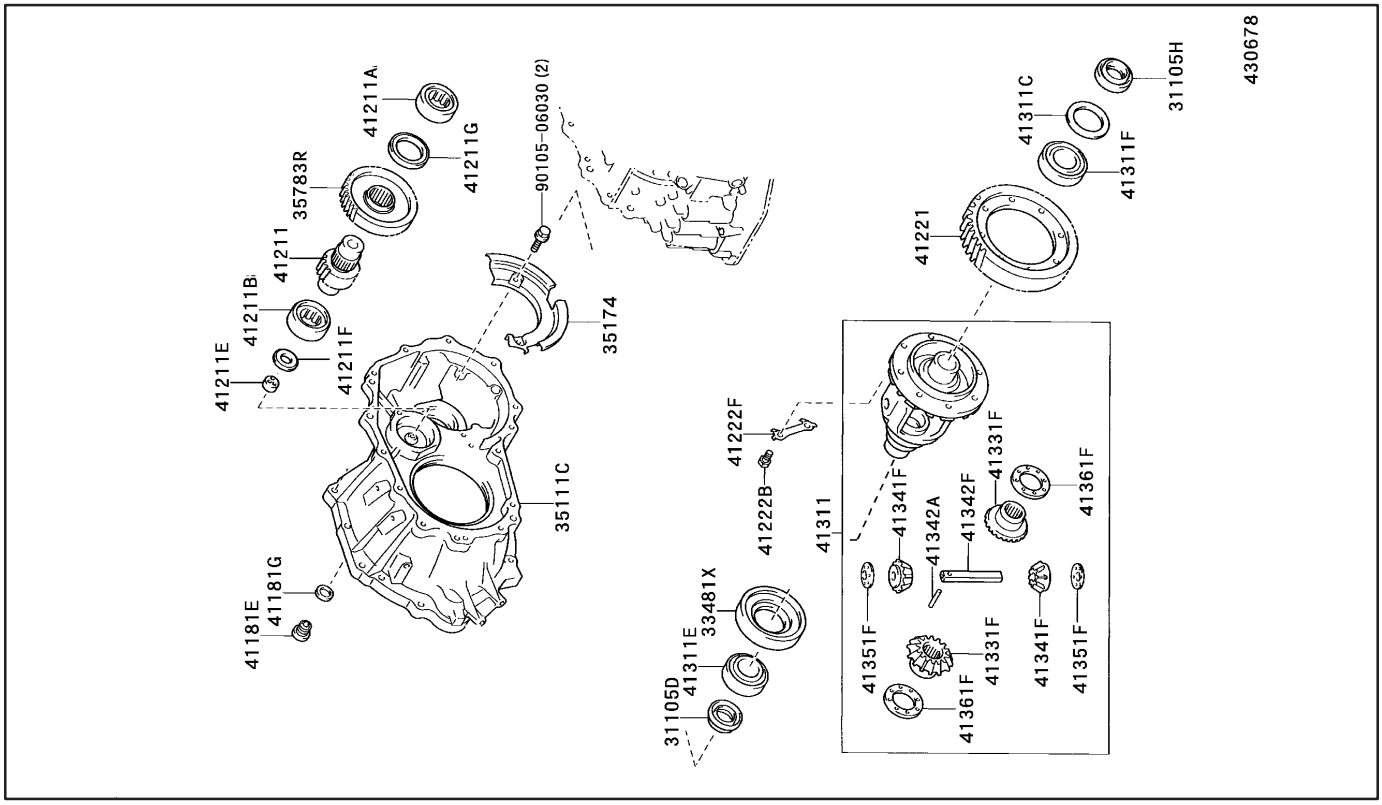

HOW TO USE THIS MANUAL

0103I–01

GENERAL INFORMATION

1. GENERAL DESCRIPTION

(a) This manual is made in accordance with SAE J2008.

(b) Repair operations can be separated mainly in the following 3 processes:
1. Diagnosis
2. Removing and Installing, Replacing, Disassembling, Installing and Checking, Adjusting
3. Final Inspection

(c) This text explains the 1st process of ”Diagnosis” (placed in the ”Diagnostics” section) and the 2nd process, ”Removing & Installing, Replacing, Disassembling, Installing & Checking, Adjusting”, but the 3rd process of ”Final Inspection” are omitted.

(d) The following essential operations are not written down in the this manual, these operations, however, must be done in the practical situation.
(1) Operation with a jack and lift
(2) Cleaning of a removed part when necessary
(3) Visual check

2. INDEX

(a) An INDEX is provided on the first to page XX of each section to the guide you to the item to be repaired.

3. PREPARATION

(a) Use of special service tools (SST) and special service materials (SSM) may be required, depending on the repairing condition. Be sure to use SST and SSM when they are required and follow the working procedure properly. A list of SST and SSM is in the Preparation section in this manual.

4. REPAIR PROCEDURES

(a) Component drawing is placed as ”Component section.” It enables you to understand the fitting condition of the components.

(b) Illustrations of the parts catalog is placed as the component drawing. (In the illustration, parts code of the parts catalog is described.)

NOTICE:

The parts code described in this text is as of August, 2000. There is a case where the parts code or ten digits of the parts No. may change, so be sure to place an order using the parts catalog.

Example:

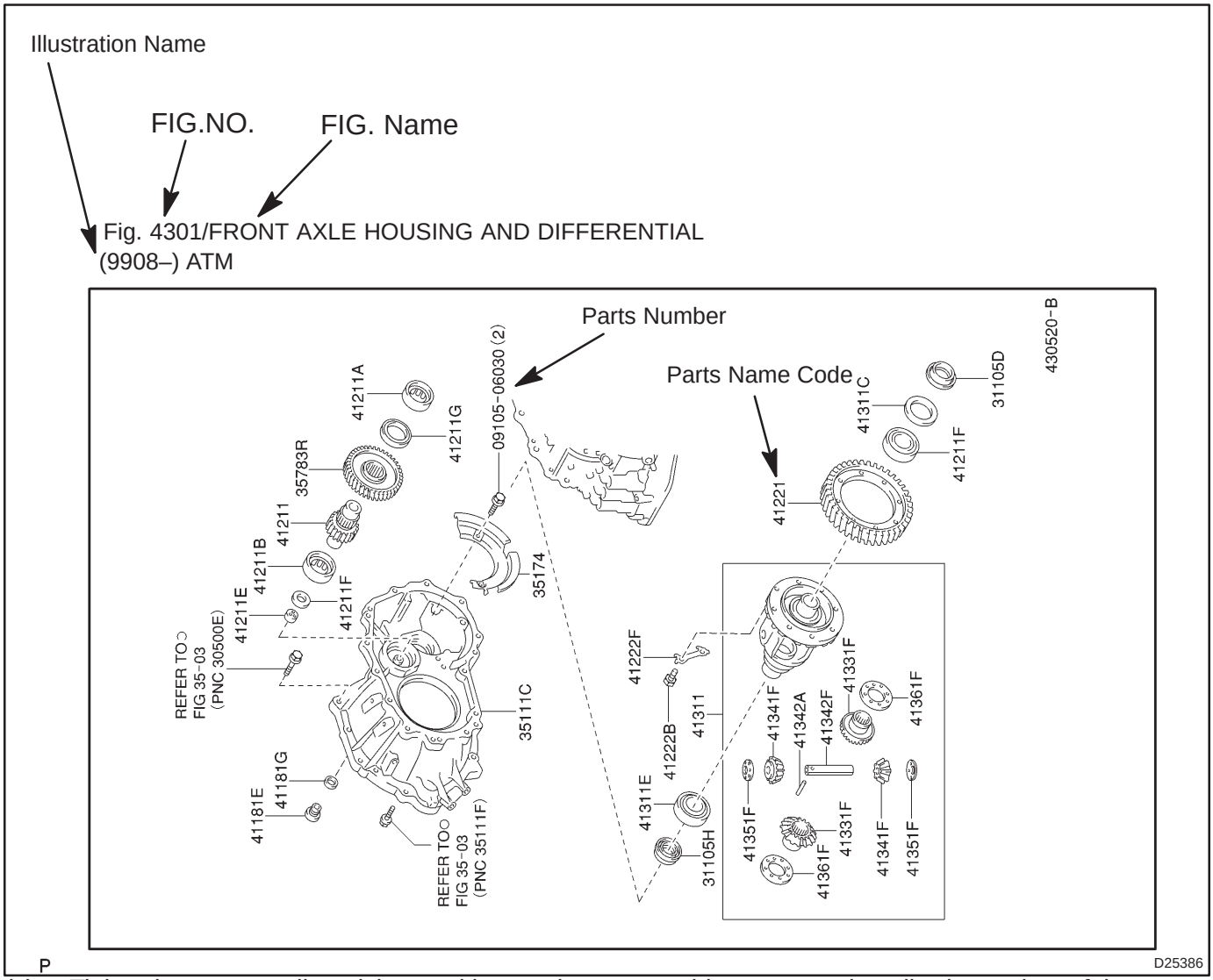

(c) Tightening torque, oil applying position, and non–reusable parts are described as points of the procedure.

NOTICE:

In case that the above items can be indicated only by an illustration, component drawing which describes the points is placed. In that case, all the information such as torque, oil, etc. are described in the illustration.

(d) Installing procedure of the operation items is performed in the reverse procedure of the removing and only the case with points is described.

(e) Only items with points are described in the procedure, and the operational portion and content are placed using an illustration. In the explanations, details of the operational method, standard value and notice are placed.

(f) There may be a case where the illustrations are used in common with similar models. Therefore there is a case where the details are different from one of the actual vehicle.

(g) The procedures are presented in a step–by–step format:
  (1) The illustration shows what to do and where to do it.
  (2) The task heading tells what to do.
  (3) The detailed text tells how to perform the task and gives other information such as specifications and warnings.

Example:

Illustration:
what to do and where

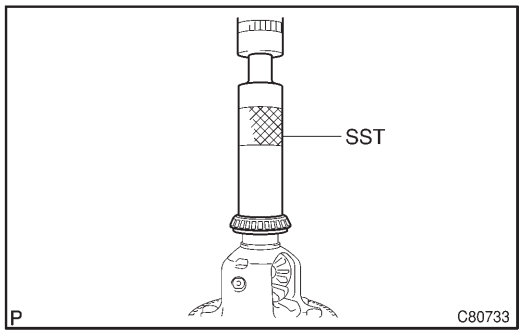

Task heading: what to do

87. INSTALL FR DIFFERENTIAL CASE FRONT TAPERED ROLLER BEARING
[41311 / 4301] ← *Part name code / FIG. NO.*

(a) Using SST and a press, install the front differential case tapered roller bearing front inner race to the differential case.

SST 09316–60011 (09316–00011)

Detailed text: how to do task

Set part No. *Component part No.*

P D25387

HINT:
This format provides an experienced technician with a FAST TRACK to the information needed. The upper case task heading can be read at a glance when necessary, and the text below it provides detailed information. Important specifications and warnings always stand out in bold type.

5. SERVICE SPECIFICATIONS

(a) Specifications are presented in bold type throughout the text where needed. You never have to leave the procedure to look up your specifications. They are also found in the Service Specifications section for a quick reference.

6. TERMS DEFINITION

CAUTION	Indicate the possibility of injury to you or other people.
NOTICE	Indicate the possibility of damage to the components being repaired.
HINT	Provide additional information to help you perform the repair efficiently.

7. SI UNIT

(a) The UNITS given in this manual are primarily expressed according to the SI UNIT (International System of Unit), and alternately expressed in the metric system and in the English System.
Example:
Torque: 30 N·m (310 kgf·cm, 22 ft·lbf)

REPAIR INSTRUCTION FOR AUTOMATIC TRANSAXLE REPAIR MANUAL

0103J–01

PRECAUTION

1. BASIC REPAIR HINT

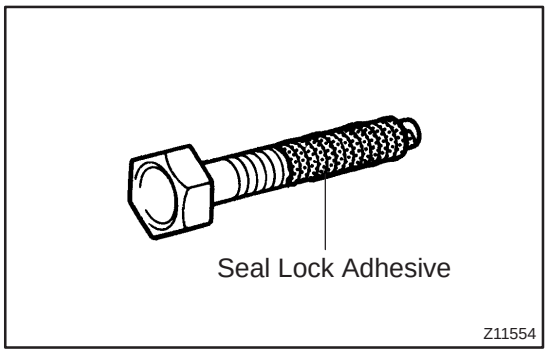

(a) PRECOATED PARTS

(1) Precoated parts are bolts, nuts, etc. that are coated with a seal lock adhesive at the factory.

(2) If a precoated part is retightened, loosened or caused to move in any way, it must be recoated with the specified adhesive.

(3) When reusing precoated parts, clean off the old adhesive and dry with compressed air. Then apply the specified seal lock adhesive to the bolt, nut or threads.

NOTICE:

Do the torque checking with the lower limit value of the torque tolerance.

(4) Depending on the seal lock agent to apply, there may be a case where it is necessary to leave it for a specified time until it hardens.

(b) GASKETS

When necessary, use a sealer on gaskets to prevent leaks.

(c) BOLTS, NUTS AND SCREWS

Carefully observe all specifications for bolt tightening torques. Always use a torque wrench.

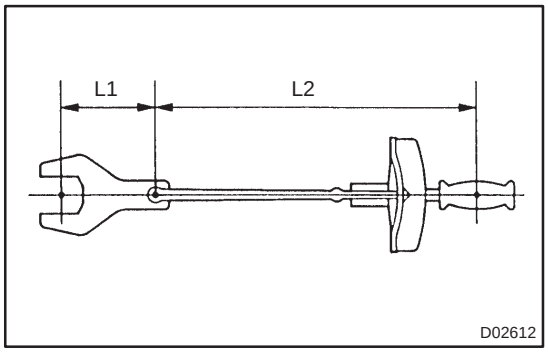

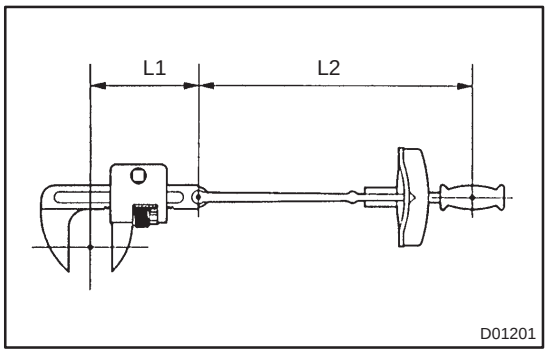

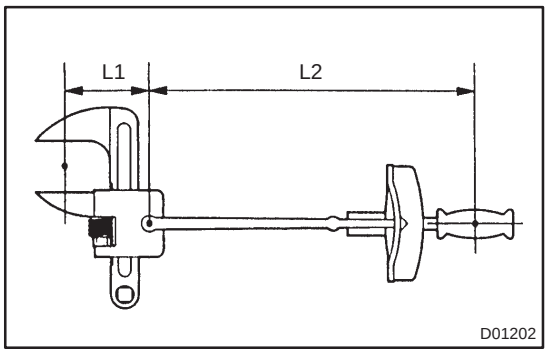

(d) TORQUE WHEN USING EXTENSION TOOL WITH TORQUE WRENCH

(1) In case of tightening by extending the entire length of the torque wrench combined with SST or tool, if you tighten until the reading of the torque wrench reached the specified torque value, the actual torque becomes excessive.

(2) In this text, only the specified torque is described. In case of using SST or extension tool, find the reading of the torque wrench by the formula.

(3) Formula T'=T x L2/(L1 + L2)

T'	Reading of torque wrench {N·m (kgf·cm, ft·lbf)}
T	Torque {N·m (kgf·cm, ft·lbf)}
L1	Length of SST or tool (cm)
L2	Length of torque wrench (cm)

TERMS FOR AUTOMATIC TRANSAXLE REPAIR MANUAL

0103K–01

ABBREVIATIONS USED IN THIS MANUAL

Abbreviations	Meaning
ASSY	Assembly
ATF	Automatic Transmission Fluid
B_3	U/D Brake
C_1	Forward Clutch
C_3	Reverse Clutch
FIPG	Formed In Place Gasket
O/D	Overdrive
SSM	Special Service Materials
SST	Special Service Tools
U/D	Underdrive
1ST	First
2ND	Second
w/	with
w/o	without

0103L–01

GLOSSARY OF SAE AND TOYOTA TERMS

This glossary lists all SAE–J1930 terms and abbreviations used in this manual in compliance with SAE recommendations, as well as their Toyota equivalents.

SAE ABBREVIATIONS	SAE TERMS	TOYOTA TERMS ( )—ABBREVIATIONS
A/C	Air Conditioning	Air Conditioner
ACL	Air Cleaner	Air Cleaner
AIR	Secondary Air Injection	Air Injection (AI)
AP	Accelerator Pedal	–
B+	Battery Positive Voltage	+B, Battery Voltage
BARO	Barometric Pressure	–
CAC	Charge Air Cooler	Inter cooler
CARB	Carburetor	Carburetor
CFI	Continuous Fuel Injection	–
CKP	Crankshaft Position	Crank Angle
CL	Closed Loop	Closed Loop
CMP	Camshaft position	Cam Angle
CPP	Clutch Pedal Position	–
CTOX	Continuous Trap Oxidizer	–
CTP	Closed Throttle Potion	–
DFI	Direct Fuel Injection (Diesel)	Direct Injection (DI)
DI	Distributor Ignition	–
DLC1 DLC2 DLC3	Data Link Connector 1 Data Link Connector 2 Data Link Connector 3	1: Check Connector 2: Total Diagnosis Communication Link (TDCL) 3: OBD II Diagnostic Connector
DTC	Diagnostic Trouble Code	Diagnostic Code
DTM	Diagnostic Test Mode	–
ECL	Engine Control Level	–
ECM	Engine Control Module	Engine ECU (Electronic Control Unit)
ECT	Engine Control Temperature	Coolant Temperature, Water Temperature (THW)
EEPROM	Electrically Erasable Programmable Read Only memory	Electrically Erasable Programmable Read Only memory (EEPROM), Erasable Programmable Read Only memory (EPROM)
EFE	Early Fuel Evaporation	Cold Mixture Heater (CMH), Heat Control Valve (HCV)
EGR	Exhaust Gas Recirculation	Exhaust Gas Recirculation (EGR)
EI	Electronic Ignition	Distributorless Ignition (DI)
EM	Engine Modification	Engine Modification (EM)
EPROM	Erasable Programmable Read Only Memory	Programmable Read Only Memory (PROM)
EVAP	Evaporative Emission	Evaporative Emission Control (EVAP)
FC	Fan Control	–
FEEPROM	Flash Electrically Erasable Programmable Read Only Memory	–
FEPROM	Flash Erasable Programmable Read Only Memory	–
FF	Flexible Fuel	–
FP	Fuel Pump	Fuel Pump
GEN	Generator	Alternator
GND	Ground	Ground (GND)
HO2S	Heated Oxygen Sensor	Heated Oxygen Sensor (HO2S)
IAC	Idol Air Control	Idol Speed Control (ISC)
IAT	Intake Air Temperature	Intake or Inlet Air Temperature
ICM	Ignition Control Module	–
IFI	Indirect Fuel Injection	Indirect Injection
IFS	Inertia Fuel–Shutoff	–

ISC	Idle Speed Control	–
KS	Knock Sensor	Knock Sensor
MAF	Mass Air Flow	Air Flow Meter
MAP	Manifold Absolute Pressure	Manifold Pressure Intake Vacuum
MC	Mixture Control	Electric Bleed Air Control Valve (EBCV) Mixture Control Valve (MCV) Electric Air Control Valve (EACV)
MDP	Manifold Differential Pressure	–
MFI	Multiport Fuel Injection	Electronic Fuel Injection (EFI)
MIL	Malfunction Indicator Lamp	Check Engine Light
MST	Manifold Surface temperature	–
MVZ	Manifold Vacuum Zone	–
NVRAM	Non–Volatile Random Access Memory	–
O2S	Oxygen Sensor	Oxygen Sensor, O_2 Sensor (O_{2S})
OBD	On–Board Diagnostic	On–Board Diagnostic (OBD)
OC	Oxidation Catalytic Converter	Oxidation Catalyst Converter (OC), CC_0
OP	Open Loop	Open Loop
PAIR	Pulsed Secondary Air Injection	Air Suction (AS)
PCM	Powertrain Control Module	–
PNP	Park/Neutral Position	–
PROM	Programmable Read Only Memory	–
PSP	Power Steering Pressure	–
PTOX	Periodic Trap Oxidizer	Diesel Particulate Filter (DPF) Diesel Particulate Trap (DPT)
RAM	Random Access Memory	Random Access Memory (RAM)
RM	Relay Module	–
ROM	Read Only Memory	Read Only Memory (ROM)
RPM	Engine Speed	Engine Speed
SC	Supercharger	Supercharger
SCB	Supercharger Bypass	–
SFI	Sequential Multiport Fuel Injection	Electronic Fuel Injection (EFI), Sequential Injection
SPL	Smoke Puff Limiter	–
SRI	Service Reminder Indicator	–
SRT	System Readiness Test	–
ST	Scan Tool	–
TB	Throttle Body	Throttle Body
TBI	Throttle Body Fuel Injection	Single Point Injection Central Fuel Injection (Ci)
TC	Turbocharger	Turbocharger
TCC	Torque Converter Clutch	Torque Converter
TCM	Transmission Control Module	Transmission ECU (Electronic Control Unit)
TP	Throttle Position	Throttle Position
TR	Transmission Range	–
TVV	Thermal Vacuum Valve	Bimetallic Vacuum Switching Valve (BVSV) Thermostatic Vacuum Switching Valve (TVSV)
TWC	Three–Way Catalytic Converter	Three–Way Catalytic (TWC) CC_{RO}
TWC+OC	Three–Way + Oxidation Catalytic Converter	$CC_R + CC_O$
VAF	Volume Air Flow	Air Flow Meter
VR	Voltage Regulator	Voltage Regulator
VSS	Vehicle Speed Sensor	Vehicle Speed Sensor (Read Switch Type)
WOT	Wide Open Throttle	Full Throttle

WU–OC	Warm Up Oxidation Catalytic Converter	–
WU–TWC	Warm Up Three–Way Catalytic Converter	Manifold Converter
3GR	Third Gear	–
4GR	Fourth Gear	–

STANDARD BOLT FOR AUTOMATIC TRANSAXLE REPAIR MANUAL

0103M–01

HOW TO DETERMINE BOLT STRENGTH

Bolt Type				Class
Hexagon Head Bolt		Stud Bolt	Weld Bolt	
Normal Recess Bolt	Deep Recess Bolt			
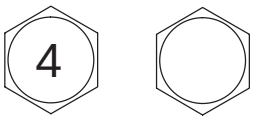		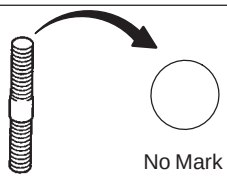	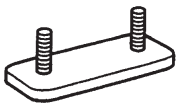	4T
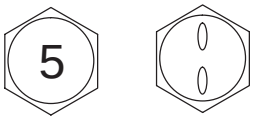				5T
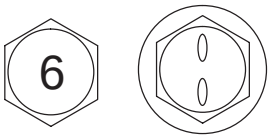	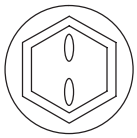			6T
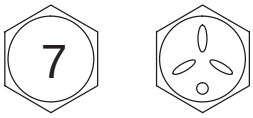	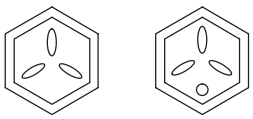			7T
				8T
				9T
	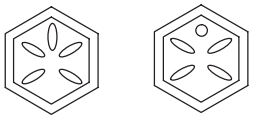			10T
	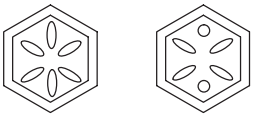			11T

B06431

0103N–01

SPECIFIED TORQUE FOR STANDARD BOLTS

Class	Diameter mm	Pitch mm	Specified torque					
			Hexagon head bolt			Hexagon flange bolt		
			N·m	kgf·cm	ft·lbf	N·m	kgf·cm	ft·lbf
4T	6	1	5	55	48 in.·lbf	6	60	52 in.·lbf
	8	1.25	12.5	130	9	14	145	10
	10	1.25	26	260	19	29	290	21
	12	1.25	47	480	35	53	540	39
	14	1.5	74	760	55	84	850	61
	16	1.5	115	1,150	83	–	–	–
5T	6	1	6.5	65	56 in.·lbf	7.5	75	65 in.·lbf
	8	1.25	15.5	160	12	17.5	175	13
	10	1.25	32	330	24	36	360	26
	12	1.25	59	600	43	65	670	48
	14	1.5	91	930	67	100	1,050	76
	16	1.5	140	1,400	101	–	–	–
6T	6	1	8	80	69 in.·lbf	9	90	78 in.·lbf
	8	1.25	19	195	14	21	210	15
	10	1.25	39	400	29	44	440	32
	12	1.25	71	730	53	80	810	59
	14	1.5	110	1,100	80	125	1,250	90
	16	1.5	170	1,750	127	–	–	–
7T	6	1	10.5	110	8	12	120	9
	8	1.25	25	260	19	28	290	21
	10	1.25	52	530	38	58	590	43
	12	1.25	95	970	70	105	1,050	76
	14	1.5	145	1,500	108	165	1,700	123
	16	1.5	230	2,300	166	–	–	–
8T	8	1.25	29	300	22	33	330	24
	10	1.25	61	620	45	68	690	50
	12	1.25	110	1,100	80	120	1,250	90
9T	8	1.25	34	340	25	37	380	27
	10	1.25	70	710	51	78	790	57
	12	1.25	125	1,300	94	140	1,450	105
10T	8	1.25	38	390	28	42	430	31
	10	1.25	78	800	58	88	890	64
	12	1.25	140	1,450	105	155	1,600	116
11T	8	1.25	42	430	31	47	480	35
	10	1.25	87	890	64	97	990	72
	12	1.25	155	1,600	116	175	1,800	130

0103O–01

HOW TO DETERMINE NUT STRENGTH

Nut Type			Class
Present Standard Hexagon Nut	Old Standard Hexagon Nut		
	Cold Forging Nut	Cutting Processed Nut	
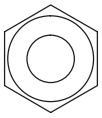 No Mark			4N
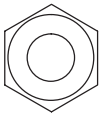 No Mark (w/ Washer)	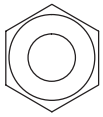 No Mark (w/ Washer)	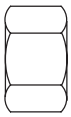 No Mark	5N (4T)
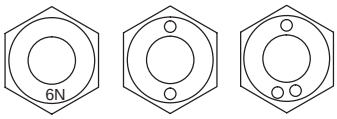 6N			6N
	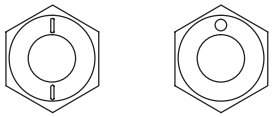	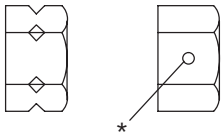 *	7N (5T)
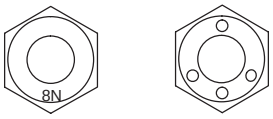 8N			8N
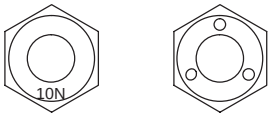 10N	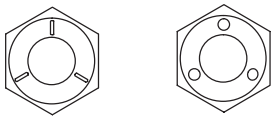	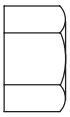 No Mark	10N (7T)
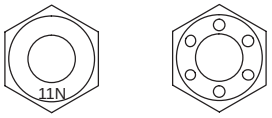 11N			11N
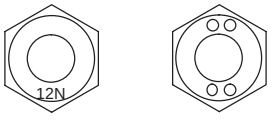 12N			12N

*: Nut with 1 or more marks on one side surface of the nut.

B06432

HINT:

Use the nut with the same number of the nut strength classification or the greater than the bolt strength classification number when tightening parts with a bolt and nut.

Example: Bolt = 4T

Nut = 4N or more

AUTOMATIC TRANSMISSION / TRANS

0209F–01

PREPARATION

SST

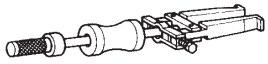	09308–00010	Oil Seal Puller	OIL PUMP ASSY(U241E) FRONNT DIFFERENTIAL ASSY(U241E)
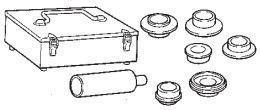	09316–60011	Transmission & Transfer Bearing Replacer	UNDERDRIVE PLANETARY GEAR ASSY(U241E) FRONNT DIFFERENTIAL ASSY(U241E)
	(09316–00011)	Replacer Pipe	UNDERDRIVE PLANETARY GEAR ASSY(U241E) FRONNT DIFFERENTIAL ASSY(U241E)
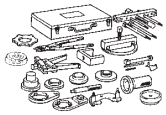	09350–32014	TOYOTA Automatic Transmission Tool Set	OIL PUMP ASSY(U241E) FORWARD CLUTCH ASSY(U241E) UNDERDRIVE CLUTCH ASSY(U241E) FRONNT DIFFERENTIAL ASSY(U241E)
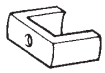	(09351–32070)	No.2 Piston Spring Compressor	FORWARD CLUTCH ASSY(U241E) UNDERDRIVE CLUTCH ASSY(U241E)
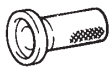	(09351–32140)	Oil Seal Replacer	OIL PUMP ASSY(U241E)
	(09351–32150)	Oil Seal Replacer	FRONNT DIFFERENTIAL ASSY(U241E)
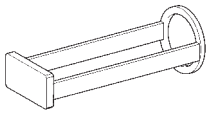	09387–00020	Direct Clutch Wrench	AUTOMATIC TRANSAXLE ASSY(U241E) DIRECT CLUTCH ASSY(U241E)
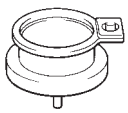	09387–00030	Counter Drive Gear Holding Tool	AUTOMATIC TRANSAXLE ASSY(U241E)
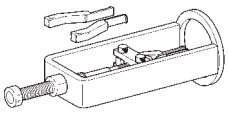	09387–00040	Bearing Puller Assembly	AUTOMATIC TRANSAXLE ASSY(U241E) FRONNT DIFFERENTIAL ASSY(U241E)
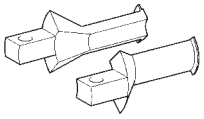	(09387–01010)	Claw No.1	AUTOMATIC TRANSAXLE ASSY(U241E)
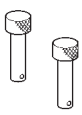	(09387–01030)	Pin	AUTOMATIC TRANSAXLE ASSY(U241E) FRONNT DIFFERENTIAL ASSY(U241E)

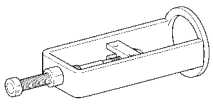	(09387–01040)	Bearing Puller Body	AUTOMATIC TRANSAXLE ASSY(U241E) FRONNT DIFFERENTIAL ASSY(U241E)
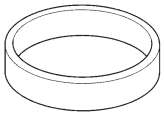	(09387–02010)	Oil Seal Replacer	FRONNT DIFFERENTIAL ASSY(U241E)
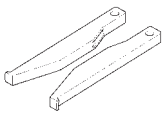	(09387–02020)	One–way Clutch Test Tool Set	FRONNT DIFFERENTIAL ASSY(U241E)
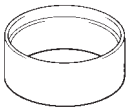	09387–00050	Under Drive Gear Puller	UNDERDRIVE PLANETARY GEAR ASSY(U241E)
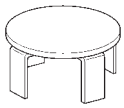	09387–00060	Second Brake Wrench	SECOND BRAKE PISTON ASSY(U241E)
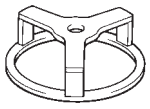	09387–00070	First & Reverse Brake Wrench	AUTOMATIC TRANSAXLE ASSY(U241E)
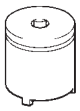	09387–00080	Counter Drive Gear Nut Wrench	AUTOMATIC TRANSAXLE ASSY(U241E)
	09506–35010	Differential Drive Pinion Rear Bearing Replacer	UNDERDRIVE PLANETARY GEAR ASSY(U241E)
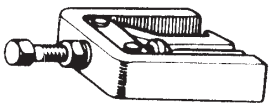	09514–35011	Rear Wheel Bearing Puller	AUTOMATIC TRANSAXLE ASSY(U241E)
	09550–60010	Differential Side Bearing Replacer	AUTOMATIC TRANSAXLE ASSY(U241E)
	(09951–00320)	Replacer 32	AUTOMATIC TRANSAXLE ASSY(U241E) UNDERDRIVE PLANETARY GEAR ASSY(U241E)
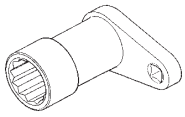	09564–16020	Drive Pinion Lock Nut Wrench	UNDERDRIVE PLANETARY GEAR ASSY(U241E)
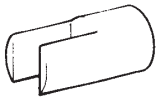	09564–32011	Differential Preload Adaptor	FRONNT DIFFERENTIAL ASSY(U241E)

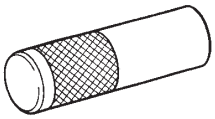	09608–06041	Front Hub Inner Bearing Cone Replacer	FRONNT DIFFERENTIAL ASSY(U241E)
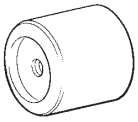	09649–17010	Steering Knuckle Tool	AUTOMATIC TRANSAXLE ASSY(U241E) FRONNT DIFFERENTIAL ASSY(U241E)
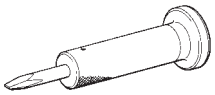	09930–00010	Drive Shaft Nut Chisel	UNDERDRIVE PLANETARY GEAR ASSY(U241E)
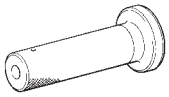	(09931–00010)	Handle	UNDERDRIVE PLANETARY GEAR ASSY(U241E)
	(09931–00020)	Nut Chisel	UNDERDRIVE PLANETARY GEAR ASSY(U241E)
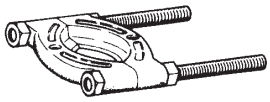	09950–00020	Bearing Remover	UNDERDRIVE PLANETARY GEAR ASSY(U241E) FRONNT DIFFERENTIAL ASSY(U241E)
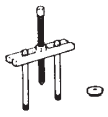	09950–00030	Bearing Remover Attachment	UNDERDRIVE PLANETARY GEAR ASSY(U241E) FRONNT DIFFERENTIAL ASSY(U241E)
	09950–40011	Puller B Set	AUTOMATIC TRANSAXLE ASSY(U241E) FRONNT DIFFERENTIAL ASSY(U241E)
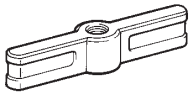	(09951–04010)	Hanger 150	AUTOMATIC TRANSAXLE ASSY(U241E)
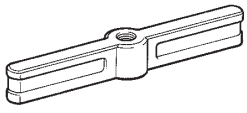	(09951–04020)	Hanger 200	FRONNT DIFFERENTIAL ASSY(U241E)
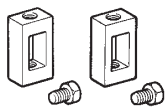	(09952–04010)	Slide Arm	AUTOMATIC TRANSAXLE ASSY(U241E) FRONNT DIFFERENTIAL ASSY(U241E)
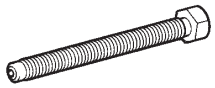	(09953–04020)	Center Bolt 150	AUTOMATIC TRANSAXLE ASSY(U241E) FRONNT DIFFERENTIAL ASSY(U241E)
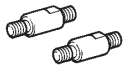	(09954–04010)	Arm 25	AUTOMATIC TRANSAXLE ASSY(U241E) FRONNT DIFFERENTIAL ASSY(U241E)

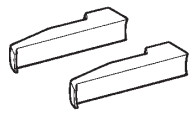	(09955–04011) Claw No.1	AUTOMATIC TRANSAXLE ASSY(U241E)
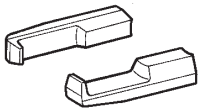	(09955–04061) Claw No.6	FRONNT DIFFERENTIAL ASSY(U241E)
	(09957–04010) Attachment	FRONNT DIFFERENTIAL ASSY(U241E)
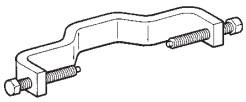	(09958–04011) Holder	AUTOMATIC TRANSAXLE ASSY(U241E) FRONNT DIFFERENTIAL ASSY(U241E)
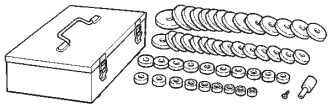	09950–60010 Replacer Set	AUTOMATIC TRANSAXLE ASSY(U241E) UNDERDRIVE PLANETARY GEAR ASSY(U241E) FRONNT DIFFERENTIAL ASSY(U241E)
	(09951–00230) Replacer 23	AUTOMATIC TRANSAXLE ASSY(U241E)
	(09951–00250) Replacer 25	UNDERDRIVE PLANETARY GEAR ASSY(U241E)
	(09951–00320) Replacer 32	AUTOMATIC TRANSAXLE ASSY(U241E) UNDERDRIVE PLANETARY GEAR ASSY(U241E)
	(09951–00340) Replacer 34	UNDERDRIVE PLANETARY GEAR ASSY(U241E) FRONNT DIFFERENTIAL ASSY(U241E)
	(09951–00350) Replacer 35	AUTOMATIC TRANSAXLE ASSY(U241E)
	(09951–00400) Replacer 40	AUTOMATIC TRANSAXLE ASSY(U241E)
	(09951–00450) Replacer 45	AUTOMATIC TRANSAXLE ASSY(U241E)
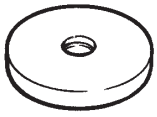	(09951–00600) Replacer 60	AUTOMATIC TRANSAXLE ASSY(U241E)

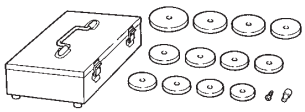	09950–60020	Replacer Set No.2	AUTOMATIC TRANSAXLE ASSY(U241E) UNDERDRIVE PLANETARY GEAR ASSY(U241E) FRONNT DIFFERENTIAL ASSY(U241E)
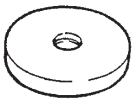	(09951–00680)	Replacer 68	FRONNT DIFFERENTIAL ASSY(U241E)
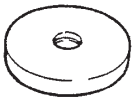	(09951–00710)	Replacer 71	FRONNT DIFFERENTIAL ASSY(U241E)
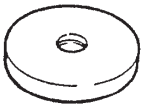	(09951–00810)	Replacer 81	AUTOMATIC TRANSAXLE ASSY(U241E)
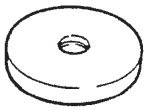	(09951–00890)	Replacer 89	AUTOMATIC TRANSAXLE ASSY(U241E) UNDERDRIVE PLANETARY GEAR ASSY(U241E)
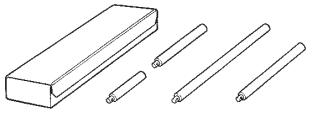	09950–70010	Handle Set	AUTOMATIC TRANSAXLE ASSY(U241E) UNDERDRIVE PLANETARY GEAR ASSY(U241E) FRONNT DIFFERENTIAL ASSY(U241E)
	(09951–07100)	Handle 100	AUTOMATIC TRANSAXLE ASSY(U241E) UNDERDRIVE PLANETARY GEAR ASSY(U241E) FRONNT DIFFERENTIAL ASSY(U241E)
	(09951–07150)	Handle 150	AUTOMATIC TRANSAXLE ASSY(U241E) FRONNT DIFFERENTIAL ASSY(U241E)

Recomended Tools

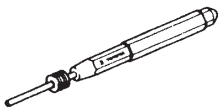	09031–00030	Pin Punch .	AUTOMATIC TRANSAXLE ASSY(U241E)
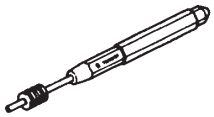	09031–00040	Pin Punch .	FRONNT DIFFERENTIAL ASSY(U241E)
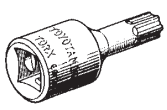	09042–00010	Torx Socket T30	AUTOMATIC TRANSAXLE ASSY(U241E) OIL PUMP ASSY(U241E)
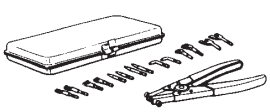	09904–00010	Expander Set	AUTOMATIC TRANSAXLE ASSY(U241E)

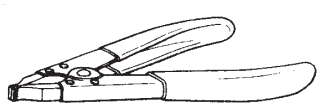	09905–00012	Snap Ring No.1 Expander .	AUTOMATIC TRANSAXLE ASSY(U241E) FORWARD CLUTCH ASSY(U241E) DIRECT CLUTCH ASSY(U241E) UNDERDRIVE CLUTCH ASSY(U241E)
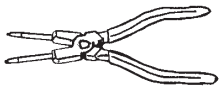	09905–00013	Snap Ring Pliers .	UNDERDRIVE PLANETARY GEAR ASSY(U241E)

Equipment

Dial indicator with magnetic base	
Feeler gauge	
Vernier calipers	
Torque wrench	
Plastic hammer	
Straight edge	

Lubicant

Item	Capacity	Classification
Automatic transaxle fluid Dry fill Drain and refill	 8.6 liters (9.1 US qts, 7.6 lmp.qts) 3.3 liters (3.5 US qts, 2.9 lmp.qts)	 ATF Type T–IV

SSM (Special Service Mateials)

08826–00090	”Seal Packing 1281,” THREE BOND 1281 or equivalent (FIPG)	
08833–00080	Adhesive 1344 THREE BOND 1344 LOCTITE 242 or equivalent	

AUTOMATIC TRANSMISSION / TRANSAXLE

0305N–01

SERVICE DATA

Oil pump		
Body clearance	STD	0.10 – 0.17 mm (0.0039 – 0.0067 in.)
	Max.	0.17 mm (0.0067 in.)
Tip clearance	STD	0.07 – 0.15 mm (0.0028 – 0.0059 in.)
	Max.	0.15 mm (0.0059 in.)
Side clearance	STD	0.02 – 0.05 mm (0.0008 – 0.0020 in.)
	Max.	0.05 mm (0.0020 in.)
Drive gear thickness	Mark	
	1	10.690 –10.699 mm (0.4209 – 0.4212 in.)
	2	10.700 –10.709 mm (0.4213 – 0.4216 in.)
	3	10.710 –10.720 mm (0.4217 – 0.4220 in.)
	4	10.721 –10.730 mm (0.4221 – 0.4224 in.)
	5	10.731 –10.740 mm (0.4225 – 0.4228 in.)
Driven gear thickness	Mark	
	1	10.690 –10.699 mm (0.4209 – 0.4212 in.)
	2	10.700 –10.709 mm (0.4213 – 0.4216 in.)
	3	10.710 –10.720 mm (0.4217 – 0.4220 in.)
	4	10.721 –10.730 mm (0.4221 – 0.4224 in.)
	5	10.731 –10.740 mm (0.4225 – 0.4228 in.)
Pump body bushing inside diameter	STD	38.11 – 38.14 mm (1.5005 – 1.5015 in.)
	Max.	38.19 mm (1.5035 in.)
Stator shaft bushing inside diameter	STD	20.50 – 21.53 mm (0.8465 – 0.8475 in.)
	Max.	21.57 mm (0.8492 in.)

Forward Clutch		
Piston stroke		1.74 – 2.08 mm (0.0685 – 0.0819 in.)
Piston return spring free length		28.23 mm (1.1114 in.)
Flange thickness	No.	
	1	3.00 mm (0.1181 in.)
	2	3.15 mm (0.1240 in.)
	3	3.30 mm (0.1299 in.)
	4	3.45 mm (0.1358 in.)
	5	3.60 mm (0.1417 in.)

Direct clutch		
Pack clearance		0.605 – 0.825 mm (0.02382 – 0.03248 in.)
Piston return spring free length		22.58 mm (0.8890 in.)
Flange thickness	No.	
	1	3.0 mm (0.118 in.)
	2	3.1 mm (0.122 in.)
	3	3.2 mm (0.126 in.)
	4	3.3 mm (0.130 in.)
	5	3.4 mm (0.134 in.)
	6	3.5 mm (0.138 in.)
End play		0.198 – 0.936 mm (0.00800 – 0.03685 in.)

2ND brake		
Pack clearance		0.62 – 0.91 mm (0.0244 – 0.0358 in.)
Piston return spring free length		16.61 mm (0.6539 in.)
Flange thickness	Mark	
	1	3.0 mm (0.118 in.)
	2	3.1 mm (0.122 in.)
	3	3.2 mm (0.126 in.)
	4	3.3 mm (0.130 in.)
	5	3.4 mm (0.134 in.)
	6	3.5 mm (0.138 in.)
	7	3.6 mm (0.142 in.)

Input shaft		
End play		0.26 – 1.25 mm (0.0103 – 0.0492 in.)

U/D clutch		
Pack clearance		1.51 – 1.90 mm (0.0594 – 0.0748 in.)
U/D clutch drum busing inside diameter	STD	32.56 – 32.58 mm (1.2818 – 1.2826 in.)
	Max	32.63 mm (1.2846 in.)
Piston return spring free length		17.14 mm (0.6748 in.)
Flange thickness	Mark	
	A	3.0 mm (0.118 in)
	B	3.2 mm (0.126 in.)
	C	3.4 mm (0.134 in.)

U/D brake		
Piston stroke		1.81 – 2.20 mm (0.0713 – 0.0866 in.)
Piston return spring free length		14.04 mm (0.5213 in.)
Flange thickness	Mark	
	1	3.0 mm (0.118 in.)
	2	3.2 mm (0.126 in.)
	3	3.4 mm (0.134 in.)

1ST & reverse brake		
Pack clearance		1.02 – 1.21 mm (0.0402 – 0.0476 in.)
Piston return spring free length		15.51 mm (0.6106 in.)

Front planetary gear		
Bearing turning torque at 60 rpm	New bearing:	0.5 – 1.0 N·m (5.1 – 10.0 kgf·cm, 4.4 – 8.7 in.·lbf)
	Used bearing:	0.3 – 0.5 N·m (3.1 – 5.1 kgf·cm, 2.7 – 4.4 in.·lbf)

U/D planetary gear		
U/D output shaft turning torque	at 60 rpm	0.23 – 5.01 N·m (2 – 51 kgf·cm, 2.0 – 44.3 in.·lbf)
End play		0.20 – 0.69 mm (0.0079 – 0.0272 in.)

Transmission valve body		
Bolt length	A	25 mm (0.984 in.)
	B	41 mm (1.614 in.)
	C	45 mm (1.771 in.)

Accumulator			
Spring		Free length/Outer diameter	Color
B_3	Inner	60.24 (2.3716) / 15.9 (0.626)	Yellowish Green
	Outer	74.61 (2.9374) / 21.7 (0.854)	Blue
C_1		81.53 (3.2098) / 18.5 (0.728)	Pink
C_3		90.49 (3.5626) / 19.2 (0.756)	White

Differential	
Side gear backlash	0.05 – 0.20 mm (0.0020 – 0.0079 in.)
Thrust washer thickness	1.0 mm (0.039 in) 1.1 mm (0.043 in.) 1.2 mm (0.047 in.) 1.3 mm (0.051 in.)

Preload (at starting)		
New bearing		0.20 – 0.69 N·m (2 – 7 kgf·cm, 1.8 – 6.1 in.·lbf)
Used bearing		0.10 – 0.35 N·m (1 – 4 kgf·cm, 0.9 – 3.1 in.·lbf)
Shim thickness	Mark	
	0	1.90 mm (0.0748 in.)
	1	1.95 mm (0.0768 in.)
	2	2.00 mm (0.0787 in.)
	3	2.05 mm (0.0807 in.)
	4	2.10 mm (0.0827 in.)
	5	2.15 mm (0.0846 in.)
	6	2.20 mm (0.0866 in.)
	7	2.25 mm (0.0886 in.)
	8	2.30 mm (0.0906 in.)
	9	2.35 mm (0.0925 in.)
	A	2.40 mm (0.0945 in.)
	B	2.45 mm (0.0965 in.)
	C	2.50 mm (0.0984 in.)
	D	2.55 mm (0.1004 in.)
	E	2.60 mm (0.1024 in.)
	F	2.65 mm (0.1043 in.)
	G	2.70 mm (0.1063 in.)
	H	2.75 mm (0.1083 in.)
	J	2.80 mm (0.1102 in.)

0305O–01

TORQUE SPECIFICATION

Part Tightened		N·m	kgf·cm	ft·lbf
Transaxle housing x Transaxle case	Bolt A, B	29.4	300	21.7
	Bolt C	22.1	225	16.3
Differential gear lube apply tube x Transaxle housing		9.8	100	7
Front planetary gear assy x Nut		268	2,728	197
Transaxle case No. 1 plug x transaxle rear cover		7.4	75	65 in.·lbf
Transaxle rear cover plate x transaxle rear cover		7.5	76	66 in.·lbf
Transaxle rear cover x Transaxle case	Bolt A	18.6	190	14
	Other bolt	24.5	250	18
Pawl shaft clamp x Transaxle case		9.8	100	7
Oil pump x Transaxle case		22	226	16
Transaxle housing x Transaxle case	Bolt A	22	226	16
	Bolt B, C	29	300	22
Transaxle case No. 1 plug x Transaxle housing		7.4	75	65 in.·lbf
Parking lock pawl bracket x Transaxle case		20	205	15
Detent spring x Transaxle case	Bolt A	20	205	15
	Bolt B	12	120	9
Solenoid wire retaining bolt		5.4	55	48 in.·lbf
ATF temperature sensor clamp x Valve body		6.6	67	58 in·lbf
Oil strainer x Valve body		11	110	8
Oil pan x Transaxle case		7.8	80	69 in.·lbf
Speed sensor		11.3	115	8
Transmission revolution sensor		11.3	115	8
Oil cooler tube union (Elbow) x Transaxle case		27	276	20
Oil cooler tube union x Transaxle case		27	280	20
Transaxle case No. 1 plug x Transaxle case		7.4	75	65 in.·lbf
Park/neutral start switch	Bolt:	5.4	55	48 in.·lbf
	Nut:	6.9	70	61 in.·lbf
Control shaft lever		13	133	10
Speedometer driven hole cover sub–assy x Transaxle case		7.0	70	61 in.·lbf
Stator shaft assy x Oil pump assy		9.8	100	7
Lock nut		280	2,855	207
Valve body x Transaxle case		11	110	8
Differential ring gear x Differential case		95	969	70

AUTOMATIC TRANSMISSION / TRANSAXLE (U241E)

4006X–01

COMPONENTS

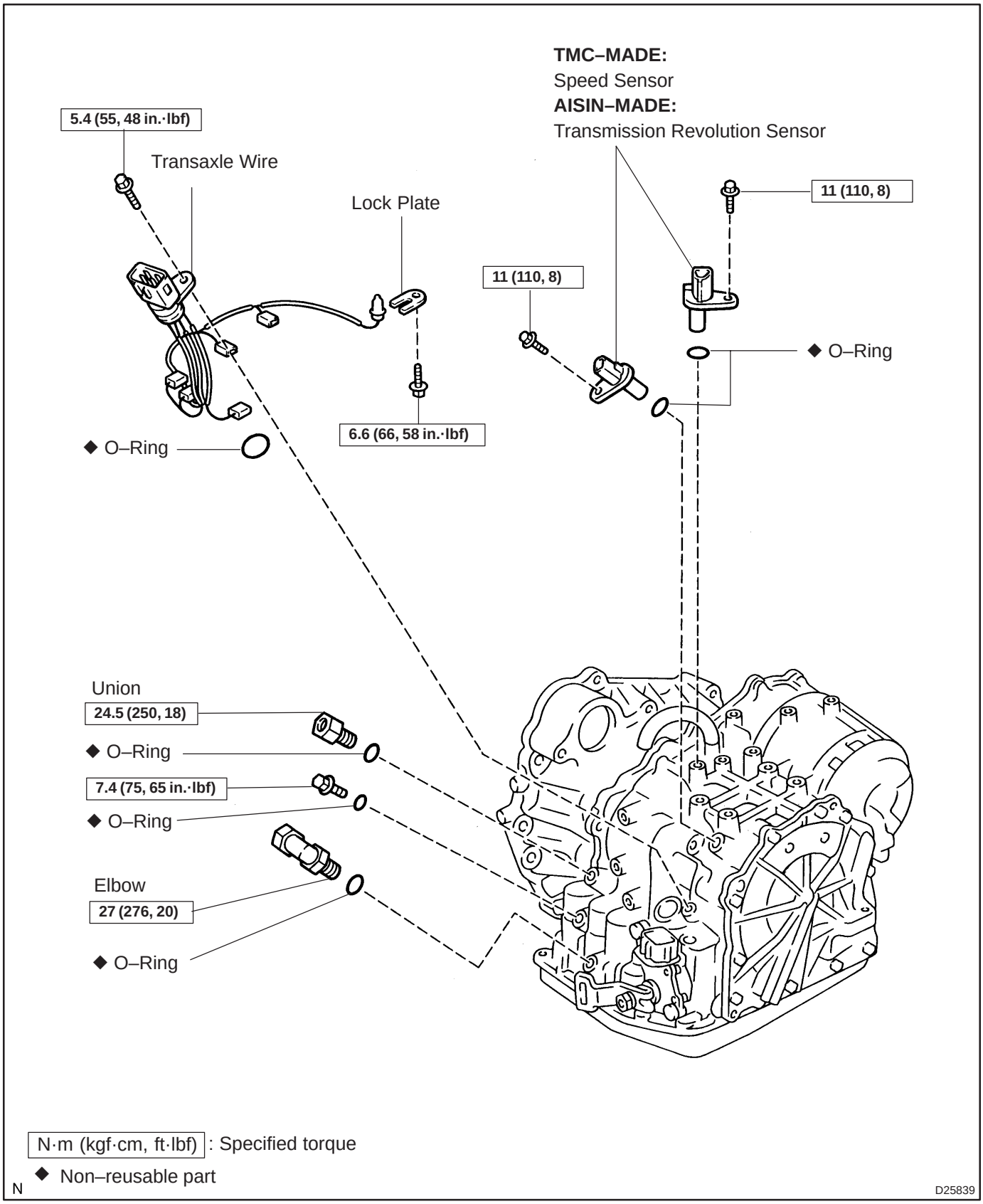

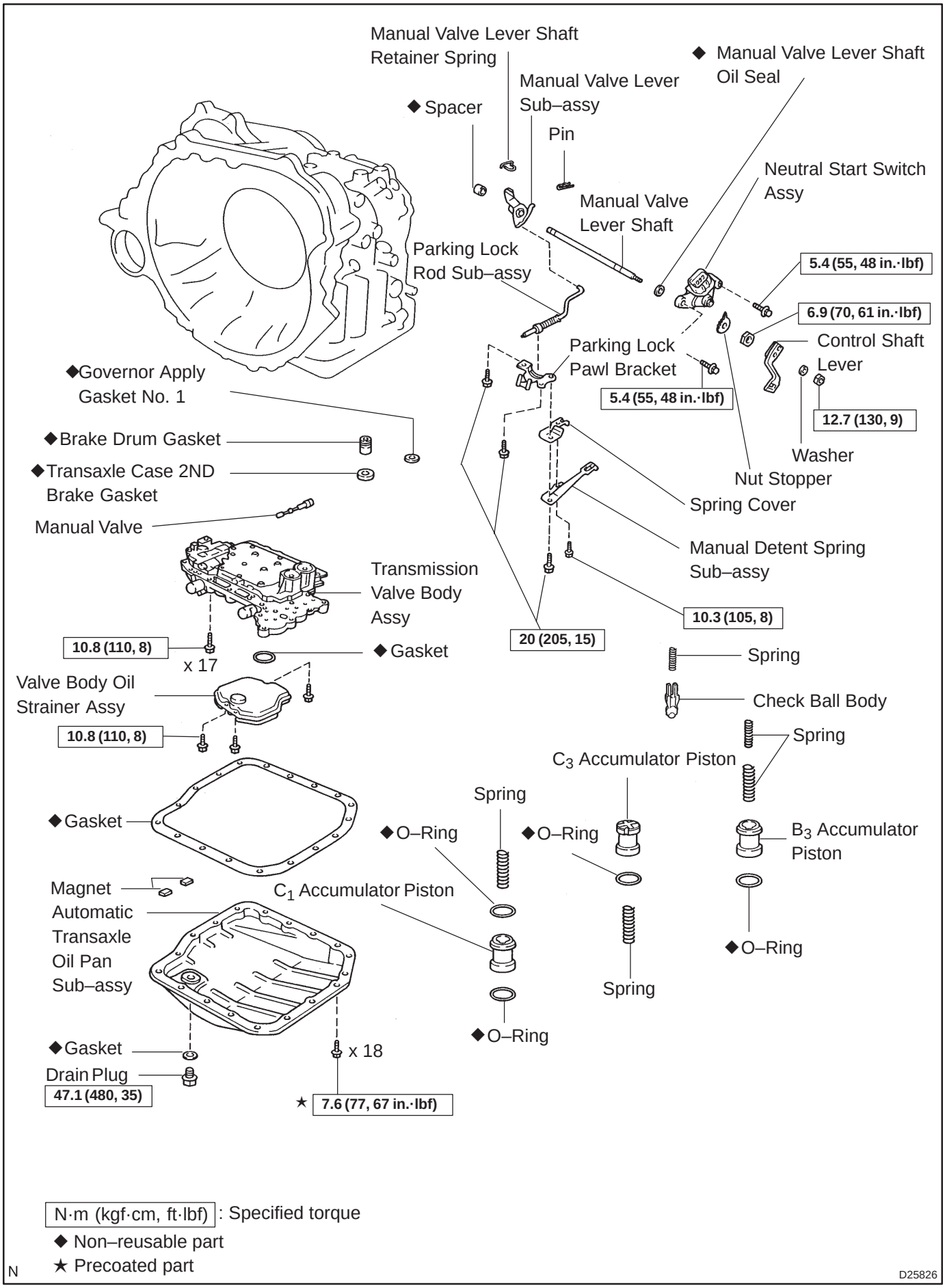

N·m (kgf·cm, ft·lbf) : Specified torque
◆ Non–reusable part
★ Precoated part

N

D25826

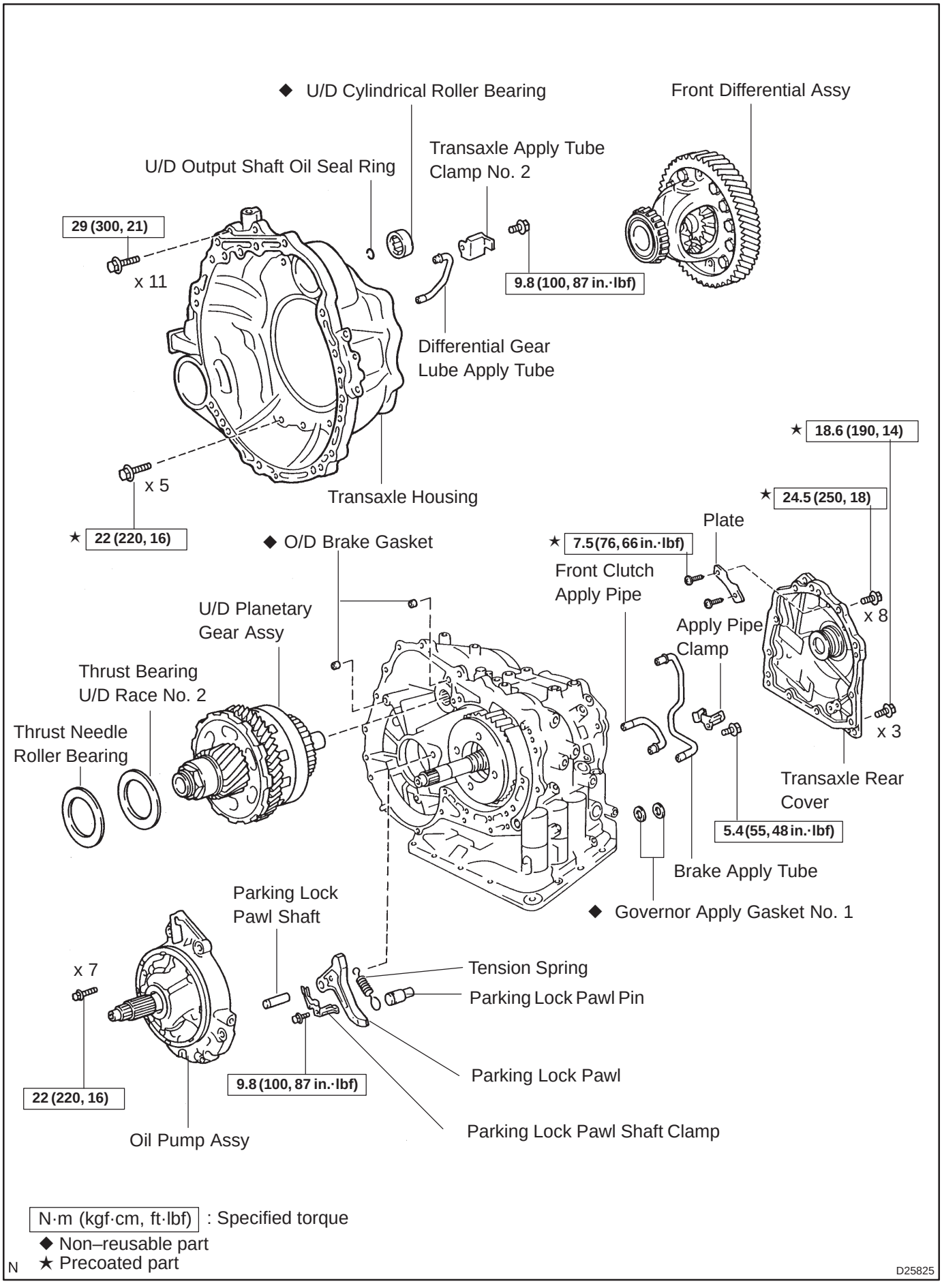

N·m (kgf·cm, ft·lbf) : Specified torque
◆ Non–reusable part
★ Precoated part

N

D25825

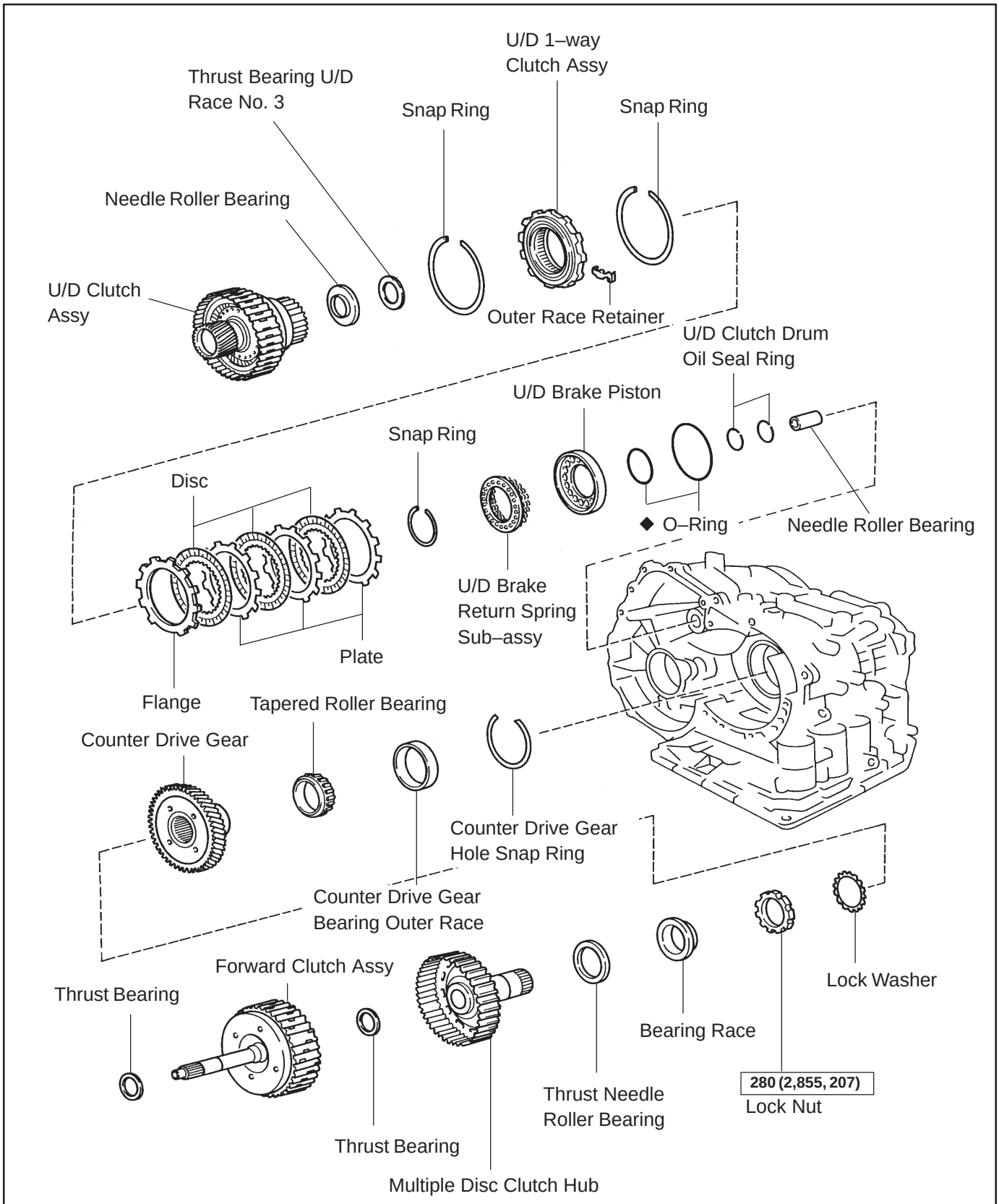

N ◆ Non–reusable part

N·m (kgf·cm, ft·lbf) : Specified torque

D09171

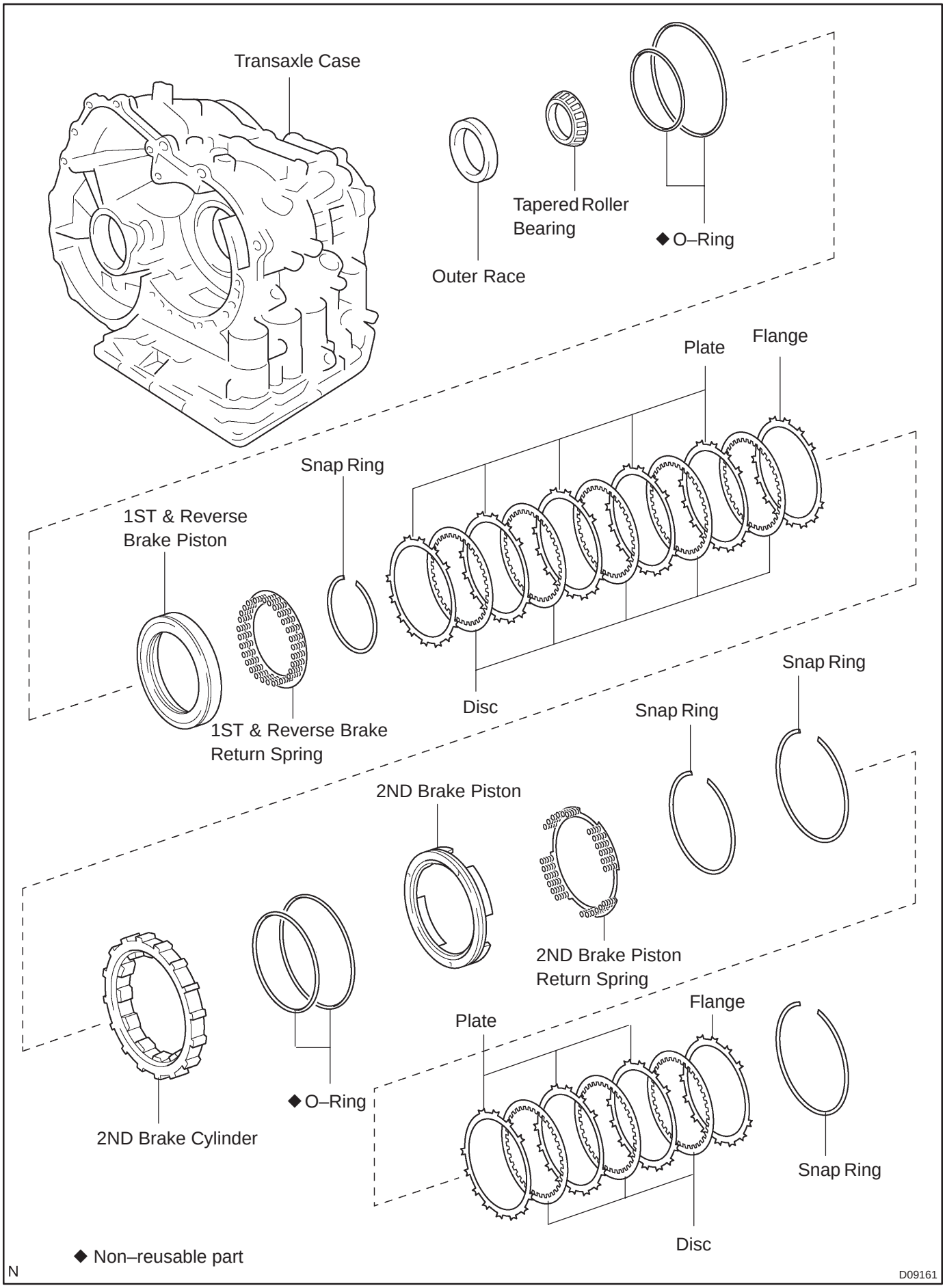
Transaxle Case
Outer Race
Tapered Roller Bearing
◆ O–Ring
Plate
Flange
Snap Ring
1ST & Reverse Brake Piston
1ST & Reverse Brake Return Spring
Disc
Snap Ring
Snap Ring
2ND Brake Piston
2ND Brake Piston Return Spring
◆ O–Ring
2ND Brake Cylinder
Plate
Flange
Snap Ring
Disc
◆ Non–reusable part
N
D09161

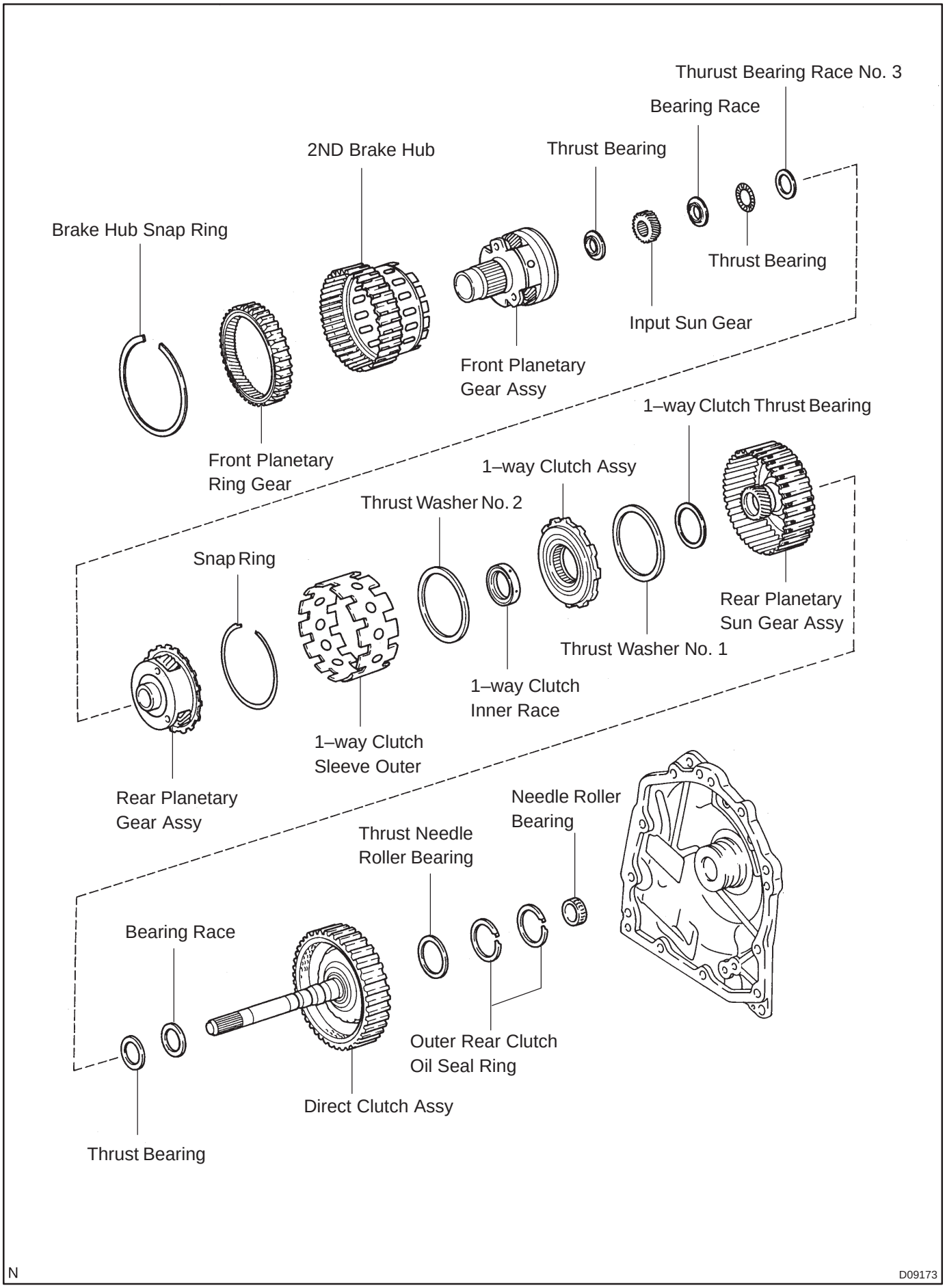
Thurust Bearing Race No. 3
Bearing Race
2ND Brake Hub
Thrust Bearing
Brake Hub Snap Ring
Thrust Bearing
Input Sun Gear
Front Planetary
Gear Assy
1–way Clutch Thrust Bearing
Front Planetary
Ring Gear
1–way Clutch Assy
Thrust Washer No. 2
Snap Ring
Rear Planetary
Sun Gear Assy
Thrust Washer No. 1
1–way Clutch
Inner Race
1–way Clutch
Sleeve Outer
Rear Planetary
Gear Assy
Needle Roller
Bearing
Thrust Needle
Roller Bearing
Bearing Race
Outer Rear Clutch
Oil Seal Ring
Direct Clutch Assy
Thrust Bearing
N
D09173

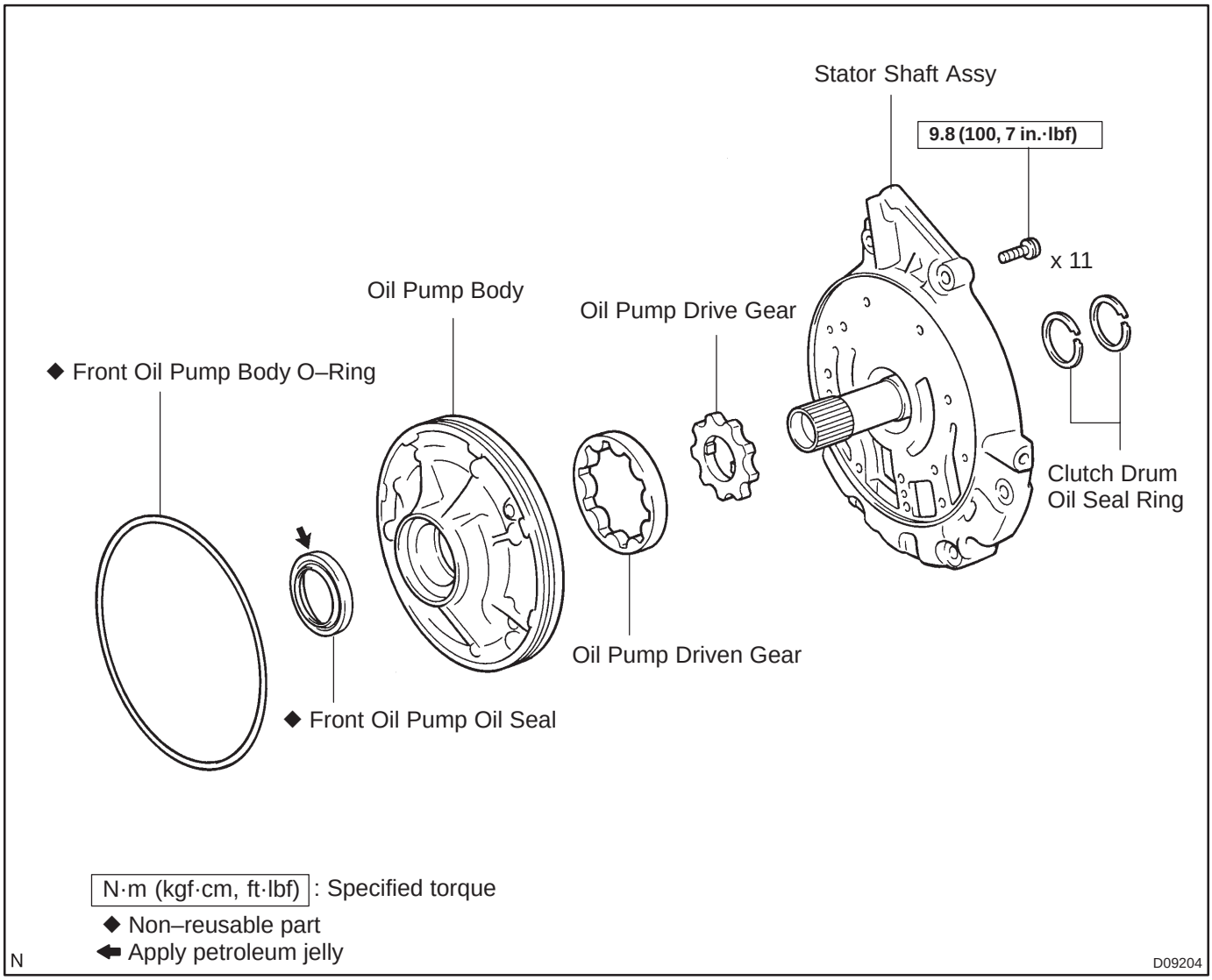
Stator Shaft Assy
9.8 (100, 7 in.·lbf)
x 11
Oil Pump Body
Oil Pump Drive Gear
◆ Front Oil Pump Body O–Ring
Clutch Drum
Oil Seal Ring
Oil Pump Driven Gear
◆ Front Oil Pump Oil Seal
N·m (kgf·cm, ft·lbf) : Specified torque
◆ Non–reusable part
Apply petroleum jelly
N
D09204

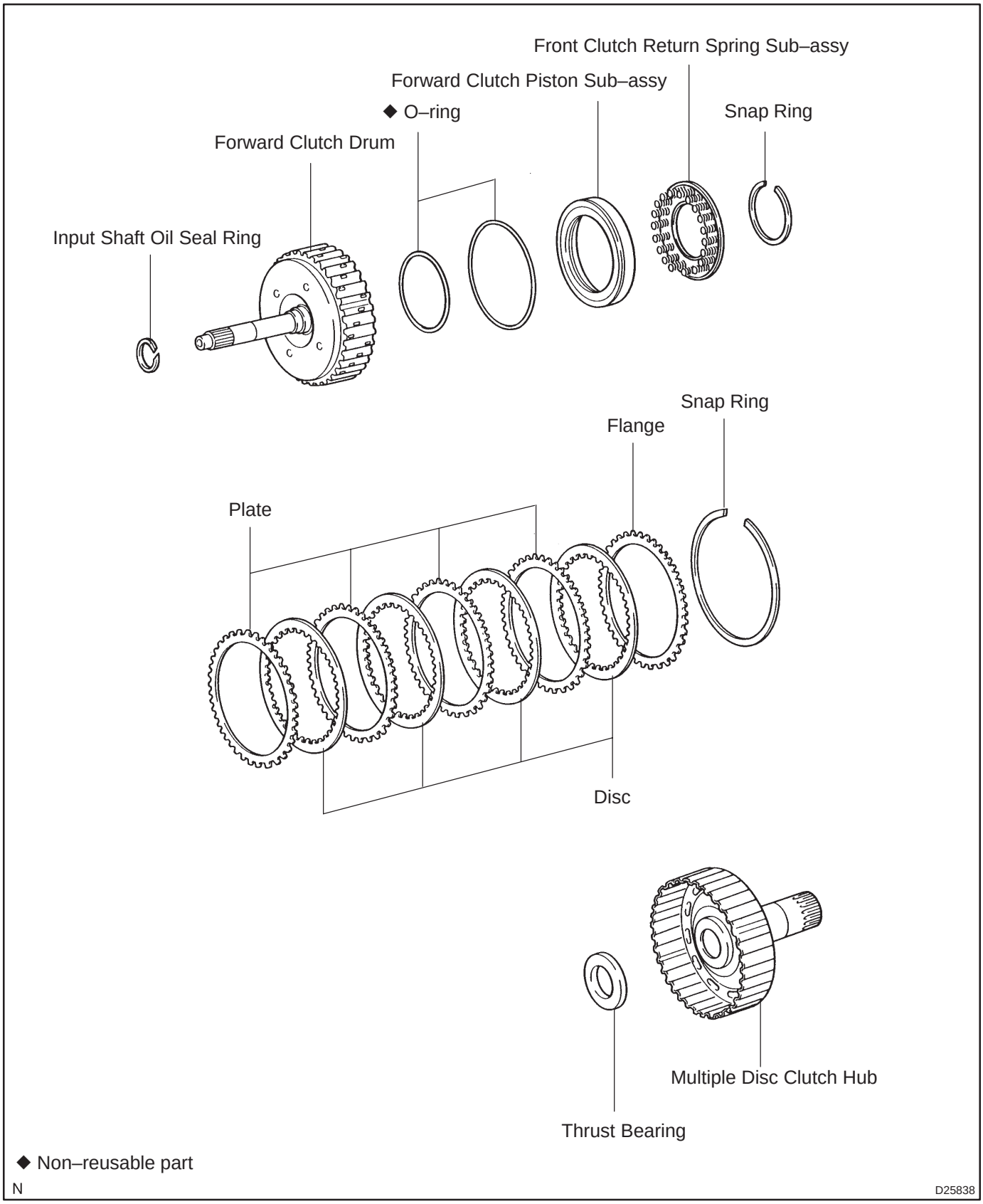
Front Clutch Return Spring Sub–assy
Forward Clutch Piston Sub–assy
◆ O–ring
Snap Ring
Forward Clutch Drum
Input Shaft Oil Seal Ring
Snap Ring
Flange
Plate
Disc
Multiple Disc Clutch Hub
Thrust Bearing
◆ Non–reusable part
N
D25838

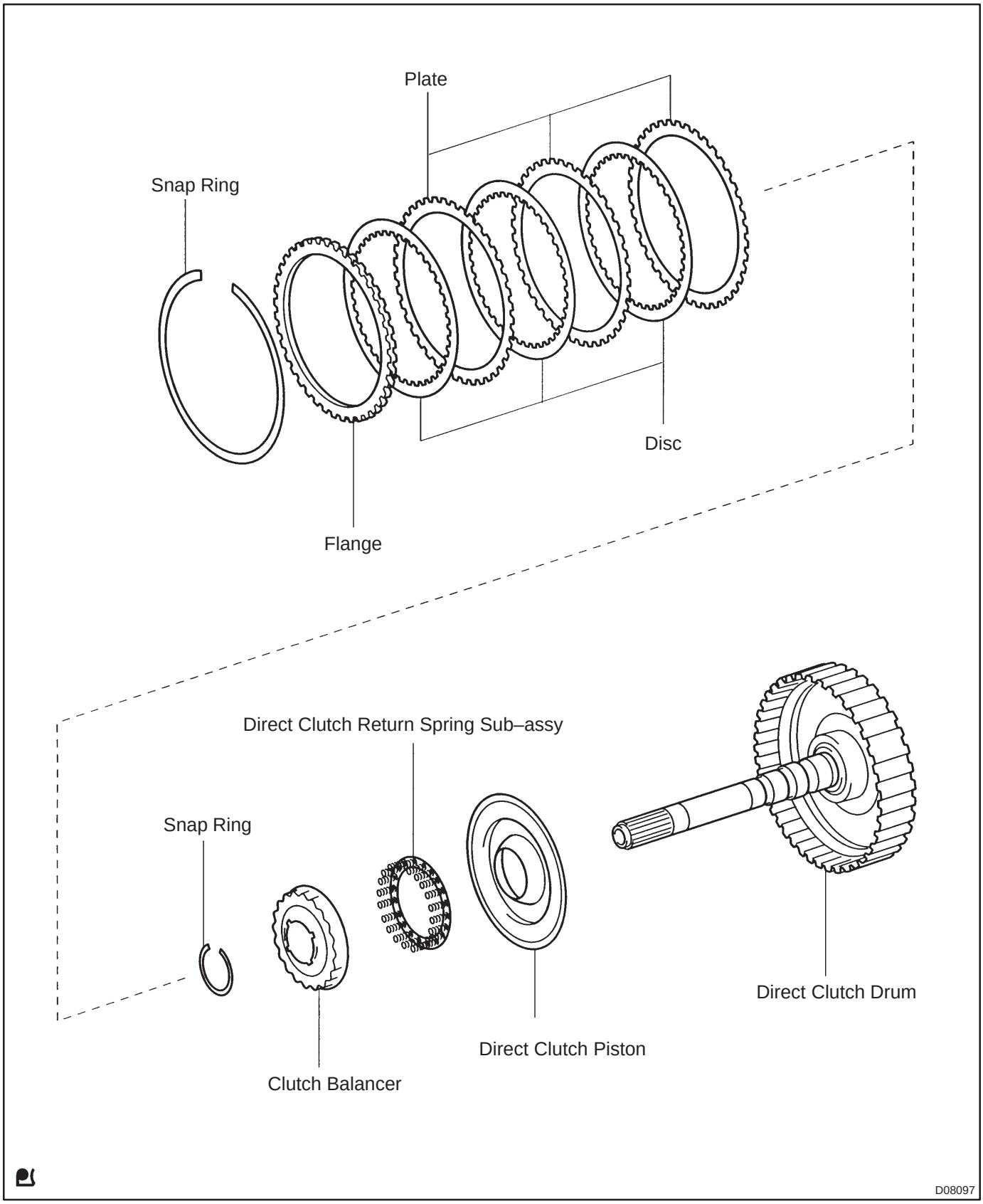
Plate
Snap Ring
Disc
Flange
Direct Clutch Return Spring Sub–assy
Snap Ring
Direct Clutch Drum
Direct Clutch Piston
Clutch Balancer
D08097

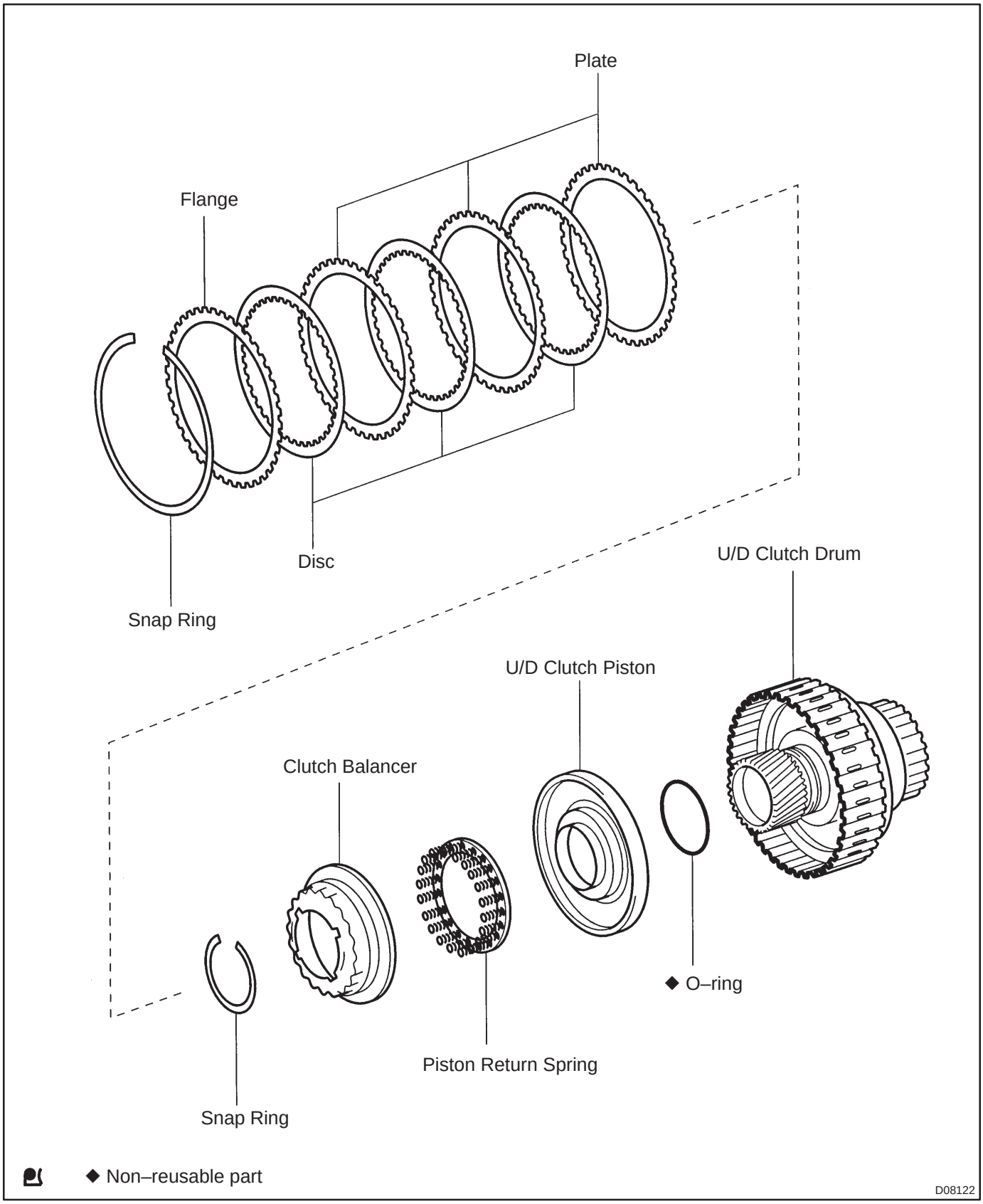
Plate
Flange
Disc
Snap Ring
U/D Clutch Drum
U/D Clutch Piston
Clutch Balancer
◆ O–ring
Piston Return Spring
Snap Ring
◆ Non–reusable part
D08122

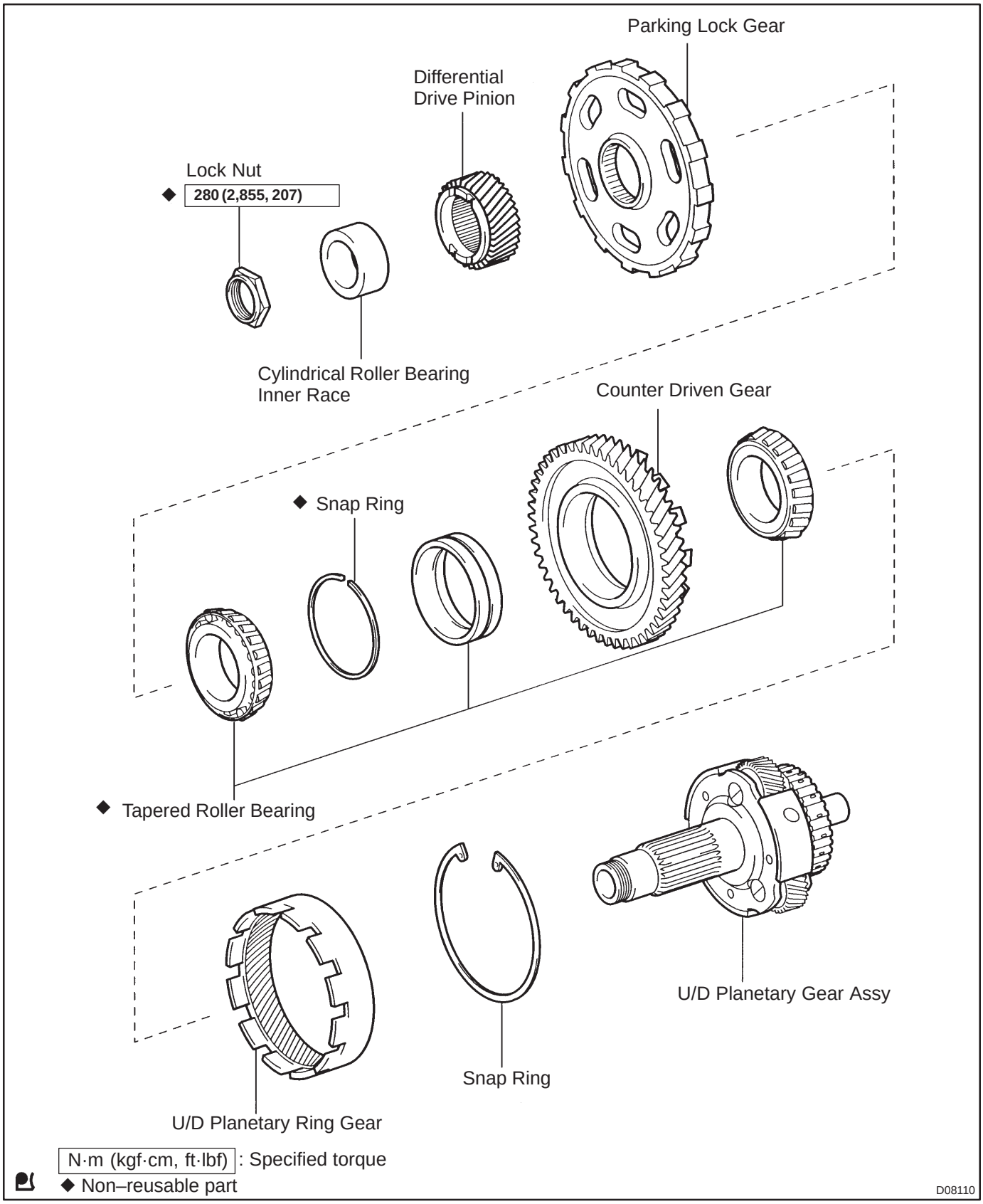
Parking Lock Gear
Differential
Drive Pinion
Lock Nut
◆ 280 (2,855, 207)
Cylindrical Roller Bearing
Inner Race
Counter Driven Gear
◆ Snap Ring
◆ Tapered Roller Bearing
U/D Planetary Gear Assy
Snap Ring
U/D Planetary Ring Gear
N·m (kgf·cm, ft·lbf) : Specified torque
◆ Non–reusable part
D08110

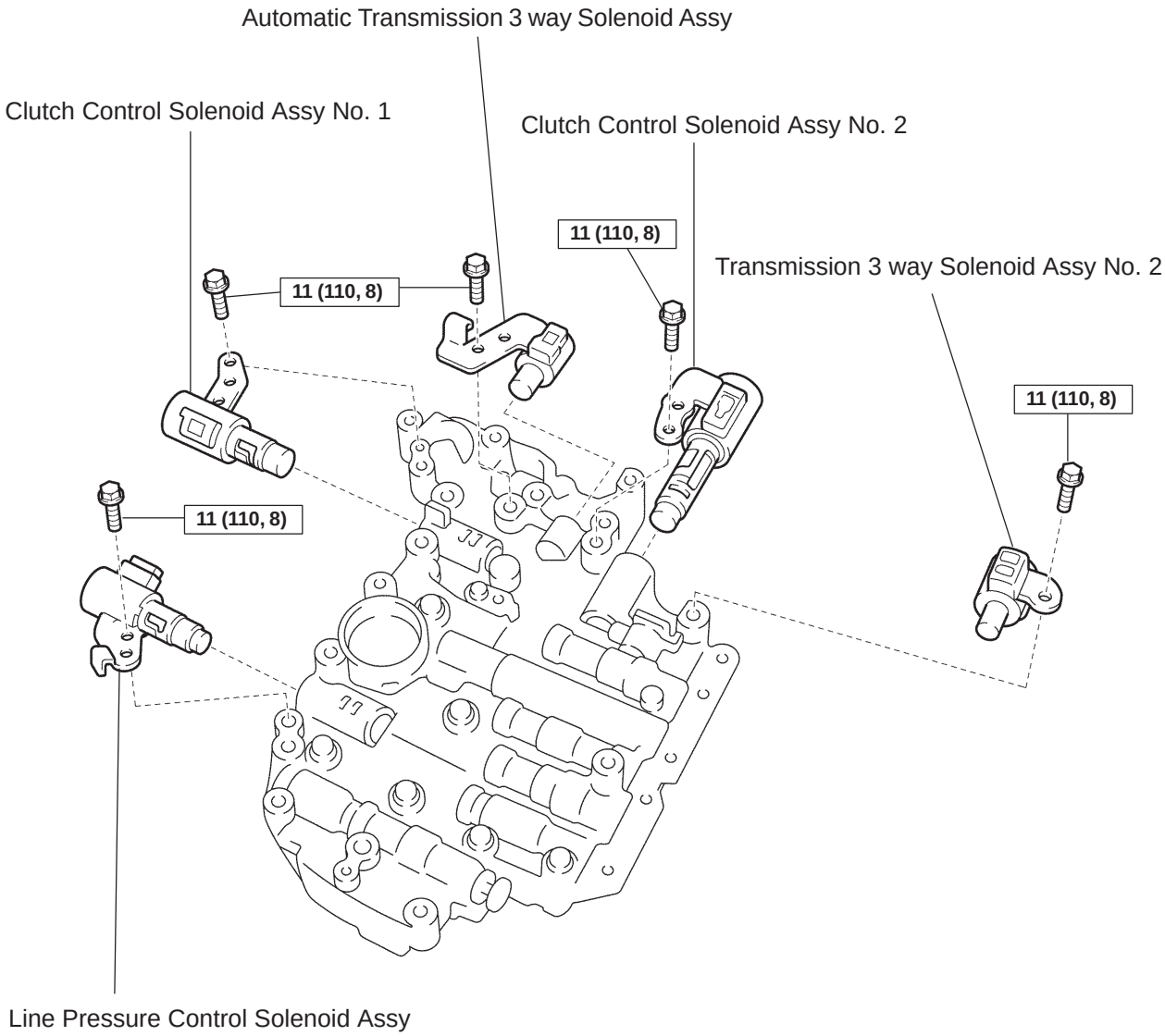

N·m (kgf·cm, ft·lbf) : Specified torque

P

D25769

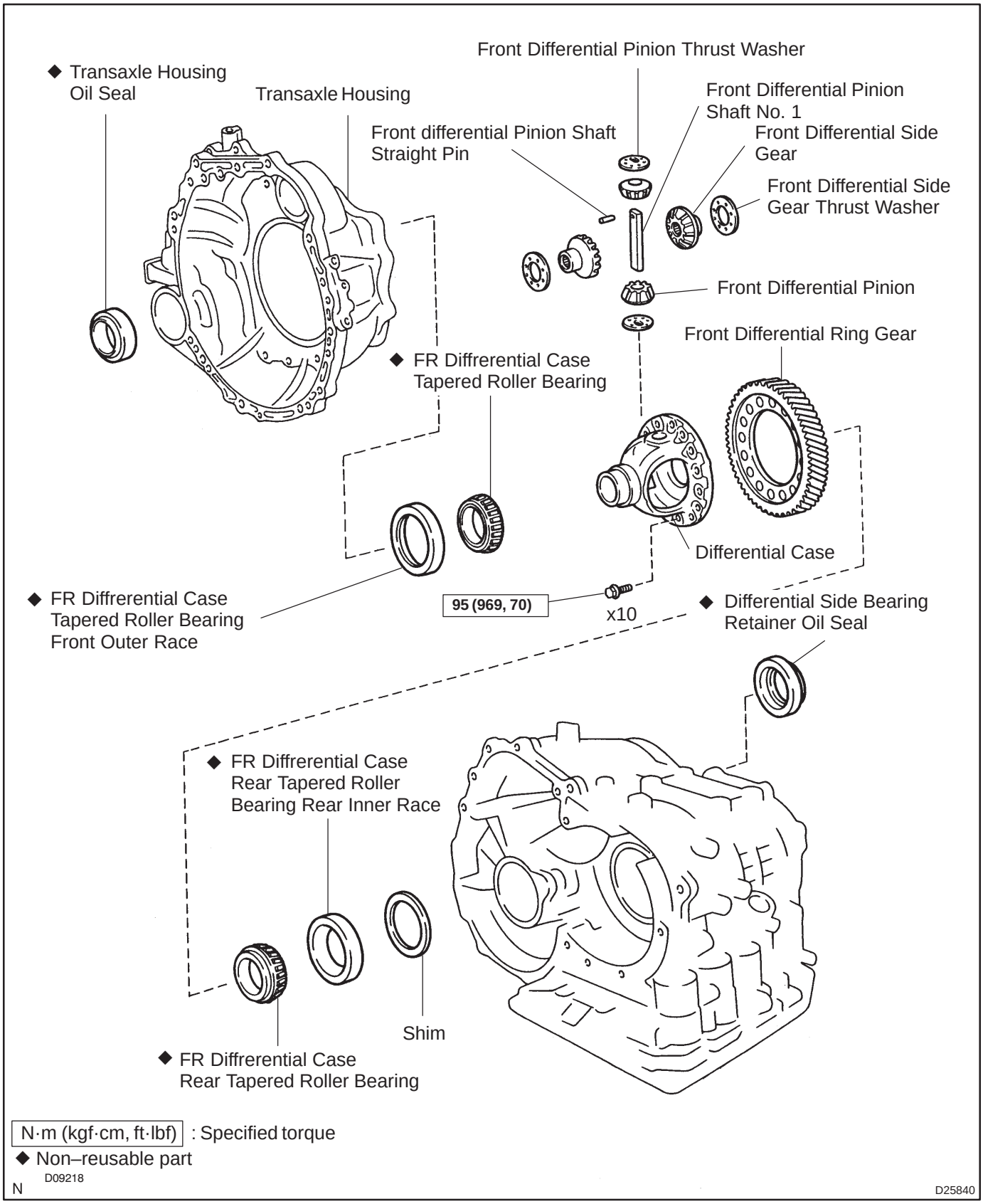
◆ Transaxle Housing Oil Seal
Transaxle Housing
Front Differential Pinion Thrust Washer
Front Differential Pinion Shaft No. 1
Front differential Pinion Shaft Straight Pin
Front Differential Side Gear
Front Differential Side Gear Thrust Washer
Front Differential Pinion
Front Differential Ring Gear
◆ FR Diffrerential Case Tapered Roller Bearing
Differential Case
◆ FR Diffrerential Case Tapered Roller Bearing Front Outer Race
95 (969, 70)
x10
◆ Differential Side Bearing Retainer Oil Seal
◆ FR Diffrerential Case Rear Tapered Roller Bearing Rear Inner Race
Shim
◆ FR Diffrerential Case Rear Tapered Roller Bearing
N·m (kgf·cm, ft·lbf) : Specified torque
◆ Non–reusable part
D09218
N
D25840

AUTOMATIC TRANSAXLE ASSY (U241E)

4006Z–01

OVERHAUL

1. REMOVE SPEEDOMETER DRIVEN HOLE (ATM) COVER SUB–ASSY

(a) Remove the bolt and speedometer driven hole cover sub–assy from the transaxle assy.
(b) Remove the O–ring from the speedometer driven hole cover.

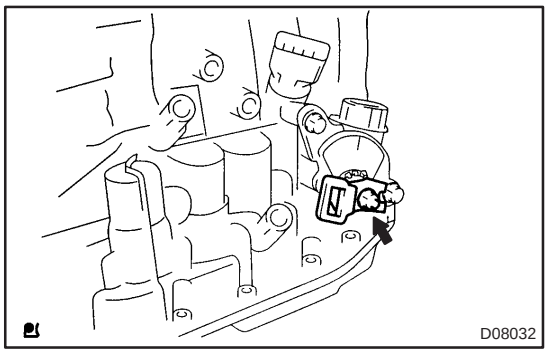

2. REMOVE PARK/NEUTRAL POSITION SWITCH ASSY

(a) Remove the nut, washer and control shaft lever.

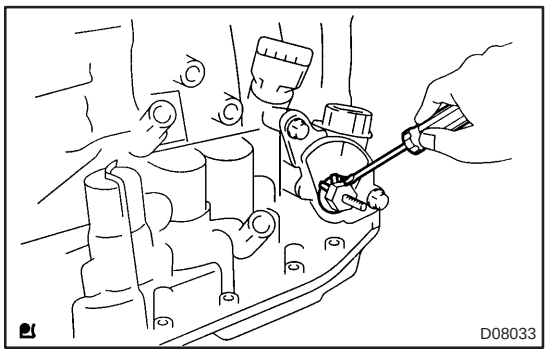

(b) Using a screwdriver, unstake the nut stopper and remove the lock nut and stopper.

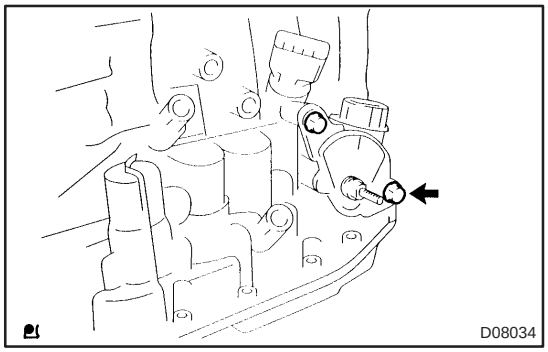

(c) Remove the 2 bolts and pull out the park/neutral position switch.

3. REMOVE BREATHER PLUG HOSE

(a) Remove the breather plug hose from the breather No. 2 plug.

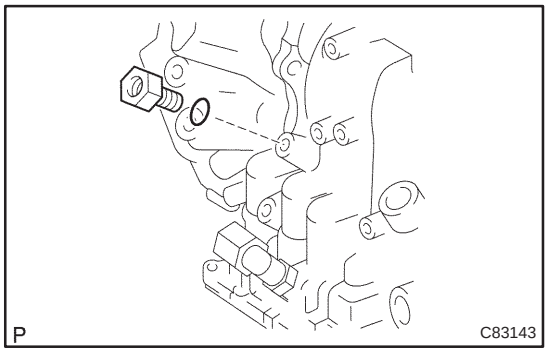

4. REMOVE OIL COOLER TUBE UNION(INLET OIL COOLER UNION)

(a) Remove the union.
(b) Remove the O–ring from the union.

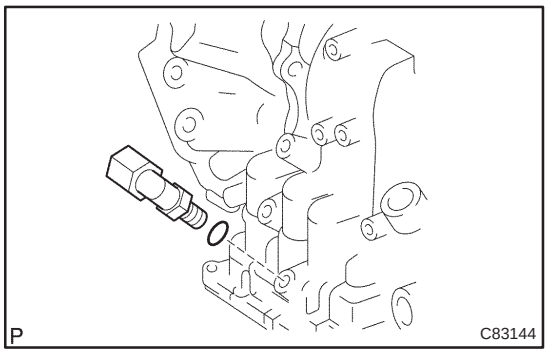

5. REMOVE OIL COOLER TUBE UNION(OUTLET OIL COOLER UNION)

(a) Remove the elbow.
(b) Remove the O–ring from the elbow.

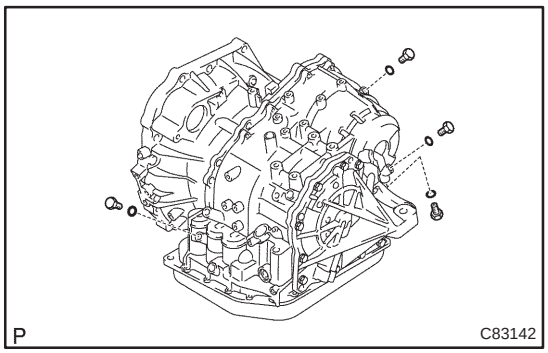

6. REMOVE TRANSAXLE CASE NO.1 PLUG

(a) Remove the 4 transaxle case No. 1 plugs from the transaxle case.
(b) Remove 4 O–rings from the 4 transaxle case No. 1 plugs.

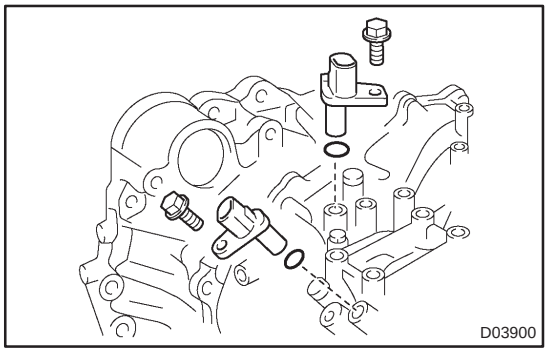

7. REMOVE SPEED SENSOR(TMC –MADE)

(a) Remove the 2 bolts and the 2 speed sensors from the transaxle assy.
(b) Remove the 2 O–rings from the sensors.

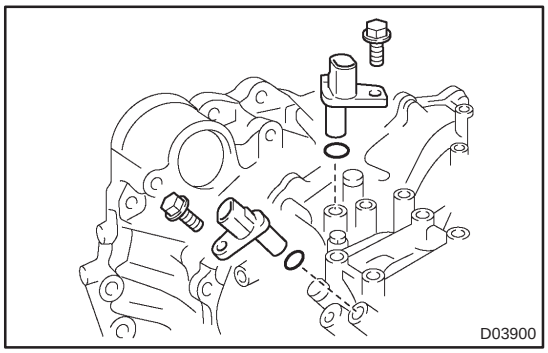

8. REMOVE TRANSMISSION REVOLUTION SENSOR(AISIN –MADE)

(a) Remove the 2 bolts and the 2 transmission revolution sensors from the transaxle assy.
(b) Remove the 2 O–rings from the sensors.

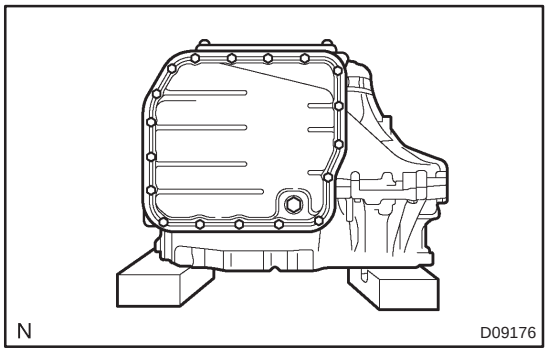

9. FIX AUTOMATIC TRANSAXLE ASSY

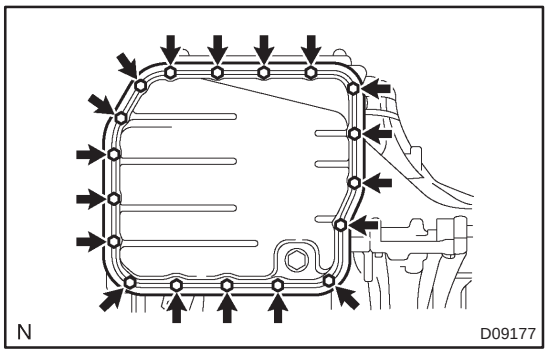

10. REMOVE AUTOMATIC TRANSAXLE OIL PAN SUB–ASSY

(a) Remove the 18 bolts.
(b) Remove the oil pan and 2 magnets.

11. REMOVE AUTOMATIC TRANSAXLE OIL PAN GASKET

(a) Remove the gasket from the oil pan.

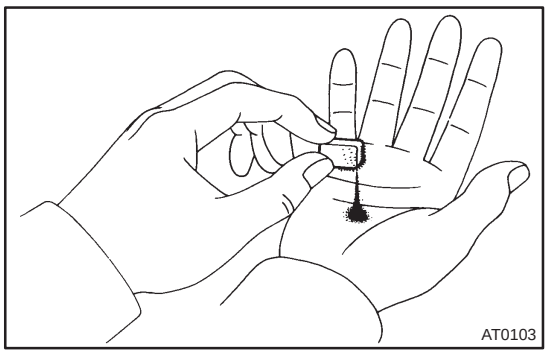

12. INSPECT AUTOMATIC TRANSAXLE OIL PAN SUB–ASSY

(a) Remove the magnets and use them to collect any steel chips. Examine the chips and particles in the pan and on the magnet to determine what type of wear has occurred in the transaxle:
Steel (magnetic).... bearing, gear and plate wear
Brass (non–magnetic).... bushing wear

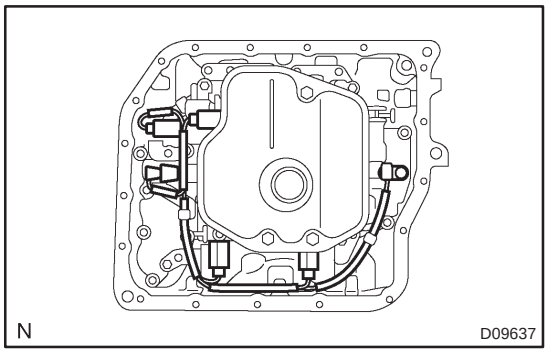

13. REMOVE TRANSMISSION WIRE

(a) Remove the 5 connectors from the shift solenoid valves.
(b) Remove the bolt, clamp and ATF temperature sensor.

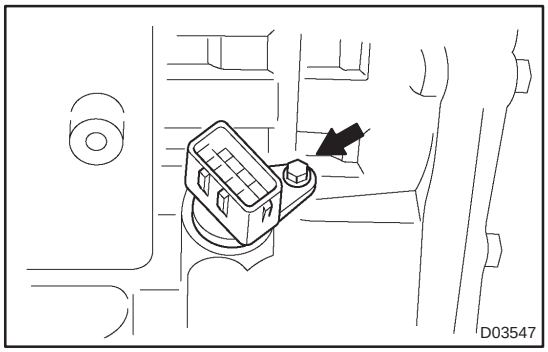

(c) Remove the bolt and transaxle solenoid wire from the transaxle case.

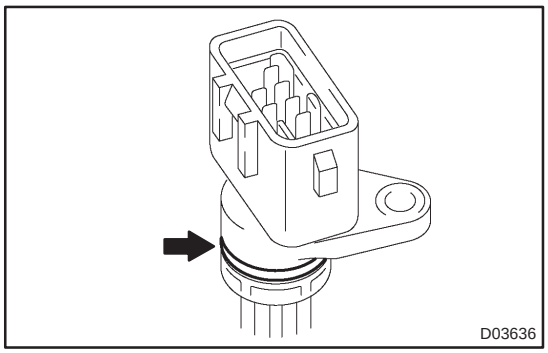

(d) Remove the O–ring from the transaxle solenoid wire.

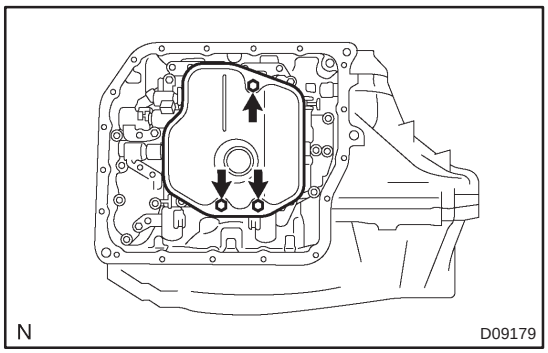

14. REMOVE VALVE BODY OIL STRAINER ASSY

(a) Remove the 3 bolts and oil strainer.

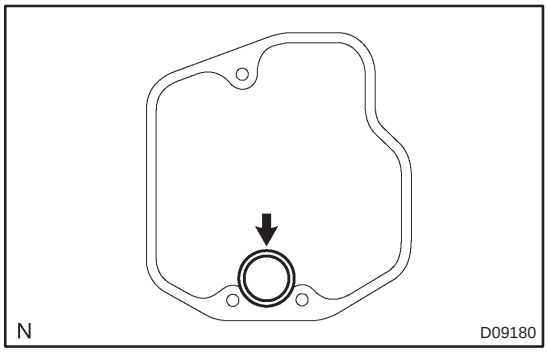

(b) Remove the O–ring from the oil strainer.

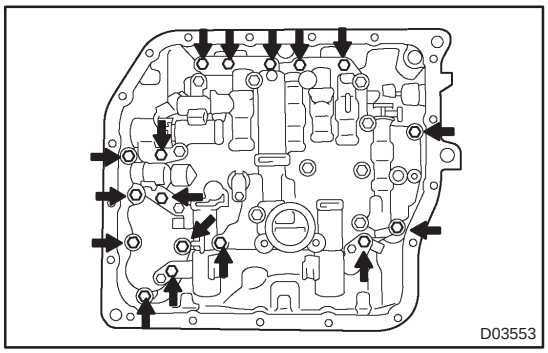

15. REMOVE TRANSMISSION VALVE BODY ASSY

(a) Support the valve body assy and remove the 17 bolts and the valve body assy.

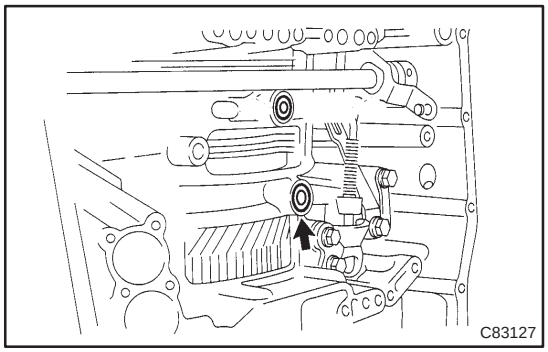

16. REMOVE GOVERNOR APPLY GASKET NO.1

(a) Remove the governor apply gasket No. 1 from the transaxle case.

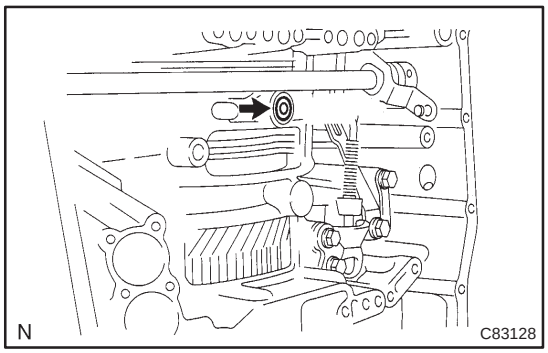

17. REMOVE TRANSAXLE CASE 2ND BRAKE GASKET

(a) Remove the transaxle case 2ND brake gasket from the transaxle case.

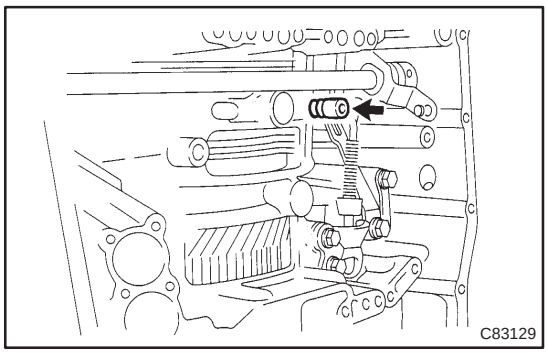

18. REMOVE BRAKE DRUM GASKET

(a) Remove the brake drum gasket from the transaxle case.

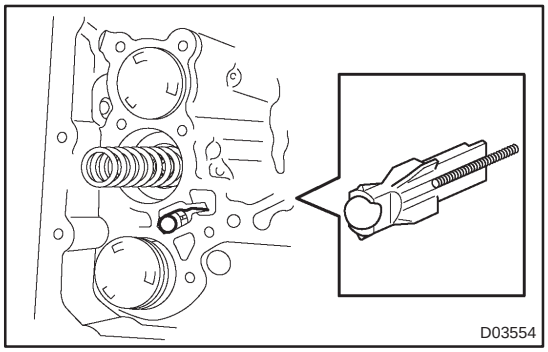

19. REMOVE CHECK BALL BODY

(a) Remove the check ball body and spring from the transaxle case.

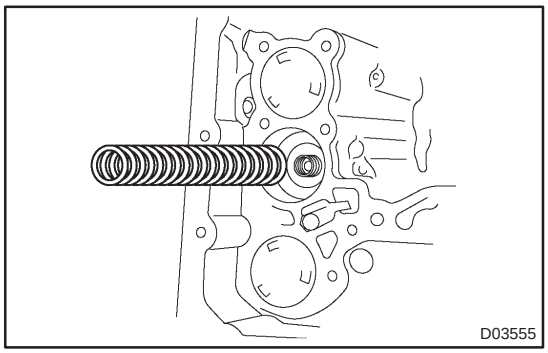

20. REMOVE C–3 ACCUMULATOR PISTON

(a) Remove the compression spring from the C_3 accumulator piston.

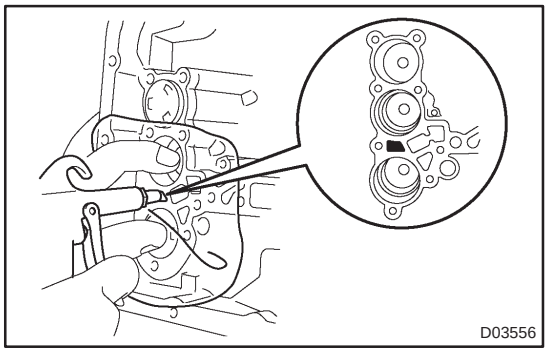

(b) Apply compressed air (392 kPa, 4.0 kgf/cm^2, 57 psi) to the oil hole and remove the C_3 accumulator piston.

NOTICE:

- **Blowing off the air may cause the piston's jump–out. When removing the piston, hold it with your hand using a waste cloth.**
- **Take care not to splash ATF when air–blowing.**

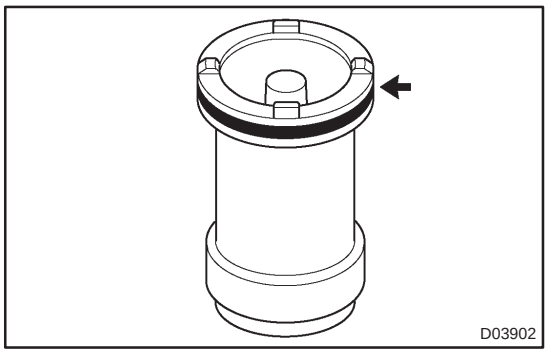

(c) Remove the O–ring from the C_3 accumulator piston.

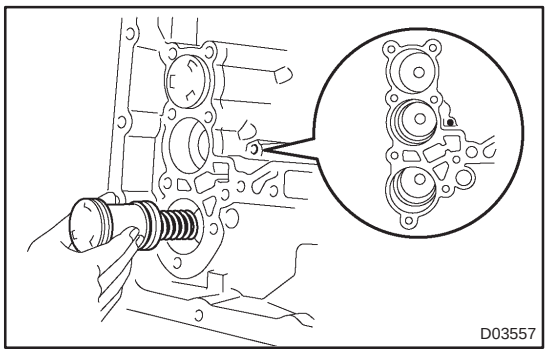

21. REMOVE C–1 ACCUMULATOR PISTON

(a) Apply compressed air (392 kPa, 4.0 kgf/cm^2, 57 psi) to the oil hole and remove the C_1 accumulator piston and compression spring.

NOTICE:

- **Blowing off the air may cause the piston's jump–out. When removing the piston, hold it with your hand using a waste cloth.**
- **Take care not to splash ATF when air–blowing.**

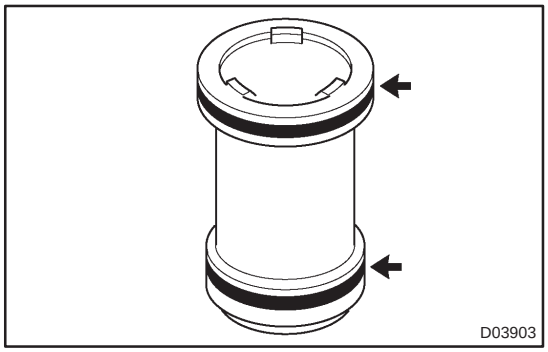

(b) Remove the 2 O–rings from the C_1 accumulator piston.

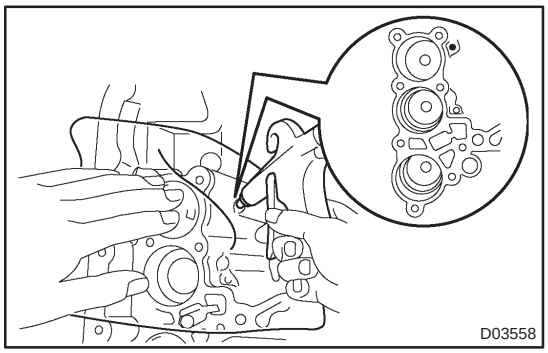

22. REMOVE B–3 ACCUMULATOR PISTON

(a) Apply compressed air (392 kPa, 4.0 kgf/cm^2, 57 psi) to the oil hole and remove the B_3 accumulator piston and 2 compression springs.

NOTICE:

- **Blowing off the air may cause the piston's jump–out. When removing the piston, hold it with your hand using a waste cloth.**
- **Take care not to splash ATF when air–blowing.**

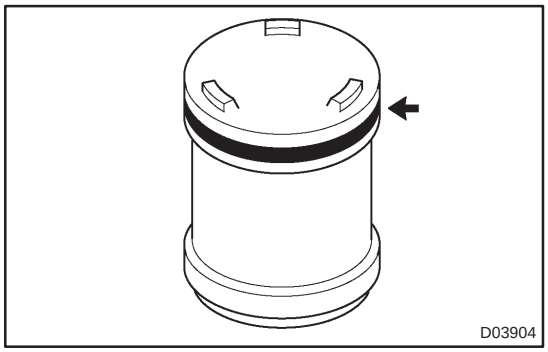

(b) Remove the O–ring from the B_3 accumulator piston.

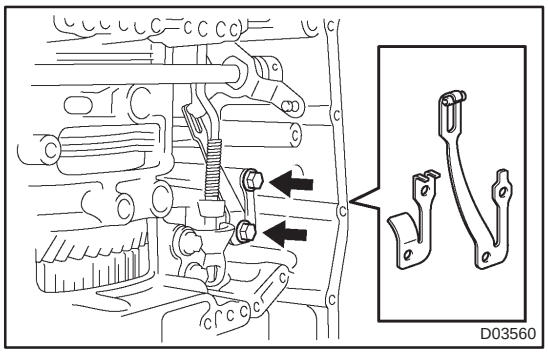

23. REMOVE MANUAL DETENT SPRING SUB–ASSY

(a) Remove the 2 bolts, the manual detent spring sub–assy and spring cover.

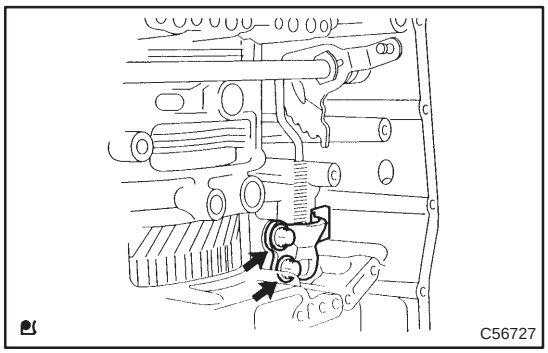

24. REMOVE PARKING LOCK PAWL BRACKET

(a) Remove the 2 bolts and the parking lock pawl bracket.

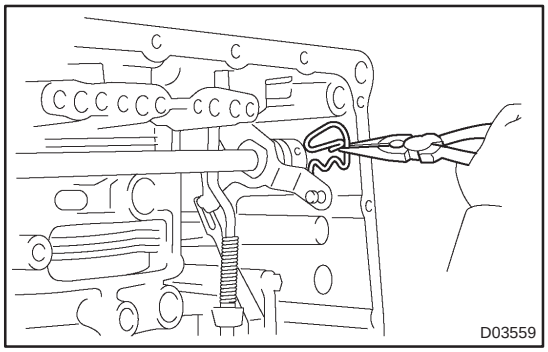

25. REMOVE MANUAL VALVE LEVER SHAFT RETAINER SPRING

(a) Using needle–nose pliers, remove the manual valve lever shaft retainer spring.

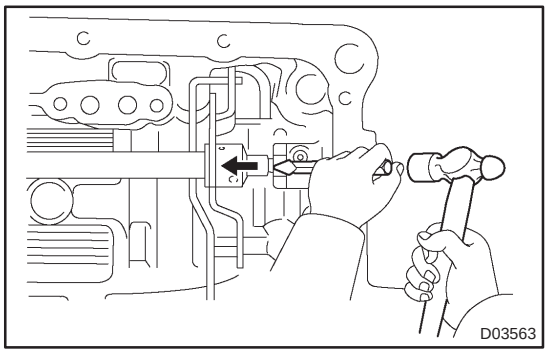

26. REMOVE MANUAL VALVE LEVER SUB–ASSY

(a) Using a chisel and hammer, unstake and remove the manual valve lever spacer.

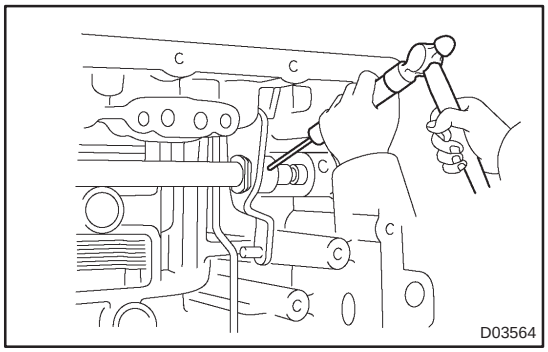

(b) Using a pin punch and hammer, drive out the manual valve lever shaft spring pin.

HINT:

Slowly drive out the pin so that it will not fall into the transaxle case.

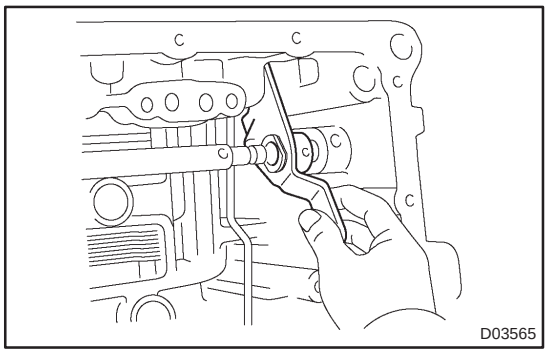

(c) Remove the manual valve lever shaft and manual valve lever.

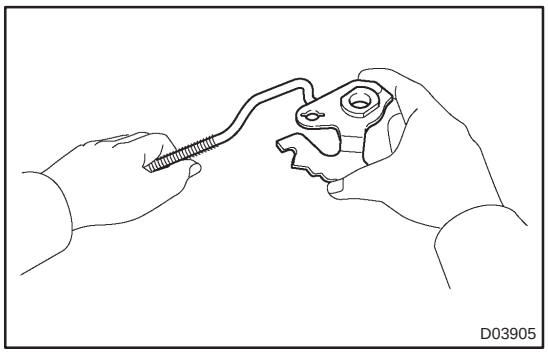

27. REMOVE PARKING LOCK ROD SUB–ASSY

(a) Remove the parking lock rod from the manual valve lever.

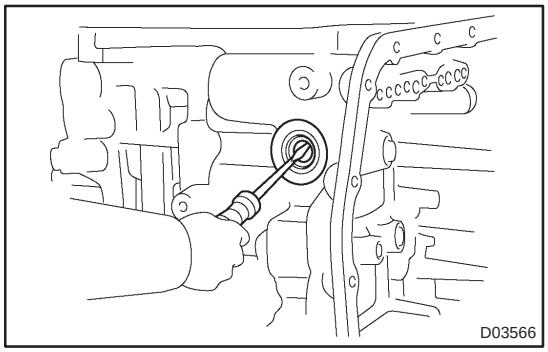

28. REMOVE MANUAL VALVE LEVER SHAFT OIL SEAL

(a) Using a screwdriver, remove the oil seal from the transaxle case.

29. FIX AUTOMATIC TRANSAXLE ASSY

(a) Fix the transaxle case with the oil pump side facing up.

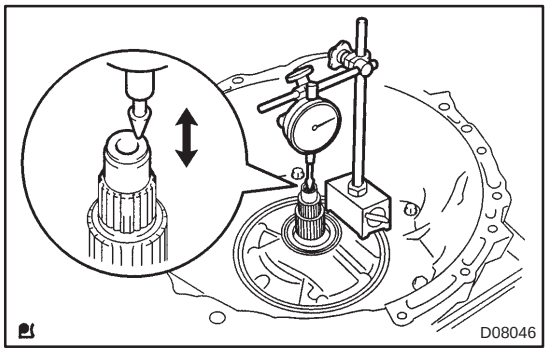

30. INSPECT INPUT SHAFT ENDPLAY

(a) Using a dial indicator, measure the input shaft end play.
END Play: 0.26 – 1.25 mm (0.0103 – 0.0492 in.)

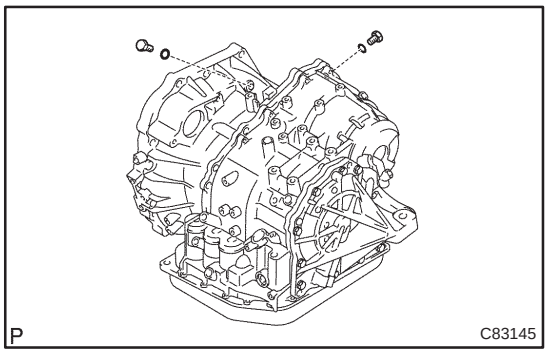

31. REMOVE TRANSAXLE CASE NO.1 PLUG

(a) Remove the 2 transaxle case No 1 plugs.
(b) Remove the 2 O–rings from the transaxle case plug.

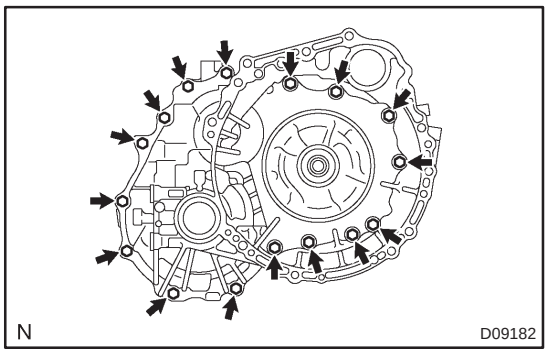

32. REMOVE TRANSAXLE HOUSING

(a) Remove the 16 bolts.
(b) Tap on the circumference of the transaxle housing with a plastic hammer to remove the transaxle housing from the transaxle case.

NOTICE:
Differential may be accidentally removed when the transaxle housing is removed.

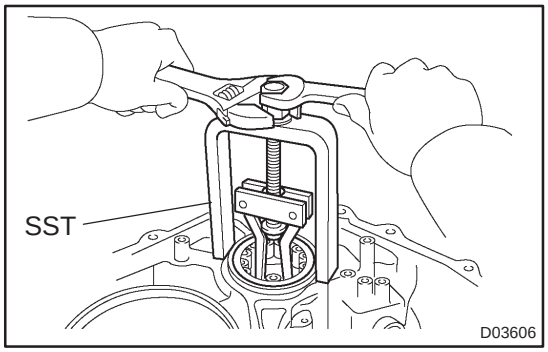

33. REMOVE UNDERDRIVE CYLINDRICAL ROLLER BEARING

(a) Using SST, remove the cylindrical roller bearing from the transaxle case.
SST 09514–35011

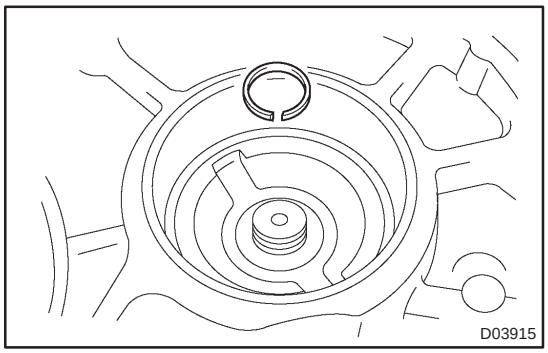

34. REMOVE UNDERDRIVE OUTPUT SHAFT OIL SEAL RING

(a) Remove the oil seal ring from the transaxle housing.

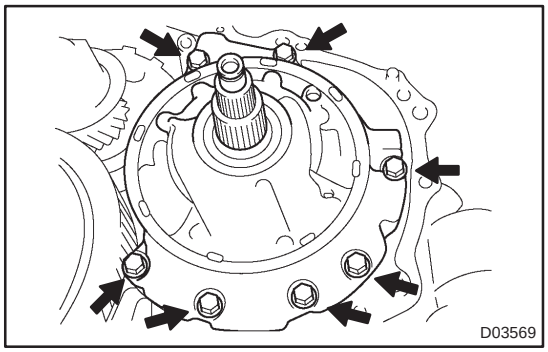

35. REMOVE OIL PUMP ASSY

(a) Remove the 7 bolts and oil pump assy from the transaxle case.

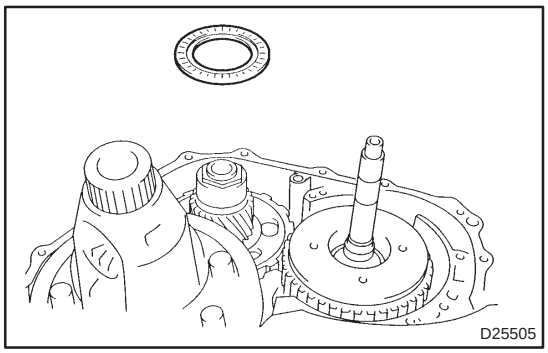

36. REMOVE THRUST NEEDLE ROLLER BEARING

(a) Remove thrust needle roller bearing from the U/D planetary gear assy.

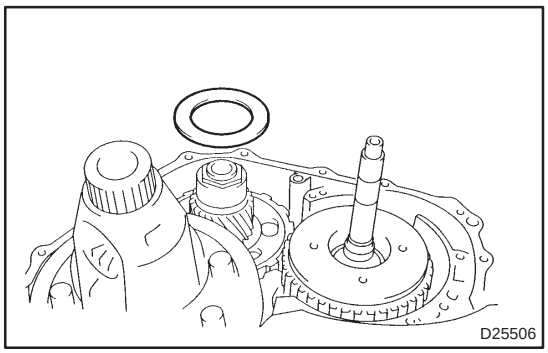

37. REMOVE THRUST BEARING UNDERDRIVE RACE NO.2

(a) Remove thrust bearing race No. 2 from the U/D planetary gear assy.

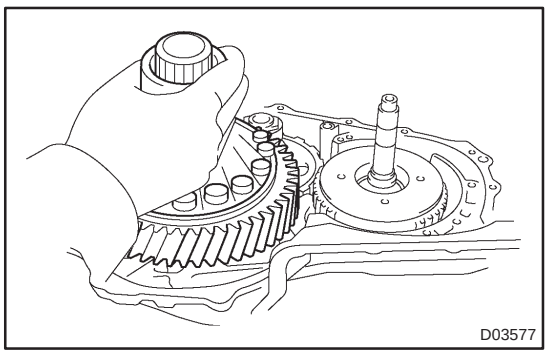

38. REMOVE FRONNT DIFFERENTIAL ASSY

(a) Remove the front differential assy from the transaxle case.

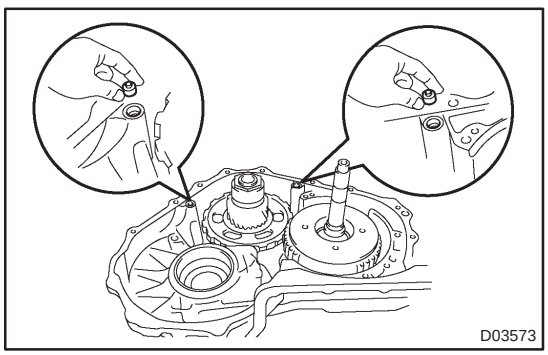

39. REMOVE OVERDRIVE BRAKE GASKET

(a) Remove the 2 O/D brake gaskets from the transaxle case.

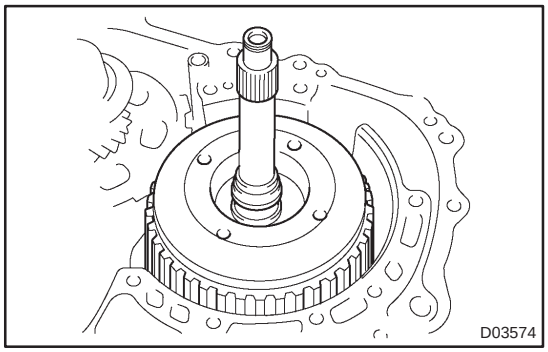

40. REMOVE FORWARD CLUTCH ASSY

(a) Remove the forward clutch from the transaxle case.

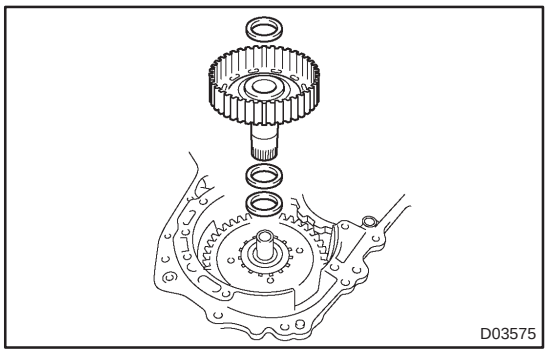

41. REMOVE MULTIPLE DISC CLUTCH CLUTCH HUB

(a) Remove the thrust bearing, multiple clutch hub, needle roller bearing and bearing race from the transaxle case.

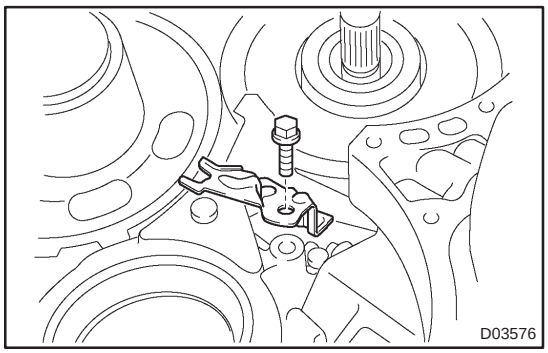

42. REMOVE UNDERDRIVE PLANETARY GEAR ASSY

(a) Remove the bolt and parking pawl shaft clamp.

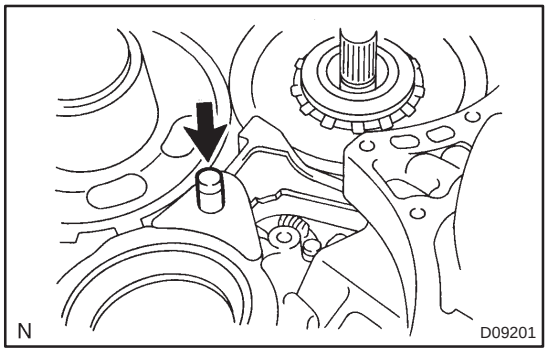

(b) Remove the parking lock pawl shaft.

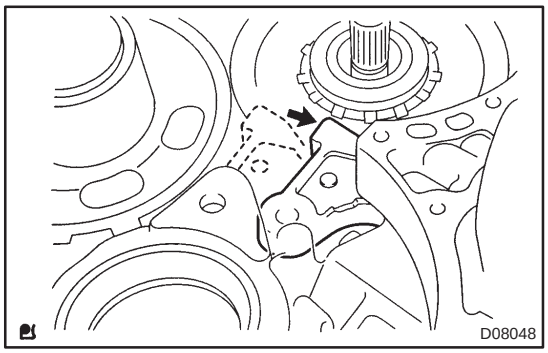

(c) Push the parking lock pawn.

HINT:

Failure to do so will cause interference when the U/D planetary gear is removed.

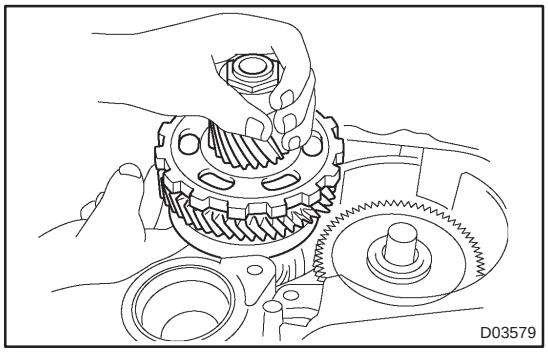

(d) Remove the U/D planetary gear assy from the transaxle case.

NOTICE:

Be careful so that the U/D planetary gear assy will not fall out.

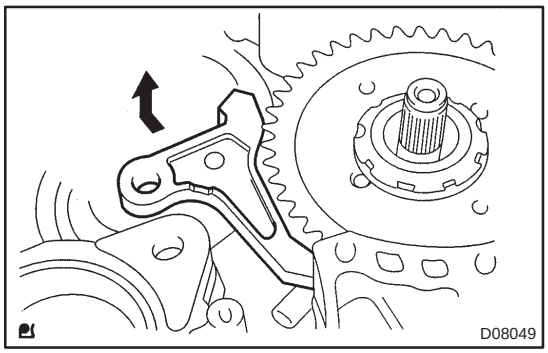

(e) Remove the spring, pawl pin and parking lock pawl.

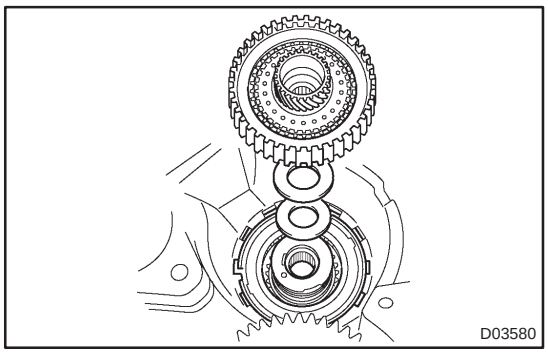

43. REMOVE UNDERDRIVE CLUTCH ASSY

(a) Remove the U/D clutch assy, needle roller bearing, thrust bearing U/D race No. 3 from the transaxle case.

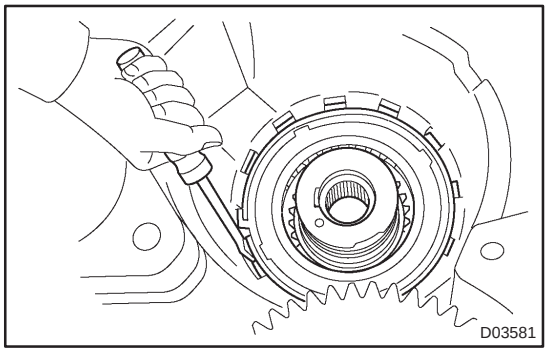

44. REMOVE UNDERDRIVE 1 WAY CLUTCH ASSY

(a) Using a screwdriver, remove the snap ring from the transaxle case.

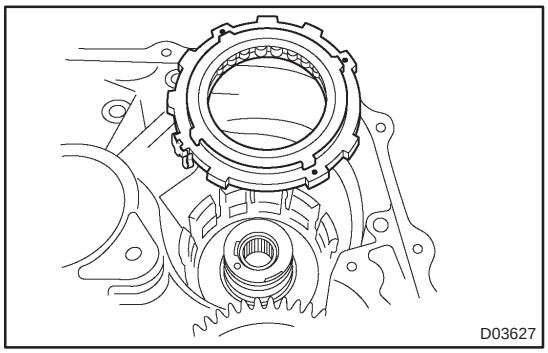

(b) Remove the 1–way clutch from the transaxle case.

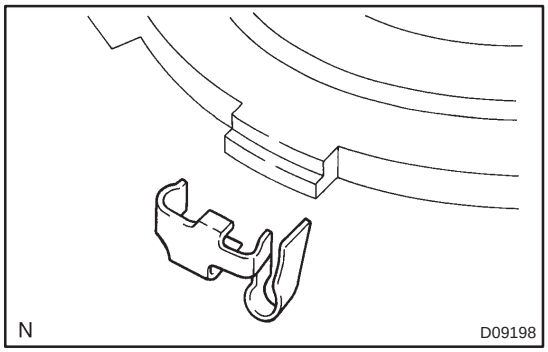

(c) Remove the outer race retainer from the 1–way clutch.

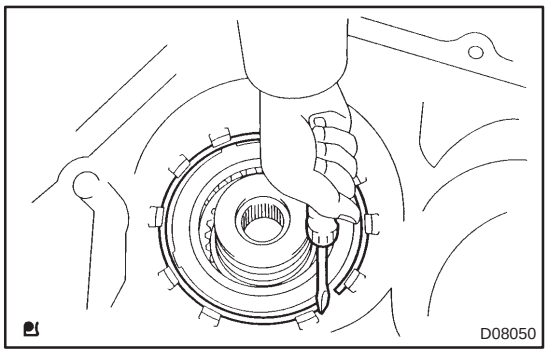

45. REMOVE UNDERDRIVE CLUTCH DISC NO.2

(a) Using a screwdriver, remove the snap ring from the transaxle case.

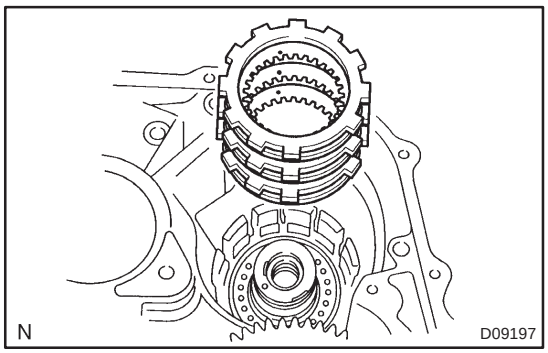

(b) Remove the flange, 3 discs and 3 plates from the transaxle case.

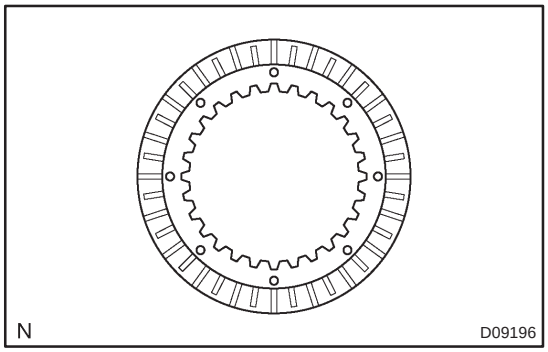

46. INSPECT UNDERDRIVE CLUTCH DISC NO.2

(a) Check to see if the sliding surface of the disc, plate and flange are worn or burnt.

If necessary, replace them.

NOTICE:

- **If the lining of the disc is peeling off or discolored, or even if a part of the groove is defaced, replace all discs.**
- **Before assembling new discs, soak them in ATF for at least 15 minutes.**

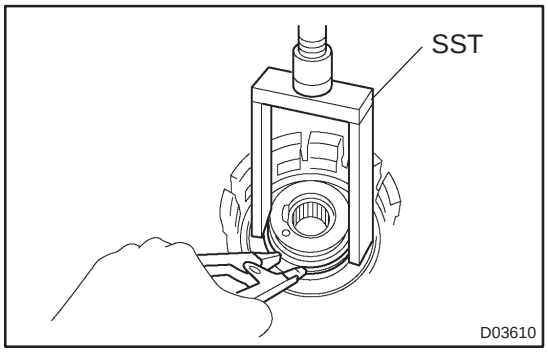

47. REMOVE UNDERDRIVE BRAKE RETURN SPRING SUB–ASSY

(a) Using SST, a snap ring expander and a press, remove the snap ring from the transaxle case.
SST 09387–00020

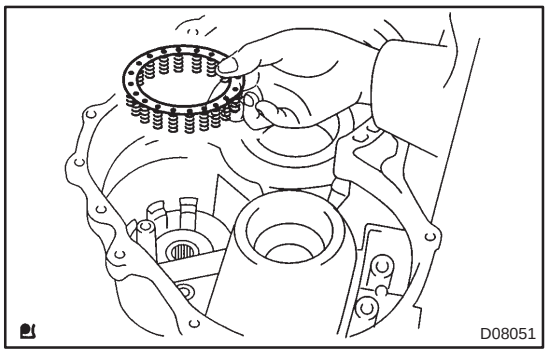

(b) Remove the U/D brake return spring sub–assy from the U/D brake piston.

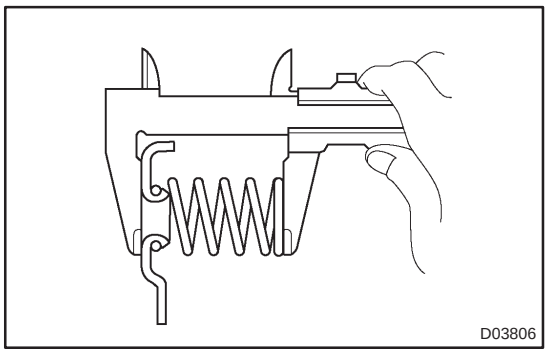

48. INSPECT UNDERDRIVE BRAKE RETURN SPRING SUB–ASSY

(a) Using vernier calipers, measure the free length of the U/D brake return spring sub–assy together with the spring seat.
Standard free length: 14.04 mm (0.5213 in.)

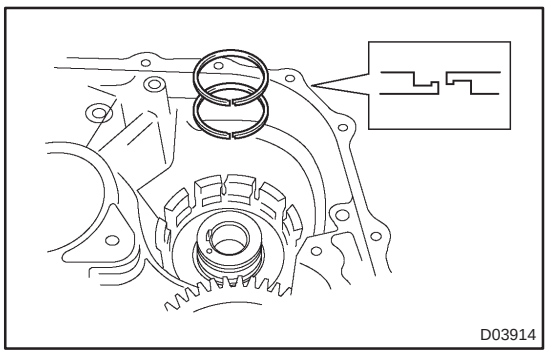

49. REMOVE UNDERDRIVE CLUTCH DRUM OIL SEAL RING

(a) Remove the 2 U/D clutch drum oilseal rings from the transaxle case.

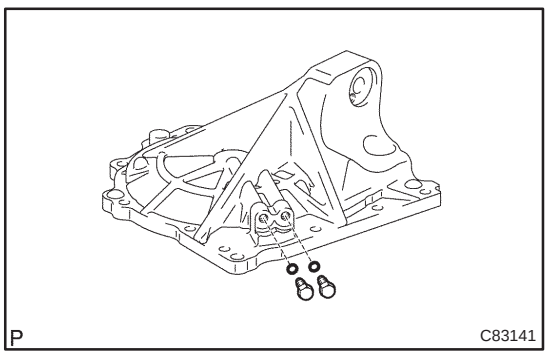

50. REMOVE TRANSAXLE CASE NO.1 PLUG

(a) Remove 2 transaxle case No. 1 plugs from the transaxle rear cover.
(b) Remove 2 O–rings from the 2 transaxle case No. 1 plugs.

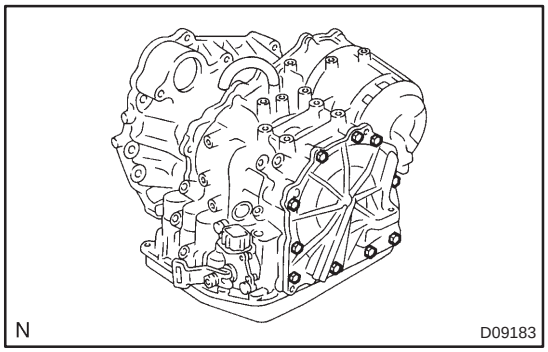

51. REMOVE TRANSAXLE REAR COVER SUB–ASSY

(a) Remove the 11 bolts.

(b) Tap in the circumference of the rear cover with a plastic hammer to remove the transaxle rear cover from the transaxle case.

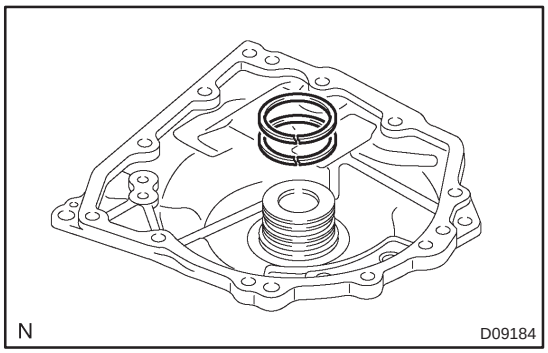

(c) Remove the 2 outer rear clutch oil seal rings from the transaxle rear cover.

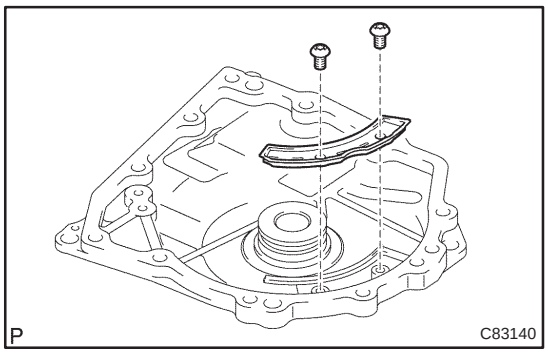

(d) Using a torx socket wrench T30, remove the 2 screws and transaxle rear cover plate.

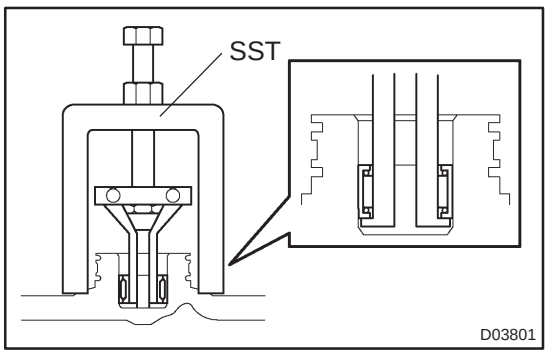

(e) Using SST, remove the needle–roller bearing from the transaxle rear cover.

SST 09387–00040 (09387–01010, 09387–01030, 09387–01040)

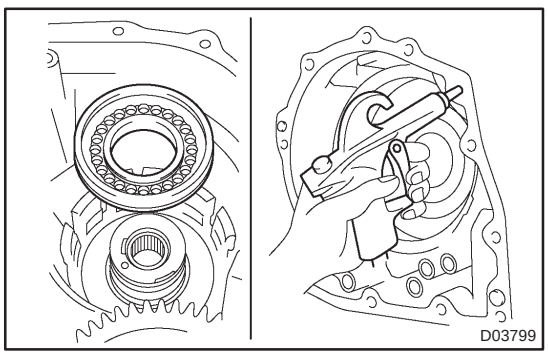

52. REMOVE UNDERDRIVE BRAKE PISTON

(a) Apply compressed air (392 kPa, 4.0 kgf/cm^2, 57 psi) to the transaxle case to remove the U/D brake piston.

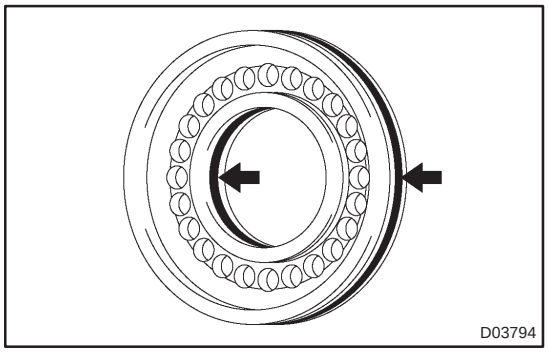

(b) Remove the 2 O–rings from the U/D brake piston.

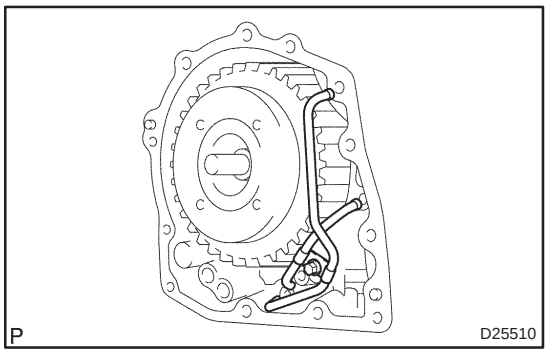

53. REMOVE BRAKE APPLY TUBE

(a) Remove a bolt, clamp and 2 brake apply tubes.
(b) Remove the brake apply tube from the clamp.

54. REMOVE FRONT CLUTCH APPLY TUBE

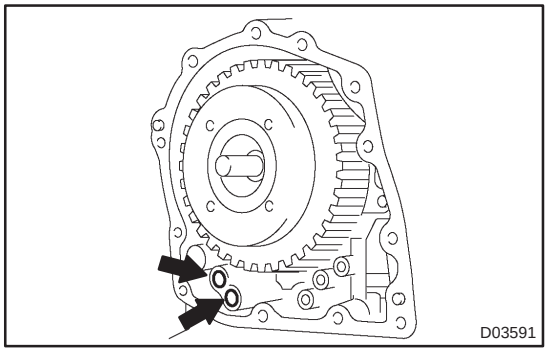

55. REMOVE GOVERNOR APPLY GASKET NO.1

(a) Using a screwdriver, remove the 2 governor apply gasket No. 1.

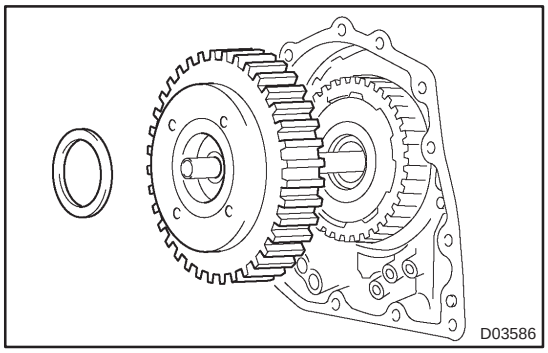

56. REMOVE DIRECT CLUTCH ASSY

(a) Remove the thrust bearing and the direct clutch assy from the transaxle case.

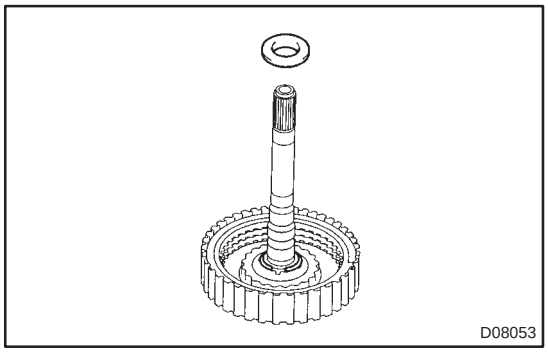

(b) Remove the bearing race from the direct clutch.

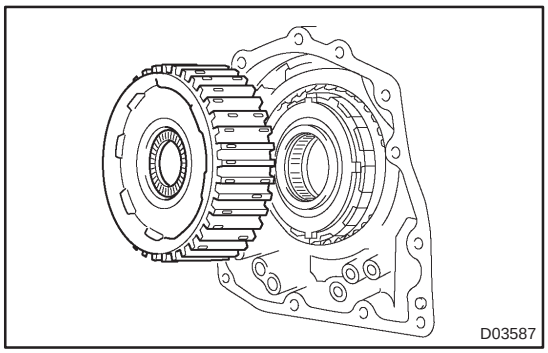

57. REMOVE REAR PLANETARY SUN GEAR ASSY

(a) Remove the rear planetary sun gear assy from the transaxle case.

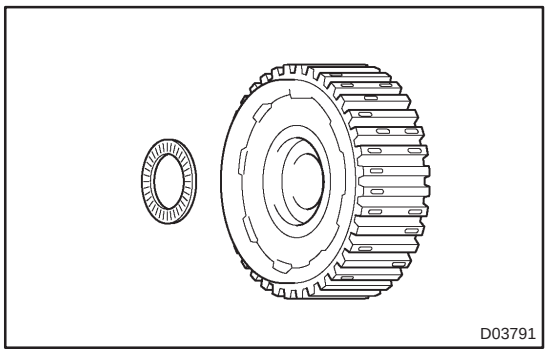

(b) Remove the rear planetary sun gear thrust bearing from the rear planetary sun gear.

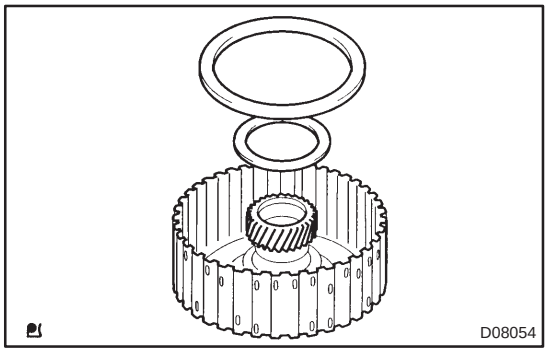

(c) Remove the thrust washer No. 1 and 1–way clutch thrust bearing from the rear planetary sun gear.

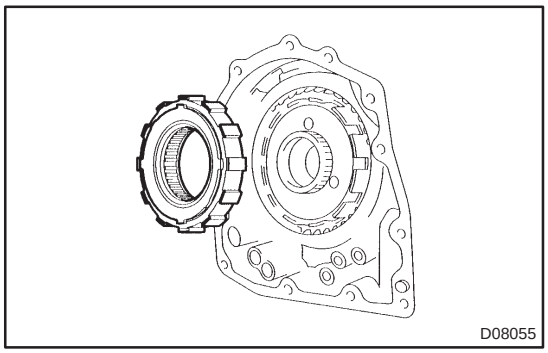

58. REMOVE 1 WAY CLUTCH ASSY

(a) Remove the 1–way clutch assy from the transaxle case.

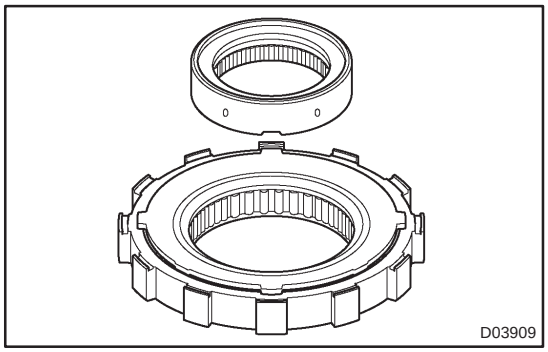

(b) Remove the 1–way clutch inner race from the 1–way clutch assy.

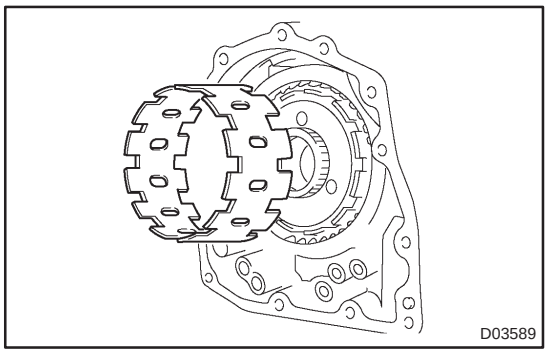

59. REMOVE 1WAY CLUTCH SLEEVE OUTER

(a) Remove the 1–way clutch sleeve outer.

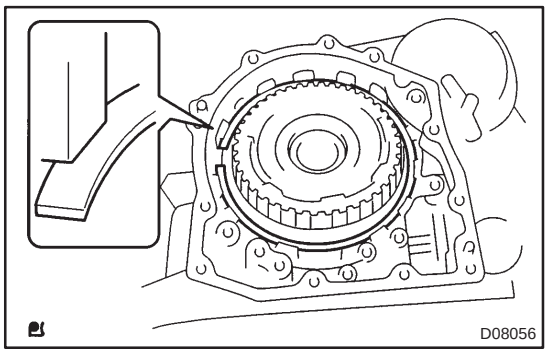

60. REMOVE 2ND BRAKE CLUTCH DISC

(a) Using a screwdriver, remove the 2ND brake hole snap ring from the transaxle case.

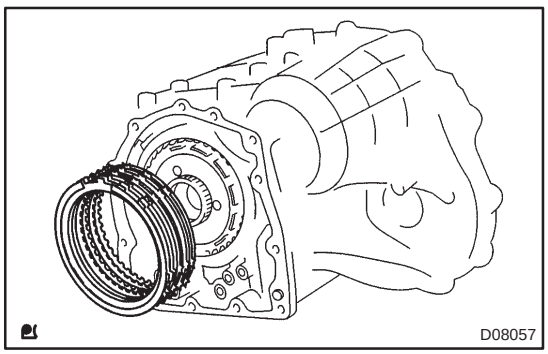

(b) Remove the flange, 3 discs and 3 plates from the transaxle case.

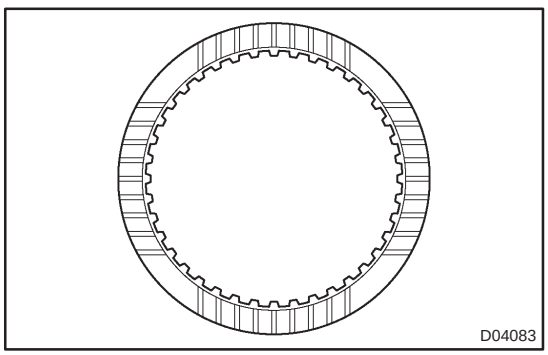

61. INSPECT 2ND BRAKE CLUTCH DISC

(a) Check to see if the sliding surface of the disc, plate and flange are worn or burnt.

If necessary, replace them.

NOTICE:

- **If the lining of the disc is peeling off or discolored, or even if a part of the printed number is defaced, replace all discs.**

- **Before assembling new discs, soak them in ATF for at least 15 minutes.**

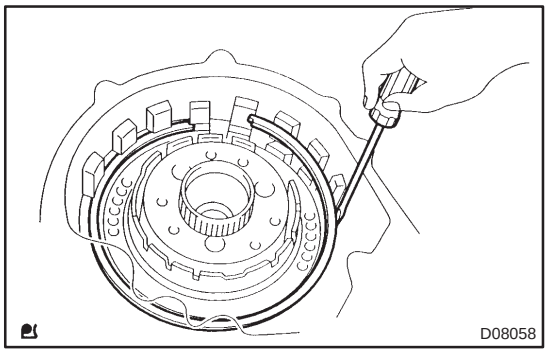

62. REMOVE SECOND BRAKE PISTON ASSY

(a) Using a screwdriver, remove the 2ND brake cylinder hole snap ring from the transaxle case.

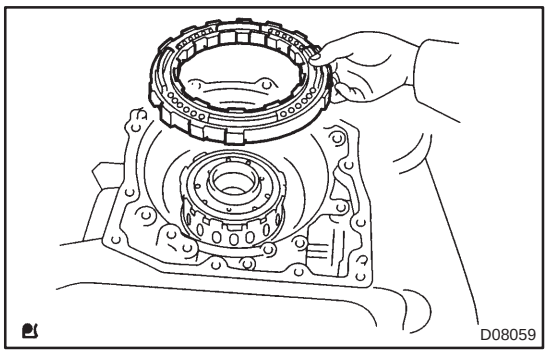

(b) Remove the 2ND brake cylinder from the transaxle case.

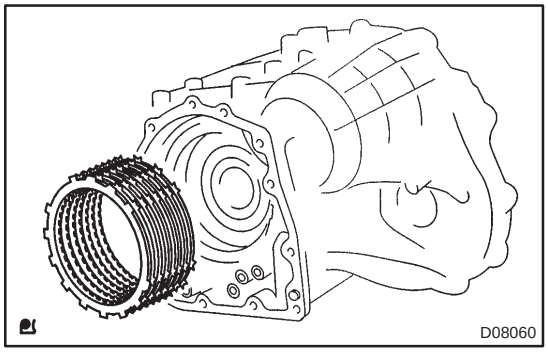

63. REMOVE 1ST & REVERSE BRAKE CLUTCH DISC

(a) Remove the flange, 5 discs and 5 plates from the transaxle case.

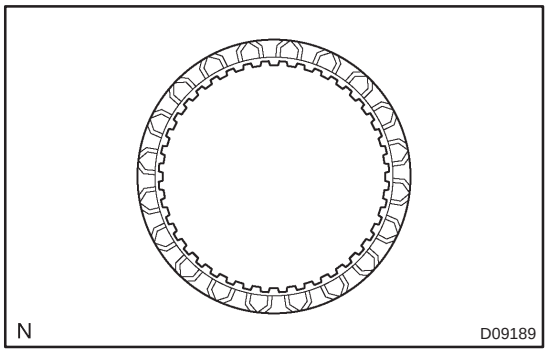

64. INSPECT 1ST & REVERSE BRAKE CLUTCH DISC

(a) Check to see if the sliding surface of the disc, plate, and flange are worn or burnt.

If necessary, replace them.

NOTICE:

- **If the lining of the disc is peeling off or discolored, or even if a part of the groove is defaced, replace all discs.**
- **Before assembling new discs, soak them in ATF for at least 15 minutes.**

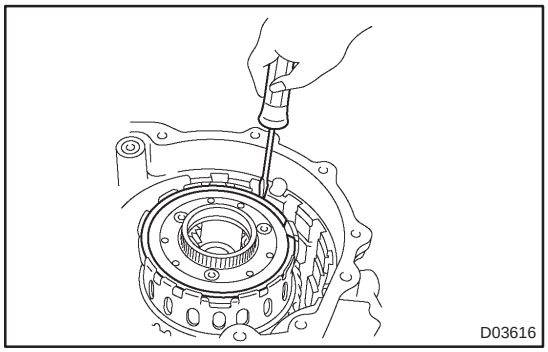

65. REMOVE REAR PLANETARY GEAR ASSY

(a) Using a screwdriver, remove the snap ring from the brake hub.

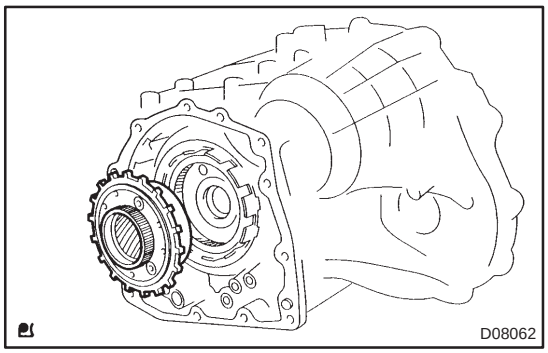

(b) Remove the rear planetary gear assy from the transaxle case.

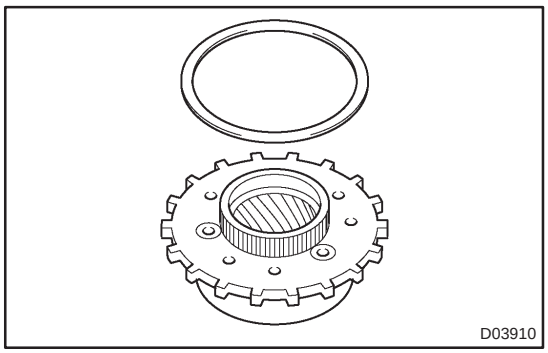

(c) Remove the thrust washer No. 2 from the rear planetary gear assy.

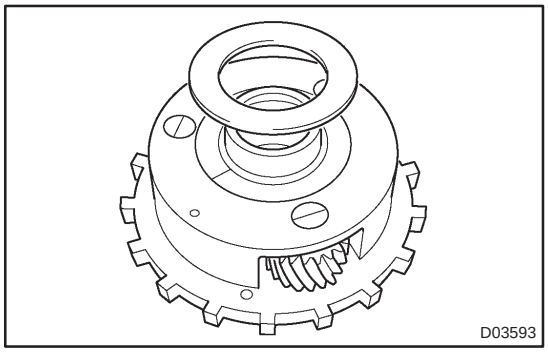

(d) Remove the thrust bearing race No. 3 from the rear planetary gear assy.

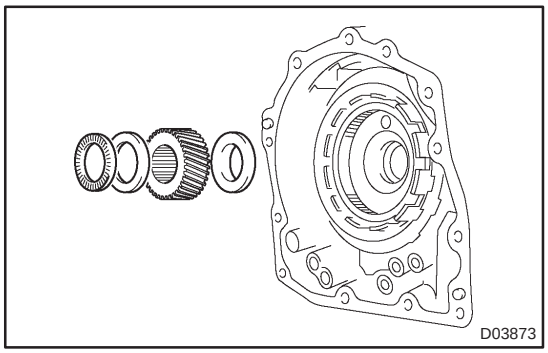

66. REMOVE INPUT SUN GEAR

(a) Remove the 2 thrust bearings, the bearing race and the input sun gear from the transaxle case.

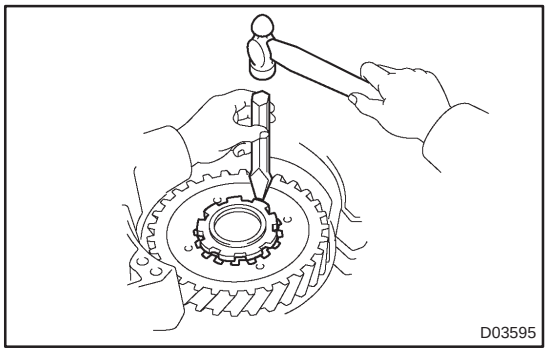

67. REMOVE FRONT PLANETARY GEAR ASSY

(a) Using a chisel and a hammer, unstake the lock washer.

NOTICE:

Push down all claws of the washer. Otherwise SST can not be fully pressed against the nut and can not loosen the nut.

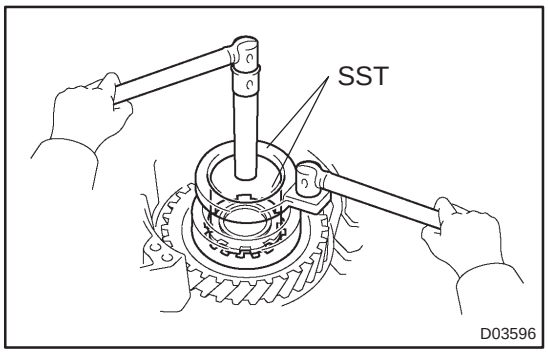

(b) Using SST, remove the nut.
SST 09387–00030, 09387–00080

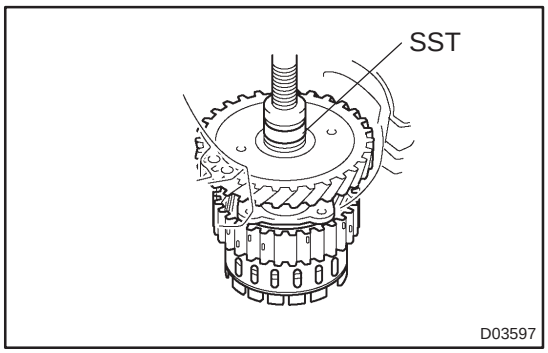

(c) Using SST and a press, remove the front planetary gear assy from the counter drive gear.
SST 09950–60010 (09951–00450)

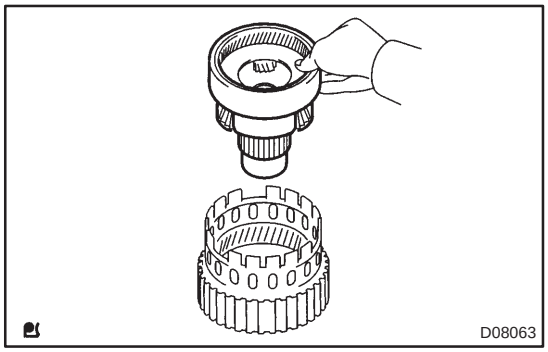

(d) Remove front planetary gear assy from the brake hub.

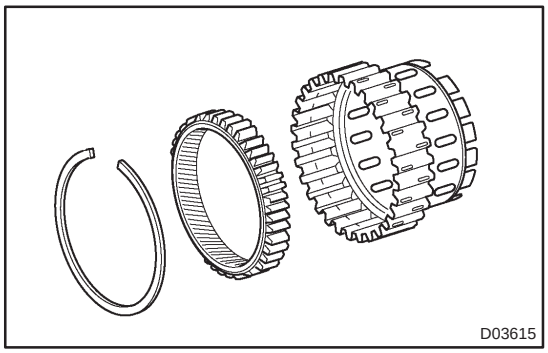

68. REMOVE FRONT PLANETARY RING GEAR

(a) Using a screwdriver, remove the brake hub snap ring and front planetary ring gear from the brake hub.

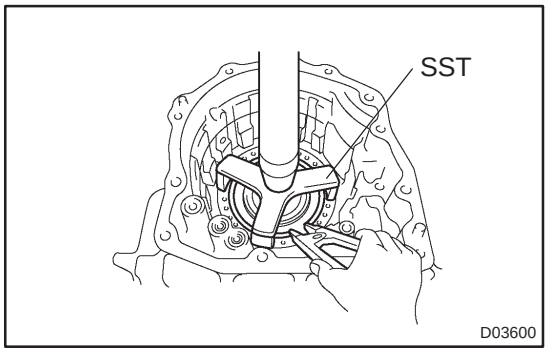

69. REMOVE 1ST & REVERSE BRAKE PISTON

(a) Using SST, a press and a snap ring expander, remove snap ring and the piston return spring.
SST 09387–00070

NOTICE:

- **Stop the press when the spring sheet is lowered 1 – 2 mm (0.039 – 0.078 in.) from the snap ring groove, preventing the spring sheet from deforming.**
- **Do not expand the snap ring excessively.**

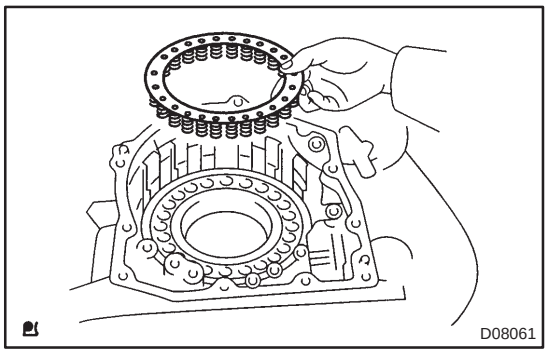

(b) Remove the1ST & reverse brake return spring from the 1ST & reverse brake piston.

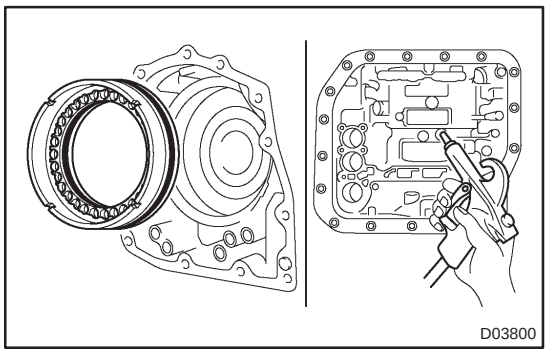

(c) Apply compressed air (392 kPa, 4.0 kgf/cm^2, 57 psi) to the transaxle case to remove 1ST & reverse brake piston.

NOTICE:

- **Blowing off the air may cause the piston jump–out. When removing the piston, hold it with your hand using a waste cloth.**
- **Take care not to splash ATF when air–blowing.**

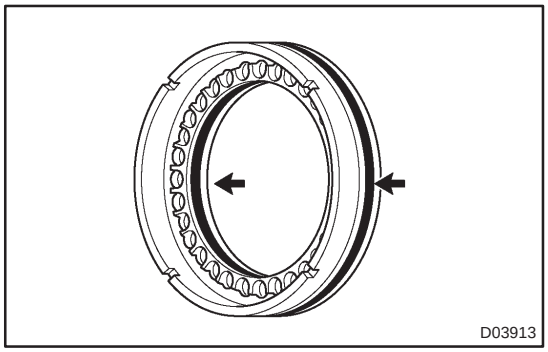

(d) Remove 2 O–rings from the 1ST & reverse brake piston.

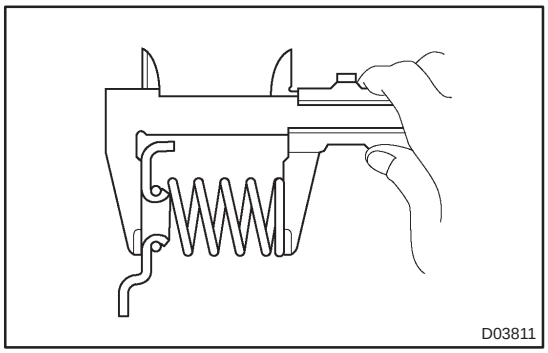

70. INSPECT 1ST & REVERSE BRAKE RETURN SPRING SUB–ASSY

(a) Using vernier calipers, measure the free length of the 1ST & reverse brake return spring together with the spring seat.
Standard free length: 15.51 mm (0.6106 in.)

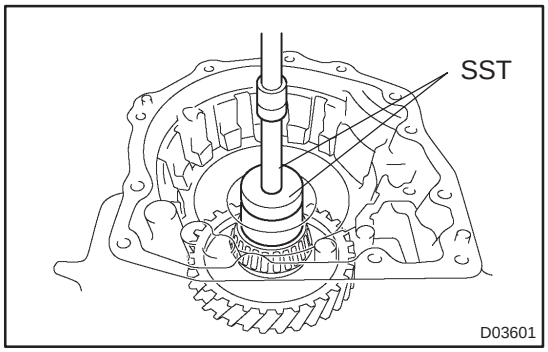

71. REMOVE COUNTER DRIVE GEAR

(a) Using SST and a press, remove the counter drive gear from the transaxle case.
SST 09950–60010 (09951–00600), 09950–70010 (09951–07100)

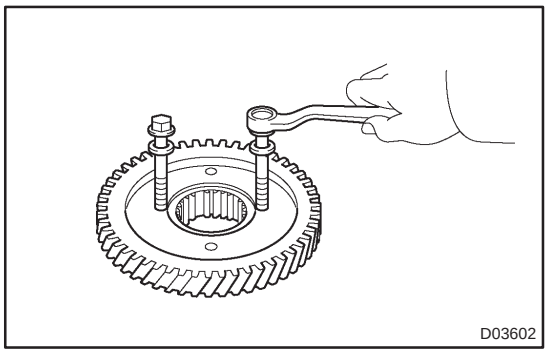

(b) As shown in the illustration, tighten 2 bolts evenly and make clearance of approx. 20.0 mm (0.797 in.) between the counter drive gear and the inner race.

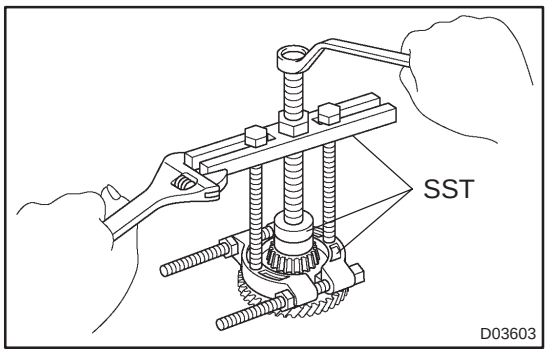

(c) Using SST, remove the tapered roller bearing.
SST 09950–60010 (09951–00600), 09950–40011 (09951–04010, 09952–04010, 09953–04020, 09954–04010, 09955–04011, 09958–04011)

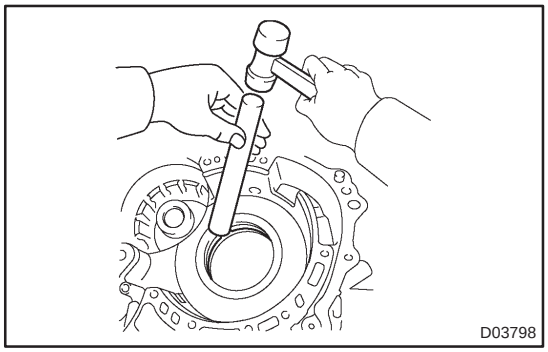

(d) Using a brass bar and a hammer, remove the 2 counter drive gear bearing outer races from the transaxle case.

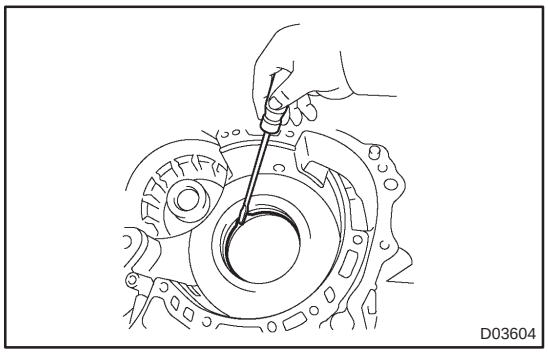

72. REMOVE COUNTER DRIVE GEAR HOLE SNAP RING

(a) Using a screwdriver, remove the snap ring from the transaxle case.

73. REMOVE BREATHER PLUG NO.2 (ATM)

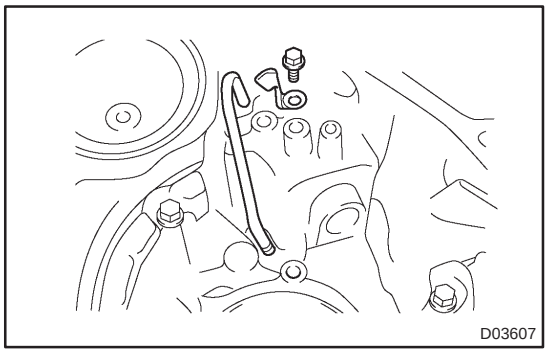

74. REMOVE DIFFERENTIAL GEAR LUBE APPLY TUBE

(a) Remove the bolt, the transaxle apply tube clamp No. 2 and the differential gear loop apply tube from the transaxle case.

75. BEARING POSITION

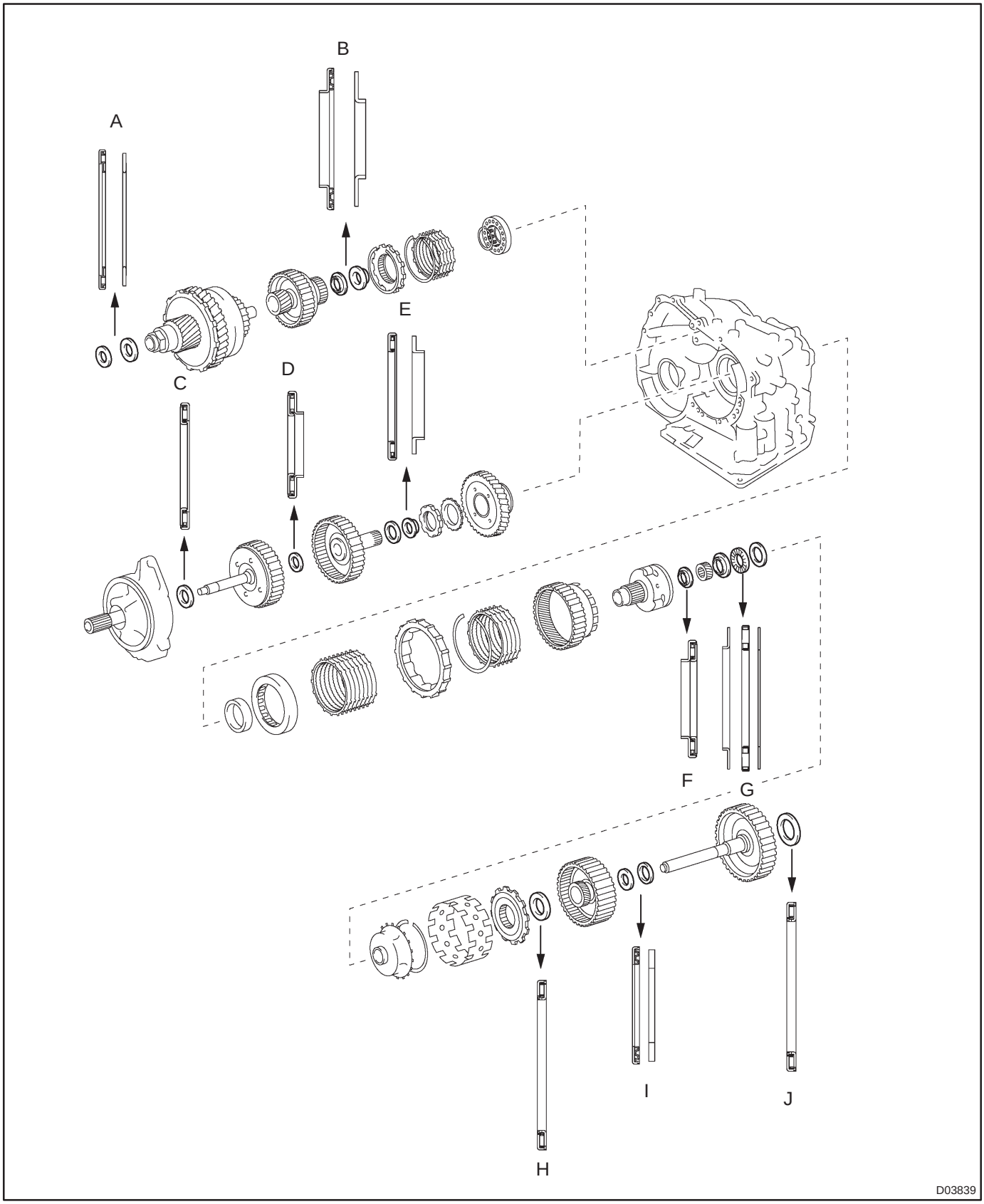

Mark	Front Race Diameter Inside / Outside mm (in.)	Thrust Bearing Diameter Inside / Outside mm (in.)	Rear Race Diameter Inside / Outside mm (in.)
A	–	53.0 (2.087) / 78.2 (3.079)	52.1 (2.051) / 75.5 (2.972)
B	–	37.73 (1.4854) / 58.0 (2.283)	29.9 (1.177) / 55.5 (2.185)
C	–	33.85 (1.3327) / 52.2 (2.055)	–
D	–	23.5 (0.925) / 44.0 (1.732)	–
E	–	36.3 (1.429) / 52.2 (2.055)	34.5 (1.358) / 48.5 (1.909)
F	–	34.6 (1.362) / 52.2 (2.055)	–
G	40.3 (1.587) / 58.0 (2.283)	38.6 (1.520) / 60.0 (2.362)	38.6 (1.520) / 58.0 (2.283)
H	–	53.6 (2.110) / 69.6 (2.740)	–
I	–	33.7 (1.327) / 48.2 (1.898)	30.3 (1.193) / 46.0 (1.811)
J	–	53.6 (2.110) / 70.18 (2.763) or 69.6 (2.740)	–

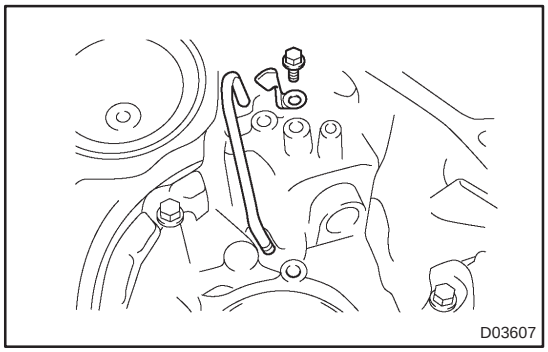

76. INSTALL DIFFERENTIAL GEAR LUBE APPLY TUBE

(a) Install the apply tube, and apply tube clamp No. 2 with the bolt to the transaxle housing.
Torque: 9.8 N·m (100 kgf·cm, 87 in.·lbf)

NOTICE:
Make sure to insert the tube to the stopper.

77. INSTALL BREATHER PLUG NO.2 (ATM)

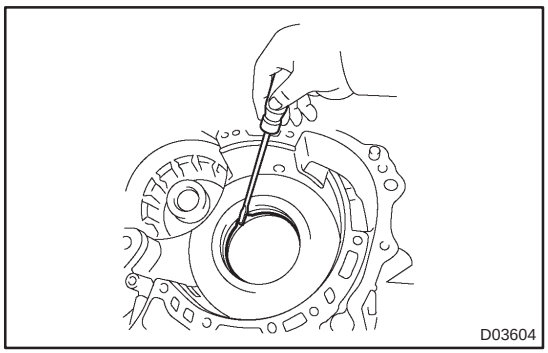

78. INSTALL COUNTER DRIVE GEAR HOLE SNAP RING

(a) Using a screwdriver, install the hole snap ring to the transaxle case.

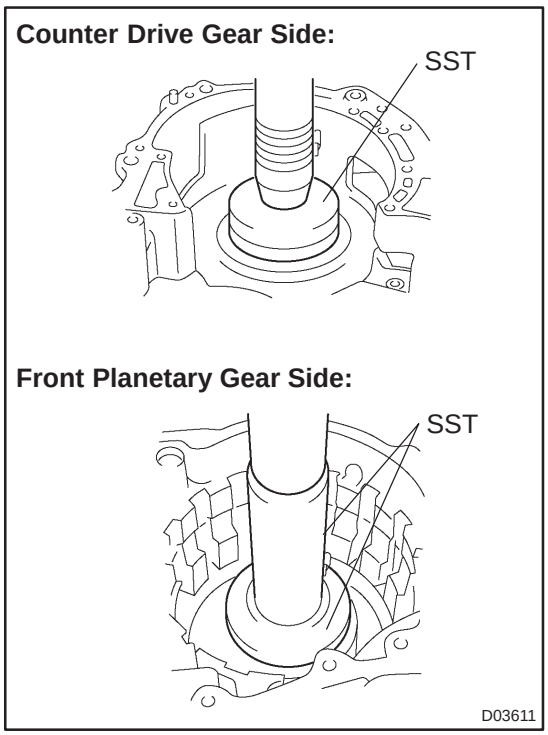

79. INSTALL COUNTER DRIVE GEAR

(a) Using SST and a press, instal the 2 counter drive gear bearings outer races to the transaxle case.

NOTICE:
- **Press–fit the bearing race until it contacts the snap ring.**
- **Do not apply excessive pressure to it.**

SST 09950–60020 (09951–00890), 09950–70010 (09951–07150)

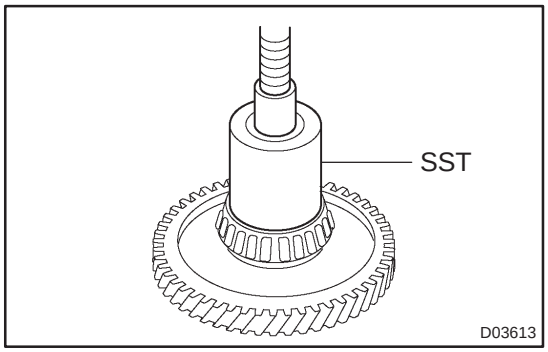

(b) Using SST and a press, install the tapered roller bearing to the counter drive gear.
SST 09649–17010

NOTICE:

- **Press–fit the bearing inner race until contacts the counter drive gear.**
- **Do not apply excessive pressure to it.**

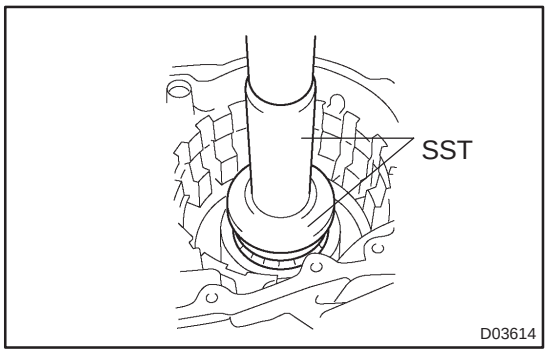

(c) Using SST and a press, install the counter drive gear and bearing to the transaxle case.
SST 09950–60020 (09951–00890), 09950–70010 (09951–07150)

NOTICE:
Do not apply excessive pressure to it.

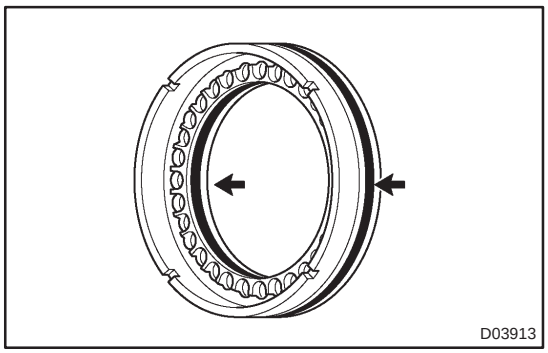

80. INSTALL 1ST & REVERSE BRAKE PISTON

(a) Coat 2 new O–rings with ATF.
(b) Install the 2 O–ring to the 1st & reverse brake piston.

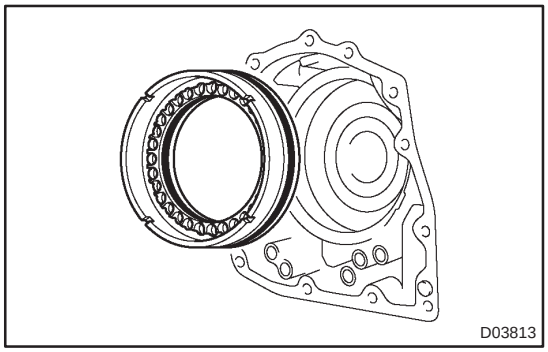

(c) Coat a 1st & reverse brake piston with ATF, install it to the transaxle case.

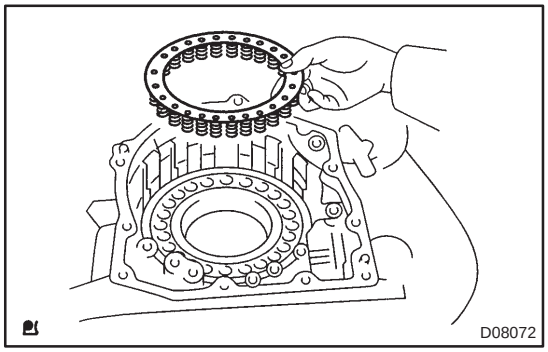

(d) Install the 1st & reverse brake return spring to the 1st & reverse brake piston.

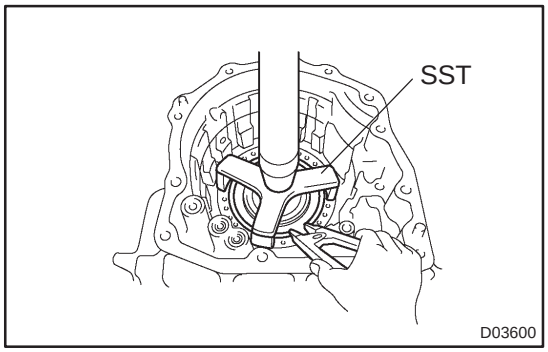

(e) Using SST, a press and snap ring expander, install the piston return spring and snap ring to the transaxle case.
SST 09387–00070

NOTICE:

- **Stop the press when the spring sheet is lowered to the place 1 – 2 mm (0.039 – 0.078 in.) from the snap ring groove, preventing the spring sheet from being deform.**
- **Do not expand the snap ring excessively.**

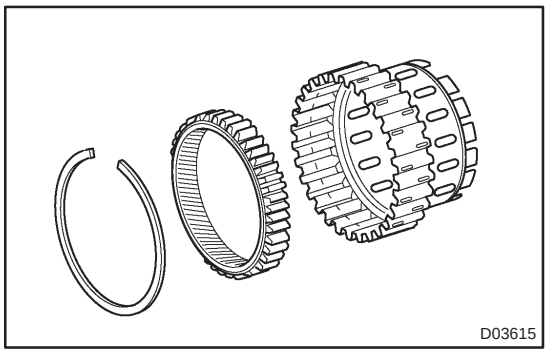

81. INSTALL FRONT PLANETARY RING GEAR

(a) Using a screwdriver, install the front planetary ring gear and brake hub snap ring to the brake hub.

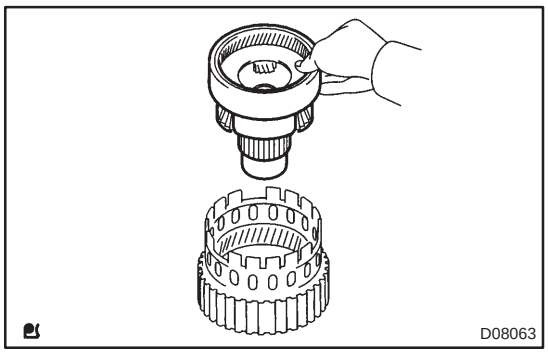

82. INSTALL FRONT PLANETARY GEAR ASSY

(a) Install the front planetary gear assy to the brake hub.

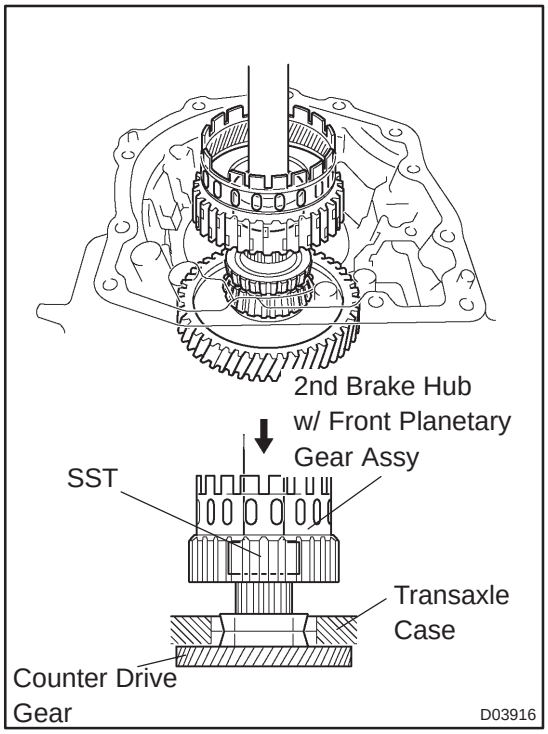

(b) Using SST and a press, press–fit the front planetary gear assy.

NOTICE:

Do not apply excessive pressure to it.

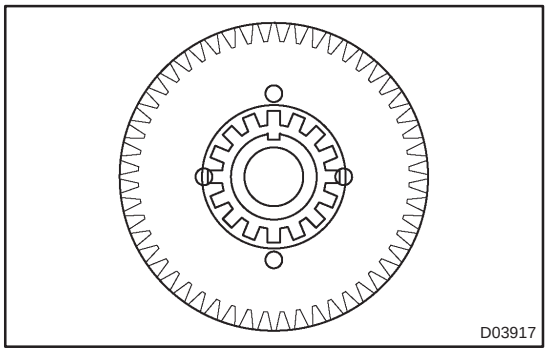

(c) Install the front planetary gear washer, as shown in the illustration.

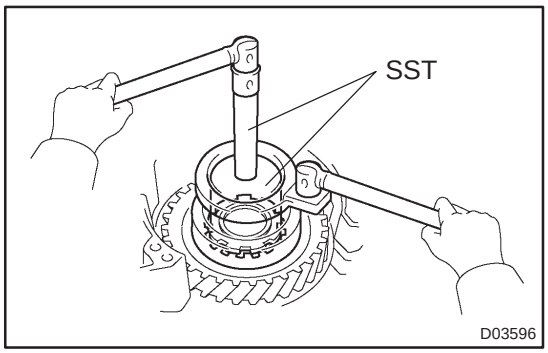

(d) Using SST, install the nut.
SST 09387–00030, 09387–00080
Torque: 268 N·m (2,728 kgf·cm, 197 ft·lbf)

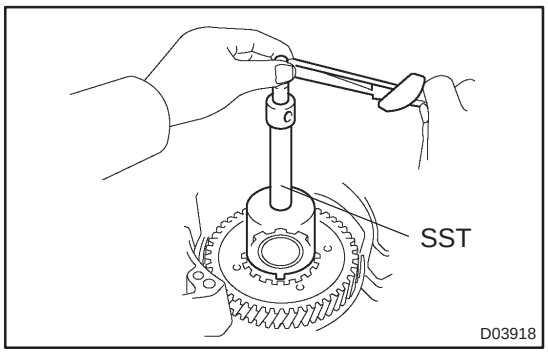

(e) Using SST and a torque wrench, measure the turning torque of the bearing while rotating SST at 60 rpm. When the measured value is not within the specified value, gradually tighten the nut until it reaches the specified value.
SST 09950–60010 (09951–00400), 09950–70010 (09951–07100), 09387–00030, 09387–00080
Turning torque at 60 rpm:
New Bearing
0.5 – 1.0 N·m (5.1 – 10.0 kgf·cm, 4.4 – 8.7 in.·lbf)
Used Bearing
0.3 – 0.5 N·m (3.1 – 5.1 kgf·cm, 2.7 – 4.4 in.·lbf)

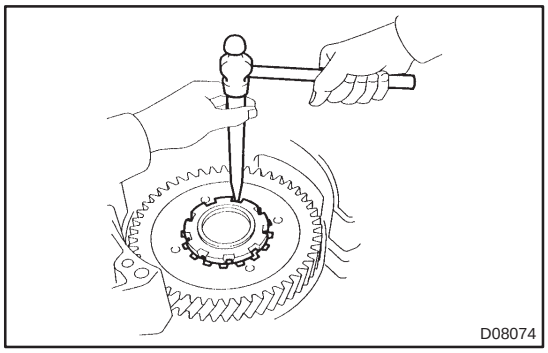

(f) Using a chesel and hammer, stake the front planetary gear washer.

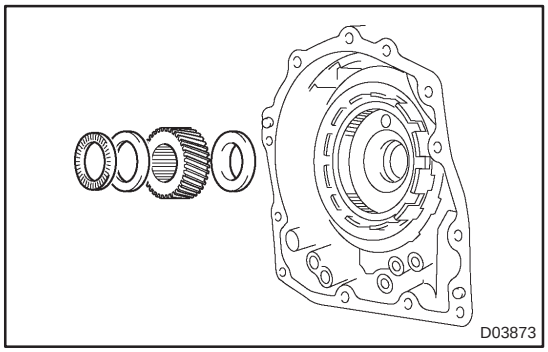

83. INSTALL INPUT SUN GEAR

(a) Install the 2 thrust bearings, the bearing race and the front planetary sun gear to the front planetary gear assy.
Bearing and race diameter: mm (in.)

	inside	outside
Bearing	34.6 (1.362)	52.2 (2.055)
Race	40.3 (1.587)	58.0 (2.283)
Bearing	38.6 (1.520)	60.0 (2.362)

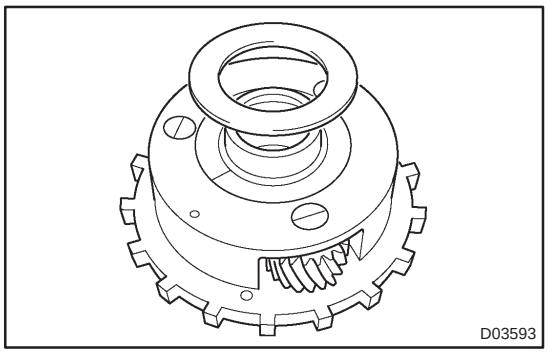

84. INSTALL REAR PLANETARY GEAR ASSY

(a) Coat a bearing race with ATF, install it to the rear planetary gear assy.
Bearing race diameter: mm (in.)

	inside	outside
Race	38.6 (1.520)	58.0 (2.283)

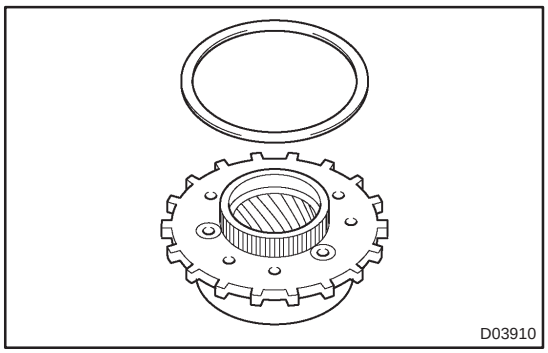

(b) Install the planetary carrier thrust washer No. 2 to the planetary gear assy.

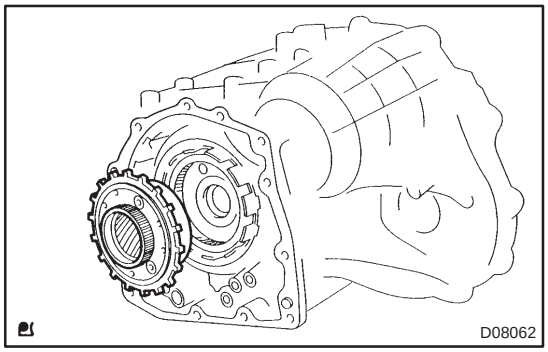

(c) Install the rear planetary gear to the rear planetary ring gear.

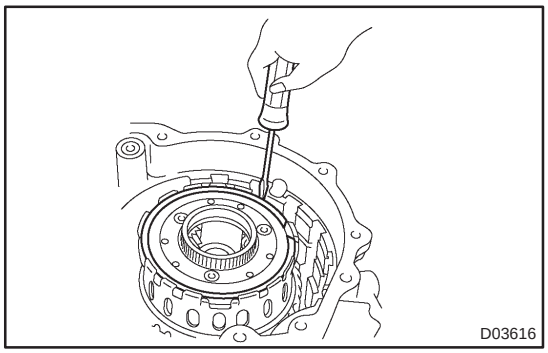

(d) Using a screwdriver, install the snap ring to the brake hub.

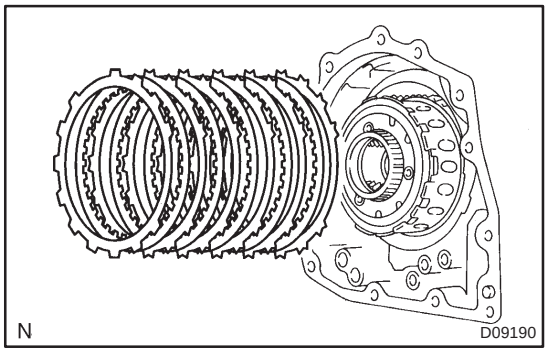

85. INSTALL 1ST & REVERSE BRAKE CLUTCH DISC

(a) Install the 5 plates and 5 discs.

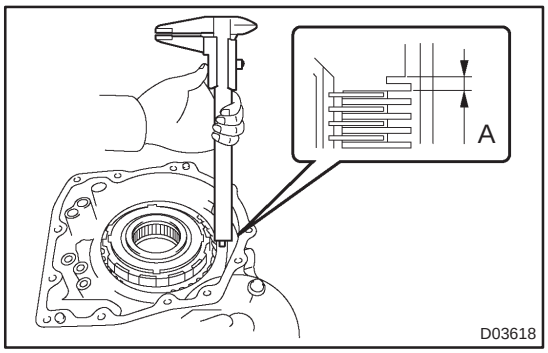

86. INSPECT PACK CLEARANCE OF FIRST & REVERSE BRAKE

(a) Using vernier calipers,measure the distance between the disc surface and the contact surface of the 2nd brake cylinder and transaxle case.(Dimension A)

(b) Select an appropriate flange so that the piston stroke will meet the specified value.

Pack clearance:

1.02 – 1.21 mm (0.0402 – 0.0476 in.)

HINT:

Piston stroke = Dimension A –Flange thickness

Flange thickness: mm (in.)

Mark	Thickness	Mark	Thickness
1	1.8 (0.071)	5	2.2 (0.087)
2	1.9 (0.075)	6	2.3 (0.091)
3	2.0 (0.079)	7	2.4 (0.094)
4	2.1 (0.083)	8	2.5 (0.098)

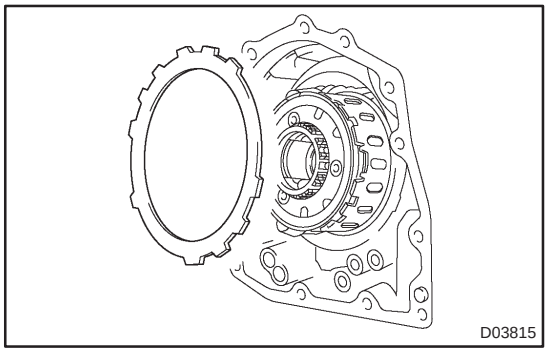

(c) Install the flange.

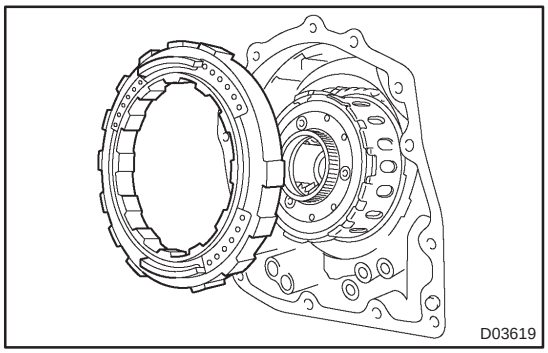

87. INSTALL 2ND BRAKE CYLINDER

(a) Install the 2nd brake piston assy to the transaxle case.

(b) Install the snap ring and measure the inside diameter.

Inside diameter: More than 167 mm (6.57 in.)

NOTICE:

- **Because the taper snap ring has the positioning direction, check it when installing.**
- **When the diameter does not satisfy the specified value, replace the snap ring with new one.**

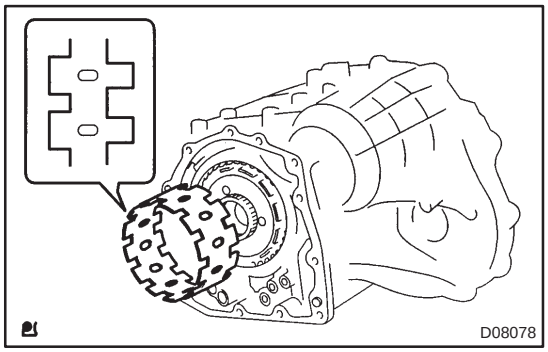

88. INSTALL 1WAY CLUTCH SLEEVE OUTER

(a) Install the 1–way clutch outer sleeve to the 2nd brake cylinder assy.

NOTICE:
Check the positioning direction of the outer sleeve.

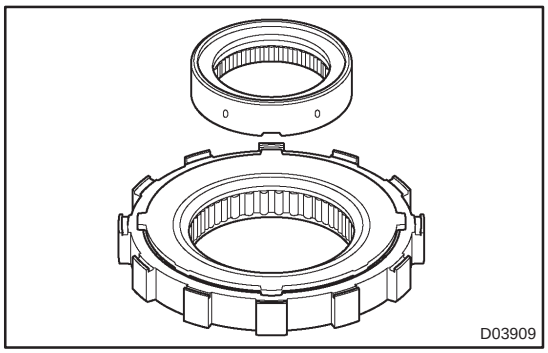

89. INSTALL 1 WAY CLUTCH ASSY

(a) Install the inner race to the 1–way clutch.

NOTICE:
Check the direction of the inner race.

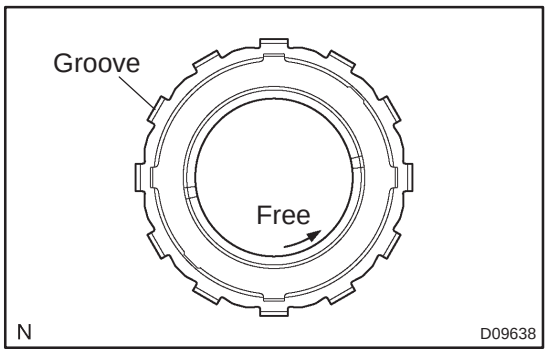

(b) Check the rotating direction of 1–way clutch for the lock or free operation, as shown in illustration.

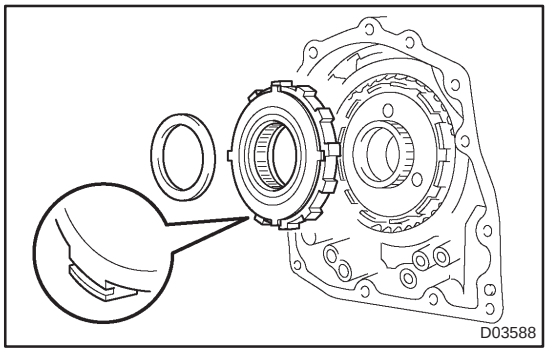

(c) Install the 1–way clutch and bearing to the 1–way clutch outer race sleeve.

Bearing diameter: mm (in.)

	Inside	Outside
Bearing	53.6 (2.110)	69.6 (2.740)

NOTICE:
Install the thrust bearing properly so that no–colored race will be visible.

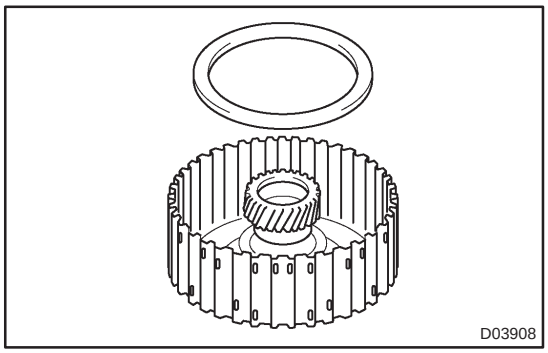

90. INSTALL REAR PLANETARY SUN GEAR ASSY

(a) Coat the planetary carrier thrust washer No. 1 with petroleum jelly, install it onto the rear planetary sun gear.

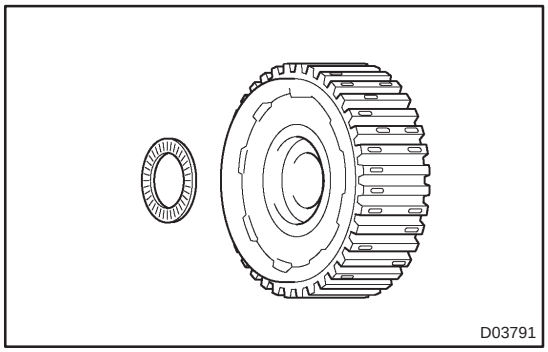

(b) Coat the bearing with petroleum jelly, install it onto the rear planetary sun gear.

Bearing diameter: mm (in.)

	Inside	Outside
Bearing	33.8 (1.331)	48.2 (1.898)

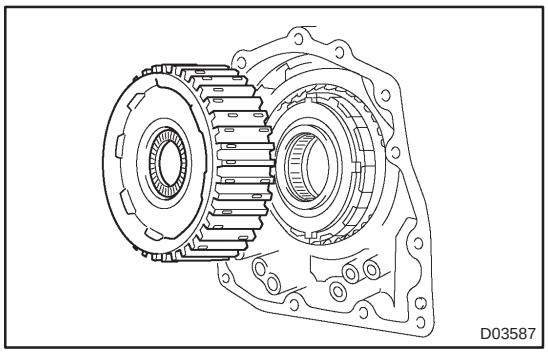

(c) Install the rear planetary sun gear assy to the rear planetary gear.

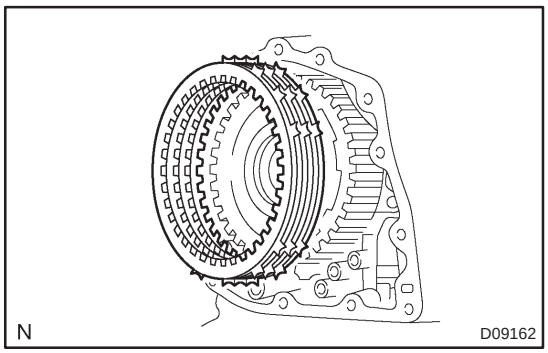

91. INSTALL 2ND BRAKE CLUTCH DISC

(a) Install the 3 discs and 3 plates to the transaxle case.
(b) Temporarily install the snap ring.

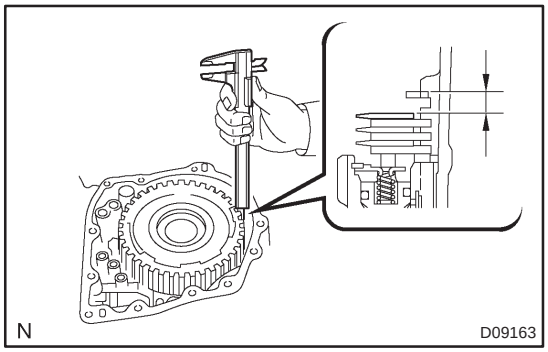

92. INSPECT PACK CLEARANCE OF SECOND BRAKE

(a) Using vernier calipers, measure the distance between the disc surface and snap ring surface.
(b) Select an appropriate flange so that the piston stroke will meet the specified value.

Pack clearance: 0.62 – 0.91 mm (0.0244 – 0.0358 in.)

HINT:

Piston stroke = Clearance – Flange thickness – Snap ring thickness 1.6 mm (0.063 in.)

Flange thickness: mm (in.)

Mark	Thickness	Mark	Thickness
1	3.0 (0.118)	5	3.4 (0.134)
2	3.1 (0.122)	6	3.5 (0.138)
3	3.2 (0.126)	7	3.6 (0.142)
4	3.3 (0.130)	8	–

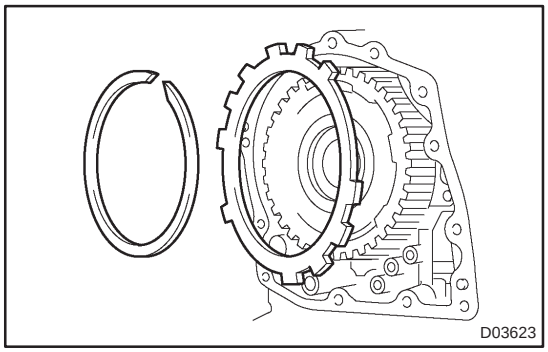

(c) Temporarily remove the snap ring, attach the selected flange and restore the snap ring.

NOTICE:

Secure the snap ring so that its gap is visible through the groove of the transaxle case.

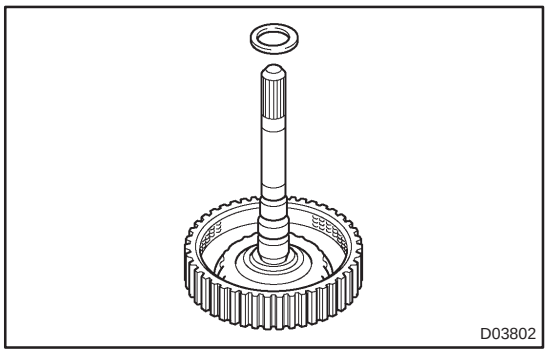

93. INSTALL DIRECT CLUTCH ASSY

(a) Install the bearing race to the direct clutch.

Bearing race diameter : mm (in.)

	Inside	Outside
Bearing race	30.3 (1.193)	46.0 (1.811)

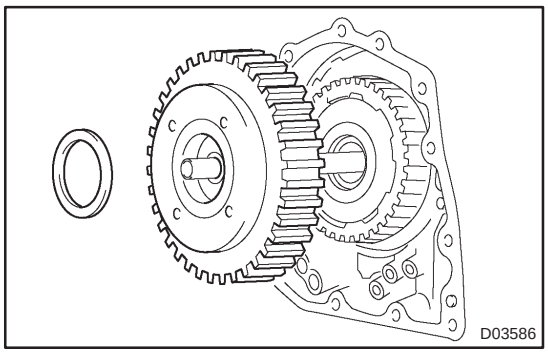

(b) Install direct clutch assy and thrust needle roller bearing to the rear planetary sun gear assy.

NOTICE:

The disc in the direct clutch should completely mate with the hub attached outside the rear planetary sun gear. Otherwise, the rear cover can not be installed.

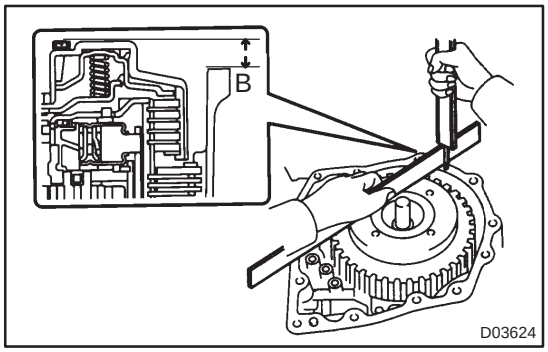

(c) Clean the connecter part of the transaxle case and rear cover.

(d) As shown in the illustration, place a straight edge on the direct clutch drum and measure the distance between the the transaxle case and the straight edge using vernier calipers. (Dimension B)

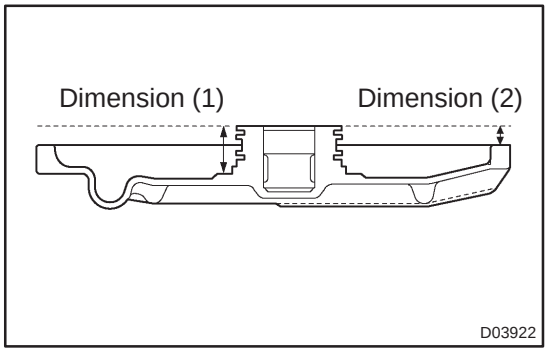

(e) Measure the 2 places of the rear cover as shown in the illustration and calculate a dimension C using the following formula.

HINT:

Dimension C = Dimension (1) – Dimension (2)

(f) Calculate the end play value using the following formula. Select a thrust bearing which satisfies the end play value and install it.

End play: 0.198 – 0.936 mm (0.00800 – 0.03685 in.)

NOTICE:
Make sure that the colored race side is facing the direct clutch assy.
HINT:
End play = Dimension C – Dimension B

Bearing thickness and diameter : mm (in.)

Thickness	Inside	Outside
3.55 (0.1397)	53.6 (2.110)	69.6 (2.740)
3.85 (0.1515)	53.6 (2.110)	70.18 (2.763)

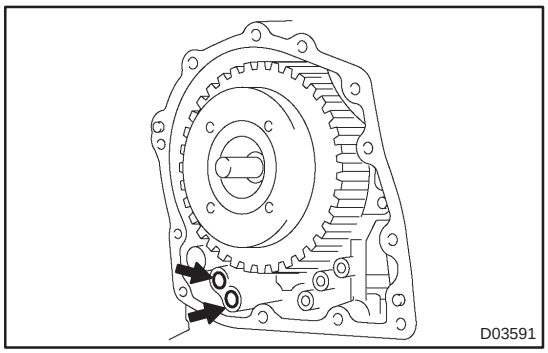

94. INSTALL GOVERNOR APPLY GASKET NO.1

(a) Install 2 new apply gaskets to the transaxle case.

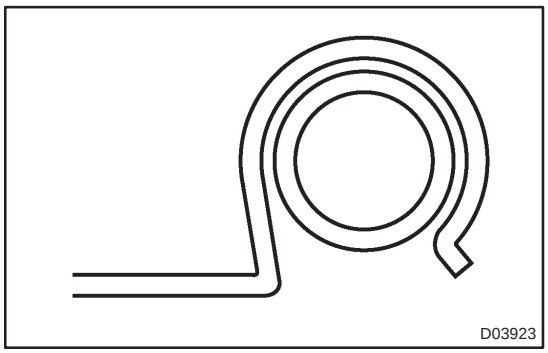

95. INSTALL FRONT CLUTCH APPLY TUBE

(a) Install the clamp to the front clutch apply tube.

NOTICE:
Make sure to install the clamp to the apply pipe before installing the apply pipe to the transaxle case. This prevents the apply pipe from being deformed or damaged.

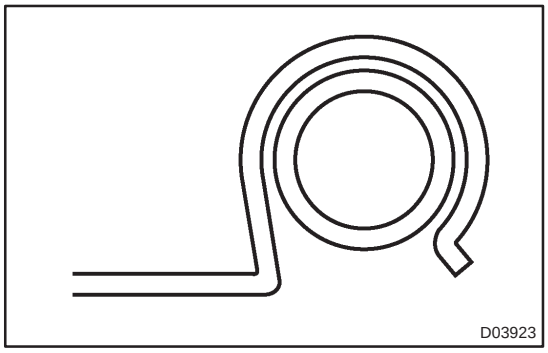

96. INSTALL BRAKE APPLY TUBE

(a) Install the clamp to the brake apply tube.

NOTICE:
Make sure to install the clamp to the apply pipe before installing the apply pipe to the transaxle case. This prevents the apply pipe from being deformed or damaged.

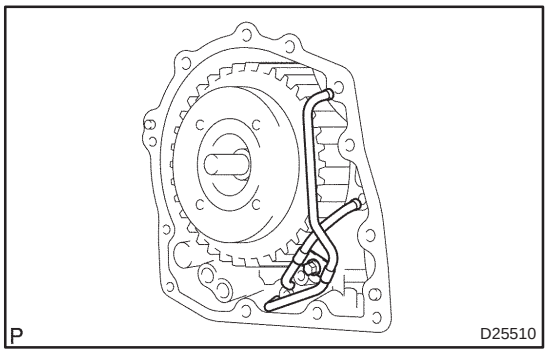

(b) Install the 2 apply tubes and a bolt to the transaxle case.
Torque: 5.4 N·m (55 kgf·cm, 48 in.·lbf)

NOTICE:
Each pipe should be securely inserted until it reaches the stopper.

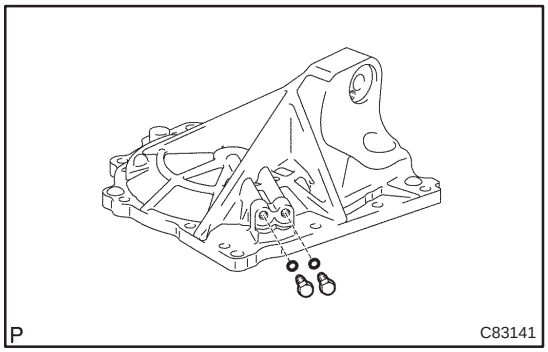

97. INSTALL TRANSAXLE CASE NO.1 PLUG

(a) Install 2 new O–rings to the 2 transaxle case No. 1 plugs.
(b) Install 2 transaxle case No. 1 plugs to the transaxle rear cover.
Torque: 7.4 N·m (75 kgf·cm, 65 in.·lbf)

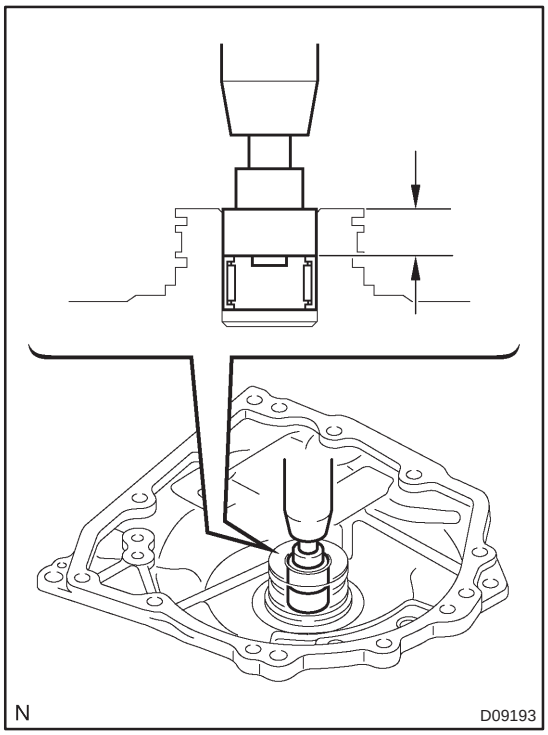

98. INSTALL TRANSAXLE REAR COVER SUB–ASSY

(a) Using SST and a press, install the bearing.
SST 09950–60010 (09951–00230, 09951–00350)
Press fit depth: 12.05 – 12.75 mm (0.4744 – 0.5020 in.)

NOTICE:

- **Face the inscribed mark side of the bearing race up.**
- **Repeat the press fit until the specified value is obtained.**

(b) Apply liquid sealer to the 2 screws.
Sealant:
Part No. 08833–00080, THREE BOND 2430 or equivalent.

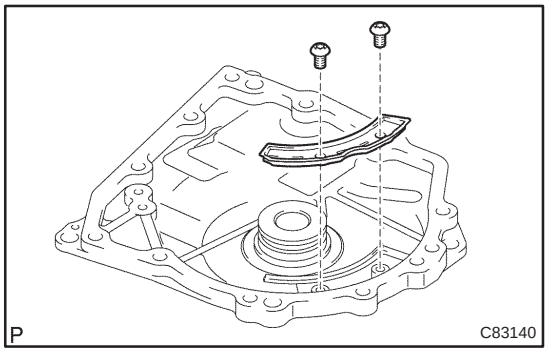

(c) Using a torx socket wrench T30, install the transaxle rear cover plate with the 2 screws.
Torque: 7.5 N·m (76 kgf·cm, 66 in.·lbf)

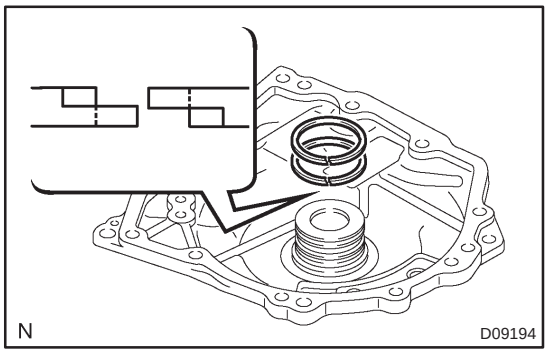

(d) Coat 2 new oil seal rings with ATF, install them to the transaxle rear cover.

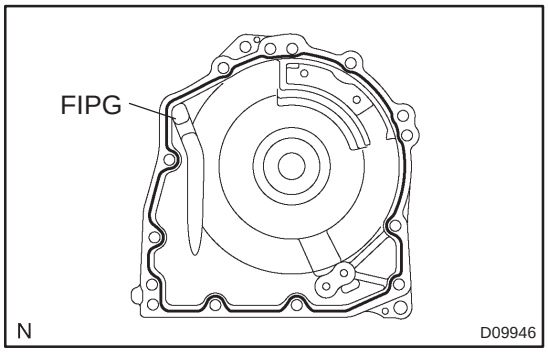

(e) Remove any packing material and be careful not to get oil on the contacting surfaces of the transaxle rear cover or the transaxle case.

(f) Apply FIPG to the cover.
FIPG:
Part No. 08826–00090, THREE BOND 1281 or equivalent.

(g) Coat a needle roller bearing with ATF.

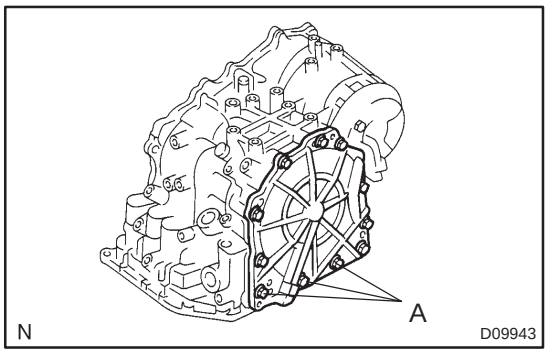

(h) Apply liquid sealer to the ”A” bolt threads.
Sealant:
Part No. 08833–00080, THREE BOND 1344, LOCTITE 242 or equivalent.

(i) Install the 11 bolts.
Torque:
Bolt A: 18.6 N·m (190 kgf·cm, 14 ft·lbf)
Other bolt: 24.5 N·m (250 kgf·cm, 18 ft·lbf)

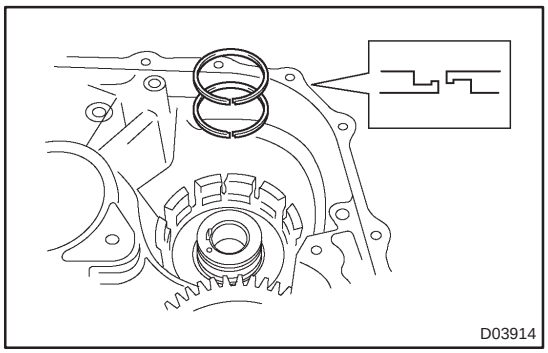

99. INSTALL UNDERDRIVE CLUTCH DRUM OIL SEAL RING

(a) Install the new 2 oil seal rings to the transaxle case.

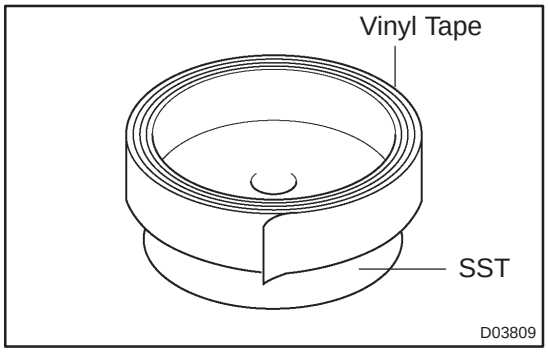

100. INSTALL UNDERDRIVE BRAKE PISTON

(a) Wind a vinyl tape around SST at the place 4.0 mm (0.157 in.) above from the bottom end until the thickness of the wound tape is about 5.0 mm (0.197 in.).
SST 09550–60010 (09951–00320)

NOTICE:
Clean SST to remove deposited oil, before winding a vinyl tape.

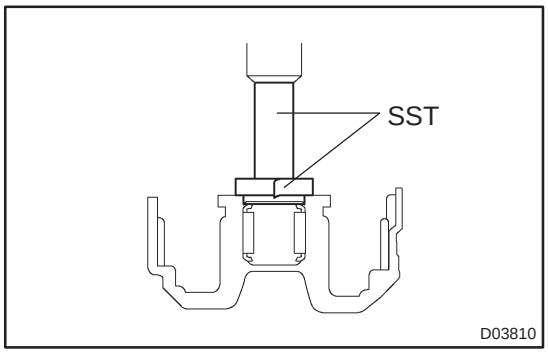

(b) Using SST and a press, install the needle–roller bearing to the transaxle case.
SST 09550–60010 (09951–00320), 09950–70010 (09951–07100), 09387–00020

NOTICE:
When the wound vinyl tape contacts the transaxle case, stop press–fitting.

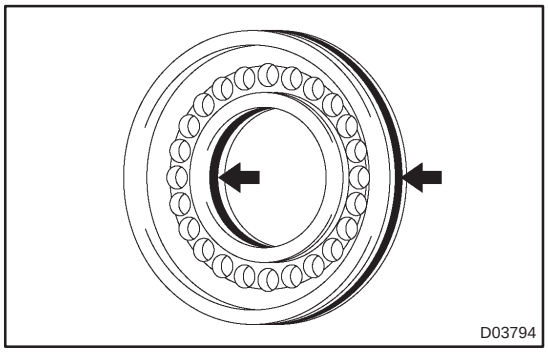

(c) Coat 2 new O–rings with ATF, install them to the U/D brake piston.

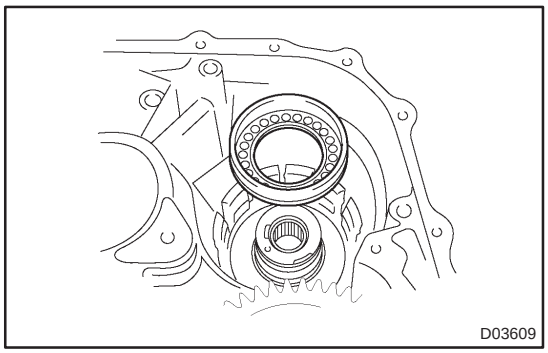

(d) Install the U/D brake piston to the transaxle case.

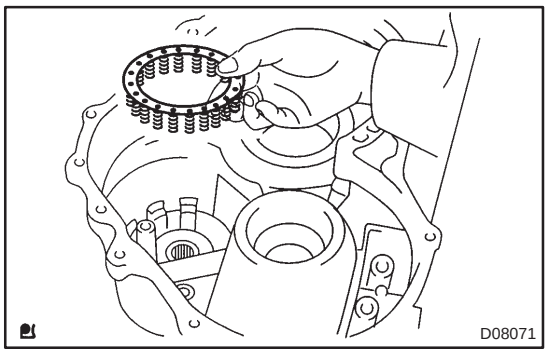

101. INSTALL UNDERDRIVE BRAKE RETURN SPRING SUB–ASSY

(a) Install the U/D brake return spring to the U/D brake piston.

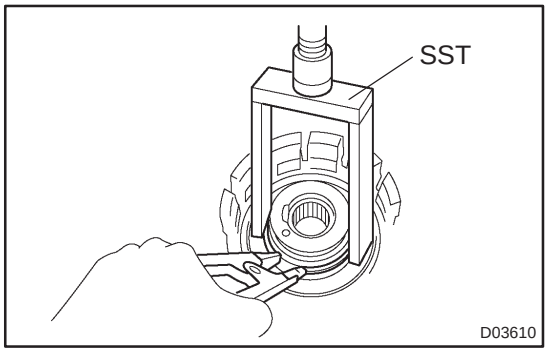

(b) Using SST, a snap ring expander and a press, install the snap ring to the transaxle case.
SST 09387–00020

NOTICE:
Do not apply excessive pressure to it.

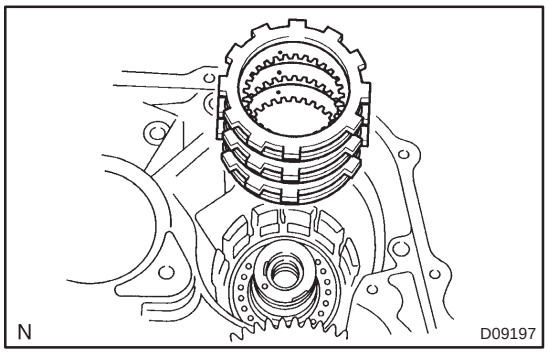

102. INSTALL UNDERDRIVE CLUTCH DISC NO.2

(a) Install the 3 discs and 3 plates to the transaxle case.

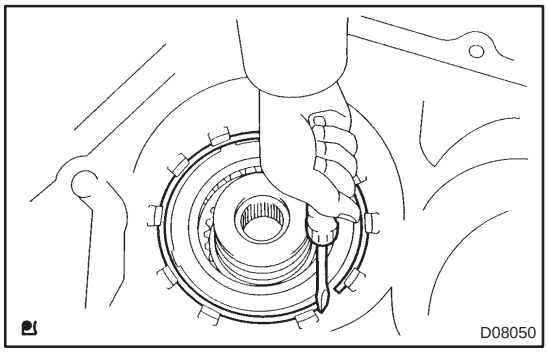

(b) Using a screwdriver, install the snap ring.

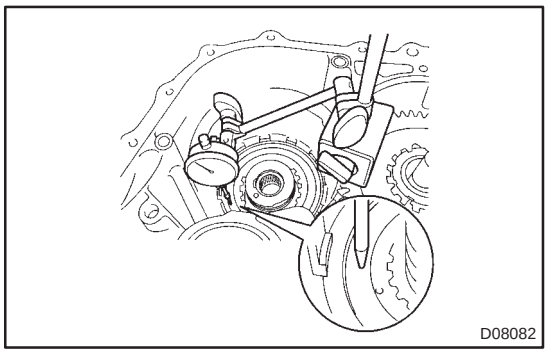

(c) Using a dial indicator, measure the U/D brake piston stroke while applying and releasing compressed air (392 kPa, 4.0 kgf/cm^2, 57 psi).

Piston stroke: 1.81 – 2.20 mm (0.0713 – 0.0866 in.)

HINT:

Select an appropriate flange from the table below so that it will meet the specified value.

Flange thickness: mm (in.)

Mark	Thickness	Mark	Thickness
1	3.0 (0.118)	3	3.4 (0.134)
2	3.2 (0.126)	–	–

(d) Temporally remove the snap ring and attach the flange. Restore the snap ring.

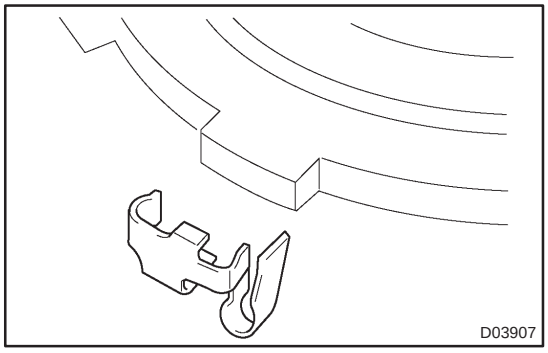

103. INSTALL UNDERDRIVE 1 WAY CLUTCH ASSY

(a) Install the outer race retainer to the 1–way clutch.

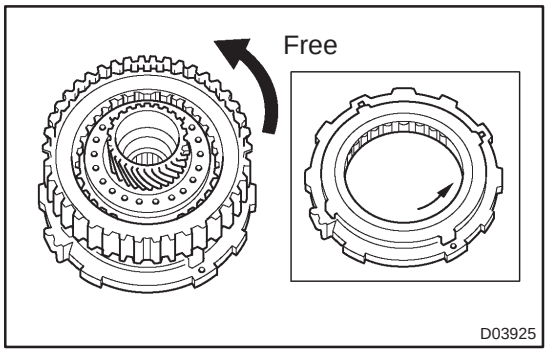

(b) Install the U/D clutch assy to the 1–way clutch. Rotate the U/D clutch assy to check the rotating direction for the lock or free operation.

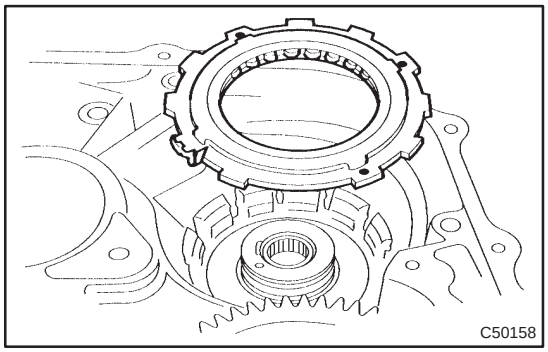

(c) Install the 1–way clutch to the transaxle case.

NOTICE:

Make sure that the mark on the 1–way clutch outer race is visible.

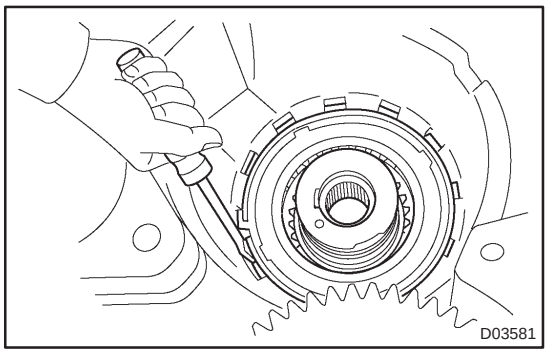

(d) Using screwdriver, install the snap ring to the transaxle case.

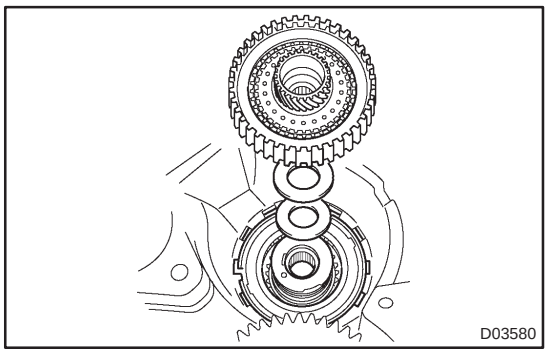

104. INSTALL UNDERDRIVE CLUTCH ASSY

(a) Coat the bearing and bearing race with petroleum jelly, install them onto the U/D clutch.

Race diameter: mm (in.)

	Inside	Outside
Bearing	37.73 (1.4854)	58.0 (2.283)
Race	29.9 (1.177)	55.5 (2.185)

(b) Install the U/D clutch assy to the transaxle case.

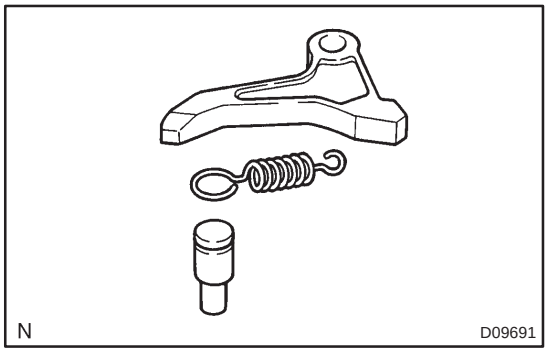

105. INSTALL UNDERDRIVE PLANETARY GEAR ASSY

(a) Install the parking lock pawl pin and torsion spring to the parking lock pawl.

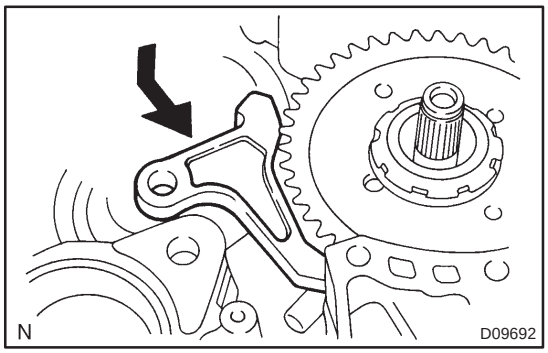

(b) Temporarily install the parking lock pawl, shaft and spring to the transaxle case as shown in the illustration.

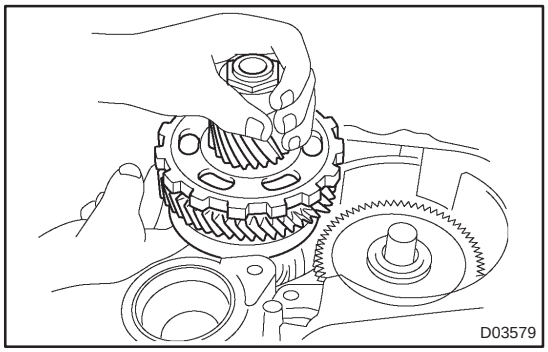

(c) Install the U/D planetary gear assy to the transaxle case.

NOTICE:

Engage all the discs of U/D clutch and hub splines of the U/D planetary gear assy firmly and assemble them securely.

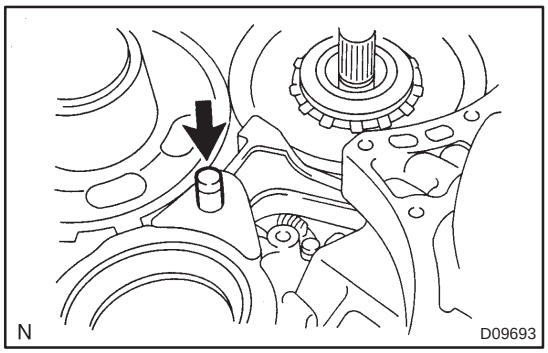

(d) Install the parking lock pawl shaft.

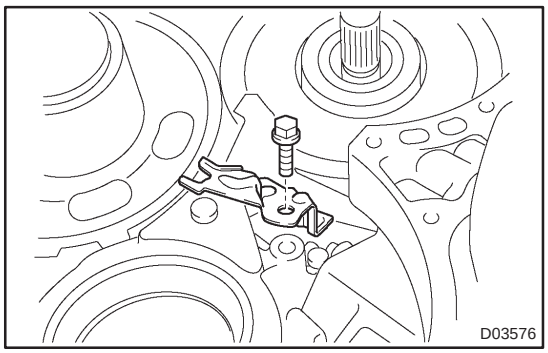

(e) Install the pawl shaft clamp with the bolt.
Torque: 9.8 N·m (100 kgf·cm, 87 in.·lbf)

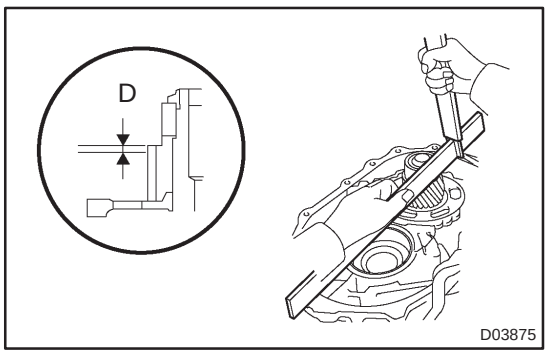

(f) Using a straight edge and vernier calipers as shown in the illustration, measure the gap between the top of the differential drive pinion in the U/D planetary gear and contact surface of the transaxle case and housing. (Dimension D)

NOTICE:

Note down the dimension D as it is necessary for the following process.

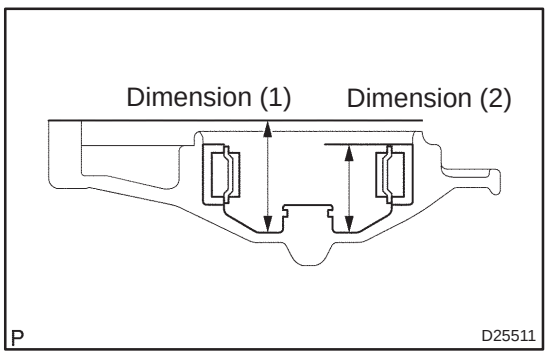

(g) As shown in the illustration, measure the 2 places of the transaxle housing, Calculate the dimension E using the formula.

NOTICE:

NOte down the dimension E as it is necessary for the following process.

HINT:

Dimension E = Dimension (1) – Dimension (2)

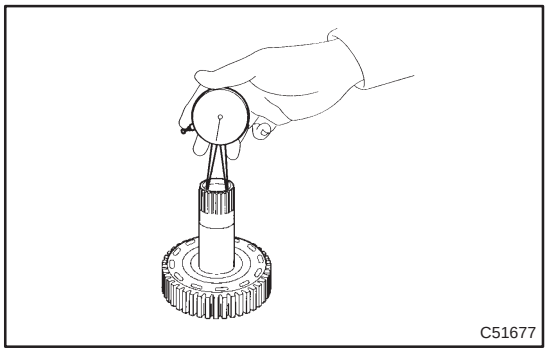
C51677

106. INSPECT MULTIPLE DISC CLUTCH CLUTCH HUB

(a) Using a dial indicator, measure the inside diameter of the forward clutch hub bushing
Standard inside diameter:
23.025 – 23.045 mm (0.9065 – 0.9073 in.)
Maximum inside diameter: 23.09 mm (0.9091 in.)

NOTICE:

- **When the diameter is over the maximum, replace the multiple disc clutch hub with new one.**
- **Check the contact surface of the bush in the direct clutch shaft. If any scratch or discolor is identified, replace the direct clutch sub–assy with new one.**

If the inside diameter is greater than the maximum, replace the forward clutch hub.

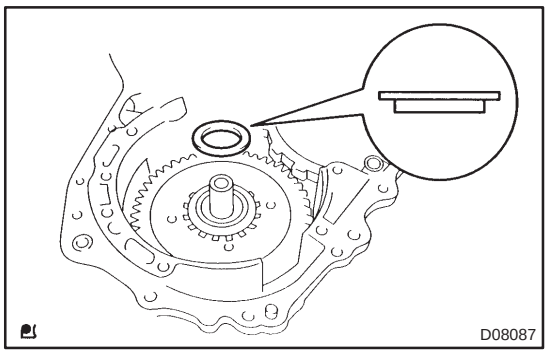
D08087

107. INSTALL MULTIPLE DISC CLUTCH CLUTCH HUB

(a) Install the bearing race to the transaxle while checking its direction.
Bearing race diameter: mm (in.)

	Inside	Outside
Bearing race	34.5 (1.358)	48.5 (1.909)

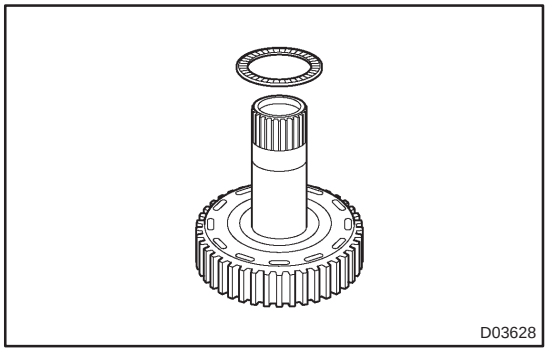
D03628

(b) Coat the thrust needle roller bearing and race with petroleum jelly, install them onto the multiple disc clutch hub.
Thrust bearing and race diameter: mm (in.)

	Inside	Outside
Bearing	36.3 (1.429)	52.2 (2.055)

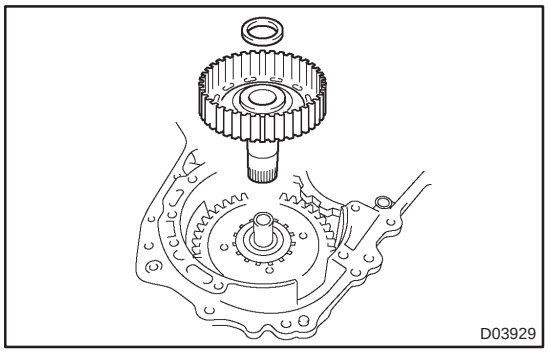
D03929

(c) Install the input shaft thrust bearing to the multiple clutch hub.
Bearing diameter: mm (in.)

	Inside	Outside
Bearing	23.5 (0.925)	44.0 (1.732)

(d) Install the forward clutch hub to the transaxle case.

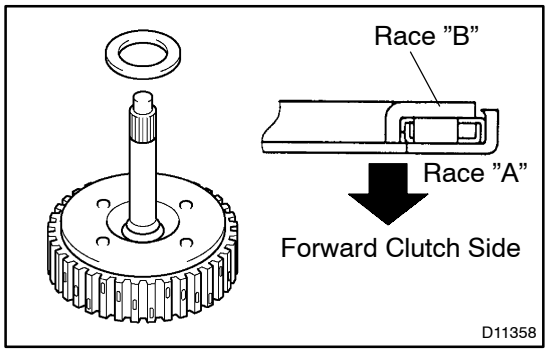

108. INSTALL FORWARD CLUTCH ASSY

(a) Install the input shaft thrust bearing to the forward clutch.
Bearing diameter: mm (in.)

	Inside	Outside
Bearing	33.85 (1.3327)	52.2 (2.055)

NOTICE:
Install the thrust bearing properly so that the race ”B” will be visible.

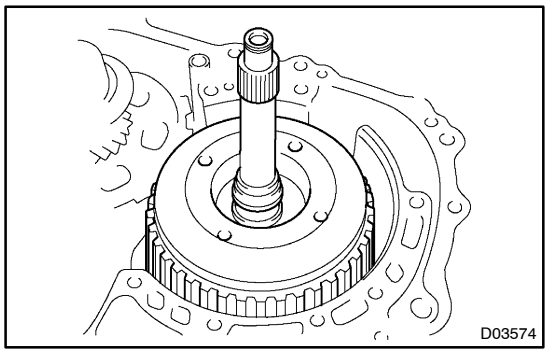

(b) Install the forward clutch to the multiple clutch hub.

NOTICE:
Align the splines of all discs in the forward clutch with those of multiple clutch hub to assemble them securely.

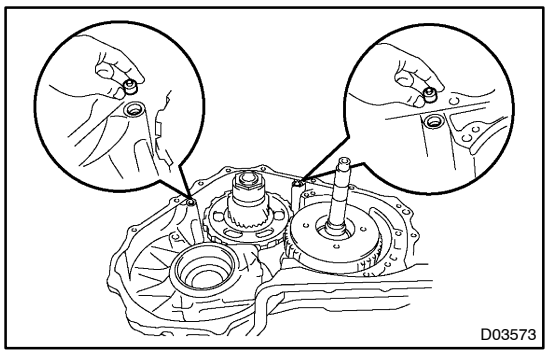

109. INSTALL OVERDRIVE BRAKE GASKET
[35179 / 98–3]

(a) Install 2 new O/D brake gaskets to the transaxle case.

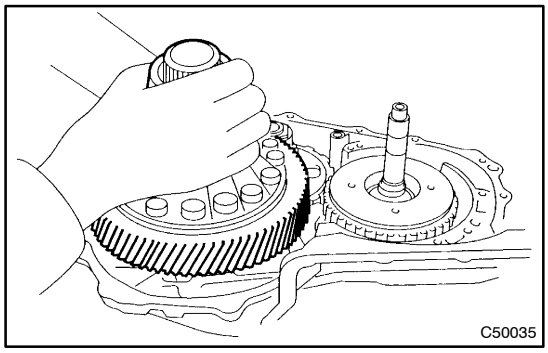

110. INSTALL FRONNT DIFFERENTIAL ASSY

(a) Install the differential assy to the transaxle case.

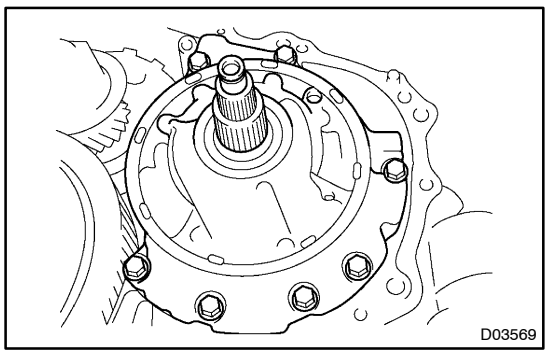

111. INSTALL OIL PUMP ASSEMBLY

(a) Install the oil pump assy and 7 bolts to the transaxle case.
Torque: 22 N·m (226 kgf·cm, 16 ft·lbf)

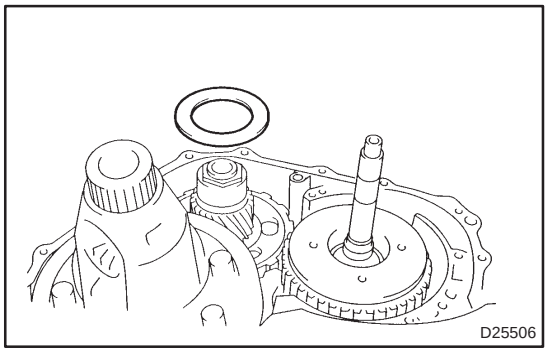

112. INSTALL THRUST BEARING UNDERDRIVE RACE NO.2

(a) Install the thrust bearing race to the U/D planetary gear assy.

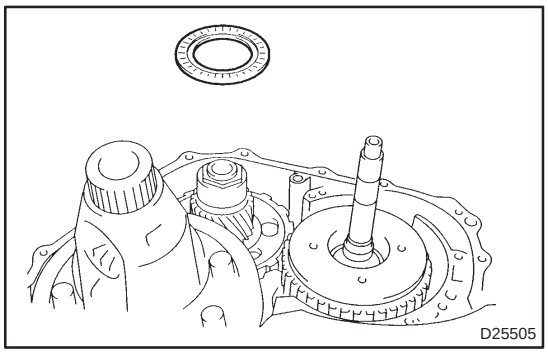

113. INSTALL THRUST NEEDLE ROLLER BEARING

(a) Calculate the end play value using the following formula and values of Dimension D and E that ware measured when installing cylindrical roller bearing and U/D planetary gear, Select an appropriate U/D planetary gear thrust bearing race No. 2 which satisfies the specified end play value, and install it.

End play: 0.20 – 0.69 mm (0.0079 – 0.0272 in.)

HINT:

End play = Dimension E – Dimension D – thrust bearing thickness 3.28 mm (0.1291 in.) – U/D thrust bearing race No. 2 thickness.

Race thickness: mm (in.)

E – D	Thickness
Less than 7.34 (0.2890)	3.5 (0.138)
7.34 (0.2890)	3.8 (0.150)

Bearing and bearing race diameter: mm (in.)

	Inside	Outside
Bearing	53.0 (2.087)	78.2 (3.079)
Bearing race	52.1 (2.051)	75.5 (2.972)

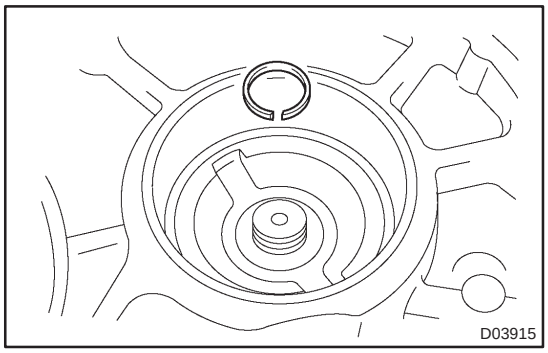

114. INSTALL UNDERDRIVE OUTPUT SHAFT OIL SEAL RING

(a) Install new oil seal ring to the transaxle housing.

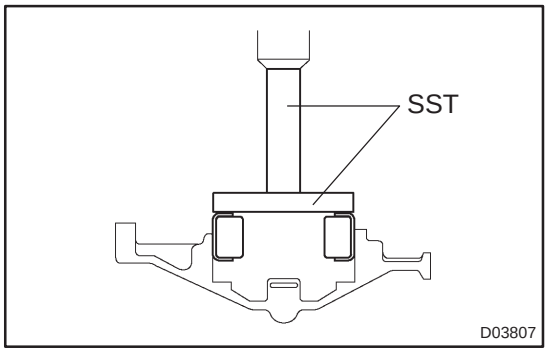

115. INSTALL UNDERDRIVE CYLINDRICAL ROLLER BEARING

(a) Using SST and a press, install the U/D cylindrical roller bearing.
SST 09950–60020 (09951–00810), 09950–70010 (09951–07100)

NOTICE:
Do not apply excessive pressure to it.

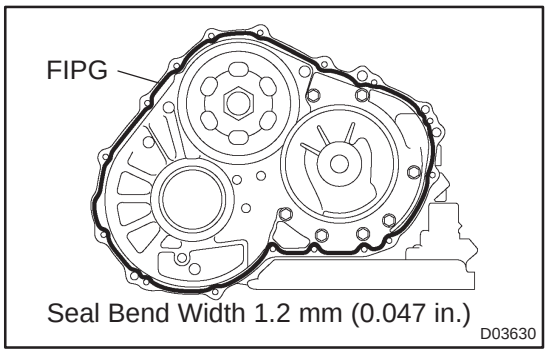

116. INSTALL TRANSAXLE HOUSING

(a) Remove any parking material and be careful not to get oil on the contacting surfaces of the transaxle case or transaxle housing.
(b) Apply FIPG to the transaxle case.
FIPG:
Part No. 08826–00090, THREE BOND 1281 or equivalent

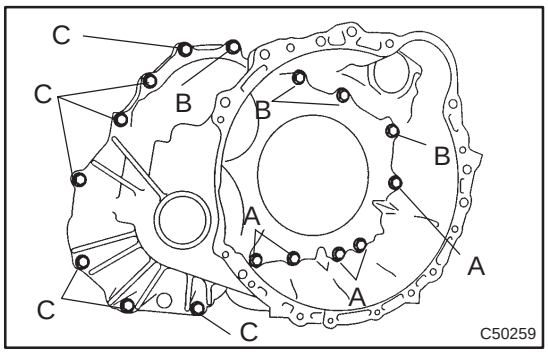

(c) Install the transaxle housing and 16 bolts to the transaxle case.
Torque:
Bolt A: 22 N·m (226 kgf·cm, 16 ft·lbf)
Bolt B and C: 29 N·m (300 kgf·cm, 22 ft·lbf)

HINT:
Apply seal packing or equivalent to the bolt A.
Seal packing:
THREE BOND 2403 or equivalent
Bolt length:
Bolt A: 50 mm (1.969 in.)
Bolt B: 50 mm (1.969 in.)
Bolt C: 42 mm (1.654 in.)

NOTICE:
Because the bolt A is a seal bolt, apply the seal packing to new bolts and tighten them within 10 minutes after application.

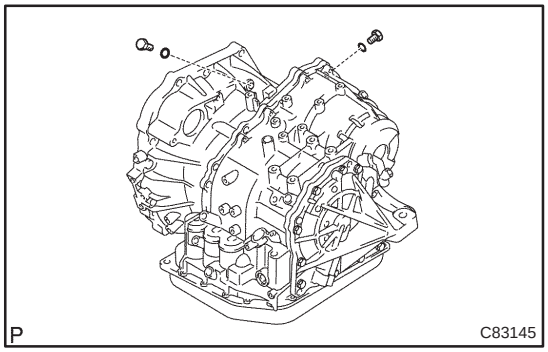

117. INSTALL TRANSAXLE CASE NO.1 PLUG

(a) Install 2 new O–rings to the 2 transaxle case No. 1 plugs.
(b) Install the 2 transaxle case No. 1 plugs to the transaxle housing.
Torque: 7.4 N·m (75 kgf·cm, 65 in.·lbf)

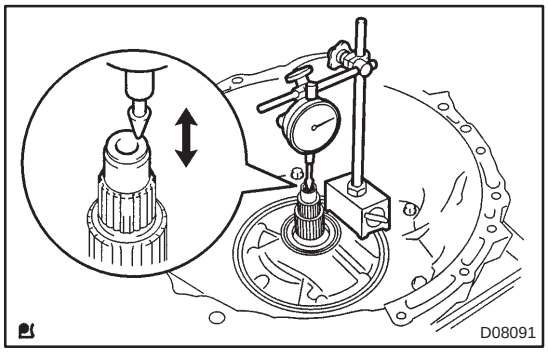

118. INSPECT INPUT SHAFT ENDPLAY

(a) Using a dial indicator, measure the input shaft end play.
End play: 0.26 – 1.25 mm (0.0103 – 0.0492 in.)

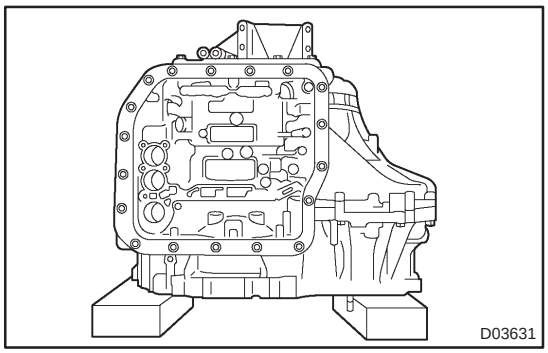

119. FIX AUTOMATIC TRANSAXLE ASSY

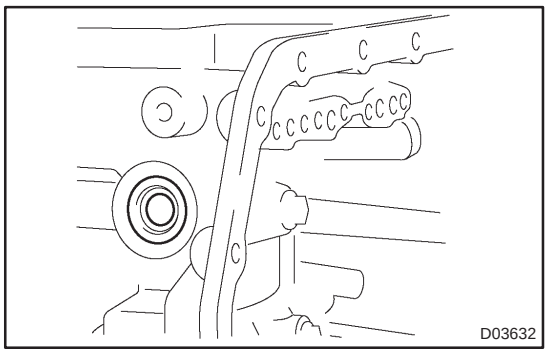

120. INSTALL MANUAL VALVE LEVER SHAFT OIL SEAL

(a) Coat a new oil seal with ATF, install it to the transaxle case.
(b) Install the oil seal to the transaxle case.

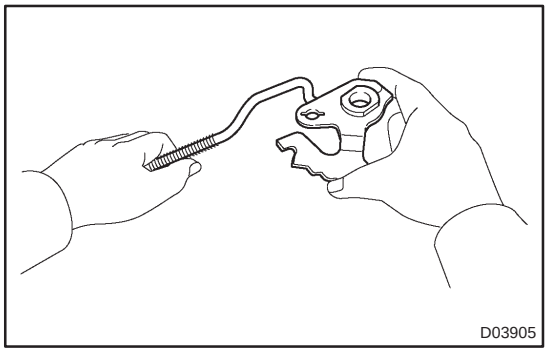

121. INSTALL PARKING LOCK ROD SUB–ASSY

(a) Install the parking lock rod to the manual valve lever.

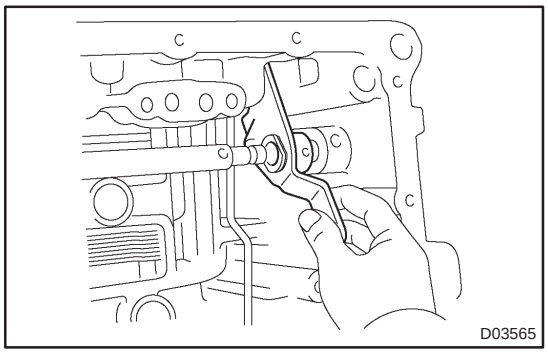

122. INSTALL MANUAL VALVE LEVER SUB–ASSY

(a) Install a new spacer and manual valve lever shaft to the transaxle case.

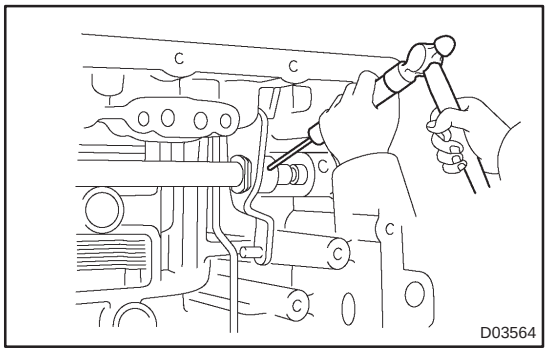

(b) Using a pin punch and a hammer, drive in a new pin.

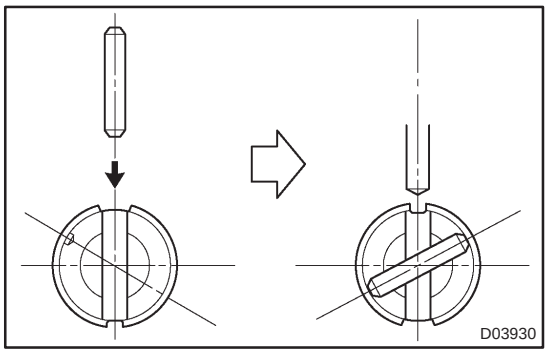

(c) Turn the spacer and the lever shaft to align the small hole for locating the staking position in the spacer with the staking position mark on the lever shaft.
(d) Using a pin punch, stake the spacer through the small hole.
(e) Check that the spacer does not turn.

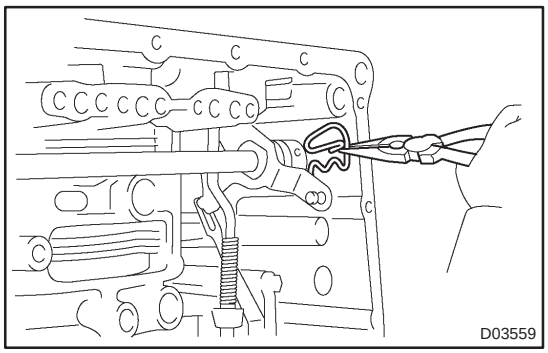

123. INSTALL MANUAL VALVE LEVER SHAFT RETAINER SPRING

(a) Using needle–nose pliers, install the retainer spring.

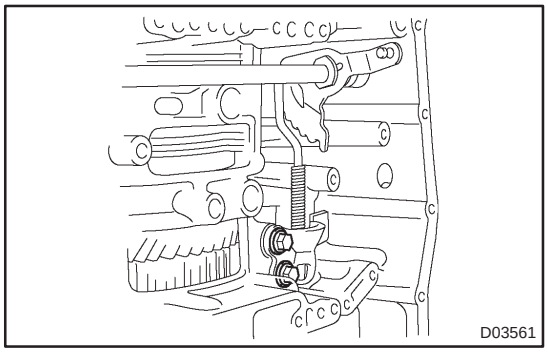

124. INSTALL PARKING LOCK PAWL BRACKET

(a) Install the parking lock pawl bracket with the 2 bolts.
Torque: 20 N·m (205 kgf·cm, 15 ft·lbf)
Bolt length: 25 mm (0.984 in.)

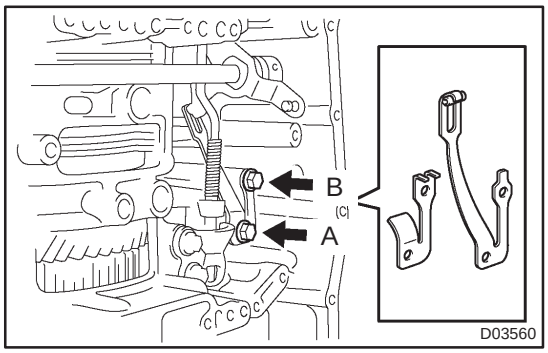

125. INSTALL MANUAL DETENT SPRING SUB–ASSY

(a) Install the manual detent spring with the 2 bolts.

NOTICE:
Make sure to install the manual detent spring and cover in this order.

Torque:
Bolt A: 20 N·m (205 kgf·cm, 15 ft·lbf)
Bolt B: 12 N·m (120 kgf·cm, 9 ft·lbf)

Bolt length:
Bolt A: 27 mm (1.063 in.)
Bolt B: 16 mm (0.630 in.)

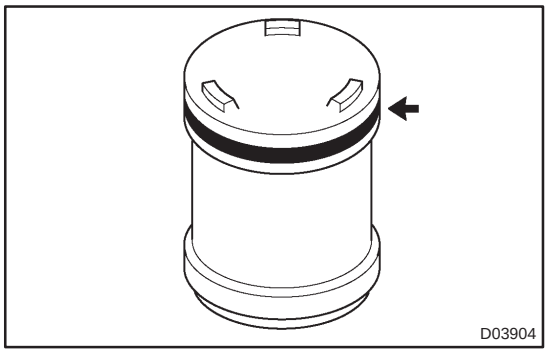

126. INSTALL B–3 ACCUMULATOR PISTON

(a) Coat a new O–ring with ATF, install it to the B_3 accumulator piston.

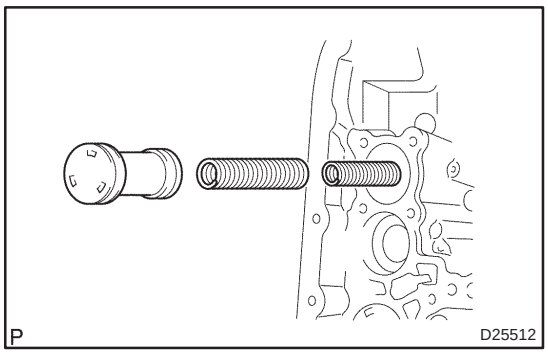

(b) Coat the accumulator B_3 piston and spring with ATF, install them to the transaxle case.
Accumulator spring:

Free length Outer diameter mm (in.)	Color
Inner 60.24 (2.3716) / 15.9 (0.626)	Yellowish green
Outer 74.61 (2.9374) / 21.7 (0.854)	Blue

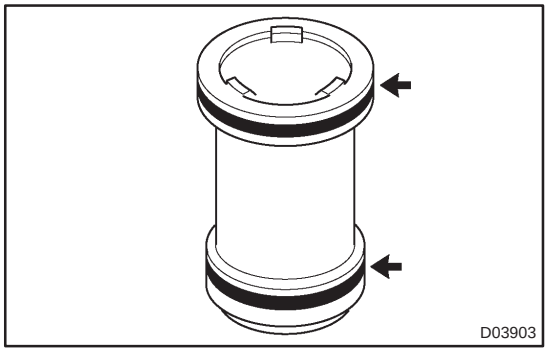

127. INSTALL C–1 ACCUMULATOR PISTON

(a) Coat 2 new O–rings with ATF, install them to the C_1 accumulator piston.

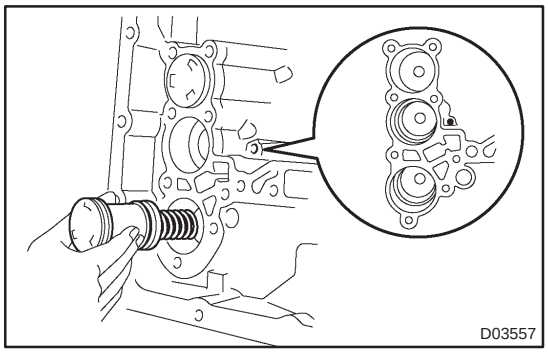

(b) Coat accumulator C_1 piston with ATF, install it to the transaxle case.
Accumulator spring:

Free length Outer diameter mm (in.)	Color
81.53 (3.2098) / 18.5 (0.728)	Pink

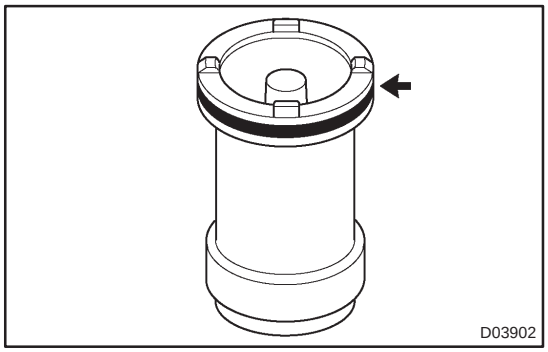

128. INSTALL C–3 ACCUMULATOR PISTON

(a) Coat a new O–ring with ATF, install it to the C_3 accumulator piston.

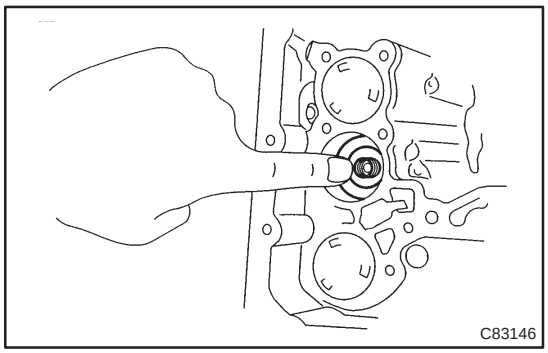

(b) Coat the C_3 accumulator piston with ATF, install it to the transaxle case.

Accumulator spring:

Free length Outer diameter mm (in.)	Color
90.49 (3.5626) / 19.2 (0.756)	White

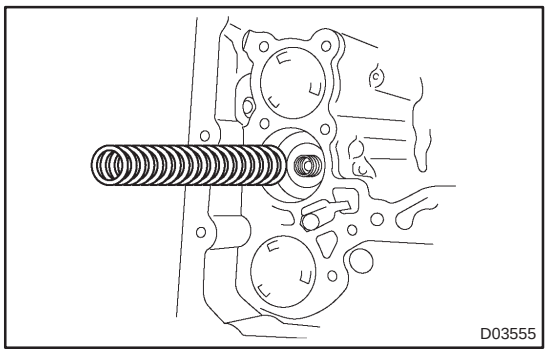

(c) Install the compression spring from the C_3 accumulator piston.

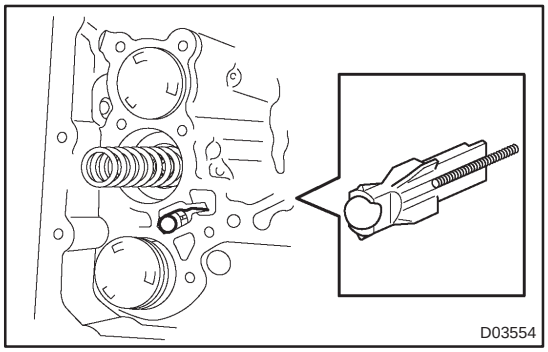

129. INSTALL CHECK BALL BODY

(a) Install the check ball body and spring.

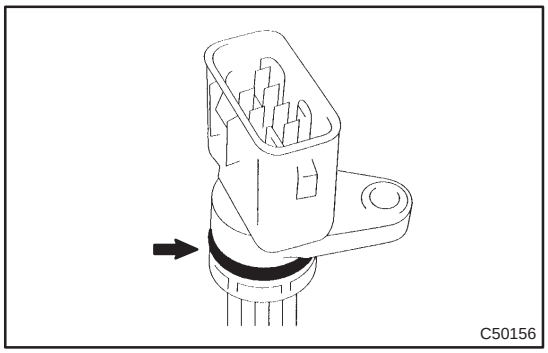

130. INSTALL TRANSMISSION WIRE

(a) Coat a new O–ring with ATF, install it to the transaxle solenoid wire.

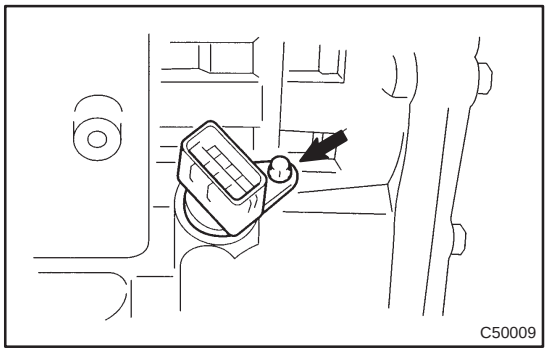

(b) Install the solenoid wire retaining bolt
Torque: 5.4 N·m (55 kgf·cm, 48 in.·lbf)

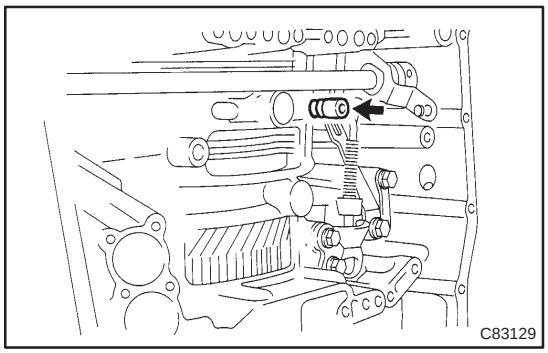

131. INSTALL BRAKE DRUM GASKET

(a) Coat a new brake drum gasket with ATF, install it to the transaxle case.

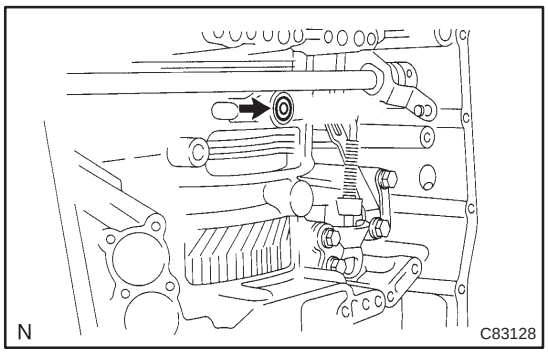

132. INSTALL TRANSAXLE CASE 2ND BRAKE GASKET

(a) Coat a new transaxle case 2nd brake gasket with ATF, install it to the transaxle case.

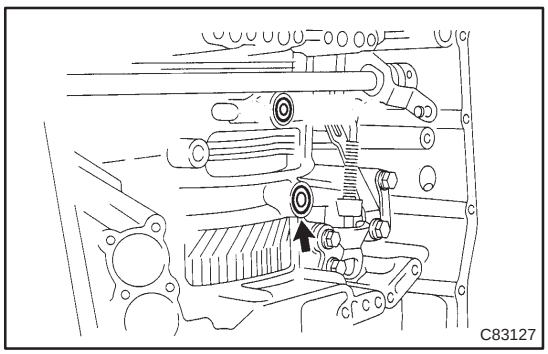

133. INSTALL GOVERNOR APPLY GASKET NO.1

(a) Coat a new governor apply gasket No. 1 with ATF, install it to the transaxle case.

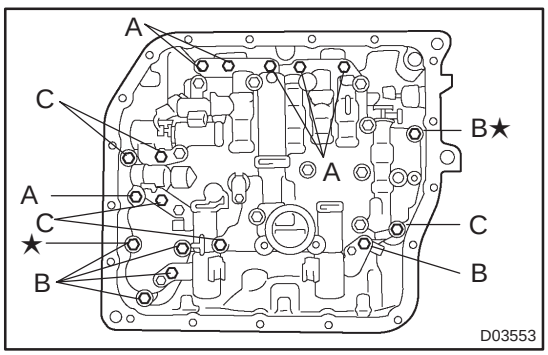

134. INSTALL TRANSMISSION VALVE BODY ASSY

(a) Make sure that the manual valve lever position, install the valve body with 17 bolts to the transaxle case.
Torque: 11 N·m (110 kgf·cm, 8 ft·lbf)
Bolt length:
Bolt A: 25 mm (0.984 in.)
Bolt B: 41 mm (1.614 in.)
Bolt C: 45 mm (1.771 in.)

NOTICE:

- **Push the valve body against the accumulator piston spring and the check ball body to install it.**
- **When installing the valve body to the transaxle case, do not hold the solenoids.**
- **Tighten those bolts marked by ★ in the illustration first temporarily because they are positioning bolts.**

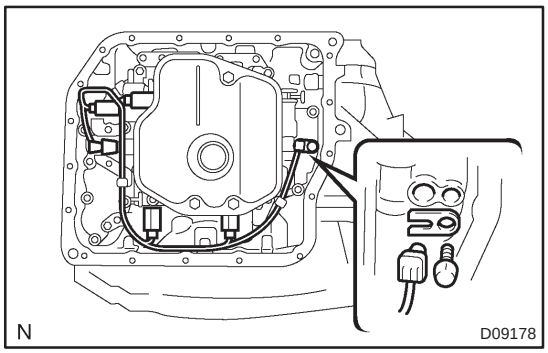

(b) Connect the 5 solenoid connectors.

(c) Install the ATF temperature sensor, clamp and bolt.
Torque: 6.6 N·m (67 kgf·cm, 58 in·lbf)

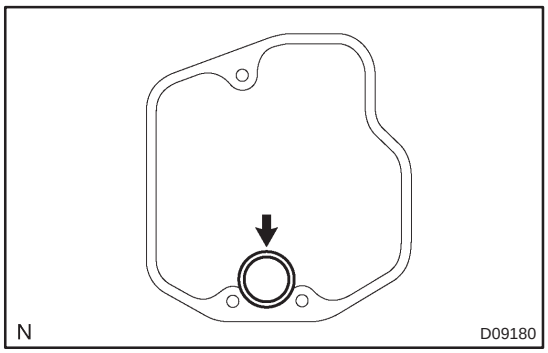

135. INSTALL VALVE BODY OIL STRAINER ASSY

(a) Coat a new O–ring with ATF, install it to the oil strainer.

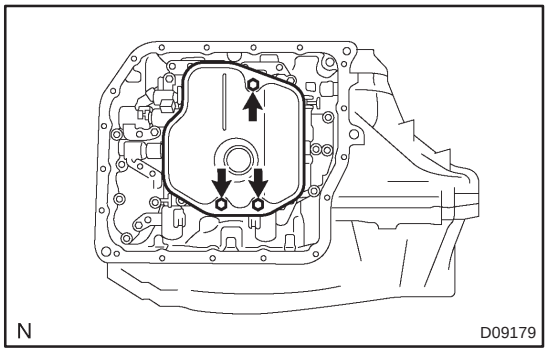

(b) Install the oil strainer and 3 bolts to the valve body.
Torque: 11 N·m (110 kgf·cm, 8 ft·lbf)

136. INSTALL AUTOMATIC TRANSAXLE OIL PAN GASKET

(a) Install a new oil pan gasket to the oil pan.

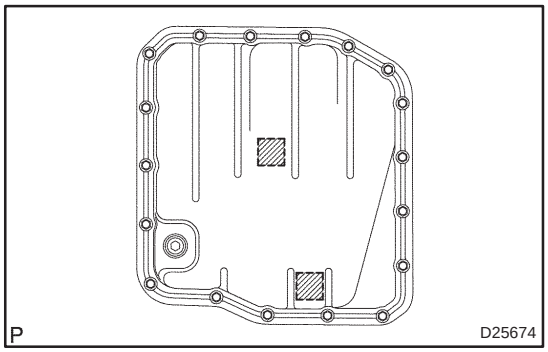

137. INSTALL AUTOMATIC TRANSAXLE OIL PAN SUB–ASSY

(a) Install the 2 magnets in the oil pan.
(b) Apply seal packing or equivalent to new 18 bolts.
Seal packing:
THREE BOND 2430 or equivalent

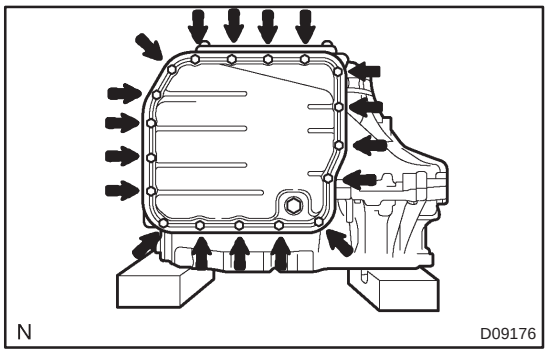

(c) Install oil pan and 18 bolts to the transaxle case.
Torque: 7.8 N·m (80 kgf·cm, 69 in.·lbf)

NOTICE:
Because the bolts should be seal bolts, apply seal packing to new bolts and tighten them within 10 minutes after application.

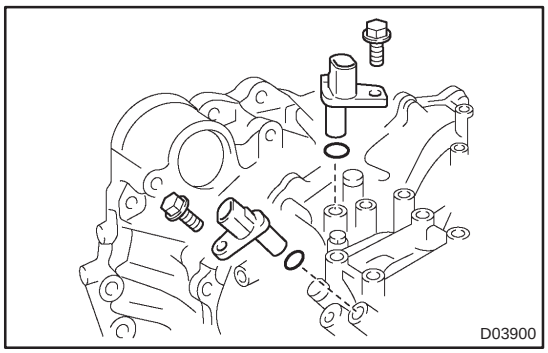

138. INSTALL SPEED SENSOR(TMC –MADE)

(a) Coat 2 new O–rings with ATF, install them to the 2 sensors.
(b) Install the 2 sensors with the 2 bolts to the transaxle case.
Torque: 11.3 N·m (115 kgf·cm, 8 ft·lbf)

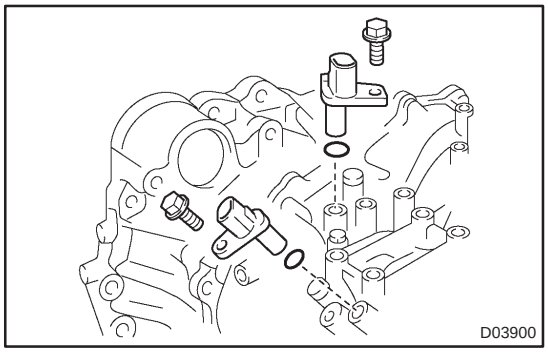

139. INSTALL TRANSMISSION REVOLUTION SENSOR(AISIN –MADE)

(a) Coat 2 new O–rings with ATF, install them to the 2 sensors.
(b) Install the 2 sensors with the 2 bolts to the transaxle case.
Torque: 11.3 N·m (115 kgf·cm, 8 ft·lbf)

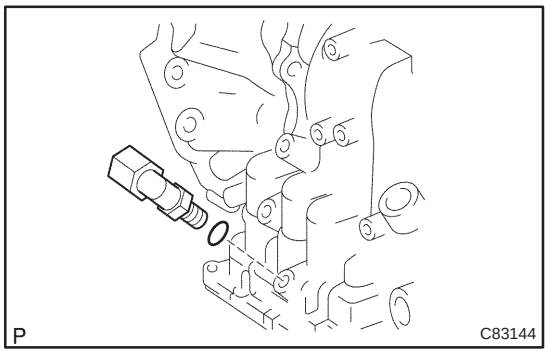

140. INSTALL OIL COOLER TUBE UNION

(a) Coat a new O–ring with ATF, install it to the elbow.
(b) Install the elbow to the transaxle case.
Torque: 27 N·m (276 kgf·cm, 20 ft·lbf)

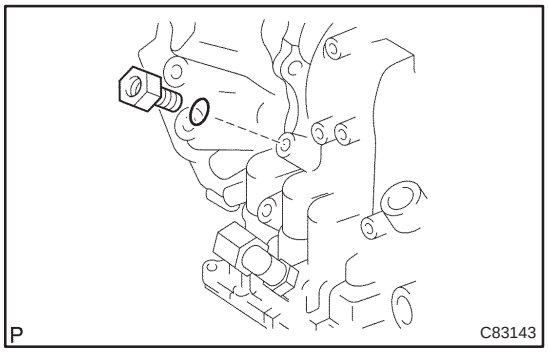

141. INSTALL OIL COOLER TUBE UNION

(a) Coat a new O–ring with ATF, install it to the union.
(b) Install the union to the transaxle case.
Torque: 27 N·m (280 kgf·cm, 20 ft·lbf)

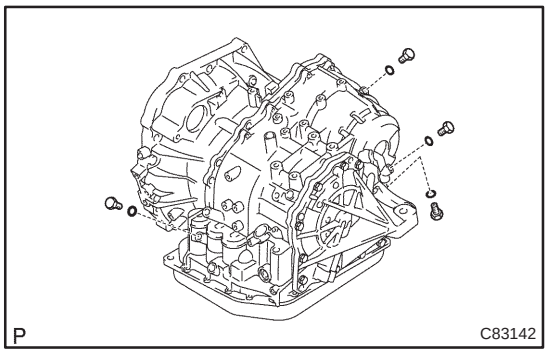

142. INSTALL TRANSAXLE CASE NO.1 PLUG

(a) Coat 4 new O–rings with ATF, install them to the 4 transaxle case No. 1 plugs.
(b) Install the 4 transaxle case No. 1 plugs to the transaxle case.
Torque: 7.4 N·m (75 kgf·cm, 65 in.·lbf)

143. INSTALL BREATHER PLUG HOSE

(a) Install the breather plug hose to the breather No. 2 plug.

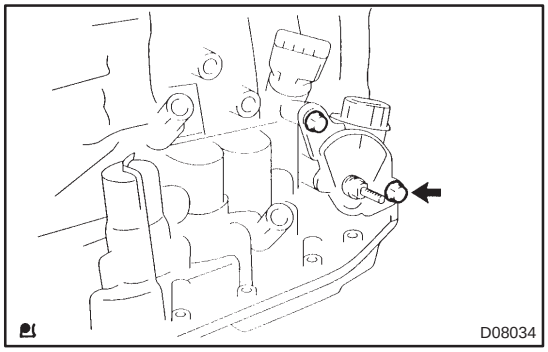

144. INSTALL PARK/NEUTRAL POSITION SWITCH ASSY

(a) Install the park/neutral position switch onto the manual valve lever shaft and temporarily install the 2 adjusting bolts.
(b) Install a new nut stopper and nut.
Torque: 6.9 N·m (70 kgf·cm, 61 in.·lbf)

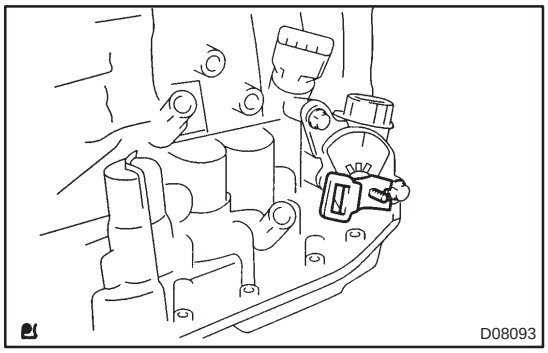

(c) Temporarily install control shaft lever.

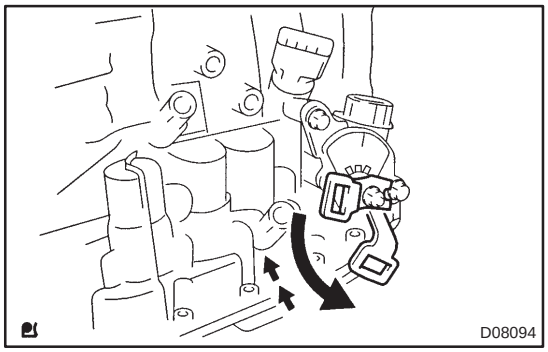

(d) Turn the lever counterclockwise until it stops, and then turn it clockwise 2 notches.
(e) Remove the control shaft lever.

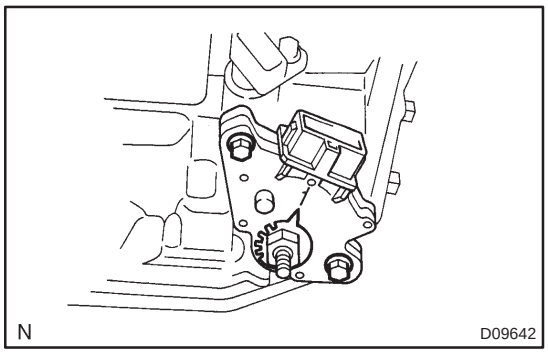

(f) Align the groove with neutral basic line.
(g) Tighten the 2 bolts.
Torque: 5.4 N·m (55 kgf·cm, 48 in.·lbf)

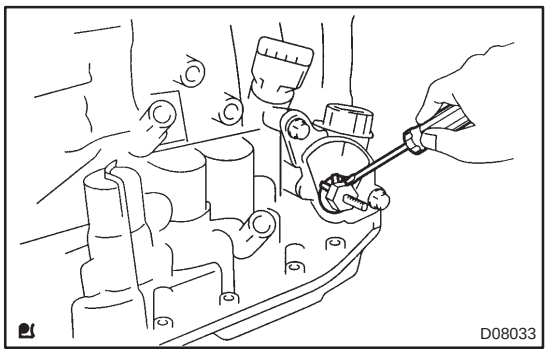

(h) Using a screwdriver, stake the nut with the nut stopper.

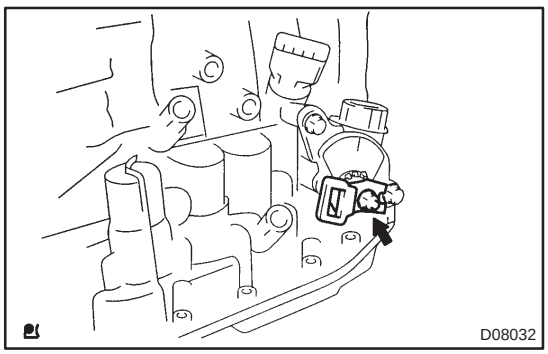

(i) Install the control shaft lever, washer and nut.
Torque: 13 N·m (133 kgf·cm, 10 ft·lbf)

145. INSTALL SPEEDOMETER DRIVEN HOLE (ATM) COVER SUB–ASSY

(a) Coat the new O–ring with ATF and install it to the speedometer driven hole cover.
(b) Install the bolt and speedometer driven hole cover sub–assy to the transaxle assy.
Torque: 7.0 N·m (70 kgf·cm, 61 in.·lbf)

OIL PUMP ASSY (U241E)

OVERHAUL

4006P–01

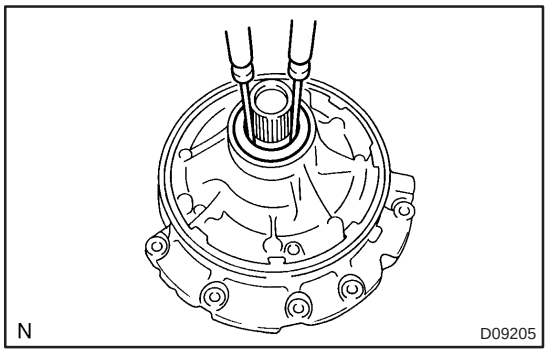

1. INSPECT OIL PUMP ASSY

(a) Turn the drive gear with 2 screwdrivers and make sure it rotates smoothly.

NOTICE:

Be careful not to damage the oil seal lip.

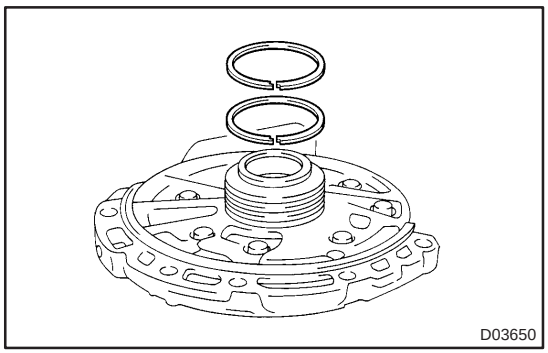

2. REMOVE CLUTCH DRUM OIL SEAL RING

(a) Remove 2 clutch drum oil seal rings.

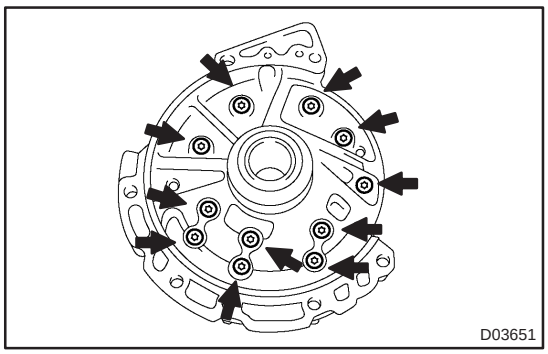

3. REMOVE STATOR SHAFT ASSY

(a) Using a torx socket (T30), remove the 11 bolts and stator shaft.

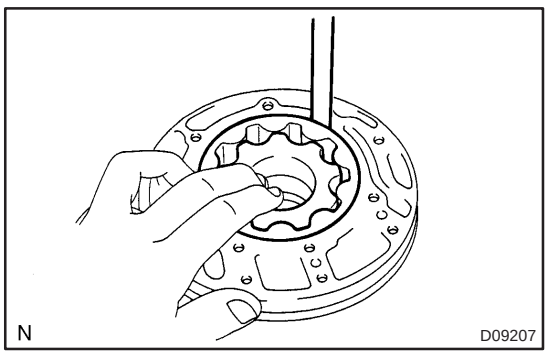

4. INSPECT CLEARANCE OF OIL PUMP ASSEMBLY

(a) Push the driven gear to one side of the body. Using a feeler gauge, measure the clearance.

Standard body clearance:

0.10 – 0.17 mm (0.0039 – 0.0067 in.)

Maximum body clearance: 0.17 mm (0.0067 in.)

If the body clearance is greater than the maximum, replace the oil pump body sub–assy.

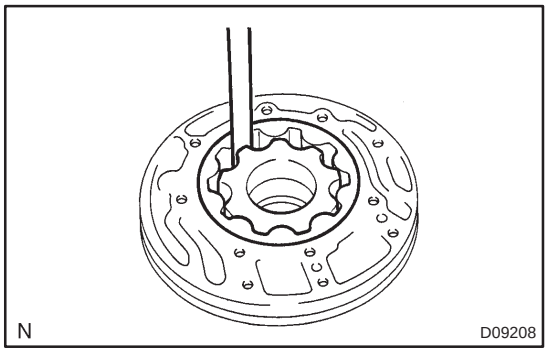

(b) Measure the tip clearance between the driven gear teeth and drive gear teeth.

Standard tip clearance:
0.07 – 0.15 mm (0.0028 – 0.0059 in.)
Maximum tip clearance: 0.15 mm (0.0059 in.)

If the tip clearance is greater than the maximum, replace the oil pump body sub–assy.

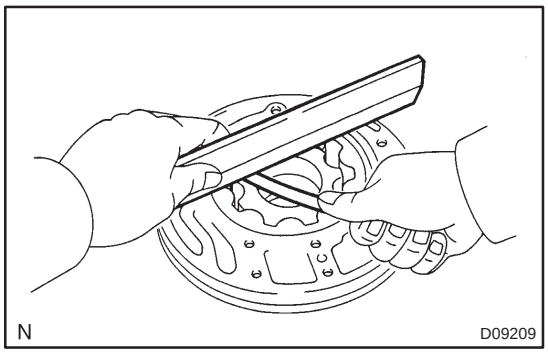

(c) Using a straight edge and feeler gauge, measure the side clearance of both gears.

Standard side clearance:
0.02 – 0.05 mm (0.0008 – 0.0020 in.)
Maximum side clearance: 0.05 mm (0.0020 in.)
Drive gear thickness: mm (in.)

Mark	Thickness
1	10.690 – 10.699 (0.4209 – 0.4212)
2	10.700 – 10.709 (0.4213 – 0.4216)
3	10.710 – 10.720 (0.4217 – 0.4220)
4	10.721 – 10.730 (0.4221 – 0.4224)
5	10.731 – 10.740 (0.4225 – 0.4228)

Driven gear thickness: mm (in.)

Mark	Thickness
1	10.690 – 10.699 (0.4209 – 0.4212)
2	10.700 – 10.709 (0.4213 – 0.4216)
3	10.710 – 10.720 (0.4217 – 0.4220)
4	10.721 – 10.730 (0.4221 – 0.4224)
5	10.731 – 10.740 (0.4225 – 0.4228)

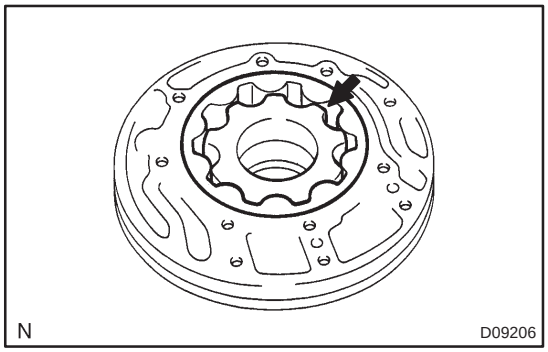

5. REMOVE FRONT OIL PUMP DRIVE GEAR

(a) Remove the front oil pump drive gear.

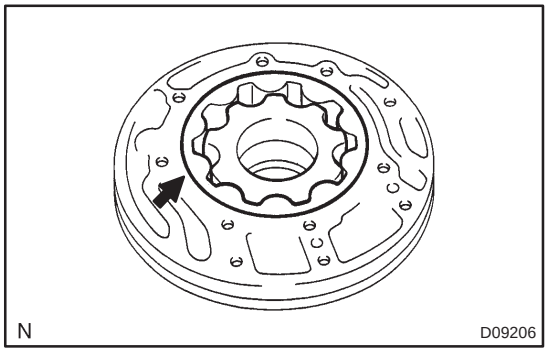

6. REMOVE FRONT OIL PUMP DRIVEN GEAR

(a) Remove the front oil pump driven gear.

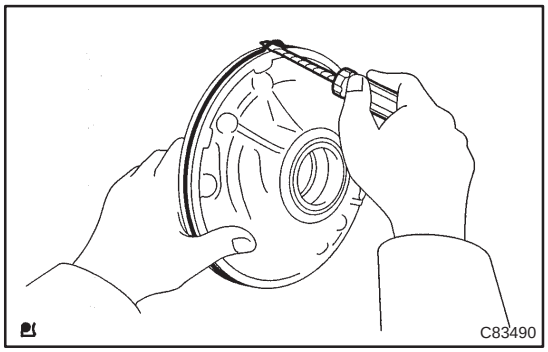

7. REMOVE FRONT OIL PUMP BODY O–RING

(a) Using a screwdriver, remove the O–ring.

HINT:

Tape the screwdriver before use.

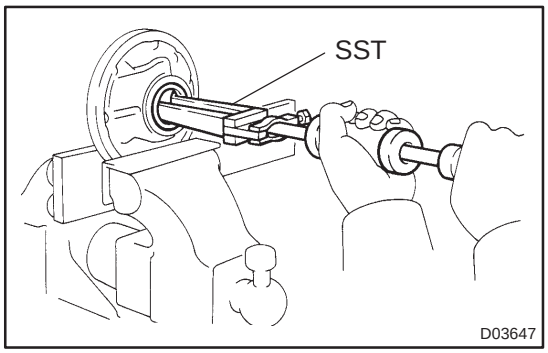

8. REMOVE FRONT OIL PUMP OIL SEAL

(a) Mount oil pump in a soft jaw vise.

(b) Using SST, remove oil seal from the oil pump body.
SST 09308–00010

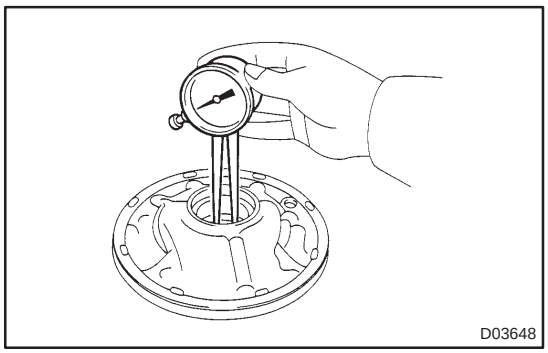

9. INSPECT FR OIL PUMP & GEAR BODY SUB–ASSY

(a) Using a dial indicator, measure the inside diameter of the oil pump body bushing.
Standard inside diameter:
38.11 – 38.14 mm (1.5005 – 1.5015 in.)
Maximum inside diameter: 38.19 mm (1.5035 in.)

If the inside diameter is greater than the maximum, replace the oil pump body sub–assy.

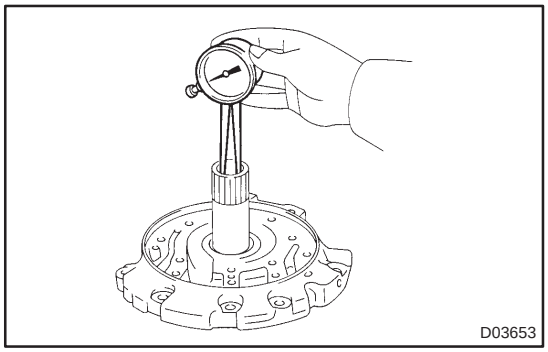

10. INSPECT STATOR SHAFT ASSY

(a) Using a dial Indicator, measure the inside diameter of the stator shaft bushings.
Standard inside diameter:
20.50 – 21.53 mm (0.8465 – 0.8475 in.)
Maximum inside diameter: 21.57 mm (0.8492 in.)

If the inside diameter is greater than maximum, replace the stator shaft.

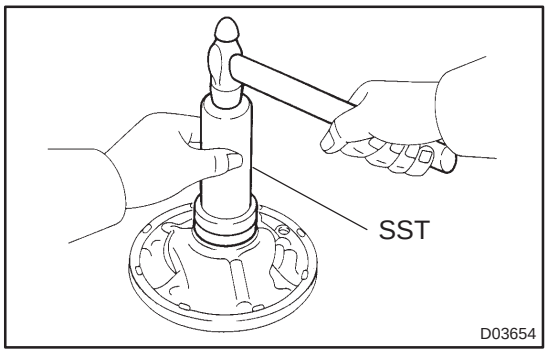

11. INSTALL FRONT OIL PUMP OIL SEAL

(a) Using SST, install a new oil seal to the pump.
SST 09350–32014 (09351–32140)

HINT:

The seal end should be flush with the outer edge of the oil pump.

(b) Coat the lip of the oil seal with petroleum jelly.

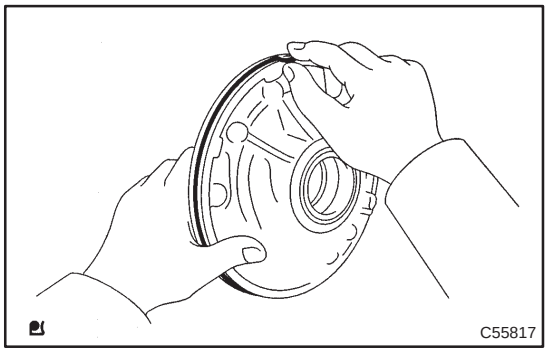

12. INSTALL FRONT OIL PUMP BODY O–RING

(a) Coat a new O–ring with ATF, install it to the oil pump body.

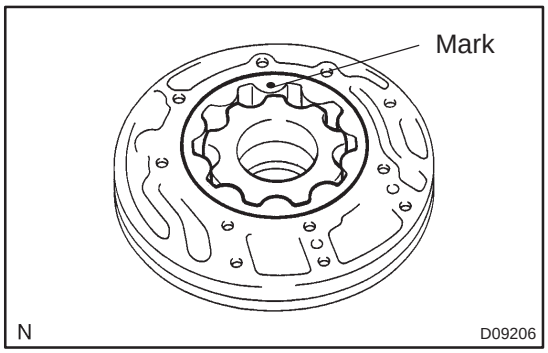

13. INSTALL FRONT OIL PUMP DRIVEN GEAR

(a) Coat the front oil pump driven gear with ATF, install it to the oil pump body with the maked side up.

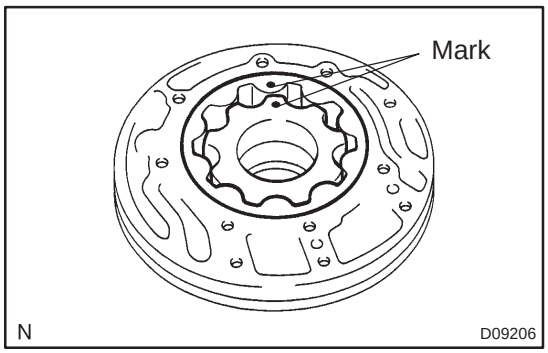

14. INSTALL FRONT OIL PUMP DRIVE GEAR

(a) Coat the front oil pump drive gear with ATF, install it to the oil pump body with the maked side up.

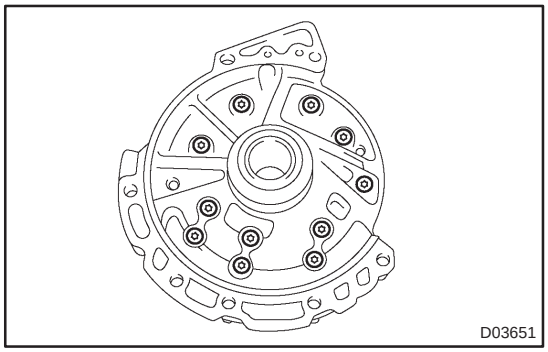

15. INSTALL STATOR SHAFT ASSY

(a) Set the stator shaft by aligning each bolt hole.
(b) Using a torx socket T30, install the 11 bolts.
Torque: 9.8 N·m (100 kgf·cm, 87 in.·lbf)

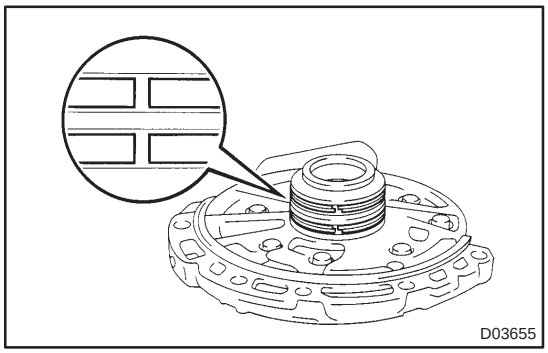

16. INSTALL CLUTCH DRUM OIL SEAL RING

NOTICE:
Do not expand the ring ends excessively.

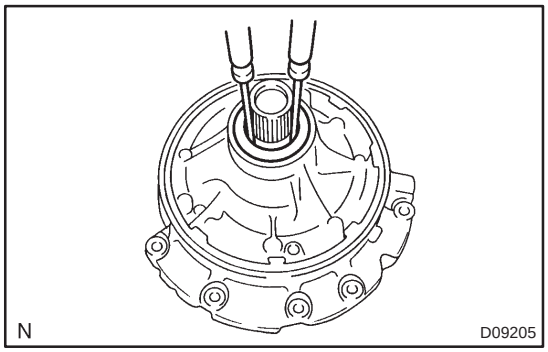

17. INSPECT OIL PUMP ASSY

(a) Turn the drive gear with 2 screwdrivers and make sure it rotates smoothly.

NOTICE:

Be careful not to damage the oil seal lip.

FORWARD CLUTCH ASSY (U241E)

OVERHAUL

4006Q–01

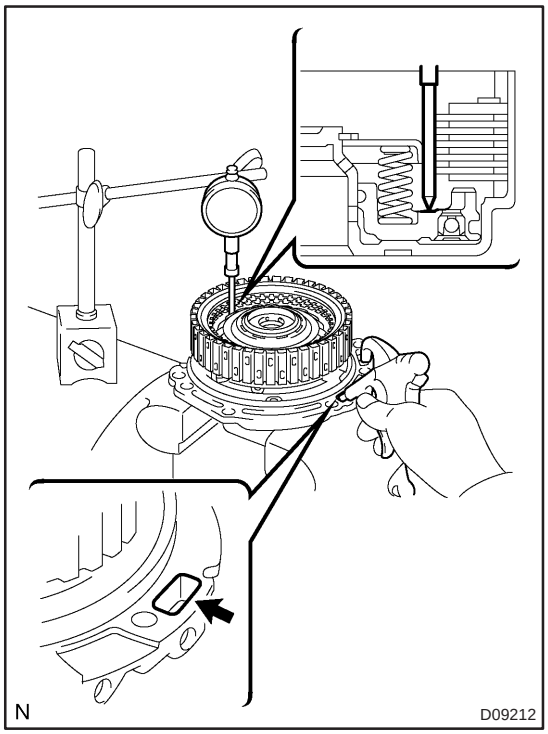

1. INSPECT PACK CLEARANCE OF FORWARD CLUTCH

(a) Install the forward clutch on the oil pump.

NOTICE:

Be careful not to damage the oil seal ring of oil pump.

(b) Using a dial indicator, measure the forward clutch piston stroke while applying and releasing compressed air (392 kPa, 4.0 kgf/cm^2, 57 psi).

Piston stroke: 1.74 – 2.08 mm (0.0685 – 0.0819 in.)

If the piston stroke is less than the minimum, parts may have been assembled incorrectly. Check and reassemble again.

If the clearance is non–standard, select another flange.

HINT:

There are 5 different flanges in thickness.

Flange thickness: mm (in.)

No.	Thickness	No.	Thickness
1	3.00 (0.1181)	4	3.45 (0.1358)
2	3.15 (0.1240)	5	3.60 (0.1417)
3	3.30 (0.1299)	–	–

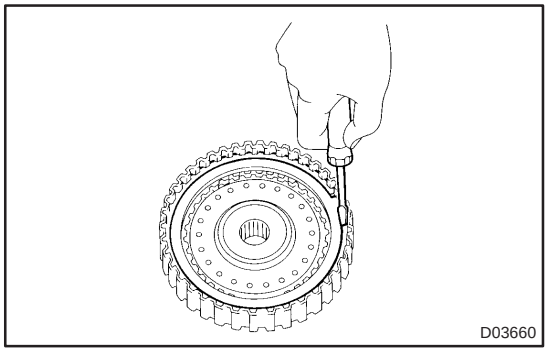

2. REMOVE FORWARD MULTIPLE DISC CLUTCH CLUTCH DISC

(a) Using a screwdriver, remove the snap ring.

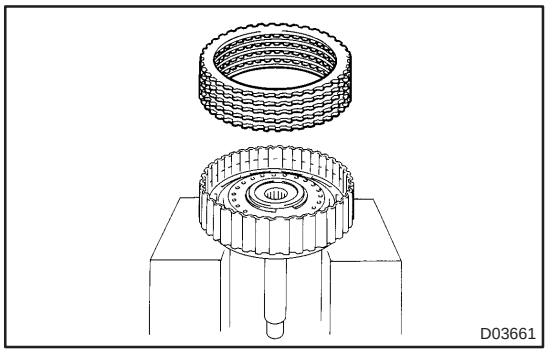

(b) Remove the flange, 5 discs and 5 plates.

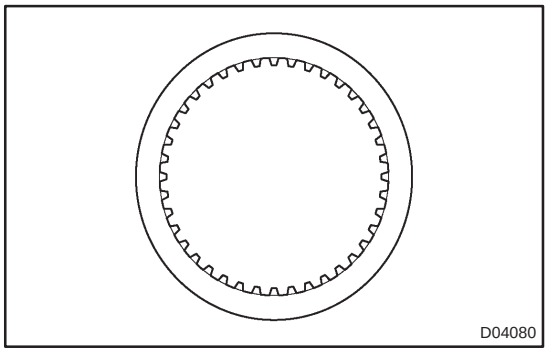

3. INSPECT FORWARD MULTIPLE DISC CLUTCH CLUTCH DISC

(a) Check to see if the sliding surface of the disc, plate and flange are worn or burnt.

If necessary, replace them.

HINT:

- If the lining of the disc is peeling off or discolored, or even if replace all discs.
- Before assembling new discs, soak them in ATF for at least 15 minutes.

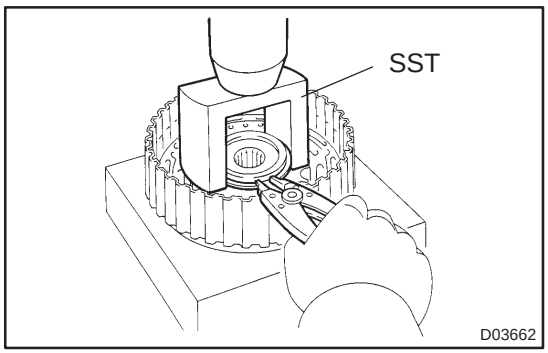

4. REMOVE FORWARD CLUTCH RETURN SPRING SUB–ASSY

(a) Place SST on the spring retainer and compress the return spring with a press.

SST 09350–32014 (09351–32070)

(b) Using a snap ring expander, remove the snap ring.

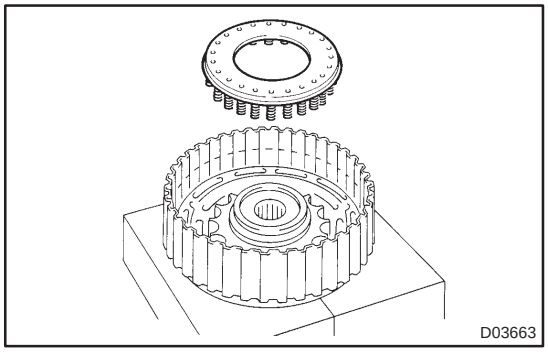

(c) Remove the piston return spring.

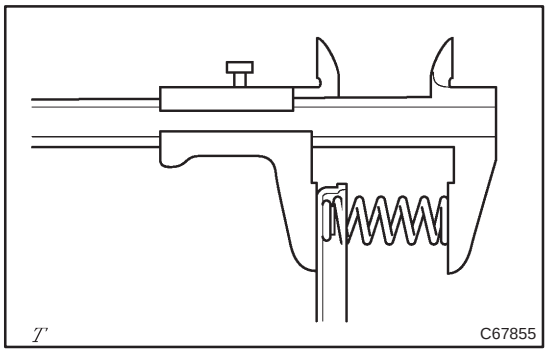

5. INSPECT FORWARD CLUTCH RETURN SPRING SUB–ASSY

(a) Using a vernier calipers, measure the free length of the spring together with the spring seat.

Standard free length: 28.23 mm (1.1114 in.)

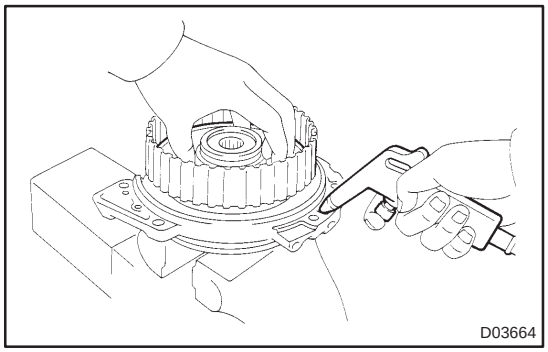

6. REMOVE FORWARD CLUTCH PISTON SUB–ASSY

(a) Place the forward clutch drum onto the oil pump.
(b) Holding the forward clutch piston with your hard, apply compressed air (392 kPa, 4.0 kgf/cm^2, 57 psi) to the oil pump to remove the forward clutch piston.

HINT:
When the piston can not be removed as it is slanted, either blow the air again with the protruding side pushed or remove the piston using the needle nose plier with vinyl tape on the tip.

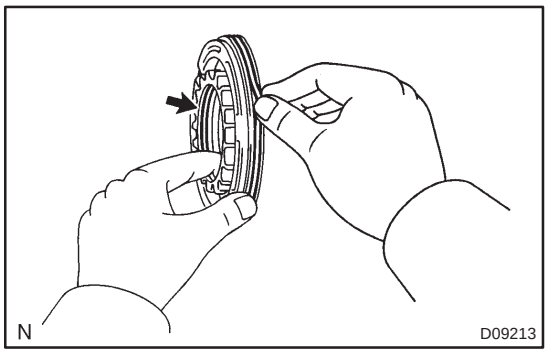

7. REMOVE FORWARD CLUTCH PISTON O–RING

(a) Remove the 2 O–rings.

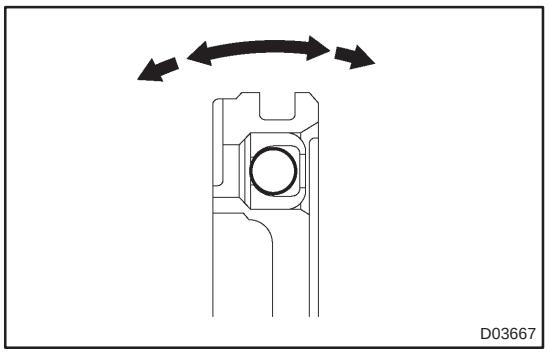

8. INSPECT FORWARD CLUTCH PISTON SUB–ASSY

(a) Shake the piston to check that the check ball is not stuck.

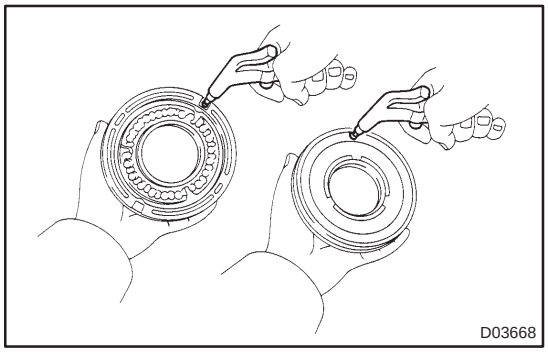

(b) Check that the valve does not leak when applying low compressed air (392 kPa, 4.0 kgf/cm^2, 57 psi).

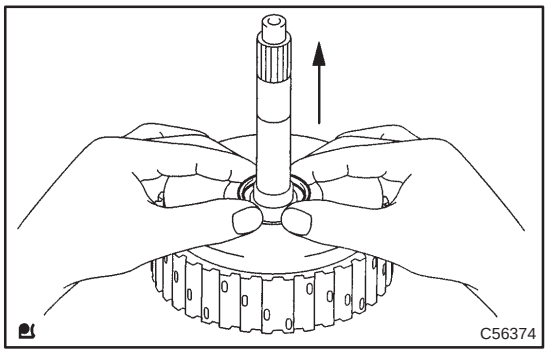

9. REMOVE INPUT SHAFT OIL SEAL RING

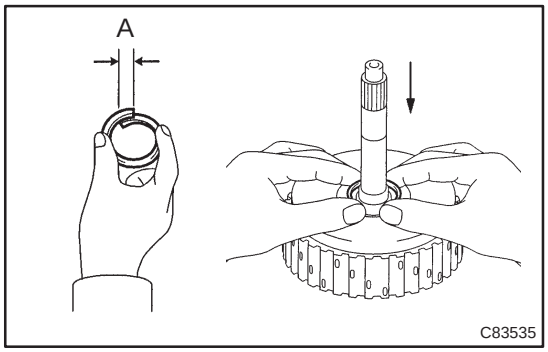

10. INSTALL INPUT SHAFT OIL SEAL RING

(a) Compress the oil seal ring from both sides to reduce dimension A.
Dimension A:
5.0 mm (0.197 in.)

(b) Coat the oil seal ring with ATF and install it to the input shaft.

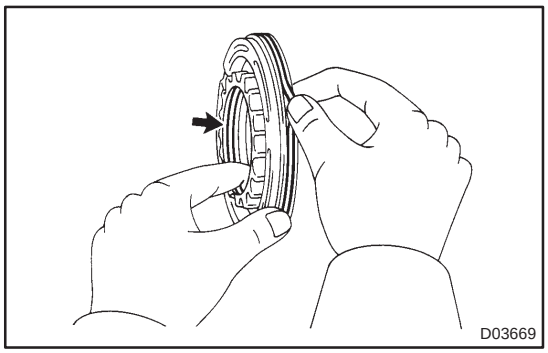

11. INSTALL FORWARD CLUTCH PISTON O–RING

(a) Coat 2 new O–rings with ATF, install them to the forward clutch piston.

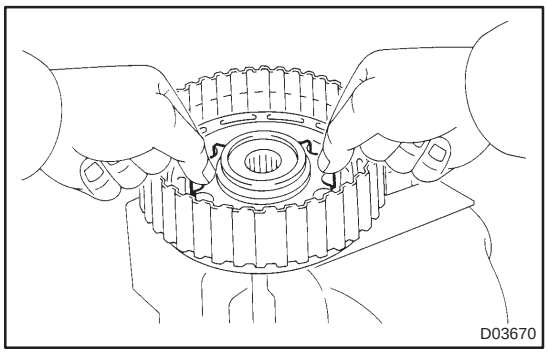

12. INSTALL FORWARD CLUTCH PISTON SUB–ASSY

(a) Install the forward clutch piston sub–assy to the forward clutch drum.

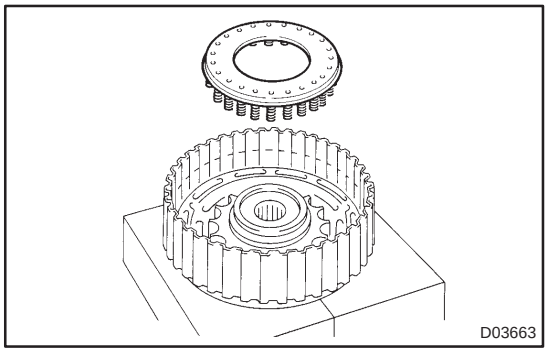

13. INSTALL FORWARD CLUTCH RETURN SPRING SUB–ASSY

(a) Place the forward clutch return spring sub–assy onto the forward clutch piston.

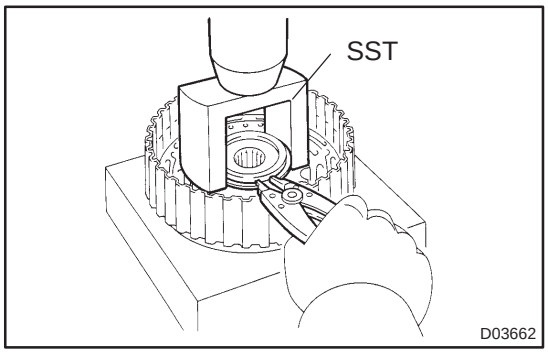

(b) Place SST on the return spring, and compress the return spring with a press.
SST 09350–32014 (09351–32070)

(c) Install the snap ring with a snap ring expander. Be sure the end gap of the snap ring is not aligned with the spring retainer claw.

NOTICE:

- **Stop the press when the spring sheet is lowered to the place 1 – 2 mm (0.039 – 0.078 in.) from the snap ring grove.**

- **This prevents the spring sheet from being deformed.**
- **Do not expand the snap ring excessively.**

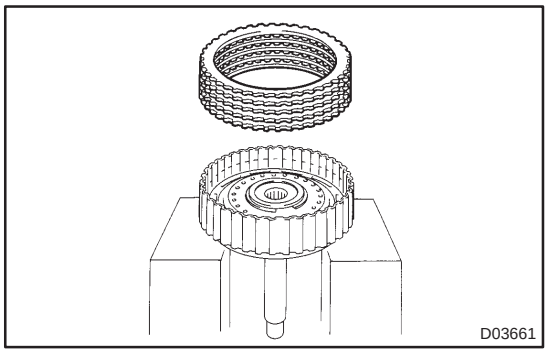

14. INSTALL FORWARD CLUTCH FLANGE HOLE SNAP RING

(a) Install the 5 plates, 5 discs and a flange.

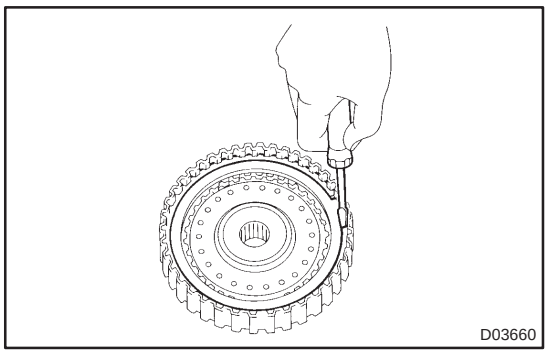

(b) Using a screwdriver, install the snap ring.
(c) Check that the end gap of the snap ring is not aligned with one of the cutouts.

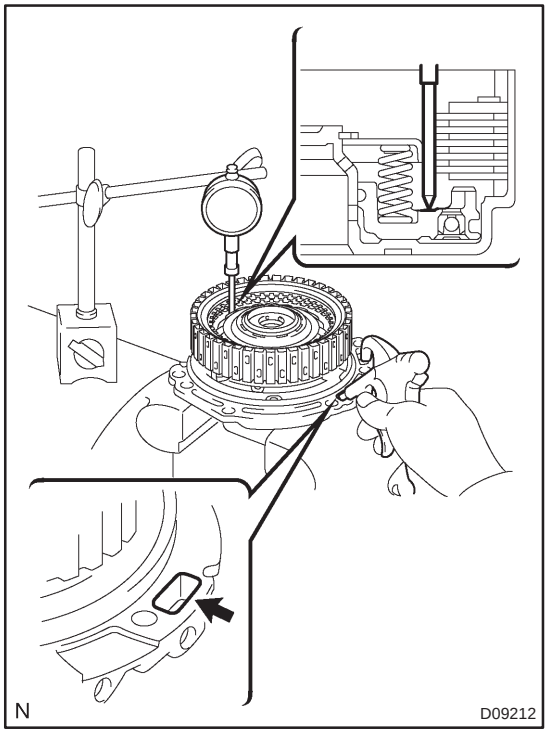

15. INSPECT PACK CLEARANCE OF FORWARD CLUTCH

(a) Using a dial indicator, measure the forward clutch piston stroke while applying and releasing compressed air (392 kgf·cm^2, 4.0 kPa, 57 psi).

Piston stroke: 1.74 – 2.08 mm (0.0685 – 0.0819 in.)

If the piston stroke is less than the minimum, parts may have been assembled incorrectly. Check and reassemble again.
If the clearance is non–standard, select another flange.
HINT:
There are 5 different flanges in thickness.

Flange thickness: mm (in.)

No.	Thickness	No.	Thickness
1	3.00 (0.1181)	4	3.45 (0.1358)
2	3.15 (0.1240)	5	3.60 (0.1417)
3	3.30 (0.1299)	–	–

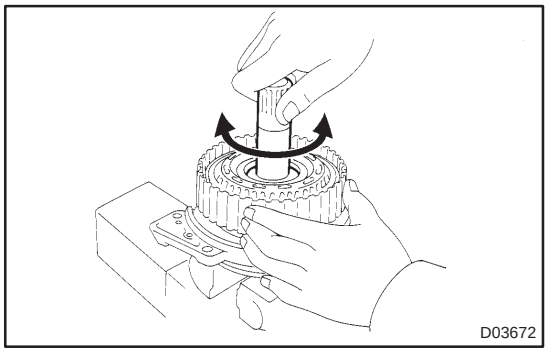

16. INSPECT FORWARD MULTIPLE DISC CLUTCH CLUTCH DISC

(a) Inspect the clutch disc rotation.
  (1) Check that the disc lightly rotates when rotating the forward clutch assembly after inserting the multiple disc clutch into it.

NOTICE:
Do not place the forward clutch assy in a vise.

DIRECT CLUTCH ASSY (U241E)

OVERHAUL

4006R–01

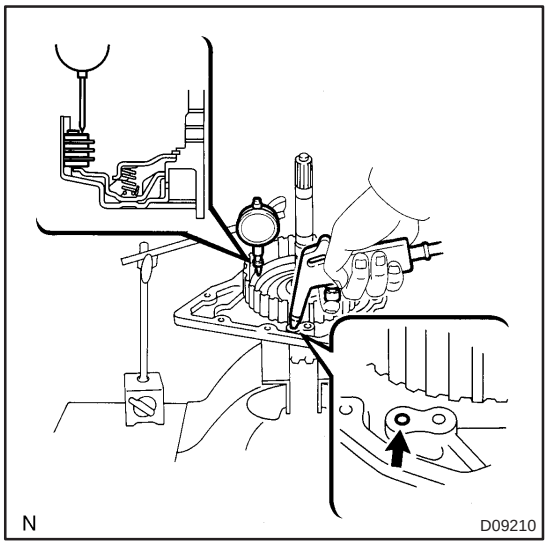

1. INSPECT PACK CLEARANCE OF DIRECT CLUTCH

(a) Install the direct clutch and needle roller bearing on the transaxle rear cover.

(b) Using a dial indicator, measure the direct clutch pack clearance while applying and releasing compressed air (392 kPa, 4.0 kgf/cm^2, 57 psi).

Pack clearance:

0.605 – 0.825 mm (0.02382 – 0.03248 in.)

If the pack clearance is non–standard, inspect the discs, plates and flange.

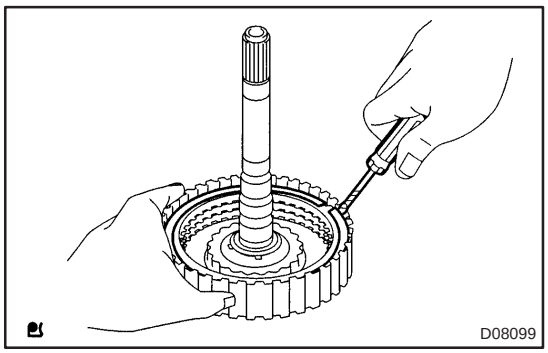

2. REMOVE DIRECT MULTIPLE DISC CLUTCH CLUTCH DISC

(a) Using a screwdriver, remove the snap ring from the direct clutch drum.

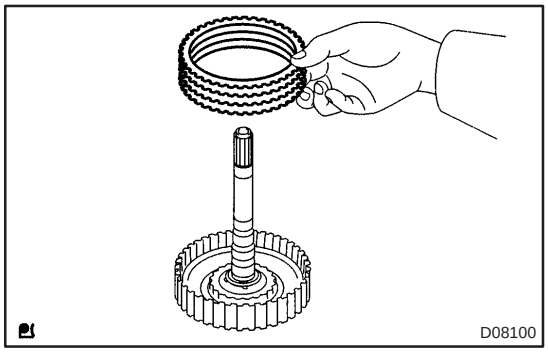

(b) Remove the flange, 3 discs and 3 plates from the direct clutch drum.

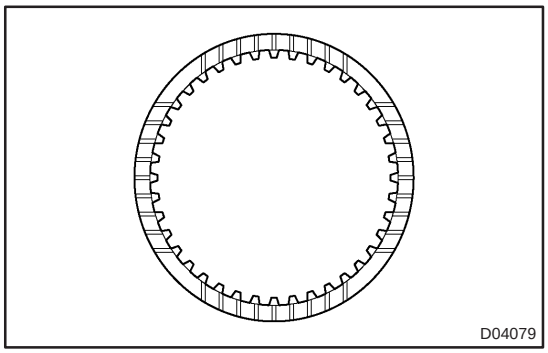

3. INSPECT DIRECT MULTIPLE DISC CLUTCH CLUTCH DISC

(a) Check to see if the sliding surface of the disc, plate and flange are worn or burnt.

If necessary, replace them.

HINT:

- If the lining of the disc is peeling off or discolored, or even if a part of the printed mark is defaced, replace all discs.

- Before assembling new discs, soak them in ATF for at least 15 minutes.

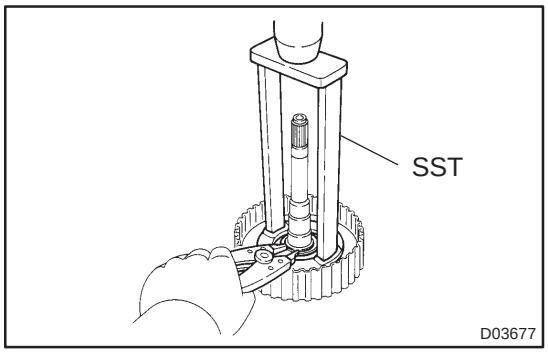

4. REMOVE DIRECT CLUTCH RETURN SPRING SUB–ASSY

(a) Place SST on the clutch balancer and compress the spring with a press.
SST 09387–00020

(b) Using a snap ring expander, remove the snap ring from the direct clutch drum.

NOTICE:

- **Stop the press when the spring sheet is lowered to the place 1 – 2 mm (0.039 – 0.078 in.) from the snap ring grove.**
- **This prevents the spring sheet from being deformed.**
- **Do not expand the snap ring excessively.**

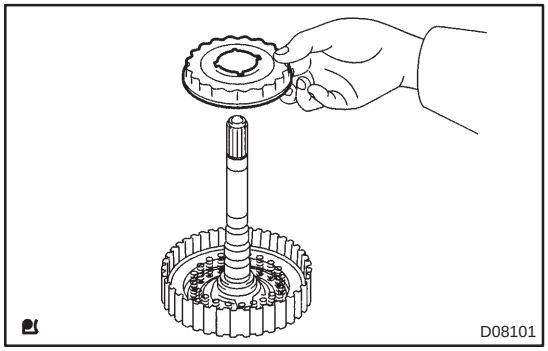

(c) Remove the clutch balancer from the direct clutch drum.

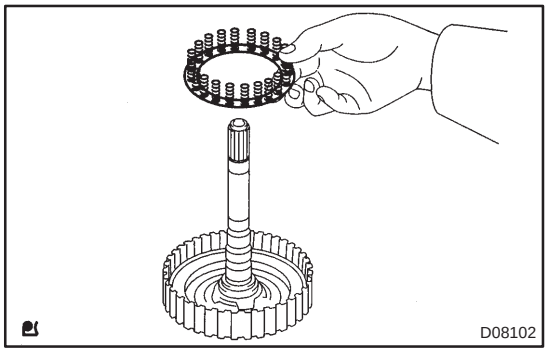

(d) Remove the piston return spring from the direct clutch drum.

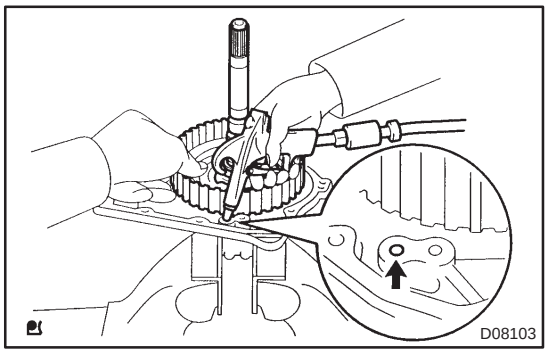

(e) Install direct clutch drum on the transaxle rear cover.

(f) Holding the direct clutch piston with your hand, apply compressed air (392 kPa, 4.0 kgf/cm^2, 57 psi) to the transaxle rear cover to remove the direct clutch piston.

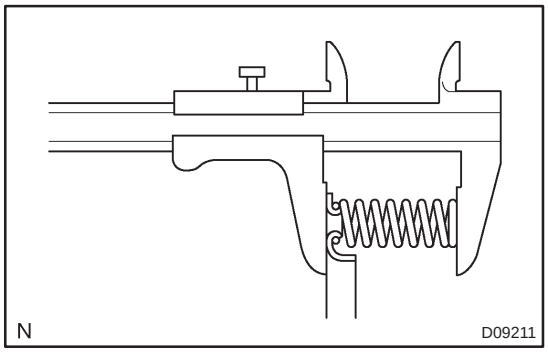

5. INSPECT DIRECT CLUTCH RETURN SPRING SUB–ASSY

(a) Using vernier calipers, measure the free length of the spring together with the spring seat.
Standard free length: 22.58 mm (0.8890 in.)

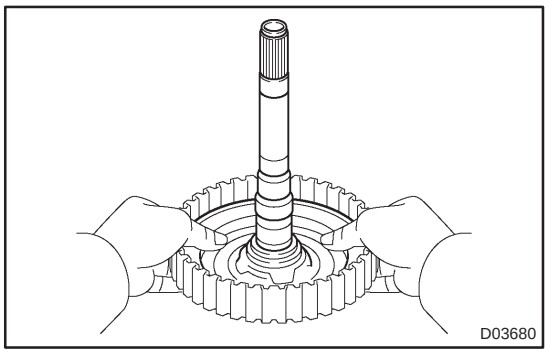

6. INSTALL DIRECT CLUTCH RETURN SPRING SUB–ASSY

(a) Coat the direct clutch piston with ATF, and install it to the direct clutch drum.

NOTICE:
Be careful not to damage the lip seal of the direct clutch piston.

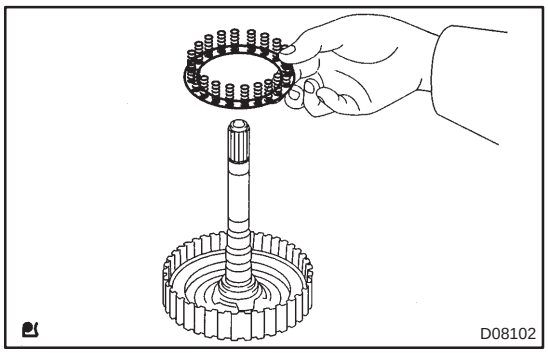

(b) Install the piston return spring to the direct clutch drum.

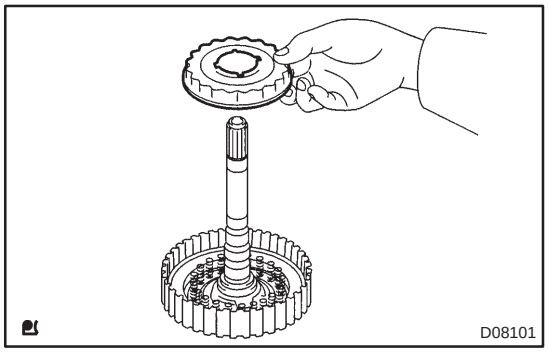

(c) Install the clutch balancer to the direct clutch drum.

NOTICE:
Be careful not to damage the lip seal of the direct clutch balancer.

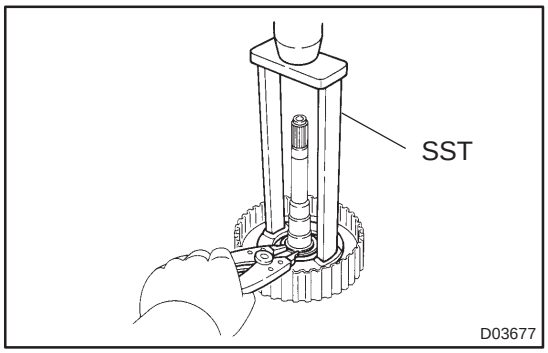

(d) Place SST on the clutch balancer and compress the piston return spring with a press.
SST 09387–00020

(e) Using a snap ring expander, install the snap ring to the direct clutch drum.

NOTICE:
- **Be sure the end gap of the snap ring is not aligned with the clutch balancer claw.**

- **Stop the press when the spring sheet is lowered to the place 1 – 2 mm (0.039 – 0.078 in.) from the snap ring grove.**
- **This prevents the spring sheet from being deformed.**
- **Do not expand the snap ring excessively.**

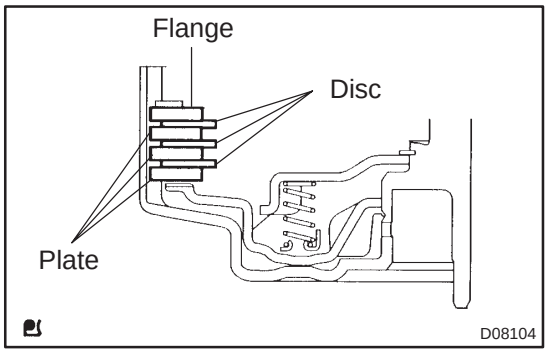

7. INSTALL DIRECT MULTIPLE DISC CLUTCH CLUTCH DISC

(a) Install the 3 plates, 3 discs and flange.

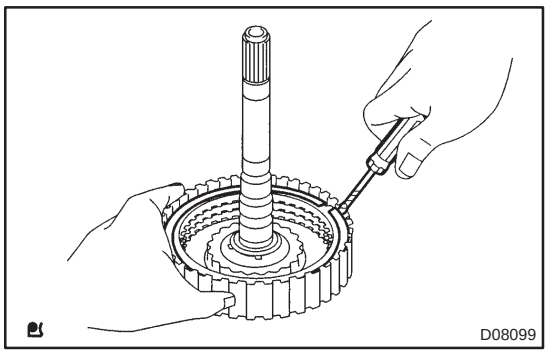

(b) Using a screwdriver, install the snap ring.
(c) Check that the end gap of the snap ring is not aligned with one of the cutouts.

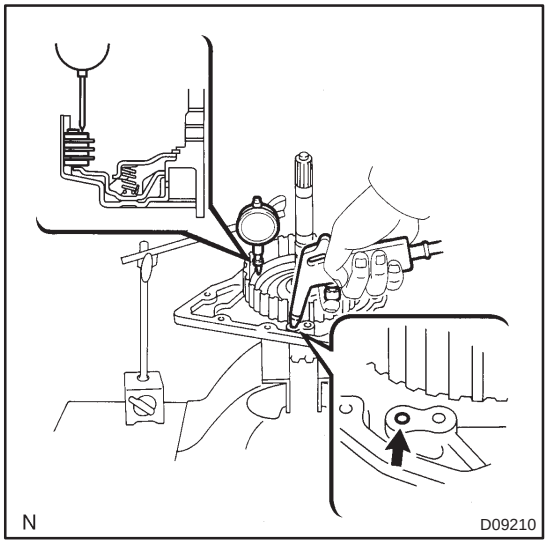

8. INSPECT PACK CLEARANCE OF DIRECT CLUTCH

(a) Install the direct clutch on the transaxle rear cover.
(b) Using a dial indicator, measure the direct clutch pack clearance while applying and releasing compressed air (392 kPa, 4.0 kgf/cm^2, 57 psi).

Park clearance:
0.605 – 0.825 mm (0.02382 – 0.03248 in.)

If the pack clearance is less than the minimum, parts may have been assembled incorrectly, so check and reassemble again.
If the stroke is non–standard, select another flange.
HINT:
There are 6 flanges in different thickness.

Flange thickness: mm (in.)

No.	Thickness	No.	Thickness
1	3.0 (0.118)	4	3.3 (0.130)
2	3.1 (0.122)	5	3.4 (0.134)
3	3.2 (0.126)	6	3.5 (0.138)

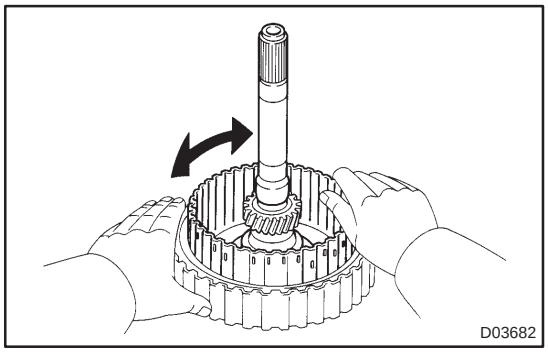

9. INSPECT DIRECT MULTIPLE DISC CLUTCH CLUTCH DISC

(a) Inspect the clutch disc rotation.
  (1) Check that the disc rotates when rotating the disc after inserting the rear planetary sun gear.

NOTICE:
Do not place the rear planetary sun gear in a vise.

SECOND BRAKE PISTON ASSY (U241E)

4006S–01

OVERHAUL

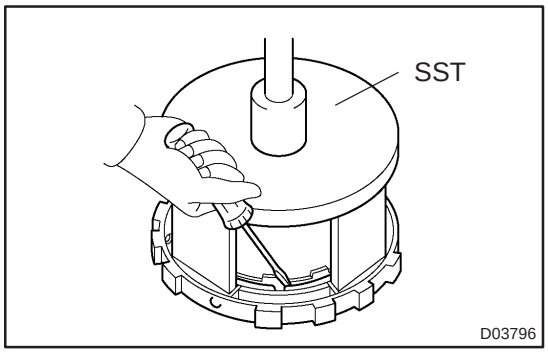

1. REMOVE 2ND BRAKE PISTON RETURN SPRING SUB–ASSY

(a) Place SST on the return spring and compress.
SST 09387–00060

(b) Using a screwdriver, remove the snap ring.

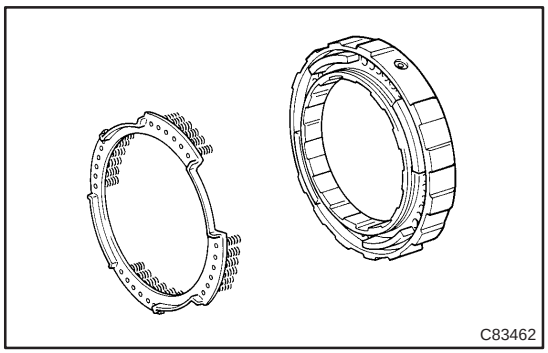

(c) Remove the piston return spring.

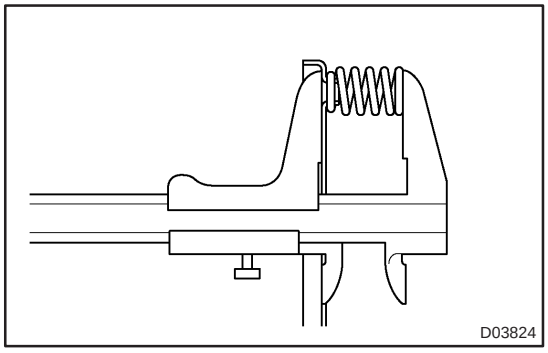

2. INSPECT 2ND BRAKE PISTON RETURN SPRING SUB–ASSY

(a) Using a vernier calipers, measure the free length of the spring together with the spring seat.
Standard free length: 16.61 mm (0.6539 in.)

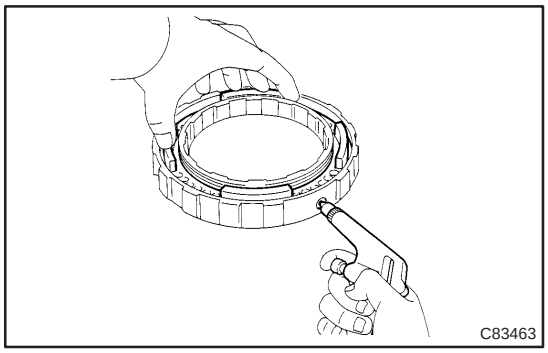

3. REMOVE 2ND BRAKE PISTON

(a) Hold the 2ND brake piston and apply compressed air (392 kPa, 4.0 kgf/cm^2, 57 psi) to the 2ND brake cylinder to remove the 2ND brake piston.

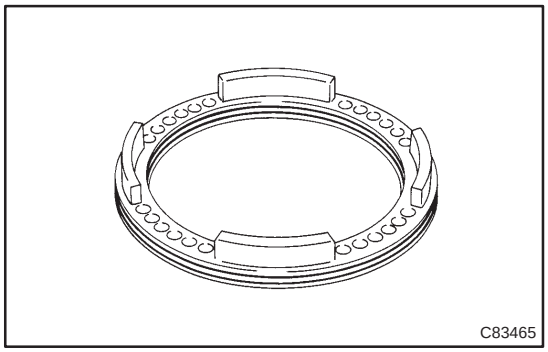

4. REMOVE 2ND BRAKE PISTON O–RING

(a) Remove the 2 O–rings from the 2ND brake piston.

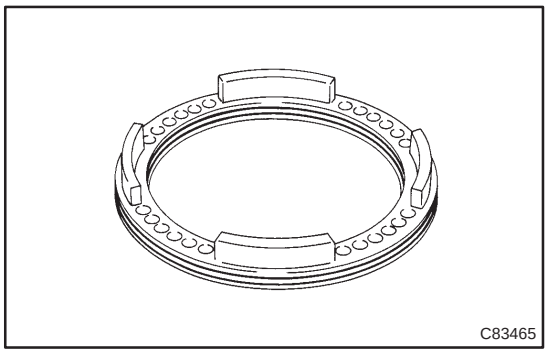

5. INSTALL 2ND BRAKE PISTON O–RING

(a) Coat 2 new O–rings with ATF and install them in the 2ND brake piston.

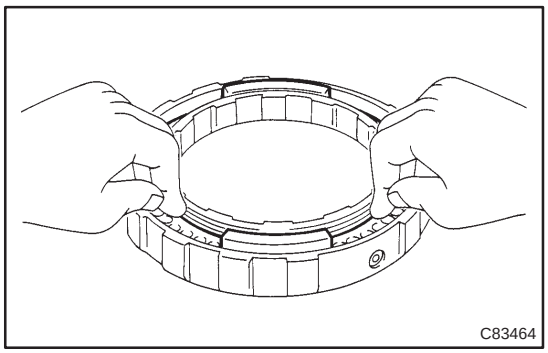

6. INSTALL 2ND BRAKE PISTON

(a) Press in the 2ND brake piston into the 2ND brake cylinder with your hands.

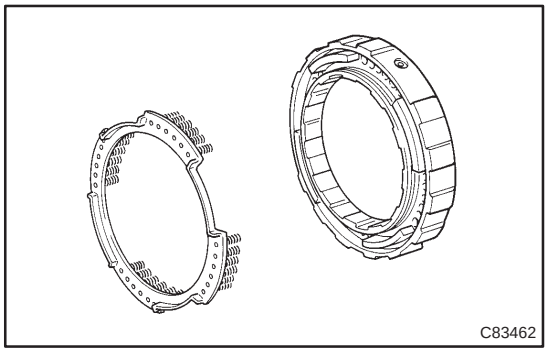

7. INSTALL 2ND BRAKE PISTON RETURN SPRING SUB–ASSY

(a) Install the piston return spring.

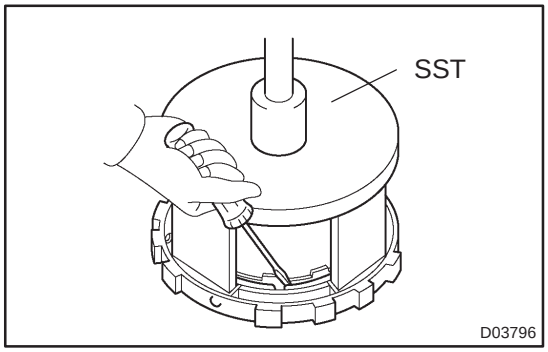

(b) Place SST on the piston return spring, and compress the piston return spring with a press.
SST 09387–00060

(c) Using a screwdriver, install the snap ring.

NOTICE:

Be sure the end gap of the snap ring is not aligned with the piston return spring claw.

UNDERDRIVE CLUTCH ASSY (U241E)

4006T–01

OVERHAUL

1. INSPECT UNDERDRIVE PACK CLEARANCE

(a) Inspect the U/D clutch to the transaxle case.

NOTICE:

Be careful not to damage the oil seal rings.

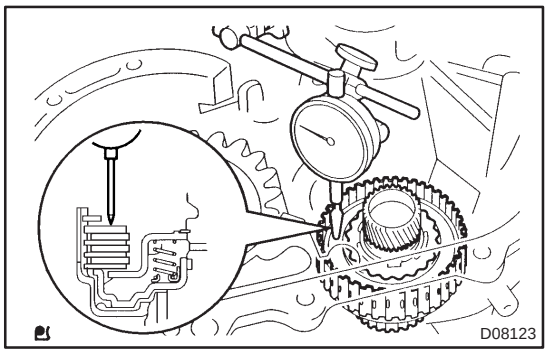

(b) Install a dial indicator as shown in the illustration.

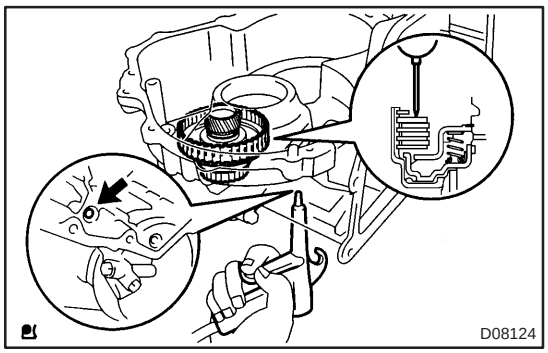

(c) Measure the U/D clutch pack clearance while applying and releasing compressed air (392 kPa, 4.0 kgf/cm^2, 57 psi).

Pack clearance: 1.51 – 1.90 mm (0.0594 – 0.0748 in.)

If the pack clearance is non–standard, inspect the discs, plates and flange.

2. REMOVE UNDERDRIVE CLUTCH DISC NO.1

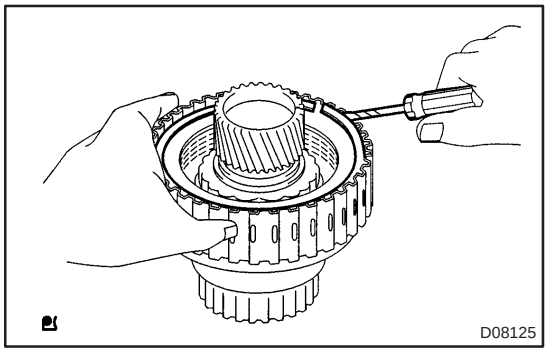

(a) Using a screwdriver, remove the snap ring.

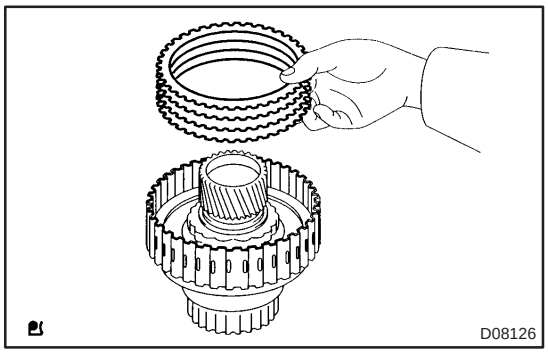

(b) Remove the flange, 3 discs and 3 plates from the U/D clutch drum.

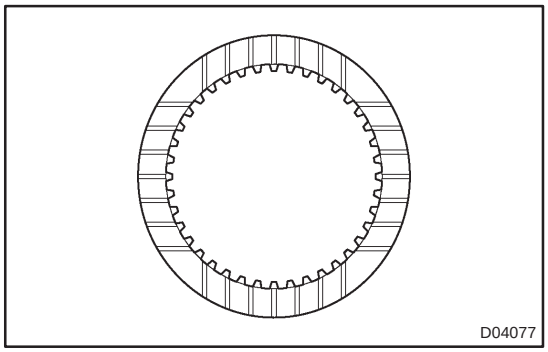

3. INSPECT UNDERDRIVE CLUTCH DISC NO.1

(a) Check to see if the sliding surface of the disc, plate and flange are worn or burnt. If necessary, replace them.

HINT:

- If the lining of the disc is peeling off or discolored, or even if a part of the printed mark is defaced, replace all discs.
- Before assembling new discs, soak them in ATF for at least 15 minutes.

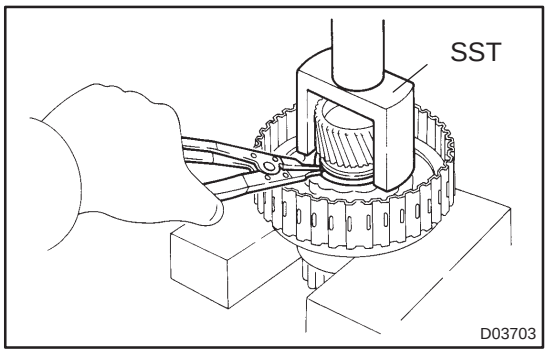

4. REMOVE UNDERDRIVE CLUTCH PISTON SET

(a) Place SST on the clutch balancer and compress the spring with a press.
SST 09350–32014 (09351–32070)

(b) Using a snap ring expander, remove the snap ring.

NOTICE:

- **Stop the press when the spring sheet is lowered to the place 1 – 2 mm (0.039 – 0.078 in.) from the snap ring grove.**
- **This prevents the spring sheet from being deformed.**
- **Do not expand the snap ring excessively.**

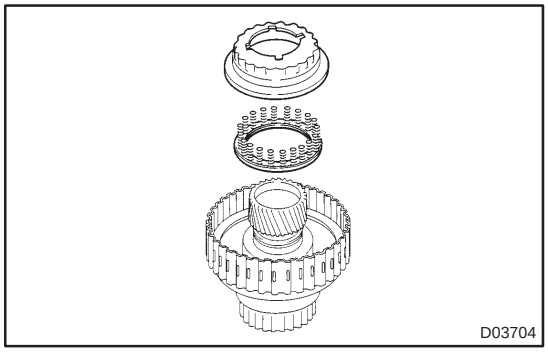

(c) Remove the clutch balancer and piston return spring from the U/D clutch drum.

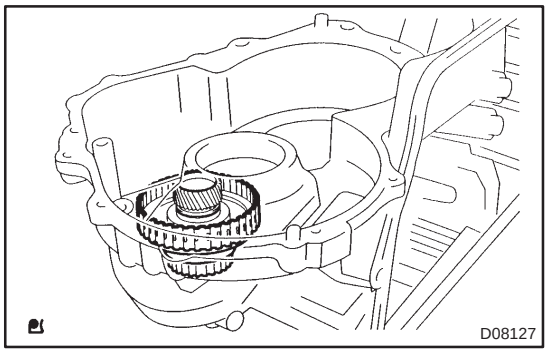

(d) Install the U/D clutch to the transaxle case.

NOTICE:

Be careful not to damage the oil seal rings.

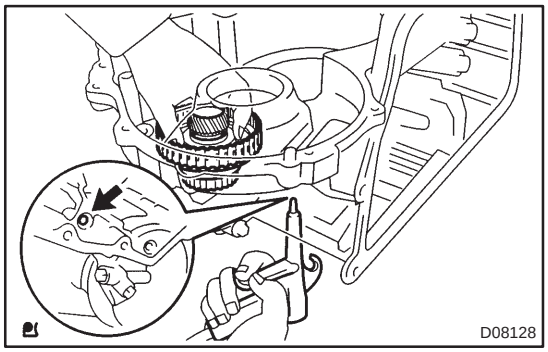

(e) Holding the U/D clutch piston with your hand, apply compressed air (392 kPa, 4.0 kgf/cm^2, 57 psi) to the transaxle case to remove the U/D clutch piston.

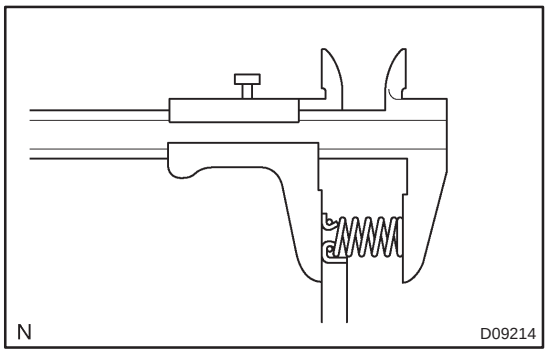

5. INSPECT UNDERDRIVE CLUTCH RETURN SPRING SUB–ASSY

(a) Using vernier calipers, measure the free length of the spring together with the spring seat.
Standard free length: 17.14 mm (0.6748 in.)

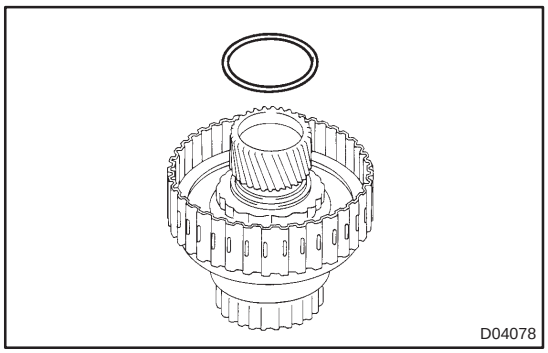

6. REMOVE UNDERDRIVE CLUTCH DRUM O–RING

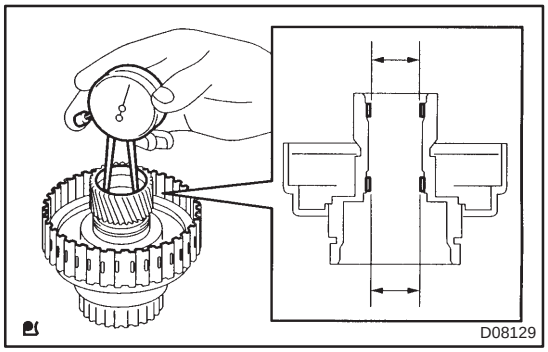

7. INSPECT UNDERDRIVE CLUTCH DRUM SUB–ASSY

(a) Using a dial indicator, measure the inside diameter of the U/D clutch drum bushing.
Standard drum bushing:
32.56 – 32.58 mm (1.2818 – 1.2826 in.)
Maximum drum bushing: 32.63 mm (1.2846 in.)

If the inside diameter is greater than the maximum, replace the U/D clutch drum.

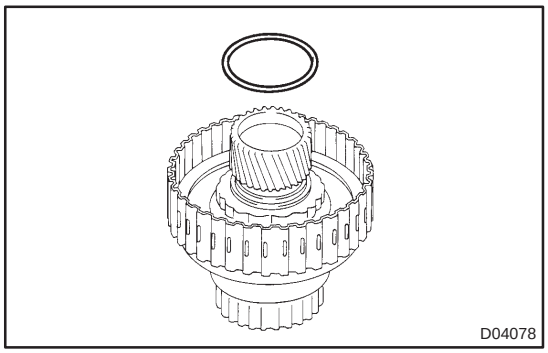

8. INSTALL UNDERDRIVE CLUTCH DRUM O–RING

(a) Coat a new O–ring with ATF and install it to the U/D clutch drum.

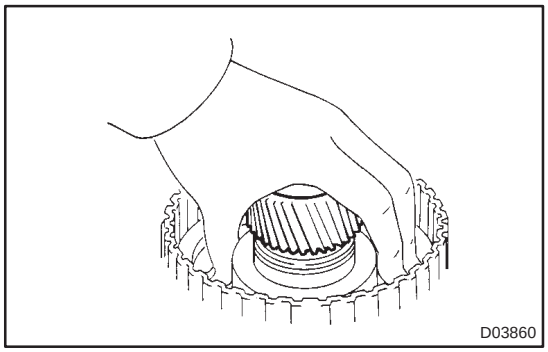

9. INSTALL UNDERDRIVE CLUTCH PISTON SET

(a) Coat the U/D clutch piston with ATF, and install it to the U/D clutch piston drum.

NOTICE:
Be careful not to damage the O–ring.

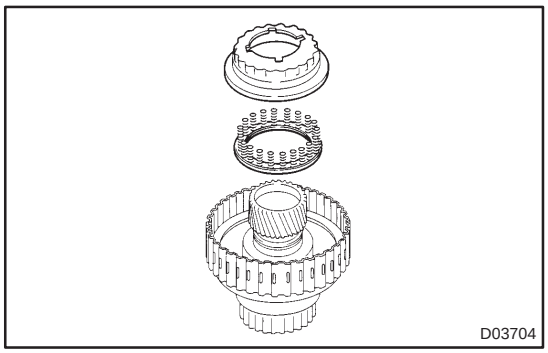

(b) Install the piston return spring and clutch balancer to the U/D clutch drum.

NOTICE:
Be careful not to damage the lip seal of the clutch balancer.

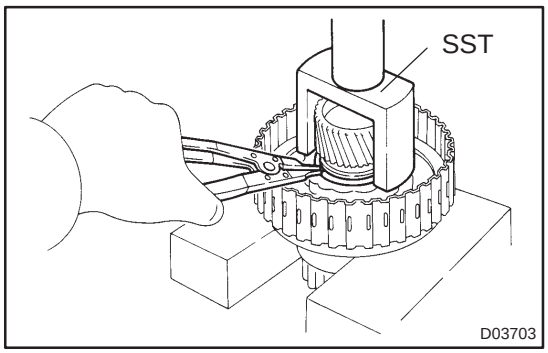

(c) Place SST on the clutch balancer and compress the piston return spring with a press.
SST 09350–32014 (09351–32070)

(d) Using a snap ring expander, install the snap ring to U/D clutch drum.

NOTICE:
- **Be sure the end gap of the snap ring is not aligned with the clutch balancer's claw.**
- **Stop the press when the spring sheet is lowered to the place 1 – 2 mm (0.039 – 0.078 in.) from the snap ring groove.**
- **This prevents the spring sheet from being deformed.**
- **Do not expand the snap ring excessively.**

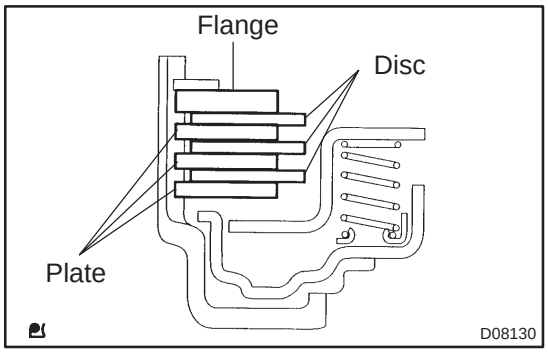

10. INSTALL UNDERDRIVE CLUTCH DISC NO.1

(a) Install the 3 plates, 3 discs and flange.

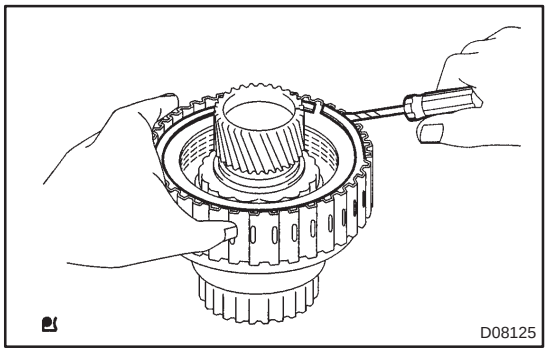

(b) Using a screwdriver, install the snap ring.
(c) Check that the end gap of the snap ring is not aligned with one of the cutouts.

11. INSPECT UNDERDRIVE PACK CLEARANCE

(a) Install the U/D clutch to the transaxle case.

NOTICE:

Be careful not to damage the oil seal rings.

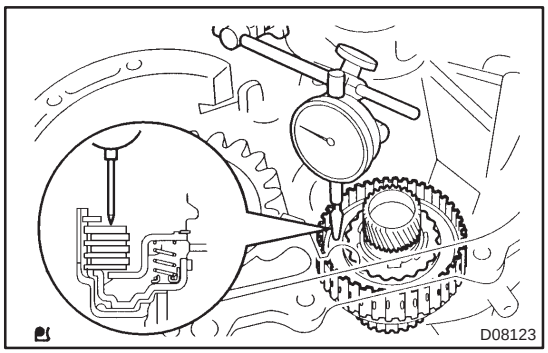

(b) Set a dial indicator as shown in the illustration.

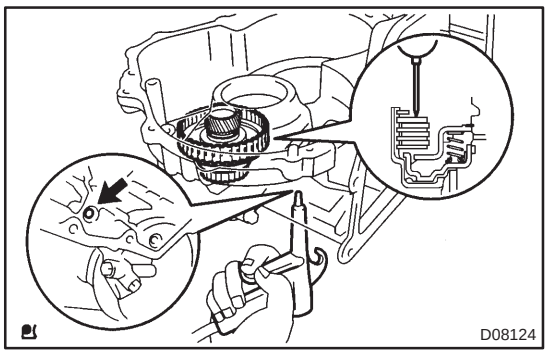

(c) Measure the U/D clutch piston stroke while applying and releasing compressed air (392 kPa, 4.0 kgf/cm^2, 57 psi).

Park clearance: 1.51 – 1.90 mm (0.0594 – 0.0748 in.)

If the pack clearance is less than the minimum, parts may have been assembled incorrectly, so check and reassemble again.
If the park clearance is non–standard, select another flange.
HINT:
There are 3 flanges in different thickness.

Flange thickness: mm (in.)

No.	Thickness	No.	Thickness
A	3.0 (0.118)	C	3.4 (0.134)
B	3.2 (0.126)	–	–

UNDERDRIVE PLANETARY GEAR ASSY (U241E)

4006U–01

OVERHAUL

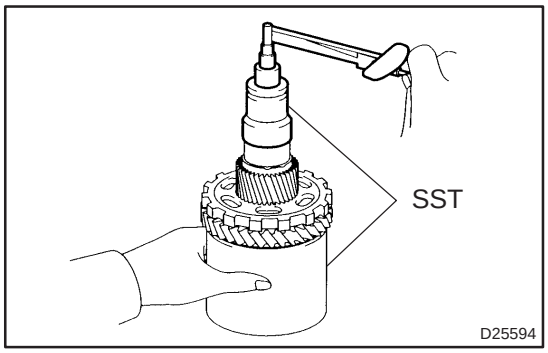

1. INSPECT UNDERDRIVE PLANETARY GEAR PRELOAD

(a) Using SST a torque wrench, measure the turning torque of U/D planetary gear assy while rotating the torque wrench at 60 rpm.
SST 09387–00050, 09564–16020
Turning torque at 60 rpm:
0.23 – 5.01 N·m (2 – 51 kgf·cm, 2.0 – 44.3 in.·lbf)

HINT:
Use a torque wrench with a fulcrum length of 160 mm (6.3 in.).

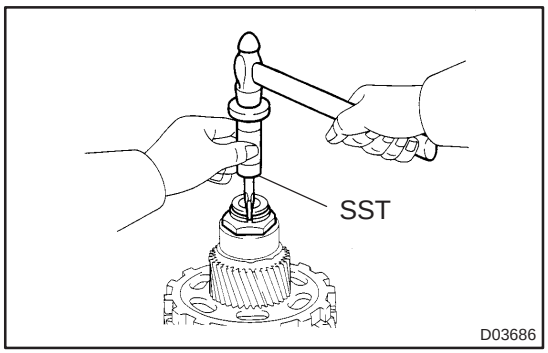

2. REMOVE CYLINDRICAL ROLLER BEARING RACE INNER

(a) Using SST, loosen the staked part of the nut.
SST 09930–00010 (09931–00010, 09931–00020), 09387–00050

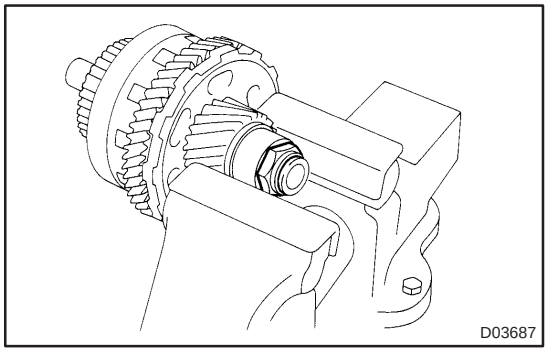

(b) Clamp the U/D planetary gear in soft jaw vise.

NOTICE:
Be careful not to damage the differential drive pinion.

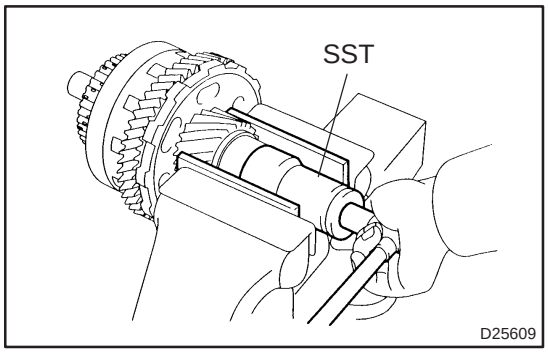

(c) Using SST, remove lock nut.
SST 09564–16020

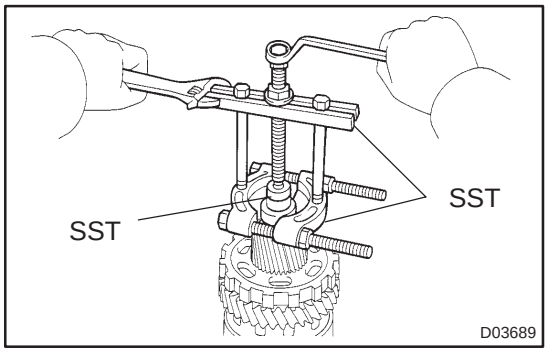

(d) Using SST, remove cylindrical roller bearing inner race.
SST 09950–00020, 09950–00030, 09950–60010 (09951–00340)

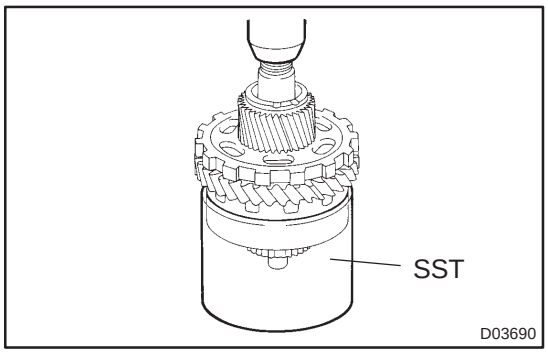

3. REMOVE UNDERDRIVE PLANETARY GEAR ASSY

(a) Using SST and press, remove the differential drive pinion, parking lock gear, counter driven gear with U/D planetary ring gear and front tapered roller bearing.
SST 09387–00050

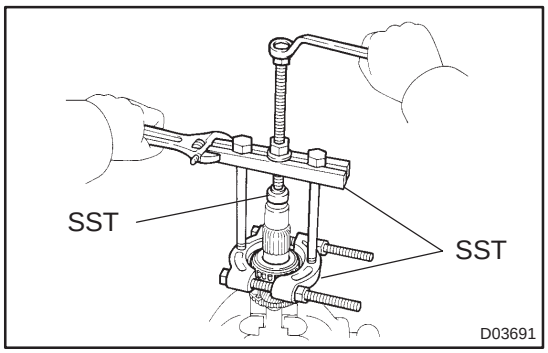

(b) Clamp the U/D planetary gear in soft jaw vise.
(c) Using SST, remove rear tapered roller bearing form the U/D planetary gear.
SST 09950–00020, 09950–00030, 09950–60010 (09951–00320)

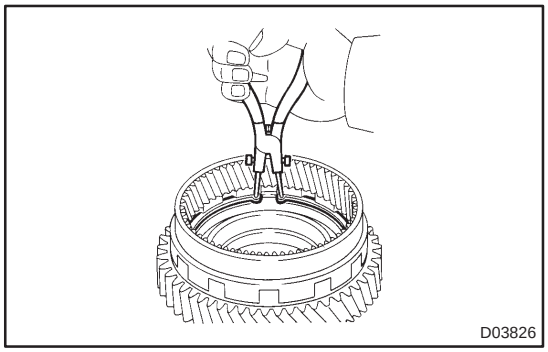

4. REMOVE UNDERDRIVE PLANETARY RING GEAR

(a) Using a snap ring pliers, remove the snap ring.

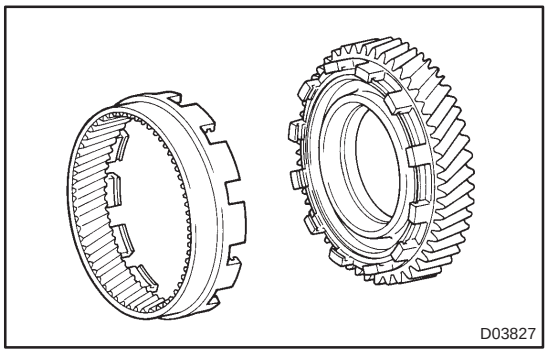

(b) Remove the U/D planetary ring gear from the counter driven gear.

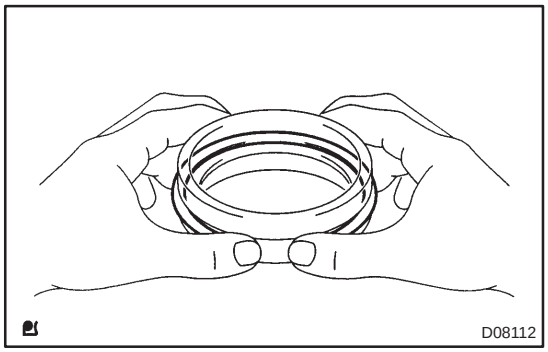

5. INSTALL UNDERDRIVE PLANETARY RING GEAR

(a) Install a new snap ring to the outer race of the tapered roller bearing.

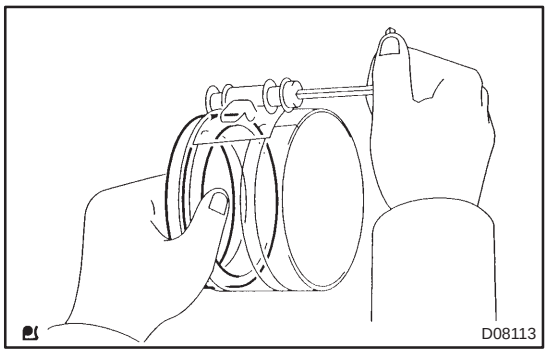

(b) Using a piston ring compressor, squeeze the snap ring.

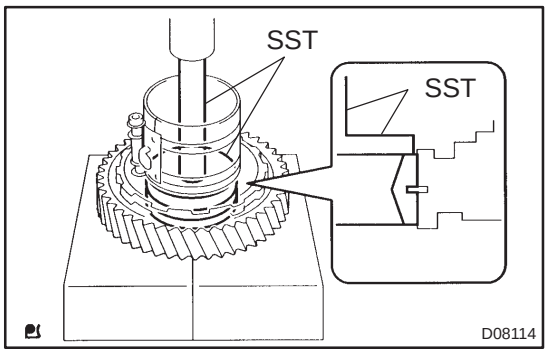

(c) Using SST a press, press in the outer race of the tapered roller bearing.
SST 09950–60020 (09951–00890), 09950–70010 (09951–07100)

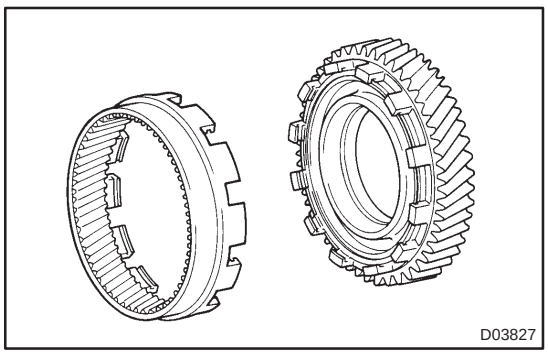

(d) Install the underdrive planetary ring gear to the counter driven gear.

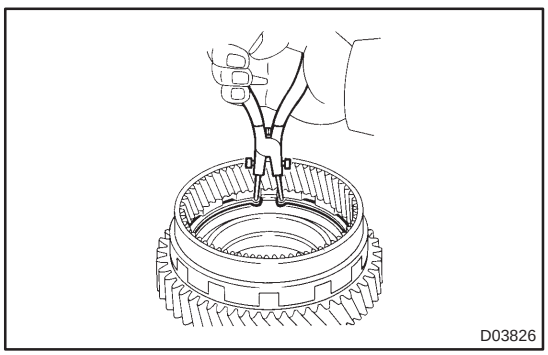

(e) Using snap ring pliers, install the snap ring.

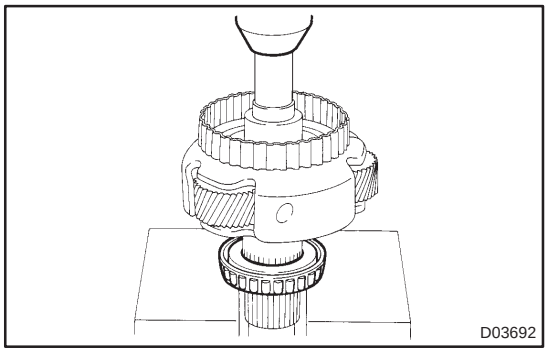

6. INSTALL UNDERDRIVE PLANETARY GEAR ASSY

(a) Using a press, install the tapered roller bearing.

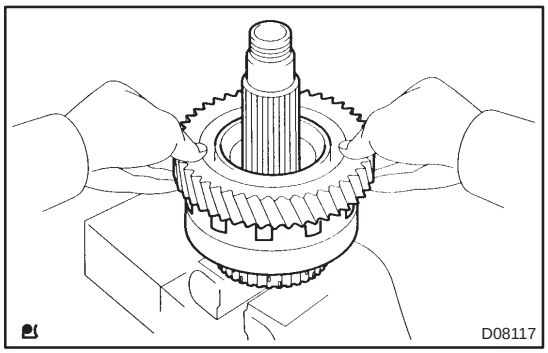

(b) Install the counter driven gear with planetary ring gear to the U/D planetary gear.

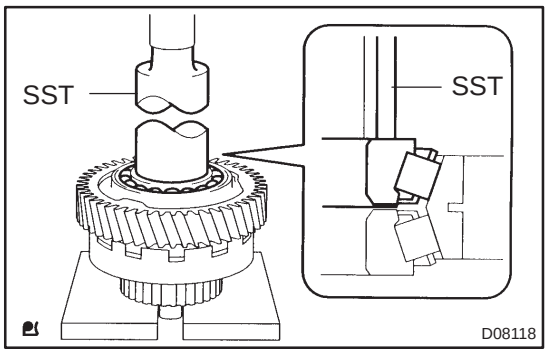

(c) Using SST and a press, press in the tapered roller bearing.

SST 09316–60011 (09316–00011)

NOTICE:

Press in the counter driven gear while rotating it.

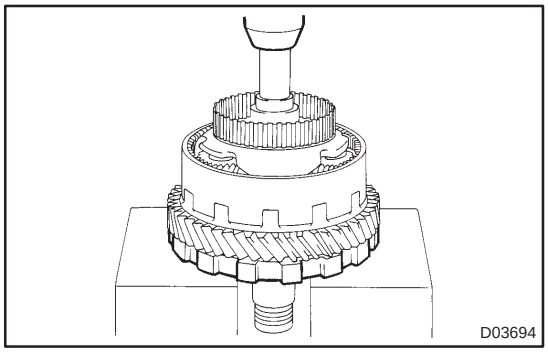

(d) Using a press, install the parking lock gear.

NOTICE:

Press in the counter driven gear while rotating it.

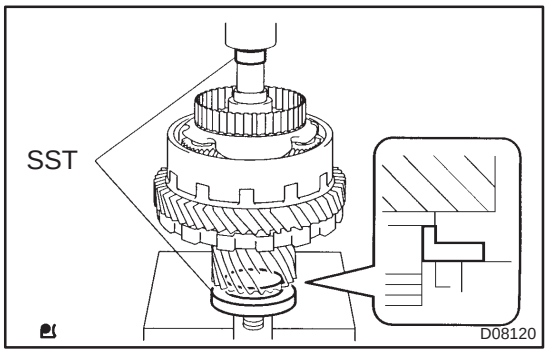

(e) Using SST and a press, install the differential drive pinion.

NOTICE:

Press in the counter driven gear while rotating it.

SST 09506–35010, 09950–60010 (09951–00250)

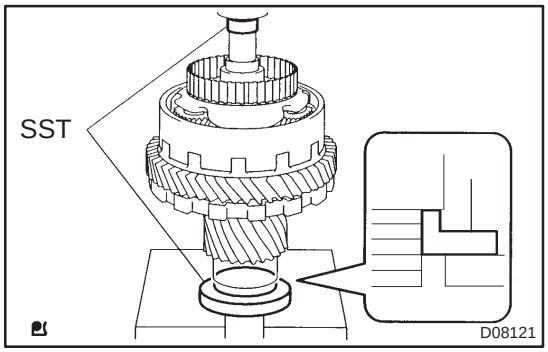

(f) Using SST and a press, in the cylindrical roller bearing inner race.

NOTICE:

Press in the counter driven gear while rotating it.

SST 09506–35010, 09950–60010 (09951–00250)

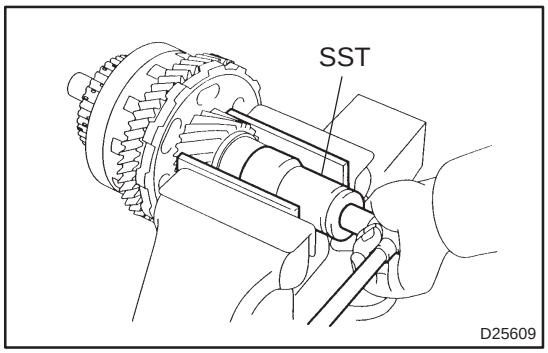

(g) Clamp the U/D planetary gear in soft jaw vise.

NOTICE:

Be careful not to damage the differential drive pinion.

(h) Using SST, install a new lock nut.

Torque: 280 N·m (2,855 kgf·cm, 207 in.·lbf)

SST 09564–16020

HINT:

Use a torque wrench with a fulcrum length of 750 mm (29.53 in.).

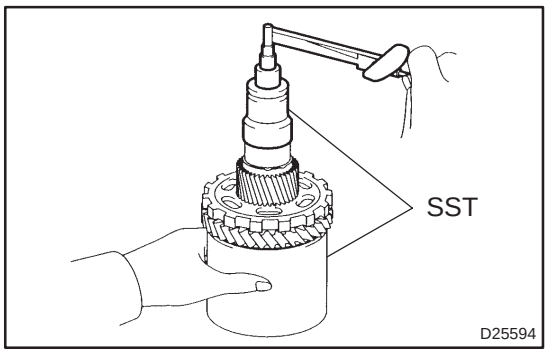

(i) Using SST and a torque wrench, measure the turning torque of U/D planetary gear assy while rotating the torque wrench at 60 rpm.

SST 09564–16020, 09387–00050

Turning torque at 60 rpm:

0.23 – 5.01 N·m (2 – 51 kgf·cm, 2.0 – 44.3 in.·lbf)

HINT:

Use a torque wrench with a fulcrum length of 160 mm (6.30 in.).

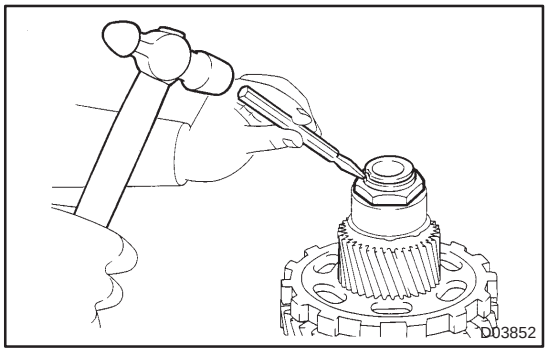

(j) Using a pin punch and hammer, stake the lock nut.

NOTICE:

Make sure that there are no cracks on the nut.

TRANSMISSION VALVE BODY ASSY (U241E)

OVERHAUL

4006V–01

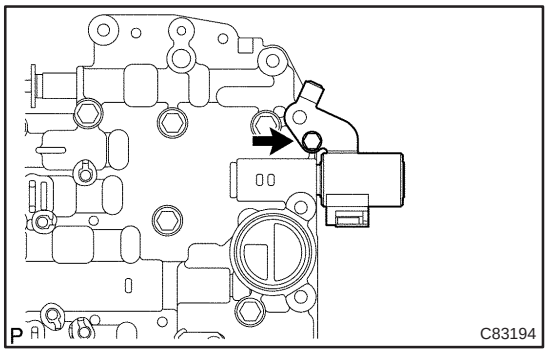

1. REMOVE LINE PRESSURE CONTROL SOLENOID ASSY

(a) Remove the bolt and line pressure control solenoid assy.

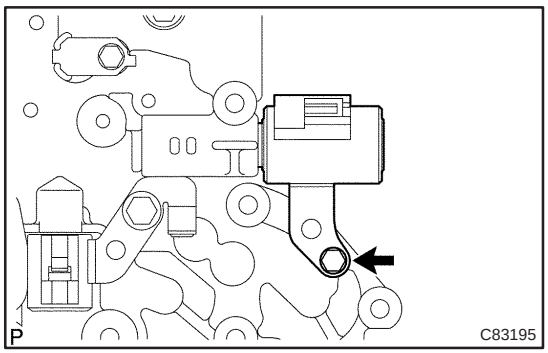

2. REMOVE SHIFT SOLENOID VALVE SL1

(a) Remove the bolt and shift solenoid valve SL1.

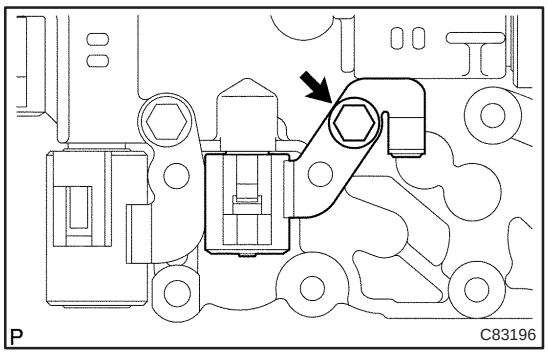

3. REMOVE SHIFT SOLENOID VALVE DSL

(a) Remove the bolt and shift solenoid valve DSL.

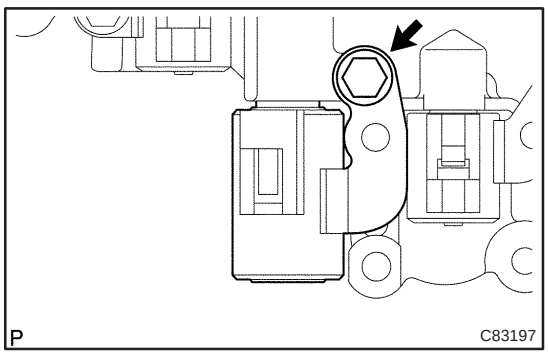

4. REMOVE SHIFT SOLENOID VALVE SL2

(a) Remove the bolt and shift solenoid valve SL2.

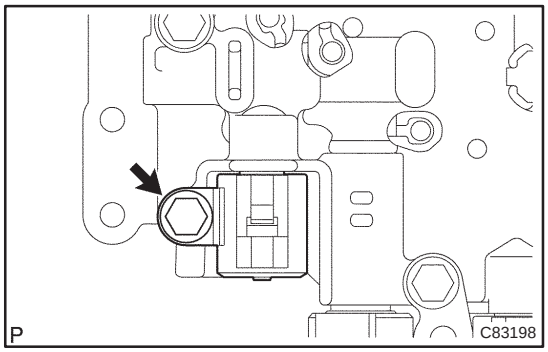

5. REMOVE SHIFT SOLENOID VALVE S4

(a) Remove the bolt and shift solenoid valve S4.

6. REMOVE MANUAL VALVE

(a) Remove the manual valve from the valve body assy.

7. INSTALL MANUAL VALVE

(a) Coat the manual valve with ATF, install it to the valve body assy.

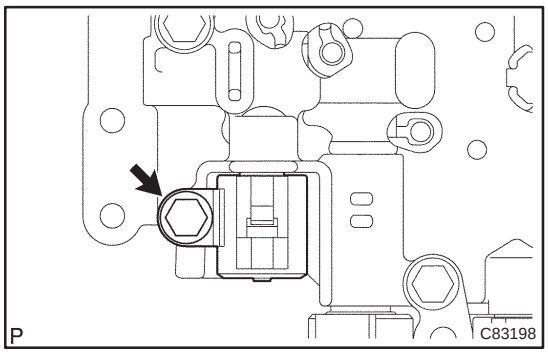

8. INSTALL SHIFT SOLENOID VALVE S4

(a) Install the bolt and shift solenoid valve S4.

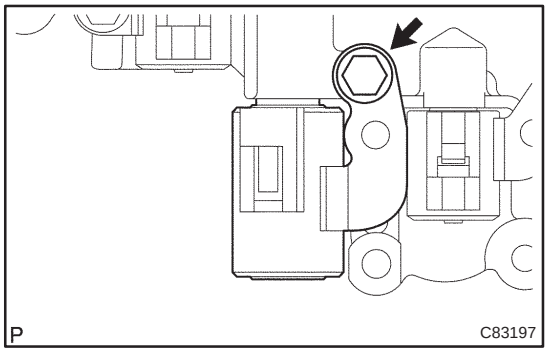

9. INSTALL SHIFT SOLENOID VALVE SL2

(a) Install the bolt and shift solenoid valve SL2.

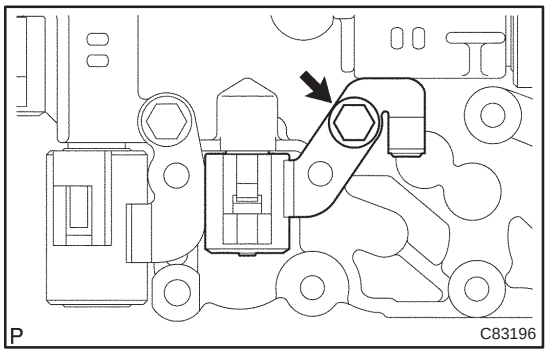

10. INSTALL SHIFT SOLENOID VALVE DSL

(a) Install the bolt and shift solenoid valve DSL.

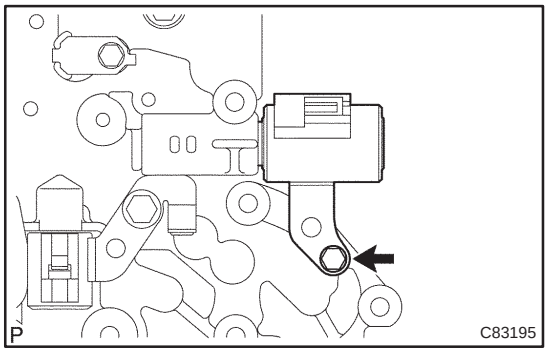

11. INSTALL SHIFT SOLENOID VALVE SL1

(a) Install the bolt and shift solenoid valve SL1.

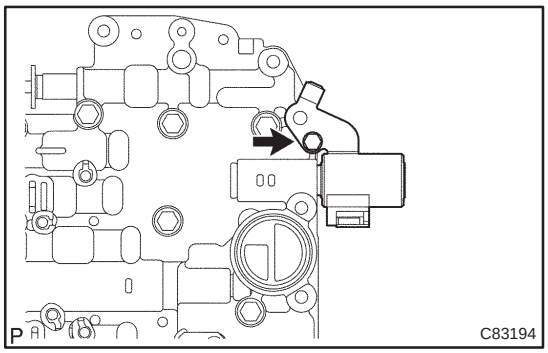

12. INSTALL LINE PRESSURE CONTROL SOLENOID ASSY

(a) Install the bolt and line pressure control solenoid assy.

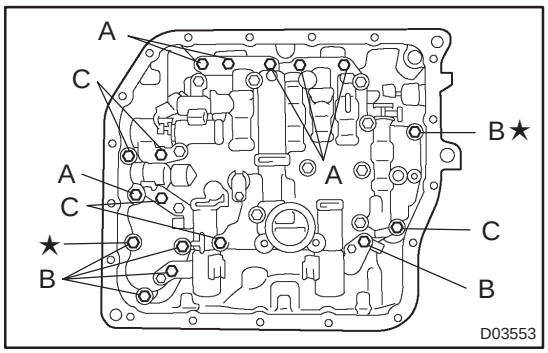

13. INSTALL TRANSMISSION VALVE BODY ASSY

(a) Align the groove of the manual valve with the pin of lever.
(b) Install the 17 bolts.
Torque: 11 N·m (110 kgf·cm, 8 ft·lbf)
Bolt length:
Bolt A: 25 mm (0.984 in.)
Bolt B: 41 mm (1.614 in.)
Bolt C: 45 mm (1.771 in.)

NOTICE:

- **Push the valve body against the accumulator piston spring and the check ball body to install it.**
- **Tighten those bolts marked by ★ in the illustration first temporarily because they are positioning bolts.**

FRONT DIFFERENTIAL ASSY (U241E)

OVERHAUL

4006W–01

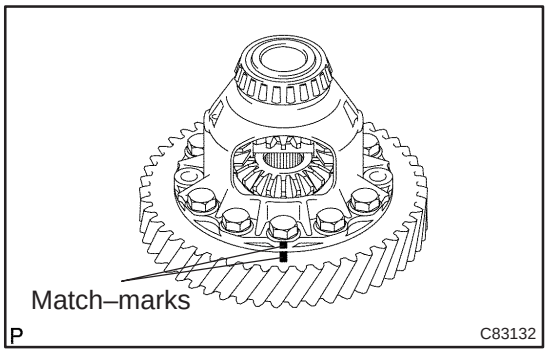

1. REMOVE FRONT DIFFERENTIAL RING GEAR

(a) Place the match–marks on the ring gear and differential case.

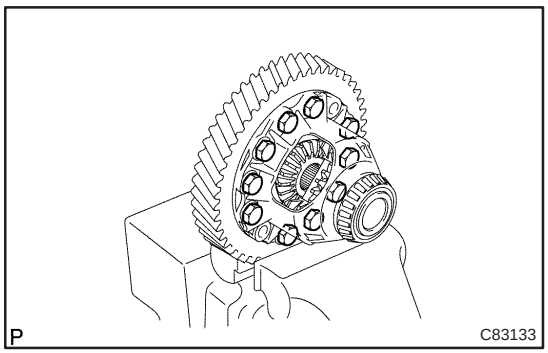

(b) Remove the 10 bolts.

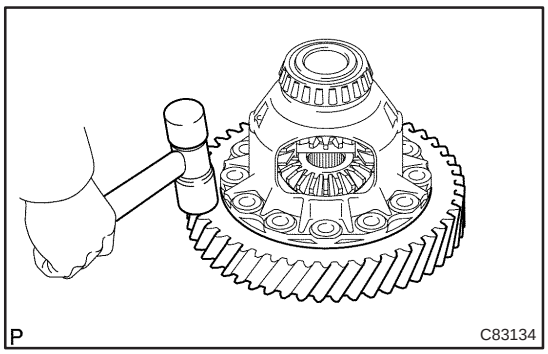

(c) Using a plastic hammer, tap on the ring gear to remove it from the case.

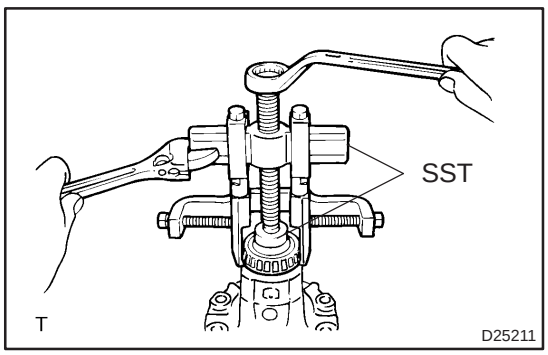

2. REMOVE FR DIFFERENTIAL CASE FRONT TAPERED ROLLER BEARING

(a) Using SST, remove the front differential case tapered roller bearing front inner race from the differential case.

SST 09950–40011 (09951–04020, 09952–04010, 09953–04020, 09954–04010, 09955–04061, 09957–04010, 09958–04011), 09950–60010 (09951–00340)

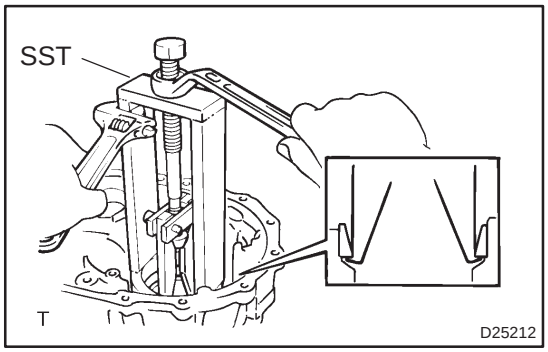

(b) Using SST, remove the front differential case tapered roller bearing front outer race and differential case washer.
SST 09387–00040 (09387–01030, 09387–01040, 09387–02010, 09387–02020)

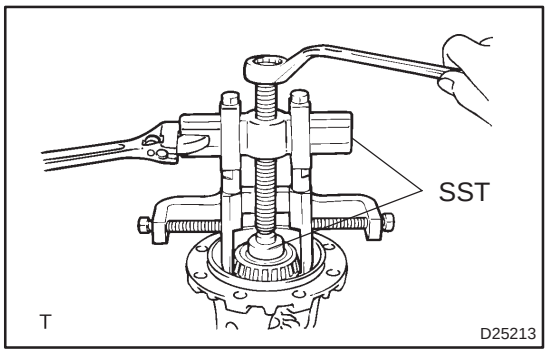

3. REMOVE FR DIFFERENTIAL CASE REAR TAPERED ROLLER BEARING

(a) Using SST, remove the front differential case tapered roller bearing rear inner race from the differential case.
SST 09950–40011 (09951–04020, 09952–04010, 09953–04020, 09954–04010, 09955–04061, 09957–04010, 09958–04011), 09950–60010 (09951–00340)

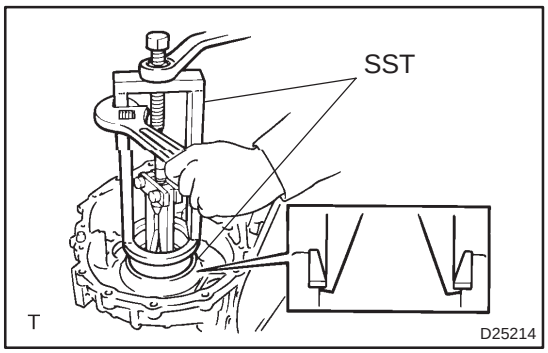

(b) Using SST, front differential case tapered roller bearing rear outer race and differential case washer.
SST 09387–00040 (09387–01030, 09387–01040, 09387–02010, 09387–02020)

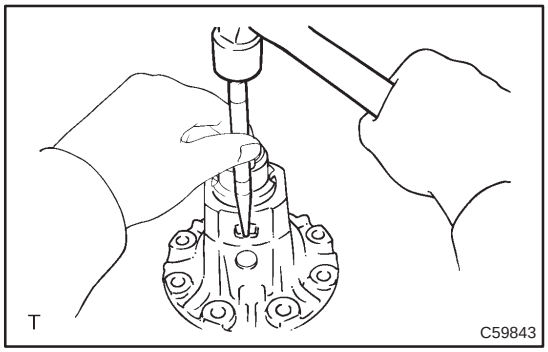

4. REMOVE FRONT DIFFERENTIAL PINION SHAFT STRAIGHT PIN

(a) Using a punch and a hummer, loosen the staked part of the differential case.

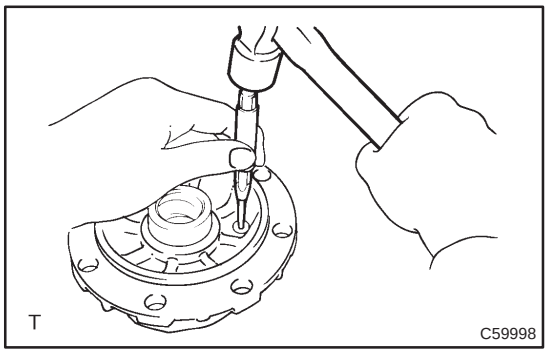

(b) Using a pin punch (5 mm), drive out the pin from ring gear side.

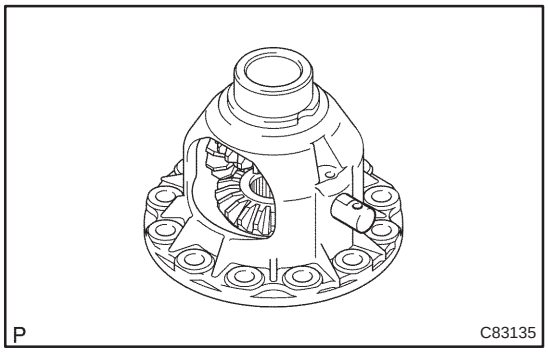

5. REMOVE FRONT DIFFERENTIAL PINION SHAFT NO.1

(a) Remove the front differential pinion shaft No. 1 from the differential case.

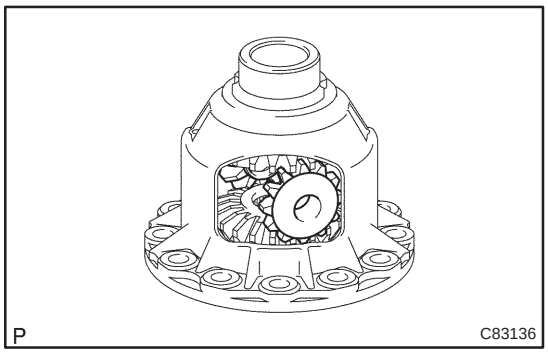

6. REMOVE FRONT DIFFERENTIAL SIDE GEAR

(a) Remove the 2 front differential pinions, 2 pinion thrust washers, 2 front differential side gears and 2 side gear thrust washers from the differential case.

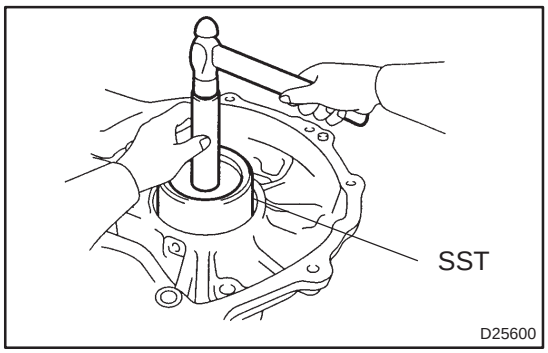

7. REMOVE DIFFERENTIAL SIDE BEARING RETAINER OIL SEAL

(a) Place the transaxle case in vise.
(b) Using SST, remove the oil seal.
SST 09308–00010

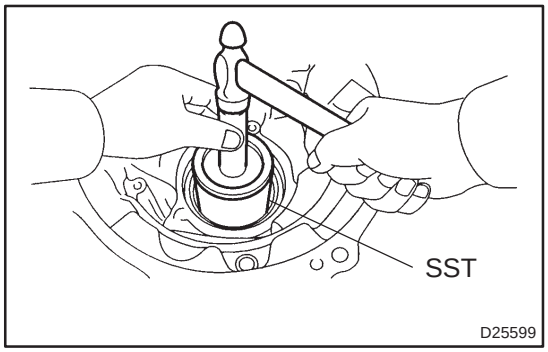

8. REMOVE TRANSAXLE HOUSING OIL SEAL

(a) Place the transaxle housing in vise.
(b) Using SST, remove the oil seal.
SST 09308–00010

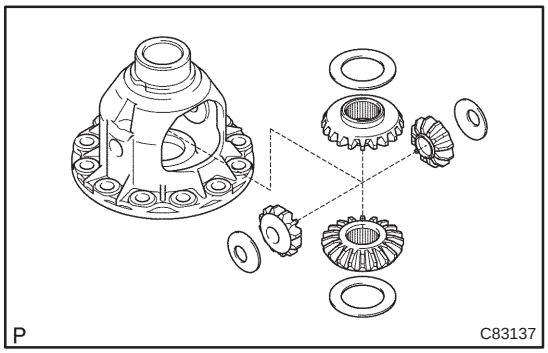

9. INSTALL FRONT DIFFERENTIAL SIDE GEAR

(a) Coat the 2 front differential side gears, 2 side gear thrust washers, 2 front differential pinions and 2 pinion thrust washers with ATF and install them to the differential case.

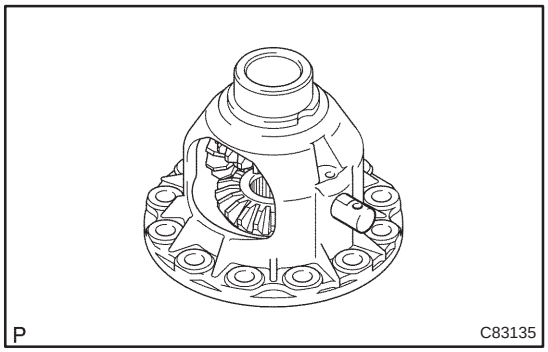

10. INSTALL FRONT DIFFERENTIAL PINION SHAFT NO.1

(a) Coat the front differential pinion shaft No. 1 with ATF and install it to the differential case.

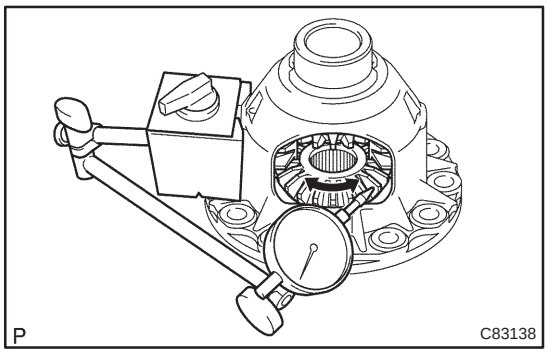

11. INSPECT FRONT DIFFERENTIAL SIDE GEAR BACKLASH

(a) Using a dial indicator, inspect the backlash of the side gear.

Standard backlash:
0.05 – 0.20 mm (0.0020 – 0.0079 in.)
Thrust washer thickness:

Mark	Thickness
–	1.0 mm (0.0394 in.)
–	1.1 mm (0.0433in.)
–	1.2 mm (0.0472 in.)
–	1.3 mm (0.0512 in.)

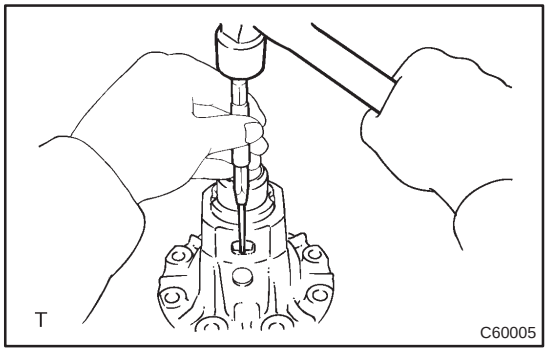

12. INSTALL FRONT DIFFERENTIAL PINION SHAFT STRAIGHT PIN

(a) Using a pin punch and hammer, install the pinion shaft straight pin.

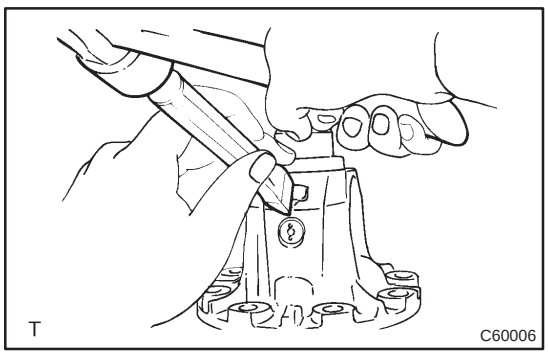

(b) Using a chisel and hammer, stake the differential case.

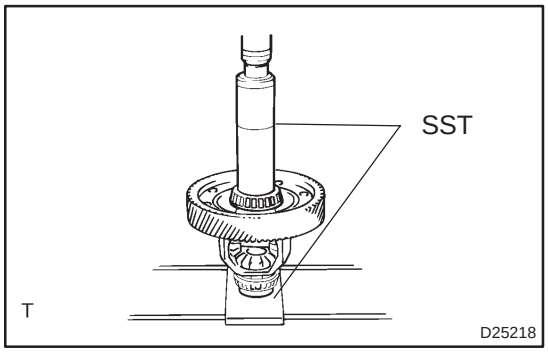

13. INSTALL FR DIFFERENTIAL CASE REAR TAPERED ROLLER BEARING

(a) Using SST and a press, install the front differential case tapered roller bearing rear inner race to the differential case.
SST 09608–06041

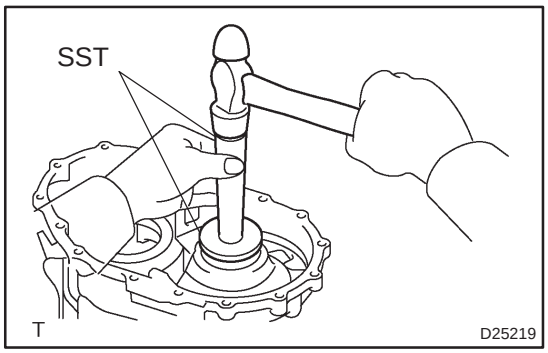

(b) Using SST and a hammer, install the case washer and front differential case tapered roller bearing rear outer race to the transaxle case.
SST 09950–60020 (09951–00710), 09950–70010 (09951–07100)

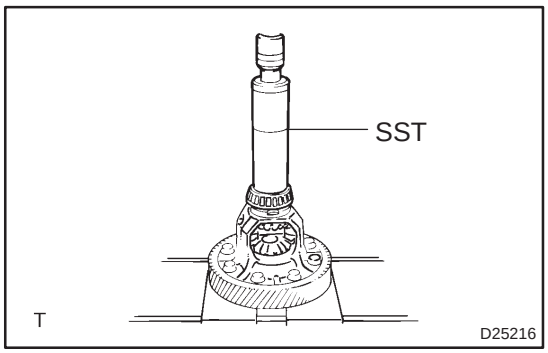

14. INSTALL FR DIFFERENTIAL CASE FRONT TAPERED ROLLER BEARING

(a) Using SST and a press, install the front differential case tapered roller bearing front inner race to the differential case.
SST 09608–06041

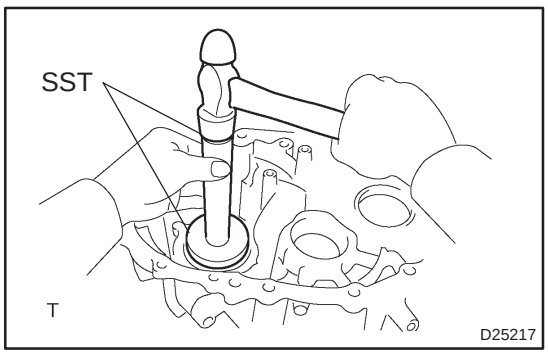

(b) Using SST and a hammer, install the front differential case tapered roller bearing front outer race to the transaxle housing.
SST 09950–60020 (09951–00680), 09950–70010 (09951–07100), 09950–60010 (09951–00340)

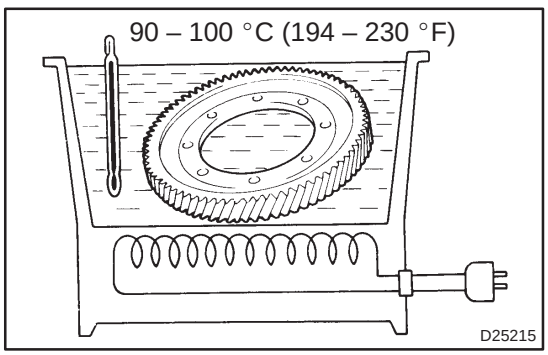

15. INSTALL FRONT DIFFERENTIAL RING GEAR

(a) Using ATF and hear, hear the front differential ring gear to 90 – 110 °C (194.0 – 230.0 °F).
(b) Clean the contact surface of the front differential case.

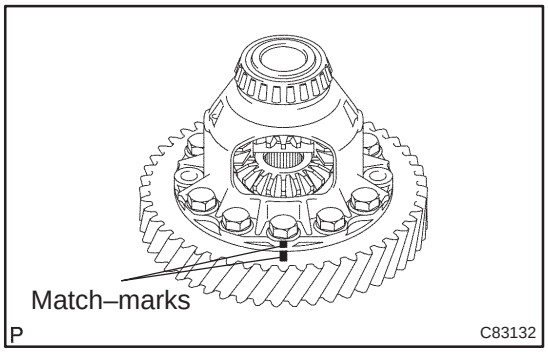

(c) Set the match–marks, install the front differential ring gear case quickly.

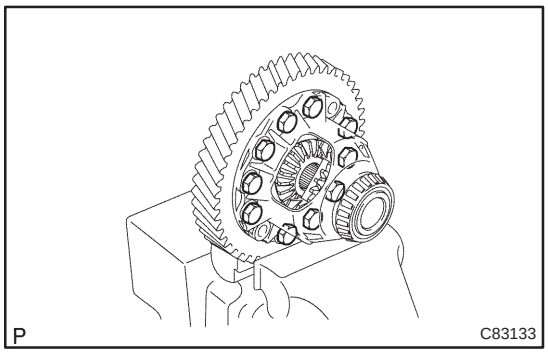

(d) Tighten the 10 bolts.
Torque: 95 N·m (969 kgf·cm, 70 ft·lbf)

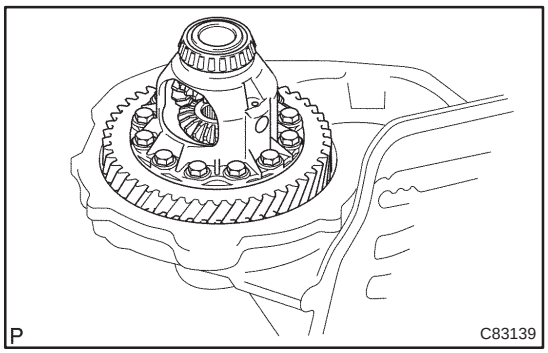

16. INSPECT TAPERED POLLER BEARING PRELOAD

(a) Install the differential assy to the transaxle case.

(b) Install the transaxle housing to the transaxle case.

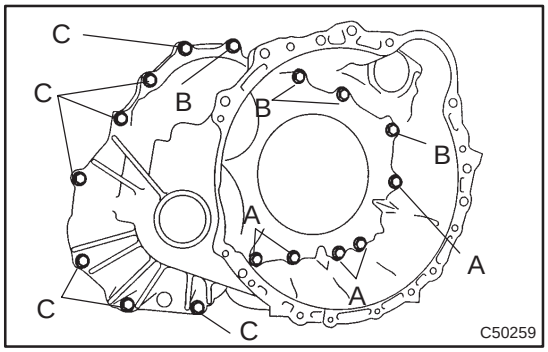

(c) Install the 16 bolts.
Torque:
Bolt A, B: 29.4 N·m (300 kgf·cm, 21.7 ft·lbf)
Bolt C: 22.1 N·m (225 kgf·cm, 16.3 ft·lbf)

Bolt	Bolt length (mm)
A, B	42
C	50

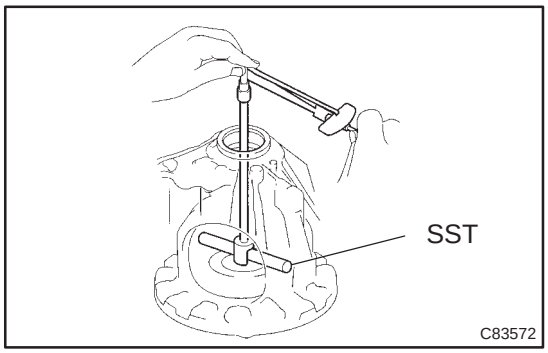

(d) Using SST, turn the differential assy.
SST 09564–32011

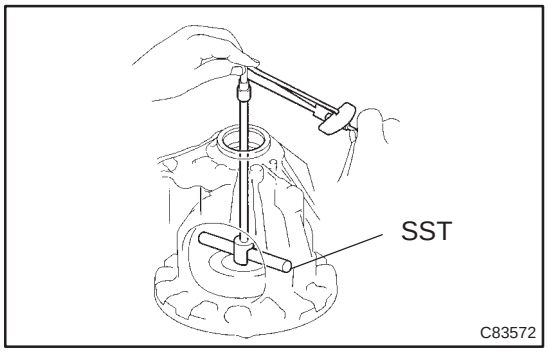

(e) Using SST and torque wrench, measure the preload of the differential assy.
SST 09564–32011
Preload
New bearing:
0.20 – 0.69 N·m (2.0 – 7.0 kgf·cm, 1.8 – 6.1 in.·lbf)
Used bearing:
0.10 – 0.35 N·m (1.0 – 3.6 kgf·cm, 0.9 – 3.1 in.·lbf)
Adjusting shim thickness: mm (in.)

Mark	Thickness
0	1.90 (0.074)
1	1.95 (0.077)
2	2.00 (0.079)
3	2.05 (0.081)
4	2.10 (0.083)
5	2.15 (0.085)
6	2.20 (0.087)
7	2.25 (0.089)
8	2.30 (0.091)
9	2.35 (0.093)
A	2.40 (0.094)
B	2.45 (0.096)
C	2.50 (0.098)
D	2.55 (0.100)
E	2.60 (0.102)
F	2.65 (0.104)
G	2.70 (0.106)
H	2.75 (0.108)
J	2.80 (0.110)

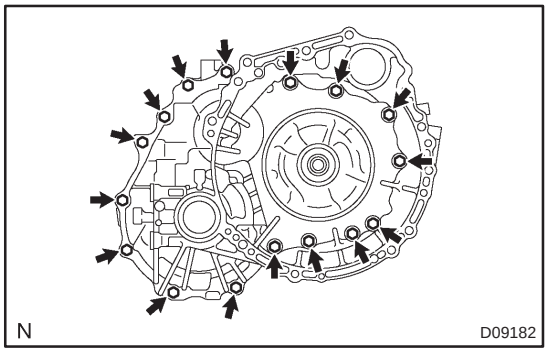

(f) Remove the 16 bolts.
(g) Using a practice hammer, remove the transaxle housing.

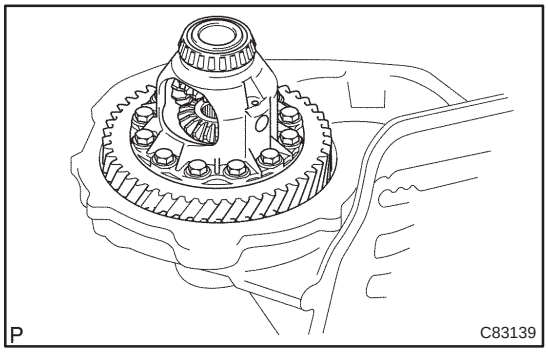

(h) Remove the differential assy.

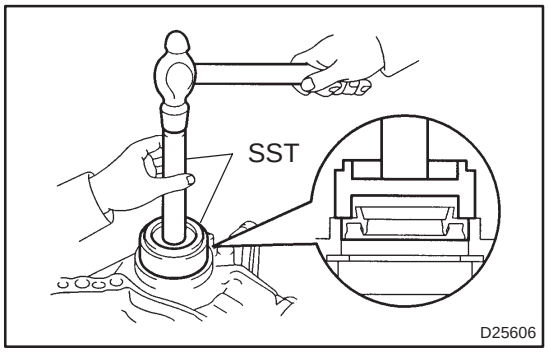

17. INSTALL TRANSAXLE HOUSING OIL SEAL

(a) Using SST, drive into a new oil seal.
SST 09350–32014 (09351–32150), 09950–70010 (09951–07150)

(b) Coat the rip of oil seal with a little MP grease.

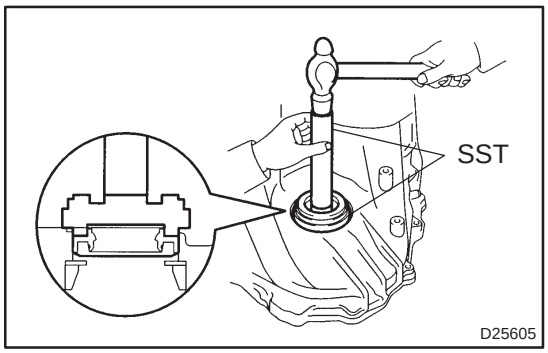

18. INSTALL DIFFERENTIAL SIDE BEARING RETAINER OIL SEAL

(a) Using SST, drive into a new oil seal.
SST 09350–32014 (09351–32150), 09950–70010 (09951–07150)

(b) Coat the rip of the oil seal with a little MP grease.

980WL–01

3501/TRANSAXLE OR TRANSMISSION ASSY & GASKET KIT (ATM)

(0011–) U241E

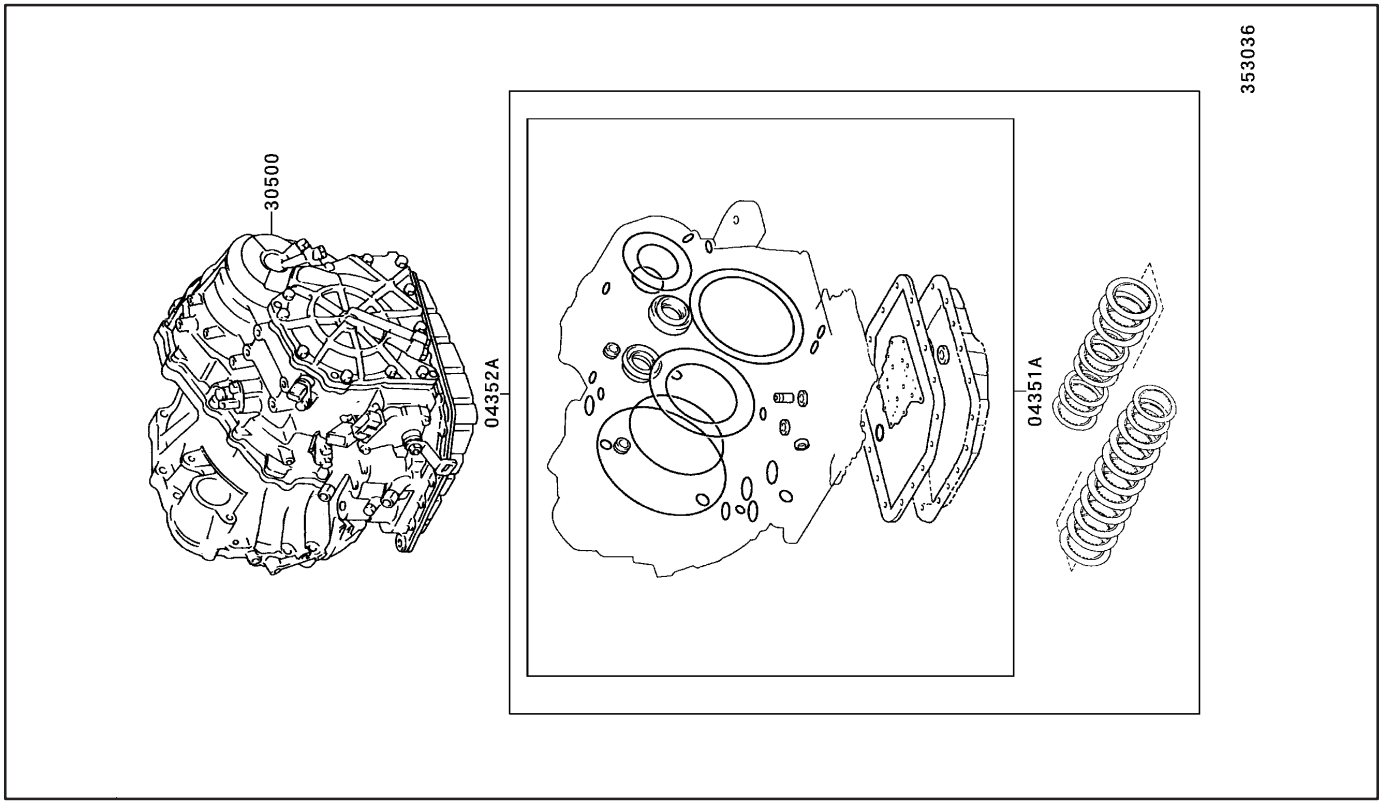

980WM–01

3502/TORQUE CONVERTER, FRONT OIL PUMP & CHAIN (ATM)

(0011–) U241E

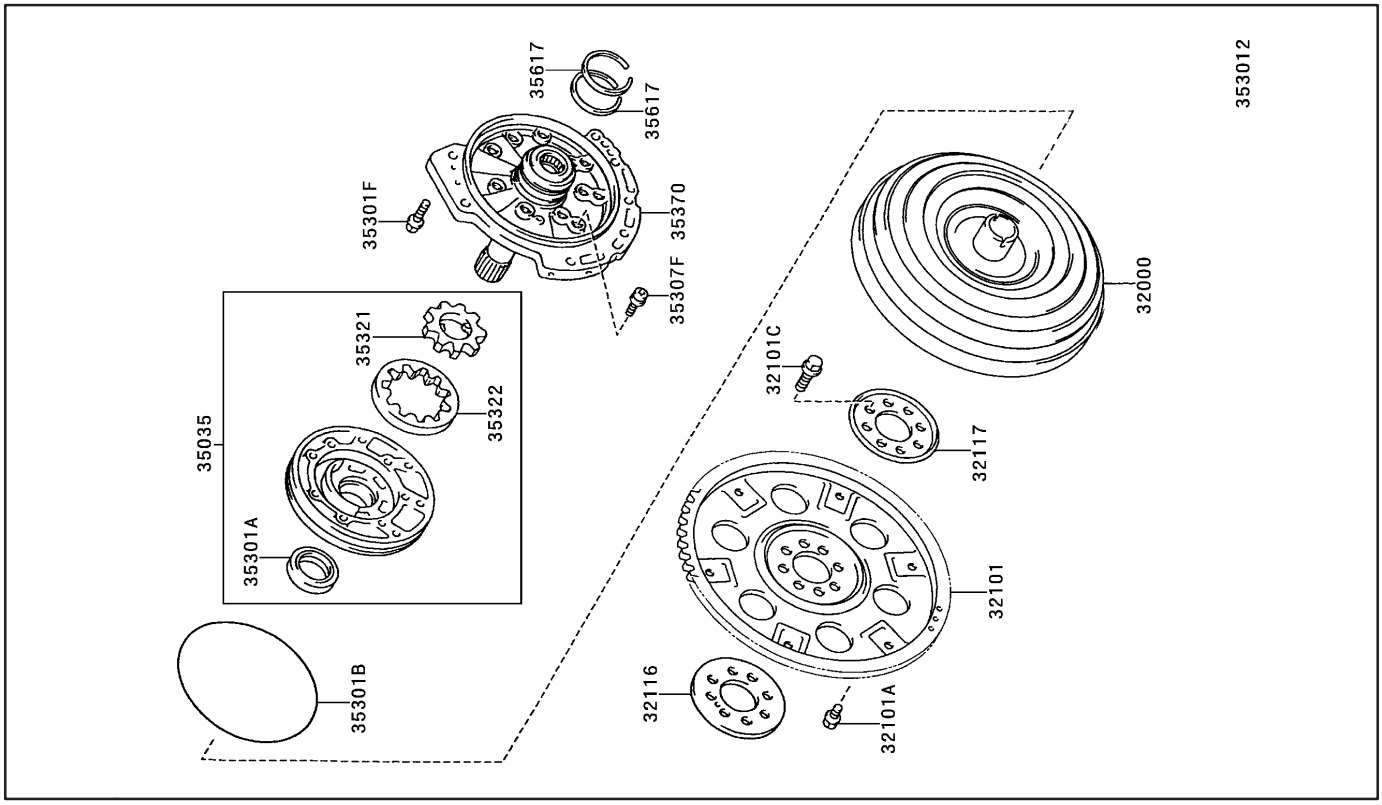

980WN–01

3503/TRANSMISSION CASE & OIL PAN (ATM)

(0011–) U241E

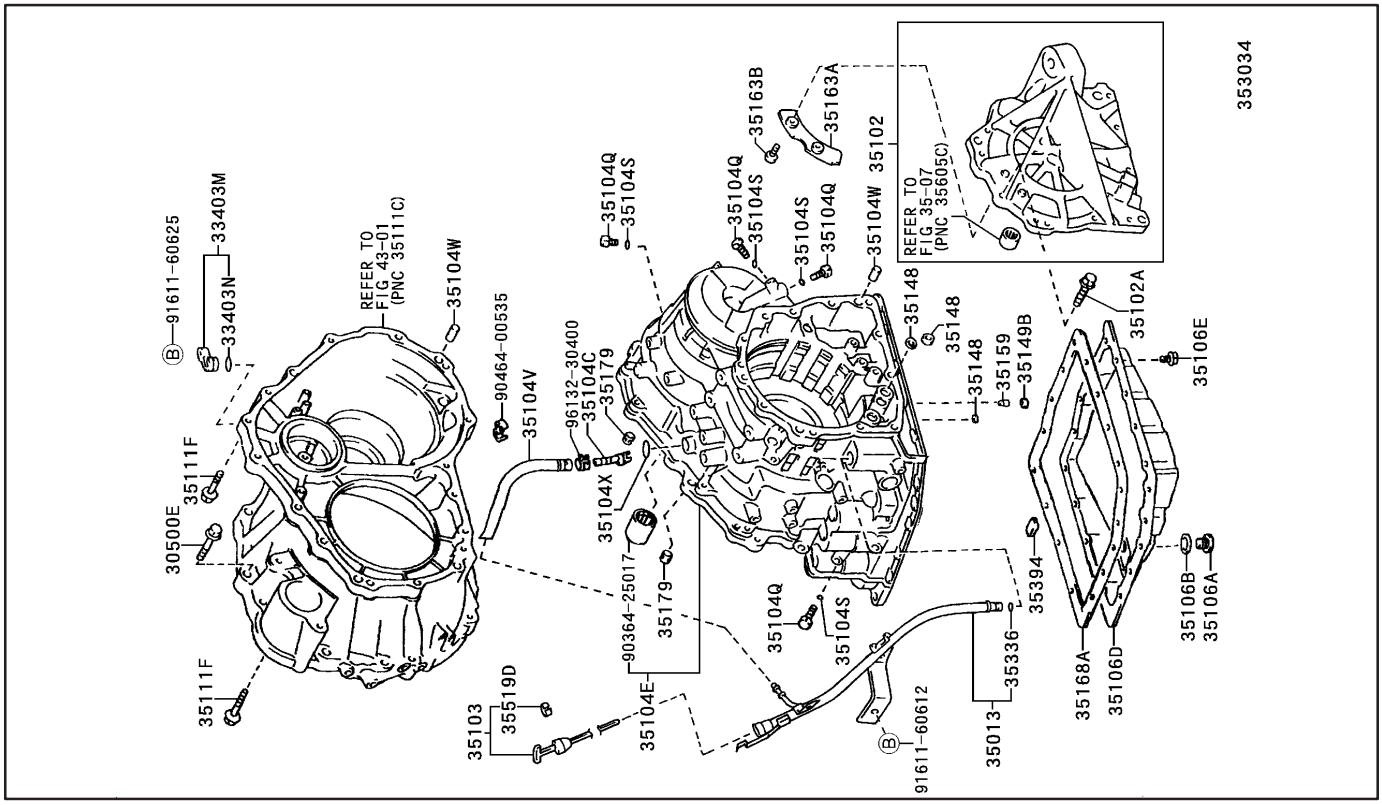

980WO–01

3506/OVERDRIVE GEAR (ATM)

(0011–)ACU2# **U241E**

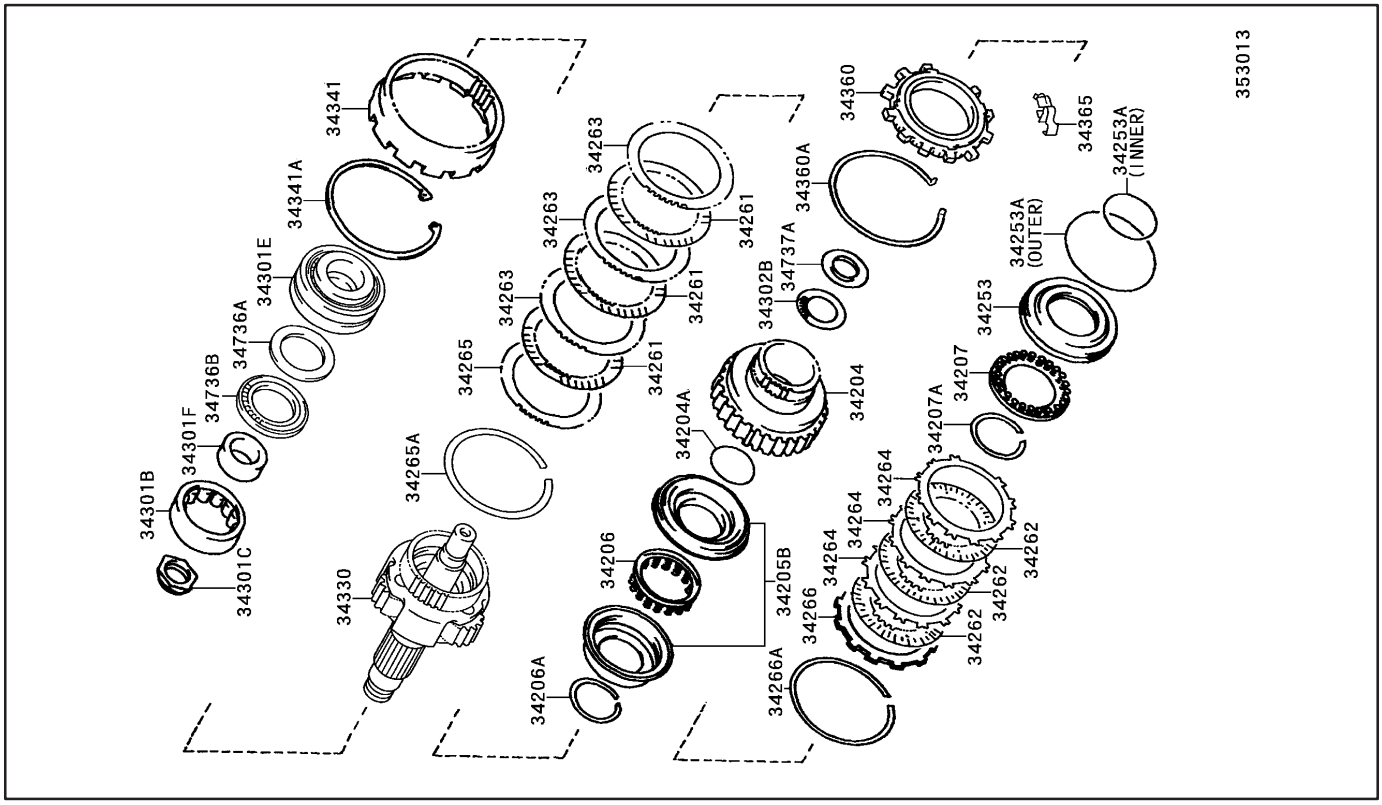

980WP–01

3507/BRAKE BAND & MULTIPLE DISC CLUTCH (ATM)

(0011–)ACU2# **U241E**

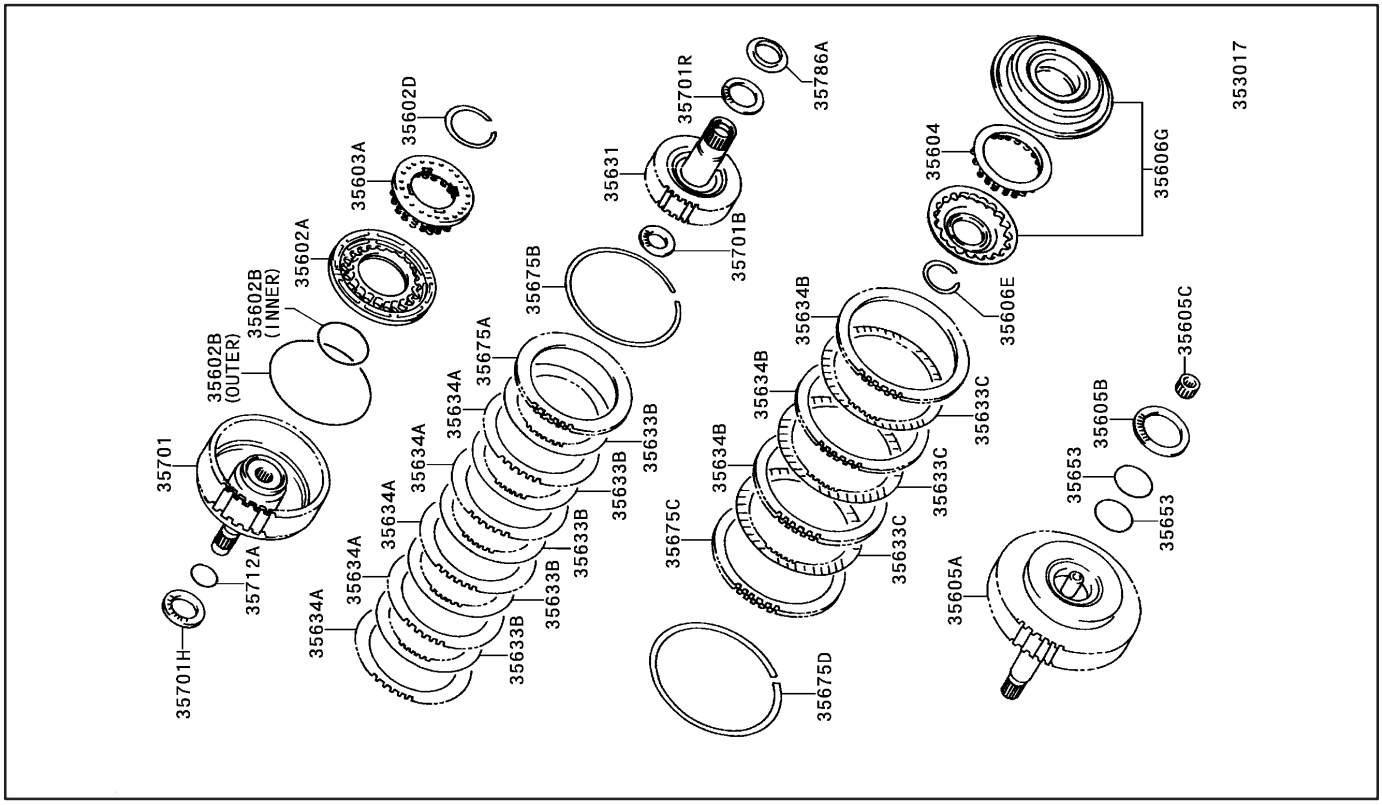

980WQ–01

3508/CENTER SUPPORT & PLANETARY SUN GEAR (ATM)

(0011–)ACU2# **U241E**

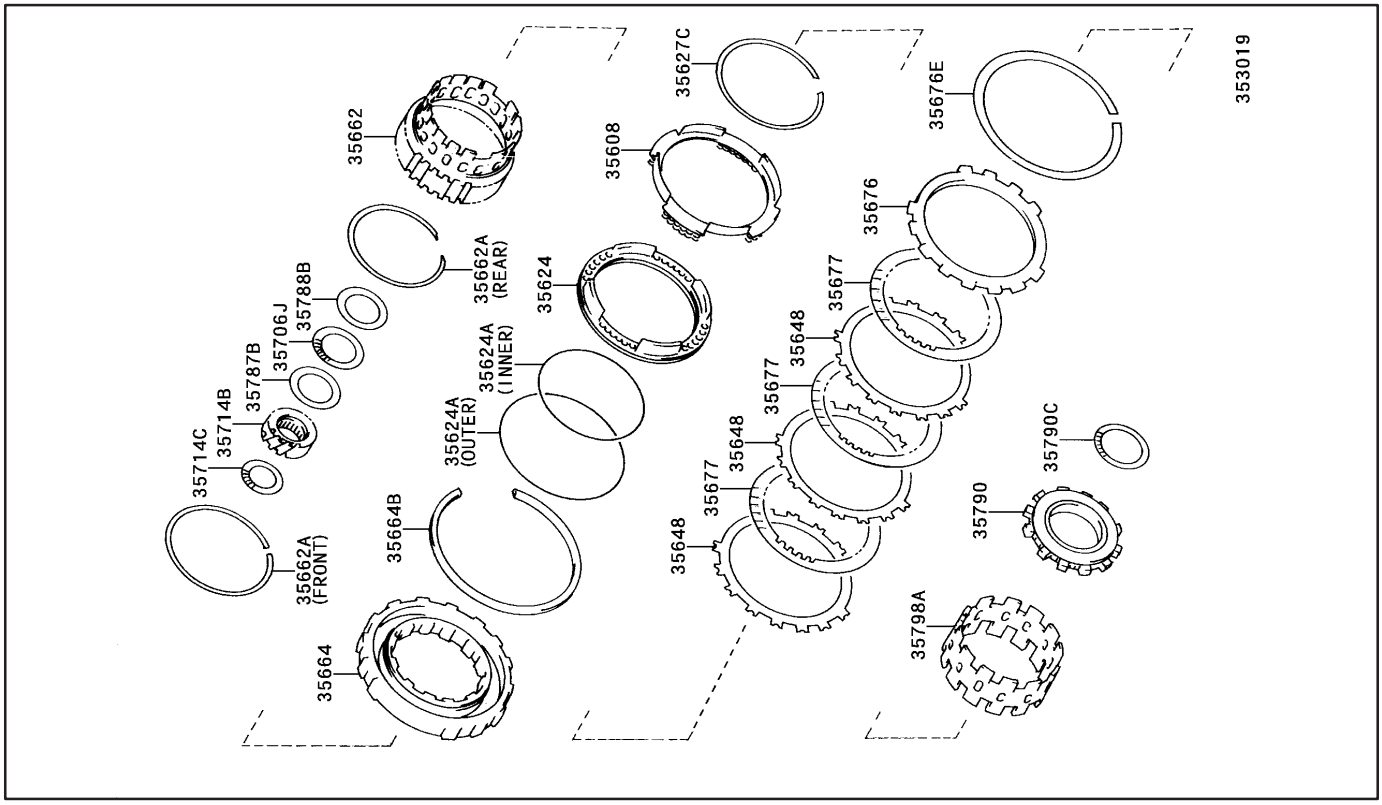

980WR–01

3509/BRAKE NO.3, 1ST & REVERSE BRAKE (ATM)

(0011–)ACU2# **U241E**

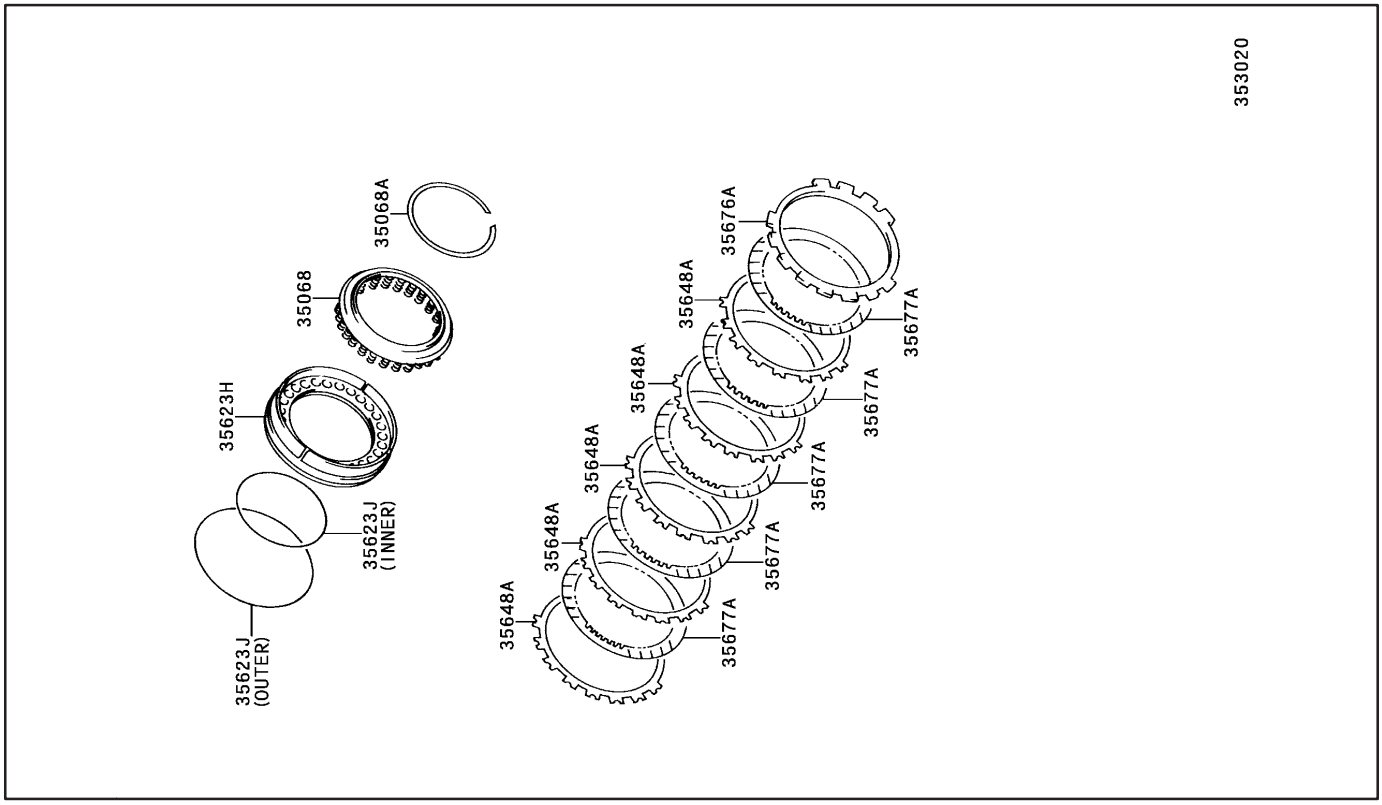

980WS–01

3510/PLANETARY GEAR, REVERSE PISTON & COUNTER GEAR(ATM)

(0011–) U241E

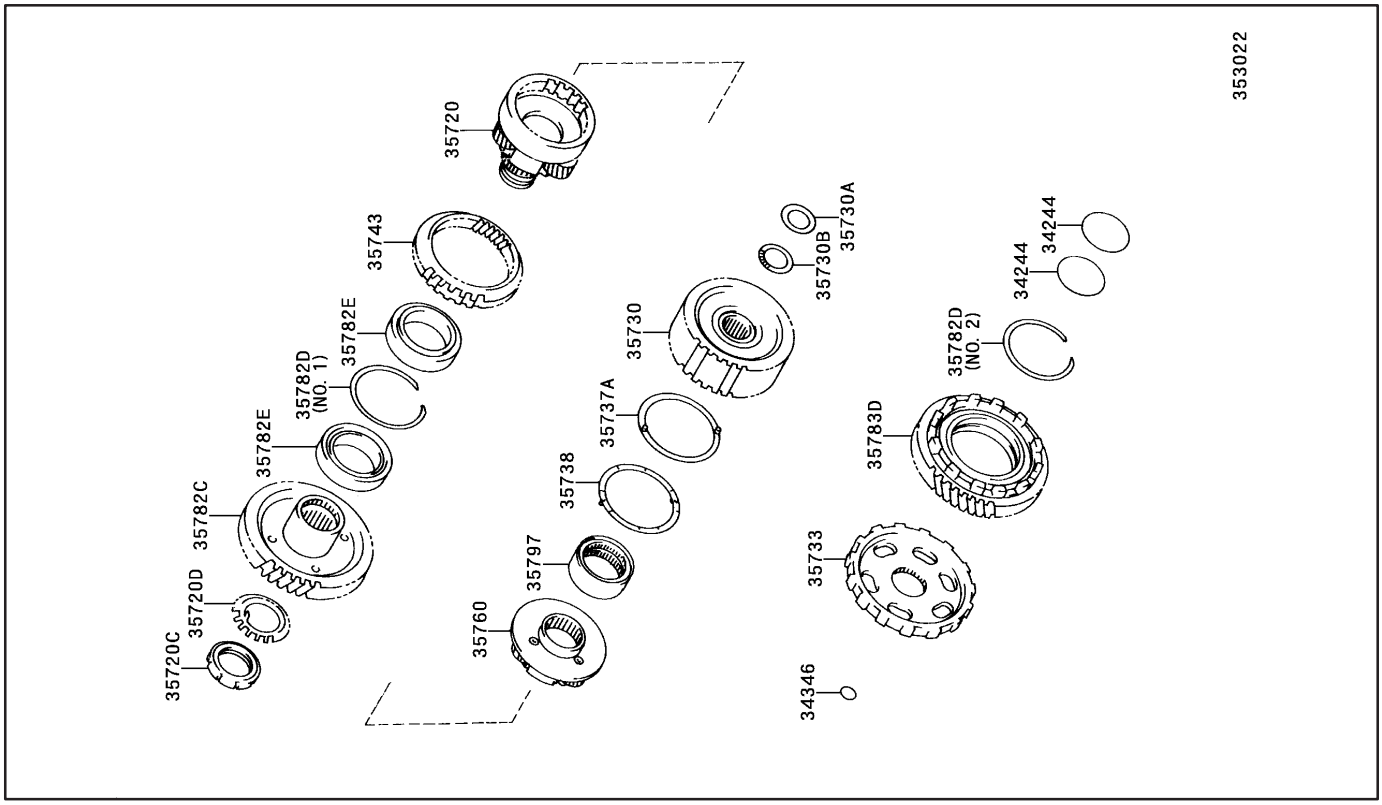

980WT–01

3512/VALVE BODY & OIL STRAINER (ATM)

(0011–) **U140E,U140F,U241E**

ILLUST NO. 1 OF 3

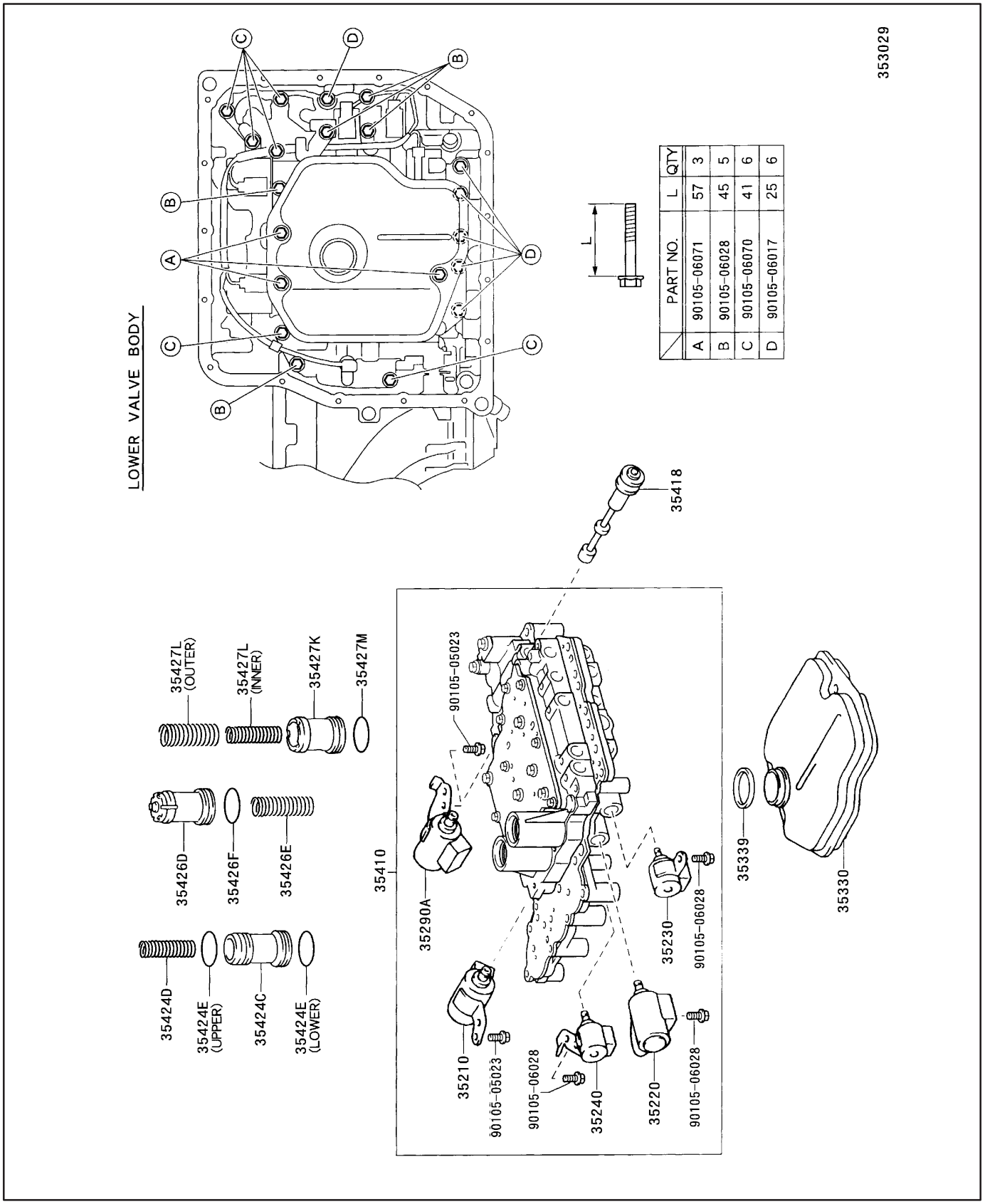

	PART NO.	L	QTY
A	90105-06071	57	3
B	90105-06028	45	5
C	90105-06070	41	6
D	90105-06017	25	6

3512/VALVE BODY & OIL STRAINER (ATM)

(0011–) **U241E ILLUST NO. 2 OF 3**

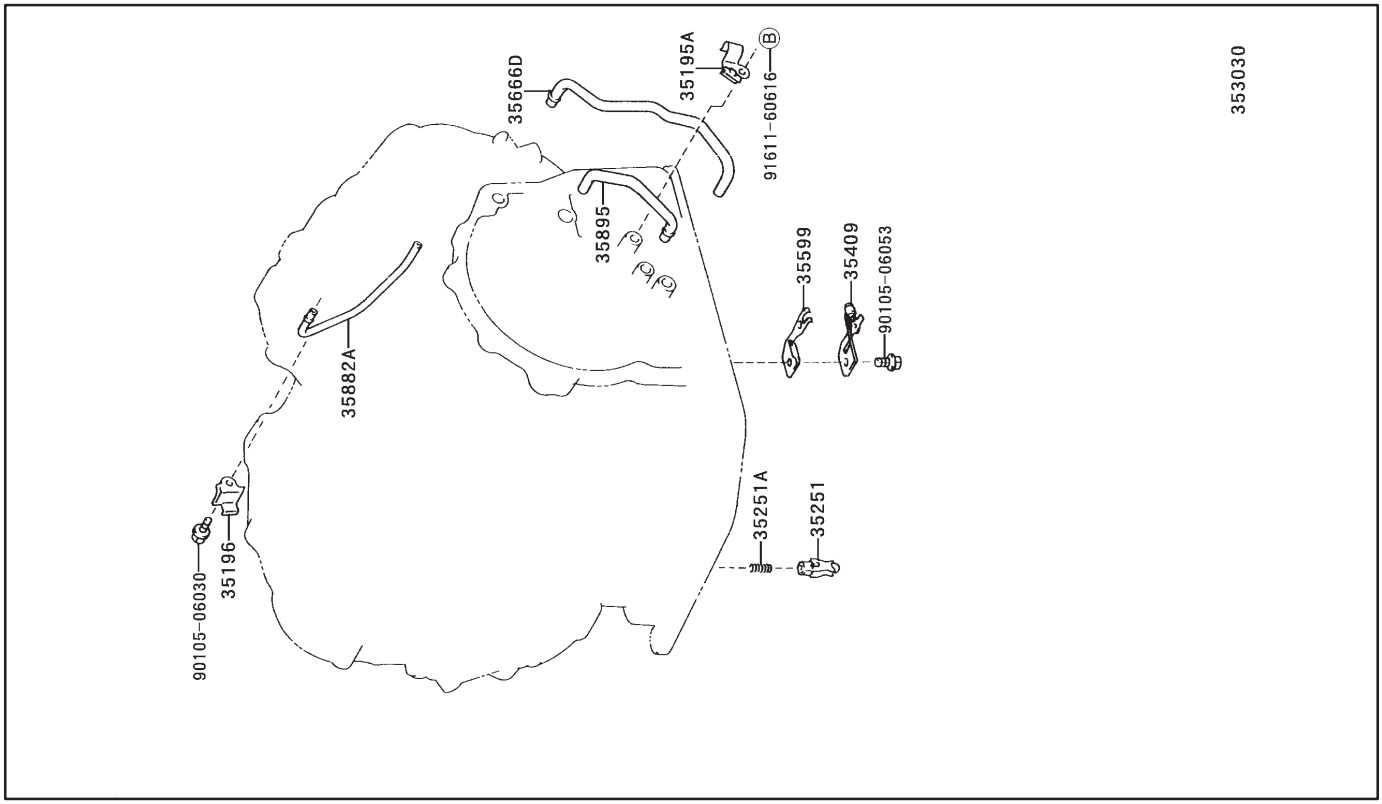

(0011–) **U140E,U140F,U241E ILLUST NO. 3 OF 3**

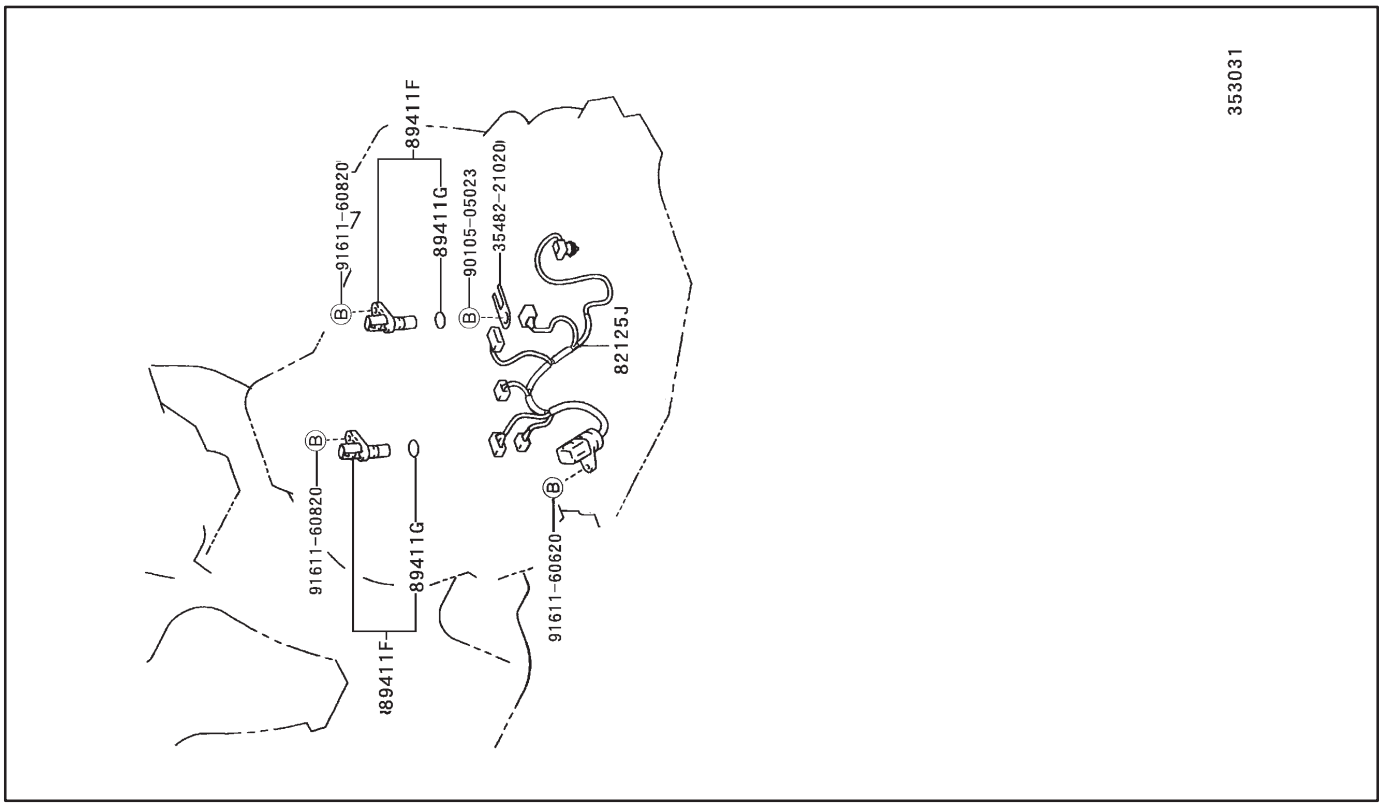

980WU–01

3513/THROTTLE LINK & VALVE LEVER (ATM)

(0011–) **U241E**

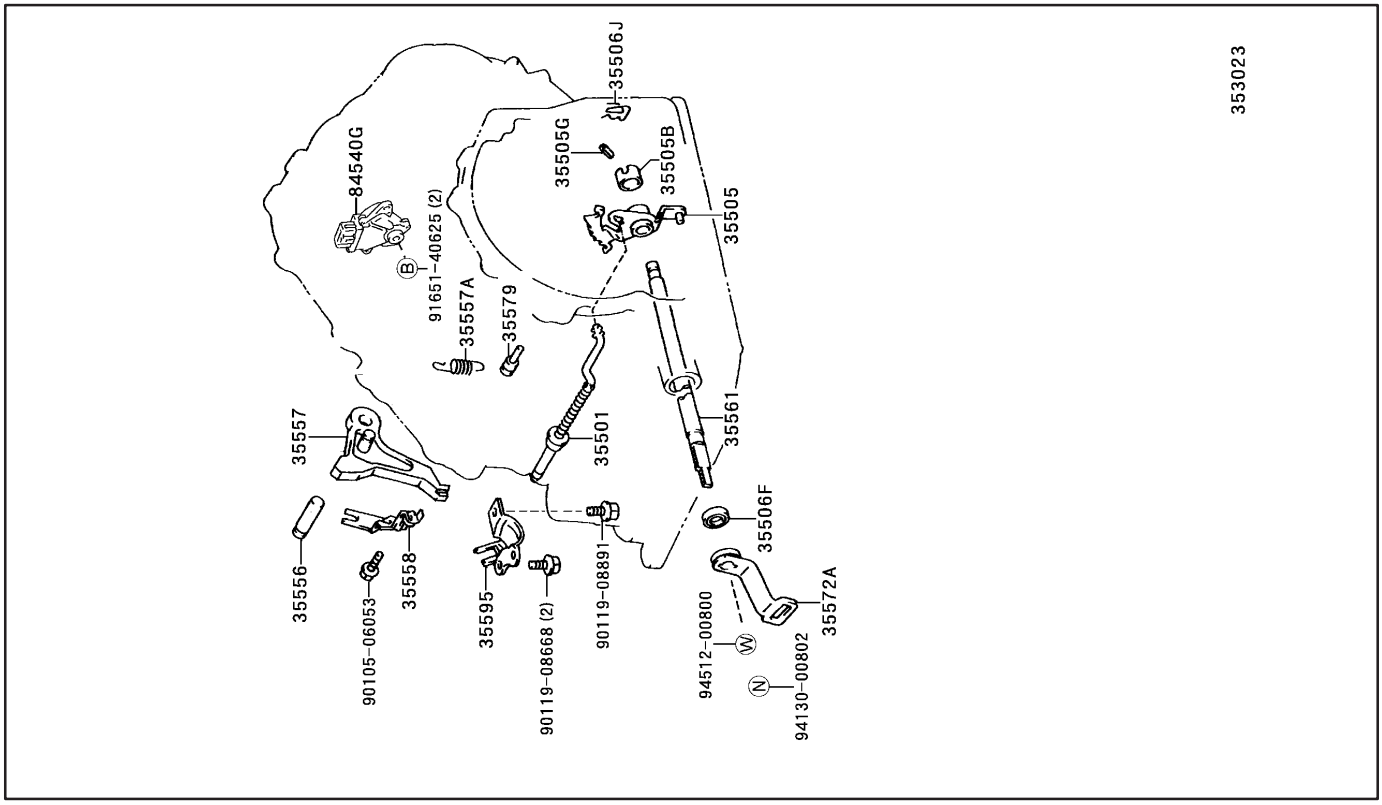

980WV–01

4301/FRONT AXLE HOUSING & DIFFERENTIAL

(0011–) **U241E**

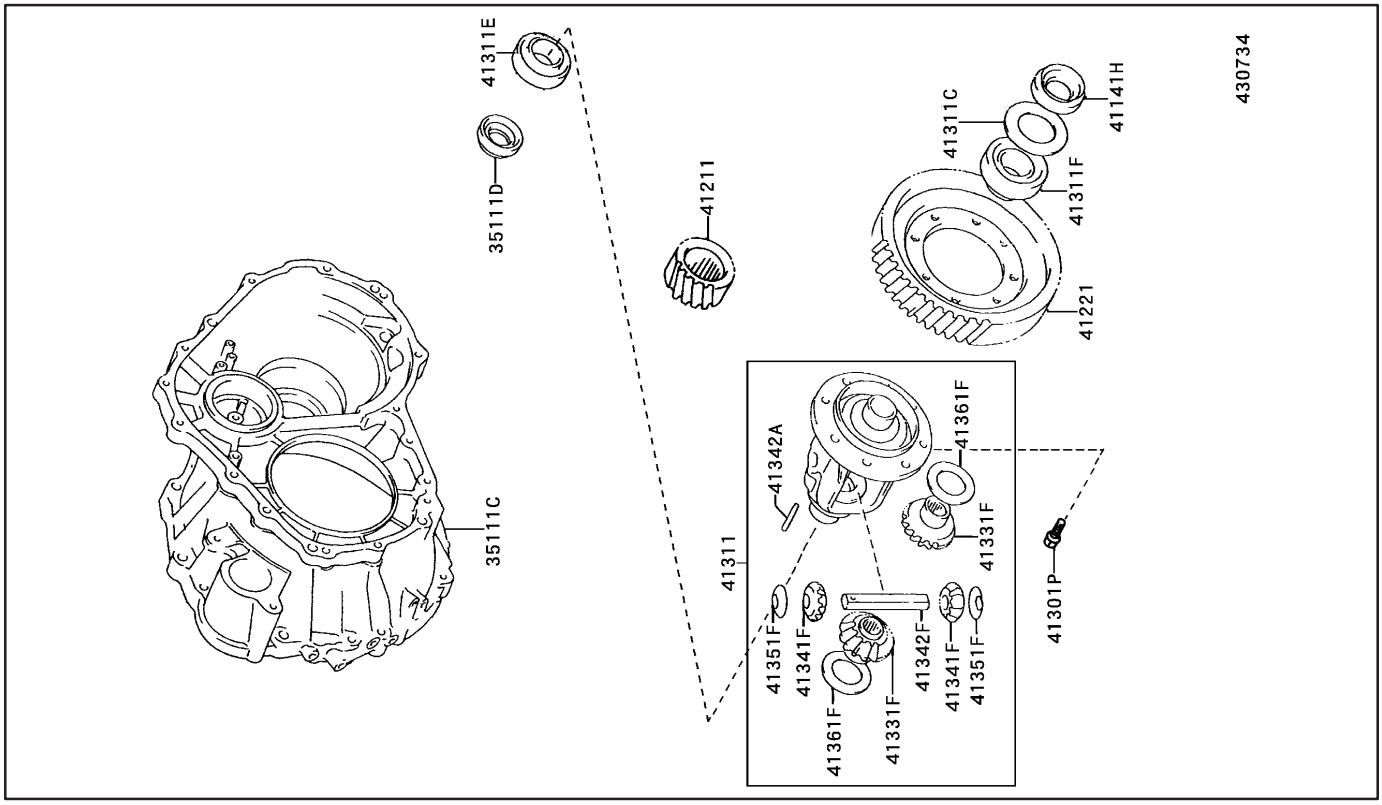

980WW–01

8202/WIRING & CLAMP

(0011–) **ENGINE ROOM ILLUST NO. 1 OF 9**

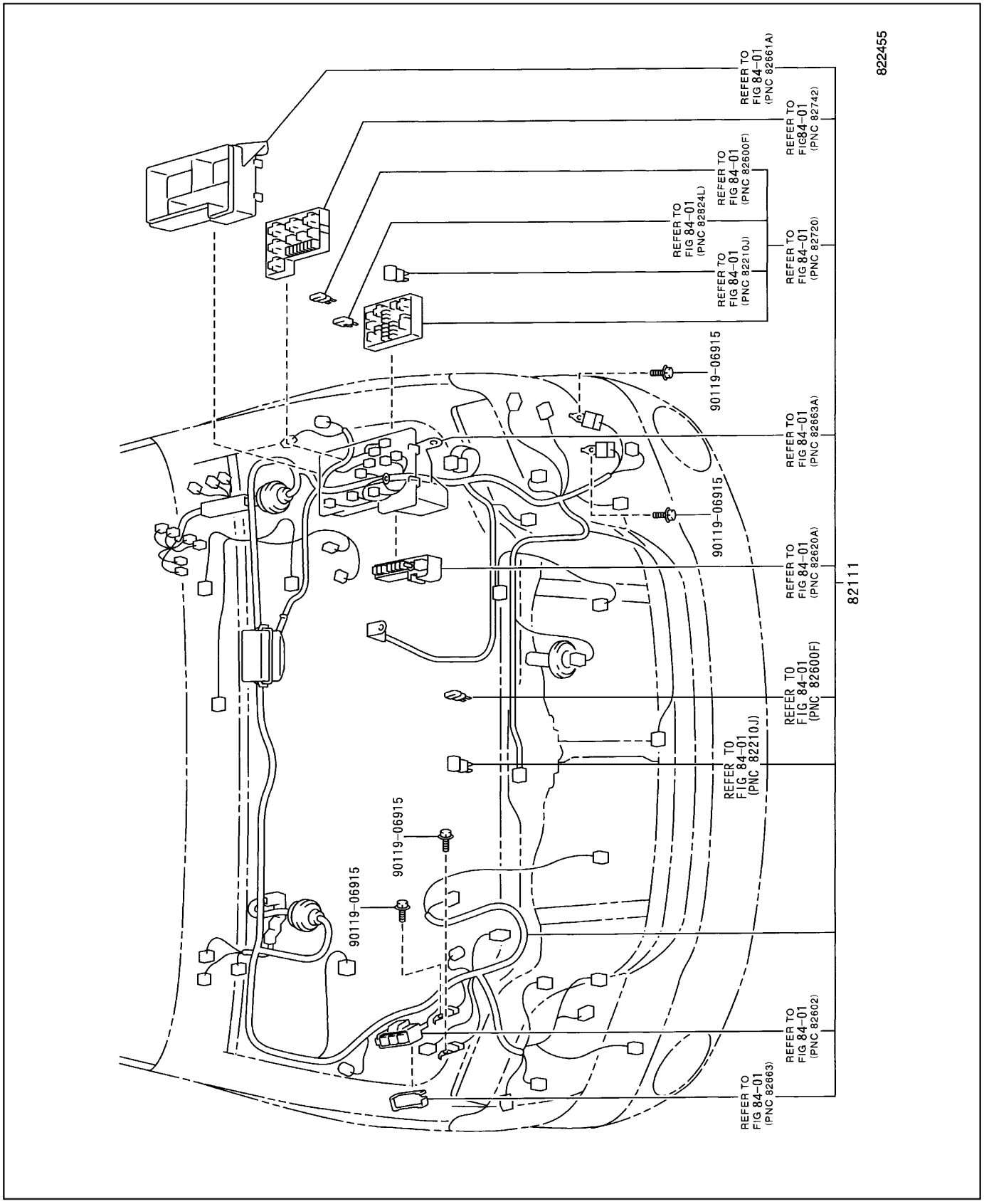

8202/WIRING & CLAMP

(0011–)ACU2# **ENGINE ILLUST NO. 2 OF 9**

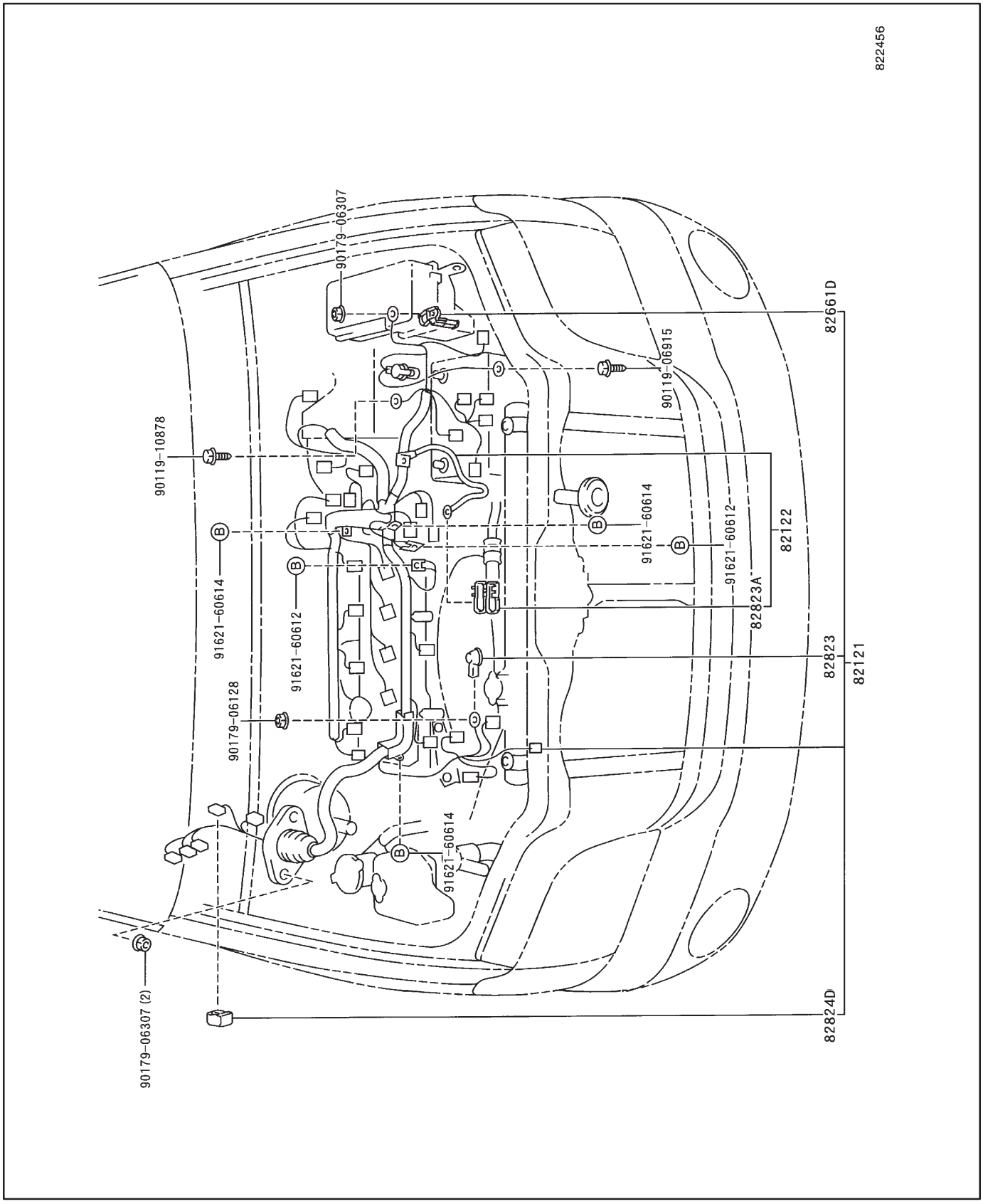

8202/WIRING & CLAMP

(0011–)MCU2# **ENGINE ILLUST NO. 2 OF 9**

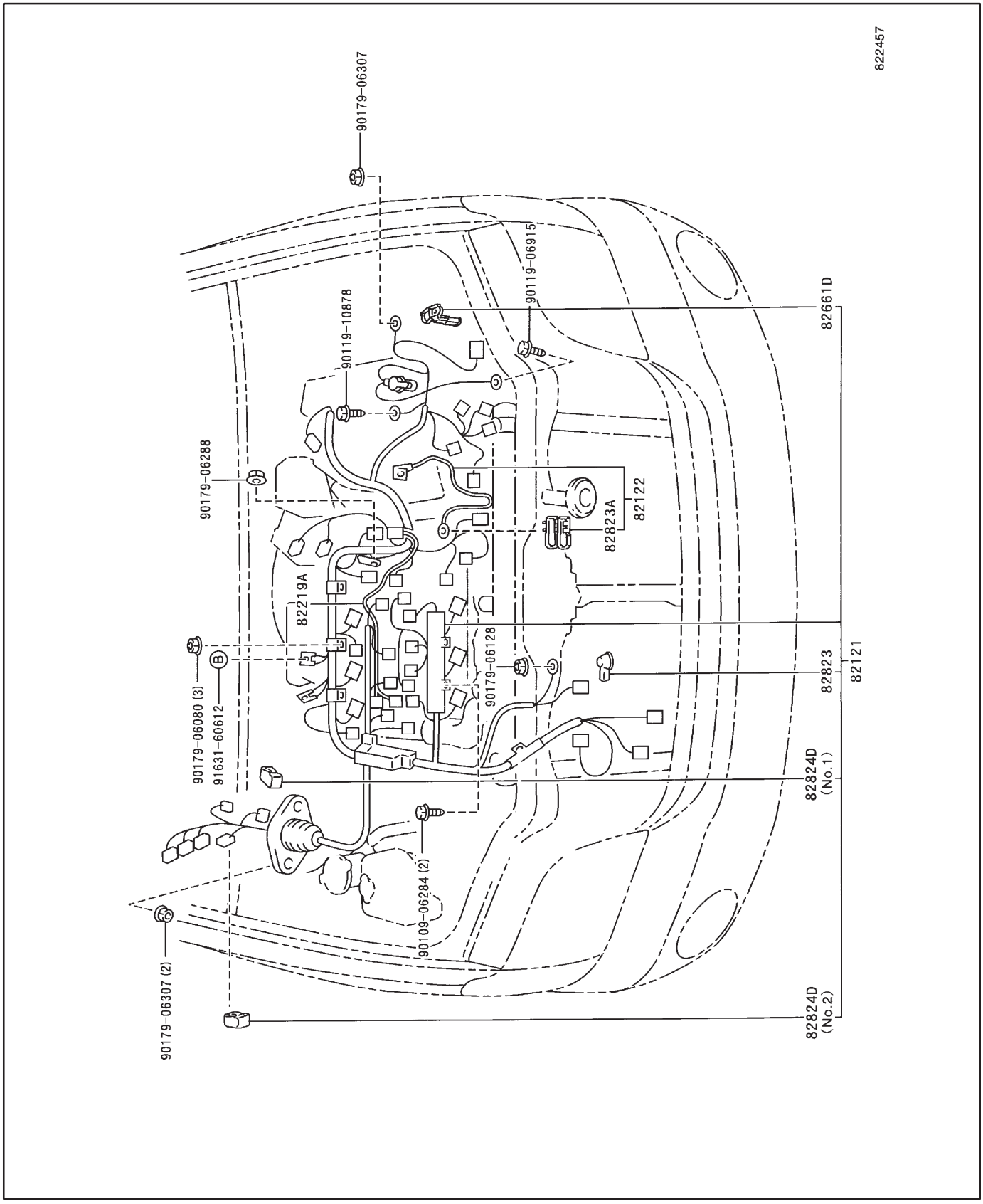

8202/WIRING & CLAMP

(0011–) **COWL ILLUST NO. 3 OF 9**

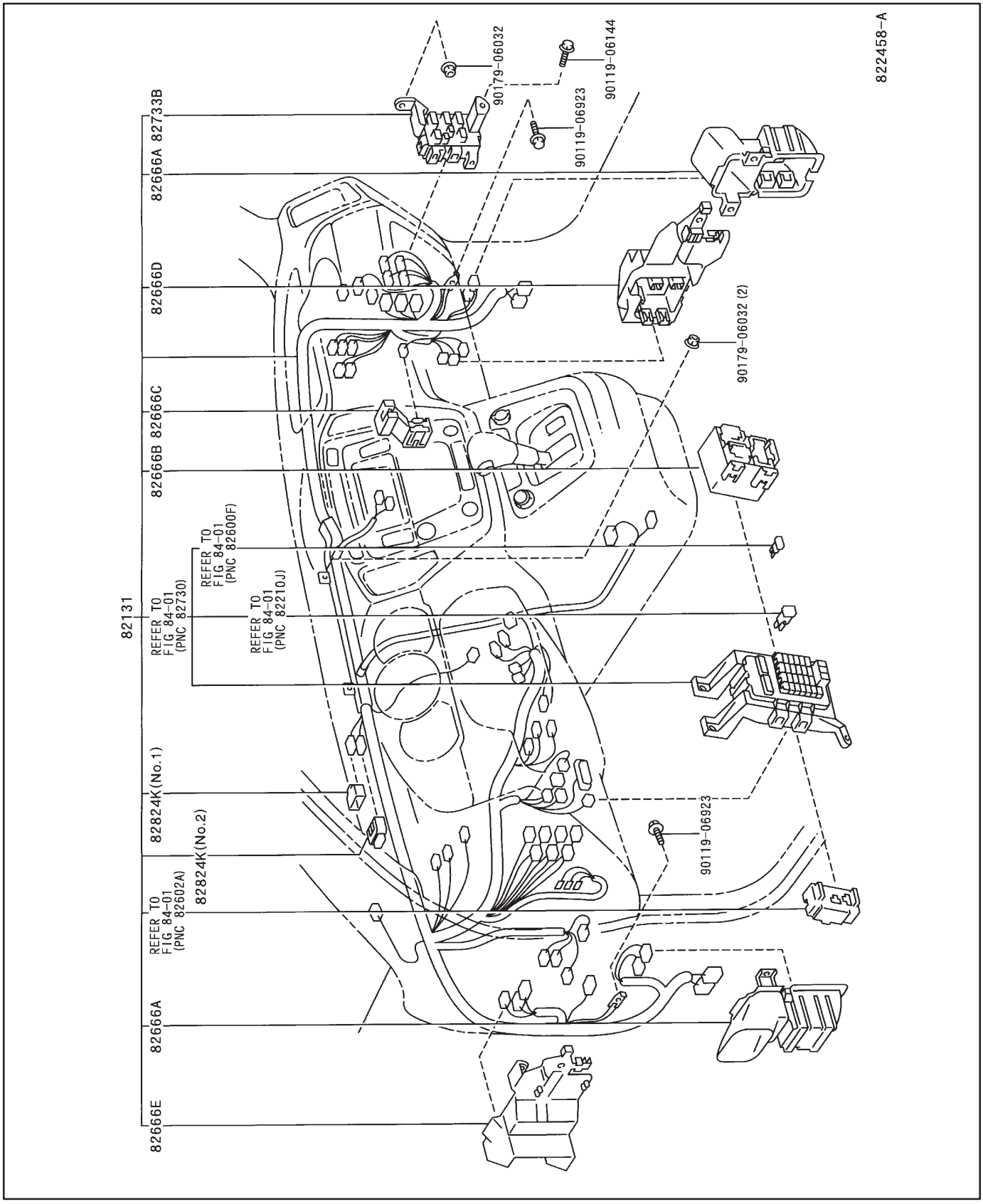

8202/WIRING & CLAMP

(0011–) **INSTRUMENT PANEL ILLUST NO. 4 OF 9**

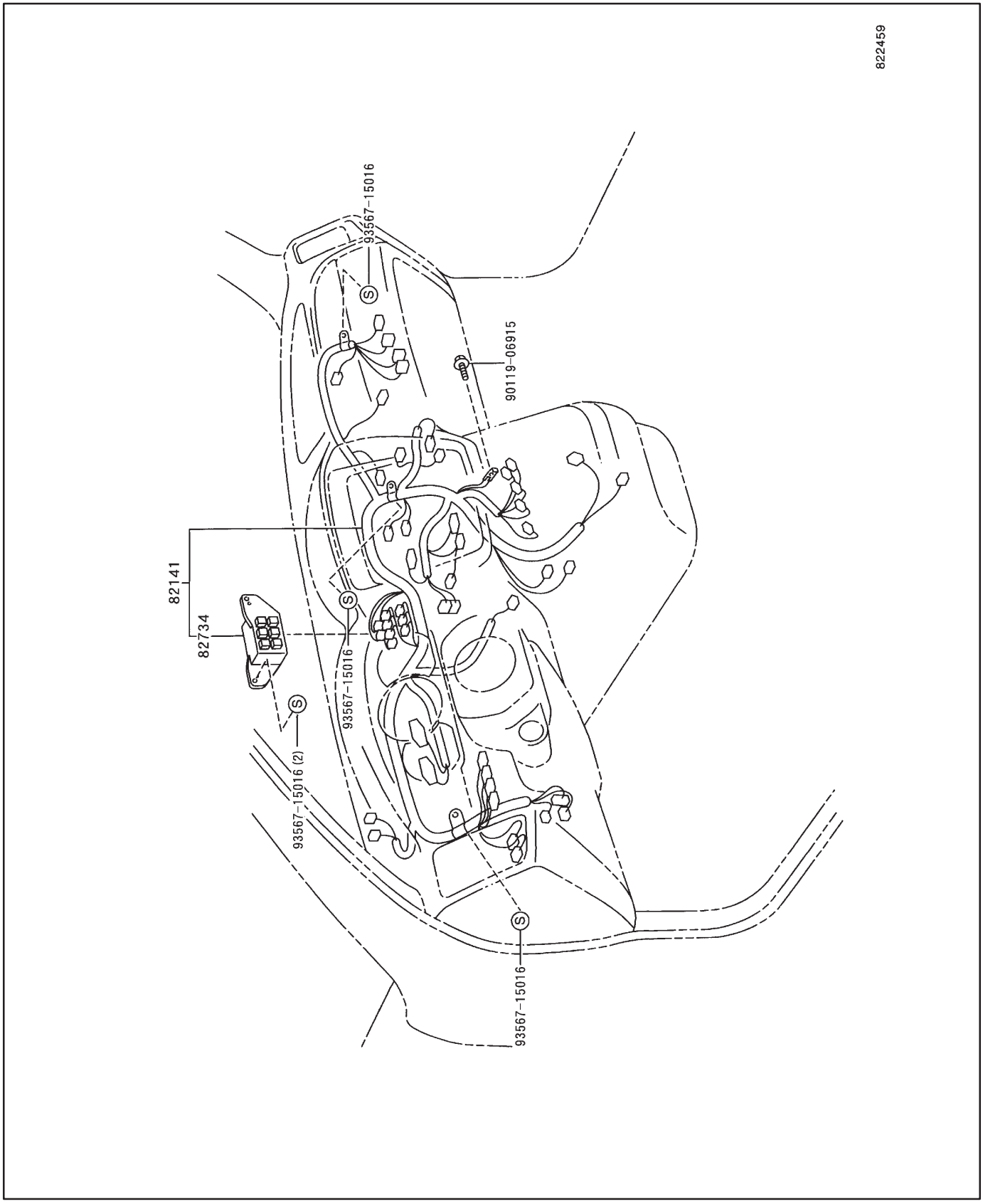

8202/WIRING & CLAMP

(0011–) **FLOOR & ROOF ILLUST NO. 5 OF 9**

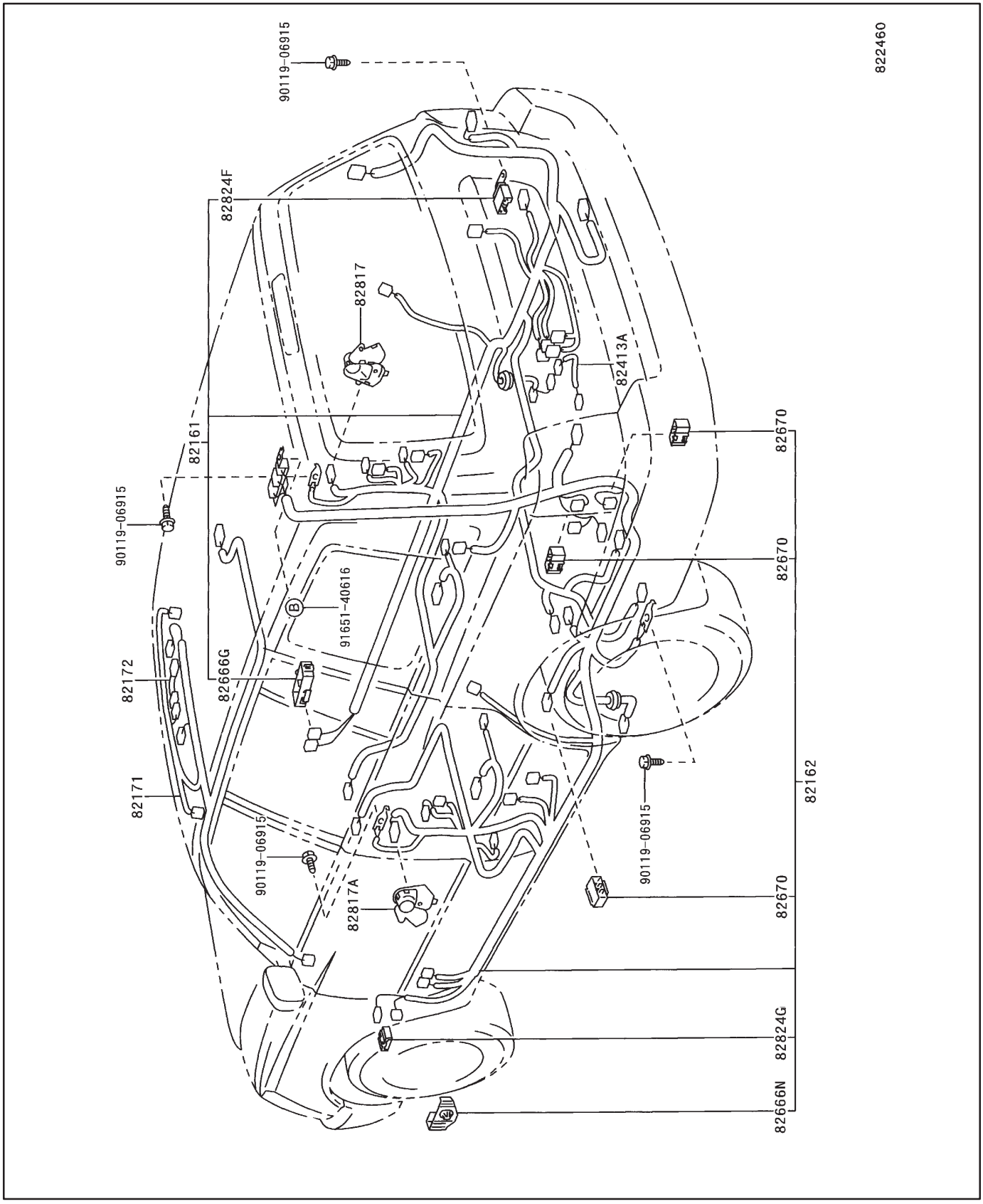

8202/WIRING & CLAMP

(0011–) **DOOR ILLUST NO. 6 OF 9**

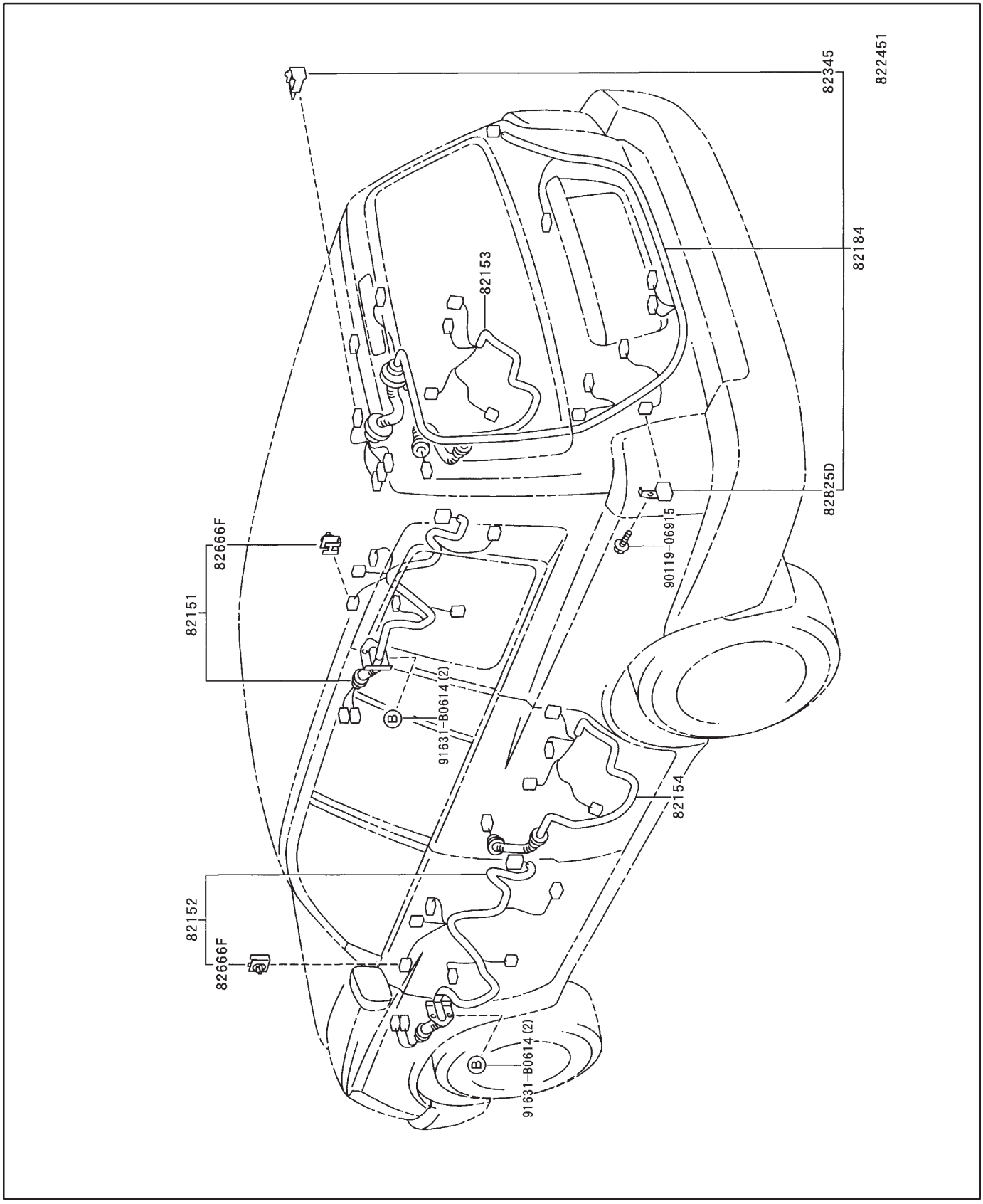

8202/WIRING & CLAMP

(0011–) **SEAT ILLUST NO. 7 OF 9**

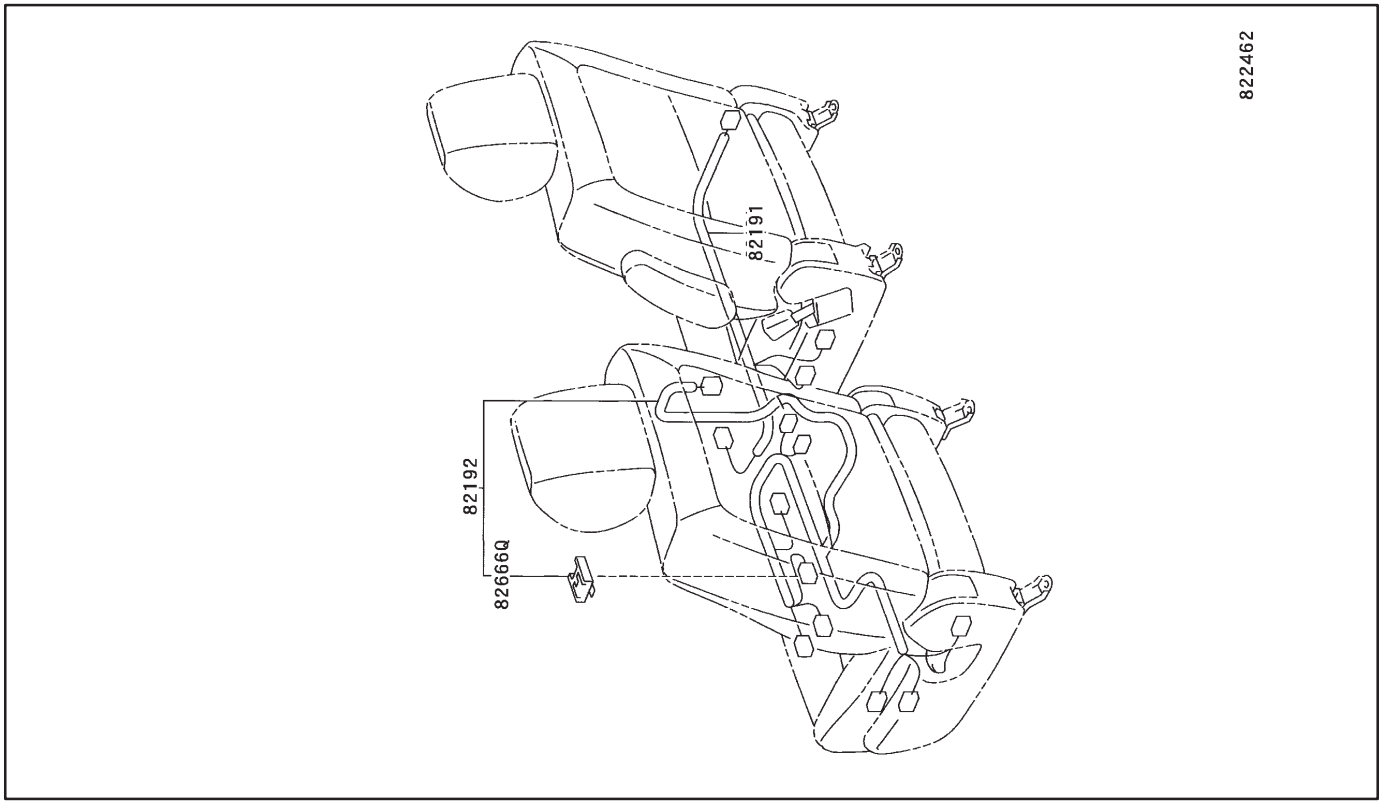

(0011–) **CABLE BOND ILLUST NO. 8 OF 9**

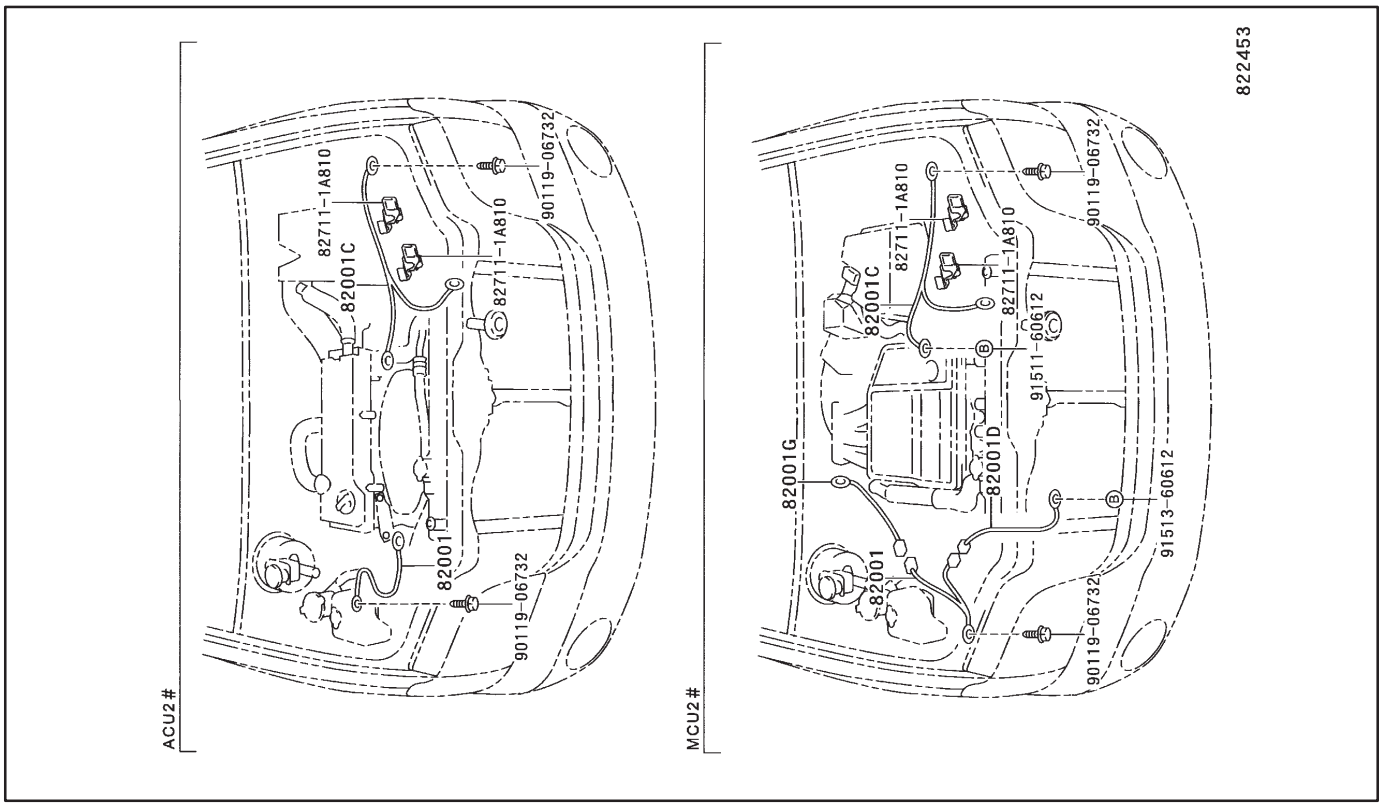

8202/WIRING & CLAMP

(0011–)

CLAMP & BRACKET ILLUST NO. 9 OF 9

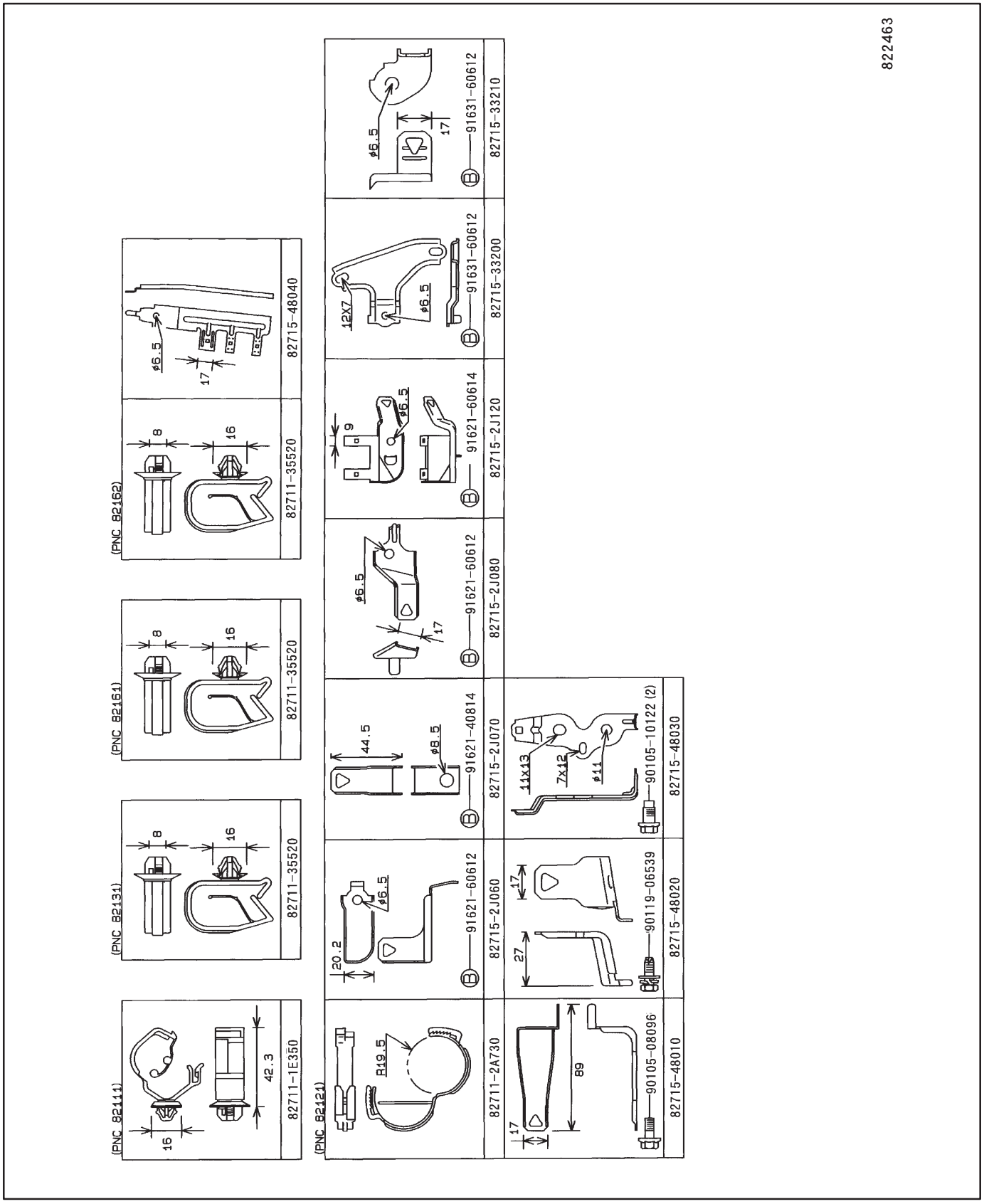

HOW TO USE THIS ENGINE REPAIR MANUAL (1AZ–FE)

0107M–01

GENERAL INFORMATION

1. GENERAL DESCRIPTION

(a) This manual is made in accordance with SAE J2008.

(b) Generally repair operations can be separated in the following 3 main processes:
1. Diagnosis
2. Removing and Installing, Replacing, Disassembling, Installing and Checking, Adjusting
3. Final Inspection

(c) This manual explains ”Removing and Installing, Replacing, Disassembling, Installing and Checking, Adjusting”, but ”Final Inspection” is omitted.

(d) The following essential operations are not written in this manual, however these operations must be done in the practical situation.
(1) Operation with a jack or lift
(2) Cleaning of a removed part when necessary
(3) Visual check

2. INDEX

(a) An alphabetical INDEX is provided as a section on the end of the book to guide you to the item to be repaired.

3. PREPARATION

(a) Use of special service tools (SST) and special service materials (SSM) may be required, depending on the repairing condition. Be sure to use SST and SSM when they are required and follow the working procedure properly. A list of SST and SSM is in the Preparation section of this manual.

4. REPAIR PROCEDURES

(a) Component drawing is placed as the section or title when necessary.

(b) Illustrations of the parts catalog are placed as the ”disassembled parts drawing” so that it enables you to understand the fitting condition of the components.

(c) Non–reusable parts, grease applied parts, precoated parts and tightening torque are specified in the components drawing.

Example:

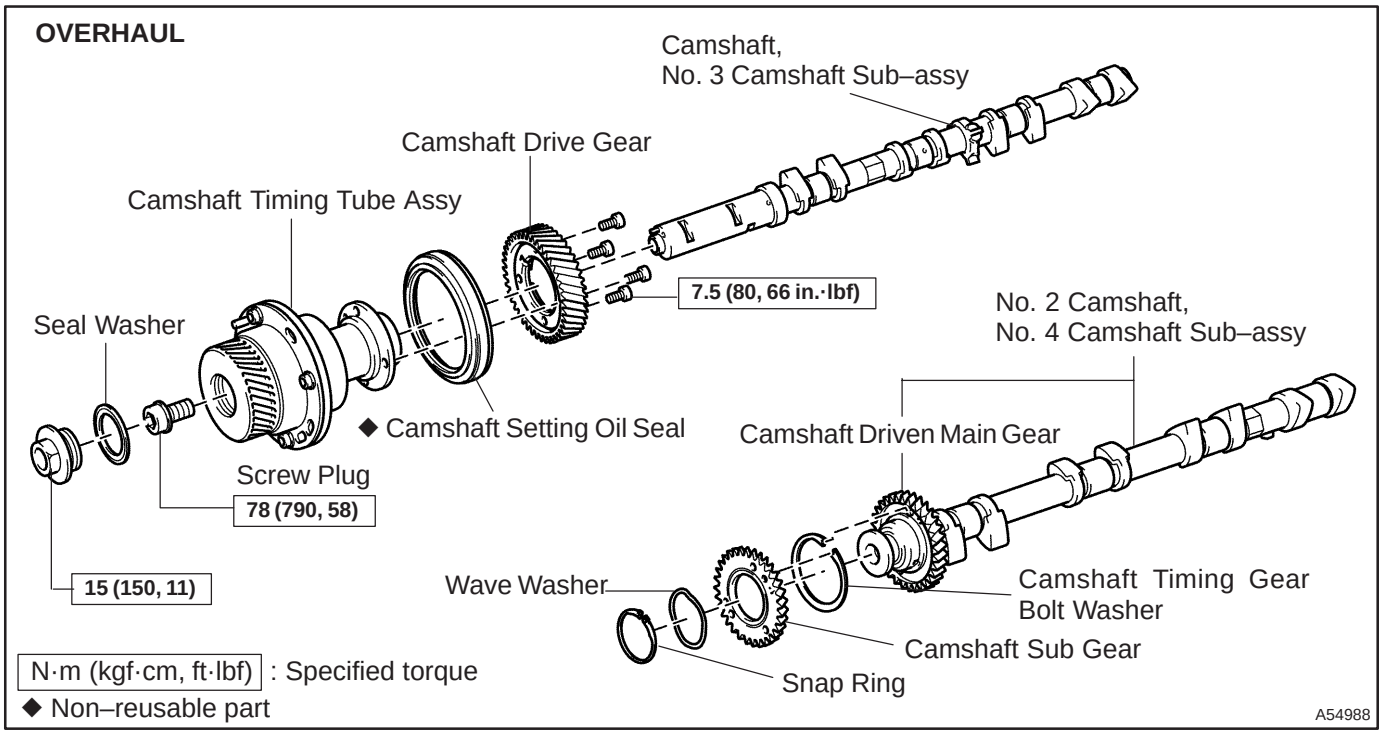

(d) Tightening torque, oil applying position, and non–reusable parts are described as important points in the procedure.

NOTICE:

There are cases where such information can only be indicated by an illustration. In that case, all the information such as torque, oil, etc. are described in the illustration.

(e) Installing procedure of operation items is performed in the reverse order of the removing, and only the important points are described.

(f) Only items with points are described in the procedure, and the operational portion and content are placed using an illustration. In the explanations, details of the operational method, standard value and notice are placed.

(g) There may be a case where the illustrations of similar models are used. In that case the details may be different from the actual vehicle.

(h) The procedures are presented in a step–by–step format:

(1) The illustration shows what to do and where to do it.

(2) The task heading tells what to do.

(3) The detailed text tells how to perform the task and gives other information such as specifications and warnings.

Example:

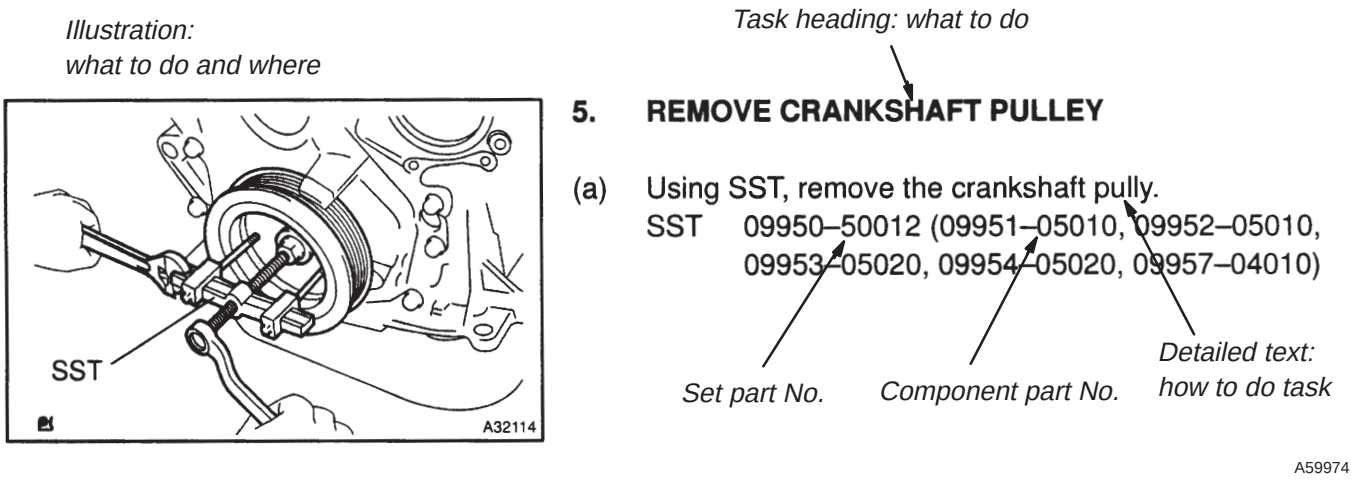

HINT:

This format provides an experienced technician with a FAST TRACK to the necessary information. The task heading can be read at a glance when necessary, and the text below provides detailed information. Important specifications and warnings always stand out in bold type.

5. SERVICE SPECIFICATIONS

(a) Specifications are presented in bold type throughout the manual. You never have to leave the procedure to look up your specifications. The specifications are also found in the Service Specifications section for a quick reference.

6. TERMS DEFINITION

CAUTION	Indicate the possibility of injury to you or other people.
NOTICE	Indicate the possibility of damage to the components being repaired.
HINT	Provide additional information to help you perform the repair efficiently.

7. SI UNIT

(a) The UNITS given in this manual are primarily expressed according to the SI UNIT (International System of Unit), and alternately expressed in the metric system and in the English System.

Example:

Torque: 30 N·m (310 kgf·cm, 22 ft·lbf)

REPAIR INSTRUCTION FOR ENGINE REPAIR MANUAL (1AZ–FE)

0107N–01

PRECAUTION

1. TO PREVENT FROM ENTERING FOREIGN SUBSTANCES.

(a) When foreign substances such as dust, grain of sand or metallic dust enter inside of engine, it often causes functional failure of the engine.

(1) Precaution before disassembly.

- Remove adequately all sand and mud adhere to the outside of engine .

(2) Precaution at reassembly.

- Protect disassembled parts from dust by using vinyl sheet to cover.

2. TO PREVENT SCRATCHES ON THE PARTS.

(a) The existence of scratches on the contact and revolving surfaces often causes oil leak and seisure.

(1) Precautions at disassembly and reassembly.

- When disassemble the contact surface of the parts, use plastic hummer striking lightly. (Do not pry out by screwdriver).
- When fix the parts to the vise, do not directly catch it in the vise. Fix the parts through aluminum bar.

3. TO CLEAN AND WASH THE PARTS.

(a) Each parts needs to be well cleaned, washed, and dried by air, and apply specified oil before reassembly.

(1) Cleaning and washing by alkaline solvent is prohibited:

- Parts made of aluminum and rubber. (ex. cylinder head cover gasket etc.)

(2) Cleaning and washing by flushing oil (ex. kerosene, white gasoline etc.) is prohibited:

- Parts made of rubber. (ex. cylinder head cover gasket etc.)

4. POSITION AND DIRECTION OF EACH PARTS.

(a) Each parts needs to be reassembled as the same position and direction as it disassembled.

(1) Precautions at disassembly and reassembly.

- Follow the directions when the manual designates to mark the matchmark and/or direction mark.
- Disassembled parts needs to be put in order as disassembled, not to change position and/or direction.
- Follow the directions when the manual instructs the position and direction.

5. INSTALL ENGINE ASSEMBLY TO OVERHAUL STAND WHEN OVERHAUL THE ENGINE.

6. PUT THE DISASSEMBLED PARTS IN ORDER AS THEY DISASSEMBLED.

7. APPLY ENGINE OIL TO THE SLIDING AND ROTATING SURFACES.

8. NON–REUSABLE PARTS SUCH AS GASKET AND SEAL NEEDS TO BE CHANGED TO THE NEW PARTS.

9. BASIC REPAIR HINT

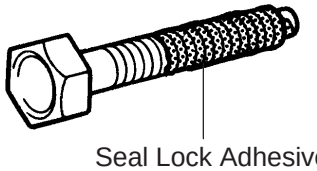

1AZ–FE ENGINE REPAIR MANUAL (RM865E) Z11554

(a) Precoated Parts:

(1) Precoated parts are bolts, nuts, etc. that are coated with a seal lock adhesive at the factory.

(2) If a precoated part is retightened, loosened or caused to move in any way, it must be recoated with the specified adhesive.

(3) When reusing precoated parts, clean off the old adhesive and dry with compressed air. Then apply

the specified seal lock adhesive to the bolt, nut or threads.

NOTICE:

Do the torque checking with the lower limit value of the torque tolerance.

(4) Depending on the seal lock agent to apply, there may be a case where it is necessary to leave it for a specified time until it hardens.

(b) Gaskets:
When necessary, use a sealer on gaskets to prevent leaks.

(c) Bolts, Nuts and Screws:
Carefully observe all specifications for bolt tightening torques. Always use a torque wrench.

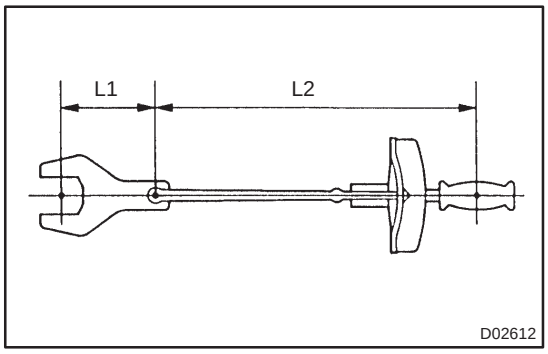

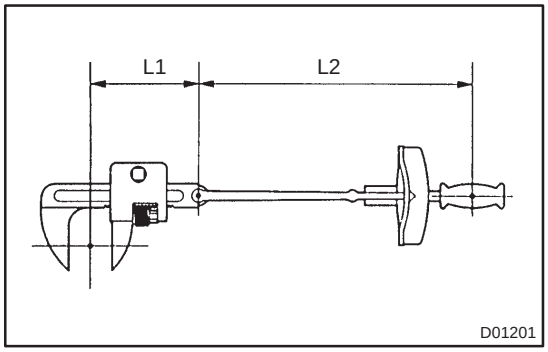

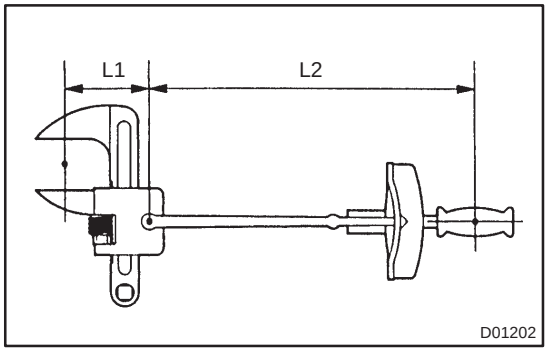

(d) Torque When Using Extension Tool with Torque Wrench:

(1) In case of tightening by extending the entire length of the torque wrench combined with SST or tool, if you tighten until the reading of the torque wrench reached the specified torque value, the actual torque becomes excessive.

(2) In this text, only the specified torque is described. In case of using SST or extension tool, find the reading of the torque wrench by the formula.

(3) Formula T'=T x L2/(L1 + L2)

T'	Reading of torque wrench {N·m (kgf·cm, ft·lbf)}
T	Torque {N·m (kgf·cm, ft·lbf)}
L1	Length of SST or tool (cm)
L2	Length of torque wrench (cm)

10. REMOVAL AND INSTALLATION OF FUEL CONTROL PARTS

(a) Place for Removing and Installing Fuel System Parts:

(1) Place with good air ventilation and without anything flammable such as welder, grinder, drill, electric motor or stove in the surroundings.

(2) Never work in a place like a pit or nearby pit as there is a possibility that vaporized fuel fills those places.

(b) Removing and Installing of Fuel System Parts:

(1) Prepare a fire extinguisher before starting the operation.

(2) For prevention of the static electricity, install a ground on the fuel changer, vehicle and fuel tank, and do not spray much water so as to prevent slipping.
(3) Never use any electric equipment like an electric motor or a working light as they may cause spark or high temperature.
(4) Never use an iron hammer as it may cause spark.
(5) Dispose the shop lag separately from any fuel deposit.

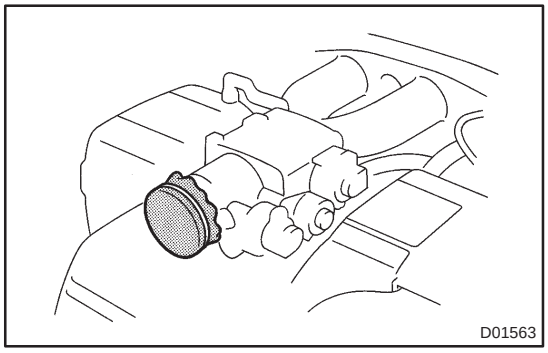
D01563

11. REMOVAL AND INSTALLATION OF ENGINE INTAKE PARTS

(a) If any metal tip is mixed in the inlet pass, that may give a bad effect to the engine and turbo charger.
(b) When removing and installing of the inlet system parts, close the opening of the removed inlet system parts and the engine with a clean shop lag or gum tape.
(c) When installing the inlet system parts, check that there is no mixing of a metal tip.

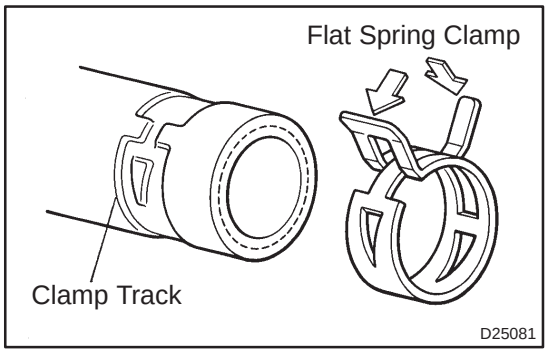

D25081

12. HANDLING OF HOSE CLAMPS

(a) Before removing the hose, check the depth of inserting portion and the clamp position to restore it surely.
(b) Change a deformed or dented into a new one.
(c) In case of reusing the hose, install the clamp on the hose where it has a clamp track.
(d) For a flat spring type clamp, make it adjust by adding force to the arrow mark direction after the installation.

TERMS FOR ENGINE REPAIR MANUAL (1AZ–FE)

0107O–01

ABBREVIATIONS USED IN THIS MANUAL

Abbreviations	Meaning
ABS	Anti–Lock Brake System
A/C	Air Conditioner
AC	Alternating Current
ACC	Accessory
ACIS	Acoustic Control Induction System
ACSD	Automatic Cold Start Device
A.D.D.	Automatic Disconnecting Differential
A/F	Air–Fuel Ratio
AHC	Active Height Control Suspension
ALR	Automatic Locking Retractor
ALT	Alternator
AMP	Amplifier
ANT	Antenna
APPROX.	Approximately
ASSY	Assembly
A/T	Automatic Transmission (Transaxle)
ATF	Automatic Transmission Fluid
AUTO	Automatic
AUX	Auxiliary
AVG	Average
AVS	Adaptive Variable Suspension
B+	Battery Voltage
BACS	Boost Altitude Compensation System
BAT	Battery
BDC	Bottom Dead Center
B/L	Bi–Level
B/S	Bore–Stroke Ratio
BTDC	Before Top Dead Center
BVSV	Bimetallic Vacuum Switching Valve
CB	Circuit Breaker
CCo	Catalytic Converter For Oxidation
CD	Compact Disc
CF	Cornering Force
CG	Center Of Gravity
CH	Channel
CKD	Complete Knock Down
COMB.	Combination
CPE	Coupe
CPS	Combustion Pressure Sensor
CPU	Central Processing Unit
CRS	Child Restraint System
CTR	Center
C/V	Check Valve
CV	Control Valve
CW	Curb Weight
DC	Direct Current
DEF	Defogger
DFL	Deflector

Abbreviations	Meaning
DIFF.	Differential
DIFF. LOCK	Differential Lock
D/INJ	Direct Injection
DLC	Data Link Connector
DLI	Distributorless Ignition
DOHC	Double Overhead Cam
DP	Dash Pot
DS	Dead Soak
DSP	Digital Signal Processor
DTC	Diagnostic Trouble Code
ECAM	Engine Control And Measurement System
ECD	Electronic Controlled Diesel
ECDY	Eddy Current Dynamometer
ECT	Electronic Control Transmission
ECU	Electronic Control Unit
ED	Electro–Deposited Coating
EDU	Electronic Driving Unit
EDIC	Electric Diesel Injection Control
EFI	Electronic Fuel Injection
E/G	Engine
EGR	Exhaust Gas Recirculation
EGR–VM	EGR–Vacuum Modulator
ELR	Emergency Locking Retractor
ENG	Engine
ESA	Electronic Spark Advance
ETCS	Electronic Throttle Control System
EVAP	Evaporative Emission Control
EVP	Evaporator
E–VRV	Electric Vacuum Regulating Valve
EX	Exhaust
FE	Fuel Economy
FF	Front–Engine Front–Wheel–Drive
F/G	Fuel Gauge
FIPG	Formed In Place Gasket
FL	Fusible Link
F/P	Fuel Pump
FPU	Fuel Pressure Up
FR	Front
F/W	Flywheel
FW/D	Flywheel Damper
FWD	Front–Wheel–Drive
GAS	Gasoline
GND	Ground
HAC	High Altitude Compensator
H/B	Hatchback
H–FUSE	High Current Fuse
HI	High
HID	High Intensity Discharge (Head Lamp)
HSG	Housing
HT	Hard Top
HWS	Heated Windshield System

Abbreviations	Meaning
IC	Integrated Circuit
IDI	Indirect Diesel Injection
IFS	Independent Front Suspension
IG	Ignition
IIA	Integrated Ignition Assembly
IN	Intake (Manifold, Valve)
INT	Intermittent
I/P	Instrument Panel
IRS	Independent Rear Suspension
ISC	Idle Speed Control
J/B	Junction Block
J/C	Junction Connector
KD	Kick–Down
LAN	Local Area Network
LB	Liftback
LCD	Liquid Crystal Display
LED	Light Emitting Diode
LH	Left–Hand
LHD	Left–Hand Drive
L/H/W	Length, Height, Width
LLC	Long–Life Coolant
LNG	Liquified Natural Gas
LO	Low
LPG	Liquified Petroleum Gas
LSD	Limited Slip Differential
LSP & PV	Load Sensing Proportioning And Bypass Valve
LSPV	Load Sensing Proportioning Valve
MAP	Manifold Absolute Pressure
MAX.	Maximum
MIC	Microphone
MIL	Malfunction Indicator Lamp
MIN.	Minimum
MP	Multipurpose
MPI	Multipoint Electronic Injection
MPX	Multiplex Communication System
M/T	Manual Transmission
MT	Mount
MTG	Mounting
N	Neutral
NA	Natural Aspiration
NO.	Number
O2S	Oxygen Sensor
O/D	Overdrive
OEM	Original Equipment Manufacturing
OHC	Overhead Camshaft
OHV	Overhead Valve
OPT	Option
O/S	Oversize
P & BV	Proportioning And Bypass Valve
PCS	Power Control System
PCV	Positive Crankcase Ventilation

Abbreviations	Meaning
PKB	Parking Brake
PPS	Progressive Power Steering
PS	Power Steering
PTO	Power Take–Off
P/W	Power Window
R & P	Rack And Pinion
R/B	Relay Block
RBS	Recirculating Ball Type Steering
R/F	Reinforcement
RFS	Rigid Front Suspension
RRS	Rigid Rear Suspension
RH	Right–Hand
RHD	Right–Hand Drive
RLY	Relay
ROM	Read Only Memory
RR	Rear
RRS	Rear–Wheel Drive
RWD	Rear–Wheel Drive
SDN	Sedan
SEN	Sensor
SICS	Starting Injection Control System
SOC	State Of Charge
SOHC	Single Overhead Camshaft
SPEC	Specification
SPI	Single Point Injection
SRS	Supplemental Restraint System
SSM	Special Service Materials
SST	Special Service Tools
STD	Standard
STJ	Cold–Start Fuel Injection
SW	Switch
SYS	System
T/A	Transaxle
TACH	Tachometer
TBI	Throttle Body Electronic Fuel Injection
TC	Turbocharger
TCCS	TOYOTA Computer–Controlled System
TCV	Timing Control Valve
TDC	Top Dead Center
TEMP.	Temperature
TEMS	TOYOTA Electronic Modulated Suspension
TFT	Toyota Free–Tronic
TIS	Total Information System For Vehicle Development
T/M	Transmission
TMC	TOYOTA Motor Corporation
TMMK	TOYOTA Motor Manufacturing Kentucky, Inc.
TRC	Traction Control System
TURBO	Turbocharge
TWC	Three–Way Catalyst
U/D	Underdrive
U/S	Undersize

Abbreviations	Meaning
VCV	Vacuum Control Valve
VENT	Ventilator
VIN	Vehicle Identification Number
VPS	Variable Power Steering
VSC	Vehicle Skid Control
VSV	Vacuum Switching Valve
VTV	Vacuum Transmitting Valve
VVT–i	Variable Valve Timing–intelligent
W/	With
WGN	Wagon
W/H	Wire Harness
W/O	Without
1ST	First
2ND	Second
2WD	Two Wheel Drive Vehicle (4 x 2)
3RD	Third
4TH	Fourth
4WD	Four Wheel Drive Vehicle (4 x 4)
4WS	Four Wheel Steering System
5TH	Fifth

0107P–01

GLOSSARY OF SAE AND TOYOTA TERMS

This glossary lists all SAE–J1930 terms and abbreviations used in this manual in compliance with SAE recommendations, as well as their TOYOTA equivalents.

SAE ABBREVIATIONS	SAE TERMS	TOYOTA TERMS ( )—ABBREVIATIONS
A/C	Air Conditioning	Air Conditioner
ACL	Air Cleaner	Air Cleaner, A/CL
AIR	Secondary Air Injection	Air Injection (AI)
AP	Accelerator Pedal	–
B+	Battery Positive Voltage	+B, Battery Voltage
BARO	Barometric Pressure	HAC
CAC	Charge Air Cooler	Intercooler
CARB	Carburetor	Carburetor
CFI	Continuous Fuel Injection	–
CKP	Crankshaft Position	Crank Angle
CL	Closed Loop	Closed Loop
CMP	Camshaft Position	Cam Angle
CPP	Clutch Pedal Position	–
CTOX	Continuous Trap Oxidizer	–
CTP	Closed Throttle Position	LL ON, Idle ON
DFI	Direct Fuel Injection (Diesel)	Direct Injection (DI)
DI	Distributor Ignition	–
DLC1 DLC2 DLC3	Data Link Connector 1 Data Link Connector 2 Data Link Connector 3	1: Check Connector 2: Total Diagnosis Comunication Link (TDCL) 3: OBD II Diagnostic Connector
DTC	Diagnostic Trouble Code	Diagnostic Code
DTM	Diagnostic Test Mode	–
ECL	Engine Control Level	–
ECM	Engine Control Module	Engine ECU (Electronic Control Unit)
ECT	Engine Coolant Temperature	Coolant Temperature, Water Temperature (THW)
EEPROM	Electrically Erasable Programmable Read Only Memory	Electrically Erasable Programmable Read Only Memory (EEPROM), Erasable Programmable Read Only Memory (EPROM)
EFE	Early Fuel Evaporation	Cold Mixture Heater (CMH), Heat Control Valve (HCV)
EGR	Exhaust Gas Recirculation	Exhaust Gas Recirculation (EGR)
EI	Electronic Ignition	TOYOTA Distributorless Ignition (TDI)
EM	Engine Modification	Engine Modification (EM)
EPROM	Erasable Programmable Read Only Memory	Programmable Read Only Memory (PROM)
EVAP	Evaporative Emission	Evaporative Emission Control (EVAP)
FC	Fan Control	–
FEEPROM	Flash Electrically Erasable Programmable Read Only Memory	–
FEPROM	Flash Erasable Programmable Read Only Memory	–
FF	Flexible Fuel	–
FP	Fuel Pump	Fuel Pump
GEN	Generator	Alternator
GND	Ground	Ground (GND)

HO2S	Heated Oxygen Sensor	Heated Oxygen Sensor (HO_2S)
IAC	Idle Air Control	Idle Speed Control (ISC)
IAT	Intake Air Temperature	Intake or Inlet Air Temperature
ICM	Ignition Control Module	–
IFI	Indirect Fuel Injection	Indirect Injection (IDL)
IFS	Inertia Fuel–Shutoff	–
ISC	Idle Speed Control	–
KS	Knock Sensor	Knock Sensor
MAF	Mass Air Flow	Air Flow Meter
MAP	Manifold Absolute Pressure	Manifold Pressure Intake Vacuum
MC	Mixture Control	Electric Bleed Air Control Valve (EBCV) Mixture Control Valve (MCV) Electric Air Control Valve (EACV)
MDP	Manifold Differential Pressure	–
MFI	Multiport Fuel Injection	Electronic Fuel Injection (EFI)
MIL	Malfunction Indicator Lamp	Check Engine Lamp
MST	Manifold Surface Temperature	–
MVZ	Manifold Vacuum Zone	–
NVRAM	Non–Volatile Random Access Memory	–
O2S	Oxygen Sensor	Oxygen Sensor, O_2 Sensor (O_2S)
OBD	On–Board Diagnostic	On–Board Diagnostic System (OBD)
OC	Oxidation Catalytic Converter	Oxidation Catalyst Convert (OC), CCo
OP	Open Loop	Open Loop
PAIR	Pulsed Secondary Air Injection	Air Suction (AS)
PCM	Powertrain Control Module	–
PNP	Park/Neutral Position	–
PROM	Programmable Read Only Memory	–
PSP	Power Steering Pressure	–
PTOX	Periodic Trap Oxidizer	Diesel Particulate Filter (DPF) Diesel Particulate Trap (DPT)
RAM	Random Access Memory	Random Access Memory (RAM)
RM	Relay Module	–
ROM	Read Only Memory	Read Only Memory (ROM)
RPM	Engine Speed	Engine Speed
SC	Supercharger	Supercharger
SCB	Supercharger Bypass	E–ABV
SFI	Sequential Multiport Fuel Injection	Electronic Fuel Injection (EFI), Sequential Injection
SPL	Smoke Puff Limiter	–
SRI	Service Reminder Indicator	–
SRT	System Readiness Test	–
ST	Scan Tool	–
TB	Throttle Body	Throttle Body
TBI	Throttle Body Fuel Injection	Single Point Injection Central Fuel Injection (Ci)
TC	Turbocharger	Turbocharger
TCC	Torque Converter Clutch	Torque Converter

TCM	Transmission Control Module	Transmission ECU, ECT ECU
TP	Throttle Position	Throttle Position
TR	Transmission Range	–
TVV	Thermal Vacuum Valve	Bimetallic Vacuum Switching Valve (BVSV) Thermostatic Vacuum Switching Valve (TVSV)
TWC	Three–Way Catalytic Converter	Three–Way Catalytic (TWC) Manifold Converter CC_{RO}
TWC+OC	Three–Way + Oxidation Catalytic Converter	CC_R + CCo
VAF	Volume Air Flow	Air Flow Meter
VR	Voltage Regulator	Voltage Regulator
VSS	Vehicle Speed Sensor	Vehicle Speed Sensor
WOT	Wide Open Throttle	Full Throttle
WU–OC	Warm Up Oxidation Catalytic Converter	–
WU–TWC	Warm Up Three–Way Catalytic Converter	–
3GR	Third Gear	–
4GR	Fourth Gear	–

ENGINE MECHANICAL

PREPARATION

020JP–01

SST

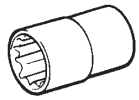	09011–38121	12 mm Socket Wrench for 12 Pointed Head	CYLINDER BLOCK(1AZ–FE)
	09032–00100	Oil Pan Seal Cutter	PARTIAL ENGINE ASSY(1AZ–FE)
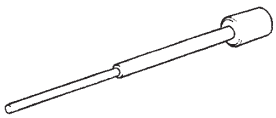	09201–01055	Valve Guide Bushing Remover & Replacer 5.5	CYLINDER HEAD ASSY(1AZ–FE)
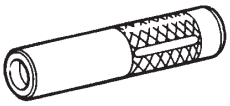	09201–41020	Valve Stem Oil Seal Replacer	CYLINDER HEAD ASSY(1AZ–FE)
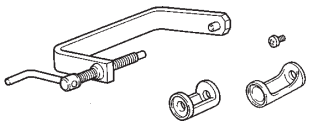	09202–70020	Valve Spring Compressor	CYLINDER HEAD ASSY(1AZ–FE)
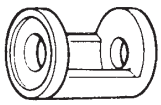	(09202–00010)	Attachment	CYLINDER HEAD ASSY(1AZ–FE)
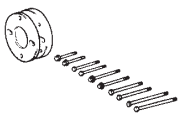	09213–54015	Crankshaft Pulley Holding Tool	PARTIAL ENGINE ASSY(1AZ–FE)
	(91651–60855)	Bolt	PARTIAL ENGINE ASSY(1AZ–FE)
	09223–15030	Oil Seal & Bearing Replacer	PARTIAL ENGINE ASSY(1AZ–FE)
	09228–06501	Oil Filter Wrench	PARTIAL ENGINE ASSY(1AZ–FE)
	09309–37010	Transmission Bearing Replacer	PARTIAL ENGINE ASSY(1AZ–FE)
	09330–00021	Companion Flange Holding Tool	PARTIAL ENGINE ASSY(1AZ–FE)

	09950–40011	Puller B Set	PARTIAL ENGINE ASSY(1AZ–FE)
	(09957–04010)	Attachment	PARTIAL ENGINE ASSY(1AZ–FE)
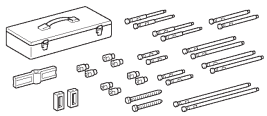	09950–50013	Puller C Set	PARTIAL ENGINE ASSY(1AZ–FE)
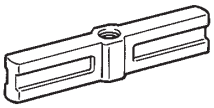	(09951–05010)	Hanger 150	PARTIAL ENGINE ASSY(1AZ–FE)
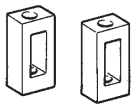	(09952–05010)	Slide Arm	PARTIAL ENGINE ASSY(1AZ–FE)
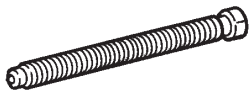	(09953–05020)	Center Bolt 150	PARTIAL ENGINE ASSY(1AZ–FE)
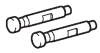	(09954–05021)	Claw No.2	PARTIAL ENGINE ASSY(1AZ–FE)
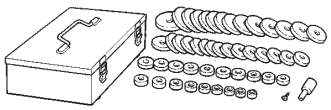	09950–60010	Replacer Set	CYLINDER BLOCK(1AZ–FE)
	(09951–00200)	Replacer 20	CYLINDER BLOCK(1AZ–FE)
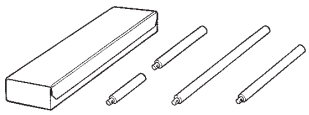	09950–70010	Handle Set	PARTIAL ENGINE ASSY(1AZ–FE) CYLINDER HEAD ASSY(1AZ–FE) CYLINDER BLOCK(1AZ–FE)
	(09951–07100)	Handle 100	PARTIAL ENGINE ASSY(1AZ–FE) CYLINDER HEAD ASSY(1AZ–FE) CYLINDER BLOCK(1AZ–FE)
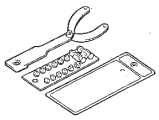	09960–10010	Variable Pin Wrench Set	PARTIAL ENGINE ASSY(1AZ–FE)
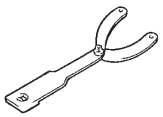	(09962–01000)	Variable Pin Wrench Arm Assy	PARTIAL ENGINE ASSY(1AZ–FE)

	(09963–00600)	Pin 6	PARTIAL ENGINE ASSY(1AZ–FE)

Recomended Tools

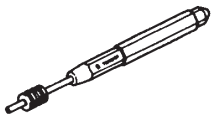	09031–00040	Pin Punch .	CYLINDER HEAD ASSY(1AZ–FE)
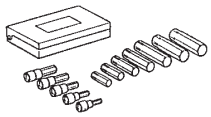	09040–00011	Hexagon Wrench Set	PARTIAL ENGINE ASSY(1AZ–FE)
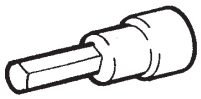	(09043–20080)	Socket Hexagon Wrench 8	PARTIAL ENGINE ASSY(1AZ–FE)
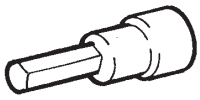	(09043–20060)	Socket Hexagon Wrench 6	PARTIAL ENGINE ASSY(1AZ–FE)
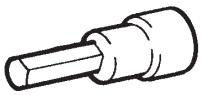	(09043–20120)	Socket Hexagon Wrench 12	PARTIAL ENGINE ASSY(1AZ–FE)
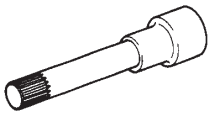	09043–50100	Bi–hexagon Wrench 10 mm	PARTIAL ENGINE ASSY(1AZ–FE)
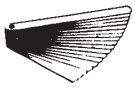	(09203–00010)	Thickness Gauge	PARTIAL ENGINE ASSY(1AZ–FE)

SSM

	08826–00080	Seal Packing Black or equivalent (FIPG)	PARTIAL ENGINE ASSY(1AZ–FE)
	08826–00100	”Seal Packing 1282B,” THREE BOND 1282B or equivalent (FIPG)	PARTIAL ENGINE ASSY(1AZ–FE)
	08833–00070	”Adhesive 1324,” THREE BOND 1324 or equivalent	PARTIAL ENGINE ASSY(1AZ–FE) CYLINDER BLOCK(1AZ–FE)

Equipment

Reamer	
V–block	
Piston ring compressor	
Piston ring expander	
Valve seat cutter	
Cylinder gauge	
Feeler gauge	
Micrometer	
Precision straight edge	
Steel square	
Torque wrench	
Vernier calipers	
Dial indicator with magnetic base	
Spring tension gauge	
Slide calipers	
Plastigage	
Heater	

LUBRICATION

020JQ–01

PREPARATION

Equipment

Feeler gauge	
Precision straight edge	
Torque wrench	

STARTING & CHARGING

020JR–01

PREPARATION

SST

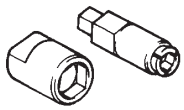	09820–63010	Alternator Pulley Set Nut Wrench Set	GENERATOR ASSY(1AZ–FE)
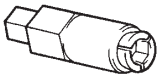	(09820–06010)	Alternator Rotor Shaft Wrench	GENERATOR ASSY(1AZ–FE)
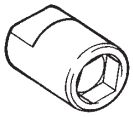	(09820–06020)	Alternator Pulley Set Nut 22 mm Wrench	GENERATOR ASSY(1AZ–FE)

Recomended Tools

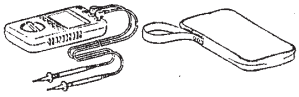	09082–00040	TOYOTA Electrical Tester	STARTER ASSY(1.3KW)(1AZ–FE)

Equipment

V–block	
Dial indicator	
Ohmmeter	
Torque wrench	
Vernier calipers	
Dial indicator with magnetic base	
Press	

STANDARD BOLT

HOW TO DETERMINE BOLT STRENGTH

030BQ–01

Bolt Type				Class
Hexagon Head Bolt		Stud Bolt	Weld Bolt	
Normal Recess Bolt	Deep Recess Bolt			
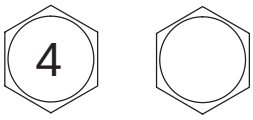 No Mark	 No Mark	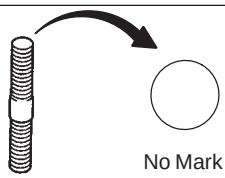 No Mark	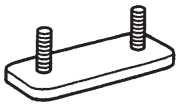	4T
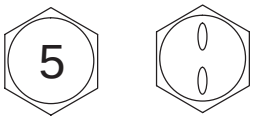				5T
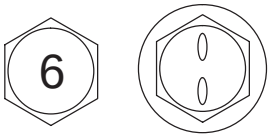 w/ Washer	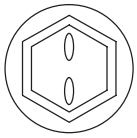 w/ Washer			6T
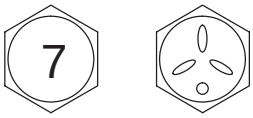	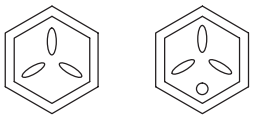			7T
				8T
				9T
	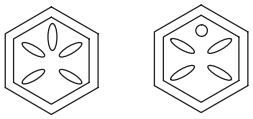			10T
	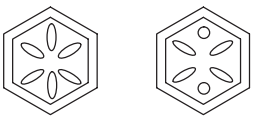			11T

B06431

030BR–01

SPECIFIED TORQUE FOR STANDARD BOLTS

Class	Diameter mm	Pitch mm	Specified torque					
			Hexagon head bolt			Hexagon flange bolt		
			N·m	kgf·cm	ft·lbf	N·m	kgf·cm	ft·lbf
4T	6	1	5	55	48 in.·lbf	6	60	52 in.·lbf
	8	1.25	12.5	130	9	14	145	10
	10	1.25	26	260	19	29	290	21
	12	1.25	47	480	35	53	540	39
	14	1.5	74	760	55	84	850	61
	16	1.5	115	1,150	83	–	–	–
5T	6	1	6.5	65	56 in.·lbf	7.5	75	65 in.·lbf
	8	1.25	15.5	160	12	17.5	175	13
	10	1.25	32	330	24	36	360	26
	12	1.25	59	600	43	65	670	48
	14	1.5	91	930	67	100	1,050	76
	16	1.5	140	1,400	101	–	–	–
6T	6	1	8	80	69 in.·lbf	9	90	78 in.·lbf
	8	1.25	19	195	14	21	210	15
	10	1.25	39	400	29	44	440	32
	12	1.25	71	730	53	80	810	59
	14	1.5	110	1,100	80	125	1,250	90
	16	1.5	170	1,750	127	–	–	–
7T	6	1	10.5	110	8	12	120	9
	8	1.25	25	260	19	28	290	21
	10	1.25	52	530	38	58	590	43
	12	1.25	95	970	70	105	1,050	76
	14	1.5	145	1,500	108	165	1,700	123
	16	1.5	230	2,300	166	–	–	–
8T	8	1.25	29	300	22	33	330	24
	10	1.25	61	620	45	68	690	50
	12	1.25	110	1,100	80	120	1,250	90
9T	8	1.25	34	340	25	37	380	27
	10	1.25	70	710	51	78	790	57
	12	1.25	125	1,300	94	140	1,450	105
10T	8	1.25	38	390	28	42	430	31
	10	1.25	78	800	58	88	890	64
	12	1.25	140	1,450	105	155	1,600	116
11T	8	1.25	42	430	31	47	480	35
	10	1.25	87	890	64	97	990	72
	12	1.25	155	1,600	116	175	1,800	130

030BS–01

HOW TO DETERMINE NUT STRENGTH

Nut Type			Class
Present Standard Hexagon Nut	Old Standard Hexagon Nut		
	Cold Forging Nut	Cutting Processed Nut	
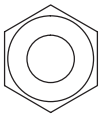 No Mark			4N
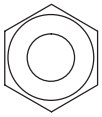 No Mark (w/ Washer)	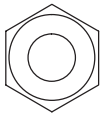 No Mark (w/ Washer)	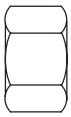 No Mark	5N (4T)
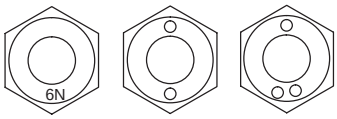 6N			6N
	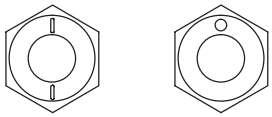	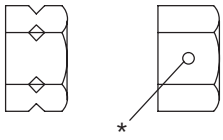 *	7N (5T)
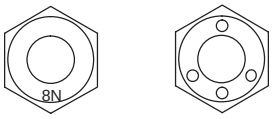 8N			8N
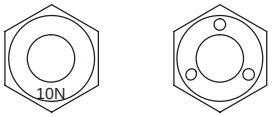 10N	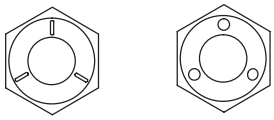	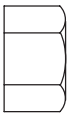 No Mark	10N (7T)
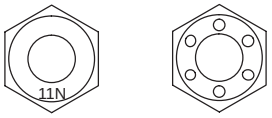 11N			11N
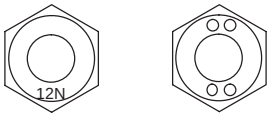 12N			12N

*: Nut with 1 or more marks on one side surface of the nut.

B06432

HINT:

Use the nut with the same number of the nut strength classification or the greater than the bolt strength classification number when tightening parts with a bolt and nut.

Example: Bolt = 4T

Nut = 4N or more

ENGINE MECHANICAL

SERVICE DATA

030BF–01

Oil pump drive gear		
Gear diameter (w/chain)	Minimum	48.2 mm (1.898 in.)
Oil pump drive shaft gear		
Gear diameter (w/chain)	Minimum	48.2 mm (1.898 in.)
Crankshaft timing gear or sprocket		
Gear diameter (w/chain)	Minimum	51.6 mm (2.031 in.)
Chain tensioner slipper		
Wear	Maximum	1.0 mm (0.039 in.)
Chain vibration damper No.1		
Wear	Maximum	1.0 mm (0.039 in.)
Cylinder head set bolt		
Bolt length	Standard	161.3 – 162.7 mm (6.350 – 6.406 in.)
	Maximum	164.2 mm (6.465 in.)
Chain sub–assy		
Elongation	Maximum	115.4 mm (4.543 in.)
Camshaft timing gear or sprocket		
Sprocket diameter (w/chain)	Minimum	97.3 mm (3.831 in.)
Camshaft		
Circle runout	Maximum	0.03 mm (0.0012 in.)
Cam lobe height	Standard	46.495 – 46.595 mm (1.8305 – 1.8345 in.)
	Minimum	46.385 mm (1.8262 in.)
No. 1 journal diameter		35.971 – 35.985 mm (1.4165 – 1.4167 in.)
Other journal diameter		22.959 – 22.975 mm (0.9039 – 0.9045 in.)
Thrust clearance		
Intake	Standard	0.040 – 0.095 mm (0.0016 – 0.0037 in.)
	Maximum	0.11 mm (0.0043 in.)
Exhaust	Standard	0.080 – 0.135 mm (0.0032 – 0.0053 in.)
	Maximum	0.15 mm (0.0059 in.)
Oil clearance		
Intake No. 1 journal bearing mark 1	Standard	0.007 – 0.038 mm (0.0028 – 0.00150 in.)
Intake No. 1 journal bearing mark 2	Standard	0.008 – 0.038 mm (0.0031 – 0.00150 in.)
Intake No. 1 journal bearing mark 3	Standard	0.008 – 0.038 mm (0.0031 – 0.00150 in.)
Exhaust No. 1 journal	Standard	0.040 – 0.079 mm (0.0016 – 0.003 in.)
Other journals	Standard	0.025 – 0.062 mm (0.00098 – 0.00244 in.)
Intake No. 1 journal	Maximum	0.07 mm (0.0028 in.)
Other journals	Maximum	0.10 mm (0.0039 in.)
Camshaft No.2		
Circle runout	Maximum	0.03 mm (0.0012 in.)
Cam lobe height	Standard	45.983 – 46.083 mm (1.8104 – 1.8143 in.)
	Minimum	45.873 mm (1.8060 in.)
No. 1 journal diameter		35.971 – 35.985 mm (1.4165 – 1.4167 in.)
Other journal diameter		22.959 – 22.975 mm (0.9039 – 0.9045 in.)
Thrust clearance		
Intake	Standard	0.040 – 0.095 mm (0.0016 – 0.0037 in.)
	Maximum	0.11 mm (0.0043 in.)
Exhaust	Standard	0.080 – 0.135 mm (0.0032 – 0.0053 in.)
	Maximum	0.15 mm (0.0059 in.)
Oil clearance		
Intake No. 1 journal bearing mark 1	Standard	0.007 – 0.038 mm (0.0028 – 0.00150 in.)
Intake No. 1 journal bearing mark 2	Standard	0.008 – 0.038 mm (0.0031 – 0.00150 in.)
Intake No. 1 journal bearing mark 3	Standard	0.008 – 0.038 mm (0.0031 – 0.00150 in.)
Exhaust No. 1 journal	Standard	0.015 – 0.054 mm (0.0059 – 0.00213 in.)
Other journals	Standard	0.025 – 0.062 mm (0.00098 – 0.00244 in.)
Intake No. 1 journal	Maximum	0.07 mm (0.0028 in.)
Other journals	Maximum	0.10 mm (0.0039 in.)

Valve clearance		
Intake	(cold)	0.19 – 0.29 mm (0.0075 – 0.0114 in.)
Exhaust		0.30 – 0.40 mm (0.0118 – 0.0157 in.)
Cylinder head		
Warpage	Maximum Cylinder block side	0.05 mm (0.0020 in.)
	Intake manifold side	0.08 mm (0.0031 in.)
	Exhaust manifold side	0.08 mm (0.0031 in.)
Inner compression spring		
Free length		45.7 mm (1.799 in.)
Deviation	Maximum	1.6 mm (0.063 in.)
Angle (reference)	Maximum	2°
Intake valve		
Overall length	Standard	101.71 mm (4.0043in.)
	Minimum	101.21 mm (3.9846in.)
Valve stem diameter		5.470 – 5.485 mm (0.2154 – 0.2159 in.)
Margin thickness	Standard	1.05 – 1.45 mm (0.041 – 0.057 in.)
	Minimum	0.5 mm (0.020 in.)
Exhaust valve		
Overall length	Standard	101.15 mm (3.9823in.)
	Minimum	100.70 mm (3.9646 in.)
Valve stem diameter		5.465 – 5.480 mm (0.2152 – 0.2157 in.)
Margin thickness	Standard	1.2 – 1.6 mm (0.047 – 0.063 in.)
	Minimum	0.5 mm (0.020 in.)
Intake valve guide bush		
Bushing inside diameter		5.510 – 5.530 mm (0.2169 – 0.2177 in.)
Oil clearance	Standard	0.025 – 0.060 mm (0.0010 – 0.0024 in.)
	Maximum	0.08 mm (0.0031 in.)
Diameter		10.285 – 10.306 mm (0.4049 – 0.4057 in.)
Protrusion height		9.6 – 10.0 mm (0.3779 – 0.3937 in.)
Exhaust valve guide bush		
Bushing inside diameter		5.510 – 5.530 mm (0.2169 – 0.2177 in.)
Oil clearance	Standard	0.030 – 0.065 mm (0.0012 – 0.0026 in.)
	Maximum	0.10 mm (0.0039 in.)
Diameter		10.285 – 10.306 mm (0.4049 – 0.4057 in.)
Protrusion height		9.6 – 10.0 mm (0.3779 – 0.3937 in.)
Valve lifter		
Lifter diameter		30.966 – 30.976 mm (1.2191 – 1.2195 in.)
Lifter bore diameter		31.009 – 31.025 mm (1.2208 – 1.2215 in.)
Oil clearance	Standard	0.033 – 0.059 mm (0.0013 – 0.0023 in.)
	Maximum	0.07 mm (0.0028 in.)
Ring w/head pin		
Protrusion height		5.5 mm (0.2165 in.)
Connecting rod		
Thrust clearance	Standard	0.160 – 0.362 mm (0.0063 – 0.0143 in.)
	Maximum	0.362 mm (0.0143 in.)
Oil clearance	Standard	0.024 – 0.048 mm (0.0009 – 0.0019 in.)
	Maximum	0.08 mm (0.0031 in.)
Bushing inside diameter		22.005 – 22.014 mm (0.8663 – 0.8667 in.)
Out–of–alignment	Maximum per 100 mm (3.94 in.)	0.05 mm (0.0020 in.)
Rod twist	Maximum per 100 mm (3.94 in.)	0.15 mm (0.0059 in.)
Connecting rod bolt		
Diameter	Standard	7.2 – 7.3 mm (0.283 – 0.287 in.)
	Minimum	7.0 mm (0.276 in.)

Crankshaft		
Thrust clearance	Standard	0.040 – 0.240 mm (0.0016 – 0.0094 in.)
	Maximum	0.30 mm (0.0118 in.)
Thrust washer thickness		1.930 – 1.980 mm (0.0760 – 0.0780 in.)
Circle runout	Maximum	0.03 mm (0.0012 in.)
Main journal diameter		54.988 – 55.000 (2.1648 – 2.1654 in.)
Crank pin taper and out– of –round	Maximum	0.003 mm (0.0001 in.)
Crank pin diameter		47.990 – 48.000 mm (1.8894 – 1.8898 in.)
Cylinder block		
Warpage	Maximum	0.05 mm (0.0020 in.)
Bore diameter	Standard	86.000 – 86.013 mm (3.4843 – 3.4848 in.)
	Maximum	86,013 mm (3.4848 in.)
Piston		
Piston diameter		85.927 – 85.937 mm (3.3829 – 3.3833 in.)
Piston oil clearance	Standard	0.063 – 0086 mm (0.0025 – 0.0034 in.)
	Maximum	0.1 mm (0.0039 in.)
Piston ring		
Ring groove clearance	No. 1	0.020 – 0.070 mm (0.0008 – 0.0028 in.)
	No. 2	0.020 – 0.060 mm (0.0008 – 0.0024 in.)
End gap	Standard No. 1	0.30 – 0.40 mm (0.0118 – 0.0157 in.)
	No. 2	0.47 – 0.62 mm (0.0185 – 0.0244 in.)
	Oil (side rail)	0.10 – 0.35 mm (0.0039 – 0.0138 in.)
	Maximum No. 1	0.89 mm (0.0350 in.)
	No. 2	1.37 mm (0.0531 in.)
	Oil (side rail)	0.73 mm (0.0287 in.)
Piston pin		
Bushing inside diameter		22.001 – 22.010 mm (0.8662 – 0.8665 in.)
Piston pin diameter		21.997 – 22.009 mm (0.8660 – 0.8665 in.)
Oil clearance	Standard	0.005 – 0.011 mm (0.0002 – 0.0004 in.)
	Maximum	0.010 mm (0.0020 in.)
Crankshaft bearing cap set bolt		
Diameter	Standard	7.5 – 7.6 mm (0.295 – 0.299 in.)
	Minimum	7.2 mm (0.283 in.)

030BG–01

TORQUE SPECIFICATION

Part Tightened		N·m	kgf·cm	ft·lbf
Stiffening crankcase assy x Cylinder block		33	332	24
W/head taper screw plug No. 1 x Cylinder block		26	265	19
Oil control valve filter x Cylinder block		30	306	22
Cylinder block water drain cock x Stiffening crankcase assy		25	255	18
Union (W/oil cooler) x Stiffening crankcase assy		40	408	29
Cylinder head x Cylinder block	1st	79	806	58
	2nd	Turn 90°	Turn 90°	Turn 90°
Camshaft timing gear assy x Camshaft		54	551	40
Camshaft timing sprocket x Camshaft		54	551	40
Camshaft bearing cap No. 1 x Cylinder head		30	301	22
Camshaft bearing cap No. 2 x Cylinder head		30	301	22
Camshaft bearing cap No. 3 x Cylinder head		9	92	80 in.·lbf
Oil pump assy x Stiffening crankcase assy		19	194	14
Chain tensioner plate x Stiffening crankcase assy		12	122	9
Oil pump drive sprocket x Oil pump		30	301	22
Chain vibration damper No. 1 x Cylinder head		9	92	80 in.·lbf
Chain tensioner slipper x Cylinder block		19	194	14
Timing chain guide x Crankshaft bearing cap No. 1		9	92	80 in.·lbf
Timing chain cover (See page14–1)	Bolt A	9.0	92	80 in.·lbf
	Bolt B	21	214	15
	Bolt C	43	438	32
	Nut	9.0	92	80 in.·lbf
Oil pan x Stiffening crankcase assy		9.0	92	80 in.·lbf
Oil pan drain plug x Oil pan		25	250	18
Water pump assy x Cylinder block		9.0	92	80 in.·lbf
Water pump pulley x Water pump assy		26	265	19
Crank position sensor x Timing chain cover		9.0	92	80 in.·lbf
Crankshaft pulley x Crankshaft		170	1,733	125
Chain tensioner assy x Timing chain cover		9.0	92	80 in.·lbf
Camshaft position sensor x Cylinder head		9.0	92	80 in.·lbf
Cylinder head cover x Cylinder head (See page14–1)	Bolt A	11	112	8
	Bolt B	14	143	10
	Nut	11	112	8
Oil filter union (W/oil cooler) x Stiffening crankcase assy		30	306	22
Oil cooler union bolt x Stiffening crankcase assy		78.5	800	58
Oil cooler flange nut x Stiffening crankcase assy		9.0	92	80 in.·lbf
Spark plug x Cylinder head		19	194	14
Ventilation valve x Cylinder head cover		19	194	14
Stud bolt (See page14–30)	Bolt A	5	51	44 in.·lbf
	Bolt B	5	51	44 in.·lbf
	Bolt C	10	97	84 in.·lbf
	Bolt D	10	97	84 in.·lbf
Crankshaft bearing cap x Cylinder block	1st	20	204	15
	2nd	40	408	29
Connecting rod cap x Connecting rod	1st	25	250	18
	2nd	Turn 90°	Turn 90°	Turn 90°

LUBRICATION

SERVICE DATA

030BH–01

Oil pump		
Side clearance	Standard	0.030–0.085 mm (0.0012–0.0033 in.)
	Maximum	0.16 mm (0.0063 in.)
Tip clearance	Standard	0.080–0.160 mm (0.0031–0.0063 in.)
	Maximum	0.35 mm (0.0138 in.)
Body clearance	Standard	0.100–0.170 mm (0.00394–0.00669 in.)
	Maximum	0.325 mm (0.01280 in.)

030BI–01

TORQUE SPECIFICATION

Part Tightened	N·m	kgf·cm	ft·lbf
Oil pump x Oil pump cover	8.8	90	78 in.·lbf

STARTING & CHARGING

SERVICE DATA

030BJ–01

Starter assy (1.2kw)		
Circle runout	Maximum	0.05 mm(0.0020 in.)
Diameter	Standard	30 mm (1.18 in.)
	Minimum	29 mm (1.14 in.)
Undercut depth	Standard	0.6 mm (0.024 in.)
	Minimum	0.2 mm (0.008 in.)
Brush length	Standard	15.5 mm (0.61 in.)
	Minimum	10 mm (0.394 in.)
Starter assy (1.3kw)		
Circle runout	Maximum	0.05 mm(0.0020 in.)
Commutator length	Standard	3.3 mm (0.1299 in.)
	Maximum	4.0 mm (0.1575 in.)
Brush length	Standard	9.0 mm (0.3543 in.)
	Maximum	4.0 mm (0.1575 in.)
Snap ring length		5.0 mm (0.1969 in.)
Generator assy		
Rotor coil resistance	at 20°C (68°F)	2.1 – 2.5 Ω
Slip ring diameter	Standard	14.2 – 14.4 mm (0.559 – 0.567 in.)
	Minimum	12.8 mm (0.504 in.)
Brush exposed length	Standard	9.5 – 11.5 mm (0.374 – 0.453 in.)
	Minimum	1.5 mm (0.059 in.)

030BK–01

TORQUE SPECIFICATION

Part Tightened	N·m	kgf·cm	ft·lbf
Starter assy (1.2kw)			
Commutator end frame assy x Field frame	1.5	15	13 in.·lbf
Starter housing x Magnetic switch	5.9	60	52 in.·lbf
Filed frame x Armature assembly	5.9	60	52 in.·lbf
Lead wire x Terminal C of starter	5.9	60	52 in.·lbf
Starter assy (1.3kw)			
Commutator end frame assy x Motor terminal starter kit	6.0	61	52 in.·lbf
Repair service starter kit x Motor terminal starter kit	7.5	80	69 in.·lbf
Lead wire x Terminal C of starter	6.5	66	58 in.·lbf
Generator			
Rectifire end frame x Drive end frame	4.5	46	39 in.·lbf
Generator			
Cord clamp x Rectifire end frame	5.4	55	47 in.·lbf
Generator			
Recrifire holder x Coil lead on rectifire end frame	2.9	30	26 in.·lbf
Generator			
Rear end cover x Rectifire holder	4.4	45	39 in.·lbf
Generator			
Plate terminal x Rectifire holder	3.9	39	35 in.·lbf
Generator			
Terminal insulator x Rectifire holder	4.1	42	36 in.·lbf
Generator pulley x Rotor	111	1,125	81

PARTIAL ENGINE ASSY (1AZ–FE)

140DU–01

OVERHAUL

1. REMOVE OIL FILLER CAP SUB–ASSY

2. REMOVE OIL FILLER CAP GASKET

3. REMOVE VENTILATION VALVE SUB–ASSY

4. REMOVE SPARK PLUG

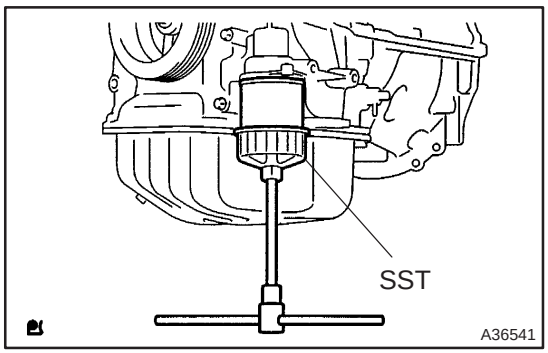

5. REMOVE OIL FILTER SUB–ASSY

(a) Using SST, remove the oil filter.
SST 09228–06501

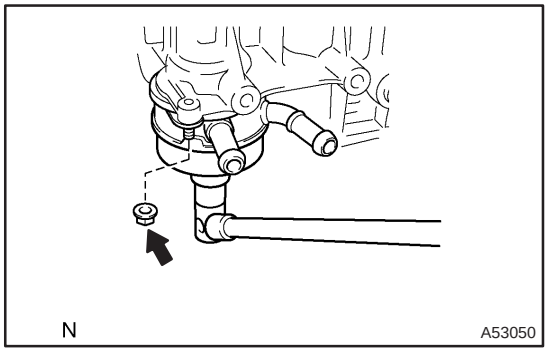

6. REMOVE OIL COOLER ASSY(W/ OIL COOLER)

(a) Remove the flange nut.
(b) Remove the union bolt and oil cooler.
(c) Remove the O–ring from the oil cooler.

7. REMOVE OIL FILTER UNION(W/O OIL COOLER)

(a) Using a 12 mm hexagon wrench, remove the oil filter union.

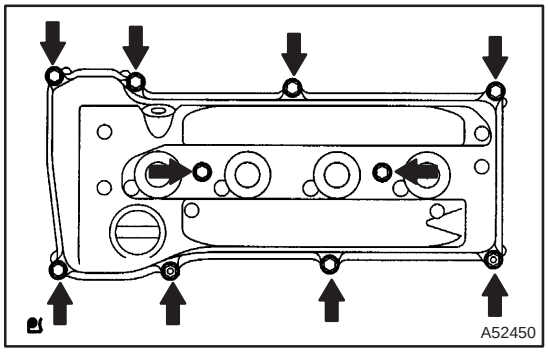

8. REMOVE CYLINDER HEAD COVER SUB–ASSY

(a) Remove 8 bolts, 2 nuts, and cylinder head cover sub assembly.

9. REMOVE CYLINDER HEAD COVER GASKET

10. REMOVE CAMSHAFT POSITION SENSOR

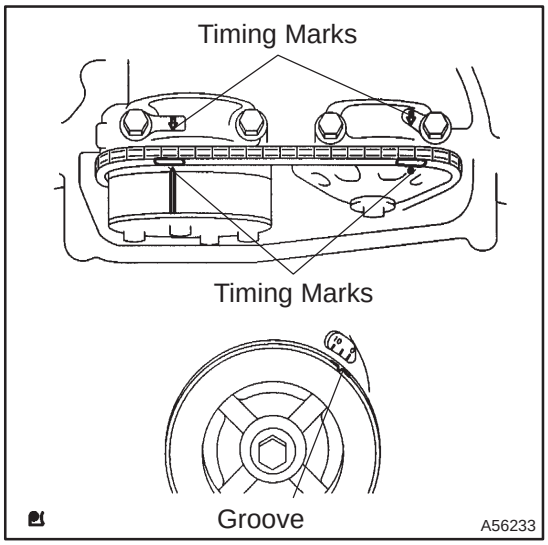

11. REMOVE CRANKSHAFT PULLEY

(a) Turn the crankshaft pulley, and align its groove with the timing mark ”0” of the timing chain cover.

(b) Check that the timing marks of the camshaft timing sprockets are aligned with the timing marks of the No. 1 bearing cap as shown in the illustration.

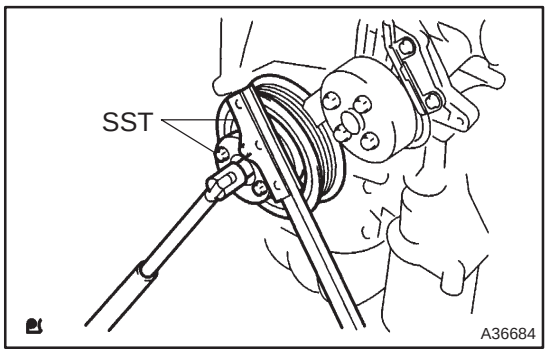

(c) Using SST, fix the crankshaft pulley and loosen a pulley set bolt.
SST 09213–54015 (91651–60855), 09330–00021

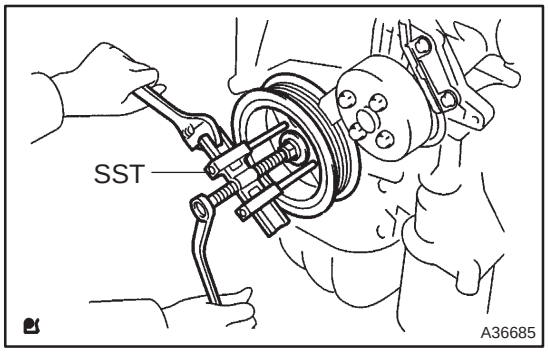

(d) Using a pulley set bolt and SST, remove the crankshaft pulley.
SST 09950–50013 (09951–05010, 09952–05010, 09953–05020, 09954–05021), 09950–40011 (09957–04010)

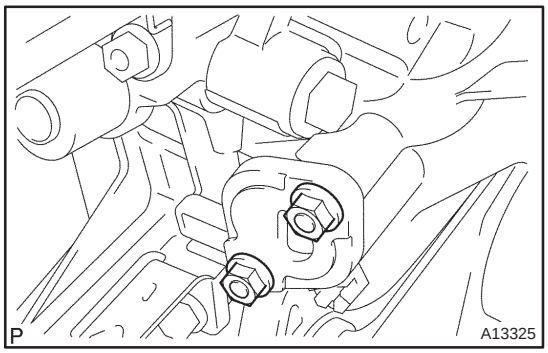

12. REMOVE CHAIN TENSIONER ASSY NO.1

(a) Remove the 2 nuts, timing chain tensioner and gasket.

NOTICE:

Be sure not to turn the crankshaft without the chain tensioner.

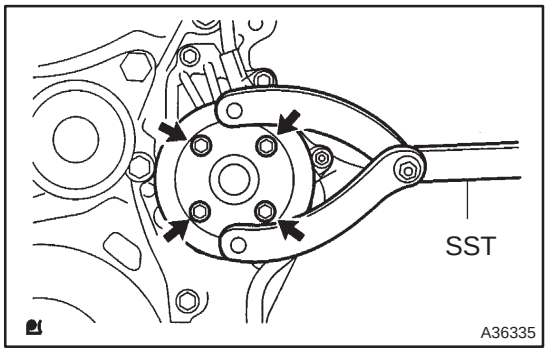

13. REMOVE WATER PUMP PULLEY

(a) Using SST, remove the water pump pulley.
SST 09960–10010 (09962–01000, 09963–00600)

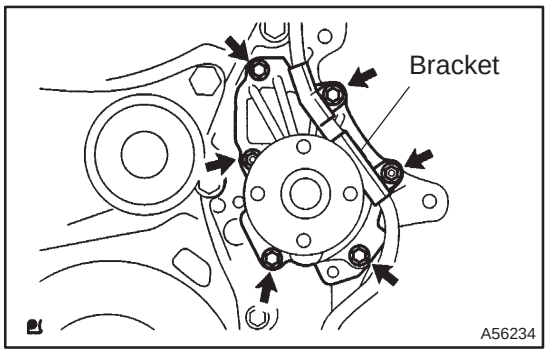

14. REMOVE WATER PUMP ASSY

(a) Remove the 4 bolts, 2 nuts, bracket and water pump.

15. REMOVE CRANK POSITION SENSOR

16. REMOVE OIL PAN DRAIN PLUG

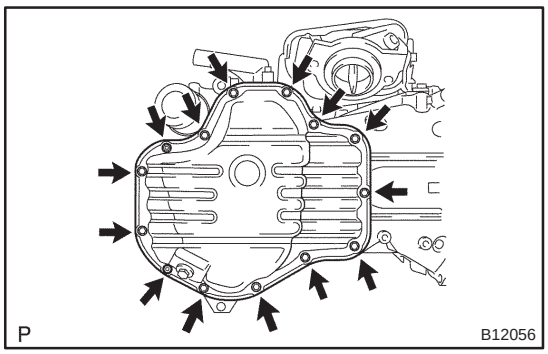

17. REMOVE OIL PAN SUB–ASSY

(a) Remove the 12 bolts and 2 nuts.

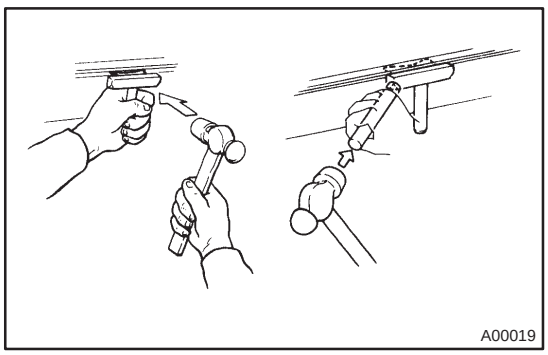

(b) Insert the blade of SST between the crank case and oil pan, cut off applied sealer and remove the oil pan.
SST 09032–00100

NOTICE:
Be careful not to damage the contact surface of the cylinder block and oil pan.

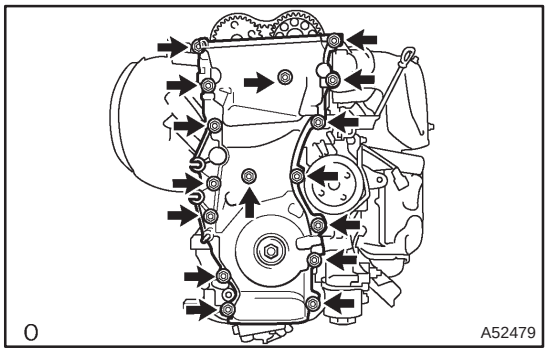

18. REMOVE TIMING CHAIN OR BELT COVER SUB–ASSY

(a) Remove the 14 bolts and 2 nuts.
(b) Remove the timing chain cover by prying the portions between the timing chain cover and cylinder head or cylinder block with a screwdriver.

NOTICE:
Be careful not to damage the contact surfaces of the timing chain cover, cylinder block and cylinder head.

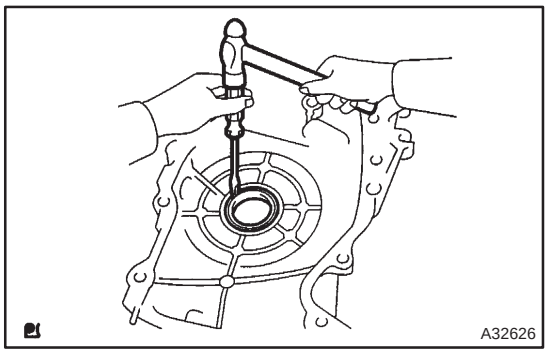

19. REMOVE TIMING GEAR CASE OR TIMING CHAIN CASE OIL SEAL

(a) Using a screwdriver, remove the oil seal.

20. REMOVE CRANKSHAFT POSITION SENSOR PLATE NO.1

21. REMOVE TIMING CHAIN GUIDE

22. REMOVE CHAIN TENSIONER SLIPPER

23. REMOVE CHAIN VIBRATION DAMPER NO.1

24. REMOVE CHAIN SUB–ASSY

25. REMOVE CRANKSHAFT TIMING GEAR OR SPROCKET

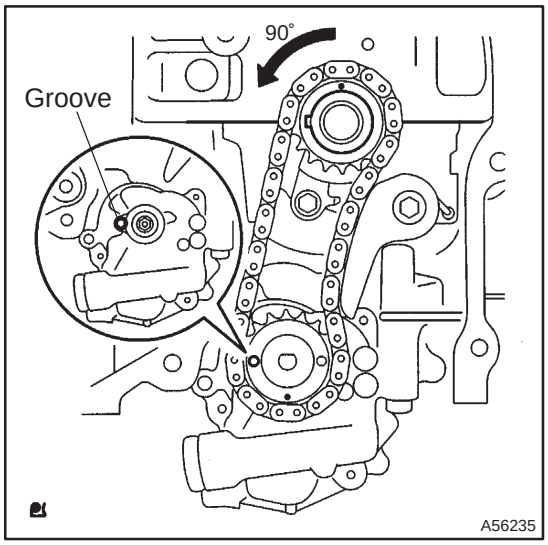

26. REMOVE NO.2 CHAIN SUB–ASSY

(a) Turn the crankshaft counterclockwise 90°, and align an adjusting hole of the oil pump drive shaft gear with the groove of the oil pump.

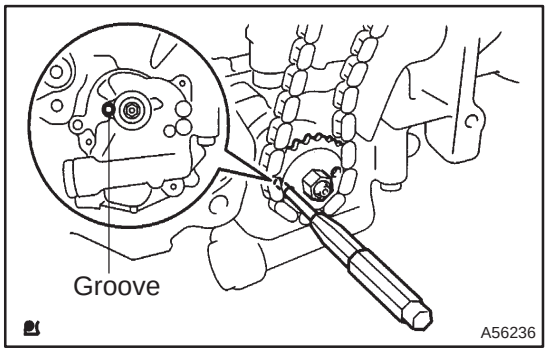

(b) Put a bar (ϕ 4 mm) in the adjusting hole of the oil pump drive shaft gear to lock in position, and remove a nut.

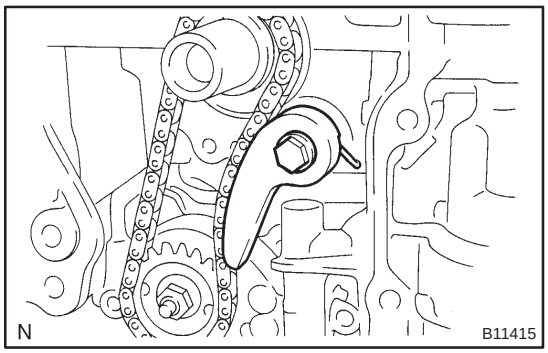

(c) Remove bolt and a chain tensioner plate.
(d) Remove the oil pump drive gear, oil pump drive shaft gear and No. 2 chain sub assembly.

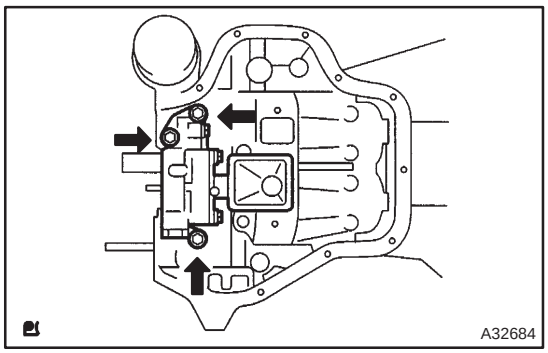

27. REMOVE OIL PUMP ASSY

(a) Remove 3 bolts and the oil pump assembly.

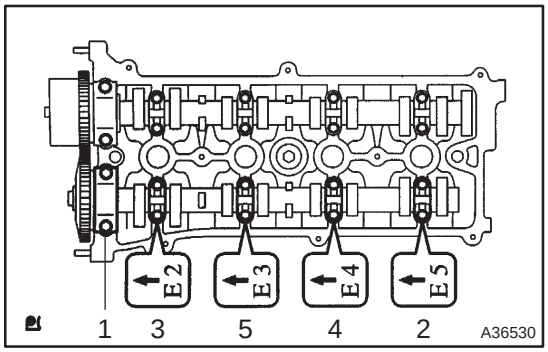

28. REMOVE NO.2 CAMSHAFT

(a) Remove No. 1 and No. 2 camshaft bearing caps as the sequence shown in the illustration.
(b) Remove No. 2 camshaft.

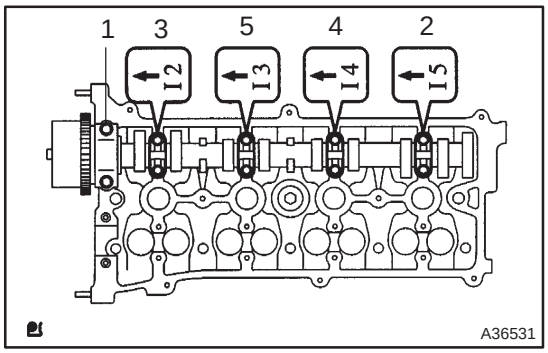

29. REMOVE CAMSHAFT

(a) Remove No. 1 and No. 3 camshaft bearing caps as the sequence shown in the illustration.
(b) Remove No. 1 camshaft.

30. REMOVE CAMSHAFT BEARING NO.1

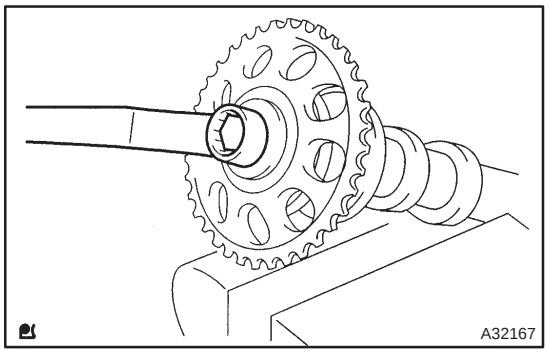

31. REMOVE CAMSHAFT TIMING GEAR OR SPROCKET

(a) Fix the No. 2 camshaft with a vise, and remove the camshaft timing gear.

NOTICE:

Be careful not to damage the camshaft.

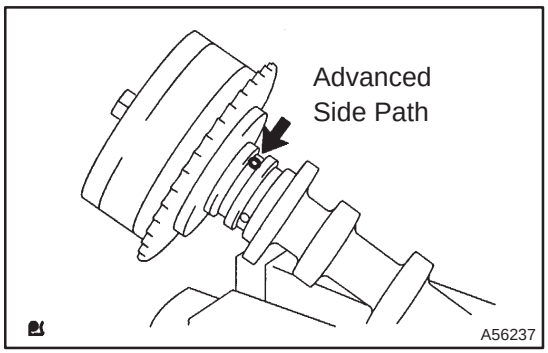

32. REMOVE CAMSHAFT TIMING GEAR ASSY

(a) Fix the No. 1 camshaft with a vise, and make sure the camshaft timing gear assembly does not move.

(b) Cover all the paths with vinyl tape except an advanced side path as shown in the illustration.

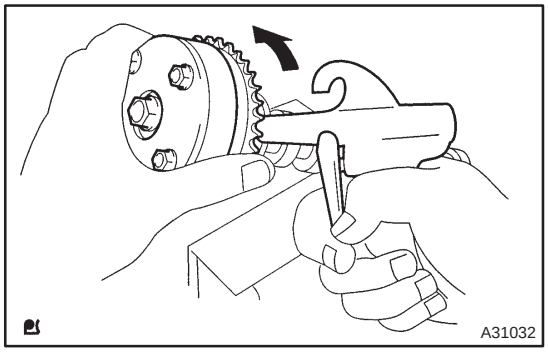

(c) Put air pressure into the oil path with 150 kPa (1.5 kgf/cm^2 21psi), and turn the camshaft timing gear assembly to the advance direction (counterclockwise) by force.

NOTICE:

Cover the paths with shop rag to avoid oil splashing.

HINT:

Depending on the air pressure, the VVT timing sprocket will turn to the advance angle side without applying force by hand. Also, under the condition that the pressure can be hardly applied because of the air leakage form the port, there may be the case that the lock pin could be hardly released.

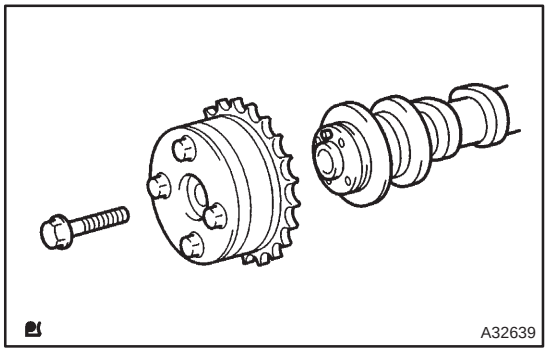

(d) Remove a fringe bolt of camshaft timing gear assembly.

NOTICE:

- **Be sure not to remove the other 4 bolts.**
- **In case of reusing the camshaft timing gear assembly, release the straight pin lock first, and then install the gear.**

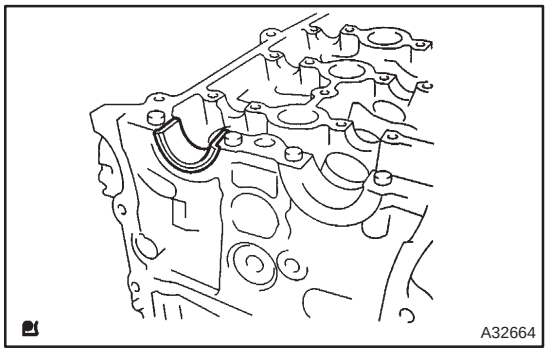

33. REMOVE CAMSHAFT BEARING NO.2

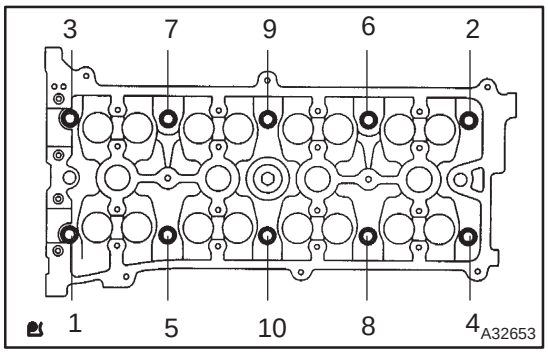

34. REMOVE CYLINDER HEAD SUB–ASSY

(a) Using a 10 mm bi–hexagon wrench, uniformly loosen and remove the 10 cylinder head bolts, in several passes, in the sequence shown. Remove the 10 cylinder head bolts and plate washers.

NOTICE:

- **Be careful not to drop washers into the cylinder head.**
- **Head warpage or cracking could result from removing bolts in and incorrect order.**

35. REMOVE CYLINDER HEAD GASKET

36. REMOVE CYLINDER BLOCK WATER DRAIN COCK SUB–ASSY

37. REMOVE UNION(W/ OIL COOLER)

38. REMOVE OIL CONTROL VALVE FILTER

(a) Using a 6 mm socket hexagon wrench, remove a plug and oil control valve filter.

39. REMOVE W/HEAD TAPER SCREW PLUG NO.1

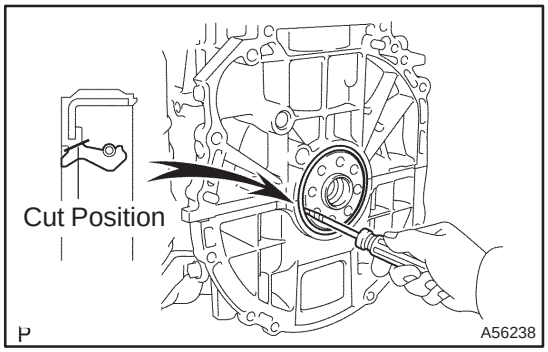

40. REMOVE ENGINE REAR OIL SEAL

(a) Using a knife, cut off the oil seal lip.

(b) Using a screwdriver with its tip taped, pry out the oil seal.

NOTICE:

After the removal, check the crankshaft is not damaged. If there is, mend it with a sandpaper (#400).

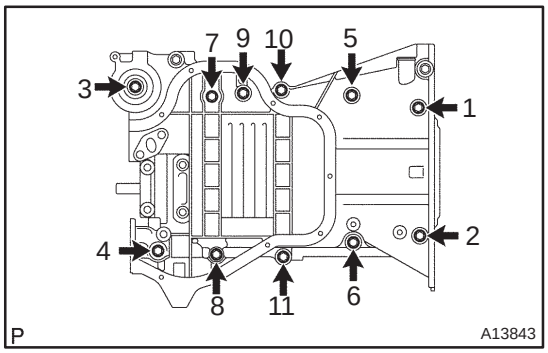

41. REMOVE STIFFENING CRANKCASE ASSY

(a) Uniformly loosen and remove the 11 bolts, in several passes, in the sequence shown.

(b) Using a screwdriver, remove the crankcase by prying the portions between the crankcase and cylinder block.

NOTICE:

Be careful not to damage the contact surfaces of the crankcase and cylinder block.

(c) Remove the O–ring from the cylinder block.

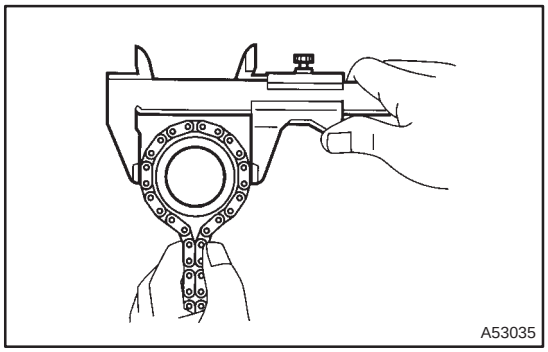

42. INSPECT OIL PUMP DRIVE GEAR

(a) Wrap the chain around the drive gear.
(b) Using vernier calipers, measure the drive gear diameter with the chain.

NOTICE:
Vernier calipers must contact the chain rollers for the measuring.

Minimum gear diameter (w/chain): 48.2 mm (1.898 in.)

(c) If the diameter is less than minimum, replace the chain and drive gear.

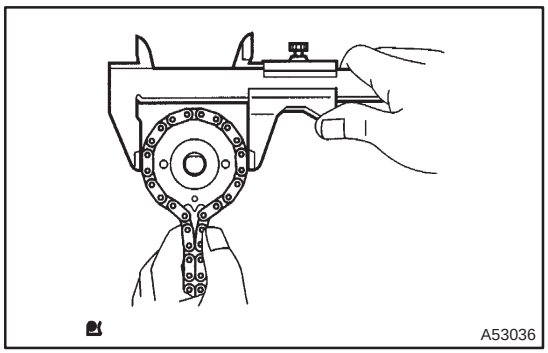

43. INSPECT OIL PUMP DRIVE SHAFT GEAR

(a) Wrap the chain around the drive shaft gear.
(b) Using vernier calipers, measure the drive shaft gear diameter with the chain.

NOTICE:
Vernier calipers must contact the chain rollers for the measuring.

Minimum gear diameter (w/chain): 48.2 mm (1.898 in.)

(c) If the diameter is less than minimum, replace the chain and drive shaft gear.

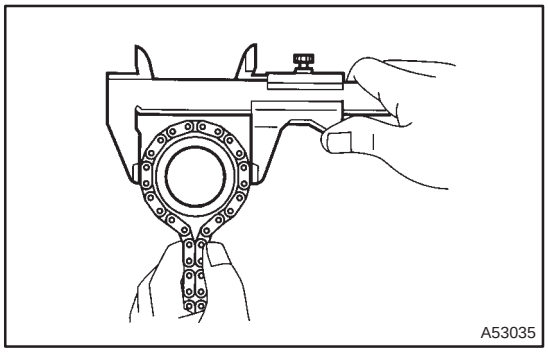

44. INSPECT CRANKSHAFT TIMING GEAR OR SPROCKET

(a) Wrap the chain around the timing gear.
(b) Using vernier calipers, measure the timing gear diameter with the chain.

NOTICE:
Vernier calipers must contact the chain rollers for the measuring.

Minimum gear diameter (w/chain): 51.6 mm (2.031 in.)

(c) If the diameter is less than minimum, replace the chain and timing gear.

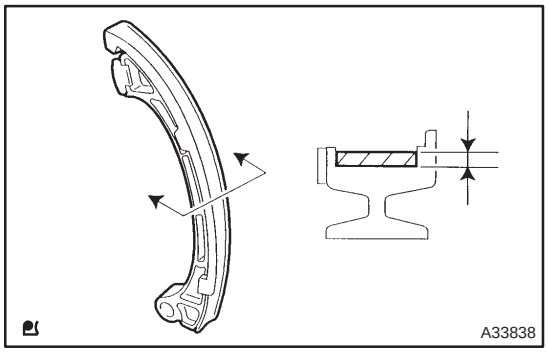

45. INSPECT CHAIN TENSIONER SLIPPER

(a) Measure the chain tensioner slipper wears.
Maximum wear: 1.0 mm (0.039 in.)
(b) If the wear is greater than maximum, replace the chain tensioner slipper.

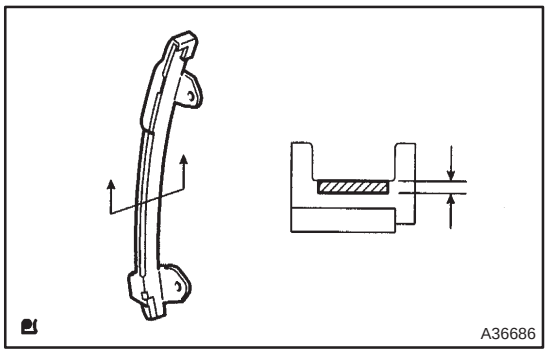

46. INSPECT CHAIN VIBRATION DAMPER NO.1

(a) Measure the chain vibration damper No. 1 wears.
Maximum wear: 1.0 mm (0.039 in.)
(b) If the wear is greater than maximum, replace the chain vibration damper No. 1.

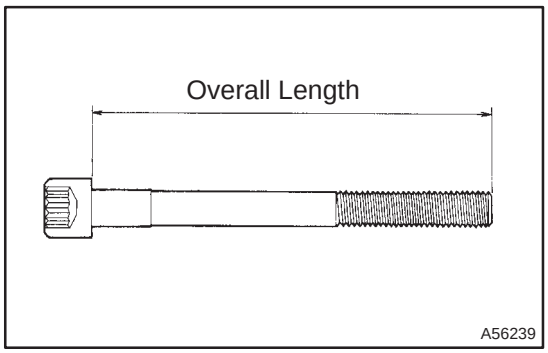

47. INSPECT CYLINDER HEAD SET BOLT

(a) Using vernier calipers, measure the length of head bolts from the seat to the end.
Standard bolt length:
161.3 – 162.7 mm (6.350 – 6.405 in.)
Maximum bolt length: 164.2 mm (6.465 in.)
(b) If the length is greater than maximum, replace the bolt.

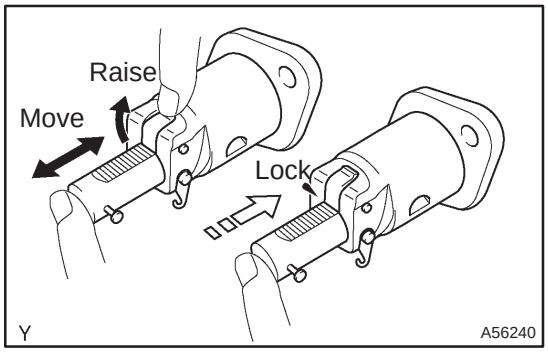

48. INSPECT CHAIN TENSIONER ASSY NO.1

(a) Check the plunger moves smoothly when the ratchet pawl is raised, and when the ratchet pawl is released, the plunger is locked in place.
(b) Release the ratchet pawl and check that the plunger is locked in place by the ratchet pawl and does not move when pushed with finger.

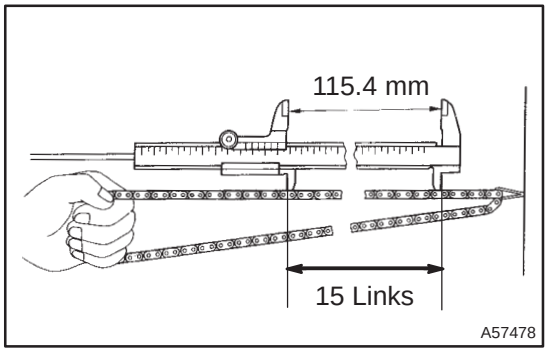

49. INSPECT CHAIN SUB–ASSY

(a) Using vernier calipers, measure the length of the 15 links with the chain fully stretched.
Maximum chain elongation: 115.4 mm (4.543 in.)

If the elongation is greater than maximum, replace the chain.
HINT:
Make the same pulling measurements at 3 or more places selected at random.

(b) If the elongation is greater than maximum, replace the chain.

NOTICE:

Make the same measurements pulling at 3 or more places selected at random, and average the length.

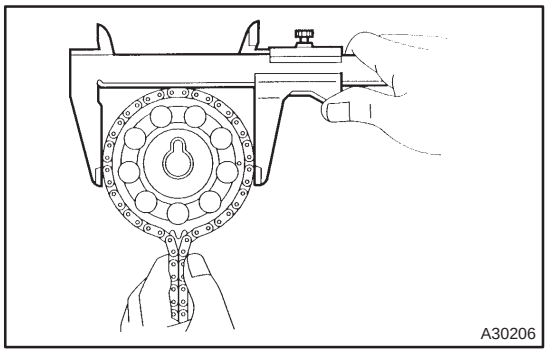

50. INSPECT CAMSHAFT TIMING GEAR OR SPROCKET

(a) Wrap the chain around the timing sprocket.

(b) Using a vernier calipers, measure the timing sprocket diameter with the chain.

Minimum sprocket diameter (w/chain):
97.3 mm (3.831 in.)

NOTICE:

Vernier calipers must contact the chain rollers for the measuring.

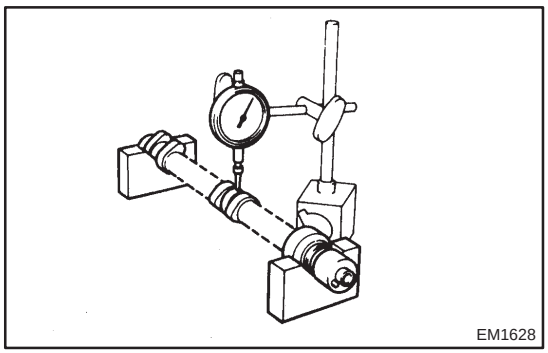

51. INSPECT CAMSHAFT

(a) Inspect the camshaft for runout.
  (1) Place the camshaft on V–blocks.
  (2) Using a dial indicator, measure the circle runout at the center journal

Maximum circle runout: 0.03 mm (0.0012 in.)

(b) If the circle runout is greater than maximum, replace the camshaft.

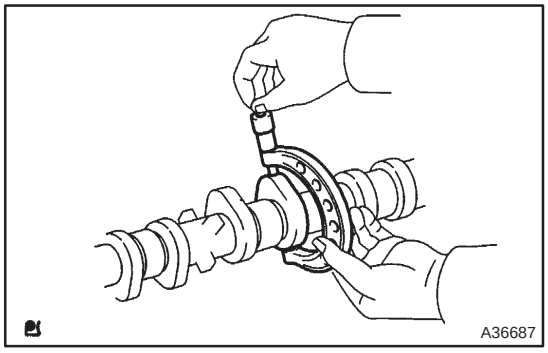

(c) Inspect cam lobe height.
  (1) Using a micrometer, measure the cam lobe height.

Standard cam lobe height:
46.495 – 46.595 mm (1.8305 – 1.8345 in.)
Minimum cam lobe height: 46.385 mm (1.8262 in.)

(d) If the cam lobe height is less than minimum, replace the camshaft.

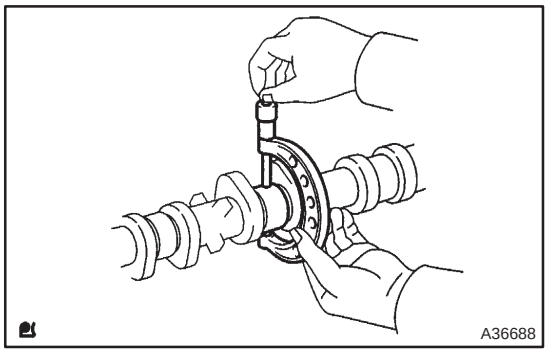

(e) Inspect camshaft journal diameter.
  (1) Using a micrometer, measure the journal diameter.

No. 1 journal diameter:
35.971 – 35.985 mm (1.4162 – 1.4167 in.)
Other journal diameter:
22.959 – 22.975 mm (0.9039 – 0.9045 in.)

(f) If the journal diameter is not as specified, check the oil clearance.

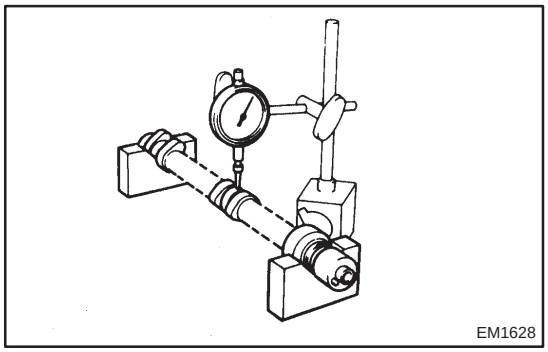

52. INSPECT NO.2 CAMSHAFT

(a) Place the camshaft on V–blocks.
(b) Using a dial indicator, measure the circle runout at the center journal.
Maximum circle runout: 0.03 mm (0.0012 in.)
(c) If the circle runout is greater than maximum, replace the camshaft.

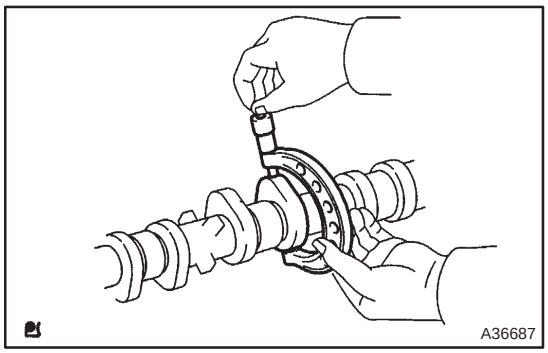

(d) Inspect cam lobe height.
(1) Using a micrometer, measure the cam lobe height.
Standard cam lobe height:
45.983 – 46.083 mm (1.8104 – 1.8143 in.)
Minimum cam lobe height: 45.873 mm (1.8060 in.)
(e) If the cam lobe height is less than minimum, replace the camshaft.

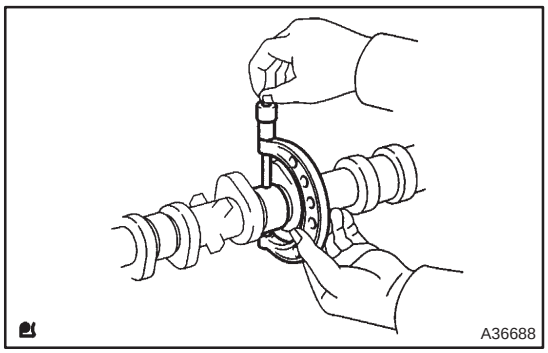

(f) Inspect camshaft journal diameter.
(1) Using a micrometer, measure the journal diameter.
No. 1 journal diameter:
35.971 – 35.985 mm (1.4162 – 1.4167 in.)
Other journal diameter:
22.959 – 22.975 mm (0.9039 – 0.9045 in.)
(g) If the journal diameter is not as specified, check the oil clearance.

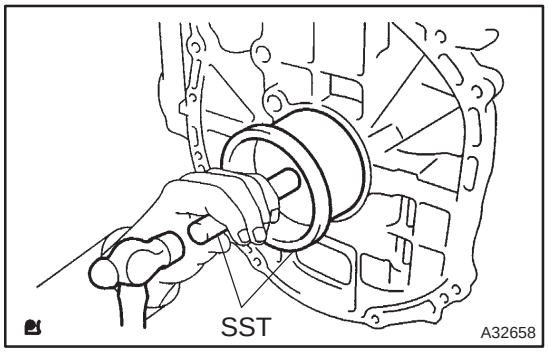

53. INSTALL ENGINE REAR OIL SEAL

(a) Apply MP grease to a new oil seal lip.
NOTICE:
Keep the lip off the foreign materials.
(b) Using SST and a hammer, evenly tap the oil seal until its surface is flush with the rear oil seal retainer edge.
SST 09223–15030, 09950–70010 (09951–07100)
NOTICE:
Wipe off extra grease on the crank shaft.

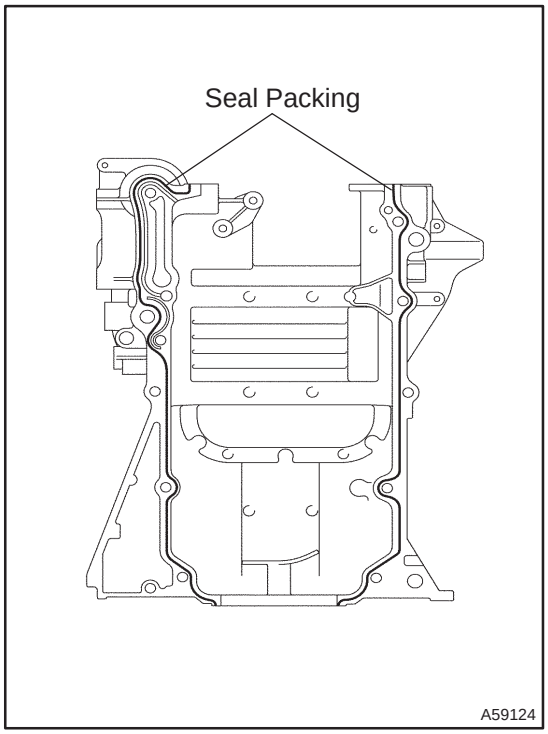

54. INSTALL STIFFENING CRANKCASE ASSY

(a) Apply seal packing in the shape of bead (Diameter 2.5 mm – 3 mm (0.098 – 0.118 in.)) the places shown in the illustration.

Seal packing: Part No. 08826–00080 or equivalent

NOTICE:

- **Remove any oil from the contact surface.**
- **Install the crank case within 3 minutes after applying seal packing.**
- **Do not start the engine within 2 hours after installing.**

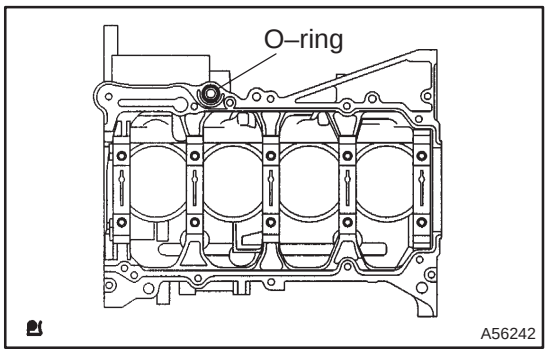

(b) Install a new O–ring the place shown in the illustration.

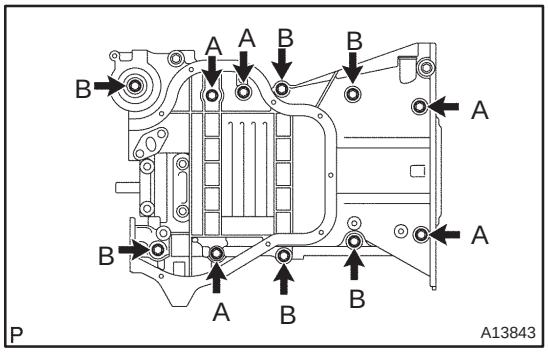

(c) Temporarily install the crank case with the 11 bolts.

HINT:

Each bolt length is indicated in the illustration.

Bolt length:

112 mm (4.41 in.) for A of 12 mm head

35 mm (1.38 in.) for B of 12 mm head

(d) Uniformly tighten the bolts, stud bolts and nuts in several passes.

Torque: 33 N·m (332 kgf·cm, 24 ft·lbf)

55. INSTALL W/HEAD TAPER SCREW PLUG NO.1

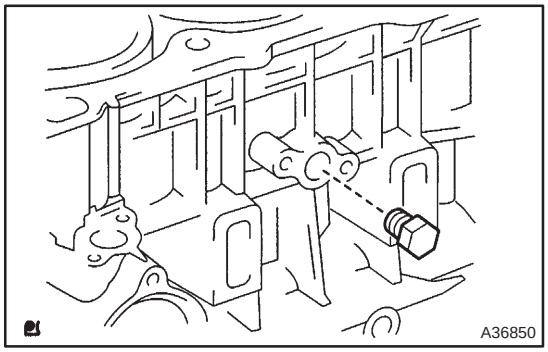

(a) Apply adhesive to the threads of the plug and install.

Adhesive:

Part No. 08833–00070, THREE BOND 1324 or equivalent.

Torque: 26 N·m (265 kgf·cm, 19 ft·lbf)

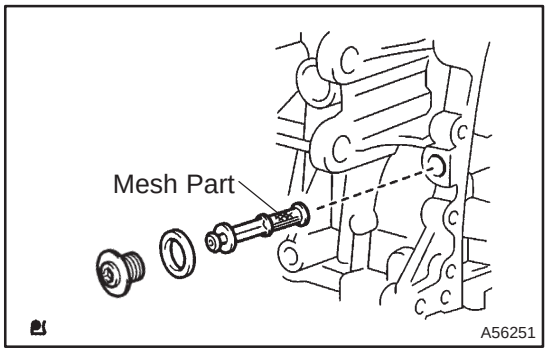

56. INSTALL OIL CONTROL VALVE FILTER

(a) Check that no foreign substance on the mesh part of the filter.

(b) Using a 8 mm socket hexagon wrench, install the oil control valve filter with a new gasket.
Torque: 30 N·m (306 kgf·cm, 22 ft·lbf)

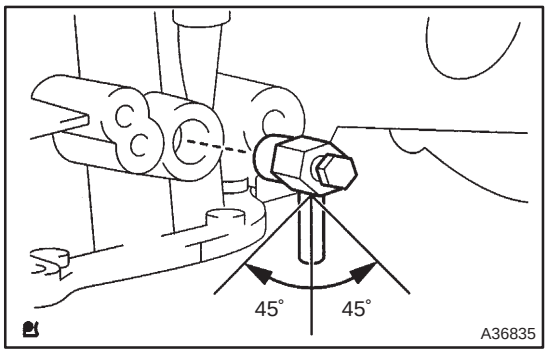

57. INSTALL CYLINDER BLOCK WATER DRAIN COCK SUB–ASSY

(a) Install the water drain cock sub assembly within the range shown in the illustration.
Torque: 25 N·m (255 kgf·cm, 18 ft·lbf)

58. INSTALL UNION(W/ OIL COOLER)
Torque: 40 N·m (408 kgf·cm, 29 ft·lbf)

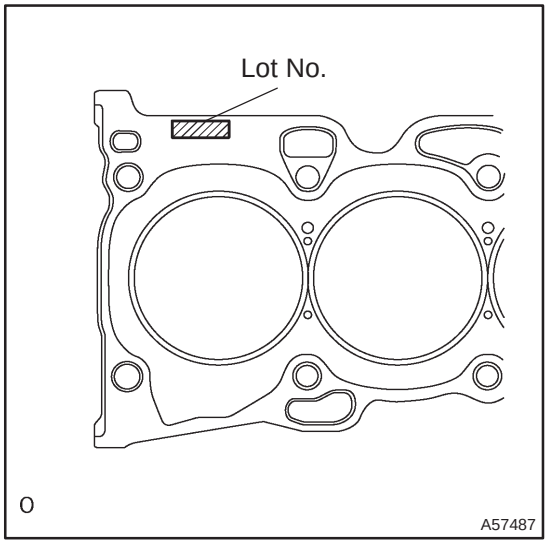

59. INSTALL CYLINDER HEAD GASKET

(a) Place a new cylinder head gasket on the cylinder block surface with the Lot No. stamp upward.

NOTICE:
- **Remove any oil from contact surface.**
- **Be careful of the installation direction.**
- **Place the cylinder head quietly in order not to damage the gasket with the bottom part of the head.**

60. INSTALL CYLINDER HEAD SUB–ASSY

HINT:
The cylinder head bolts are tightened in 2 progressive steps.

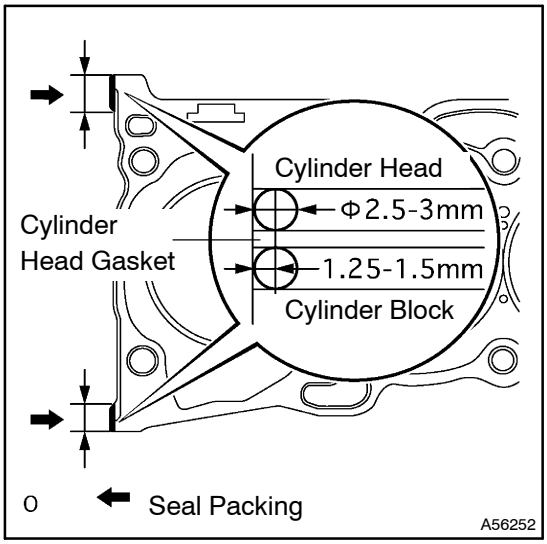

(a) Apply seal packing in the shape of bead (Diameter 2.5 – 3 mm (0.098 – 0.118 in.)) consequently as shown in the illustration.

Seal packing: Part No. 08826–00080 or equivalent

NOTICE:

- **Remove any oil from contact surface.**
- **Install the cylinder head within 3 minutes after applying seal packing.**
- **After installing the cylinder head, cylinder head bolts must be tightened within 15 minutes.**

(b) Apply a light coat of engine oil on the threads and under the heads of the cylinder head bolts.

(c) Install bolts and plate washers to the cylinder head.

NOTICE:

Do not drop the washers into the cylinder head.

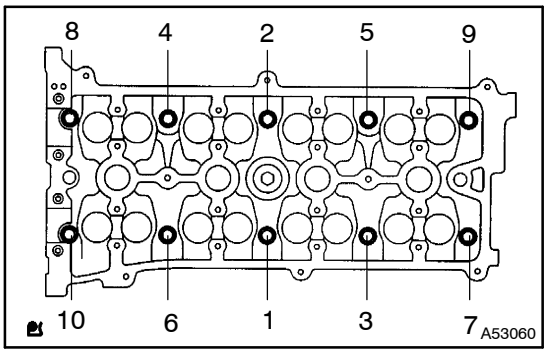

(d) Using a 10 mm bi–hexagon wrench, temporarily tighten each bolts in the several passes, as the sequence shown in the illustration, and fully tighten with specified torque.

Torque: 79 N·m (806 kgf·cm, 58 ft·lbf)

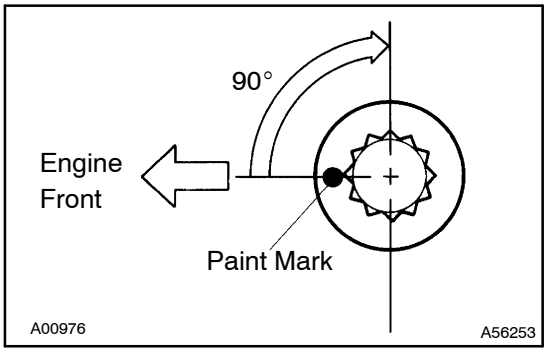

(e) Mark the front side of each cylinder head bolt with paint.

(f) Retighten the cylinder head bolts by 90° in the sequence shown.

(g) Check that the painted marks are now at a 90° angle to the front.

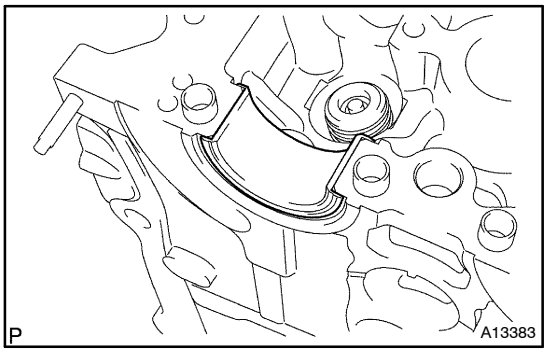

61. INSTALL CAMSHAFT BEARING NO.2

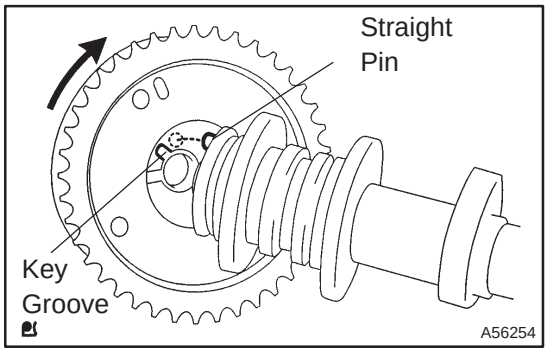

62. INSTALL CAMSHAFT TIMING GEAR ASSY

(a) Put the camshaft timing gear assembly and the camshaft together with the straight pin of the key groove.

(b) Turn the camshaft timing gear assembly to the left direction (as shown in the illustration) with pushing it lightly against the camshaft. Push further at the position where the pin gets into the groove.

CAUTION:

Be sure not to turn the camshaft timing gear to the retard angle side (to the right angle).

(c) Check that there is no clearance between the gear's fringe and the camshaft.

(d) Tighten the fringe bolt with the camshaft timing gear fixed.
Torque: 54 N·m (551 kgf·cm, 50 ft·lbf)

(e) Check that the camshaft timing gear assembly can move to the retard angle side (the right direction), and is locked at the most retarded position.

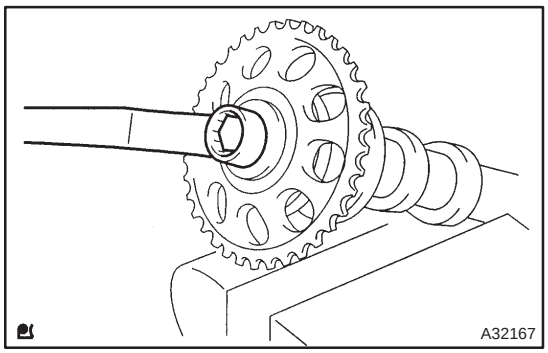

63. INSTALL CAMSHAFT TIMING GEAR OR SPROCKET

(a) Fix the camshaft No. 2 to the vise, and install camshaft No. 2 timing gear.
Torque: 54 N·m (551 kgf·cm, 40 ft·lbf)

64. INSTALL CAMSHAFT BEARING NO.1

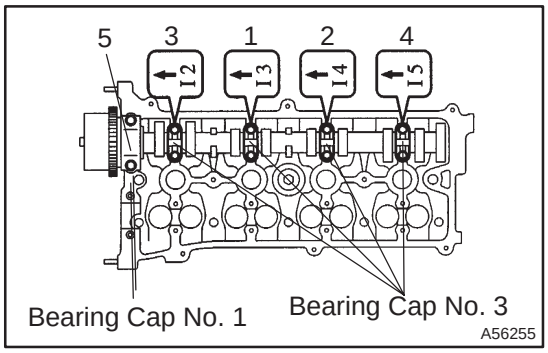

65. INSTALL CAMSHAFT

(a) Tighten camshaft bearing cap No.1 and No. 3 as the sequence shown in the illustration.
Torque:
Bearing cap No. 1 29.5 N·m (300 kgf·cm, 22 ft·lbf)
Bearing cap No. 3 9 N·m (90 kgf·cm, 80 in.·lbf)

NOTICE:

- **Tighten the bolts after deciding the position for the thrust direction of the camshaft by bearing cap No. 1.**
- **Install the camshaft with its timing mark of camshaft timing gear on top.**

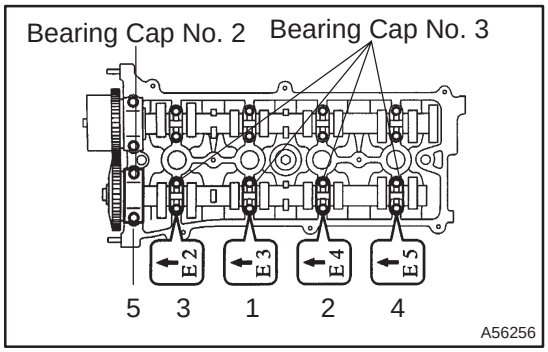

66. INSTALL NO.2 CAMSHAFT

(a) Tighten camshaft bearing cap No.2 and No. 3 as the sequence shown in the illustration.
Torque:
Bearing cap No. 2 29.5 N·m (300 kgf·cm, 22 ft·lbf)
Bearing cap No. 3 9 N·m (90 kgf·cm, 80 in.·lbf)

NOTICE:

- **Tighten the bolts after deciding the position for the thrust direction of the camshaft by bearing cap No. 2.**
- **Install the camshaft with its timing mark of camshaft timing gear on top.**

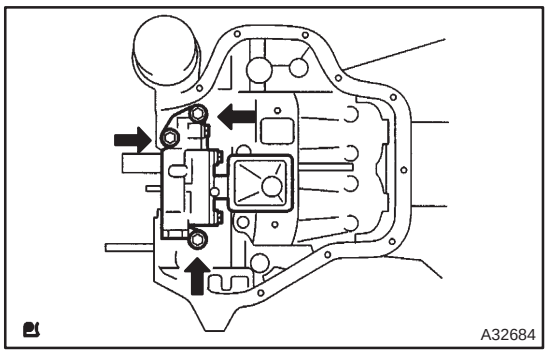

67. INSTALL OIL PUMP ASSY

(a) Install oil pump assembly with 3 bolts and a new gaskets.
Torque: 19 N·m (195 kgf·cm, 15 ft·lbf)

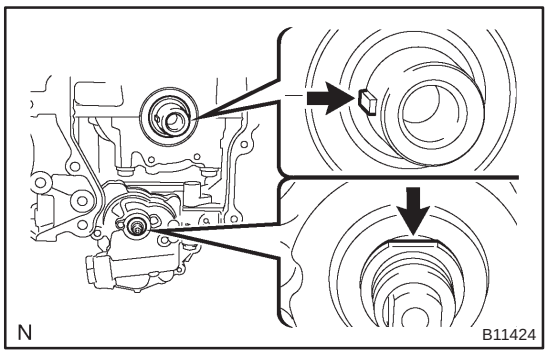

68. INSTALL NO.2 CHAIN SUB–ASSY

(a) Set the crankshaft key into the left horizontal position.
(b) Turn the cutout of the drive shaft to the top.

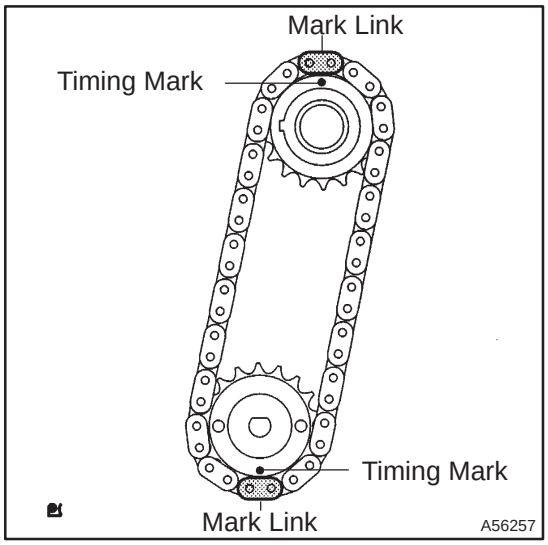

(c) Align the mark links (yellow colored links) with the timing marks of gear as shown in the illustration.
(d) Insert the gear with chain to the crankshaft and oil pump shaft.
(e) Temporarily tighten the oil pump drive shaft gear by a nut.

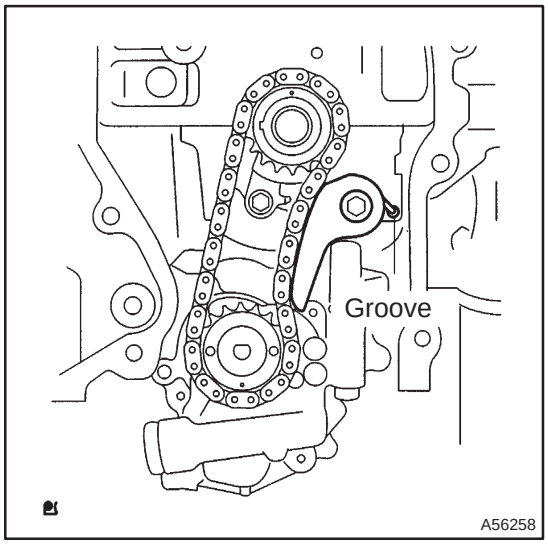

(f) Insert the damper spring into the adjusting hole, and install the chain tensioner plate by a bolt.
Torque: 12 N·m (120 kgf·cm, 9 ft·lbf)

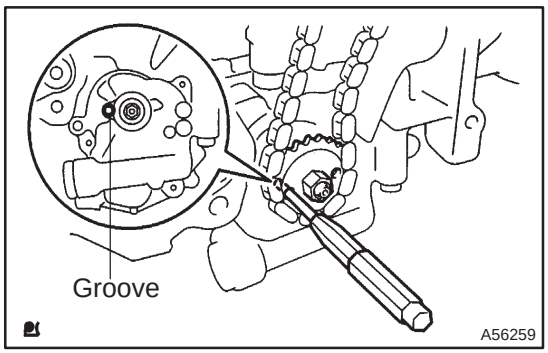

(g) Align an adjusting hole of the sprocket with the groove of the oil pump.

(h) Put a bar (ϕ 4mm) into the adjusting hole of the sprocket to lock in position, and assemble a nut.
Torque: 29.5 N·m (300 kgf·cm, 20 ft·lbf)

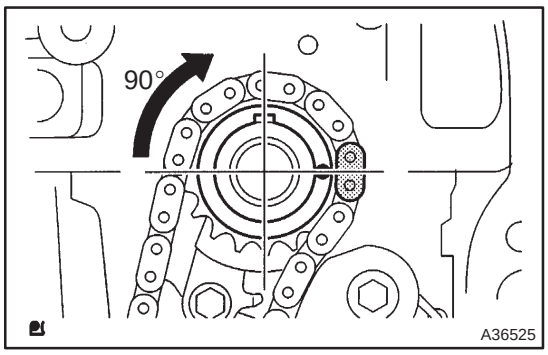

(i) Rotate the crankshaft clockwise 90°, and align the crankshaft key with the top.

69. INSTALL CRANKSHAFT TIMING GEAR OR SPROCKET

70. INSTALL CHAIN VIBRATION DAMPER NO.1

(a) Install the chain vibration damper with the 2 bolts.
Torque: 9 N·m (90 kgf·cm, 80 in.·lbf)

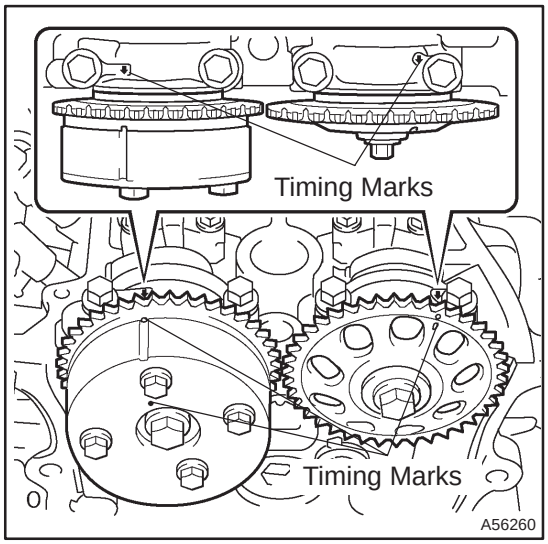

71. INSTALL CHAIN SUB–ASSY

(a) Set No. 1 cylinder to TDC/compression.
(1) Align the timing marks of the camshaft timing sprockets and No. 1 bearing caps.

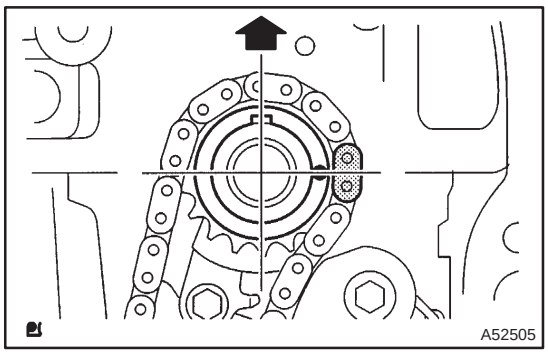

(2) Using the crankshaft pulley bolt, turn the crankshaft and set the set key on the crankshaft upward.

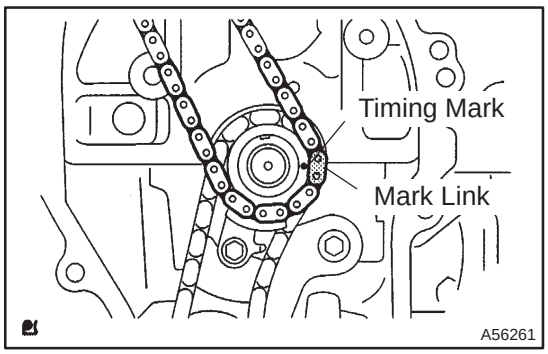

(b) Align the mark plate (blue or orange colored link) with the timing mark of the crankshaft timing gear.

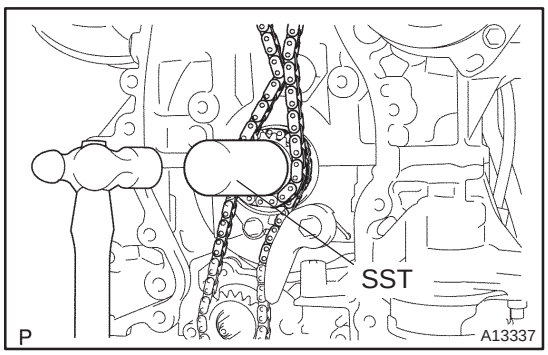

(c) Using SST, install the sprocket.
SST 09309–37010

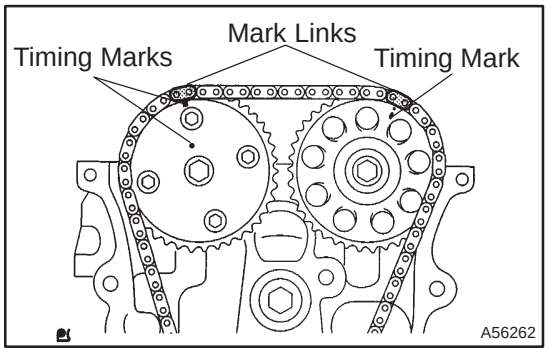

(d) Align the mark l;inks (gold or yellow colored links) with the timing marks of the camshaft timing gear, and install the chain.

72. INSTALL CHAIN TENSIONER SLIPPER

Torque: 19 N·m (195 kgf·cm, 14 ft·lbf)

73. INSTALL TIMING CHAIN GUIDE

Torque: 9 N·m (90 kgf·cm, 80 in.·lbf)

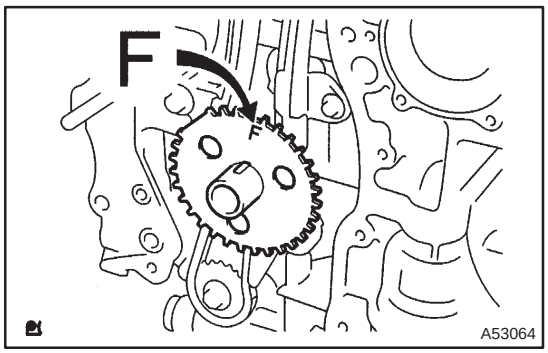

74. INSTALL CRANKSHAFT POSITION SENSOR PLATE NO.1

(a) Install crank angle sensor plate with the ”F” mark facing forward.

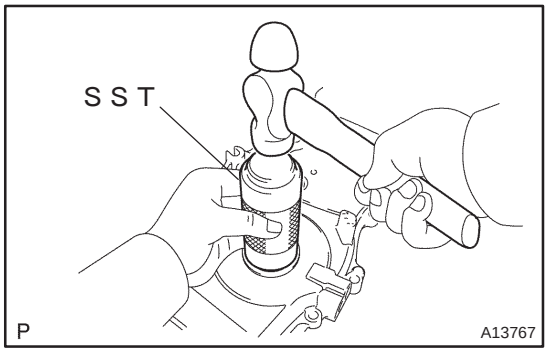

75. INSTALL TIMING GEAR CASE OR TIMING CHAIN CASE OIL SEAL

(a) Using SST and a hammer, tap in a new oil seal until its surface is flush with the timing chain cover edge.
SST 09309–37010

(b) Apply a light coat of MP grease to the lip of a new oil seal.

NOTICE:
Keep the lip off foreign materials.

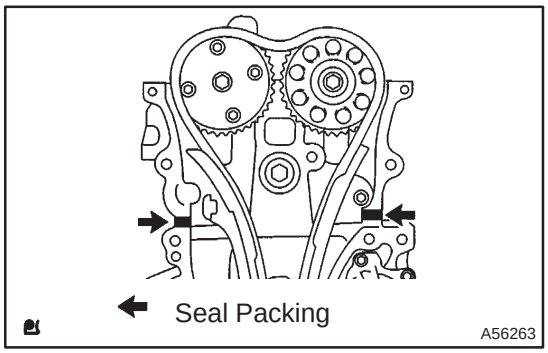

76. INSTALL TIMING CHAIN OR BELT COVER SUB–ASSY

NOTICE:
- **Remove any oil from the contact surface.**
- **Install the chain cover within 3 minutes after applying seal packing.**
- **Do not start the engine within 2 hours after installing.**

(a) Remove any old packing (FIPG) material and be careful not to drop any oil on the contact surfaces of the timing chain cover, cylinder head and cylinder block.

(b) Apply seal packing in the shape of bead (Diameter 2 mm (0.09 in.)) as shown in the illustration.
Seal packing: Part No. 08826–00080 or equivalent

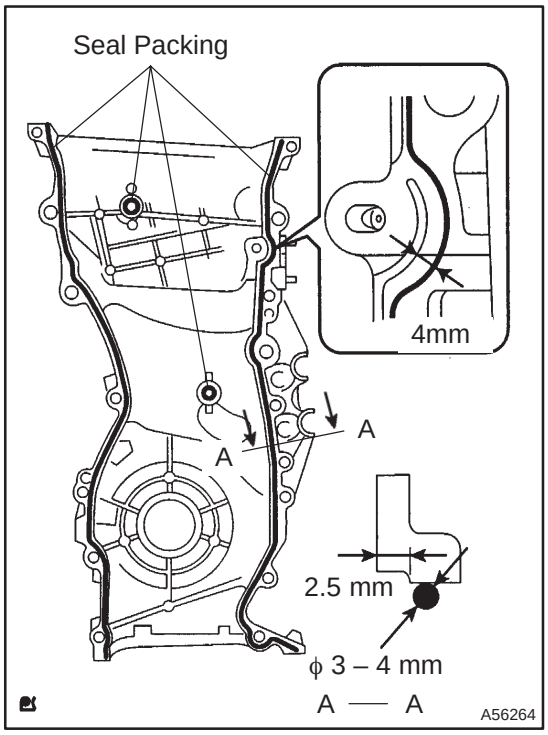

(c) Apply seal packing in the shape of bead (Diameter 3 – 4 mm (0.118 – 0.157 in.)) as shown in the illustration.
Seal packing: Part No. 08826–00080 or equivalent

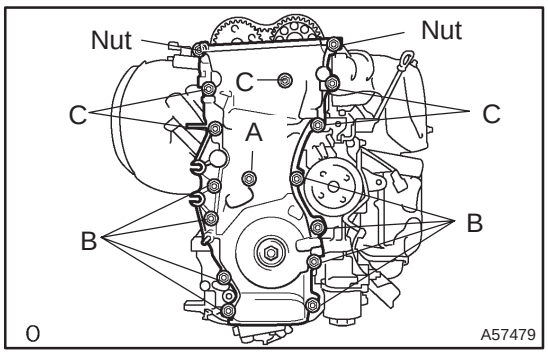

(d) Install the timing chain cover with the 14 bolts and 2 nuts.
Torque:
Bolt A 9.0 N·m (90 kgf·cm, 80 in.·lbf)
Bolt B 21 N·m (220 kgf·cm, 15 ft·lbf)
Bolt C 43 N·m (440 kgf·cm, 32 ft·lbf)
Nut 9.0 N·m (90 kgf·cm, 80 in.·lbf)

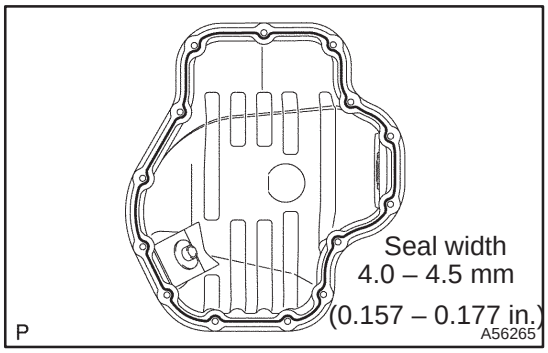

77. INSTALL OIL PAN SUB–ASSY

NOTICE:
- **Remove any oil from the contact surface.**
- **Install the oil pan within 3 minutes after applying seal packing.**
- **Do not start the engine within 2 hours after installing.**

(a) Remove any old packing (FIPG) material and be careful not to drop any oil on the contact surfaces of the cylinder block and oil pan.

(b) Apply seal packing in the shape of bead (Diameter 3 mm – 4 mm (0.157 in.)) as shown in the illustration, and install the oil pan.
Seal packing: Part No. 08826–00080 or equivalent

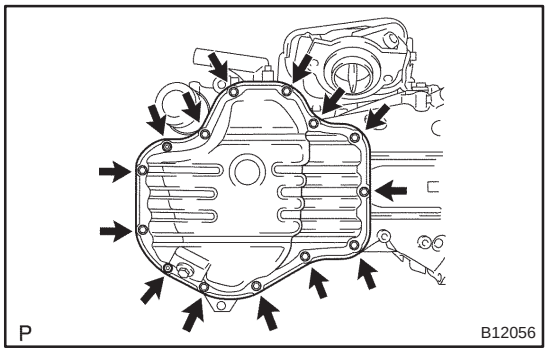

(c) Install the oil pan with the 12 bolts and 2 nuts.
Torque: 9.0 N·m (90 kgf·cm, 80 in.·lbf)

78. INSTALL OIL PAN DRAIN PLUG

(a) Install an oil pan drain plug with a new gasket.
Torque: 25 N·m (250 kgf·cm, 18 ft·lbf)

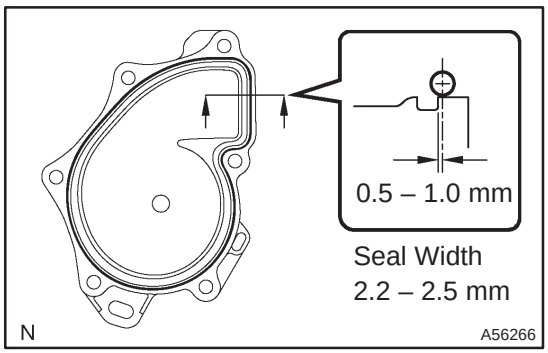

79. INSTALL WATER PUMP ASSY

(a) Clean the contact surface of the cylinder block.
(b) Apply seal packing in the shape of bead (Diameter 2.2 – 2.5 mm) to the outside edge of the water pump.
Seal packing: Part No. 08826–00100 or equivalent

NOTICE:
- **Remove any oil from the contact surface.**
- **Install the water pump within 5 minutes after applying seal packing.**
- **Do not start the engine within 2 hours after installing.**

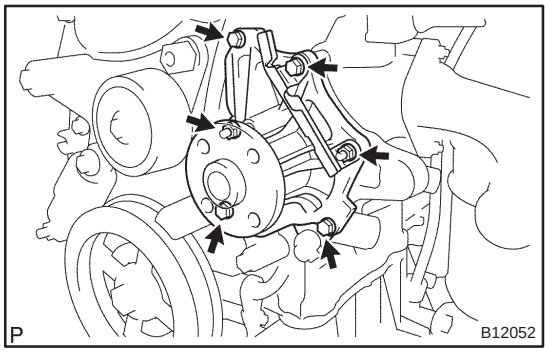

(c) Install the water pump assembly with 4 bolts and 2 nuts.
Torque: 9.0 N·m (90 kgf·cm, 80 in.·lbf)

NOTICE:
Tighten the outside bolts and nuts with the clamp.

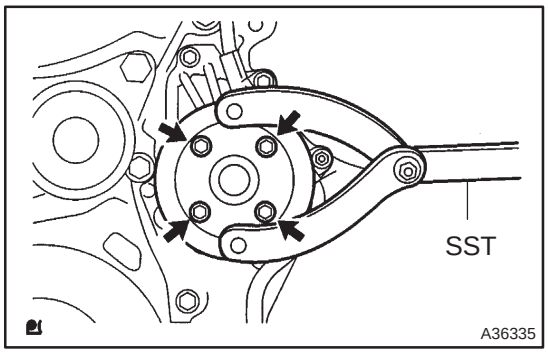

80. INSTALL WATER PUMP PULLEY

(a) Using SST, install the water pump pulley.
SST 09960–10010 (09962–01000, 09963–00600)
Torque: 26 N·m (265 kgf·cm, 19 ft·lbf)

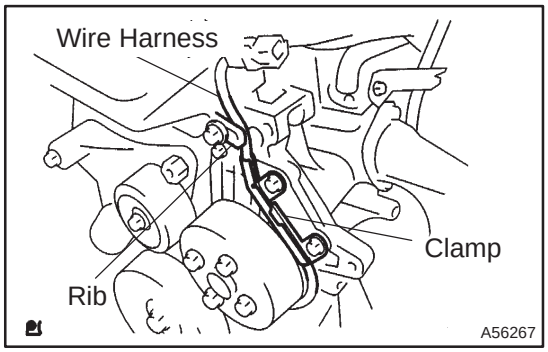

81. INSTALL CRANK POSITION SENSOR

(a) Install the bolt and crankshaft position sensor.
Torque: 9.0 N·m (90 kgf·cm, 80 in.·lbf)

(b) Confirm the wire harness of the crank position sensor is placed as shown in the illustration.

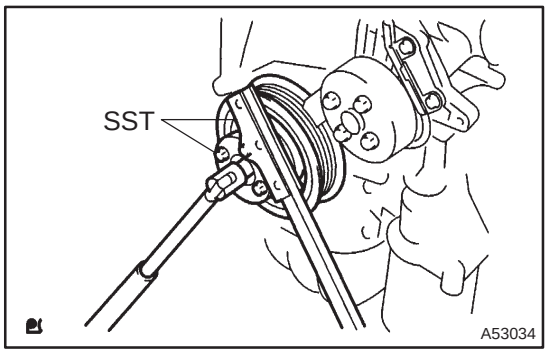

82. INSTALL CRANKSHAFT PULLEY

(a) Using SST, tighten the set bolt.
SST 09213–54015 (91651–60855), 09330–00021
Torque: 170 N·m (1735 kgf·cm, 125 ft·lbf)

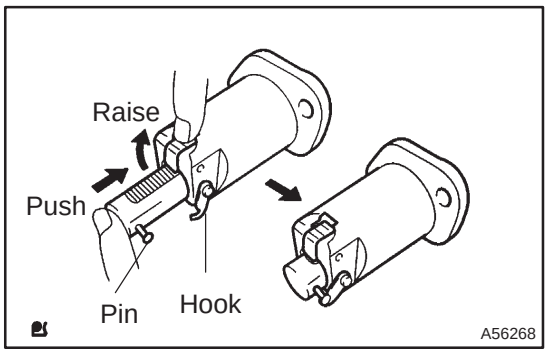

83. INSTALL CHAIN TENSIONER ASSY NO.1

(a) Release the ratchet pawl, fully push in the plunger and apply the hook to the pin so that the plunger cannot spring out.

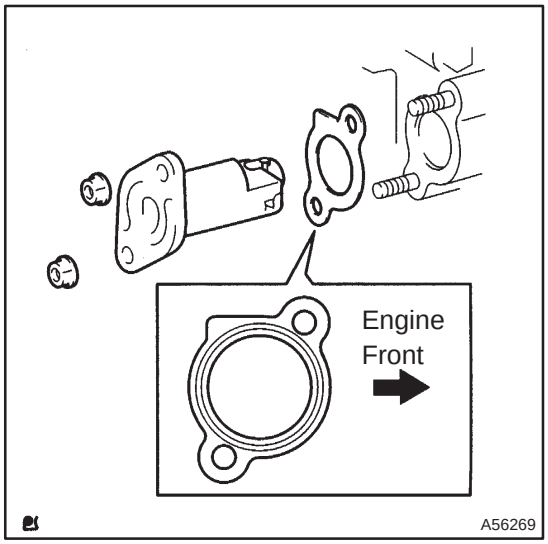

(b) Install a new gasket chain tensioner with 2 nuts.
Torque: 9.0 N·m (90 kgf·cm, 80 in.·lbf)

NOTICE:
If the hook is released wile inserting, apply the hook again, and insert the chain tensioner.

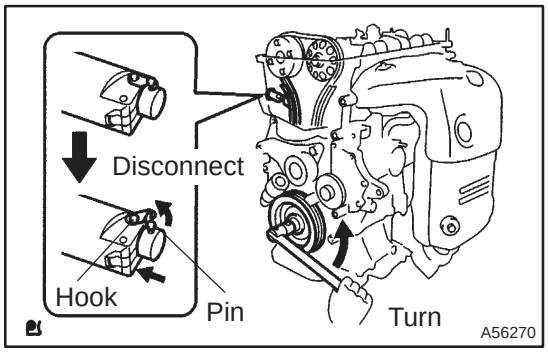

(c) Turn the crankshaft counterclockwise, and check the plunger knock pin is disconnected from the hook.

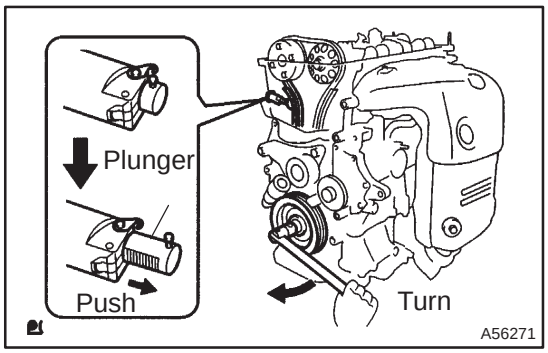

(d) Turn the crankshaft clockwise, and check the plunger is pushed by the plunger.

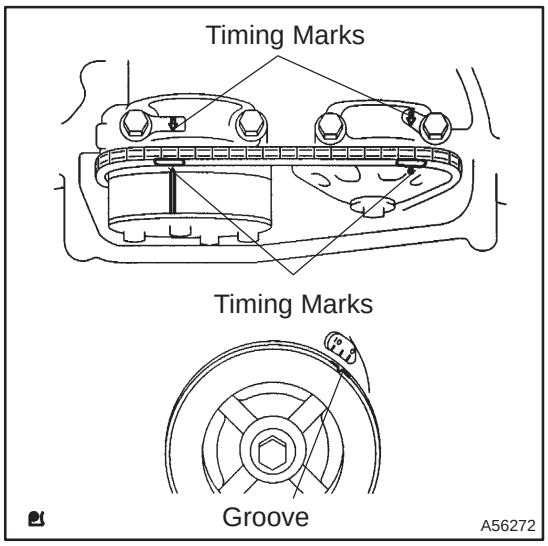

84. INSPECT VALVE CLEARANCE

(a) Turn the crankshaft pulley, and align its groove with the timing mark ”0” of the timing chain cover.

(b) Check that the timing marks of the camshaft timing sprockets are aligned with the timing marks of the No. 1 bearing cap as shown in the illustration.

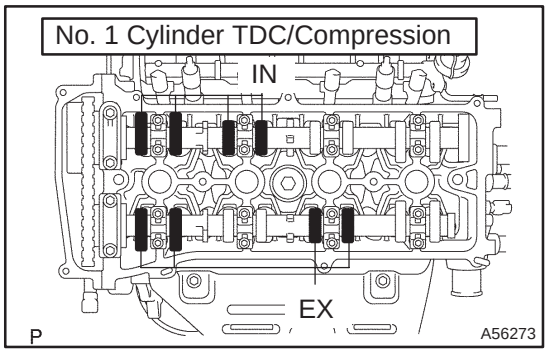

(c) Check only the valve indicated.

(1) Using a feeler gauge, measure the clearance between the valve lifter and camshaft.

(2) Record the out–of–specification valve clearance measurements. They will be used later to determine the required replacement valve lifter.

Valve clearance (cold):
Intake 0.19 – 0.29 mm (0.008 – 0.011 in.)
Exhaust 0.30 – 0.40 mm (0.012 – 0.016 in.)

(d) Turn the crankshaft 1 revolution (360°) clockwise, and set No.4 cylinder to TDC/compression.

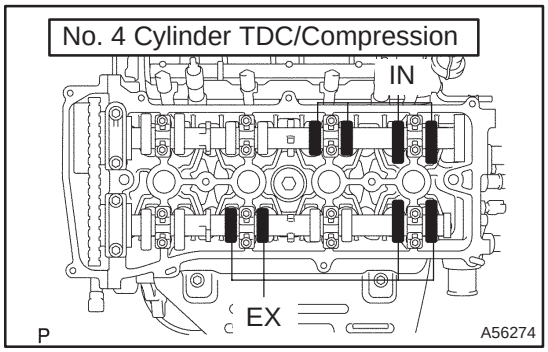

(e) Check only the valve indicated.
(1) Using a feeler gauge, measure the clearance between the valve lifter and camshaft.
(2) Record the out–of–specification valve clearance measurements. They will be used later to determine the required replacement valve lifter.

Valve clearance (cold):
Intake 0.19 – 0.29 mm (0.008 – 0.011 in.)
Exhaust 0.30 – 0.40 mm (0.012 – 0.016 in.)

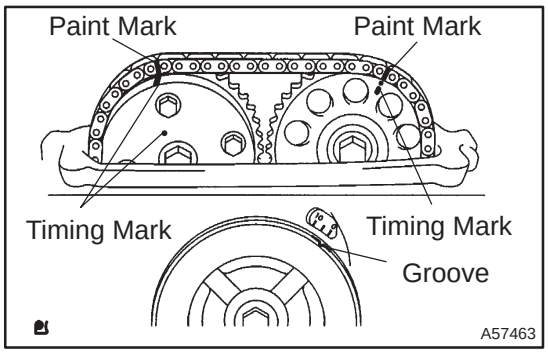

85. ADJUST VALVE CLEARANCE

NOTICE:

Do not turn the crankshaft without the chain tensioner.

(a) Turn the crankshaft 1 revolution (360°) clockwise, and set No. 1 cylinder to TDC/compression.
(b) Place matchmarks on the timing chain and camshaft timing gear.
(c) Remove the 2 bolts and chain tensioner.

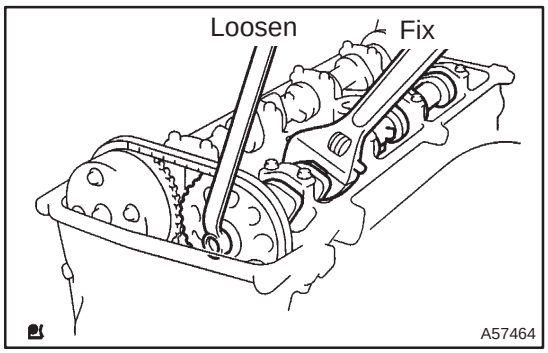

(d) Fix the camshaft with a spanner and so on, then loosen the camshaft timing gear set bolt.

NOTICE:

Be careful not to damage the valve lifter.

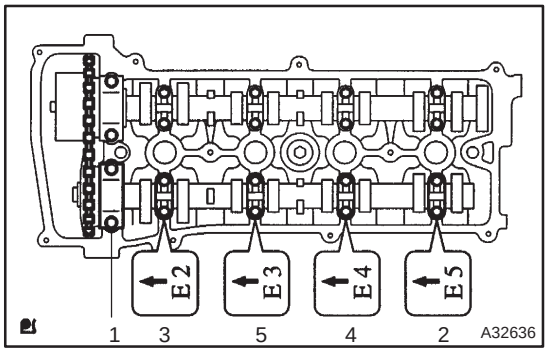

(e) Loosen the camshaft bearing cap bolts on No. 2 camshaft in the sequence shown in the illustration in several passes, and remove the caps.

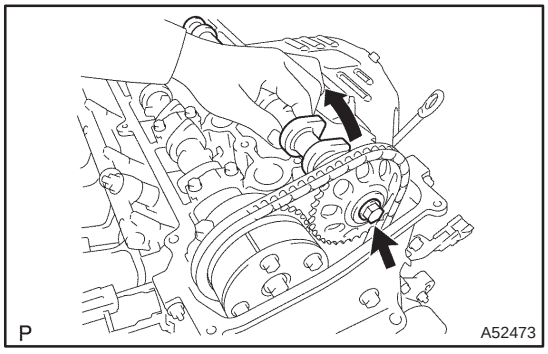

(f) Raising the camshaft, remove the set bolt.
(g) Remove the timing chain sprocket from the camshaft with timing chain.
(h) Remove the timing chain sprocket from the timing chain.

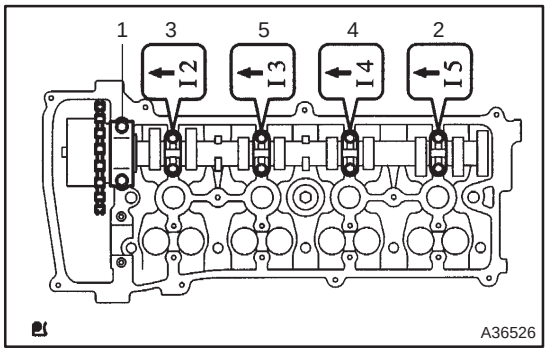

(i) Loosen the camshaft bearing cap bolts on camshaft in the sequence shown in the illustration, in several passes, and remove the caps.

(j) Remove the intake camshaft.

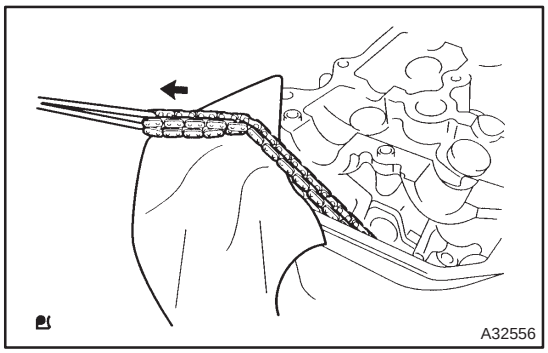

(k) Tie the timing chain with a string.

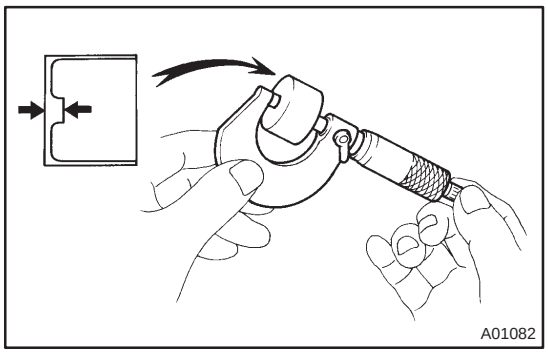

(l) Using a micrometer, measure the thickness of the removed lifter.

(m) Calculate the thickness of a new lifter so that the valve clearance comes within the specified value.

A	Thickness of the new lifter
B	Thickness of the used lifter
C	Measured valve clearance

Valve clearance:
Intake A = B + (C – 0.24 mm (0.0094 in.))
Exhaust A = B + (C – 0.35 mm (0.0138 in.))

HINT:

- Select a new lifter with a thickness as close as possible to the calculated values.
- Lifter are available in 35 sizes in increments of 0.020 mm (0.0008 in.), from 5.060 mm (0.1992 in.) to 5.740 mm (0.2260 in.).

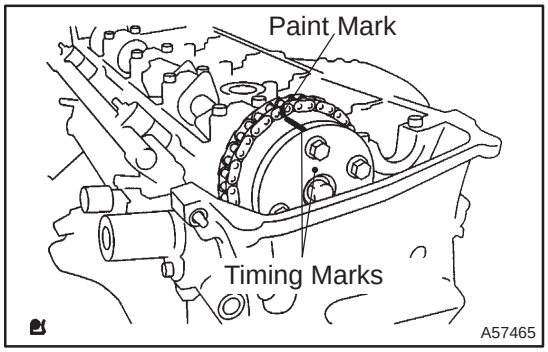

(n) Install the timing chain on the camshaft timing gear, with the painted links aligned with the timing marks on the camshaft timing sprockets.

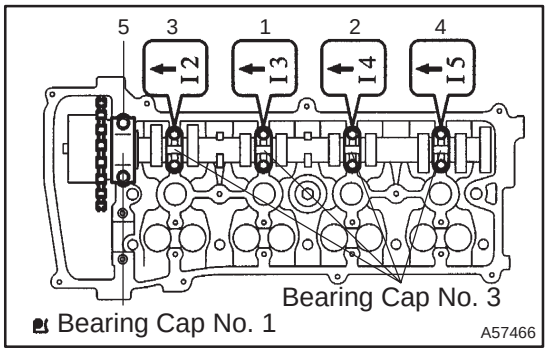

(o) Examine the front marks and numbers and tighten the bolts in the order shown in the illustration.
Torque:
Bearing cap No. 1 29.5 N·m (300 kgf·cm, 22 ft·lbf)
Bearing cap No. 3 9.0N·m (90 kgf·cm, 80 in.·lbf)

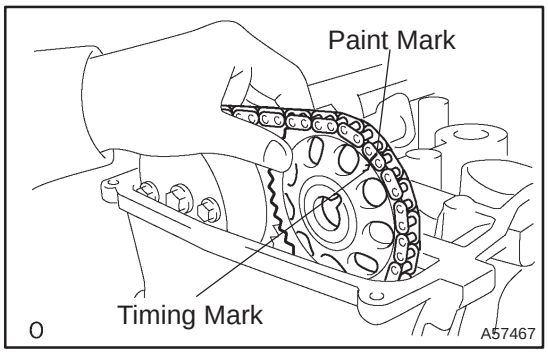

(p) Put the camshaft No. 2 on the cylinder head with the painted links of chain aligned with the timing mark on the camshaft timing sprockets.

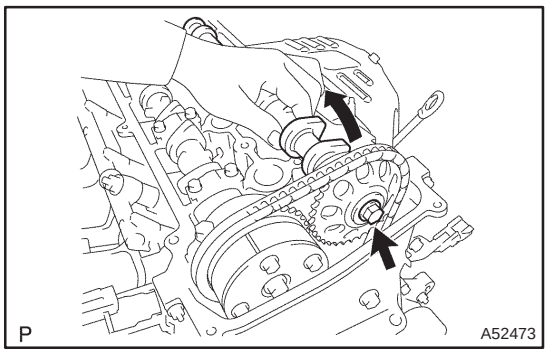

(q) Raising the camshaft, tighten the set bolt temporarily.

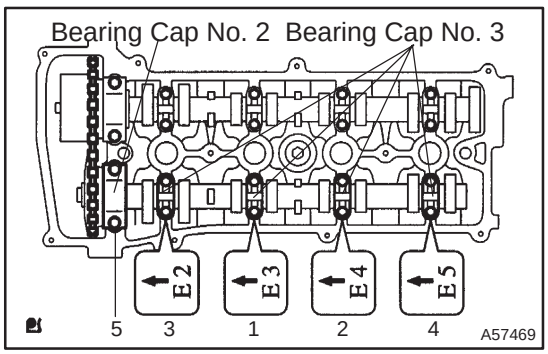

(r) Examine the front marks and numbers and tighten the bolts in the sequence shown in the illustration.
Torque:
Bearing cap No. 2 29.5 N·m (300 kgf·cm, 22 ft·lbf)
Bearing cap No. 3 9.0N·m (90 kgf·cm, 80 in.·lbf)

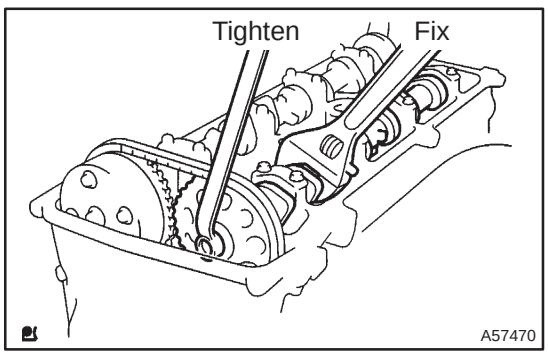

(s) Fix the camshaft with a spanner and so on, then tighten the camshaft timing gear set bolt.
Torque: 54 N·m (550 kgf·cm, 40 ft·lbf)

NOTICE:
Be careful not to damage the valve lifter.

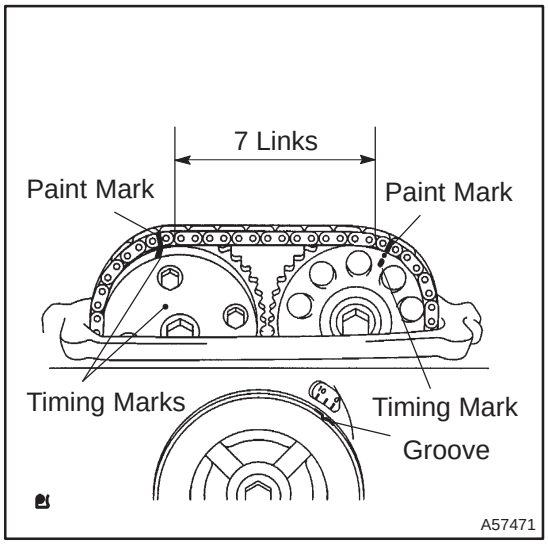

(t) As shown in the illustration, check the matchmarks on the timing chain and camshaft timing sprockets and the alignment of the pulley groove with timing mark of the chain cover.

HINT:

There are 7 links between the timing marks.

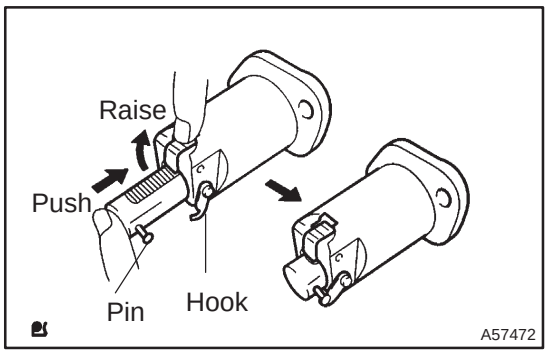

(u) Install chain tensioner.

(1) Release the ratchet pawl, fully push in the plunger and apply the hook to the pin so that the plunger cannot spring out.

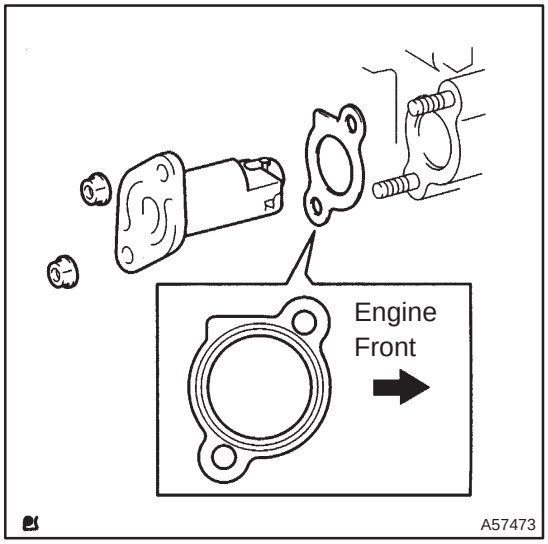

(2) Install a new gasket and chain tensioner with the 2 nuts.

Torque: 9.0N·m (90 kgf·cm, 80 in.·lbf)

NOTICE:

When installing the tensioner, set the hook again if the hook releases the plunger.

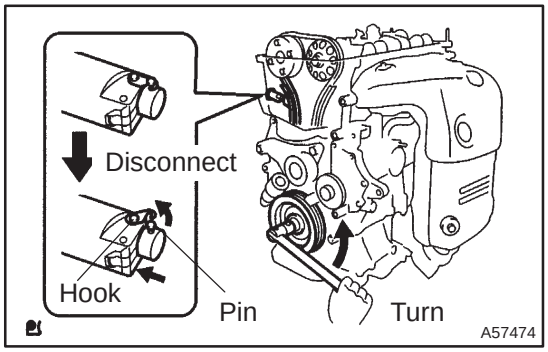

(3) Turn the crankshaft counterclockwise, and disconnect the plunger knock pin form the hook.

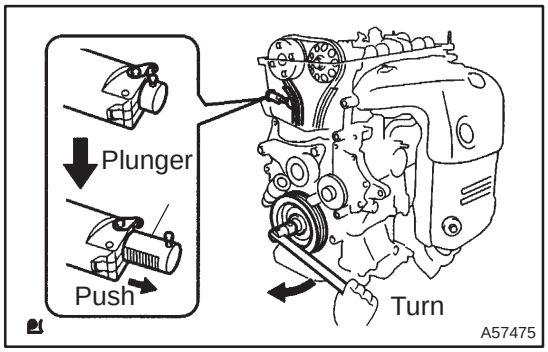

(4) Turn the crankshaft clockwise, and check that the slipper is pushed by the plunger.

86. INSTALL CAMSHAFT POSITION SENSOR

Torque: 9.0 N·m (90 kgf·cm, 80 in.·lbf)

87. INSTALL CYLINDER HEAD COVER GASKET

(a) Install the gasket to the cylinder head cover.

88. INSTALL CYLINDER HEAD COVER SUB–ASSY

(a) Remove any old packing (FIPG) material.

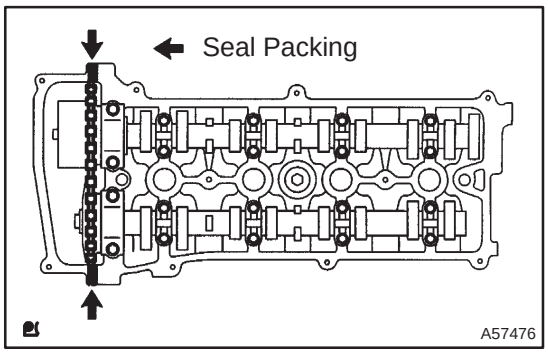

(b) Apply seal packing to 2 locations as shown in the illustration.

Seal packing: Part No. 08826–00080 or equivalent

NOTICE:

- **Remove any oil from the contact surface.**
- **Install the cylinder head cover within 3 minutes after applying seal packing.**
- **Do not put into engine oil 2 hours after installing.**

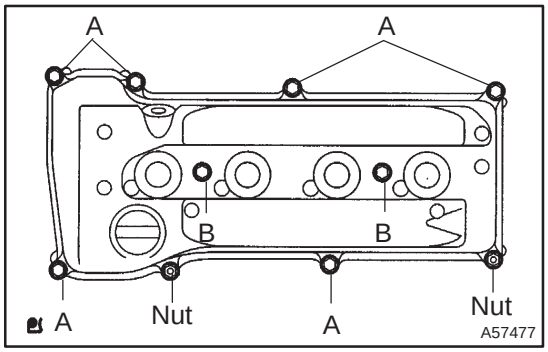

(c) Install the cylinder head cover with the 8 bolts and 2 nuts.

Torque:
Bolt A 11 N·m (112 kgf·cm, 8 ft·lbf)
Bolt B 14 N·m (143 kgf·cm, 10 ft·lbf)
Nut 11 N·m (112 kgf·cm, 8 ft·lbf)

89. INSTALL OIL FILTER UNION(W/O OIL COOLER)

(a) Using a 12 mm hexagon wrench, install the oil filter union.

Torque: 30 N·m (306 kgf·cm, 22 ft·lbf)

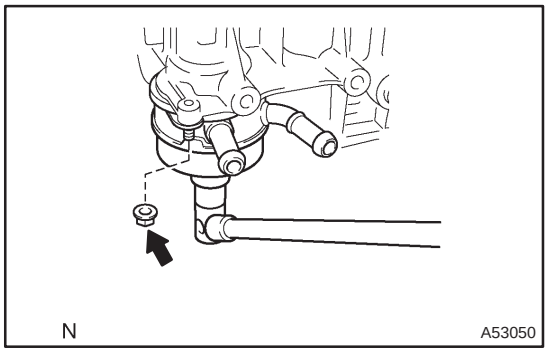

90. INSTALL OIL COOLER ASSY(W/ OIL COOLER)

(a) Install a new O–ring to the oil cooler.
(b) Apply a light coat of engine oil on the threads and under the head of the union bolt.
(c) Install the oil cooler and union bolt.
Torque: 78.5 N·m (800 kgf·cm, 58 ft·lbf)
(d) Install the flange nut.
Torque: 9.0 N·m (90 kgf·cm, 80 in.·lbf)

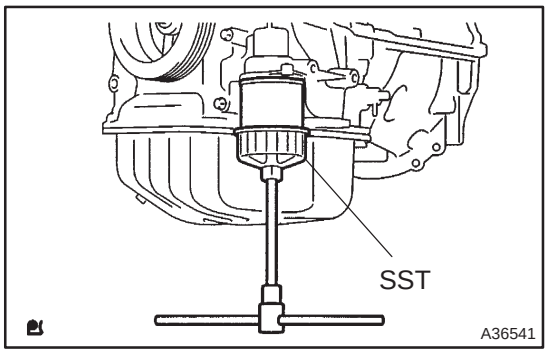

91. INSTALL OIL FILTER SUB–ASSY

(a) Check and clean the oil filter installation surface.
(b) Apply clean engine oil to the gasket of a new oil filter.
(c) Lightly screw the oil filter into place, and tighten it until the gasket contacts the seat.
(d) Using SST, tighten it an additional 3/4 turn.
SST 09228–06501

92. INSTALL SPARK PLUG

Torque: 19 N·m (194 kgf·cm, 14 ft·lbf)

93. INSTALL VENTILATION VALVE SUB–ASSY

(a) Apply adhesive on the threads of the ventilation valve.
Torque: 19 N·m (194 kgf·cm, 14 ft·lbf)
Adhesive: Part No. 08833–00070 THREE BOND 1324 or equivalent

94. INSTALL OIL FILLER CAP GASKET

(a) Install the gasket to the oil filter cap.

95. INSTALL OIL FILLER CAP SUB–ASSY

CYLINDER HEAD ASSY (1AZ–FE)

140DV–01

OVERHAUL

1. REMOVE VALVE LIFTER

HINT:
Arrange the valve lifters in the correct order.

2. REMOVE INTAKE VALVE

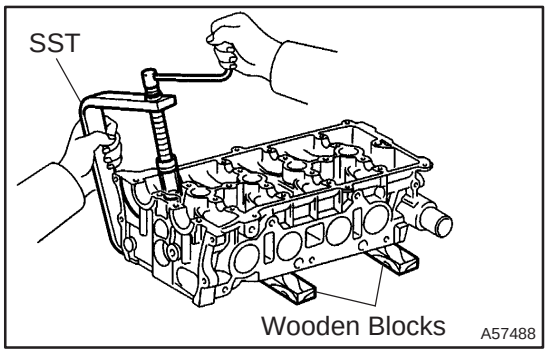

(a) Using SST and wooden blocks, compress and remove the 8 valve spring retainer locks.
SST 09202–70020 (09202–00010)

(b) Remove the parts below from the cylinder head.

1	Retainer
2	Valve spring
3	Intake valve

HINT:
Arrange the removed parts in the correct order.

3. REMOVE EXHAUST VALVE

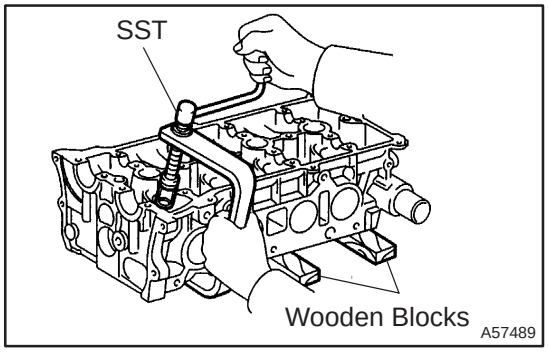

(a) UsIng SST and wooden blocks, compress and remove the 8 valve spring retainer locks.
SST 09202–70020 (09202–00010)

(b) Remove the parts below from the cylinder head.

1	Retainer
2	Valve spring
3	Exhaust valve

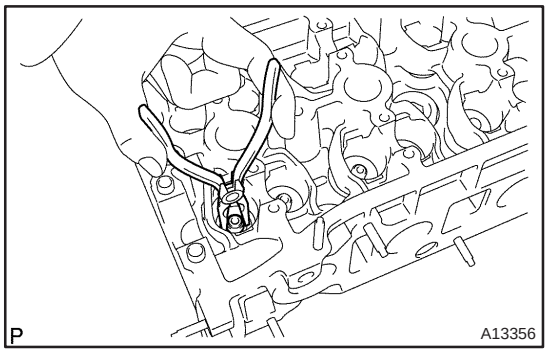

4. REMOVE VALVE STEM OIL O SEAL OR RING

(a) Using needle–nose pliers, remove the oil seals.

5. REMOVE VALVE SPRING SEAT

6. REMOVE STUD BOLT

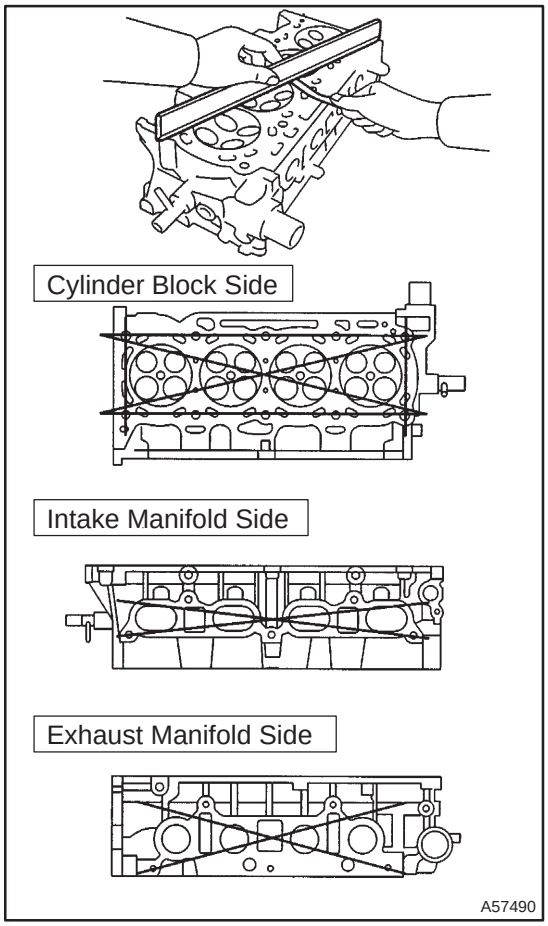

7. INSPECT CYLINDER HEAD FOR FLATNESS

(a) Using a precision straight edge and a feeler gauge, measure the surface contacting the cylinder block and the manifolds for warpage.

Maximum warpage:
Cylinder block side 0.08 mm (0.0031 in.)
Intake manifold side 0.08 mm (0.0031 in.)
Exhaust manifold side 0.08 mm (0.0031 in.)

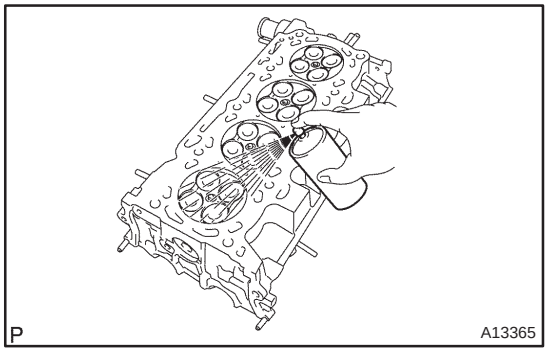

8. INSPECT CYLINDER HEAD FOR CRACKS

(a) Using a dye penetrate, check the intake ports, exhaust ports and cylinder surface for cracks.

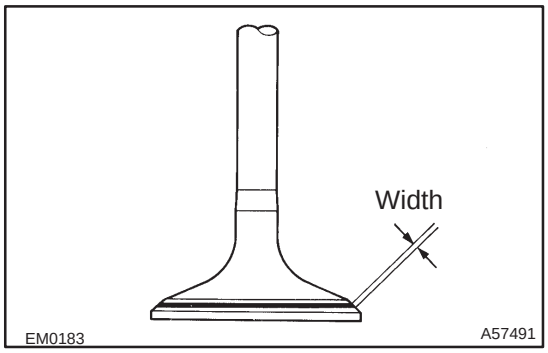

9. INSPECT VALVE SEATS

(a) Apply a light coat of prussian blue (or white lead) to the valve face.

(b) Lightly press the valve against the seat.

(c) Check the valve face and seat according to the following procedure.

(1) If blue appears 360° around the face, the valve is concentric. If not, replace the valve.

(2) If blue appears 360° around the valve sat, the guide and face are concentric. If not, resurface the seat.

(3) Check that the sat contact is in the middle of the valve face with the width between 1.0 – 1.4 mm (0.039 – 0.055 in.).

10. REPAIR VALVE SEATS

NOTICE:

Take off a cutter gradually to make smooth seats.

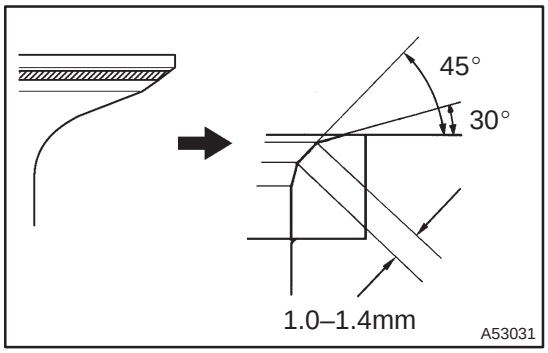

(a) If the seating is too high on the valve face, use 30° and 45° cutters to correct the seat.

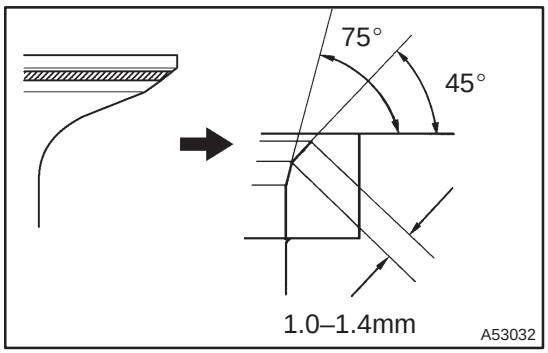

(b) If the seating is too low on the valve face, use 75° and 45° cutters to correct the seat.

(c) Hand–lap the valve and valve sat with an abrasive compound.

(d) Check the valve seating position.

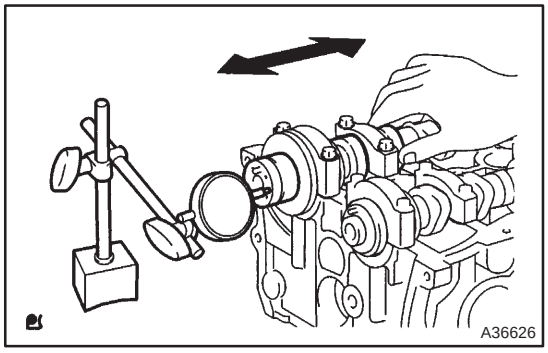

11. INSPECT CAMSHAFT THRUST CLEARANCE

(a) Install the camshafts.

(b) Using a dial indicator, measure the thrust clearance while moving the camshaft back and forth.

Standard thrust clearance:
Intake 0.040 – 0.095 mm (0.0016 – 0.0037 in.)
Exhaust 0.080 – 0.135 mm (0.0032 – 0.0053 in.)
Maximum thrust clearance:
Intake 0.11 mm (0.0043 in.)
Exhaust 0.15 mm (0.0059 in.)

(c) If the thrust clearance is greater than maximum, replace the cylinder head. If the thrust surface is damaged, replace the camshaft.

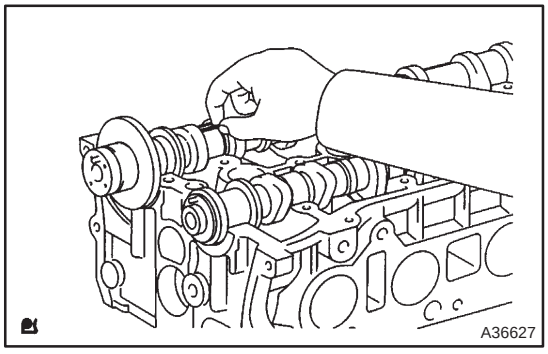

12. INSPECT CAMSHAFT OIL CLEARANCE

(a) Clean the bearing caps and camshaft journals.

(b) Place the camshafts on the cylinder head.

(c) Lay a strip of plastigage across each of the camshaft journal.

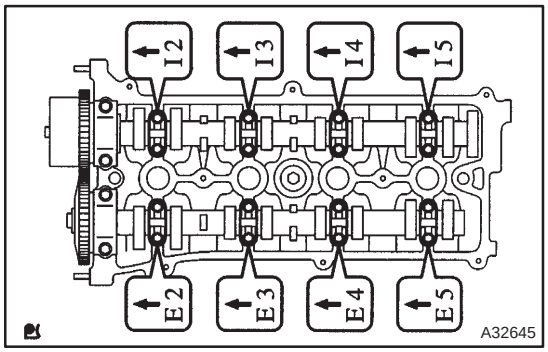

(d) Install the bearing caps.
Torque:
29.5 N·m (300 kgf·cm, 22 ft·lbf) for No. 1
29.5 N·m (300 kgf·cm, 22 ft·lbf) for No. 2
9 N·m (90 kgf·cm, 80 in.·lbf) for No. 3

NOTICE:
Do not turn the camshaft.

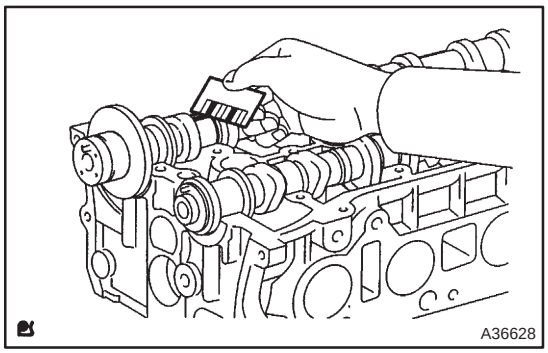

(e) Remove the bearing cap, and measure the plastigage at its widest point.
Standard oil clearance:
Intake No. 1 journal bearing mark 1
0.007 – 0.038 mm (0.0028 – 0.00150 in.)
Exhaust No. 1 journal
0.040 – 0.079 mm (0.0016 – 0.003 in.)
Other journals
0.025 – 0.062 mm (0.00098 – 0.00244 in.)
Maximum oil clearance:
Intake No. 1 journal 0.07 mm (0.0028 in.)
Other journals 0.10 mm (0.0039 in.)

NOTICE:
Completely remove the plastigage after the inspection.

(f) If the oil clearance is greater than maximum, replace the camshaft. If necessary, replace the cylinder head.

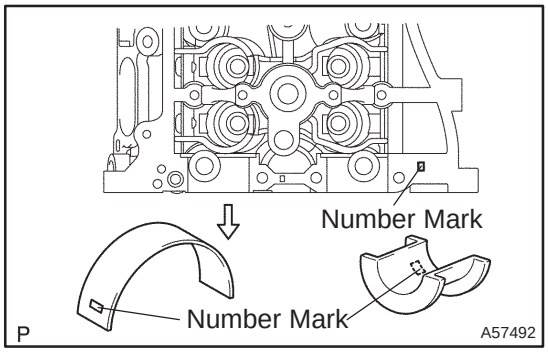

(g) If the oil clearance on No.1 journal is greater than maximum, choose and replace the bearing.
Cylinder head journal bore diameter

Mark "1"	40.000 – 40.008 mm (1.57480 – 1.57511 in.)
Mark "2"	40.009 – 40.017 mm (1.57515 – 1.57547 in.)
Mark "3"	40.018 – 40.025 mm (1.57551 – 1.57578 in.)

Standard bearing center wall thickness

Mark "1"	2.000 – 2.004 mm (0.07874 – 0.07890 in.)
Mark "2"	2.005 – 2.008 mm (0.07894 – 0.07905 in.)
Mark "3"	2.009 – 2.012 mm (0.07909 – 0.07921 in.)

Camshaft journal diameter

	35.971 – 35.985 mm (1.41648 – 1.41673 in.)

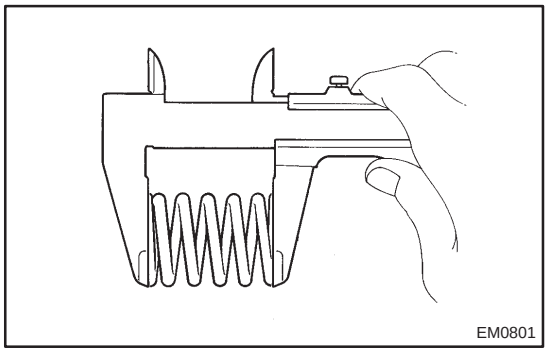

13. INSPECT INNER COMPRESSION SPRING

(a) Check the free length.
(1) Using vernier calipers, measure the free length of the valve spring.
Free length: 45.7 mm (1.799 in.)

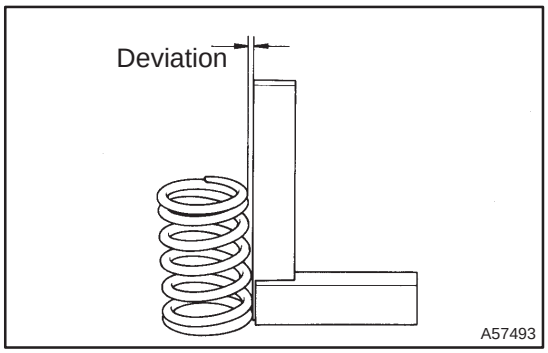

(b) Check the deviation.
(1) Using a steel square, measure the deviation of the valve spring.
Maximum deviation: 1.6 mm (0.063 in.)
Maximum angle (reference): 2°

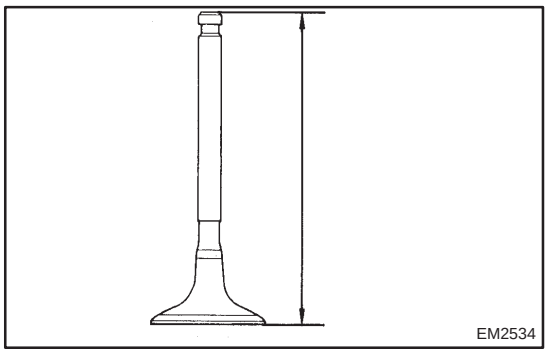

14. INSPECT INTAKE VALVE

(a) Check the valve overall length.
(1) Using vernier calipers, measure the valve overall length.
Standard overall length: 101.71 mm (4.0043in.)
Minimum overall length: 101.21 mm (3.9846in.)

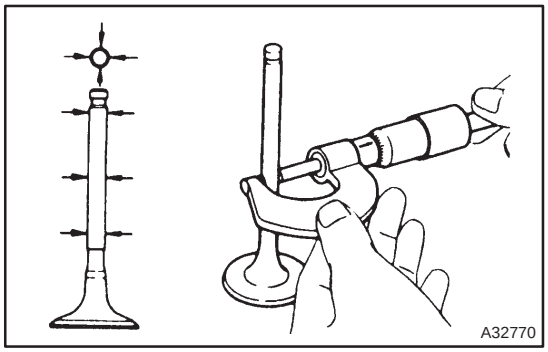

(b) Check the diameter of the valve stem.
(1) Using a micrometer, measure the diameter of the valve stem.
Valve stem diameter:
5.470 – 5.485 mm (0.2154 – 0.2159 in.)

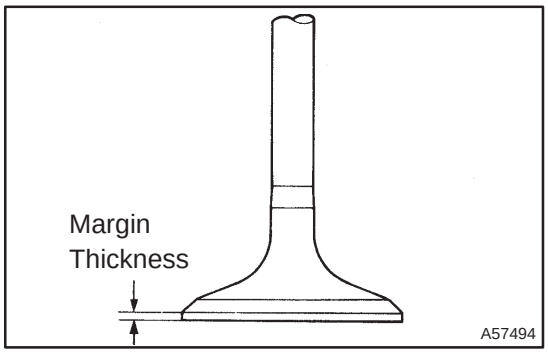

(c) Check the valve head margin thickness.
(1) Using vernier calipers, measure the valve head margin thickness.
Standard margin thickness:
1.05 – 1.45 mm (0.041 – 0.057 in.)
Minimum margin thickness: 0.5 mm (0.020 in.)

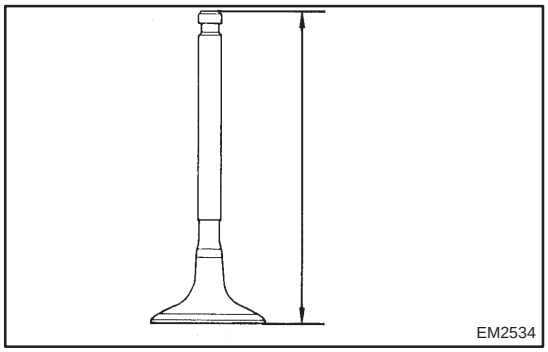

15. INSPECT EXHAUST VALVE

(a) Check the valve overall length.
(1) Using vernier calipers, measure the valve overall length.
Standard overall length: 101.15 mm (3.9823in.)
Minimum overall length: 100.70 mm (3.9646 in.)

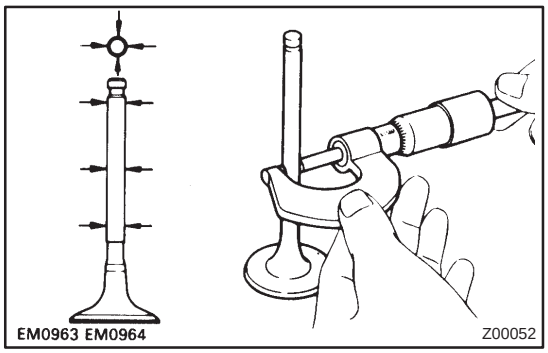

(b) Check the diameter of the valve stem.
(1) Using a micrometer, measure the diameter of the valve stem.
Valve stem diameter:
5.465 – 5.480 mm (0.2152 – 0.2157 in.)

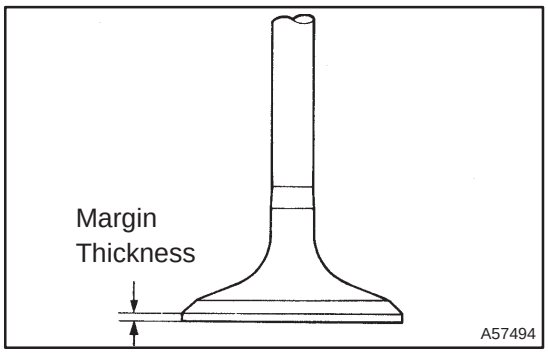

(c) Check the valve head margin thickness.
(1) Using vernier calipers, measure the valve head margin thickness.
Standard margin thickness:
1.2 – 1.6 mm (0.047 – 0.063 in.)
Minimum margin thickness: 0.5 mm (0.020 in.)

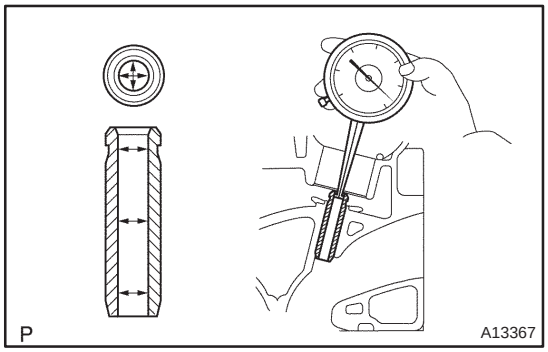

16. INSPECT INTAKE VALVE GUIDE BUSHING

(a) Using a caliper gauge, measure the inside diameter of the guide bushing.
Bushing inside diameter:
5.510 – 5.530 mm (0.2169 – 0.2177 in.)

(b) Subtract the valve stem diameter measurement from the guide bushing inside diameter measurement.
Standard oil clearance:
0.025 – 0.060 mm (0.0010 – 0.0024 in.)
Maximum oil clearance: 0.08 mm (0.0031 in.)

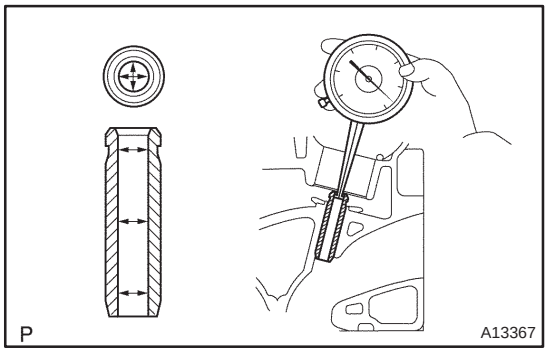

17. INSPECT EXHAUST VALVE GUIDE BUSHINGS

(a) Using a caliper gauge, measure the inside diameter of the guide bushing.

Bushing inside diameter:
5.510 – 5.530 mm (0.2169 – 0.2177 in.)

(b) Subtract the valve stem diameter measurement from the guide bushing inside diameter measurement.

Standard oil clearance:
0.030 – 0.065 mm (0.0012 – 0.0026 in.)
Maximum oil clearance: 0.10 mm (0.0039 in.)

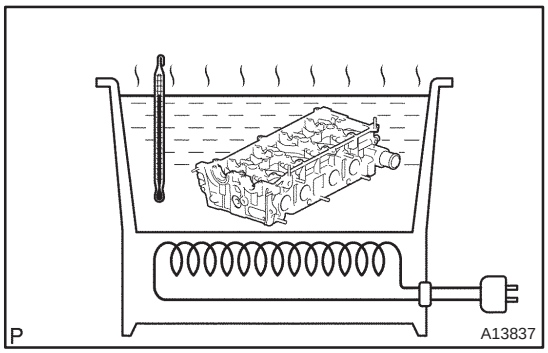

18. REMOVE INTAKE VALVE GUIDE BUSHING

(a) Gradually heat the cylinder head to 80 – 100°C (176 – 212°F).

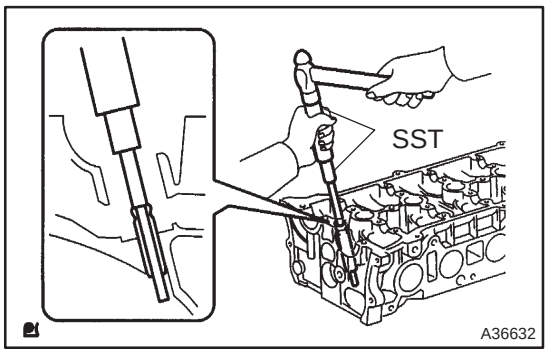

(b) Using SST and a hammer, tap out the guide bushing.
SST 09201–01055, 09950–70010 (09951–07100)

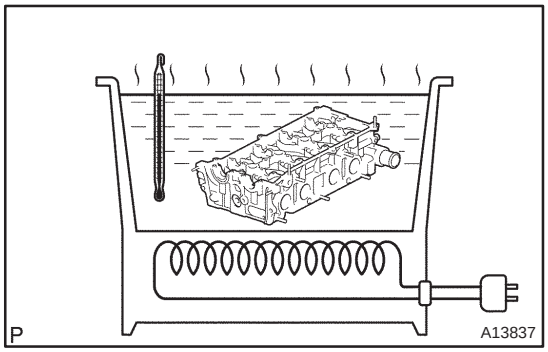

19. REMOVE EXHAUST VALVE GUIDE BUSHINGS

(a) Gradually heat the cylinder head to 80 – 100°C (176 – 212°F).

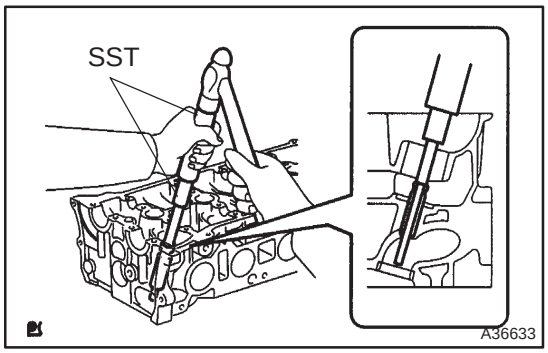

(b) Using SST and a hammer, tap out the guide bushing.
SST 09201–01055, 09950–70010 (09951–07100)

20. INSTALL INTAKE VALVE GUIDE BUSHING

(a) Using a caliper gauge, measure the bushing bore diameter of the cylinder head.
Diameter: 10.285 – 10.306 mm (0.4049 – 0.4057 in.)

(b) Install the STD bushing if the diameter is within specified diameter.

STD	10.333 – 10.344 mm (0.4068 – 0.4072 in.)

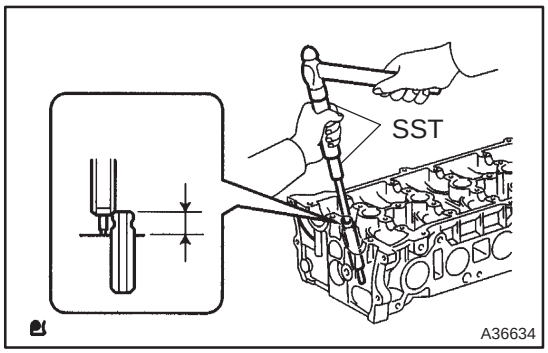

(c) Using SST and a hammer, tap in a new guide bushing to the specified protrusion height.
Protrusion height: 9.6 – 10.0 mm (0.3779 – 0.3937 in.)
SST 09201–01055, 09950–70010 (09951–07100), 23801

(d) Using a sharp 5.5 mm reamer, ream the guide bushing to obtain the standard specified clearance between the guide bushing and valve stem.
Standard oil clearance:
0.025 – 0.060 mm (0.00098 – 0.00236 in.)

21. INSTALL EXHAUST VALVE GUIDE BUSHINGS

(a) Using a caliper gauge, measure the bushing bore diameter of the cylinder head.
Diameter: 10.285 – 10.306 mm (0.4049 – 0.4057 in.)

(b) Install the STD bushing if the diameter is within specified diameter.

STD	10.333 – 10.344 mm (0.4068 – 0.4072 in.)

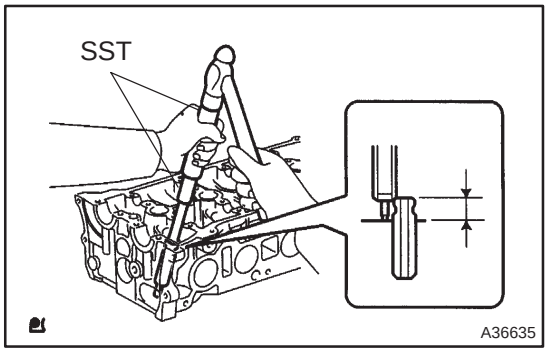

(c) Using SST and a hammer, tap in a new guide bushing to the specified protrusion height.
Protrusion height: 9.6 – 10.0 mm (0.3779 – 0.3937 in.)

(d) Using a sharp 5.5 mm reamer, ream the guide bushing to obtain the standard specified clearance between the guide bushing and valve stem.
SST 09201–01055, 09950–70010 (09951–07100), 23801
Standard oil clearance:
0.030 – 0.065 mm (0.00118 – 0.00256 in.)

22. INSPECT VALVE LIFTER

(a) Check the lifter diameter.
(1) Using a micrometer, measure the lifter diameter.
Lifter diameter:
30.966 – 30.976 mm (1.2191 – 1.2195 in.)

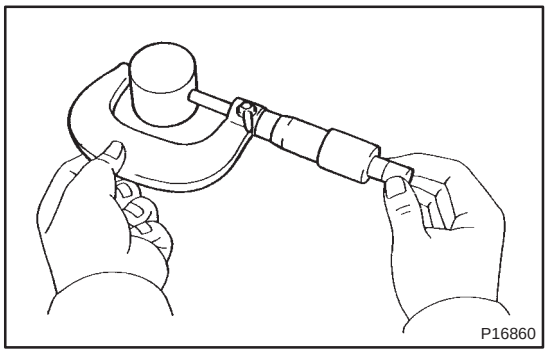

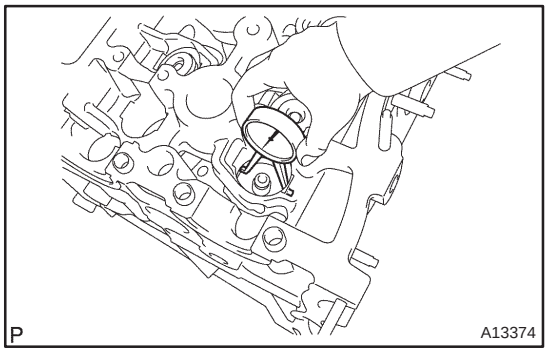

(b) Check the valve lifter oil clearance.
(1) Using a caliper gauge, measure the lifter bore diameter of the cylinder head.
Lifter bore diameter:
31.009 – 31.025 mm (1.2208 – 1.2215 in.)

(c) Subtract the lifter diameter measurement from the lifter bore diameter measurement.
Standard oil clearance:
0.033 – 0.059 mm (0.0013 – 0.0023 in.)
Maximum oil clearance: 0.07 mm (0.0028 in.)

23. INSTALL RING W/HEAD PIN

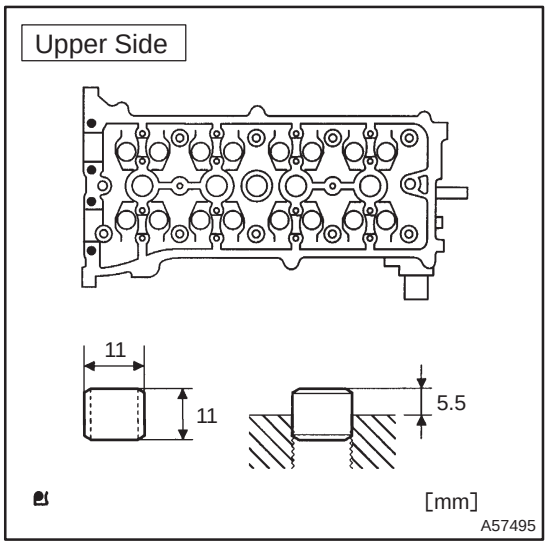

(a) Using a plastic–faced hammer, tap in a new ring pin to the specified protrusion height.
Protrusion height: 5.5 mm (0.2165 in.)

24. INSTALL STUD BOLT

Torque:
Bolt A 5 N·m (51 kgf·cm, 44 in.·lbf)
Bolt B 5 N·m (51 kgf·cm, 44 in.·lbf)
Bolt C 10 N·m (97 kgf·cm, 84 in.·lbf)
Bolt D 10 N·m (97 kgf·cm, 84 in.·lbf)

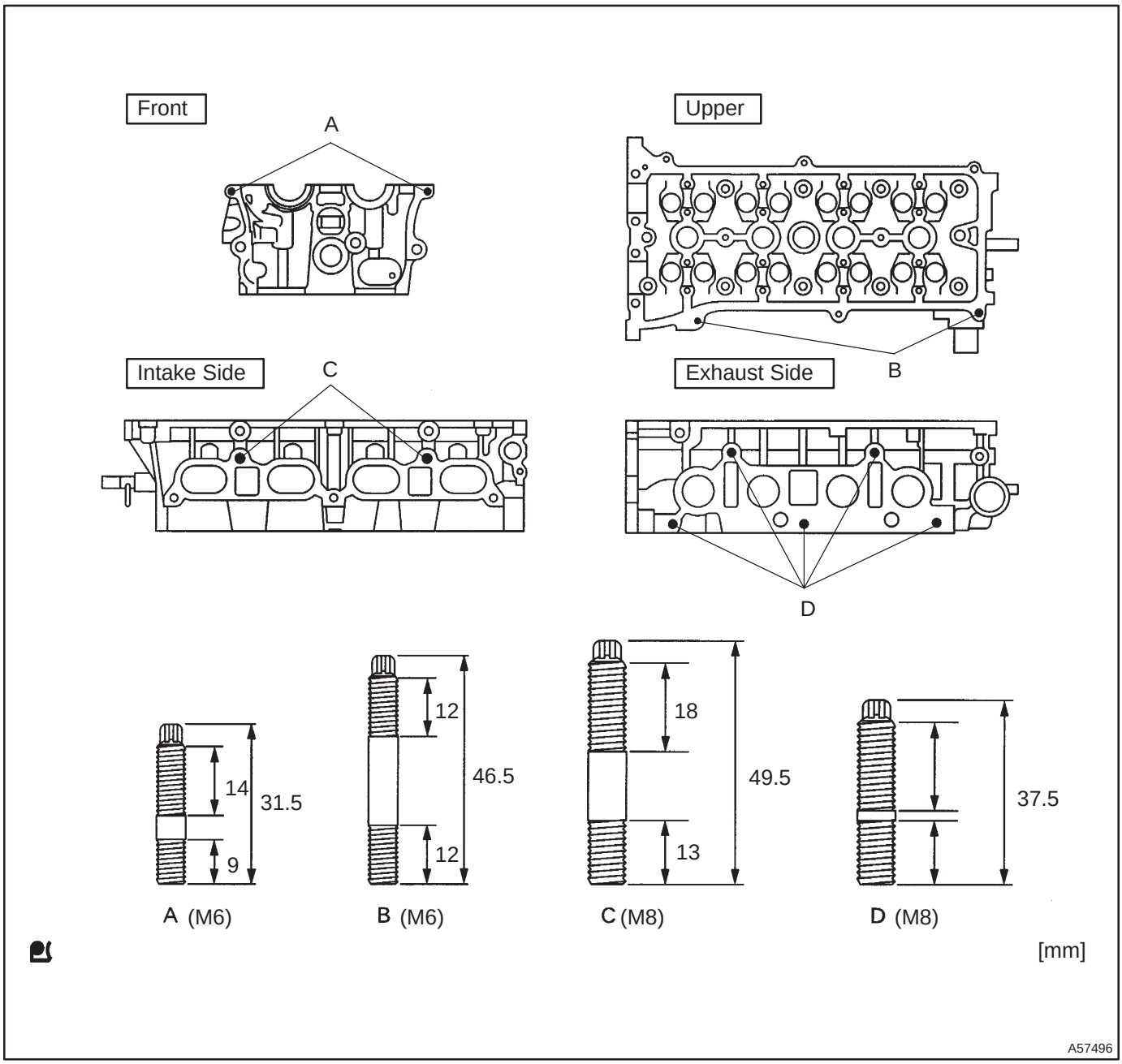

25. INSTALL VALVE SPRING SEAT

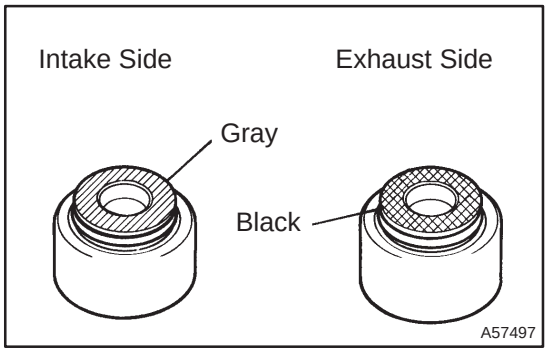

26. INSTALL VALVE STEM OIL O SEAL OR RING

(a) Apply a light coat of engine oil on new valve stem seals.

NOTICE:

Pay much attention assembling the oil seal for intake and exhaust. Assembling the wrong one may cause a failure.

HINT:

The intake valve oil seal is gray and the exhaust valve oil seal is black.

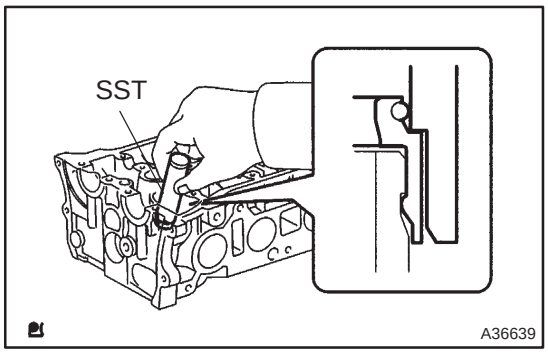

(b) Using SST, push in a the oil seal.
SST 09201–41020

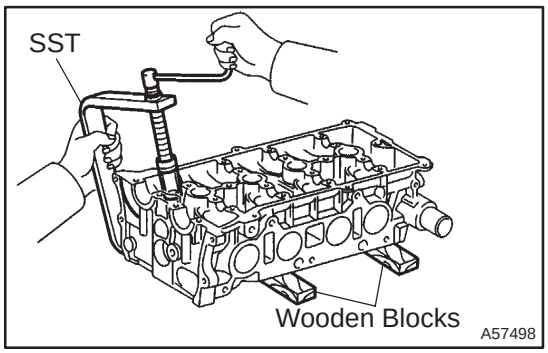

27. INSTALL INTAKE VALVE

(a) Install the parts below to the cylinder head.

1	Intake valve
2	Spring
3	Retainer

(b) Using SST and wooden blocks, compress and install 2 valve spring retainer locks.
SST 09202–70020 (09202–00010)

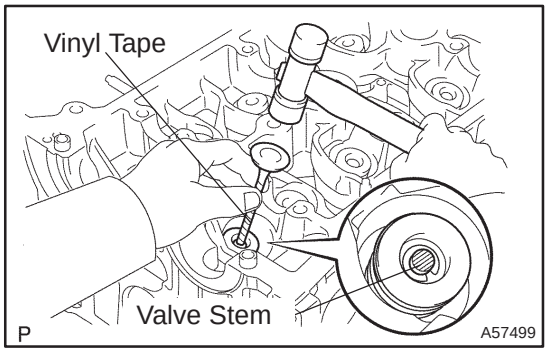

(c) Using a plastic–faced hammer and the valve stem (not in use) tip wound with vinyl tape, lightly tap the valve stem tip to ensure a proper fit.

NOTICE:

Be careful not to damage the valve stem tip.

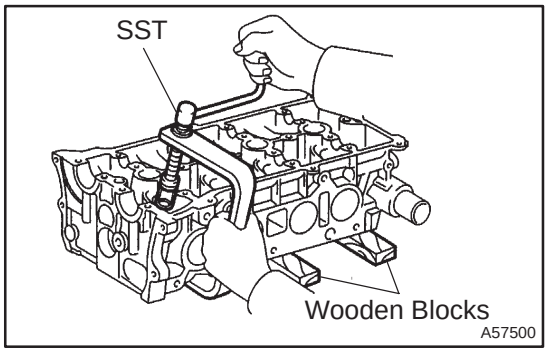

28. INSTALL EXHAUST VALVE

(a) Install the parts below to the cylinder head.

1	Exhaust valve
2	Spring
3	Retainer

(b) Using SST and wooden blocks, compress and install 2 valve spring retainer locks.
SST 09202–70020 (09202–00010)

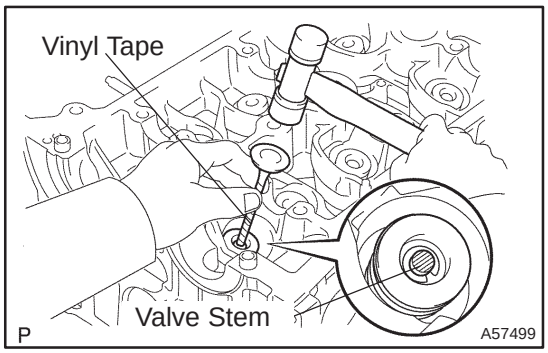

(c) Using a plastic–faced hammer and the valve stem (not in use) tip wound with vinyl tape, lightly tap the valve stem tip to ensure a proper fit.

NOTICE:
Be careful not to damage the valve stem tip.

29. INSTALL VALVE LIFTER

(a) Assemble the valve lifter and the tip of the valve stem with a light coat of engine oil applied.

NOTICE:
Install the valve lifters originally placed.

CYLINDER BLOCK (1AZ–FE)

OVERHAUL

140DW–01

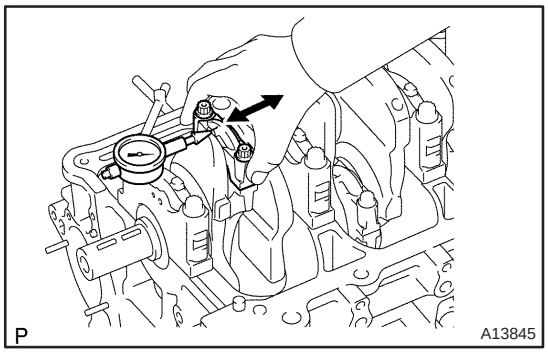

1. INSPECT CONNECTING ROD THRUST CLEARANCE

(a) Using a dial indicator, measure the thrust clearance while moving the connecting rod back and forth.
Standard thrust clearance:
0.160 – 0.362 mm (0.0063 – 0.0143 in.)
Maximum thrust clearance: 0.362 mm (0.0143 in.)

(b) If the thrust clearance is greater than maximum, replace the connecting rod assembly(s). If necessary, replace the crankshaft.

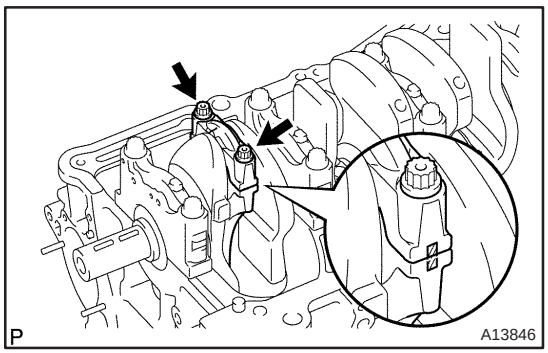

2. INSPECT CONNECTING ROD OIL CLEARANCE

HINT:
The connecting rod cap bolts are tightened in 2 progressive steps.

(a) Check the matchmarks on the connecting rod and cap are aligned to ensure correct reassembly.

HINT:
The matchmarks on the connecting rods and caps are for ensuring correct reassembly.

(b) Remove the 2 connecting rod cap bolts.
(c) Clean the crank pin and bearing.
(d) Check the crank pin and bearing for pitting and scratches.

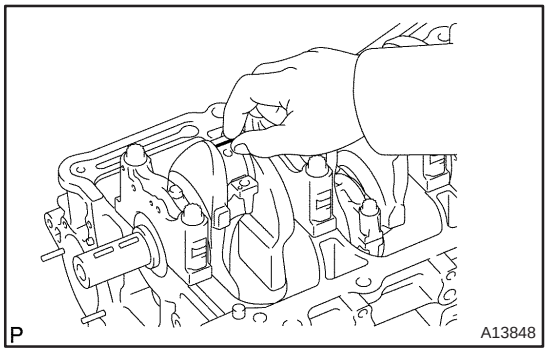

(e) Lay a strip of plastigage on the crank pin.

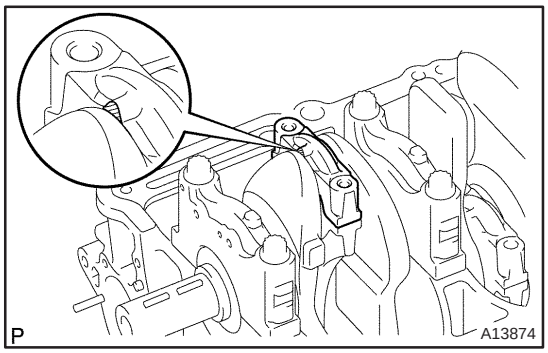

(f) Check that the protrusion of the connecting rod cap is facing in the correct direction.
(g) Apply a light coat of engine oil on the threads and under the heads of the connecting rod cap bolts.
(h) Tighten the bolts in several passes by the specified torque.
Torque: 25 N·m (250 kgf·cm, 18 ft·lbf)

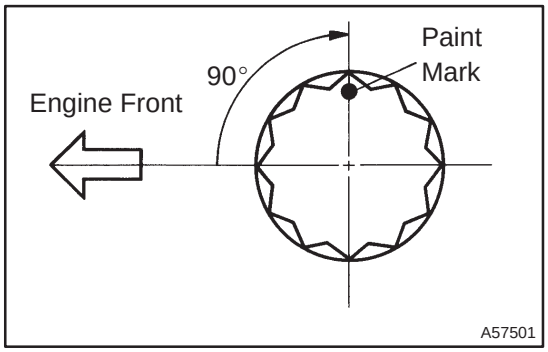

(i) Mark the front of the connecting rod cap bolts with paint.
(j) Retighten the cap bolts by 90° as shown in the illustration.

NOTICE:

Do not turn the crankshaft.

(k) Remove the 2 bolts, connecting rod cap and lower bearing.

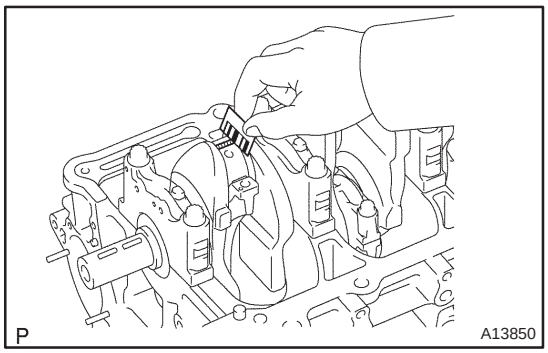

(l) Measure the plastigage at its widest point.
Standard oil clearance:
0.024 – 0.048 mm (0.0009 – 0.0019 in.)
Maximum oil clearance: 0.08 mm (0.0031 in.)

NOTICE:

Completely remove the plastigage.

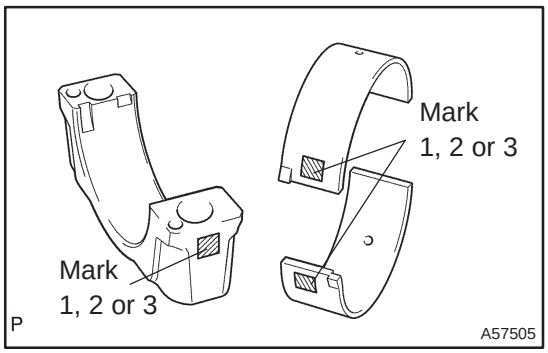

(m) If replacing a bearing, replace it with one having the same number as marked on the connecting rod. There are 3 sizes of standard bearings, marked ”1”, ”2” and ”3” accordingly.

HINT:

Standard bearing center wall thickness.

Mark 1	1.485 – 1.488 mm (0.0585 – 0.0586 in.)
Mark 2	1.488 – 1.491 mm (0.0586 – 0.0587 in.)
Mark 3	1.491 – 1.494 mm (0.0587 – 0.0588 in.)

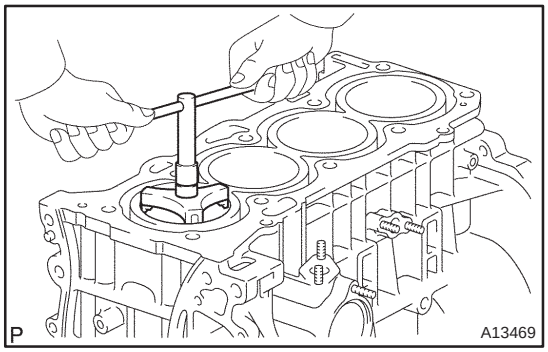

3. REMOVE PISTON SUB–ASSY W/CONNECTING ROD

(a) Using a ridge reamer, remove all the carbon from the top of the cylinder.
(b) Push the piston, connecting rod assembly and upper bearing through the top of the cylinder block.

HINT:

- Keep the bearing, connecting rod and cap together.
- Arrange the piston and connecting rod assemblies in the correct order.

4. REMOVE CONNECTING ROD BEARING

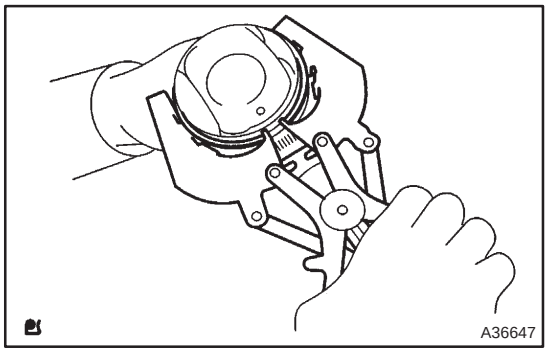

5. REMOVE PISTON RING SET

(a) Using a piston ring expander, remove the 2 compression rings.

(b) Remove the 2 side rails and oil ring by hand.

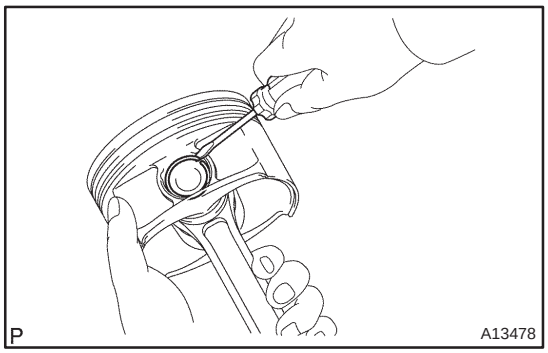

6. REMOVE PISTON PIN HOLE SNAP RING

(a) Using a small screwdriver, pry out the 2 snap rings.

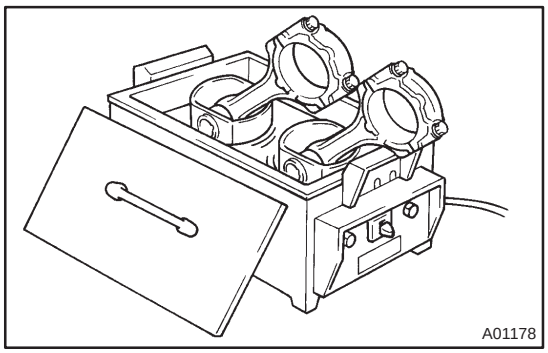

7. REMOVE PISTON

(a) Gradually heat the piston to 80 – 90 °C (176 – 194 °F).

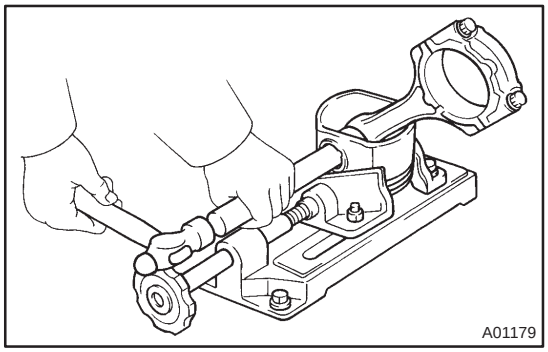

(b) Using a plastic–faced hammer and brass bar, lightly tap out the piston pin and remove the connecting rod.

HINT:

- The piston and pin are a matched set.
- Arrange the pistons, pins, rings, connecting rods and bearings in the correct order.

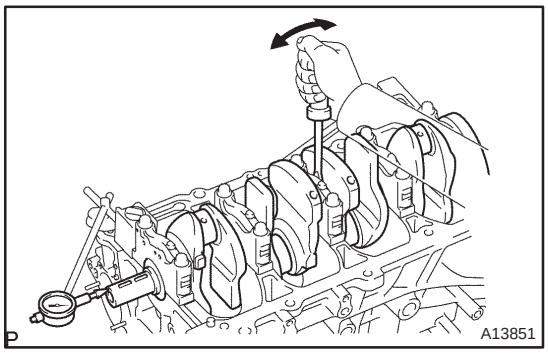

8. INSPECT CRANKSHAFT THRUST CLEARANCE

(a) Using a dial indicator, measure the thrust clearance while prying the crankshaft back and forth with a screwdriver.
Standard thrust clearance:
0.040 – 0.240 mm (0.0016 – 0.0094 in.)
Maximum thrust clearance: 0.30 mm (0.0118 in.)

(b) If the thrust clearance is greater than maximum, replace the thrust washers as a set.
Thrust washer thickness:
1.930 – 1.980 mm (0.0760 – 0.0780 in.)

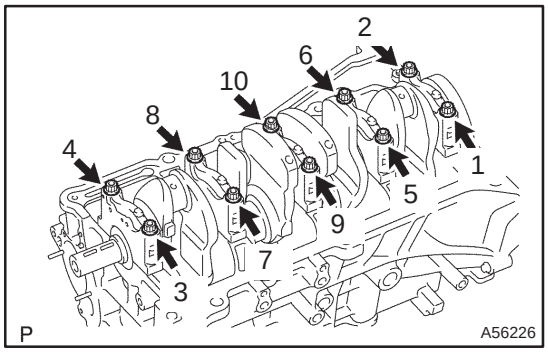

9. REMOVE CRANKSHAFT

(a) Uniformly loosen and remove the 10 bearing cap sub–assembly bolts, in several passes, in the sequence shown.
(b) Remove the bearing cap and crankshaft.

10. REMOVE CRANKSHAFT THRUST WASHER UPPER

11. REMOVE CRANKSHAFT BEARING

NOTICE:
Arrange the bearings in the correct order.
12. REMOVE CRANKSHAFT BEARING NO.2

NOTICE:
Arrange the main bearings and thrust washers in the correct order.
13. REMOVE STUD BOLT

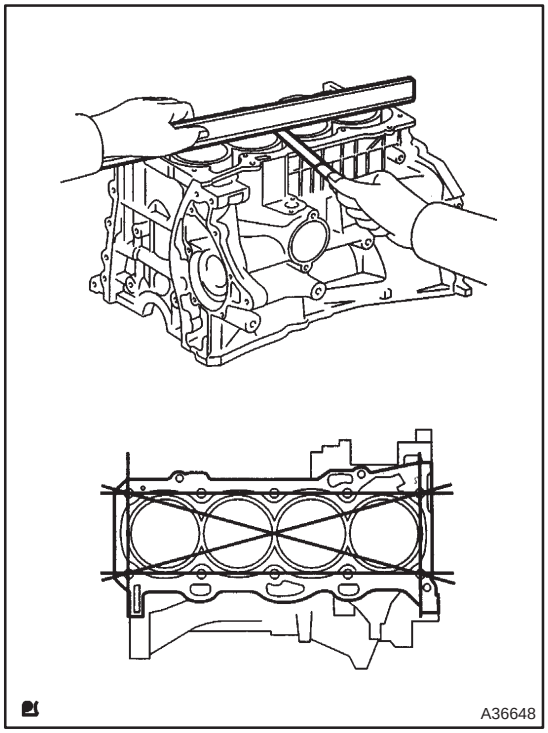

14. INSPECT CYLINDER BLOCK FOR FLATNESS

(a) Using a precision straight edge and feeler gauge, measure the surface contacting the cylinder head gasket for warpage.
Maximum warpage: 0.05 mm (0.0020 in.)

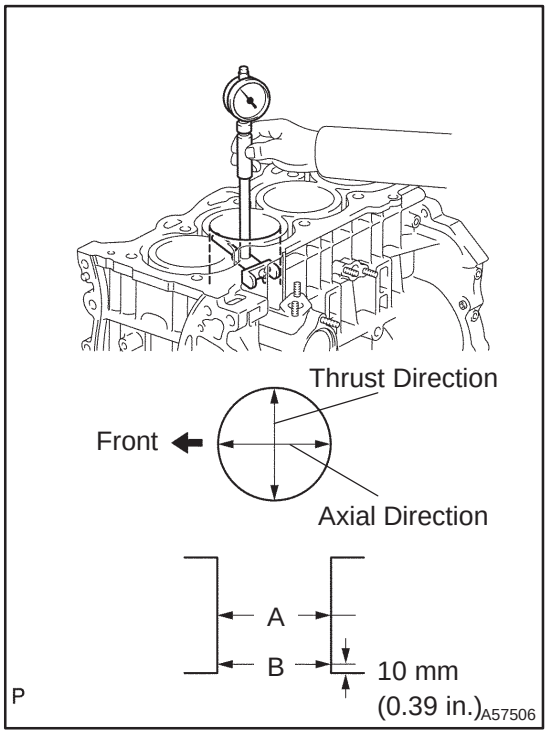

15. INSPECT CYLINDER BORE

(a) Using a cylinder gauge, measure the cylinder bore diameter at positions A and B in the thrust and axial directions.
Standard diameter:
86.000 – 86.013 mm (3.3858 – 3.3863 in.)
Maximum diameter: 86.013 mm (3.3863 in.)

(b) If the diameter is greater than maximum, replace the cylinder block.

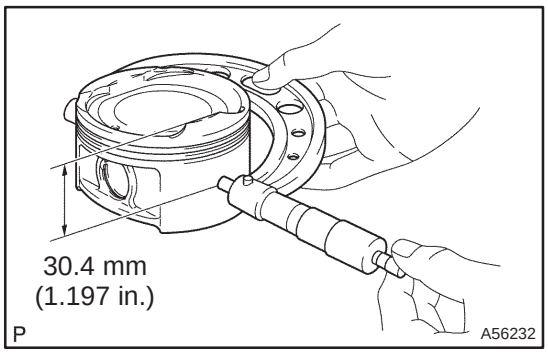

16. INSPECT PISTON DIAMETER

(a) Using a micrometer, measure the piston diameter at right angles to the piston pin center line, 30.3 mm (1.193 in.) from the piston head.
Piston diameter:
85.927 – 85.937 mm (3.3829 – 3.3833 in.)

17. INSPECT PISTON CLEARANCE

(a) Subtract the piston diameter measurement from the cylinder bore diameter measurement.
Standard oil clearance: 0.063 – 0.086 mm (0.0025 – 0.0034 in.)
Maximum oil clearance: 0.1 mm (0.0039 in.)

(b) If the clearance is greater than maximum, replace all the 4 pistons. If necessary, replace the cylinder block.

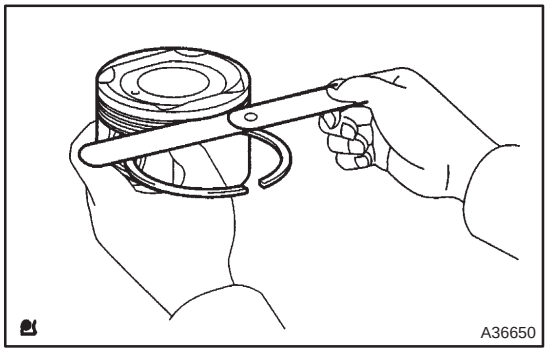

18. INSPECT RING GROOVE CLEARANCE

(a) Using a feeler gauge, measure the clearance between the piston ring and the wall of the ring groove.
Ring groove clearance:
No. 1 0.020 – 0.070 mm (0.0008 – 0.0028 in.)
No. 2 0.020 – 0.060 mm (0.0008 – 0.0024 in.)
Oil ring (side rail)
w/ TWC 0.070 – 0.150 (0.0028 – 0.0059 in.)
w/o TWC 0.060 – 0.140 (0.0024 – 0.0055 in.)

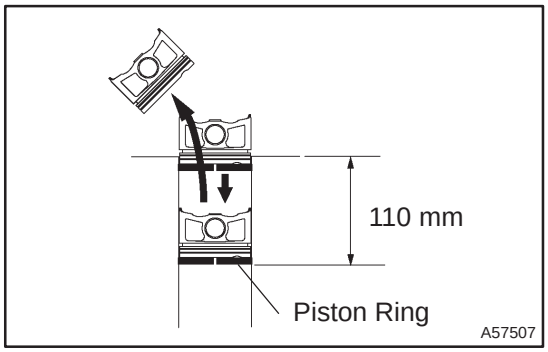

19. INSPECT PISTON RING END GAP

(a) Using a piston, push the piston ring a little beyond the bottom of the ring travel, 110 mm (4.33 in.) from the top of the cylinder block.

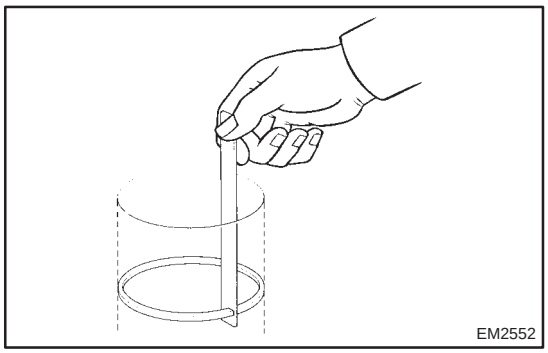

(b) Using a feeler gauge, measure the end gap.

Standard end gap:
No. 1 0.30 – 040 mm (0.0118 – 0.0157 in.)
No. 2 0.47 – 0.62 mm (0.0185 – 0.0244 in.)
Oil (side rail) 0.10 – 0.35 mm (0.0039 – 0.0138 in.)
Maximum end gap:
No. 1 0.89 mm (0.0350 in.)
No. 2 1.37 mm (0.0539 in.)
Oil (side rail) 0.73 mm (0.0287 in.)

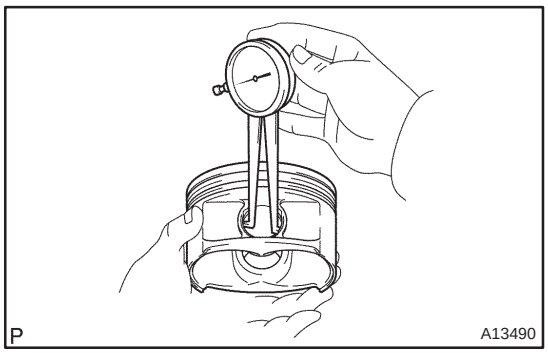

20. INSPECT PISTON PIN OIL CLEARANCE

(a) Using caliper gauge, measure the inside diameter of the piston bushing.

Bushing inside diameter:
22.001 – 22.010 mm (0.8662 – 0.8665 in.)
Bushing inside diameter

Mark	mm (in.)
A	22.001 – 22.004 (0.8662 – 0.8663)
B	22.004 – 22.007 (0.8663 – 0.8664)
C	22.007 – 22.010 (0.8664 – 0.8665)

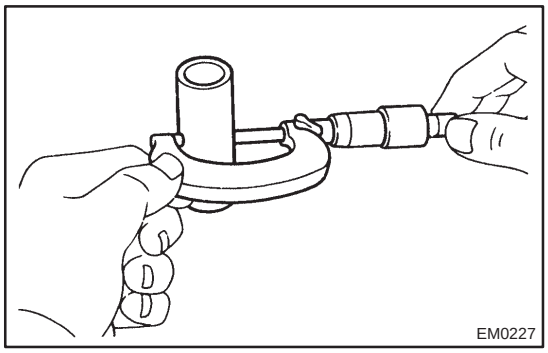

(b) Using a micrometer, measure the piston pin diameter.

Piston pin diameter:
21.997 – 22.009 mm (0.8660 – 0.8665 in.)
Piston pin diameter

Mark	Color	mm (in.)
A	Blue	21.997 – 22.000 (0.8660 – 0.8661)
B	Green	22.000 – 22.003 (0.8661 – 0.8663)
C	Colorless	22.003 – 22.006 (0.8663 – 0.8664)
D		22.006 – 22.009 (0.8664 – 0.8665)

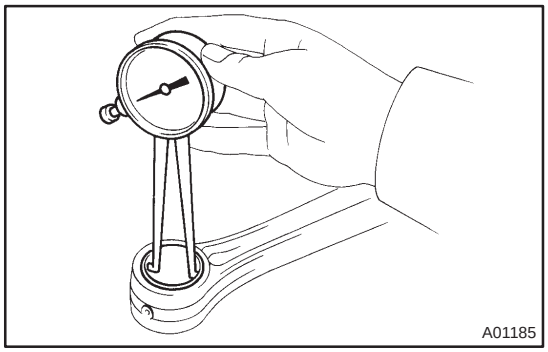

(c) Using a caliper gauge, measure the inside diameter of the connecting rod bushing.
Bushing inside diameter:
22.005 – 22.014 mm (0.8663 – 0.8667 in.)
Bushing inside diameter

Mark	mm (in.)
A	22.005 – 22.008 (0.8663 – 0.8665)
B	22.008 – 22.011 (0.8665 – 0.8666)
C	22.011 – 22.014 (0.8666 – 0.8667)

(d) Subtract the piston pin diameter measurement from the piton pin hole diameter measurement.
Standard oil clearance:
0.001 – 0.007 mm (0.00004 – 0.00028 in.)
Maximum oil clearance: 0.010 mm (0.0020 in.)

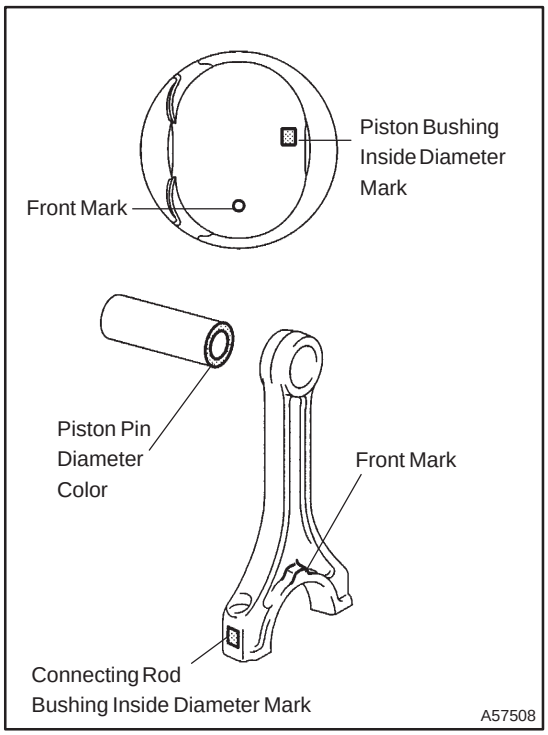

(e) If the oil clearance is greater than maximum, replace the connecting rod. If necessary, replace the piston and piston pin as a set.
(f) Subtract the piston pin diameter measurement form the bushing inside diameter measurement.
Standard oil clearance:
0.005 – 0.011 mm (0.0002 – 0.0004 in.)
Maximum oil clearance: 0.010 mm (0.0020 in.)
(g) If the oil clearance is greater than maximum, replace the connecting rod. If necessary, replace the connecting rod and piston pin as a set.

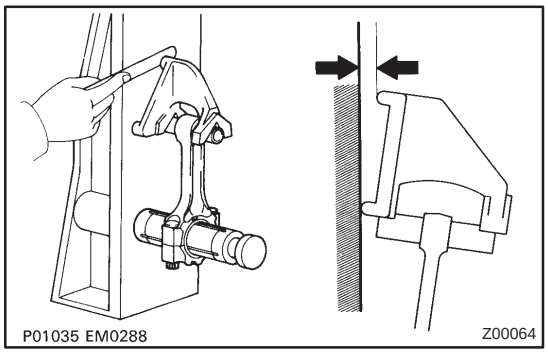

21. INSPECT CONNECTING ROD SUB–ASSY

(a) Using a rod aligner and feeler gauge, check the connecting rod alignment.
(1) Check for out–of–alignment.
Maximum out–of–alignment:
0.05 mm (0.0020 in.) per 100 mm (3.94 in.)
(b) If out–of alignment is greater than maximum, replace the connecting rod assembly.

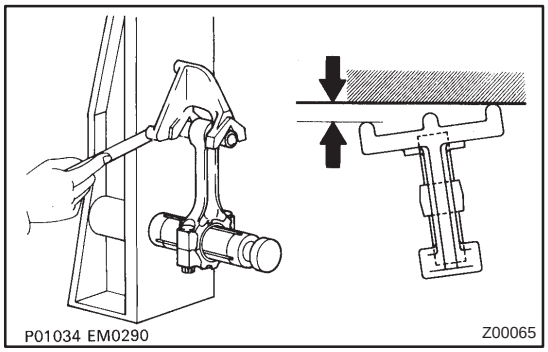

(1) Check for twist.
Maximum twist:
0.15 mm (0.0059 in.) per 100 mm (3.94 in.)

(c) If twist is greater than maximum, replace the connecting rod assembly.

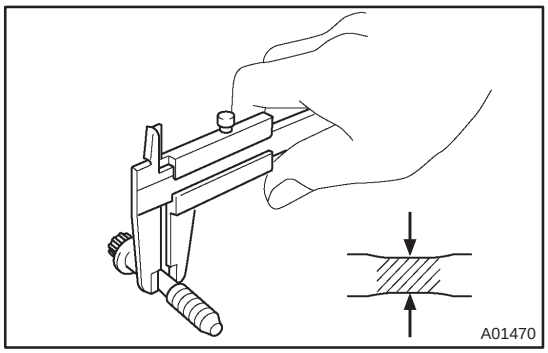

22. INSPECT CONNECTING ROD BOLT

(a) Using a vernier calipers, measure the tension portion diameter of the bolt.
Standard diameter: 7.2 – 7.3 mm (0.283 – 0.287 in.)
Minimum diameter: 7.0 mm (0.276 in.)

(b) If the diameter is less than minimum, replace the bolt.

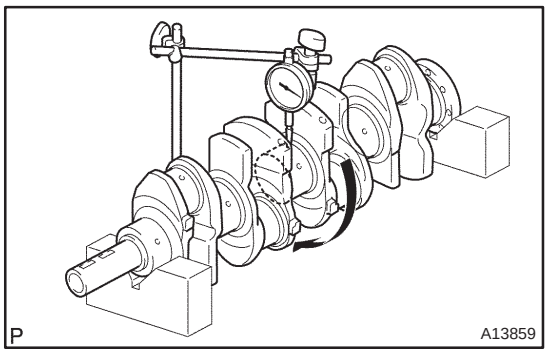

23. INSPECT CRANKSHAFT

(a) Using a dial indicator and V–blocks, measure the circle runout, ash shown in the illustration.
Maximum circle runout: 0.03 mm (0.0012 in.)

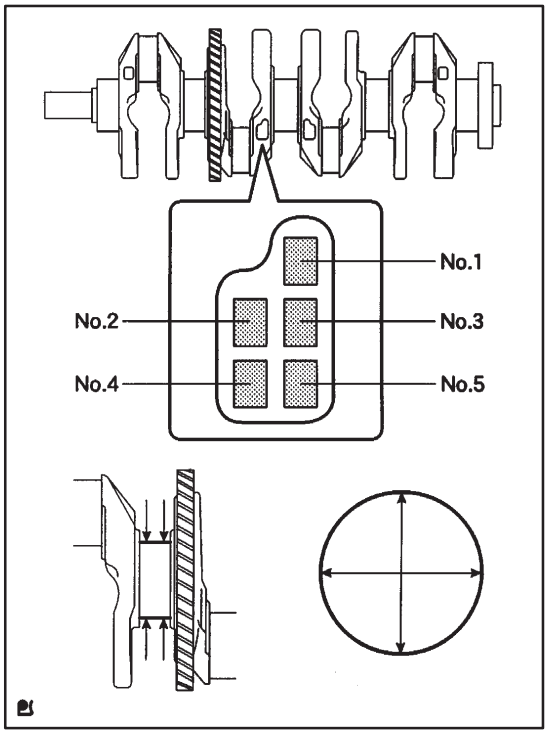

(b) Using a micrometer, measure the diameter of each main journal.
Diameter: 54.988 – 55.000 (2.1648 – 2.1654 in.)

(c) Check each main journal for taper and out–of–round as shown.
Maximum taper and out– of –round:
0.003 mm (0.0001 in.)

Mark	mm (in.)
0	54.998 – 55.000 (2.16528 – 2.16535)
1	54.996 – 54.998 (2.16520 – 2.16528)
2	54.994 – 54.996 (2.16512 – 2.16520)
3	54.992 – 54.994 (2.16504 – 2.16512)
4	54.990 – 54.992 (2.16496 – 2.16504)
5	54.988 – 54.990 (2.16490 – 2.16496)

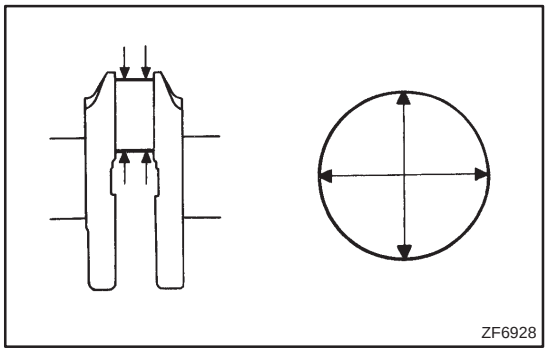

(d) Using a micrometer, measure the diameter of each crank pin.
Diameter: 47.990 – 48.000 mm (1.8894 – 1.8898 in.)

(e) Check each crank pin for taper and out–of–round as shown.
Maximum taper and out–of–round:
0.003 mm (0.0001 in.)

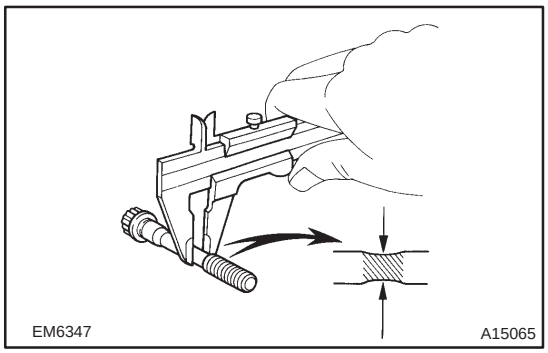

24. INSPECT CRANKSHAFT BEARING CAP SET BOLT

(a) Using vernier calipers, measure the tension portion diameter of the bolt.
Standard diameter: 7.5 – 7.6 mm (0.295 – 0.299 in.)
Minimum diameter: 7.2 mm (0.283 in.)

If the diameter is less than minimum, replace the bolt.

25. INSTALL RING PIN

(a) Using a plastic–faced hammer, tap into the ring pin.
Standard protrusion:
Ring pin A 6 mm (0.236 in.)
Ring pin B 5 mm (0.197 in.)

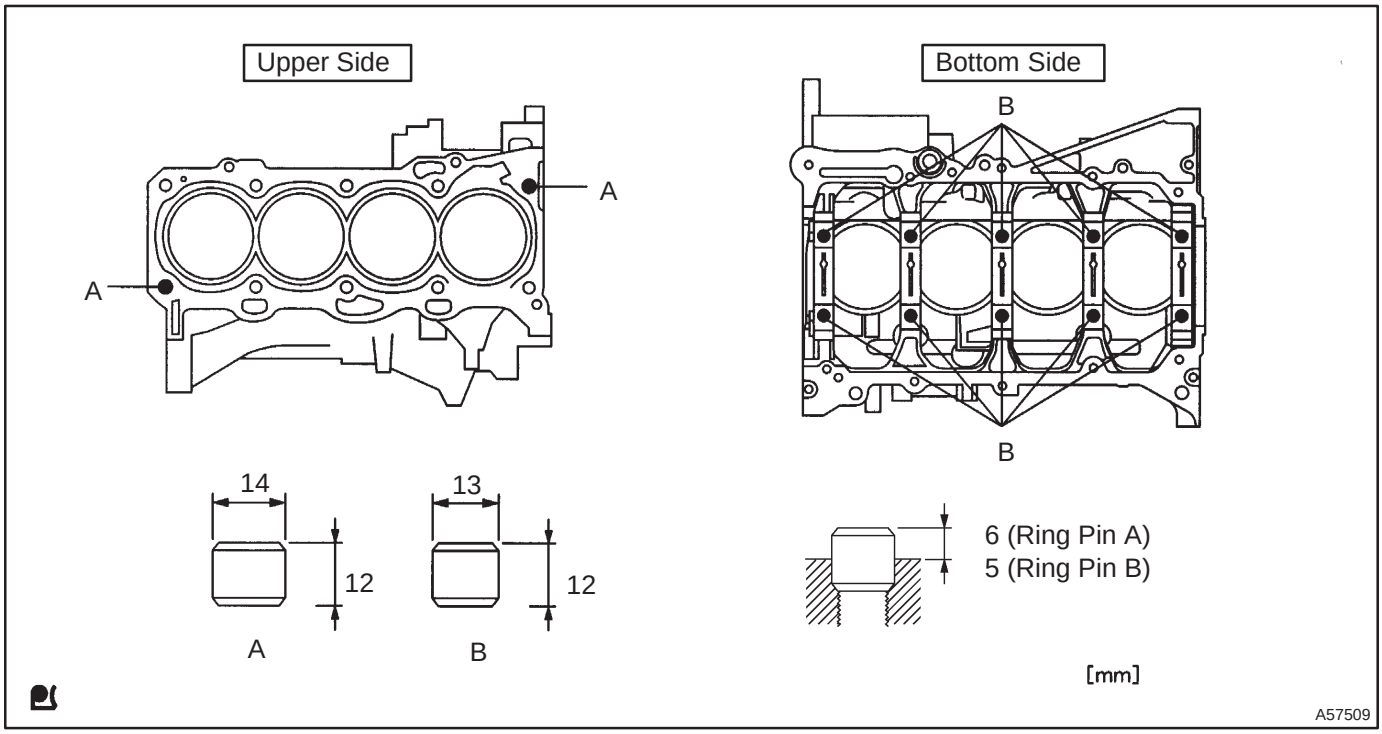

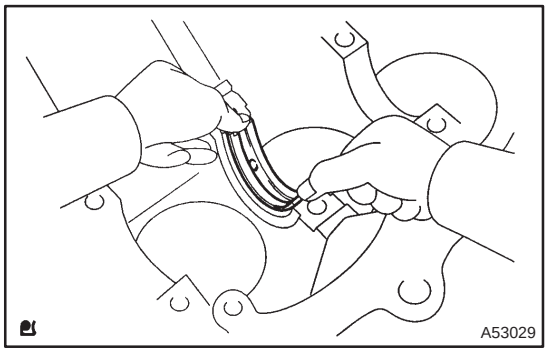

26. INSPECT CRANKSHAFT OIL CLEARANCE

NOTICE:

- **Clean the backside of the bearing and the bearing surface of the bearing cap and let not stick the oils and fats.**
- **The bearing cap bolts are tightened in 2 progressive steps.**

(a) Clean each main journal and bearing.

(b) Install the upper bearing with an oil groove on cylinder block.

(c) Install the lower bearing on the bearing cap sub assembly.

(d) Place the crankshaft on the cylinder block.

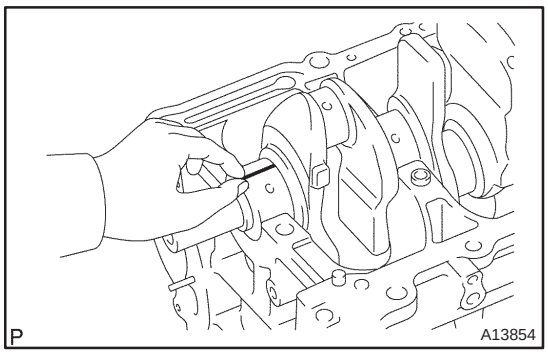

(e) Lay a strip of plastigage across each journal.

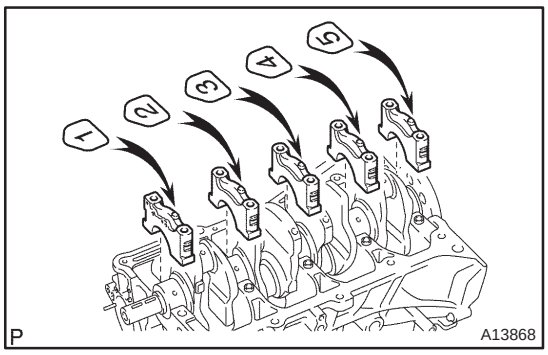

(f) Examine the front marks and install the bearing caps on the cylinder block.

(g) Apply a light coat of engine oil on the threads and under the bearing cap bolts.

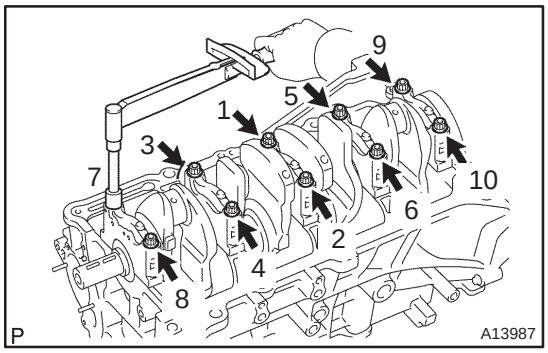

(h) Tighten the bolts in several passes, in the sequence shown, by the specified torque.
Torque: 20 N·m (205 kgf·cm, 15 ft·lbf)

(i) Retighten the bolts in several passes, in the sequence shown, by the specified torque.
Torque: 40 N·m (410 kgf·cm, 30 ft·lbf)

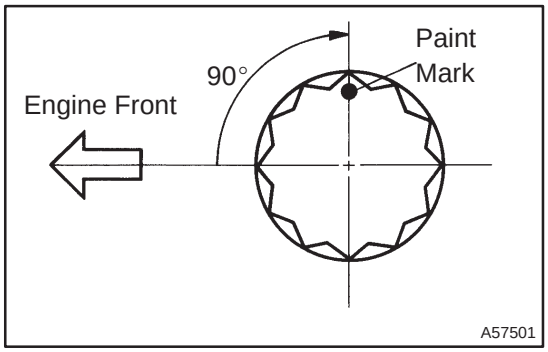

(j) Mark the front of the bearing cap bolts with paint.
(k) Retighten the bearing cap bolts by 90° in the numerical order shown.
(l) Check that the painted mark is now at a 90° angle to the front.

NOTICE:
Do not turn the crankshaft.

(m) Remove the bearing cap.

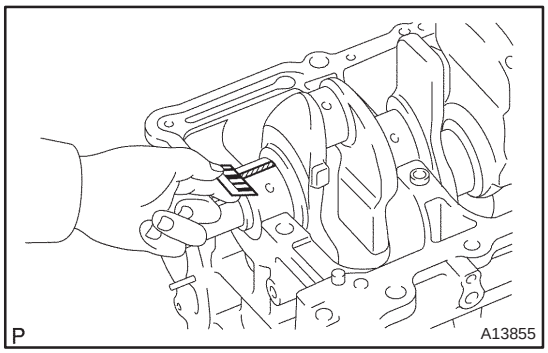

(n) Measure the plastigage at its widest point.
Standard oil clearance:
0.017 – 0.040 mm (0.0007 – 0.0016 in.)
Maximum oil clearance: 0.07 mm (0.0028 in.)

NOTICE:
Completely remove the plastigage.

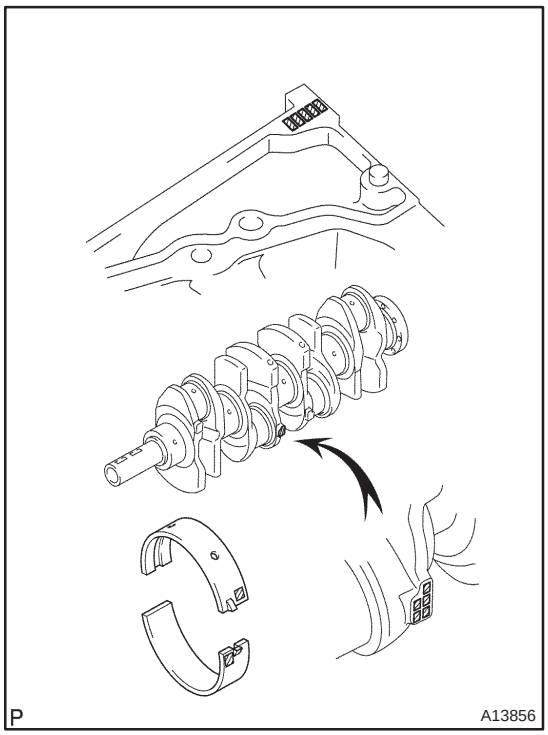

(o) If using a standard bearing, replace it with one having the same number. If the number of the bearing cannot be determined, select the correct bearing by adding together the numbers imprinted on the cylinder block and crankshaft, then selecting the bearing with the same number as the total. There are 4 sizes of standard bearings, marked ”1”, ”2”, ”3” and ”4” accordingly.

Cylinder block (A) + Crankshaft (B)	0 – 2	3 – 5	6 – 8	9 – 11
Use bearing	”1”	”2”	”3”	”4”

HINT:
EXAMPLE
Cylinder block ”4” (A) + Crankshaft ”3” (B) =
Total number 7 (Use bearing ”3”)

Reference:

Item	Mark	mm (in.)
Cylinder block main journal bore diameter (A)	0	59.000 – 59.002 (2.32283 – 2.32291)
	1	59.003 – 59.004 (2.32295 – 2.32299)
	2	59.005 – 59.006 (2.32303 – 2.32307)
	3	59.007 – 59.009 (2.32311 – 2.32318)
	4	59.010 – 59.011 (2.32322 – 2.32326)
	5	59.012 – 59.013 (2.32330 – 2.32334)
	6	59.014 – 59.016 (2.32338 – 2.32346)
Crankshaft main journal diameter (B)	0	54.998 – 55.000 (2.16527 – 2.16535)
	1	54.996 – 54.998 (2.16519 – 2.16527)
	2	54.994 – 54.996 (2.16511 – 2.16519)
	3	54.992 – 54.994 (2.16503 – 2.16511)
	4	54.990 – 54.992 (2.16496 – 2.16504)
	5	54.988 – 54.990 (2.16488 – 2.16496)
Standard bearing center wall thickness	1	1.993 – 1.996 (0.07846 – 0.07858)
	2	1.996 – 1.999 (0.07858 – 0.07870)
	3	1.999 – 2.002 (0.07870 – 0.07882)
	4	2.002 – 2.005 (0.07882 – 0.07894)

27. INSTALL TIGHT PLUG

(a) Apply adhesive around tight plugs.
Adhesive: Part No. 08833–00070, THREE BOND 1324 or equivalent.

(b) Using SST, into the tight plugs as shown in the illustration.
SST 09950–60010 (09951–00200), 09950–70010 (09951–07100)
Standard depth:
Engine front 1.7 – 2.7 mm (0.067 – 0.106 in.)
Engine rear 2.2 – 3.2 mm (0.087 – 0.126 in.)

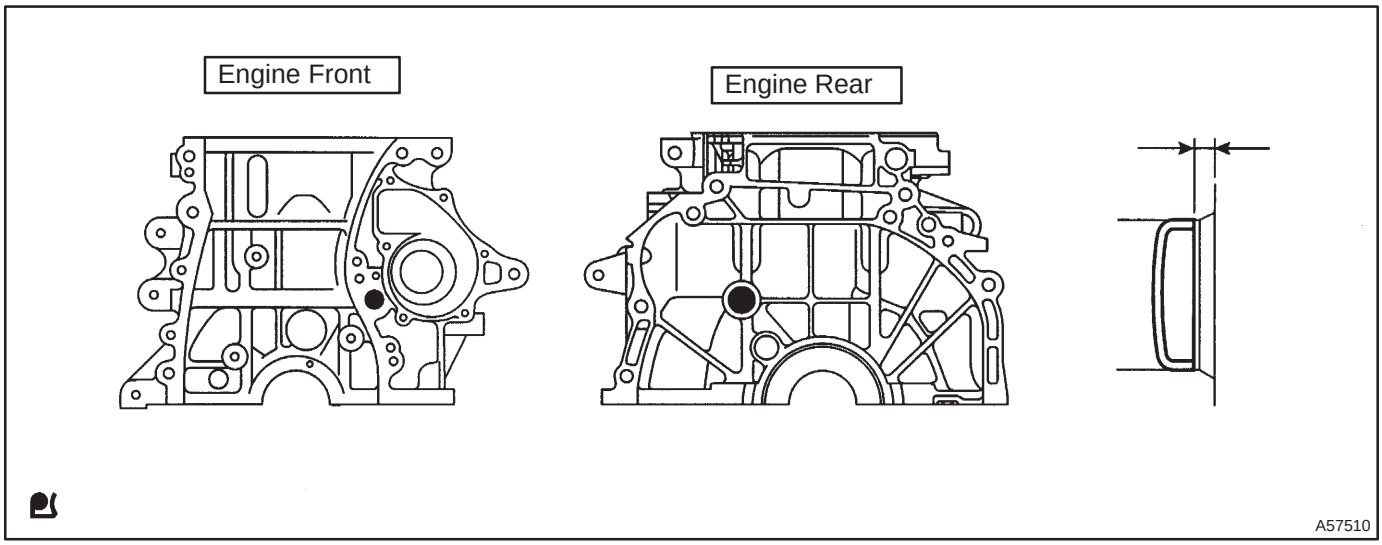

28. INSTALL STUD BOLT

(a) Install the stud bolts as shown in the illustration.

Torque:
Stud bolt A 5.0 N·m (51 kgf·cm, 44 in.·lbf)
Stud bolt B 10N·m (97 kgf·cm, 84 in.·lbf)
Stud bolt C 5.0N·m (51 kgf·cm, 44 in.·lbf)

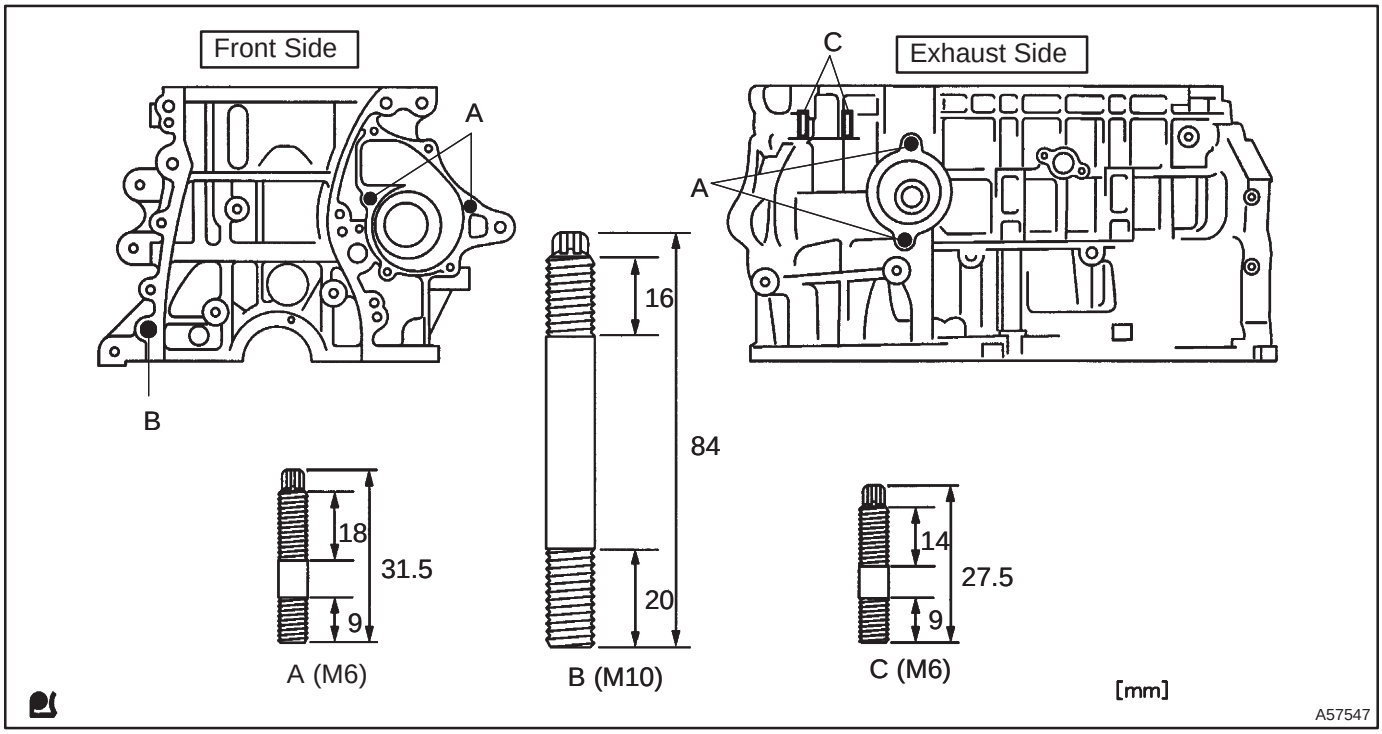

29. INSTALL STRAIGHT PIN

(a) Using a plastic–faced hammer, tap into the straight pin.

Standard protrusion
Pin A 7.5 mm (0.295 in.)
Pin B 12 mm (0.472 in.)

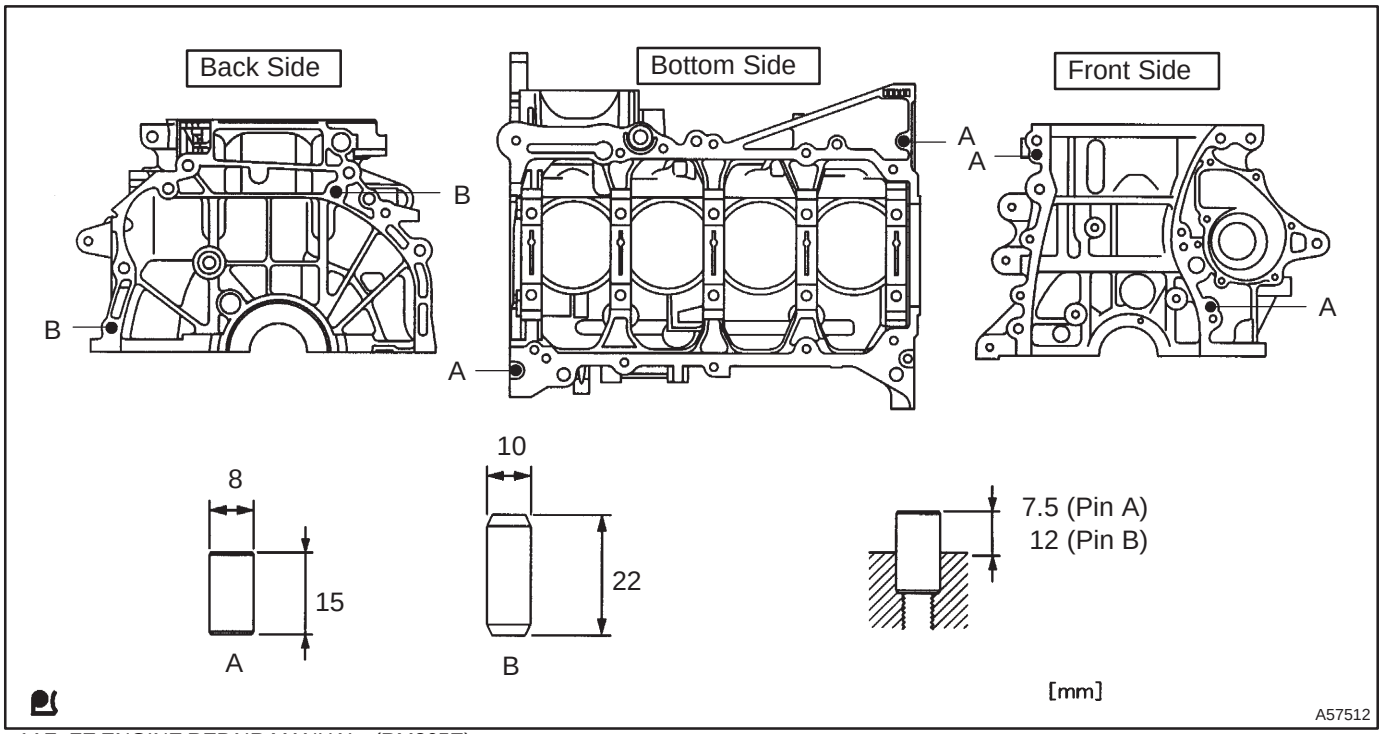

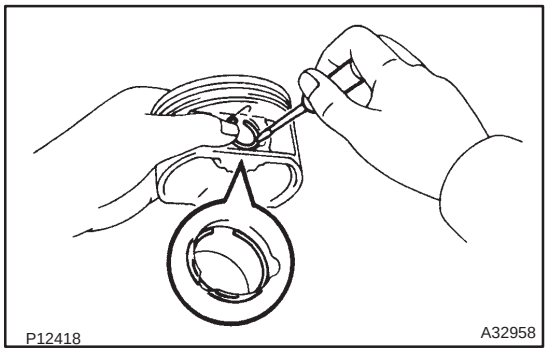

30. INSTALL PISTON

(a) Using a small screwdriver, install a new snap ring at one end of the piston pin hole.
(b) Gradually hat the piston to 80 – 90°C (176 – 194°F).

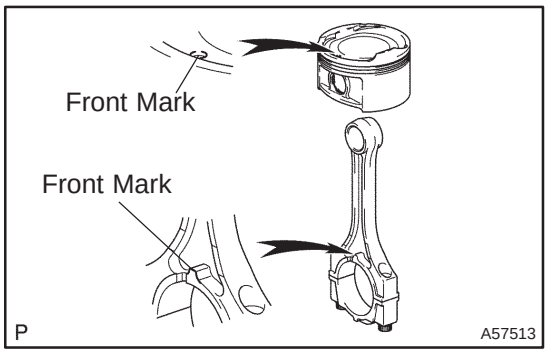

(c) Align the front marks on the piston with connecting rod, and push in the piston with your thumb.
(d) Using a small screwdriver, install a new snap ring on the other end of the piston pin hole.

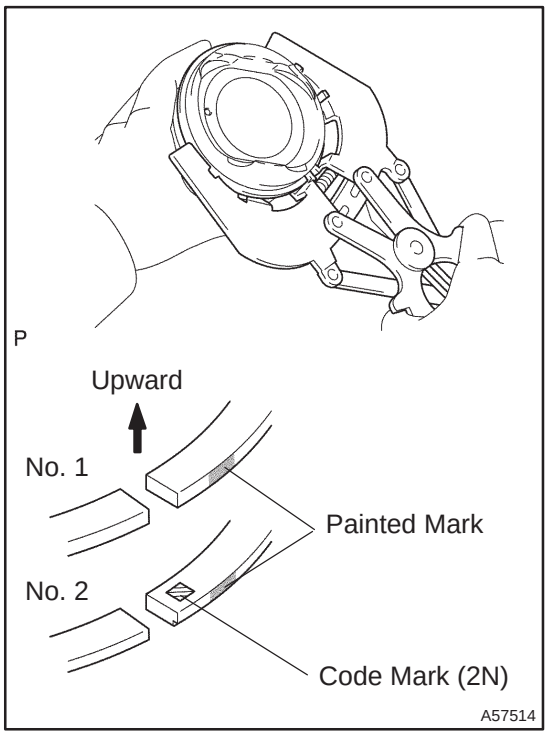

31. INSTALL PISTON RING SET

(a) Install the oil ring expander and 2 side rails by hand.
(b) Using a piston ring expander, install the 2 compression rings with the point mark facing right side.

NOTICE:
Install the compression ring No. 2 with the code mark (2N) facing upward.

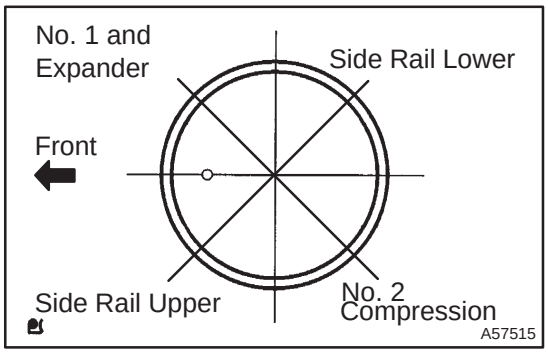

(c) Position the piston rings so that the ring ends are as shown.

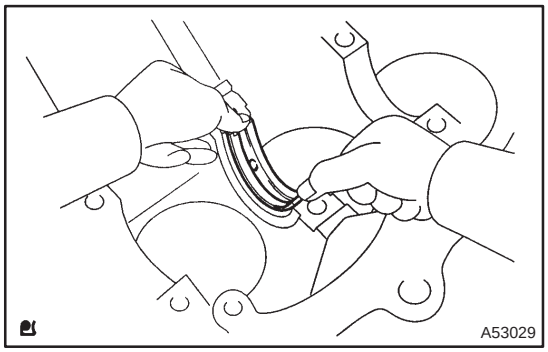

32. INSTALL CRANKSHAFT BEARING

(a) Install the upper bearing with an oil groove on cylinder block.

NOTICE:
Clean the back side of the bearing and the bearing surface of the cylinder block and let not stick the oils and fats.

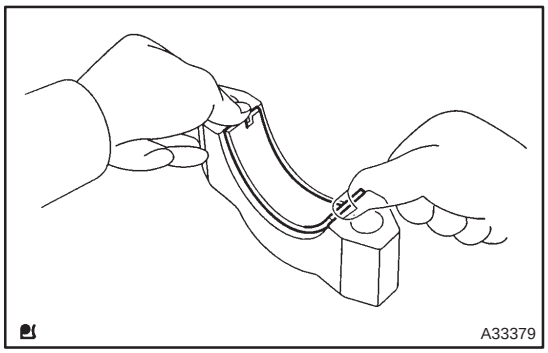

33. INSTALL CRANKSHAFT BEARING NO.2

(a) Install the lower bearing on bearing cap.

NOTICE:
Clean the back side of the bearing and the bearing surface of the bearing cap and let not stick the oils and fats.

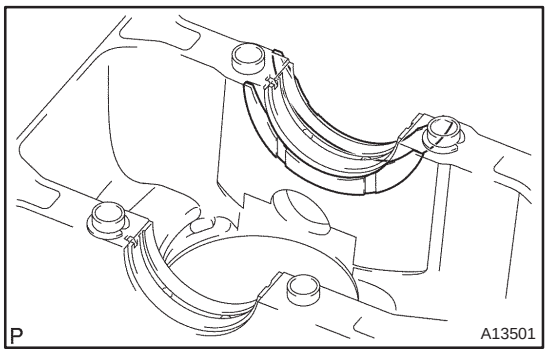

34. INSTALL CRANKSHAFT THRUST WASHER UPPER

(a) Install the 2 thrust washers under the No. 3 journal position of the cylinder block with the oil grooves facing outward.

35. INSTALL CRANKSHAFT

(a) Apply engine oil to upper bearing and install the crankshaft on the cylinder block.
(b) Apply engine oil to lower bearing.
(c) Examine the front marks and install the bearing caps on the cylinder block.
(d) Apply a light coat of engine oil on the threads and under the bearing cap bolts.

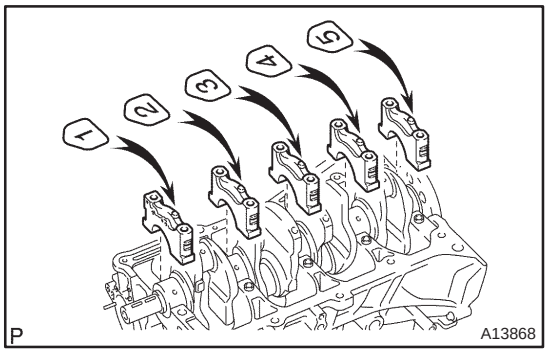

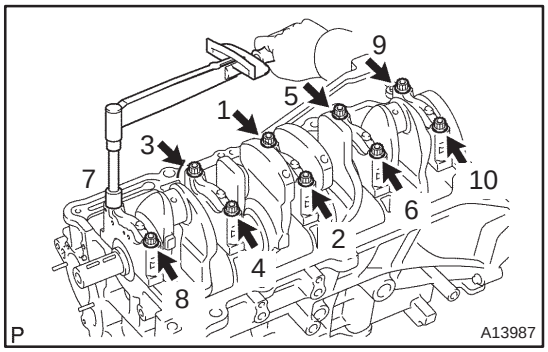

(e) Tighten the blots in several passes, in the sequence shown, by the specified torque.
Torque: 20 N·m (205 kgf·cm, 15 ft·lbf)

(f) Tighten the bolts in several passes, in the sequence shown, by the specified torque.
Torque: 40 N·m (410 kgf·cm, 30 ft·lbf)

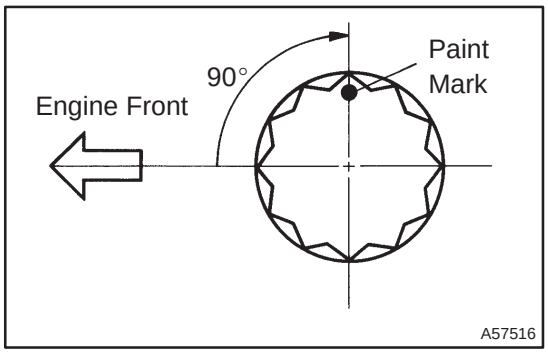

(g) Mark the front of the bearing cap bolts with paint.

(h) Retighten the bearing cap bolts by 90° in the numerical order shown.

(i) Check that the painted mark is now at a 90° angle to the front.

(j) Check the crankshaft turns smoothly.

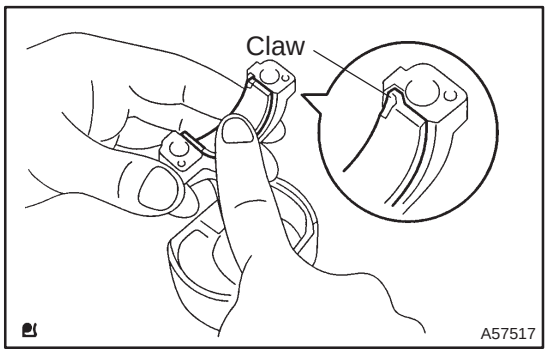

36. INSTALL CONNECTING ROD BEARING

(a) Align the bearing claw with the groove of the connecting rod or connecting cap.

NOTICE:
Clean the back side of the bearing and the bearing surface of the bearing cap and let not stick the oils and fats.

37. INSTALL PISTON

NOTICE:
The connecting rod cap bolts are tightened in 2 progressive steps.

(a) Apply engine oil to the cylinder walls, the pistons, and the surfaces of connecting rod bearings.

(b) Check the position of the piston ring ends.

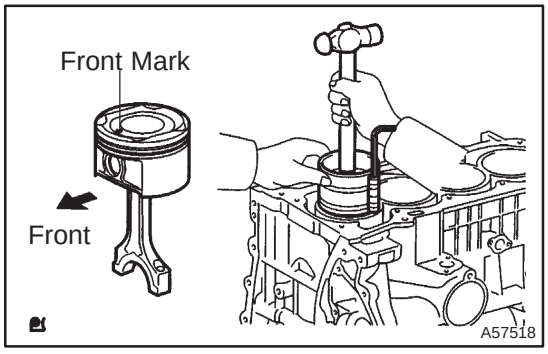

(c) Using a piston ring compressor, push the correctly numbered piston and connecting rod assemblies into each cylinder with the front mark of the piston facing forward.

NOTICE:
Match the numbered connecting rod cap with the connecting rod.

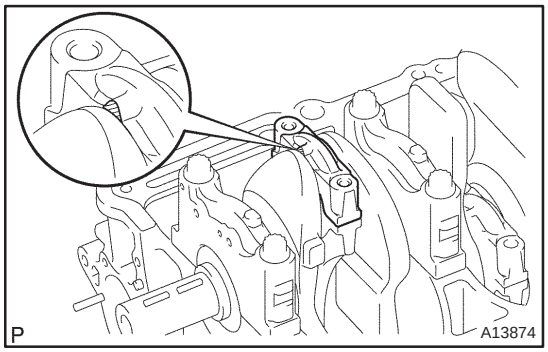

(d) Check that the protrusion of the connecting rod cap is facing in the correct direction.

(e) Apply a light coat of engine oil on the threads and under the heads of the connecting rod cap bolts.

(f) Tighten the bolts in several passes by the specified torque.

Torque: 25 N·m (250 kgf·cm, 18 ft·lbf)

(g) Mark the front of the connecting cap blots with paint.

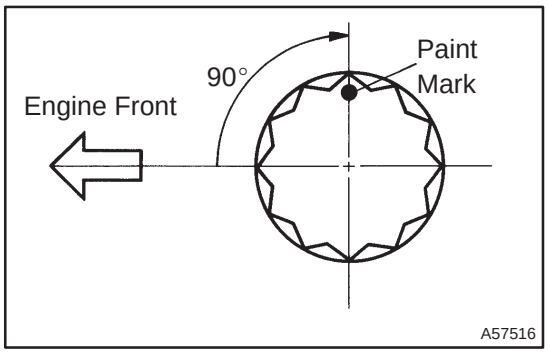

(h) Retighten the cap bolts by 90° as shown in the illustration.

(i) Check that the crankshaft turns smoothly.

SST 09011–38121, 99999–60012

WATER PUMP ASSY (1AZ–FE)

1606X–01

INSPECTION

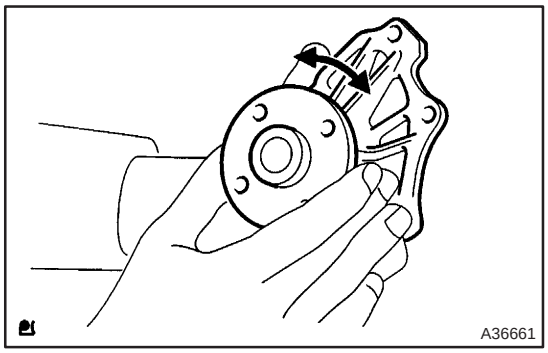

1. INSPECT WATER PUMP ASSY

(a) Visually check the drain hole coolant leakage.
(b) Turn the pulley, and check that the water pump bearing moves smoothly and quietly.

OIL PUMP ASSY (1AZ–FE)

OVERHAUL

1704E–01

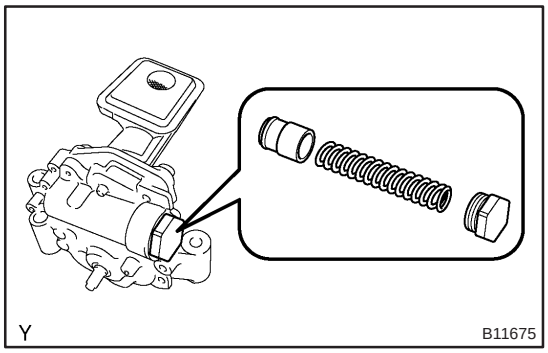

1. INSPECT OIL PUMP ASSY

(a) Remove oil pump relief valve.
  (1) Remove the relief valve plug.
  (2) Remove the oil pump relief valve spring.
  (3) Remove the relief valve.

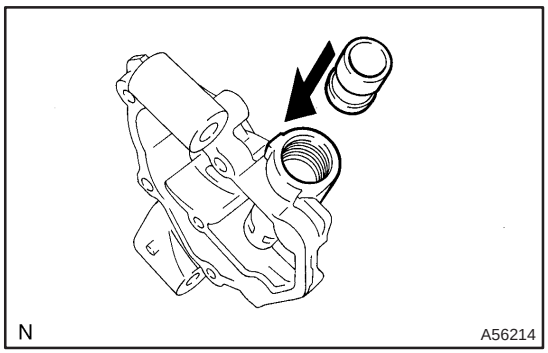

(b) Inspect oil pump relief valve.
  (1) Coat the valve with engine oil and check that it falls smoothly into the valve hole by its own weight.

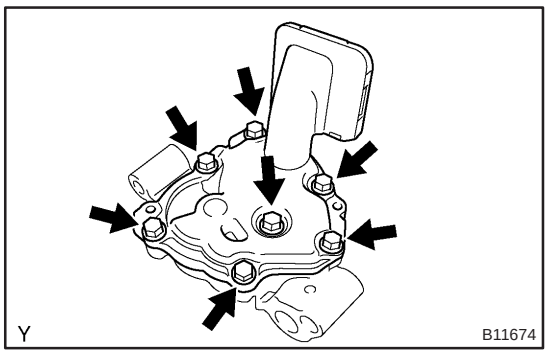

(c) Remove the oil pump cover.
  (1) Remove the 7 bolts, pump body cover, drive and driven rotors.

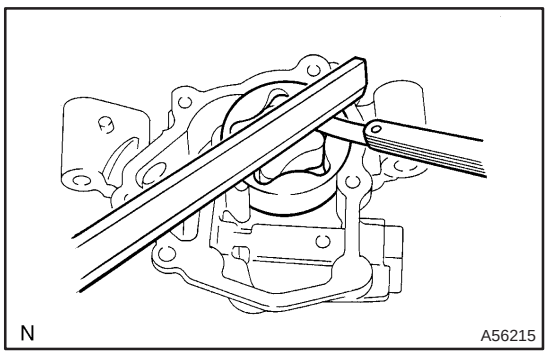

(d) Inspect rotor side clearance.
  (1) Using a feeler gauge and precision straight edge, measure the clearance between the rotors and precision straight edge.

Standard side clearance:
0.030 – 0.085 mm (0.0012 – 0.0033 in.)
Maximum side clearance:
0.16 mm (0.0063 in.)

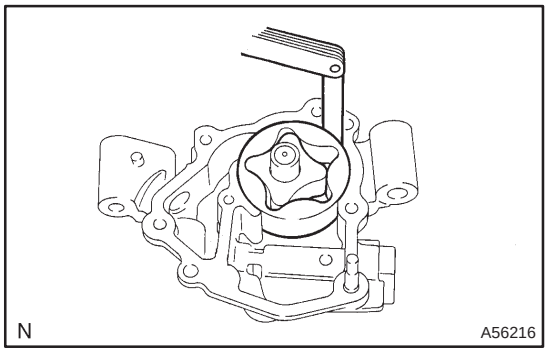

(e) Inspect rotor tip clearance.
(1) Using a feeler gauge, measure the clearance between the drive and driven rotor tips.
Standard tip clearance:
0.080 – 0.160 mm (0.0031 – 0.0063 in.)
Maximum side clearance:
0.35 mm (0.0138 in.)

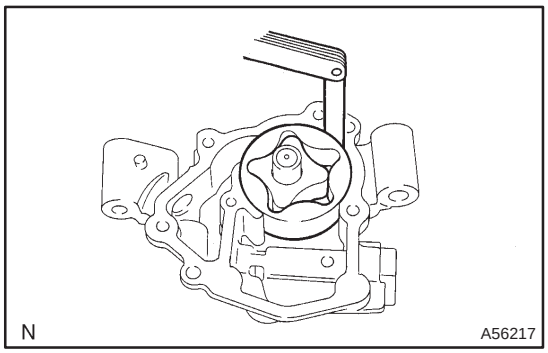

(f) Inspect rotor body clearance.
(1) Using a feeler gauge, measure the clearance between the driven rotor and body.
Standard body clearance:
0.100 – 0.170 mm (0.00394 – 0.00669 in.)
Maximum side clearance:
0.325 mm (0.01280 in.)

(g) Remove the oil pump rotor set.

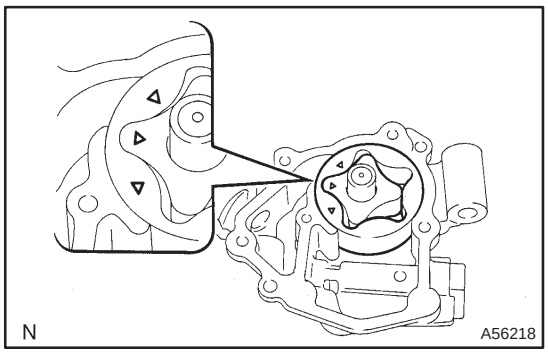

(h) Install the oil pump rotor set.
(1) Coat the drive rotor and driven rotors with engine oil.
(2) Place the drive and driven rotors into pump body with the marks facing the pump body cover side.

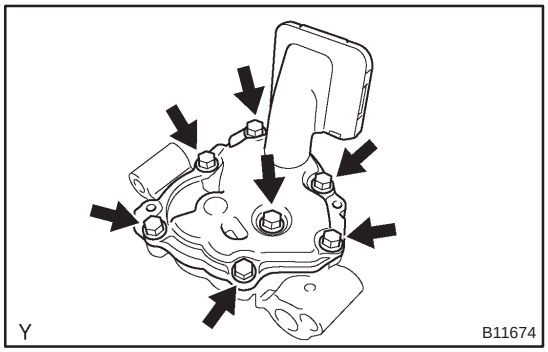

(i) Install oil pump cover.
(1) Install the pump body cover with 5 bolts.
Torque: 8.8 N·m (90 kgf·cm, 80 in.·lbf)

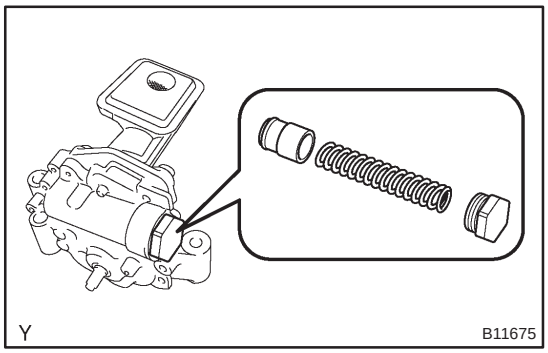

(j) Install oil pump relief valve.
(1) Coat the oil pump relief valve with engine oil.
(2) Insert the relief valve and spring into the pump body hole.
(3) Install the relief valve plug.

STARTER ASSY(1.2KW) (1AZ–FE)

1906K–01

OVERHAUL

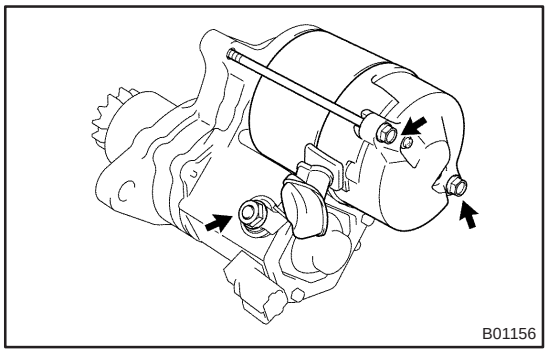

1. REMOVE STARTER YOKE ASSY

(a) Remove the starter cover.
(b) Remove the nut, and disconnect the lead wire from the C terminal.
(c) Remove the 2 through bolts. Pull out the field frame together with the armature.
(d) Remove the O–ring from the field frame.

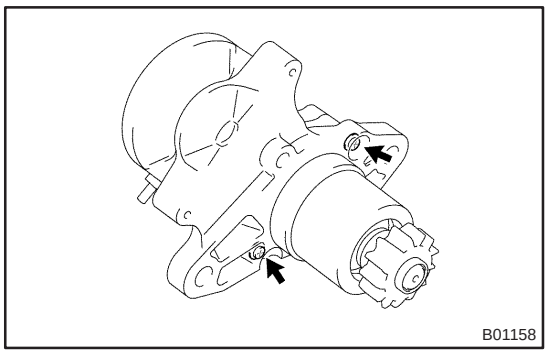

2. REMOVE STARTER CLUTCH SUB–ASSY

(a) Remove the 2 screws.

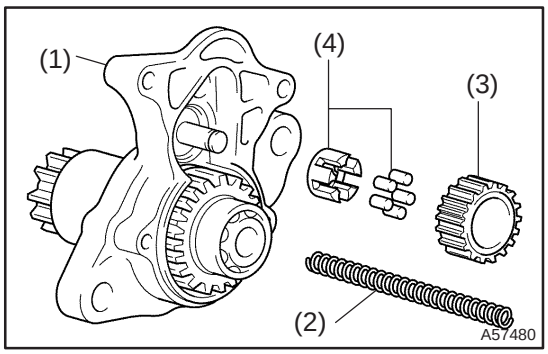

(b) Remove the starter housing and clutch assembly (1), return spring (2), idler gear (3) and bearing from the magnetic switch.

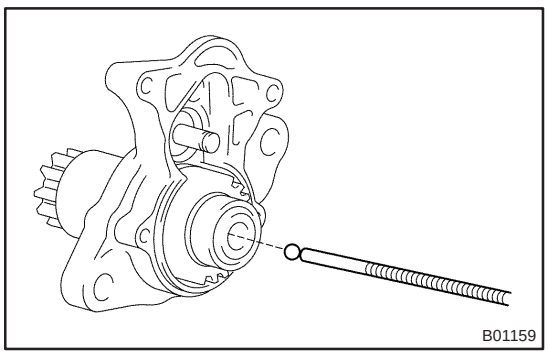

(c) Using a magnetic finger, remove the steel ball from the clutch shaft hole.

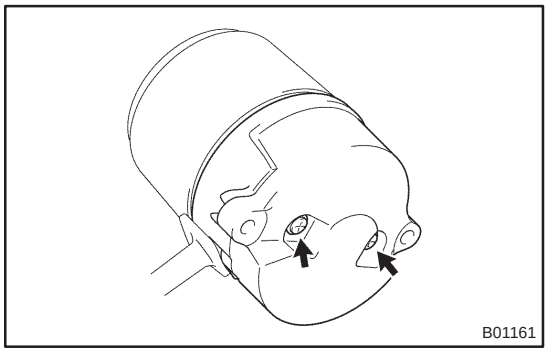

3. REMOVE STARTER BRUSH HOLDER ASSY

(a) Remove the 2 screws and end cover from the field frame.
(b) Remove the O–ring from the field frame.

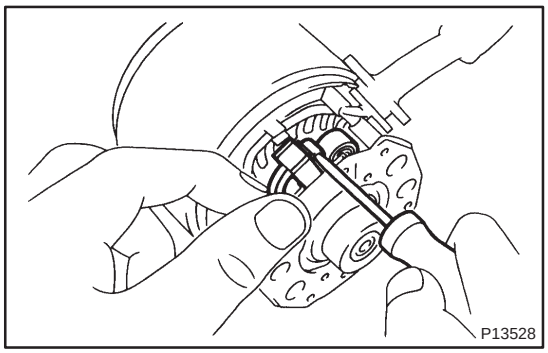

(c) Using a screwdriver, hold the spring back and disconnect the brush from the brush holder. Disconnect the 4 brushes, and remove the brush holder.

NOTICE:
At the time of reassembly, check that the positive (+) lead wires are not grounded.

4. REMOVE STARTER ARMATURE ASSY

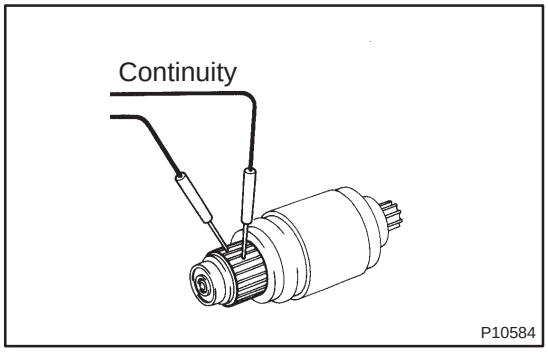

5. INSPECT STARTER ARMATURE ASSY

(a) Check the commutator for open circuit.
  (1) Using and ohmmeter, check that there is continuity between the segments of the commutator.

If there is no continuity between any segment, replace the armature.

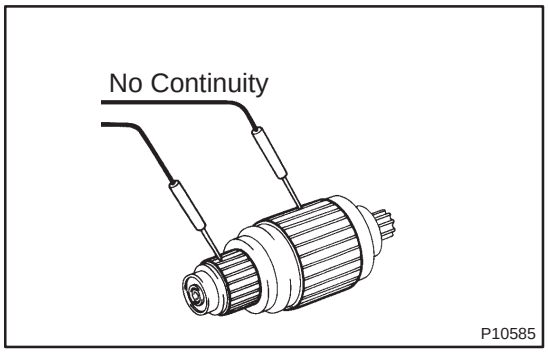

(b) Check the commutator for ground.
  (1) Using an ohmmeter, check that there is no continuity between the commutator and armature coil core.

If there is continuity, replace the armature.

(c) Check the commutator for the dirty and burnt surfaces.

If the surface is dirty or burnt, correct it with the sandpaper (No. 400) or on a lathe.

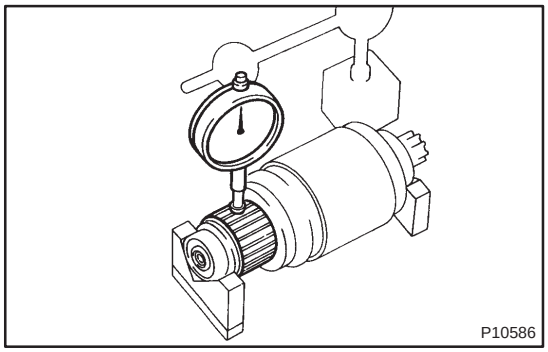

(d) Place the commutator on V–blocks.
(1) Using a dial gauge, measure the circle runout.
Maximum circle runout: 0.05 mm (0.0020 in.)

If the circle runout is greater than maximum, replace the armature.

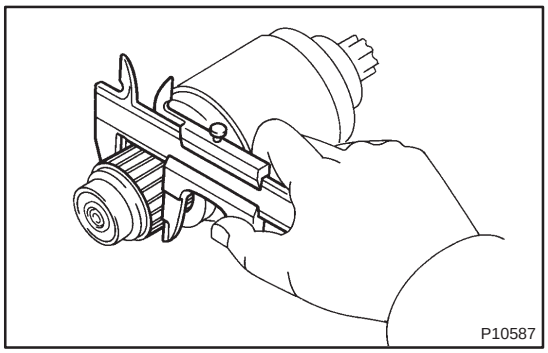

(e) Using vernier calipers, measure the commutator diameter.
Standard diameter: 30.0 mm (1.181 in.)
Minimum diameter: 29.0 mm (1.142 in.)

If the diameter is less than minimum, replace the armature.

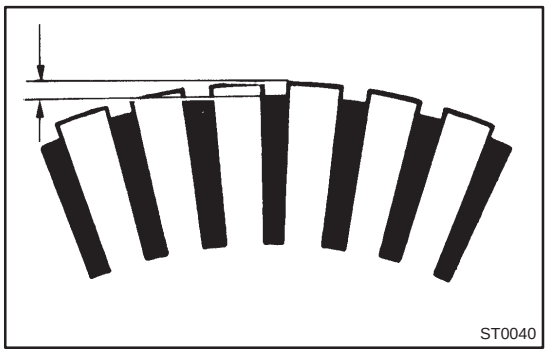

(f) Check that the undercut depth is clean and free of foreign materials. Smooth out the edge.
Standard undercut depth: 0.6 mm (0.024 in.)
Minimum undercut depth: 0.2 mm (0.008 in.)

If the undercut depth is less than minimum, correct it with a hacksaw blade.

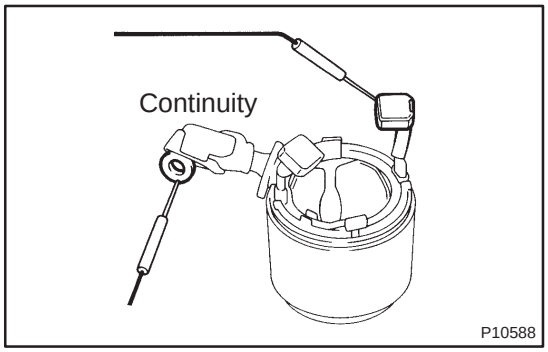

(g) Check the field coil for open circuit.
(1) Using an ohmmeter, check that there is continuity between the lead wire and field coil brush lead.

If there is no continuity, replace the field frame.

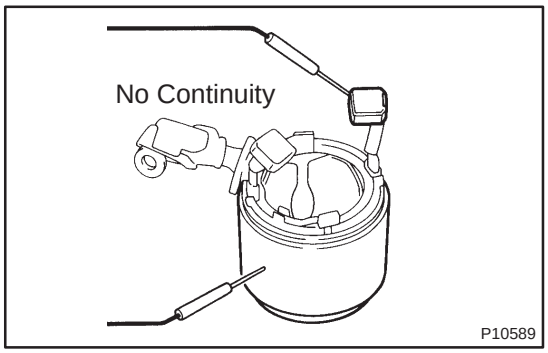

(h) Check the field coil for ground.
(1) Using an ohmmeter, check that there is no continuity between the field coil brush lead and field frame.

If there is continuity, repair or replace the field frame.

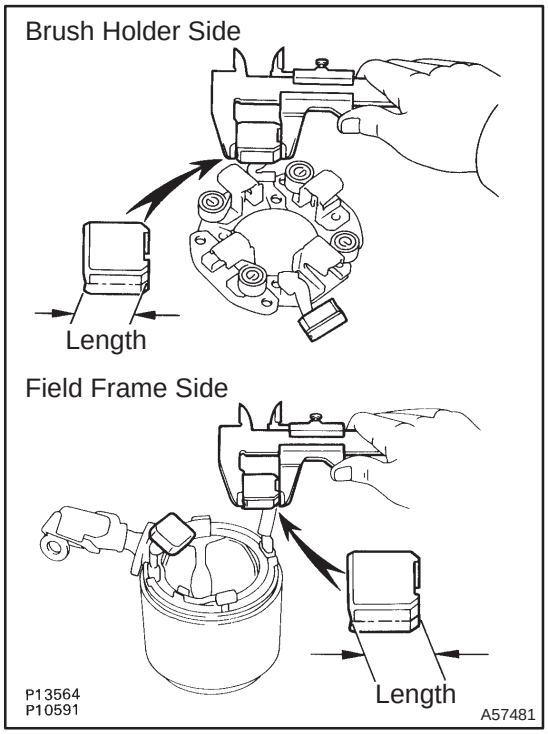

6. INSPECT STARTER BRUSH HOLDER ASSY

(a) Using vernier calipers, measure the brush length.
Standard length: 15.5 mm (0.610 in.)
Minimum length: 10 mm (0.394 in.)

If the length is less than minimum, replace the brush holder and field frame.

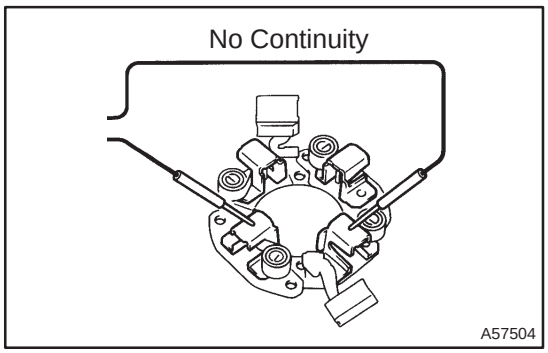

(b) Using an ohmmeter, check that there is no continuity between the positive (+) and negative (–) brush holders.

If there is continuity, repair or replace the brush holder.

7. INSPECT STARTER CLUTCH SUB–ASSY

(a) Check the gear teeth on the pinion gear, idler gear and clutch assembly for wear or damage.

If damaged, replace the gear or clutch assembly.

If damaged, also check the ring gear of the flywheel/drive plate for wear or damage.

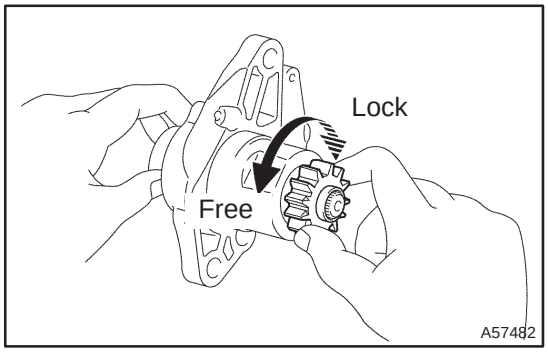

(b) Hold the starter clutch and rotate the pinion gear counterclockwise, and check that it turns freely. Try to rotate the pinion gear clockwise and check that it locks.

If necessary, replace the clutch assembly.

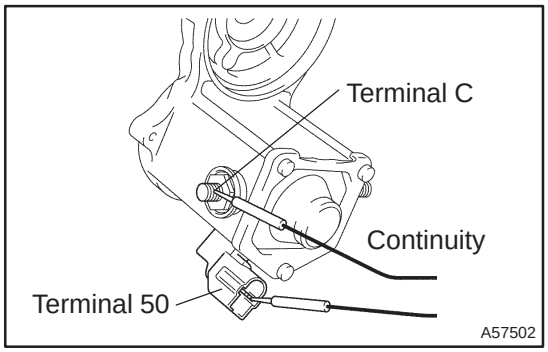

8. INSPECT MAGNET STARTER SWITCH ASSY

(a) Using an ohmmeter, check that there is continuity between terminals 50 and C.

If there is no continuity, check and replace the magnetic switch.

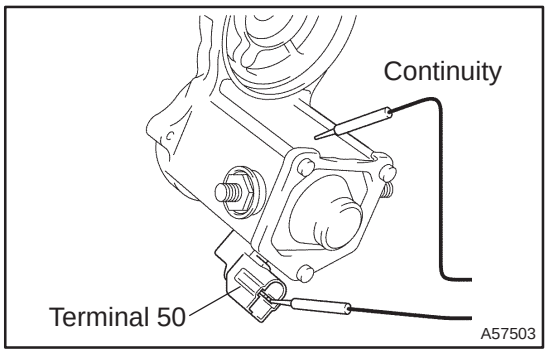

(b) Using an ohmmeter, check that there is continuity between the terminal 50 and the switch body.

If there is no continuity, replace the magnetic switch.

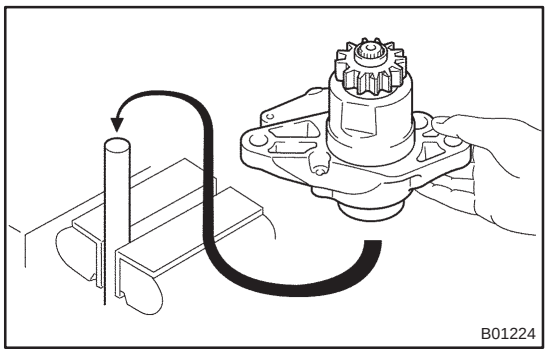

9. REPLACE STARTER CLUTCH SUB–ASSY

(a) Mount a brass bar in a vise, and install the starter housing and clutch assembly to the brass bar.

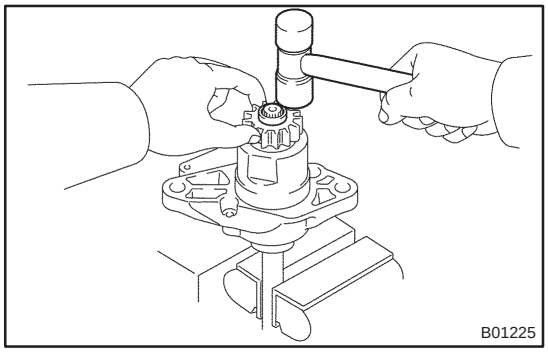

(b) Push down the pinion gear.

(c) Using a plastic–faced hammer, tap down the stop collar.

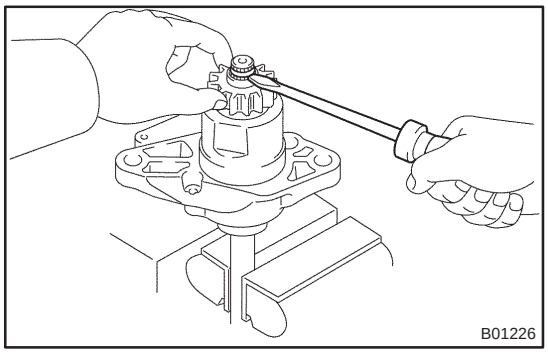

(d) Using a screwdriver, pry out the snap ring.

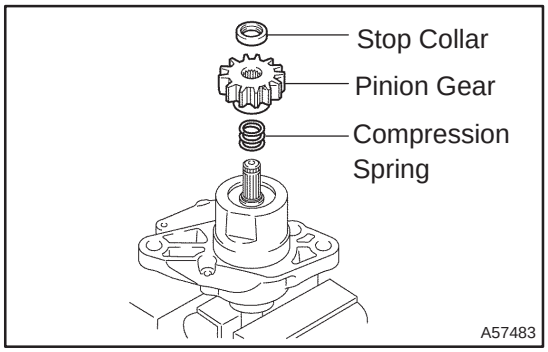

(e) Remove the stop collar, pinion gear and compression spring.

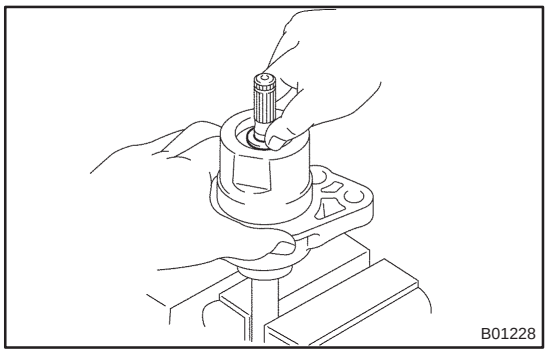

(f) Push down the starter housing, and remove the spring retainer.

(g) Remove the clutch shaft, compression spring and starter clutch from the starter housing.

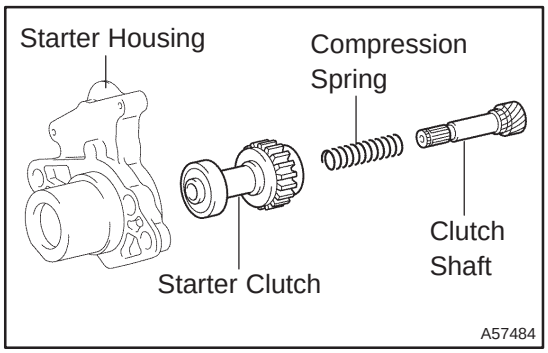

(h) Assemble the starter housing and the clutch assembly.

(1) Install the starter clutch, compression spring, and clutch shaft to the starter housing.

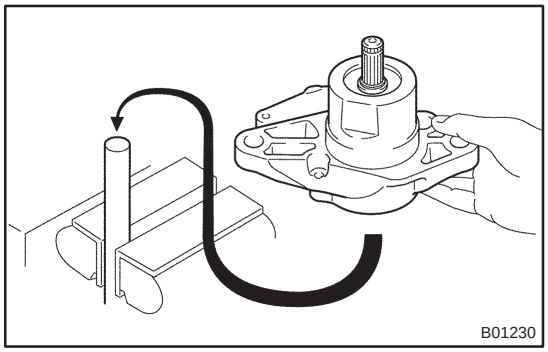

(2) Mount a brass bar in a vise, install the starter housing and clutch assembly to the brass bar.

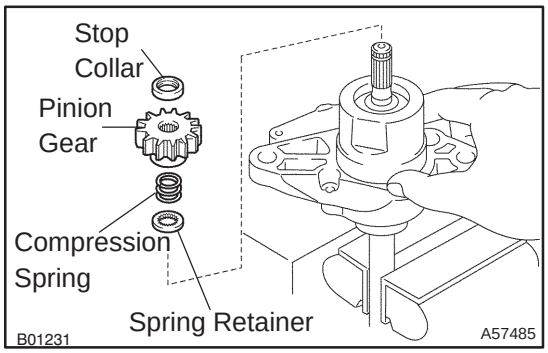

(3) Push down the starter housing, and install the spring retainer, compression spring, pinion gear and stop collar.

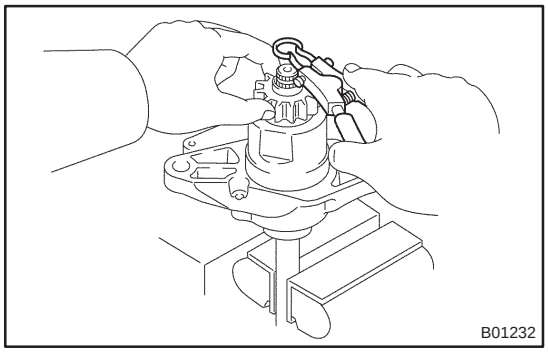

(4) Push down the pinion gear.
(5) Using snap ring pliers, install a new snap ring.

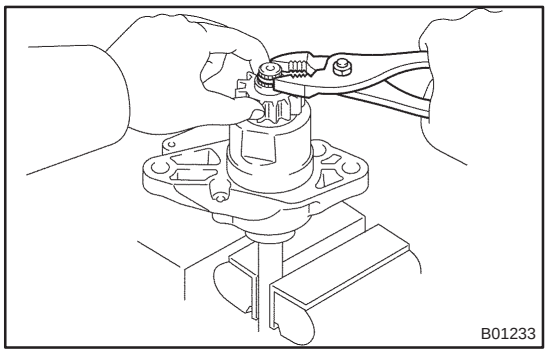

(6) Using pliers, compress the snap ring.
(7) Check that the snap ring fits correctly.
(8) Remove the starter housing and clutch assembly from the brass bar.

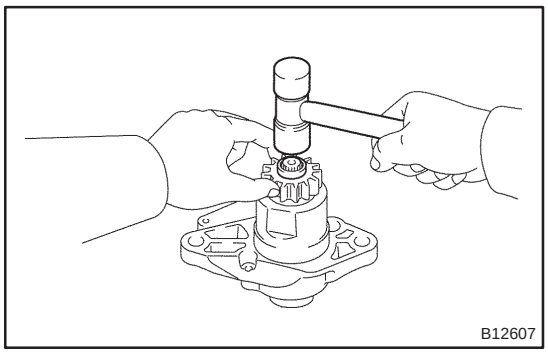

(i) Using a plastic–faced hammer, tap the clutch shaft and install the stop collar onto the snap ring.

10. INSTALL STARTER ARMATURE ASSY

11. INSTALL STARTER BRUSH HOLDER ASSY

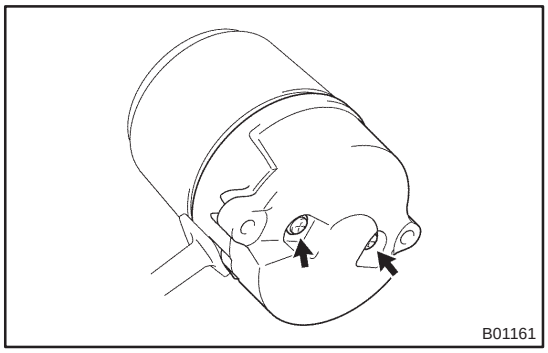

(a) Install the brush holder.
(b) Install an O–ring to the groove of the field frame.
(c) Install the end frame with the 2 screws.
Torque: 1.5 N·m (15 kgf·cm, 13 in.·lbf)

12. INSTALL STARTER CLUTCH SUB–ASSY

(a) Apply grease to the steel ball, and install it to the clutch shaft hole.

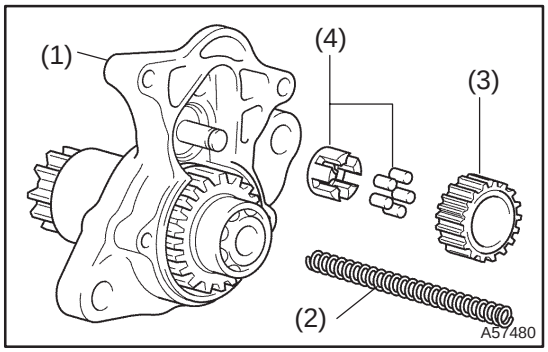

(b) Apply grease to the these parts, and install them to the starter housing.

(1)	Starter magnet switch return spring
(2)	Starter idle gear pinion
(3)	Starter idle gear retainer
(4)	Starter idle gear clutch roller

(c) Apply grease to the clutch gear.

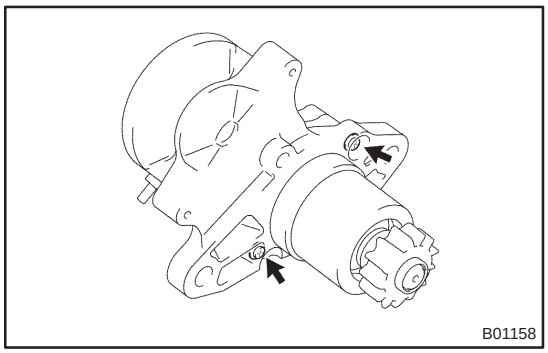

(d) Install the starter housing and clutch assembly with the 2 screws.
Torque: 5.9 N·m (60 kgf·cm, 52 in.·lbf)

13. INSTALL STARTER YOKE ASSY

(a) Install an O–ring to the groove of the field frame.

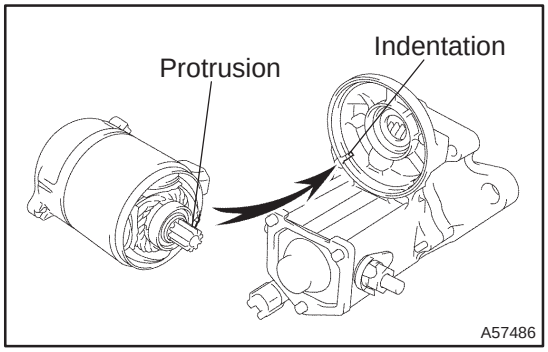

(b) Pull out the field frame together with the armature.
HINT:
Align the protrusion of the field frame with the indentation of the magnetic switch.

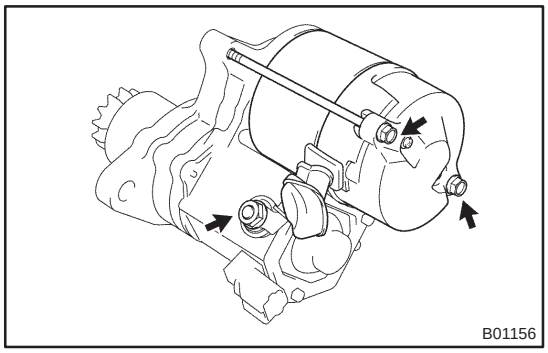

(c) Install the field frame and armature assembly with the 2 through bolts.
Torque: 5.9 N·m (60 kgf·cm, 52 in.·lbf)

(d) Connect the lead wire to the C terminal with the nut.
Torque: 5.9 N·m (60 kgf·cm, 52 in.·lbf)

STARTER ASSY(1.3KW) (1AZ–FE)

OVERHAUL

1906L–01

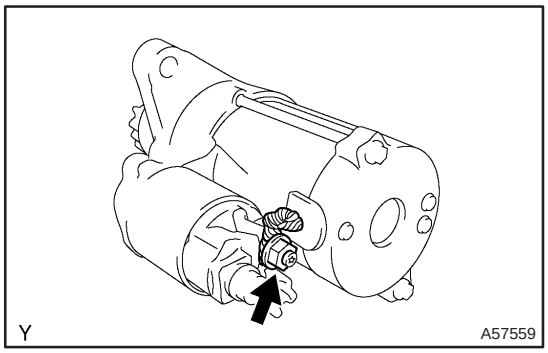

1. REMOVE REPAIR SERVICE STARTER KIT

(a) Remove the nut, and disconnect the lead wire from the repair service starter kit.

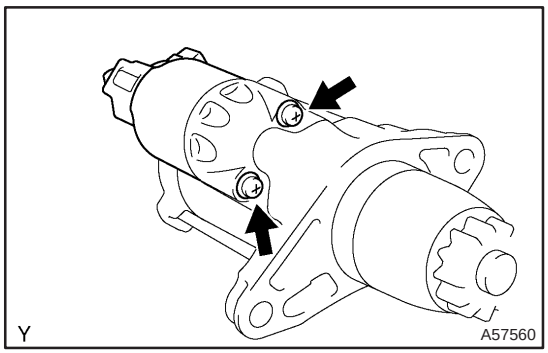

(b) Remove the 2 screws holding the repair service starter kit to the starter housing.
(c) Remove the repair service starter kit.
(d) Remove the return spring and plunger.

2. REMOVE STARTER COMMUTATOR END FRAME COVER

(a) Using a screwdriver, remove the cover.

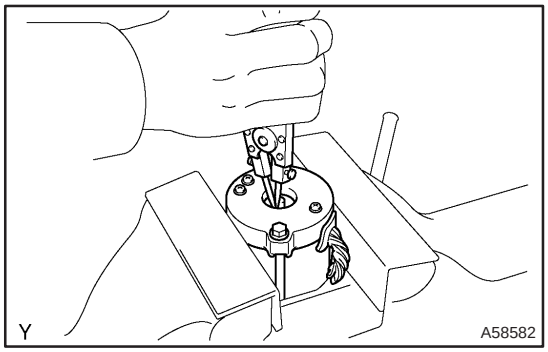

3. REMOVE STARTER COMMUTATOR END FRAME ASSY

(a) Using snap ring pliers, remove the snap ring and plate washer.

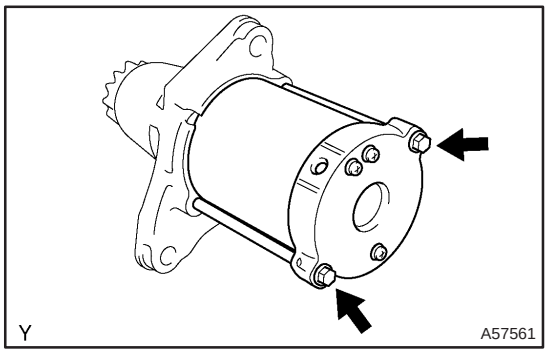

(b) Remove the 2 through bolts, and pull out the starter yoke assy together with the commutator end frame assy.

4. REMOVE STARTER YOKE ASSY

(a) Remove the starter armature assy from starter yoke assy.

5. REMOVE STARTER ARMATURE PLATE

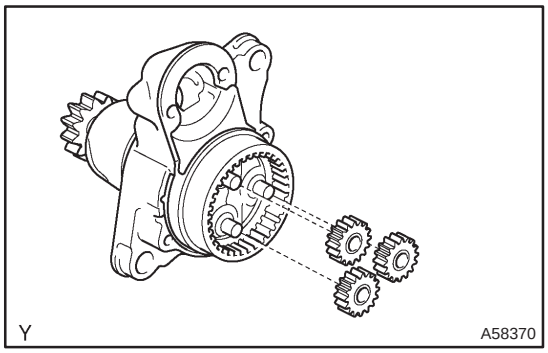

6. REMOVE PLANET GEAR

(a) Remove the 3 planetary gears.

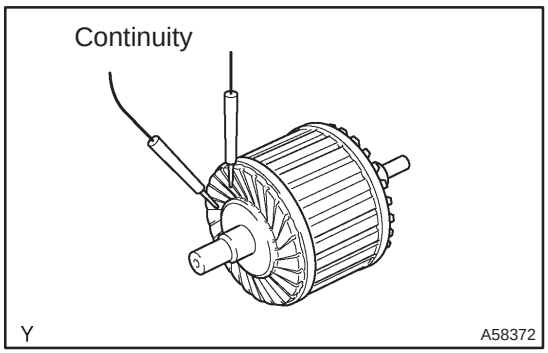

7. INSPECT STARTER ARMATURE ASSY

(a) Check the commutator for open circuit.
  (1) Using an ohmmeter, check that there is continuity between the segments of the commutator.

If there is no continuity between any segments, replace the armature.

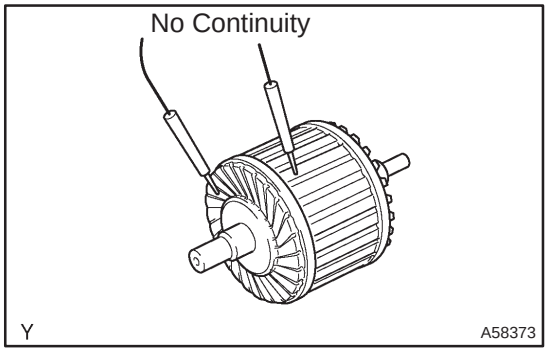

(b) Check the commutator for ground.
  (1) Using an ohmmeter, check that there is no continuity between the commutator and armature coil core.

If there is continuity, replace the armature.

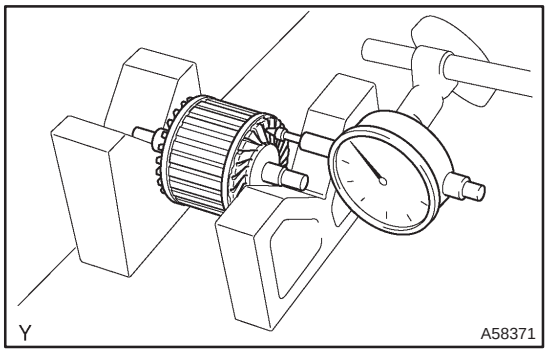

(c) Check the commutator for dirty and burn on surface.

If the surface is dirty or burnt, correct it with sandpaper (No.400) or a lathe.

(d) Check for the commutator circuit runout.
  (1) Place the commutator on V–blocks.
  (2) Using a dial indicator, measure the circle runout.
  Maximum circle runout: 0.05 mm (0.0020 in.)

If the circle runout is greater than maximum, replace the armature.

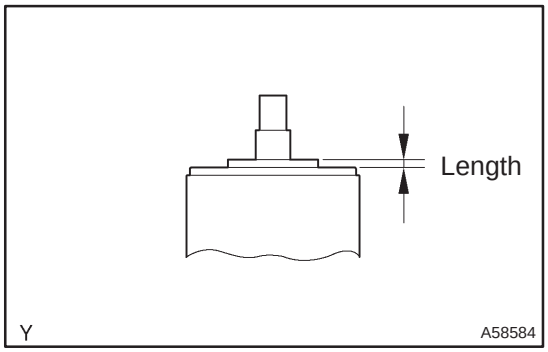

(e) Using vernier calipers, measure the commutator length.
Standard length: 3.3 mm (0.1299 in.)
Maximum length: 4.0 mm (0.1575 in.)

If the length is greater than maximum, replace the armature.

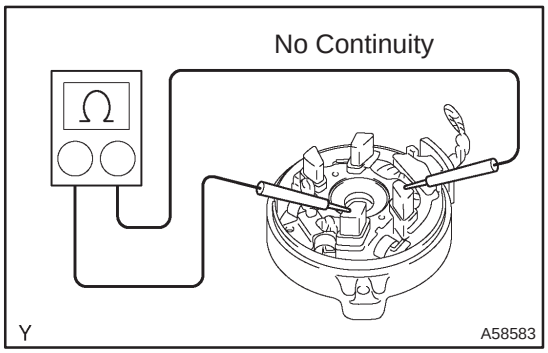

8. INSPECT STARTER COMMUTATOR END FRAME ASSY

(a) Check the brush holder.
(1) Using an ohmmeter, check that there is no continuity between the positive (+) and negative (–) brush holders.

If the there is continuity repair or replace the starter commutator end frame assy.

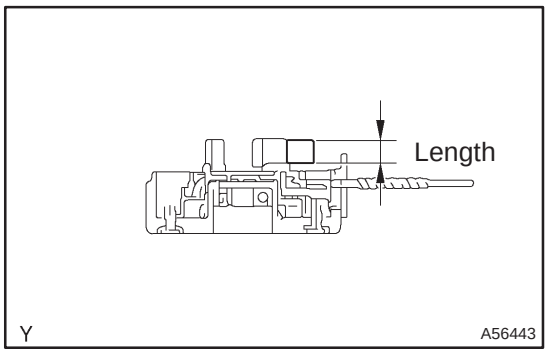

(b) Using vernier calipers, measure the brush holder length.
Standard length: 9.0 mm (0.3543 in.)
Maximum length: 4.0 mm (0.0787 in.)

If the length is greater than maximum, replace the starter commutator end frame assy.

9. INSPECT MOTOR TERMINAL STARTER KIT

(a) Check the gear teeth on the planetary gear, internal gear and starter clutch for wear or damage.

If the gear is damaged, replace it.

If damaged, replace the gear or clutch assembly. If damaged, also check the drive plate ring gear for wear or damage.

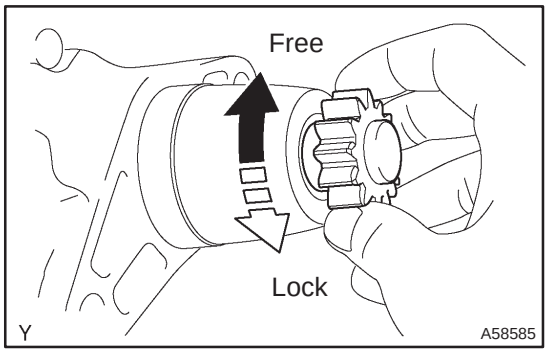

(b) Check the starter clutch.
(1) Rotate the clutch pinion gear clockwise and check that it turns freely. Try to rotate the clutch pinion gear counterclockwise and check that it locks.

If necessary, replace the starter clutch.

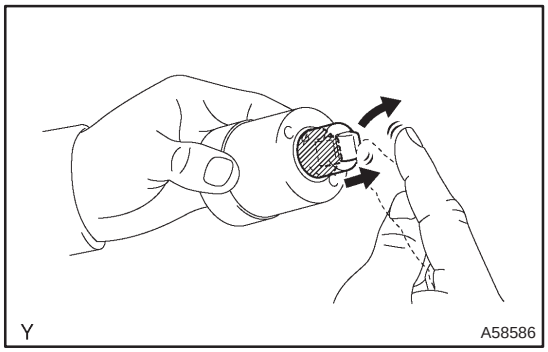

10. INSPECT REPAIR SERVICE STARTER KIT

(a) Check the plunger.
  (1) Push in the plunger and check that it returns quickly to its original position.

If necessary, replace the repair service starter kit.

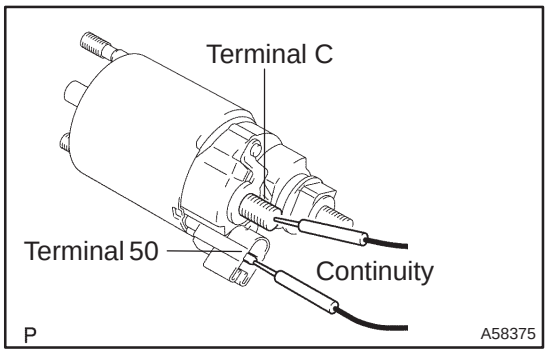

(b) Check the pull–in coil for open circuit.
  (1) Using an ohmmeter, check that there is continuity between terminals 50 and C.

If there is no continuity, replace the repair service starter kit.

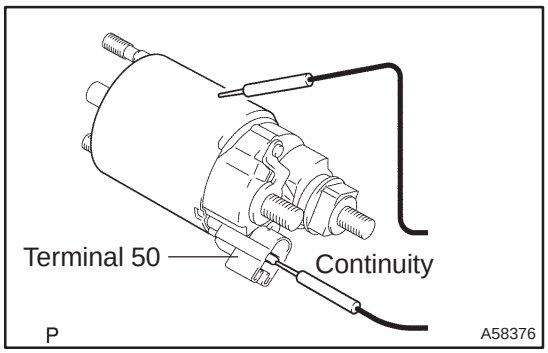

(c) Check the hold–in coil for open circuit.
  (1) Using an ohmmeter, check that there is continuity between terminal 50 and the switch body.

If there is no continuity, replace the repair service kit.

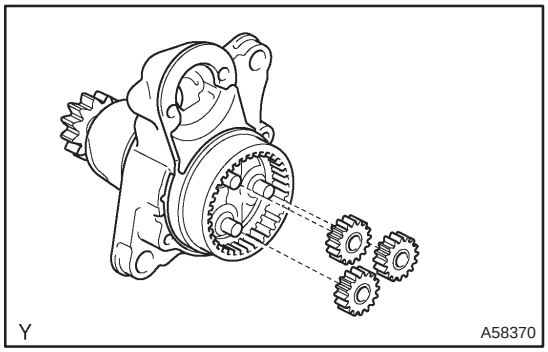

11. INSTALL PLANET GEAR

(a) Apply grease to the planetary gears and pin parts of the planetary shaft.
(b) Install the 3 planetary gears.
(c) Align the cutout of the plate with the protrusion inside the shock absorber.

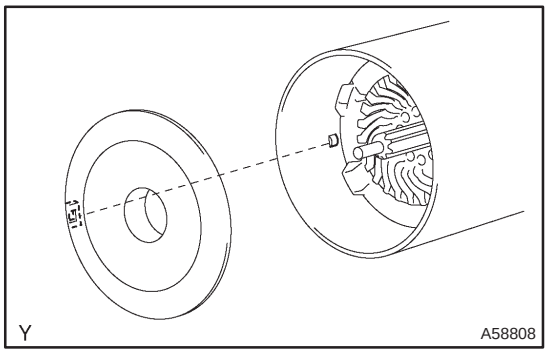

12. INSTALL STARTER ARMATURE PLATE

(a) Apply grease to the planetary gears and pin parts of the planetary shaft.
(b) Align the cutout of the plate with the protrusion inside the shock absorber, and install the plate.

13. INSTALL STARTER ARMATURE ASSY

(a) Apply grease to the washer plate and armature shaft.
(b) Install the armature shaft to the starter commutator end frame assy.
(c) Using snap ring pliers, install the plate washer and new snap ring.

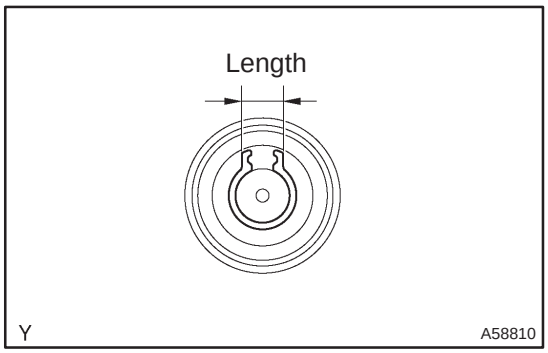

(d) Using vernier calipers, mesure the snap ring.
Maximum length: 5.0 mm (0.1969 in.)

If the length is greater than maximum, replace the new snap ring.

14. INSTALL STARTER COMMUTATOR END FRAME COVER

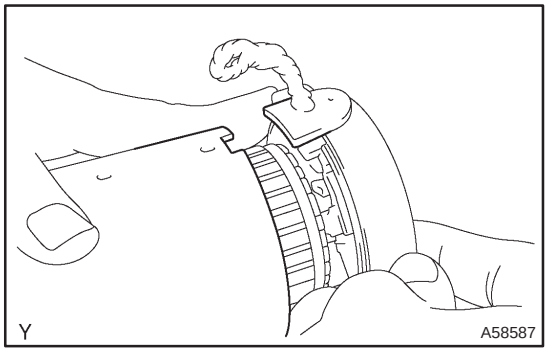

15. INSTALL STARTER YOKE ASSY

(a) Align the starter commutator rubber end frame with the cutout of starter yoke.
(b) Install starter yoke assy to starter commutator end frame.

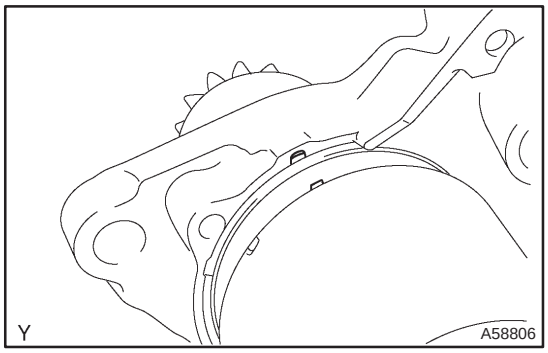

16. INSTALL STARTER COMMUTATOR END FRAME ASSY

(a) Align the starer yoke assy with the cutout of motor terminal starter kit.

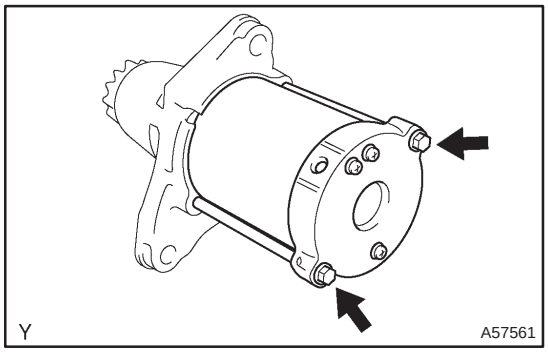

(b) Install the starter yoke assy with the 2 through bolts.
Torque: 6.0 N·m (61 kgf·cm, 52 in.·lbf)

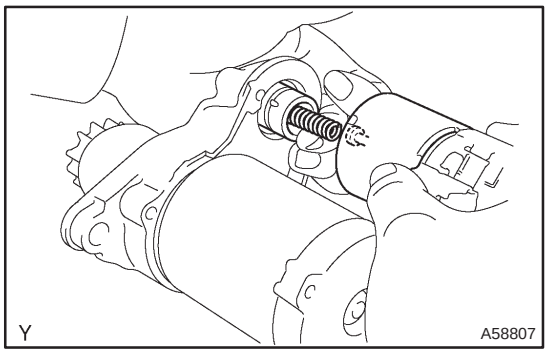

17. INSTALL REPAIR SERVICE STARTER KIT

(a) Apply grease to the plunger and hook.
(b) Hang the plunger hook of the repair service starter kit to the drive lever.
(c) Install the plunger and return spring.
(d) Install the repair service starter kit with the 2 screws.
Torque: 7.5 N·m (80 kgf·cm, 69 in.·lbf)
(e) Apply grease to the nut of the lead wire.

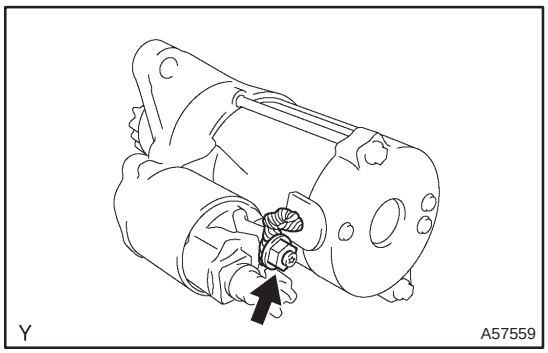

(f) Connect the lead wire to the terminal with the nut.
Torque: 6.5 N·m (66 kgf·cm, 58 in.·lbf)

GENERATOR ASSY (1AZ–FE)

OVERHAUL

1906M–01

1. REMOVE GENERATOR PULLEY

SST 09820–63010 (09820–06010, 09820–06020)

SST 1 – A, B	09820–06010
SST 2	09820–06020

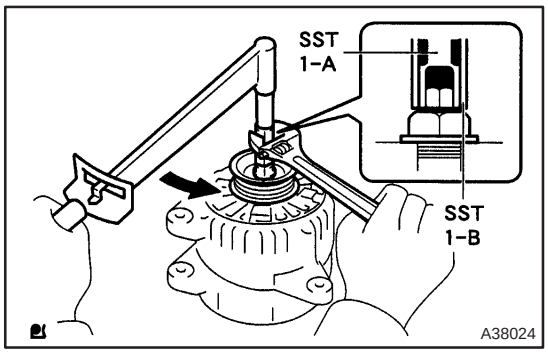

(a) Hold SST 1 – A with a torque wrench, and tighten SST 1 – B clockwise to the specified torque.
Torque: 39 N·m (400 kgf·cm, 29 ft·lbf)

NOTICE:
Check that SST is secured to the rotor shaft.

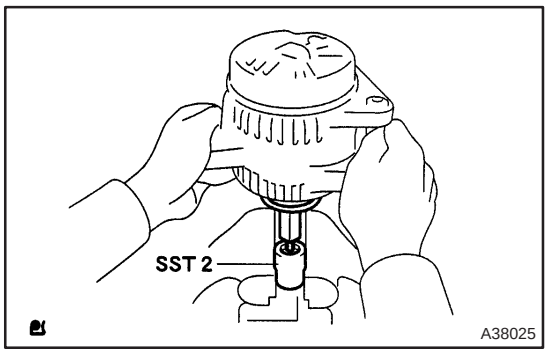

(b) Mount SST 2 in a vise.
(c) Insert SST 1 – A, B into SST 2, and attach the pulley nut to SST 2.

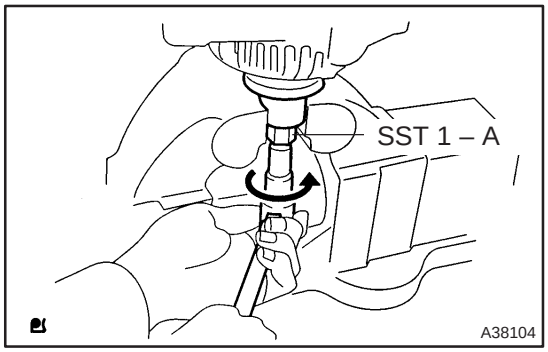

(d) To loosen the pulley nut, turn SST 1 – A in the direction shown in the illustration.

NOTICE:
To prevent damage to the rotor shaft, do not loosen the pulley nut more than one–half of a turn.

(e) Remove the alternator from SST 2.

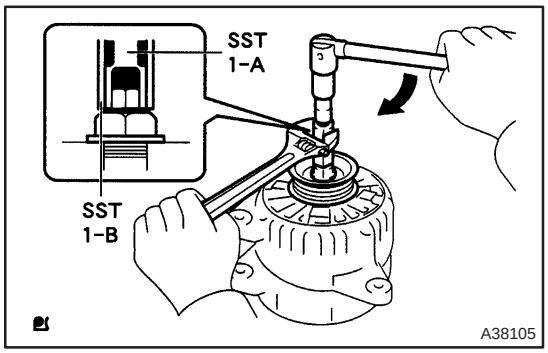

(f) Turn SST 1 – B, and remove SST 1 – A, B.
(g) Remove the pulley nut and pulley.

2. REMOVE GENERATOR BRUSH HOLDER ASSY

(a) Remove the nut and terminal insulator.
(b) Remove the bolt, 3 nuts, plate terminal and end cover.
(c) Remove the brush cover.
(d) Remove the 2 screws and brush holder.

3. REMOVE GENERATOR REGULATOR ASSY

(a) Remove the 3 screws and voltage regulator.

4. REMOVE GENERATOR HOLDER W/RECTIFIER

(a) Remove the 4 screws and rectifier holder.

5. REMOVE ALTERNATOR RECTIFIRE END FRAME

(a) Remove the rubber insulator.
(b) Remove the seal plate.
(c) Remove the 4 nuts and cord clip.

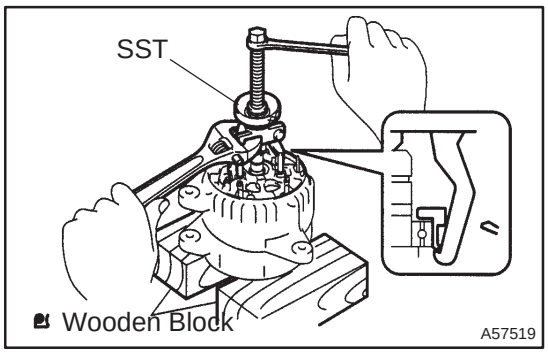

(d) Using bearing puller set, remove the rectifier end frame.

6. REMOVE GENERATOR ROTOR ASSY

(a) Remove the alternator washer from the rotor.
(b) Remove the rotor from drive end frame.

NOTICE:
Do not drop the rotor.

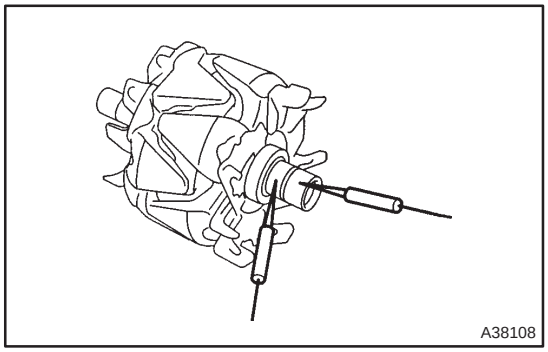

7. INSPECT GENERATOR ROTOR ASSY

(a) Inspect rotor for open circuit.
(1) Using an ohmmeter, check that there is continuity between the slip rings.

Standard resistance: 2.1 – 2.5 Ω at 20°C (68°F)

If there is no continuity, replace the rotor.

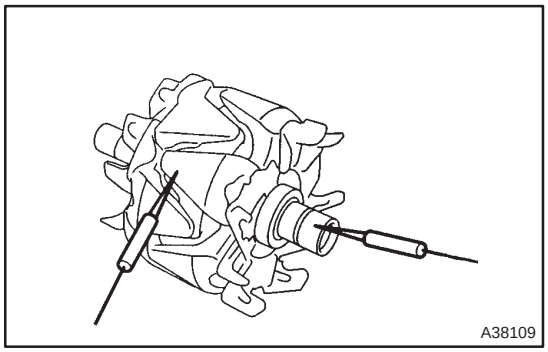

(b) Inspect rotor for ground.
(1) Using an ohmmeter, check that there is no continuity between the slip ring and rotor.

If there is continuity, replace the rotor.

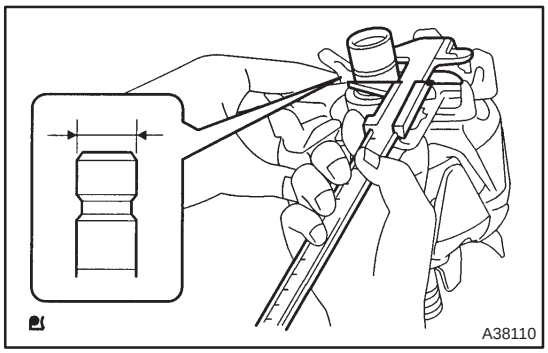

(c) Inspect slip rings.
(1) Using vernier calipers, measure the slip ring diameter.

Standard diameter: 14.2 – 14.4 mm (0.559 – 0.567 in.)
Minminimum diameter: 12.8 mm (0.504 in.)

If the diameter is less than minimum, replace the rotor.

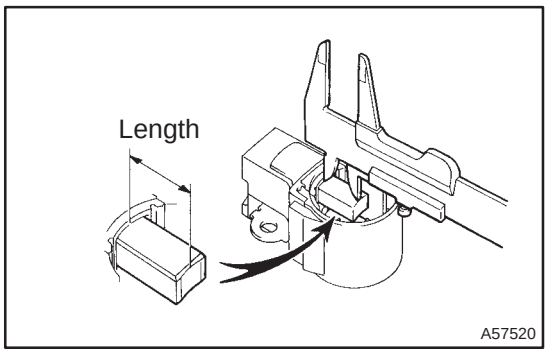

8. INSPECT BRUSH

(a) Using vernier calipers, measure the exposed brush length.

Standard exposed length:
9.5 – 11.5 mm (0.374 – 0.453 in.)
Minimum exposed length: 1.5 mm (0.059 in.)

If the exposed length is less than minimum, replace the brush holder assembly.

9. INSTALL GENERATOR ROTOR ASSY

(a) Install the generator rotor.
(b) Install the alternator washer to the rotor.

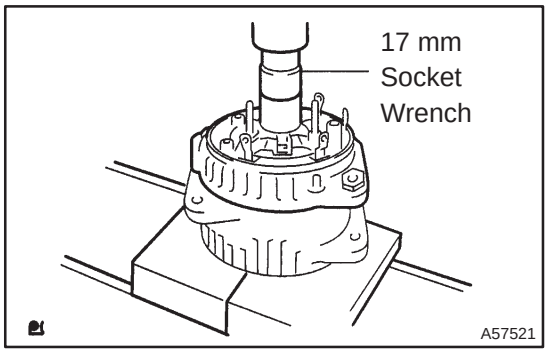

10. INSTALL ALTERNATOR RECTIFIRE END FRAME

(a) Using a 17 mm socket wrench and press, slowly press in the rectifier end frame.

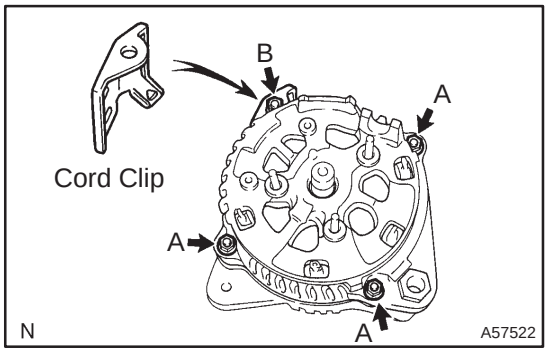

(b) Install the cord clip and 4 nuts.
Torque:
Nut A 4.5 N·m (46 kgf·cm, 39 in.·lbf)
Nut B 5.4 N·m (55 kgf·cm, 47 in.·lbf)

(c) Install the seal plate on the rectifier end frame.

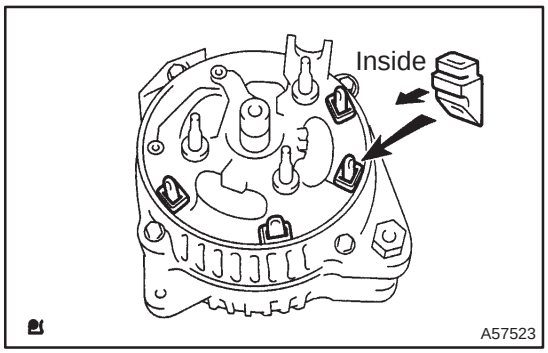

(d) Install the 4 rubber insulators on the lead wires.

NOTICE:
Be careful of the rubber insulators installation direction.

11. INSTALL GENERATOR HOLDER W/RECTIFIER

(a) Install the rectifier holder while pushing it with the 4 screws.
Torque: 2.9 N·m (30 kgf·cm, 26 in.·lbf)

12. INSTALL GENERATOR REGULATOR ASSY

(a) Instal the 3 screws and voltage regulator.

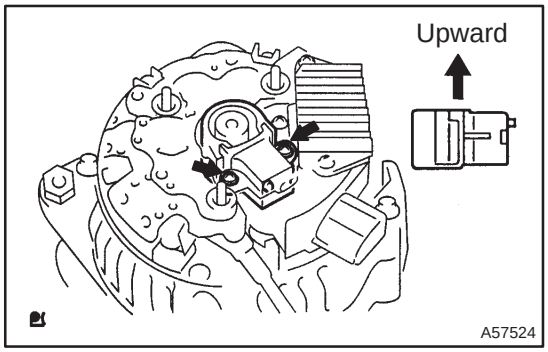

13. INSTALL GENERATOR BRUSH HOLDER ASSY

(a) Install the 2 screws and brush holder.

NOTICE:
Be careful of the holder installation direction.

(b) Install the brush cover.

(c) Instal the end cover and plate terminal with the bolt and 3 nuts.
Torque:
Nut 4.4 N·m (45 kgf·cm, 39 in.·lbf)
Bolt 3.9 N·m (39 kgf·cm, 35 in.·lbf)

(d) Install the terminal insulator with the nut.
Torque: 4.1 N·m (42 kgf·cm, 36 in.·lbf)

14. INSTALL GENERATOR PULLEY

SST 09820–63010 (09820–06010, 09820–06020)

SST 1 – A, B	09820–06010
SST 2	09820–06020

(a) Install the pulley to the rotor shaft by tightening the pulley nut by hand.

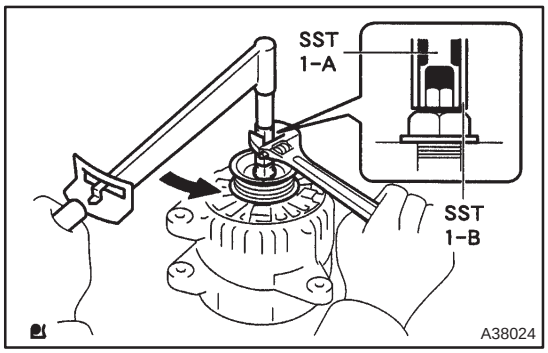

(b) Hold SST 1 – A with a torque wrench, and tighten SST 1 – B clockwise with the specified torque.
Torque: 39 N·m (400 kgf·cm, 29 ft·lbf)

NOTICE:
Check that SST is secured to the pulley shaft.

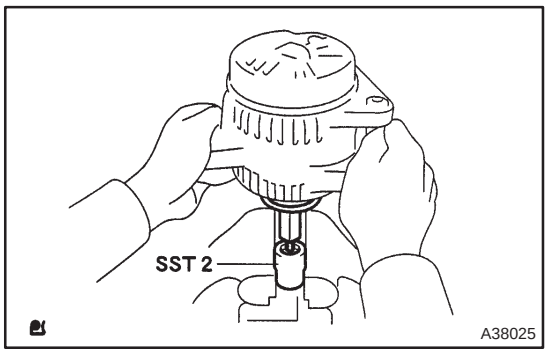

(c) Mount SST 2 in a vise.
(d) Insert SST 1 – A, B into SST 2, and attach the pulley nut to SST 2.

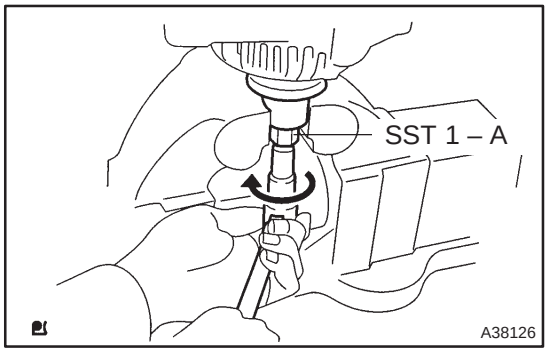

(e) Tighten the pulley nut, turn SST 1 – A in the direction shown in the illustration.
Torque: 111 N·m (1,125 kgf·cm, 81 ft·lbf)
(f) Remove the alternator from SST 2.

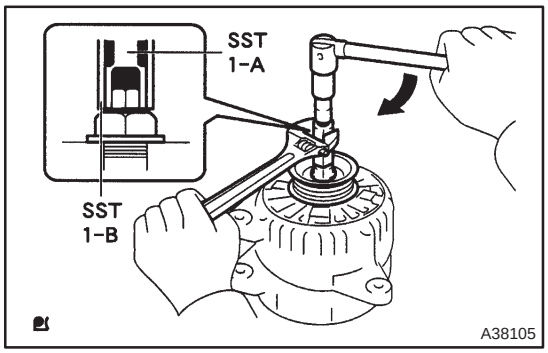

(g) Turn SST 1 – B, and remove SST 1 – A, B.
(h) Turn the pulley, and check that the pulley moves smoothly.

HOW TO USE THIS MANUAL TRANSAXLE REPAIR MANUAL

01018–02

GENERAL INFORMATION

1. GENERAL DESCRIPTION

(a) This manual is made in accordance with SAE J2008.

(b) Generally repair operations can be separated in the following 3 main processes:
1. Diagnosis
2. Removing and Installing, Replacing, Disassembling, Installing and Checking, Adjusting
3. Final Inspection

(c) This manual explains ”Removing and Installing, Replacing, Disassembling, Installing and Checking, Adjusting”, but ”Final Inspection” is omitted.

(d) The following essential operations are not written in this manual, however these operations must be done in the practical situation.
(1) Operation with a jack or lift
(2) Cleaning of a removed part when necessary
(3) Visual check

2. INDEX

(a) An alphabetical INDEX is provided as a section on the end of the book to guide you to the item to be repaired.

3. PREPARATION

(a) Use of special service tools (SST) and special service materials (SSM) may be required, depending on the repairing condition. Be sure to use SST and SSM when they are required and follow the working procedure properly. A list of SST and SSM is in the Preparation section of this manual.

4. REPAIR PROCEDURES

(a) Component drawing is placed as the section or title when necessary.

(b) Illustrations of the parts catalog are placed as the ”disassembled parts drawing” so that it enables you to understand the fitting condition of the components.

(c) Non–reusable parts, grease applied parts, precoated parts and tightening torque are specified in the components drawing.

Example:

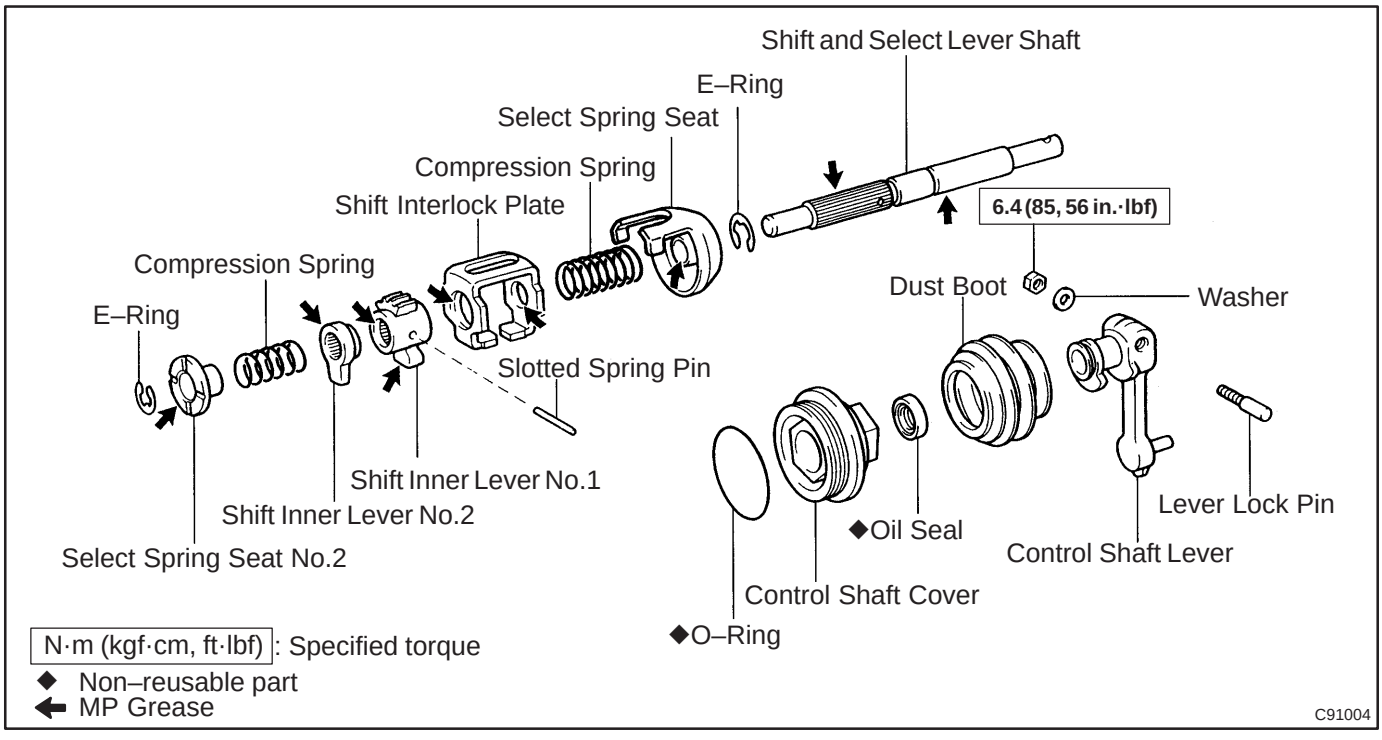

(d) Tightening torque, oil applying position, and non–reusable parts are described as important points in the procedure.

NOTICE:

There are cases where such information can only be indicated by an illustration. In that case, all the information such as torque, oil, etc. are described in the illustration.

(e) Installing procedure of operation items is performed in the reverse order of the removing, and only the important points are described.

(f) Only items with points are described in the procedure, and the operational portion and content are placed using an illustration. In the explanations, details of the operational method, standard value and notice are placed.

(g) There may be a case where the illustrations of similar models are used. In that case the details may be different from the actual vehicle.

(h) The procedures are presented in a step–by–step format:

(1) The illustration shows what to do and where to do it.

(2) The task heading tells what to do.

(3) The detailed text tells how to perform the task and gives other information such as specifications and warnings.

Example:

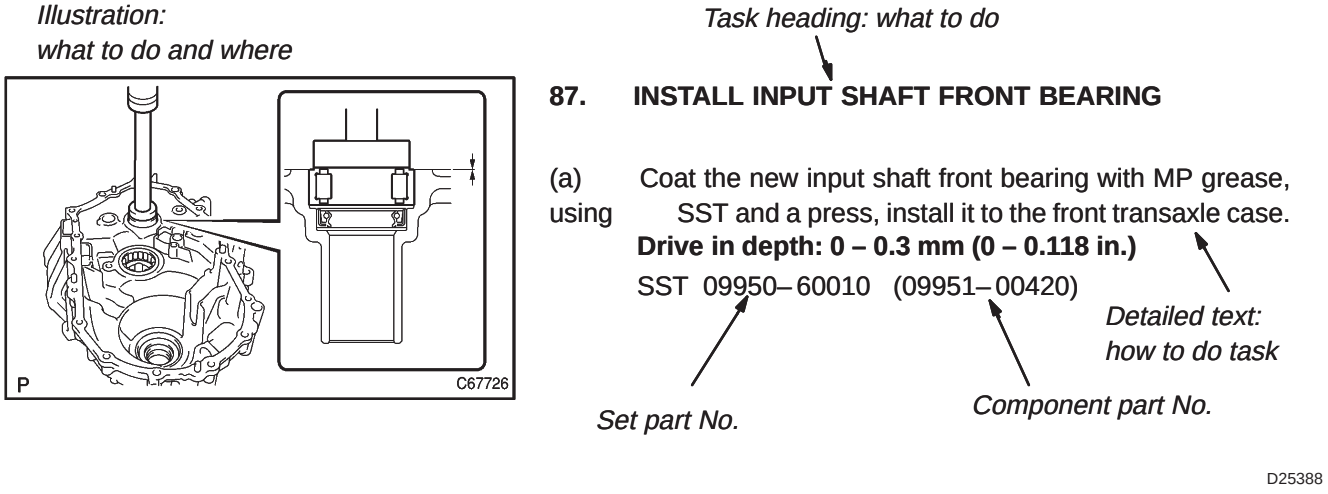

HINT:

This format provides an experienced technician with a FAST TRACK to the necessary information. The task heading can be read at a glance when necessary, and the text below provides detailed information. Important specifications and warnings always stand out in bold type.

5. SERVICE SPECIFICATIONS

(a) Specifications are presented in bold type throughout the manual. You never have to leave the procedure to look up your specifications. The specifications are also found in the Service Specifications section for a quick reference.

6. TERMS DEFINITION

CAUTION	Indicate the possibility of injury to you or other people.
NOTICE	Indicate the possibility of damage to the components being repaired.
HINT	Provide additional information to help you perform the repair efficiently.

7. SI UNIT

(a) The UNITS given in this manual are primarily expressed according to the SI UNIT (International System of Unit), and alternately expressed in the metric system and in the English System.

Example:

Torque: 30 N·m (310 kgf·cm, 22 ft·lbf)

REPAIR INSTRUCTION FOR MANUAL TRANSAXLE REPAIR MANUAL

01019–02

PRECAUTION

1. BASIC REPAIR HINT

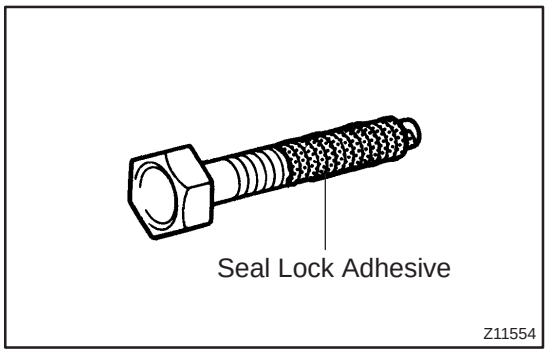

(a) PRECOATED PARTS

(1) Precoated parts are bolts, nuts, etc. that are coated with a seal lock adhesive at the factory.

(2) If a precoated part is retightened, loosened or caused to move in any way, it must be recoated with the specified adhesive.

(3) When reusing precoated parts, clean off the old adhesive and dry with compressed air. Then apply the specified seal lock adhesive to the bolt, nut or threads.

NOTICE:

Do the torque checking with the lower limit value of the torque tolerance.

(4) Depending on the seal lock agent to apply, there may be a case where it is necessary to leave it for a specified time until it hardens.

(b) GASKETS

When necessary, use a sealer on gaskets to prevent leaks.

(c) BOLTS, NUTS AND SCREWS

Carefully observe all specifications for bolt tightening torques. Always use a torque wrench.

TERMS FOR MANUAL TRANSAXLE REPAIR MANUAL

0101A–02

ABBREVIATIONS USED IN THIS MANUAL

Abbreviations	Meaning
E/G	Engine
FIPG	Formed In Plce Gasket
MAX	Maximum
MIN	Minimum
MP	Multipurpose
M/T	Manual Transmission
N	Neutral
No.	Number
RH	Right–Hand
SPEC	Specification
SSM	Special Service Materials
SST	Special service Tools
STD	Standard
T/A	Transaxle
T/M	Transmission
TMC	TOYOTA Motor Coporation
w/	With
w/o	Without
1st	First
2nd	Second

0101B–02

GLOSSARY OF SAE AND TOYOTA TERMS

This glossary lists all SAE–J1930 terms and abbreviations used in this manual in compliance with SAE recommendations, as well as their Toyota equivalents.

SAE ABBREVIATIONS	SAE TERMS	TOYOTA TERMS ( )—ABBREVIATIONS
A/C	Air Conditioning	Air Conditioner
ACL	Air Cleaner	Air Cleaner
AIR	Secondary Air Injection	Air Injection (AI)
AP	Accelerator Pedal	–
B+	Battery Positive Voltage	+B, Battery Voltage
BARO	Barometric Pressure	–
CAC	Charge Air Cooler	Inter cooler
CARB	Carburetor	Carburetor
CFI	Continuous Fuel Injection	–
CKP	Crankshaft Position	Crank Angle
CL	Closed Loop	Closed Loop
CMP	Camshaft position	Cam Angle
CPP	Clutch Pedal Position	–
CTOX	Continuous Trap Oxidizer	–
CTP	Closed Throttle Potion	–
DFI	Direct Fuel Injection (Diesel)	Direct Injection (DI)
DI	Distributor Ignition	–
DLC1 DLC2 DLC3	Data Link Connector 1 Data Link Connector 2 Data Link Connector 3	1: Check Connector 2: Total Diagnosis Communication Link (TDCL) 3: OBD II Diagnostic Connector
DTC	Diagnostic Trouble Code	Diagnostic Code
DTM	Diagnostic Test Mode	–
ECL	Engine Control Level	–
ECM	Engine Control Module	Engine ECU (Electronic Control Unit)
ECT	Engine Control Temperature	Coolant Temperature, Water Temperature (THW)
EEPROM	Electrically Erasable Programmable Read Only memory	Electrically Erasable Programmable Read Only memory (EEPROM), Erasable Programmable Read Only memory (EPROM)
EFE	Early Fuel Evaporation	Cold Mixture Heater (CMH), Heat Control Valve (HCV)
EGR	Exhaust Gas Recirculation	Exhaust Gas Recirculation (EGR)
EI	Electronic Ignition	Distributorless Ignition (DI)
EM	Engine Modification	Engine Modification (EM)
EPROM	Erasable Programmable Read Only Memory	Programmable Read Only Memory (PROM)
EVAP	Evaporative Emission	Evaporative Emission Control (EVAP)
FC	Fan Control	–
FEEPROM	Flash Electrically Erasable Programmable Read Only Memory	–
FEPROM	Flash Erasable Programmable Read Only Memory	–
FF	Flexible Fuel	–
FP	Fuel Pump	Fuel Pump
GEN	Generator	Alternator
GND	Ground	Ground (GND)
HO2S	Heated Oxygen Sensor	Heated Oxygen Sensor (HO2S)
IAC	Idol Air Control	Idol Speed Control (ISC)
IAT	Intake Air Temperature	Intake or Inlet Air Temperature
ICM	Ignition Control Module	–
IFI	Indirect Fuel Injection	Indirect Injection
IFS	Inertia Fuel–Shutoff	–

ISC	Idle Speed Control	–
KS	Knock Sensor	Knock Sensor
MAF	Mass Air Flow	Air Flow Meter
MAP	Manifold Absolute Pressure	Manifold Pressure Intake Vacuum
MC	Mixture Control	Electric Bleed Air Control Valve (EBCV) Mixture Control Valve (MCV) Electric Air Control Valve (EACV)
MDP	Manifold Differential Pressure	–
MFI	Multiport Fuel Injection	Electronic Fuel Injection (EFI)
MIL	Malfunction Indicator Lamp	Check Engine Light
MST	Manifold Surface temperature	–
MVZ	Manifold Vacuum Zone	–
NVRAM	Non–Volatile Random Access Memory	–
O2S	Oxygen Sensor	Oxygen Sensor, O_2 Sensor (O_{2S})
OBD	On–Board Diagnostic	On–Board Diagnostic (OBD)
OC	Oxidation Catalytic Converter	Oxidation Catalyst Converter (OC), CC_0
OP	Open Loop	Open Loop
PAIR	Pulsed Secondary Air Injection	Air Suction (AS)
PCM	Powertrain Control Module	–
PNP	Park/Neutral Position	–
PROM	Programmable Read Only Memory	–
PSP	Power Steering Pressure	–
PTOX	Periodic Trap Oxidizer	Diesel Particulate Filter (DPF) Diesel Particulate Trap (DPT)
RAM	Random Access Memory	Random Access Memory (RAM)
RM	Relay Module	–
ROM	Read Only Memory	Read Only Memory (ROM)
RPM	Engine Speed	Engine Speed
SC	Supercharger	Supercharger
SCB	Supercharger Bypass	–
SFI	Sequential Multiport Fuel Injection	Electronic Fuel Injection (EFI), Sequential Injection
SPL	Smoke Puff Limiter	–
SRI	Service Reminder Indicator	–
SRT	System Readiness Test	–
ST	Scan Tool	–
TB	Throttle Body	Throttle Body
TBI	Throttle Body Fuel Injection	Single Point Injection Central Fuel Injection (Ci)
TC	Turbocharger	Turbocharger
TCC	Torque Converter Clutch	Torque Converter
TCM	Transmission Control Module	Transmission ECU (Electronic Control Unit)
TP	Throttle Position	Throttle Position
TR	Transmission Range	–
TVV	Thermal Vacuum Valve	Bimetallic Vacuum Switching Valve (BVSV) Thermostatic Vacuum Switching Valve (TVSV)
TWC	Three–Way Catalytic Converter	Three–Way Catalytic (TWC) CC_{RO}
TWC+OC	Three–Way + Oxidation Catalytic Converter	$CC_R + CC_O$
VAF	Volume Air Flow	Air Flow Meter
VR	Voltage Regulator	Voltage Regulator
VSS	Vehicle Speed Sensor	Vehicle Speed Sensor (Read Switch Type)
WOT	Wide Open Throttle	Full Throttle

WU–OC	Warm Up Oxidation Catalytic Converter	–
WU–TWC	Warm Up Three–Way Catalytic Converter	Manifold Converter
3GR	Third Gear	–
4GR	Fourth Gear	–

MANUAL TRANSMISSION/TRANSAXLE

020IV–01

PREPARATION

SST

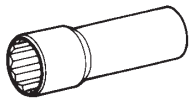	09229–55010	Oil Cooler Relief Valve Wrench	MANUAL TRANSAXLE ASSY(E355/E356)
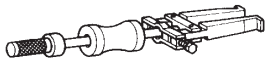	09308–00010	Oil Seal Puller	MANUAL TRANSAXLE ASSY(E355/E356)
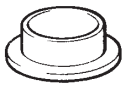	09316–20011	Transfer Bearing Replacer	MANUAL TRANSAXLE ASSY(E355/E356)
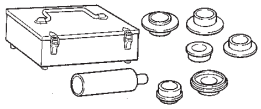	09316–60011	Transmission & Transfer Bearing Replacer	INPUT SHAFT ASSY(E355/E356) OUTPUT SHAFT ASSY(E355/E356)
	(09316–00031)	Replacer ”B”	OUTPUT SHAFT ASSY(E355/E356)
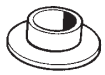	(09316–00041)	Replacer ”C”	INPUT SHAFT ASSY(E355/E356)
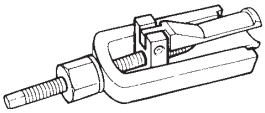	09319–60020	Output Shaft Needle Roller Bearing Remover	MANUAL TRANSAXLE ASSY(E355/E356)
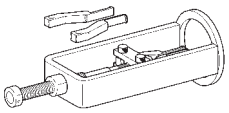	09387–00040	Bearing Puller Assembly	MANUAL TRANSAXLE ASSY(E355/E356)
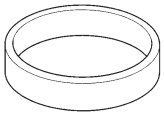	(09387–02010)	Oil Seal Replacer	MANUAL TRANSAXLE ASSY(E355/E356)
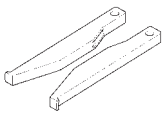	(09387–02020)	One–way Clutch Test Tool Set	MANUAL TRANSAXLE ASSY(E355/E356)
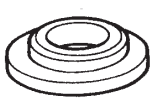	09506–30012	Differential Drive Pinion Rear Bearing Cone Replacer	OUTPUT SHAFT ASSY(E355/E356)
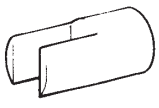	09564–32011	Differential Preload Adaptor	MANUAL TRANSAXLE ASSY(E355/E356)

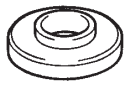	09608–00071	Drive Pinion Rear Bearing Cone Replacer	INPUT SHAFT ASSY(E355/E356) OUTPUT SHAFT ASSY(E355/E356)
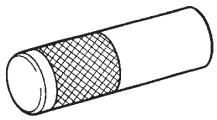	09608–06041	Front Hub Inner Bearing Cone Replacer	INPUT SHAFT ASSY(E355/E356)
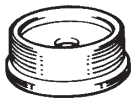	09608–10010	Steering Knuckle Oil Seal Replacer	MANUAL TRANSAXLE ASSY(E355/E356)
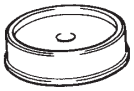	09608–32010	Steering Knuckle Oil Seal Replacer	MANUAL TRANSAXLE ASSY(E355/E356)
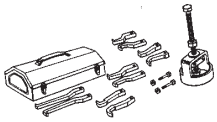	09612–65014	Steering Worm Bearing Puller	MANUAL TRANSAXLE ASSY(E355/E356)
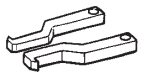	(09612–01040)	Claw ”D”	MANUAL TRANSAXLE ASSY(E355/E356)
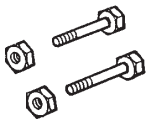	(09612–01050)	Hanger Pin with Nut	MANUAL TRANSAXLE ASSY(E355/E356)
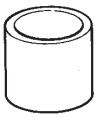	09631–12090	Seal Ring Tool	MANUAL TRANSAXLE ASSY(E355/E356)
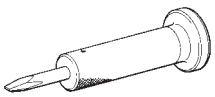	09930–00010	Drive Shaft Nut Chisel	MANUAL TRANSAXLE ASSY(E355/E356) DIFFERENTIAL CASE ASSY(E355/E356)
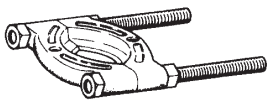	09950–00020	Bearing Remover	MANUAL TRANSAXLE ASSY(E355/E356) INPUT SHAFT ASSY(E355/E356) OUTPUT SHAFT ASSY(E355/E356)
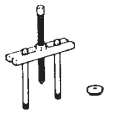	09950–00030	Bearing Remover Attachment	MANUAL TRANSAXLE ASSY(E355/E356)
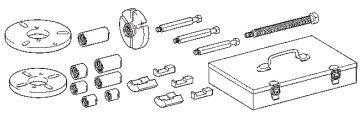	09950–30012	Puller A Set	MANUAL TRANSAXLE ASSY(E355/E356)
	(09951–03010)	Upper Plate	MANUAL TRANSAXLE ASSY(E355/E356)

	(09953–03010)	Center Bolt	MANUAL TRANSAXLE ASSY(E355/E356)
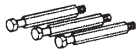	(09954–03010)	Arm	MANUAL TRANSAXLE ASSY(E355/E356)
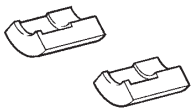	(09955–03011)	Claw No.1	MANUAL TRANSAXLE ASSY(E355/E356)
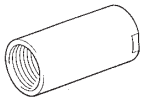	(09956–03030)	Adaptor 20	MANUAL TRANSAXLE ASSY(E355/E356)
	(09957–04010)	Attachment	MANUAL TRANSAXLE ASSY(E355/E356)
	09950–40011	Puller B Set	MANUAL TRANSAXLE ASSY(E355/E356)
	(09957–04010)	Attachment	MANUAL TRANSAXLE ASSY(E355/E356)
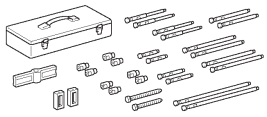	09950–50013	Puller C Set	MANUAL TRANSAXLE ASSY(E355/E356)
	(09957–04010)	Attachment	MANUAL TRANSAXLE ASSY(E355/E356)
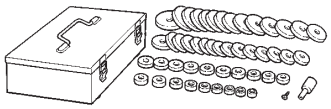	09950–60010	Replacer Set	MANUAL TRANSAXLE ASSY(E355/E356) OUTPUT SHAFT ASSY(E355/E356)
	(09951–00180)	Replacer 18	MANUAL TRANSAXLE ASSY(E355/E356)
	(09951–00280)	Replacer 28	MANUAL TRANSAXLE ASSY(E355/E356)
	(09951–00320)	Replacer 32	OUTPUT SHAFT ASSY(E355/E356)

	(09951–00420) Replacer 42	MANUAL TRANSAXLE ASSY(E355/E356)
	(09951–00430) Replacer 43	OUTPUT SHAFT ASSY(E355/E356)
	(09951–00490) Replacer 49	MANUAL TRANSAXLE ASSY(E355/E356)
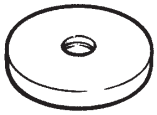	(09951–00560) Replacer 56	MANUAL TRANSAXLE ASSY(E355/E356)
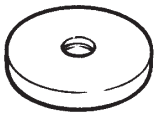	(09951–00570) Replacer 57	MANUAL TRANSAXLE ASSY(E355/E356)
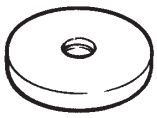	(09951–00600) Replacer 60	MANUAL TRANSAXLE ASSY(E355/E356)
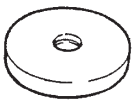	(09951–00680) Replacer 68	MANUAL TRANSAXLE ASSY(E355/E356)
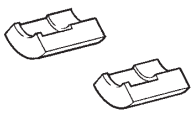	(09955–03011) Claw No.1	MANUAL TRANSAXLE ASSY(E355/E356)
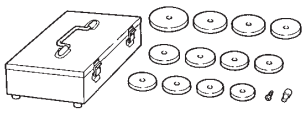	09950–60020 Replacer Set No.2	MANUAL TRANSAXLE ASSY(E355/E356)
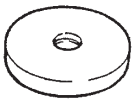	(09951–00680) Replacer 68	MANUAL TRANSAXLE ASSY(E355/E356)
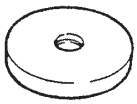	(09951–00730) Replacer 73	MANUAL TRANSAXLE ASSY(E355/E356)
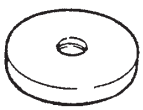	(09951–00790) Replacer 79	MANUAL TRANSAXLE ASSY(E355/E356)
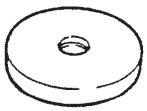	(09951–00890) Replacer 89	MANUAL TRANSAXLE ASSY(E355/E356)

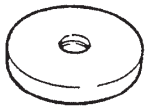	(09951–00910)	Replacer 91	MANUAL TRANSAXLE ASSY(E355/E356)
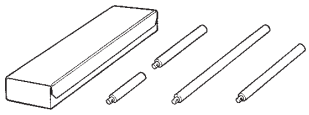	09950–70010	Handle Set	MANUAL TRANSAXLE ASSY(E355/E356) OUTPUT SHAFT ASSY(E355/E356)
	(09951–07100)	Handle 100	MANUAL TRANSAXLE ASSY(E355/E356) OUTPUT SHAFT ASSY(E355/E356)
	(09951–07150)	Handle 150	MANUAL TRANSAXLE ASSY(E355/E356) OUTPUT SHAFT ASSY(E355/E356)

Recomended Tools

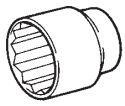	09011–12301	Socket Wrench 30 mm	MANUAL TRANSAXLE ASSY(E355/E356)
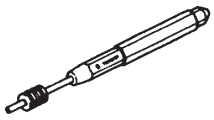	09031–00040	Pin Punch .	MANUAL TRANSAXLE ASSY(E355/E356) SHIFT & SELECT LEVER SHAFT ASSY(E355/E356) DIFFERENTIAL CASE ASSY(E355/E356)
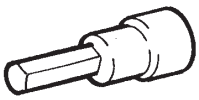	(09043–20060)	Socket Hexagon Wrench 6	MANUAL TRANSAXLE ASSY(E355/E356)
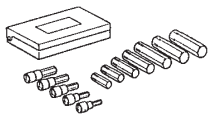	09040–00011	Hexagon Wrench Set	MANUAL TRANSAXLE ASSY(E355/E356)
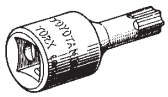	09042–00050	Torx Socket T45	MANUAL TRANSAXLE ASSY(E355/E356)
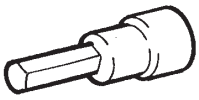	(09043–20060)	Socket Hexagon Wrench 6	MANUAL TRANSAXLE ASSY(E355/E356)
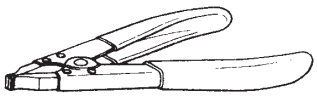	09905–00012	Snap Ring No.1 Expander	MANUAL TRANSAXLE ASSY(E355/E356)

Equipment

V–block	
Cylinder gauge	
Dial indicator or dial indicator with magnetic base	
Feeler gauge	
Micrometer	
Torque wrench	
Vernier calipers	
Chisel	
Plastic hammer	
Slide calipers	
Press	
Heater	

SSM (Special Service Materials)

08826–00090	"Seal Packing 1281," THREE BOND 1281 or equivalent (FIPG)	
08833–00080	Adhesive 1344 THREE BOND 1344 LOCTITE 242 or equivalent	

STANDARD BOLT

HOW TO DETERMINE BOLT STRENGTH

030BT–02

Bolt Type				Class
Hexagon Head Bolt		Stud Bolt	Weld Bolt	
Normal Recess Bolt	Deep Recess Bolt			
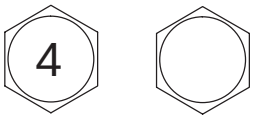 No Mark	 No Mark	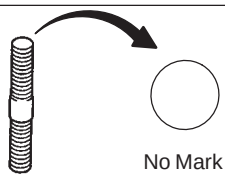 No Mark	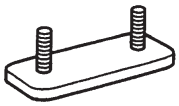	4T
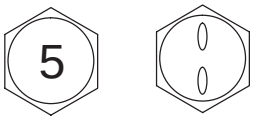				5T
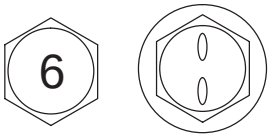 w/ Washer	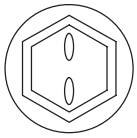 w/ Washer			6T
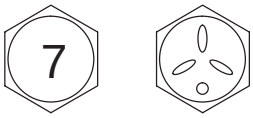	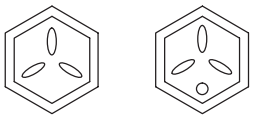			7T
				8T
				9T
	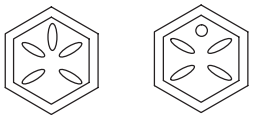			10T
	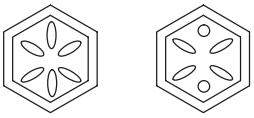			11T

B06431

030BU–02

SPECIFIED TORQUE FOR STANDARD BOLTS

Class	Diameter mm	Pitch mm	Specified torque					
			Hexagon head bolt			Hexagon flange bolt		
			N·m	kgf·cm	ft·lbf	N·m	kgf·cm	ft·lbf
4T	6	1	5	55	48 in.·lbf	6	60	52 in.·lbf
	8	1.25	12.5	130	9	14	145	10
	10	1.25	26	260	19	29	290	21
	12	1.25	47	480	35	53	540	39
	14	1.5	74	760	55	84	850	61
	16	1.5	115	1,150	83	–	–	–
5T	6	1	6.5	65	56 in.·lbf	7.5	75	65 in.·lbf
	8	1.25	15.5	160	12	17.5	175	13
	10	1.25	32	330	24	36	360	26
	12	1.25	59	600	43	65	670	48
	14	1.5	91	930	67	100	1,050	76
	16	1.5	140	1,400	101	–	–	–
6T	6	1	8	80	69 in.·lbf	9	90	78 in.·lbf
	8	1.25	19	195	14	21	210	15
	10	1.25	39	400	29	44	440	32
	12	1.25	71	730	53	80	810	59
	14	1.5	110	1,100	80	125	1,250	90
	16	1.5	170	1,750	127	–	–	–
7T	6	1	10.5	110	8	12	120	9
	8	1.25	25	260	19	28	290	21
	10	1.25	52	530	38	58	590	43
	12	1.25	95	970	70	105	1,050	76
	14	1.5	145	1,500	108	165	1,700	123
	16	1.5	230	2,300	166	–	–	–
8T	8	1.25	29	300	22	33	330	24
	10	1.25	61	620	45	68	690	50
	12	1.25	110	1,100	80	120	1,250	90
9T	8	1.25	34	340	25	37	380	27
	10	1.25	70	710	51	78	790	57
	12	1.25	125	1,300	94	140	1,450	105
10T	8	1.25	38	390	28	42	430	31
	10	1.25	78	800	58	88	890	64
	12	1.25	140	1,450	105	155	1,600	116
11T	8	1.25	42	430	31	47	480	35
	10	1.25	87	890	64	97	990	72
	12	1.25	155	1,600	116	175	1,800	130

030BV–02

HOW TO DETERMINE NUT STRENGTH

Nut Type			Class
Present Standard Hexagon Nut	Old Standard Hexagon Nut		
	Cold Forging Nut	Cutting Processed Nut	
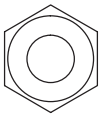 No Mark			4N
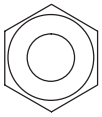 No Mark (w/ Washer)	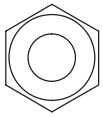 No Mark (w/ Washer)	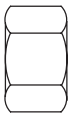 No Mark	5N (4T)
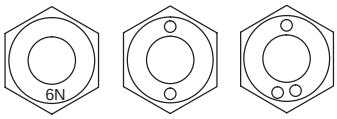 6N			6N
	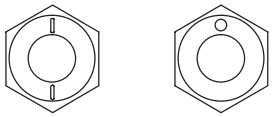	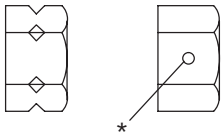 *	7N (5T)
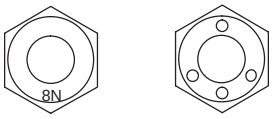 8N			8N
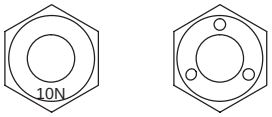 10N	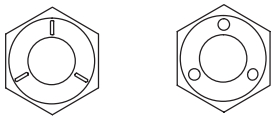	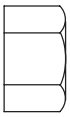 No Mark	10N (7T)
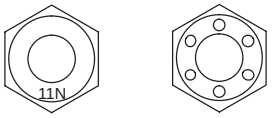 11N			11N
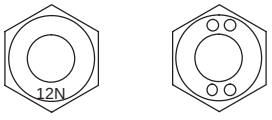 12N			12N

*: Nut with 1 or more marks on one side surface of the nut.

B06432

HINT:

Use the nut with the same number of the nut strength classification or the greater than the bolt strength classification number when tightening parts with a bolt and nut.

Example: Bolt = 4T

Nut = 4N or more

MANUAL TRANSMISSION / TRANSAXLE

03010–04

SERVICE DATA

5th gear thrust clearance		0.10 – 0.65 mm (0.0040 – 0.0258 in.)
5th gear radial clearance		0.009 – 0.050 mm (0.0036 – 0.0200 in.)
Reverse idler gear sub–assy inside diameter	STD	20.056 – 20.074 mm (0.762 – 0.7969in.)
	Max	20.074 mm (0.7969 in.)
Reverse idler gear shaft outer diameter	STD	19.984 – 20.000 mm (0.7934 – 0.7940)
	Min	19.984 mm (0.7934 in.)
Transmission hub sleeve No.3 and gear shift fork No.3 clearance		0.15–0.35 mm (0.005600 – 0.0139 in.)
Shift & select lever shaft bimetal formed bush clearance		0.081 – 0.149 mm (0.0032 – 0.0059 in.)
Transmission case oil seal clearance		3.0 – 4.0 mm (0.1191 – 0.1588 in.)
Output shaft rear bearing shim thickness	0	1.30 mm (0.0516 in.)
	1	1.35 mm (0.0536 in.)
	2	1.40 mm (0.0556 in.)
	3	1.45 mm (0.0576 in.)
	4	1.50 mm (0.0596 in.)
	5	1.55 mm (0.0615 in.)
	6	1.60 mm (0.0635 in.)
	7	1.65 mm (0.0655 in.)
	8	1.70 mm (0.0675 in.)
	9	1.75 mm (0.0695 in.)
	A	1.80 mm (0.0715 in.)
	B	1.85 mm (0.0734 in.)
	C	1.90 mm (0.0754 in.)
	D	1.95 mm (0.0774 in.)
	E	2.00 mm (0.0794 in.)
	F	2.05 mm (0.0814 in.)
	G	2.10 mm (0.0834 in.)
	H	2.15 mm (0.0854 in.)
	J	2.20 mm (0.0873 in.)
	K	2.25 mm (0.0893 in.)
	L	2.30 mm (0.0913 in.)
	M	2.35 mm (0.0933 in.)
	N	2.40 mm (0.0953 in.)
	P	2.45 mm (0.0973 in.)
	Q	2.50 mm (0.0993 in.)
Front differential case pleroad	New	0.8 – 0.16 N·m (8.15 – 1.63 kgf·cm, 7.1 – 14.2 ft·lbf)
	Used	0.5 – 10.1 N·m (5.09 – 10.1 kgf·cm, 4.4 – 8.6 ft·lbf)
Front differential case shim RR thickness	0	2.00 mm (0.0794 in.)
	1	2.05 mm (0.0814 in.)
	2	2.10 mm (0.0834 in.)
	3	2.15 mm (0.0854 in.)
	4	2.20 mm (0.0873 in.)
	5	2.25 mm (0.0893 in.)
	6	2.30 mm (0.0913 in.)
	7	2.35 mm (0.0933 in.)
	8	2.40 mm (0.0953 in.)
	9	2.45 mm (0.0973 in.)
	A	2.50 mm (0.0993 in.)
	B	2.55 mm (0.1012 in.)
	C	2.60 mm (0.1032 in.)
	D	2.65 mm (0.1052 in.)
	E	2.70 mm (0.1071 in.)
	F	2.75 mm (0.1092 in.)
	G	2.80 mm (0.1112 in.)
	H	2.85 mm (0.1131 in.)
Front transaxle case oil seal clearance		1 – 2 mm (0.0397 in. – 0.0794 in.)
Input shaft front bearing clearance		4.28 – 4.60 mm (0.1699 in. – 0.1826 in.)
Reverse restrict pin slotted pin clearance		12.5 – 13.5 mm (0.4963 – 0.53595 in.)

Transmission clutch hub No.3 snap ring clearance		0.1 mm or less (0.004 in. or less)
Transmission clutch hub No.3 snap ring thickness	A	1.75 – 1.80 mm (0.0695 – 0.0715 in.)
	B	1.80 – 1.85 mm (0.0715 – 0.0734 in.)
	C	1.85 – 1.90 mm (0.0734 – 0.0754 in.)
	D	1.90 – 1.95 mm (0.0754 – 0.0774 in.)
	E	1.95 – 2.00 mm (0.0774 – 0.0794 in.)
	F	2.00 – 2.05 mm (0.0794 – 0.0814 in.)
	G	2.05 – 2.10 mm (0.0814 – 0.0834 in.)
	H	2.10 – 2.15 mm (0.0834 – 0.0854 in.)
	J	2.15 – 2.20 mm(0.0854 – 0.0873 in.)
5 th gear radial clearance		0.009 – 0.050 mm (0.0004 – 0.0020 in.)
5 th gear thrust clearance		0.10 – 0.65 mm (0.0040 – 0.0258 in.)
4 th gear thrust clearance		0.1 – 0.57 mm (0.0039– 0.0224 in.)
3 rd gear thrust clearance		0.1 – 0.35 mm (0.0039 – 0.0014 in.)
4 th gear radial clearance	KOYO made	0.009 – 0.053 mm (0.0004 – 0.0021 in.)
	NSK made	0.009 – 0.051 mm (0.0004 – 0.0020 in.)
3 rd gear radial clearance	KOYO made	0.009 – 0.053 mm (0.0004 – 0.0021 in.)
	NSK made	0.009 – 0.051 mm (0.0004 – 0.0020 in.)
Input shaft run out	Max	0.03 mm (0.001191 in.)
Input shaft outer diameter	STD: A	35.984 – 36.000 mm (1.4286 – 1.4292 in.)
	B	35.984 – 36.000 mm (1.4286 – 1.4292 in.)
	C	27.957 – 27.972 mm (1.1100 – 1.1105 in.)
	Min: A	35.984 mm (1.4286 in.)
	B	35.984 mm (1.4286 in.)
	C	27.957 mm (1.1100 in.)
4 th gear inside diameter	STD	42.009 – 42.025 mm (1.6678 – 1.6684 in.)
	Max	42.025 mm (1.6684 in.)
3 rd gear inside diameter	STD	43.009– 43.025 mm (1.7075 – 1.7081 in.)
	Max	43.025 mm (1.7081 in.)
Synchronizer outer ring and 4th gear clearance		0.75 – 1.65mm (0.0297 – 0.0655 in.)
Synchronizer ring No.3 and 3 rd gear clearance		0.65 – 1.75 mm (0.0258 – 0.0695 in.)
Transmission hub sleeve No.2 and gear shift fork No.2 clearance		0.15 – 0.35 mm (0.0060 – 0.0139 in.)
Transmission clutch hub No.2 snap ring clearance		0.1 mm or less (0.0039 in. or less)
Transmission clutch hub No.2 snap ring thickness	H	2.30 – 2.35 mm (0.0917 – 0.0933 in.)
	J	2.35 – 2.40 mm (0.0933 – 0.0953 in.)
	K	2.40 – 2.45 mm (0.0953 – 0.0973 in.)
	L	2.45 – 2.50 mm (0.0973 – 0.0993 in.)
	M	2.50 – 2.55 mm (0.0993 – 0.1012 in.)
	N	2.55 – 2.60 mm (0.1012 – 0.1032 in.)
	P	2.60 – 2.65 mm(0.1032 – 0.1052 in.)
Input shaft radial ball bearing snap ring clearance		0.1 mm or less (0.0039 in. or less)
Input shaft radial ball bearing snap ring thickness	1	2.35 – 2.40 mm (0.0933 – 0.0953 in.)
	2	2.40 – 2.45 mm (0.0953 – 0.0973 in.)
	3	2.45 – 2.50 mm (0.0973 – 0.0993 in.)
	4	2.50 – 2.55 mm (0.0993 – 0.1012 in.)
	5	2.55 – 2.60 mm (0.1012 – 0.1032 in.)
	6	2.60 – 2.65 mm(0.1032 – 0.1052 in.)
	7	2.65 – 2.70 mm (0.1052 – 0.1072 in.)
	8	2.70 – 2.75 mm (0.1072 – 0.1092 in.)
3 rd gear radial clearance	KOYO made	0.009 – 0.053 mm (0.0004 – 0.0021 in.)
	NSK made	0.009 – 0.051 mm (0.0004 – 0.0020 in.)
4 th gear radial clearance	KOYO made	0.009 – 0.053 mm (0.0004 – 0.0021 in.)
	NSK made	0.009 – 0.051 mm (0.0004 – 0.0020 in.)
3 rd gear thrust clearance		0.1 – 0.35 mm (0.0039 – 0.0139 in.)
4 th gear thrust clearance		0.1 – 0.57 mm (0.0039 – 0.0226 in.)
1 st gear thrust clearance		0.25 – 0.4 mm (0.0099 – 0.0159 in.)
2 nd gear thrust clearance		0.1 – 0.35 mm (0.0004 – 0.0139 in.)

1 st gear radial clearance	KOYO made NSK made	0.009 – 0.053 mm (0.0004 – 0.0021 in.) 0.009 – 0.051 mm (0.0004 – 0.0020 in.)
2 nd gear radial clearance	KOYO made NSK made	0.009 – 0.053 mm (0.0004 – 0.0021 in.) 0.009 – 0.051 mm (0.0004 – 0.0020 in.)
output shaft run out	Max	0.03 mm (0.0012 in.)
output shaft outer diameter	STD: A B C Min: A B C	37.610 – 37.626 mm (1.4931 – 1.4938 in) 37.610 – 37.626 mm (1.4931 – 1.4938 in) 34.802 – 34.512 mm (1.3816 – 1.3701 in.) 37.610 mm (1.4931 in.) 37.610 mm (1.4931 in.) 34.802 mm (1.3816 in.)
2 nd gear inside diameter	STD Max	50.009 – 50.025 mm (1.9854 – 1.9860 in.) 50.025 mm (1.9860 in.)
1 st gear inside diameter	STD Max	51.009 – 51.025 mm (2.0250 – 2.0257 in.) 51.025 mm (2.0257 in.)
Synchronizer ring set No.2 and 2nd gear clearance		0.70 – 1.45 mm (0.0278 – 0.0576 in.)
Synchronizer ring set No.1 and 1 st gear clearance		0.70 – 1.45 mm (0.0278 – 0.0576 in.)
Reverse gear and reverse gear shift frok No.1		0.15 – 0.35 mm (0.0060 – 0.0139 in.)
2 nd gear radial clearance	KOYO made NSK made	0.009 – 0.053 mm (0.0004 – 0.0021 in.) 0.009 – 0.051 mm (0.0004 – 0.0020 in.)
1 st gear radial clearance	KOYO made NSK made	0.009 – 0.053 mm (0.0004 – 0.0021 in.) 0.009 – 0.051 mm (0.0004 – 0.0020 in.)
2 nd gear thrust clearance		0.1 – 0.35 mm (0.0039 – 0.0139 in.)
1 st gear thrust clearance		0.25 – 0.4 mm (0.099 – 0.0159 in.)
Front differential side gear backlash		0.05 – 0.2 mm (0.0020 – 0.0079 in.)
Front differential pinion thrust washer thickness	Min	0.94 mm (0.03701 in)
Front differential side gear backlash		0.05 – 0.2 mm (0.0020 – 0.0079 in.)
Front differential side gear thrust washer thickness	1 2 3 4	1.00 mm (0.0397 in.) 1.10 mm (0.0437 in.) 1.20 mm (0.0476 in.) 1.30 mm (0.0516 in.)
Shift lever slotted pin clearance(Select lever shaft x Select spring seat No.1)		–0.5 – 0.5 mm (–0.0199 – 0.0199 in.)
Shift lever slotted pin clearance(Select lever shaft x Sift lever inner NO.2)		5.8 – 6.8mm (0.2303 – 0.2700 in.)

0300Z–04

TORQUE SPECIFICATION

Part Tightened		N·m	kgf·cm	ft·lbf
Transmission case x Manual transaxle case		29	300	21
Manual transaxle case x Transmission case		30	306	22
Bearing retainer RR x Transmission case		42	430	31
Manual transaxle case receiver x Manual transaxle case		7	70	62
Gear shift head No.1 x Gear shift fork shaft No.2		24	240	17
Gear shift fork No.1 x Gear shift fork shaft No.1		24	240	17
Reverse shift arm bracket x Manual transaxle case		17	175	13
Reverse restrict pin plug x Transmission case		13	133	9.6
Oil receiver pipe No.1 x Transmission case		17	175	13
Oil receiver pipe No.2 x Transmission case		17	175	13
Clutch tube bracket x Transmission case		17	173	14
Reverse idler gear shaft bolt x Transmission case		30	306	22
Shift detente ball plug x Manual transaxle assy		25	250	18
Transmission clutch hub No.3 gear shift fork shaft x input shaft		24	244	17
Manual transmission output rear set nat. x Output shaft		123	1250	90
Drain (MTM) plug sub–assy x Transmission case		49	500	36
Manual transmission filler plug x Transmission case		49	500	36
Back up lamp switch assy x Transmission case		40	410	30
Manual transmission breather plug x Transmission case		49	500	36
Lock ball assy No.1 x Transmission case		29	300	22
Control shift cover x Transmission case		20	200	14
Control shift lever x Shift & select lever assy		6.4	65	57 in.·lbf
Selecting bell crank assy x Transmission case		20	200	14
Release fork support x Manual transaxle case	E355 E356	39.2 47.1	400 480	28.91 34.74
Front differential ring gear x Front differential case		106	1080	77
Selecting bell crank support sub–assy x Selecting bellcrank No.2 plate washer		106	1080	77

MANUAL TRANSMISSION / TRANSAXLE (E355/E356)

4103V–01

COMPONENTS

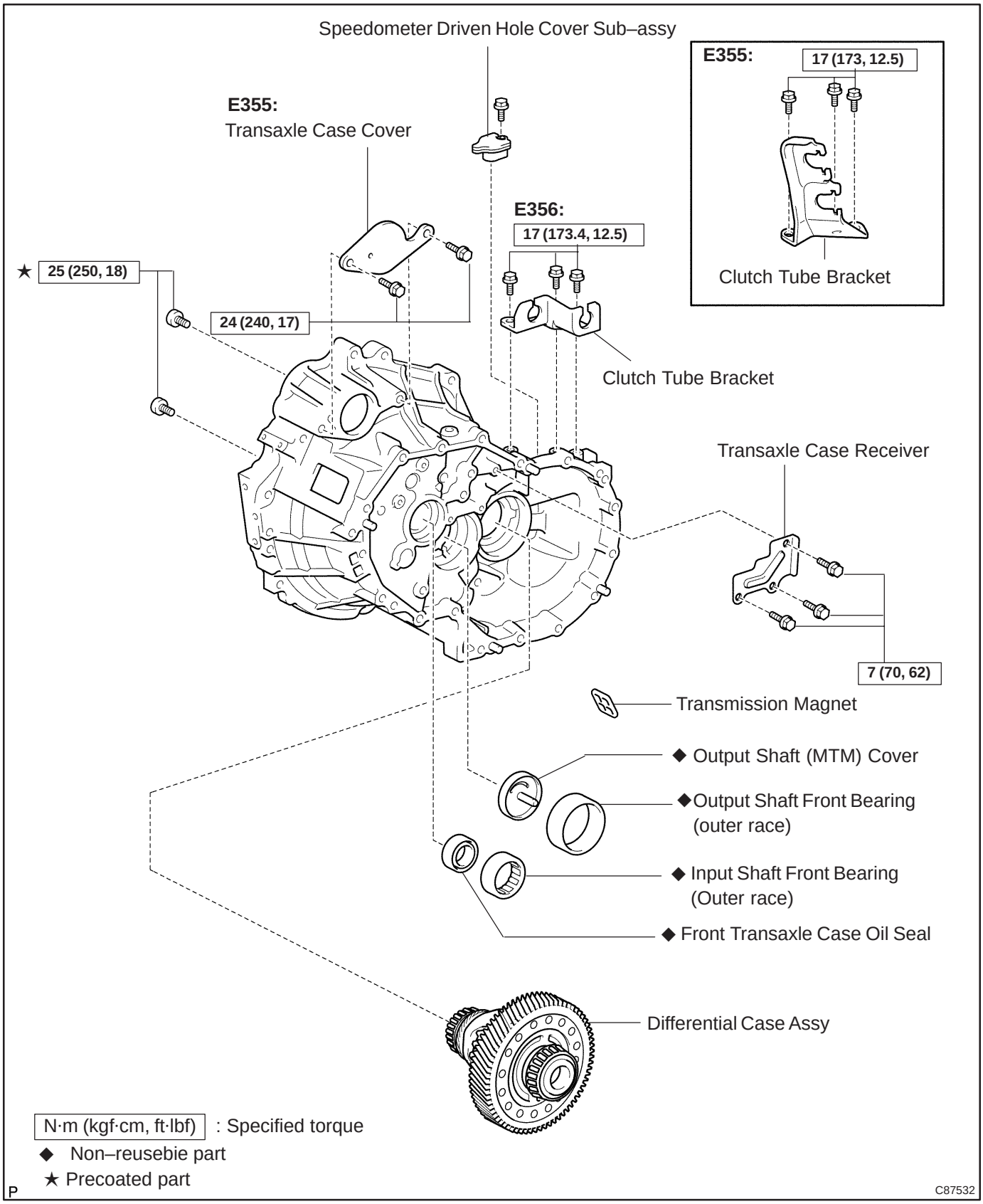

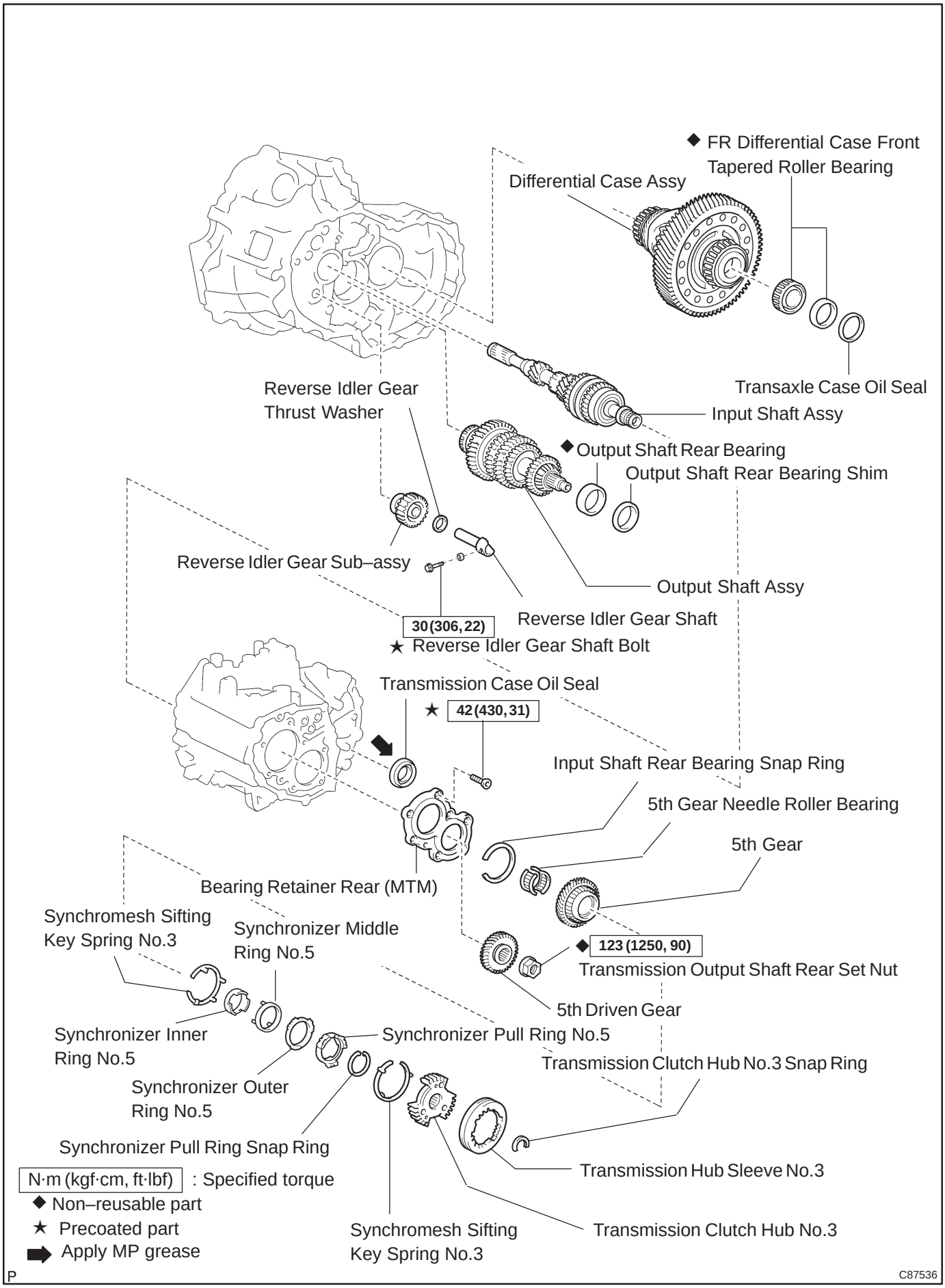
◆ FR Differential Case Front Tapered Roller Bearing
Differential Case Assy
Transaxle Case Oil Seal
Reverse Idler Gear Thrust Washer
Input Shaft Assy
◆ Output Shaft Rear Bearing
Output Shaft Rear Bearing Shim
Reverse Idler Gear Sub–assy
Output Shaft Assy
Reverse Idler Gear Shaft
30 (306, 22)
★ Reverse Idler Gear Shaft Bolt
Transmission Case Oil Seal
★ 42 (430, 31)
Input Shaft Rear Bearing Snap Ring
5th Gear Needle Roller Bearing
5th Gear
Bearing Retainer Rear (MTM)
Synchromesh Sifting Key Spring No.3
Synchronizer Middle Ring No.5
◆ 123 (1250, 90)
Transmission Output Shaft Rear Set Nut
5th Driven Gear
Synchronizer Inner Ring No.5
Synchronizer Pull Ring No.5
Transmission Clutch Hub No.3 Snap Ring
Synchronizer Outer Ring No.5
Synchronizer Pull Ring Snap Ring
Transmission Hub Sleeve No.3
N·m (kgf·cm, ft·lbf) : Specified torque
◆ Non–reusable part
★ Precoated part
Apply MP grease
Synchromesh Sifting Key Spring No.3
Transmission Clutch Hub No.3
P
C87536

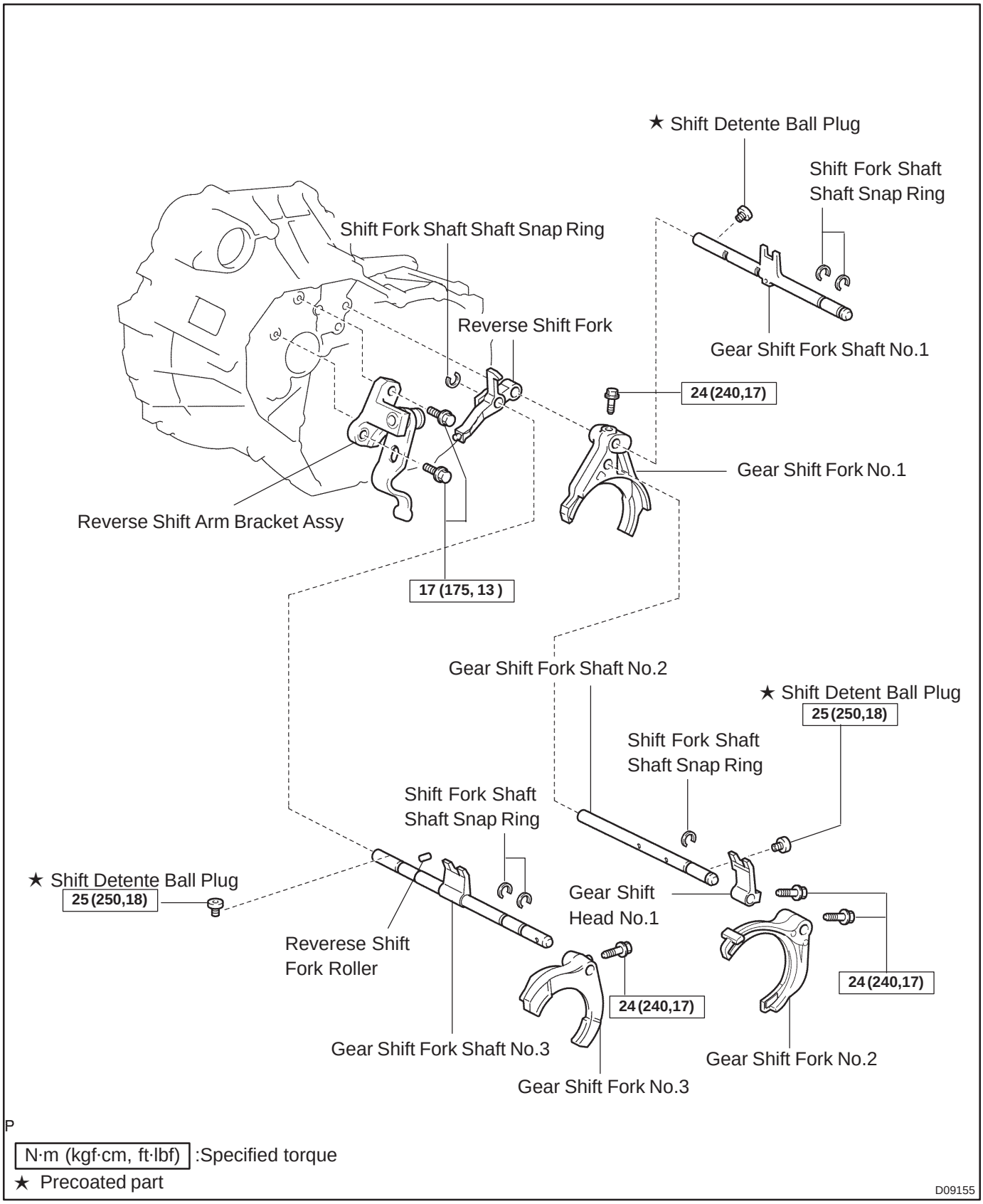
★ Shift Detente Ball Plug
Shift Fork Shaft
Shaft Snap Ring
Shift Fork Shaft Shaft Snap Ring
Reverse Shift Fork
Gear Shift Fork Shaft No.1
24 (240,17)
Gear Shift Fork No.1
Reverse Shift Arm Bracket Assy
17 (175, 13)
Gear Shift Fork Shaft No.2
★ Shift Detent Ball Plug
25 (250,18)
Shift Fork Shaft
Shaft Snap Ring
Shift Fork Shaft
Shaft Snap Ring
★ Shift Detente Ball Plug
25 (250,18)
Gear Shift
Head No.1
Reverese Shift
Fork Roller
24 (240,17)
24 (240,17)
Gear Shift Fork Shaft No.3
Gear Shift Fork No.2
Gear Shift Fork No.3
P
N·m (kgf·cm, ft·lbf) :Specified torque
★ Precoated part
D09155

E355:

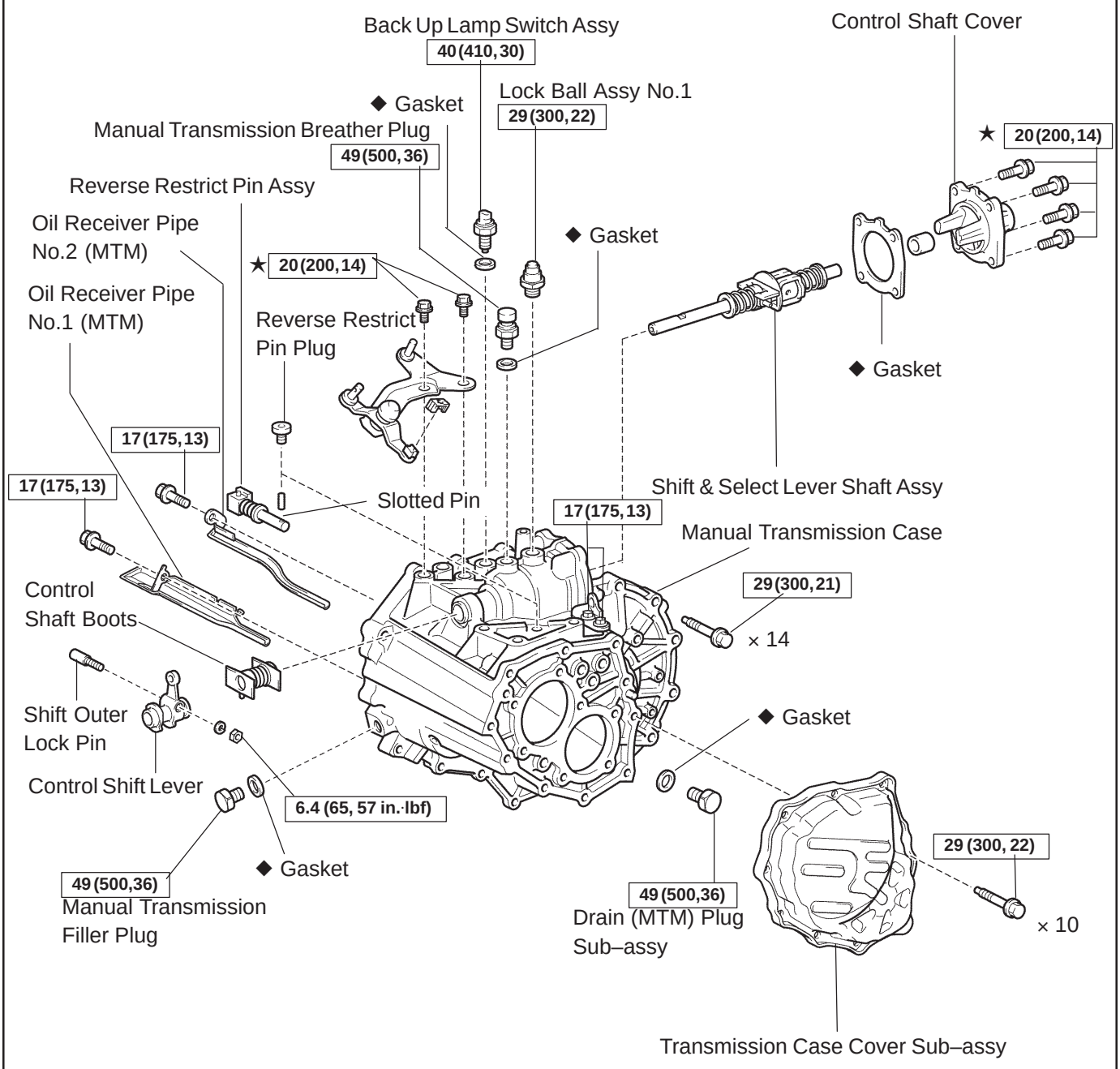

N·m (kgf·cm, ft·lbf) : Specified torque
◆ Non–reusable part
★ Precoated part

P C87533

E356:

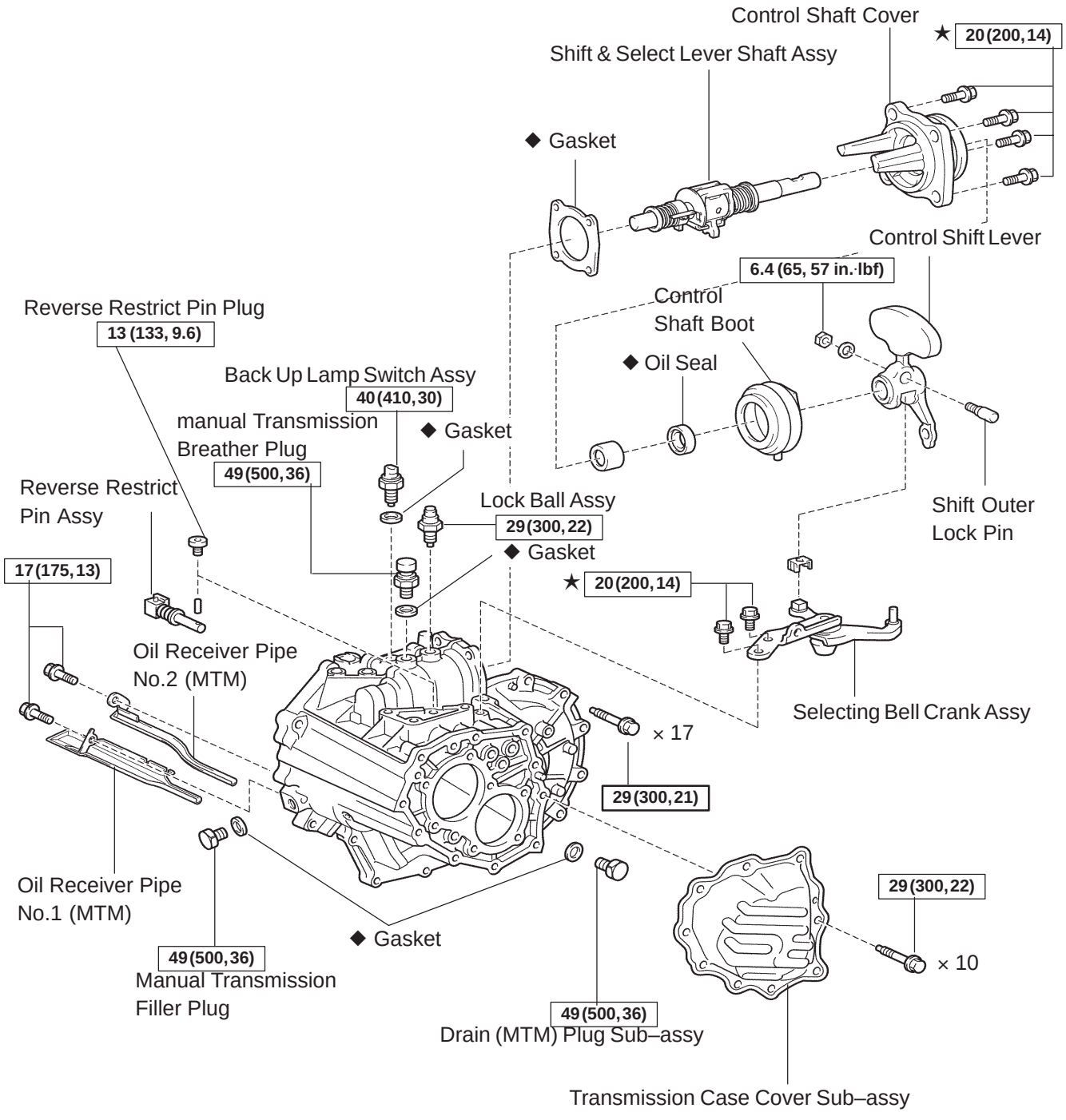

N·m (kgf·cm, ft·lbf) :Specified torque
◆ Non–reusable part
★ Precoated part

P C91171

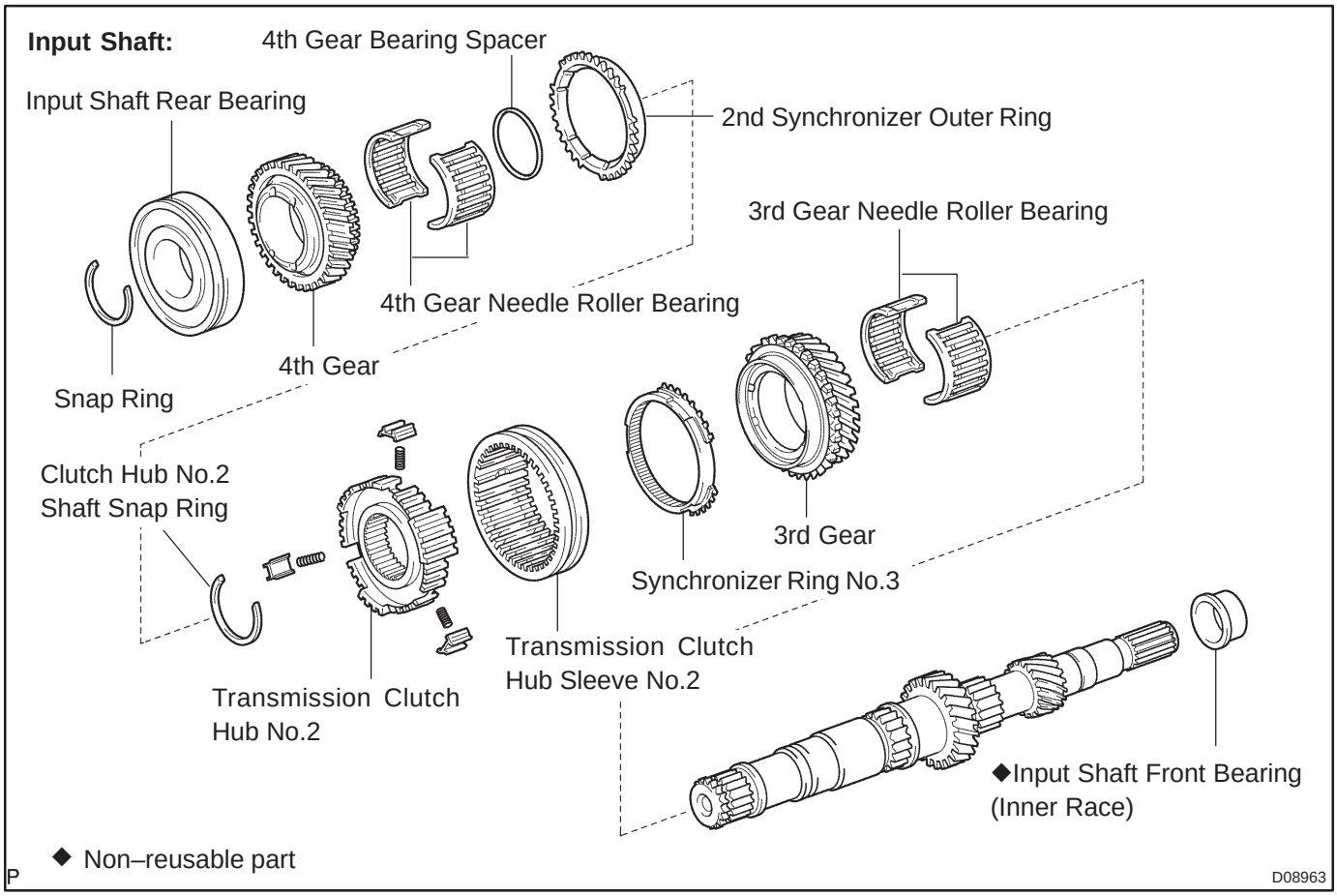
Input Shaft:
4th Gear Bearing Spacer
Input Shaft Rear Bearing
2nd Synchronizer Outer Ring
3rd Gear Needle Roller Bearing
4th Gear Needle Roller Bearing
4th Gear
Snap Ring
Clutch Hub No.2
Shaft Snap Ring
3rd Gear
Synchronizer Ring No.3
Transmission Clutch
Hub Sleeve No.2
Transmission Clutch
Hub No.2
◆Input Shaft Front Bearing
(Inner Race)
◆ Non–reusable part
D08963

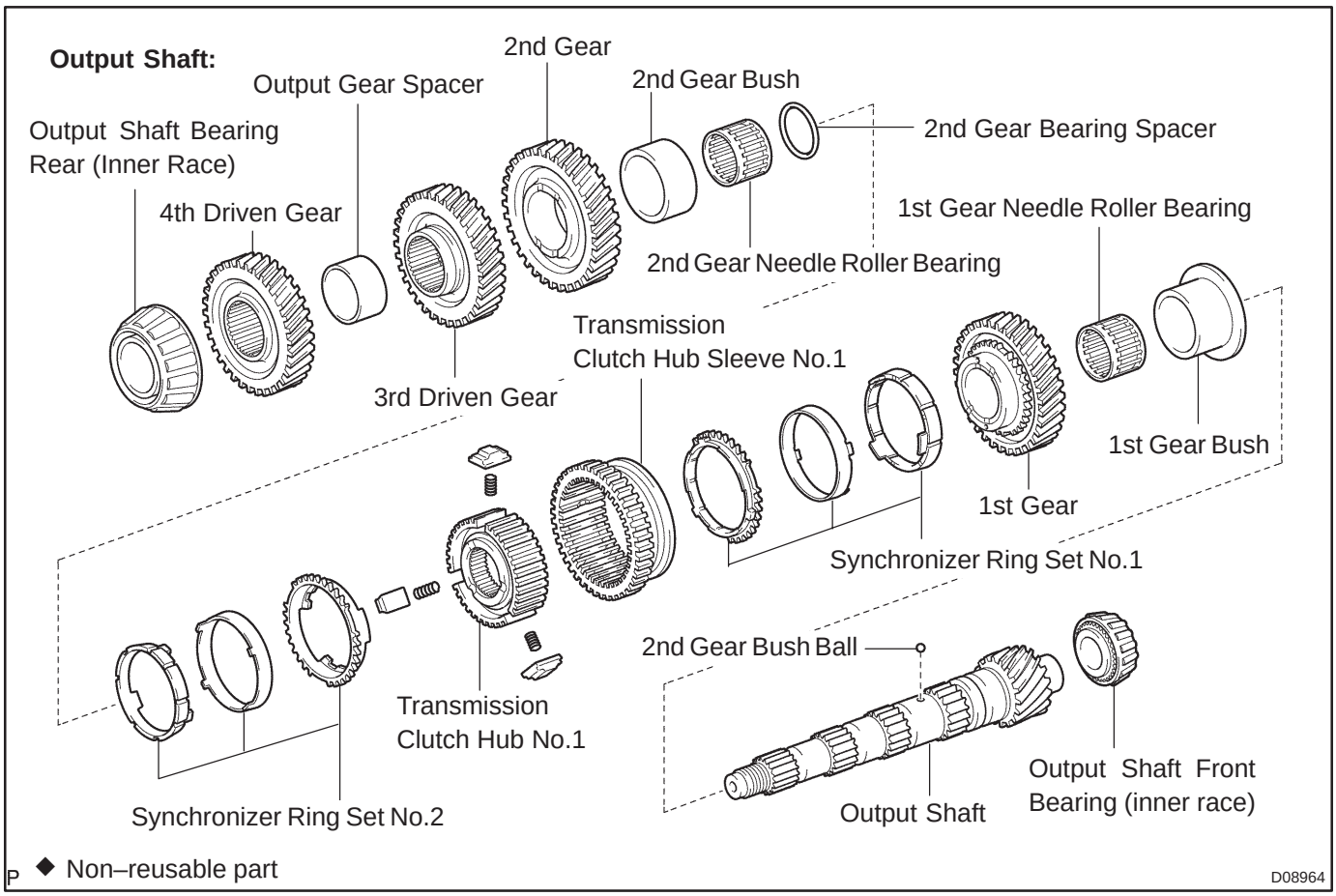
Output Shaft:
2nd Gear
Output Gear Spacer
2nd Gear Bush
Output Shaft Bearing
Rear (Inner Race)
2nd Gear Bearing Spacer
4th Driven Gear
1st Gear Needle Roller Bearing
2nd Gear Needle Roller Bearing
Transmission
Clutch Hub Sleeve No.1
3rd Driven Gear
1st Gear Bush
1st Gear
Synchronizer Ring Set No.1
2nd Gear Bush Ball
Transmission
Clutch Hub No.1
Output Shaft Front
Bearing (inner race)
Synchronizer Ring Set No.2
Output Shaft
◆ Non–reusable part
D08964

E355:

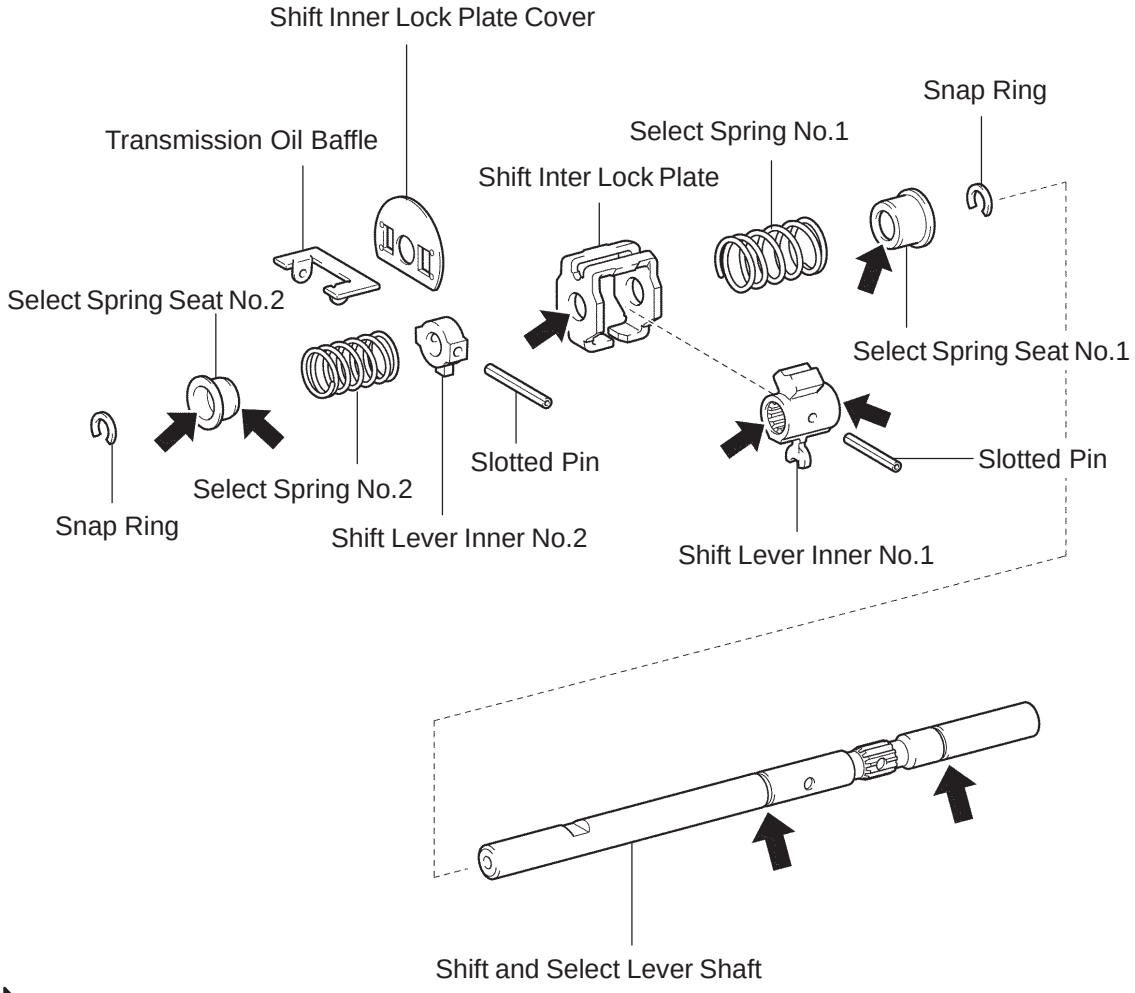
Shift Inner Lock Plate Cover
Transmission Oil Baffle
Shift Inter Lock Plate
Select Spring No.1
Snap Ring
Select Spring Seat No.2
Select Spring Seat No.1
Slotted Pin
Slotted Pin
Select Spring No.2
Snap Ring
Shift Lever Inner No.2
Shift Lever Inner No.1
Shift and Select Lever Shaft
Apply MP grease
P
D10974

E356:

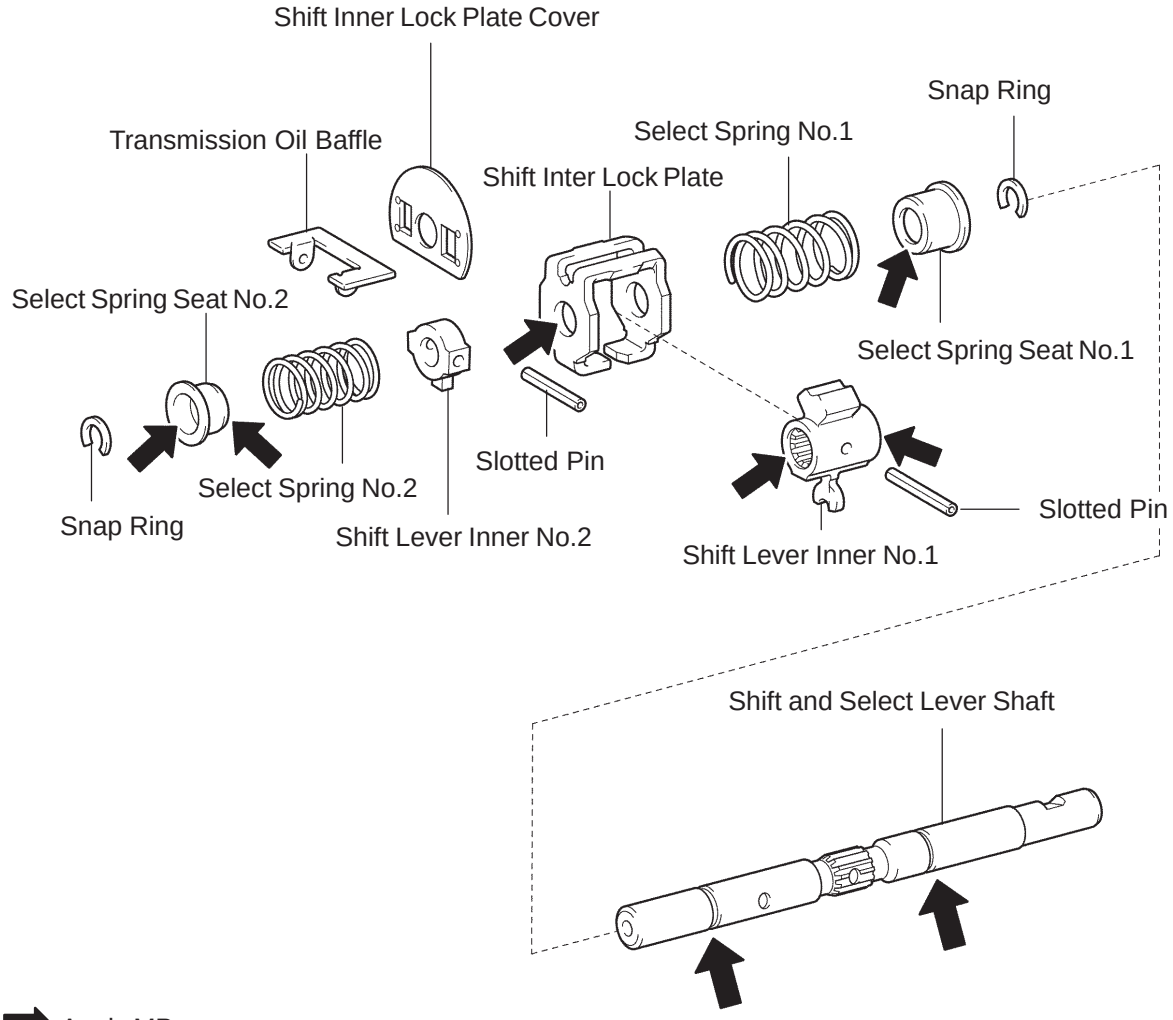
Shift Inner Lock Plate Cover
Transmission Oil Baffle
Shift Inter Lock Plate
Select Spring No.1
Snap Ring
Select Spring Seat No.2
Select Spring Seat No.1
Select Spring No.2
Slotted Pin
Snap Ring
Shift Lever Inner No.2
Shift Lever Inner No.1
Slotted Pin
Shift and Select Lever Shaft
Apply MP grease
P
D09546

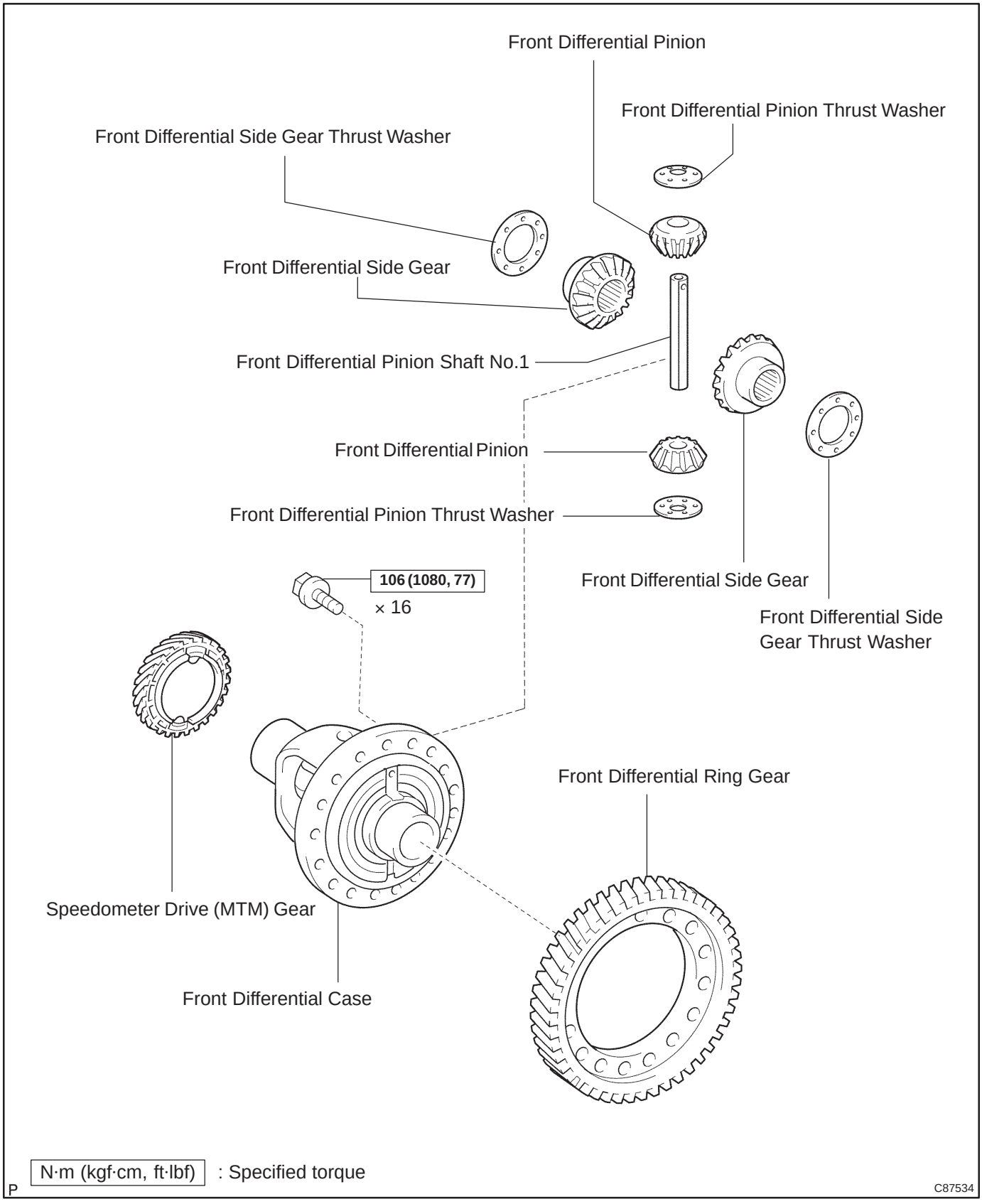
Front Differential Pinion
Front Differential Pinion Thrust Washer
Front Differential Side Gear Thrust Washer
Front Differential Side Gear
Front Differential Pinion Shaft No.1
Front Differential Pinion
Front Differential Pinion Thrust Washer
106 (1080, 77)
× 16
Front Differential Side Gear
Front Differential Side Gear Thrust Washer
Front Differential Ring Gear
Speedometer Drive (MTM) Gear
Front Differential Case
N·m (kgf·cm, ft·lbf) : Specified torque
P
C87534

MANUAL TRANSAXLE ASSY (E355/E356)

4103W–01

OVERHAUL

HINT:

COMPONENTS: See page 41–1

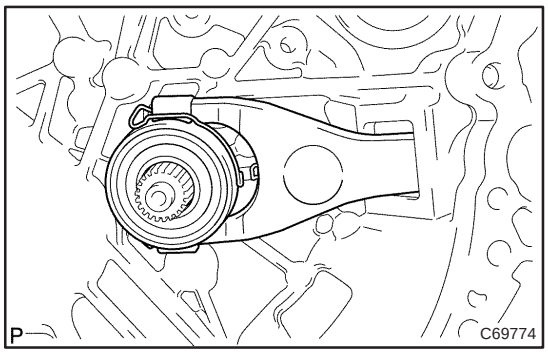

1. REMOVE CLUTCH RELEASE FORK SUB–ASSY

(a) Remove the clutch release fork with clutch release bearing from the manual transaxle case.

2. REMOVE CLUTCH RELEASE BEARING ASSY

(a) Remove the clutch release bearing assy and clutch release bearing hub clip from the clutch release fork sub–assy.

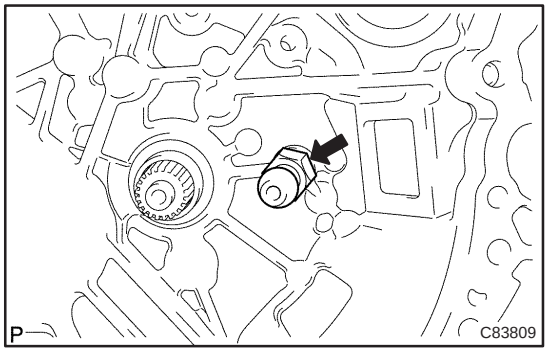

3. REMOVE RELEASE FORK SUPPORT

(a) Remove the release fork support from the manual transaxle case.

4. REMOVE CLUTCH RELEASE FORK BOOT

(a) Remove the clutch release fork boot from the manual transaxle case.

5. REMOVE SPEEDOMETER DRIVEN HOLE COVER SUB–ASSY

(a) Remove the bolt and speedometer driven hole cover.

6. REMOVE TRANSAXLE CASE COVER

(a) Remove the 2 bolt and transaxle case cover.

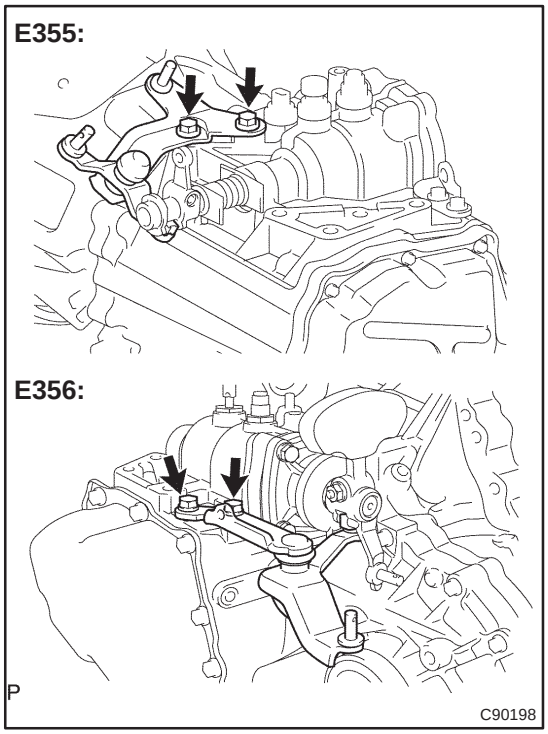

7. REMOVE SELECTING BELL CRANK ASSY

(a) Remove the 2 bolts and selecting bell crank assy from manual transmission case.

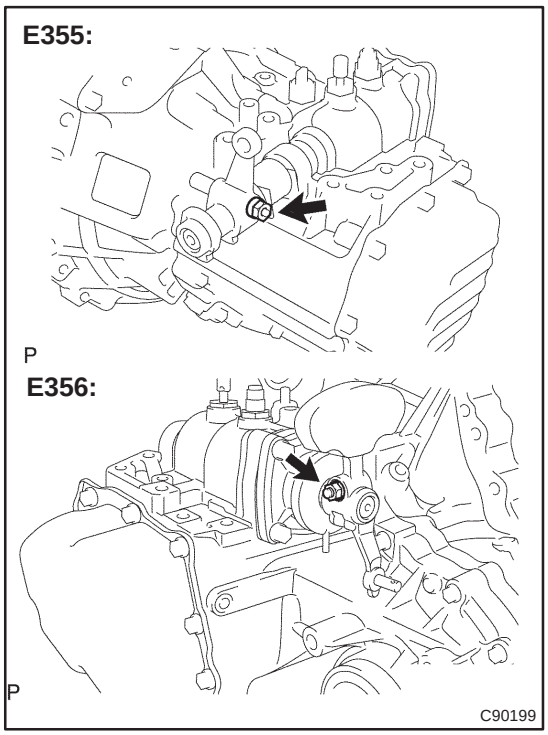

8. REMOVE CONTROL SHIFT LEVER

(a) Remove the nut and spring washer.

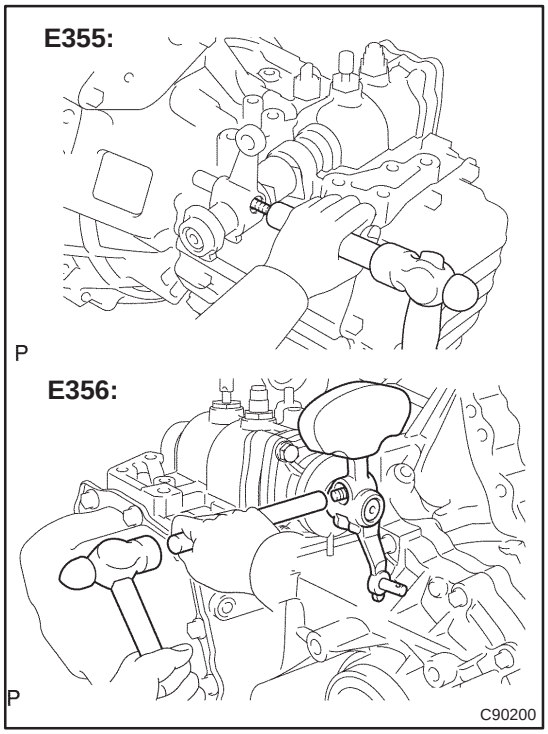

(b) Using a brass bar and hammer, remove the shift outer lock pin.

(c) Remove the control shift lever.

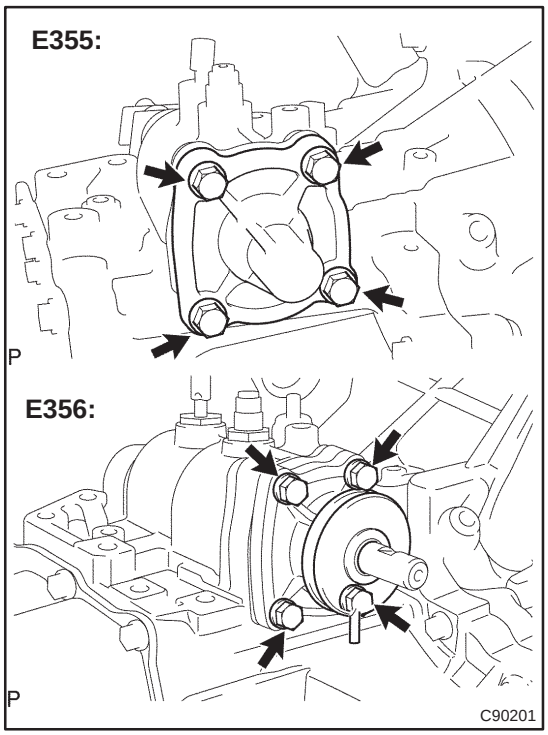

9. REMOVE CONTROL SHAFT COVER

(a) Remove the 4 bolts and control shaft cover from the manual transmission case.

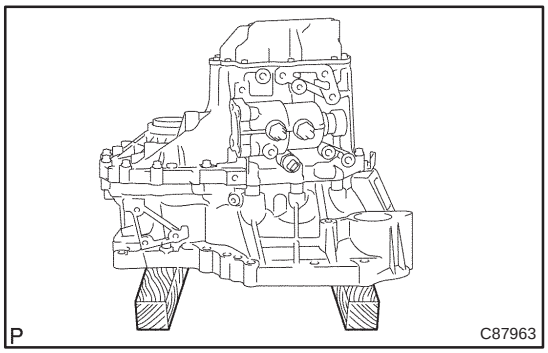

10. FIX MANUAL TRANSAXLE ASSY

(a) Using wooden brooks, fix the manual transaxle assy.

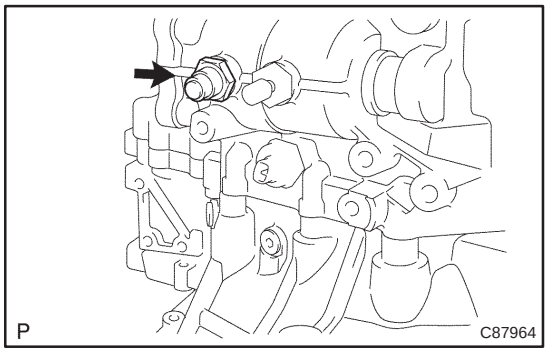

11. REMOVE LOCK BALL ASSY NO.1

(a) Remove the lock ball assy No. 1 from the manual transmission case.

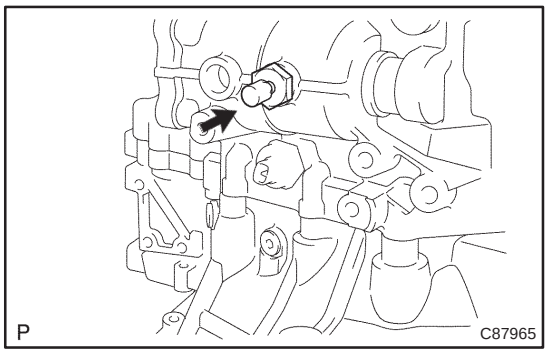

12. REMOVE MANUAL TRANSMISSION BREATHER PLUG

(a) Remove the manual transmission breather plug and gasket.

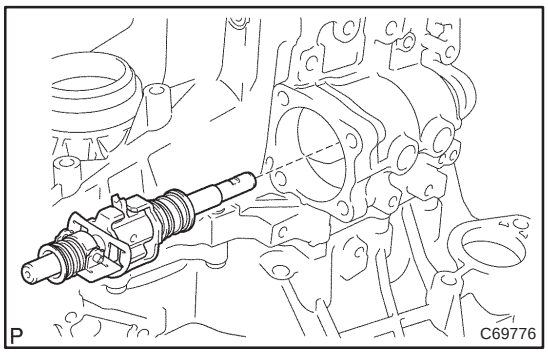

13. REMOVE SHIFT & SELECT LEVER SHAFT ASSY

(a) Remove the shift & select lever shaft assy from the manual transmission case.

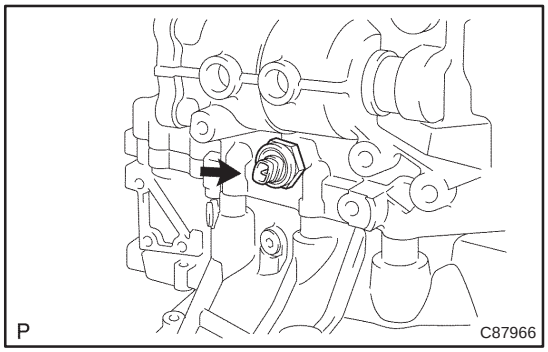

14. REMOVE BACK UP LAMP SWITCH ASSY

(a) Remove the back up lamp switch assy and gasket from the manual transmission case.

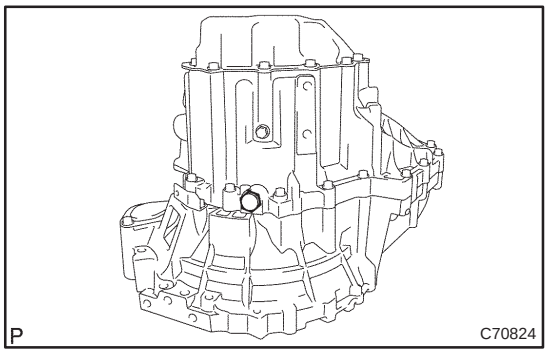

15. REMOVE MANUAL TRANSMISSION FILLER PLUG

(a) Remove the manual transmission filler plug and gasket from the manual transmission case.

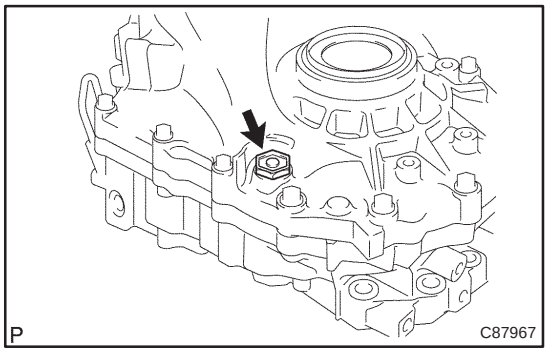

16. REMOVE DRAIN (MTM) PLUG SUB–ASSY

(a) Remove the drain (MTM) plug sub–assy and gasket from the manual transmission case.

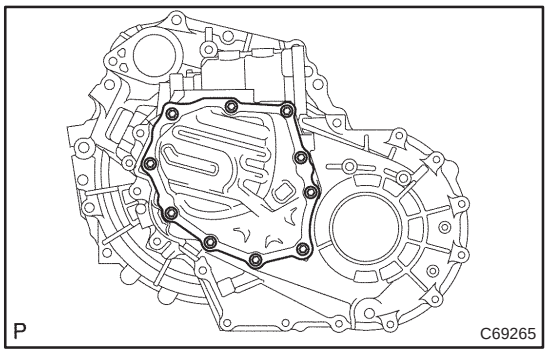

17. REMOVE MANUAL TRANSMISSION CASE COVER SUB–ASSY

(a) Remove the 10 bolts and manual transmission case cover from the manual transmission case.

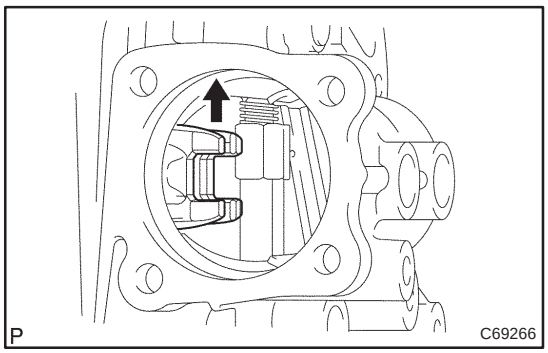

18. REMOVE MANUAL TRANSMISSION OUTPUT SHAFT REAR SET NUT

(a) Engage the gear to the double meshing.

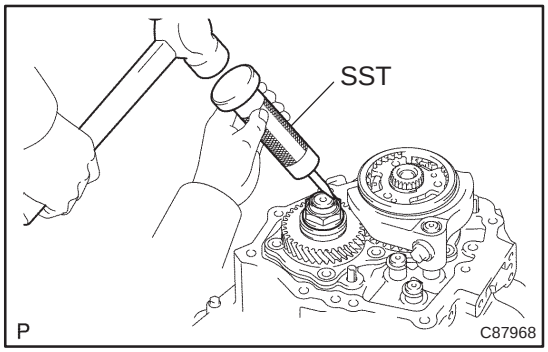

(b) Using SST and a hammer, loosen the staked part of the manual transmission output shaft rear set nut.
SST 09930–00010

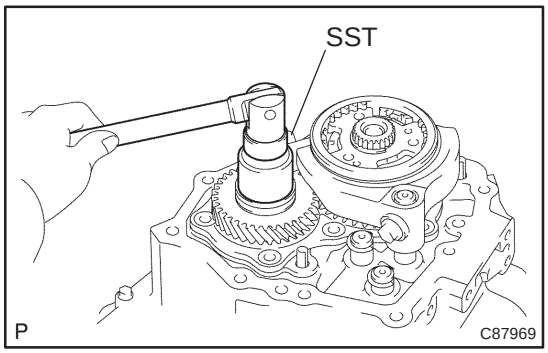

(c) Using SST, remove the manual transmission output shaft rear set nut from the output shaft.
SST 09229–55010

(d) Disengage the double meshing of the gear.

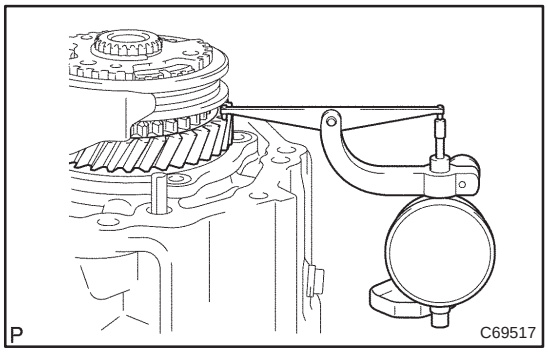

19. INSPECT 5TH GEAR THRUST CLEARANCE

(a) Using a dial indicator, inspect the 5th gear thrust clearance.

Standard clearance:
0.10 – 0.65 mm (0.0040 – 0.0258 in.)

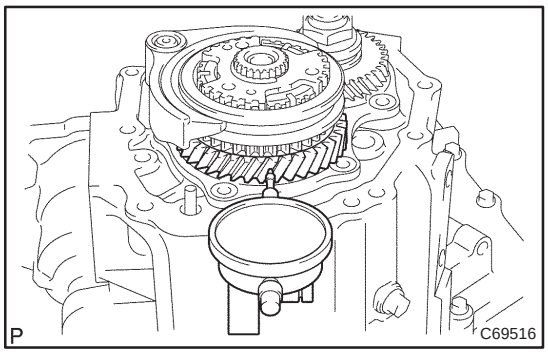

20. INSPECT 5TH GEAR RADIAL CLEARANCE

(a) Using a dial indicator, inspect the 5th gear radial clearance.

Standard clearance:
0.009 – 0.050 mm (0.0036 – 0.0200 in.)

HINT:
If the clearance is out of the specification, replace 1st gear needle roller bearing.

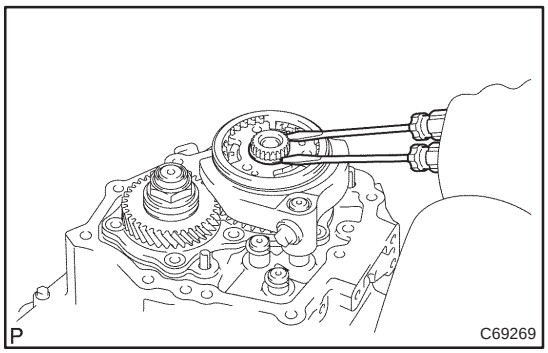

21. REMOVE TRANSMISSION CLUTCH HUB NO.3

(a) Using 2 screwdrivers and hammer, remove the transmission clutch hub No. 3 shaft snap ring from the input shaft.

HINT:
Using a waste to prevent the snap ring from bearing scattered.

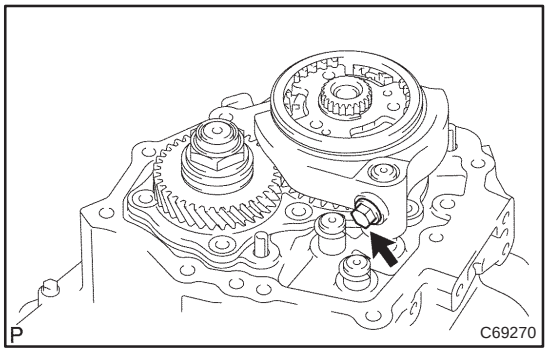

(b) Remove the gear shift fork bolt from the gear shift fork No. 3.

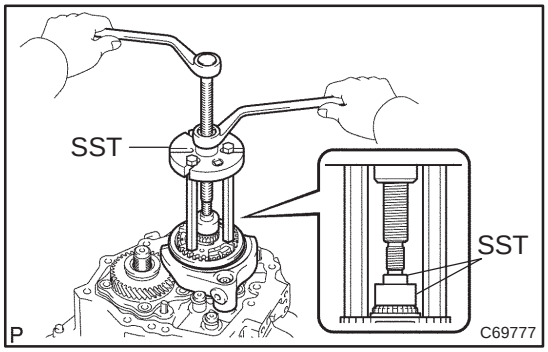

(c) Using SST, remove the transmission clutch hub No. 3 and gear shift fork No. 3 from the input shaft.

SST 09950–30012 (09951–03010, 09953–03010, 09954–03010), 09950–50013 (09957–04010), 09950–60010 (09951–00280)

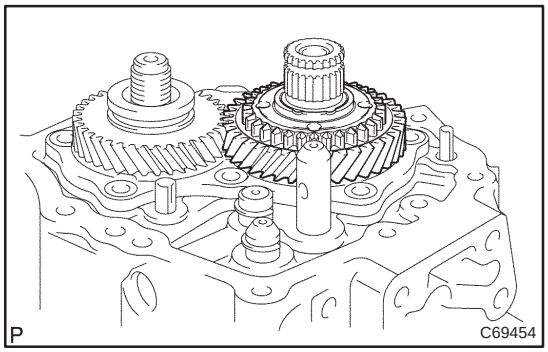

22. REMOVE 5TH GEAR

(a) Remove the 5th gear from the input shaft.

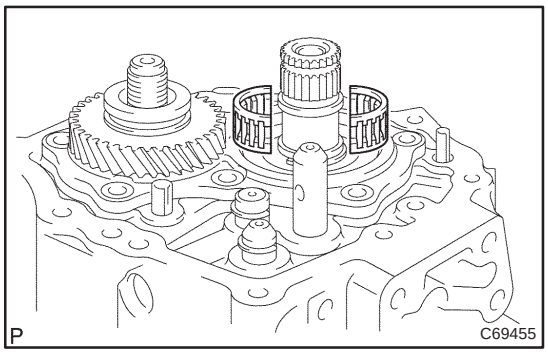

23. REMOVE 5TH GEAR NEEDLE ROLLER BEARING

(a) Remove the 5th gear needle roller bearing from the input Shaft.

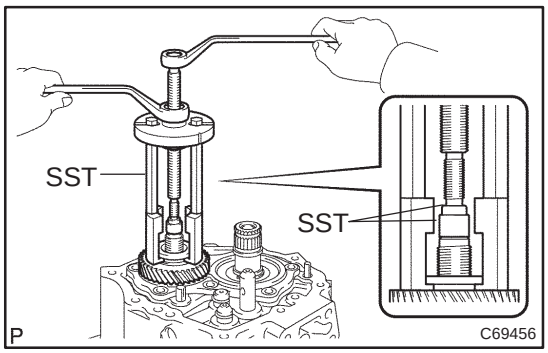

24. REMOVE 5TH DRIVEN GEAR

(a) Using SST, remove the 5th driven gear from the output shaft.
SST 09950–30012 (09951–03010, 09953–03010, 09954–03010, 09957–04010), 09950–60010 (09951–00180, 09955–03011), 09950–50013

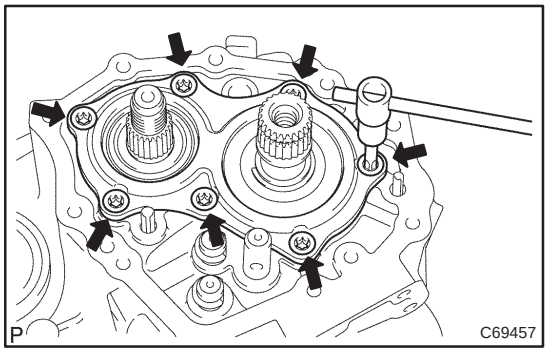

25. REMOVE BEARING RETAINER REAR (MTM)

(a) Using a torx socket wrench(T45), remove the 7 torx screws and bearing retainer rear (MTM) from the manual transmission case.

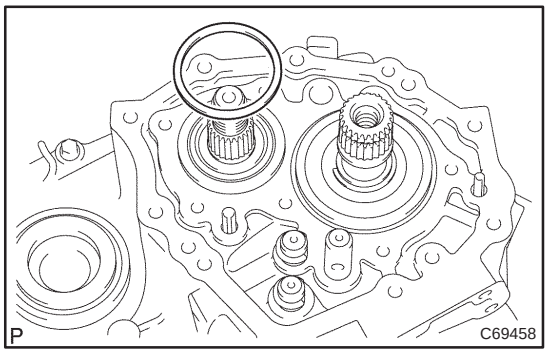

26. REMOVE OUTPUT SHAFT REAR BEARING SHIM

(a) Remove the output shaft rear bearing shim from the output shaft.

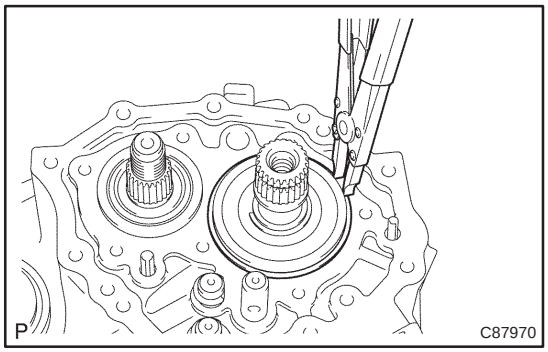

27. REMOVE INPUT SHAFT REAR BEARING SHAFT SNAP RING

(a) Using a snap ring expander, remove the input shaft rear bearing shaft snap ring from the input shaft.

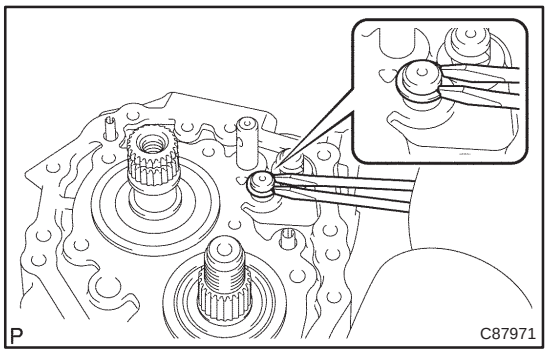

28. REMOVE SHIFT FORK SHAFT SHAFT SNAP RING

(a) Using 2 screw drivers and a hammer, remove the shift fork shaft shaft snap ring from the gear shift fork shaft No. 1.

HINT:
Using a waste to prevent the snap ring from being scattered.

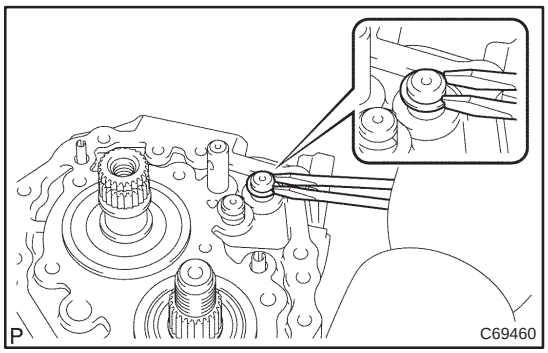

(b) Using 2 screw drivers and a hammer, remove the shift fork shaft shaft snap ring from the gear shift fork shaft No. 2.

HINT:
Using a waste to prevent the snap ring from being scattered.

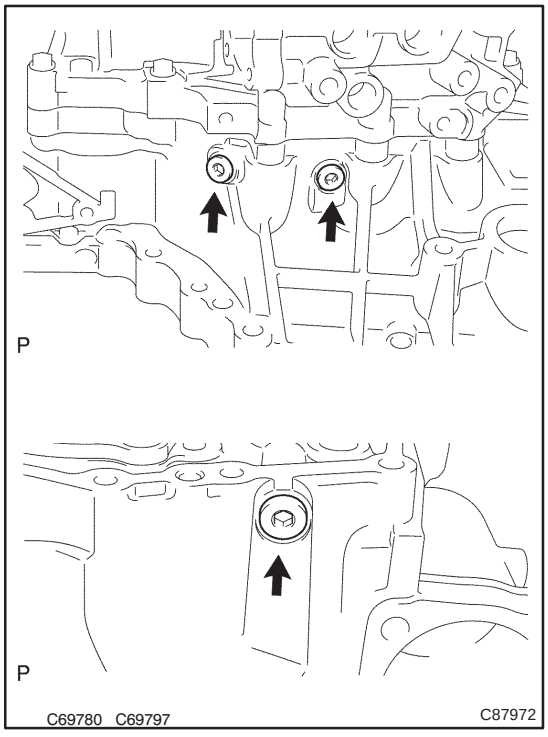

29. REMOVE SHIFT DETENT BALL PLUG

(a) Using a hexagon wrench (6 mm), remove the 3 shift detente ball plug from the manual transaxle case.

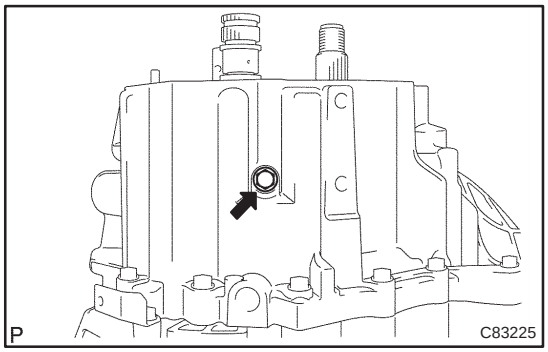

30. REMOVE REVERSE IDLER GEAR SHAFT BOLT

(a) Remove the reverse idler gear shaft bolt and gasket.

31. REMOVE CLUTCH TUBE BRACKET

(a) Remove the 3 bolts and remove the clutch tube bracket.

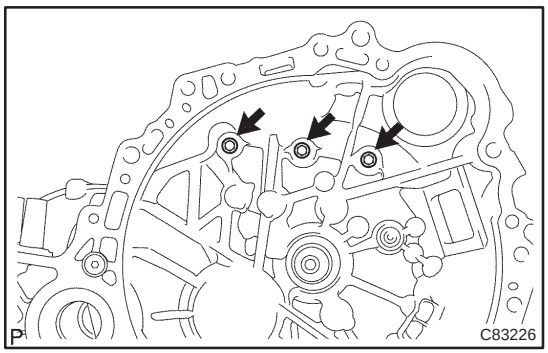

32. REMOVE MANUAL TRANSMISSION CASE

(a) Remove the 3 bolts of the manual transaxle case side.

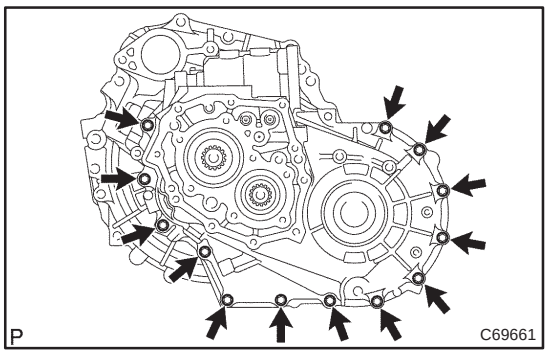

(b) Remove the 14 bolts of the manual transmission case side.

(c) Using a plastic hammer, remove the manual transmission case.

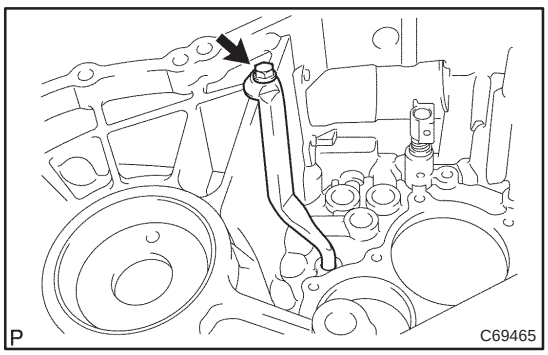

33. REMOVE OIL RECEIVER PIPE NO.2 (MTM)

(a) Remove the bolt and oil receiver pipe No. 2 (MTM) from the manual transmission case.

NOTICE:
Do not damage the pipe.

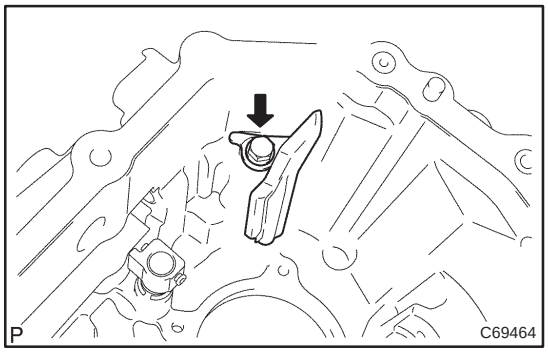

34. REMOVE OIL RECEIVER PIPE NO.1 (MTM)

(a) Remove the bolt and oil receiver pipe No. 1 (MTM) from the manual transmission case.

NOTICE:
Do not damage the pipe.

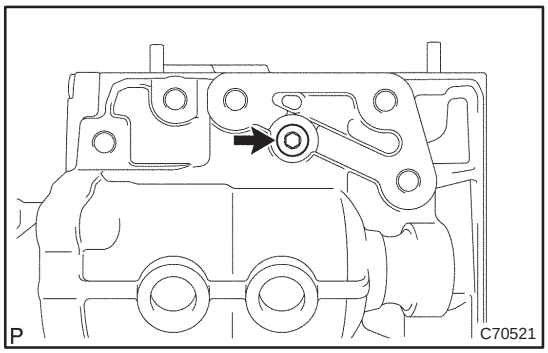

35. REMOVE REVERSE RESTRICT PIN ASSY

(a) Using a hexagon wrench (6 mm), remove the reverse restrict pin plug from the manual transmission case.

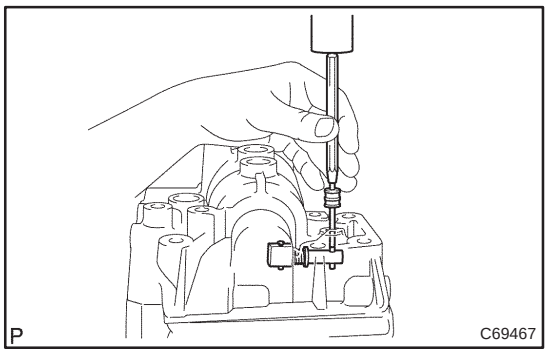

(b) Using a pin punch(ϕ 5 mm), remove the slotted pin and reverse restrict pin assy.

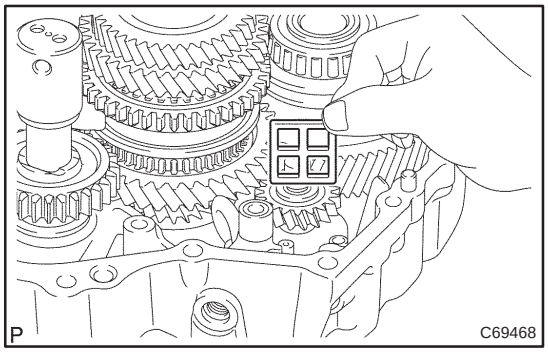

36. REMOVE TRANSMISSION MAGNET

(a) Remove the transmission magnet from the manual transaxle case.

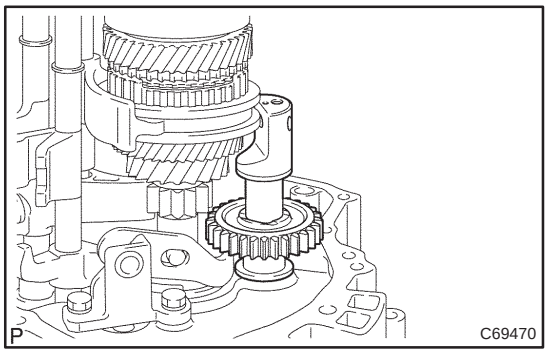

37. REMOVE REVERSE IDLER GEAR SUB–ASSY

(a) Remove the reverse idler gear sub–assy from the manual transaxle case.

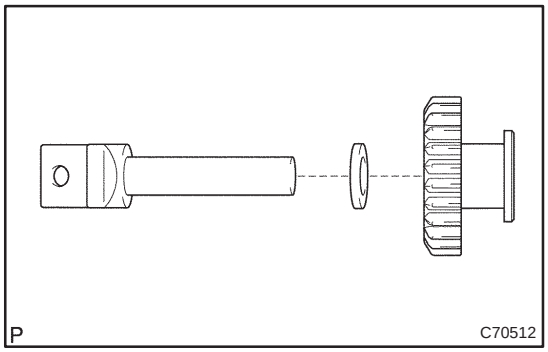

(b) Remove the reverse gear and reverse idler thrust washer from the reverse idler gear shaft.

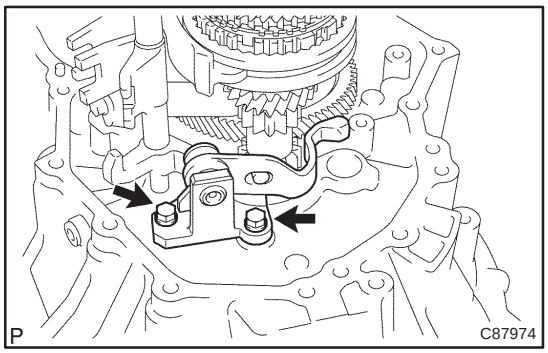

38. REMOVE REVERSE SHIFT ARM BRACKET ASSY

(a) Remove the 2 bolts and reverse shift arm bracket from the manual transaxle case.

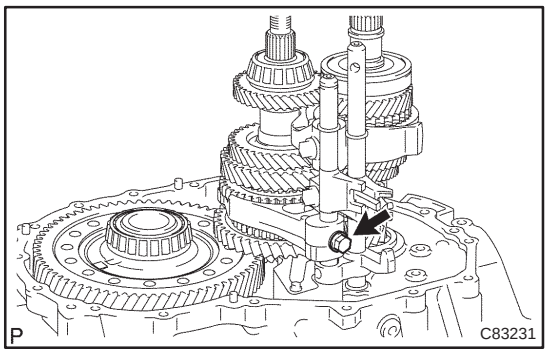

39. REMOVE GEAR SHIFT FORK SHAFT NO.1

(a) Remove the shift fork bolt from the gear shift fork No. 1.

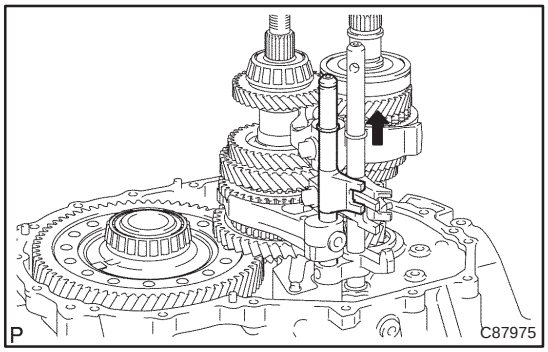

(b) Pull out the gear shift fork shaft No. 1 while the gear fork shaft No. 3 in pulled up.

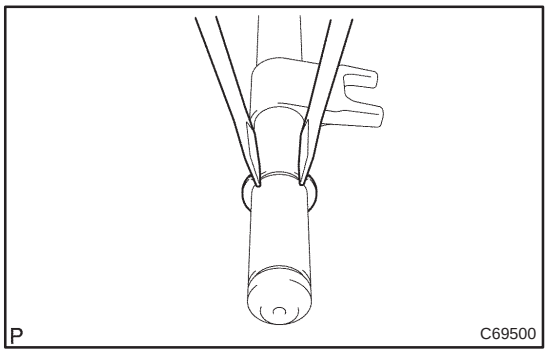

(c) Using 2 screwdrivers and a hammer, remove the shift fork shaft snap ring form the gear shift fork shaft No.1.

NOTICE:

Using a waste to prevent the snap ring from being scattered.

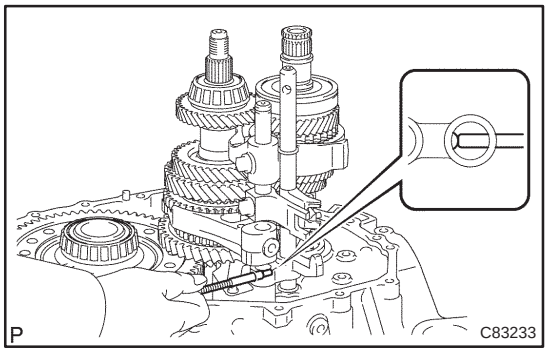

40. REMOVE REVERSE SHIFT FORK ROLLER

(a) Using a magnetic finger, remove the reverse shift fork roller from the reverse shift fork.

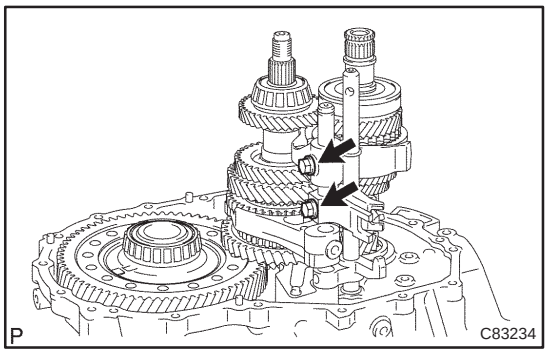

41. REMOVE GEAR SHIFT FORK SHAFT NO.2

(a) Remove the 2 shift fork bolts from the gear shift fork No. 2 and gear shift head No.1.

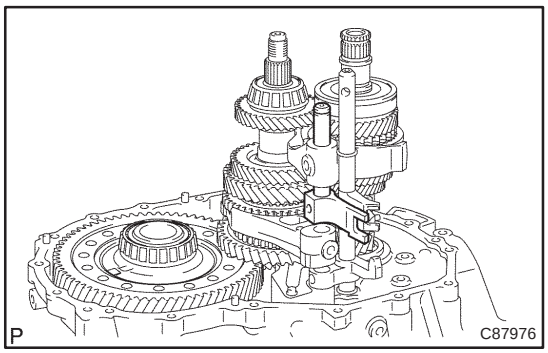

(b) Remove the gear shift fork shaft No. 2 and gear shift head No.1 from the manual transaxle case.

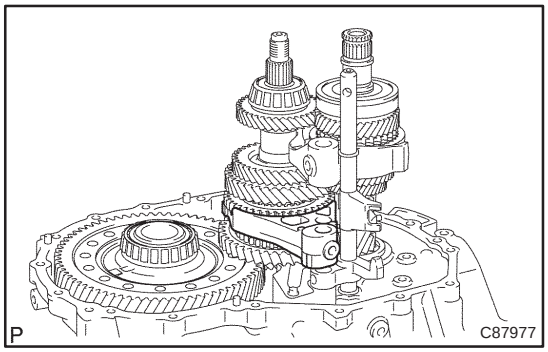

42. REMOVE GEAR SHIFT FORK NO.1

(a) Remove the gear shift fork No.1 from the output shaft assy.

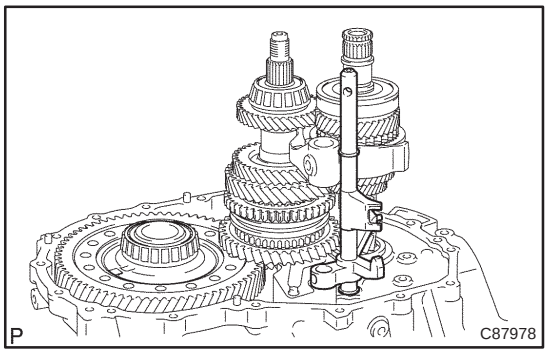

43. REMOVE GEAR SHIFT FORK SHAFT NO.3

(a) Remove the gear shift fork shaft No.3 from the manual transaxle case.

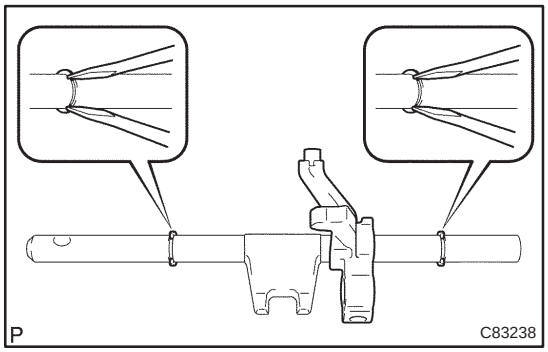

(b) Using 2 screwdriver and a hammer, remove the 2 shift fork shaft snap rings from the gear shift fork shaft No. 3.

(c) Remove the reverse shift fork from the gear shift fork shaft No.3.

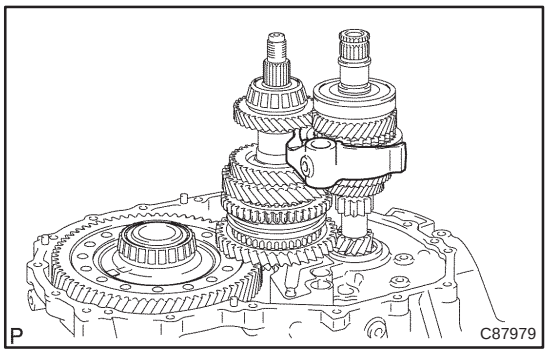

44. REMOVE GEAR SHIFT FORK NO.2

(a) Remove the gear shift fork No.2 from the input shaft assy.

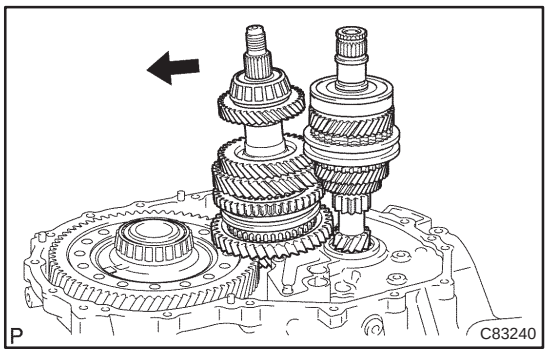

45. REMOVE INPUT SHAFT ASSY

(a) Incline the output shaft then remove the input shaft from the manual transaxle case.

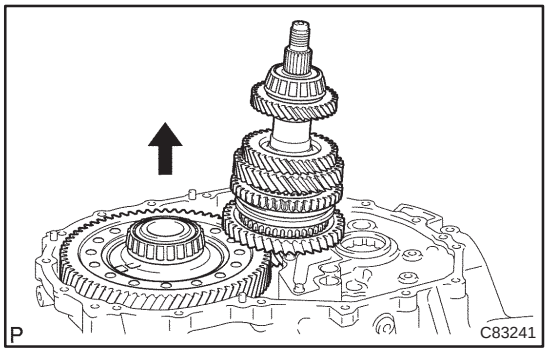

46. REMOVE OUTPUT SHAFT ASSY

(a) Remove the output shaft from the manual transaxle case.

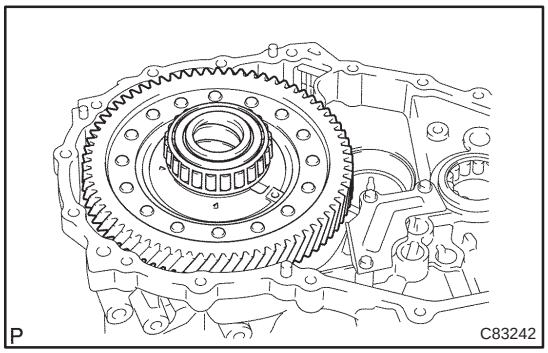

47. REMOVE DIFFERENTIAL CASE ASSY

(a) Remove the differential case assy from the manual transaxle case.

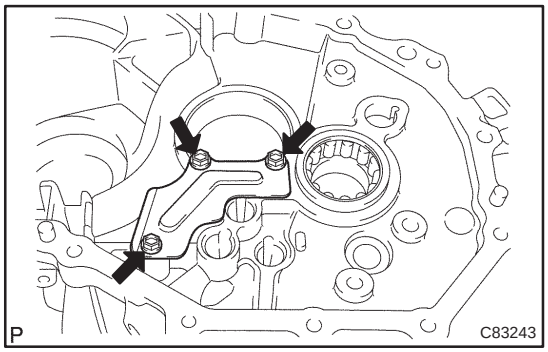

48. REMOVE MANUAL TRANSAXLE CASE RECEIVER

(a) Remove the 3 bolts and manual transaxle case receiver from the manual transaxle case.

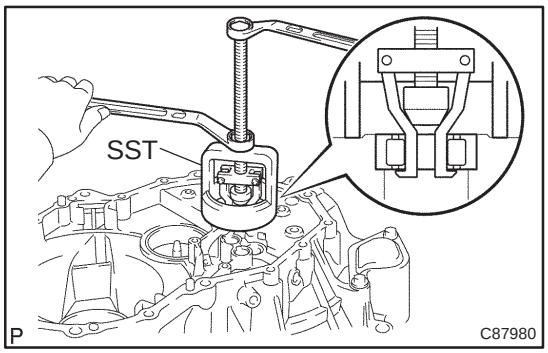

49. REMOVE INPUT SHAFT FRONT BEARING

(a) Using SST, remove the input shaft front bearing (outer race) from the manual transaxle case.
SST 09612–65014 (09612–01040, 09612–01050)

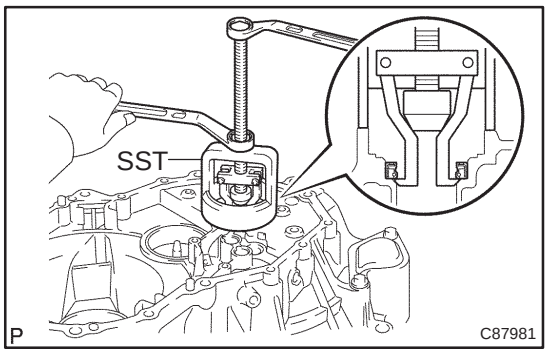

50. REMOVE FRONT TRANSAXLE CASE OIL SEAL

(a) Using SST, remove the manual transaxle case oil seal from the manual transaxle case.
SST 09612–65014 (09612–01040, 09612–01050)

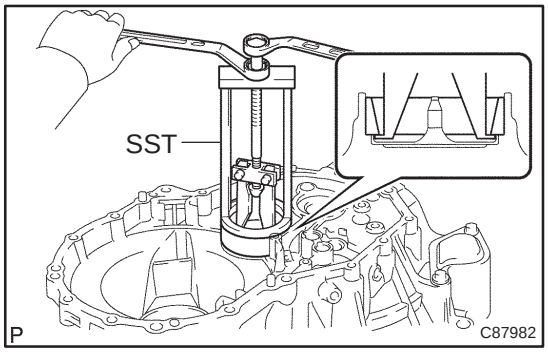

51. REMOVE OUTPUT SHAFT FRONT BEARING

(a) Using SST, remove the output shaft front bearing (outer race) from the manual transaxle case.
SST 09387–00040 (09387–02020, 09387–02010)

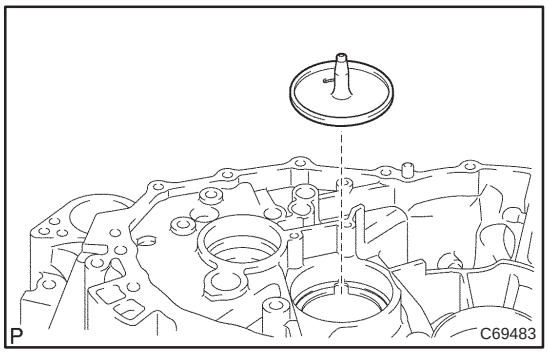

52. REMOVE OUTPUT SHAFT (MTM) COVER

(a) Remove the output shaft (MTM) cover from the manual transaxle case.

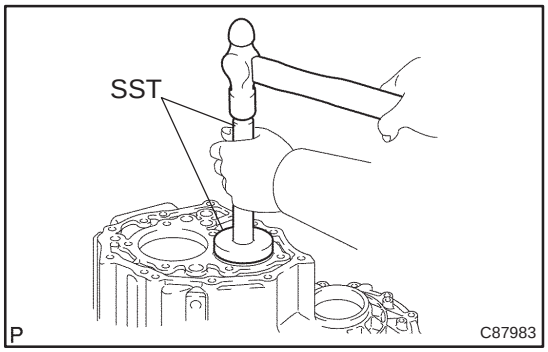

53. REMOVE OUTPUT SHAFT REAR BEARING

(a) Using SST, remove the output shaft rear bearing from the manual transmission case (outer race).
SST 09950–60010 (09951–00680), 09950–70010 (09951–07100)

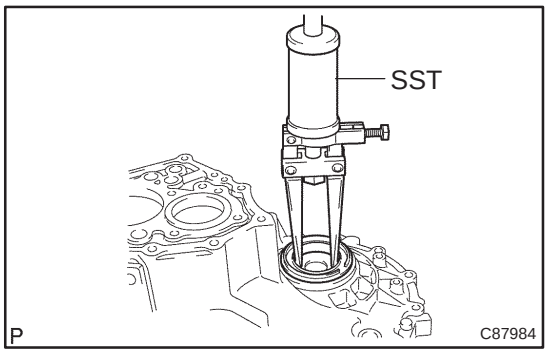

54. REMOVE TRANSMISSION CASE OIL SEAL

(a) Using SST, remove the transmission case oil seal from the manual transmission case.
SST 09308–00010

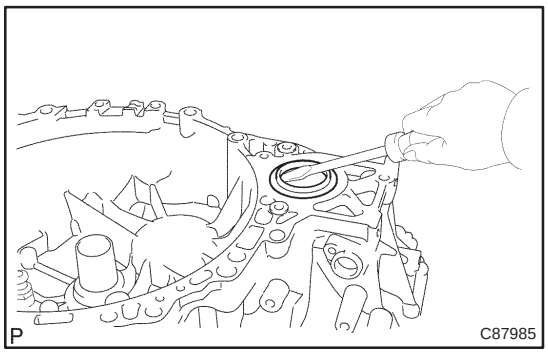

55. REMOVE FRONT TRANSAXLE CASE COVER OIL SEAL

(a) Using a screwdriver, remove the front transaxle case cover oil seal.

HINT:
Tape the screwdriver tip before use.

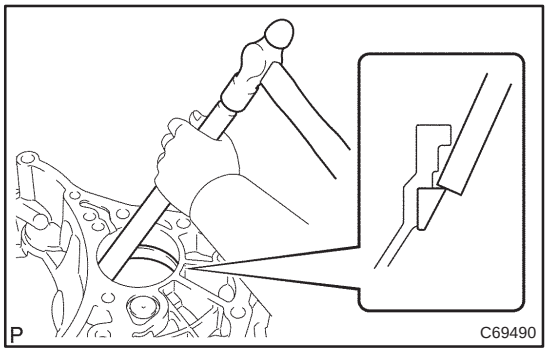

56. REMOVE FR DIFFERENTIAL CASE REAR TAPERED ROLLER BEARING

(a) Using a brass bar and a hammer, remove the FR differential case rear tapered roller bearing (outer race) from the manual transaxle case.

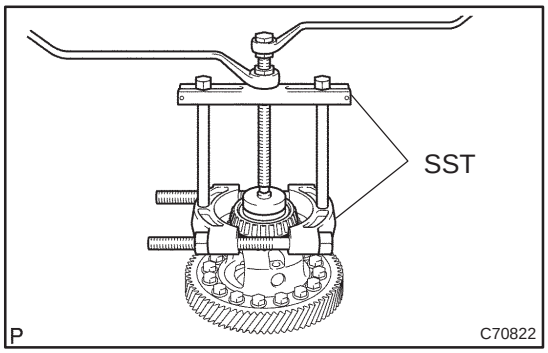

(b) Using SST, remove the front differential case rear tapered roller bearing from the front differential case.
SST 09950–00020, 09950–00030, 09950–40011 (09957–04010), 09950–60010 (09951–00560)

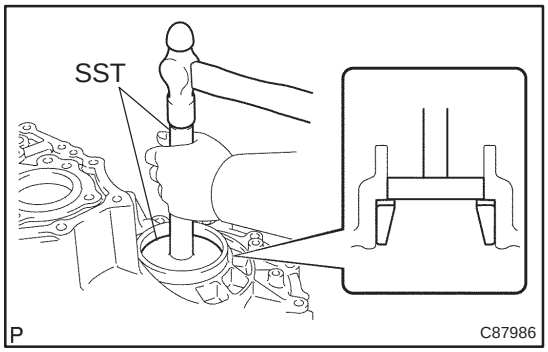

57. REMOVE FR DIFFERENTIAL CASE FRONT TAPERED ROLLER BEARING

(a) Using SST and hammer, remove the FR differential case front taped roller bearing (outer race) and FR differential case rear shim from the manual transmission case.
SST 09950–60020 (09951–00790), 09950–70010 (09951–07100)

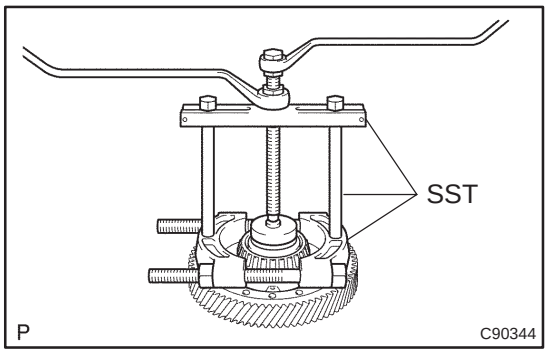

(b) Using SST, remove the FR differential case front tapered roller bearing (inner race) from front differential case.
SST 09950–00020, 09950–00030, 09950–40011 (09957–04010), 09950–60010 (09951–00490)

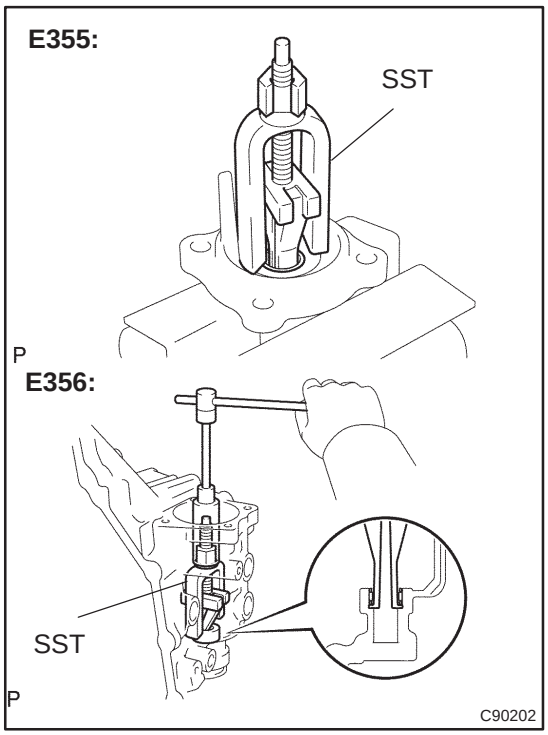

58. REMOVE SHIFT & SELECT LEVER SHAFT BIMETAL FORMED BUSH

(a) Using SST, remove the shift & select lever shaft bimetal formed bush.
SST 09319–60020

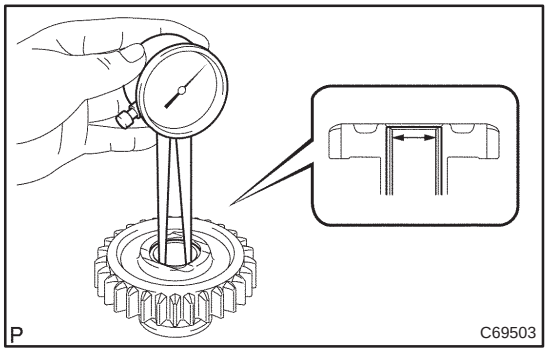

59. INSPECT REVERSE IDLER GEAR SUB–ASSY

(a) Using a callipers gauge, measure the inside diameter of the reverse idler gear.

Inside diameter: mm (in)

Standard inside diameter	Maximum inside diameter
20.056–20.074 (0.7962 – 0.7969)	20.074 (0.7969)

If the inside diameter is exceeds than the maximum, replace the reverse idler gear.

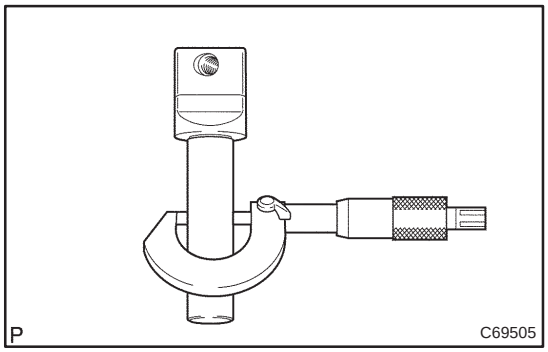

(b) Using a micro meter, measure the outer diameter of the reverse idler gear shaft.

Outer diameter: mm (in)

Standard outer diameter	Minimum outer diameter
19.984–20.000 (0.7934 – 0.7940)	19.984 (0.7934)

If the outer diameter is less than the minimum, replace the reverse idler gear shaft.

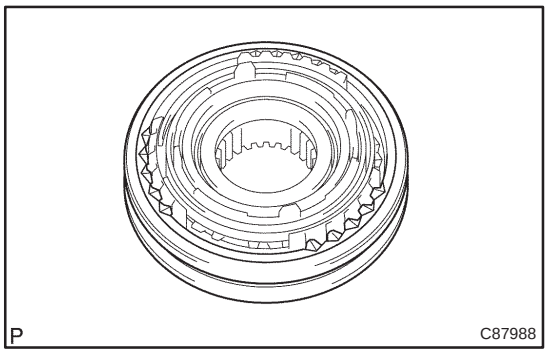

60. REMOVE TRANSMISSION HUB SLEEVE NO.3

(a) Remove the transmission hub sleeve No.3 from the transmission clutch hub No.3.

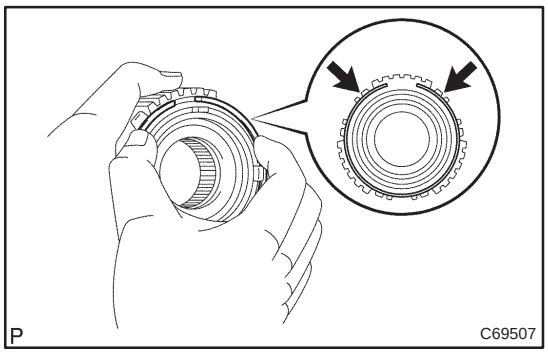

61. REMOVE SYNCHROMESH SHIFTING KEY SPRING NO.3

(a) Push the synchromesh shifting key spring No.3 then remove the 2 synchromesh shifting key spring No.3 from the transmission clutch hub No.3.

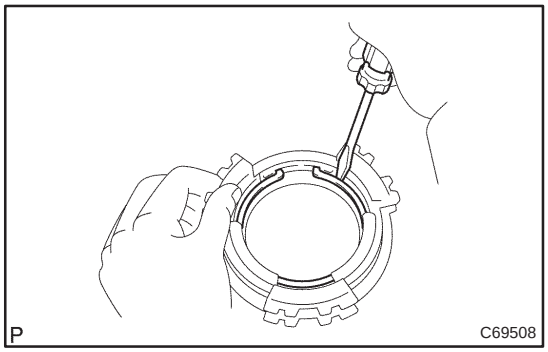

62. REMOVE SYNCHRONIZER PULL RING

(a) Using a screwdriver, remove the synchronizer pull ring snap ring.

(b) Remove the synchronizer pull ring, synchronizer outer ring No.5, synchronizer inner ring No.5 and synchronizer middle ring No.5 from the synchronizer ring No.5.

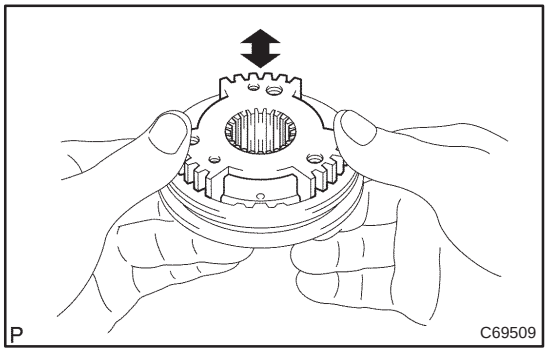

63. INSPECT TRANSMISSION CLUTCH HUB NO.3

(a) Inspect the sliding condition between transmission clutch hub No.3 and transmission hub sleeve No.3.

(b) Inspect tip of spline gear on the transmission hub sleeve No.3 for wear.

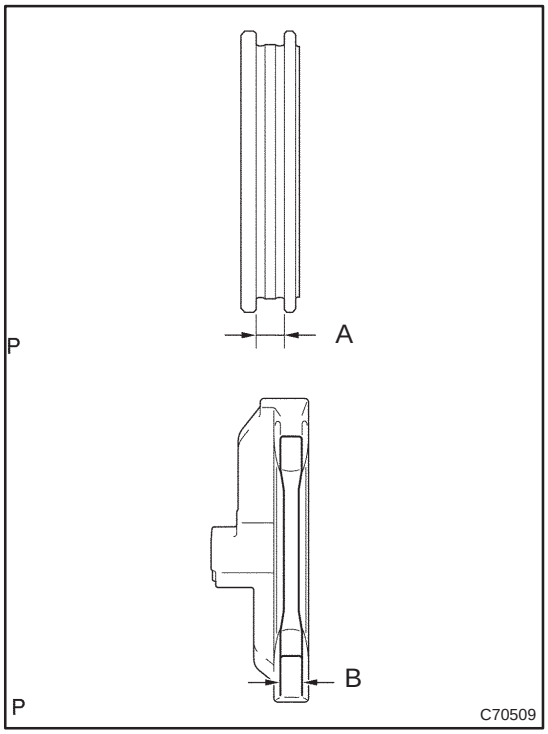

64. INSPECT TRANSMISSION HUB SLEEVE NO.3

(a) Using vernier calipers, measure the transmission hub sleeve No.3 groove and the thickness of the claw part on gear shift fork No.3, and calculate the clearance.
Standard clearance:
0.15–0.35 mm (0.005600 – 0.0139 in.) {A – B}

If the clearance is out of the specification, replace the transmission hub sleeve No.3 and gear shift fork No.3 with the new one.

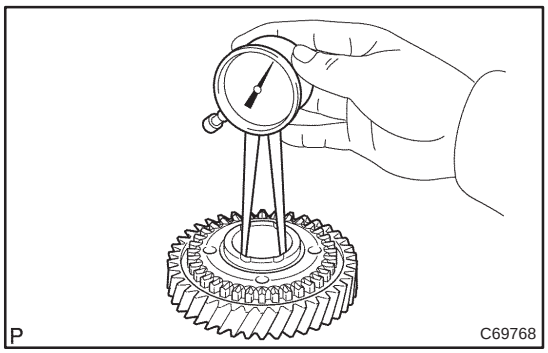

65. INSPECT 5TH GEAR

(a) Using a calipers gauge, measure the inner diameter of the 5th gear.
Inner diameter: mm (in)

Standard inner diameter	Maximum inner diameter
34.981–34.997 (1.3887 – 1.3893)	34.997 (1.3893)

If the inner diameter is exceeds than the maximum, replace the 5th gear.

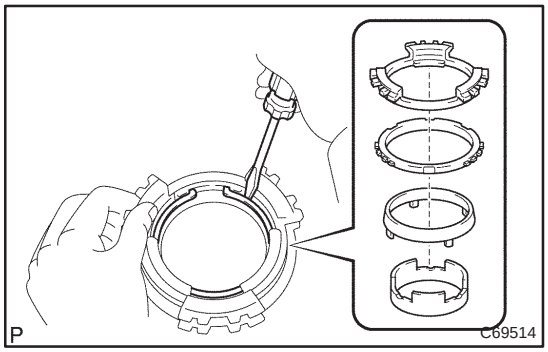

66. INSTALL SYNCHRONIZER PULL RING

(a) Install the synchronizer middle ring No.5, synchronizer ring outer No.5 and synchronizer pull ring to the synchronizer ring inner No.5. using a screwdriver, fix with snap ring.

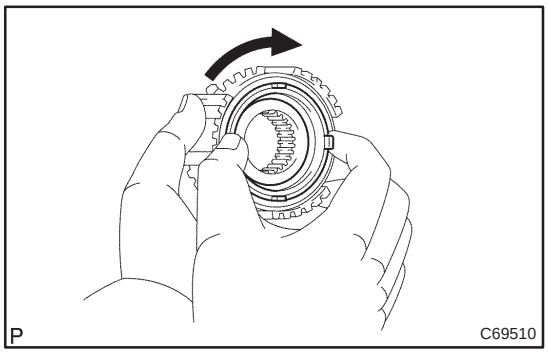

67. INSPECT SYNCHRONIZER RING MIDDLE NO.5

(a) Check that the synchronizer ring middle No.5 rotates smoothly.

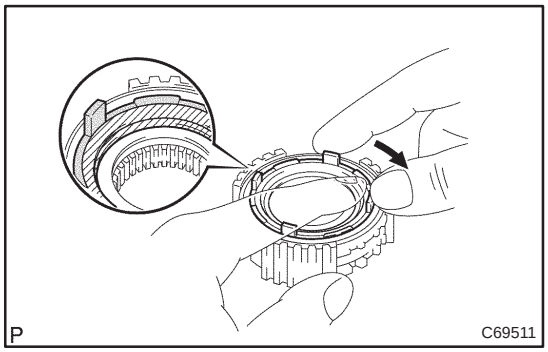

(b) Check the the synchronizer ring middle No.5 does not rotate while it is being pushed to the clutch hub No.3.

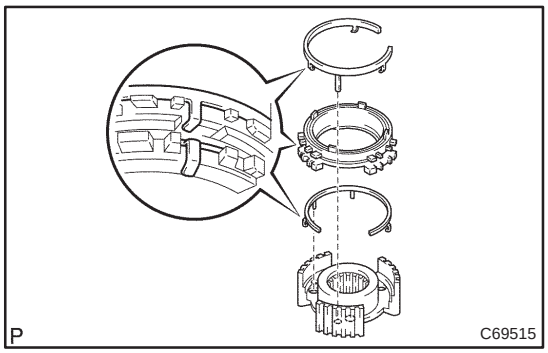

68. INSTALL SYNCHROMESH SHIFTING KEY SPRING NO.3

(a) Install the synchromesh shifting key spring No.3 to the transmission clutch hub No.3.

NOTICE:

Align the projection of the shifting key spring with the hole of the clutch hub No. 3 and install them.

(b) Install the synchronizer ring set and synchromesh shifting key spring No.3 to the transmission clutch hub No.3.

NOTICE:

- **Install the shifting key spring claw to the center of the teeth of the synchronizer ring.**
- **Align the projection of the shifting key spring with the hole of the clutch hub No. 3 and install them.**

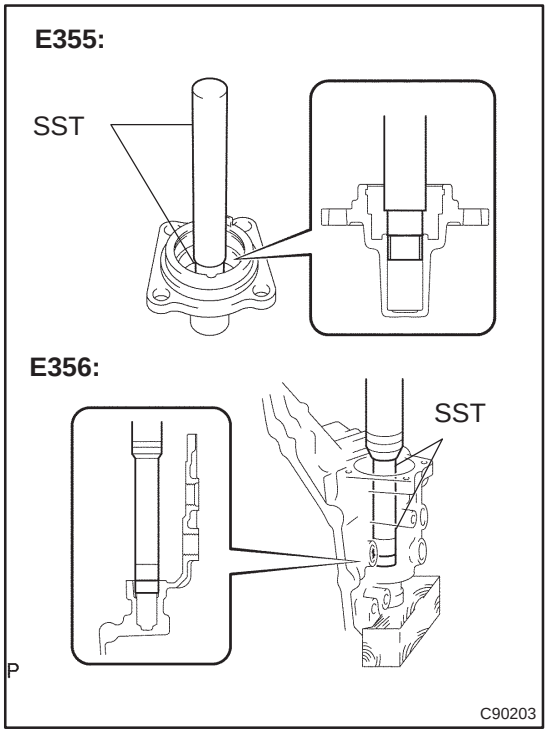

69. INSTALL SHIFT & SELECT LEVER SHAFT BIMETAL FORMED BUSH

(a) Using SST, install the shift & select lever shaft bimetal formed bush.

SST 09950–60010 (09951–00180), 09950–70010 (09951–07100)

Clearance:

0.081 – 0.149 mm (0.0032 – 0.0059 in.)

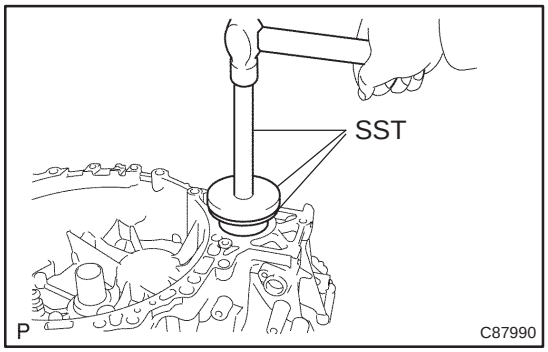

70. INSTALL FRONT TRANSAXLE CASE COVER OIL SEAL

(a) Using SST and a hammer, install the front transaxle case cover oil seal.
SST 09316–20011, 09950–60020 (09951–00910), 09950–70010 (09951–07150)

(b) Coat the lip of front transaxle case cover oil seal with MP grease.

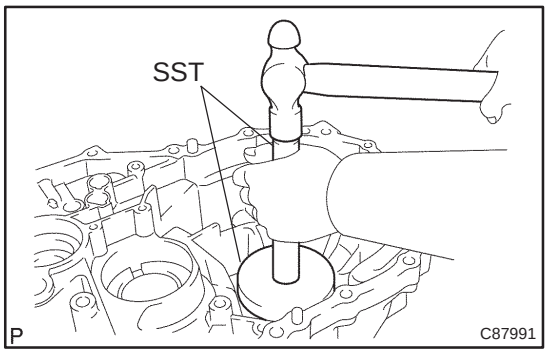

71. INSTALL FR DIFFERENTIAL CASE REAR TAPERED ROLLER BEARING

(a) Using SST and a hammer, install the FR differential case rear tapered roller bearing (outer race) to the front transaxle case.
SST 09950–60020 (09951–00910), 09950–70010 (09951–07100)

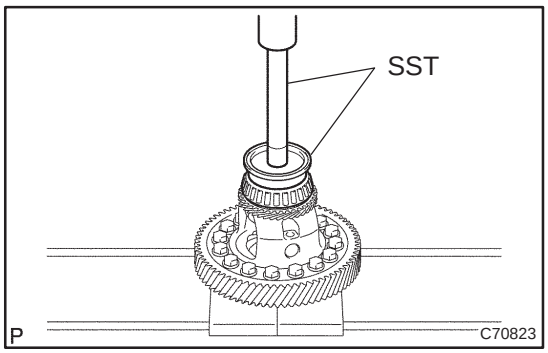

(b) Using SST and press, install the FR Differential case rear tapered roller bearing (inner race) to the front differential case.
SST 09950–70010 (09951–07100, 09951–07150), 09608–10010

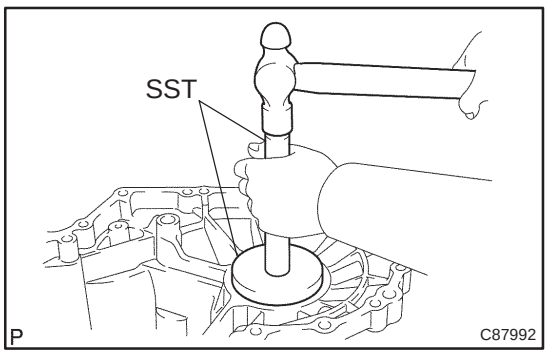

72. INSTALL FR DIFFERENTIAL CASE FRONT TAPERED ROLLER BEARING

(a) Install the front differential case shim rear.

(b) Using SST and a hammer, install FR differential case front tapered roller bearing (outer race).
SST 09950–60020 (09951–00890), 09950–70010 (09951–07100)

NOTICE:
Install the same thickness of case shim as the removed one.

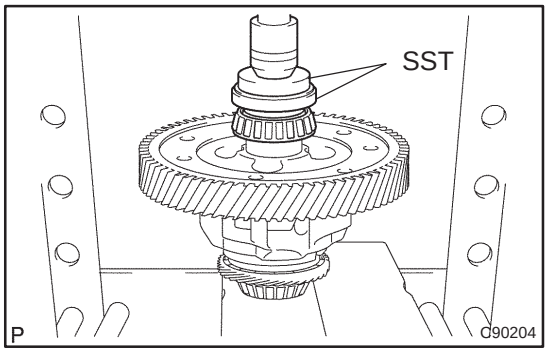

(c) Using SST, remove the FR differential case front tapered roller bearing (inner race)
SST 09631–12090, 09950–60010 (09951–00600), 09950–70010 (09951–07100)

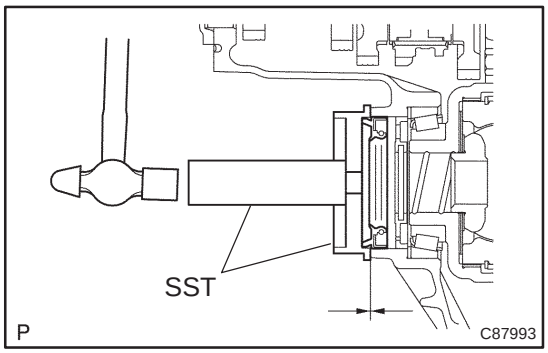

73. INSTALL TRANSMISSION CASE OIL SEAL

(a) Using SST and a hammer, install the transmission case oil seal to the manual transmission case.
SST 09608–32010, 09950–70010 (09951–07150)
(b) Coat the lip of transmission case oil seal with MP grease.

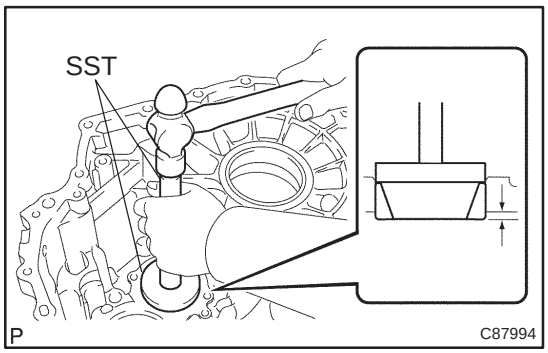

74. INSTALL OUTPUT SHAFT REAR BEARING

(a) Using SST and a hammer, install the output shaft rear bearing (outer race) to the manual transmission case.
SST 09950–60020 (09951–00680), 09950–70010 (09951–07100)
Clearance:3.8 – 4.4 mm (0.1509 – 0.1747 in.)

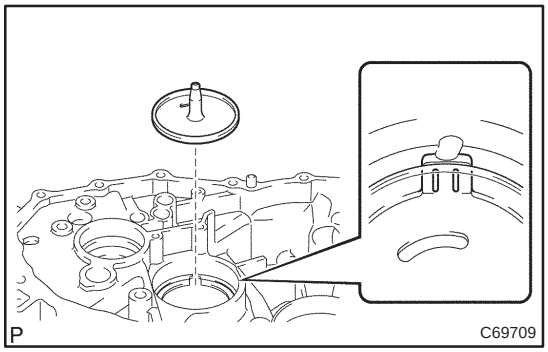

75. INSTALL OUTPUT SHAFT (MTM) COVER

(a) Coat the output shaft (MTM) cover with MP grease, install it to the manual transaxle case.

NOTICE:
Align the projection of the output shaft with the transmission grooves and install them.

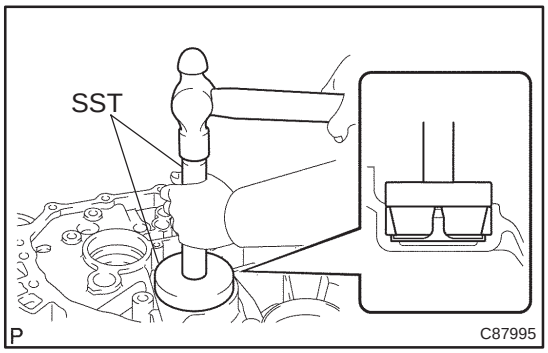

76. INSTALL OUTPUT SHAFT FRONT BEARING

(a) Using SST and a hammer, install the output shaft front bearing (outer race).
SST 09950–60020 (09951–00730), 09950–70010 (09951–07100)

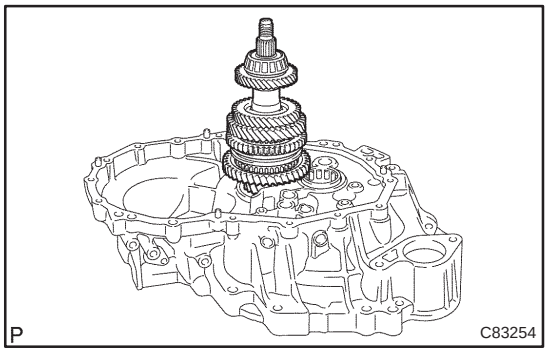

77. ADJUST OUTPUT SHAFT BEARING PRERELOAD

(a) Install the output shaft to the manual transaxle case.

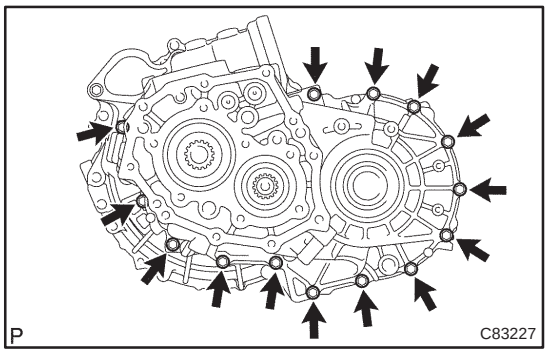

(b) Install the transmission case with 14 bolts to the manual transaxle case.
Torque: 29 N·m (300 kgf·cm, 21 ft·lbf)

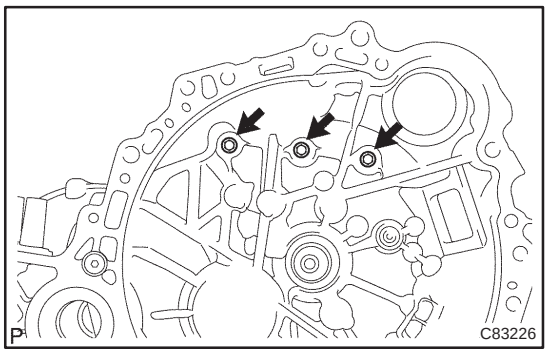

(c) Install the 3 bolts to the manual transaxle side.
Torque: 30 N·m (306 kgf·cm, 22 ft·lbf)

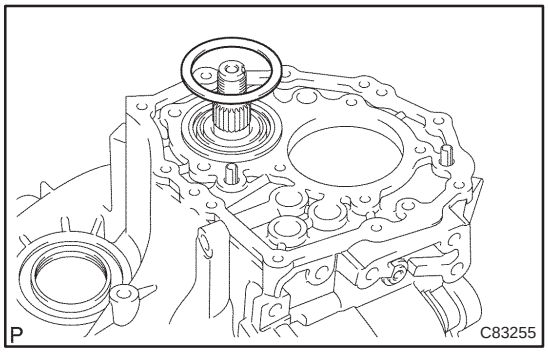

(d) Install the output shaft rear bearing shim to the output shaft.

HINT:
Install the same thickness of case shim as the removed one.

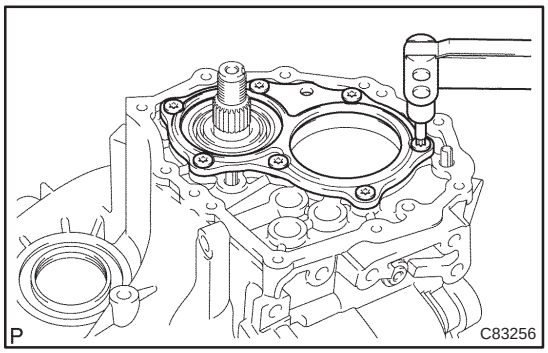

(e) Using a torx socket wrench(T45), install the bearing retainer RR with 7 screws to the manual transmission case.
Torque:42 N·m (430 kgf·cm, 31 ft·lbf)

(f) Install the new output rear set nut to the output shaft.

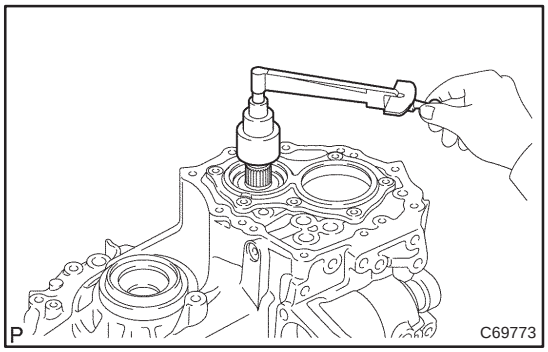

(g) Turn the output shaft in both directions to get it to smooth.

(h) Using a socket wrench and torque wrench, inspect the preload.

Preload:mm (in.)

Bearing	Torque
New	0.8–1.6 (8.16 – 16.32, 7.1–14.2)
Used	0.5–1.0 {5.10 – 10.20, 4.4 – 8.6)

(i) If the preload is out of the specification, select the output shaft rear bearing shim and adjust it.

HINT:

The preload of the output shaft rear bearing shim varies in torque from about 0.04 to 0.06 N·m is one size.

Shim: mm (in.)

Part No.	thickness:mm(in.)	Make
90564 – 59001	1.30 (0.0516)	0
90564 – 59002	1.35 (0.0536)	1
90564 – 59003	1.40 (0.0556)	2
90564 – 59004	1.45 (0.0576)	3
90564 – 59005	1.50 (0.0596)	4
90564 – 59006	1.55 (0.0615)	5
90564 – 59007	1.60 (0.0635)	6
90564 – 59008	1.65 (0.0655)	7
90564 – 59009	1.70 (0.0675)	8
90564 – 59010	1.75 (0.0695)	9
90564 – 59011	1.80 (0.0715)	A
90564 – 59012	1.85 (0.0734)	B
90564 – 59013	1.90 (0.0754)	C
90564 – 59014	1.95 (0.0774)	D
90564 – 59015	2.00 (0.0794)	E
90564 – 59016	2.05 (0.0814)	F
90564 – 59017	2.10 (0.0834)	G
90564 – 59018	2.15 (0.0854)	H
90564 – 59019	2.20 (0.0873)	J
90564 – 59020	2.25 (0.0893)	K
90564 – 59021	2.30 (0.0913)	L
90564 – 59022	2.35 (0.0933)	M
90564 – 59023	2.40 (0.0953)	N
90564 – 59024	2.45 (0.0973)	P
90564 – 59025	2.50 (0.0993)	Q

(j) Remove the output shaft rear set nut from the output shaft.

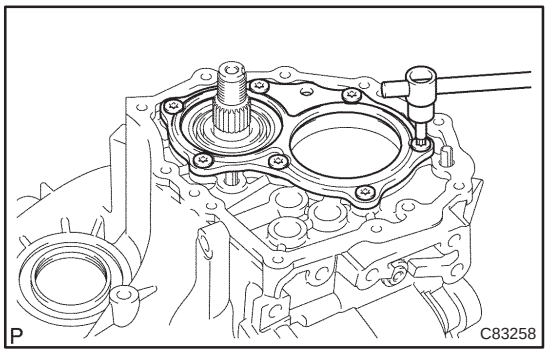

(k) Using a torx socket wrench(T45), remove the 7 screws and bearing retainer RR from the manual transmission case.

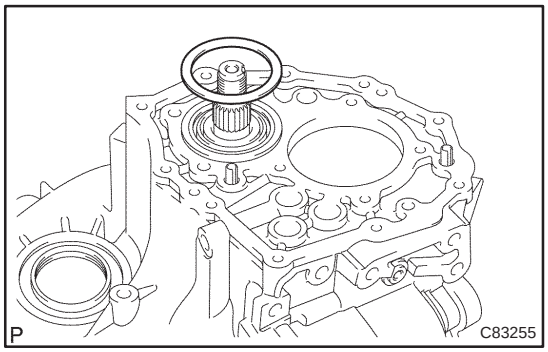

(l) Remove the output shaft rear bearing shim from the output shaft.

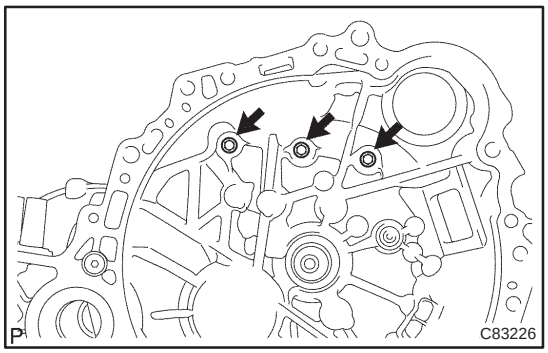

(m) Remove the 3 bolts.

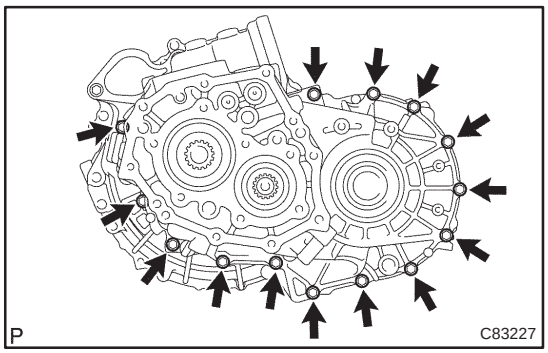

(n) Remove the 14 bolts and manual transmission case from the manual transaxle case.

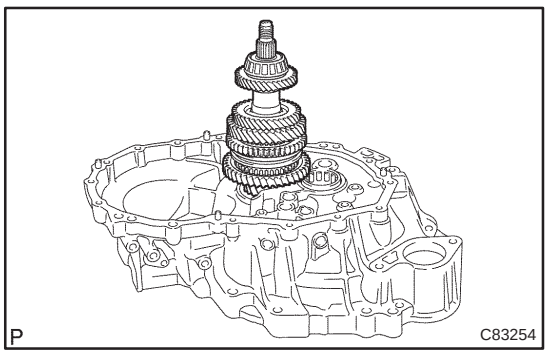

(o) Remove the output shaft assy from the front manual transaxle case.

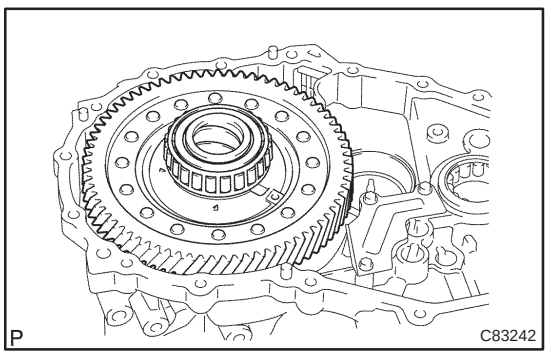

78. ADJUST TAPERED POLLER BEARING PRELOAD

(a) Install differential case assy to the manual transaxle case.

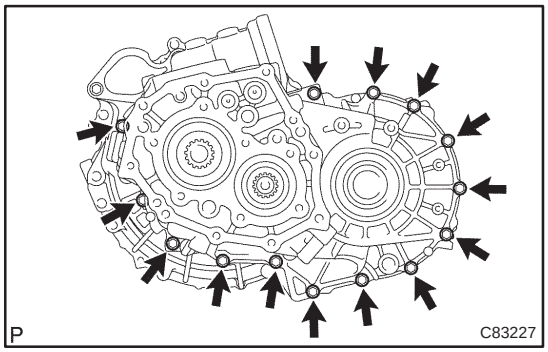

(b) Install the 14 bolts and manual transmission case to the manual transaxle case.
Torque: 29 N·m (300 kgf·cm, 21 ft·lbf)

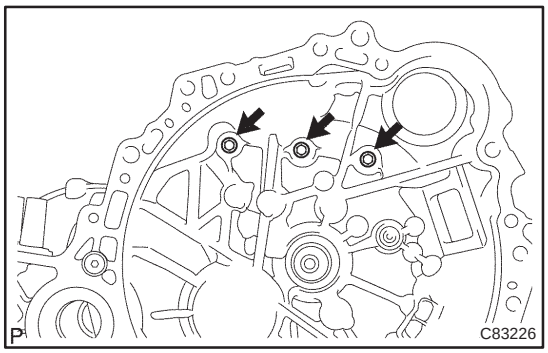

(c) Install the 3 bolts and front manual transaxle case side.
Torque: 30 N·m (306 kgf·cm, 22 ft·lbf)

(d) Turn the differential case in both directions to get it to smooth.

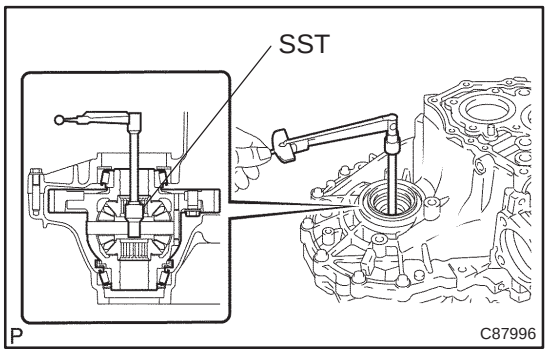

(e) Using SST and torque wrench, inspect preload.
SST 09564–32011
Preload: N·m (kgf·cm, 22 ft·lbf)

Bearing	Torque
New	0.8 – 0.16 (8.15 – 1.63, 7.1–14.2)
Used	0.5 – 1.0 (5.09 – 10.1, 4.4 – 8.6)

If the preload is out of the specification, select the front differential case shim RR and adjust it.
HINT:
The preload of the front differential case shim RR varies in torque from about 0.04 to 0.06 N·m is one size.

Shim:mm (in.)

Part No.	Thickness	Mark
90564 – 56055	2.00 (0.0794)	0
90564 – 56056	2.05 (0.0814)	1
90564 – 56057	2.10 (0.0834)	2
90564 – 56058	2.15 (0.0854)	3
90564 – 56059	2.20 (0.0873)	4
90564 – 56060	2.25 (0.0893)	5
90564 – 56061	2.30 (0.0913)	6
90564 – 56062	2.35 (0.0933)	7
90564 – 56063	2.40 (0.0953)	8
90564 – 56064	2.45 (0.0973)	9
90564 – 56065	2.50 (0.0993)	A
90564 – 56066	2.55 (0.1012)	B
90564 – 56067	2.60 (0.1032)	C
90564 – 56068	2.65 (0.1052)	D
90564 – 56069	2.70 (0.1071)	E
90564 – 56070	2.75 (0.1092)	F

Part No.	Thickness	Mark
90564 – 56071	2.80 (0.1112)	G
90564 – 56072	2.85 (0.1131)	H

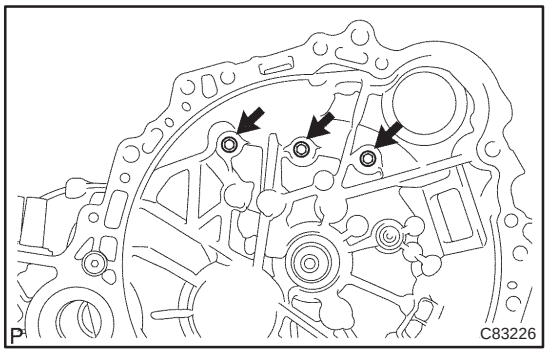

(f) Remove the 3 bolts.

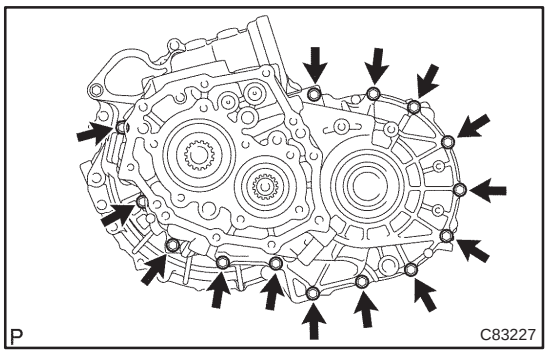

(g) Remove the 14 bolts and manual transmission case to the manual transaxle case.

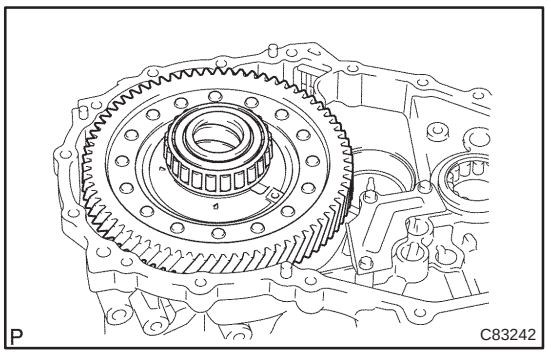

(h) Remove the differential case assy from the manual transaxle case.

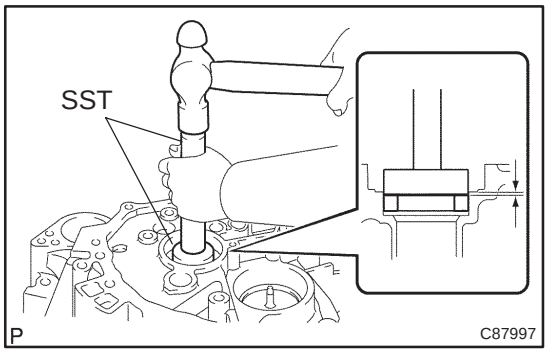

79. INSTALL FRONT TRANSAXLE CASE OIL SEAL

(a) Using SST and a hammer, install the front transaxle case oil seal No. 1 to the manual transaxle case.
SST 09950–60010 (09951–00420), 09950–70010 (09951–07150)

(b) Coat the lip of front transaxle case oil seal No. 1 with MP grease.
Clearance:1 – 2 mm (0.0397 –0.0794 in.)

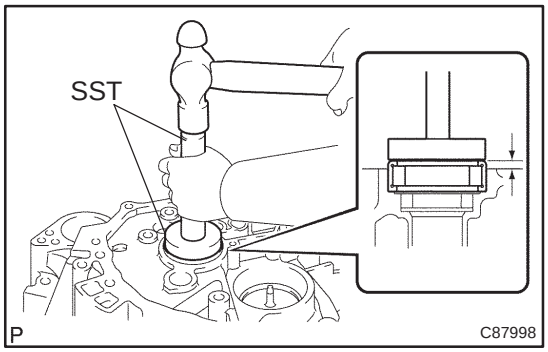

80. INSTALL INPUT SHAFT FRONT BEARING

(a) Coat the input shaft front bearing with gear oil, install it to the manual transaxle case.
SST 09950–60010 (09951–00570), 09950–70010 (09951–07150)
Clearance:4.28 – 4.60 mm (0.1699 in. – 0.1826 in.)

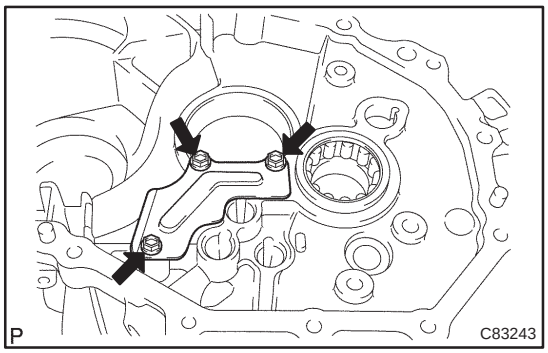

81. INSTALL MANUAL TRANSAXLE CASE RECEIVER

(a) Install the 3 bolts and manual transaxle case receiver to the manual transaxle case.
Torque:7 N·m (70 kgf·cm, 62 ft·lbf)

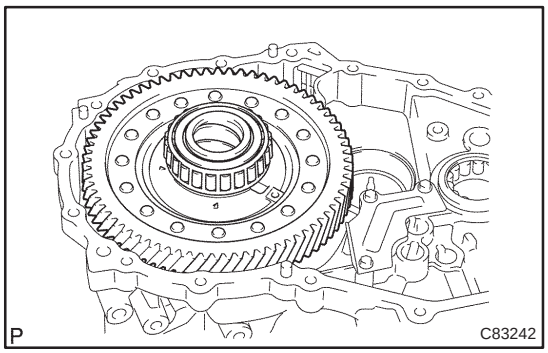

82. INSTALL DIFFERENTIAL CASE ASSY

(a) Coat the differential case taper roller bearing with gear oil, install the differential case assy to the manual transaxle case.

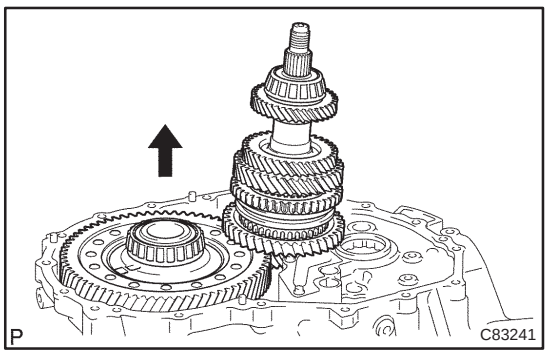

83. INSTALL OUTPUT SHAFT ASSY

(a) Apply gear oil to each sliding part of the output shaft assy.
(b) Lift the differential case assy up, leaning the output shaft assy install to the manual transaxle case.

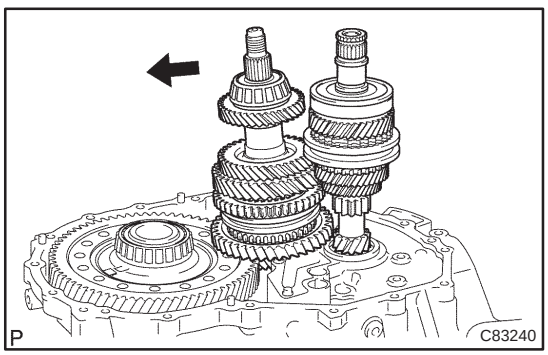

84. INSTALL INPUT SHAFT ASSY

(a) Apply gear oil to each sliding part of the input shaft assy.
(b) Leaning output shaft assy, install the input shaft assy to the manual transaxle case.

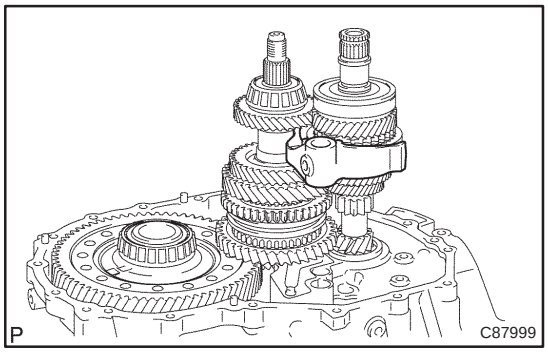

85. INSTALL GEAR SHIFT FORK NO.2

(a) Coat the gear shift fork No. 2 with gear oil, install it to the input shaft assy.

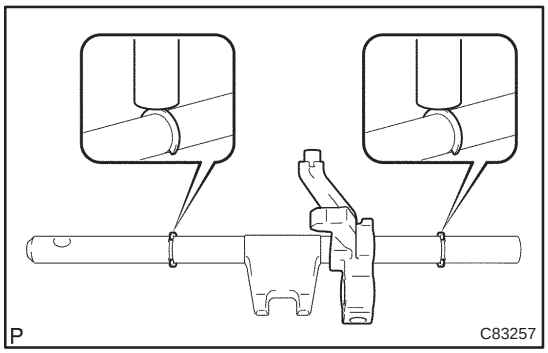

86. INSTALL GEAR SHIFT FORK NO.3

(a) Install the gear shift fork No.3 to the gear shift fork shaft No. 3.
(b) Using a brass bar and hammer, install the 2 shift fork shaft snap rings to the gear shift fork shaft.

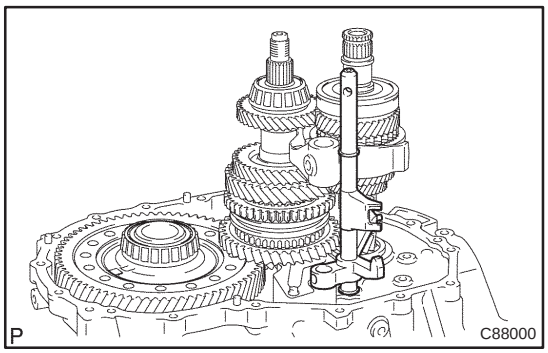

(c) Apply gear oil to each sliding part of the gear shift fork shaft No.3, install it to the manual transaxle case.

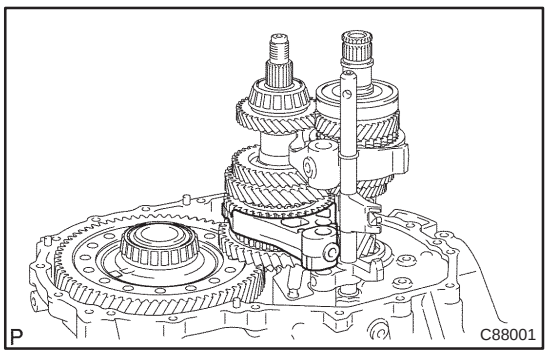

87. INSTALL GEAR SHIFT FORK NO.1

(a) Apply gear oil to each sliding part of the gear shift fork No.1, install it to the output shaft assy.

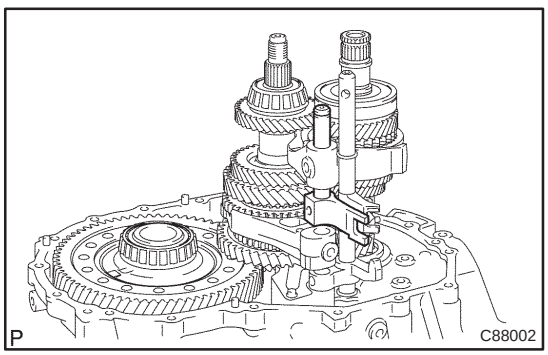

88. INSTALL GEAR SHIFT FORK SHAFT NO.2

(a) Install the gear shift head No.1 to the gear shift fork shaft No.2.
(b) Apply gear oil to each sliding part of the gear shift fork shaft No.2, install it to the manual transaxle case.

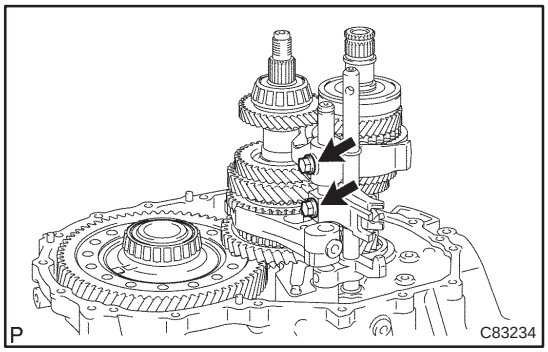

(c) Install the 2 shift fork bolts to the gear shift head No.1.
Torque:24 N·m (240 kgf·cm, 17 ft·lbf)

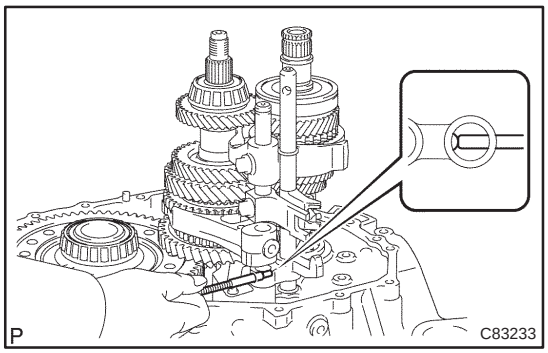

89. INSTALL REVERSE SHIFT FORK ROLLER

(a) Using a magnetic finger, install the reverse shift fork roller to the reverse shift fork.

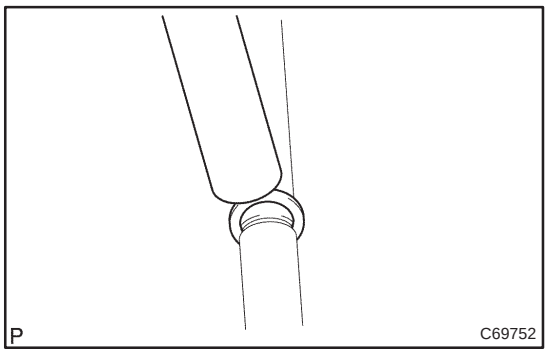

90. INSTALL GEAR SHIFT FORK SHAFT NO.1

(a) Using a brass bar and hammer, install the shift fork shaft snap ring to the shift fork shaft No.1.

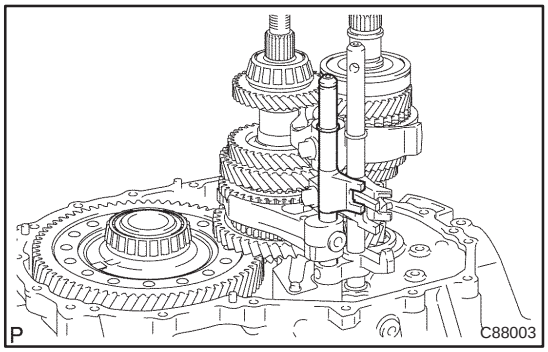

(b) Install the gear shift fork shaft No. 1 to the manual transaxle case.

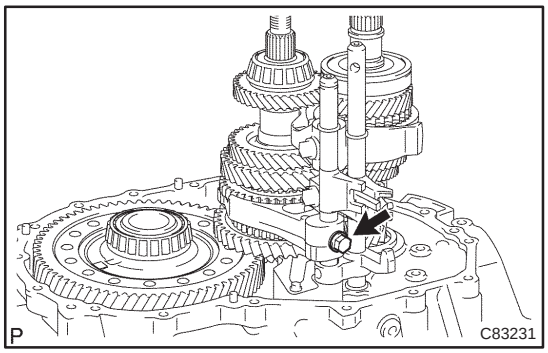

(c) Install the shift fork bolt to the gear shift fork No. 1.
Torque:24 N·m (240 kgf·cm, 17 ft·lbf)

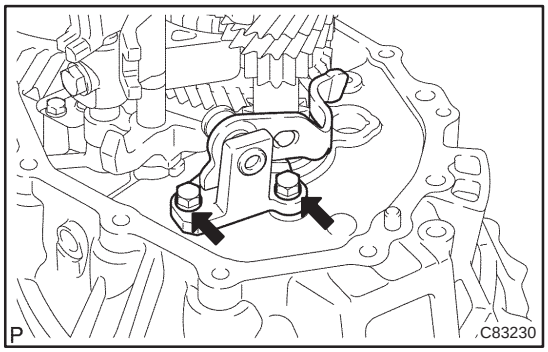

91. INSTALL REVERSE SHIFT ARM BRACKET ASSY

(a) Install the 2 bolts and reverse shift arm bracket assy to the manual transaxle case.
Torque:17 N·m (175 kgf·cm, 13 ft·lbf)

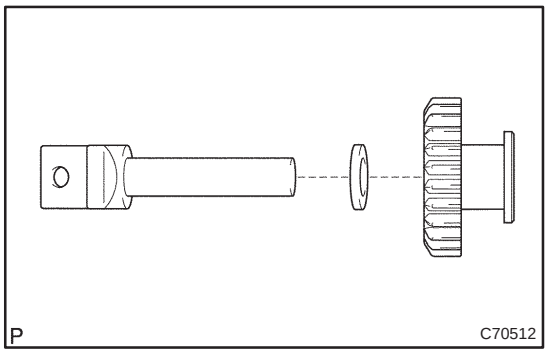

92. INSTALL REVERSE IDLER GEAR SUB–ASSY

(a) Coat the reverse idler gear and reverse idler thrust washer with MP grease, install them to the reverse idler gear shaft.

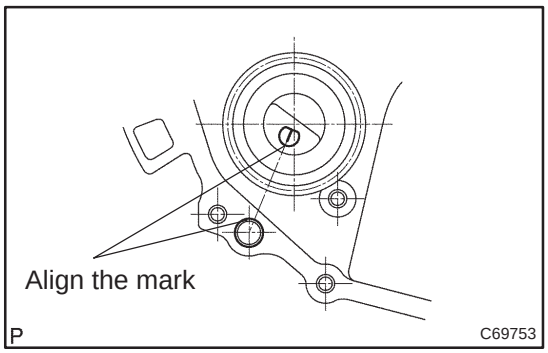

(b) Install the reverse idler gear to the manual transaxle case.
HINT:
Align the mark of the reverse idler gear shaft with the hole of the bolt.

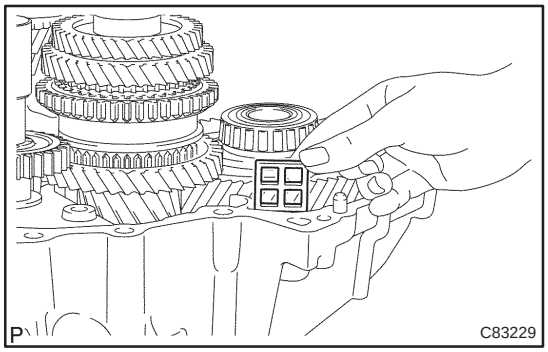

93. INSTALL TRANSMISSION MAGNET

(a) Clean the transmission magnet, install it to the manual transaxle case.

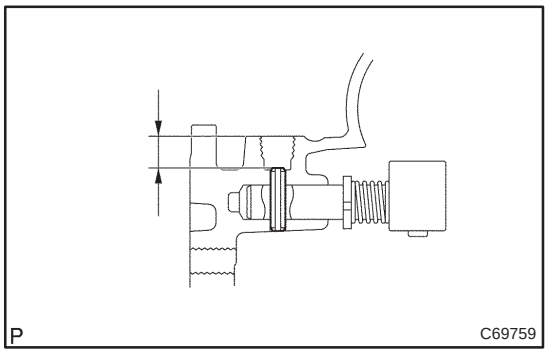

94. INSTALL REVERSE RESTRICT PIN ASSY

(a) Using a pin punch(ϕ 5mm), install the reverse restrict pin and reverse restrict pin assy.
Clearance:12.5 – 13.5 mm (0.4963 – 0.53595 in.)

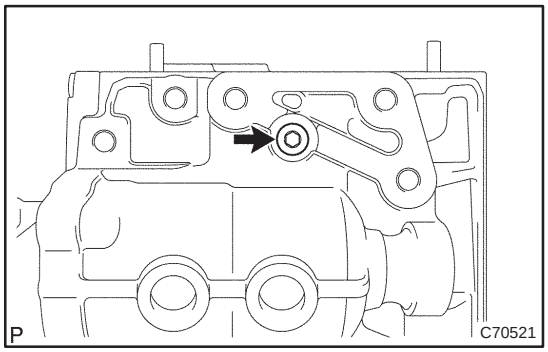

(b) Coat the reverse restrict pin plug with adhesive 1324, using hexagon wrench(6mm), install the manual transmission case.
Torque:13 N·m (133 kgf·cm, 9.6 ft·lbf)

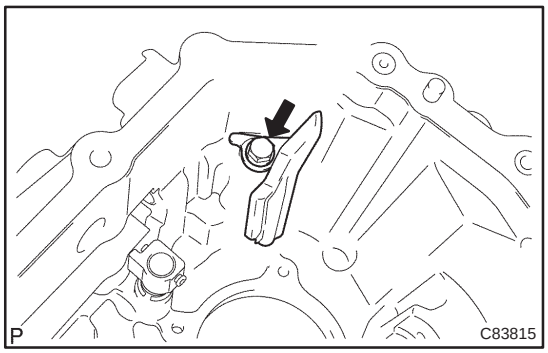

95. INSTALL OIL RECEIVER PIPE NO.1 (MTM)

(a) Install the bolt and oil receiver pipe No. 1 (MTM) to the manual transmission case.
Torque:17 N·m (175 kgf·cm, 13 ft·lbf)

HINT:
Tighten the oil receiver pipe No. 1 with the bolt while transmission case is being put.

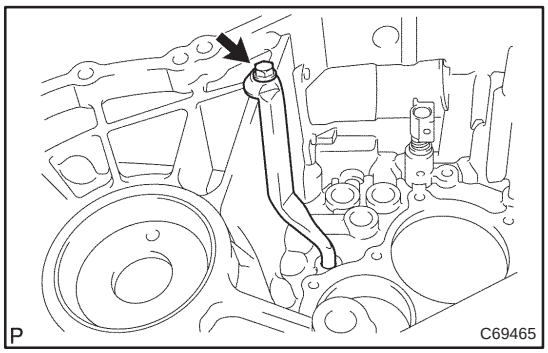

96. INSTALL OIL RECEIVER PIPE NO.2 (MTM)

(a) Install the bolt and oil receiver pipe No. 2 (MTM) to the manual transmission case.
Torque:17 N·m (175 kgf·cm, 13 ft·lbf)

HINT:
Tighten the oil receiver pipe No. 2 (MTM) with the bolt while manual transmission case is being put.

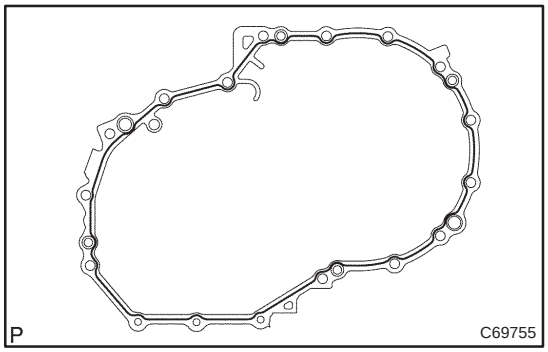

97. INSTALL MANUAL TRANSMISSION CASE

(a) Apply FIPG bead condition sequentially to the shown position in the diagram of the manual transmission case.

HINT:
Install within 10 minutes after applying FIPG.

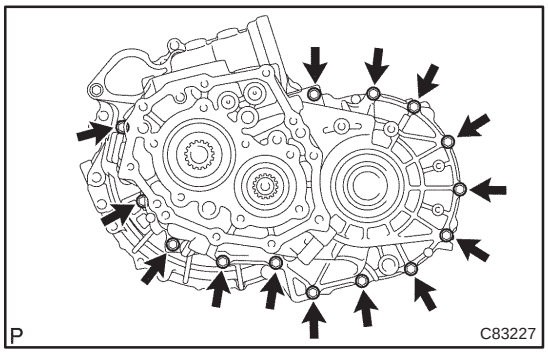

(b) Install the manual transmission case and 14 bolts to the manual transaxle case.
Torque:29 N·m (300 kgf·cm, 22 ft·lbf)

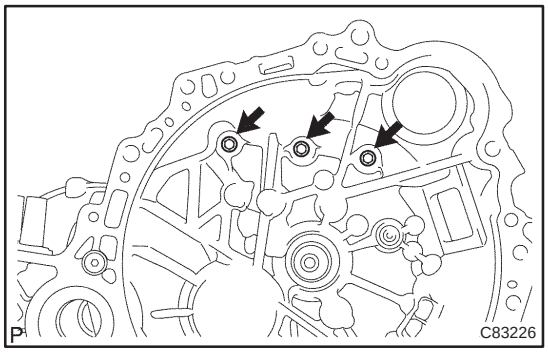

(c) Install the 3 bolts to the manual transaxle case side.
Torque:30 N·m (306 kgf·cm, 22 ft·lbf)

98. INSTALL CLUTCH TUBE BRACKET

(a) Install the clutch tube with 3 bolt bracket.
Torque:17 N·m (173 kgf·cm, 14 ft·lbf)

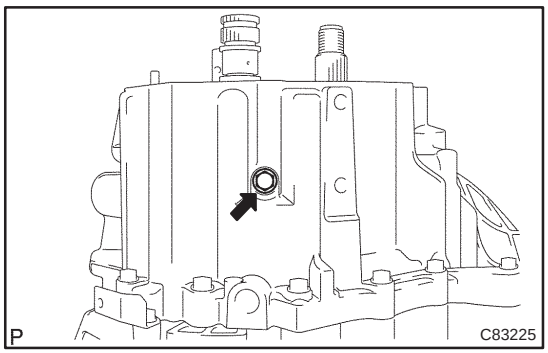

99. INSTALL REVERSE IDLER GEAR SHAFT BOLT

(a) Coat the 4 bolts with sealant, install it and new gasket to the manual transmission case.
Torque:30 N·m (306 kgf·cm, 22 ft·lbf)
Sealant:
Part No. 08833 – 00080, THREE BOND 1344, LOCTITE 242 or equivalent

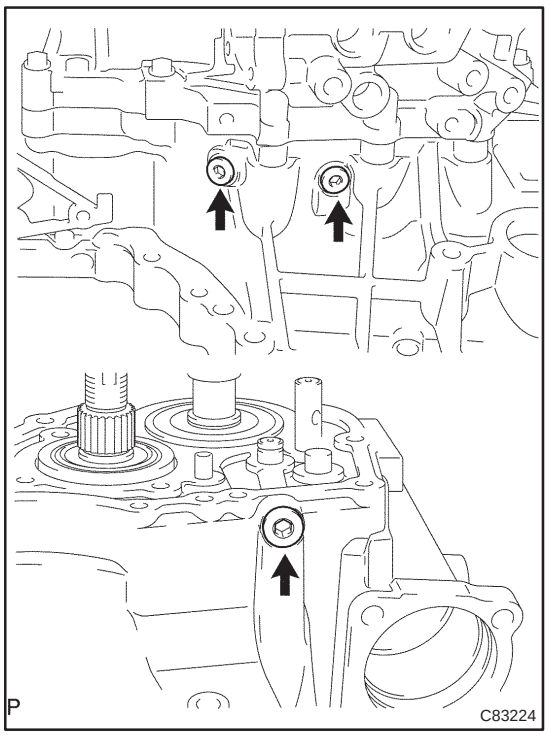

100. INSTALL SHIFT DETENT BALL PLUG

(a) Coat the shift detente ball plug with sealant, install it with using a hexagon wrench(6 mm).
Torque: 25 N·m (250 kgf·cm, 18 ft·lbf)
Sealant:
Part No. 08833 – 00080, THREE BOND 1344, LOCTITE

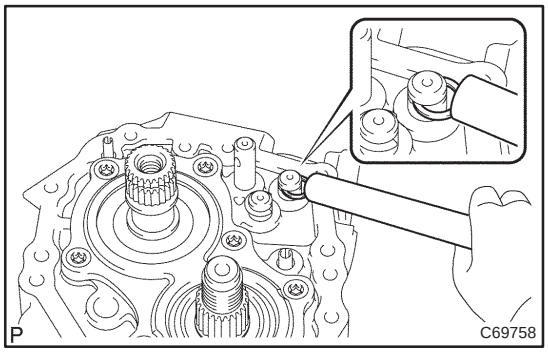

101. INSTALL SHIFT FORK SHAFT SHAFT SNAP RING

(a) Using a brass bar and hammer, install the shift fork shaft snap ring to the gear shift fork shaft No. 1.

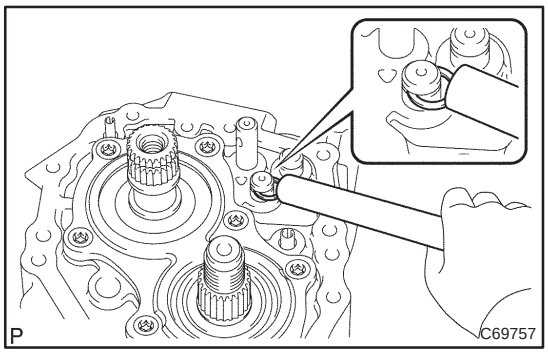

(b) Using a brass bar and hammer, install the shift fork shaft snap ring to the gear shift fork shaft No. 2.

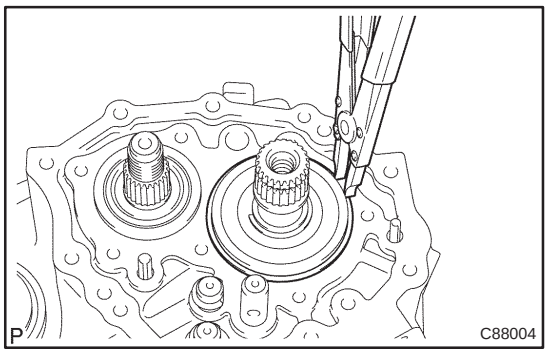

102. INSTALL INPUT SHAFT REAR BEARING SHAFT SNAP RING

(a) Using a snap ring expander, install the input shaft rear bearing hole snap ring.

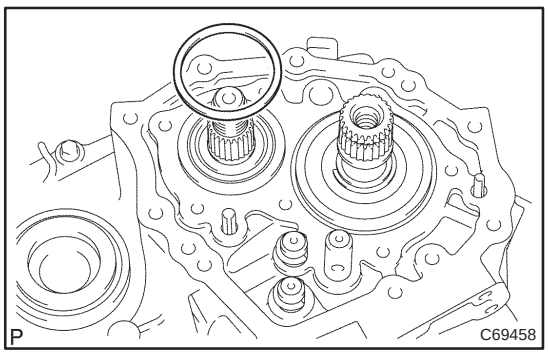

103. INSTALL OUTPUT SHAFT REAR BEARING SHIM

(a) Install the output shaft rear bearing shim to the output shaft.

HINT:
Install the same thickness of the case shim as the remove one.

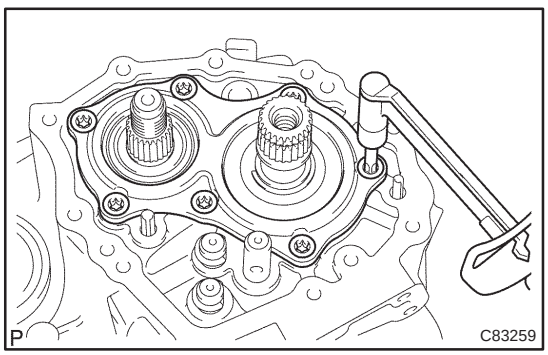

104. INSTALL BEARING RETAINER REAR (MTM)

(a) Coat the bearing retainer rear (MTM) with sealant, install it with using a torx wrench(T45).
Torque:42 N·m (430 kgf·cm, 31 ft·lbf)

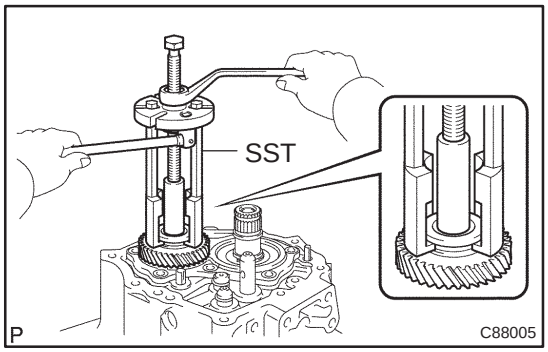

105. INSTALL 5TH DRIVEN GEAR

(a) Using SST, install the 5th driven gear to the output shaft.
SST 09950–30012 (09951–03010, 09953–03010, 09954–03010, 09956–03030, 09955–03011)

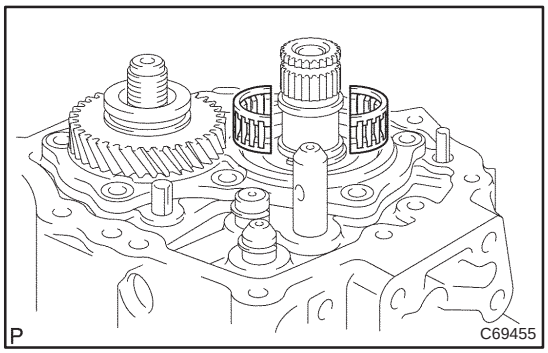

106. INSTALL 5TH GEAR NEEDLE ROLLER BEARING

(a) Coat the 5th gear needle roller bearing with gear oil, install it to the input shaft.

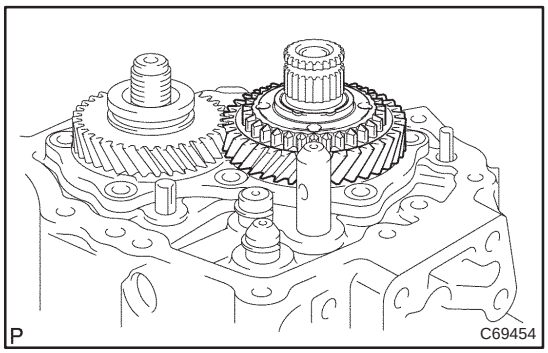

107. INSTALL 5TH GEAR

(a) Coat the 5th gear with gear oil, install it to the input shaft.

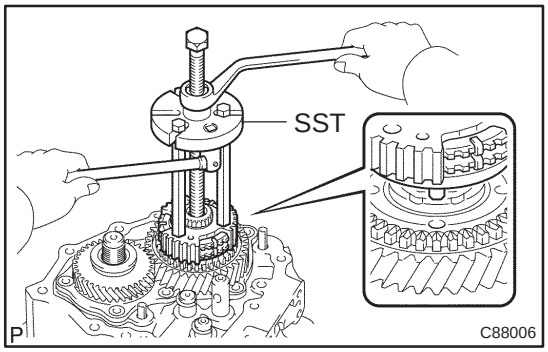

108. INSTALL TRANSMISSION CLUTCH HUB NO.3

(a) Using SST, install the transmission clutch hub No. 3 to the input shaft.
SST 09950–30012 (09951–03010, 09953–03010, 09954–03010)

NOTICE:
Align the projection of the synchronizer ring with the hole of the 5th gear and install them.

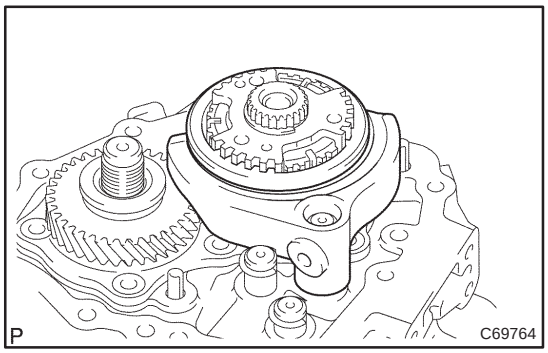

(b) Install the transmission hub sleeve No. 3 and gear shift fork No. 3 to the transmission clutch hub No. 3.

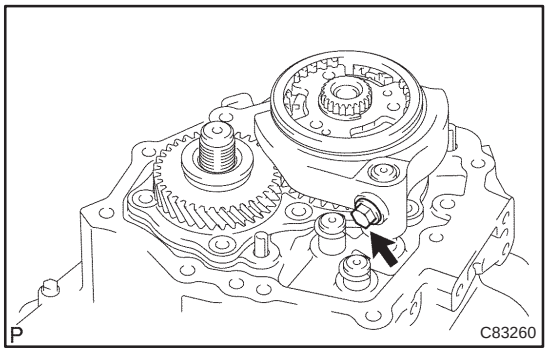

(c) Coat the shift fork bolt with sealant, install it to the gear shift fork No. 3.
Sealant:
Part No. 08833 – 00080, THREE BOND 1344, LOCTITE 242 or equivalent
Torque: 24 N·m (244 kgf·cm, 17 ft·lbf)

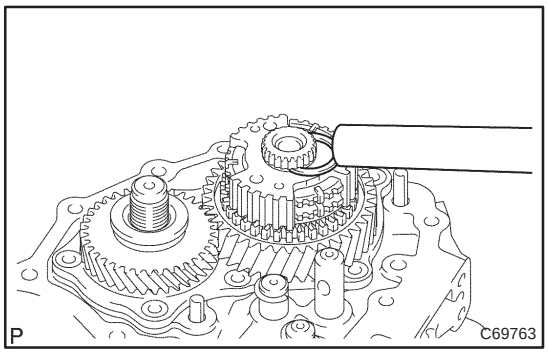

(d) Select a snap ring that will minimum axial play. Using a brass bar and a hammer, install the shaft snap ring.
Clearance:0.1 mm or less
Snap ring:mm (in.)

Part No.	Thickness	Mark
90520–27061	1.75 – 1.80 (0.0695 – 0.0715)	a
90520–27062	1.80 – 1.85 (0.0715 – 0.0734)	b
90520–27063	1.85 – 1.90 (0.0734 – 0.0754)	c
90520–27064	1.90 – 1.95 (0.0754 – 0.0774)	d
90520–27065	1.95 – 2.00 (0.0774 – 0.0794)	e
90520–27066	2.00 – 2.05 (0.0794 – 0.0814)	f
90520–27067	2.05 – 2.10 (0.0814 – 0.0834)	g
90520–27068	2.10 – 2.15 (0.0834 – 0.0854)	h
90520–27069	2.15 – 2.20 (0.0854 – 0.0873)	j

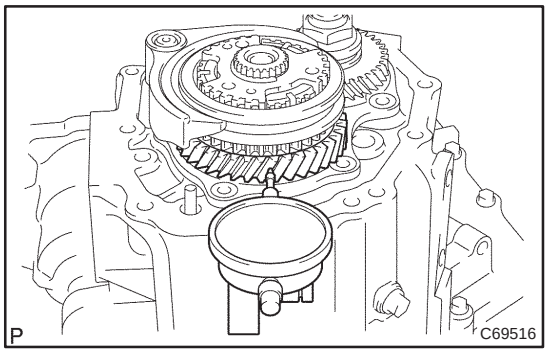

109. INSPECT 5TH GEAR RADIAL CLEARANCE
(a) Using a dial indicator, inspect the 5th gear radial clearance.
Standard clearance:
0.009 – 0.050 mm (0.0004 – 0.0020 in.)
If the clearance is out of the specification, replace 1st gear needle roller bearing.

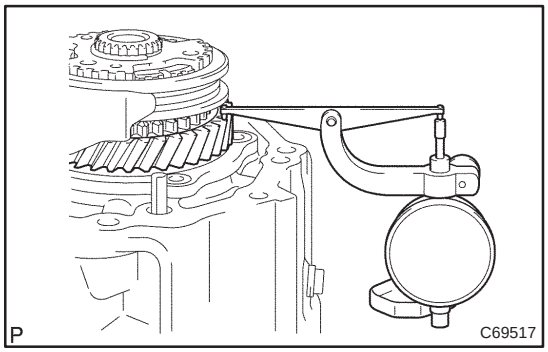

110. INSPECT 5TH GEAR THRUST CLEARANCE

(a) Using a dial indicator, inspect the 5th gear thrust clearance.

Standard clearance:
0.10 – 0.65 mm (0.0040 – 0.0258 in.)

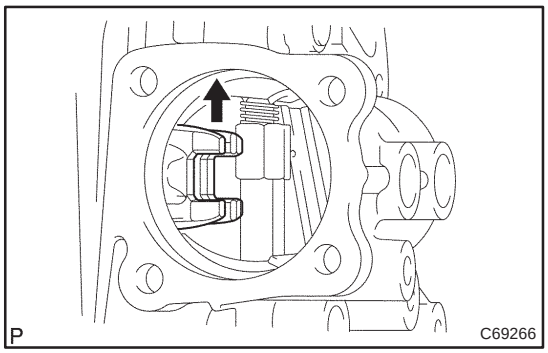

111. INSTALL MANUAL TRANSMISSION OUTPUT SHAFT REAR SET NUT

(a) Engage the gear double meshing.

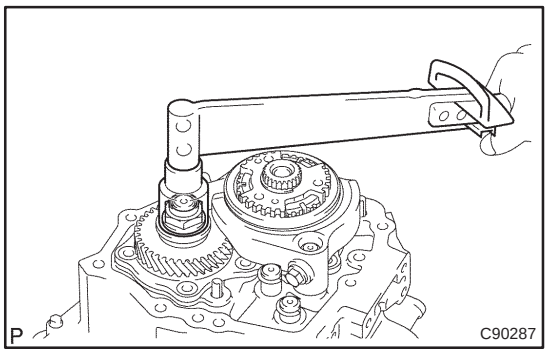

(b) Install the new manual transmission output shaft rear set nat.

Torque: 123 N·m (1250 kgf·cm, 90 ft·lbf)

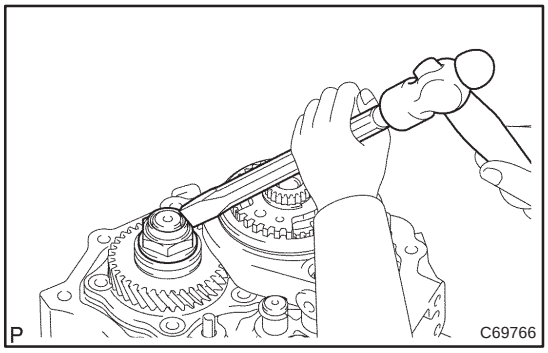

(c) Using a chisel and a hammer, stake the manual transmission output shaft rear set nat.

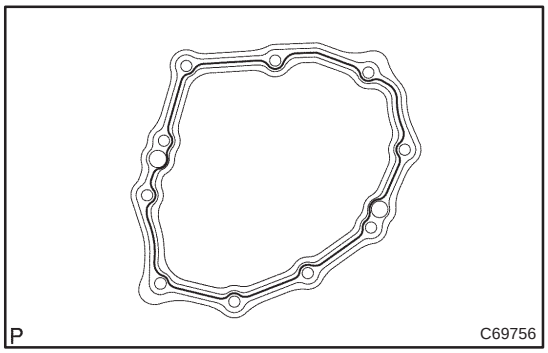

112. INSTALL MANUAL TRANSMISSION CASE COVER SUB–ASSY

(a) Apply FIPG to the transaxle case cover sub–assy, as shown to the installation.

FIPG:
Part No. 08826–00090, THREE BOND 1281

NOTICE:
Parts must be assembled 10 minutes of application otherwise the packing (FIPG) material

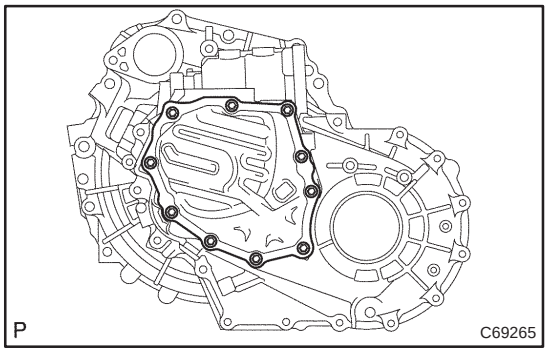

(b) Install the transmission case cover sub–assy with 10 bolts to the manual transaxle case.

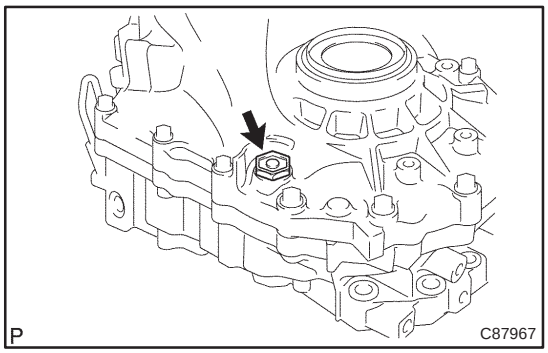

113. INSTALL DRAIN (MTM) PLUG SUB–ASSY

(a) Install the drain plug sub–assy with new gasket to the manual transmission case.
Torque:49 N·m (500 kgf·cm, 36 ft·lbf)

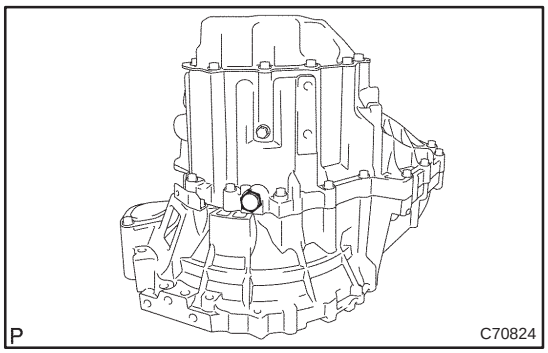

114. INSTALL MANUAL TRANSMISSION FILLER PLUG

(a) Install the manual transmission filler plug with new gasket to the oil seal.
Torque:49 N·m (500 kgf·cm, 36 ft·lbf))

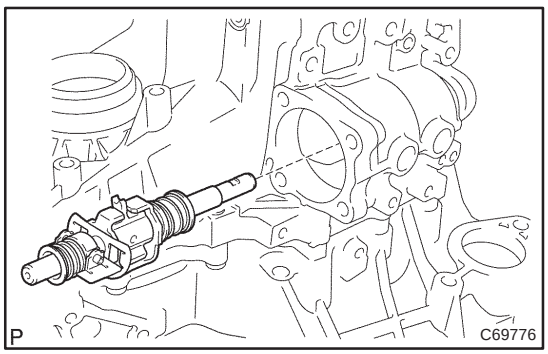

115. INSTALL SHIFT & SELECT LEVER SHAFT ASSY

(a) coat the shift & select lever shaft assy with gear oil, install it to the manual transmission case.

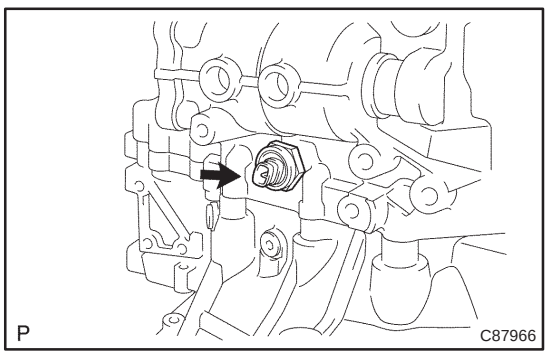

116. INSTALL BACK UP LAMP SWITCH ASSY

(a) install back up lamp switch assy to the manual transmission case.
Torque:40 N·m (410 kgf·cm, 30 ft·lbf)

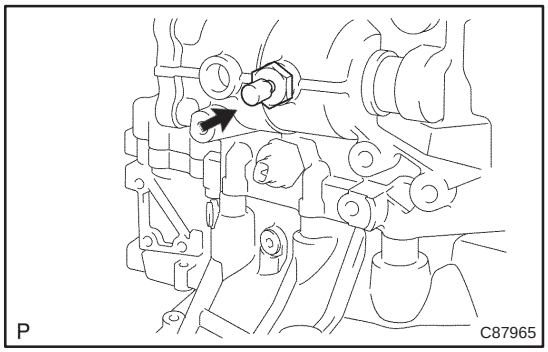

117. INSTALL MANUAL TRANSMISSION BREATHER PLUG

(a) Install the new gasket with manual transmission breather plug to the manual transmission cease.
Torque:49 N·m (500 kgf·cm, 36 ft·lbf)

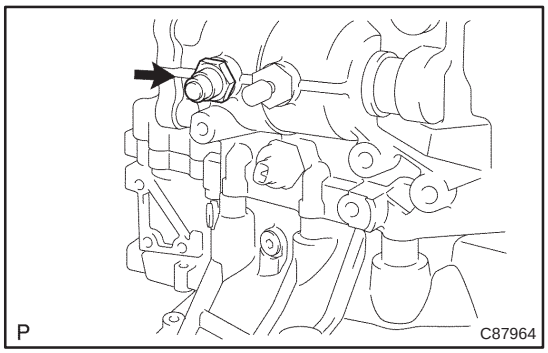

118. INSTALL LOCK BALL ASSY NO.1

(a) Install the lock ball assy No.1 to the manual transmission case.
Torque:29 N·m (300 kgf·cm, 22 ft·lbf)

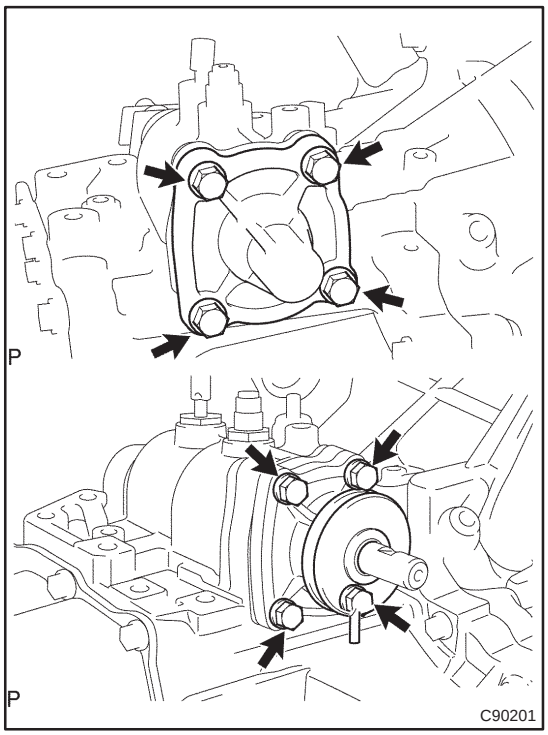

119. INSTALL CONTROL SHAFT COVER

(a) Coat the 4 bolts with sealant, install it, new gasket with control shaft cover.
Sealant:
Part No. 08833 – 00080, THREE BOND 1344, LOCTITE 242 or equivalent
Torque:20 N·m (200 kgf·cm, 14 ft·lbf)

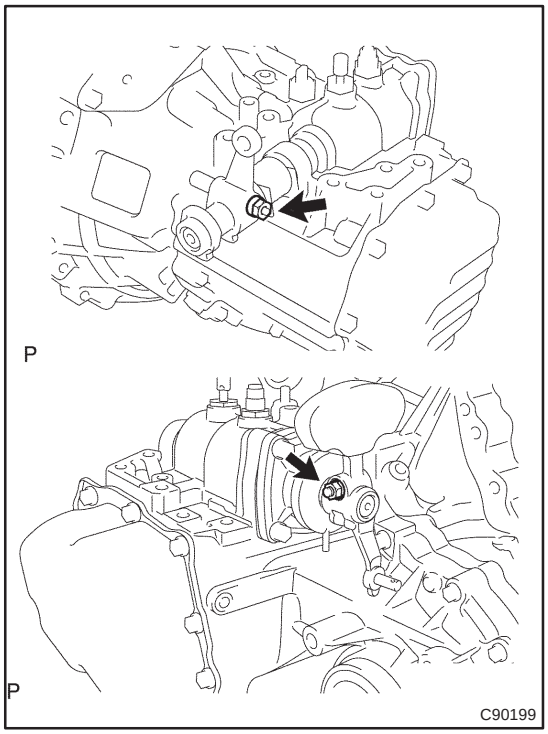

120. INSTALL CONTROL SHIFT LEVER

(a) Install the control shift lever with shift outer lock pin to the
(b) install the spring washer with nat.
Torque: 6.4 N·m (65 kgf·cm, 57 in.·lbf)



121. INSTALL SELECTING BELL CRANK ASSY

(a) Coat the 2 bolts with sealant, install it with selecting bell clank assy to the manual transmission cease.
Sealant:
Part No. 08833 – 00080, THREE BOND 1344, LOCTITE 242 or equivalent
Torque: 20 N·m (200 kgf·cm, 14 ft·lbf)

122. INSTALL TRANSAXLE CASE COVER

(a) Install the transaxle case cover with 2 bolts.

123. INSTALL SPEEDOMETER DRIVEN HOLE COVER SUB–ASSY

(a) Install the bolt and speedometer driven hole cover sub–assy to the transmission case.

124. INSTALL CLUTCH RELEASE FORK BOOT

(a) Install the clutch release fork bolt to the manual transaxle case.

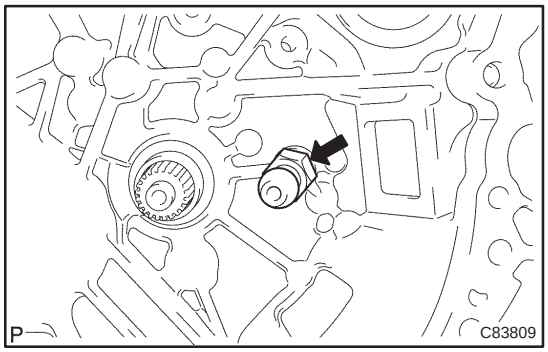

125. INSTALL RELEASE FORK SUPPORT

(a) Using a deep socket wrench, install the release fork support to the manual transaxle case.
Torque:
E355:39.2 N·m (400 kgf·cm, 28.91 ft·lbf)
E356 :47.1 N·m (480 kgf·cm, 34.74 ft·lbf)

126. INSTALL CLUTCH RELEASE BEARING ASSY

(a) Coat the clutch release bearing assy with release hub grease, install it to the clutch release fork sub–assy.
Sealant:
Part No. 0887 – 01806, RELEASE HUB GREASE or equivalent
(b) Apply clutch spline grease to the input shaft spline.

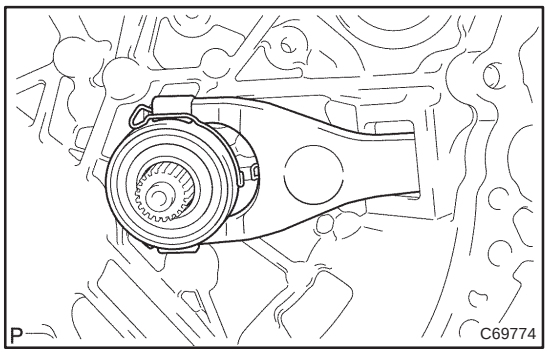

127. INSTALL CLUTCH RELEASE FORK SUB–ASSY

(a) Install the clutch release fork sub – assy to the input shaft.

INPUT SHAFT ASSY (E355/E356)

4103X–01

OVERHAUL

HINT:

COMPONENTS:See page 41–1

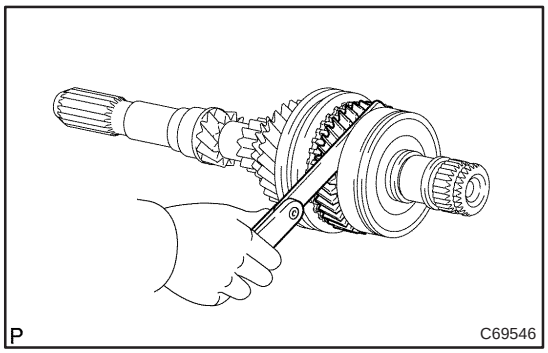

1. INSPECT 4TH GEAR THRUST CLEARANCE

(a) Using a feeler gauge, measure the 4th gear thrust clearance.

Standard clearance:
0.1 – 0.57 mm (0.0039– 0.0224 in.)

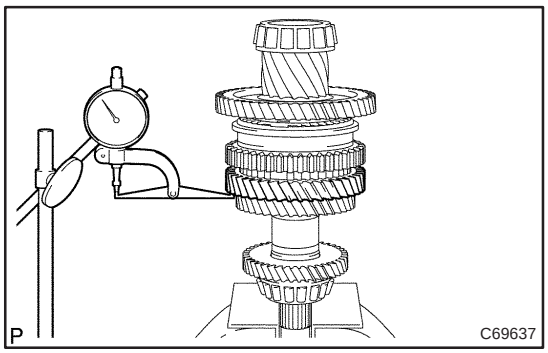

2. INSPECT 3RD GEAR THRUST CLEARANCE

(a) Using a dial indicator, measure the 3rd gear thrust clearance.

Standard clearance:
0.1 – 0.35 mm (0.0039 – 0.0014 in.)

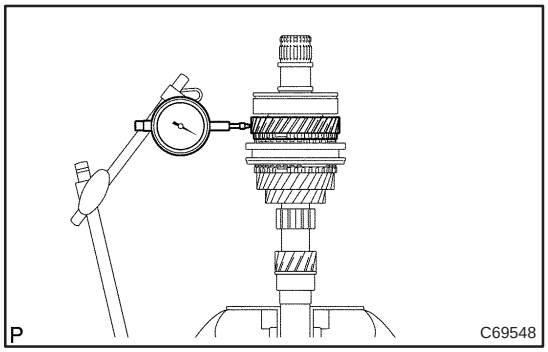

3. INSPECT 4TH GEAR RADIAL CLEARANCE

(a) Using a dial indicator, measure the 4th gear radial clearance.

Standard clearance: mm (in.)

Bearing	Standard clearance
KOYO made	0.009 – 0.053] (0.0004 – 0.0021)
NSK made	0.009 – 0.051 (0.0004 – 0.00020)

If the clearance exceeds the maximum, replace the 4th gear needle roller bearing.

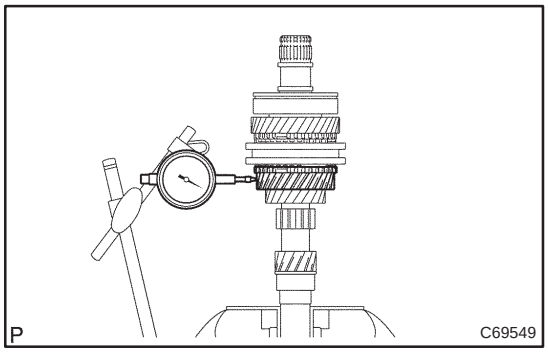

4. INSPECT 3RD GEAR RADIAL CLEARANCE

(a) Using a dial indicator, measure the 3rd gear radial clearance.

Standard clearance: mm (in.)

Bearing	Standard clearance
KOYO made	0.009 – 0.053 (0.0004 – 0.0021)
NSK made	0.009 – 0.051 (0.0004 – 0.0020)

If the clearance exceeds the maximum, replace the 3rd gear needle roller bearing.

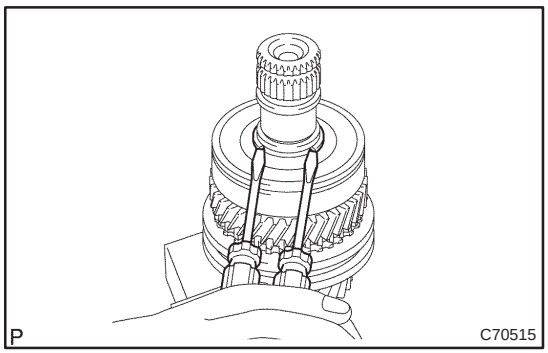

5. REMOVE 4TH GEAR

(a) Fix the input shaft assy and soft jaws to the valse.

(b) Using a 2 screwdrivers and a hammer, remove the input shaft rear bearing shaft snap ring from the input shaft.

NOTICE:

Using a waste to prevent the snap ring from being scattered.

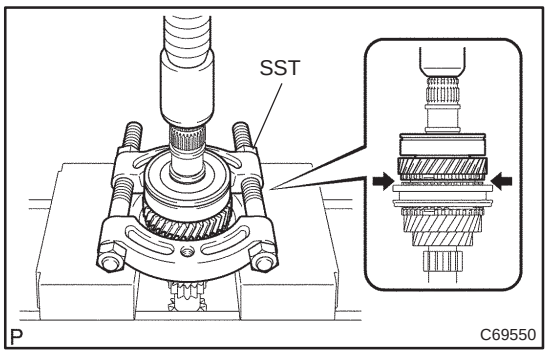

(c) Using SST and a press, remove the input shaft rear bearing and 4th gear.

SST 09950–00020

NOTICE:

Do not tighten SST excessively.

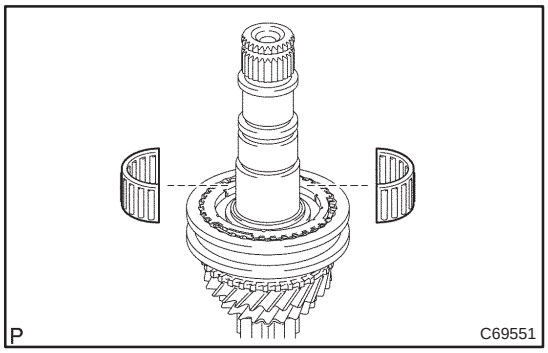

6. REMOVE 4TH GEAR NEEDLE ROLLER BEARING

(a) Remove the 4th gear needle roller bearing from the input shaft.

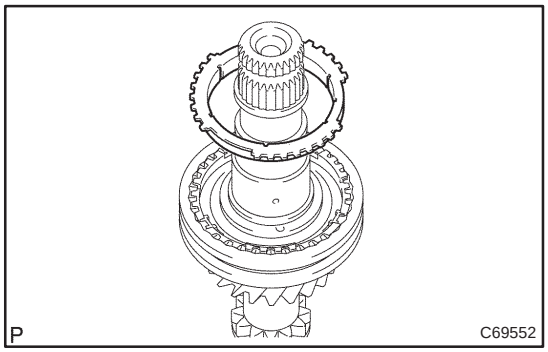

7. REMOVE 2ND SYNCHRONIZER OUTER RING

(a) Remove the 2nd synchronizer outer ring from the transmission clutch hub No.2.

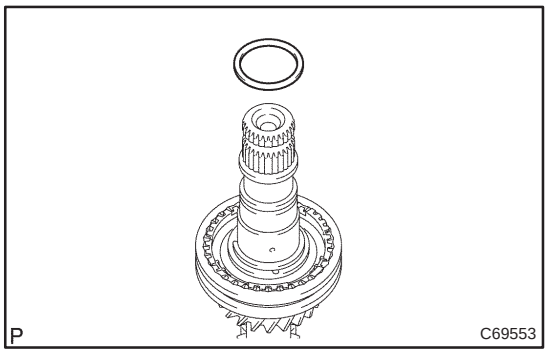

8. REMOVE 4TH GEAR BEARING SPACER

(a) Remove the 4th gear bearing spacer from the transmission clutch hub No.2.

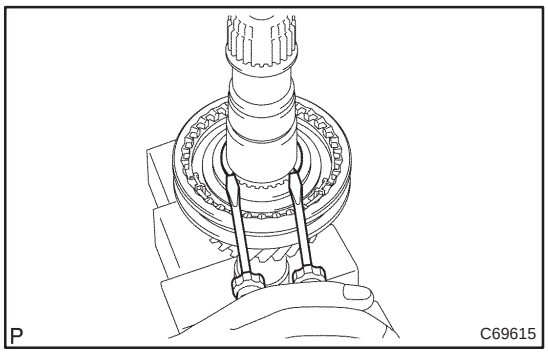

9. REMOVE 3RD GEAR

(a) Using 2 screwdrivers and a hammer, remove the clutch hub No.2 setting shaft snap ring from the input shaft.

NOTICE:
Using a waste to prevent the snap ring from being scattered.

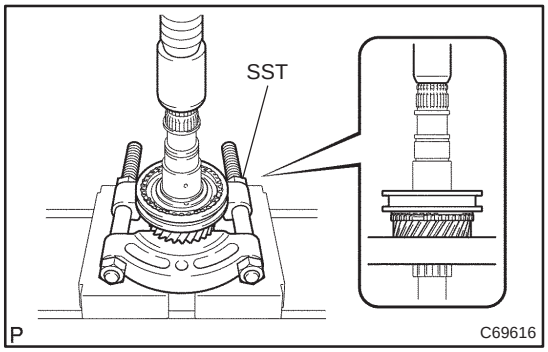

(b) Using SST and a press, remove the transmission clutch hub No.2 and 3rd gear from the input shaft.
SST 09950–00020

NOTICE:
Do not tighten SST excessively.

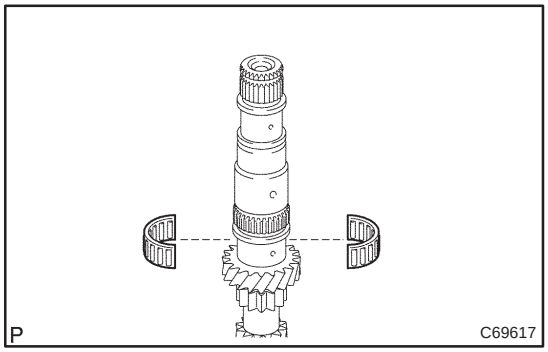

10. REMOVE 3RD GEAR NEEDLE ROLLER BEARING

(a) Remove the 3rd gear needle roller bearing from the input shaft.

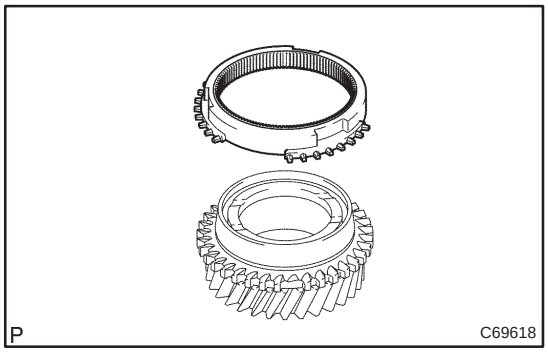

11. REMOVE SYNCHRONIZER RING NO.3

(a) Remove the synchronizer ring No.3 from the 3rd gear.

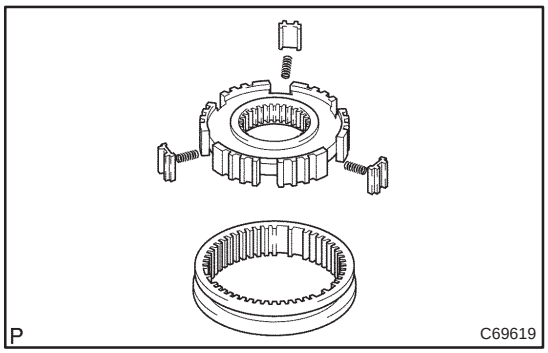

12. REMOVE TRANSMISSION HUB SLEEVE NO.2

(a) Remove the transmission hub sleeve No.2, 3 synchromesh sifting keys and 3 synchromesh sifting key springs from the transmission clutch hub No.2.

NOTICE:
Using a waste to prevent the sifting key and sifting key spring from being scattered.

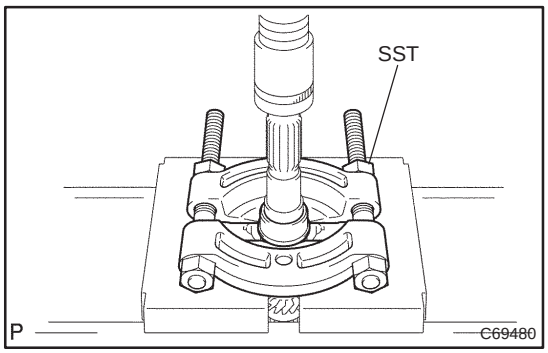

13. REMOVE INPUT SHAFT FRONT BEARING

(a) Using SST and a press, remove the input shaft bearing front (inner race) from the input shaft.
SST 09950–00020

NOTICE:
Do not tighten SST excessively.

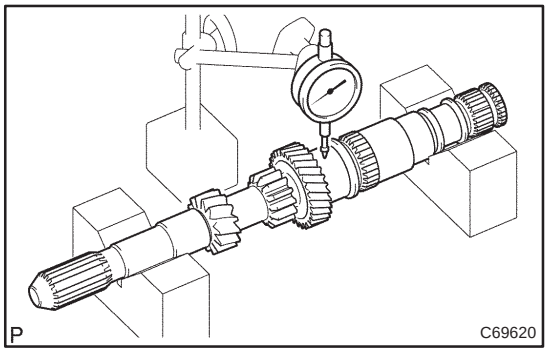

14. INSPECT INPUT SHAFT

(a) Using V–block and dial indicator, measure the shaft run out.
Maximum run out:0.03 mm (0.001191 in.)

If the run out exceeds the maximum, replace the input shaft.

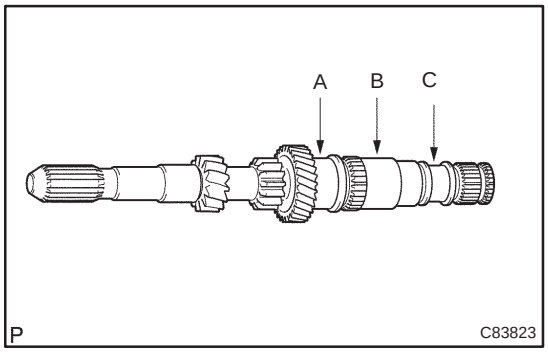

(b) Using a micrometer, measure the outer diameter of the input shaft jarnal surface.

Outer diameter: mm (in.)

	Standard outer diameter	Minimum outer diameter
A	35.984 – 36.000 (1.4286 – 1.4292)	35.984 (1.4286)
B	35.984 – 36.000 (1.4286 – 1.4292)	35.984 (1.4286)
C	27.957 – 27.972 (1.1100 – 1.1105)	27.957 (1.1100)

If the outer diameter is less than the minimum replace the input shaft.

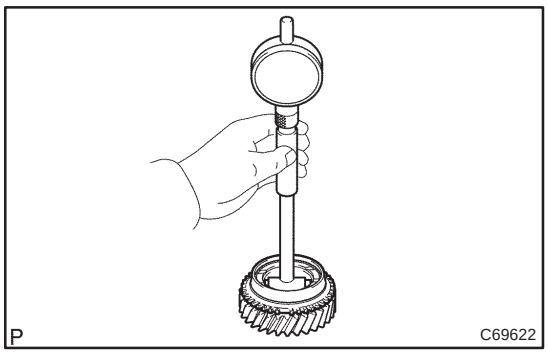

15. INSPECT 4TH GEAR

(a) Using a cylinder gauge, measure the inside diameter of the 4th gear.

Inside diameter: mm (in.)

Standard inside diameter	Maximum inside diameter
42.009 – 42.025 (1.6678 – 1.6684)	42.025 (1.6684)

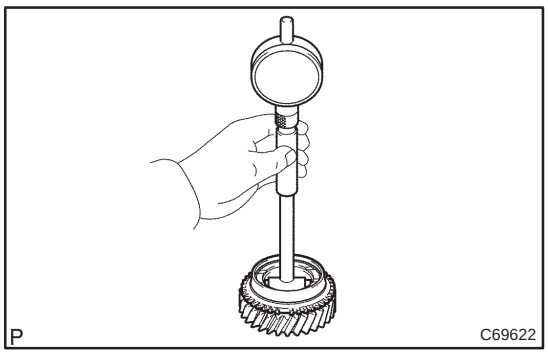

16. INSPECT 3RD GEAR

(a) Using a cylinder gauge, measure the inside diameter of the 3rd gear.

Inside diameter: mm (in.)

Standard inside diameter	Maximum inside diameter
43.009 – 43.025 (1.7075 – 1.7081)	43.025 (1.7081)

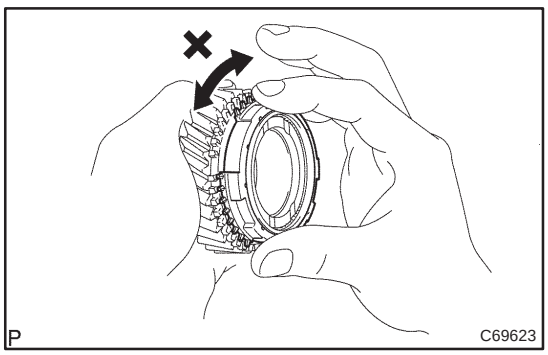

17. INSPECT 2ND SYNCHRONIZER OUTER RING

(a) Coat the 4th gear cone with gear oil. Turn in the synchronizer ring No.3 in one direction while pushing it to the 4th gear cone. Check that the ring locks.

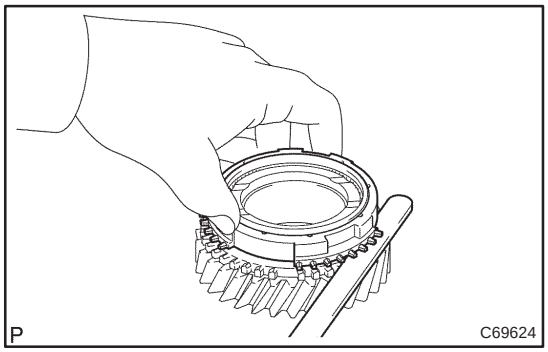

(b) Using a feeler gauge, measure the clearance between the synchronizer outer ring back and 4th gear spline end.
Standard clearance:
0.75 – 1.65mm (0.0297 – 0.0655 in.)

If the standard clearance is out of specification, replace the synchronizer ring.

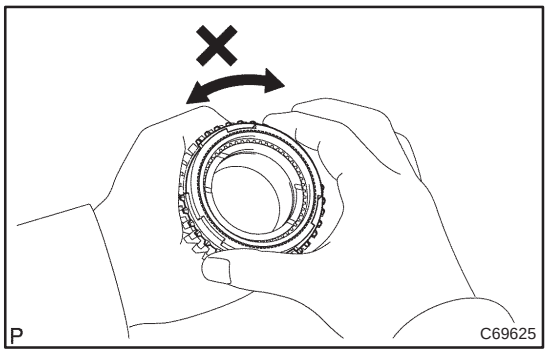

18. INSPECT SYNCHRONIZER RING NO.3

(a) Coat the 3rd gear cone with gear oil. Turn in the synchronizer outer ring in one direction while pushing it to the 3rd gear cone. Check that the ring locks.

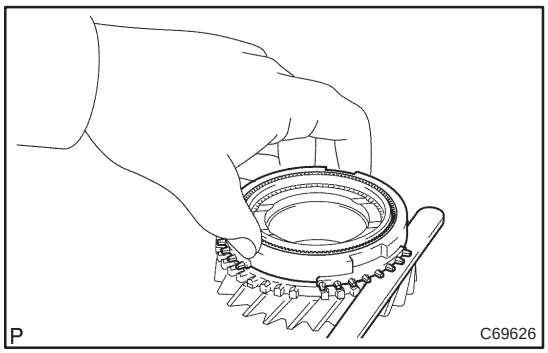

(b) Using a feeler gauge, measure the clearance between the synchronizer ring No.3 back and 3rd gear spline end.
Standard clearance:
0.65 – 1.75 mm (0.0258 – 0.0695 in.)

If the standard clearance is out of specification, replace the synchronizer ring No.3.

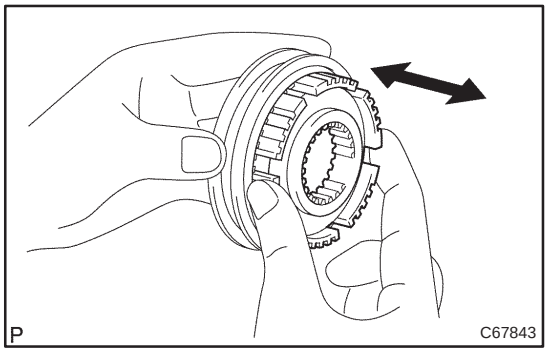

19. INSPECT TRANSMISSION HUB SLEEVE NO.2

(a) Inspect the sliding condition between transmission hub sleeve No.2 and transmission clutch hub No.2.

(b) Inspect tip of spline gear on the transmission hub sleeve No.2 for wear.

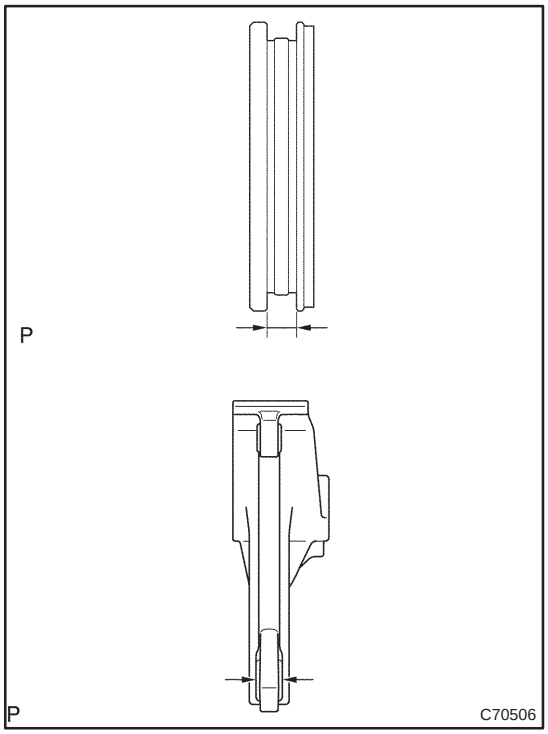

(c) Using a vernier calipers, measure the transmission hub sleeve No.3 groove and the thickness of the claw part on gear shift fork No.1, and calculate the clearance.
Standard clearance:
0.15 – 0.35 mm (0.0060 – 0.0139 in.)

If the clearance is out of the specification, replace the transmission hub sleeve No.2 and gear shift fork No.2 with the new one.

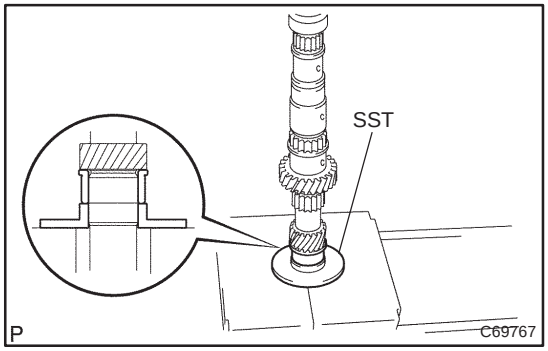

20. INSTALL INPUT SHAFT FRONT BEARING

(a) Using SST and a press, install the input shaft front bearing(inner race).
SST 09608–00071

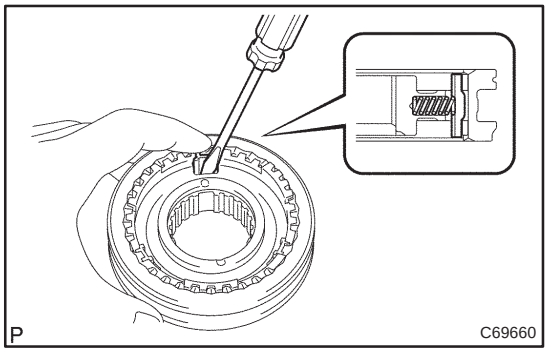

21. INSTALL TRANSMISSION HUB SLEEVE NO.2

(a) Coat the transmission hub sleeve No.2 with gear oil.
(b) Install the 3 synchromesh key springs with transmission hub sleeve No.2.

NOTICE:
Do not the transmission clutch hub sleeve No.2 and the transmission clutch hub No.2 incorrect orientation.

(c) Using a screwdriver, install the synchromesh shifting key to the input shaft.

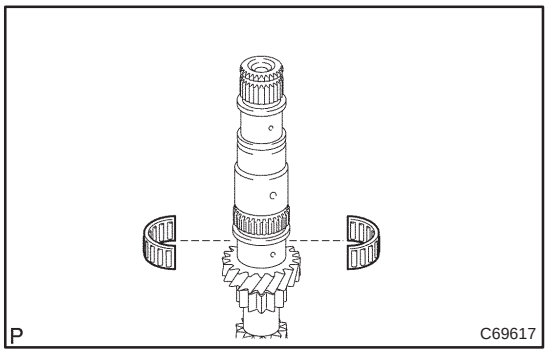

22. INSTALL 3RD GEAR NEEDLE ROLLER BEARING

(a) Coat the 3rd gear bearing with gear oil, install it to the input shaft.

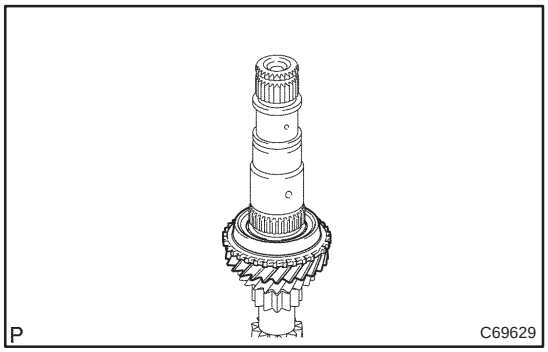

23. INSTALL 3RD GEAR

(a) Coat the 3rd gear with gear oil, install it to the input shaft.

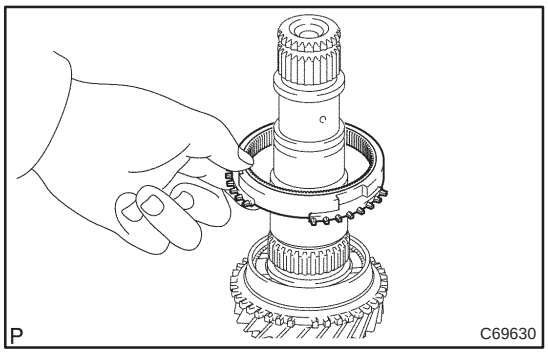

24. INSTALL SYNCHRONIZER RING NO.3

(a) Coat the synchronizer ring No.3 with gear oil, install it to the 3rd gear.

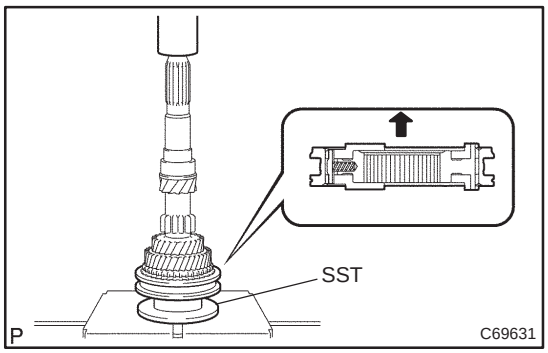

25. INSTALL TRANSMISSION CLUTCH HUB NO.2

(a) Using SST and a press, install the transmission clutch hub No.2 to the input shaft.
SST 09316–60011 (09316–00041)

NOTICE:

- **Align the claw of clutch hub No.2 and notch of synchronizer ring No.3 and install them.**
- **Make sure that the 3rd gear should rotate.**

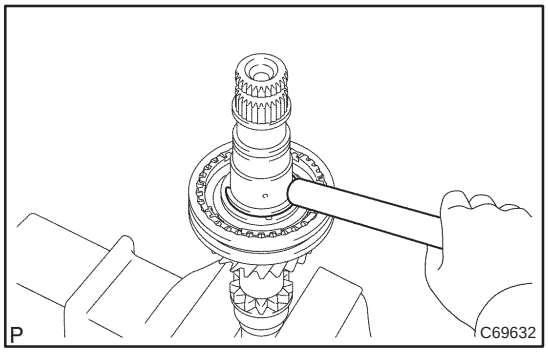

(b) Select a snap ring so that clearance between the transmission clutch hub No.2 and the clutch hub No.2 shaft snap ring will be the standard clearance. Using a brass bar and a hammer, install the snap ring.
Standard clearance:0.1 mm or less (0.0039 or less)
Snap ring thickness

Part No.	Thickness: mm (in.)	Mark
90520 – 34003	2.30 – 2.35 (0.0917 – 0.0933)	H
90520 – 34004	2.35 – 2.40 (0.0933 – 0.0953)	J
90520 – 34005	2.40 – 2.45 (0.0953 – 0.0973)	K
90520 – 34006	2.45 – 2.50 (0.0973 – 0.0993)	L
90520 – 34007	2.50 – 2.55 (0.0993 – 0.1012)	M
90520 – 34008	2.55 – 2.60 (0.1012 – 0.1032)	N
90520 – 34009	2.60 – 2.65 (0.1032–0.1052)	P

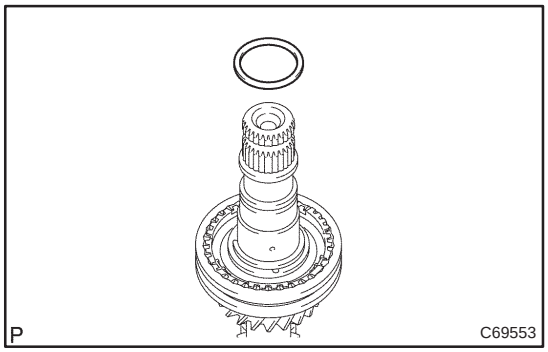

26. INSTALL 4TH GEAR BEARING SPACER

(a) Coat the 4th gear bearing spacer with gear oil,install it to the input shaft.

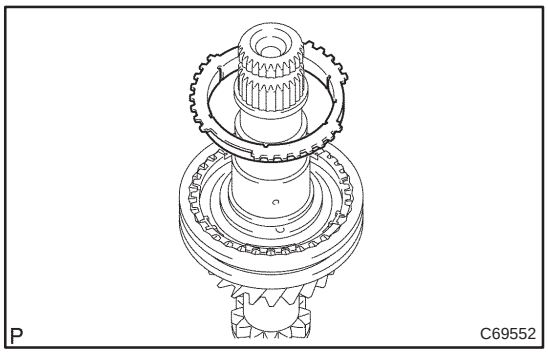

27. INSTALL 2ND SYNCHRONIZER OUTER RING

(a) Coat the 2nd synchronizer outer ring with gear oil, install it to the transmission the transmission clutch clutch hub No.2.

NOTICE:

Align the claw of the clutch hub No.2 with the noch of the 2nd synchronizer outer ring and assemble.

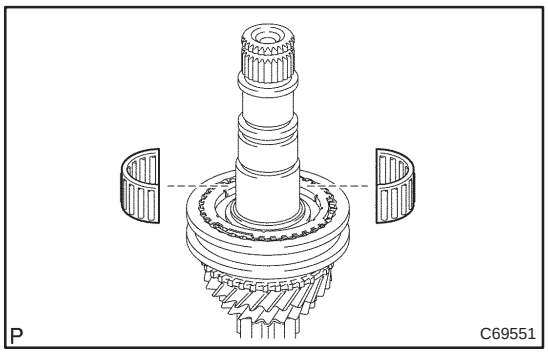

28. INSTALL 4TH GEAR NEEDLE ROLLER BEARING

(a) Coat the 4th gear needle roller bearing with gear oil, install it to the input shaft.

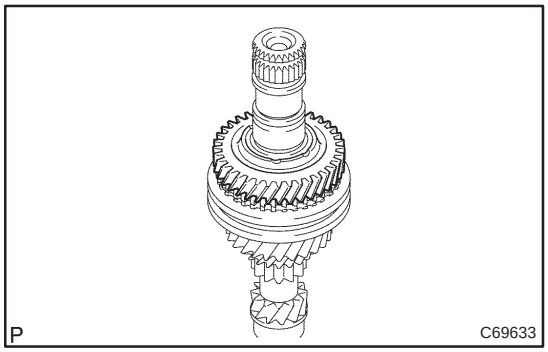

29. INSTALL 4TH GEAR

(a) Coat the 4th gear with gear oil, install it to the input shaft.

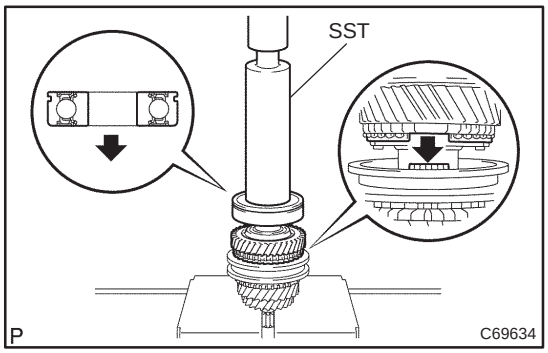

30. INSTALL INPUT SHAFT REAR RADIAL BALL BEARING

(a) Using SST and a press, install the input shaft rear radial ball bearing to the input shaft.
SST 09608–06041

NOTICE:

- **Make the groove on the bearing face to the rear and install.**
- **Make sure that the 3rd gear should rotate.**

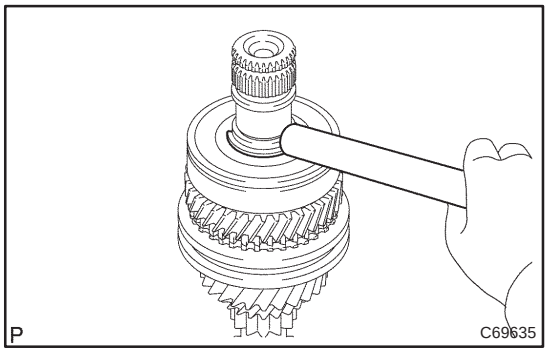

(b) Select a snap ring so that the clearance between the Input shaft radial ball rear bearing and the input shaft rear bearing snap ring will be the standard clearance. Using a brass bar and a hammer, install the snap ring.

Standard clearance:0.1 mm or less

Snap ring

Part No.	thickness: mm (in.)	Mark
90520–30008	2.35 – 2.40 (0.0935 – 0.0953)	1
90520–30009	2.40 – 2.45 (0.0953 – 0.0973)	2
90520–30010	2.45 – 2.50 (0.0973 – 0.0993)	3
90520–30011	2.50 – 2.55 (0.0993 – 0.1012)	4
90520–30012	2.55 – 2.60 (0.1012 – 0.1032)	5
90520–30013	2.60 – 2.65 (0.1032 – 0.1052)	6
90520–30021	2.65 – 2.70 (0.1052 – 0.1072)	7
90520–30022	2.70 – 2.75 (0.1072 – 0.1092)	8

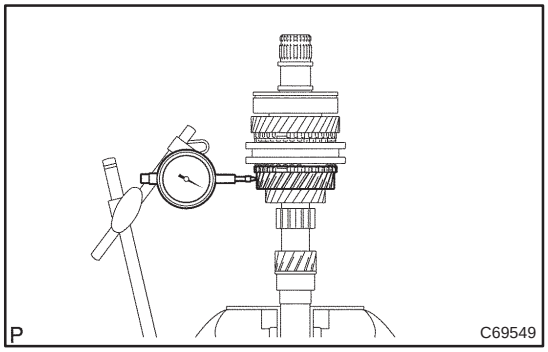

31. INSPECT 3RD GEAR RADIAL CLEARANCE

(a) Using a dial indicator, measure the 3rd gear radial clearance.

Standard clearance: mm (in.)

Bearing	Standard clearance
KOYO made	0.009 – 0.053 (0.0004 – 0.0021)
NSK made	0.009 – 0.051 (0.0004 – 0.0020)

If the clearance exceeds the maximum, replace the 3rd gear needle roller bearing.

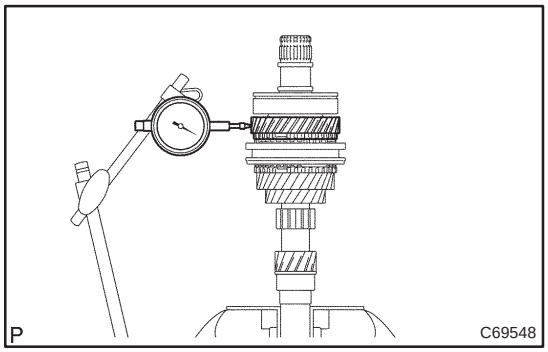

32. INSPECT 4TH GEAR RADIAL CLEARANCE

(a) Using a dial indicator, measure the 4th gear radial clearance.

Standard clearance: mm (in.)

Bearing	Standard clearance
KOYO made	0.009 – 0.053 (0.0004 – 0.0021)
NSK made	0.009 – 0.051 (0.0004 – 0.0020)

If the clearance exceeds the maximum, replace the 4th gear needle roller bearing.

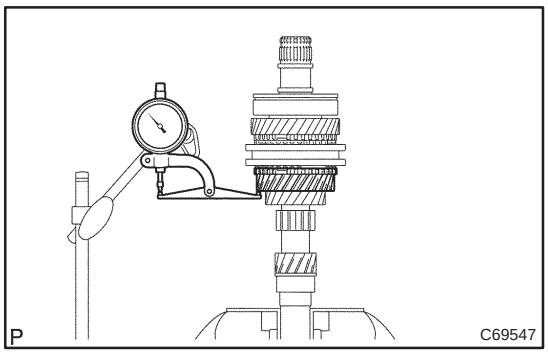

33. INSPECT 3RD GEAR THRUST CLEARANCE

(a) Using a dial indicator, measure the 3rd gear thrust clearance.

Standard clearance:
0.1 – 0.35 mm (0.0039 – 0.0139 in.)

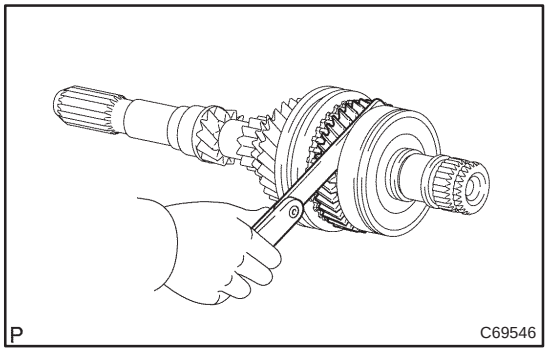

34. INSPECT 4TH GEAR THRUST CLEARANCE

(a) Using a feeler gauge, measure the 4th gear thrust clearance.

Standard clearance:
0.1 – 0.57 mm (0.0039 – 0.0226 in.)

OUTPUT SHAFT ASSY (E355/E356)

4103Y–01

OVERHAUL

HINT:

COMPONENTS:See page 41–1

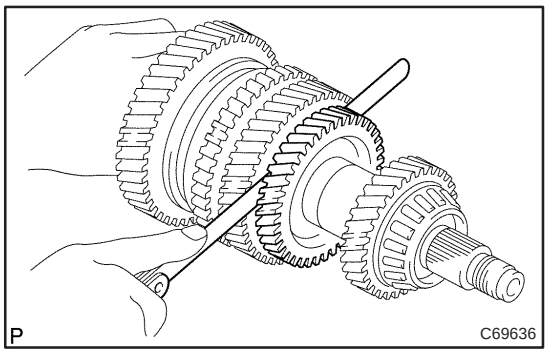

1. INSPECT 1ST GEAR THRUST CLEARANCE

(a) Using a fleer gauge, measure the 1st gear thrust clearance.

Standard clearance:
0.25 – 0.4 mm (0.0099 – 0.0159 in.)

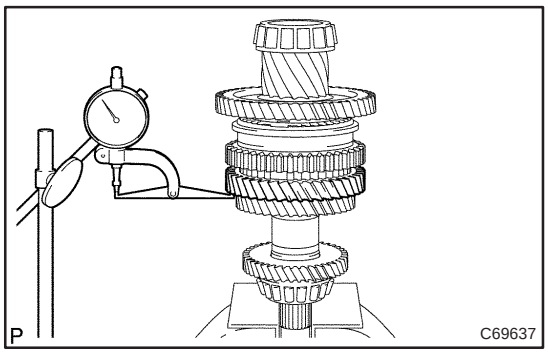

2. INSPECT 2ND GEAR THRUST CLEARANCE

(a) Using a dial indicator, measure the 2nd gear thrust clearance.

Standard clearance:
0.1 – 0.35 mm (0.0004 – 0.0139 in.)

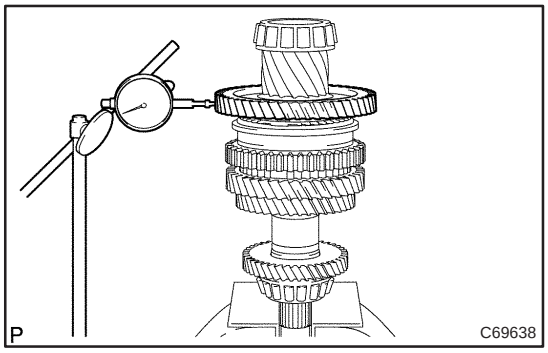

3. INSPECT 1ST GEAR RADIAL CLEARANCE

(a) Using a dial indicator, measure the 1st gear radial clearance.

Standard clearance:mm (in.)

Bearing	Standard clearance
KOYO made	0.009 – 0.053 (0.0004 – 0.0021)
NSK made	0.009 – 0.051 (0.0004 – 0.0020)

If the clearance is out of the specification, replace the 1st gear needle roller bearing.

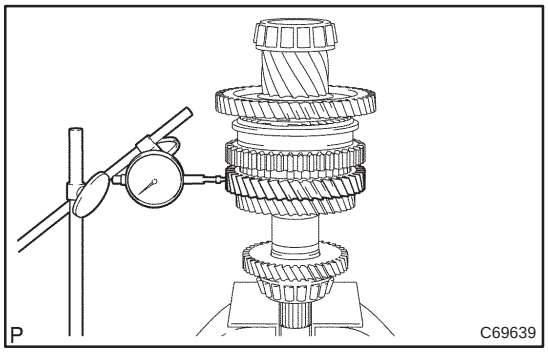

4. INSPECT 2ND GEAR RADIAL CLEARANCE

(a) Using a dial indicator, measure the 2nd gear radial clearance.

Standard clearance:mm (in.)

Bearing	Standard clearance
KOYO made	0.009 – 0.053 (0.0004 – 0.0021)
NSK made	0.009 – 0.051 (0.0004 – 0.0020)

If the clearance is out of the specification, replace the 2nd gear needle roller bearing.

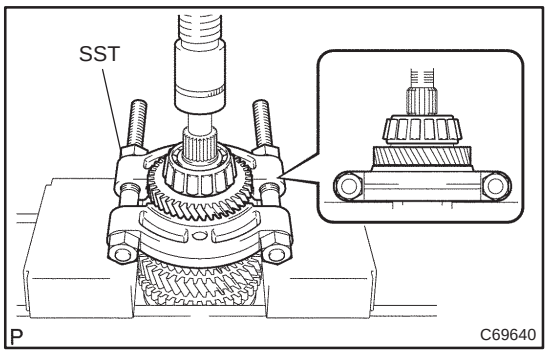

5. REMOVE 4TH DRIVEN GEAR

(a) Using SST and a press, remove the output shaft bearing rear (inner race) and 4th driven gear.
SST 09950–00020

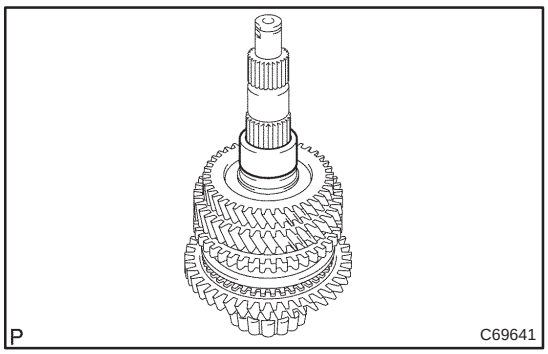

6. REMOVE OUTPUT GEAR SPACER

(a) Remove the out put gear spacer from the output shaft.

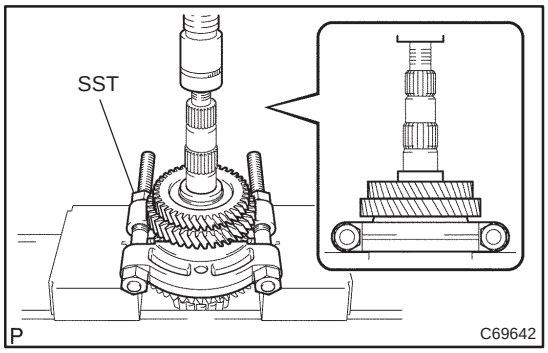

7. REMOVE 2ND GEAR

(a) Using SST and a press, remove the 3rd driven gear and 2nd gear from the out put shaft.
SST 09950–00020

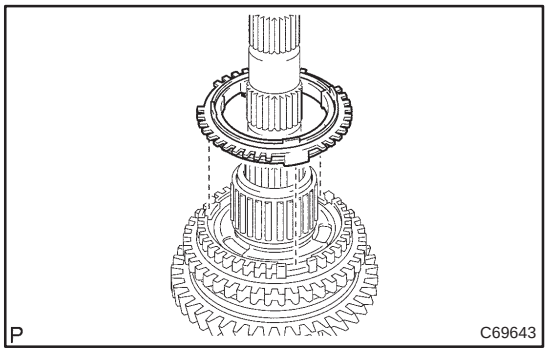

8. REMOVE SYNCHRONIZER RING SET NO.2

(a) Remove the synchronizer ring set No.2 from the transmission clutch hub No.1.

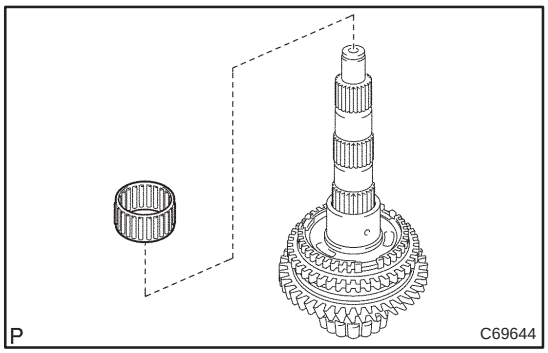

9. REMOVE 2ND GEAR NEEDLE ROLLER BEARING

(a) Remove the 2nd gear needle roller bearing from the output shaft.

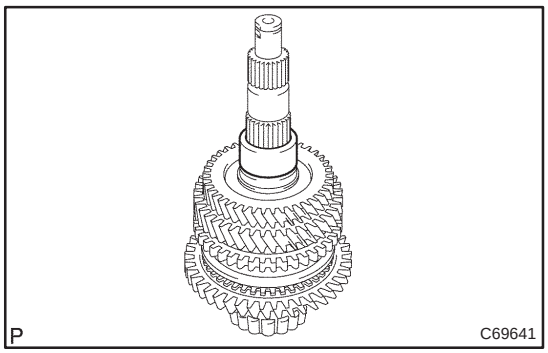

10. REMOVE 2ND GEAR BEARING SPACER

(a) Remove the 2nd gear bearing spacer from the output shaft.

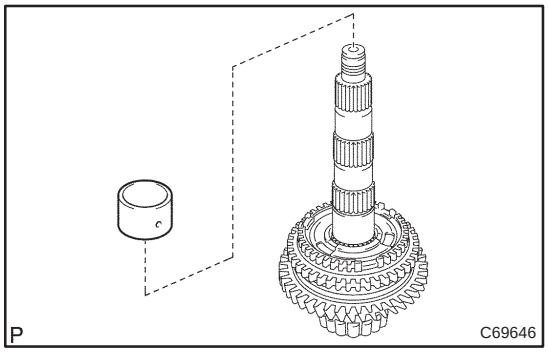

11. REMOVE 2ND GEAR BUSH

(a) Remove the 2nd gear bush from the output shaft.

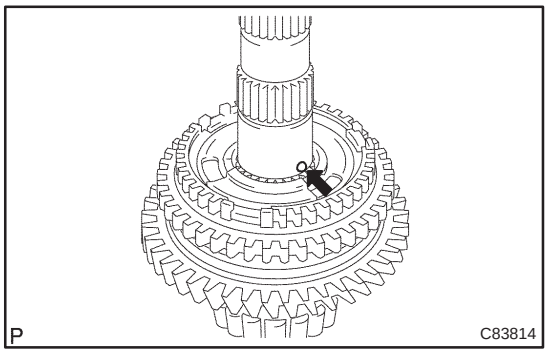

12. REMOVE 2ND GEAR BUSH BALL

(a) Using a magnetic finger, remove the 2nd gear bush ball from the output shaft.

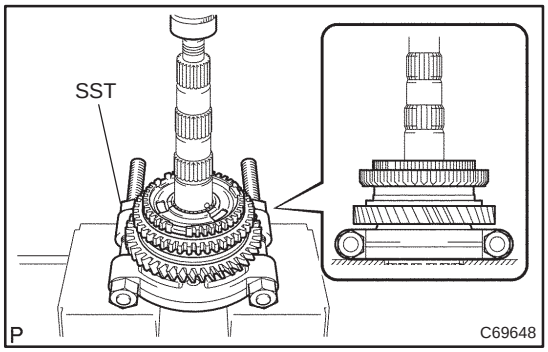

13. REMOVE 1ST GEAR

(a) Using SST and a press, remove the transmission clutch hub No.1 and 1st gear from the output shaft.
SST 09950–00020

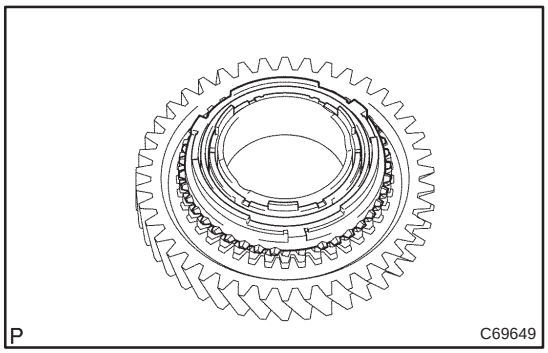

14. REMOVE SYNCHRONIZER RING SET NO.1

(a) Remove the synchronizer ring set No.1 from the 1st gear.

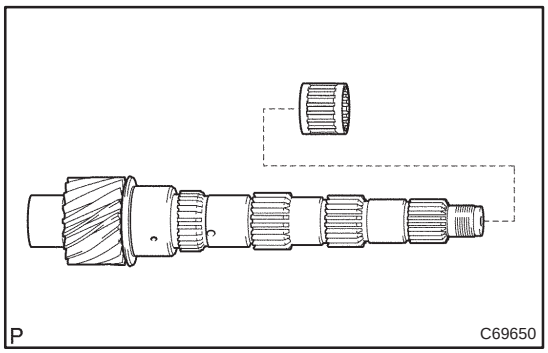

15. REMOVE 1ST GEAR NEEDLE ROLLER BEARING

(a) Remove the 1st gear needle roller bearing from the output shaft.

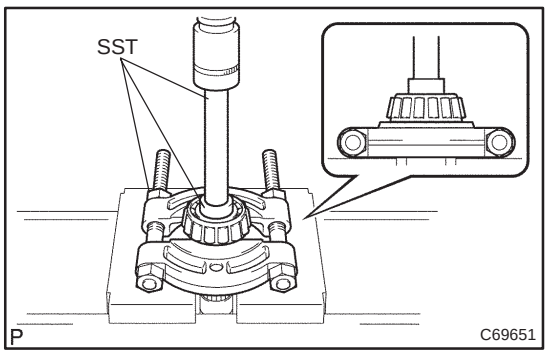

16. REMOVE OUTPUT SHAFT FRONT BEARING

(a) Using SST and a press, remove the output shaft front bearing (inner race) from the output shaft.
SST 09950–00020, 09950–60010 (09951–00320), 09950–70010 (09951–07150)

NOTICE:
Do not tighten SST excessively.

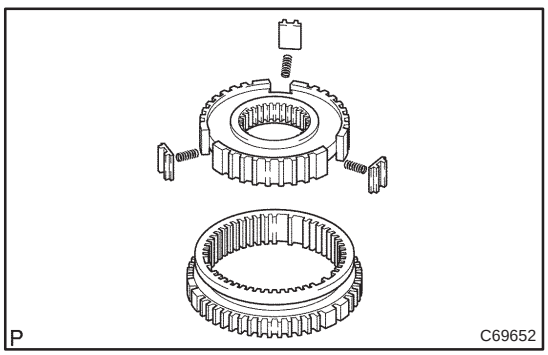

17. REMOVE REVERSE GEAR

(a) Remove the reverse gear, 3 synchromesh shifting keys and 3 synchromesh shifting key springs from the transmission clutch hub No.1.

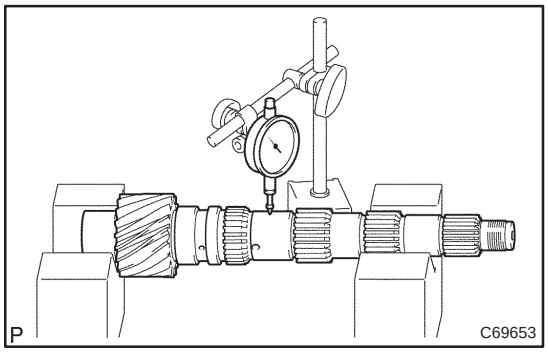

18. INSPECT OUTPUT SHAFT

(a) Using V – block and a dial indicator, measure the shaft run out.

Maximum run out:0.03 mm (0.0012 in.)

If the run out exceeds the maximum, replace the input shaft.

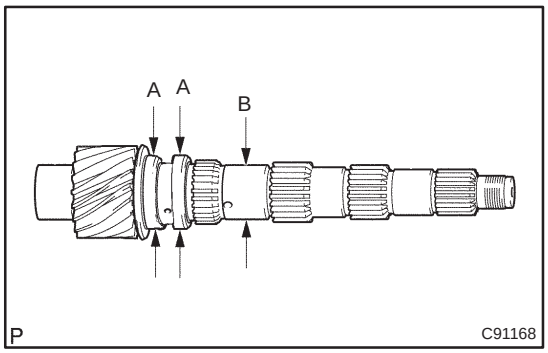

(b) Using a micrometer, measure the outer diameter of the output shaft jarnal surface.

Outer diameter: mm (in.)

Part	Standard outer diameter	minimum outer diameter
A	37.610 – 37.626 (1.4931 – 1.4938)	37.610 (1.4931)
B	34.802 – 34.512 (1.3816 – 1.3701)	34.802 (1.3816)

If the outer diameter is less than the minimum replace the input shaft.

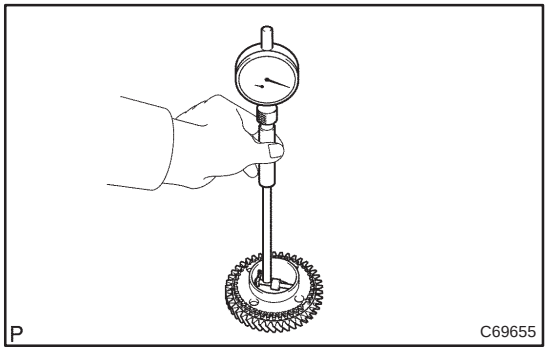

19. INSPECT 2ND GEAR

(a) Using a cylinder gauge, measure the inside diameter of the 2 nd gear.

Inside diameter: mm (in.)

Standard inside diameter	Maximum inside diameter
50.009–50.025 (1.9854 – 1.9860)	50.025 (1.9860)

If the inside diameter exceeds the maximum, replace the 2nd gear.

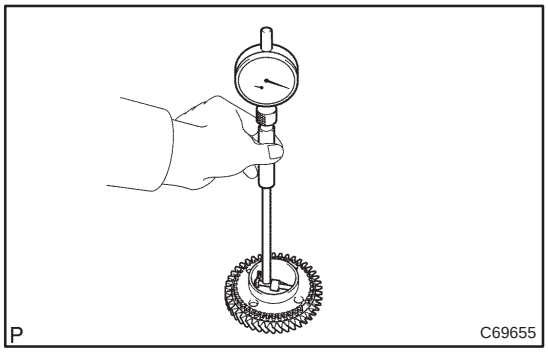

20. INSPECT 1ST GEAR

(a) Using a cylinder gauge, measure the inside diameter of the 1st gear.

Inside diameter: mm (in.)

Standard inside diameter	Maximum inside diameter
51.009–51.025 (2.0250 – 2.0257)	51.025 (2.0257)

If the inside diameter exceeds the maximum, replace the 1st gear.

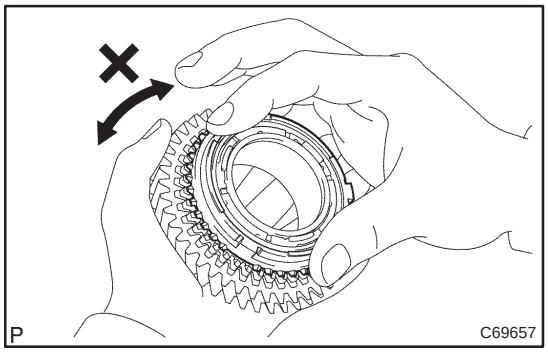

21. INSPECT SYNCHRONIZER RING SET NO.2

(a) Coat the cone of the 2nd gear with gear oil, check that it does not turn in the both circumference directions wile pushing it to the synchronizer ring No.2.

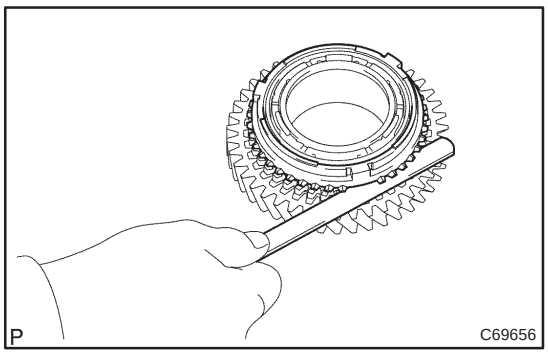

(b) Check the clearance between the synchronizer ring No.2 and 2nd gear while pushing it to the synchronizer ring No.2.

Standard clearance:
0.70 – 1.45 mm (0.0278 – 0.0576 in.)

If the standard clearance is out of the specification, replace the synchronizer ring set No.2 with a new one.

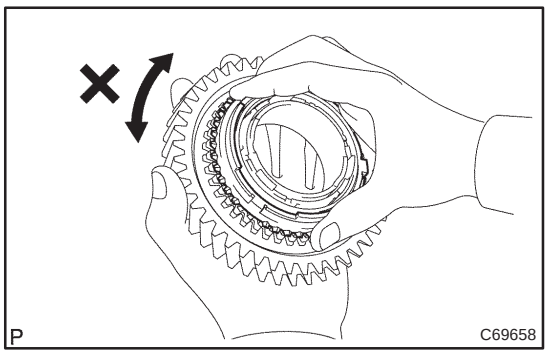

22. INSPECT SYNCHRONIZER RING SET NO.1

(a) Coat the 1st gear cone with gear oil. Turn the synchronizer ring set No.1. in one direction while pushing it to the 1st gear cone. Check that the ring locks.

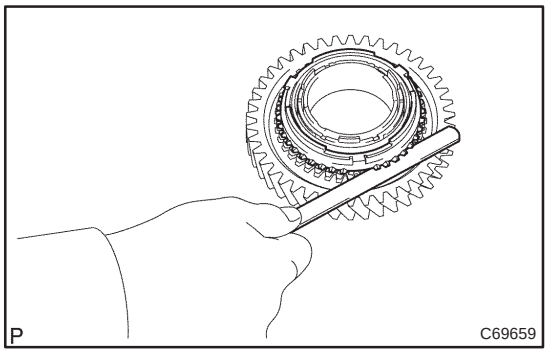

(b) Check the clearance between the synchronizer ring set No.1 and 1st gear while pushing it to the cone of synchronizer ring set No.1.

Standard clearance:
0.70 – 1.45 mm (0.0278 – 0.0576 in.)

If the standard clearance is out of the specification, replace the synchronizer ring set No.1 with a new one.

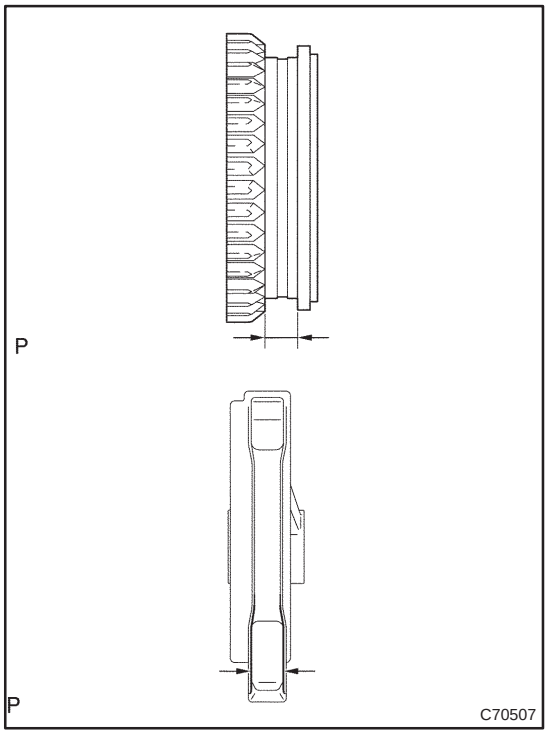

23. INSPECT REVERSE GEAR

(a) Using a vernier calipers, measure the reverse gear groove and thickness of the claw part on gear shift fork No.1, and calculate
Standard clearance:
0.15 – 0.35 mm (0.0060 – 0.0139 in.)

If the clearance is bout of the specification, replace the reverse gear and gear shift fork No.1 with the new one.

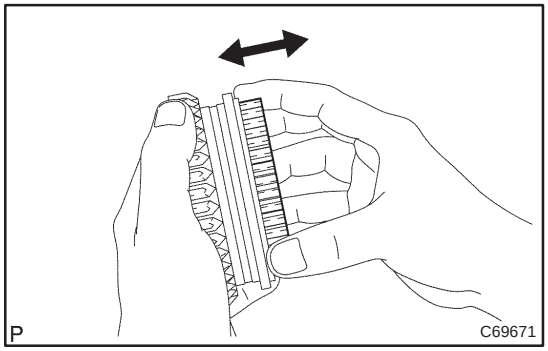

24. INSPECT TRANSMISSION CLUTCH HUB NO.1

(a) Check the sliding condition between the transmission clutch hub No.1 and reverse gear.
(b) Check the tip of spline gear on the sleeve of reverse gear for wear.

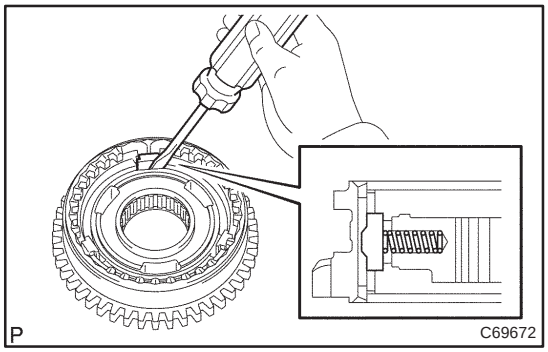

25. INSTALL REVERSE GEAR

(a) Coat the reverse gear with gear oil.
(b) Install the 3 synchromesh shifting key spring No.1 and transmission clutch hub No.1 to the reverse gear.

NOTICE:
Do not set the reverse gear and the transmission clutch hub No.1 in incorrect direction.

(c) Using a screwdriver, install the synchromesh sifting key No.1 to the reverse gear.

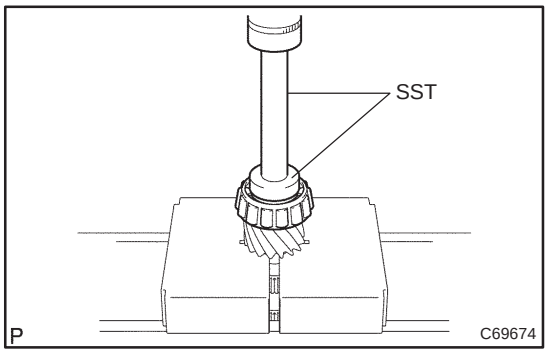

26. INSTALL OUTPUT SHAFT FRONT BEARING

(a) Using SST and a press, install the output shaft front bearing (inner race) to the output shaft.
SST 09950–60010 (09951–00430), 09950–70010 (09951–07150)

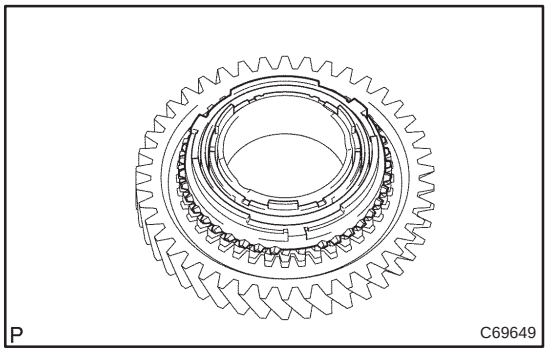

27. INSTALL SYNCHRONIZER RING SET NO.1

(a) Coat the synchronizer ring set No.1 with gear oil, install it to the 1st gear.

NOTICE:

Align the synchronizer ring set No.1 with the hole of 1st gear and install.

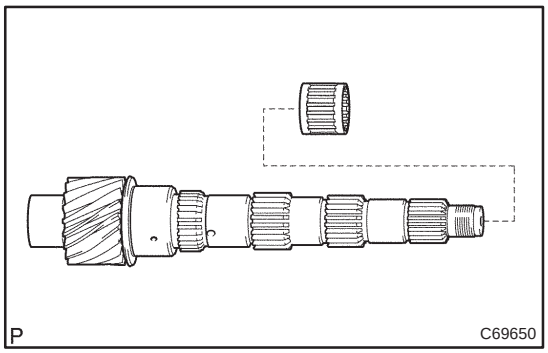

28. INSTALL 1ST GEAR NEEDLE ROLLER BEARING

(a) Coat the 1st gear needle roller bearing with gear oil,install it to the output shaft.

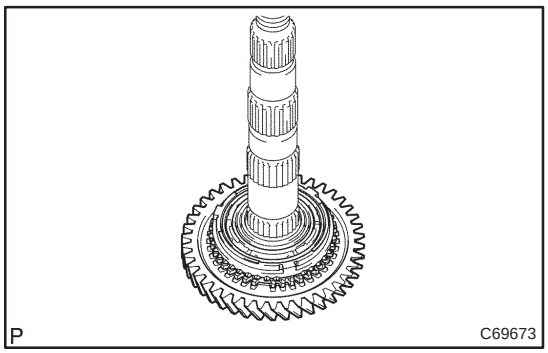

29. INSTALL 1ST GEAR

(a) Coat the 1st gear with gear oil, install it to the output shaft.

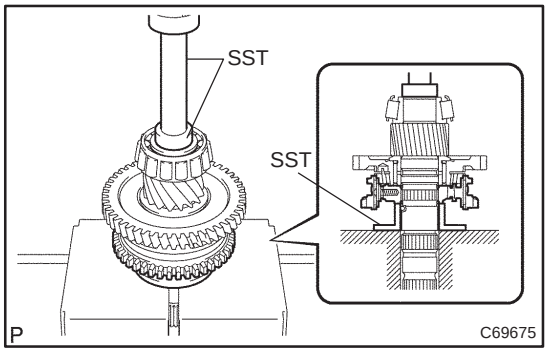

30. INSTALL TRANSMISSION CLUTCH HUB NO.1

(a) Using SST and a press, install transmission clutch hub No.1 to the output shaft.

SST 09316–60011 (09316–00031), 09950–60010 (09951–00320), 09950–70010 (09951–07100)

NOTICE:

- **Align the synchronizer ring No.1 with synchromesh shifting key No.1 and install.**
- **Make sure that the 1st gear rotates.**

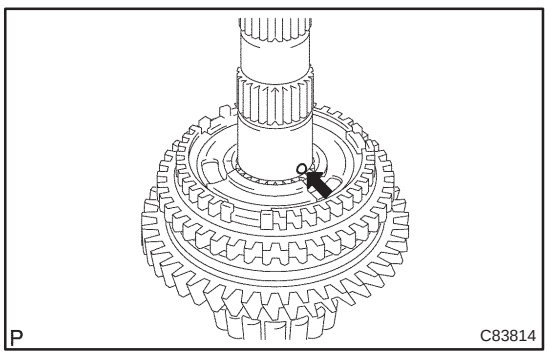

31. INSTALL 2ND GEAR BUSH BALL

(a) Coat the gear bush with MP grease, install it to the output shaft.

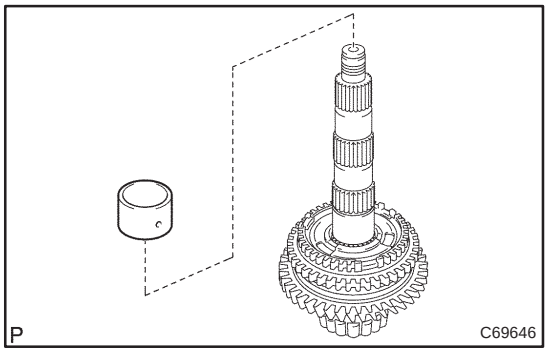

32. INSTALL 2ND GEAR BUSH

(a) Coat the gear 2nd gear bush with gear oil, install it to the output shaft.

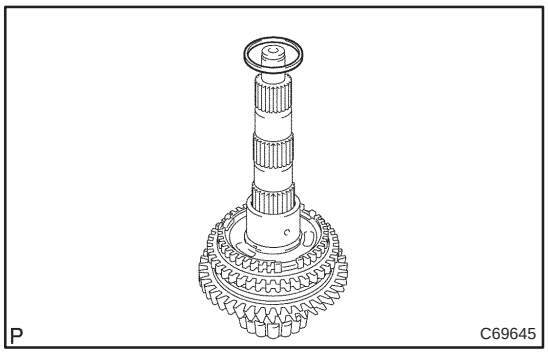

33. INSTALL 2ND GEAR BEARING SPACER

(a) Coat the gear 2nd gear bearing spacer with gear oil, install it to the output shaft.

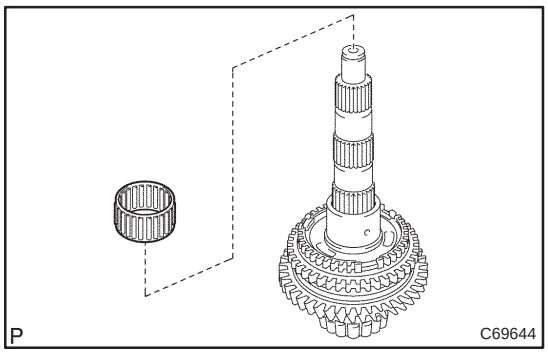

34. INSTALL 2ND GEAR NEEDLE ROLLER BEARING

(a) Coat the 2nd gear needle roller bearing with gear oil, install it to the output shaft.

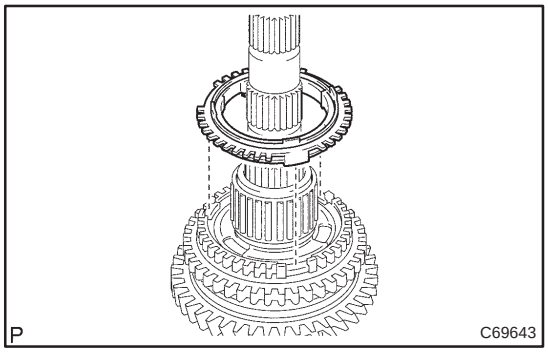

35. INSTALL SYNCHRONIZER RING SET NO.2

(a) Coat the synchronizer ring set No.2 with gear oil, install it to the transmission clutch hub No.1

NOTICE:

Align the key groove on the synchronizer ring set No.2 with the synchromesh shifting key No.1.

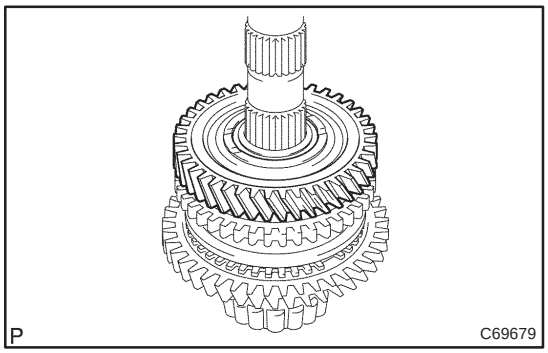

36. INSTALL 2ND GEAR

(a) Coat the 2nd gear with gear oil, install it to the output shaft.

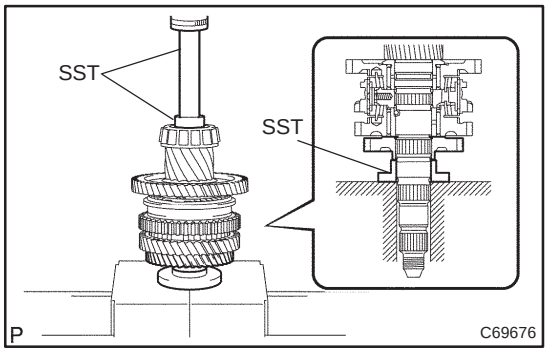

37. INSTALL 3RD DRIVEN GEAR

(a) Using SST and a press, install the 3rd driven gear to the output shaft.
SST 09608–00071, 09950–60010 (09951–00320), 09950–70010 (09951–07100)

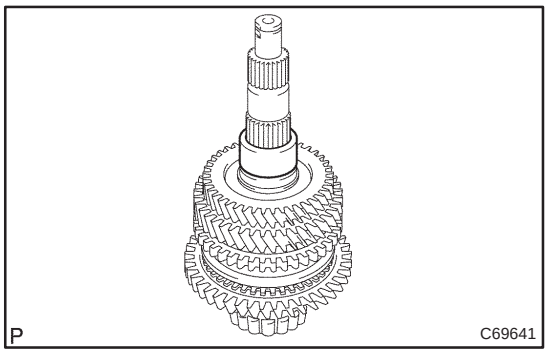

38. INSTALL OUTPUT GEAR SPACER

(a) install the output gear spacer to the output shaft.

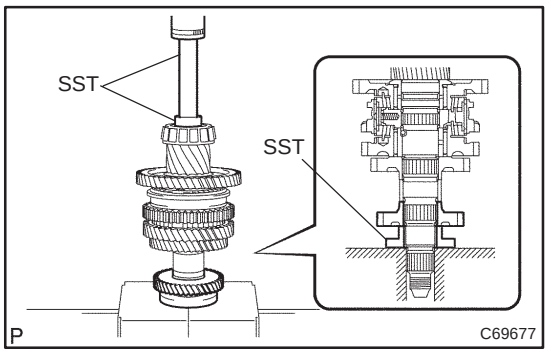

39. INSTALL 4TH DRIVEN GEAR

(a) Using SST and a press, install the 4th driven gear to the output shaft.
SST 09608–00071, 09950–60010 (09951–00320), 09950–70010 (09951–07100)

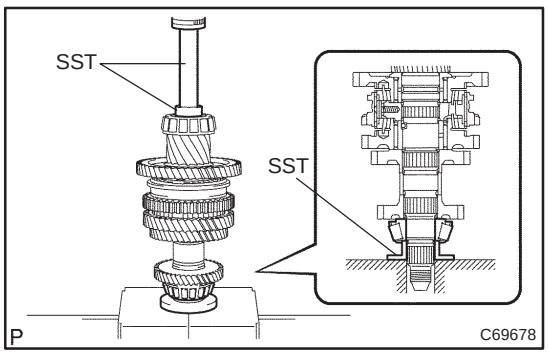

40. INSTALL OUTPUT SHAFT FRONT BEARING

(a) Using SST and a press, install the output shaft front bearing (inner race) to the output shaft.
SST 09506–30012, 09950–60010 (09951–00320), 09950–70010 (09951–07100)

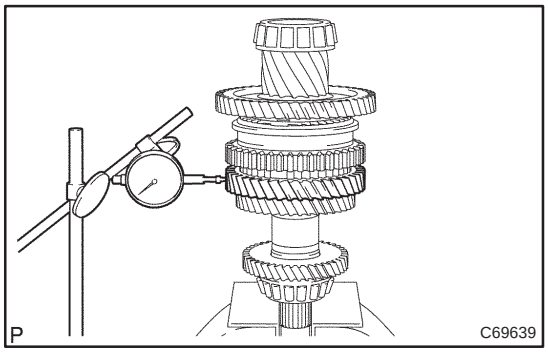

41. INSPECT 2ND GEAR RADIAL CLEARANCE

(a) Using a dial indicator, measure the 2nd gear radial clearance.

Standard clearance:mm (in.)

Bearing	Standard clearance
KOYO made	0.009 – 0.053 (0.0004 – 0.0021)
NSK made	0.009 – 0.051 (0.0004 – 0.0020)

If the clearance is out of the specification, replace the 2nd gear needle roller bearing.

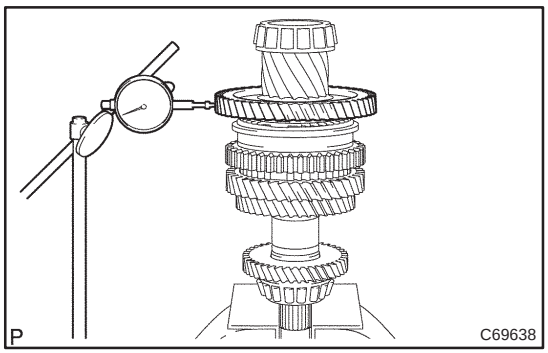

42. INSPECT 1ST GEAR RADIAL CLEARANCE

(a) Using a dial indicator, measure the 1st gear radial clearance.

Standard clearance:mm (in.)

Bearing	Standard clearance
KOYO made	0.009 – 0.053 (0.0004 – 0.0021)
NSK made	0.009 – 0.051 (0.0004 – 0.0020)

If the clearance is out of the specification, replace the 1st gear needle roller bearing.

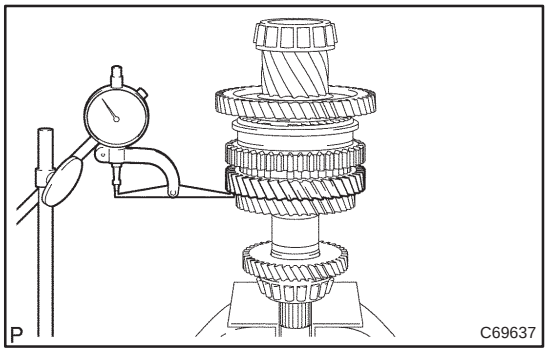

43. INSPECT 2ND GEAR THRUST CLEARANCE

(a) Using a dial indicator, measure the 2nd gear thrust clearance.

Standard clearance:
0.1 – 0.35 mm (0.0039 – 0.0139 in.)

(b) Using a fleer gauge, measure the 1st gear thrust clearance.

Standard clearance:
0.25 – 0.4 mm (0.099 – 0.0159 in.)

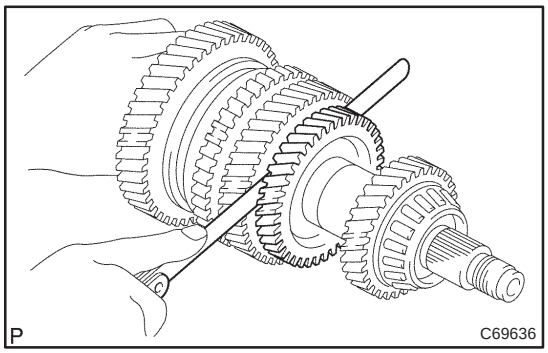

44. INSPECT 1ST GEAR THRUST CLEARANCE

(a) Using a fleer gauge, measure the 1st gear thrust clearance.

Standard clearance:
0.25 – 0.4 mm (0.099 in. – 0.0159 in.)

SHIFT & SELECT LEVER SHAFT ASSY (E355/E356)

41041–01

OVERHAUL

HINT:

COMPONENTS: See page 41–1

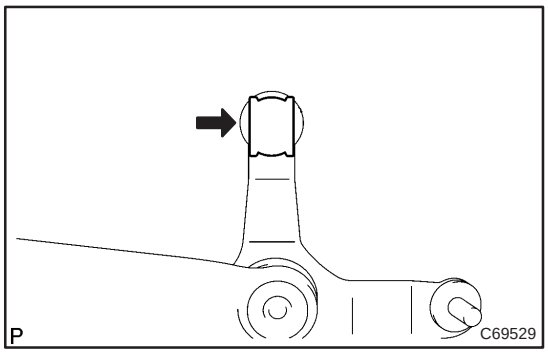

1. REMOVE CONTROL SHIFT LEVER BUSH

(a) Remove the control shift lever bush from the selecting bellcrank No.2.

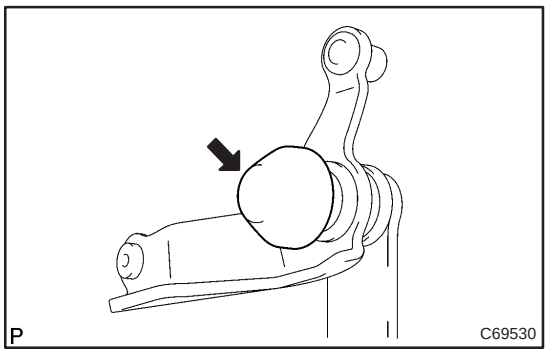

2. REMOVE SELECTING BELLCRANK DUST COVER NO.1

(a) Remove the selecting bellcrank dust cover No.1 from the selecting bellcrank No.2.

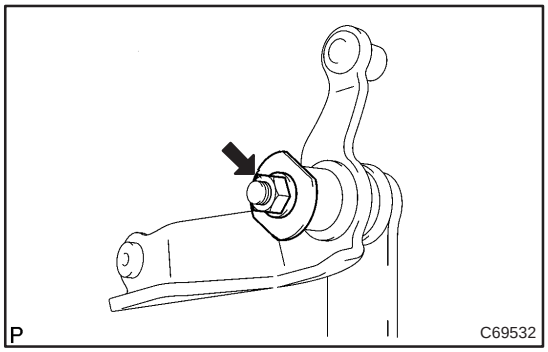

3. REMOVE SELECTING BELLCRANK SUPPORT SUB–ASSY

(a) Remove the nut, washer and selecting bell crank No.2 plate washer from the selecting bellcrank No.2.

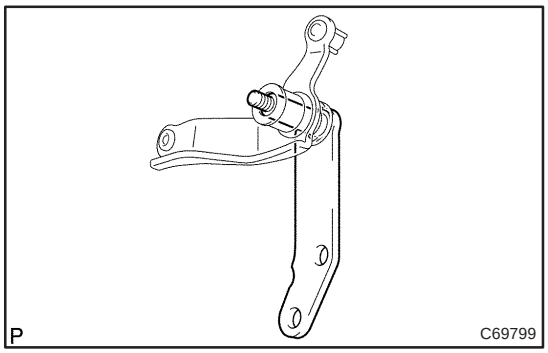

(b) Remove the selecting bellcrank support sub–assy from the selecting bell crank No.2.

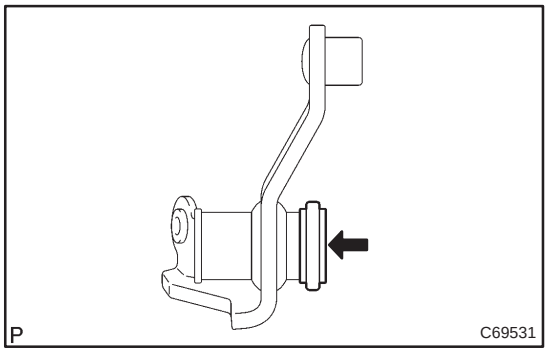

4. REMOVE SELECTING BELLCRANK DUST COVER NO.2

(a) Remove the selecting bell crank dust cover No.2 from the selecting bellcrank no.2.

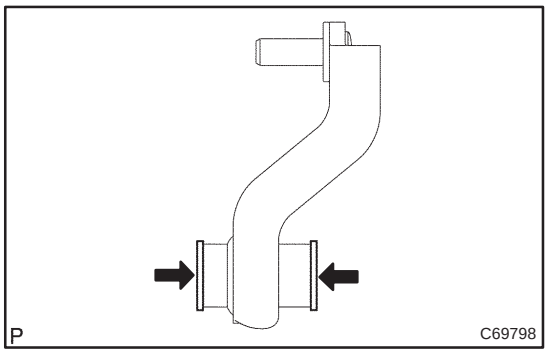

5. REMOVE SELECTING BELLCRANK NO.2 BUSH

(a) Remove the selecting bellcrank bush from the selecting bellcrank No.2.

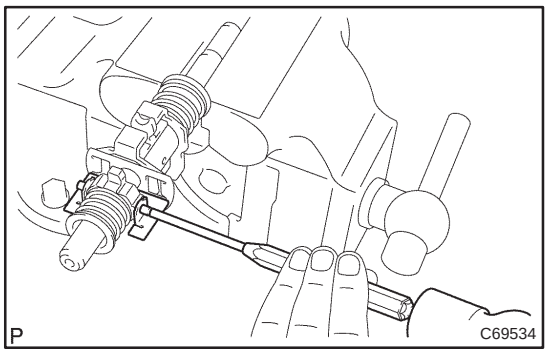

6. REMOVE SHIFT LEVER INNER NO.2

(a) Fix the shift & select lever on the the vise through the soft jaw.

NOTICE:

Do not damage the shift & select lever shaft.

(b) Using a pin punch(ϕ 5 mm), remove the shift & select lever inner slotted pin and oil baffle.

NOTICE:

Do not damage the shift & select lever shaft.

(c) Apply the force to the select return spring No.1 and select return spring No.2 and fix it on the vise through the soft jaw.

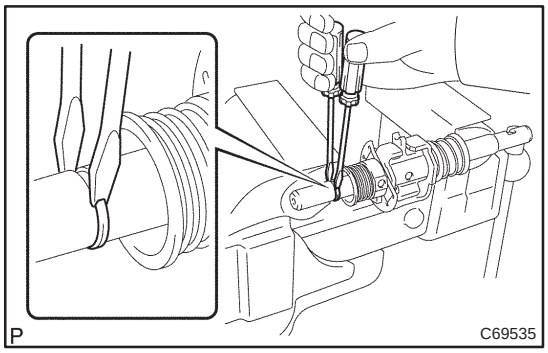

(d) Using 2 screwdrivers and a hammer, remove the select seat snap ring from the shift & select lever shaft.

NOTICE:

Do not damage the shift & select lever shaft.

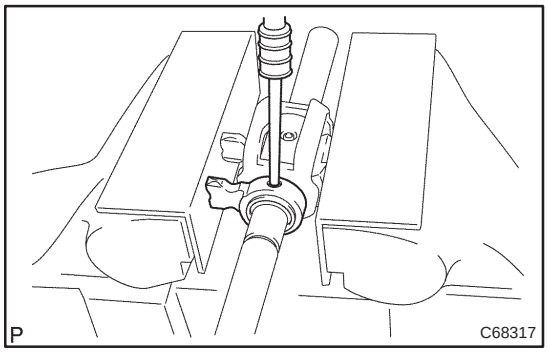

7. REMOVE SELECT SPRING SEAT NO.1

(a) Using a pin punch(ϕ 5 mm), remove the shift inner lever slotted pin from the shift & select lever shaft.

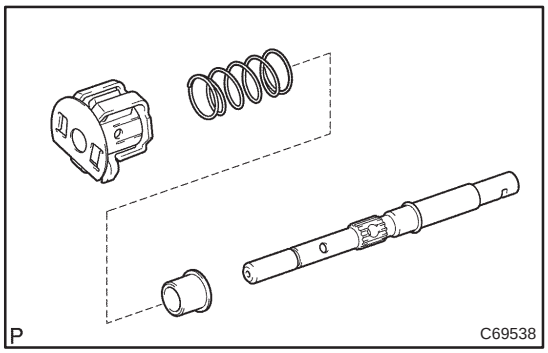

(b) Remove the shift lever assy select return spring No.1 and select spring seat from the shift & select lever shaft.

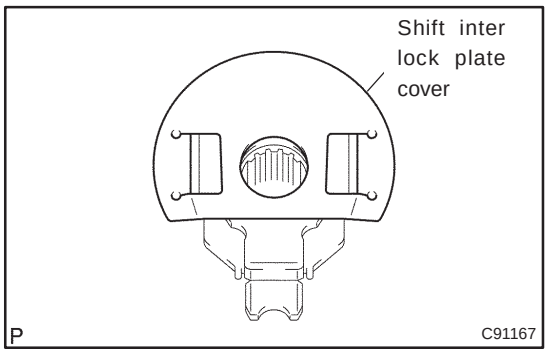

8. REMOVE SHIFT INTER LOCK PLATE COVER

(a) Remove the shift inter lock plate cover from the shift inter lock plate.

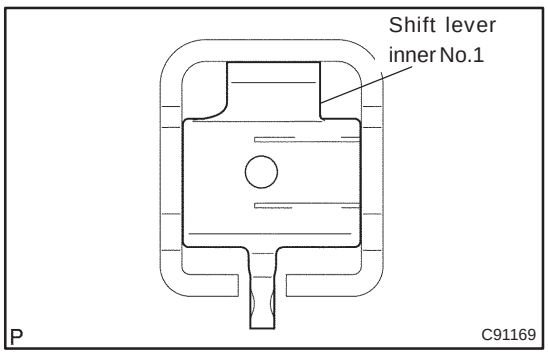

9. REMOVE SHIFT LEVER INNER NO.1

(a) Remove the shift lever inner No.1 from the shift inter lock plate.

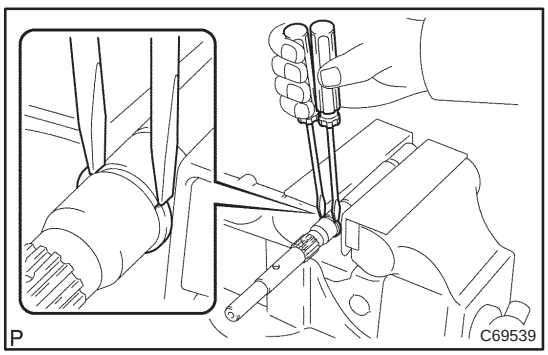

10. REMOVE SELECT SPRING NO.1 SEAT SHAFT SNAP RING

(a) Using 2 screwdrivers and a hammer, remove the select spring No.1 seat shaft snap ring.

NOTICE:
Do not damage the shaft.

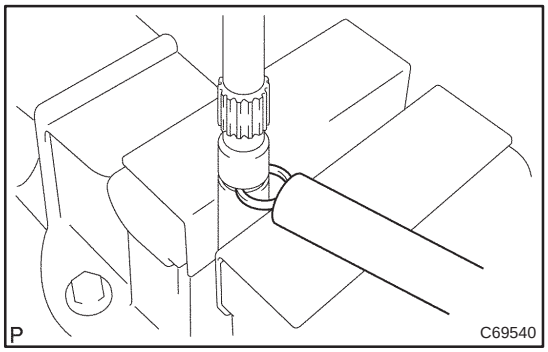

11. INSTALL SELECT SPRING NO.1 SEAT SHAFT SNAP RING

(a) Using a brass bar and a hammer, install the select spring No.1 seat shaft snap ring.

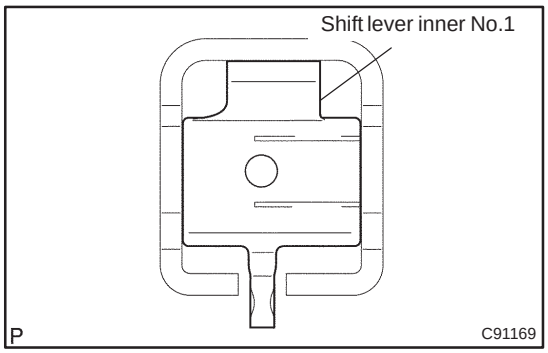

12. INSTALL SHIFT LEVER INNER NO.1

(a) Install the shift lever inner No.1 to the shift inter lock plate.

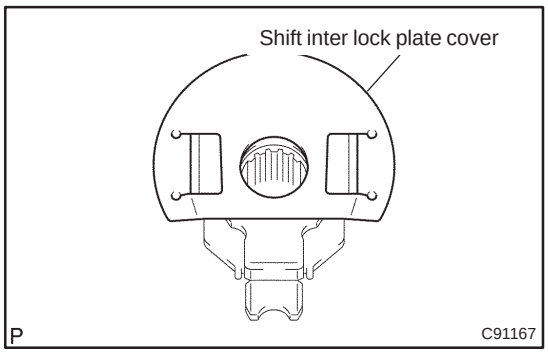

13. INSTALL SHIFT INTER LOCK PLATE COVER

(a) Install the shift inter lock plate cover to the shift inter lock plate.

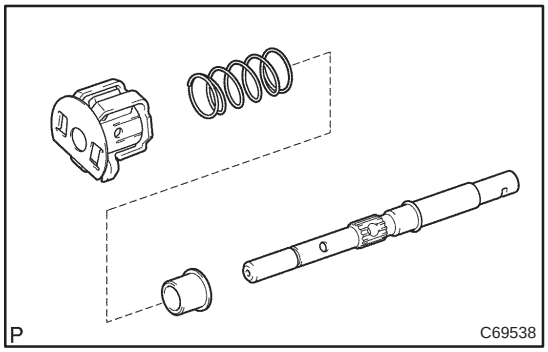

14. INSTALL SELECT SPRING SEAT NO.1

(a) Install the select spring seat No.1, select return spring No.1 and shift lever inner assy to the shift & select lever shaft.

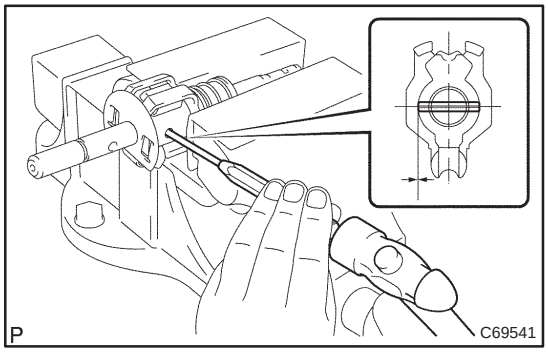

(b) Fix the shift & select lever on the vise through the soft jaw.
(c) Using a pin punch(ϕ 5 mm), install the shift lever slotted pin to the shift & select lever shaft.
Clearance:–0.5 – 0.5 mm (– 0.0199 – 0.0199 in.)

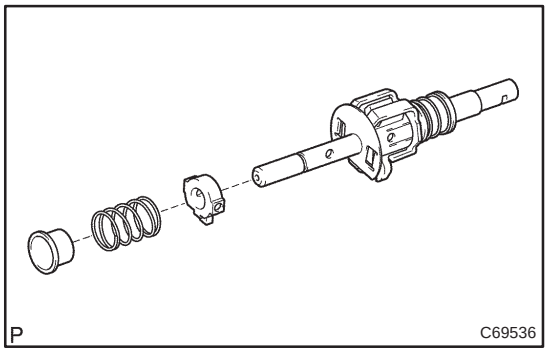

15. INSTALL SHIFT LEVER INNER NO.2

(a) shift lever inner No.2, select return spring No.2 and select return spring seat No.2 to the shift & select lever shaft.

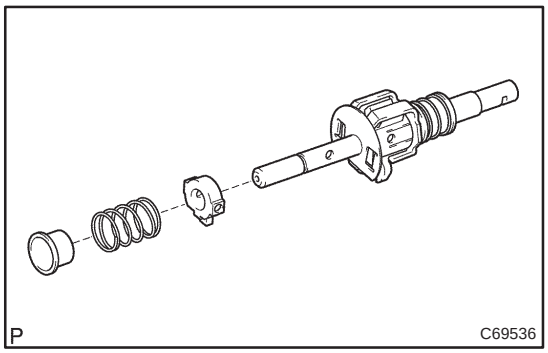

(b) Using a brass bar and a hammer, install the select seat snap ring to the shift & select lever shaft.

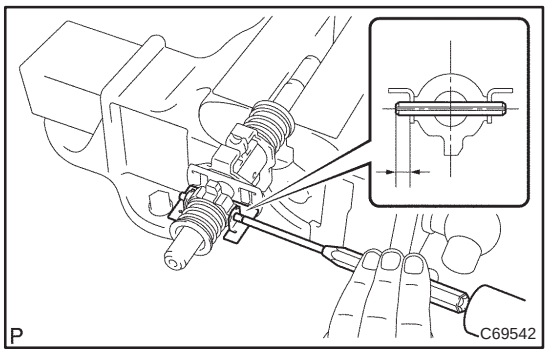

(c) Install the transmission oil baffle. Using a pin punch(ϕ 5 mm) and a hammer, install the shift inner lever slotted pin to the shift & select lever shaft.
Clearance:5.8 – 6.8mm (0.2303 – 0.2700 in.)

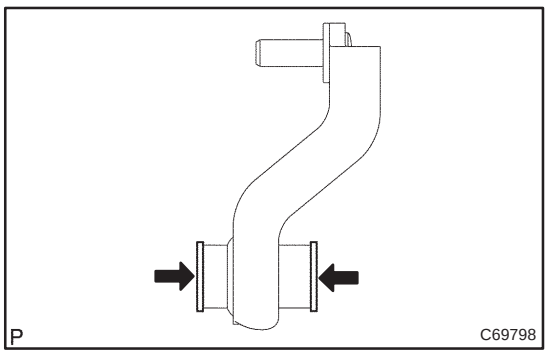

16. INSTALL SELECTING BELLCRANK NO.2 BUSH

(a) Coat the 2 selecting bellcrank No.2 bushes with MP grease, install it to the selecting bellcrank No.2.

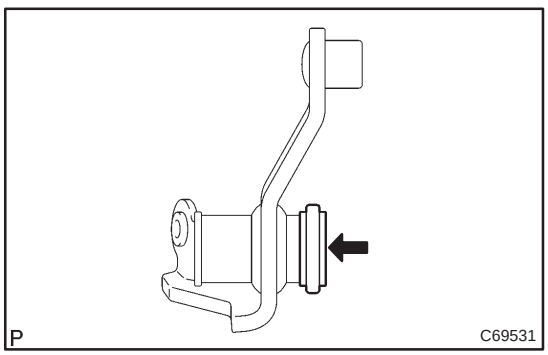

17. INSTALL SELECTING BELLCRANK DUST COVER NO.2

(a) Coat the selecting bellcrank dust cover No.2 with MP grease, install it to the selecting bellcrank No.2.

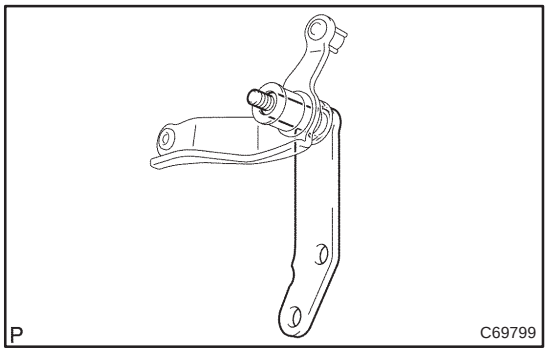

18. INSTALL SELECTING BELLCRANK SUPPORT SUB–ASSY

(a) Install the selecting bellcrank support sub–assy to the selecting bellcrank No.2.

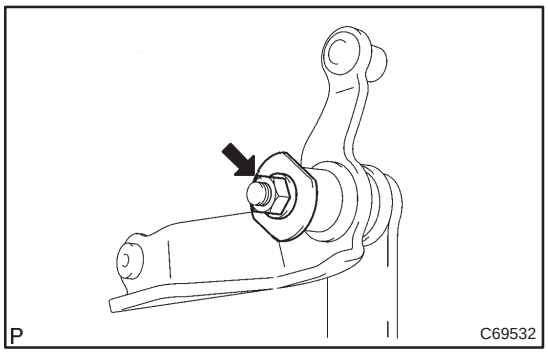

(b) Install the selecting bellcrank No.2 plate washer, washer and nut.
Torque:12N·m (120 kgf·cm, 9 ft·lbf)

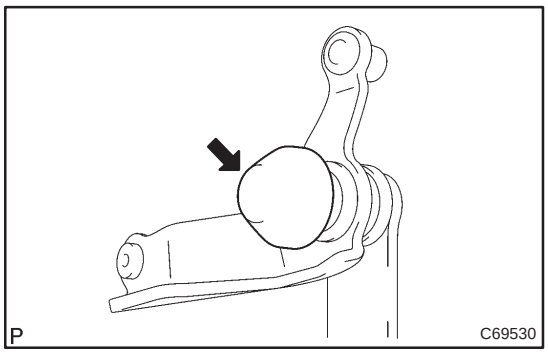

19. INSTALL SELECTING BELLCRANK DUST COVER NO.1

(a) Install the selecting bellcrank dust cover No.1 to the selecting bellcrank No.2.

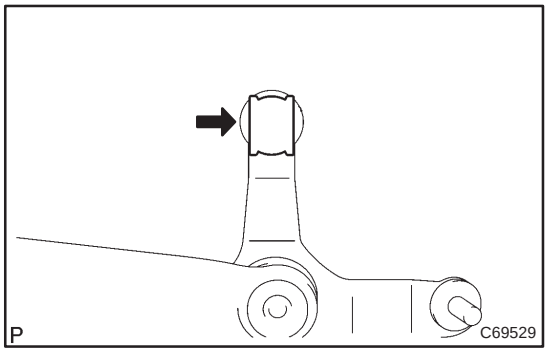

20. INSTALL CONTROL SHIFT LEVER BUSH

(a) Install the control shift lever bush to the selecting bell crank No.2.

DIFFERENTIAL CASE ASSY (E355/E356)

4103Z–01

OVERHAUL

HINT:

COMPONENTS: See page 41–1

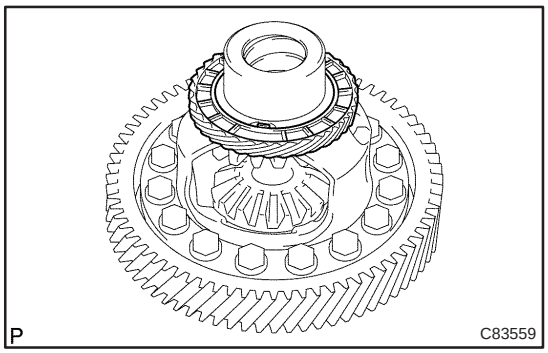

1. REMOVE SPEEDOMETER DRIVE (MTM) GEAR

(a) Remove the speedometer drive (MTM) gear from front differential case assy.

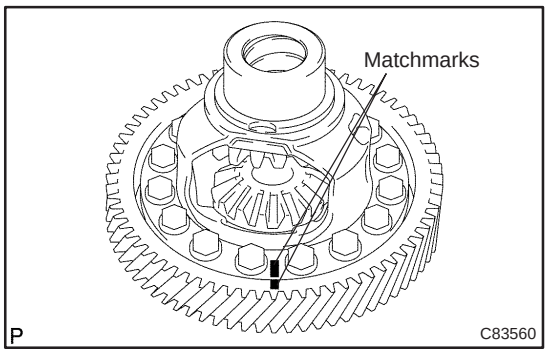

2. REMOVE FRONT DIFFERENTIAL RING GEAR

(a) Place machmarks on the from the front differential ring gear and from the front differential case.

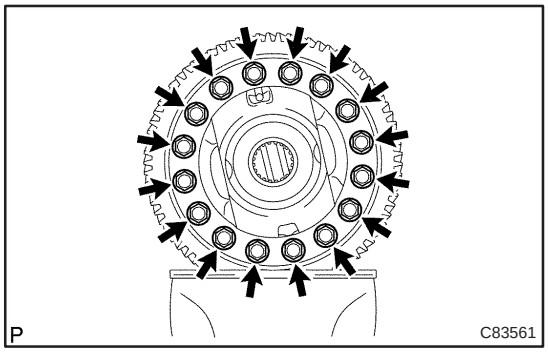

(b) Remove the 16 bolts. using a plastic hammer, remove the front differential case.

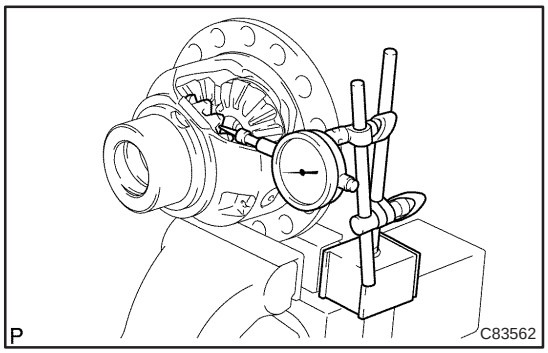

3. INSPECT FRONT DIFFERENTIAL SIDE GEAR BACKLASH

(a) Fixing the front differential pinion to the front differential case side. Using a dial indicator, measure the front differential side gear backlash.

Standard backlash: 0.05 – 0.2 mm (0.0020 – 0.0079 in.)

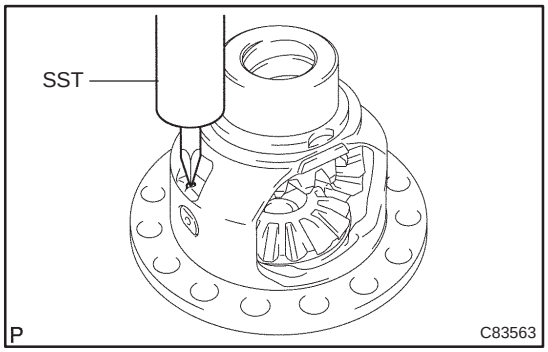

4. REMOVE FRONT DIFFERENTIAL PINION SHAFT STRAIGHT PIN

(a) Using SST and a hammer, loosen the stacked part of the front differential case.
SST 09930–00010

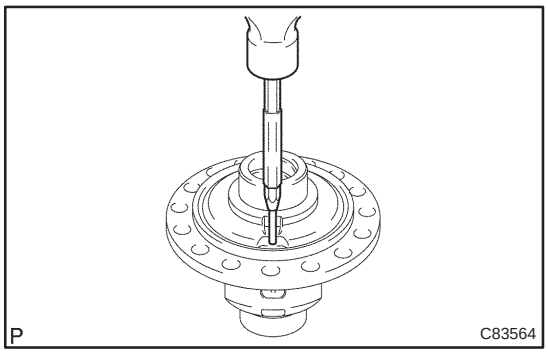

(b) Using a pin punch and a hammer, remove the front differential pinion shaft straight pin from the front differential case.

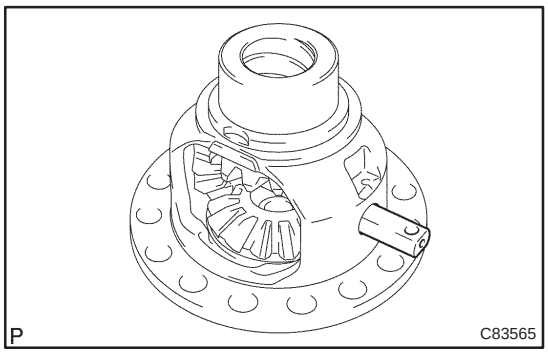

5. REMOVE FRONT DIFFERENTIAL PINION SHAFT NO.1

(a) Remove the front differential pinion shaft No.1 to the front differential case.

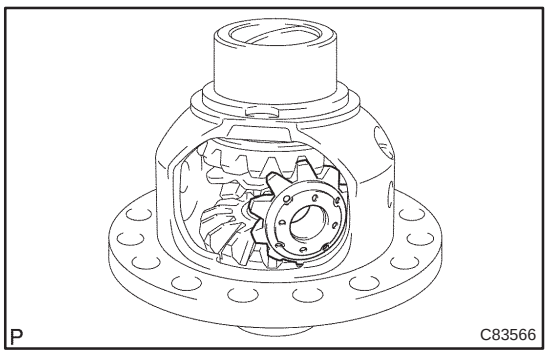

6. REMOVE FRONT DIFFERENTIAL SIDE GEAR

(a) Remove the 2 front differential pinions, 2 front differential pinion thrust washers, 2 front differential side gear and 2 front differential side gear thrust washer No.1 from the front differential case.

HINT:
Revolving front differential pinion, remove the 2 pinion thrust washers and side gear thrust washers.

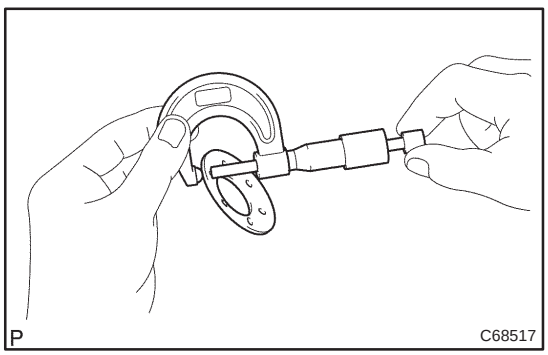

7. INSPECT FRONT DIFFERENTIAL PINION THRUST WASHER

(a) Using a micrometer, measure the thickness of the front differential pinion thrust washer.
Minimum thickness: 0.94 mm (0.03701 in)

If the thickness exceed the minimum, replace the front differential pinion thrust washer.

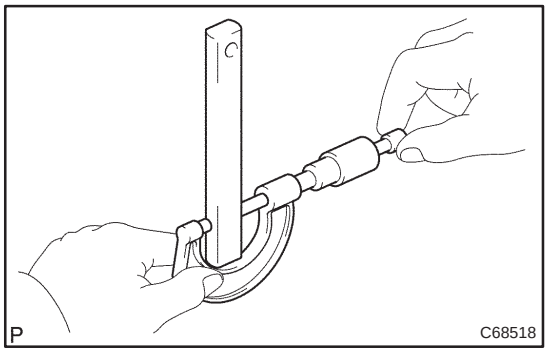

8. INSPECT FRONT DIFFERENTIAL PINION SHAFT NO.1

(a) Using a micrometer, measure the outer diameter of the front differential pinion shaft No.1.

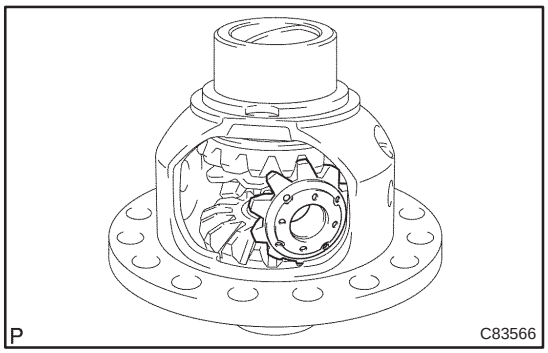

9. INSTALL FRONT DIFFERENTIAL SIDE GEAR

(a) Coat the rotating surface of the front differential side gear with gear oil.
(b) Install the 2 front differential side gear thrust washers to the 2 front differential side gears.

HINT:

(c) Install the 2 front differential side gears, 2 front differential pinions and front differential thrust washers to the front differential case.

HINT:
Revolving the front differential pinion, install the 2 front differential pinions with front differential washers.

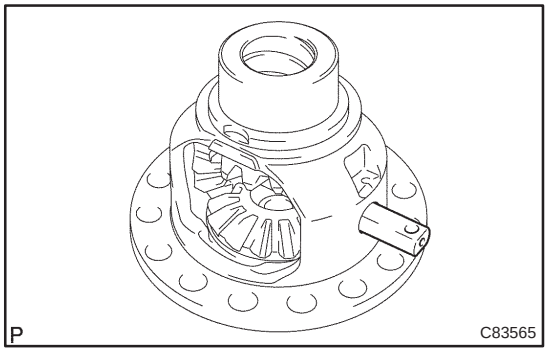

10. INSTALL FRONT DIFFERENTIAL PINION SHAFT NO.1

(a) Coat the rotating surface of the front differential pinion shaft No.1 with gear oil.
(b) Install the front differential pinion shaft No.1 to the front differential case so that the hole for the front differential pinion shaft straight pin is aliened with the hole in the front differential case.

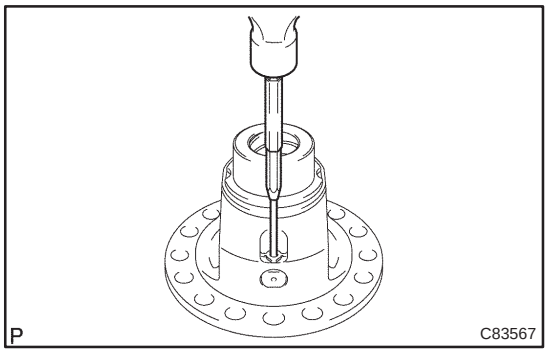

11. INSTALL FRONT DIFFERENTIAL PINION SHAFT STRAIGHT PIN

(a) Using a pin punch and a hammer, install the front differential pinion shaft straight pin to the front differential case.

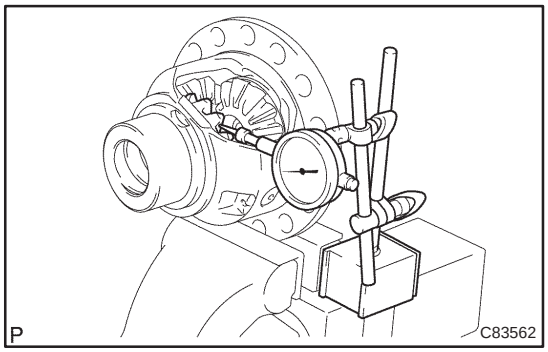

12. ADJUST FRONT DIFFERENTIAL SIDE GEAR BACKLASH

(a) Fixing the front differential pinion to the front differential case side. Using a dial indicator, measure the front differential side gear backlash.
Standard backlash: 0.05 – 0.2 mm (0.0020 – 0.0079 in.)

(b) If the backlash is out of the specification, select the front differential side gear thrust washer and ajust it.
Thrust washer: mm (in.)

Part No.	Thickness	Mark
41361 – 28230	1.00 (0.0397)	1
41361 – 28240	1.10 (0.0437)	2
41361 – 28250	1.20 (0.0476)	3
41361 – 28260	1.30 (0.0516)	4

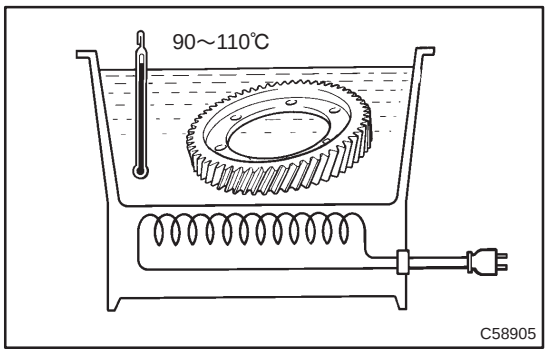

13. INSTALL FRONT DIFFERENTIAL RING GEAR

(a) Using a heater, heart the front differential ring gear to 90 – 100 °C (194.0 – 230.0 °F).

(b) Clean the contact surface differential case.

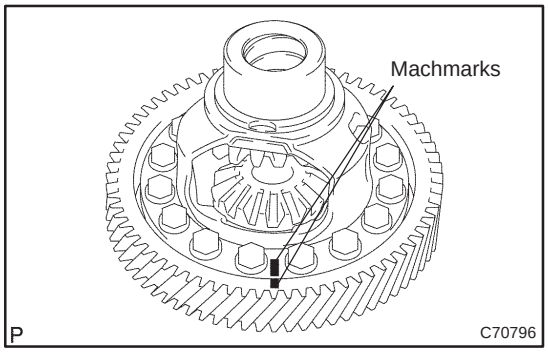

(c) Aligning the both matchmarks, quickly install the front differential ring gear to the front differential case.
Torque: 106 N·m (1080 kgf·cm, 77 ft·lbf)

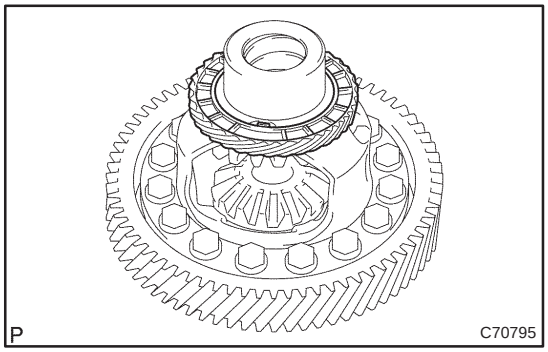

14. INSTALL SPEEDOMETER DRIVE (MTM) GEAR

(a) Install the speedometer drive (MTM) gear to the front differential case.

HOW TO USE THIS MANUAL (1ZZ–FE/3ZZ–FE)

010BH–01

GENERAL INFORMATION

1. GENERAL DESCRIPTION

(a) This manual is made in accordance with SAE J2008.

(b) Generally repair operations can be separated in the following 3 main processes:
1. Diagnosis
2. Removing and Installing, Replacing, Disassembling, Installing and Checking, Adjusting
3. Final Inspection

(c) This manual explains ”Removing and Installing, Replacing, Disassembling, Installing and Checking, Adjusting”, but ”Final Inspection” is omitted.

(d) The following essential operations are not written in this manual, however these operations must be done in the practical situation.
(1) Operation with a jack or lift
(2) Cleaning of a removed part when necessary
(3) Visual check

2. INDEX

(a) An alphabetical INDEX is provided as a section on the end of the book to guide you to the item to be repaired.

3. PREPARATION

(a) Use of special service tools (SST) and special service materials (SSM) may be required, depending on the repairing condition. Be sure to use SST and SSM when they are required and follow the working procedure properly. A list of SST and SSM is in the Preparation section of this manual.

4. REPAIR PROCEDURES

(a) Component drawing is placed as the section or title when necessary.

(b) Illustrations of the parts catalog are placed as the ”disassembled parts drawing” so that it enables you to understand the fitting condition of the components.

(c) Non–reusable parts, grease applied parts, precoated parts and tightening torque are specified in the components drawing.

Example:

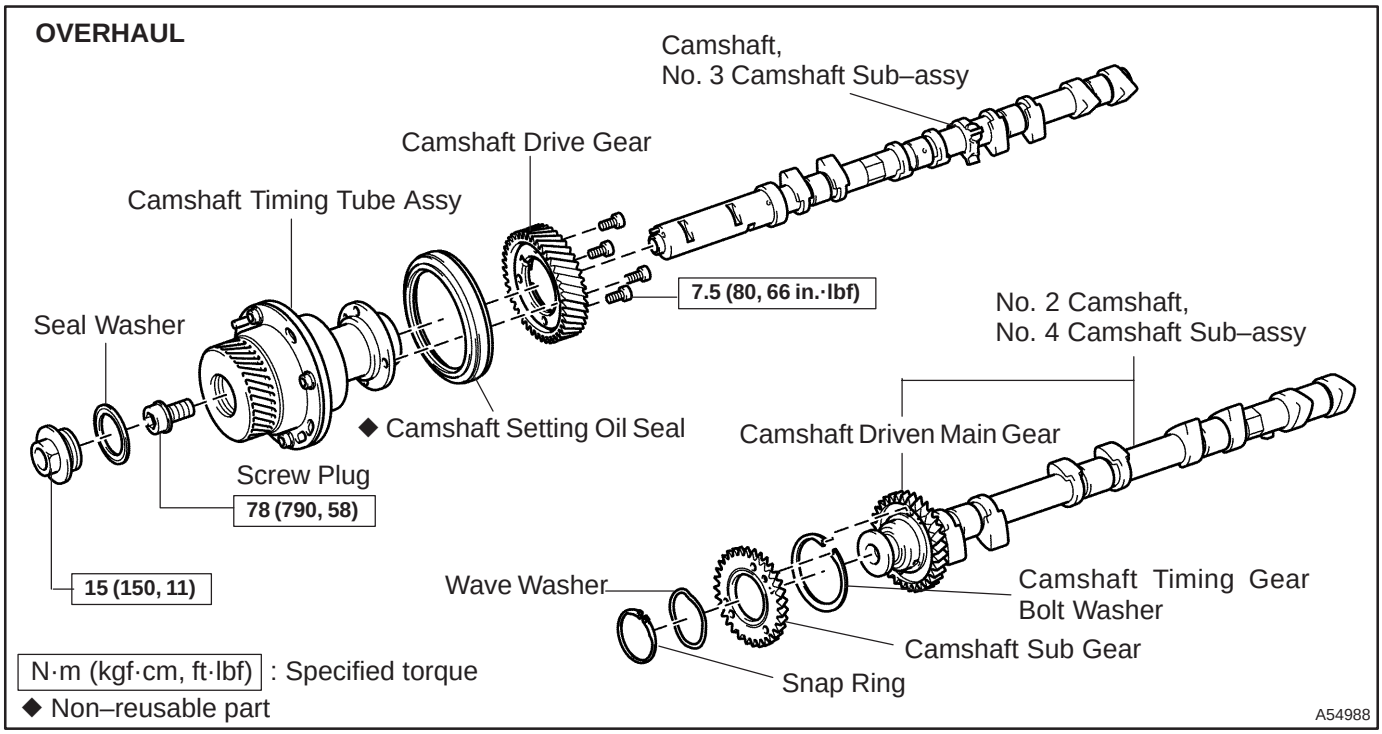

(d) Tightening torque, oil applying position, and non–reusable parts are described as important points in the procedure.

NOTICE:

There are cases where such information can only be indicated by an illustration. In that case, all the information such as torque, oil, etc. are described in the illustration.

(e) Installing procedure of operation items is performed in the reverse order of the removing, and only the important points are described.

(f) Only items with points are described in the procedure, and the operational portion and content are placed using an illustration. In the explanations, details of the operational method, standard value and notice are placed.

(g) There may be a case where the illustrations of similar models are used. In that case the details may be different from the actual vehicle.

(h) The procedures are presented in a step–by–step format:

(1) The illustration shows what to do and where to do it.

(2) The task heading tells what to do.

(3) The detailed text tells how to perform the task and gives other information such as specifications and warnings.

Example:

Illustration: what to do and where

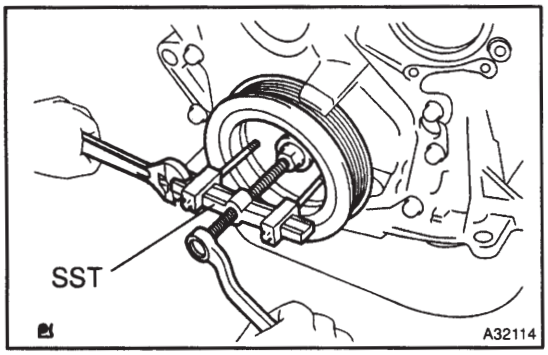

Task heading: what to do

5. REMOVE CRANKSHAFT PULLEY

(a) Using SST, remove the crankshaft pully.
SST 09950–50012 (09951–05010, 09952–05010, 09953–05020, 09954–05020, 09957–04010)

Set part No. *Component part No.* *Detailed text: how to do task*

A59974

HINT:

This format provides an experienced technician with a FAST TRACK to the necessary information. The task heading can be read at a glance when necessary, and the text below provides detailed information. Important specifications and warnings always stand out in bold type.

5. SERVICE SPECIFICATIONS

(a) Specifications are presented in bold type throughout the manual. You never have to leave the procedure to look up your specifications. The specifications are also found in the Service Specifications section for a quick reference.

6. TERMS DEFINITION

CAUTION	Indicate the possibility of injury to you or other people.
NOTICE	Indicate the possibility of damage to the components being repaired.
HINT	Provide additional information to help you perform the repair efficiently.

7. SI UNIT

(a) The UNITS given in this manual are primarily expressed according to the SI UNIT (International System of Unit), and alternately expressed in the metric system and in the English System.

Example:

Torque: 30 N·m (310 kgf·cm, 22 ft·lbf)

REPAIR INSTRUCTION (1NZ–FE/2NZ–FE)

010BI–01

PRECAUTION

1. TO PREVENT FROM ENTERING FOREIGN SUBSTANCES.

(a) When foreign substances such as dust, grain of sand or metallic dust enter inside of engine, it often causes functional failure of the engine.
  (1) Precaution before disassembly.
    • Remove adequately all sand and mud adhere to the outside of engine.
  (2) Precaution at reassembly.
    • Protect disassembled parts from dust by using vinyl sheet to cover.

2. TO PREVENT SCRATCHES ON THE PARTS.

(a) The existence of scratches on the contact and revolving surfaces often causes oil leak and seisure.
  (1) Precautions at disassembly and reassembly.
    • When disassemble the contact surface of the parts, use plastic hummer striking lightly. (Do not pry out by screwdriver).
    • When fix the parts to the vise, do not directly catch it in the vise. Fix the parts through aluminum bar.

3. TO CLEAN AND WASH THE PARTS.

(a) Each parts needs to be well cleaned, washed, and dried by air, and apply specified oil before reassembly.
  (1) Cleaning and washing by alkaline solvent is prohibited:
    • Parts made of aluminum and rubber. (ex. cylinder head cover gasket etc.)
  (2) Cleaning and washing by flushing oil (ex. kerosene, white gasoline etc.) is prohibited:
    • Parts made of rubber. (ex. cylinder head cover gasket etc.)

4. POSITION AND DIRECTION OF EACH PARTS.

(a) Each parts needs to be reassembled as the same position and direction as it disassembled.
  (1) Precautions at disassembly and reassembly.
    • Follow the directions when the manual designates to mark the matchmark and/or direction mark.
    • Disassembled parts needs to be put in order as disassembled, not to change position and/or direction.
    • Follow the directions when the manual instructs the position and direction.

5. INSTALL ENGINE ASSEMBLY TO OVERHAUL STAND WHEN OVERHAUL THE ENGINE.

6. PUT THE DISASSEMBLED PARTS IN ORDER AS THEY DISASSEMBLED.

7. APPLY ENGINE OIL TO THE SLIDING AND ROTATING SURFACES.

8. NON–REUSABLE PARTS SUCH AS GASKET AND SEAL NEEDS TO BE CHANGED TO THE NEW PARTS.

9. BASIC REPAIR HINT

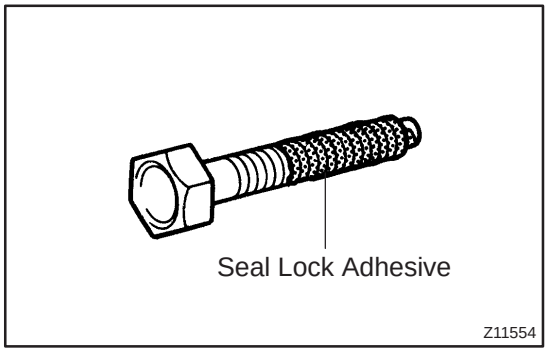

(a) Precoated Parts:
  (1) Precoated parts are bolts, nuts, etc. that are coated with a seal lock adhesive at the factory.
  (2) If a precoated part is retightened, loosened or caused to move in any way, it must be recoated with the specified adhesive.
  (3) When reusing precoated parts, clean off the old adhesive and dry with compressed air. Then apply the specified seal lock adhesive to the bolt, nut or threads.

NOTICE:

Do the torque checking with the lower limit value of the torque tolerance.

(4) Depending on the seal lock agent to apply, there may be a case where it is necessary to leave it for a specified time until it hardens.

(b) Gaskets:
When necessary, use a sealer on gaskets to prevent leaks.

(c) Bolts, Nuts and Screws:
Carefully observe all specifications for bolt tightening torques. Always use a torque wrench.

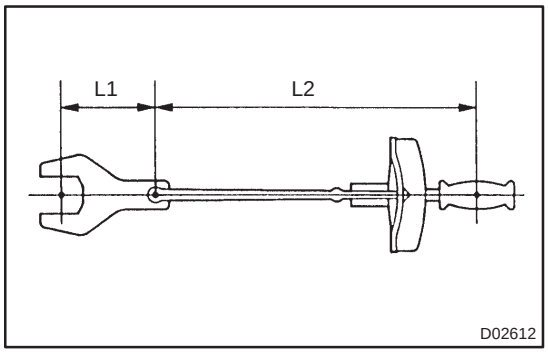

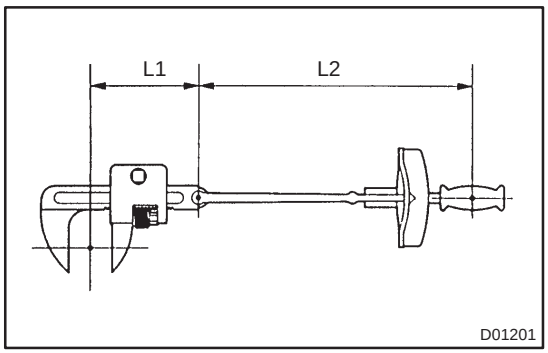

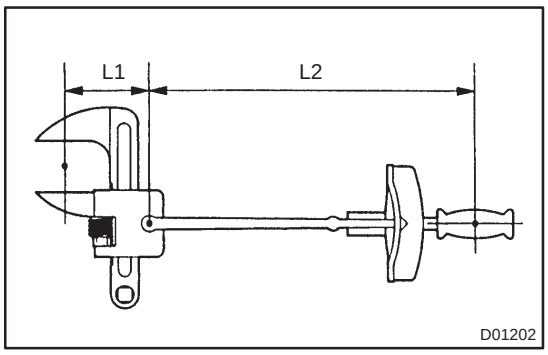

(d) Torque When Using Extension Tool with Torque Wrench:

(1) In case of tightening by extending the entire length of the torque wrench combined with SST or tool, if you tighten until the reading of the torque wrench reached the specified torque value, the actual torque becomes excessive.

(2) In this text, only the specified torque is described. In case of using SST or extension tool, find the reading of the torque wrench by the formula.

(3) Formula T'=T x L2/(L1 + L2)

T'	Reading of torque wrench {N·m (kgf·cm, ft·lbf)}
T	Torque {N·m (kgf·cm, ft·lbf)}
L1	Length of SST or tool (cm)
L2	Length of torque wrench (cm)

10. REMOVAL AND INSTALLATION OF FUEL CONTROL PARTS

(a) Place for Removing and Installing Fuel System Parts:

(1) Place with good air ventilation and without anything flammable such as welder, grinder, drill, electric motor or stove in the surroundings.

(2) Never work in a place like a pit or nearby pit as there is a possibility that vaporized fuel fills those places.

(b) Removing and Installing of Fuel System Parts:

(1) Prepare a fire extinguisher before starting the operation.

(2) For prevention of the static electricity, install a ground on the fuel changer, vehicle and fuel tank, and do not spray much water so as to prevent slipping.

(3) Never use any electric equipment like an electric motor or a working light as they may cause spark or high temperature.
(4) Never use an iron hammer as it may cause spark.
(5) Dispose the shop lag separately from any fuel deposit.

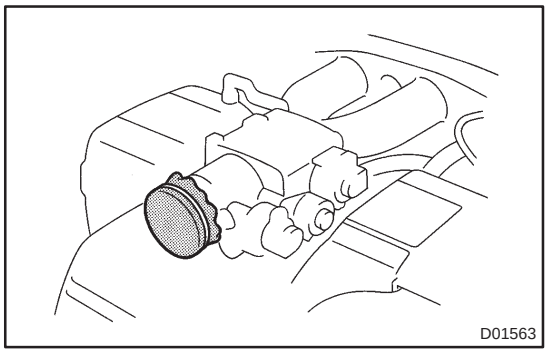
D01563

11. REMOVAL AND INSTALLATION OF ENGINE INTAKE PARTS

(a) If any metal tip is mixed in the inlet pass, that may give a bad effect to the engine and turbo charger.
(b) When removing and installing of the inlet system parts, close the opening of the removed inlet system parts and the engine with a clean shop lag or gum tape.
(c) When installing the inlet system parts, check that there is no mixing of a metal tip.

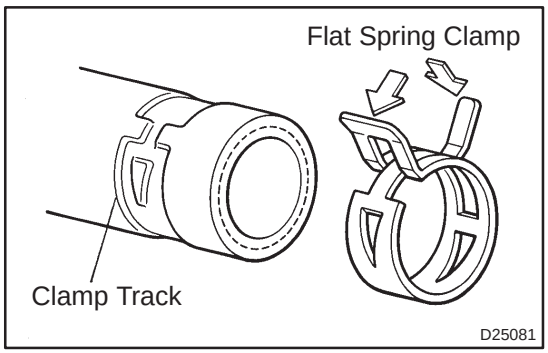

D25081

12. HANDLING OF HOSE CLAMPS

(a) Before removing the hose, check the depth of inserting portion and the clamp position to restore it surely.
(b) Change a deformed or dented into a new one.
(c) In case of reusing the hose, install the clamp on the hose where it has a clamp track.
(d) For a flat spring type clamp, make it adjust by adding force to the arrow mark direction after the installation.

TERMS (1ZZ–FE/3ZZ–FE)

ABBREVIATIONS USED IN THIS MANUAL

010BJ–01

Abbreviations	Meaning
ABS	Anti–Lock Brake System
A/C	Air Conditioner
AC	Alternating Current
ACC	Accessory
ACIS	Acoustic Control Induction System
ACSD	Automatic Cold Start Device
A.D.D.	Automatic Disconnecting Differential
A/F	Air–Fuel Ratio
AHC	Active Height Control Suspension
ALR	Automatic Locking Retractor
ALT	Alternator
AMP	Amplifier
ANT	Antenna
APPROX.	Approximately
ASSY	Assembly
A/T	Automatic Transmission (Transaxle)
ATF	Automatic Transmission Fluid
AUTO	Automatic
AUX	Auxiliary
AVG	Average
AVS	Adaptive Variable Suspension
B+	Battery Voltage
BACS	Boost Altitude Compensation System
BAT	Battery
BDC	Bottom Dead Center
B/L	Bi–Level
B/S	Bore–Stroke Ratio
BTDC	Before Top Dead Center
BVSV	Bimetallic Vacuum Switching Valve
CB	Circuit Breaker
CCo	Catalytic Converter For Oxidation
CD	Compact Disc
CF	Cornering Force
CG	Center Of Gravity
CH	Channel
CKD	Complete Knock Down
COMB.	Combination
CPE	Coupe
CPS	Combustion Pressure Sensor
CPU	Central Processing Unit
CRS	Child Restraint System
CTR	Center
C/V	Check Valve
CV	Control Valve
CW	Curb Weight
DC	Direct Current
DEF	Defogger
DFL	Deflector

Abbreviations	Meaning
DIFF.	Differential
DIFF. LOCK	Differential Lock
D/INJ	Direct Injection
DLC	Data Link Connector
DLI	Distributorless Ignition
DOHC	Double Overhead Cam
DP	Dash Pot
DS	Dead Soak
DSP	Digital Signal Processor
DTC	Diagnostic Trouble Code
ECAM	Engine Control And Measurement System
ECD	Electronic Controlled Diesel
ECDY	Eddy Current Dynamometer
ECT	Electronic Control Transmission
ECU	Electronic Control Unit
ED	Electro–Deposited Coating
EDU	Electronic Driving Unit
EDIC	Electric Diesel Injection Control
EFI	Electronic Fuel Injection
E/G	Engine
EGR	Exhaust Gas Recirculation
EGR–VM	EGR–Vacuum Modulator
ELR	Emergency Locking Retractor
ENG	Engine
ESA	Electronic Spark Advance
ETCS	Electronic Throttle Control System
EVAP	Evaporative Emission Control
EVP	Evaporator
E–VRV	Electric Vacuum Regulating Valve
EX	Exhaust
FE	Fuel Economy
FF	Front–Engine Front–Wheel–Drive
F/G	Fuel Gauge
FIPG	Formed In Place Gasket
FL	Fusible Link
F/P	Fuel Pump
FPU	Fuel Pressure Up
FR	Front
F/W	Flywheel
FW/D	Flywheel Damper
FWD	Front–Wheel–Drive
GAS	Gasoline
GND	Ground
HAC	High Altitude Compensator
H/B	Hatchback
H–FUSE	High Current Fuse
HI	High
HID	High Intensity Discharge (Head Lamp)
HSG	Housing
HT	Hard Top
HWS	Heated Windshield System

Abbreviations	Meaning
IC	Integrated Circuit
IDI	Indirect Diesel Injection
IFS	Independent Front Suspension
IG	Ignition
IIA	Integrated Ignition Assembly
IN	Intake (Manifold, Valve)
INT	Intermittent
I/P	Instrument Panel
IRS	Independent Rear Suspension
ISC	Idle Speed Control
J/B	Junction Block
J/C	Junction Connector
KD	Kick–Down
LAN	Local Area Network
LB	Liftback
LCD	Liquid Crystal Display
LED	Light Emitting Diode
LH	Left–Hand
LHD	Left–Hand Drive
L/H/W	Length, Height, Width
LLC	Long–Life Coolant
LNG	Liquified Natural Gas
LO	Low
LPG	Liquified Petroleum Gas
LSD	Limited Slip Differential
LSP & PV	Load Sensing Proportioning And Bypass Valve
LSPV	Load Sensing Proportioning Valve
MAP	Manifold Absolute Pressure
MAX.	Maximum
MIC	Microphone
MIL	Malfunction Indicator Lamp
MIN.	Minimum
MP	Multipurpose
MPI	Multipoint Electronic Injection
MPX	Multiplex Communication System
M/T	Manual Transmission
MT	Mount
MTG	Mounting
N	Neutral
NA	Natural Aspiration
NO.	Number
O2S	Oxygen Sensor
O/D	Overdrive
OEM	Original Equipment Manufacturing
OHC	Overhead Camshaft
OHV	Overhead Valve
OPT	Option
O/S	Oversize
P & BV	Proportioning And Bypass Valve
PCS	Power Control System
PCV	Positive Crankcase Ventilation

Abbreviations	Meaning
PKB	Parking Brake
PPS	Progressive Power Steering
PS	Power Steering
PTO	Power Take–Off
P/W	Power Window
R & P	Rack And Pinion
R/B	Relay Block
RBS	Recirculating Ball Type Steering
R/F	Reinforcement
RFS	Rigid Front Suspension
RRS	Rigid Rear Suspension
RH	Right–Hand
RHD	Right–Hand Drive
RLY	Relay
ROM	Read Only Memory
RR	Rear
RRS	Rear–Wheel Drive
RWD	Rear–Wheel Drive
SDN	Sedan
SEN	Sensor
SICS	Starting Injection Control System
SOC	State Of Charge
SOHC	Single Overhead Camshaft
SPEC	Specification
SPI	Single Point Injection
SRS	Supplemental Restraint System
SSM	Special Service Materials
SST	Special Service Tools
STD	Standard
STJ	Cold–Start Fuel Injection
SW	Switch
SYS	System
T/A	Transaxle
TACH	Tachometer
TBI	Throttle Body Electronic Fuel Injection
TC	Turbocharger
TCCS	TOYOTA Computer–Controlled System
TCV	Timing Control Valve
TDC	Top Dead Center
TEMP.	Temperature
TEMS	TOYOTA Electronic Modulated Suspension
TFT	Toyota Free–Tronic
TIS	Total Information System For Vehicle Development
T/M	Transmission
TMC	TOYOTA Motor Corporation
TMMK	TOYOTA Motor Manufacturing Kentucky, Inc.
TRC	Traction Control System
TURBO	Turbocharge
TWC	Three–Way Catalyst
U/D	Underdrive
U/S	Undersize

Abbreviations	Meaning
VCV	Vacuum Control Valve
VENT	Ventilator
VIN	Vehicle Identification Number
VPS	Variable Power Steering
VSC	Vehicle Skid Control
VSV	Vacuum Switching Valve
VTV	Vacuum Transmitting Valve
VVT–i	Variable Valve Timing–intelligent
W/	With
WGN	Wagon
W/H	Wire Harness
W/O	Without
1ST	First
2ND	Second
2WD	Two Wheel Drive Vehicle (4 x 2)
3RD	Third
4TH	Fourth
4WD	Four Wheel Drive Vehicle (4 x 4)
4WS	Four Wheel Steering System
5TH	Fifth

010BK–01

GLOSSARY OF SAE AND TOYOTA TERMS

This glossary lists all SAE–J1930 terms and abbreviations used in this manual in compliance with SAE recommendations, as well as their TOYOTA equivalents.

SAE ABBREVIATIONS	SAE TERMS	TOYOTA TERMS ( )—ABBREVIATIONS
A/C	Air Conditioning	Air Conditioner
ACL	Air Cleaner	Air Cleaner, A/CL
AIR	Secondary Air Injection	Air Injection (AI)
AP	Accelerator Pedal	–
B+	Battery Positive Voltage	+B, Battery Voltage
BARO	Barometric Pressure	HAC
CAC	Charge Air Cooler	Intercooler
CARB	Carburetor	Carburetor
CFI	Continuous Fuel Injection	–
CKP	Crankshaft Position	Crank Angle
CL	Closed Loop	Closed Loop
CMP	Camshaft Position	Cam Angle
CPP	Clutch Pedal Position	–
CTOX	Continuous Trap Oxidizer	–
CTP	Closed Throttle Position	LL ON, Idle ON
DFI	Direct Fuel Injection (Diesel)	Direct Injection (DI)
DI	Distributor Ignition	–
DLC1 DLC2 DLC3	Data Link Connector 1 Data Link Connector 2 Data Link Connector 3	1: Check Connector 2: Total Diagnosis Comunication Link (TDCL) 3: OBD II Diagnostic Connector
DTC	Diagnostic Trouble Code	Diagnostic Code
DTM	Diagnostic Test Mode	–
ECL	Engine Control Level	–
ECM	Engine Control Module	Engine ECU (Electronic Control Unit)
ECT	Engine Coolant Temperature	Coolant Temperature, Water Temperature (THW)
EEPROM	Electrically Erasable Programmable Read Only Memory	Electrically Erasable Programmable Read Only Memory (EEPROM), Erasable Programmable Read Only Memory (EPROM)
EFE	Early Fuel Evaporation	Cold Mixture Heater (CMH), Heat Control Valve (HCV)
EGR	Exhaust Gas Recirculation	Exhaust Gas Recirculation (EGR)
EI	Electronic Ignition	TOYOTA Distributorless Ignition (TDI)
EM	Engine Modification	Engine Modification (EM)
EPROM	Erasable Programmable Read Only Memory	Programmable Read Only Memory (PROM)
EVAP	Evaporative Emission	Evaporative Emission Control (EVAP)
FC	Fan Control	–
FEEPROM	Flash Electrically Erasable Programmable Read Only Memory	–
FEPROM	Flash Erasable Programmable Read Only Memory	–
FF	Flexible Fuel	–
FP	Fuel Pump	Fuel Pump
GEN	Generator	Alternator
GND	Ground	Ground (GND)

HO2S	Heated Oxygen Sensor	Heated Oxygen Sensor (HO_2S)
IAC	Idle Air Control	Idle Speed Control (ISC)
IAT	Intake Air Temperature	Intake or Inlet Air Temperature
ICM	Ignition Control Module	–
IFI	Indirect Fuel Injection	Indirect Injection (IDL)
IFS	Inertia Fuel–Shutoff	–
ISC	Idle Speed Control	–
KS	Knock Sensor	Knock Sensor
MAF	Mass Air Flow	Air Flow Meter
MAP	Manifold Absolute Pressure	Manifold Pressure Intake Vacuum
MC	Mixture Control	Electric Bleed Air Control Valve (EBCV) Mixture Control Valve (MCV) Electric Air Control Valve (EACV)
MDP	Manifold Differential Pressure	–
MFI	Multiport Fuel Injection	Electronic Fuel Injection (EFI)
MIL	Malfunction Indicator Lamp	Check Engine Lamp
MST	Manifold Surface Temperature	–
MVZ	Manifold Vacuum Zone	–
NVRAM	Non–Volatile Random Access Memory	–
O2S	Oxygen Sensor	Oxygen Sensor, O_2 Sensor (O_2S)
OBD	On–Board Diagnostic	On–Board Diagnostic System (OBD)
OC	Oxidation Catalytic Converter	Oxidation Catalyst Convert (OC), CCo
OP	Open Loop	Open Loop
PAIR	Pulsed Secondary Air Injection	Air Suction (AS)
PCM	Powertrain Control Module	–
PNP	Park/Neutral Position	–
PROM	Programmable Read Only Memory	–
PSP	Power Steering Pressure	–
PTOX	Periodic Trap Oxidizer	Diesel Particulate Filter (DPF) Diesel Particulate Trap (DPT)
RAM	Random Access Memory	Random Access Memory (RAM)
RM	Relay Module	–
ROM	Read Only Memory	Read Only Memory (ROM)
RPM	Engine Speed	Engine Speed
SC	Supercharger	Supercharger
SCB	Supercharger Bypass	E–ABV
SFI	Sequential Multiport Fuel Injection	Electronic Fuel Injection (EFI), Sequential Injection
SPL	Smoke Puff Limiter	–
SRI	Service Reminder Indicator	–
SRT	System Readiness Test	–
ST	Scan Tool	–
TB	Throttle Body	Throttle Body
TBI	Throttle Body Fuel Injection	Single Point Injection Central Fuel Injection (Ci)
TC	Turbocharger	Turbocharger
TCC	Torque Converter Clutch	Torque Converter

TCM	Transmission Control Module	Transmission ECU, ECT ECU
TP	Throttle Position	Throttle Position
TR	Transmission Range	–
TVV	Thermal Vacuum Valve	Bimetallic Vacuum Switching Valve (BVSV) Thermostatic Vacuum Switching Valve (TVSV)
TWC	Three–Way Catalytic Converter	Three–Way Catalytic (TWC) Manifold Converter CC_{RO}
TWC+OC	Three–Way + Oxidation Catalytic Converter	CC_R + CCo
VAF	Volume Air Flow	Air Flow Meter
VR	Voltage Regulator	Voltage Regulator
VSS	Vehicle Speed Sensor	Vehicle Speed Sensor
WOT	Wide Open Throttle	Full Throttle
WU–OC	Warm Up Oxidation Catalytic Converter	–
WU–TWC	Warm Up Three–Way Catalytic Converter	–
3GR	Third Gear	–
4GR	Fourth Gear	–

ENGINE MECHANICAL

0214A–01

PREPARATION

SST

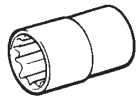	09011–38121	12 mm Socket Wrench for 12 Pointed Head	CYLINDER BLOCK (1ZZ–FE/3ZZ–FE)
	09032–00100	Oil Pan Seal Cutter	PARTIAL ENGINE ASSY (1ZZ–FE/3ZZ–FE)
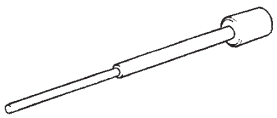	09201–01055	Valve Guide Bushing Remover & Replacer 5.5	CYLINDER HEAD ASSY (1ZZ–FE/3ZZ–FE)
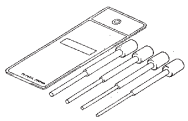	09201–10000	Valve Guide Bushing Remover & Replacer Set	CYLINDER HEAD ASSY (1ZZ–FE/3ZZ–FE)
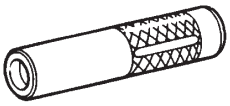	09201–41020	Valve Stem Oil Seal Replacer	CYLINDER HEAD ASSY (1ZZ–FE/3ZZ–FE)
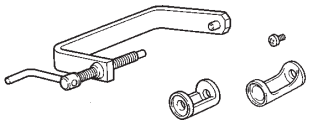	09202–70020	Valve Spring Compressor	CYLINDER HEAD ASSY (1ZZ–FE/3ZZ–FE)
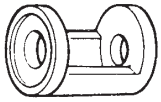	(09202–00010)	Attachment	CYLINDER HEAD ASSY (1ZZ–FE/3ZZ–FE)
	09205–16010	Cylinder Head Bolt Wrench	CYLINDER BLOCK (1ZZ–FE/3ZZ–FE)
	09222–30010	Connecting Rod Bushing Remover & Replacer	CYLINDER BLOCK (1ZZ–FE/3ZZ–FE)
	09223–15030	Oil Seal & Bearing Replacer	PARTIAL ENGINE ASSY (1ZZ–FE/3ZZ–FE)
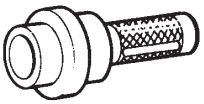	09223–22010	Crankshaft Front Oil Seal Replacer	PARTIAL ENGINE ASSY (1ZZ–FE/3ZZ–FE)
	09228–06501	Oil Filter Wrench	PARTIAL ENGINE ASSY (1ZZ–FE/3ZZ–FE)

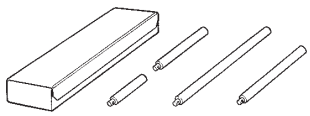	09950–70010	Handle Set	PARTIAL ENGINE ASSY (1ZZ–FE/3ZZ–FE) CYLINDER HEAD ASSY (1ZZ–FE/3ZZ–FE)
	(09951–07100)	Handle 100	PARTIAL ENGINE ASSY (1ZZ–FE/3ZZ–FE) CYLINDER HEAD ASSY (1ZZ–FE/3ZZ–FE)
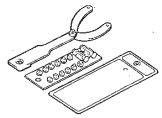	09960–10010	Variable Pin Wrench Set	PARTIAL ENGINE ASSY (1ZZ–FE/3ZZ–FE)
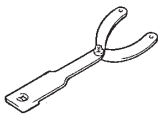	(09962–01000)	Variable Pin Wrench Arm Assy	PARTIAL ENGINE ASSY (1ZZ–FE/3ZZ–FE)
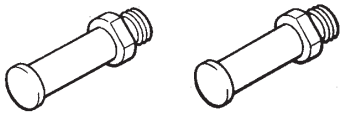	(09963–01000)	Pin 10	PARTIAL ENGINE ASSY (1ZZ–FE/3ZZ–FE)

Recomended Tools

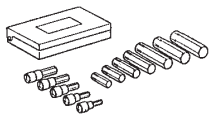	09040–00011	Hexagon Wrench Set	PARTIAL ENGINE ASSY (1ZZ–FE/3ZZ–FE) CYLINDER HEAD ASSY (1ZZ–FE/3ZZ–FE)
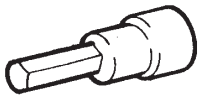	(09043–20100)	Socket Hexagon Wrench 10	CYLINDER HEAD ASSY (1ZZ–FE/3ZZ–FE)
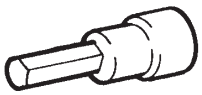	(09043–20120)	Socket Hexagon Wrench 12	PARTIAL ENGINE ASSY (1ZZ–FE/3ZZ–FE)
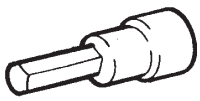	(09043–20100)	Socket Hexagon Wrench 10	CYLINDER HEAD ASSY (1ZZ–FE/3ZZ–FE)
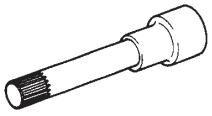	09043–50100	Bi–hexagon Wrench 10 mm	PARTIAL ENGINE ASSY (1ZZ–FE/3ZZ–FE)

SSM

	08826–00080	Seal Packing Black or equivalent (FIPG)	PARTIAL ENGINE ASSY (1ZZ–FE/3ZZ–FE) CYLINDER BLOCK (1ZZ–FE/3ZZ–FE)
	08826–00100	”Seal Packing 1282B,” THREE BOND 1282B or equivalent (FIPG)	PARTIAL ENGINE ASSY (1ZZ–FE/3ZZ–FE)

08833–00070	"Adhesive 1324," THREE BOND 1324 or equivalent	CYLINDER HEAD ASSY (1ZZ–FE/3ZZ–FE) CYLINDER BLOCK (1ZZ–FE/3ZZ–FE)

Equipment

Wooden block	
Spring tension gauge	
Vernier calipers	
V–block	
Dial indicator	
Micrometer	
Torque wrench	
Heater	
Precision straight edge	
Feeler gauge	
Caliper gauge	
Steel square	
Plastigage	
Valve seat cutter	
Ride reamer	
Piston ring expander	
Plastic hammer	
Cylinder gauge	
Connecting rod aligner	
Piston ring compressor	

LUBRICATION

02149–01

PREPARATION

Equipment

Feeler gauge	
Precision straight edge	
Torque wrench	

STARTING & CHARGING

02148–01

PREPARATION

SST

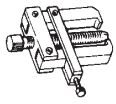	09286–46011	Injection Pump Spline Shaft Puller	GENERATOR ASSY (1ZZ–FE/3ZZ–FE)
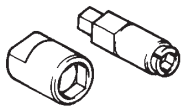	09820–63010	Alternator Pulley Set Nut Wrench Set	GENERATOR ASSY (1ZZ–FE/3ZZ–FE)
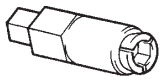	(09820–06010)	Alternator Rotor Shaft Wrench	GENERATOR ASSY (1ZZ–FE/3ZZ–FE)
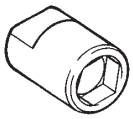	(09820–06020)	Alternator Pulley Set Nut 22 mm Wrench	GENERATOR ASSY (1ZZ–FE/3ZZ–FE)

Recomended Tools

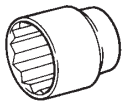	09011–12291	Socket Wrench for 29 mm .	GENERATOR ASSY (1ZZ–FE/3ZZ–FE)
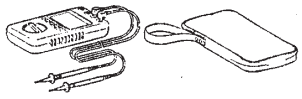	09082–00040	TOYOTA Electrical Tester	STARTER ASSY (1ZZ–FE/3ZZ–FE) GENERATOR ASSY (1ZZ–FE/3ZZ–FE)
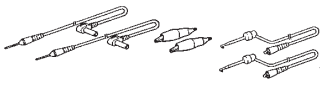	(09083–00150)	Test Lead Set	STARTER ASSY (1ZZ–FE/3ZZ–FE) GENERATOR ASSY (1ZZ–FE/3ZZ–FE)

Equipment

Ohmmeter	
Sandpaper	
V–block	
Dial indicator	
Vernier calipers	
Plastic hammer	
Torque wrench	
Wooden block	

STANDARD BOLT

HOW TO DETERMINE BOLT STRENGTH

030K5–01

Bolt Type				Class
Hexagon Head Bolt		Stud Bolt	Weld Bolt	
Normal Recess Bolt	Deep Recess Bolt			
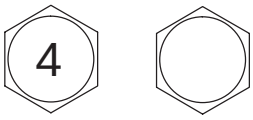 No Mark	 No Mark	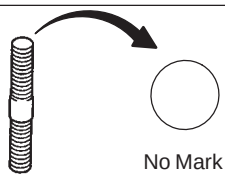 No Mark	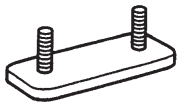	4T
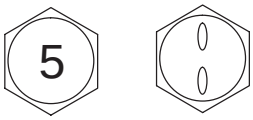				5T
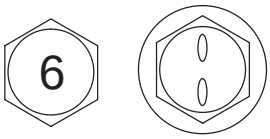 w/ Washer	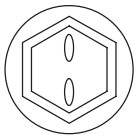 w/ Washer			6T
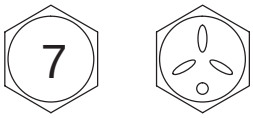	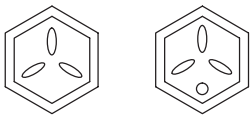			7T
				8T
				9T
	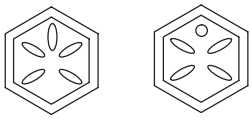			10T
	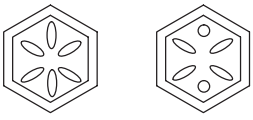			11T

B06431

030K6–01

SPECIFIED TORQUE FOR STANDARD BOLTS

Class	Diameter mm	Pitch mm	Specified torque					
			Hexagon head bolt			Hexagon flange bolt		
			N·m	kgf·cm	ft·lbf	N·m	kgf·cm	ft·lbf
4T	6	1	5	55	48 in.·lbf	6	60	52 in.·lbf
	8	1.25	12.5	130	9	14	145	10
	10	1.25	26	260	19	29	290	21
	12	1.25	47	480	35	53	540	39
	14	1.5	74	760	55	84	850	61
	16	1.5	115	1,150	83	–	–	–
5T	6	1	6.5	65	56 in.·lbf	7.5	75	65 in.·lbf
	8	1.25	15.5	160	12	17.5	175	13
	10	1.25	32	330	24	36	360	26
	12	1.25	59	600	43	65	670	48
	14	1.5	91	930	67	100	1,050	76
	16	1.5	140	1,400	101	–	–	–
6T	6	1	8	80	69 in.·lbf	9	90	78 in.·lbf
	8	1.25	19	195	14	21	210	15
	10	1.25	39	400	29	44	440	32
	12	1.25	71	730	53	80	810	59
	14	1.5	110	1,100	80	125	1,250	90
	16	1.5	170	1,750	127	–	–	–
7T	6	1	10.5	110	8	12	120	9
	8	1.25	25	260	19	28	290	21
	10	1.25	52	530	38	58	590	43
	12	1.25	95	970	70	105	1,050	76
	14	1.5	145	1,500	108	165	1,700	123
	16	1.5	230	2,300	166	–	–	–
8T	8	1.25	29	300	22	33	330	24
	10	1.25	61	620	45	68	690	50
	12	1.25	110	1,100	80	120	1,250	90
9T	8	1.25	34	340	25	37	380	27
	10	1.25	70	710	51	78	790	57
	12	1.25	125	1,300	94	140	1,450	105
10T	8	1.25	38	390	28	42	430	31
	10	1.25	78	800	58	88	890	64
	12	1.25	140	1,450	105	155	1,600	116
11T	8	1.25	42	430	31	47	480	35
	10	1.25	87	890	64	97	990	72
	12	1.25	155	1,600	116	175	1,800	130

030K7–01

HOW TO DETERMINE NUT STRENGTH

Nut Type			Class
Present Standard Hexagon Nut	Old Standard Hexagon Nut		
	Cold Forging Nut	Cutting Processed Nut	
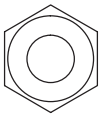 No Mark			4N
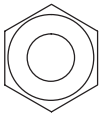 No Mark (w/ Washer)	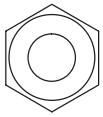 No Mark (w/ Washer)	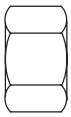 No Mark	5N (4T)
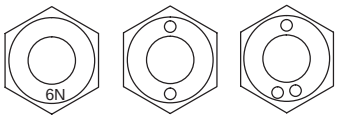 6N			6N
	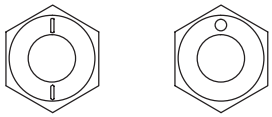	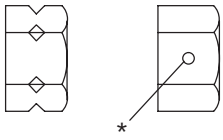 *	7N (5T)
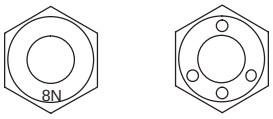 8N			8N
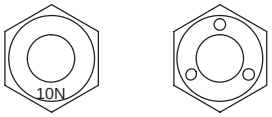 10N	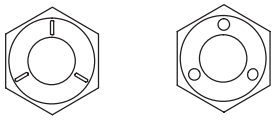	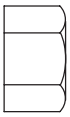 No Mark	10N (7T)
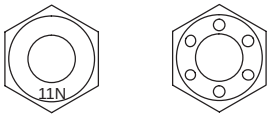 11N			11N
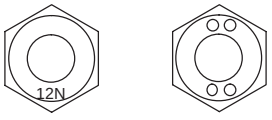 12N			12N

*: Nut with 1 or more marks on one side surface of the nut.

B06432

HINT:

Use the nut with the same number of the nut strength classification or the greater than the bolt strength classification number when tightening parts with a bolt and nut.

Example: Bolt = 4T

Nut = 4N or more

ENGINE MECHANICAL

SERVICE DATA

0300O–02

Chain sub–assy		
Length at 16 links	Maximum	112.6 mm (4.433 in.)
Camshaft timing gear or sprocket		
Diameter (w/ chain)	Minimum	97.3 mm (3.831 in.)
Crankshaft timing gear or sprocket		
Diameter (w/ chain)	Minimum	51.6 mm (2.032 in.)
Chain tensioner slipper		
Wear	Maximum	1.0 mm (0.039 in.)
Chain vibration damper No. 1		
Wear	maximum	1.0 mm (0.039 in.)
Cylinder head set bolt		
Length	Standard	156.0 – 159.0 mm (6.142 – 6.260 in.)
	Maximum	159.5 mm (6.280 in.)
Camshaft		
Circle runout	Maximum	0.03 mm (0.0012 in.)
Lobe height	Standard Intake	44.333 – 44.433 mm (1.7454 – 1.7493 in.)
	Exhaust	43.761 – 43.861 mm (1.7229 – 1.7268 in.)
	Minimum Intake	44.18 mm (1.7394 in.)
	Exhaust	43.61 mm (1.7169 in.)
Journal diameter	No. 1	34.449 – 34.465 mm (1.3563 – 1.3569 in.)
	Others	22.949 – 22.965 mm (0.9035 – 0.9041 in.)
Thrust clearance	Standard	0.040 – 0.095 mm (0.0009 – 0.0023 in.)
	Maximum	0.110 mm (0.0043 in.)
Oil clearance	Standard	0.035 – 0.072 mm (0.0014 – 0.0028 in.)
	Maximum	0.10 mm (0.0039 in.)
Valve clearance (Cold)	Intake	0.15 – 0.25 mm (0.006 – 0.010 in.)
	Exhaust	0.25 – 0.35 mm (0.010 – 0.014 in.)
Cylinder head sub–assy		
Warpage	Maximum Cylinder block side	0.05 mm (0.0020 in.)
	Intake manifold side	0.10 mm (0.0040 in.)
	Exhaust manifold side	0.10 mm (0.0040 in.)
Valve guide bushing		
Inside diameter		5.510 – 5.530 mm (0.2169 – 0.2177 in.)
Oil clearance	Standard Intake	0.025 – 0.060 mm (0.0010 – 0.0024 in.)
	Exhaust	0.030 – 0.065 mm (0.0012 – 0.0026 in.)
	Maximum Intake	0.08 mm (0.0031 in.)
	Exhaust	0.01 mm (0.0039 in.)
Bore diameter		10.285 – 10.306 mm (0.4049 – 0.4057 in.)
Protrusion height		8.7 – 9.1 mm (0.342 – 0.358 in.)
Valve stem		
Diameter	Intake	5.470 – 5.485 mm (0.2154 – 0.2159 in.)
	Exhaust	5.465 – 5.480 mm (0.2152 – 0.2158 in.)
Inner compression spring		
Free length		43.40 mm (1.7087 in.)
Deviation	Maximum	2.0 mm (0.078 in.)
Angle (reference)	Maximum	2°
Valve		
Overall length	Standard Intake	88.65 mm (3.4902 in.)
	Exhaust	88.69 mm (3.4917 in.)
	Minimum Intake	88.35 mm (3.4874 in.)
	Exhaust	88.39 mm (3.4799 in.)
Head margin thickness	Standard	1.0 mm (0.039 in.)
	Minimum	0.7 mm (0.028 in.)

Valve lifter		
Diameter		30.966 – 30.976 mm (1.2191 – 1.2195 in.)
Bore diameter		31.000 – 31.025 mm (1.2205 – 1.2215 in.)
Oil clearance	Standard	0.024 – 0.059 mm (0.0016 – 0.0037 in.)
	Maximum	0.1 mm (0.0039 in.)
Straight pin		
Protrusion height		5 mm (0.20 in.)
Union protrusion		
Protrusion height	Standard A	29 mm (1.14 in.)
	B	66.5 mm (2.62 in.)
	C	24 mm (0.95 in.)
Connecting rod sub–assy		
Thrust clearance	Standard	0.160 – 0.342 mm (0.063 – 0.0135 in.)
	Maximum	0.342 mm (0.0135 in.)
Oil clearance	Standard	0.028 – 0.060 mm (0.0011 – 0.0024 in.)
	Maximum	0.080 mm (0.0031 in.)
Out–of alignment	Maximum per/100 mm (3.94 in.)	0.05 mm (0.0020 in.)
Twist	Maximum per/100 mm (3.94 in.)	0.05 mm (0.0020 in.)
Connecting rod bearing		
Center wall thickness	Reference Mark 1	1.486 – 1.490 mm (0.0585 – 0.0587 in.)
	Mark 2	1.490 – 1.494 mm (0.0587 – 0.0588 in.)
	Mark 3	1.494 – 1.498 mm (0.0588 – 0.0590 in.)
Crankshaft		
Thrust clearance	Standard	0.04 – 0.24 mm (0.0016 – 0.0094 in.)
	Maximum	0.30 mm (0.0118 in.)
Circle runout	Maximum	0.03 mm (0.0012 in.)
Main journal diameter		47.988 – 48.000 mm (1.8893 – 1.8898 in.)
	Maximum taper and out–of–round	0.02 mm (0.0008 in.)
Oil clearance	Standard	0.013 – 0.030 mm (0.0005 – 0.0012 in.)
	Maximum	0.05 mm (0.0020 in.)
Cylinder block sub–assy		
Warpage	Maximum	0.05 mm (0.0020 in.)
Bore diameter	Standard	79.000 – 79.013 mm (3.1073 – 3.1108 in.)
	Maximum	79.013 mm (3.1108 in.)
Piston		
Diameter (at 29.8 mm (1.173 in.) from the piston head)	1ZZ–FE	78.925 – 78.935 mm (3.1073 – 3.1077 in.)
	3ZZ–FE	78.955 – 78.965 mm (3.1085 – 3.1089 in.)
Oil clearance	Standard 1ZZ–FE	0.065 – 0.088 mm (0.0026 – 0.0035 in.)
	3ZZ–FE	0.035 – 0.058 mm (0.0014 – 0.0023 in.)
	Maximum 1ZZ–FE	0.088 mm (0.0035 in.)
	3ZZ–FE	0.058 mm (0.0023 in.)
Piston ring		
Groove clearance	No. 1	0.020 – 0.070 mm (0.0008 – 0.0028 in.)
	No. 2	0.030 – 0.070 mm
End gap	Standard No. 1	0.25 – 0.35 mm (0.0098 – 0.0138 in.)
	No. 2	0.35 – 0.50 mm (0.0138 – 0.0197 in.)
	Maximum No. 1	0.74 mm (0.029 in.)
	No. 2	0.89 mm (0.035 in.)
Piston pin		
Diameter		20.004 – 20.013 mm (0.7876 –0.7879 in.)
Connecting rod bolt		
Diameter	Standard	6.6 –6.7 mm (0.260 – 0.264 in.)
	Maximum	6.4 mm (0.252 in.)
Crank pin		
Diameter		43.992 – 44.000 mm (1.7320 – 1.7323 in.)
	Maximum taper and out–of–round	0.02 mm (0.0008 in.)
Crankshaft bearing cap set bolt		
Diameter	Standard	7.3 – 7.5 mm (0.287 – 0.295 in.)
	Maximum	7.2 mm (0.283 in.)

Straight pin	
Timing chain or belt cover sub–assy x cylinder block sub–assy	
length 15 mm (0.59 in.)	5 mm (0.20 in.)
length 12 mm (0.47 in.)	6 mm (0.24 in.)
Transaxle housing x Cylinder block sub–assy	12 mm (0.47 in.)
Cylinder head sub–assy x Cylinder block sub–assy	7 mm (0.28 in.)
Crankshaft bearing cap sub–assy x Cylinder block sub–assy	7.5 mm (030 in.)
Oil pump assy x Cylinder block sub–assy	10 mm (0.39 in.)
Driveshaft bracket x Cylinder block sub–assy	8 mm (0.31 in.)
Connecting rod small end bush	
Oil clearance	0.005 – 0.011 mm (0.0002 – 0.0004 in.)

0300P–02

TORQUE SPECIFICATION

Part Tightened		N·m	kgf·cm	ft·lbf
Cylinder block water drain cock sub–assy x Cylinder block sub–assy		20	204	15
Oil strainer sub–assy x Cylinder block sub–assy		9.0	92	80 in.·lbf
Oil pan sub–assy x Cylinder block sub–assy		9.0	92	80 in.·lbf
Oil pan drain plug x Oil pan sub–assy		37	377	27
Oil filter union x Cylinder block sub–assy		30	306	22
Oil pump assy x Cylinder block sub–assy		9.0	92	80 in.·lbf
Cylinder head sub–assy x Cylinder block sub–assy	1st 2nd	49 Turn 90°	500 Turn 90°	36 Turn 90°
Oil control valve filter x Cylinder head sub–assy		30	306	22
Camshaft timing oil control valve assy x Cylinder head sub–assy		9.0	92	80 in.·lbf
Camshaft timing gear assy x Camshaft		54	551	40
Camshaft timing gear or sprocket x Camshaft No. 2		54	551	40
Camshaft, Camshaft No. 2 x Cylinder head sub–assy	Bearing cap No. 1 Bearing cap No. 3	23 13	235 133	17 10
Chain vibration damper No. 1 x Cylinder head sub–assy		9.0	92	80 in.·lbf
Chain vibration damper No. 1 x Cylinder block sub–assy		9.0	92	80 in.·lbf
Chain tensioner slipper x Cylinder block sub–assy		19	194	14
Timing chain or belt cover sub–assy x Cylinder head sub–assy		13	133	10
Timing chain or belt cover sub–assy x Cylinder block sub–assy	M6 M8	13 19	133 194	10 14
Chain tensioner assy No. 1 x Cylinder head sub–assy		9.0	92	80 in.·lbf
Crankshaft pulley x Crankshaft		138	1,407	102
Water pump assy x Cylinder block sub–assy		11	112	8
Water pump assy x Timing chain or belt cover sub–assy		9.0	92	80 in.·lbf
Cylinder head cover sub–assy x Cylinder head sub–assy	w/o washer w/ washer	11 9.0	112 92	8 80 in.·lbf
Cylinder head cover sub–assy x Timing chain or belt cover sub–assy		11	112	8
Spark plug x Cylinder head sub–assy		25	255	18
Stud bolt Timing chain or belt cover sub–assy x Cylinder head sub–assy length 89 mm (3.50 in.) length 53.5 mm (2.11 in.) Cylinder head cover sub–assy x Cylinder head sub–assy Intake manifold x Cylinder head sub–assy Exhaust manifold x Cylinder head sub–assy		 9.5 5.0 5.0 9.5 9.5	 97 51 51 97 97	 84 in.·lbf 44 in.·lbf 44 in.·lbf 84 in.·lbf 84 in.·lbf
W/ Head taper screw plug No. 2 x Cylinder head sub–assy		44	449	33
Crankshaft bearing cap sub–assy x Cylinder block sub–assy	M10 1st 2nd 3rd M8	22 44 Turn 90° 19	224 449 Turn 90° 194	16 33 Turn 90° 14
Connecting rod x Connecting rod cap	1st 2nd	20 Turn 90°	204 Turn 90°	15 Turn 90°
Stud bolt Water by–pass pipe No. 1 x Cylinder block sub–assy Water inlet x Cylinder block sub–assy Oil strainer sub–assy x Cylinder block sub–assy Oil pan sub–assy x Cylinder block sub–assy Knock control sensor x Cylinder block sub–assy		 5.0 5.0 5.0 5.0 11	 51 51 51 51 112	 44 in.·lbf 44 in.·lbf 44 in.·lbf 44 in.·lbf 8

LUBRICATION

SERVICE DATA

0300L–02

Rotor tip clearance	Standard	0.040 – 0.160 mm (0.0016 – 0.0063 in.)
	Maximum	0.160 mm (0.0063 in.)
Rotor side clearance	Standard	0.025 – 0.071 mm (0.0010 – 0.0028 in.)
	Maximum	0.071 mm (0.0028 in.)
Body clearance	Standard	0.260 – 0.325 mm (0.0102 – 0.0128 in.)
	Maximum	0.325 mm (0.0128 in.)

0300K–02

TORQUE SPECIFICATION

Part Tightened	N·m	kgf·cm	ft·lbf
Oil pump relief valve plug x Oil pump body	37	377	27
Oil pump cover x Oil pump body	10	102	7

STARTING & CHARGING

0300Q–02

SERVICE DATA

Starter armature assy		
Circle runout	Maximum	0.05 mm (0.0020 in.)
Commutator diameter	Standard	28 mm (1.102 in.)
	Minimum	27 mm (1.063 in.)
Undercut depth	Standard	0.6 mm (0.024 in.)
	Minimum	0.2 mm (0.008 in.)
Starter yoke assy		
Brush length	Standard	14 mm (0.551 in.)
	Minimum	9 mm (0.354 in.)
Starter brush holder assy		
Brush length	Standard	14 mm (0.551 in.)
	Minimum	9 mm (0.354 in.)
Generator rotor assy		
Coil resistance	at 20°C (68°F)	2.1 – 2.5 Ω
Slip ring diameter	Standard	14.2 – 14.4 mm (0.559 – 0.567 in.)
	Minimum	12.8 mm (0.504 in.)
Generator brush holder assy		
Exposed brush length	Standard	9.5 – 11.5 mm (0.374 – 0.453 in.)
	Minimum	1.5 mm (0.059 in.)

0300R–02

TORQUE SPECIFICATION

Part Tightened		N·m	kgf·cm	ft·lbf
Starter commutator end frame assy x Starter brush holder assy		1.5	15	13 in.·lbf
Starter yoke assy x Starter drive housing assy		5.9	60	52 in.·lbf
Magnet starter switch assy x Starter drive housing assy		8.3	85	73 in.·lbf
Lead wire x Magnet starter switch assy		9.8	100	7
Generator rectifier end frame x Generator drive end frame	w/o cord clip	4.5	46	40 in.·lbf
	w/ cord clip	5.4	55	48 in.·lbf
Generator holder w/ rectifier x Generator drive end frame		2.9	30	26 in.·lbf
Generator regulator x Generator holder w/ rectifier		2.0	20	18 in.·lbf
Generator brush holder assy x Generator holder w/ rectifier		2.0	20	18 in.·lbf
Generator rear end cover x Generator rectifier end frame		4.4	45	39 in.·lbf
Terminal plate x Generator rectifier end frame	Bolt	3.9	40	35 in.·lbf
	Nut	4.4	45	39 in.·lbf
Terminal insulator x Generator holder w/ rectifier		4.1	42	36 in.·lbf
Generator pulley x Generator rotor assy		111	1,132	82

PARTIAL ENGINE ASSY (1ZZ–FE/3ZZ–FE)

140KJ–01

COMPONENTS

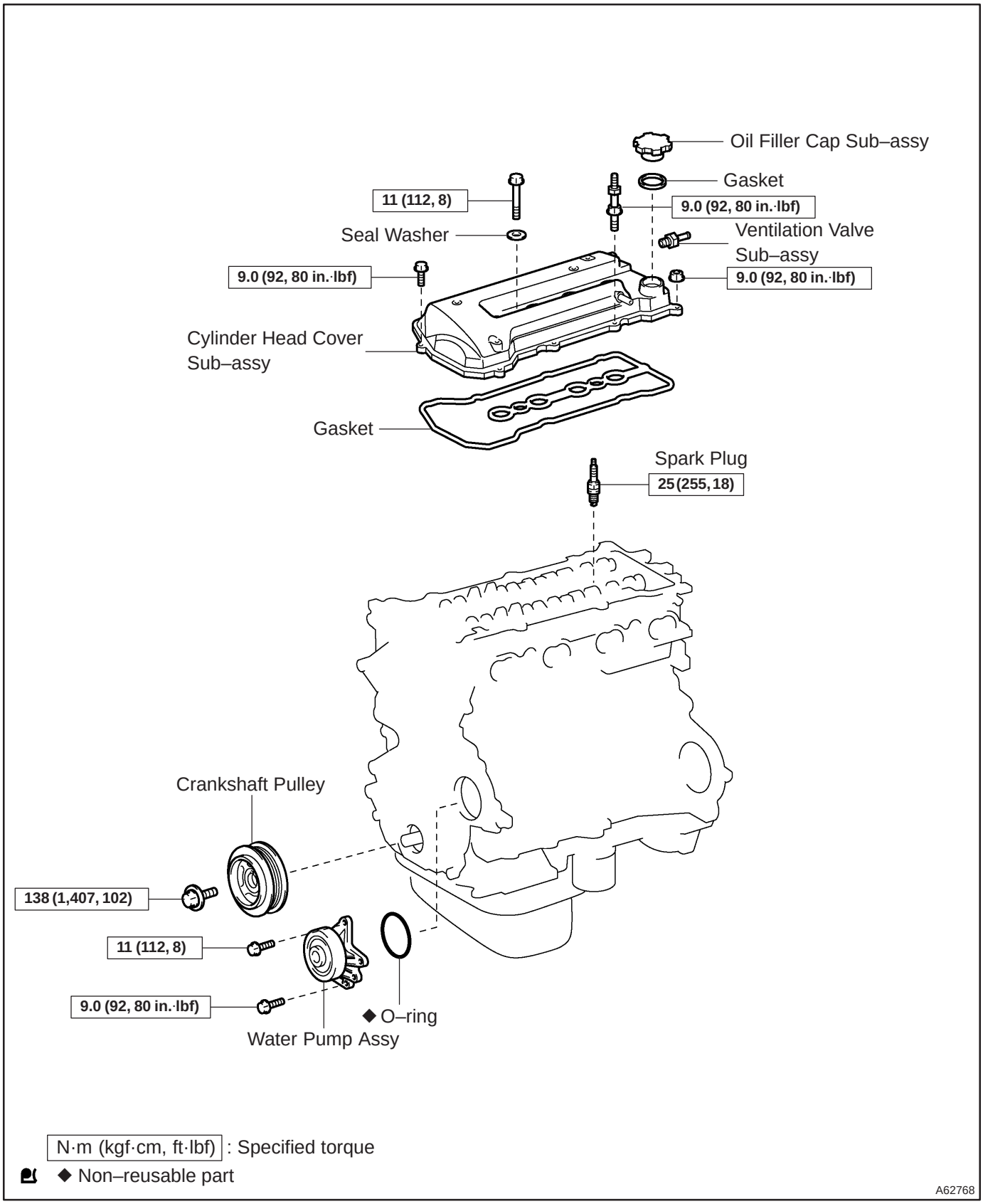

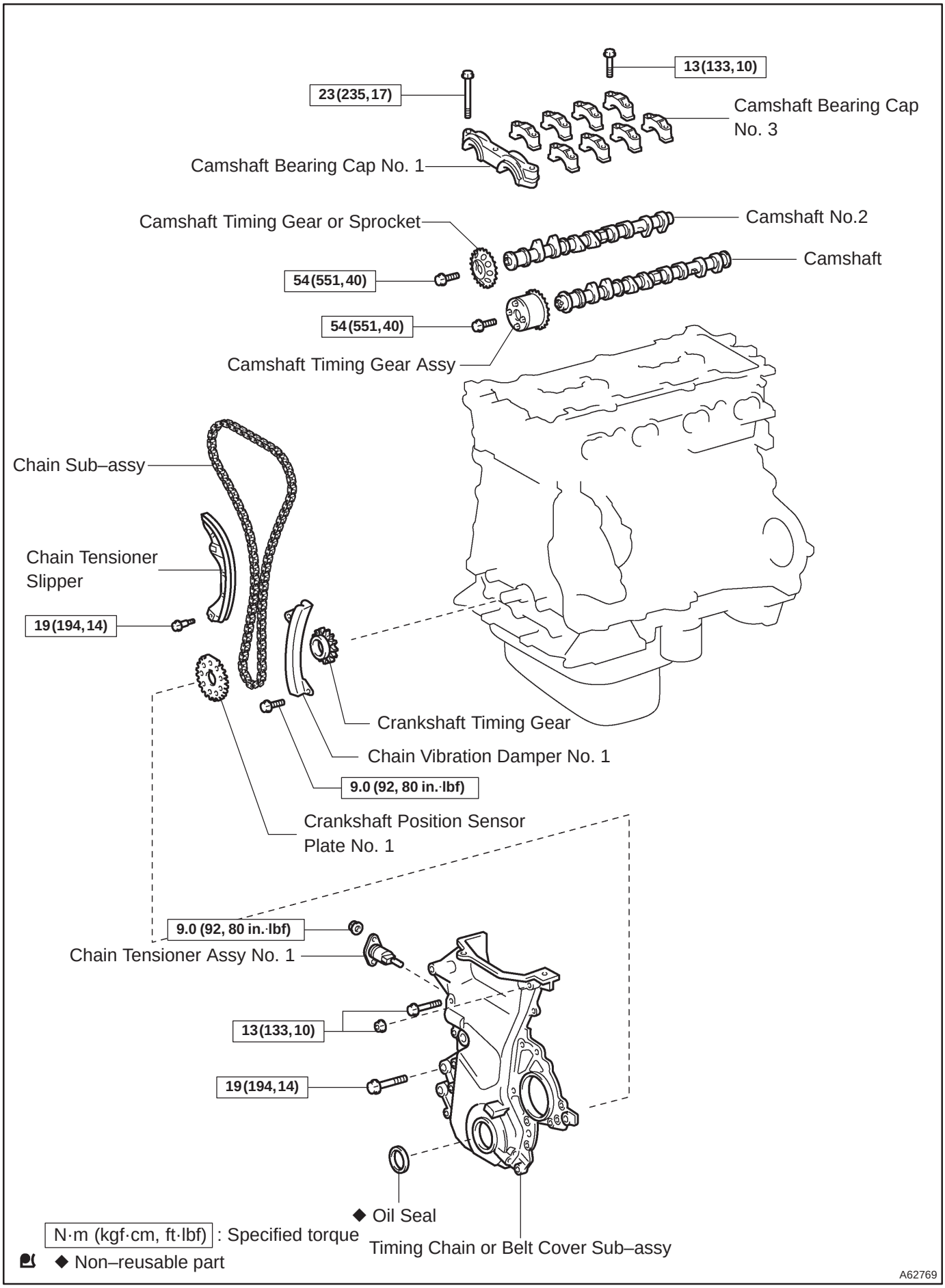
13 (133, 10)
23 (235, 17)
Camshaft Bearing Cap No. 3
Camshaft Bearing Cap No. 1
Camshaft Timing Gear or Sprocket
Camshaft No.2
Camshaft
54 (551, 40)
54 (551, 40)
Camshaft Timing Gear Assy
Chain Sub–assy
Chain Tensioner Slipper
19 (194, 14)
Crankshaft Timing Gear
Chain Vibration Damper No. 1
9.0 (92, 80 in.·lbf)
Crankshaft Position Sensor Plate No. 1
9.0 (92, 80 in.·lbf)
Chain Tensioner Assy No. 1
13 (133, 10)
19 (194, 14)
◆ Oil Seal
Timing Chain or Belt Cover Sub–assy
N·m (kgf·cm, ft·lbf) : Specified torque
◆ Non–reusable part
A62769

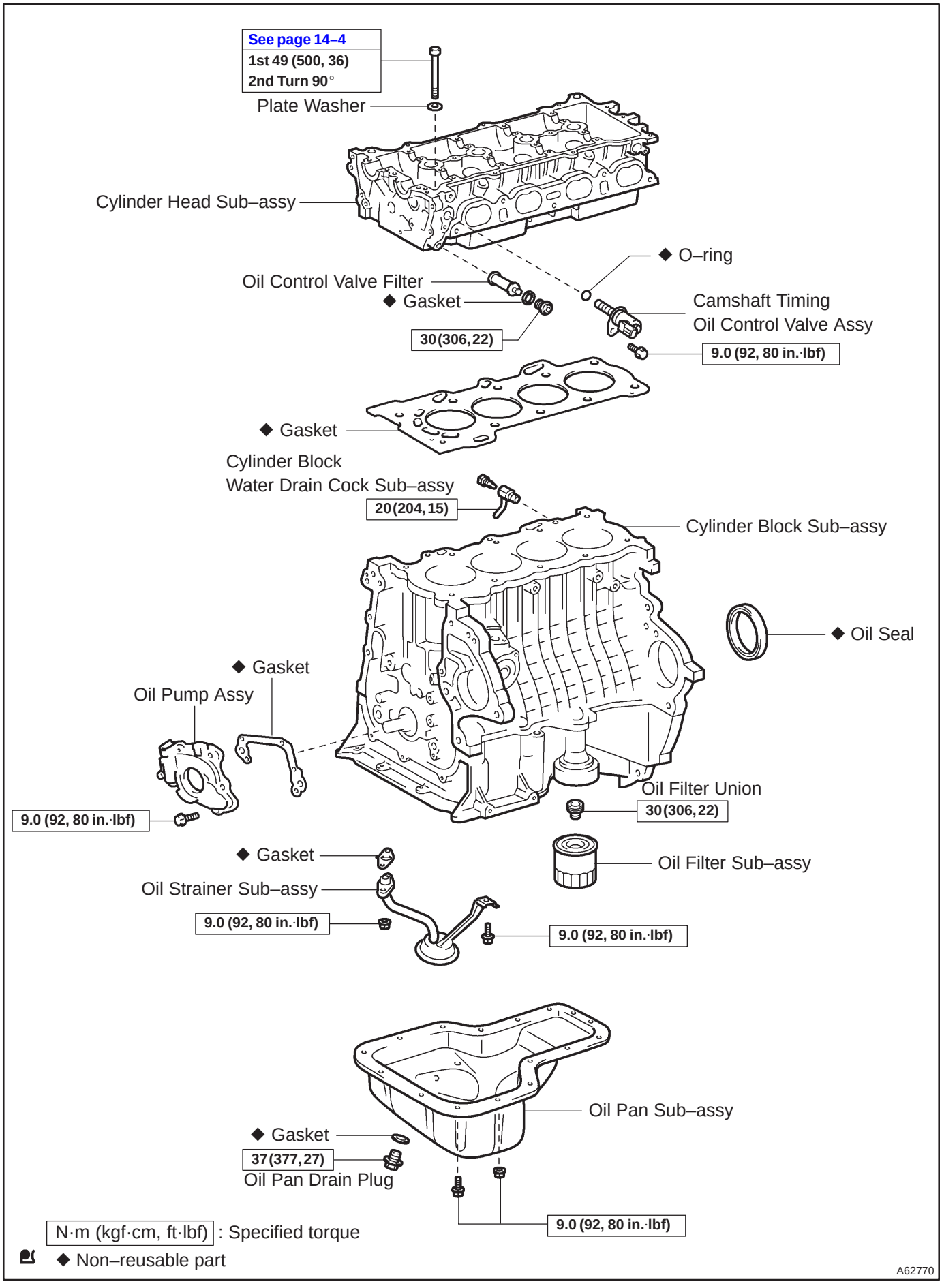
See page 14–4
1st 49 (500, 36)
2nd Turn 90°
Plate Washer
Cylinder Head Sub–assy
◆ O–ring
Oil Control Valve Filter
◆ Gasket
Camshaft Timing
Oil Control Valve Assy
30 (306, 22)
9.0 (92, 80 in.·lbf)
◆ Gasket
Cylinder Block
Water Drain Cock Sub–assy
20 (204, 15)
Cylinder Block Sub–assy
◆ Oil Seal
◆ Gasket
Oil Pump Assy
9.0 (92, 80 in.·lbf)
Oil Filter Union
30 (306, 22)
◆ Gasket
Oil Filter Sub–assy
Oil Strainer Sub–assy
9.0 (92, 80 in.·lbf)
9.0 (92, 80 in.·lbf)
Oil Pan Sub–assy
◆ Gasket
37 (377, 27)
Oil Pan Drain Plug
9.0 (92, 80 in.·lbf)
N·m (kgf·cm, ft·lbf) : Specified torque
◆ Non–reusable part
A62770

140KL–01

OVERHAUL

1. REMOVE OIL FILLER CAP SUB–ASSY

(a) Remove the oil filler cap from the cylinder head cover.

2. REMOVE OIL FILLER CAP GASKET

(a) Remove the gasket from the oil filler cap.

3. REMOVE VENTILATION VALVE SUB–ASSY

(a) Remove the ventilation valve from the cylinder head cover.

4. REMOVE SPARK PLUG

(a) Using a spark plug wrench, remove the 4 spark plugs.

5. REMOVE CYLINDER HEAD COVER SUB–ASSY

(a) Remove the 9 bolts, 2 seal washer, 2 nuts and cylinder head cover.

6. REMOVE CYLINDER HEAD COVER GASKET

(a) Remove the gasket from the cylinder head cover.

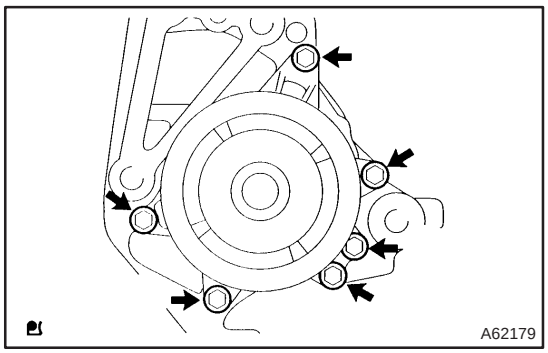

7. REMOVE WATER PUMP ASSY

(a) Remove the 6 bolts, water pump and O–ring.

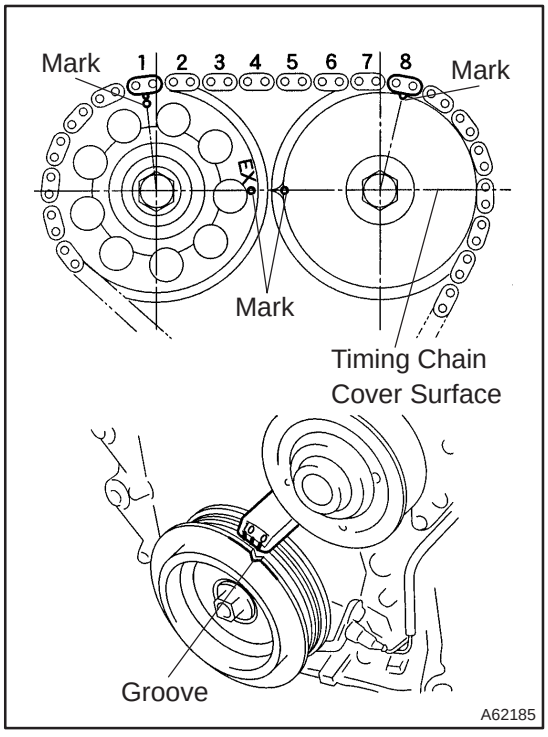

8. REMOVE CRANKSHAFT PULLEY

(a) Set No. 1 cylinder to TDC/compression.
  (1) Turn the crankshaft pulley, and align its groove with timing mark ”0” of the timing chain cover.
  (2) Check that the point marks of the camshaft timing sprocket and VVT timing sprocket are in straight line on the timing chain cover surface as shown in the illustration.

HINT:
If not, turn the crankshaft 1 revolution (360°) and align the marks as above.

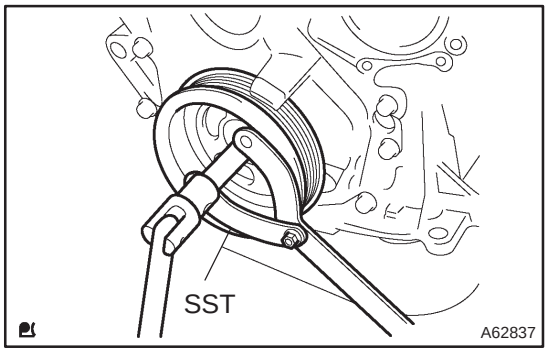

(b) Using SST, remove the pulley bolt.
SST 09960–10010 (09962–01000, 09963–01000)
(c) Remove the crankshaft pulley from the crankshaft.

9. REMOVE CHAIN TENSIONER ASSY NO.1

(a) Remove the 2 nuts and chain tensioner.

NOTICE:
Be sure not to revolve the crank shaft without the chain tensioner.

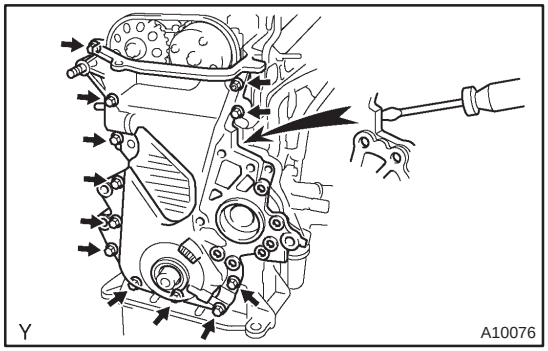

10. REMOVE TIMING CHAIN OR BELT COVER SUB–ASSY

(a) Remove the 11 bolts and nuts.
(b) Remove the timing chain cover by prying the portions between the cylinder head and cylinder block with a screwdriver.

NOTICE:
Be careful not to damage the contact surfaces of the timing chain cover, cylinder head and cylinder block.

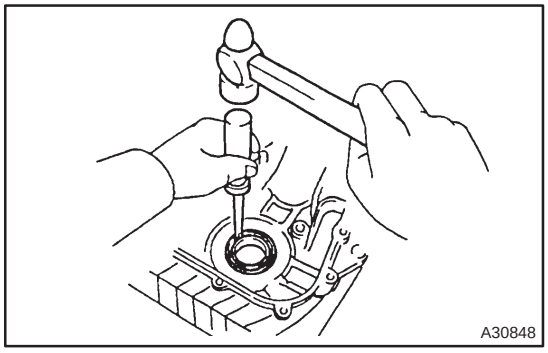

11. REMOVE TIMING GEAR COVER OIL SEAL

(a) Using a screwdriver remove the oil seal.

12. REMOVE CRANKSHAFT POSITION SENSOR PLATE NO.1

(a) Remove the crankshaft position sensor plate from the crankshaft.

13. REMOVE CHAIN TENSIONER SLIPPER

(a) Remove the bolt and chain tensioner slipper.

14. REMOVE CHAIN VIBRATION DAMPER NO.1

(a) Remove the 2 bolts and chain vibration damper.

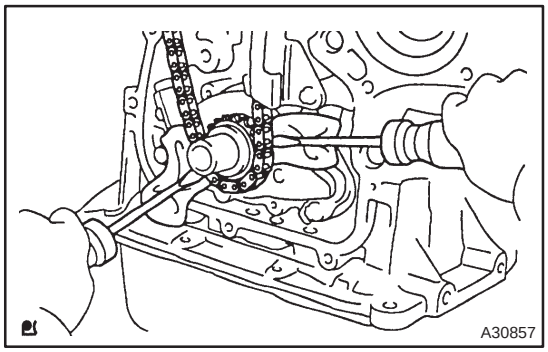

15. REMOVE CHAIN SUB–ASSY

(a) Using screwdrivers, ply out the timing chain with the crankshaft timing gear as shown in the illustration.

NOTICE:

- **Put shop rag to protect the engine.**
- **In case of revolving the camshafts with the chain off the sprockets, turn the crankshaft 1/4 revolution for valves not to touch the pistons.**

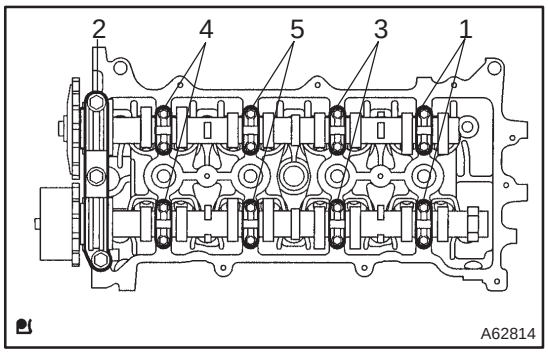

16. REMOVE CAMSHAFT

(a) Uniformly loosen and remove the 19 bearing cap bolts, in several passes, in the sequence shown, and remove the 9 bearing caps, intake and exhaust camshafts.

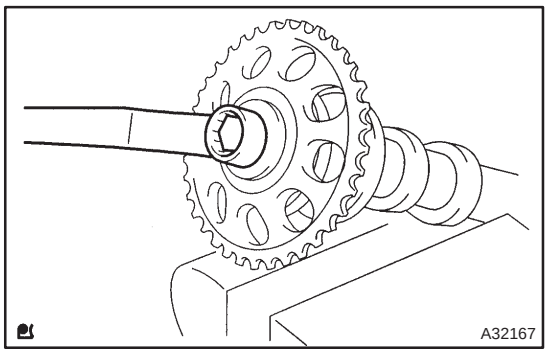

17. REMOVE CAMSHAFT TIMING GEAR OR SPROCKET

(a) Grip the camshaft with a vice, and remove the bolt and camshaft timing gear.

NOTICE:

Be careful not to damage the camshaft.

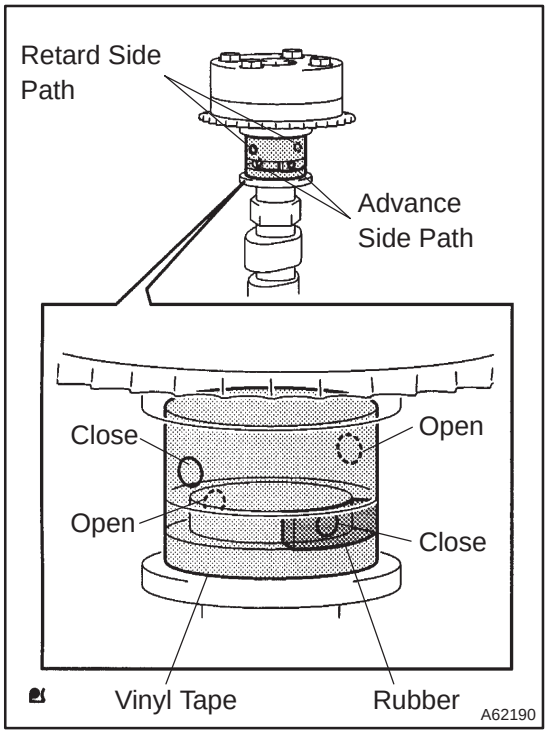

18. INSPECT CAMSHAFT TIMING GEAR ASSY

(a) Check the lock of camshaft timing gear.

(1) Grip the camshaft with a vice, and confirm the camshaft timing gear is locked.

NOTICE:

Be careful not to damage the camshaft.

(b) Release lock pin.

(1) Cover 4 oil paths of cam journal with vinyl tape as shown in the illustration.

HINT:

Two advance side paths are provided in the groove of the camshaft. Plug one of the path with a rubber piece.

(2) Break through the tapes of the advance side path and the retard side path on the opposite side of the groove.

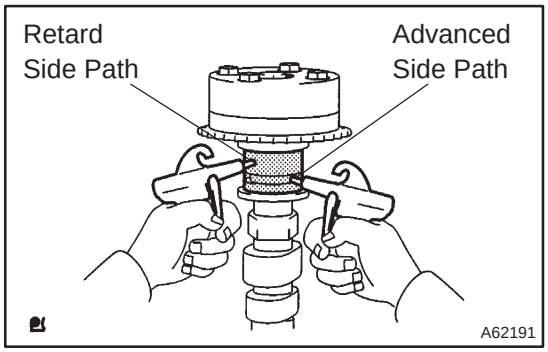

(3) Put air pressure into two broken paths (the advance side path and the retard side path) with about 150 kPa {1.5 kgf·cm}.

CAUTION:
Cover the pathes with shop rag to avoid oil splashing.

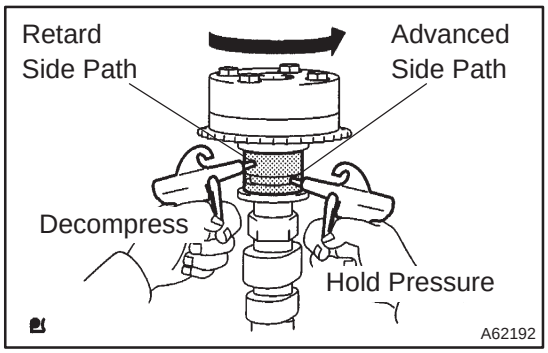

(4) Confirm if the camshaft timing gear assembly revolves in the timing advance direction when weakening the air pressure of the timing retard path.

HINT:
The lock pin is released, and camshaft timing gear, revolves in the advance direction.

(5) When the camshaft timing gear comes to the most advanced position, take out the air pressure of the timing retard side path, and then, take out that of timing advance side path.

CAUTION:
Camshaft timing assembly gear occasionally shifts to the retard side abruptly, if the air compression of the advanced side path is released before retard side path. It often causes the breakage of the lock pin.

(c) Check smooth revolution

(1) Revolve the camshaft timing gear assembly within the movable range except for the most retarded position several times, and check the smooth revolution.

CAUTION:
Be sure to perform this check by hand, instead of air pressure.

(d) Check the lock in the most retarded position.

(1) Confirm that the camshaft timing gear assembly is locked at the most retarded position.

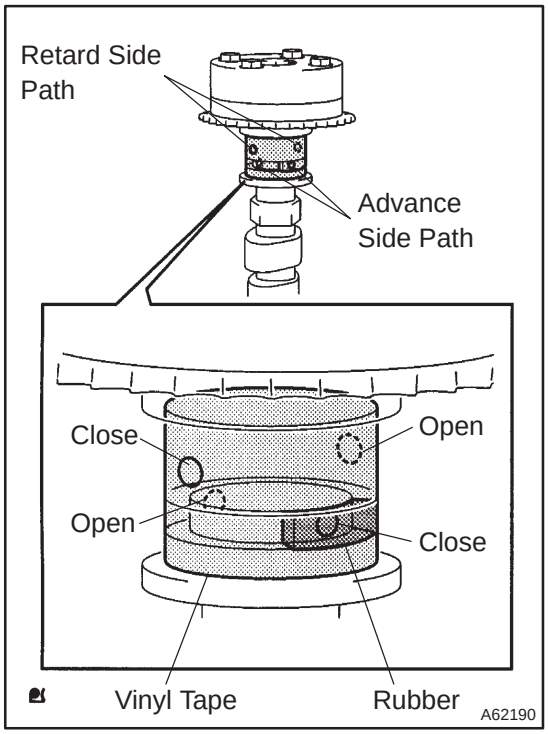

19. REMOVE CAMSHAFT TIMING GEAR ASSY

(a) Grip the camshaft with a vice, and confirm that the gear is locked.

CAUTION:
Be careful not to damage the camshaft.

(b) Cover 4 oil paths of cam journal with vinyl tape as shown in the illustration.

HINT:
Two advance side paths are provided in the groove of the camshaft. Plug one of the path with a rubber piece.

(c) Break through the tapes of the advance side path and the retard side path on the opposite side of the groove.

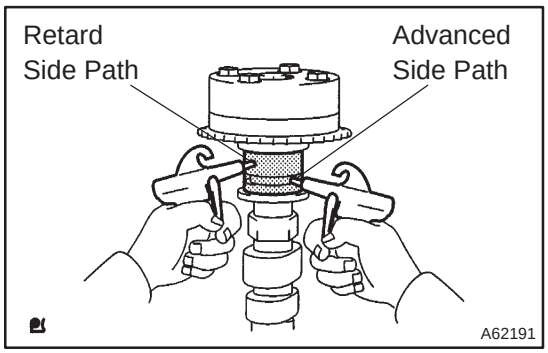

(d) Put air pressure into two broken paths (the advance side path and the retard side path) with about 150 kPa {1.5 kgf/cm^2}.

CAUTION:
Cover the pathes with shop rag to avoid oil splashing.

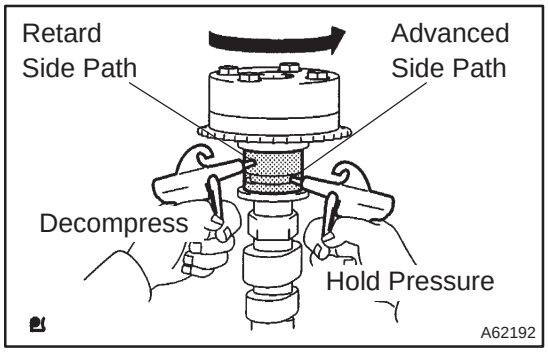

(e) Confirm if the camshaft timing gear assembly revolves in the timing advance direction when weakening the air pressure of the timing retard path.

HINT:
The lock pin is released, and camshaft timing gear revolves in the advance direction.

(f) When the camshaft timing gear comes to the most advanced position, take out the air pressure of the timing retard side path, and then, takeout that of timing advance side path.

CAUTION:
Camshaft timing gear assembly occasionally shifts to the retard side abruptly, if the air compression of the advanced side path is released before retard side paths. It often causes the breakage of the lock pin.

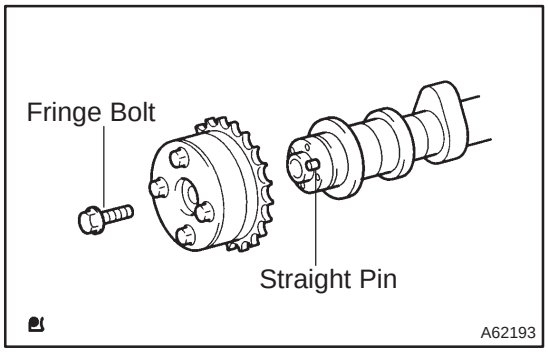

(g) Remove the fringe bolt of camshaft timing gear assembly.

NOTICE:

- **Be sure not to remove the other 4 bolts.**
- **In case of reusing the camshaft timing gear, release the strait pin locking first, and then install the gear.**

20. REMOVE CAMSHAFT TIMING OIL CONTROL VALVE ASSY

(a) Remove the bolt and camshaft timing oil control valve.

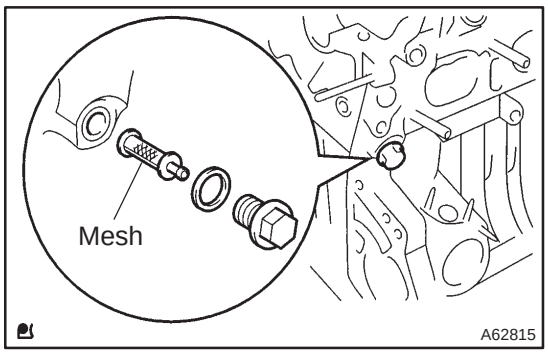

21. REMOVE OIL CONTROL VALVE FILTER

(a) Remove the bolt, gasket and oil control valve filter.

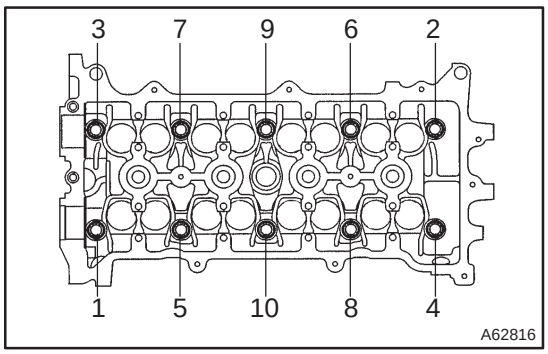

22. REMOVE CYLINDER HEAD SUB–ASSY

(a) Using a bi–hexagon wrench 10, uniformly loosen and remove the 10 cylinder head bolts, in several passes, in the sequence shown. Remove the 10 cylinder head bolts and plate washers.

NOTICE:

- **Be careful not to drop washers into the cylinder head.**
- **Head warpage or cracking could result from removing bolts in an incorrect order.**

23. REMOVE CYLINDER HEAD GASKET

(a) Remove the gasket from the cylinder block.

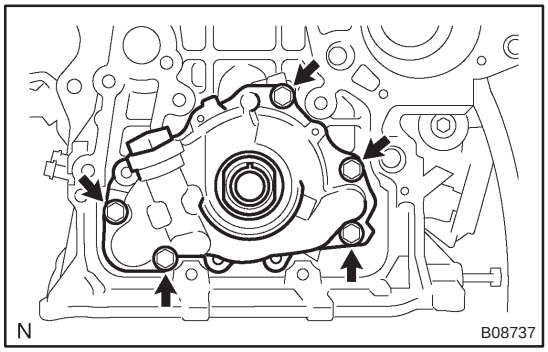

24. REMOVE OIL PUMP ASSY

(a) Remove the 5 bolts, oil pump and gasket.

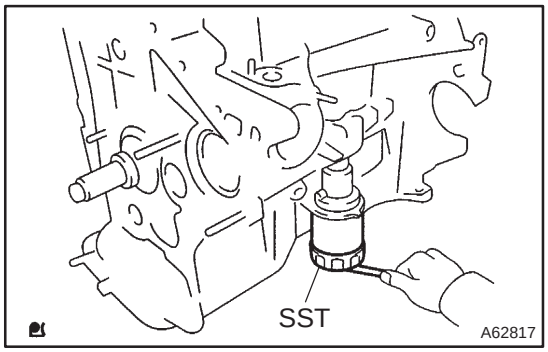

25. REMOVE OIL FILTER SUB–ASSY

(a) Using SST, remove the oil filter.
SST 09228–06501

26. REMOVE OIL FILTER UNION

(a) Using a socket hexagon wrench 12, remove the oil filter union.

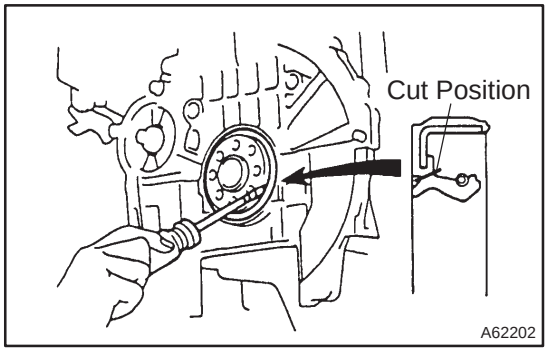

27. REMOVE ENGINE REAR OIL SEAL

(a) Using a knife, cut off the oil seal lip.
(b) Using a screwdriver with its tip taped, pry out the oil seal.

NOTICE:
After the removal, check if the crankshaft is not damaged. If there is, mend it with a sandpaper (# 400).

28. REMOVE OIL PAN DRAIN PLUG

(a) Remove the oil pan drain plug and gasket from the oil pan.

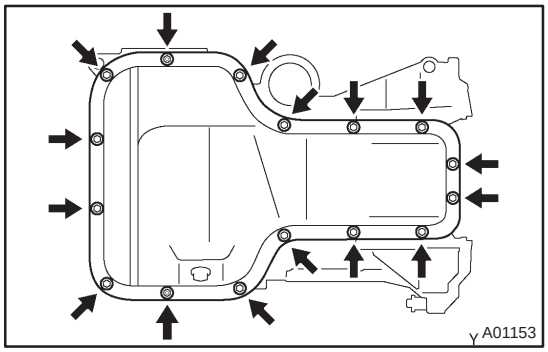

29. REMOVE OIL PAN SUB–ASSY

(a) Remove the 14 bolts and 2 nuts.

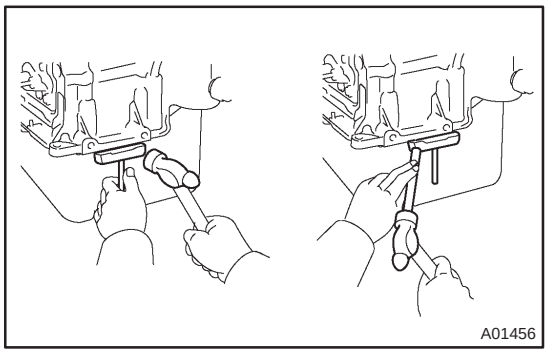

(b) Insert the blade of SST between the bearing cap sub–assembly and oil pan, and cut off applied sealer and remove the oil pan.
SST 09032–00100

NOTICE:
Be careful not to damage the oil pan contact surface of the bearing cap sub–assembly and the oil pan flange.

30. REMOVE OIL STRAINER SUB–ASSY

(a) Remove the bolt, 2 nuts, oil strainer and gasket.

31. REMOVE CYLINDER BLOCK WATER DRAIN COCK SUB–ASSY

(a) Remove the cylinder block water drain cock from the cylinder block.

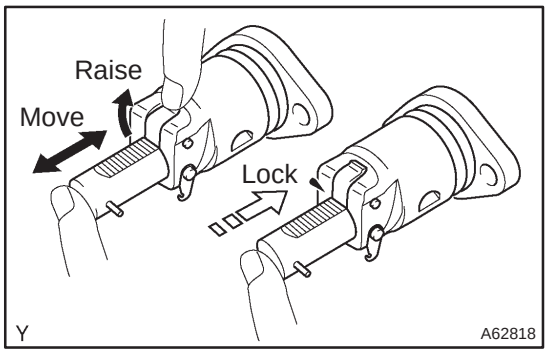

32. INSPECT CHAIN TENSIONER ASSY NO.1

(a) Check that the plunger moves smoothly when the ratchet pawl is raised with your finger.
(b) Release the ratchet pawl and check that the plunger is locked in place by the ratchet pawl and does not move when pushed with your finger.

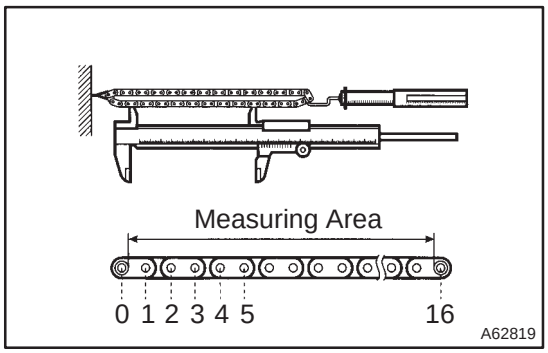

33. INSPECT CHAIN SUB–ASSY

(a) Using a spring tension gauge and vernier calipers, pull the timing chain with 140 N (4.3 kgf, 315 lb) and measure the length of it.
Maximum chain elongation : 112.6 mm (4.433 in.)

HINT:
Make the same measurements pulling at 3 or more places selected at random.

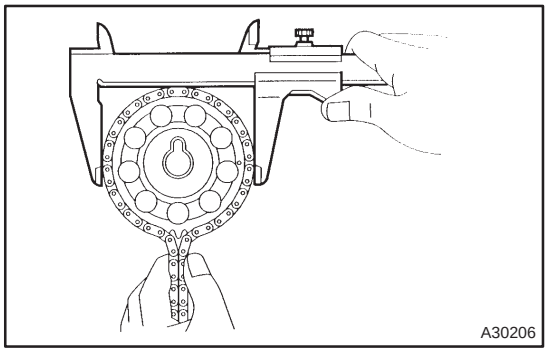

34. INSPECT CAMSHAFT TIMING GEAR OR SPROCKET

(a) Wrap the chain around the timing sprocket.
(b) Using a vernier calipers, measure the timing sprocket diameter with the chain.
Minimum sprocket diameter (w / chain):
97.3mm (3.831 in.)

NOTICE:
Vernier calipers must contact the chain rollers for measuring.

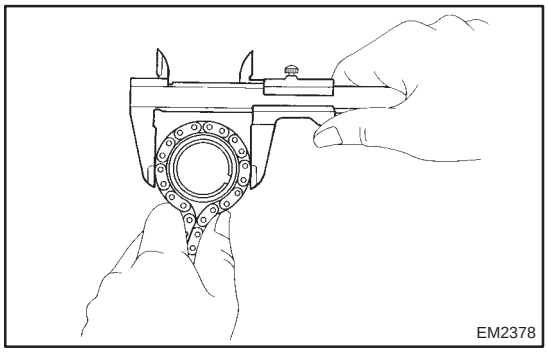

35. INSPECT CRANKSHAFT TIMING GEAR OR SPROCKET

(a) Wrap the chain around the timing sprocket.
(b) Using a vernier calipers, measure the timing sprocket diameter with the chain.

NOTICE:
Vernier calipers must contact the chain rollers for the measuring.

Minimum sprocket diameter (w / chain):
51.6mm (2.032 in.)

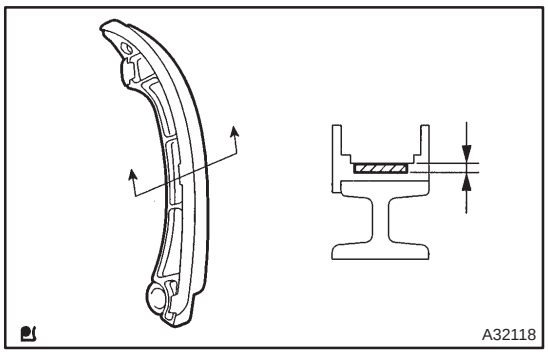

36. INSPECT CHAIN TENSIONER SLIPPER

(a) Using a vernier calipers, measure the chain tensioner slipper wears.
Maximum wear: 1.0 mm (0.039 in.)

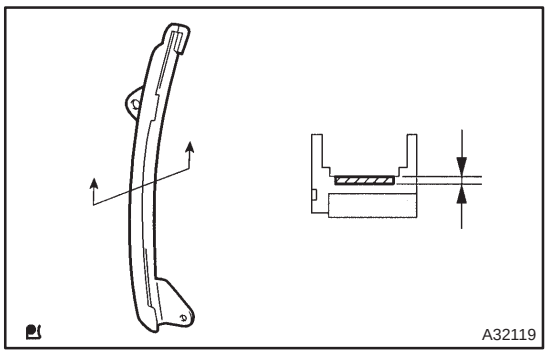

37. INSPECT CHAIN VIBRATION DAMPER NO.1

(a) Using a vernier calipers, measure the vibration damper wears.
Maximum wear: 1.0 mm (0.039 in.)

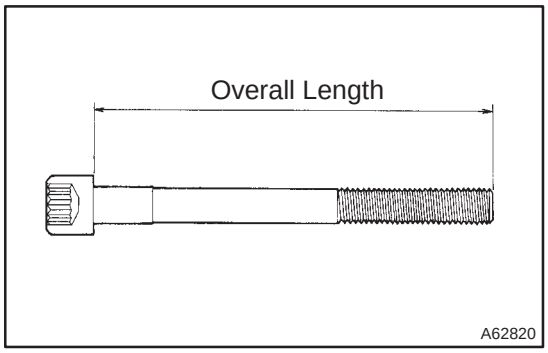

38. INSPECT CYLINDER HEAD SET BOLT

(a) Using a vernier calipers, measure the length of head bolts from the seat to the end.
Standard bolt length:
156.0 – 159.0 mm (6.142–6.260 in.)
Maximum bolt length: 159.5 mm (6.280 in.)

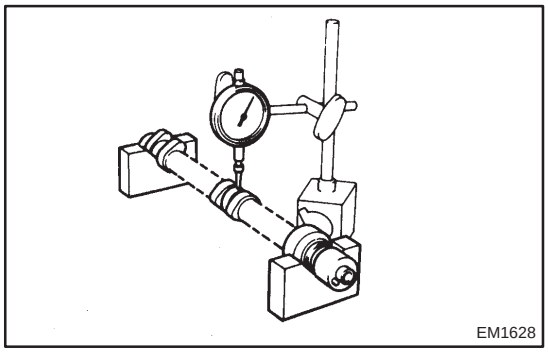
EM1628

39. INSPECT CAMSHAFT

(a) Inspect camshaft for runout.
  (1) Place the camshaft on V–blocks.
  (2) Using a dial indicator, measure the circle runout at the center journal.
  Maximum circle runout: 0.03 mm (0.0012 in.)

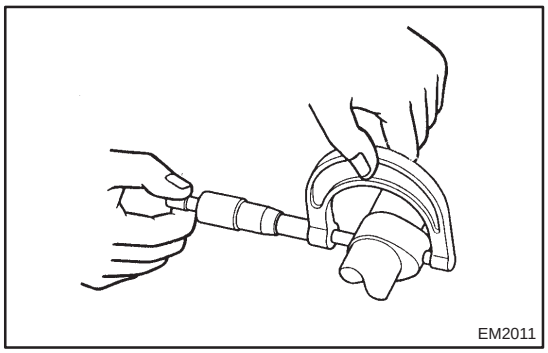
EM2011

(b) Inspect cam lobes.
  (1) Using a micrometer, measure the cam lobe height.
  Standard cam lobe height:
  Intake 44.333 – 44.433 mm (1.7454 – 1.7493 in.)
  Exhaust 43.761 – 43.861 mm (1.7229 – 1.7268 in.)
  Minimum cam lobe height:
  Intake 44.18 mm (1.7394 in.)
  Exhaust 43.61 mm (1.7169 in.)

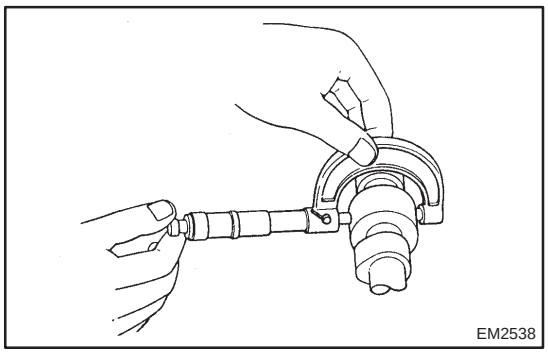
EM2538

(c) Inspect camshaft journals.
  (1) Using a micrometer, measure the journal diameter.
  No. 1 journal diameter:
  34.449 – 34.465 mm (1.3563 – 1.3569 in.)
  Others journal diameter:
  22.949 – 22.965 mm (0.9035 – 0.9041 in.)

If the journal diameter is not as specified, check the oil clearance.

40. INSTALL CYLINDER BLOCK WATER DRAIN COCK SUB–ASSY

(a) Apply two or three threads of adhesive to the drain union, and install it within 3 minutes.
  Torque: 20 N·m (204 kgf·cm15 ft·lbf)
(b) After applying the specified torque, rotate the drain union clockwise until its drain port faces downward.

NOTICE:
- **Do not put into coolant in an hour after the installation.**
- **Do not rotate the drain union more than 360° in (b), and never loosen it after setting the union correctly.**

41. INSTALL OIL STRAINER SUB–ASSY

(a) Install a new gasket and the oil strainer with the 2 nuts and a bolt.
  Torque: 9.0 N·m (92 kgf·cm, 80 in.·lbf)

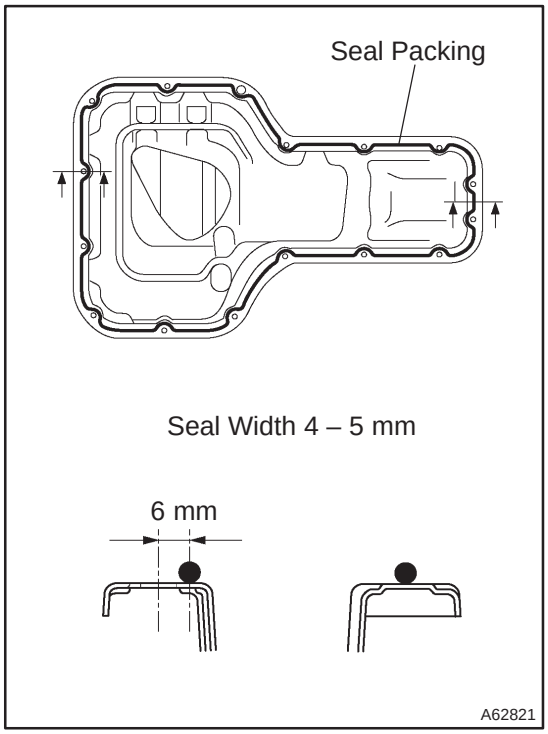

42. INSTALL OIL PAN SUB–ASSY

(a) Remove any old packing material from the contact surface.
(b) Apply seal packing in the shape of bead (Diameter 3.5 mm – 4.5 mm(0.1379–0.177in)) consequently as shown in the illustration.
Seal packing: Part No. 08826–00080 or equivalent

NOTICE:
- **Remove any oil from the contact surface.**
- **Install the oil pan within 3 minutes after applying seal packing.**
- **Do not put into engine oil within 2 hours after installing.**

(c) Install the oil pan with the 14 bolts and 2 nuts.
Torque: 9.0 N·m (92 kgf·cm, 80 in.·lbf)

43. INSTALL OIL PAN DRAIN PLUG

(a) Place a new gasket on the oil pan drain plug, and install it.
Torque: 37 N·m (377 kgf·cm, 27 ft·lbf)

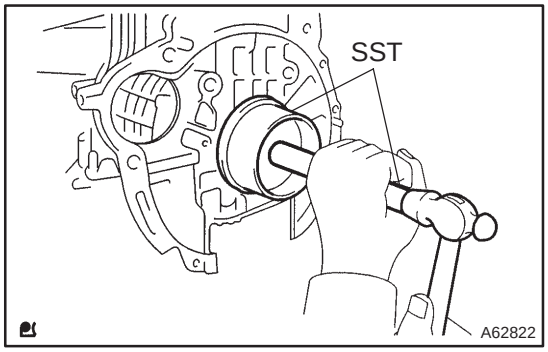

44. INSTALL ENGINE REAR OIL SEAL

(a) Apply MP grease to a new oil seal lip.

NOTICE:
Keep the lip off foreign materials.

(b) Using SST, tap in the oil seal until its surface is flush with the oil seal retainer edge.
SST 09223–15030, 09950–70010 (09951–07100)

NOTICE:
Wipe off extra grease on the crank shaft.

45. INSTALL OIL FILTER UNION

(a) Using a socket hexagon wrench 12, install the oil filter union.
Torque: 30 N·m (306 kgf·cm, 22 ft·lbf)

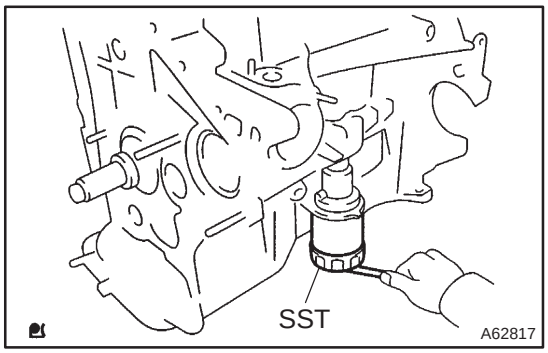

46. INSTALL OIL FILTER SUB–ASSY

(a) Check and clean the oil filter installation surface.
(b) Apply clean engine oil to the gasket of a new oil filter.
(c) Lightly screw the oil filter into place, and tighten it until the gasket contacts the seat.
(d) Using SST, tighten it an additional 3/4 turn.
SST 09228–06501

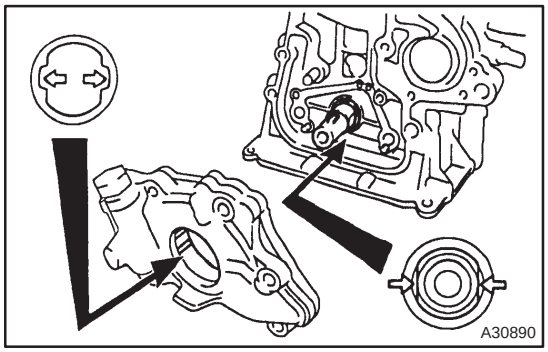

47. INSTALL OIL PUMP ASSY

(a) Engage the spline teeth of the oil pump drive rotor with the large teeth of the crankshaft, and side the oil pump.
(b) Install the oil pump with the 5 bolts.
Torque: 9.0 N·m (92 kgf·cm, 80 in.·lbf)

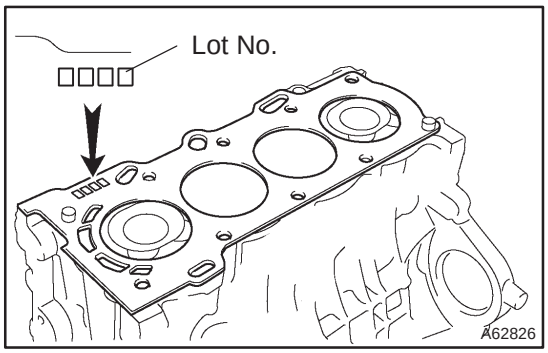

48. INSTALL CYLINDER HEAD GASKET

(a) Place a new cylinder head gasket on the cylinder block surface with the Lot No. stamp upward.

NOTICE:
- **Pay attention to the installation direction.**
- **Place the cylinder head quietly in order not to damage the gasket with the bottom part of the head.**

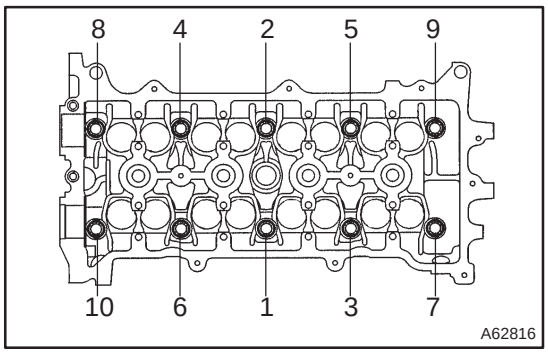

49. INSTALL CYLINDER HEAD SUB–ASSY

HINT:
The cylinder head bolts are tightened in 2 progressive steps.
(a) Apply a light coat of engine oil on the threads and under the heads of the cylinder head bolts.
(b) Using a bi–hexagon wrench 10, install and uniformly tighten the 10 cylinder head bolts with plate washers, in several passes, in the sequence shown.
Torque: 49 N·m (500 kgf·cm, 36 ft·lbf)
(c) Mark the front of the cylinder head bolt with paint.
(d) Retighten the cylinder head bolts 90° in the numerical order shown.
(e) Check that the point marked bolts are moved at 90 ° angle.

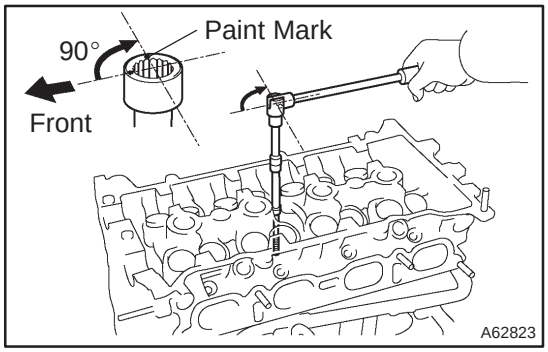

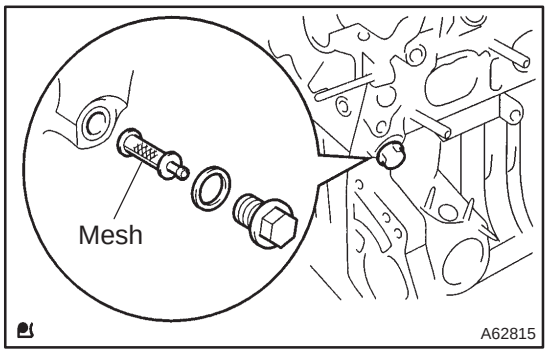

50. INSTALL OIL CONTROL VALVE FILTER

(a) Confirm that the filter is clear.
(b) Install the oil control valve filter to the cylinder head.
(c) Place a new gasket on the bolt, and install it.
Torque: 30 N·m (306 kgf·cm, 22 ft·lbf)

51. INSTALL CAMSHAFT TIMING OIL CONTROL VALVE ASSY

(a) Install a new O–ring to the camshaft timing oil control valve.
(b) Install the camshaft timing oil control valve with the bolt.
Torque: 9.0 N·m (92 kgf·cm, 80 in.·lbf)

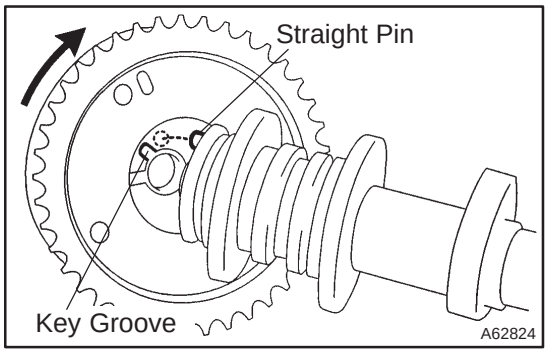

52. INSTALL CAMSHAFT TIMING GEAR ASSY

(a) Put the camshaft timing gear assembly and the camshaft together with the straight pin off the key groove.
(b) Turn the camshaft timing gear assembly to the left direction (as shown in the illustration) with pushing it lightly against the camshaft. Push further at the position where the pin gets into the groove.

CAUTION:
Be sure not to turn the camshaft timing gear to the retard angle side (to the right angle).

(c) Check that there is no clearance between the gear's fringe and the camshaft.
(d) Tighten the fringe bolt with the camshaft timing gear fixed.
Torque: 54 N·m (551 kgf·cm 40 ft·lbf)
(e) Check that the camshaft timing gear assembly can move to the retard angle side (the right angle), and is locked at the most retarded position.

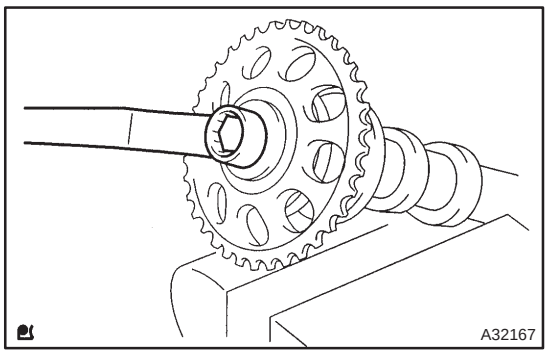

53. INSTALL CAMSHAFT TIMING GEAR OR SPROCKET

(a) Grip the camshaft with a vice, and install the camshaft timing gear.
Torque: 54 N·m (551 kgf·cm 40 ft·lbf)

NOTICE:
Be careful not to damage the camshaft.

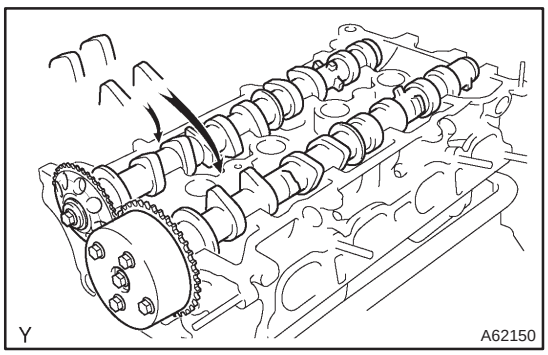

54. INSTALL CAMSHAFT

(a) Apply light coat of engine oil on the camshaft journals.
(b) Place the 2 camshafts on the cylinder head with the No. 1 cam lobes facing as shown the illustration.

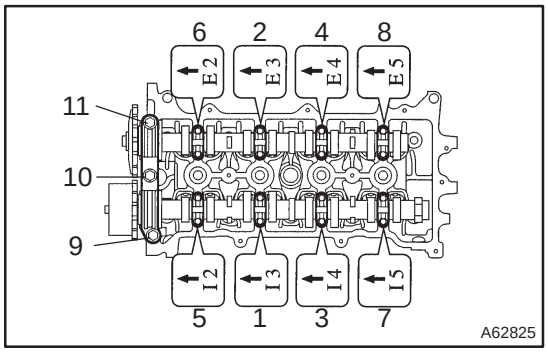

(c) Examine the front marks and numbers and tighten the bolts in the order shown in the illustration.
Torque:
Bearing cap No. 1 23 N·m (235 kgf·cm, 17 ft·lbf)
Bearing cap No. 3 13 N·m (133 kgf·cm, 10 ft·lbf)

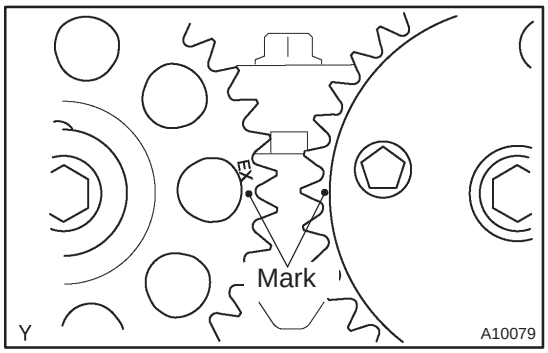

55. INSTALL CHAIN SUB–ASSY

(a) Set No. 1 cylinder to TDC/compression.
(1) Turn the hexagonal wrench head portion of the camshafts, and align the point marks of the camshaft timing gears.

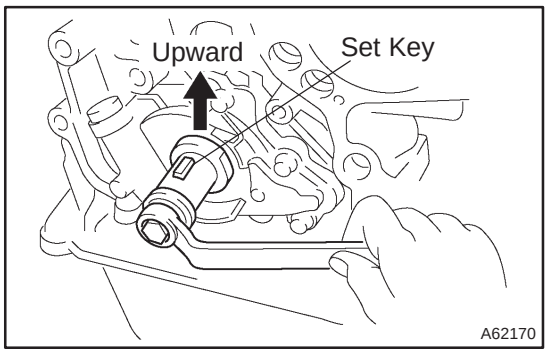

(2) Using a crankshaft pulley bolt, turn the crankshaft and set the set key on the crankshaft upward.

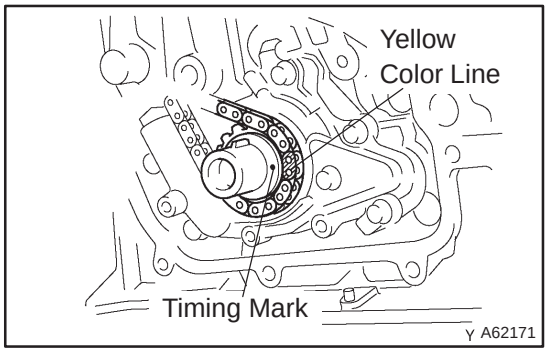

(b) Install the timing chain on the crankshaft timing sprocket with the yellow color link aligned with the timing mark on the crankshaft timing sprocket.

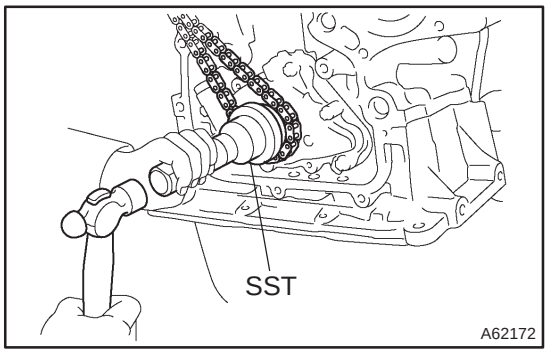

(c) Using a SST, install the sprocket.
SST 09223–22010

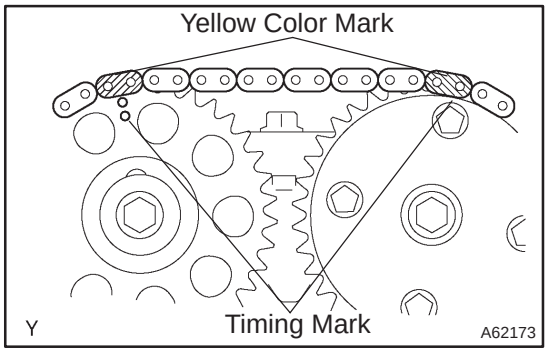

(d) Install the timing chain on the camshaft timing sprockets with the yellow color links aligned with the timing marks on the camshaft timing sprockets.

56. INSTALL CHAIN VIBRATION DAMPER NO.1

(a) Install the chain vibration damper with the 2 bolts.
Torque: 9.0 N·m (92 kgf·cm, 80 in.·lbf)

57. INSTALL CHAIN TENSIONER SLIPPER

(a) Install the chain tensioner slipper with the bolt.
Torque: 19 N·m (194 kgf·cm, 14 ft·lbf)

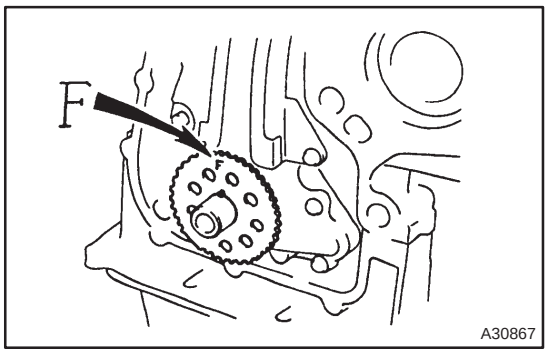

58. INSTALL CRANKSHAFT POSITION SENSOR PLATE NO.1

(a) Install the plate with the ”F” mark facing forward.

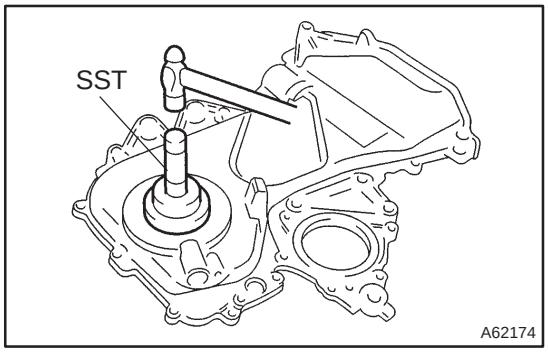

59. INSTALL TIMING GEAR COVER OIL SEAL

(a) Apply MP grease to the oil seal lip.
(b) Using SST, tap in a new oil seal until its surface is flush with the timing chain cover edge.
SST 09223–22010

NOTICE:
Keep the lip off foreign materials.

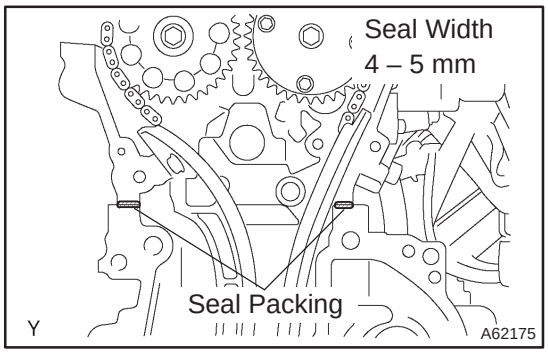

60. INSTALL TIMING CHAIN OR BELT COVER SUB–ASSY

(a) Remove any old packing material from the contact surface.

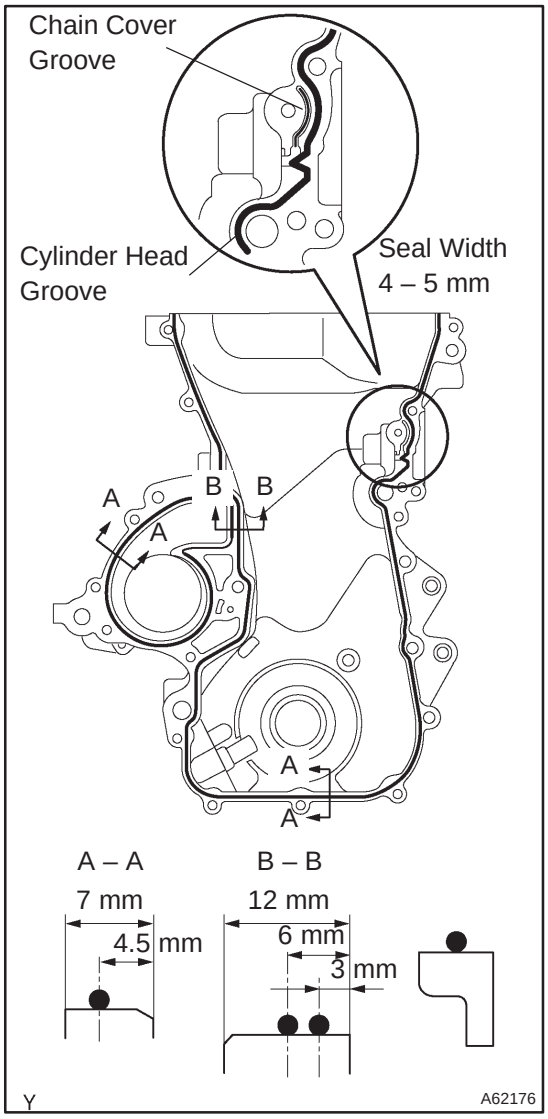

(b) Apply seal packing in the shape of bead (Diameter 3.5 mm – 4.5 mm(0.1379–0.177in)) consequently as shown in the illustration.
Seal packing:
Water pump part part No. 08826–00100 or equivalent
Other part part No. 08826–00080 or equivalent

(c) Install the timing chain cover, with the 12 bolts and nut.
Torque:
M6 13 N·m (133 kgf·cm, 10 ft·lbf)
M8 19 N·m (194 kgf·cm, 14 ft·lbf)

NOTICE:

- **Remove any oil from the contact surface.**
- **Install the oil pan within 3 minutes after applying seal packing.**
- **Do not put into engine oil within 2 hours after installing.**

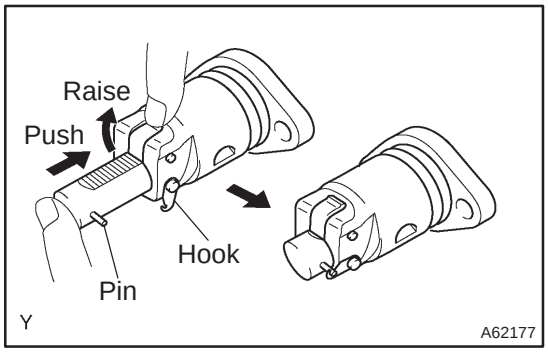

61. INSTALL CHAIN TENSIONER ASSY NO.1

(a) Check the O–ring is clean, and set the hook as shown in the illustration.

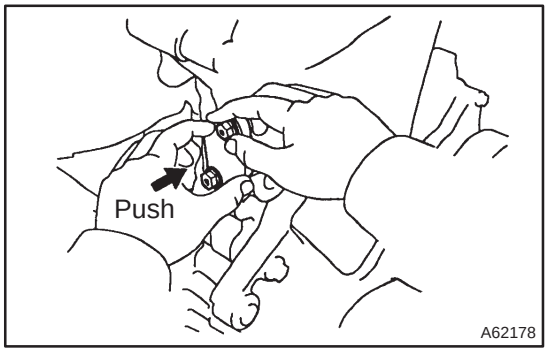

(b) Apply engine oil to the chain tensioner and install it with the 2 nuts..
Torque: 9.0 N·m (92 kgf·cm, 80 in.·lbf)

NOTICE:
When installing the tensioner, set the hook again if the hook releases the plunger.

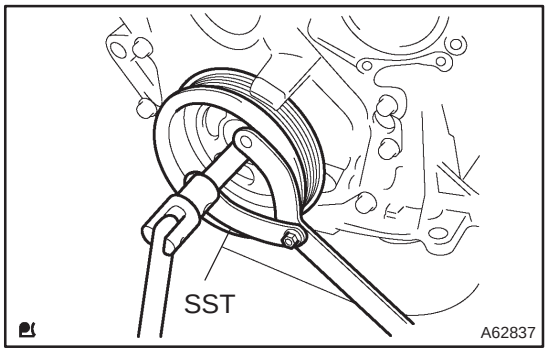

62. INSTALL CRANKSHAFT PULLEY

(a) Align the pulley set key with the key groove of the pulley, and slide on the pulley.

(b) Using SST, install the pulley bolt.
SST 09960–10010 (09962–01000, 09963–01000)
Torque: 138 N·m (1,407 kgf·cm, 102 ft·lbf)

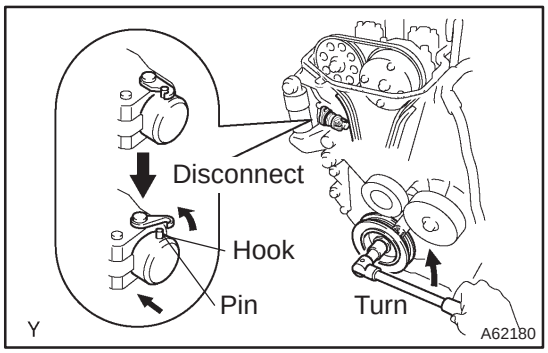

(c) Turn the crankshaft counterclockwise, and disconnect the plunger knock pin from the hook.

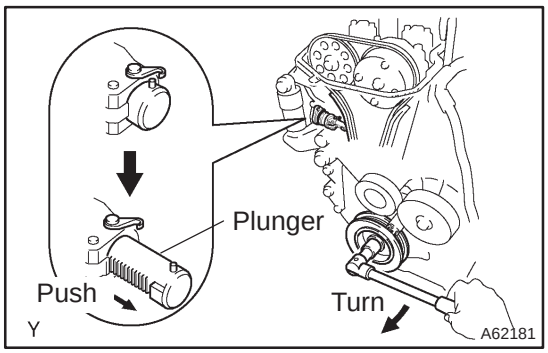

(d) Turn the crankshaft clockwise, and check that the slipper is pushed by the plunger.

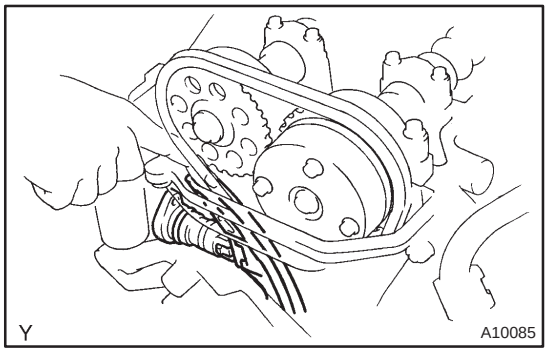

HINT:
If the plunger does not spring out, press the slipper into the chain tensioner with a screwdriver or your finger so that the hook is released from the knock pin and the plunger springs out.

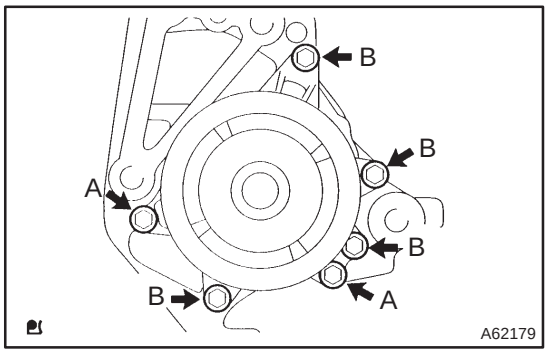

63. INSTALL WATER PUMP ASSY

(a) Place a new O–ring on the timing chain cover.

(b) Install the water pump with the 6 bolts.
Torque:
Bolt A 9.0 N·m (92 kgf·cm, 80 in·lbf)
Bolt B 11 N·m (112 kgf·cm, 8 ft·lbf)

HINT:
Each bolt length is indicated in the illustration.

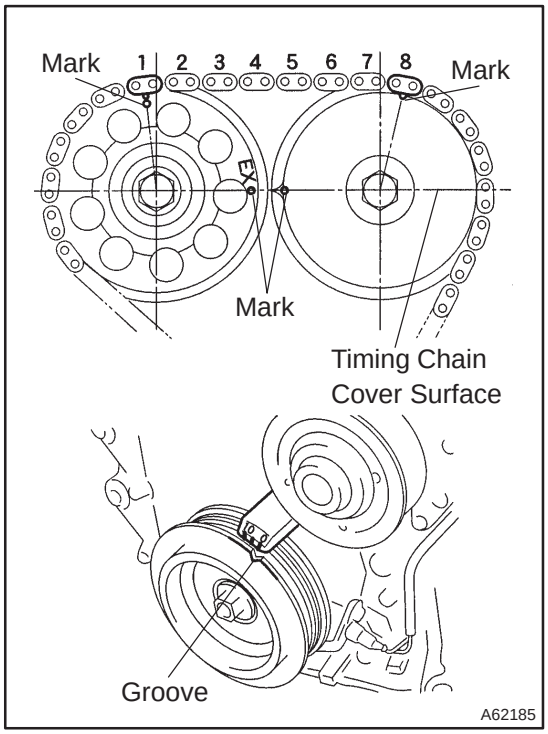

64. INSPECT VALVE CLEARANCE

(a) Set No. 1 cylinder to TDC/compression.
  (1) Turn the crankshaft pulley, and align its groove with timing mark ”0” of the timing chain cover.
  (2) Check that the point marks of the camshaft timing sprocket and VVT timing sprocket are in straight line on the timing chain cover surface as shown in the illustration.

HINT:
If not, turn the crankshaft 1 revolution (360°) and align the marks as above.

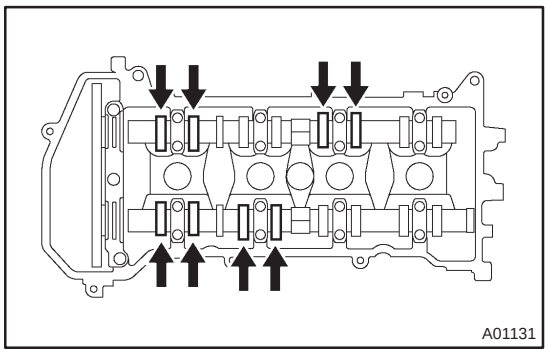

(b) Check only the valves indicated.
  (1) Using a feeler gauge, measure the clearance between the valve lifter and camshaft.
  (2) Record the out–of specification valve clearance measurements. They will be used later to determine the required replacement adjusting shim.

Valve clearance (Cold):
Intake 0.15 – 0.25 mm (0.006 – 0.010 in.)
Exhaust 0.25 – 0.35 mm (0.010 – 0.014 in.)

(c) Turn the crankshaft 1 revolution (360°) and set No. 4 cylinder to TDC/compression.

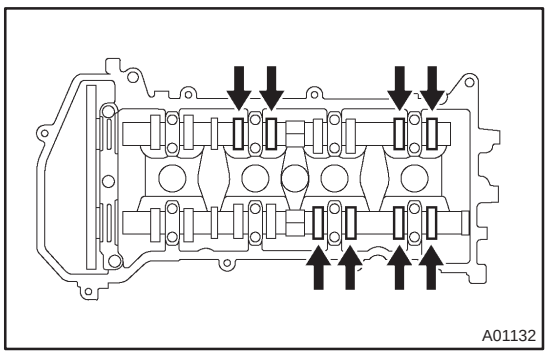

(d) Check only the valves indicated.
  (1) Using a feeler gauge, measure the clearance between the valve lifter and camshaft.
  (2) Record the out–of specification valve clearance measurements. They will be used later to determine the required replacement adjusting shim.

Valve clearance (Cold):
Intake 0.15 – 0.25 mm (0.006 – 0.010 in.)
Exhaust 0.25 – 0.35 mm (0.010 – 0.014 in.)

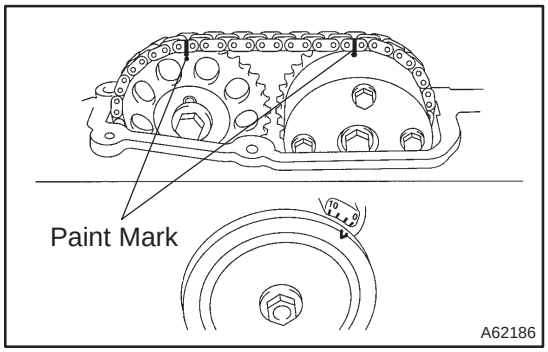

65. ADJUST VALVE CLEARANCE

NOTICE:

Be sure not to revolve the crankshaft without the chain tensioner.

(a) Set the No. 1 cylinder to the TDC/compression.

(b) Place match marks on the timing chain and camshaft timing sprockets.

(c) Remove the 2 bolts and chain tensioner.

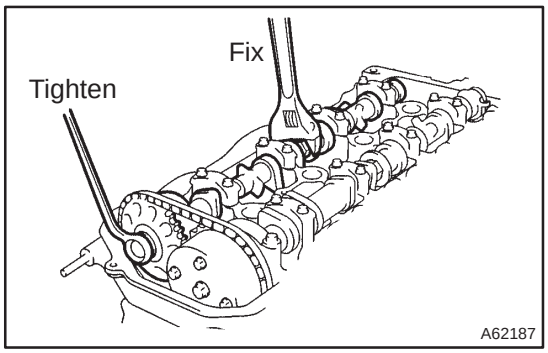

(d) Fix the camshaft with a spanner and so on, then loosen the camshaft timing gear set bolt.

NOTICE:

Be careful not to damage the valve lifter.

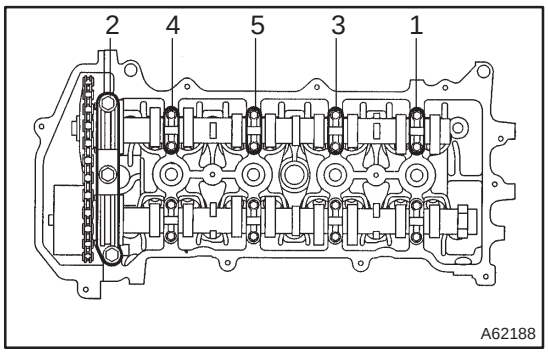

(e) Loosen the camshaft bearing cap bolts on No. 2 camshaft in the order as shown in the illustration in several passes, and remove the caps.

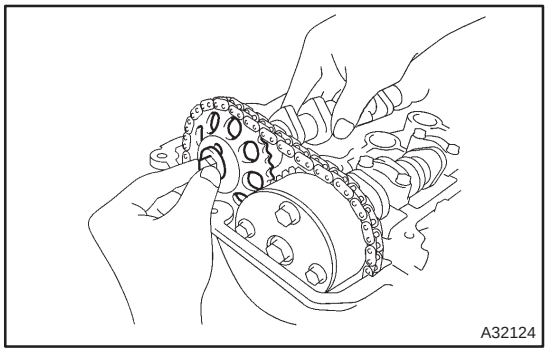

(f) Remove the camshaft timing gear as shown in the illustration.

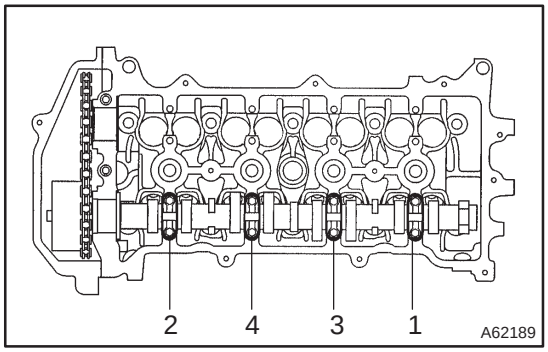

(g) Loosen the camshaft bearing cap bolts on camshaft in the order as shown in the illustration in several passes, and remove the caps.

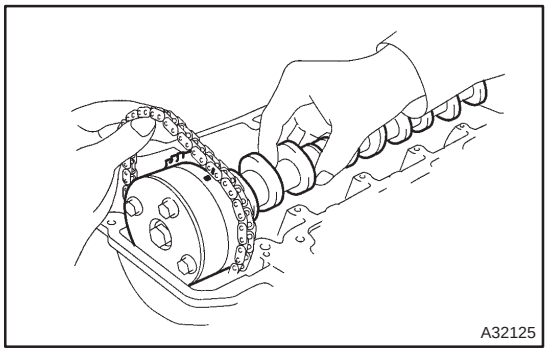

(h) Remove the camshaft with holding the timing chain.

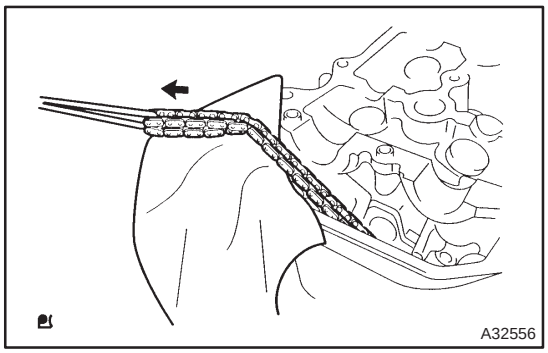

(i) Tie the timing chain with a string as shown in the illustration.

NOTICE:

Be careful not to drop anything inside the timing chain cover.

(j) Remove the valve lifters.

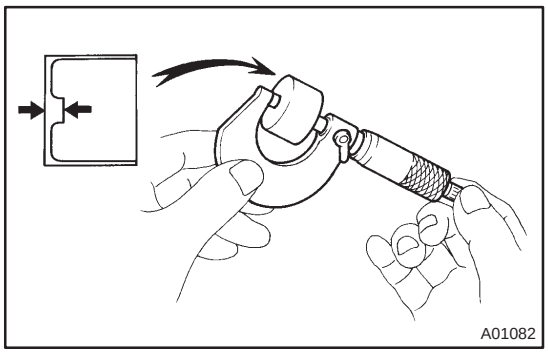

(k) Using a micrometer, measure the thickness of the removed lifters.

(l) Calculate the thickness of a new lifter so that the valve clearance comes within the specified value.

A	Thickness of new lifter
B	Thickness of used lifter
C	Measured valve clearance

Intake: A = B + (C – 0.20 mm (0.008 in.))

Exhaust: A = B + (C – 0.30 mm (0.012 in.))

HINT:

- Select a new lifter with a thickness as close as possible to the calculated values.
- Lifter are available in 35 sizes in increments of 0.020 mm (0.0008 in.), from 5.060 mm (0.1992 in.) to 5.740 mm (0.2260 in.).

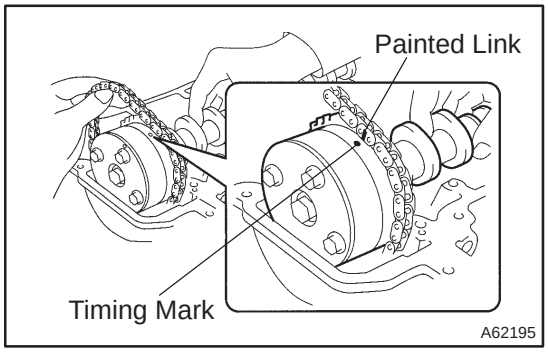

(m) As shown in the illustration, install the timing chain on the camshaft timing gear, with the painted links aligned with the timing marks on the camshaft timing sprockets.

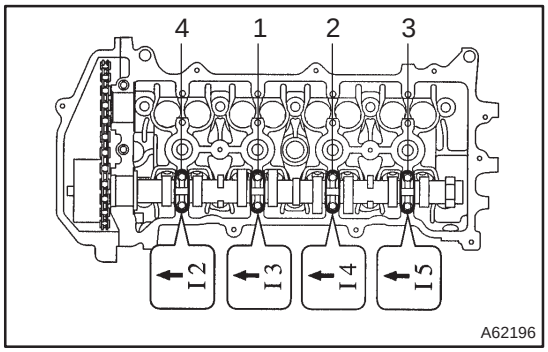

(n) Examine the front marks and numbers and tighten the bolts in the order shown in the illustration.
Torque: 13 N·m (133 kgf·cm, 10 ft·lbf)

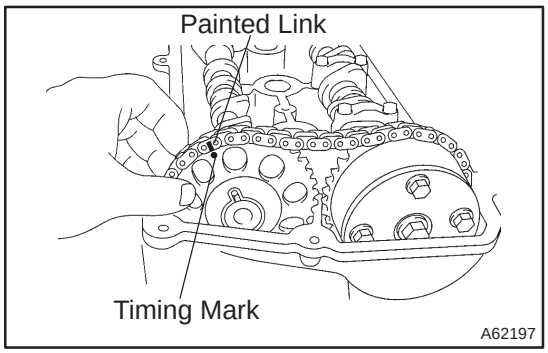

(o) Put the camshaft No.2 on the cylinder head with the painted links of the chain aligned with the timing mark on the camshaft timing sprockets.

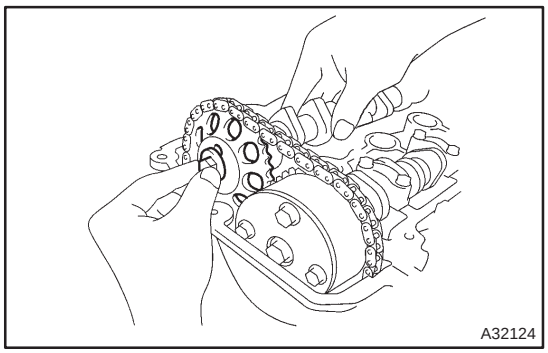

(p) Tighten the set bolt temporarily.

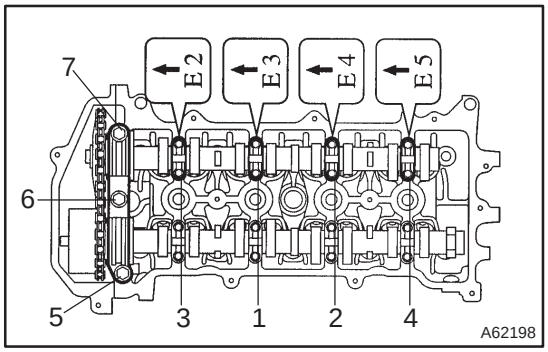

(q) Examine the front marks and numbers and tighten the bolts in the order shown in the illustration.
Torque: 13 N·m (133 kgf·cm, 10 ft·lbf)

(r) Install the bearing cap No. 1.
Torque: 23 N·m (235 kgf·cm, 17 ft·lbf)

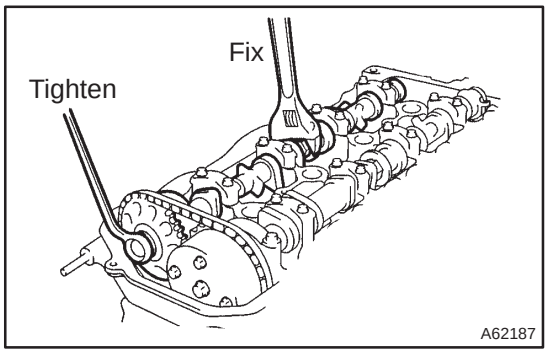

(s) Fix the camshaft with a spanner and so on, then tighten the camshaft timing gear set bolt.
Torque: 54 N·m (551 kgf·cm, 40 ft·lbf)

NOTICE:
Be careful not to damage the valve lifter.

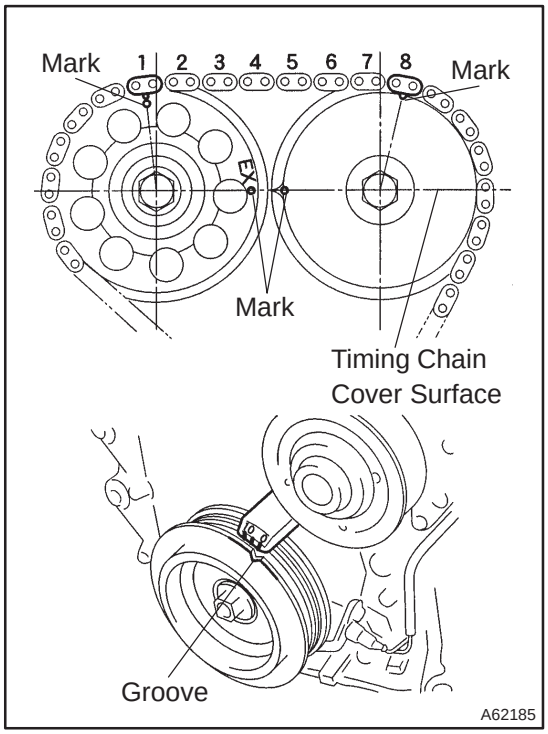

(t) Check the match marks on the timing chain and camshaft timing sprockets, and then the alignment of the pulley groove with timing mark of the chain cover as shown in the illustration.

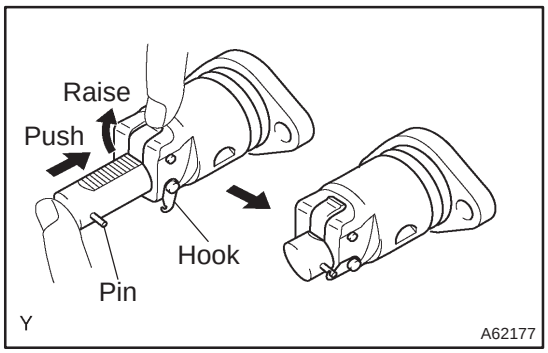

(u) Install chain tensioner.

(1) Check the O–ring is clean, and set the hook as shown in the illustration.

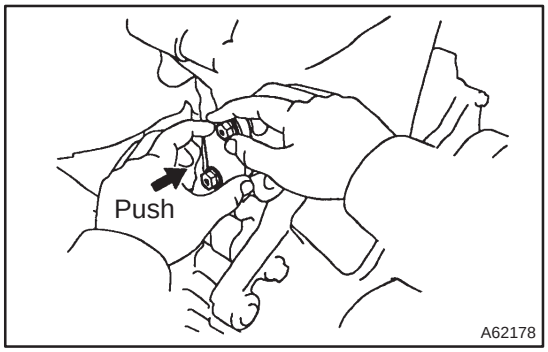

(2) Apply engine oil to the chain tensioner and install it.

Torque: 9.0 N·m (92 kgf·cm, 80 in·lbf)

NOTICE:

When installing the tensioner, set the hook again if the hook release the plunger.

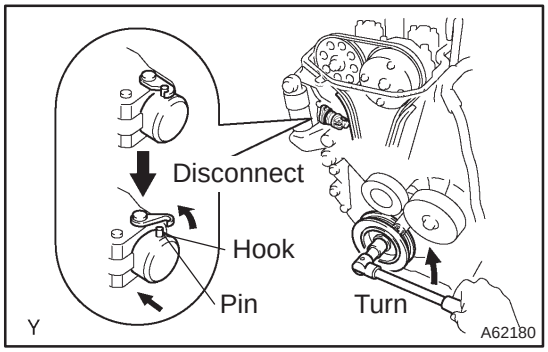

(3) Turn the crankshaft counterclockwise, and disconnect the plunger knock pin from the hook.

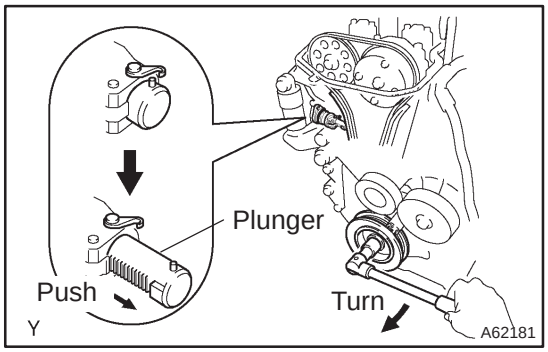

(4) Turn the crankshaft clockwise, and check that the slipper is pushed by the plunger.

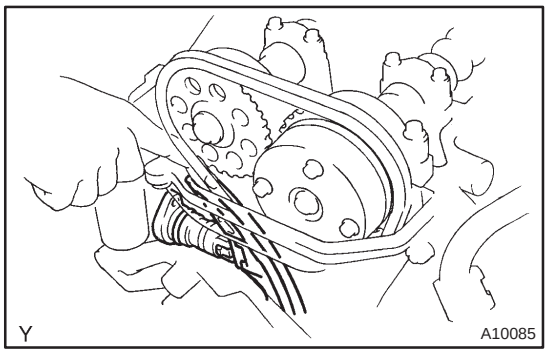

HINT:
If the plunger does not spring out, press the slipper into the chain tensioner with a screwdriver or your finger so that the hook is released from the knock pin and the plunger springs out.

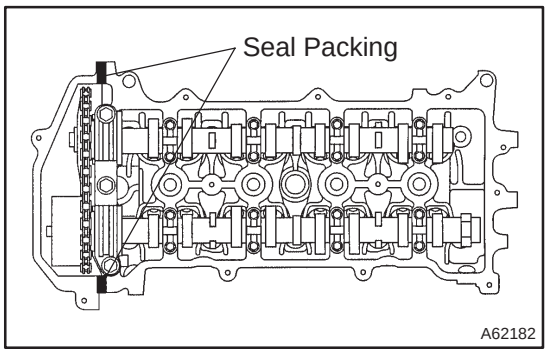

66. INSTALL CYLINDER HEAD COVER SUB–ASSY

(a) Install the gasket to the cylinder head cover.
(b) Remove any old packing (FIPG) material.
(c) Apply seal packing to 2 locations as shown in the illustration.
Seal packing: Part No. 08826–00080 or equivalent

NOTICE:
- **Remove any oil from the contact surface.**
- **Install the cylinder head cover within 3 minutes after applying seal packing.**
- **Do not put into engine oil 2 hours after installing.**

(d) Install the cylinder head cover and cable bracket with the 9 bolts, 2 seal washers and 2 nuts
Uniformly tighten the bolts and nuts, in the several passes.
Torque:
w/o washer 11 N·m (112 kgf·cm, 8 ft·lbf)
w/ washer 9.0 N·m (92 kgf·cm, 80 in·lbf)

67. INSTALL SPARK PLUG

(a) Using a spark lug wrench, install the 4 spark plugs.
Torque: 25 N·m (255 kgf·cm, 18 ft·lbf)

CYLINDER HEAD ASSY (1ZZ–FE/3ZZ–FE)

140KM–01

COMPONENTS

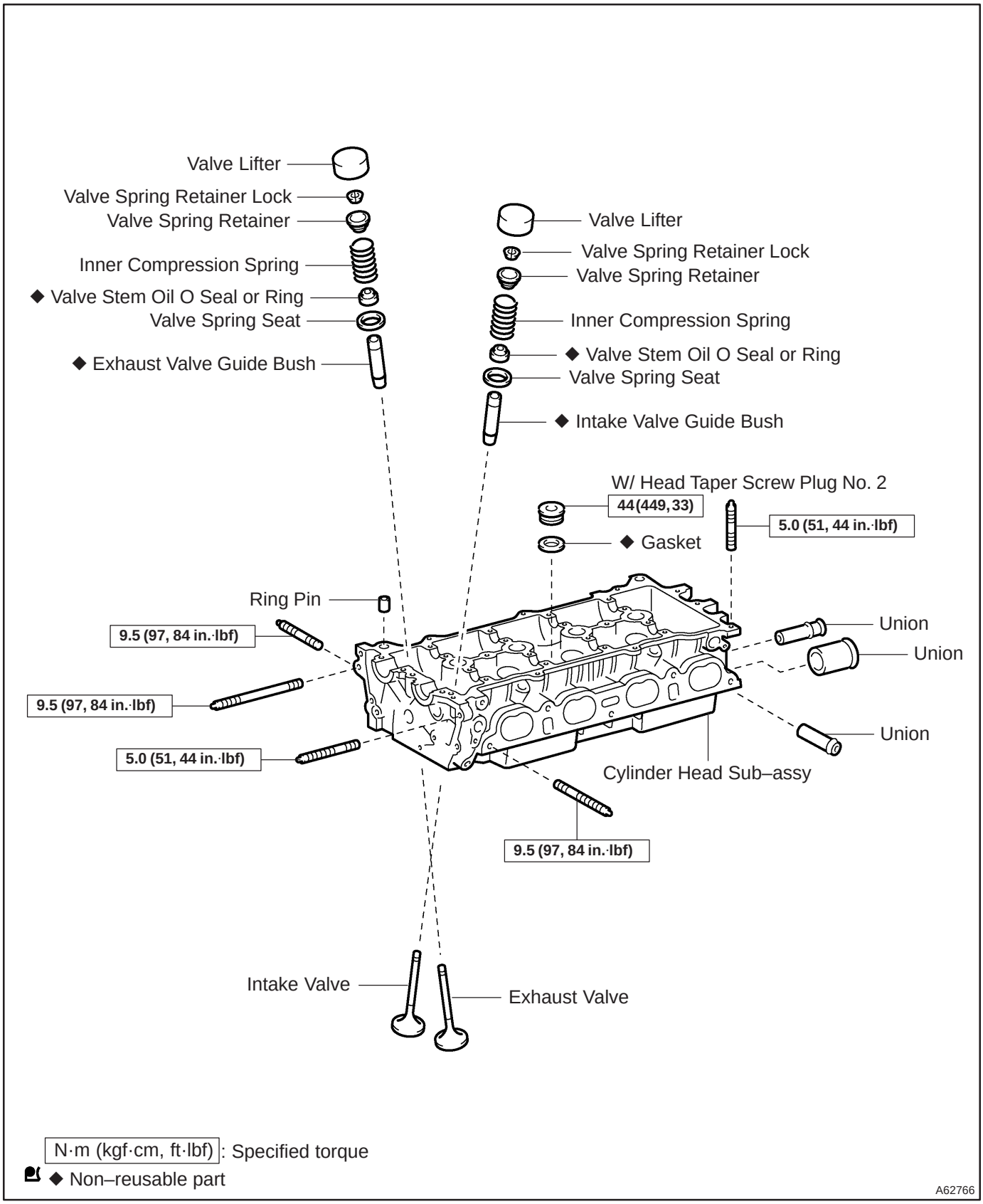

140KN–01

OVERHAUL

1. REMOVE W/HEAD TAPER SCREW PLUG NO.2

(a) Using a socket hexagon wench 10, remove the taper screw plug and gasket.

2. REMOVE VALVE LIFTER

(a) Remove the 16 valve lifters from the cylinder head.

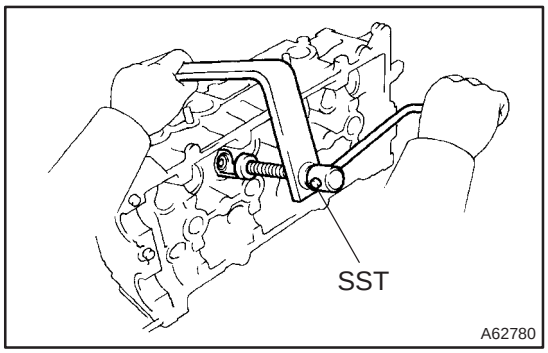

3. REMOVE INNER COMPRESSION SPRING

(a) Using SST, compress the valve spring and remove the 2 keepers, the retainer, and the spring seat.
SST 09202–70020 (09202–00010)

4. REMOVE INTAKE VALVE

(a) Remove the 8 intake valves from the cylinder head.

5. REMOVE EXHAUST VALVE

(a) Remove the 8 exhaust valves from the cylinder head.

6. REMOVE VALVE STEM OIL O SEAL OR RING

(a) Remove the 16 valve stem oil seals from the valve guide bush.

7. REMOVE VALVE SPRING SEAT

(a) Remove the 16 valve spring seats from the cylinder head.

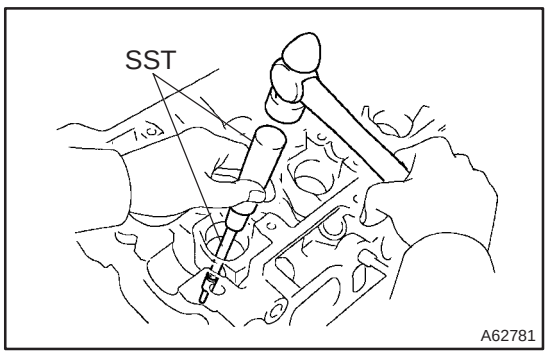

8. REMOVE VALVE GUIDE BUSH

(a) Heat the cylinder head to 80 – 100°C (176 – 212°F).
(b) Using SST, tap out the valve guide bush.
SST 09201–10000, 09201–01055, 09950–70010 (09951–07100)

9. REMOVE STUD BOLT

(a) Remove the 11 stud bolts from the cylinder head.

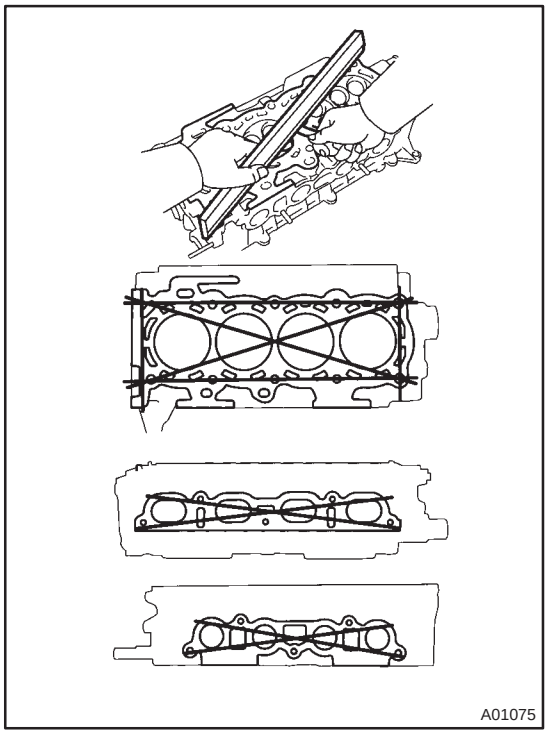

10. INSPECT CYLINDER HEAD FOR FLATNESS

(a) Using a precision straight edge and a feeler gauge, measure the surface contacting the cylinder block and the manifolds for warpage.

Maximum warpage:

Cylinder block side	0.05 mm (0.0020 in.)
Intake manifold side	0.10 mm (0.0040 in.)
Exhaust manifold side	0.10 mm (0.0040 in.)

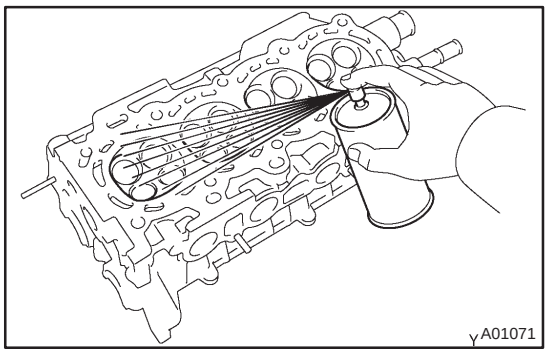

11. INSPECT CYLINDER HEAD FOR CRACKS

(a) Using a dye penetrate, check the combustion chamber, intake ports, exhaust ports and cylinder block surface for cracks.

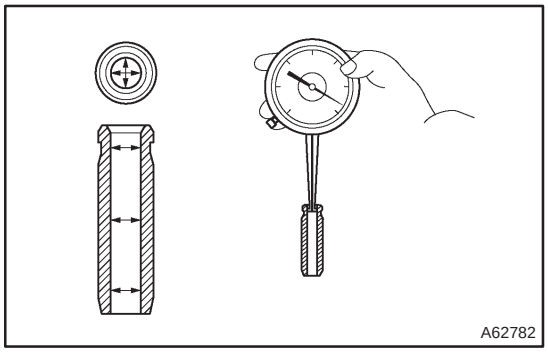

12. INSPECT VALVE GUIDE BUSHING OIL CLEARANCE

(a) Using a caliper gauge, measure the inside diameter of the valve guide bush.

Busing inside diameter:
5.510 – 5.530 mm (0.2169 – 0.2177 in.)

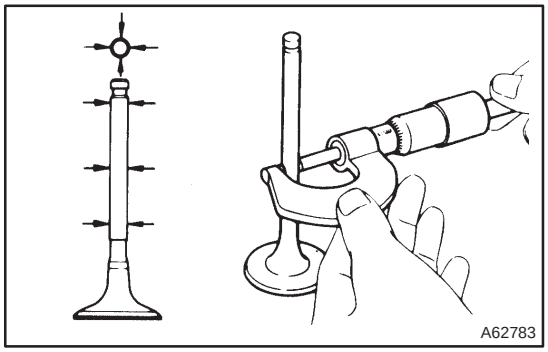

(b) Using a micrometer, measure the diameter of the valve stem.

Valve stem diameter:
Intake 5.470 – 5.485 mm (0.2154 – 0.2159 in.)
Exhaust 5.465 – 5.480 mm (0.2152 – 0.2158 in.)

(c) Subtract the valve stem diameter measurement from the guide bushing inside diameter measurement.
Standard oil clearance:
Intake 0.025 – 0.060 mm (0.0010 – 0.0024 in.)
Exhaust 0.030 – 0.065 mm (0.0012 – 0.0026 in.)
Maximum oil clearance:
Intake 0.08 mm (0.0031 in.)
Exhaust 0.01 mm (0.0039 in.)

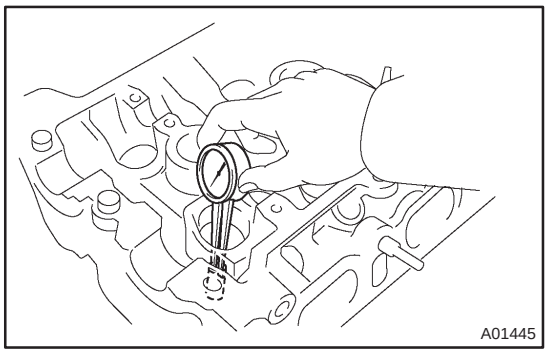

13. INSPECT VALVE GUIDE BUSH

(a) Using a caliper gauge, measure the bushing bore diameter of the cylinder head.
Diameter: 10.285 – 10.306 mm (0.4049 – 0.4057 in.)

(b) If the bushing bore diameter of the cylinder head is greater than 10.306 mm (0.4057 in.), machine the bushing bore to the dimension of 10.335 – 10.356 mm (0.4068 – 0.4077 in.) to install a over size bushing.

HINT:

bushing bore diameter mm (in.)	Bushing size
10.285 – 10.306 (0.4049 – 0.4057)	Use STD
10.335 – 10.356 (0.4068 – 0.4077)	Use O/S 0.05

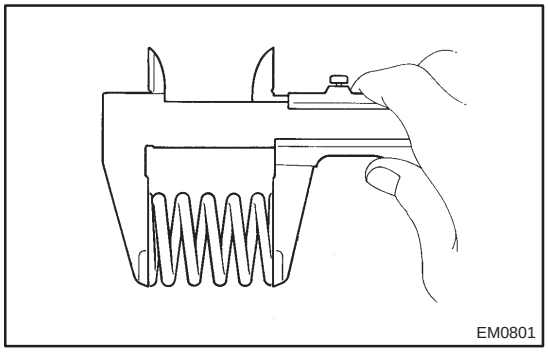

14. INSPECT INNER COMPRESSION SPRING

(a) Using a vernier caliper, measure the free length of the valve spring.
Free length: 43.40 mm (1.7087 in.)

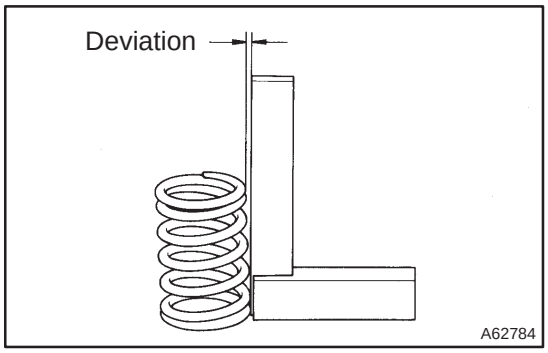

(b) Using a steel square, measure the deviation of the valve spring.
Maximum deviation: 2.0 mm (0.078 in.)
Maximum angle (reference): 2°

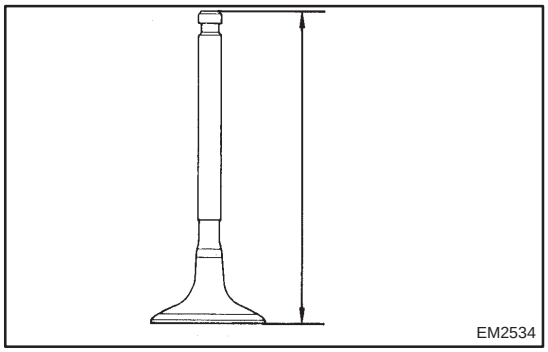

15. INSPECT INTAKE VALVE

(a) Using a vernier calipers, check the valve overall length.
Standard overall length: 88.65 mm (3.4902 in.)
Minimum overall length: 88.35 mm (3.4784 in.)

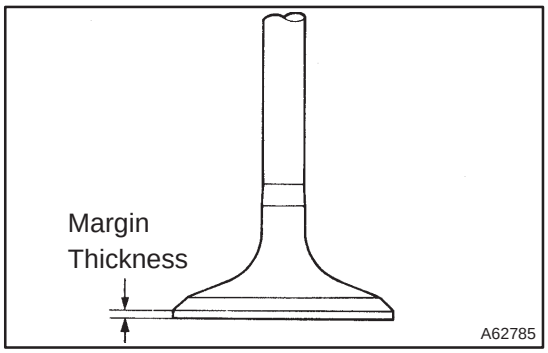

(b) Using a vernier calipers, check the valve head margin thickness.
Standard margin thickness: 1.0 mm (0.039 in.)
Minimum margin thickness: 0.7 mm (0.028 in.)

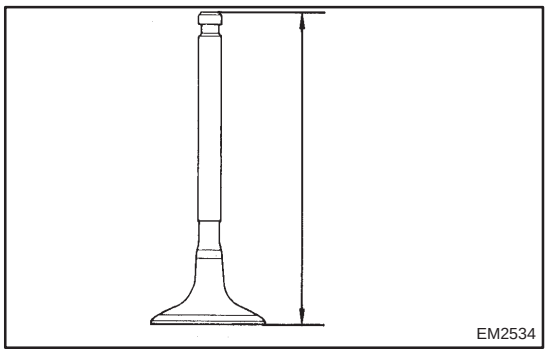

16. INSPECT EXHAUST VALVE

(a) Using a vernier calipers, check the valve overall length.
Standard overall length: 88.69 mm (3.4917 in.)
Minimum overall length: 88.39 mm (3.4799 in.)

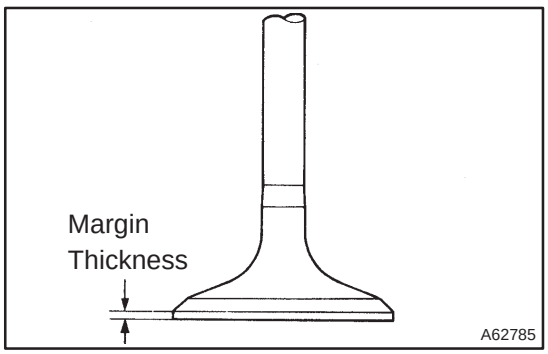

(b) Using a vernier calipers, check the valve head margin thickness.
Standard margin thickness: 1.0 mm (0.039 in.)
Minimum margin thickness: 0.7 mm (0.028 in.)

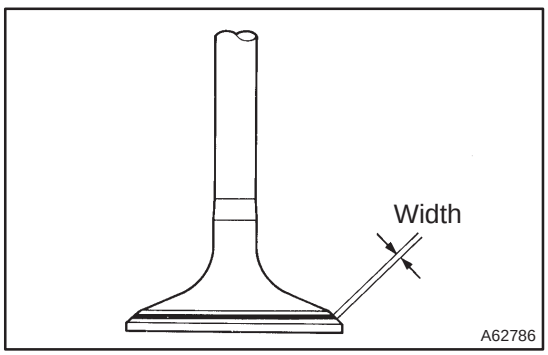

17. INSPECT VALVE SEATS

(a) Apply a light coat of prussian blue (or white lead) to the valve face.
(b) Lightly press the valve against the seat.
(c) Check the valve face and seat according to the following procedure.
  (1) If blue appears 360° around the face, the valve is concentric. If not, replace the valve.

(2) If blue appears 360° around the valve seat, the guide and face are concentric. If not, resurface the seat.

(3) Check that the seat contact is in the middle of the valve face with the width between 1.0 – 1.4 mm (0.039 – 0.055 in.).

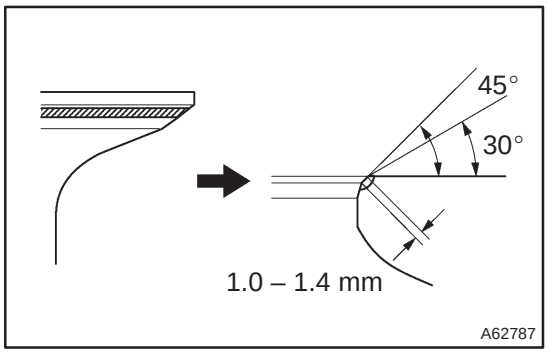

18. REPAIR VALVE SEATS

NOTICE:

Take off a cutter gradually to make smooth valve seats.

(a) If the seating is too high on the valve face, use 30° and 45 ° cutters to correct the seat.

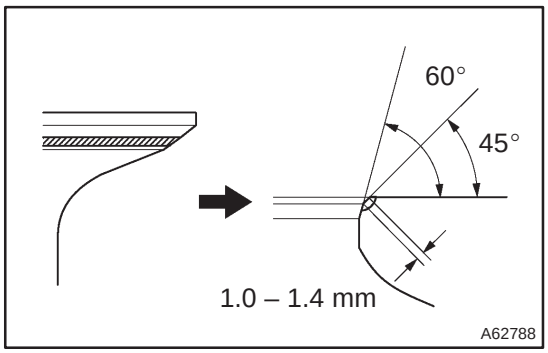

(b) If the seating is too low on the valve face, use 75° and 45° cutters to correct the seat.

(c) Hand–lap the valve and valve seat with an abrasive compound.

(d) Check the valve seating position.

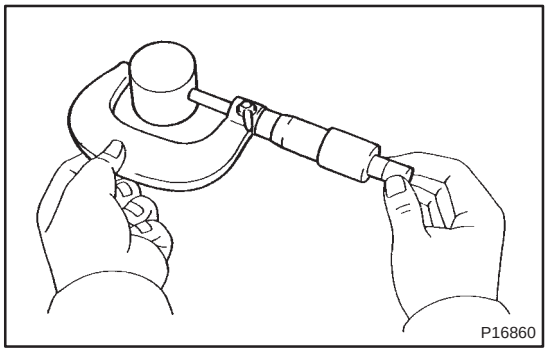

19. INSPECT VALVE LIFTER

(a) Using a micrometer, measure the lifter diameter.
Lifter diameter:
30.966 – 30.976 mm (1.2191 –1.2195 in.)

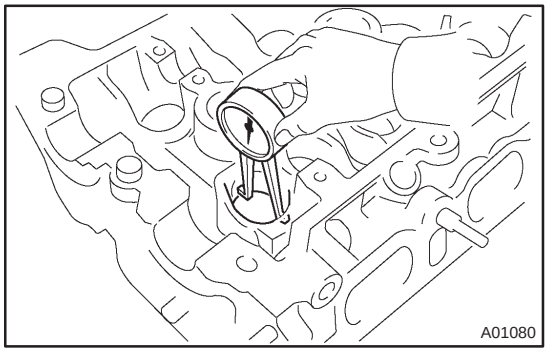

20. INSPECT VALVE LIFTER OIL CLEARANCE

(a) Using a caliper gauge, measure the lifter bore diameter of the cylinder head.
Lifter bore diameter:
31.000 – 31.025 mm (1.2205 – 1.2215 in.)

(b) Subtract the lifter diameter measurement from the lifter bore diameter measurement.
Standard oil clearance:
0.024 – 0.059 mm (0.0009 – 0.0023 in.)
Maximum oil clearance: 0.1 mm (0.0039 in.)

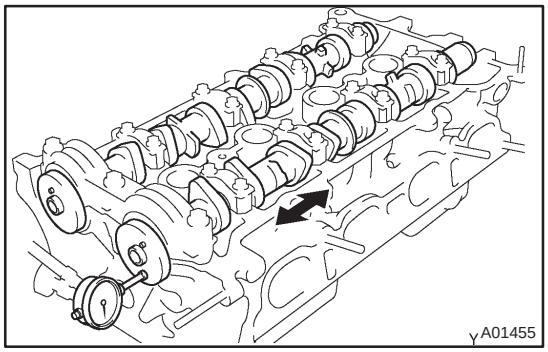

21. INSPECT CAMSHAFT THRUST CLEARANCE

(a) Install the 2 camshafts.

(b) Using a dial indicator, measure the thrust clearance while moving the camshaft back and forth.

Standard thrust clearance:
0.040 – 0.095 mm (0.0016 – 0.0037 in.)
Maximum thrust clearance: 0.110 mm (0.0043 in.)

(c) If the thrust clearance is greater than maximum, replace the cylinder head. If damages are found on the camshaft thrust surfaces, the camshaft also has to be replaced.

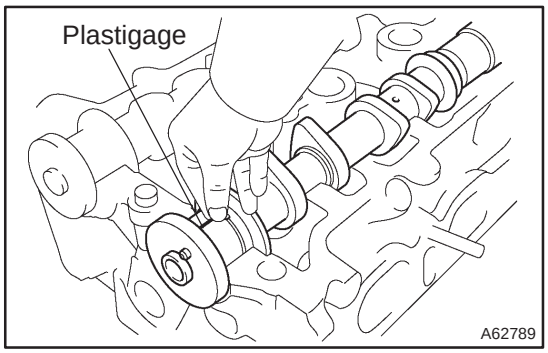

22. INSPECT CAMSHAFT OIL CLEARANCE

(a) Clean the bearing caps and camshaft journals.

(b) Place the camshafts on the cylinder head.

(c) Lay a strip of Plastigage across each of the camshaft journal.

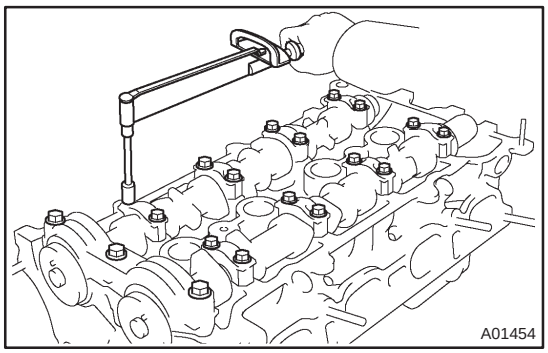

(d) Install the bearing caps (See page 14–4).

Torque:
No. 1 23 N·m (235 kgf·cm, 17 ft·lbf)
No. 3 13 N·m (132 kgf·cm, 10 ft·lbf)

NOTICE:
Do not turn the camshaft.

(e) Remove the bearing caps.

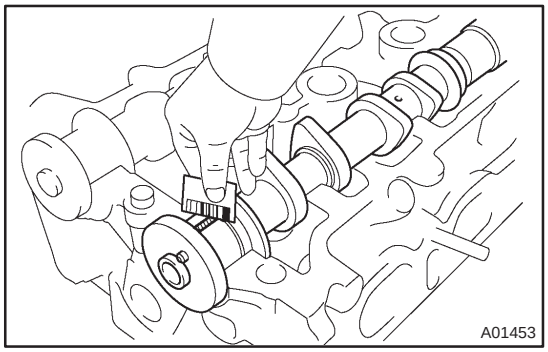

(f) Measure the plastigage at its widest point.

Standard oil clearance:
0.035 – 0.072 mm (0.0014 – 0.0028 in.)
Maximum oil clearance: 0.10 mm (0.0039 in.)

NOTICE:
Completely remove the Plastigage after the measuring.

If the oil clearance is greater than maximum, replace the cylinder head.

23. INSTALL STUD BOLT AND RING PIN

(a) Install the 11 stud bolts to cylinder head,
Torque:
Stud bolt A, D and E 9.5 N·m (97, 84 in.·lbf)
Stud bolt B and C 5.0 N·m (51, 44 in.·lbf)

(b) Using a plastic hammer, install the new 2 ring pins to the cylinder head.
Standard protrusion: 5 mm (0.020 in.)

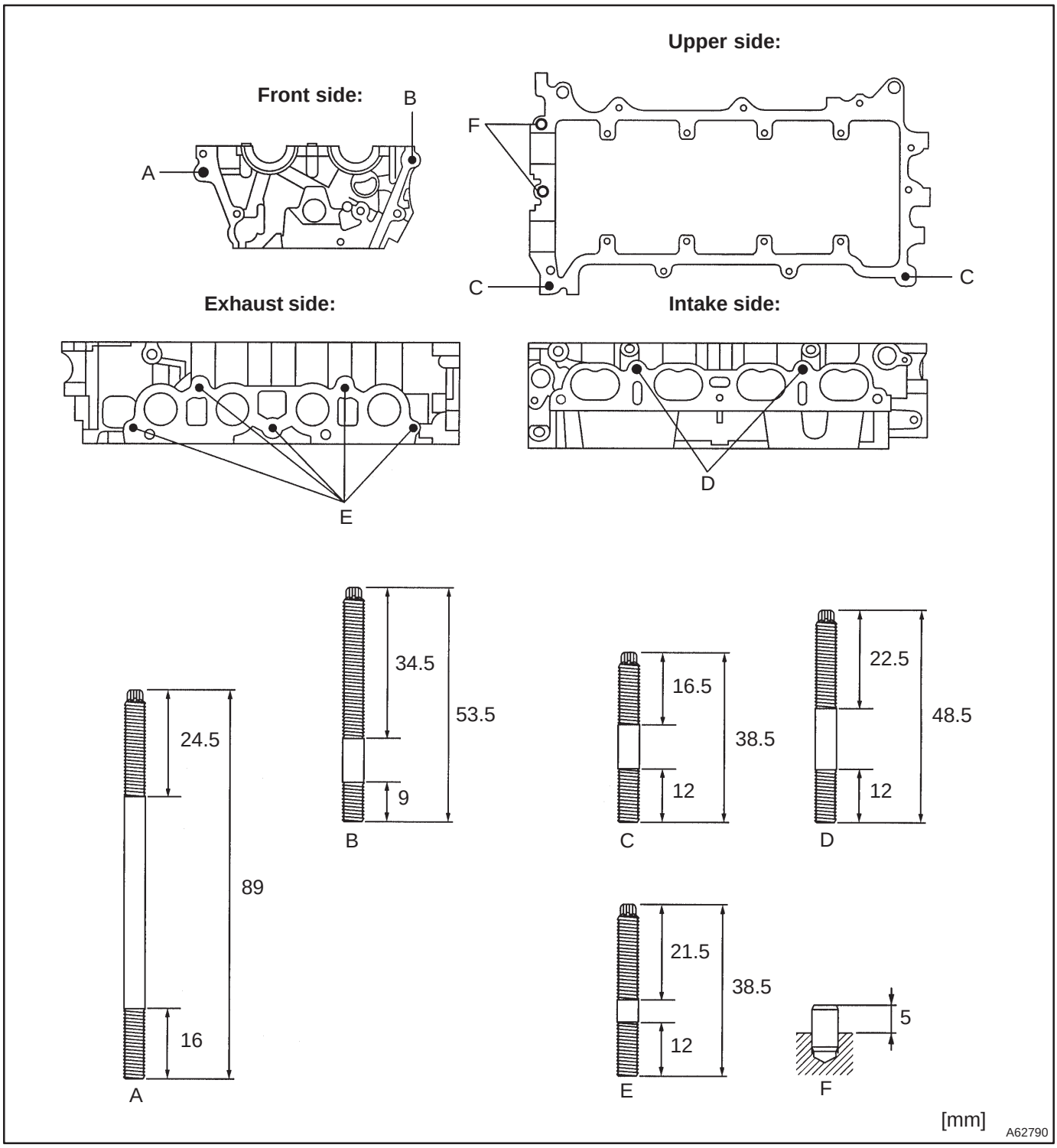

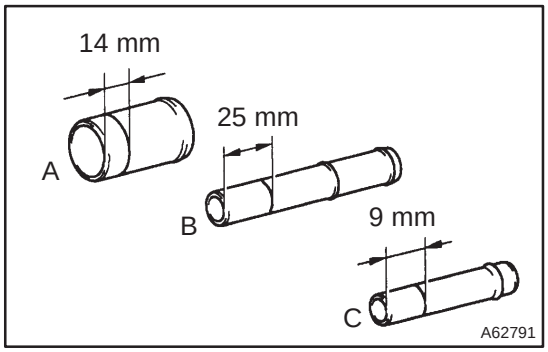

24. INSTALL UNION

(a) Mark the standard position away from the edge, onto the water hose union as shown in the illustration.

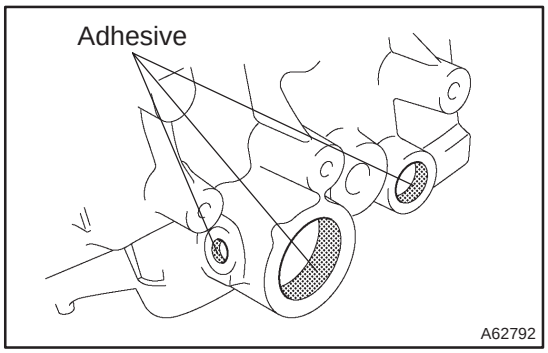

(b) Apply adhesive to the water hose union hole of the cylinder head.

Adhesive:
Part No. 08833–00070, THREE BOND 1324 or equivalent.

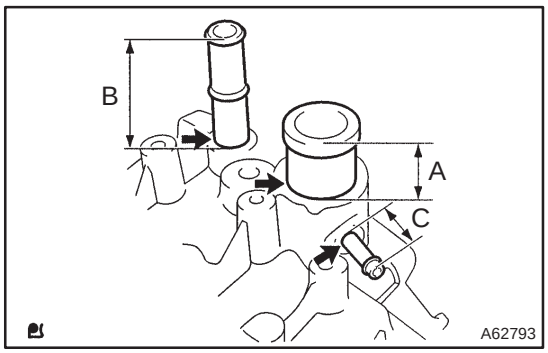

(c) Using a press, press in a new water hose union until the standard marks come to the level of the cylinder head surface.

Standard protrusion:
A 29 mm (1.14 in.)
B 66.5 mm (2.62 in.)
C 24 mm (0.95 in.)

NOTICE:

- **Install the water hose union within 3 minutes after applying adhesive.**
- **Do not put into coolant within an hour after installing.**

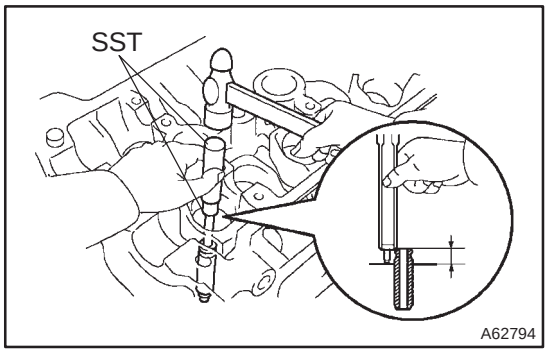

25. INSTALL VALVE GUIDE BUSH

(a) Gradually heat the cylinder head to 80 – 100°C (176 – 212°F).

(b) Using SST and a hammer, tap in a new guide bushing to the specified protrusion height.

SST 09201–10000, 09201–01055, 09950–70010 (09951–07100)

Protrusion height: 8.7 – 9.1 mm (0.342 – 0.358 in.)

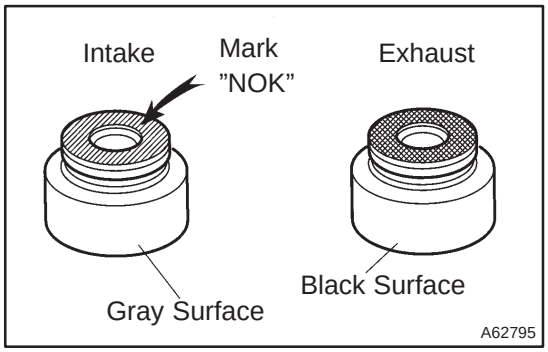

26. INSTALL VALVE STEM OIL O SEAL OR RING

(a) Apply a light coat of engine oil on the valve stem oil seals.

NOTICE:

Be very careful to assemble the oil seal for intake and exhaust. Assembling the wrong one may cause a failure.

HINT:

The intake valve stem oil seal is gray and the exhaust valve stem oil seal is black.

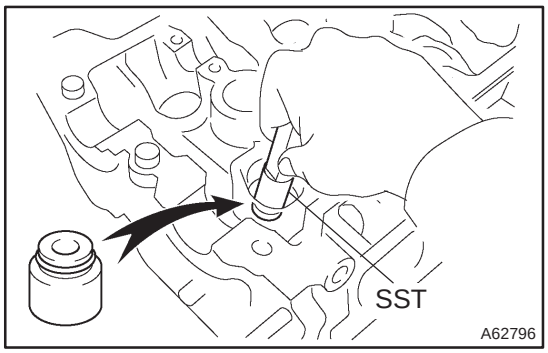

(b) Using SST, push in a new valve stem oil seal.
SST 09201–41020

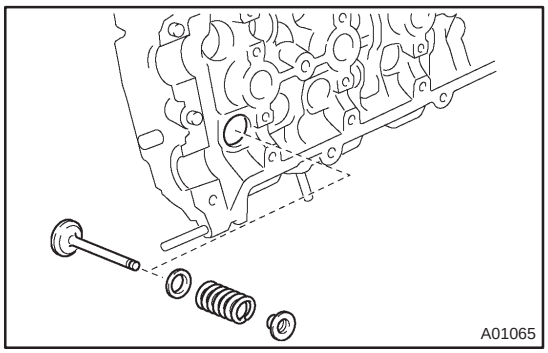

27. INSTALL INNER COMPRESSION SPRING

(a) Install the valve, spring seat, valve spring, and spring retainer.

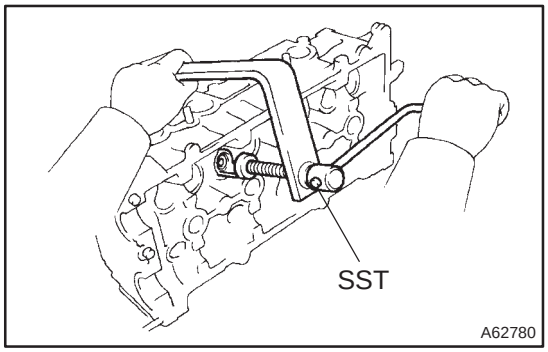

(b) Using SST, compress the valve spring and place the 2 keepers around the valve stem.
SST 09202–70020 (09202–00010)

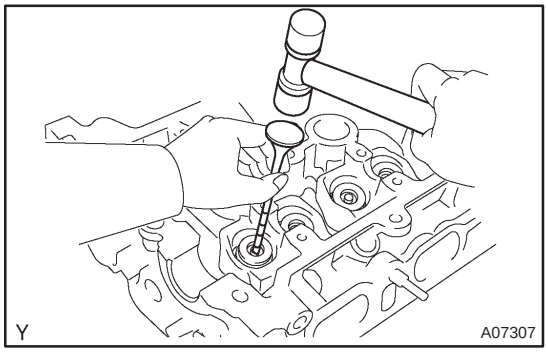

(c) Using a plastic hammer and the valve stem (not in use) tip wound with vinyl tape, lightly tap the valve stem tip to ensure a proper fit.

NOTICE:

Be careful not to damage the valve stem tip.

28. INSTALL W/HEAD TAPER SCREW PLUG NO.2

(a) Using a socket hexagon wrench 10, install the taper screw plug with a new gasket.
Torque: 44 N·m (449 kgf·cm, 33 ft·lbf)

CYLINDER BLOCK (1ZZ–FE/3ZZ–FE)

140KO–01

COMPONENTS

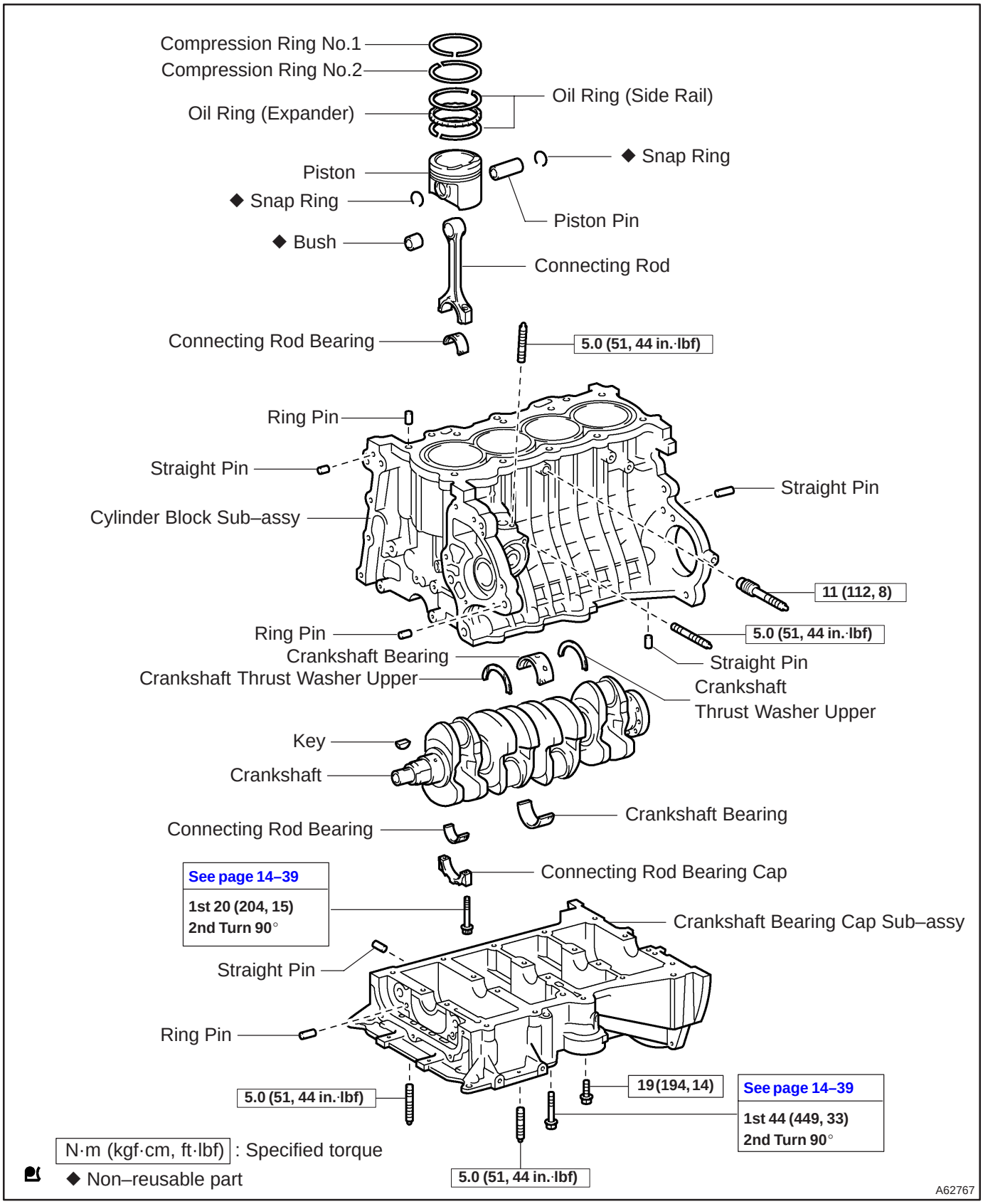

OVERHAUL

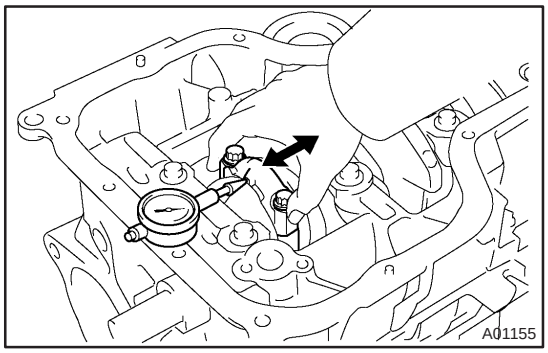

1. INSPECT CONNECTING ROD THRUST CLEARANCE

(a) Using a dial indicator, measure the thrust clearance while moving the connecting rod back and forth.

Standard thrust clearance:
0.160 – 0.342 mm (0.063 – 0.0135 in.)
Maximum thrust clearance: 0.342 mm (0.0135 in.)

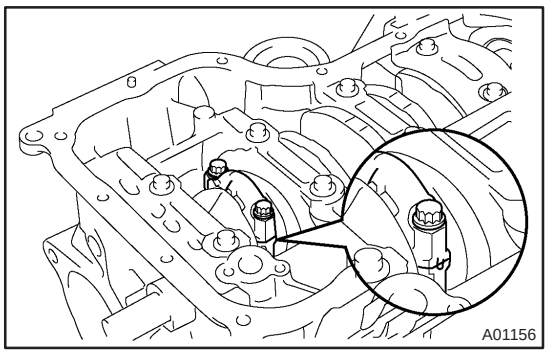

2. INSPECT CONNECTING ROD BEARING OIL CLEARANCE

NOTICE:
Do not turn the crankshaft.

(a) Using marking paint, write the matched cylinder number on each connecting rod and cap.

HINT:
The match marks on the connecting rods and caps are for ensuring correct reassembly.

(b) Using SST, remove the 2 connecting rod cap bolts.
SST 09205–16010

(c) Clean the crank pin and bearing.

(d) Check the crank pin and bearing for pitting and scratches.

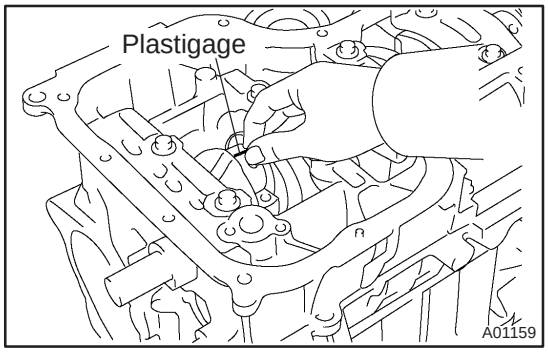

(e) Lay a strip of Plastigage across the crank pin.

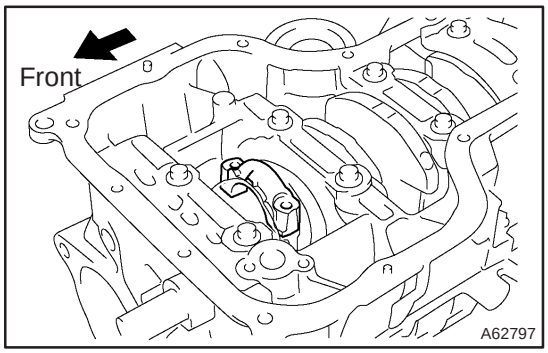

(f) Check that the protrusion of the connecting rod cap is facing in the correct direction.

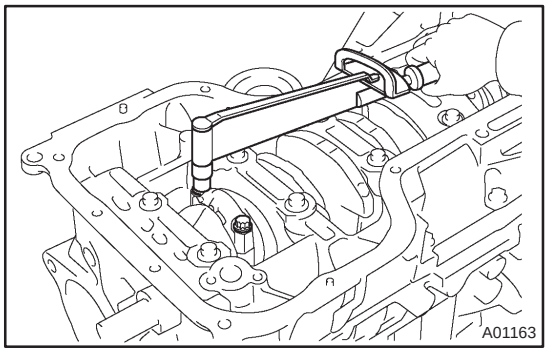

(g) Apply a light coat of engine oil on the threads and under the heads of the connecting rod cap bolts.
(h) Using SST, tighten the bolts in several passes by the specified torque.
SST 09205–16010
Torque: 20 N·m (204 kgf·cm, 15 ft·lbf)

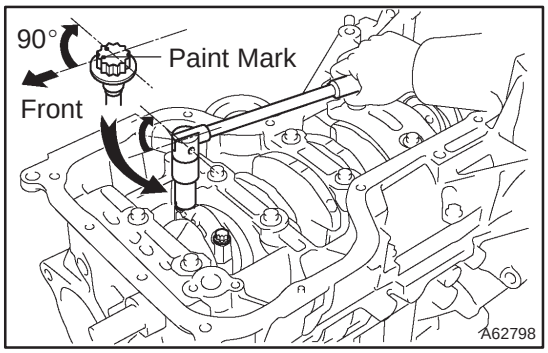

(i) Mark the front of the connecting cap bolts with paint.
(j) Retighten the cap bolts by 90° as shown in the illustration.
(k) Check that the crankshaft turns smoothly.
(l) Remove the 2 bolts, connecting rod cap and lower bearing.

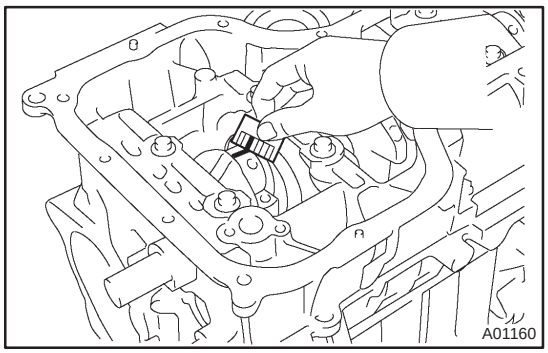

(m) Measure the Plastigage at its widest point.
Standard oil clearance:
0.028 – 0.060 mm (0.0011 – 0.0024 in.)
Maximum oil clearance: 0.080 mm (0.0031 in.)

NOTICE:
Remove the Plastigage completely after the measurement.

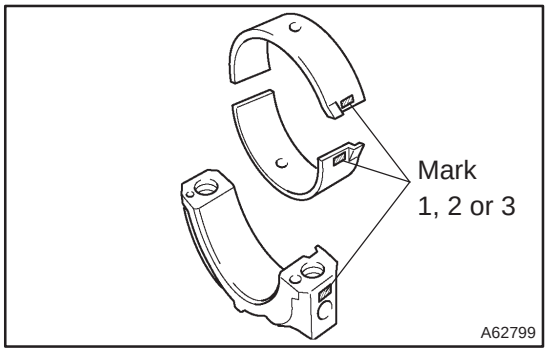

(n) If replacing a bearing, select a new one having the same number as marked on the connecting rod. There are 3 sizes of standard bearings, marked ”1”, ”2” and ”3” accordingly.
Reference:
Standard bearing center wall thickness

Mark	mm (in.)
1	1.486 – 1.490 (0.0585 – 0.0587)
2	1.490 – 1.494 (0.0587 – 0.0588)
3	1.494 – 1.498 (0.0588 – 0.0590)

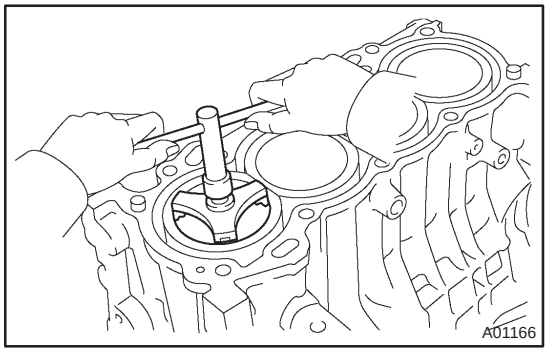

3. REMOVE PISTON SUB–ASSY W/CONNECTING ROD

(a) Using a ride reamer, remove all the carbon from the top of the cylinder.
(b) Push the piston, connecting rod assembly and upper bearing through the top of the cylinder block.

HINT:
- Keep the bearing, connecting rod and cap together.
- Arrange the piston and connecting rod assemblies in the correct order.

4. REMOVE CONNECTING ROD BEARING

(a) Remove the connecting rod bearing from the connecting rod and crankshaft.

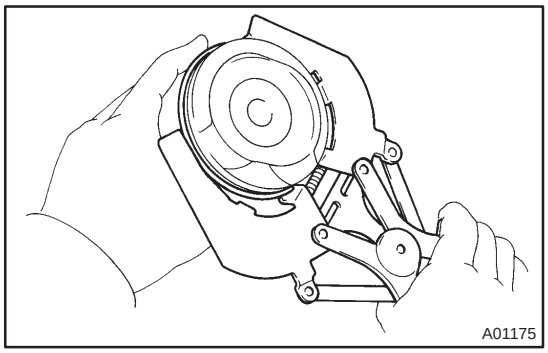

5. REMOVE PISTON RING SET

HINT:
Take care not to misplace the piston rings on both the match with the piston and the direction of the rings.

(a) Using a piston ring expander, remove the 2 compression rings.
(b) Remove the 2 side rails and oil ring by hand.

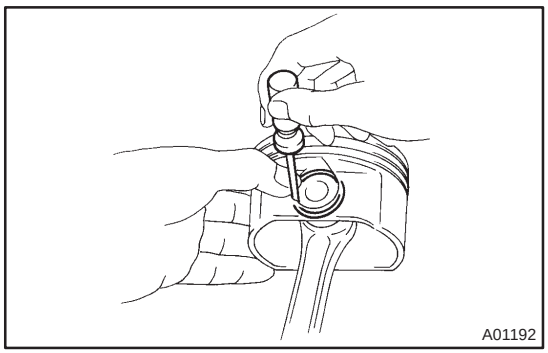

6. REMOVE PISTON PIN HOLE SNAP RING

(a) Using a small screwdriver, pry out the 2 snap rings.

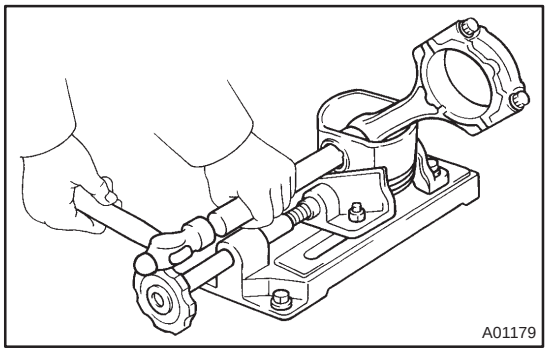

7. REMOVE W/PIN PISTON SUB–ASSY

(a) Gradually heat the piston to 80 – 90°C (176 – 194°F).
(b) Using a plastic hammer and brass bar, lightly tap out the piston pin and remove the connecting rod.

HINT:
- The piston and pin are a matched set.
- Arrange the piston, pins, ring, connecting rod and bearings in the correct order.

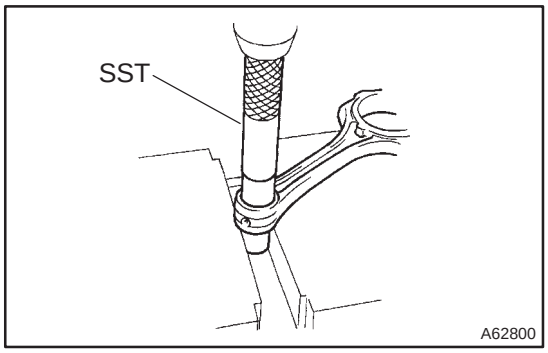

8. REMOVE CONNECTING ROD SMALL END BUSH

(a) Using SST and a press, press out the bushing.
SST 09222–30010

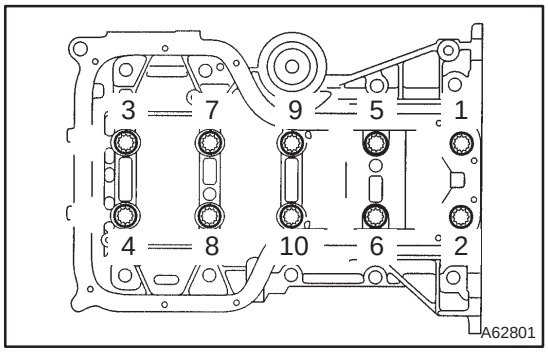

9. REMOVE CRANKSHAFT BEARING CAP SUB ASSY

(a) Remove the 10 bearing cap bolts.

(b) Uniformly loosen the 10 bearing cap sub–assy bolts, in several passes, in the sequence shown in the illustration.
SST 09011–38121

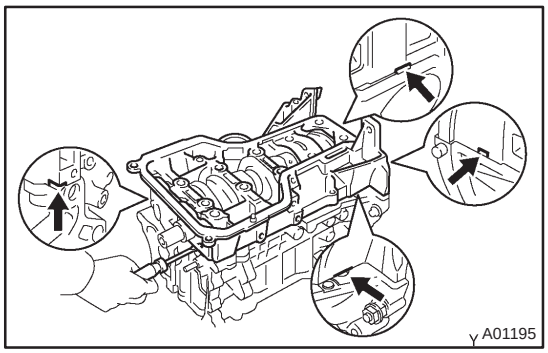

(c) Using a screwdriver, remove the bearing cap sub–assembly by prying the indicated portions between the cylinder block and bearing cap sub–assembly. Remove the 5 lower main bearings.

NOTICE:

Be careful not to damage the contact surfaces of the cylinder block and bearing cap sub–assembly.

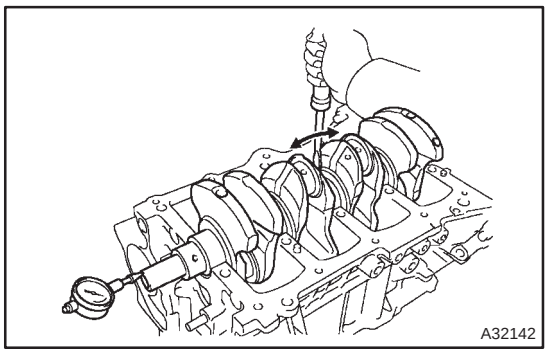

10. INSPECT CRANKSHAFT THRUST CLEARANCE

(a) Using a dial indicator, measure the thrust clearance while prying the crankshaft back and forth with a screwdriver.
Standard thrust clearance:
0.04 – 0.24 mm (0.0016 – 0.0094 in.)
Maximum thrust clearance: 0.30 mm (0.0118 in.)

(b) If the thrust clearance is greater than maximum, measure the thrust washer thickness. If the thickness is not specified, replace the thrust washer.
Thrust washer thickness:
2.430 – 2.480 mm (0.0957 – 0.0976 in.)

11. REMOVE CRANKSHAFT THRUST WASHER UPPER

(a) Remove the crankshaft thrust washer from the cylinder block.

12. REMOVE CRANKSHAFT

(a) Lift out the crankshaft.

(b) Remove the 5 upper main bearings and 2 thrust washers from the cylinder block.

NOTICE:

Arrange the main bearings and thrust washers in the correct order.

13. REMOVE CRANKSHAFT BEARING

(a) Remove the crankshaft bearing from the cylinder block.

14. REMOVE STUD BOLT

(a) Remove the 9 stud bolts from the cylinder block.

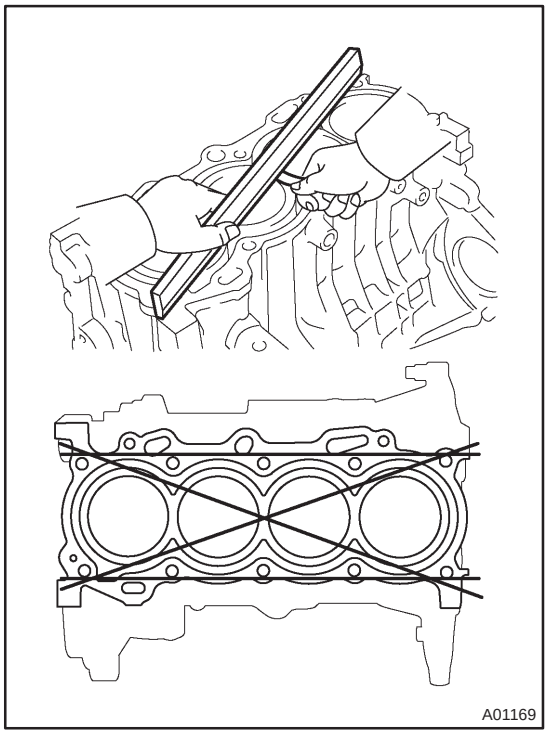

15. INSPECT CYLINDER BLOCK FOR FLATNESS

(a) Using a precision straight edge and feeler gauge, measure the surface contacting the cylinder head gasket for warpage.

Maximum warpage: 0.05 mm (0.0020 in.)

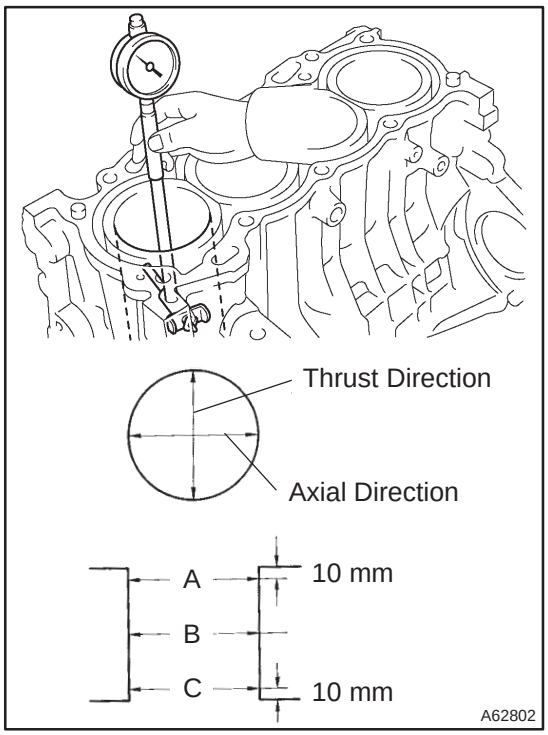

16. INSPECT CYLINDER BORE

(a) Using a cylinder gauge, measure the cylinder bore diameter at positions A, B and C in the thrust and axial directions.

Standard diameter:
79.000 – 79.013 mm (3.1102 – 3.1108 in.)
Maximum diameter: 79.013 mm (3.1108 in.)

If the diameter is greater than the maximum, replace the cylinder block.

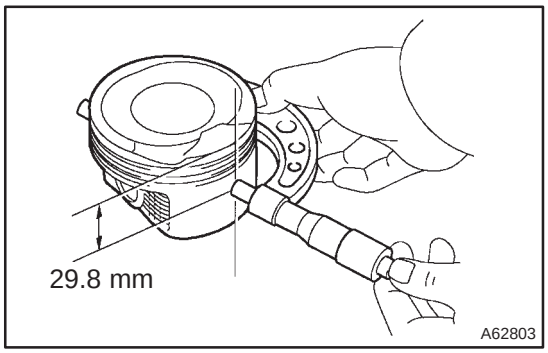

17. INSPECT PISTON DIAMETER

(a) Using a micrometer, measure the piston diameter at a right angle to the piston pin hole, and at the piston of 29.8 mm (1.173 in.) from the piston head.

Piston diameter:
1ZZ–FE 78.925 – 78.935 mm (3.1073 – 3.1077 in.)
3ZZ–FE 78.955 – 78.965 mm (3.1085 – 3.1089 in.)

18. INSPECT PISTON OIL CLEARANCE

(a) Subtract the piston diameter measurement from the cylinder bore diameter measurement.
Standard oil clearance:
1ZZ–FE 0.065 – 0.088 mm (0.0026 – 0.0035 in.)
3ZZ–FE 0.035 – 0.058 mm (0.0014 – 0.0023 in.)
Maximum oil clearance:
1ZZ–FE 0.088 mm (0.0035 in.)
3ZZ–FE 0.058 mm (0.0023 in.)

If the oil clearance is greater than maximum, replace all the 4 pistons. If necessary, replace the cylinder block.

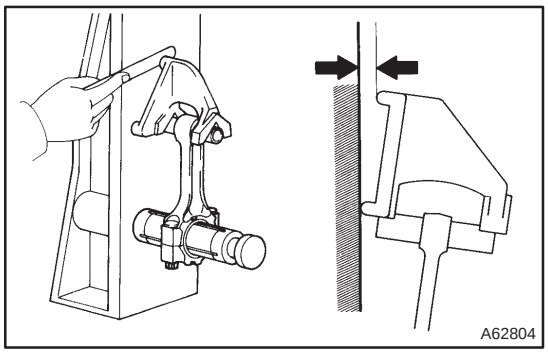

19. INSPECT CONNECTING ROD SUB–ASSY

(a) Using a connecting rod aligner and feeler gauge, check the connecting rod alignment.
(1) Check for out–of–alignment.
Maximum out–of alignment:
0.05 mm (0.0020 in.) per 100 mm (3.94 in.)

If out–of alignment is greater than maximum, replace the connecting rod assembly.

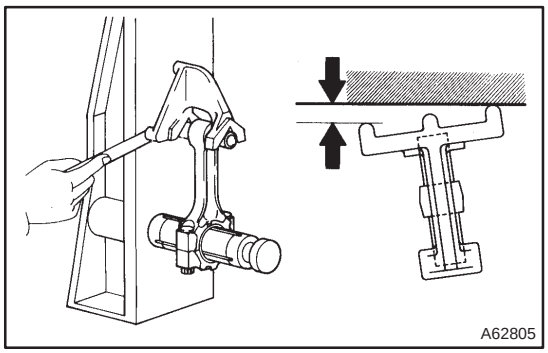

(2) Check for twist.
Maximum twist:
0.05mm (0.0020 in.) per 100 mm (3.94 in.)

If twist is greater than maximum, replace the connecting rod assembly.

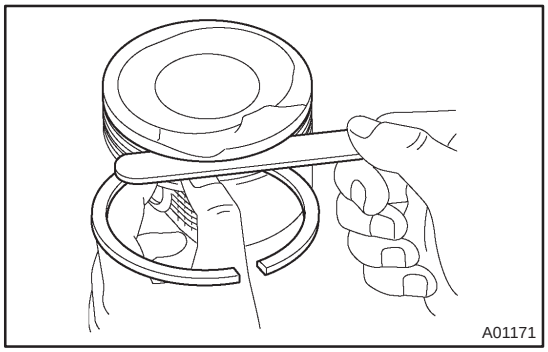

20. INSPECT RING GROOVE CLEARANCE

(a) Using a feeler gauge, measure the clearance between the new piston ring and the wall of the ring groove.
Ring groove clearance:
No. 1 0.020 – 0.070 mm (0.0008 – 0.0028 in.)
No. 2 0.030 – 0.070 mm (0.0012 – 0.0028 in.)

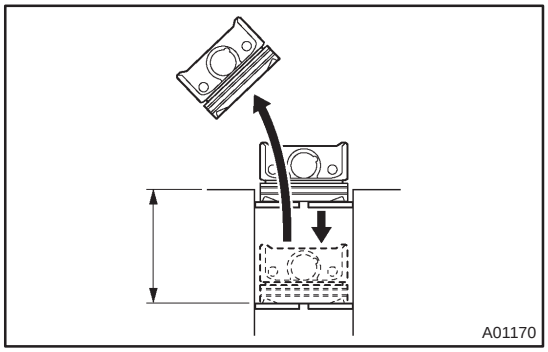

21. INSPECT PISTON RING END GAP

(a) Using a piston, push the piston ring a little beyond the bottom of the ring travel, that means 100 mm (3.94 in.) from the top of the cylinder block.

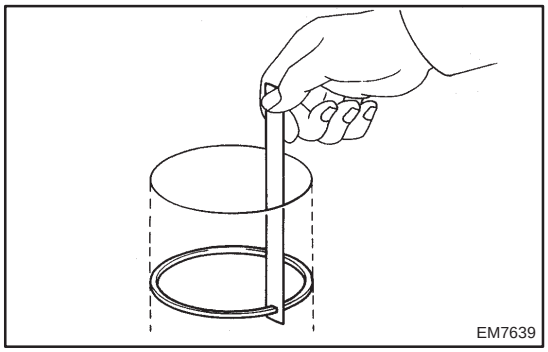

(b) Using a feeler gauge, measure the end gap.
Standard end gap:
No. 1 0.25 – 0.35 mm (0.0098 – 0.0138 in.)
No. 2 0.35 – 0.50 mm (0.0138 – 0.0197 in.)
Maximum end gap:
No. 1 0.74 mm (0.029 in.)
No. 2 0.89 mm (0.035 in.)

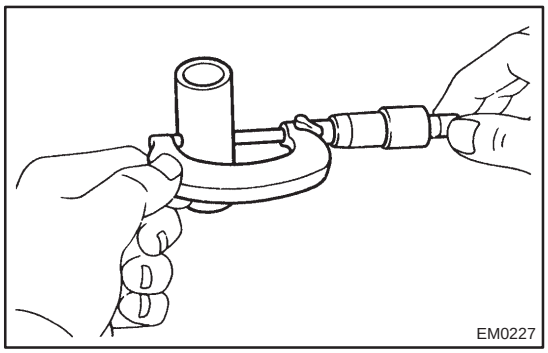

22. INSPECT PISTON PIN

(a) Using a micrometer, measure the piston pin diameter.
Piston pin diameter:
20.004 – 20.013 mm (0.7876 – 0.7879 in.)

NOTICE:
Push the piston pin into the matched piston.

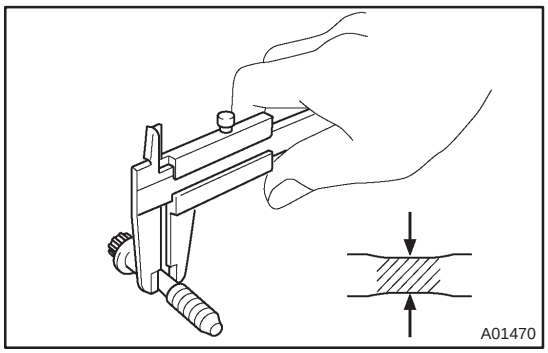

23. INSPECT CONNECTING ROD BOLT

(a) Using a vernier caliper, measure the tension portion diameter of the bolts.
Standard diameter:
6.6 – 6.7 mm (0.260 – 0.264 in.)
Maximum diameter: 6.4 mm (0.252 in.)

(b) If the diameter is less than minimum, replace the bolt.

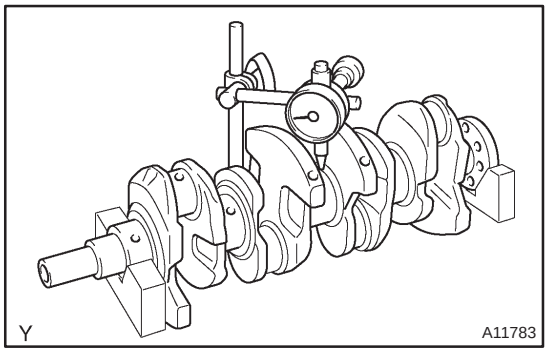

24. INSPECT CRANKSHAFT

(a) Using a dial indicator and V–blocks, measure the circle runout, as shown in the illustration.
Maximum circle runout: 0.03 mm (0.0012 in.)

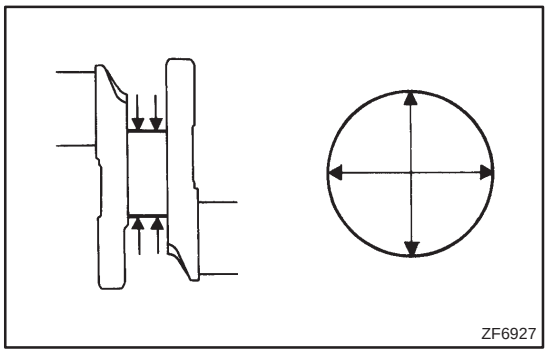

(b) Using a micrometer, measure the diameter of each main journal at the points shown in the illustration.
Diameter: 47.988 – 48.000 mm (1.8893 – 1.8898 in.)

(c) Check each main journal for taper and out–of–round as shown.
Maximum taper and out–of–round:
0.02 mm (0.0008 in.)

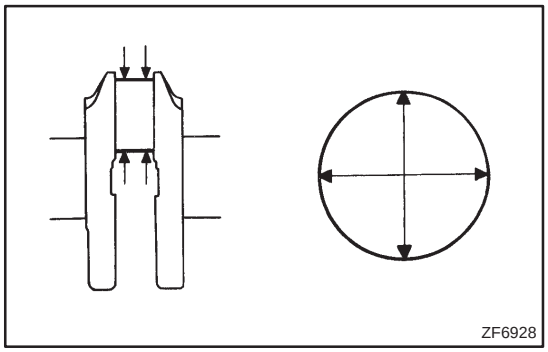

(d) Using a micrometer, measure the diameter of each crank pin at the points shown in the illustration.
Diameter: 43.992 – 44.000 mm (1.7320 – 1.7323 in.)

(e) Check each crank pin for taper and out–of–round as shown.
Maximum taper and out–of–round:
0.02 mm (0.0008 in.)

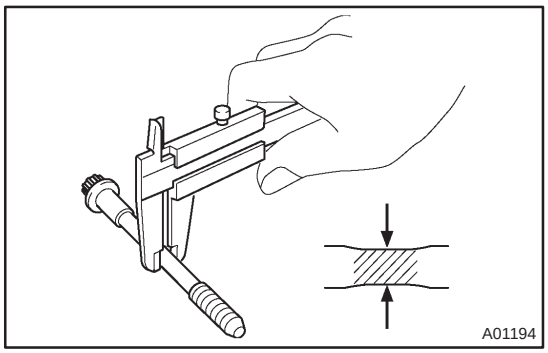

25. INSPECT CRANKSHAFT BEARING CAP SET BOLT

(a) Using vernier caliper, measure the tension portion diameter of the bolts.
Standard diameter: 7.3 – 7.5 mm (0.287 – 0.295 in.)
Minimum diameter: 7.2 mm (0.283 in.)

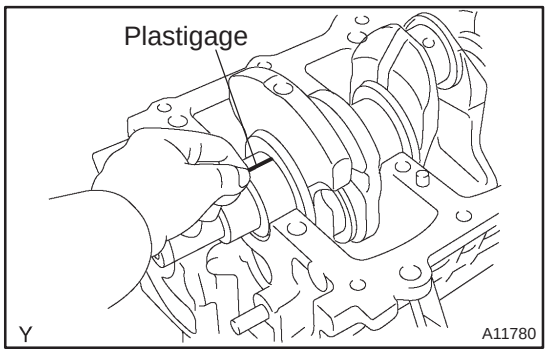

26. INSPECT CRANKSHAFT OIL CLEARANCE

(a) Clean each main journal and bearing.

(b) Place the crankshaft on the cylinder block.

(c) Lay a strip of Plastigage across each journal.

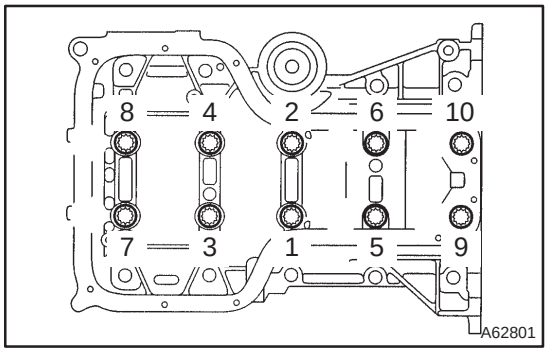

(d) Using SST, tighten the bolts in several passes, in the sequence shown, by the specified torque.
SST 09011–38121
Torque: 44 N·m (449 kgf·cm, 33 ft·lbf)

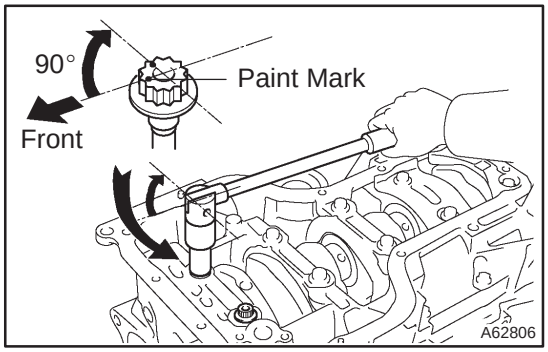

(e) Mark the front of the bearing cap sub–assembly bolts with paint.

(f) Retighten the bearing cap sub–assy bolts by 90° as shown in the illustration.

(g) Check that the painted mark is now at a 90° angle to the front.

NOTICE:

Do not turn the crankshaft.

(h) Remove the bearing cap sub–assy.

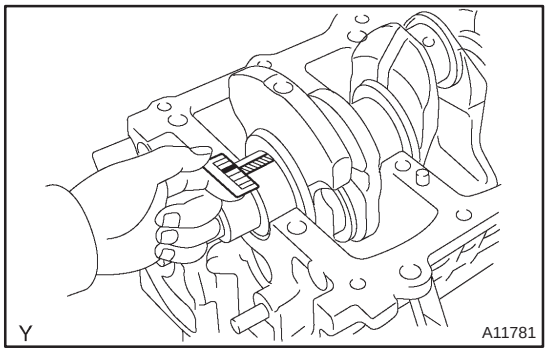

(i) Measure the Plastigage at its widest point.
Standard oil clearance:
0.013 – 0.030 mm (0.0005 – 0.0012 in.)
Minimum oil clearance: 0.05 mm (0.0020 in.)

NOTICE:
Completely remove the plastigage

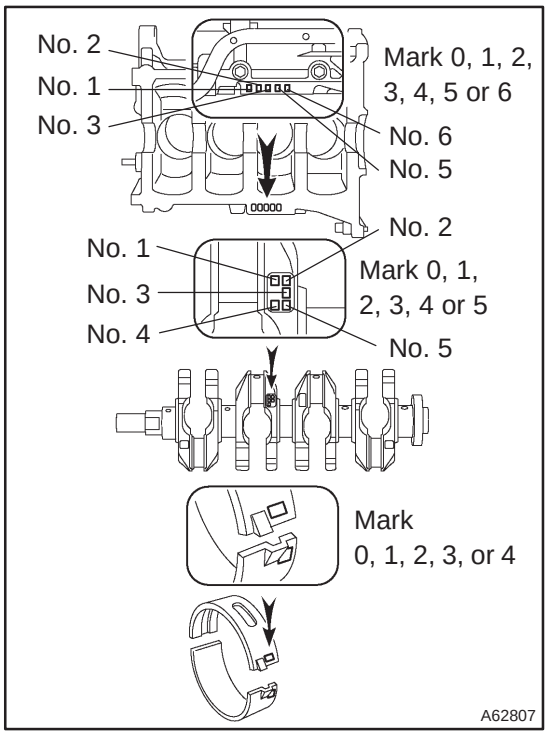

(j) If replacing a bearing, select a new one having the same number. If the number of the bearing cannot be determined, calculate the correct use bearing number by adding together the numbers imprinted on the cylinder block and crankshaft, then select a new bearing having the calculated number. There are 4 sizes of standard bearings, marked "1", "2", "3" and "4" accordingly.

Cylinder block (A) + Crankshaft (B)	0–2	3–5	6–8	9–11
Use bearing	"1"	"2"	"3"	"4"

HINT:
EXAMPLE:
Cylinder block "4" (A) + Crankshaft "3" (B) = Total number 7 (Use bearing "3")

Item	Mark	mm (in.)
Cylinder block main journal bore diameter (A)	"0"	52.000 – 52.003 (2.0472 – 2.0473)
	"1"	52.003 – 52.005 (2.0473 – 2.0474)
	"2"	52.005 – 52.007 (2.0474 – 2.0475)
	"3"	52.007 – 52.010 (2.0475 – 2.0476)
	"4"	52.010 – 52.012 (2.0476 – 2.0477)
	"5"	52.012 – 52.014 (2.0477 – 2.0478)
	"6"	52.014 – 52.016 (2.0478 – 2.0479)
Crankshaft main journal diameter (B)	"0"	47.998 – 48.000 (1.8897 – 1.8898)
	"1"	47.996 – 47.998 (1.8896 – 1.8897)
	"2"	47.994 – 47.996 (1.8895 – 1.8896)
	"3"	47.992 – 47.994 (1.8894 – 1.8895)
	"4"	47.990 – 47.992 (1.8893 – 1.8894)
	"5"	47.988 – 47.990 (1.8892 – 1.8893)
Standard bearing center wall thickness	"1"	1.994 – 1.997 (0.0785 – 0.0786)
	"2"	1.997 – 2.000 (0.0786 – 0.0787)
	"3"	2.000 – 2.003 (0.0787 – 0.0789)
	"4"	2.003 – 2.006 (0.0789 – 0.0790)

27. INSTALL STUD BOLT

(a) Install the 9 stud bolt to the cylinder block.

Torque:
Stud bolt A, B and C 5.0 N·m (51 kgf·cm, 44 in.·lbf)
Stud bolt D 11 N·m (112 kgf·cm, 8 ft·lbf)

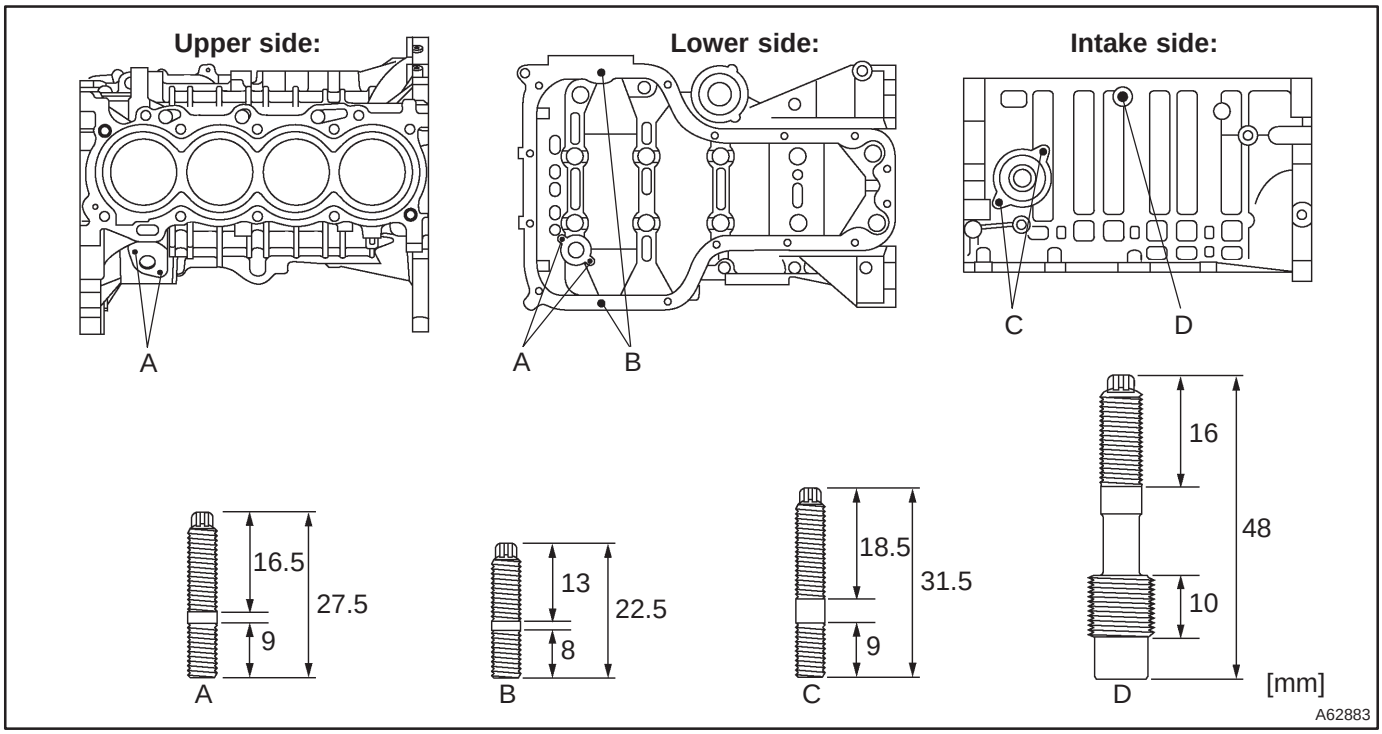

28. INSTALL RING PIN

(a) Using a plastic hammer, install the 5 ring pins to the cylinder block.

Standard protrusion:
Ring pin A 6 mm (0.24 in.)
Ring pin B 10 mm (0.39 in.)
RIng pin C 7 mm (0.28 in.)

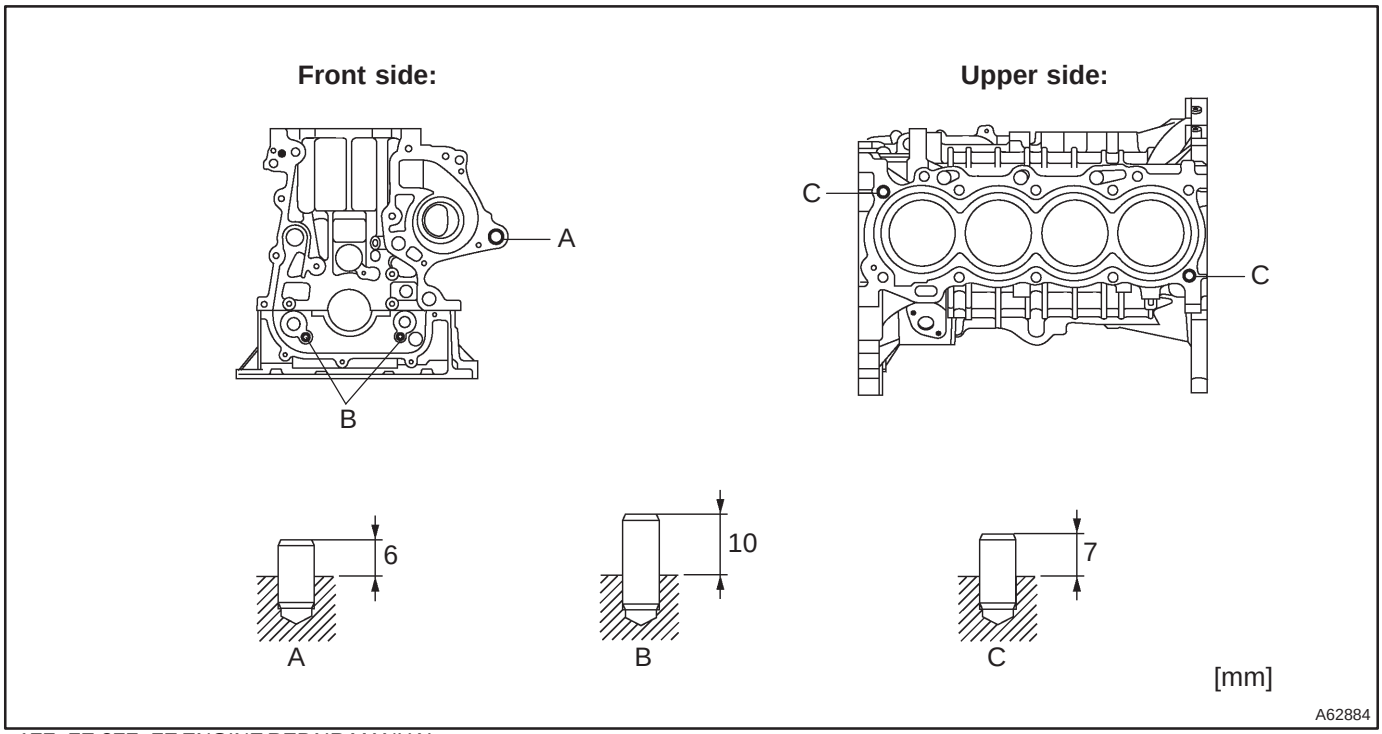

29. INSTALL STRAIGHT PIN

(a) Using a plastic hammer, install the 9 straight pins to the cylinder block.

Standard protrusion:
Straight pin A 5 mm (0.20 in.)
Straight pin B 7.5 mm (0.30 in.)
Straight pin C 8 mm (0.31 in.)
Straight pin D 12 mm (0.47 in.)

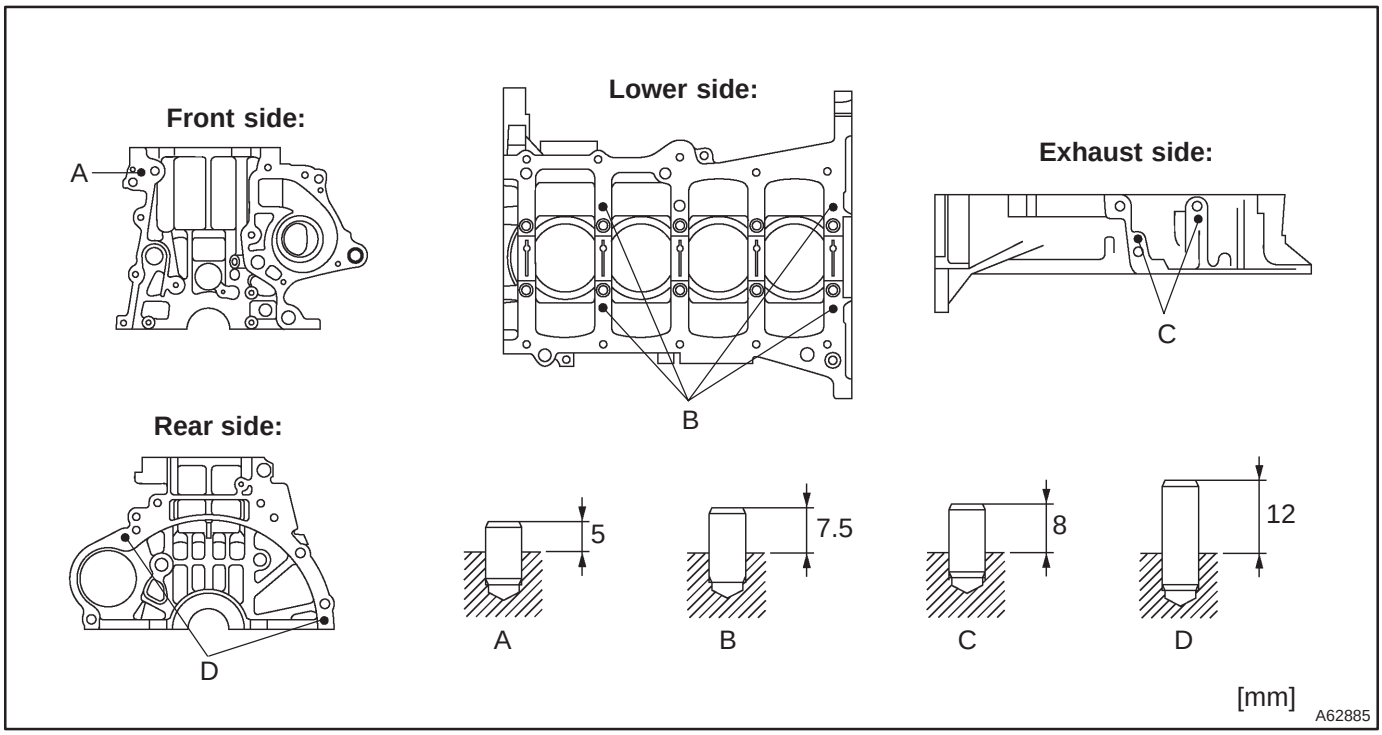

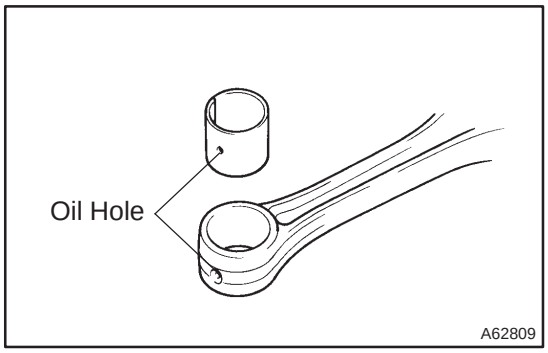

30. INSTALL CONNECTING ROD SMALL END BUSH

(a) Align the oil hole of a new bushing with the one of the connecting rod.

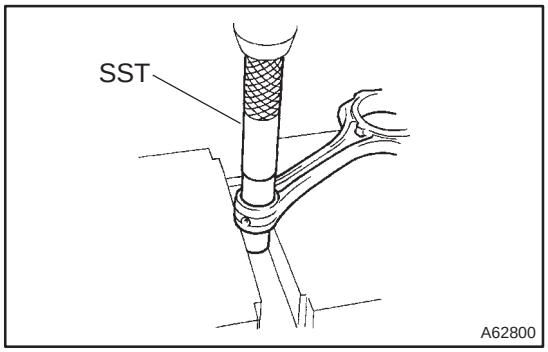

(b) Using SST and a press, press into the small end bushing.
SST 09222–30010

(c) After installing the bushing, check that the oil hole of the connecting rod is aligned with the hole of the small end bushing and that the oil clearance measured on both sides of connecting rod are equal.

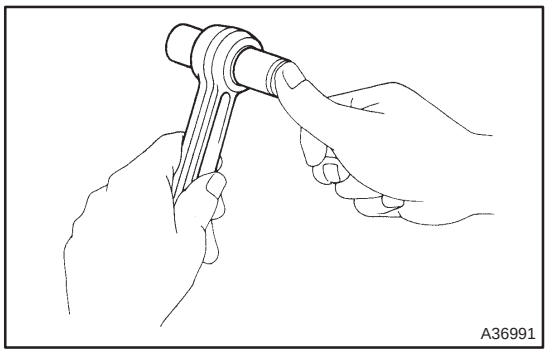

(d) Horn the connecting rod end bushing to obtain the standard specified oil clearance.
Oil clearance: 0.005 – 0.011 mm (0.0002 – 0.0004 in.)

HINT:
When pushing the piston pin with engine oil applied into the connecting rod with thumb, the piston pin is supposed to have a little resistance to insert at normal room temperature.

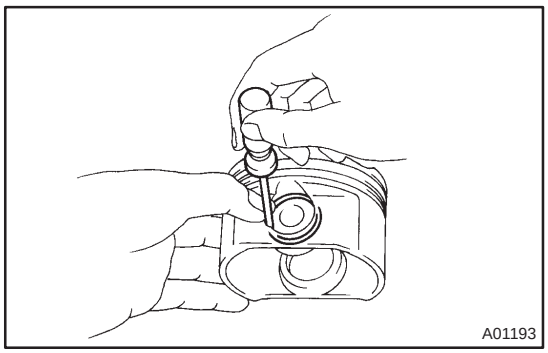

31. INSTALL PISTON PIN HOLE SNAP RING

(a) Using a small screwdriver, install a new snap ring at one end of the piston pin hole.

HINT:
Be sure that end gap of the snap ring is aligned with the pin hole cutout portion of the piston.

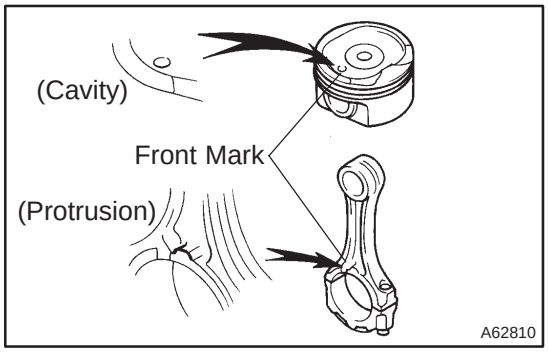

32. INSTALL W/PIN PISTON SUB–ASSY

(a) Gradually heat the piston to 80 – 90°C (176–194°F).
(b) Align the front marks on the piston with connecting rod, and push in the piston with your thumb.

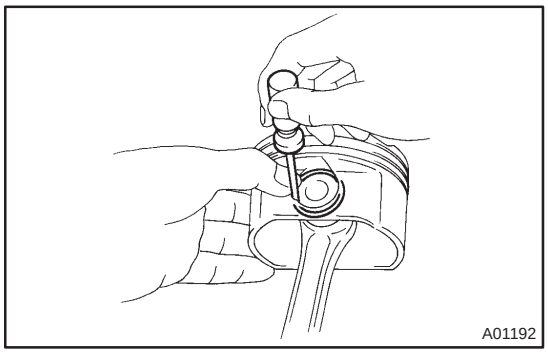

33. INSTALL PISTON PIN HOLE SNAP RING

(a) Using a small screwdriver, install a new snap ring on the other end of the piston pin hole.

HINT:
Be sure that end gap of the snap ring is aligned with the pin hole cutout portion of the piston.

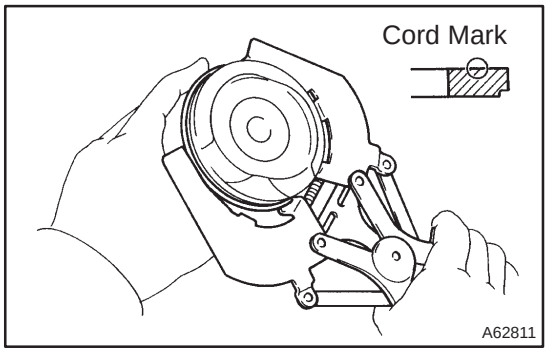

34. INSTALL PISTON RING SET

HINT:
In case of reusing the piston rings, install them to the matched pistons with the surfaces faced correctly.

(a) Install the oil ring expander and 2 side rails by hand.

(b) Using a piston ring expander, install the 2 compression rings with the code mark facing upward.
Code mark (No.2 only): T or 2R

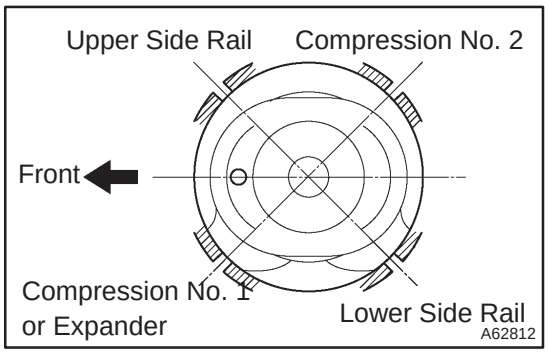

(c) Position the piston rings so that the ring ends are as shown.

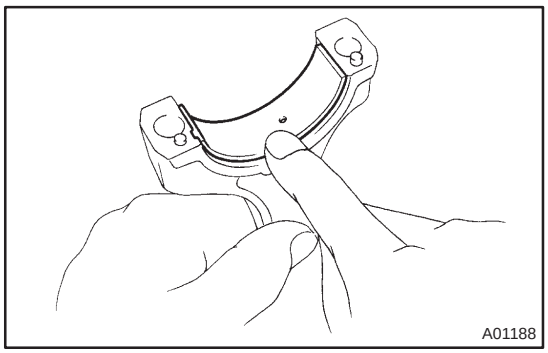

35. INSTALL CONNECTING ROD BEARING

(a) Align the bearing claw with the groove of the connecting rod or connecting cap.

NOTICE:
Clean the backside of the bearing and the bearing surface of the connecting rod and let not stick the oils and fats.

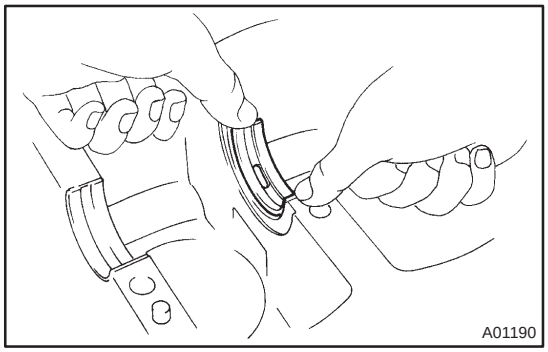

36. INSTALL CRANKSHAFT

(a) Install the upper bearing with an oil groove on cylinder block.

NOTICE:
Clean the backside of the bearing and the bearing surface of the bearing cap and let not stick the oils and fats.

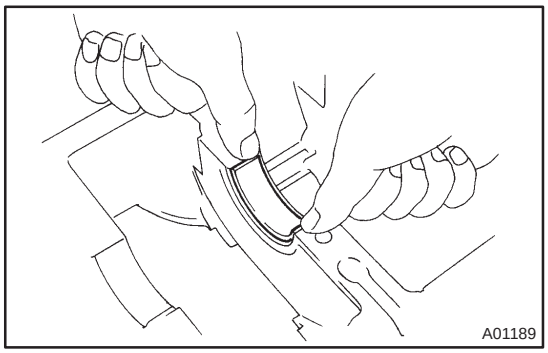

(b) Install the lower bearing on the bearing cap sub–assy.

NOTICE:
Clean the backside of the bearing and the bearing surface of the bearing cap and let not stick the oils and fats.

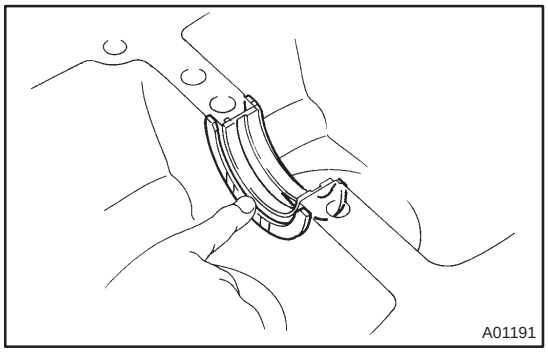

(c) Install the 2 thrust washers under the No. 3 journal position of the cylinder block with the oil grooves facing outward.

(d) Apply engine oil to upper bearing and install the crankshaft on the cylinder block.

(e) Apply a light coat of engine oil on the bolt threads, the bolt seats, and the bearings of the bearing cap sub–assy.

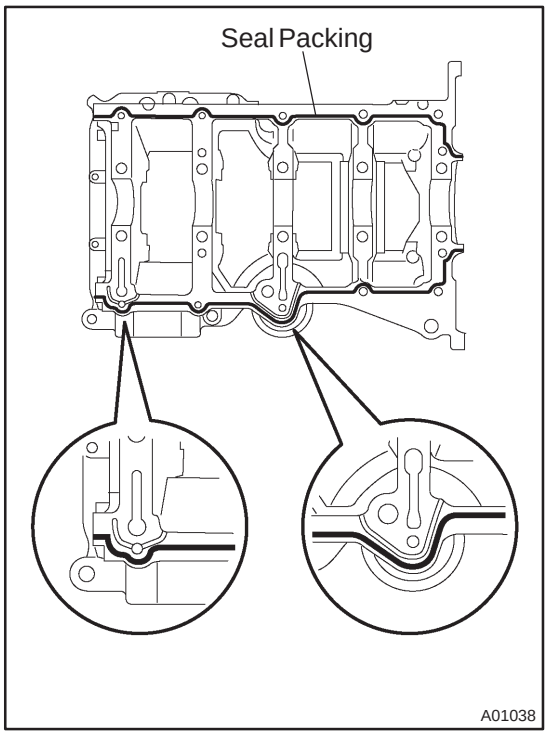

(f) Apply seal packing in the shape of bead (Diameter 2.5 – 3.5 mm (0.08 – 0.12 in.) consequently as shown in the illustration.

Seal packing: Part No. 08826–00080 or equivalent

NOTICE:

- **Remove any oil from the contact surface.**
- **Install the bearing cap sub–assembly within 3 minutes after applying seal packing.**
- **Do not put into engine oil within 2 hours after the installation.**

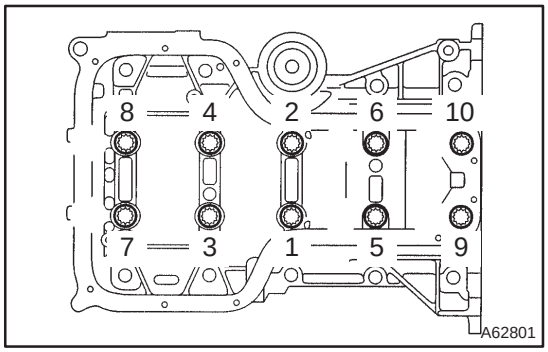

(g) Using SST, tighten the bolts in several passes, in the sequence shown, by the specified torque.

SST 09011–38121

Torque: 44 N·m (449 kgf·cm, 33 ft·lbf)

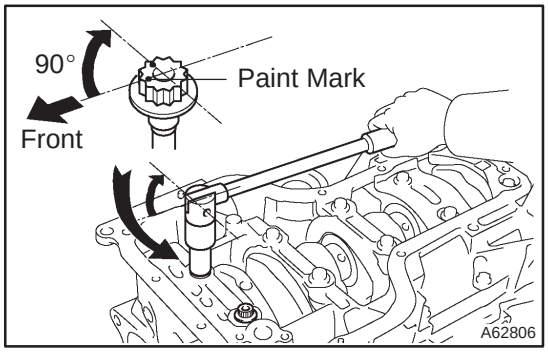

(h) Mark the front of the bearing cap sub–assy bolts with paint.

(i) Retighten the bearing cap sub–assy bolts by 90° as shown in the illustration.

(j) Check that the painted mark is now at a 90° angle to the front.

(k) Tighten 10 other bolts for the bearing cap.

Torque: 19 N·m (194 kgf·cm, 14 ft·lbf)

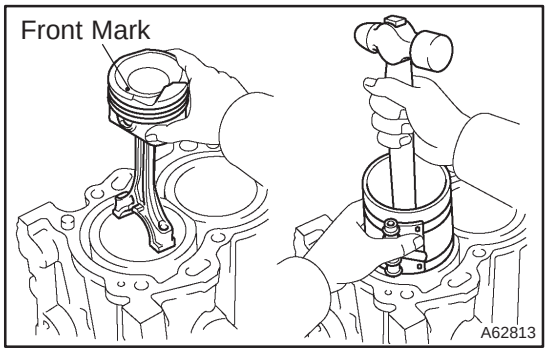

37. INSTALL CONNECTING ROD SUB–ASSY

(a) Apply engine oil to the cylinder walls, the pistons, and the surfaces of connecting rod bearings.
(b) Check the position of the piston ring ends.
(c) Using a piston ring compressor, push the correctly numbered piston and connecting rod assemblies into each cylinder with the front mark of the piston facing forward.
(d) Align the pin dowels of the connecting rod cap with the pins of the connecting rod, and install the connecting rod.

NOTICE:

- **Clean the backside and the surface of the connecting rod cap bearing and let not stick the oils and fats.**
- **Match the numbered connecting rod cap with the same numbered connecting rod.**

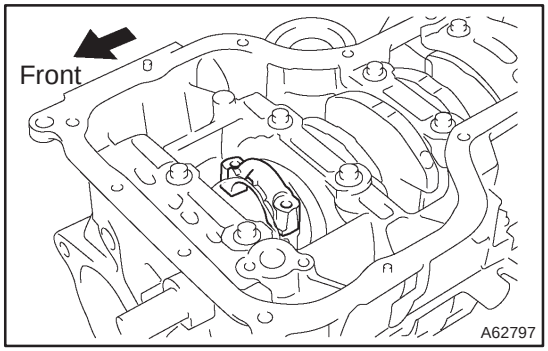

(e) Check that the protrusion of the connecting rod cap is facing in the correct direction.

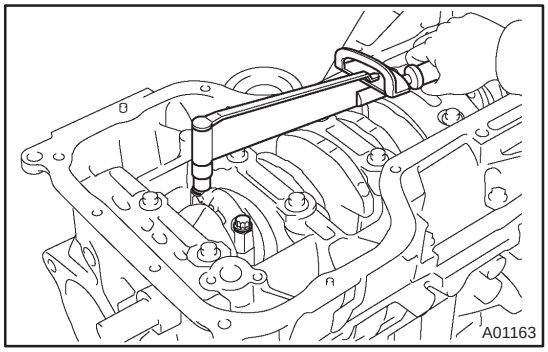

(f) Apply a light coat of engine oil on the threads and under the heads of the connecting rod cap bolts.
(g) Using SST, tighten the bolts in several passes by the specified torque.
SST 09205–16010
Torque: 20 N·m (204 kgf·cm, 15 ft·lbf)

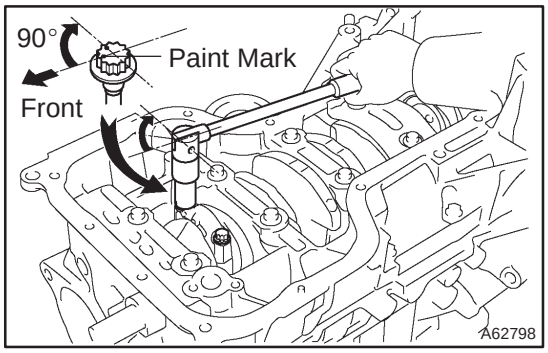

(h) Mark the front of the connecting cap bolts with paint.
(i) Retighten the cap bolts by 90° as shown in the illustration.
(j) Check that the crankshaft turns smoothly.

WATER PUMP ASSY (1ZZ–FE/3ZZ–FE)

160AO–01

INSPECTION

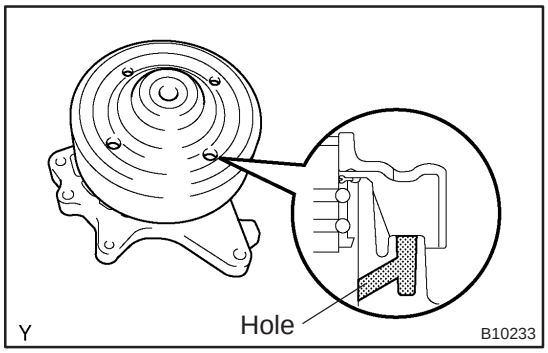

1. INSPECT WATER PUMP ASSY

(a) Visually check the drain hole for coolant leakage.

OIL PUMP ASSY (1ZZ–FE/3ZZ–FE)

1706D–01

COMPONENTS

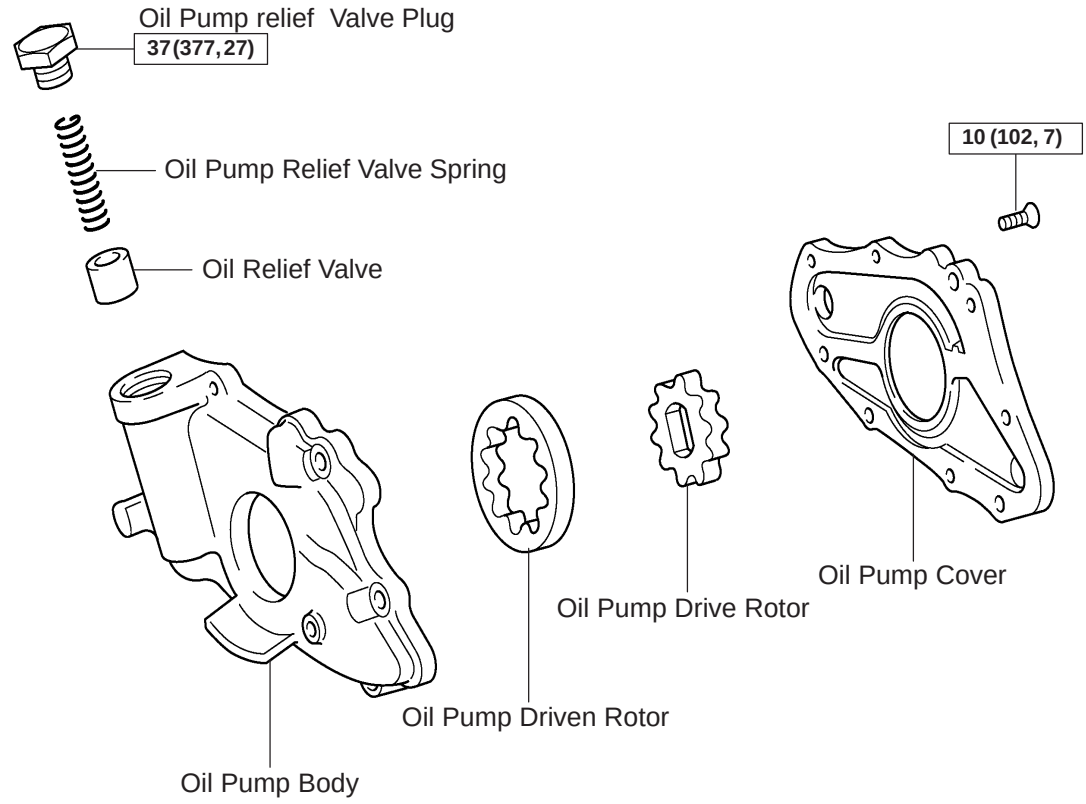

N·m (kgf·cm, ft·lbf) : Specified torque

A62218

OVERHAUL

1. REMOVE OIL PUMP DRIVE AND DRIVEN ROTORS

(a) Remove the 3 screws and oil pump cover.

(b) Remove the oil pump drive and driven rotors from the oil pump.

2. REMOVE VALVE, OIL PUMP RELIEF

(a) Remove the plug, spring and valve from the oil pump.

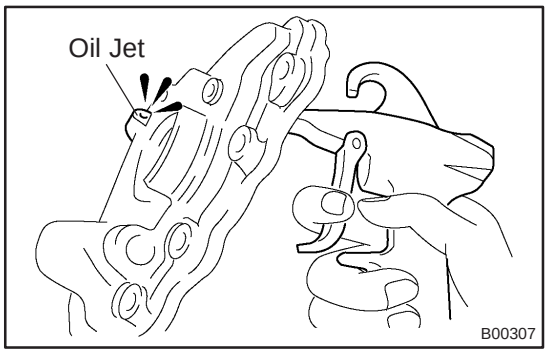

3. INSPECT OIL JET

(a) Check the oil jet for damage or clogging.

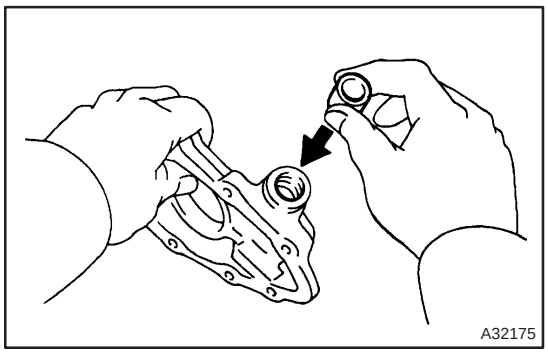

4. INSPECT OIL PUMP RELIEF VALVE

(a) Coat the oil pump relief valve with engine oil, and check that it falls smoothly into the valve hole by its own weight.

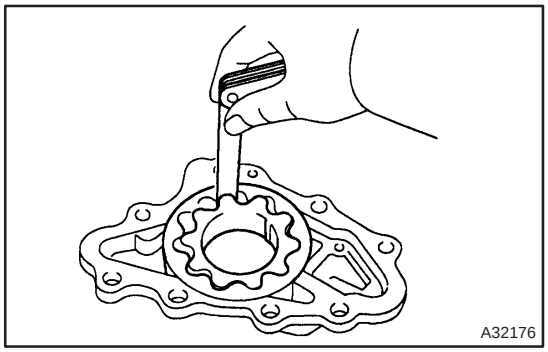

5. INSPECT ROTOR TIP CLEARANCE

(a) Using a feeler gauge, measure the clearance between the drive and driven rotor tips.

Standard tip clearance:
0.040 – 0.160 mm (0.0016 – 0.0063 in.)
Maximum tip clearance: 0.160 mm (0.0063 in.)

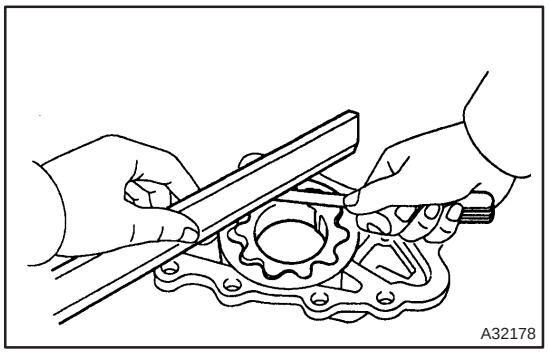

6. INSPECT ROTOR SIDE CLEARANCE

(a) Using a feeler gauge and precision straight edge, measure the clearance between the 2 rotors and precision straight edge.

Standard side clearance:
0.025 – 0.071 mm (0.0010 – 0.0028 in.)
Maximum side clearance: 0.071 mm (0.0028 in.)

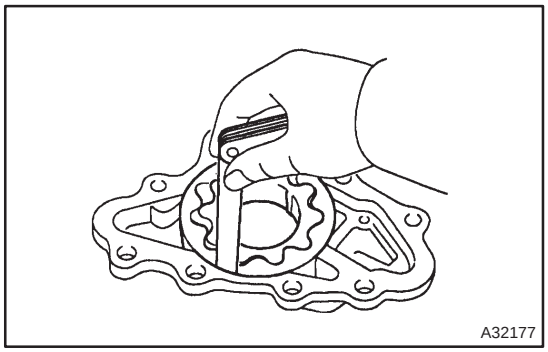

7. INSPECT BODY CLEARANCE

(a) Using a feeler gauge, measure the clearance between the driven rotor and oil pump body.
Standard body clearance:
0.260 – 0.325 mm (0.0102 – 0.0128 in.)
Maximum body clearance: 0.325 mm (0.0128 in.)

8. INSTALL OIL PUMP RELIEF VALVE

(a) Coat the oil pump relief valve with engine oil, and insert oil pump relief valve and spring to the valve hole.
(b) Install the oil pump relief valve plug.
Torque: 37 N·m (377 kgf·cm, 27 ft·lbf)

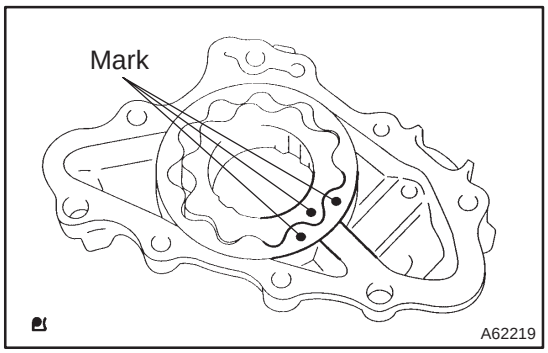

9. INSTALL OIL PUMP DRIVE AND DRIVEN ROTORS

(a) Coat the oil pump drive and driven rotors with engine oil, and place it into the oil pump with marks facing the oil pump cover side.
(b) Install the oil pump cover with the 3 screw.
Torque: 10 N·m (102 kgf·cm, 7 ft·lbf)

STARTER ASSY (1ZZ–FE/3ZZ–FE)

COMPONENTS

190A8–01

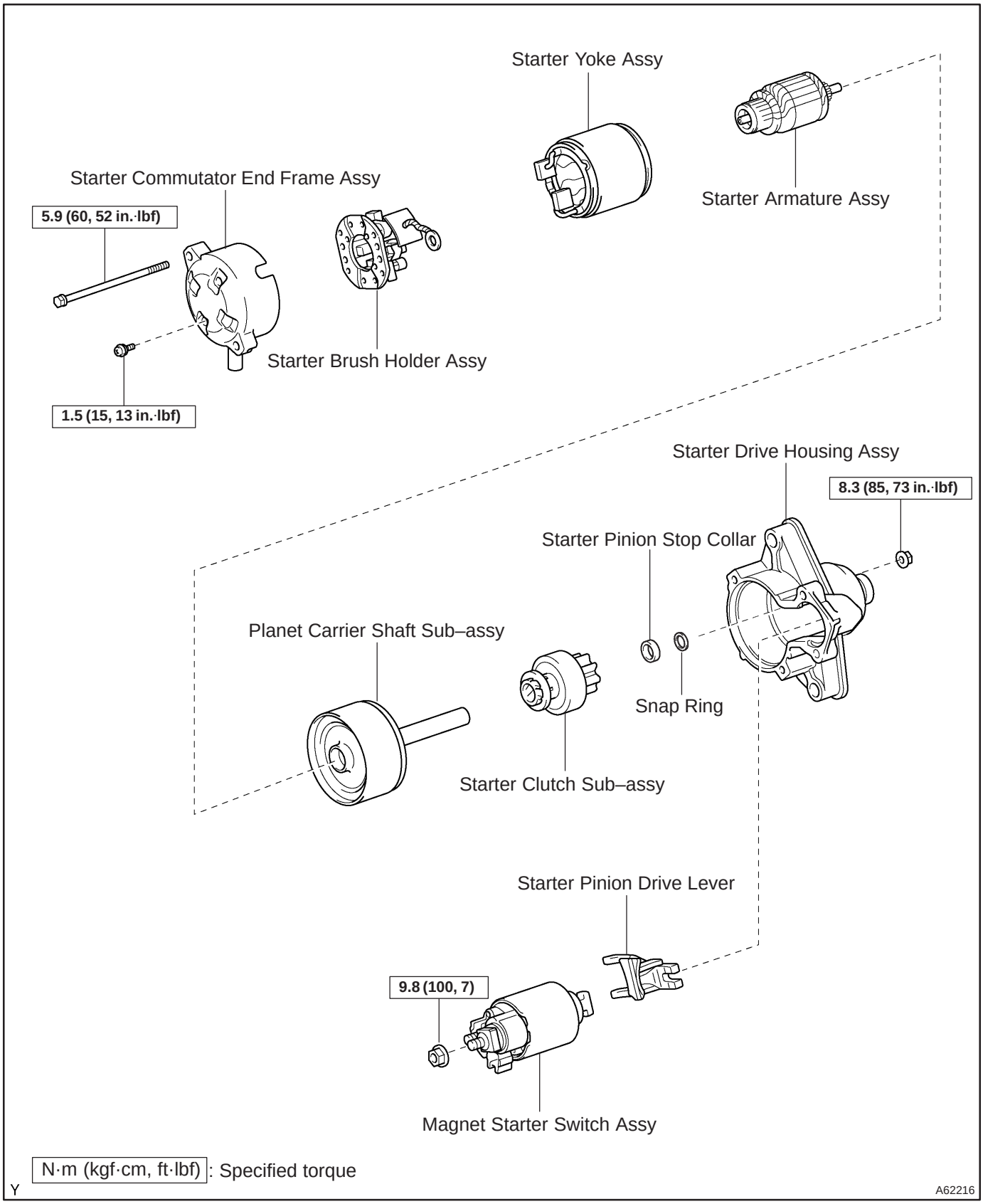

OVERHAUL

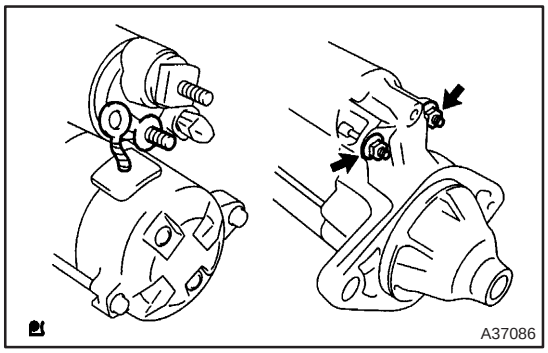

1. REMOVE MAGNET STARTER SWITCH ASSY

(a) Remove the nut, and disconnect the lead wire from the magnetic switch terminal.
(b) Loosen the 2 nuts holding the magnetic switch to the starter housing.
(c) Pull the magnetic switch and while lifting the front part of the magnetic switch, release the plunger hook from the driver lever, then release the magnetic switch.

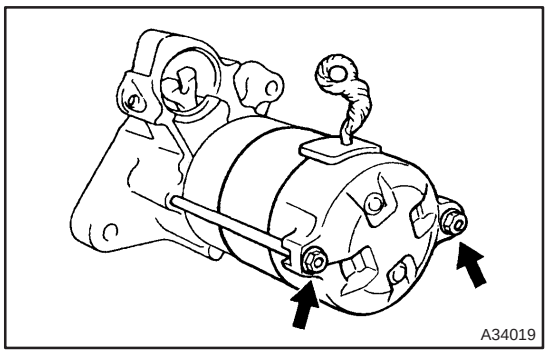

2. REMOVE STARTER YOKE ASSY

(a) Remove the 2 through bolts, and pull out the field frame together with the armature.

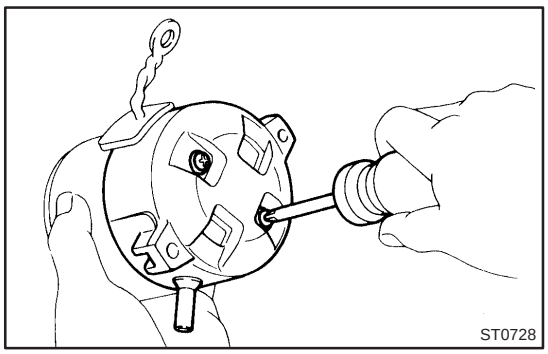

3. REMOVE STARTER BRUSH HOLDER ASSY

(a) Remove the 2 screws and commutator end frame, and hold down the lead wire while releasing the commutator end frame.

NOTICE:
To avoid interference between the brush holder and the dust protector pull the commutator end frame away at an angle.

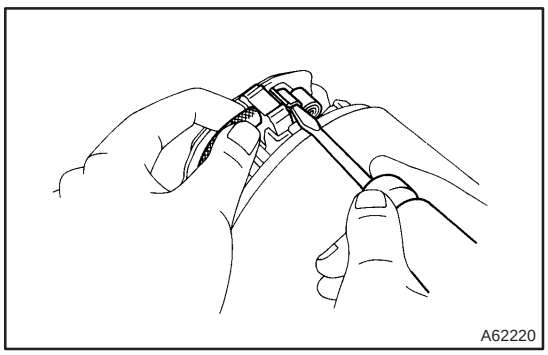

(b) Using a screwdriver, hold the spring back and disconnect the brush holder.
(c) Disconnect the 4 brushes, and remove the starter brush holder.

4. REMOVE STARTER ARMATURE ASSY

(a) Remove the starter armature from the starter yoke.

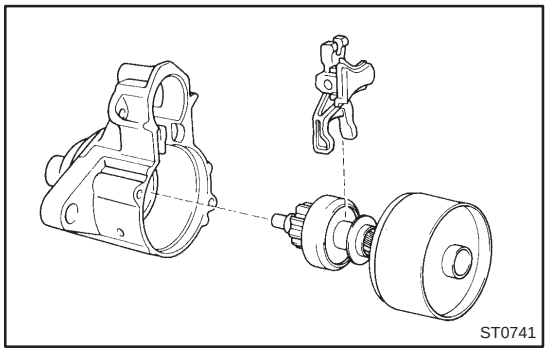

5. REMOVE STARTER CLUTCH SUB–ASSY

(a) Remove drive lever and starter clutch with shock absorber from starter housing.

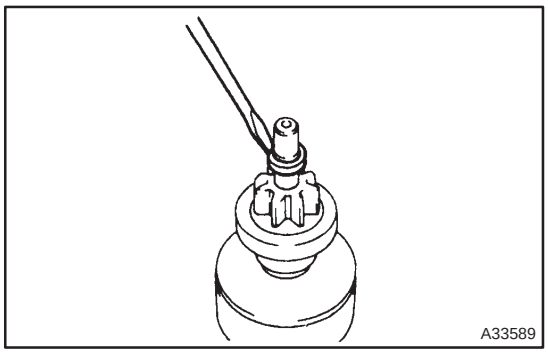

(b) Using a screwdriver, tap in the stop collar towards the starter clutch.

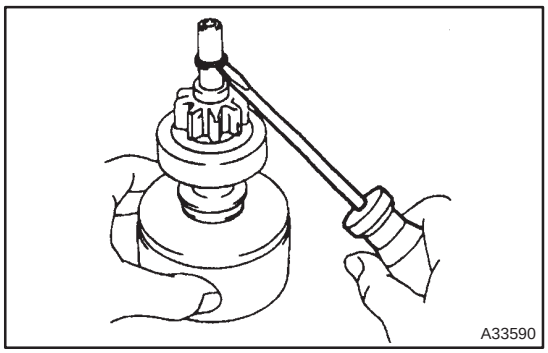

(c) Using a screwdriver, pry off the snap ring.
(d) Remove the stop collar and starter clutch from the planetary shaft.

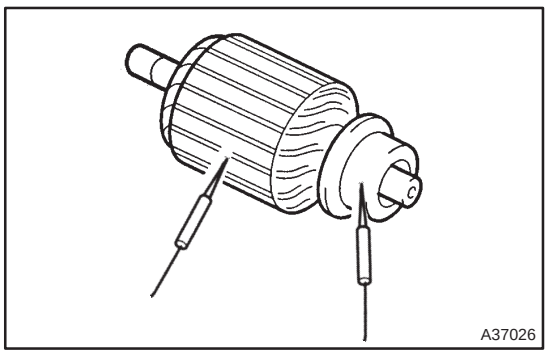

6. INSPECT STARTER ARMATURE ASSY

(a) Using an ohmmeter, check that there is no continuity between the commutator and armature coil core.

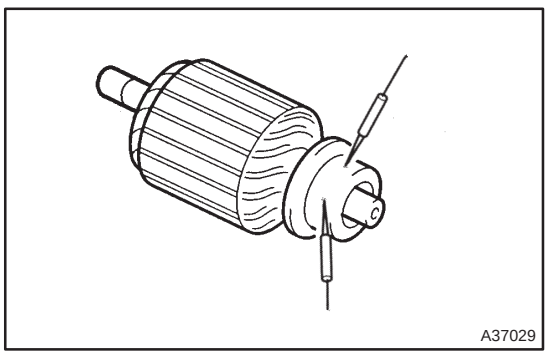

(b) Using an ohmmeter, check that there is continuity between the segments of the commutator.

(c) Check the commutator for dirty and burn on surface.
If the surface is dirty or burnt, correct it with sandpaper (No. 400) or a lathe.

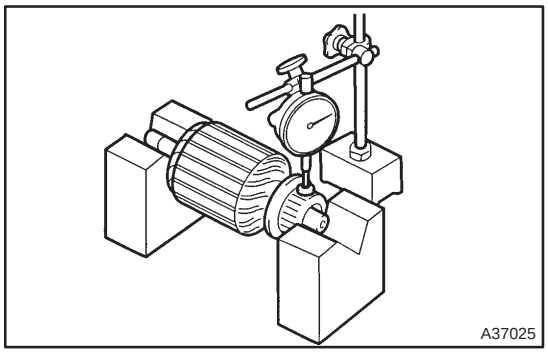

(d) Place the commutator on V – blocks.
(e) Using a dial indicator, measure the circle runout.
Maximum circle runout: 0.05 mm (0.0020 in.)

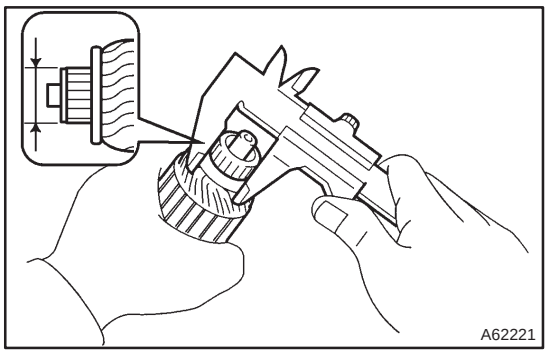

(f) Using a vernier calipers, measure the commutator diameter.
Standard diameter: 28 mm (1.102 in.)
Minimum diameter: 27 mm (1.063 in.)

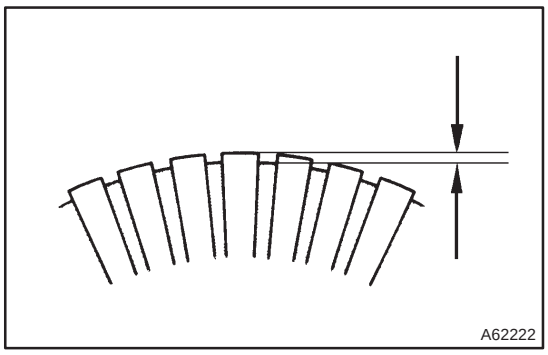

(g) Check that the undercut depth is clean and free of foreign materials. Smooth out the edge.
Standard undercut depth: 0.6 mm (0.024 in.)
Minimum undercut depth: 0.2 mm (0.008 in.)

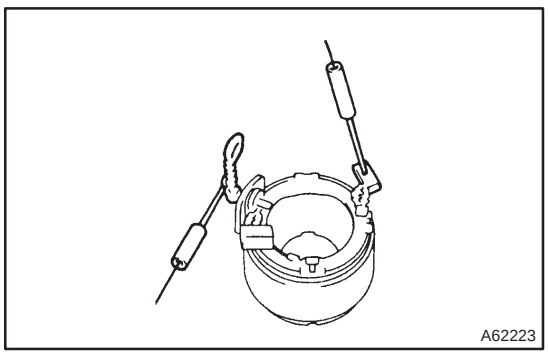

7. INSPECT FIELD COIL

(a) Using an ohmmeter, check that there is continuity between the lead wire and field coil brush lead.

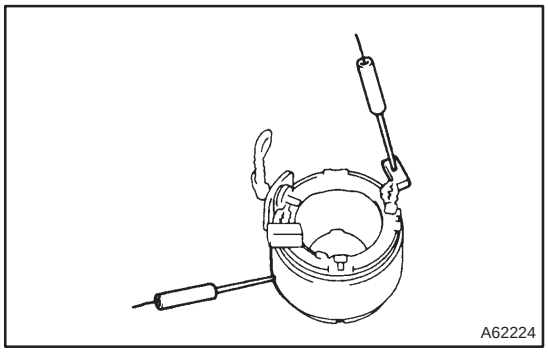

(b) Using an ohmmeter, check that there is no continuity between the field coil end and field frame.

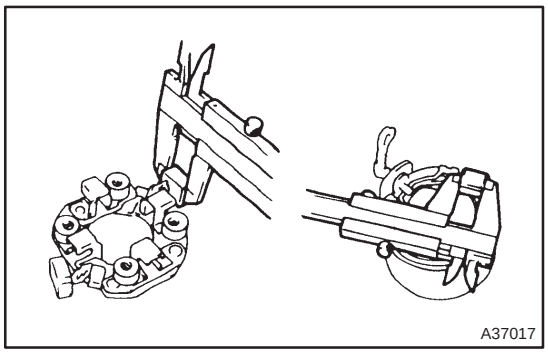

8. INSPECT BRUSH

(a) Using a vernier calipers, measure the brush length.
Standard length: 14 mm (0.551 in.)
Minimum length: 9 mm (0.354 in.)

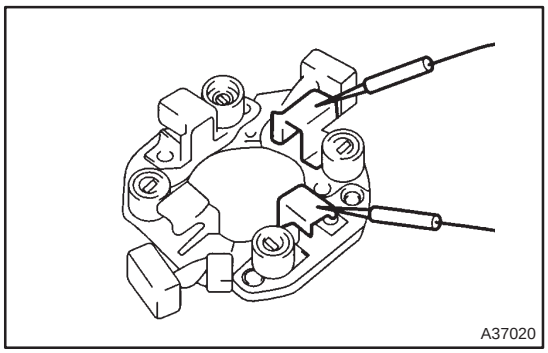

9. INSPECT STARTER BRUSH HOLDER ASSY

(a) Using an ohmmeter, check that there is no continuity between the positive (+) and negative (–) brush holders.

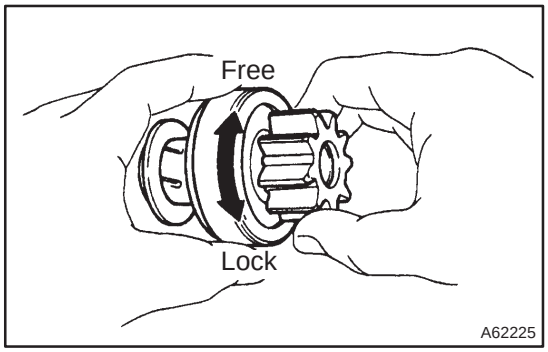

10. INSPECT STARTER CLUTCH SUB–ASSY

(a) Rotate the clutch pinion gear clockwise and check that it turns freely. Try to rotate the clutch pinion gear counterclockwise and check that it locks.

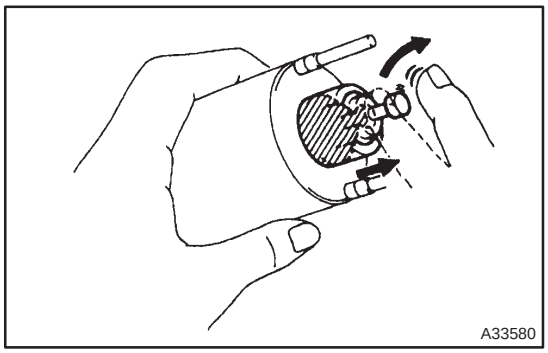

11. INSPECT MAGNET STARTER SWITCH ASSY

(a) Push in the plunger and check that it returns quickly to its original position.

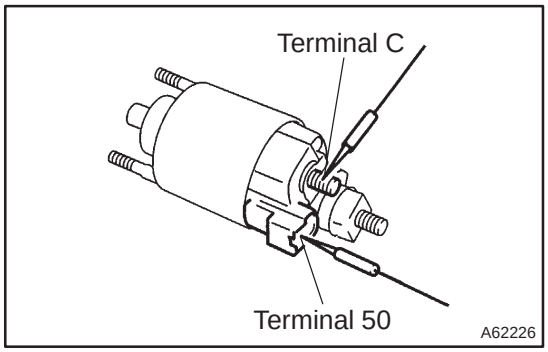

(b) Using an ohmmeter, check that there is continuity between terminals 50 and C.

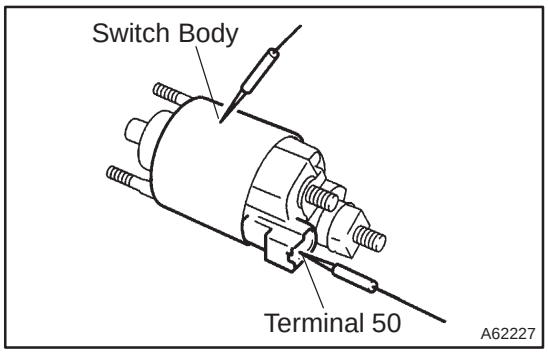

(c) Using an ohmmeter, check that there is continuity between terminals 50 and the switch body.

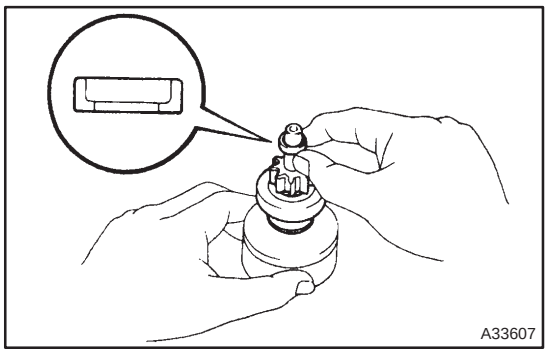

12. INSTALL STARTER CLUTCH SUB–ASSY

(a) Apply grease to the bushing and spline of the starter clutch and stop collar.
(b) Place the starter clutch and stop collar on the planetary shaft.
(c) Apply grease to the snap ring, and install it to the planetary shaft groove.

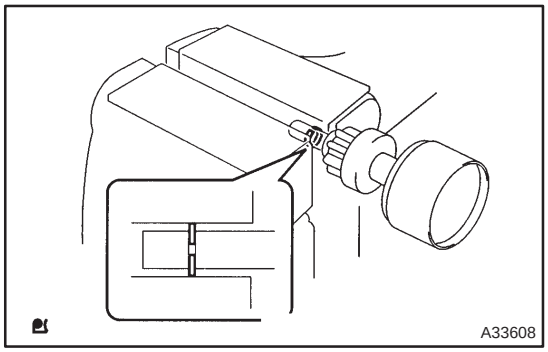

(d) Using a vise, compress the snap ring.

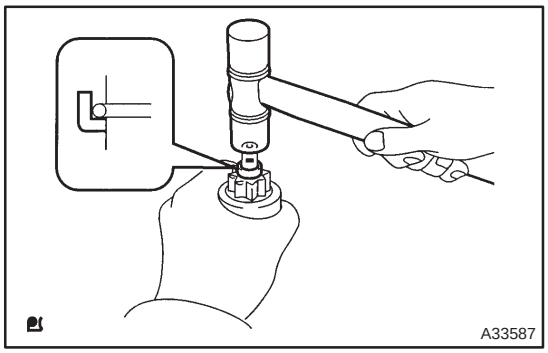

(e) Hold the starter clutch, tap the planetary shaft and install the stop collar onto the snap ring with a plastic hammer.

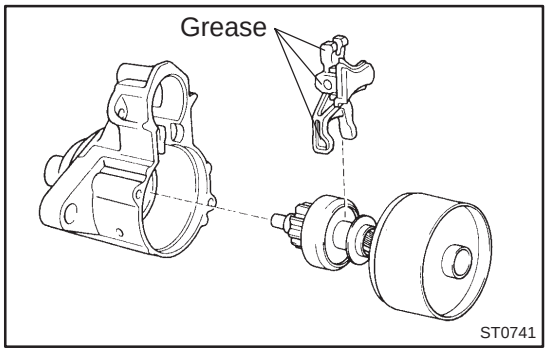

(f) Apply grease to the drive lever touching the starter pivot part of the drive lever.
(g) Install the drive lever to the starter clutch.

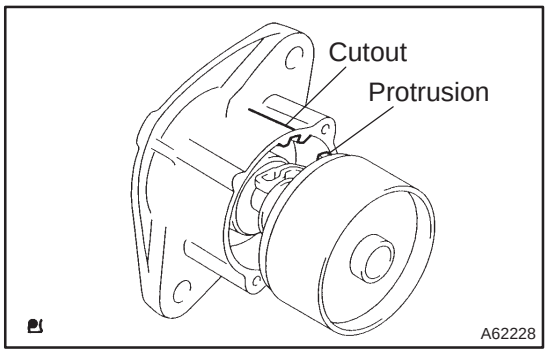

(h) Align the protrusion of the shock absorber with the cutout of the starter housing and install them.

13. INSTALL STARTER ARMATURE ASSY

(a) Install the starter armature to the starter yoke.

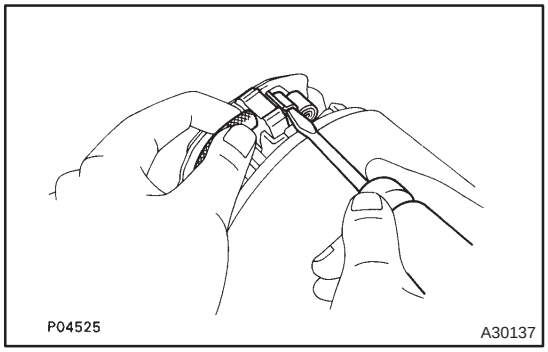

14. INSTALL STARTER BRUSH HOLDER ASSY

(a) Install the brush holder.
(b) Using a screwdriver, hold the brush spring back, and connect the brush into the brush holder.
Connect the 4 brushes.
(c) Apply turbine oil with additives to the bearing of the end frame.

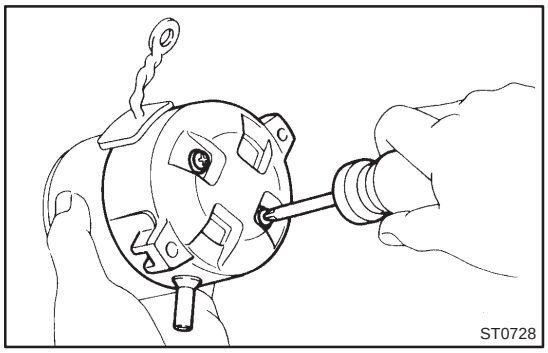

(d) Install the end frame with 2 new screws.
Torque: 1.5 N·m (15 kgf·cm, 13 in.·lbf)

NOTICE:
To avoid interference between the brush holder and the dust protector push the commutator and frame away at an angle.

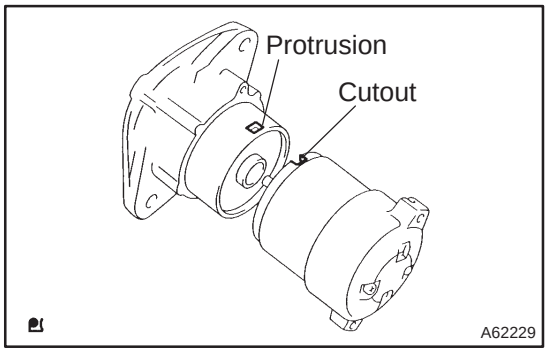

15. INSTALL STARTER YOKE ASSY

(a) Align the cutout of the field frame with the protrusion of the shock absorber.

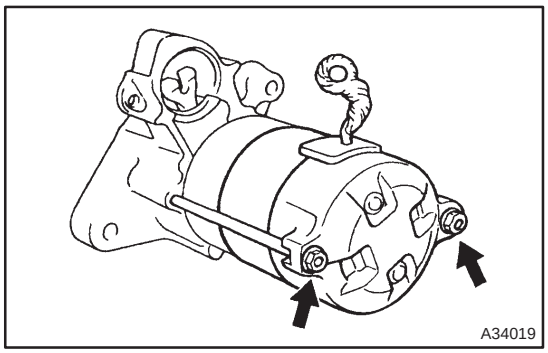

(b) Install the field frame and armature assembly with the 2 through bolts.
Torque: 5.9 N·m (60 kgf·cm, 52 in.·lbf)

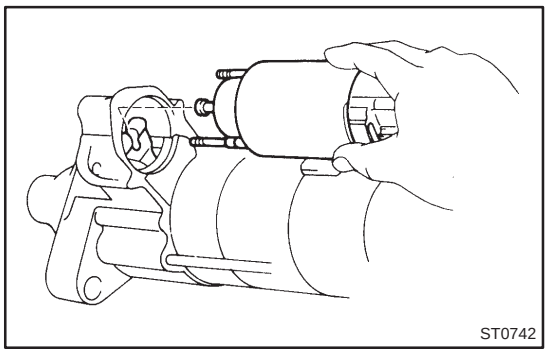

16. INSTALL MAGNET STARTER SWITCH ASSY

(a) Hang the plunger of the magnetic switch to the driver lever from the upper side.

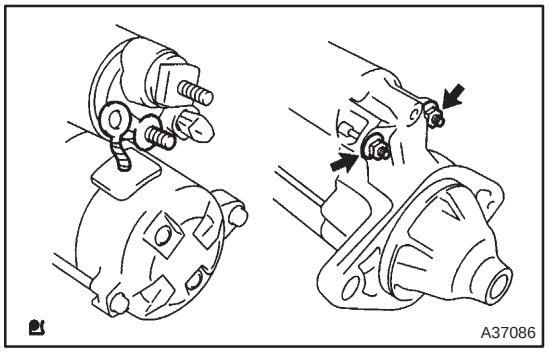

(b) Install the magnetic switch with the 2 nuts.
Torque: 8.3 N·m (85 kgf·cm, 73 in.·lbf)

(c) Connect the lead wire to the terminal with the nut.
Torque: 9.8 N·m (100 kgf·cm, 7 ft·lbf)

GENERATOR ASSY (1ZZ–FE/3ZZ–FE)

COMPONENTS

190A9–01

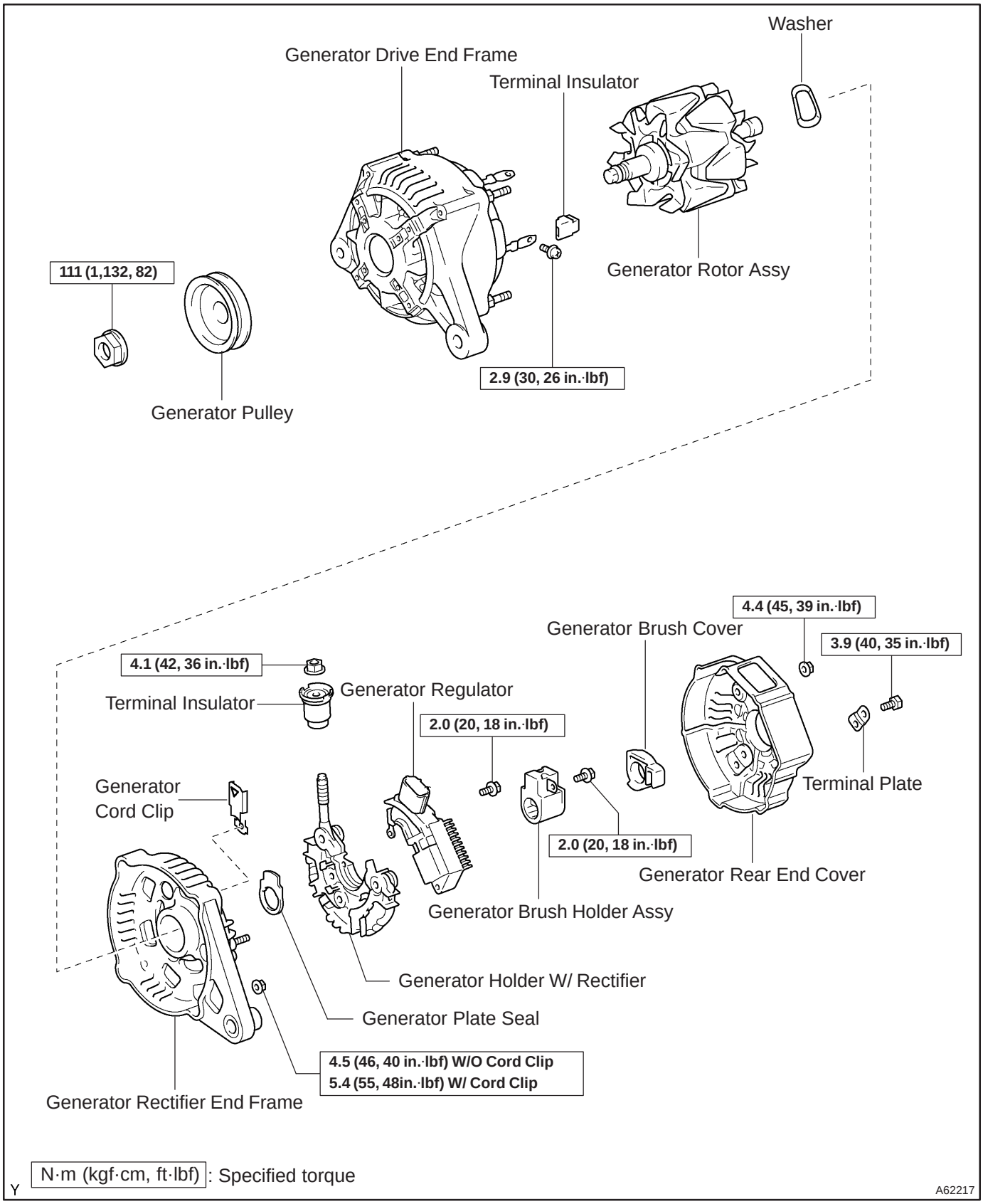

OVERHAUL

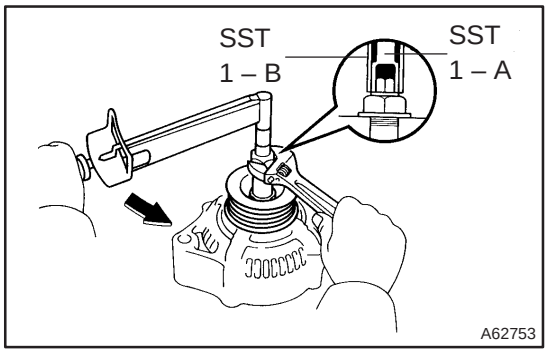

1. REMOVE GENERATOR PULLEY

SST 09820–63010 (09820–06010, 09820–06020)

HINT:

SST1 – A, B	09820–06010
SST2	09820–06020

(a) Hold SST 1 – A with a torque wrench, and tighten SST 1 – B clockwise to the specified torque.
Torque: 39 N·m (398 kgf·cm, 29 ft·lbf)

NOTICE:
Check that SST is secured to the rotor shaft.

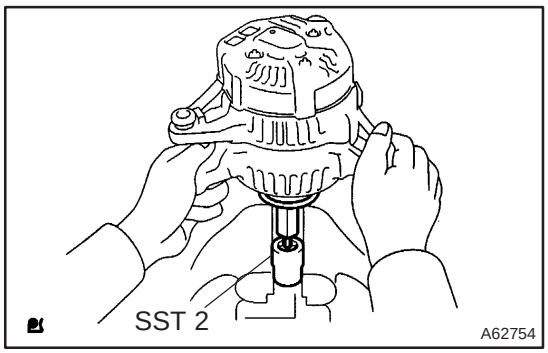

(b) Mount SST 2 in a vise.
(c) Insert SST 1 – A, B into SST 2, and attach the pulley nut to SST 2.

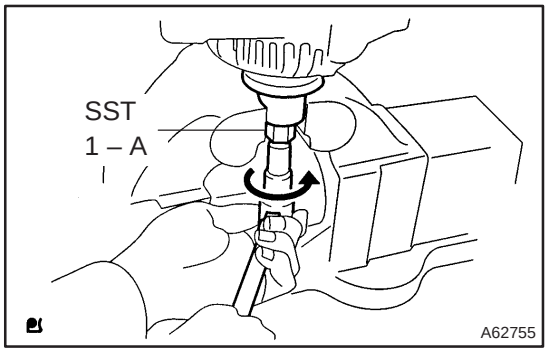

(d) To loosen the pulley nut, turn SST 1 – A in the direction shown in the illustration.

NOTICE:
To prevent damage to the rotor shaft, do not loosen the pulley nut more than one–half of a turn.

(e) Remove the alternator form SST 2.

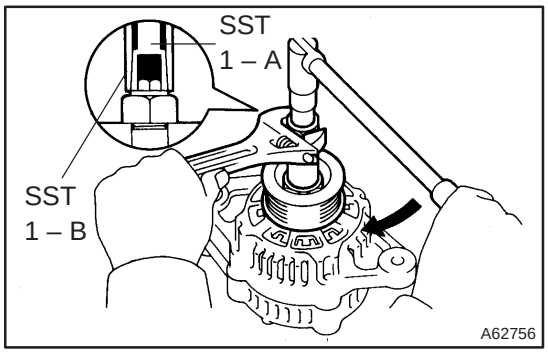

(f) Turn SST 1 – B, and remove SST 1 – A, B.
(g) Remove the pulley nut and pulley.

2. REMOVE GENERATOR BRUSH HOLDER ASSY

(a) Remove the nut and terminal insulator.
(b) Remove the screw, nut and terminal plate.
(c) Remove the 2 nuts and rear end cover.
(d) Remove the brush cover from the brush holder.
(e) Remove the 2 screw and brush holder.

3. REMOVE GENERATOR REGULATOR ASSY

(a) Remove the 3 screws and regulator.

4. REMOVE GENERATOR HOLDER W/RECTIFIER

(a) Remove the 4 screws and holder w/ rectifier.

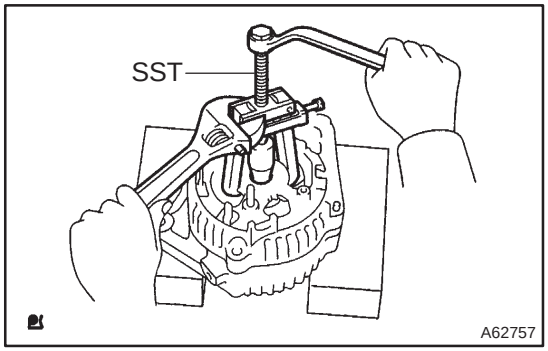

5. REMOVE GENERATOR ROTOR ASSY

(a) Remove the plate seal from the rectifier end frame.
(b) Remove the 4 terminal insulator, 4 nuts and cord clip.
(c) Using SST, remove the rectifier end frame.
SST 09286–46011
(d) Remove the rotor from drive end frame.

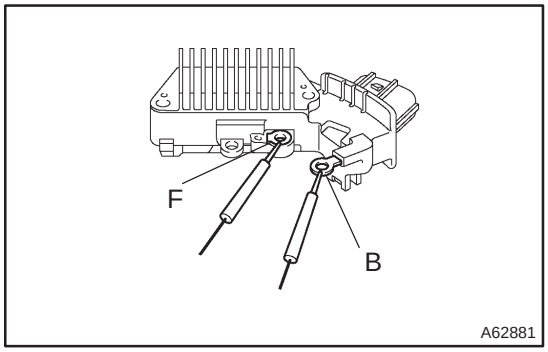

6. INSPECT GENERATOR REGULATOR ASSY

(a) Using an ohmmeter, check the continuity between terminals F and B.
Standard:
When the positive and negative poles between terminals F and B are exchanged, there is continuity in one way but no continuity in another way.

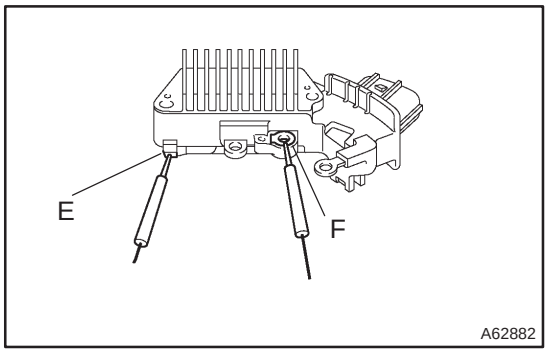

(b) Using an ohmmeter, check the continuity between terminals F and E.
Standard:
When the positive and negative poles between terminals F and E are exchanged, there is continuity in one way but no continuity in another way.

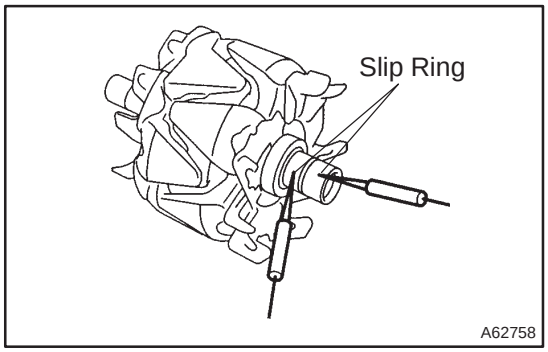

7. INSPECT GENERATOR ROTOR ASSY

(a) Using an ohmmeter, check that there is continuity between the slip rings.
Standard resistance: 2.1 – 2.5 Ω at 20°C (68°F)

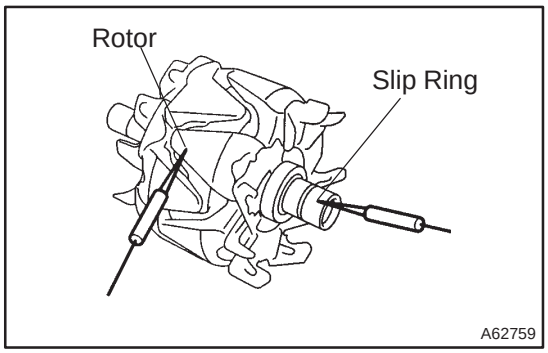

(b) Using an ohmmeter, check that there is no continuity between the slip ring and rotor.

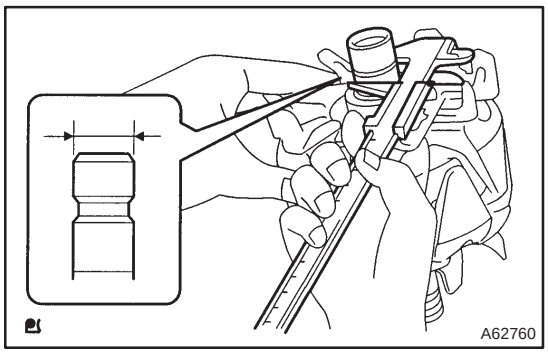

(c) Using a vernier calipers, measure the slip ring diameter.
Standard diameter: 14.2 – 14.4 mm (0.559 – 0.567 in.)
Minimum diameter: 12.8 mm (0.504 in.)

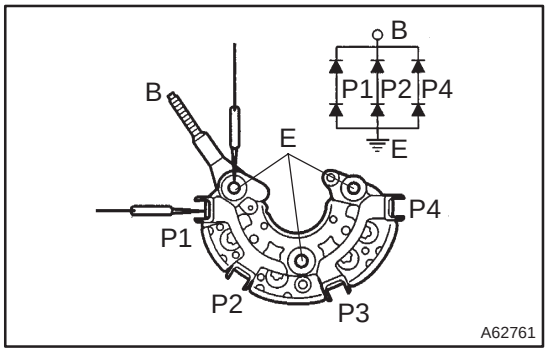

8. INSPECT GENERATOR HOLDER W/RECTIFIER

(a) Using an ohmmeter, connect one tester probe to the B or E terminal and the other to each rectifier terminal.
(b) Reverse the polarity of the tester probes and repeat step (a).
(c) Check that one shows continuity and the other shows no continuity.

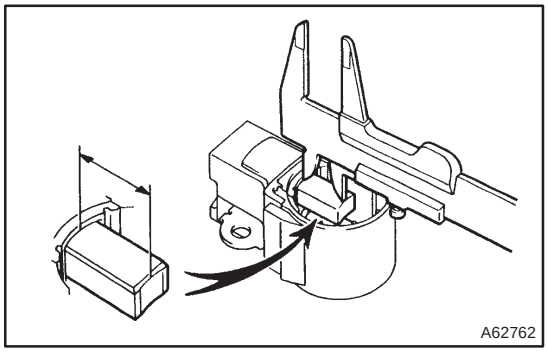

9. INSPECT GENERATOR BRUSH HOLDER ASSY

(a) Using a vernier calipers, measure the exposed brush length.
Standard exposed length:
9.5 – 11.5 mm (0.374 – 0.453 in.)
Minimum exposed length: 1.5 mm (0.059 in.)

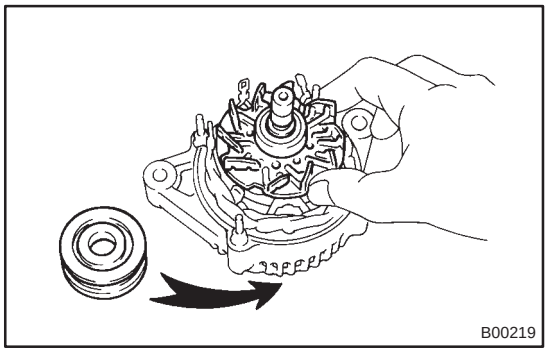

10. INSTALL GENERATOR ROTOR ASSY

(a) Install the rotor to the drive end frame.

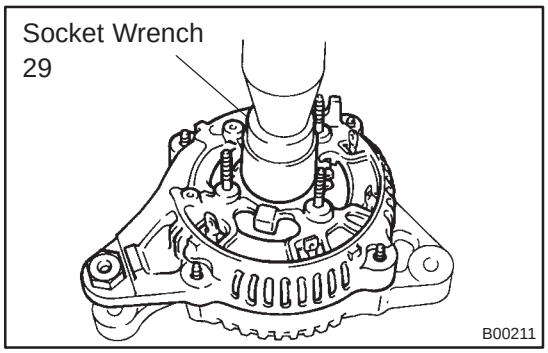

(b) Using a socket wrench 29 and press, slowly press in the rectifier end frame.

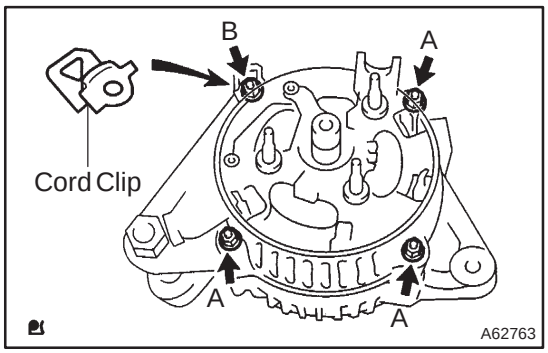

(c) Install the cord clip and 4 nuts.
Torque:
Nut A 4.5 N·m (46 kgf·cm, 40 in.·lbf)
Nut B 5.4 N·m (55 kgf·cm, 48 in.·lbf)

11. INSTALL GENERATOR HOLDER W/RECTIFIER

(a) Install the holder w/ rectifier with 4 screws.
Torque: 2.9 N·m (30 kgf·cm, 26 in.·lbf)

12. INSTALL GENERATOR REGULATOR ASSY

(a) Install the regulator with the 3 screw.
Torque: 2.0 N·m (20 kgf·cm, 18 in.·lbf)

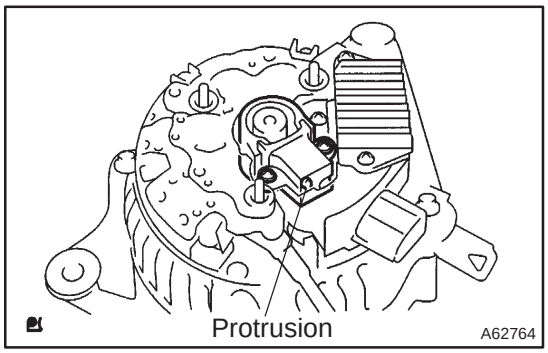

13. INSTALL GENERATOR BRUSH HOLDER ASSY

(a) Install the brush holder with the 2 screws.
Torque: 2.0 N·m (20 kgf·cm, 18 in.·lbf)

NOTICE:
Pay attention to the holder installation direction.

(b) Install the rear end cover with the 2 nuts.
Torque: 4.4 N·m (45 kgf·cm, 39 in.·lbf)

(c) Install the terminal plate with the screw and nut.
Torque:
Bolt 3.9 N·m (40 kgf·cm, 35 in.·lbf)
Nut 4.4 N·m (45 kgf·cm, 39 in.·lbf)

(d) Install the terminal insulator withe the nut.
Torque: 4.1 N·m (42 kgf·cm, 36 in.·lbf)

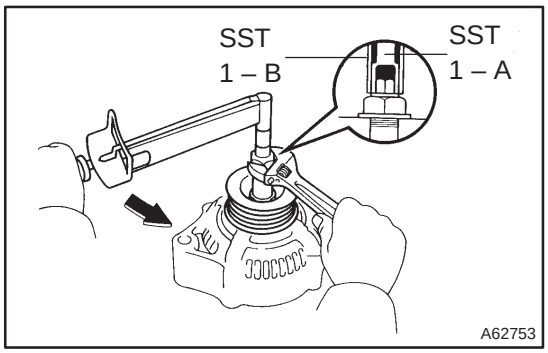

14. INSTALL GENERATOR PULLEY

SST 09820–63010 (09820–06010, 09820–06020)

HINT:

SST1 – A, B	09820–06010
SST2	09820–06020

(a) Install the pulley to the rotor shaft by tightening the pulley nut by hand.

(b) Hold SST 1 – A with a torque wrench, and tighten SST 1 – B clockwise to the specified torque.
Torque: 39 N·m (398 kgf·cm, 29 ft·lbf)

NOTICE:
Check that SST is secured to the pulley shaft.

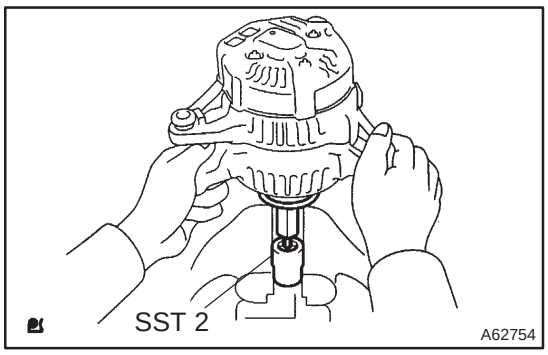

(c) Mount SST 2 in a vise.

(d) Insert SST 1 – A, B into SST 2, and attach the pulley nut to SST 2.

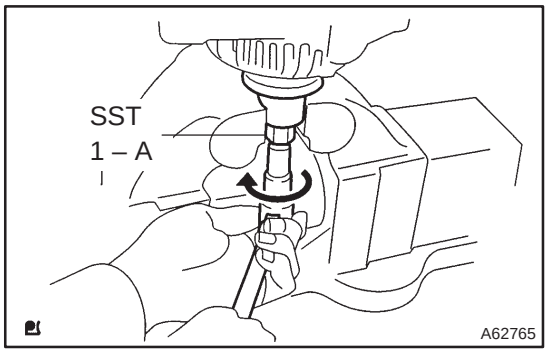

(e) Tighten the pulley nut, turn SST 1 – A in the direction shown in the illustration.
Torque: 111 N·m (1,132 kgf·cm, 82 ft·lbf)

(f) Remove the alternator form SST 2.

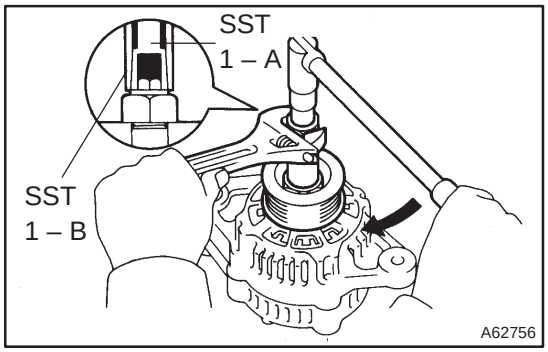

(g) Turn SST 1 – B, and remove SST 1 – A, B.
(h) Turn the pulley, and check that the pulley moves smoothly.

HOW TO USE THIS MANUAL

0106E–06

GENERAL INFORMATION

1. GENERAL DESCRIPTION

(a) This manual is made in accordance with SAE J2008.

(b) Generally repair operations can be separated in the following 3 main processes:
1. Diagnosis
2. Removing and Installing, Replacing, Disassembling, Installing and Checking, Adjusting
3. Final Inspection

(c) This manual explains ”Removing and Installing, Replacing, Disassembling, Installing and Checking, Adjusting”, but ”Final Inspection” is omitted.

(d) The following essential operations are not written in this manual, however these operations must be done in the practical situation.
(1) Operation with a jack or lift
(2) Cleaning of a removed part when necessary
(3) Visual check

2. INDEX

(a) An alphabetical INDEX is provided as a section on the end of the book to guide you to the item to be repaired.

3. PREPARATION

(a) Use of special service tools (SST) and special service materials (SSM) may be required, depending on the repairing condition. Be sure to use SST and SSM when they are required and follow the working procedure properly. A list of SST and SSM is in the Preparation section of this manual.

4. REPAIR PROCEDURES

(a) Component drawing is placed as the section or title when necessary.

(b) Illustrations of the parts catalog are placed as the ”disassembled parts drawing” so that it enables you to understand the fitting condition of the components.

(c) Non–reusable parts, grease applied parts, precoated parts and tightening torque are specified in the components drawing.

Example:

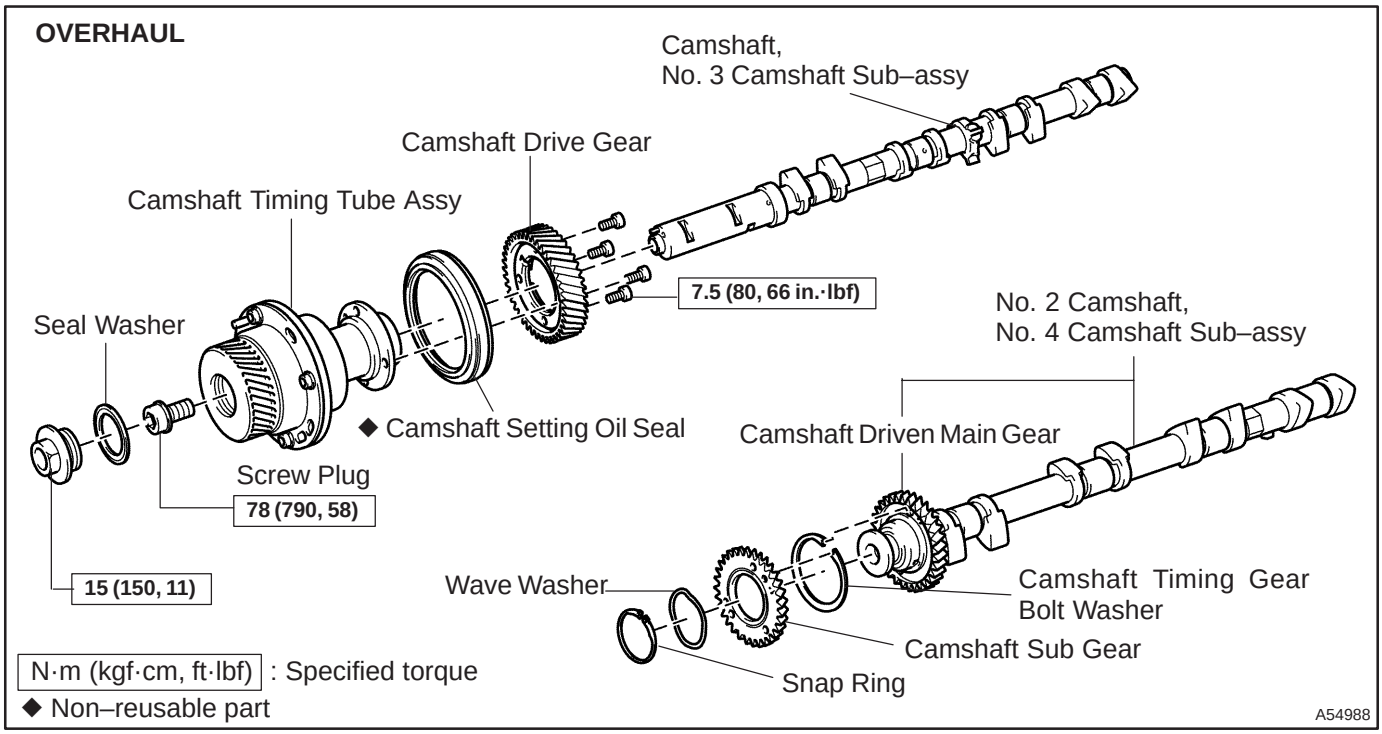

(d) Tightening torque, oil applying position, and non–reusable parts are described as important points in the procedure.

NOTICE:

There are cases where such information can only be indicated by an illustration. In that case, all the information such as torque, oil, etc. are described in the illustration.

(e) Installing procedure of operation items is performed in the reverse order of the removing, and only the important points are described.

(f) Only items with points are described in the procedure, and the operational portion and content are placed using an illustration. In the explanations, details of the operational method, standard value and notice are placed.

(g) There may be a case where the illustrations of similar models are used. In that case the details may be different from the actual vehicle.

(h) The procedures are presented in a step–by–step format:

(1) The illustration shows what to do and where to do it.

(2) The task heading tells what to do.

(3) The detailed text tells how to perform the task and gives other information such as specifications and warnings.

Example:

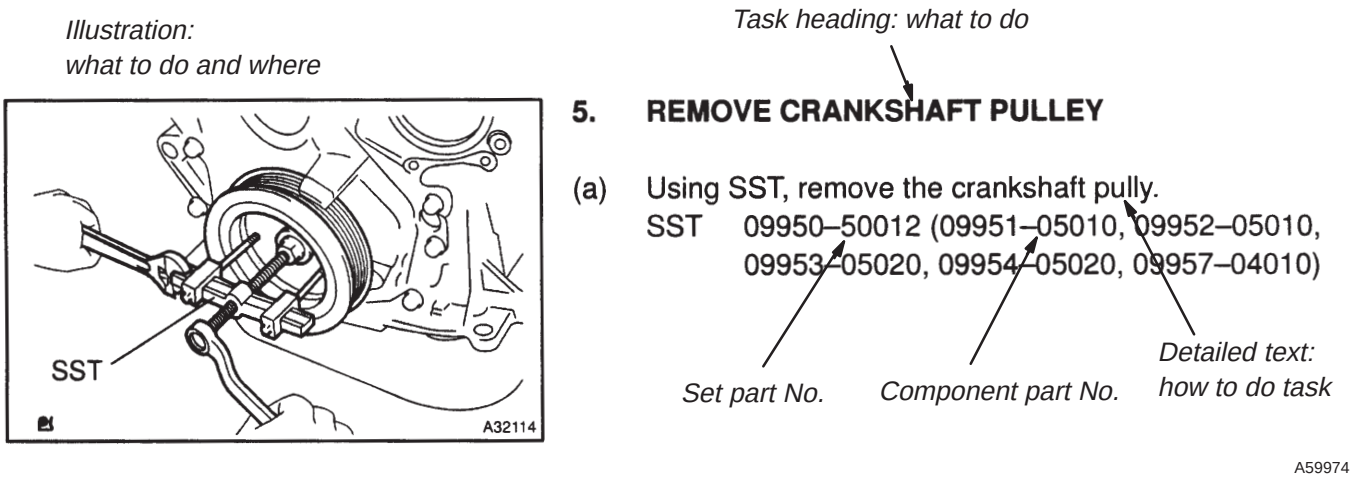

HINT:

This format provides an experienced technician with a FAST TRACK to the necessary information. The task heading can be read at a glance when necessary, and the text below provides detailed information. Important specifications and warnings always stand out in bold type.

5. SERVICE SPECIFICATIONS

(a) Specifications are presented in bold type throughout the manual. You never have to leave the procedure to look up your specifications. The specifications are also found in the Service Specifications section for a quick reference.

6. TERMS DEFINITION

CAUTION	Indicate the possibility of injury to you or other people.
NOTICE	Indicate the possibility of damage to the components being repaired.
HINT	Provide additional information to help you perform the repair efficiently.

7. SI UNIT

(a) The UNITS given in this manual are primarily expressed according to the SI UNIT (International System of Unit), and alternately expressed in the metric system and in the English System.

Example:

Torque: 30 N·m (310 kgf·cm, 22 ft·lbf)

REPAIR INSTRUCTION

010BM–01

PRECAUTION

1. TO PREVENT FROM ENTERING FOREIGN SUBSTANCES.

(a) When foreign substances such as dust, grain of sand or metallic dust enter inside of engine, it often causes functional failure of the engine.

(1) Precaution before disassembly.

- Remove adequately all sand and mud adhere to the outside of engine .

(2) Precaution at reassembly.

- Protect disassembled parts from dust by using vinyl sheet to cover.

2. TO PREVENT SCRATCHES ON THE PARTS.

(a) The existence of scratches on the contact and revolving surfaces often causes oil leak and seisure.

(1) Precautions at disassembly and reassembly.

- When disassemble the contact surface of the parts, use plastic hummer striking lightly. (Do not pry out by screwdriver).
- When fix the parts to the vise, do not directly catch it in the vise. Fix the parts through aluminum bar.

3. TO CLEAN AND WASH THE PARTS.

(a) Each parts needs to be well cleaned, washed, and dried by air, and apply specified oil before reassembly.

(1) Cleaning and washing by alkaline solvent is prohibited:

- Parts made of aluminum and rubber. (ex. cylinder head cover gasket etc.)

(2) Cleaning and washing by flushing oil (ex. kerosene, white gasoline etc.) is prohibited:

- Parts made of rubber. (ex. cylinder head cover gasket etc.)

4. POSITION AND DIRECTION OF EACH PARTS.

(a) Each parts needs to be reassembled as the same position and direction as it disassembled.

(1) Precautions at disassembly and reassembly.

- Follow the directions when the manual designates to mark the matchmark and/or direction mark.
- Disassembled parts needs to be put in order as disassembled, not to change position and/or direction.
- Follow the directions when the manual instructs the position and direction.

5. INSTALL ENGINE ASSEMBLY TO OVERHAUL STAND WHEN OVERHAUL THE ENGINE.

6. PUT THE DISASSEMBLED PARTS IN ORDER AS THEY DISASSEMBLED.

7. APPLY ENGINE OIL TO THE SLIDING AND ROTATING SURFACES.

8. NON–REUSABLE PARTS SUCH AS GASKET AND SEAL NEEDS TO BE CHANGED TO THE NEW PARTS.

9. BASIC REPAIR HINT

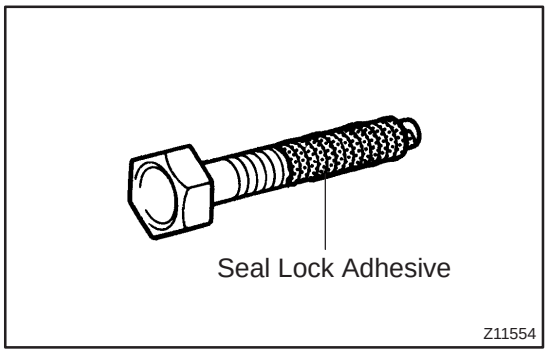

(a) Precoated Parts:

(1) Precoated parts are bolts, nuts, etc. that are coated with a seal lock adhesive at the factory.

(2) If a precoated part is retightened, loosened or caused to move in any way, it must be recoated with the specified adhesive.

(3) When reusing precoated parts, clean off the old adhesive and dry with compressed air. Then apply the specified seal lock adhesive to the bolt, nut or threads.

NOTICE:

Do the torque checking with the lower limit value of the torque tolerance.

(4) Depending on the seal lock agent to apply, there may be a case where it is necessary to leave it for a specified time until it hardens.

(b) Gaskets:
When necessary, use a sealer on gaskets to prevent leaks.

(c) Bolts, Nuts and Screws:
Carefully observe all specifications for bolt tightening torques. Always use a torque wrench.

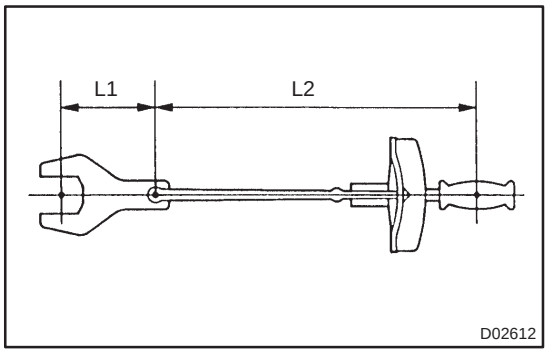

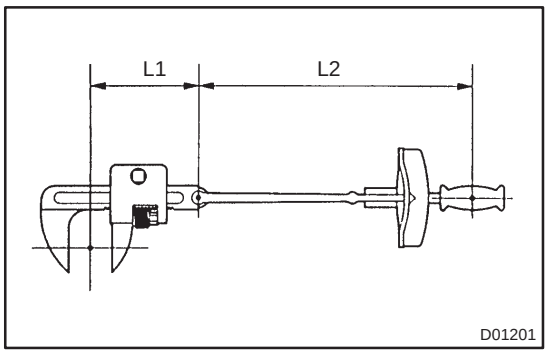

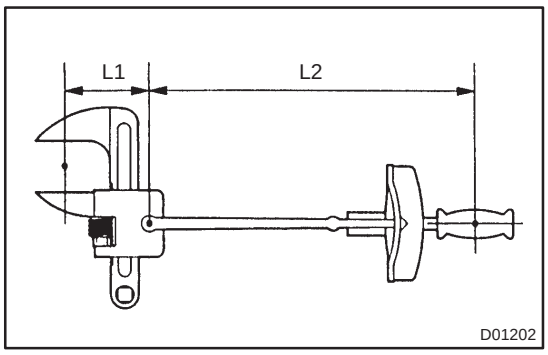

(d) Torque When Using Extension Tool with Torque Wrench:

(1) In case of tightening by extending the entire length of the torque wrench combined with SST or tool, if you tighten until the reading of the torque wrench reached the specified torque value, the actual torque becomes excessive.

(2) In this text, only the specified torque is described. In case of using SST or extension tool, find the reading of the torque wrench by the formula.

(3) Formula T'=T x L2/(L1 + L2)

T'	Reading of torque wrench {N·m (kgf·cm, ft·lbf)}
T	Torque {N·m (kgf·cm, ft·lbf)}
L1	Length of SST or tool (cm)
L2	Length of torque wrench (cm)

10. REMOVAL AND INSTALLATION OF FUEL CONTROL PARTS

(a) Place for Removing and Installing Fuel System Parts:

(1) Place with good air ventilation and without anything flammable such as welder, grinder, drill, electric motor or stove in the surroundings.

(2) Never work in a place like a pit or nearby pit as there is a possibility that vaporized fuel fills those places.

(b) Removing and Installing of Fuel System Parts:

(1) Prepare a fire extinguisher before starting the operation.

(2) For prevention of the static electricity, install a ground on the fuel changer, vehicle and fuel tank, and do not spray much water so as to prevent slipping.

(3) Never use any electric equipment like an electric motor or a working light as they may cause spark or high temperature.
(4) Never use an iron hammer as it may cause spark.
(5) Dispose the shop lag separately from any fuel deposit.

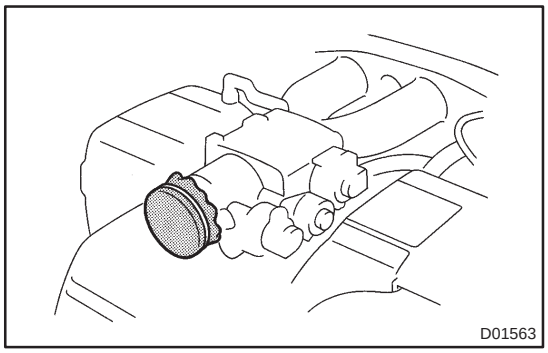
D01563

11. REMOVAL AND INSTALLATION OF ENGINE INTAKE PARTS

(a) If any metal tip is mixed in the inlet pass, that may give a bad effect to the engine and turbo charger.
(b) When removing and installing of the inlet system parts, close the opening of the removed inlet system parts and the engine with a clean shop lag or gum tape.
(c) When installing the inlet system parts, check that there is no mixing of a metal tip.

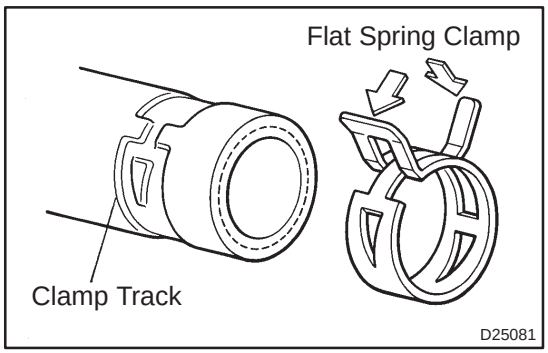

D25081

12. HANDLING OF HOSE CLAMPS

(a) Before removing the hose, check the depth of inserting portion and the clamp position to restore it surely.
(b) Change a deformed or dented into a new one.
(c) In case of reusing the hose, install the clamp on the hose where it has a clamp track.
(d) For a flat spring type clamp, make it adjust by adding force to the arrow mark direction after the installation.

TERMS

ABBREVIATIONS USED IN THIS MANUAL

010B9–02

Abbreviations	Meaning
ABS	Anti–Lock Brake System
AC	Alternating Current
ACC	Accessory
ACIS	Acoustic Control Induction System
ACSD	Automatic Cold Start Device
A.D.D.	Automatic Disconnecting Differential
A/F	Air–Fuel Ratio
AHC	Active Height Control Suspension
ALR	Automatic Locking Retractor
ALT	Alternator
AMP	Amplifier
ANT	Antenna
APPROX.	Approximately
ASSY	Assembly
A/T, ATM	Automatic Transmission (Transaxle)
ATF	Automatic Transmission Fluid
AUTO	Automatic
AUX	Auxiliary
AVG	Average
AVS	Adaptive Variable Suspension
B+	Battery Voltage
BA	Brake Assist
BACS	Boost Altitude Compensation System
BAT	Battery
BDC	Bottom Dead Center
B/L	Bi–Level
B/S	Bore–Stroke Ratio
BTDC	Before Top Dead Center
BVSV	Bimetallic Vacuum Switching Valve
Calif.	California
CB	Circuit Breaker
CCo	Catalytic Converter For Oxidation
CD	Compact Disc
CF	Cornering Force
CG	Center Of Gravity
CH	Channel
COMB.	Combination
CPE	Coupe
CPS	Combustion Pressure Sensor
CPU	Central Processing Unit
CRS	Child Restraint System
CTR	Center
C/V	Check Valve
CV	Control Valve
CW	Curb Weight
DC	Direct Current
DEF	Defogger
DFL	Deflector

Abbreviations	Meaning
DIFF.	Differential
DIFF. LOCK	Differential Lock
D/INJ	Direct Injection
DLC	Data Link Connector
DLI	Distributorless Ignition
DOHC	Double Overhead Cam
DP	Dash Pot
DS	Dead Soak
DSP	Digital Signal Processor
DTC	Diagnostic Trouble Code
DVD	Digital Versatible Disc
EBD	Electric Brake force Distribution
ECAM	Engine Control And Measurement System
ECD	Electronic Controlled Diesel
ECDY	Eddy Current Dynamometer
ECU	Electronic Control Unit
ED	Electro–Deposited Coating
EDU	Electronic Driving Unit
EDIC	Electric Diesel Injection Control
EFI	Electronic Fuel Injection
E/G	Engine
EGR	Exhaust Gas Recirculation
EGR–VM	EGR–Vacuum Modulator
ELR	Emergency Locking Retractor
EMPS	Electric Motor Power Steering
ENG	Engine
ESA	Electronic Spark Advance
ETCS–i	Electronic Throttle Control System–intelligent
EVAP	Evaporative Emission Control
EVP	Evaporator
E–VRV	Electric Vacuum Regulating Valve
EX, EXH	Exhaust
FE	Fuel Economy
FF	Front–Engine Front–Wheel–Drive
F/G	Fuel Gauge
FIPG	Formed In Place Gasket
FL	Fusible Link
F/P	Fuel Pump
FPU	Fuel Pressure Up
Fr	Front
FR	Front–Engine Rear–Wheel–Drive
F/W	Flywheel
FW/D	Flywheel Damper
FWD	Front–Wheel–Drive
GAS	Gasoline
GND	Ground
GPS	Global Positioning System
HAC	High Altitude Compensator
H/B	Hatchback
H–FUSE	High Current Fuse
HI	High

Abbreviations	Meaning
HID	High Intensity Discharge (Head Lamp)
HPU	Hydrraulic Power Unit
HSG	Housing
HT	Hard Top
HWS	Heated Windshield System
IAC	Idel Air Control
IC	Integrated Circuit
IDI	Indirect Diesel Injection
IFS	Independent Front Suspension
IG	Ignition
IIA	Integrated Ignition Assembly
IN	Intake (Manifold, Valve)
INT	Intermittent
I/P	Instrument Panel
IRS	Independent Rear Suspension
ISC	Idle Speed Control
J/B	Junction Block
J/C	Junction Connector
KD	Kick–Down
LAN	Local Area Network
LB	Liftback
LCD	Liquid Crystal Display
LED	Light Emitting Diode
LH	Left–Hand
LHD	Left–Hand Drive
L/H/W	Length, Height, Width
LLC	Long–Life Coolant
LNG	Liquified Natural Gas
LO	Low
LPG	Liquified Petroleum Gas
LSD	Limited Slip Differential
LSP & PV	Load Sensing Proportioning And Bypass Valve
LSPV	Load Sensing Proportioning Valve
MAP	Manifold Absolute Pressure
MAX.	Maximum
M–FUSE	Mediam Current Fuse
MIC	Microphone
MIL	Malfunction Indicator Lamp
MIN.	Minimum
MG1	Motor Generator No.1
MG2	Motor Generator No.2
MP	Multipurpose
MPI	Multipoint Electronic Injection
MPX	Multiplex Communication System
M/T, MTM	Manual Transmission
MT	Mount
MTG	Mounting
N	Neutral
NA	Natural Aspiration
No.	Number
O/D	Overdrive

Abbreviations	Meaning
OEM	Original Equipment Manufacturing
OHC	Overhead Camshaft
OHV	Overhead Valve
OPT	Option
ORVR	On–board Refilling Vapor Recovery
O/S	Oversize
P & BV	Proportioning And Bypass Valve
PCS	Power Control System
PCV	Positive Crankcase Ventilation
PKB	Parking Brake
PPS	Progressive Power Steering
PS	Power Steering
PTO	Power Take–Off
P/W	Power Window
R & P	Rack And Pinion
RAM	Random Access Memory
R/B	Relay Block
RBS	Recirculating Ball Type Steering
R/F	Reinforcement
RFS	Rigid Front Suspension
RH	Right–Hand
RHD	Right–Hand Drive
RLY	Relay
ROM	Read Only Memory
Rr	Rear
RR	Rear–EngineRear–Wheel–Drive
RRS	Rigid Front Suspension
RWD	Rear–Wheel–Drive
SDN	Sedan
SEN	Sensor
SICS	Starting Injection Control System
SOC	State Of Charge
SOHC	Single Overhead Camshaft
SPEC	Specification
SPI	Single Point Injection
SRS	Supplemental Restraint System
SSM	Special Service Materials
SST	Special Service Tools
STD	Standard
STJ	Cold–Start Fuel Injection
SW	Switch
SYS	System
T/A	Transaxle
TACH	Tachometer
TBI	Throttle Body Electronic Fuel Injection
TC	Turbocharger
TCCS	TOYOTA Computer–Controlled System
TCV	Timing Control Valve
TDC	Top Dead Center
TEMP.	Temperature
TEMS	TOYOTA Electronic Modulated Suspension

Abbreviations	Meaning
TFT	Toyota Free–Tronic
TIS	Total Information System For Vehicle Development
T/M	Transmission
TMC	TOYOTA Motor Corporation
TMMK	TOYOTA Motor Manufacturing Kentucky, Inc.
TRC	Traction Control System
TURBO	Turbocharge
TWC	Three–Way Catalyst
U/D	Underdrive
U/S	Undersize
VCV	Vacuum Control Valve
VENT	Ventilator
VIN	Vehicle Identification Number
VPS	Variable Power Steering
VSC	Vehicle Stability Control
VSV	Vacuum Switching Valve
VTV	Vacuum Transmitting Valve
VVT–i	Variable Valve Timing–intelligent
w/	With
WGN	Wagon
W/H	Wire Harness
w/o	Without
WU–TWC	Warm Up Three–way Catalytic Converter
WU–OC	Warm Up Oxidation Catalytic Converter
1st	First
2nd	Second
2WD	Two Wheel Drive Vehicle (4 x 2)
3rd	Third
4th	Fourth
4WD	Four Wheel Drive Vehicle (4 x 4)
4WS	Four Wheel Steering System
5th	Fifth

010BA–03

GLOSSARY OF SAE AND TOYOTA TERMS

This glossary lists all SAE–J1930 terms and abbreviations used in this manual in compliance with SAE recommendations, as well as their TOYOTA equivalents.

SAE ABBREVIATIONS	SAE TERMS	TOYOTA TERMS ( )—ABBREVIATIONS
A/C	Air Conditioning	Air Conditioner
ACL	Air Cleaner	Air Cleaner, A/CL
AIR	Secondary Air Injection	Air Injection (AI)
AP	Accelerator Pedal	–
B+	Battery Positive Voltage	+B, Battery Voltage
BARO	Barometric Pressure	HAC
CAC	Charge Air Cooler	Intercooler
CARB	Carburetor	Carburetor
CFI	Continuous Fuel Injection	–
CKP	Crankshaft Position	Crank Angle
CL	Closed Loop	Closed Loop
CMP	Camshaft Position	Cam Angle
CPP	Clutch Pedal Position	–
CTOX	Continuous Trap Oxidizer	–
CTP	Closed Throttle Position	LL ON, Idle ON
DFI	Direct Fuel Injection (Diesel)	Direct Injection (DI)
DI	Distributor Ignition	–
DLC1 DLC2 DLC3	Data Link Connector 1 Data Link Connector 2 Data Link Connector 3	1: Check Connector 2: Total Diagnosis Comunication Link (TDCL) 3: OBD II Diagnostic Connector
DTC	Diagnostic Trouble Code	Diagnostic Code
DTM	Diagnostic Test Mode	–
ECL	Engine Control Level	–
ECM	Engine Control Module	Engine ECU (Electronic Control Unit)
ECT	Engine Coolant Temperature	Coolant Temperature, Water Temperature (THW)
EEPROM	Electrically Erasable Programmable Read Only Memory	Electrically Erasable Programmable Read Only Memory (EEPROM), Erasable Programmable Read Only Memory (EPROM)
EFE	Early Fuel Evaporation	Cold Mixture Heater (CMH), Heat Control Valve (HCV)
EGR	Exhaust Gas Recirculation	Exhaust Gas Recirculation (EGR)
EI	Electronic Ignition	TOYOTA Distributorless Ignition (TDI)
EM	Engine Modification	Engine Modification (EM)
EPROM	Erasable Programmable Read Only Memory	Programmable Read Only Memory (PROM)
EVAP	Evaporative Emission	Evaporative Emission Control (EVAP)
FC	Fan Control	–
FEEPROM	Flash Electrically Erasable Programmable Read Only Memory	–
FEPROM	Flash Erasable Programmable Read Only Memory	–
FF	Flexible Fuel	–
FP	Fuel Pump	Fuel Pump
GEN	Generator	Alternator
GND	Ground	Ground (GND)

HO2S	Heated Oxygen Sensor	Heated Oxygen Sensor (HO_2S)
IAC	Idle Air Control	Idle Speed Control (ISC)
IAT	Intake Air Temperature	Intake or Inlet Air Temperature
ICM	Ignition Control Module	–
IFI	Indirect Fuel Injection	Indirect Injection (IDL)
IFS	Inertia Fuel–Shutoff	–
ISC	Idle Speed Control	–
KS	Knock Sensor	Knock Sensor
MAF	Mass Air Flow	Air Flow Meter
MAP	Manifold Absolute Pressure	Manifold Pressure Intake Vacuum
MC	Mixture Control	Electric Bleed Air Control Valve (EBCV) Mixture Control Valve (MCV) Electric Air Control Valve (EACV)
MDP	Manifold Differential Pressure	–
MFI	Multiport Fuel Injection	Electronic Fuel Injection (EFI)
MIL	Malfunction Indicator Lamp	Check Engine Lamp
MST	Manifold Surface Temperature	–
MVZ	Manifold Vacuum Zone	–
NVRAM	Non–Volatile Random Access Memory	–
O2S	Oxygen Sensor	Oxygen Sensor, O_2 Sensor (O_2S)
OBD	On–Board Diagnostic	On–Board Diagnostic System (OBD)
OC	Oxidation Catalytic Converter	Oxidation Catalyst Convert (OC), CCo
OP	Open Loop	Open Loop
PAIR	Pulsed Secondary Air Injection	Air Suction (AS)
PCM	Powertrain Control Module	–
PNP	Park/Neutral Position	–
PROM	Programmable Read Only Memory	–
PSP	Power Steering Pressure	–
PTOX	Periodic Trap Oxidizer	Diesel Particulate Filter (DPF) Diesel Particulate Trap (DPT)
RAM	Random Access Memory	Random Access Memory (RAM)
RM	Relay Module	–
ROM	Read Only Memory	Read Only Memory (ROM)
RPM	Engine Speed	Engine Speed
SC	Supercharger	Supercharger
SCB	Supercharger Bypass	E–ABV
SFI	Sequential Multiport Fuel Injection	Electronic Fuel Injection (EFI), Sequential Injection
SPL	Smoke Puff Limiter	–
SRI	Service Reminder Indicator	–
SRT	System Readiness Test	–
ST	Scan Tool	–
TB	Throttle Body	Throttle Body
TBI	Throttle Body Fuel Injection	Single Point Injection Central Fuel Injection (Ci)
TC	Turbocharger	Turbocharger
TCC	Torque Converter Clutch	Torque Converter

TCM	Transmission Control Module	Transmission ECU, ECT ECU
TP	Throttle Position	Throttle Position
TR	Transmission Range	–
TVV	Thermal Vacuum Valve	Bimetallic Vacuum Switching Valve (BVSV) Thermostatic Vacuum Switching Valve (TVSV)
TWC	Three–Way Catalytic Converter	Three–Way Catalytic (TWC) Manifold Converter CC_{RO}
TWC+OC	Three–Way + Oxidation Catalytic Converter	CC_R + CCo
VAF	Volume Air Flow	Air Flow Meter
VR	Voltage Regulator	Voltage Regulator
VSS	Vehicle Speed Sensor	Vehicle Speed Sensor
WOT	Wide Open Throttle	Full Throttle
WU–OC	Warm Up Oxidation Catalytic Converter	–
WU–TWC	Warm Up Three–Way Catalytic Converter	–
3GR	Third Gear	–
4GR	Fourth Gear	–

INTAKE

PREPARATION

0214R–01

SST

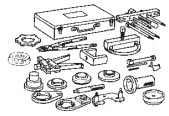	09350–32014	TOYOTA Automatic Transmission Tool Set	TURBOCHARGER ASSEMBLY(1CD–FTV)
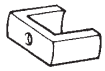	(09351–32070)	No.2 Piston Spring Compressor	TURBOCHARGER ASSEMBLY(1CD–FTV)
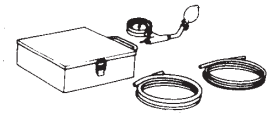	09992–00242	Turbocharger Pressure Gauge	TURBOCHARGER ASSEMBLY(1CD–FTV)
	09992–00600	Crank Type Spindle	TURBOCHARGER ASSEMBLY(1CD–FTV)

Recomended Tools

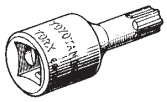	09042–00010	Torx Socket T30	TURBOCHARGER ASSEMBLY(1CD–FTV)

SSM

	08826–00080	Seal Packing Black or equivalent (FIPG)	TURBOCHARGER ASSEMBLY(1CD–FTV)

Equipment

Dial indicator	
Torque wrench	
Protractor	
Steel square	

ENGINE MECHANICAL

0214S–01

PREPARATION

SST

	09032–00100	Oil Pan Seal Cutter	PARTIAL ENGINE ASSY(1CD–FTV)
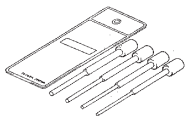	09201–10000	Valve Guide Bushing Remover & Replacer Set	CYLINDER HEAD ASSY(1CD–FTV)
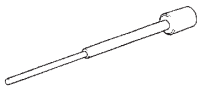	(09201–01060)	Valve Guide Bushing Remover & Replacer 6	CYLINDER HEAD ASSY(1CD–FTV)
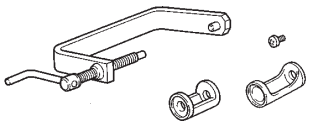	09202–70020	Valve Spring Compressor	CYLINDER HEAD ASSY(1CD–FTV)
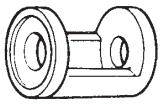	(09202–00010)	Attachment	CYLINDER HEAD ASSY(1CD–FTV)
	09223–15030	Oil Seal & Bearing Replacer	PARTIAL ENGINE ASSY(1CD–FTV)
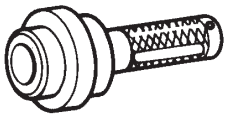	09223–46011	Crankshaft Front Oil Seal Replacer	PARTIAL ENGINE ASSY(1CD–FTV)
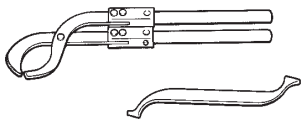	09248–55050	Valve Clearance Adjust Tool Set	PARTIAL ENGINE ASSY(1CD–FTV)
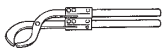	(09248–05510)	Valve Lifter Press	PARTIAL ENGINE ASSY(1CD–FTV)
	(09248–05520)	Valve Lifter Stopper	PARTIAL ENGINE ASSY(1CD–FTV)
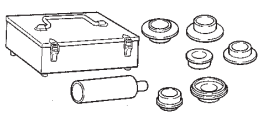	09316–60011	Transmission & Transfer Bearing Replacer	PARTIAL ENGINE ASSY(1CD–FTV)
	(09316–00011)	Replacer Pipe	PARTIAL ENGINE ASSY(1CD–FTV)

	(09316–00021)	Replacer ”A”	PARTIAL ENGINE ASSY(1CD–FTV)
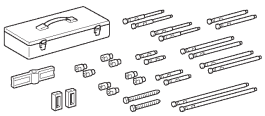	09950–50013	Puller C Set	PARTIAL ENGINE ASSY(1CD–FTV)
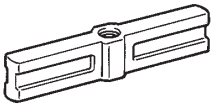	(09951–05010)	Hanger 150	PARTIAL ENGINE ASSY(1CD–FTV)
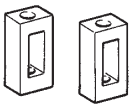	(09952–05010)	Slide Arm	PARTIAL ENGINE ASSY(1CD–FTV)
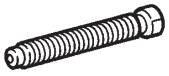	(09953–05010)	Center Bolt 100	PARTIAL ENGINE ASSY(1CD–FTV)
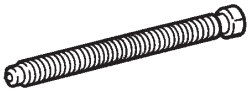	(09953–05020)	Center Bolt 150	PARTIAL ENGINE ASSY(1CD–FTV)
	(09954–05021)	Claw No.2	PARTIAL ENGINE ASSY(1CD–FTV)
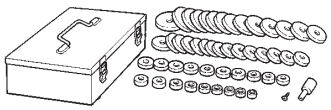	09950–60010	Replacer Set	CYLINDER HEAD ASSY(1CD–FTV) CYLINDER BLOCK(1CD–FTV)
	(09951–00210)	Replacer 21	CYLINDER HEAD ASSY(1CD–FTV)
	(09951–00350)	Replacer 35	CYLINDER BLOCK(1CD–FTV)
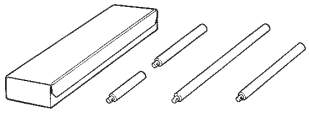	09950–70010	Handle Set	CYLINDER HEAD ASSY(1CD–FTV) CYLINDER BLOCK(1CD–FTV) PARTIAL ENGINE ASSY(1CD–FTV)
	(09951–07100)	Handle 100	CYLINDER HEAD ASSY(1CD–FTV) CYLINDER BLOCK(1CD–FTV) PARTIAL ENGINE ASSY(1CD–FTV)
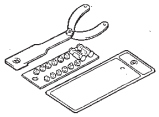	09960–10010	Variable Pin Wrench Set	PARTIAL ENGINE ASSY(1CD–FTV)

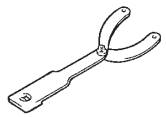	(09962–01000)	Variable Pin Wrench Arm Assy	PARTIAL ENGINE ASSY(1CD–FTV)
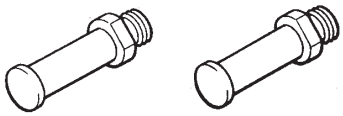	(09963–01000)	Pin 10	PARTIAL ENGINE ASSY(1CD–FTV)
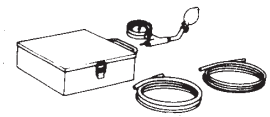	09992–00242	Turbocharger Pressure Gauge	PARTIAL ENGINE ASSY(1CD–FTV)

SSM

	08826–00080	Seal Packing Black or equivalent (FIPG)	CYLINDER HEAD ASSY(1CD–FTV) PARTIAL ENGINE ASSY(1CD–FTV)
	08826–00100	”Seal Packing 1282B,” THREE BOND 1282B or equivalent (FIPG)	PARTIAL ENGINE ASSY(1CD–FTV)
	08833–00070	”Adhesive 1324,” THREE BOND 1324 or equivalent	CYLINDER HEAD ASSY(1CD–FTV) CYLINDER BLOCK(1CD–FTV)

Equipment

V–block	
Piston ring compressor	
Piston ring expander	
Valve seat cutter	
Hexagon wrench (6 mm)	
Hexagon wrench (8 mm)	
Connecting rod aligner	
Cylinder gauge	
Dial indicator	
Feeler gauge	
Micrometer	
Precision straight edge	
Steel square	
Torque wrench	
Vernier calipers	
Dial indicator with magnetic base	
Slide calipers	
Wooden block	
Spring tester	
Plastigage	
Heater	

LUBRICATION

0214T–01

PREPARATION

Equipment

Feeler gauge	

STARTING & CHARGING

0214U–01

PREPARATION

SST

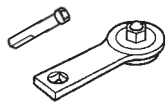	09820–63020	Alternator Pulley Wrench Set	GENERATOR ASSY(130A)(1CD–FTV)
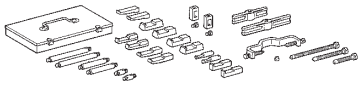	09950–40011	Puller B Set	GENERATOR ASSY(130A)(1CD–FTV)
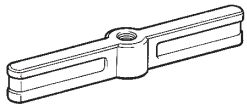	(09951–04020)	Hanger 200	GENERATOR ASSY(130A)(1CD–FTV)
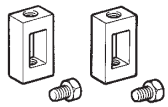	(09952–04010)	Slide Arm	GENERATOR ASSY(130A)(1CD–FTV)
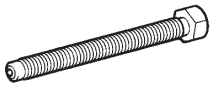	(09953–04020)	Center Bolt 150	GENERATOR ASSY(130A)(1CD–FTV)
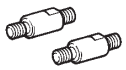	(09954–04010)	Arm 25	GENERATOR ASSY(130A)(1CD–FTV)
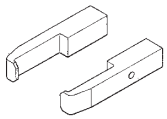	(09955–04071)	Claw No.7	GENERATOR ASSY(130A)(1CD–FTV)
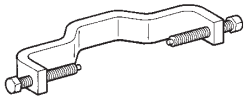	(09958–04011)	Holder	GENERATOR ASSY(130A)(1CD–FTV)
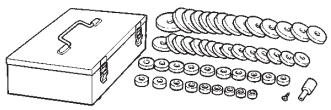	09950–60010	Replacer Set	STARTER ASSY(2.0KW)(1CD–FTV)
	(09951–00340)	Replacer 34	STARTER ASSY(2.0KW)(1CD–FTV)

Recomended Tools

	09082–00040	TOYOTA Electrical Tester	STARTER ASSY(1.4KW)(1CD–FTV) STARTER ASSY(2.2KW)(1CD–FTV) GENERATOR ASSY(130A)(1CD–FTV)
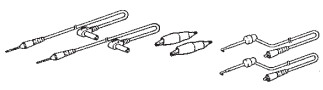	(09083–00150)	Test Lead Set	STARTER ASSY(1.4KW)(1CD–FTV) STARTER ASSY(2.2KW)(1CD–FTV) GENERATOR ASSY(90A)(1CD–FTV) GENERATOR ASSY(130A)(1CD–FTV)

 (09083–00350) AC/DC 400 A Probe	STARTER ASSY(2.2KW)(1CD–FTV)

Equipment

V–block	
Feeler gauge	
Ohmmeter	
Torque wrench	
Vernier calipers	
Dial indicator with magnetic base	

STANDARD BOLT

HOW TO DETERMINE BOLT STRENGTH

030KP–01

Bolt Type				Class
Hexagon Head Bolt		Stud Bolt	Weld Bolt	
Normal Recess Bolt	Deep Recess Bolt			
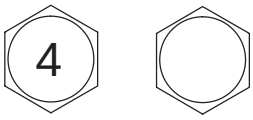		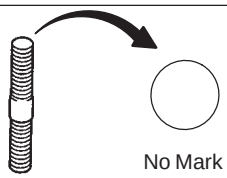	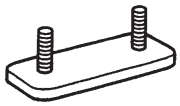	4T
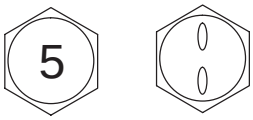				5T
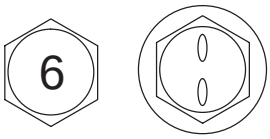	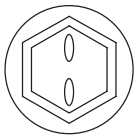			6T
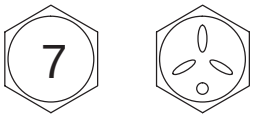	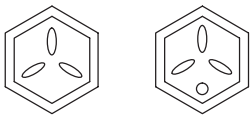			7T
				8T
				9T
	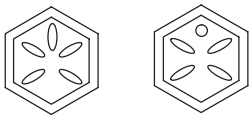			10T
	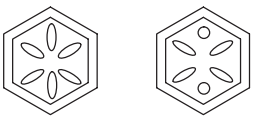			11T

B06431

030KQ–01

SPECIFIED TORQUE FOR STANDARD BOLTS

Class	Diameter mm	Pitch mm	Specified torque					
			Hexagon head bolt			Hexagon flange bolt		
			N·m	kgf·cm	ft·lbf	N·m	kgf·cm	ft·lbf
4T	6	1	5	55	48 in.·lbf	6	60	52 in.·lbf
	8	1.25	12.5	130	9	14	145	10
	10	1.25	26	260	19	29	290	21
	12	1.25	47	480	35	53	540	39
	14	1.5	74	760	55	84	850	61
	16	1.5	115	1,150	83	–	–	–
5T	6	1	6.5	65	56 in.·lbf	7.5	75	65 in.·lbf
	8	1.25	15.5	160	12	17.5	175	13
	10	1.25	32	330	24	36	360	26
	12	1.25	59	600	43	65	670	48
	14	1.5	91	930	67	100	1,050	76
	16	1.5	140	1,400	101	–	–	–
6T	6	1	8	80	69 in.·lbf	9	90	78 in.·lbf
	8	1.25	19	195	14	21	210	15
	10	1.25	39	400	29	44	440	32
	12	1.25	71	730	53	80	810	59
	14	1.5	110	1,100	80	125	1,250	90
	16	1.5	170	1,750	127	–	–	–
7T	6	1	10.5	110	8	12	120	9
	8	1.25	25	260	19	28	290	21
	10	1.25	52	530	38	58	590	43
	12	1.25	95	970	70	105	1,050	76
	14	1.5	145	1,500	108	165	1,700	123
	16	1.5	230	2,300	166	–	–	–
8T	8	1.25	29	300	22	33	330	24
	10	1.25	61	620	45	68	690	50
	12	1.25	110	1,100	80	120	1,250	90
9T	8	1.25	34	340	25	37	380	27
	10	1.25	70	710	51	78	790	57
	12	1.25	125	1,300	94	140	1,450	105
10T	8	1.25	38	390	28	42	430	31
	10	1.25	78	800	58	88	890	64
	12	1.25	140	1,450	105	155	1,600	116
11T	8	1.25	42	430	31	47	480	35
	10	1.25	87	890	64	97	990	72
	12	1.25	155	1,600	116	175	1,800	130

030KR–01

HOW TO DETERMINE NUT STRENGTH

Nut Type			Class
Present Standard Hexagon Nut	Old Standard Hexagon Nut		
	Cold Forging Nut	Cutting Processed Nut	
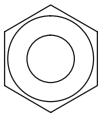 No Mark			4N
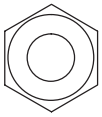 No Mark (w/ Washer)	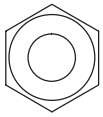 No Mark (w/ Washer)	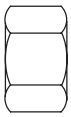 No Mark	5N (4T)
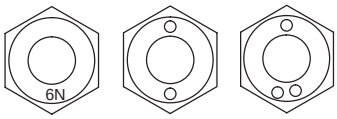 6N			6N
	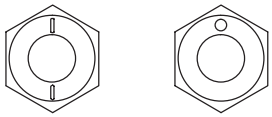	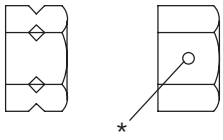 *	7N (5T)
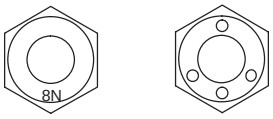 8N			8N
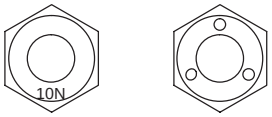 10N	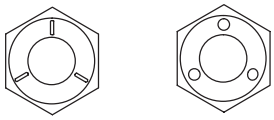	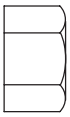 No Mark	10N (7T)
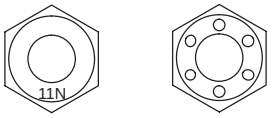 11N			11N
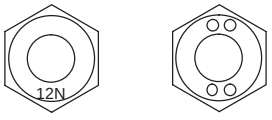 12N			12N

*: Nut with 1 or more marks on one side surface of the nut.

B06432

HINT:

Use the nut with the same number of the nut strength classification or the greater than the bolt strength classification number when tightening parts with a bolt and nut.

Example: Bolt = 4T

Nut = 4N or more

INTAKE

SERVICE DATA

030KS–01

Turbocharger	Actuator pressure		129 – 140 kPa (1.32 – 1.43 kgf/cm^2, 18.7 – 20.3 psi)
	Turbine wheel axial play	Maximum	0.09 mm (0.0035 in.) or less
	Turbine wheel radial play	Maximum	0.16 mm (0.0063 in.) or less

030KT–01

TORQUE SPECIFICATION

Part tightened	N·m	kgf·cm	ft·lbf
V Band	8.3	85	74 in.·lbf
Compressor housing x Bearing housing	4.7	48	42 in.·lbf
Turbocharger actuator x Compressor housing	7.8	80	69 in.·lbf
Compressor inlet elbow x Compressor housing	23	235	17

ENGINE MECHANICAL

SERVICE DATA

0300O–05

Cylinder head		
Warpage	Cylinder brock side	0.08 mm (0.0031 in.)
	Intake manifold side	0.20 mm (0.0079 in.)
	Exhaust manifold side	0.20 mm (0.0079 in.)
Intake valve		
Overall length	Standard	102.53 mm (4.0366in.)
	Minimum	102.10 mm (4.0197in.)
Valve stem diameter		5.970 – 5.985 mm (0.2350 – 0.2356 in.)
Margin thickness	Standard	0.9 (0.035 in.)
	Minimum	0.6 mm (0.0247 in.)
Exhaust valve		
Overall length	Standard	101.97 mm (4.0146in.)
	Minimum	101.55 mm (3.9980 in.)
Valve stem diameter		5.960 – 5.975 mm (0.2346 – 0.2352 in.)
Margin thickness	Standard	0.9 mm (0.035 in.)
	Minimum	0.6 mm (0.024 in.)
Inner compression spring		
Free length		40.45 mm (1.5925 in.)
Deviation	Maximum	2.0 mm (0.079 in.)
Installed tension	at 31.1 mm (1.224 in.)	177–195 N (18.0 – 19.9 kgf, 39.7 – 44.1 lbf)
Intake Valve guide bush		
Bushing inside diameter		6.010 – 6.030 mm (0.2366 – 0.2374 in.)
Oil clearance	Standard	0.025 – 0.060 mm (0.0010 – 0.0024 in.)
	Maximum	0.08 mm (0.0031 in.)
Diameter		10.985 – 11.006 mm (0.4325 – 0.4333 in.)
Protrusion height		10.05 – 10.45 mm (0.3957 – 0.4114 in.)
Exhaust valve guide bush		
Bushing inside diameter		6.010 – 6.030 mm (0.2366 – 0.2374 in.)
Oil clearance	Standard	0.035 – 0.070 mm (0.0014 – 0.0028 in.)
	Maximum	0.10 mm (0.0039 in.)
Diameter		10.985 – 11.006 mm (0.4325 – 0.4333 in.)
Protrusion height		9.65 – 10.05 mm (0.3799 – 0.3957 in.)
Valve lifter		
Lifter diameter		27.975 – 27.985 mm (1.1014 – 1.1018 in.)
Lifter bore diameter		28.010 – 28.031 mm (1.1028 – 1.1036 in.)
Oil clearance	Standard	0.025 – 0.056 mm (0.0010 – 0.0022 in.)
	Maximum	0.08 mm (0.0031 in.)
Camshaft		
Circle runout	Maximum	0.06 mm (0.0024 in.)
Cam lobe height (No.1)	Standard	46.57 – 46.67 mm (1.8335 – 1.8374 in.)
	Minimum	46.10 mm (1.8150 in.)
Cam lobe height (No.2)	Standard	47.52 – 47.62 mm (1.8709 – 1.8748 in.)
	Minimum	47.05 mm (1.8524 in.)
Journal diameter		26.969 – 26.985 mm (1.0618 – 1.0624 in.)
Thrust clearance		0.035 – 0.11 mm (0.0014 – 0.0043 in.)
Oil clearance	Standard	0.025 – 0.062 mm (0.0010 – 0.0024 in.)
	Minimum	0.08 mm (0.0031 in.)
Gear backlash	Standard	0.014 – 0.070 mm (0.0006 – 0.0028 in.)
	Maximum	0.17 mm (0.0067 in.)
Connecting rod		
Thrust clearance	Standard	0.08 – 0.30 mm (0.0031 – 0.0118 in.)
	Maximum	0.40 mm (0.0157 in.)
Oil clearance	Standard	0.038 – 0.056 mm (0.0015 – 0.0022 in.)
	Maximum	0.10 mm (0.0039 in.)

Cylinder block		
Warpage	Maximum	0.05 mm (0.0020 in.)
Bore diameter	Standard	82.200 – 82.213 mm (3.2362 – 3.2367 in.)
	Maximum	82.400 mm (3.2441 in.)
Piston		
Piston diameter		82.118 – 82.132 mm (3.2330 – 3.2335 in.)
Piston oil clearance	Standard	0.068 – 0.095 mm (0.0027 – 0.0037 in.)
	Maximum	0.14 mm (0.0055 in.)
Bushing inside diameter		31.015 – 31.027 mm (1.2211 – 1.2215 in.)
Piston pin		
Piston pin diameter		31.000 – 31.012 mm (1.2205 – 1.2209 in.)
Oil clearance	Standard	0.030 – 0.027 mm (0.0001 – 0.0011 in.)
	Maximum	0.025 mm (0.0010 in.)
Cylinder head set bolt		
Out side diameter	Standard	10.75 – 11.00 mm (0.4234 – 0.4331 in.)
	Minimum	10.40 mm (0.4904 in.)
Connecting rod bolt		
Diameter	Standard	8.2 – 8.3 mm (0.323 – 0.327 in.)
	Minimum	8.0 mm (0.315 in.)
Connecting rod		
Out–of–alignment	Maximum per 100 mm (3.94 in.)	0.05 mm (0.0020 in.)
Rod twist	Maximum per 100 mm (3.94 in.)	0.15 mm (0.0059 in.)
Crankshaft		
Thrust clearance	Standard	0.040 – 0.240 mm (0.0016 – 0.0094 in.)
	Maximum	0.30 mm (0.0118 in.)
Circle runout	Maximum	0.025 mm (0.0010 in.)
Crank pin taper and out– of –round	Maximum	0.01 mm (0.0004 in.)
Crank pin diameter		50.482 – 50.500 mm (1.9875 – 1.9882 in.)
Main journal diameter		56.992 – 57.010 mm (2.2438 – 2.2445 in.)
Oil clearance	Standard	0.032 – 0.050 mm (0.0013 – 0.0020 in.)
	Maximum	0.10 mm (0.0039 in.)

0300P–05

TORQUE SPECIFICATION

Part Tightened		N·m	kgf·cm	ft·lbf
Cylinder block water drain cock x Cylinder block		29	291	21
Oil check valve x Cylinder block		30	310	22
Oil pump x Cylinder block		31	320	23
Oil pan x Cylinder block	For 10 mm head bolt and nut	11	112	8.0
	For 12 mm head bolt	21	210	15
	For 14 mm head bolt	42	429	31
Oil strainer x Cylinder block	For bolt	21	210	15
	For nut	13	135	10
Oil pan No.2 x Cylinder block		12	120	9.0
Cylinder head x Cylinder block	1st	45	460	33
	2nd	Turn 90°	Turn 90°	Turn 90°
	3rd	Turn 90°	Turn 90°	Turn 90°
	4th	Turn 90°	Turn 90°	Turn 90°
Camshaft bearing cap x Cylinder head		20	204	15
Water pump x Cylinder block		31	320	23
Camshaft oil seal retainer x Cylinder head		8.8	90	78 in.·lbf
Timing belt idler Sub assy No.2 x Oil pump		47	475	34
Timing belt idler No. 1 x Cylinder head		35	350	25
Camshaft timing pulley x Camshaft		88	899	65
Nozzle holder clamp x Cylinder head		27	275	20
Nozzle leakage pipe x Cylinder head	Hollow screw	18	184	13
	Union bolt	22	224	16
Over flow screw x Plug		9.8	100	7.0
Check valve x Cylinder head		21	214	15
Cylinder head cover x Cylinder head		13	135	10
Taper screw plug No.1 x Cylinder head		25	255	18
Cylinder head stud bolt (See Page 14–23)	Bolt A	8.8	90	78 in.·lbf
	Bolt B	12	120	9.0
	Bolt C	8.8	90	78 in.·lbf
Connecting rod cap x Connecting rod	1st	30	306	22
	2nd	Turn 90°	Turn 90°	Turn 90°
Crankshaft bearing cap x Cylinder block		115	1,173	85
Cylinder block oil orifice x Cylinder block		9.0	92	78 in.·lbf
Oil nozzle No.1 x Cylinder block		7.4	76	67 in.·lbf

LUBRICATION

SERVICE DATA

0300L–04

Oil pump		
Tip clearance	Standard	0.080–0.160 mm (0.0031 – 0.0063 in.)
	Maximum	0.2 mm (0.0079 in.)
Body clearance	Standard	0.100–0.170 mm (0.0039 – 0.0067 in.)
	Maximum	0.2 mm (0.0079 in.)

STARTING & CHARGING

SERVICE DATA

0300Q–04

Starter assy (1.4kw)		
Circle runout	Maximum	0.05 mm(0.0020 in.)
Diameter	Standard	30 mm (1.18 in.)
	Minimum	29 mm (1.14 in.)
Undercut depth	Standard	0.6 mm (0.024 in.)
	Minimum	0.2 mm (0.008 in.)
Brush length	Standard	15.5 mm (0.61 in.)
	Minimum	8.5 mm (0.3346 in.)
Starter assy (2.0kw)		
Circle runout	Maximum	0.03 mm (0.0012 in.)
Diameter	Standard	32.3 mm (1.272 in.)
	Minimum	30.5 mm (1.201 in.)
Undercut depth	Standard	0.9 mm (0.035 in.)
	Minimum	0.3 mm (0.012 in.)
Brush length	Standard	14.5 mm (0.571 in.)
	Minimum	9.0 mm (0.354 in.)
Starter assy (2.2kw)		
Circle runout	Maximum	0.05 mm(0.0020 in.)
Diameter	Standard	35 mm (1.378 in.)
	Minimum	34 mm (1.3386 in.)
Undercut depth	Standard	0.7 mm (0.0276 in.)
	Minimum	0.2 mm (0.079 in.)
Brush length	Standard	16.5 mm (0.6496 in.)
	Minimum	9.0 mm (0.3543 in.)
Generator assy (90A)		
Rotor coil resistance	at 20°C (68°F)	2.7 – 3.1 Ω
Slip ring diameter	Standard	14.2 – 14.4 mm (0.559 – 0.567 in.)
	Minimum	12.8 mm (0.504 in.)
Brush exposed length	Standard	9.5 – 11.5 mm (0.374 – 0.453 in.)
	Minimum	1.5 mm (0.059 in.)
Generator assy (130A)		
Rotor coil resistance	at 20°C (68°F)	2.3 – 2.7 Ω
Slip ring diameter	Standard	14.2 – 14.4 mm (0.559 – 0.567 in.)
	Minimum	14 mm (0.551 in.)
Brush exposed length	Standard	10.5 mm (0.4134 in.)
	Minimum	4.5 mm (0.177 in.)

0300R–04

TORQUE SPECIFICATION

Part Tightened		N·m	kgf·cm	ft·lbf
Starter assy (1.4kw)				
Commutator end frame assy x Starter yoke		1.5	15	13 in.·lbf
Starter housing x Magnetic switch		5.9	60	52 in.·lbf
Filed frame x Armature assembly		5.9	60	52 in.·lbf
Lead wire x Terminal C of starter		5.9	60	52 in.·lbf
Starter assy (2.0kw)				
Commutator end frame assy x Starter housing		6.5	66	58 in.·lbf
Commutator end frame cover x Commutator end frame assy		1.7	17	15 in.·lbf
Starter housing x Magnet Starter Switch		5.0	51	44 in.·lbf
Lead wire x Terminal C of starter		8.0	82	71 in.·lbf
Starter assy (2.2kw)				
Starter housing x Magnetic switch		9.3	95	82 in.·lbf
Filed frame x Armature assembly		12.7	130	9.0
Lead wire x Terminal C of starter		5.9	60	52 in.·lbf
Generator (90A)				
Rectifire end frame x Drive end frame	Nut A	4.5	46	39 in.·lbf
	Nut B	5.4	55	47 in.·lbf
Rectifire holder x Rectifire end frame		2.9	30	26 in.·lbf
Voltage regulator x Rectifire holder		3.9	40	35 in.·lbf
Brush holder x Rectifier holder		2.0	20	18 in.·lbf
Rear end cover x Rectifier end frame	Nut	4.4	45	39 in.·lbf
	Bolt	3.9	39	35 in.·lbf
Generator pulley x Rotor		111	1,133	82
Generator assy (130 A)				
Rectifire end frame x Drive end frame		5.8	59	51 in.·lbf
Generator pulley x Rotor		111	1,133	82
Brush holder x Rectifire end frame		1.8	18	16 in.·lbf
Rear end cover x Rectifire holder		4.6	47	41 in.·lbf

TURBOCHARGER ASSEMBLY (1CD–FTV)

13034–01

COMPONENTS

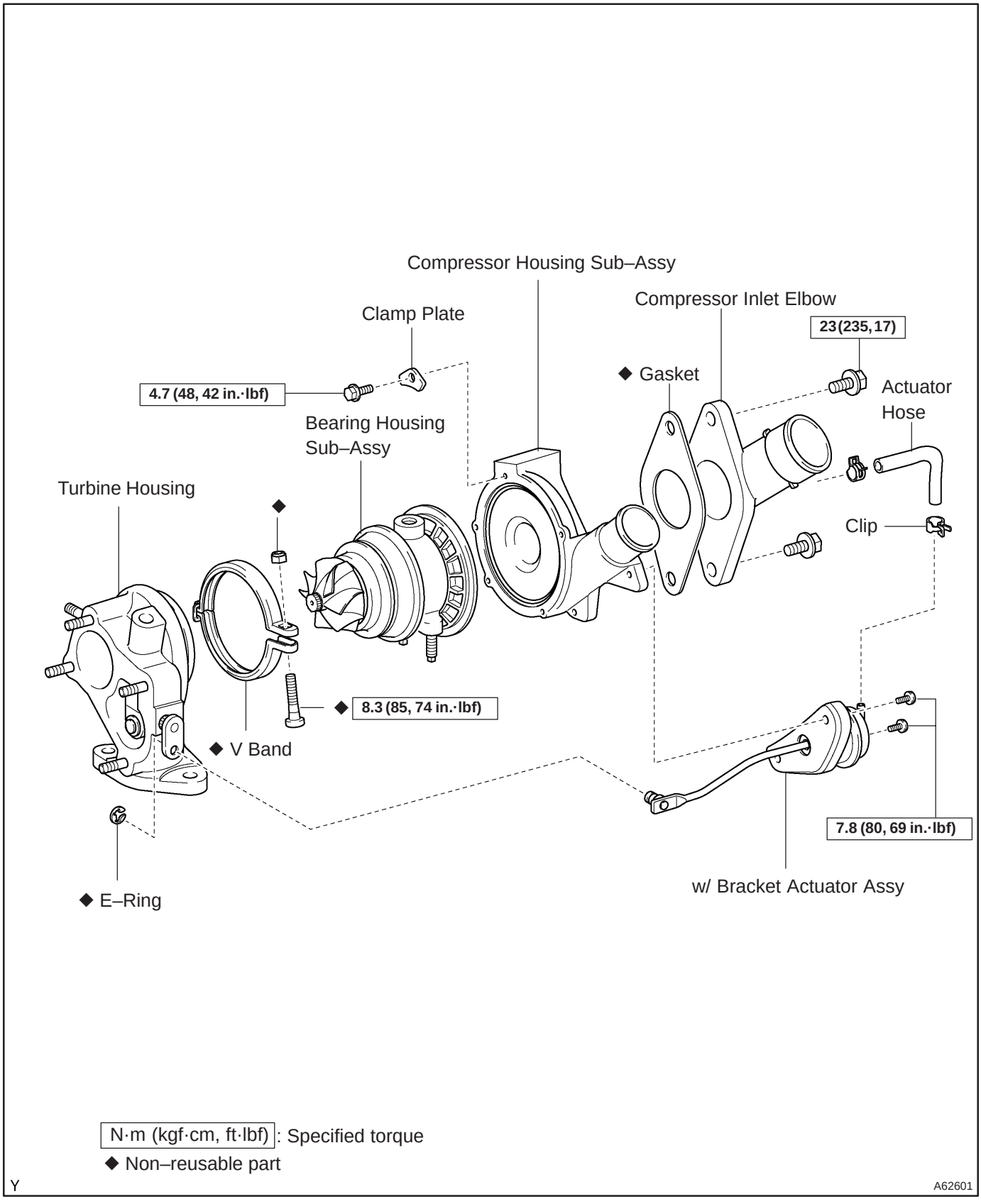

OVERHAUL

1. REMOVE COMPRESSOR INLET ELBOW

(a) Remove 2 bolts and the compressor inlet elbow.

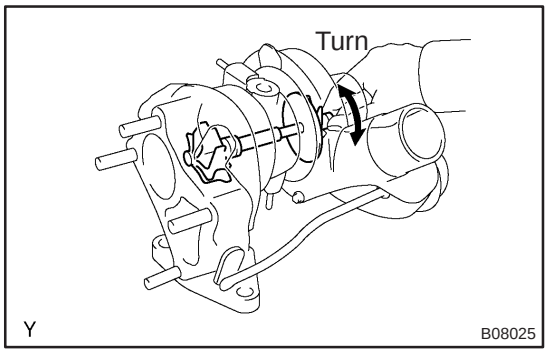

2. INSPECT TURBOCHARGER SUB–ASSY

(a) Inspect turbine shaft rotation
  (1) Grasp the edge of the turbine shaft, and turn it.
  (2) Check that the turbine shaft turns smoothly.

If the turbine shaft turns remarkably heavily or stuck, replace the bearing housing. At that time, check also the interference with the turbine housing and compressor housing.

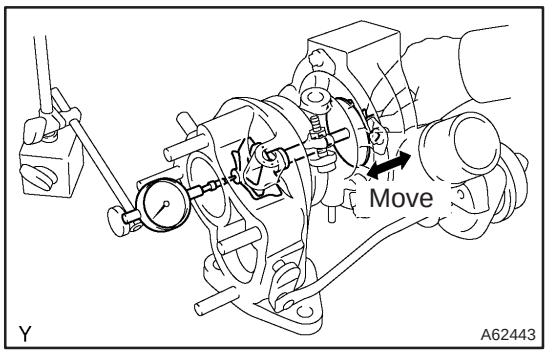

(b) Inspect axial play of turbine shaft
  (1) Using a dial indicator, insert the needle of the dial indicator into the exhaust side.
  (2) Move the turbine shaft in an axial direction, measure the axial play of the turbine shaft.

Maximum oil clearance: 0.09 mm (0.0035 in.) or less

If the axial play is greater than maximum, replace the bearing housing. At that time, check also the interference with the turbine housing and compressor housing.

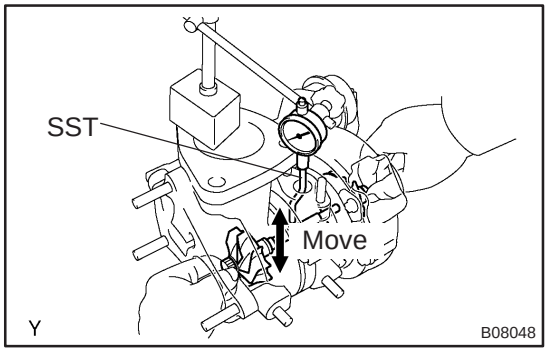

(c) Inspect radial play of turbine shaft
  (1) Using SST and a dial indicator, insert the needle of the dial indicator into the oil outlet hole, and set it in the center of the turbine shaft.

SST 09992–00600

  (2) Move the turbine shaft in a radial direction, measure the radial play of the turbine shaft.

Maximum oil clearance: 0.16 mm (0.0063 in.) or less

If the radial play is greater than maximum, replace the bearing housing. At that time, check also the interference with the turbine housing and compressor housing.

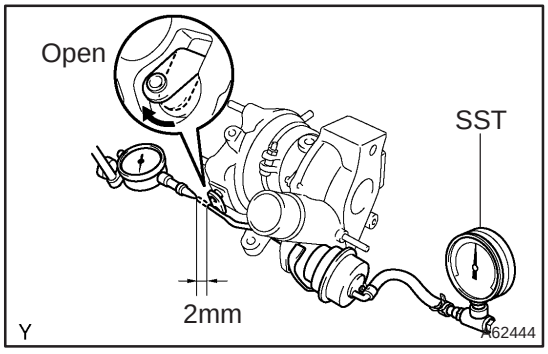

(d) Inspect actuator and waste gate valve operation.
  (1) Disconnect the actuator hose from the compressor housing.
  (2) Using SST and a dial indicator, read the graduation of SST when the actuator push rod moved 2 mm (0.079 in.).

SST 09992–00242

Standard pressure:
129 – 140 kPa (1.32 – 1.43 kgf/cm^2, 18.7 – 20.3 psi)

(e) Move the actuator push rod, and check that the waste gate valve is open.

If operation is not as specified, replace the actuator and/or turbine housing.

NOTICE:

Never apply more than 161 kPa (1.64 kgf/cm^2, 28.5 psi) of pressure on the actuator.

(f) Reconnect the actuator hose to the compressor housing.

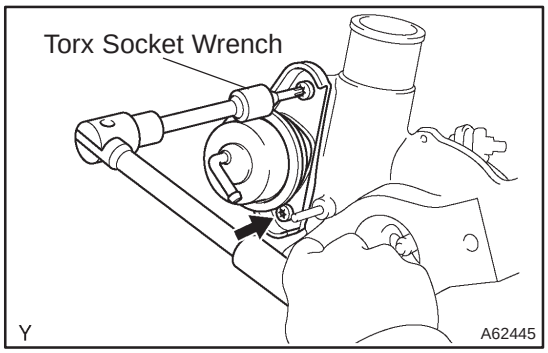

3. REMOVE W/BRACKET ACTUATOR ASSY

(a) Remove the actuator hose.

(b) Using a torx socket wrench (T30), remove the 2 screws holding the actuator to the compressor housing.

(c) Remove the E–ring holding the actuator push rod to the waste gate valve link, and remove the actuator w/ bracket.

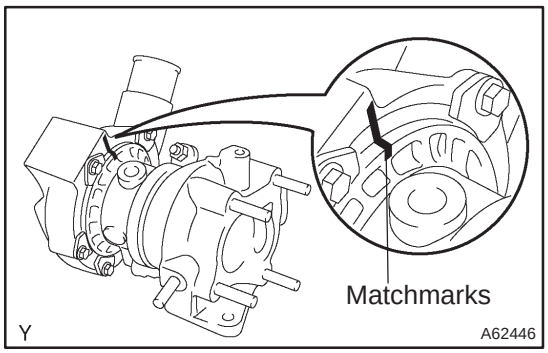

4. REMOVE COMPRESSOR HOUSING SUB–ASSY

(a) Place the matchmarks on the compressor housing and the bearing housing.

(b) Remove the 5 bolts and 5 clamp plates.

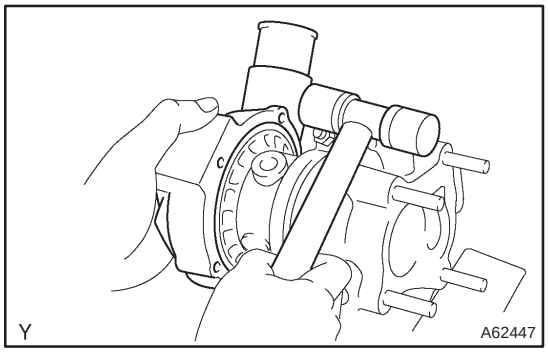

(c) Using a plastic–faced hammer, tap out the compressor housing.

NOTICE:

Remove the compressor housing as straight as possible and do not make the impeller wheel interfere with the compressor housing.

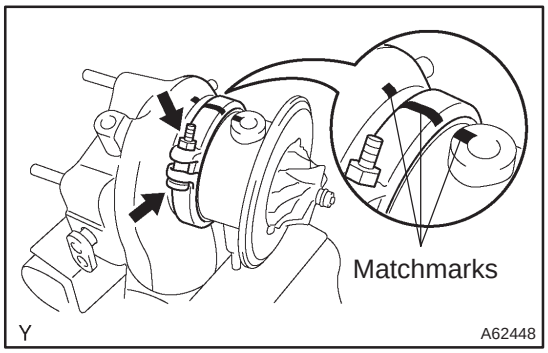

5. REMOVE BEARING HOUSING SUB–ASSY

(a) Place the matchmarks on the V band, turbine housing and bearing housing.

(b) Remove the flat head square neck bolt, nut and V band.

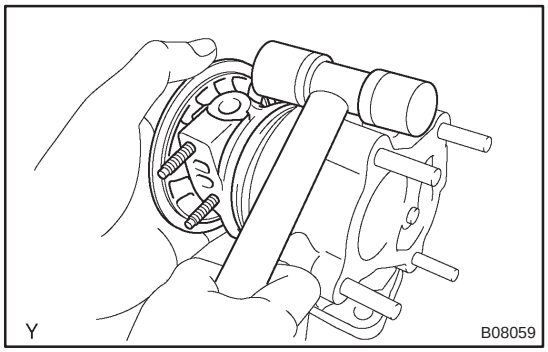

(c) Using a plastic–faced hammer, tap out the bearing housing.

NOTICE:

Remove the bearing housing as straight as possible and do not make the turbine wheel interfere with the turbine housing.

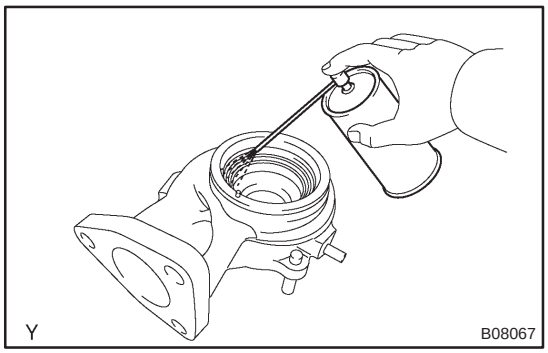

6. CLEAN TURBINE HOUSING

(a) Spray the engine conditioner to the section where the carbon dirt is adhered.

NOTICE:

Be careful not to erase the matchmark of the turbine housing.

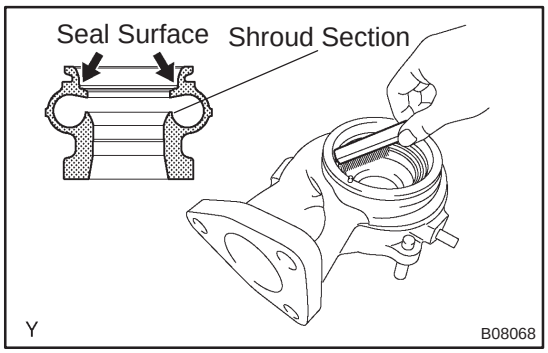

(b) Using a wire brush, remove all the carbon dirt inside the turbine housing.

NOTICE:

Clean the seal surface and shroud section shown in the illustration sufficiently. And clean the waste gate valve seat sufficiently, too.

HINT:

When the carbon dirt is heavily adhered, remove it using the screwdriver and the like.

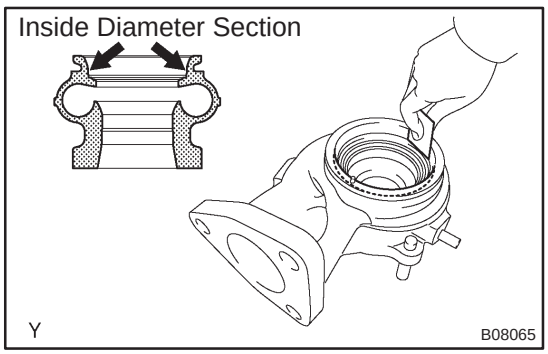

(c) Clean the inside diameter section with a sandpaper (No. 100) until the metal surface can be seen.

NOTICE:

If the cleaning is not enough, installation of the bearing housing becomes harder, so clean it sufficiently.

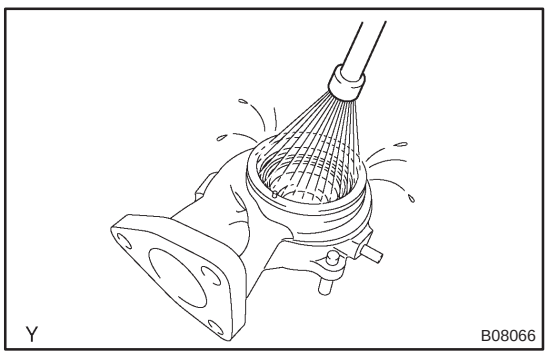

(d) Wash with compressed air or a steam cleaner.

NOTICE:

Wash sufficiently without leaving any irregular objects.

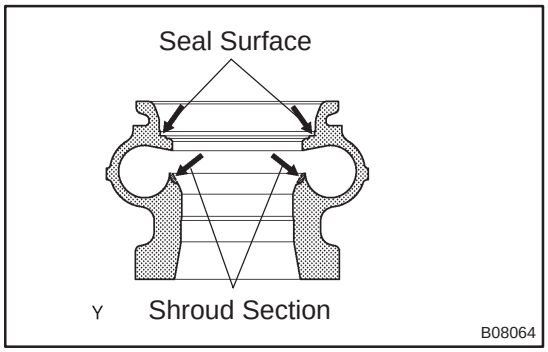

(e) Check that there is no severe damage on the seal surface with the bearing housing.

(f) Check that there is no bore made by the interference with the turbine wheel in the shroud section.

If the turbine housing is having remarkable damage or bore, replace the turbine housing and bearing housing.

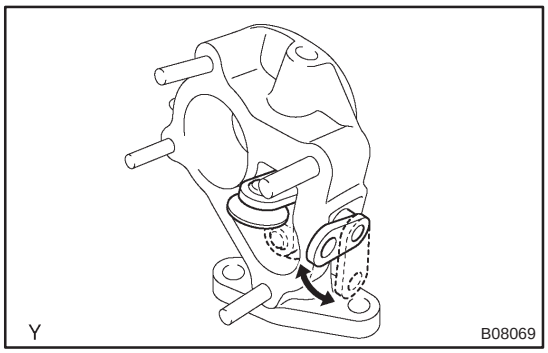

(g) Move the waste gate valve link and check that it runs smoothly without sticking.

If the link is bad running, clean again. If it is bad running, even after cleaning, replace the turbine housing.

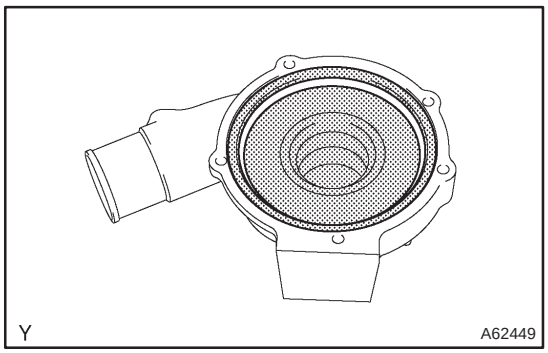

7. CLEAN COMPRESSOR HOUSING SUB–ASSY

(a) Remove any old packing (FIPG) material and be careful not to drop any oil on the contact surfaces of the compressor housing and bearing housing.

(1) Using a razor blade and gasket scraper, remove all the old packing (FIPG) material from the gasket surfaces.

(2) Thoroughly clean all components to remove all the loose material.

(3) Using a non–residue solvent, clean both sealing surfaces.

(b) Wipe off the dirt from the inside of the housing with a shop rag.

(c) Check that there is no severe interference with the impeller wheel.

If it is having bur made by a slight interference damage, remove it with a sandpaper (No. 400) and blow with compressed air.

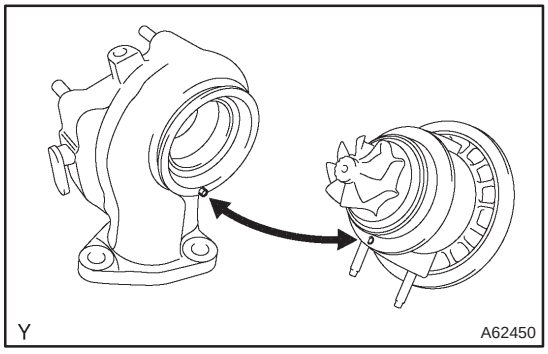

8. INSTALL BEARING HOUSING SUB–ASSY

(a) Align the pin of the turbine housing with the pin hole of the bearing housing.

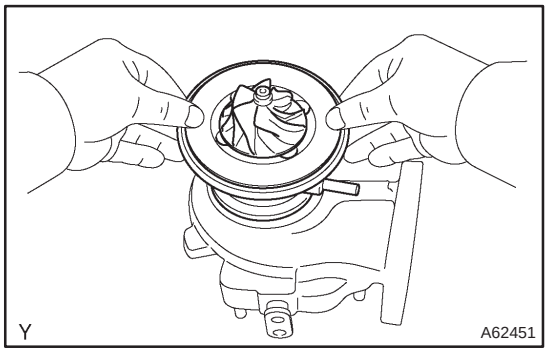

(b) Install the bearing housing to the turbine housing.

NOTICE:

- **Install the bearing housing straight, and be careful not to damage the turbine wheel.**
- **In case of having difficulty of pressing in the bearing housing to install with a hand due to hard engagement, apply the procedure (c).**

HINT:

Apply a little penetrate rust prevention lubricant onto the engagement section to make installation easier.

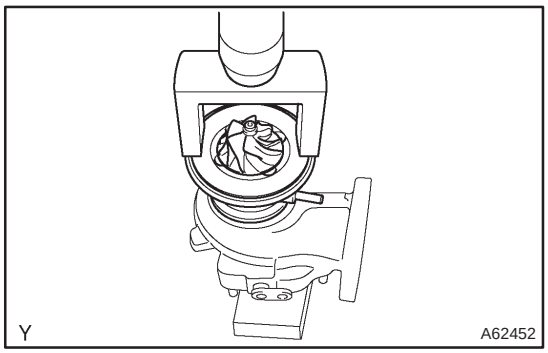

(c) In case that the engagement of the bearing housing is hard, using SST and a press, install the bearing housing while checking the smooth rotation of the impeller wheel.
SST 09350–32014 (09351–32070)

NOTICE:

- **Do not hold the turbine housing with the stud bolts.**
- **Be sure to install the bearing housing straight without tilting as the shaft may bent and cause the irregular noise.**
- **Press in the bearing housing slowly. When the rotation of the impeller wheel becomes heavy, return the press immediately and do the operation again.**
- **After installation, check that the turbine shaft turns smoothly.**

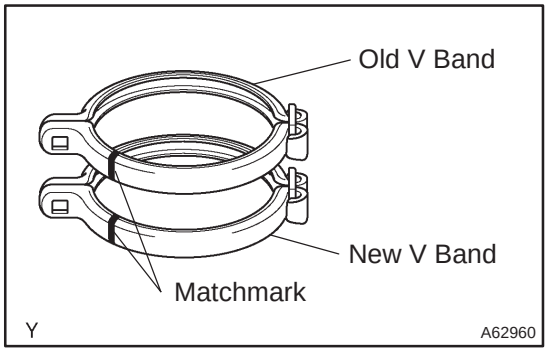

(d) Place a new and old (used) V bands in line, then reprint the matchmark position on the old V band to the new one.

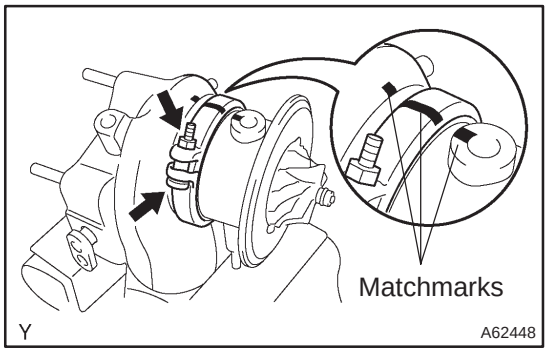

(e) Align the matchmarks on the new V band, turbine housing and bearing housing, and temporarily torque with a new bolt and nut.

Torque: 8.3 N·m (85 kgf·cm, 74 in.·lbf)

HINT:

When the marks are erased, make the matching openings meet at the position shown in the illustration.

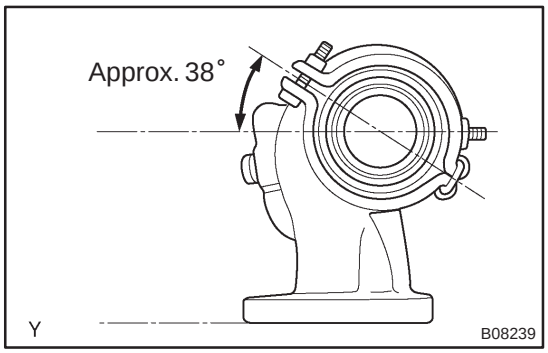

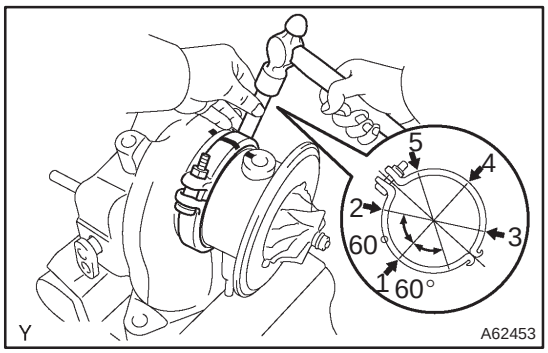

(f) Using a brass bar and hammer, hit 2 or 3 times lightly at each place in order of 1 through 5.

(g) Torque the bolt and nut more.

Torque: 8.3 N·m (85 kgf·cm, 74 in.·lbf)

(h) Using a brass bar and hammer, hit 2 or 3 times lightly at each place of 1 and 4.

(i) Torque the bolt and nut completely.

Torque: 8.3 N·m (85 kgf·cm, 74 in.·lbf)

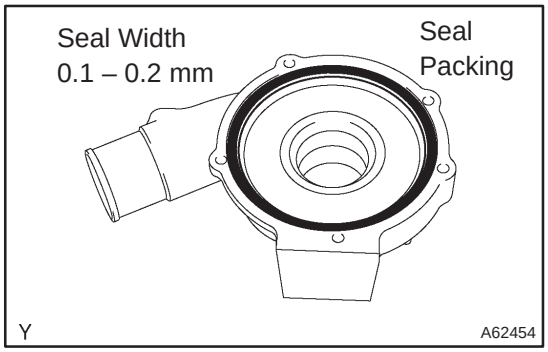

9. INSTALL COMPRESSOR HOUSING SUB–ASSY

(a) In case of reusing the compressor housing and bearing housing:

(1) Apply seal packing to the compressor housing as shown in the illustration.

Seal packing: Part No. 08826–00080 or equivalent

NOTICE:

Avoid applying an excessive amount to the surface.

- Install a nozzle that has been cut to a 0.1 – 0.2 mm (0.004 – 0.008 in.) opening.
- Parts must be assembled within 7 minutes of application. Otherwise the material must be removed and reapplied.
- Immediately remove nozzle from the tube and reinstall the cap.

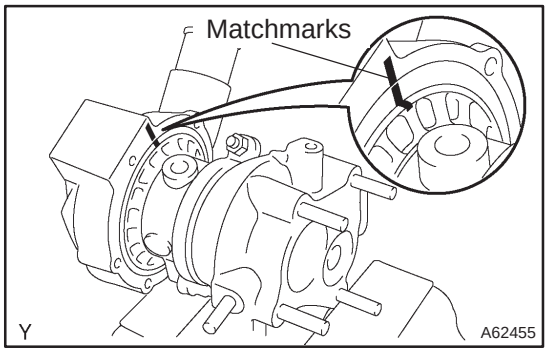

(2) Align the matchmarks on the compressor housing and bearing housing, and install them.

NOTICE:

- **Do not make the impeller wheel interfere with the compressor housing.**
- **Check that the turbine shaft turns smoothly.**

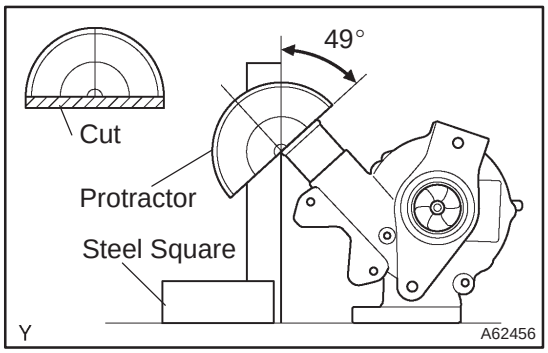

(3) Using a steel square and protractor, check the installation angle of the outlet port of the compressor housing shown in the illustration.

(4) Install the 5 clamp plates and bolts.

Torque: 4.7 N·m (48 kgf·cm, 42 in.·lbf)

(b) In case of using a new compressor housing and/or bearing housing :

(1) Temporally install the compressor housing on the bearing housing, make the installation angle of the outlet port of the compressor housing meet at the position shown in the illustration, and place the matchmarks.

(2) Remove the compressor housing.

(3) The following procedure is the same as that of reusing the compressor housing and/or bearing housing.

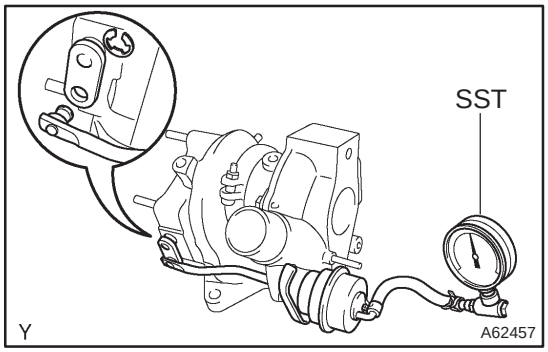

10. INSTALL W/BRACKET ACTUATOR ASSY

(a) Using a torx wrench (T30), install the actuator w/ bracket to the compressor housing with the 2 screws.

Torque: 7.8 N·m (80 kgf·cm, 69 in.·lbf)

(b) Using SST, move the actuator push rod.

SST 09992–00242

NOTICE:

Never apply more than 197 kPa (2.01 kgf/cm^2, 28.5 psi) of pressure on the actuator.

(c) Connect the actuator push rod to the waste gate valve link with a new E–ring.

NOTICE:

Do not use a hammer, etc. to force the actuator push rod onto the waste gate valve link.

(d) Remove the SST.

(e) Connect the actuator hose.

11. INSTALL COMPRESSOR INLET ELBOW

Torque: 23 N·m (235 kgf·cm, 17 ft·lbf)

PARTIAL ENGINE ASSY (1CD–FTV)

COMPONENTS

140L3–01

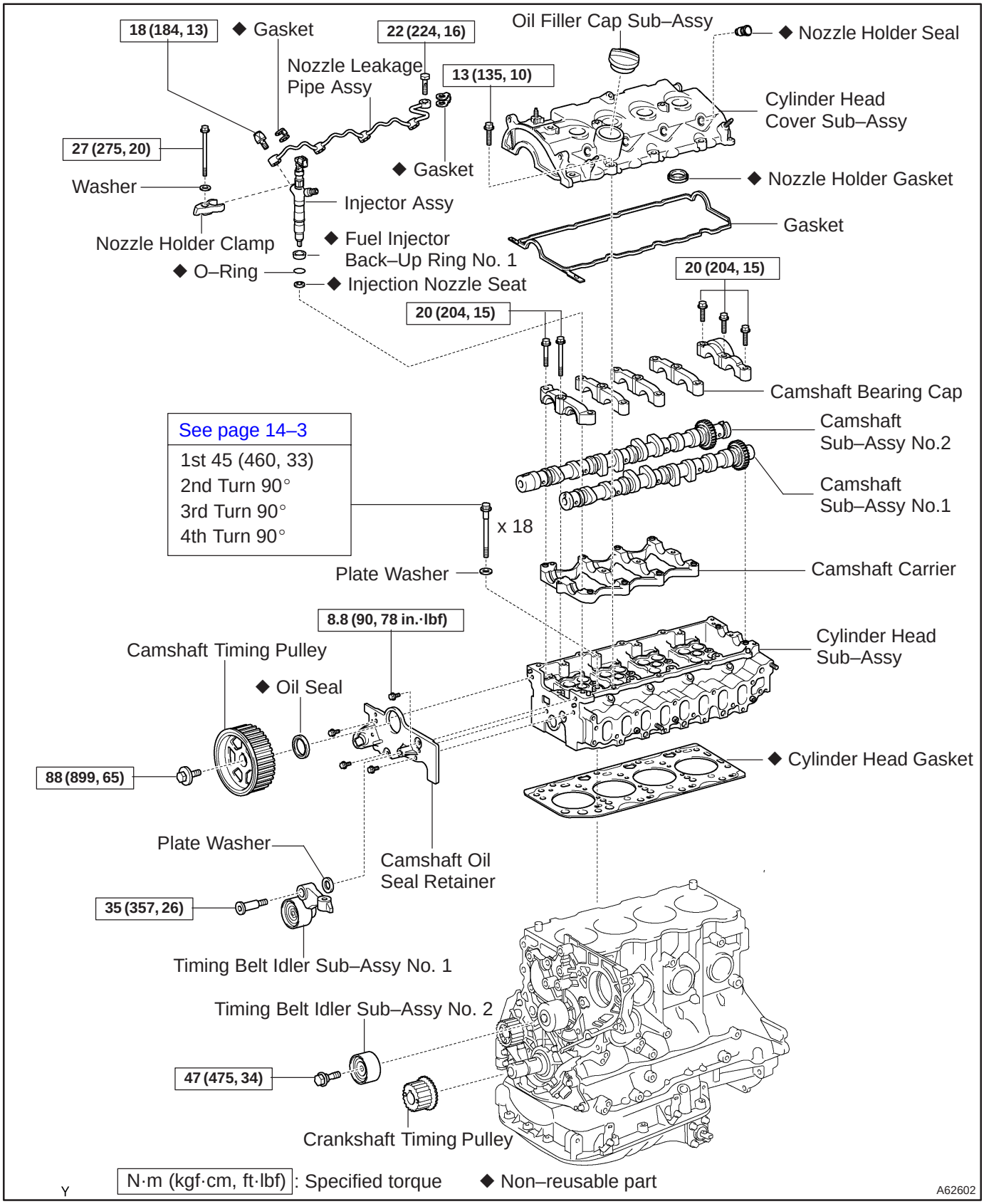

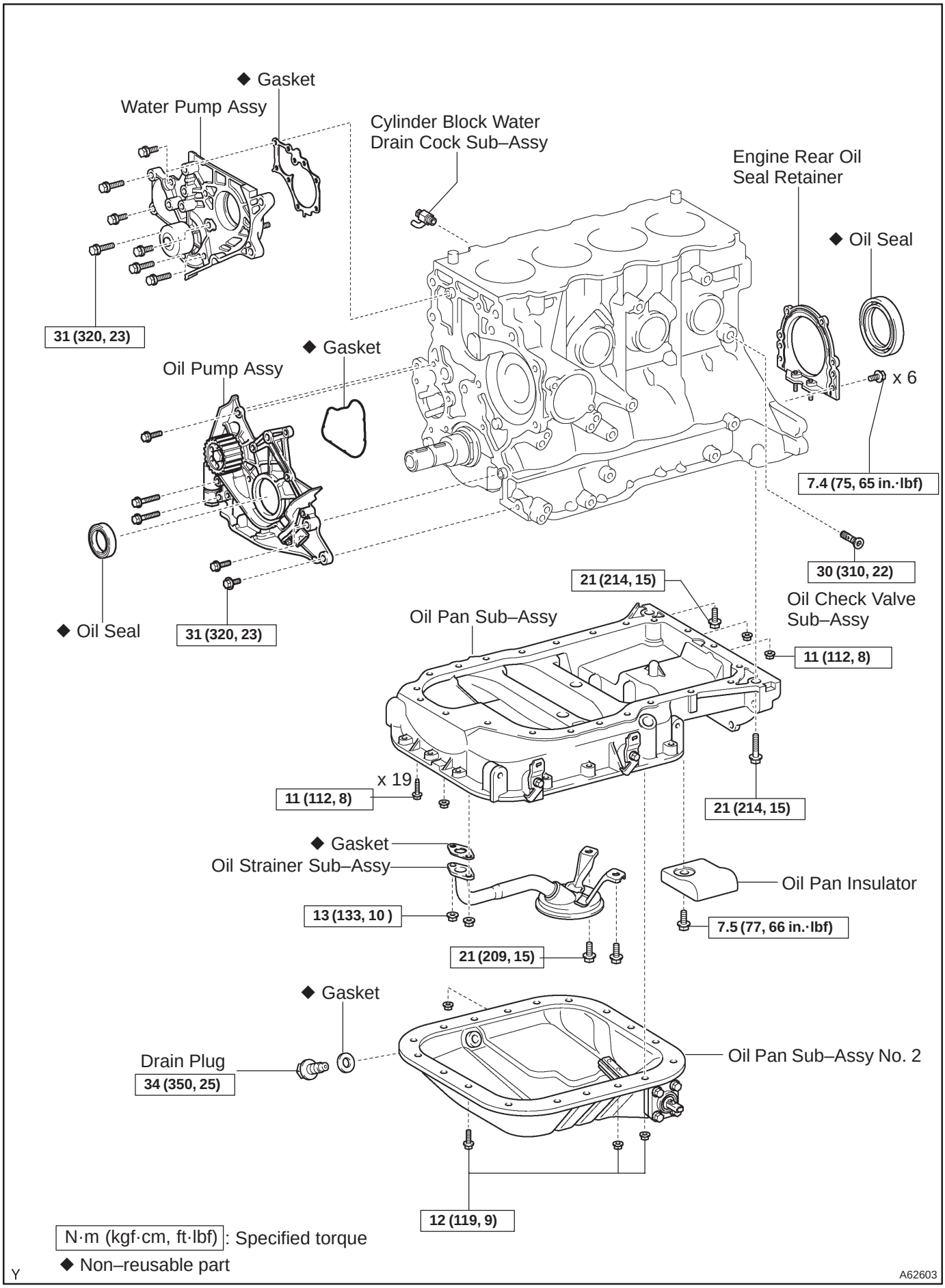
◆ Gasket
Water Pump Assy
Cylinder Block Water Drain Cock Sub–Assy
Engine Rear Oil Seal Retainer
◆ Oil Seal
31 (320, 23)
◆ Gasket
Oil Pump Assy
x 6
7.4 (75, 65 in.·lbf)
30 (310, 22)
◆ Oil Seal
31 (320, 23)
21 (214, 15)
Oil Check Valve Sub–Assy
Oil Pan Sub–Assy
11 (112, 8)
x 19
11 (112, 8)
21 (214, 15)
◆ Gasket
Oil Strainer Sub–Assy
Oil Pan Insulator
13 (133, 10)
7.5 (77, 66 in.·lbf)
21 (209, 15)
◆ Gasket
Drain Plug
34 (350, 25)
Oil Pan Sub–Assy No. 2
12 (119, 9)
N·m (kgf·cm, ft·lbf): Specified torque
◆ Non–reusable part
Y
A62603

OVERHAUL

1. REMOVE OIL FILLER CAP SUB–ASSY

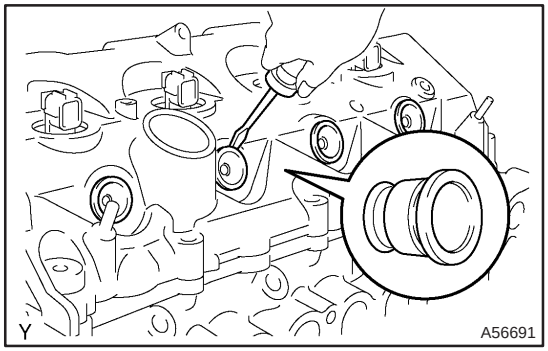

2. REMOVE NOZZLE HOLDER SEAL

(a) Using a screwdriver, pry out the 4 nozzle holder seals.

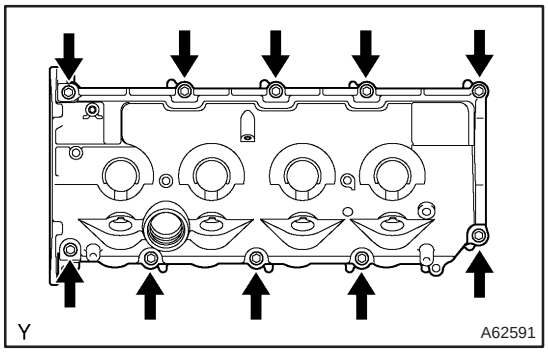

3. REMOVE CYLINDER HEAD COVER SUB–ASSY

(a) Remove the 10 bolts, cylinder head cover and gasket.

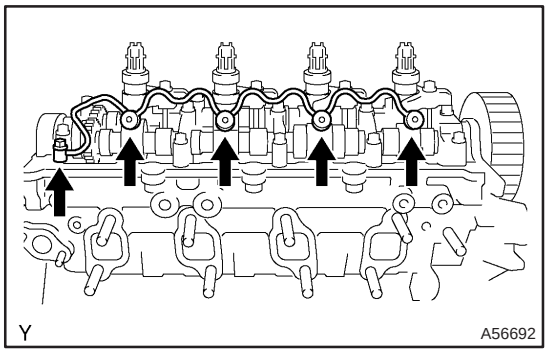

4. REMOVE NOZZLE LEAKAGE PIPE ASSY

(a) Using a hexagon wrench (6mm), remove 4 hollow screws.
(b) Remove the union bolt, nozzle leakage pipe and 5 gaskets from the cylinder head and injector.

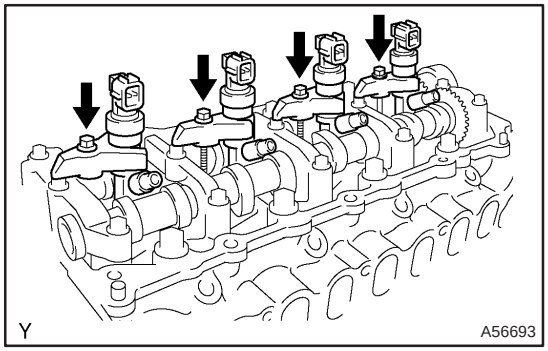

5. REMOVE NOZZLE HOLDER CLAMP

(a) Remove the 4 bolts, 4 washers and 4 nozzle holder clamps.

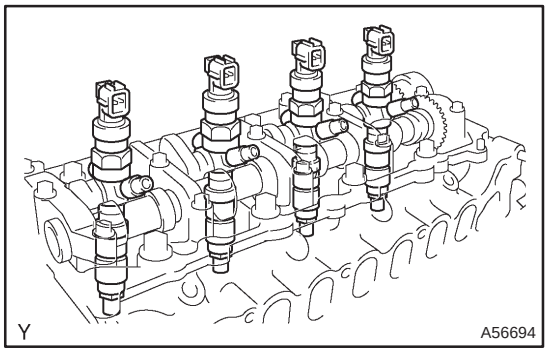

6. REMOVE INJECTOR ASSY

(a) Remove the 4 injectors from the cylinder head.

HINT:

Arrange the injectors in correct order.

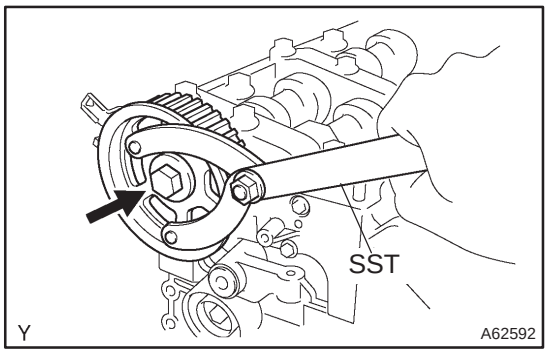

7. REMOVE CAMSHAFT TIMING PULLEY

(a) Using SST, remove the pulley bolt.
SST 09960–10010 (09962–01000, 09963–01000)

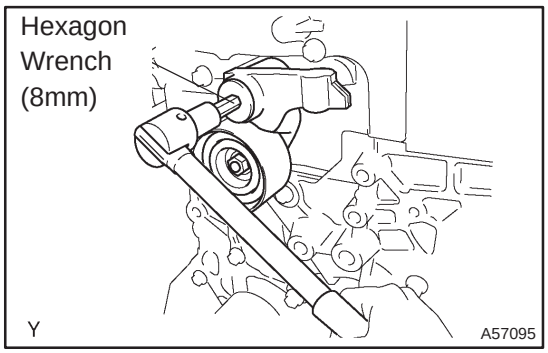

8. REMOVE TIMING BELT IDLER SUB–ASSY NO.1

(a) Using hexagon wrench (8mm), remove the idler pulley shaft, idler pulley and plate washer.

9. REMOVE TIMING BELT IDLER SUB–ASSY NO.2

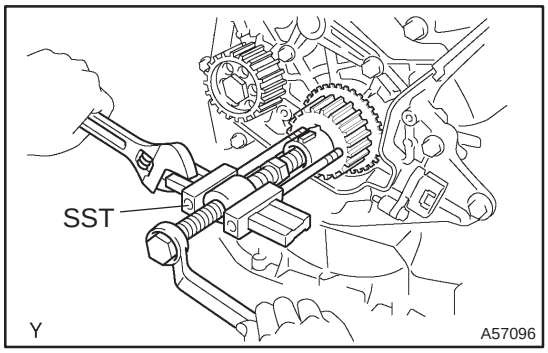

10. REMOVE CRANKSHAFT TIMING PULLEY

(a) If the pulley cannot be removed by hand, use SST to remove the timing pulley.
SST 09950–50013 (09951–05010, 09952–05010, 09953–05010, 09953–05020, 09954–05021)

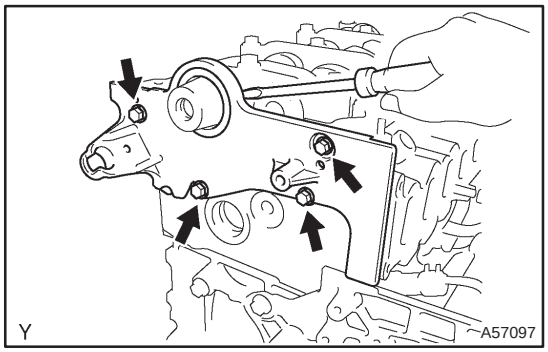

11. REMOVE CAMSHAFT OIL SEAL RETAINER

(a) Remove the 4 bolts.
(b) Using a screwdriver, remove the oil seal retainer by prying the portions between the oil seal retainer and camshaft bearing cap.

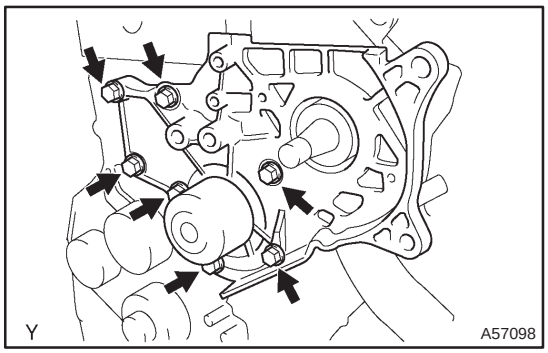

12. REMOVE WATER PUMP ASSY

(a) Remove the 7 bolts, water pump and gasket.

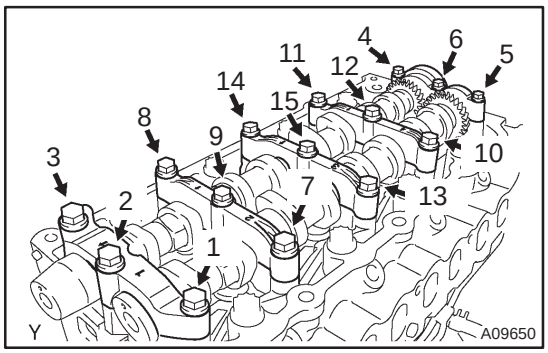

13. REMOVE CAMSHAFT SUB–ASSY, NO.2
(a) Uniformly loosen and remove the 15 bearing cap bolts in several passes in the sequence shown.
(b) Remove the 5 bearing caps.
(c) Remove the camshaft No. 2.

14. REMOVE CAMSHAFT SUB–ASSY, NO.1
(a) Remove the camshaft from the cylinder head.

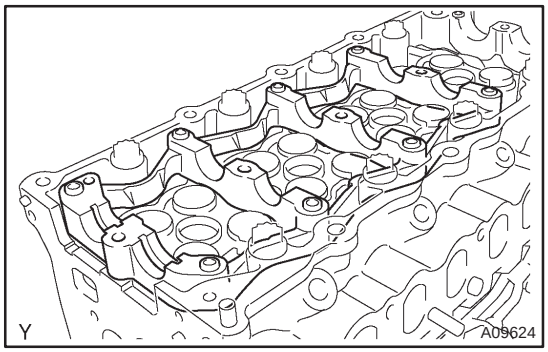

(b) Remove the camshaft carrier from the cylinder head.

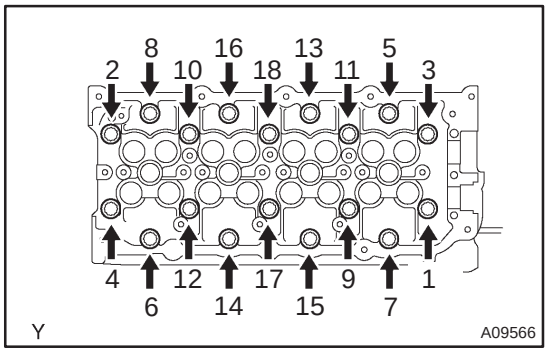

15. REMOVE CYLINDER HEAD SUB–ASSY

(a) Uniformly loosen the 18 cylinder head bolts in several passes in the sequence shown. Remove the 18 cylinder head bolts and plate washers.

NOTICE:

Cylinder head warpage or cracking could result from removing bolts in incorrect order.

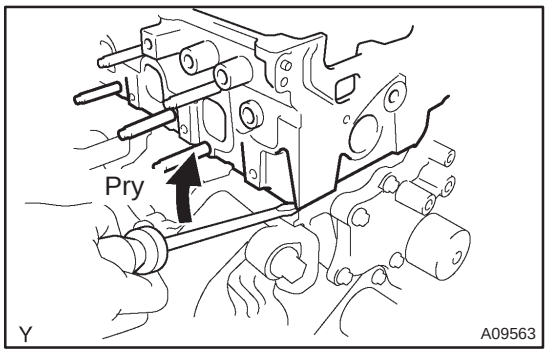

(b) Lift the cylinder head from the dowels on the cylinder block, and place the cylinder head on wooden blocks on a bench.

HINT:

If the cylinder head is lift off, pry between the cylinder head and cylinder block with a screwdriver.

NOTICE:

Be careful not to damage the contact surfaces of the cylinder head and cylinder block.

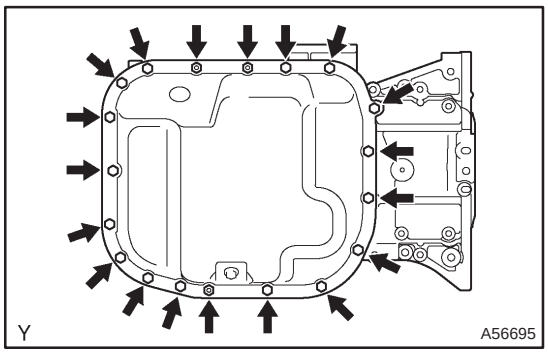

16. REMOVE OIL PAN SUB–ASSY NO.2

(a) Remove the 16 bolts and 3 nuts.

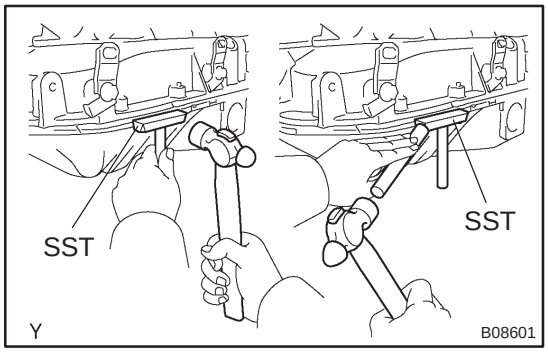

(b) Insert the blade of SST between the No. 1 and No. 2 oil pans, and cut off the applied seal and remove the No. 2 oil pan.

SST 09032–00100

NOTICE:

Be careful not to damage the contact surfaces of the No. 1 and No. 2 oil pans.

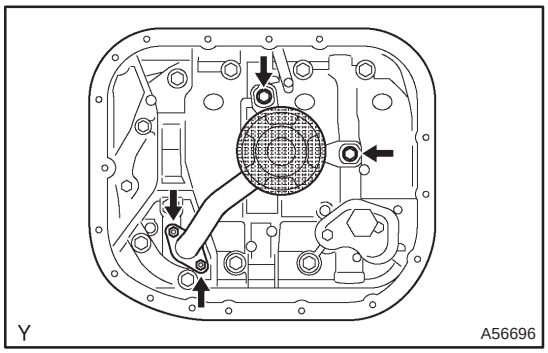

17. REMOVE OIL STRAINER SUB–ASSY

(a) Remove the 2 bolts, 2 nuts, oil strainer and gasket.

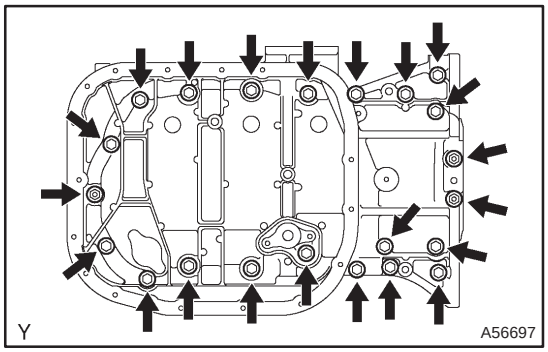

18. REMOVE OIL PAN SUB–ASSY

(a) Remove the 19 bolts and 3 nuts.

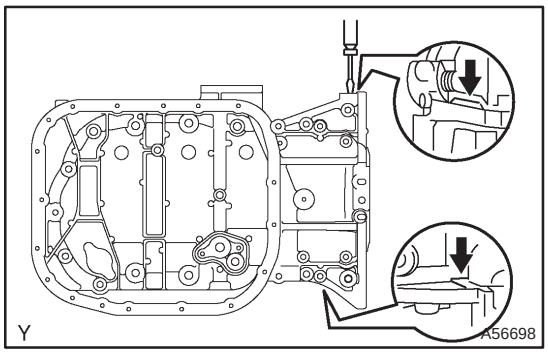

(b) Using a screwdriver, remove the oil pan by prying the portions between the cylinder block and No. 1 oil pan.

NOTICE:
Be careful not to damage the contact surfaces of the cylinder block and No. 1 oil pan.

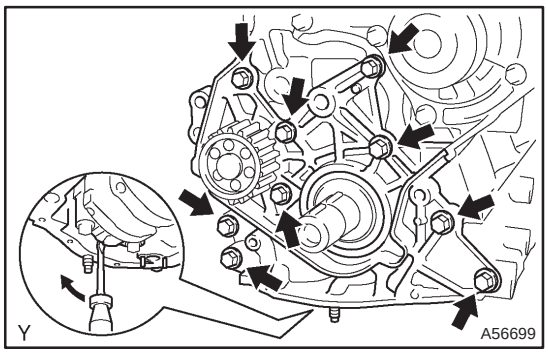

19. REMOVE OIL PUMP ASSY

(a) Remove the 9 bolts.
(b) Remove the oil pump by prying a screwdriver between the oil pump and main bearing cap.
(c) Remove the gasket.

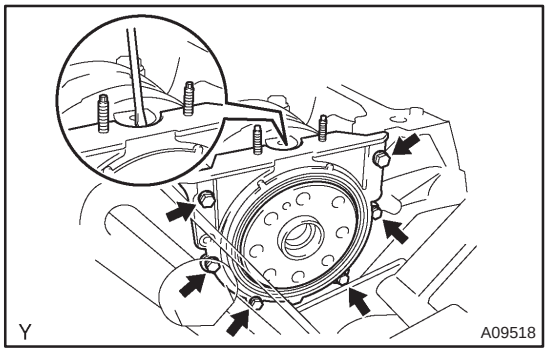

20. REMOVE ENGINE REAR OIL SEAL RETAINER

(a) Remove the 6 bolts.
(b) Using a screwdriver, remove the oil seal retainer by prying the portions between the oil seal retainer and main bearing cap.

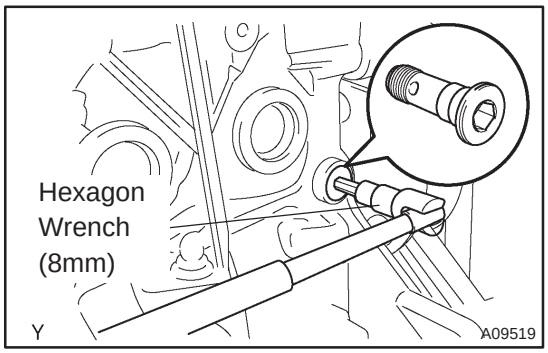

21. REMOVE OIL CHECK VALVE SUB–ASSY

(a) Using hexagon wrench (8mm), remove the pressure valve and gasket.

22. REMOVE CYLINDER BLOCK WATER DRAIN COCK SUB–ASSY

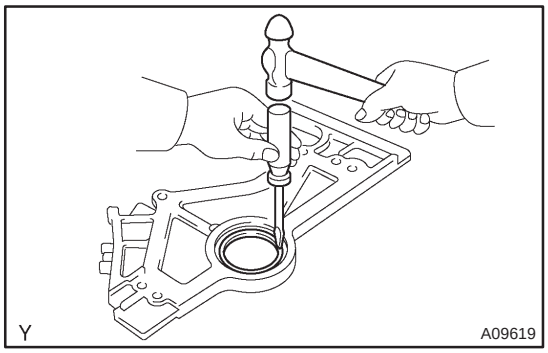

23. REMOVE CAMSHAFT OIL SEAL

(a) Using a screwdriver and a hammer, tap out the oil seal.

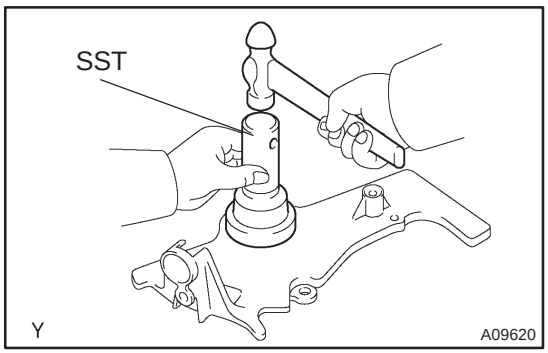

24. INSTALL CAMSHAFT OIL SEAL

(a) Using SST and a hammer, tap in a new oil seal until its surface is flush with the camshaft oil seal retainer edge.
SST 09223–46011

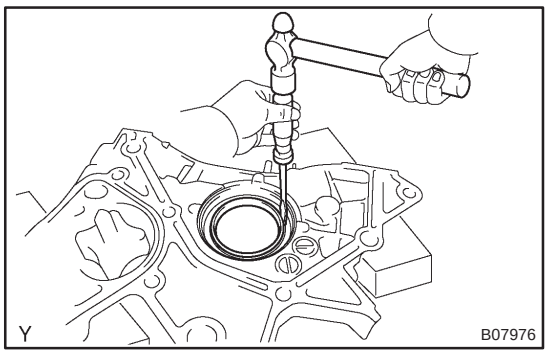

25. REMOVE CRANKSHAFT SEAL

(a) Using a screwdriver and a hammer, tap out the oil seal.

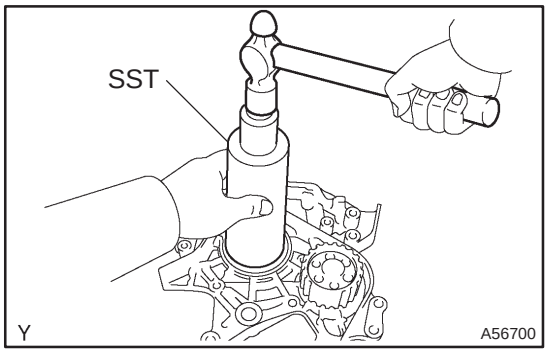

26. INSTALL CRANKSHAFT SEAL

(a) Using SST and a hammer, tap in a new oil seal until its surface is flush with the oil pump edge.
SST 09316–60011 (09316–00011, 09316–00021)

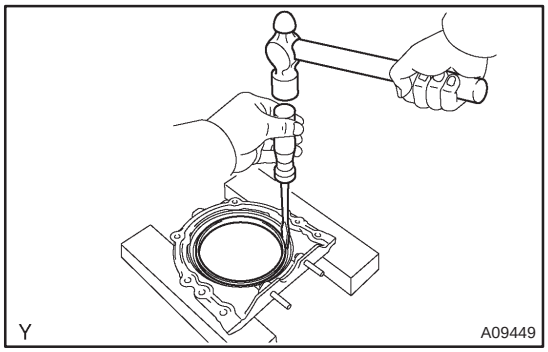

27. REMOVE ENGINE REAR OIL SEAL

(a) Using a screwdriver and a hammer, tap out the oil seal.

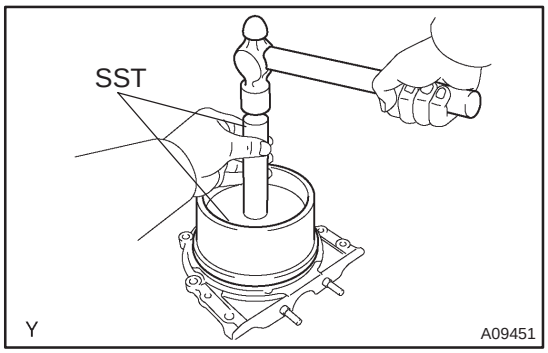

28. INSTALL ENGINE REAR OIL SEAL

(a) Using SST and a hammer, tap in a new oil seal until its surface is flush with the rear oil seal retainer edge.
SST 09223–15030, 09950–70010 (09951–07100)

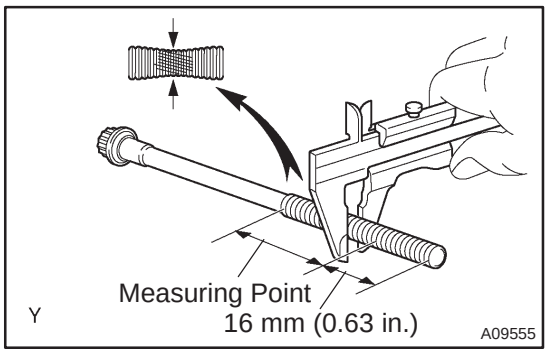

29. INSPECT CYLINDER HEAD SET BOLT

(a) Using vernier calipers, measure the tension portion diameter of the bolt.
Standard outside diameter:
10.75 – 11.00 mm (0.4232 – 0.4331 in.)
Minimum outside diameter: 10.40 mm (0.4094 in.)

If the diameter is less than minimum, replace the bolt.

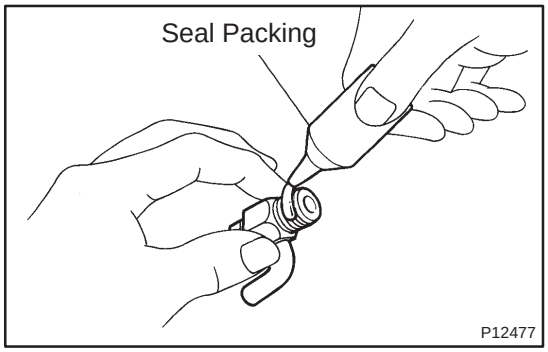

30. INSTALL CYLINDER BLOCK WATER DRAIN COCK SUB–ASSY

(a) Apply seal packing 2 or 3 threads.
Seal packing: Part No. 08826–00100 or equivalent

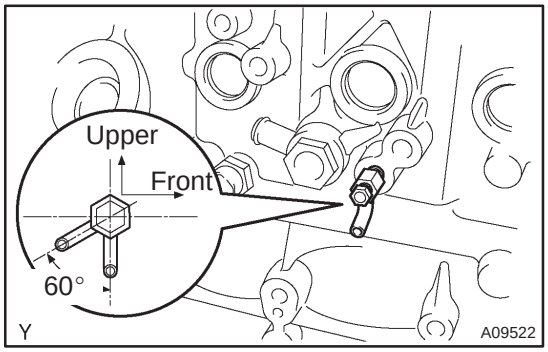

(b) Install the drain union.
Torque: 29 N·m (291 kgf·cm, 21 ft·lbf)

HINT:
After applying the specified torque, if the drain pipe of the drain union is not at the position shown in the illustration, rotate the drain union further clockwise and make the drain pipe face downward.

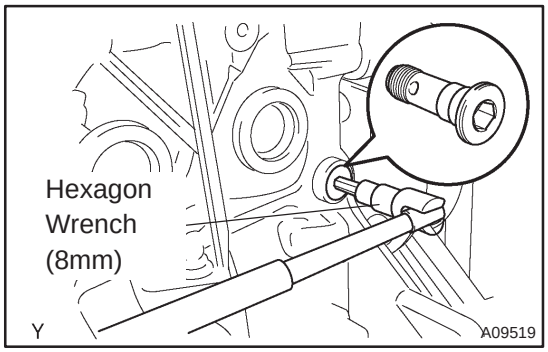

31. INSTALL OIL CHECK VALVE SUB–ASSY

(a) Using hexagon wrench (8mm), install a new gasket and the pressure valve.
Torque: 30 N·m (310 kgf·cm, 22 ft·lbf)

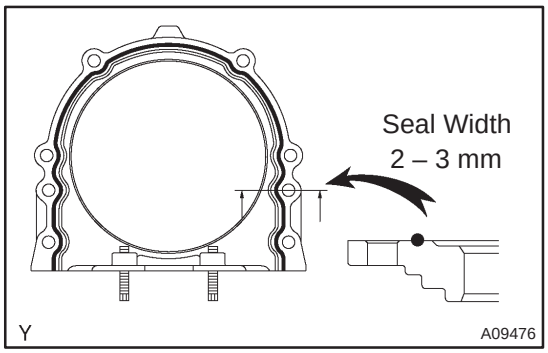

32. INSTALL ENGINE REAR OIL SEAL RETAINER

(a) Apply seal packing to the oil seal retainer as shown in the illustration.
Seal packing: Part No. 08826–00080 or equivalent

NOTICE:
- **Install a nozzle that has been cut to a 2 – 3 mm (0.08 – 0.12 in.) opening.**
- **Parts must be assembled within 15 minutes of application. Otherwise the material must be removed and reapplied.**
- **Immediately remove nozzle from the tube and reinstall the cap.**

(b) Install the oil seal retainer with 6 bolts. Uniformly tighten the bolt in several passes.
Torque: 7.4 N·m (75 kgf·cm, 65 in.·lbf)

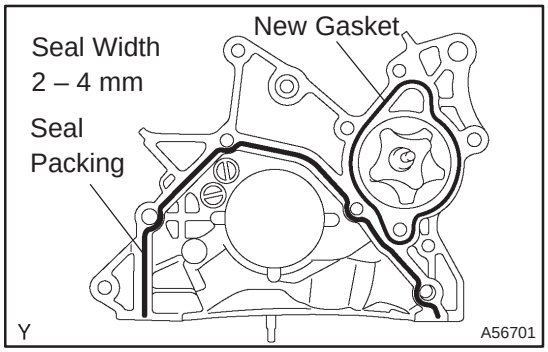

33. INSTALL OIL PUMP ASSY

(a) Apply seal packing to the oil pump as shown in the illustration.
Seal packing: Part No. 08826–00080 or equivalent

NOTICE:
- **Avoid applying an excessive amount to the surface.**
- **Install a nozzle that has been cut to a 2 – 4 mm (0.08 – 0.16 in.) opening**
- **Parts must be assembled within 15 minutes of application. Otherwise the material must be removed and reapplied.**
- **Immediately remove nozzle from the tube and reinstall the cap.**

(b) Install a new gasket to the oil pump.

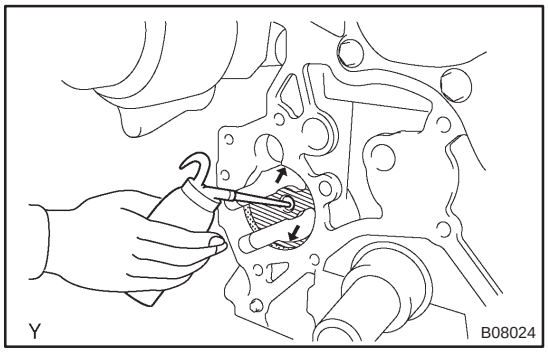

(c) Pour in 0.5 cm^3 (0.03 cu in.) or more of engine oil into the bushing of the cylinder block.

(d) Apply engine oil to the cylinder block side where it contacts with the oil pump driven rotor.

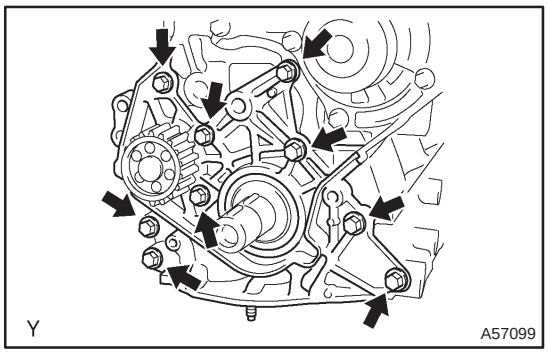

(e) Install the oil pump with the 9 bolts.
Torque: 31 N·m (320 kgf·cm, 23 ft·lbf)

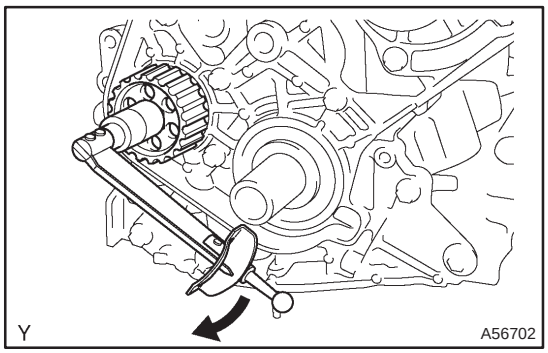

(f) Measure the oil pump rotating torque
(1) Check that the pump rotates smoothly without abnormal noise.
(2) Using a torque wrench, check the pump rotating torque.
Rotating torque: 3.0 N·m (30 kgf·cm, 26 in.·lbf) or less

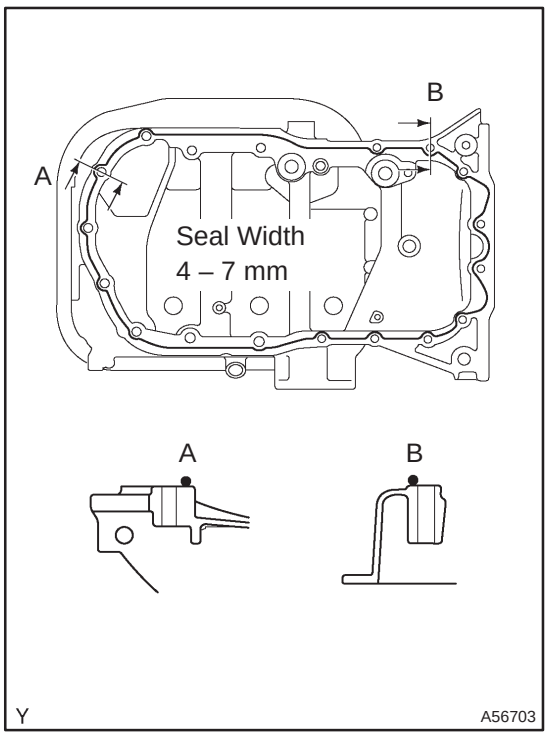

34. INSTALL OIL PAN SUB–ASSY

(a) Apply seal packing to the No. 1 oil pan as shown in the illustration.
Seal packing: Part No. 08826–00080 or equivalent

NOTICE:

- **Install a nozzle that has been cut to a 4 – 7 mm (0.16 – 0.28 in.) opening.**
- **Parts must be assembled within 15 minutes of application. Otherwise the material must be removed and reapplied.**
- **Immediately remove nozzle from the tube and reinstall the cap.**

(b) Install the oil pan with 19 bolts and 3 nuts.
Torque:
11 N·m (112 kgf·cm, 8 ft·lbf) for 10 mm head bolt and nut
21 N·m (210 kgf·cm, 15 ft·lbf) for 12 mm head bolt
42 N·m (429 kgf·cm, 31 ft·lbf) for 14 mm head bolt

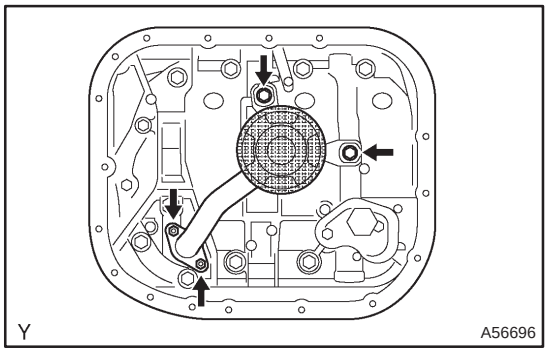

35. INSTALL OIL STRAINER SUB–ASSY

(a) Install a new gasket and the oil strainer with the 2 bolts and 2 nuts.
Torque:
21 N·m (210 kgf·cm, 15 ft·lbf) for bolt
13 N·m (135 kgf·cm, 10 ft·lbf) for nut

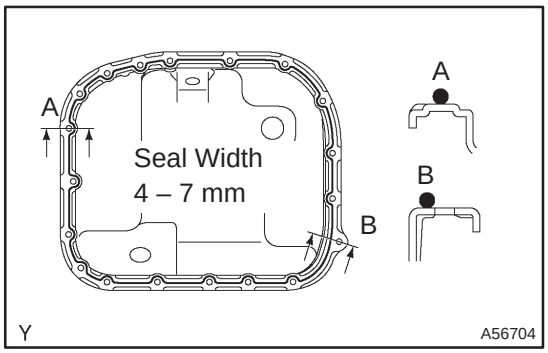

36. INSTALL OIL PAN SUB–ASSY NO.2

(a) Apply a seal packing to the oil pan as shown in the illustration.
Seal packing: Part No. 08826–00080 or equivalent

NOTICE:
- **Install a nozzle that has been cut to a 4 – 7 mm (0.16 – 0.28 in.) opening.**
- **Parts must be assembled within 15 minutes of application. Otherwise the material must be removed and reapplied.**
- **Immediately remove nozzle from the tube and reinstall the cap.**

(b) Install the oil pan with 16 bolts and 3 nuts. Uniformly tighten the bolts and nuts in several passes.
Torque: 12 N·m (120 kgf·cm, 9 ft·lbf)

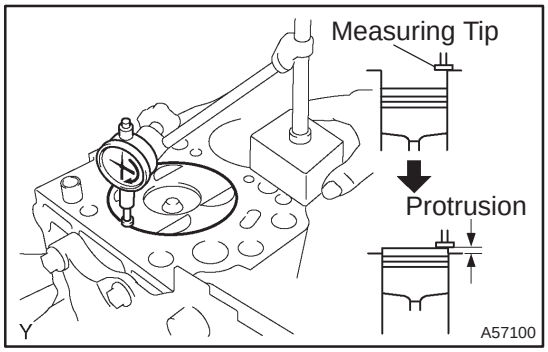

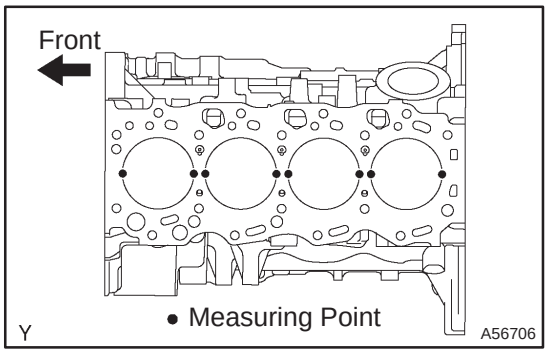

37. INSTALL CYLINDER HEAD SUB–ASSY

(a) Check piston protrusions for each cylinder.
(1) Find where the piston head protrudes most by slowly turning the crankshaft clockwise and counterclockwise.
(2) Measure each cylinder at 2 places as shown in the illustration, marking a total of 8 measurements.
(3) For the piston protrusion valve of each cylinder, use the average of the 2 measurements of each cylinder.
Protrusion: 0.165 – 0.425 mm (0.0065 – 0.0168 in.)

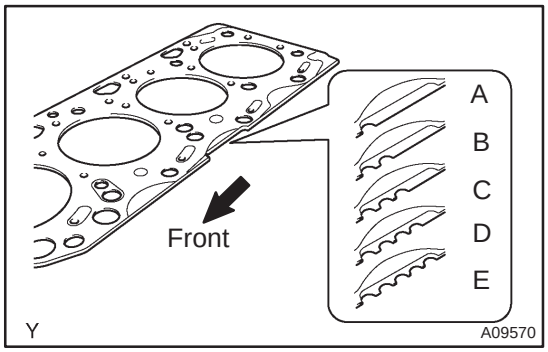

(b) Select a new cylinder head gasket.

HINT:

There are 5 sizes of new cylinder head gaskets, marked ”A”, ”B”, ”C”, ”D”, or ”E” according.

New installed cylinder head gasket thickness:

A	0.85 – 0.95 mm (0.0335 – 0.0374 in.)
B	0.90 – 1.00 mm (0.0354 – 0.0394 in.)
C	0.95 – 1.05 mm (0.0374 – 0.0413 in.)
D	1.00 – 1.10 mm (0.0394 – 0.0433 in.)
E	1.05 – 1.15 mm (0.0413 – 0.0453 in.)

(1) Select the largest piston protrusion value from the measurements made, then select a new appropriate gasket according to the table below.

Piston protrusion mm (in.)	Gasket size
0.165 – 0.220 (0.0065 – 0.0087)	Use A
0.220 – 0.270 (0.0087 – 0.0106)	Use B
0.270 – 0.320 (0.0106 – 0.0126)	Use C
0.320 – 0.370 (0.0126 – 0.0146)	Use D
0.370 – 0.425 (0.0146 – 0.0167)	Use E

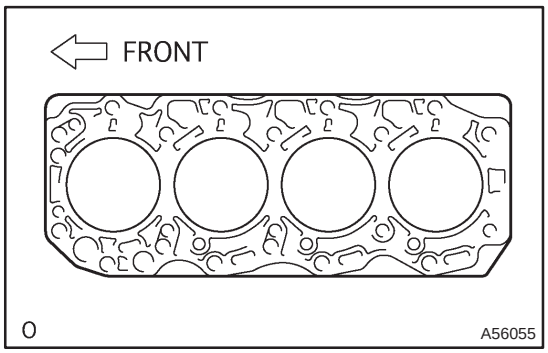

(c) Place a new cylinder head gasket in position on the cylinder block.

NOTICE:

Be careful of the installation direction.

(d) Place the cylinder head in position on the cylinder head gasket.

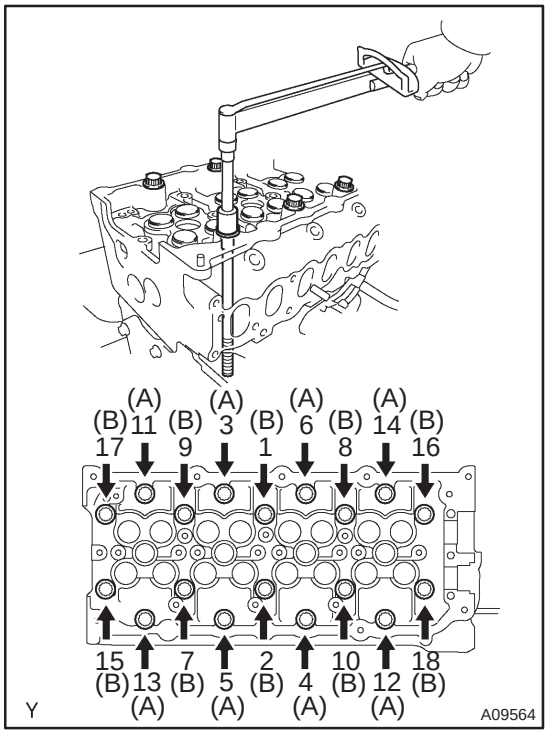

(e) Install the cylinder head bolts.

HINT:

The cylinder head bolts are tightened in 4 progressive steps (steps (3), (5), (6) and (7)).

(1) Apply a light coat of engine oil on the threads and under the heads of the cylinder head bolts and plate washers.

(2) Install the plate washer to the cylinder head bolt.

(3) Install and uniformly tighten the 18 cylinder head bolts and plate washers in several passes in the sequence shown.

Torque: 45 N·m (460 kgf·cm, 33 ft·lbf)

HINT:

Each bolt length is indicated in the illustration.

Bolt length:

(A)	160 mm (6.30 in.)
(B)	104 mm (4.09 in.)

If any of the cylinder head bolt does not meet the torque specification, replace the cylinder head bolts.

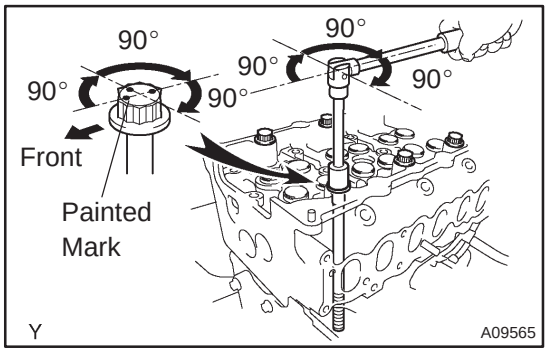

(4) Mark the front of the cylinder head bolt with paint.
(5) Retighten the cylinder head bolts additional 90° in the numerical order shown.
(6) Retighten the cylinder head bolts additional 90° in the numerical order shown.
(7) Retighten the cylinder head bolts additional 90° in the numerical order shown.
(8) Check that the painted mark is at the intake manifold side now.

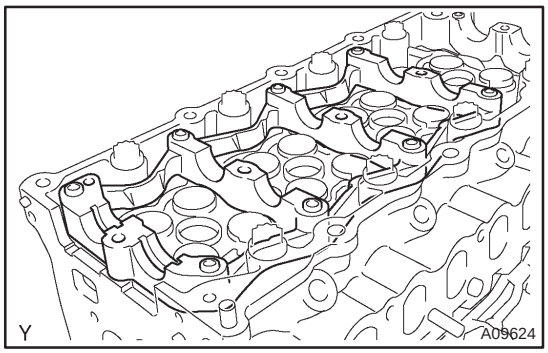

38. INSTALL CAMSHAFT SUB–ASSY, NO.1

(a) Place the camshaft carrier in position on the cylinder head.

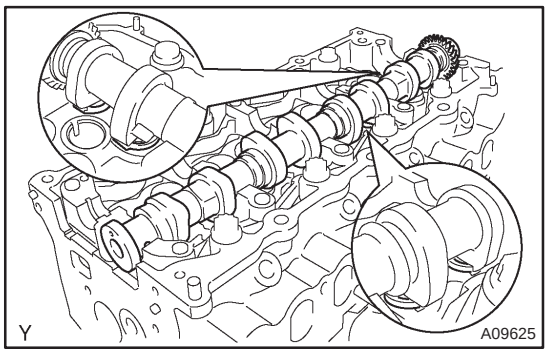

(b) Apply engine oil to the cam and gear of the camshaft, and the journal of the camshaft carrier.
(c) Place the intake camshaft on top of the camshaft carrier as shown in the illustration so that the No. 3 and No. 4 of cylinder cam lobes face downward.

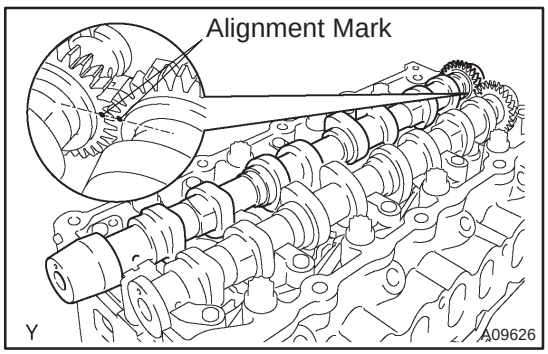

39. INSTALL CAMSHAFT SUB–ASSY, NO.2

(a) Apply engine oil to the cam and gear of the camshaft, and the journal of the camshaft carrier.
(b) Engage the exhaust camshaft gear to the intake camshaft gear by matching the alignment marks on each gear.
(c) Roll down the exhaust camshaft onto the bearing journals while engaging gears with each other.

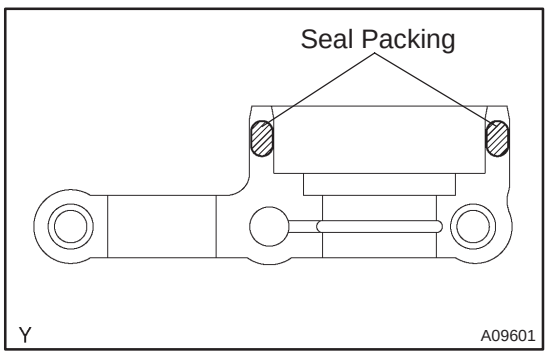

(d) Install the camshaft bearing caps.
(1) Remove any old packing (FIPG) material from the No.5 camshaft bearing cap.
(2) Apply seal packing to the No. 5 camshaft bearing cap as shown in the illustration.

Seal packing: Part No. 08826–00080 or equivalent

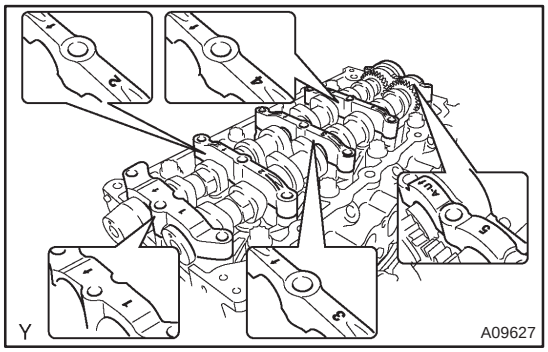

(3) Place the 5 bearing caps in their proper locations.

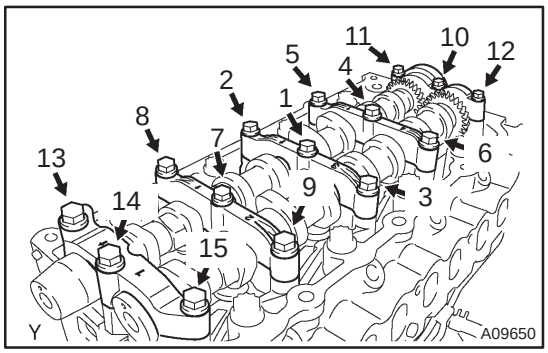

(4) Install and uniformly tighten the 15 bearing cap bolts in several passes and in the sequence shown.

Torque: 20 N·m (204 kgf·cm, 15 ft·lbf)

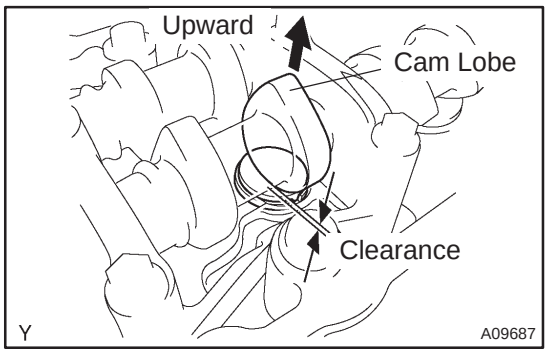

40. INSPECT VALVE CLEARANCE

(a) Turn the crankshaft so that the cam lobe of the camshaft on the inspecting valve points upward.

(b) Using a feeler gauge, measure the clearance between the valve lifter and the camshaft.

(c) Measure the clearance at 16 places.

(d) Record the out–of–specification valve clearance measurements. They will be used later to determine the required replacement adjusting shim.

Valve clearance (Cold) :

Intake	0.20 – 0.30 mm (0.008 – 0.012 in.)
Exhaust	0.35 – 0.45 mm (0.014 – 0.018 in.)

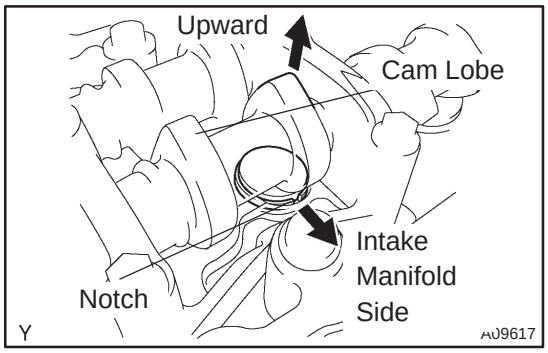

41. ADJUST VALVE CLEARANCE

(a) Remove the adjusting shim.

(1) Turn the crankshaft so that the cam lobe of the camshaft on the adjusting valve points upward.

(2) Position the notch of the valve lifter facing the intake manifold side.

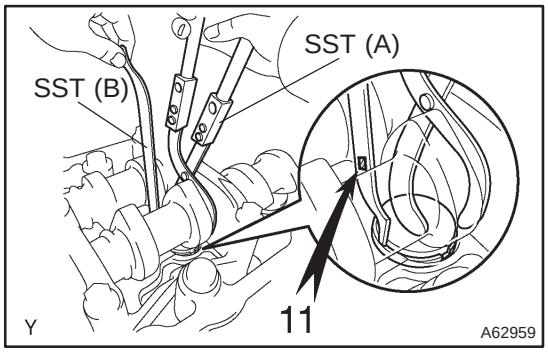

(3) Using SST (A), press down the valve lifter and place SST (B) between the camshaft and valve lifter. Remove SST (A).

SST 09248–55050 (09248–05510, 09248–05520)

HINT:

Apply SST (B) on the side marked with ”11”.

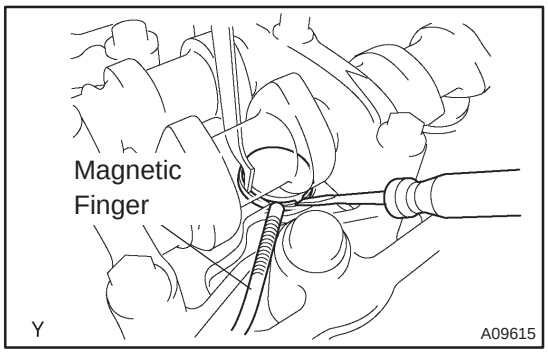

(4) Remove the adjusting shim with a small screwdriver and magnetic finger.

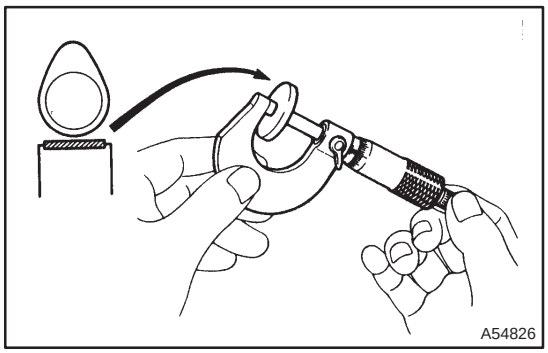

(b) Determine the replacement adjusting shim size by following the formula:

(1) Using a micrometer, measure the thickness of the removed shim.

(2) Calculate the thickness of a new shim so that the valve clearance comes within specified value.

HINT:

- T ..... Thickness of removed adjusting shim
- A ..... Measured valve clearance
- N ..... Thickness of new adjusting shim
- Intake: N = T + (A – 0.25 mm (0.010 in.))
- Exhaust: N = T + (A – 0.40 mm (0.016 in.))

(3) Select a new shim with a thickness as close as possible to the calculated value.

HINT:

Shims are available in 17 sizes in increments of 0.05 mm (0.0020 in.), from 2.50 mm (0.0984 in.) to 3.30 mm (0.1299 in.).

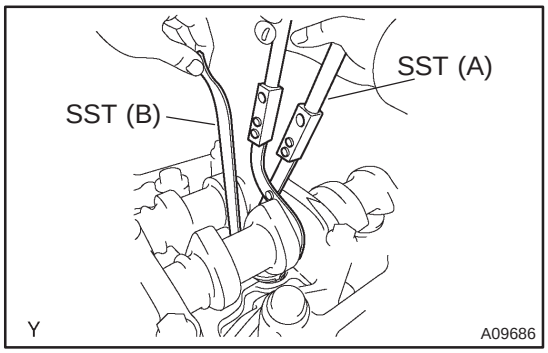

(c) Install a new adjusting shim.

(1) Place a new adjusting shim on the valve lifter.

(2) Using SST (A), press down the valve lifter and remove SST (B).

SST 09248–55050 (09248–05510, 09248–05520)

(d) Recheck the valve clearance.

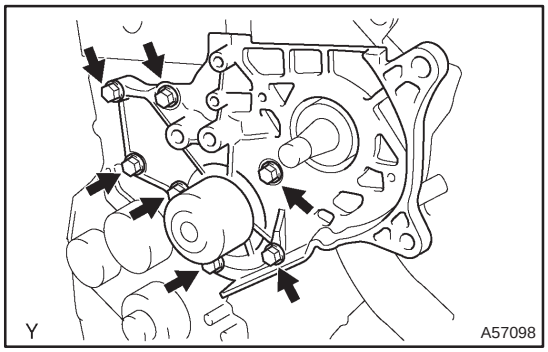

42. INSTALL WATER PUMP ASSY

(a) Install a new gasket and the water pump with the 7bolts.
Torque: 31 N·m (320 kgf·cm, 23 ft·lbf)

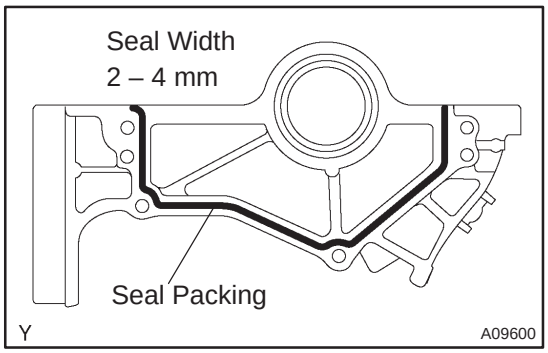

43. INSTALL CAMSHAFT OIL SEAL RETAINER

(a) Apply seal packing to the oil seal retainer as shown in the illustration.
Seal packing: Part No. 08826–00080 or equivalent

NOTICE:

- **Install a nozzle that has been cut to a 2 – 4 mm (0.08 – 0.16 in.) opening.**
- **Parts must be assembled within 15 minutes of application. Otherwise the material must be removed and reapplied.**
- **Immediately remove nozzle from the tube and reinstall the cap.**

(b) Install the oil seal retainer with 4 bolts. Uniformly tighten the 4 bolts in several passes.
Torque: 8.8 N·m (90 kgf·cm, 78 in.·lbf)

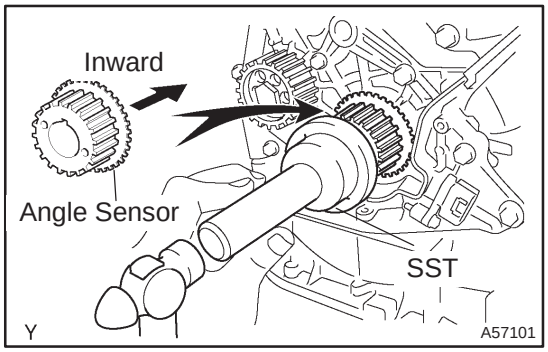

44. INSTALL CRANKSHAFT TIMING PULLEY

(a) Align the pulley set key with the key groove of the timing pulley.

(b) Using SST and a hammer, tap in the timing pulley, facing the angle sensor inward.
SST 09223–46011

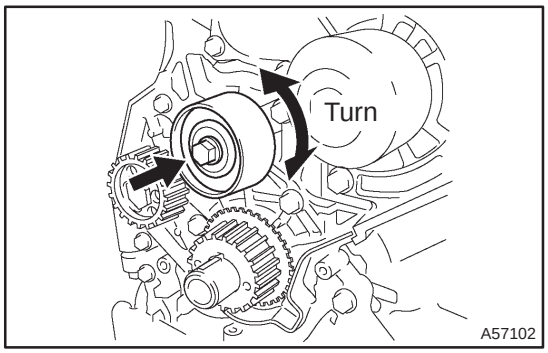

45. INSTALL TIMING BELT IDLER SUB–ASSY NO.2

(a) Install the idler pulley with the bolt.
Torque: 47 N·m (475 kgf·cm, 34 ft·lbf)

(b) Check that the idler pulley moves smoothly.

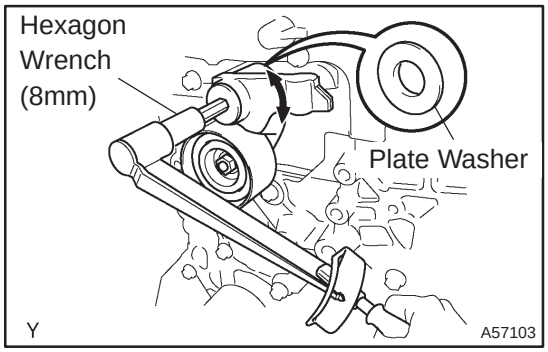

46. INSTALL TIMING BELT IDLER SUB–ASSY NO.1

(a) Using an hexagon wrench (8mm), install the plate washer and idler pulley with the idler pulley shaft.
Torque: 35 N·m (350 kgf·cm, 25 ft·lbf)
(b) Check that the pulley bracket moves smoothly.

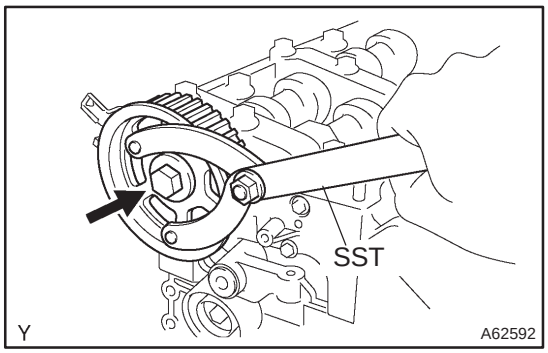

47. INSTALL CAMSHAFT TIMING PULLEY

(a) Install the pulley set key to the key groove of the camshaft.
(b) Align the pulley set key with the key groove of the timing pulley, and slide on the timing pulley.
(c) Using SST, install the pulley bolt.
SST 09960–10010 (09962–01000, 09963–01000)
Torque: 88 N·m (899 kgf·cm, 65 ft·lbf)

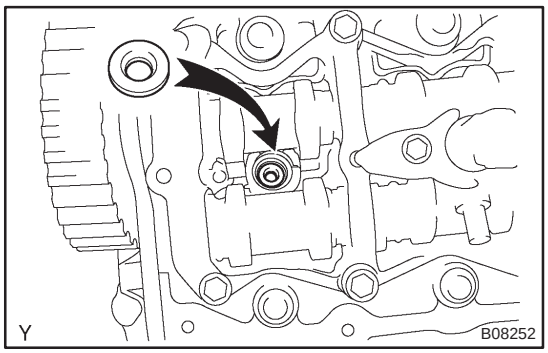

48. INSTALL INJECTOR ASSY

(a) Install 4 new nozzle seats to the cylinder head.

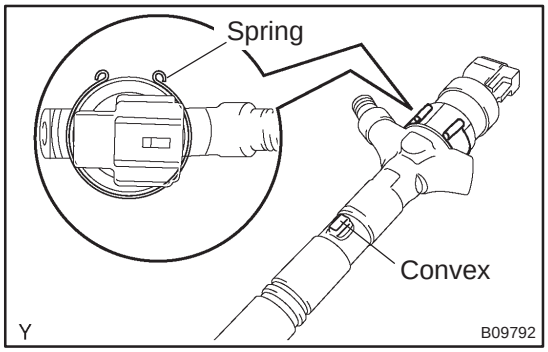

(b) Set the spring to each injector.

NOTICE:
Be sure to make the opening direction of the spring and the direction of the injector positioning convex meet.

(c) Install a new back–up ring and O–ring to each injector.
(d) Apply a light coat of oil onto O–ring for each injector.

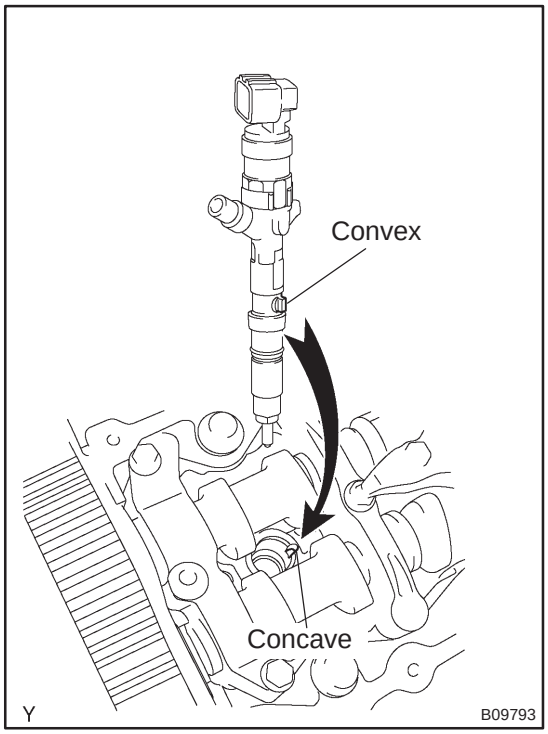

(e) Meet the injector positioning convex to the positioning concave at the cylinder head side and install the injector to the cylinder head.

NOTICE:

- **At this time, insert the injector until it touches the nozzle sheet surface.**
- **When installing the injector to the cylinder head and in case that the injector comes to float up with the reaction of O–ring, pull out the injector once, install it again.**
- **During the time after equipping the head cover and before installing the injection pipe, install the irregular object prevention cover.**
- **Do not exchange the injector cylinder.**

(f) Place the 4 nozzle holder clamps to each injector.

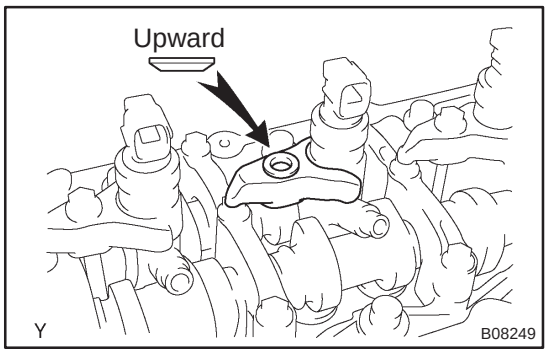

49. INSTALL NOZZLE HOLDER CLAMP

(a) Set the washer on the nozzle holder clamp as shown in the illustration.

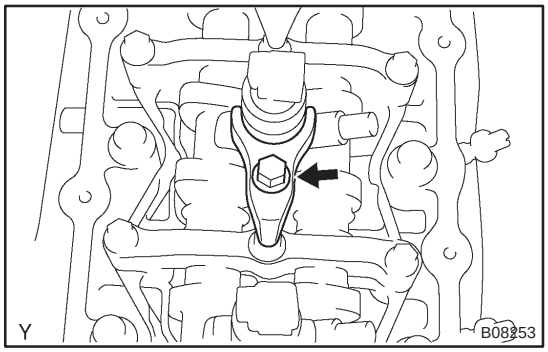

(b) Tighten the bolts.

HINT:

Apply a light coat of engine oil on the threads and under the heads of the nozzle holder clamp bolts.

Torque: 27 N·m (275 kgf·cm, 20 ft·lbf)

NOTICE:

At this time, the clamp has its cam cap bolt as a fulcrum and clip the injector at the fork portion.

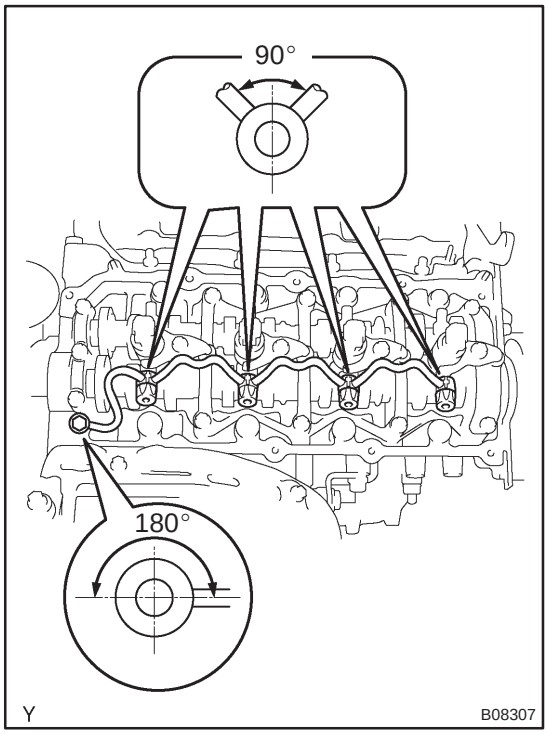

50. INSTALL NOZZLE LEAKAGE PIPE ASSY

(a) Place the leakage pipe and 5 new gaskets.

NOTICE:

Do the installation of the gasket craw within the angle range shown in the illustration.

(b) Apply a light coat of oil onto 4 hollow screws and union bolt.

(c) Tighten the 4 hollow screws and union bolt by hand.

(d) Tighten the 4 hollow screws and union bolt.

Torque:
Hollow screw 18 N·m (184 kgf·cm, 13 ft·lbf)
Union bolt 22 N·m (224 kgf·cm, 16 ft·lbf)

(e) Check that there is no leak from nozzle leakage pipe connection.

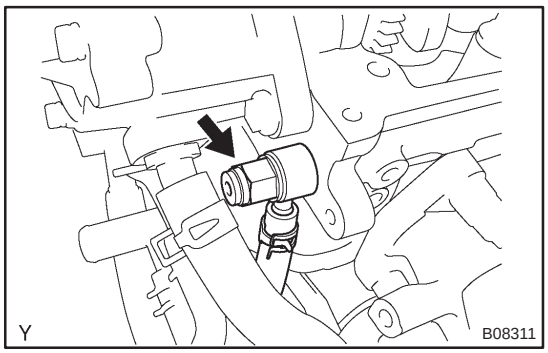

(1) Disconnect the fuel hose, and remove the check valve, No. 2 nozzle leakage pipe and gasket.

(2) Purchase a new check valve.

HINT:
Part No. 23122–27010

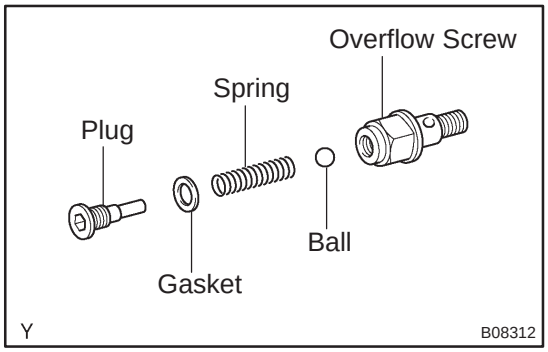

(3) Remove the plug, gasket, spring and ball.

(4) Install the plug with the gasket to the overflow screw.

Torque: 9.8 N·m (100 kgf·cm, 7 ft.·lbf)

(5) Install the No. 2 nozzle leakage pipe and gasket with the check valve to the cylinder head.

Torque: 21 N·m (214 kgf·cm, 15 ft·lbf)

(6) Apply a light coat of soapy water (any fluid to detect fuel leakage) on the nozzle leakage pipe connection.

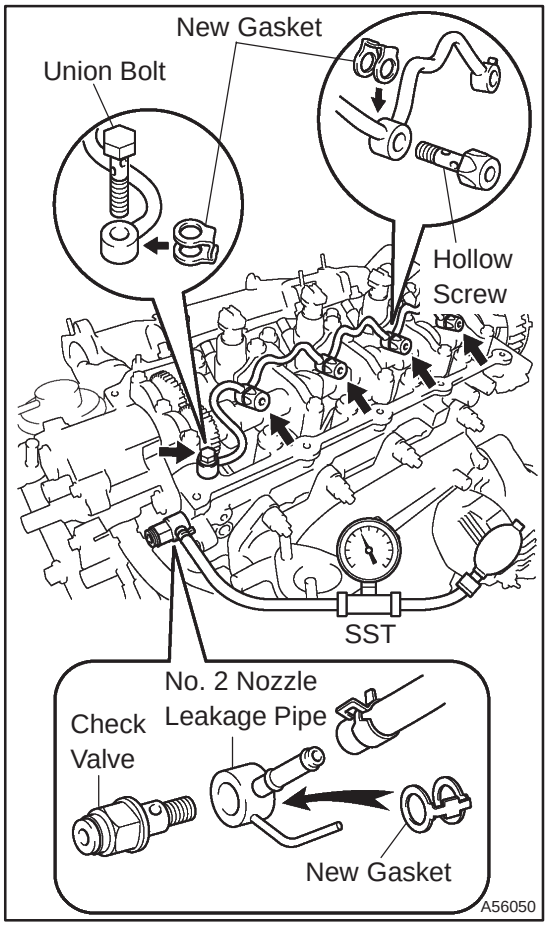

(7) Using SST (turbocharger pressure gauge), apply the SST to the fuel return side of the No. 2 nozzle leakage pipe, and maintain 100 kPa (1 kgf/cm^2, 14.5 psi) of pressure for 600 seconds to check that there are no bubbles from the soap–applied places.

SST 09992–00242

(8) After checking fuel leaks, wipe off soapy water from nozzle leakage pipe connection.

(9) Remove SST, check valve, No. 2 nozzle leakage pipe and gasket.

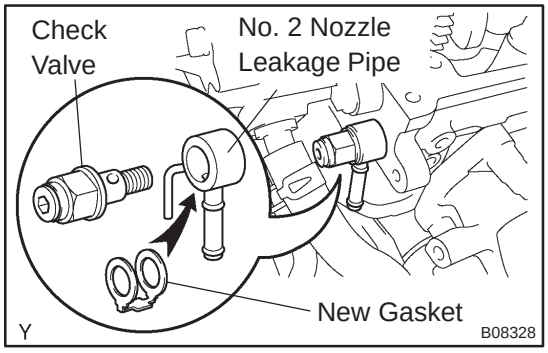

(10) Reinstall the No. 2 nozzle leakage pipe and a new gasket with the check valve.

Torque: 21 N·m (214 kgf·cm, 15 ft·lbf)

HINT:

Never reinstall the disassembled check valve on the engine.

(11) Reconnect the fuel hose to the No. 2 nozzle leakage pipe.

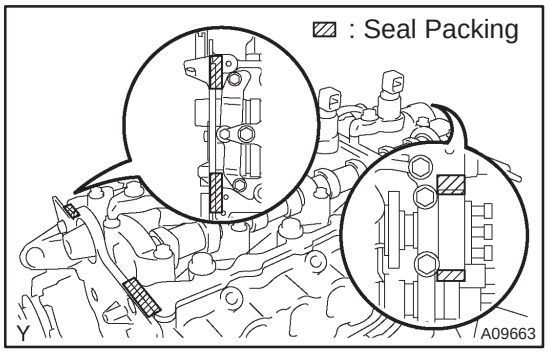

51. INSTALL CYLINDER HEAD COVER SUB–ASSY

(a) Remove any old packing (FIPG) material.

(b) Apply seal packing to the cylinder head.

Seal packing: Part No. 08826–00080 or equivalent

(c) Install the gasket to the head cover.

(d) Install the cylinder head cover with 10 bolts.

Torque: 13 N·m (135 kgf·cm, 10 ft·lbf)

(e) Install 4 new nozzle holder seals.

CYLINDER HEAD ASSY (1CD–FTV)

COMPONENTS

140L5–01

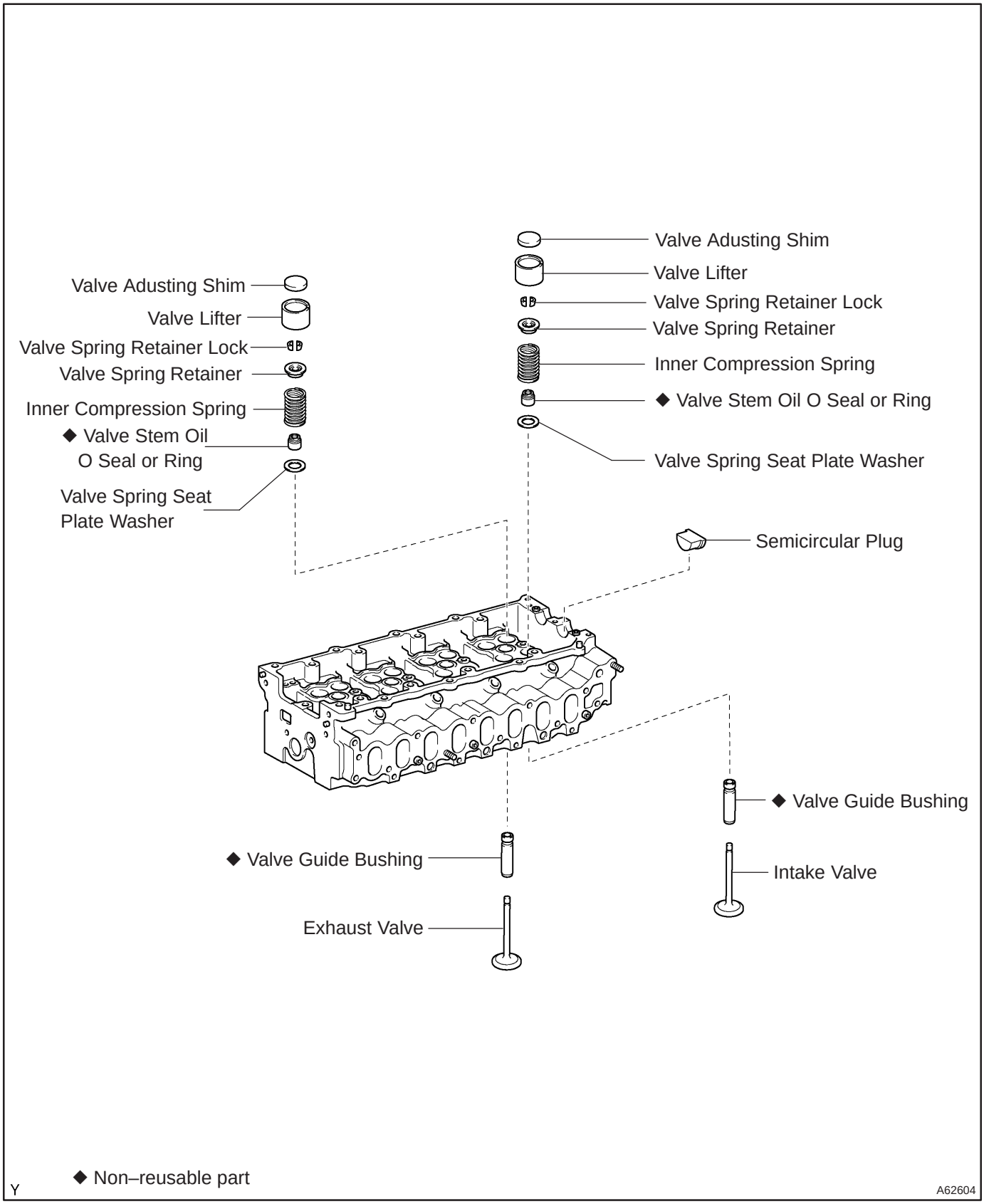

OVERHAUL

1. REMOVE VALVE LIFTER

HINT:
Arrange the valve lifters in the correct order.

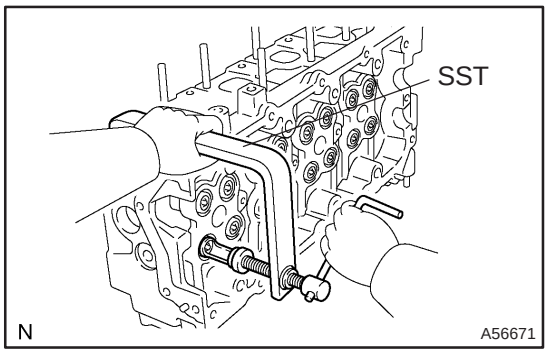

2. REMOVE INTAKE VALVE

(a) Using SST, compress the valve spring and remove the 2 keepers.
SST 09202–70020 (09202–00010)
(b) Remove the spring retainer, valve spring and valve.

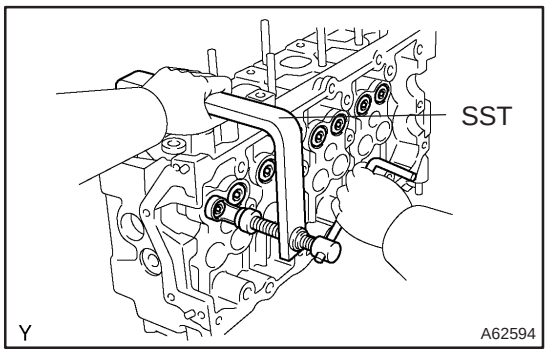

3. REMOVE EXHAUST VALVE

(a) Using SST, compress the valve spring and remove the 2 keepers.
SST 09202–70020 (09202–00010)
(b) Remove the spring retainer, valve spring and valve.

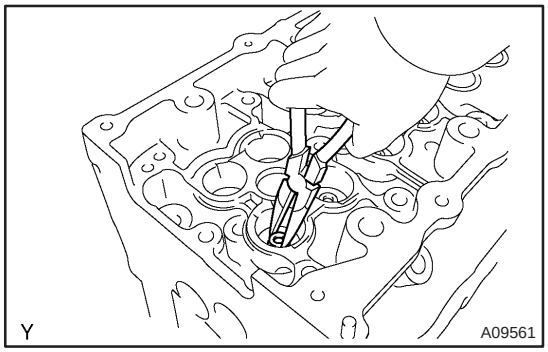

4. REMOVE VALVE STEM OIL O SEAL OR RING

(a) Using needle–nose pliers, remove the oil seal.

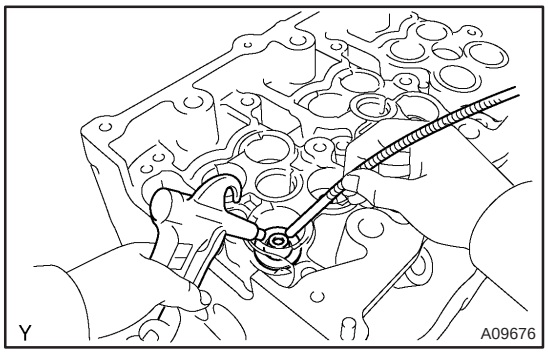

5. REMOVE VALVE SPRING SEAT PLATE WASHER

(a) Using compressed air and a magnetic finger, remove the spring seat by blowing air.

HINT:
Arrange the valves, valve springs, spring seats and spring retainers in the correct order.

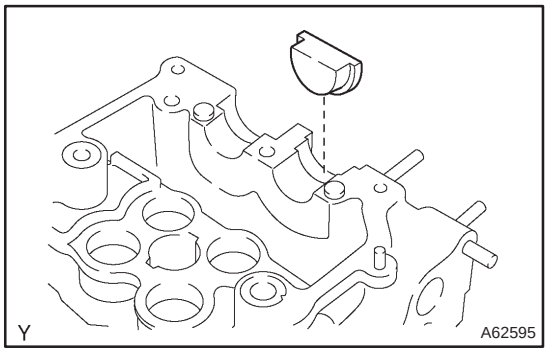

6. REMOVE SEMICIRCULAR PLUG

7. REMOVE W/HEAD TAPER SCREW PLUG NO.1

(a) Using a hexagon wrench (6mm), remove the 3 plugs.
SST 99999–70037

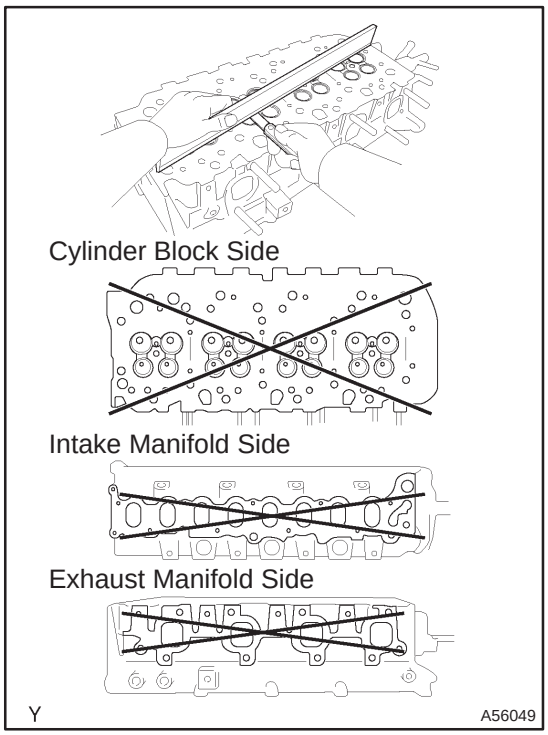

8. INSPECT CYLINDER HEAD FOR FLATNESS

(a) Using a precision straight edge and feeler gauge, measure the surfaces contacting the cylinder block and the manifolds for warpage.

Maximum warpage:

Cylinder block side	0.08mm(0.0031in.)
Intake manifold side	0.20mm(0.0079in.)
Exhaust manifold side	0.20mm(0.0079in.)

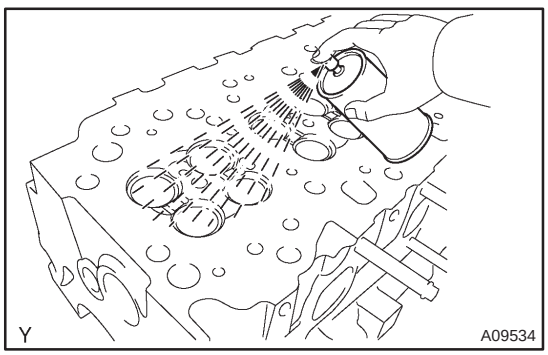

9. INSPECT CYLINDER HEAD FOR CRACKS

(a) Using dye penetrant, check the intake ports, exhaust ports and cylinder block contact surface for cracks.

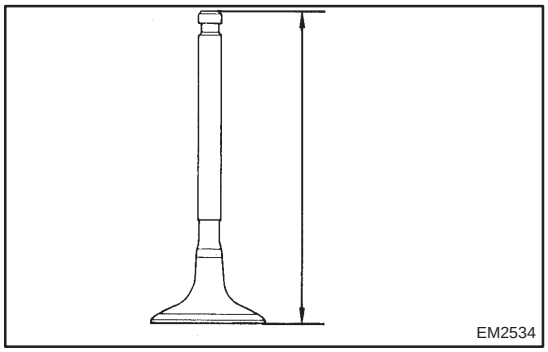

10. INSPECT INTAKE VALVE

(a) Check the valve overall length.
Standard overall length: 102.53 mm (4.0366 in.)
Minimum overall length: 102.10 mm (4.0197 in.)

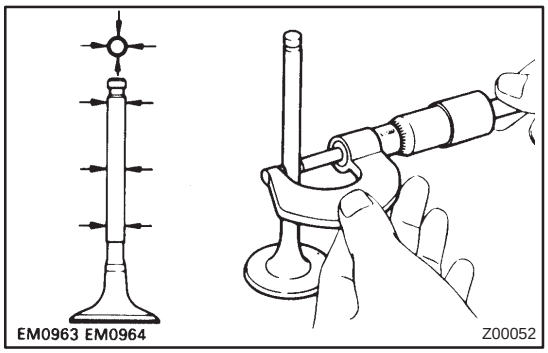

(b) Using a micrometer, measure the diameter of the valve stem.
Valve stem diameter:
5.970 – 5.985 mm (0.2350 – 0.2356 in.)

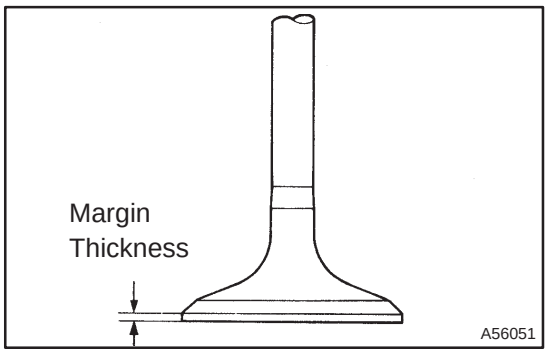

(c) Check the valve head margin thickness.
Standard margin thickness: 0.9 mm (0.035 in.)
Minimum margin thickness: 0.6 mm (0.0247 in.)

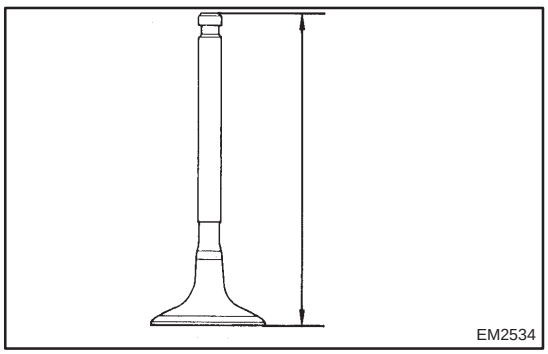

11. INSPECT EXHAUST VALVE

(a) Check the valve overall length.
Standard overall length: 101.97 mm (4.0146 in.)
Minimum overall length: 101.55 mm (3.9980 in.)

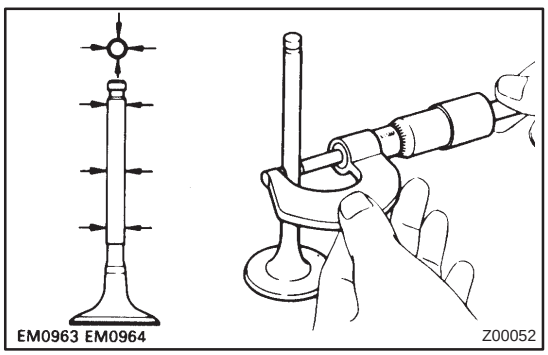

(b) Using a micrometer, measure the diameter of the valve stem.
Valve stem diameter:
5.960 – 5.975 mm (0.2346 – 0.2352 in.)

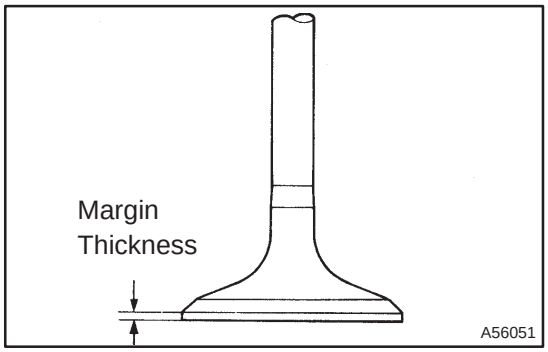

(c) Check the valve head margin thickness.
Standard margin thickness: 0.9 mm (0.035 in.)
Minimum margin thickness: 0.6 mm (0.024 in.)

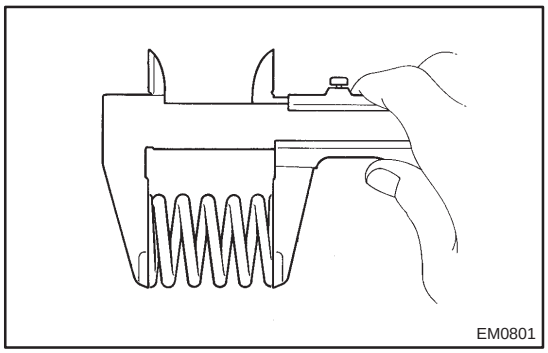

12. INSPECT INNER COMPRESSION SPRING

(a) Using vernier calipers, measure the free length of the valve spring.
Free length: 40.45 mm (1.5925 in.)

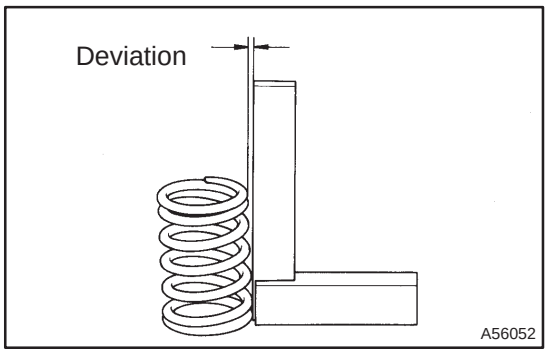

(b) Using a steel square, measure the deviation of the valve spring.
Maximum deviation: 2.0 mm (0.079 in.)

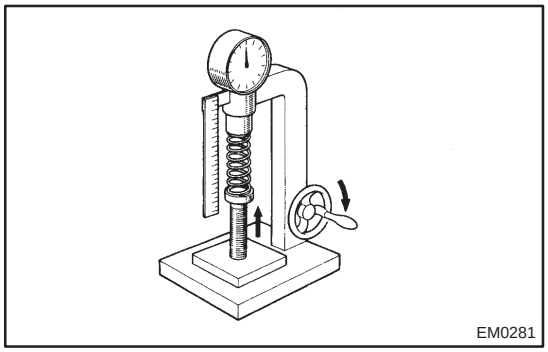

(c) Using a spring tester, measure the tension of the valve spring at the specified installed length.
Installed tension:
177 – 195 N (18.0 – 19.9 kgf, 39.7 – 44.1 lbf) at 31.1 mm (1.224 in.)

If the installed tension is not as specified, replace the valve spring.

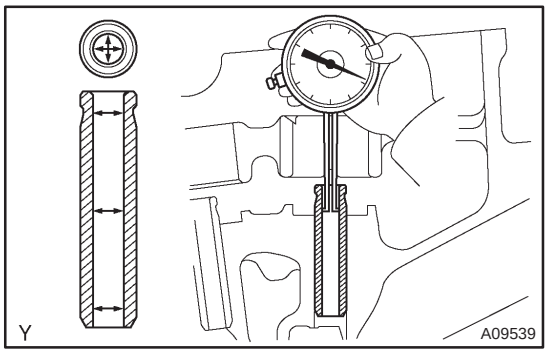

13. INSPECT VALVE GUIDE BUSHING OIL CLEARANCE

(a) using a caliper gauge, measure the inside diameter of the guide bushing.
Bushing inside diameter:
6.010 – 6.030 mm (0.2366 – 0.2374 in.)

(b) Subtract the valve stem diameter measurement from the guide bushing inside diameter measurement.

Standard oil clearance:

Intake	0.025 – 0.060 mm (0.0010 – 0.0024 in.)
Exhaust	0.035 – 0.070 mm (0.0014 – 0.0028 in.)

Maximum oil clearance:

Intake	0.08 mm (0.0031 in.)
Exhaust	0.10 mm (0.0039 in.)

14. REMOVE INTAKE VALVE GUIDE BUSH

(a) Heat the cylinder head to 80 – 100°C (176 – 212°F).

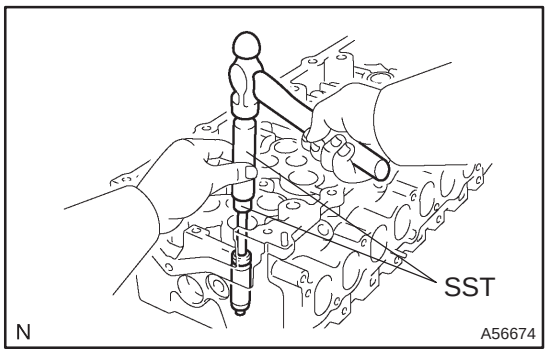

(b) Using SST and a hammer, tap out the guide bushing.
SST 09201–10000 (09201–01060), 09950–70010 (09951–07100)

15. REMOVE EXHAUST VALVE GUIDE BUSH

(a) Heat the cylinder head to 80 – 100°C (176 – 212°F).

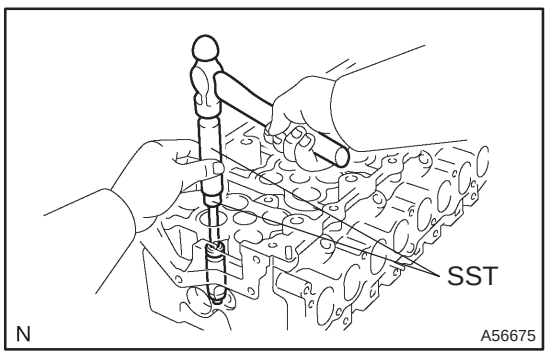

(b) Using SST and a hammer, tap out the guide bushing.
SST 09201–10000 (09201–01060), 09950–70010 (09951–07100)

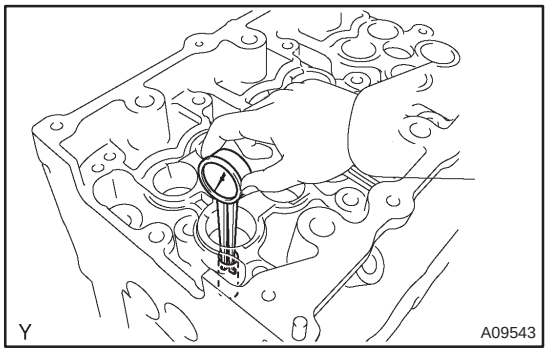

16. INSTALL INTAKE VALVE GUIDE BUSH

(a) Using a caliper gauge, measure the bushing bore diameter of the cylinder head.

Diameter: 10.985 – 11.006 mm (0.4325 – 0.4333 in.)

If the bushing bore diameter of the cylinder head is greater then 11.006 mm (0.4333 in.), machine the bushing bore to the dimension of 11.035 – 11.056 mm (0.4344 – 0.4353 in.).

HINT:

Bushing size	Bushing bore diameter mm (in.)
Use STD	10.985 – 11.006 (0.4325 – 0.4333)
Use O/S 0.05	11.035 – 11.056 (0.4344 – 0.4353)

(b) Heat the cylinder head to 80 – 100°C. (176 – 212°F)

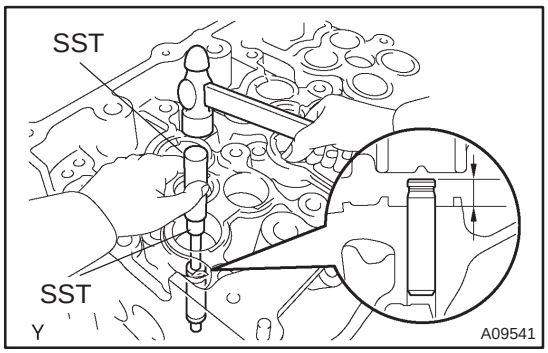

(c) Using SST and a hammer, top in a new guide bushing to the specified protrusion height.

SST 09201–10000 (09201–01060), 09950–70010 (09951–07100)

Protrusion height:
10.05 – 10.45 mm (0.3957 – 0.4114 in.)

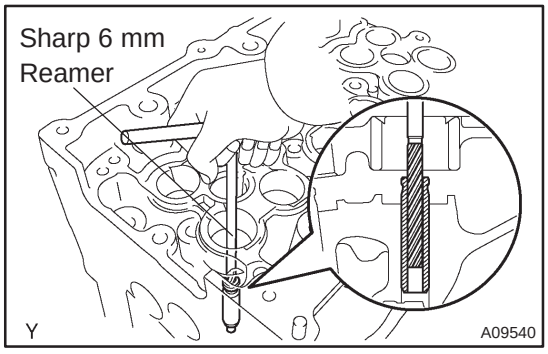

(d) Using a sharp 6 mm reamer, ream the guide bushing to obtain the standard specified clearance between the guide bushing and valve stem.

Standard oil clearance:
0.025 – 0.060 mm (0.0010 – 0.0024 in.)

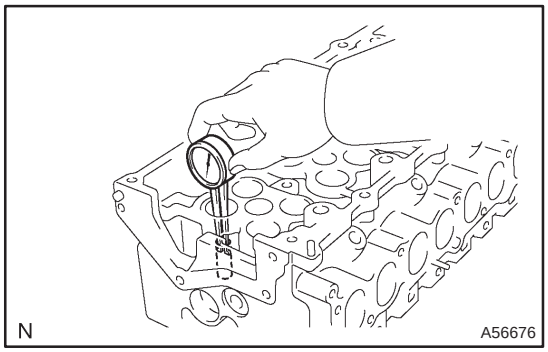

17. INSTALL EXHAUST VALVE GUIDE BUSH

(a) Using a caliper gauge, measure the bushing bore diameter of the cylinder head.

Diameter: 10.985 – 11.006 mm (0.4325 – 0.4333 in.)

If the bushing bore diameter of the cylinder head is greater then 11.006 mm (0.4333 in.), machine the bushing bore to the dimension of 11.035 – 11.056 mm (0.4344 – 0.4353 in.).

HINT:

Bushing size	Bushing bore diameter mm (in.)
Use STD	10.985 – 11.006 (0.4325 – 0.4333)
Use O/S 0.05	11.035 – 11.056 (0.4344 – 0.4353)

(b) Heat the cylinder head to 80 – 100°C. (176 – 212°F)

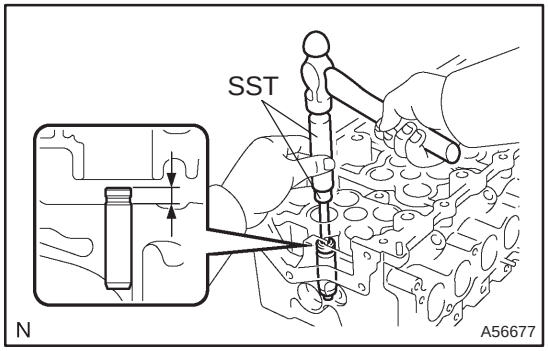

(c) Using SST and a hammer, tap in a new guide bushing to the specified protrusion height.

SST 09201–10000 (09201–01060), 09950–70010 (09951–07100)

Protrusion height:
9.65 – 10.05 mm (0.3799 – 0.3957 in.)

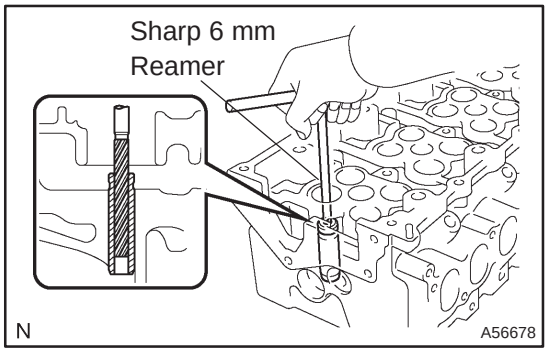

(d) Using a sharp 6 mm reamer, ream the guide bushing to obtain the standard specified clearance between the guide bushing and valve stem.

Standard oil clearance:
0.035 – 0.070 mm (0.0014 – 0.0028 in.)

18. INSPECT VALVE SEATS

(a) Apply a light coat of prussian blue (or white lead) to the valve face.

(b) Lightly press the valve against the seat.

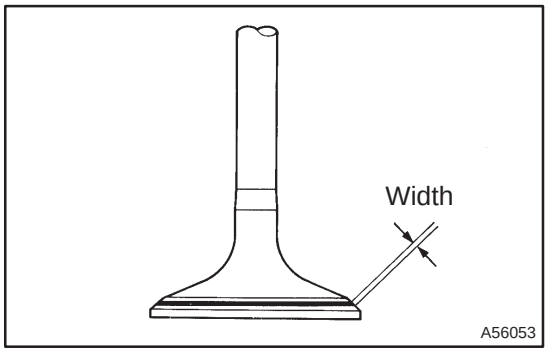

(c) Check the valve face and seat according to the following procedure.
  (1) If blue appears 360° around the face, the valve is concentric. If not, replace the valve.
  (2) If blue appears 360° around the valve seat, the guide and face are concentric. If not, resurface the seat.
  (3) Check that the seat contact is in the middle of the valve face with the following width.

Intake	1.2 – 1.6 mm (0.047 – 0.063 in.)
Exhaust	1.6 – 2.0 mm (0.063 – 0.079 in.)

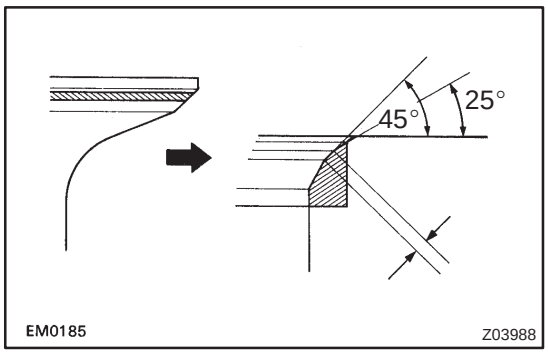

19. REPAIR INTAKE VALVE SEATS

NOTICE:

Take off a cutter gradually to make smooth valve seats.

(a) If the seating is too high on the valve face, use 25° and 45° cutters to correct the seat.

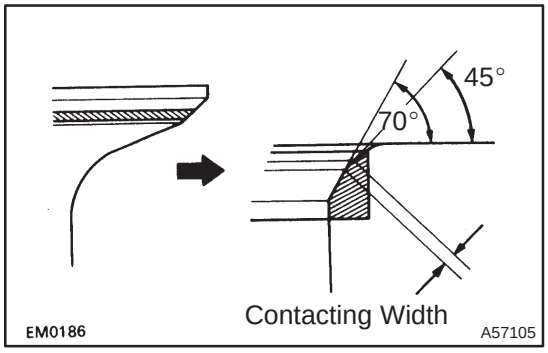

(b) If the seating is too low on the valve face, use 70 ° and 45° cutters to correct the seat.

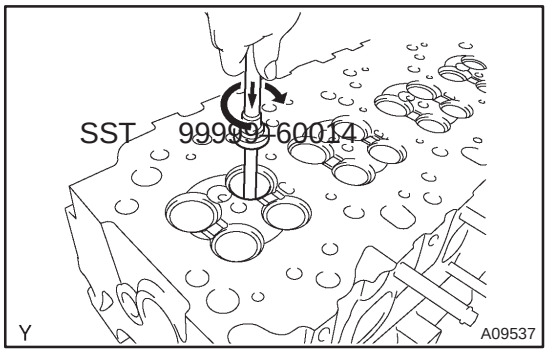

(c) Hand–lap the valve and valve seat with an abrasive compound.

(d) Check the valve seating position.

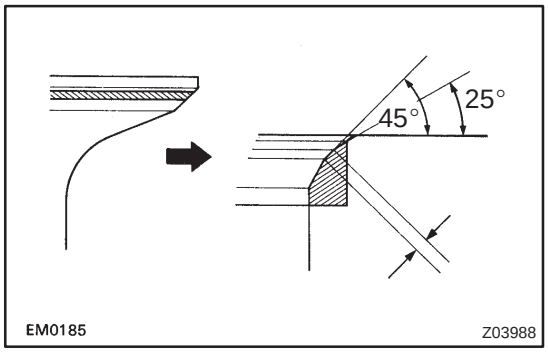

20. REPAIR EXHAUST VALVE SEATS

NOTICE:

Take off a cutter gradually to make smooth valve seats.

(a) If the seating is too high on the valve face, use 25° and 45° cutters to correct the seat.

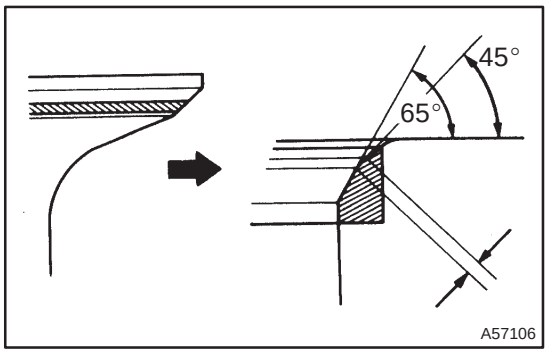

(b) If the seating is too low on the valve face, use 65° and 45° cutters to correct the seat.

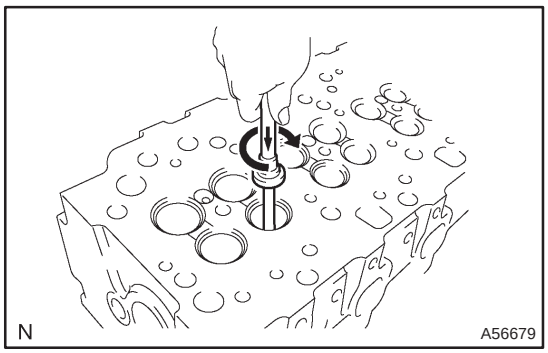

(c) Hand–lap the valve and valve seat with an abrasive compound.

(d) Check the valve seating position.

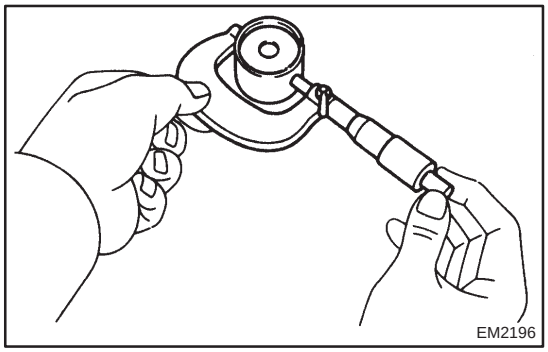

21. INSPECT VALVE LIFTER

(a) Using a micrometer, measure the lifter diameter.
Lifter diameter:
27.975 – 27.985 mm (1.1014 – 1.1018 in.)

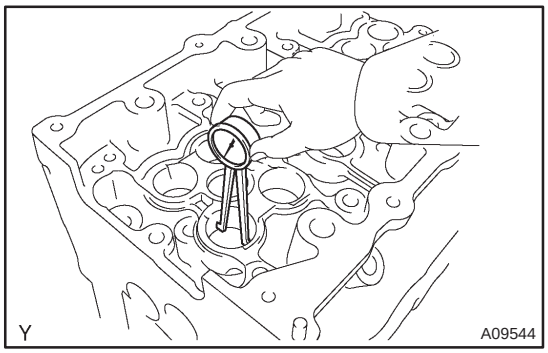

22. INSPECT VALVE LIFTER OIL CLEARANCE

(a) Using a caliper gauge, measure the lifter bore diameter of the cylinder head.
Lifter diameter:
28.010 – 28.031 mm (1.1028 – 1.1036 in.)

(b) Subtract the lifter diameter measurement from the lifter bore diameter measurement.
Standard oil clearance:
0.025 – 0.056 mm (0.0010 – 0.0022 in.)
Maximum oil clearance: 0.08 mm (0.0031 in.)

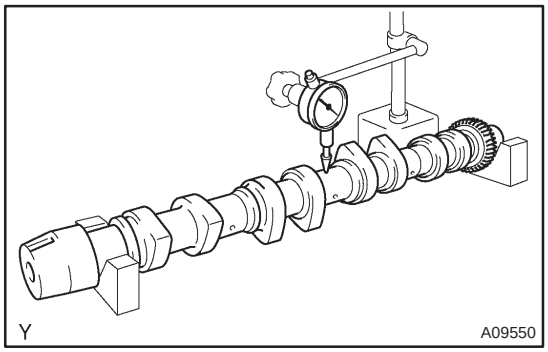

23. INSPECT CAMSHAFT

(a) Inspect the circle runout.

(1) Place the camshaft on V–blocks.

(2) Using a dial indicator, measure the circle runout at the center journal.

Maximum circle runout: 0.06 mm (0.0024 in.)

If the circle runout is greater then maximum, replace the camshaft.

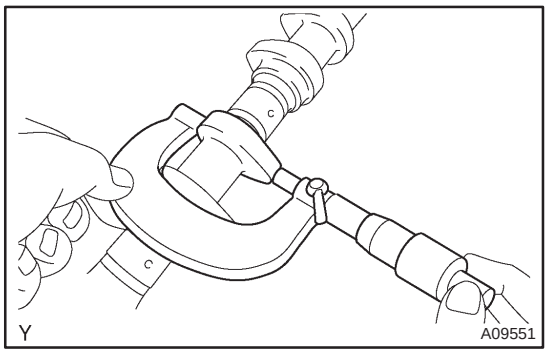

(b) Using a micrometer, measure the cam lobe height.

Standard cam lobe height:

Intake	46.57 – 46.67 mm (1.8335 – 1.8374 in.)
Exhaust	47.52 – 47.62 mm (1.8709 – 1.8748 in.)

Minimum cam lobe height:

Intake	46.10 mm (1.8150 in.)
Exhaust	47.05 mm (1.8524 in.)

If the cam lobe height is less than minimum, replace the camshaft.

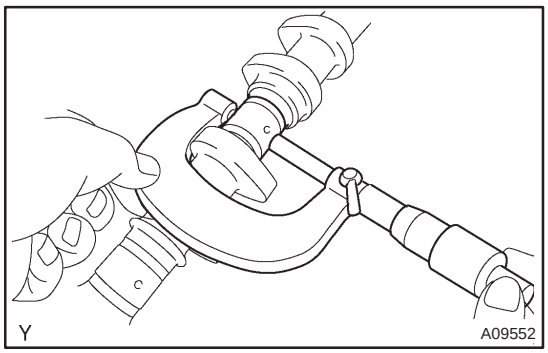

(c) Using a micrometer, measure the journal diameter.

Journal diameter:

26.969 – 26.985 mm (1.0618 – 1.0624 in.)

If the journal diameter is not as specified, check the oil clearance.

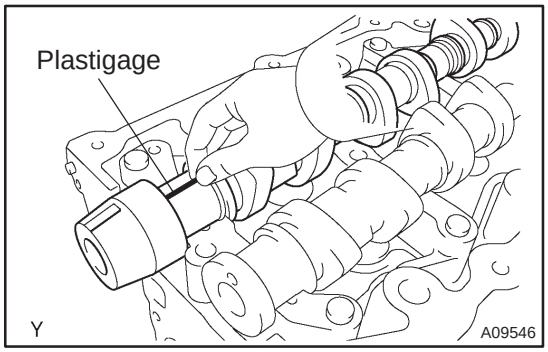

24. INSPECT CAMSHAFT OIL CLEARANCE

(a) Clean the bearing caps and camshaft carrier.

(b) Check the bearings for flaking and scoring.

If the bearings are damaged, replace the bearing caps, camshaft carrier and cylinder head as a set.

(c) Place the camshaft carrier and camshafts on the cylinder head.

(d) Lay a strip of Plastigage across each of the camshaft journals.

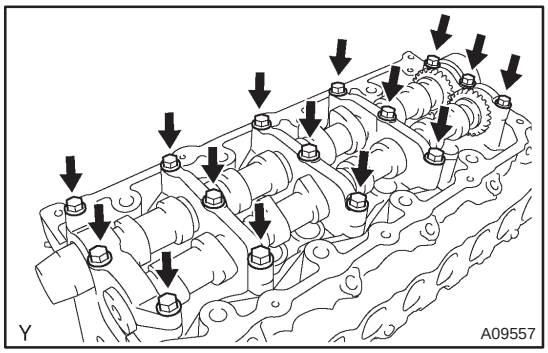

(e) Install the bearing caps.

Torque: 20 N·m (200 kgf·cm, 15 ft·lbf)

NOTICE:

Do not turn the camshaft.

(f) Remove the bearing caps.

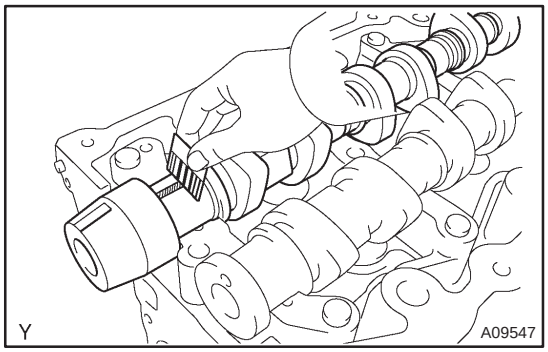

(g) Measure the Plastigage at its widest point.
Standard oil clearance:
0.025 – 0.062 mm (0.0010 – 0.0024 in.)
Maximum oil clearance: 0.08 mm (0.0031 in.)

If the oil clearance is greater than maximum, replace the camshaft. if necessary, replace the bearing caps, camshaft carrier and cylinder head as a set.

(h) Completely remove the Plastigage.

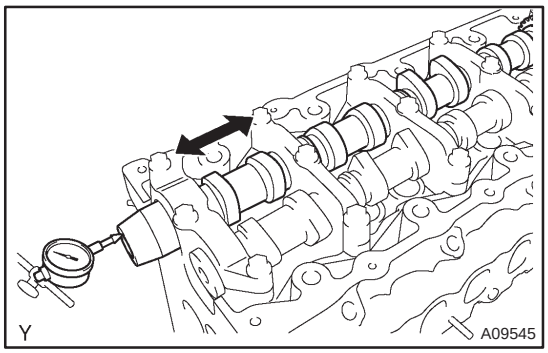

25. INSPECT CAMSHAFT THRUST CLEARANCE

(a) Install the camshaft.

(b) Using a dial indicator, measure the thrust clearance while moving the camshaft back and forth.
Standard thrust clearance:
0.035 – 0.110 mm (0.0014 – 0.0043 in.)

If the thrust clearance is not as specified, replace the camshaft. If necessary, replace the bearing caps, camshaft carrier and cylinder head as a set.

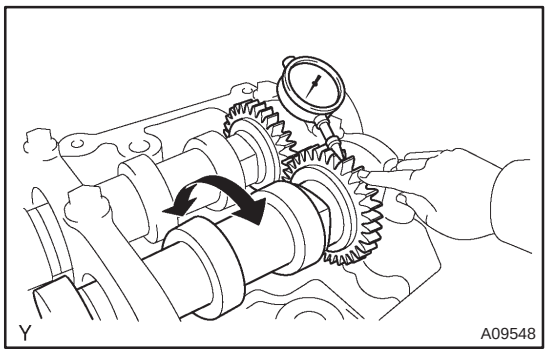

26. INSPECT CAMSHAFT GEAR BACKLASH

(a) Install the camshafts.

(b) Using a dial indicator, measure the backlash.
Standard backlash:
0.014 – 0.070 mm (0.0006 – 0.0028 in.)
Maximum backlash: 0.17 mm (0.0067 in.)

If the backlash is greater then maximum, replace the camshafts.

27. INSTALL TIGHT PLUG

(a) Apply adhesive around tight plugs.
Adhesive: Part No.08833 – 00070, THREE BOND 1324 or equivalent

(b) Using SST, tap in the tight plugs as shown in the illustration.
SST 09950–60010 (09951–00210), 09950–70010 (09951–07100)

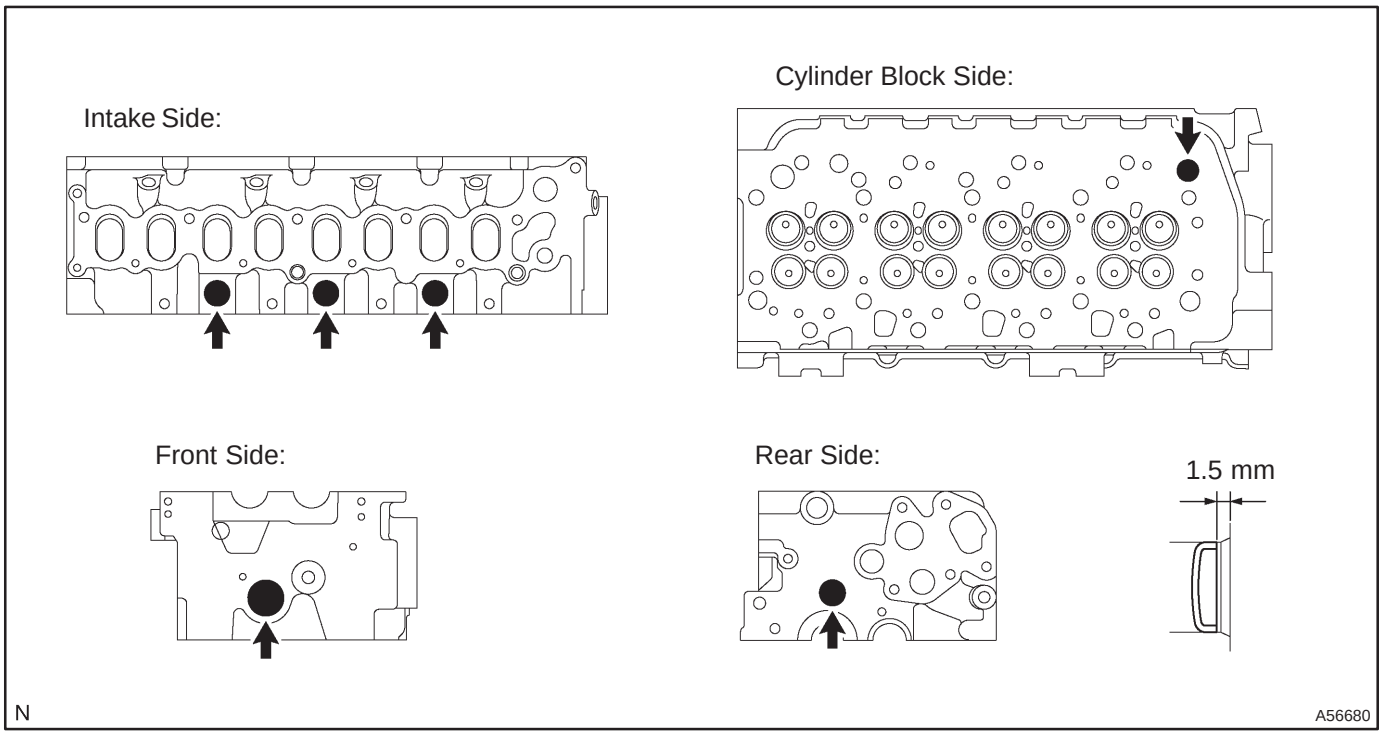

28. INSTALL RING PIN

(a) Using a plastic–faced hammer, tap in new ring pins to the specified protrusion height.

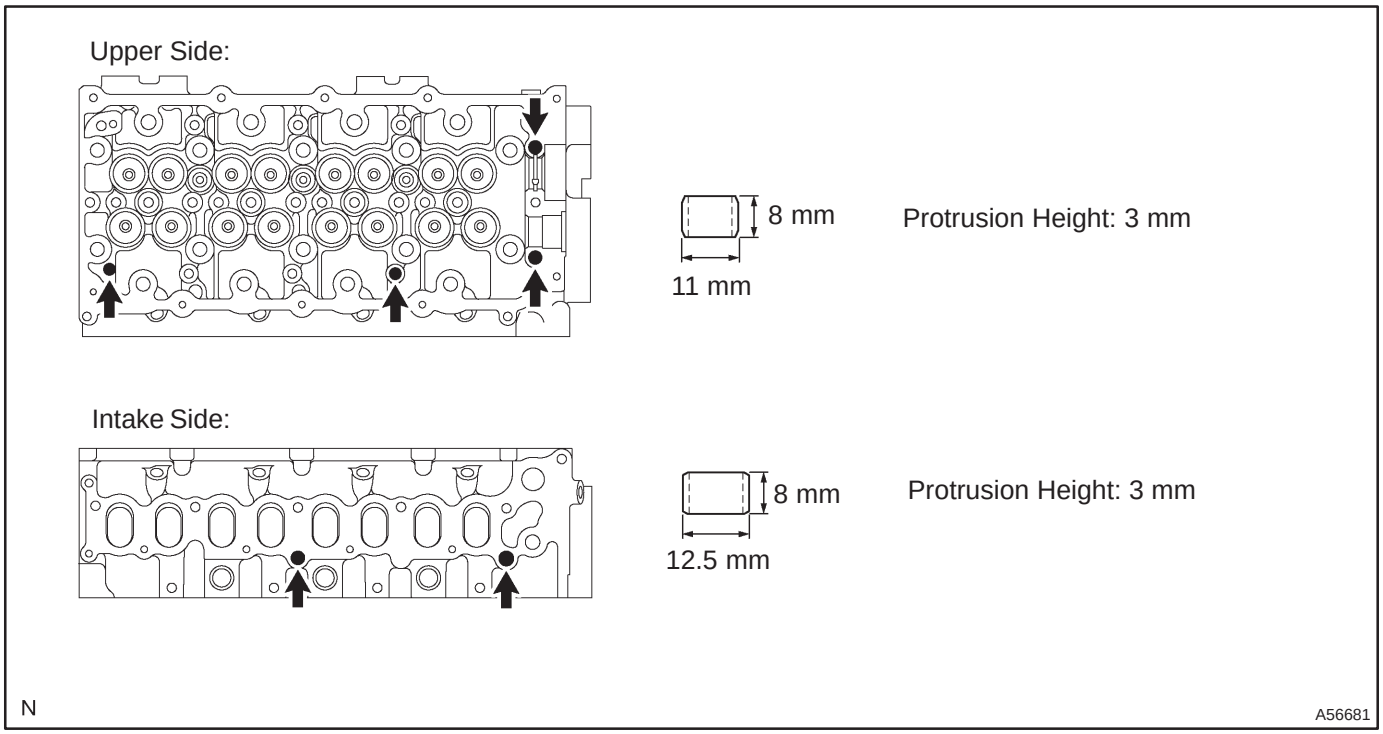

29. INSTALL STRAIGHT PIN

(a) Using a plastic–faced hammer, tap in the straight pin.

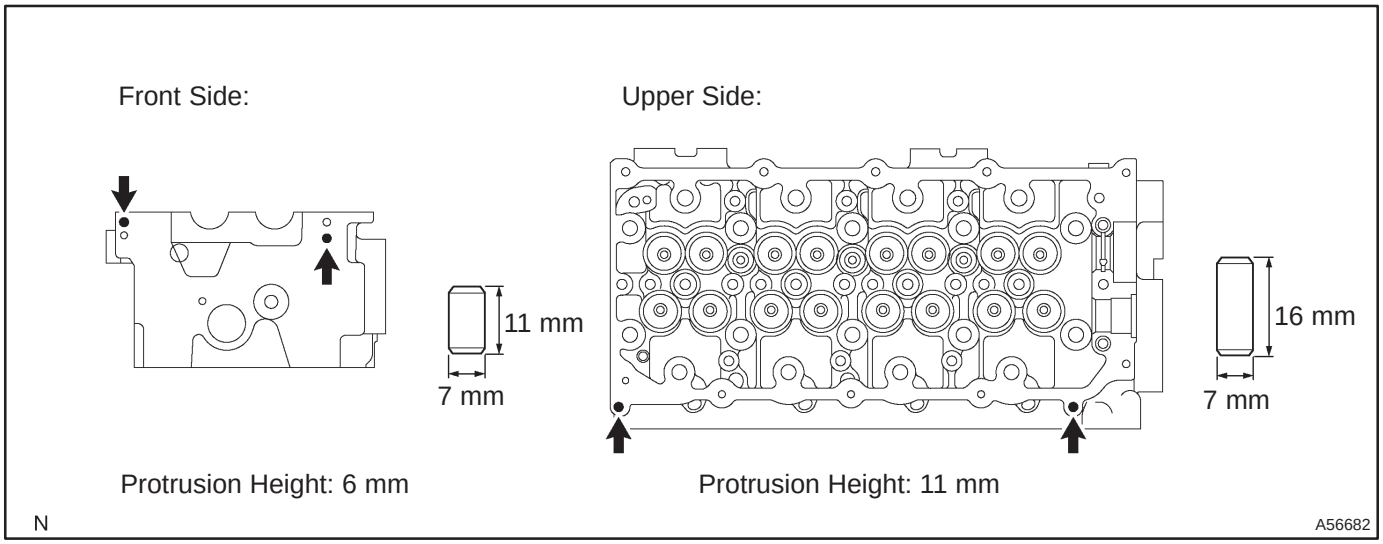

30. INSTALL STUD BOLT

(a) Install the stud bolts as shown in the illustration.
Torque:
Bolt A 8.8N·m (90 kgf·cm, 78 in.·lbf)
Bolt B 12N·m (120 kgf·cm, 9 ft·lbf)
Bolt C 8.8N·m (90 kgf·cm, 78 in.·lbf)

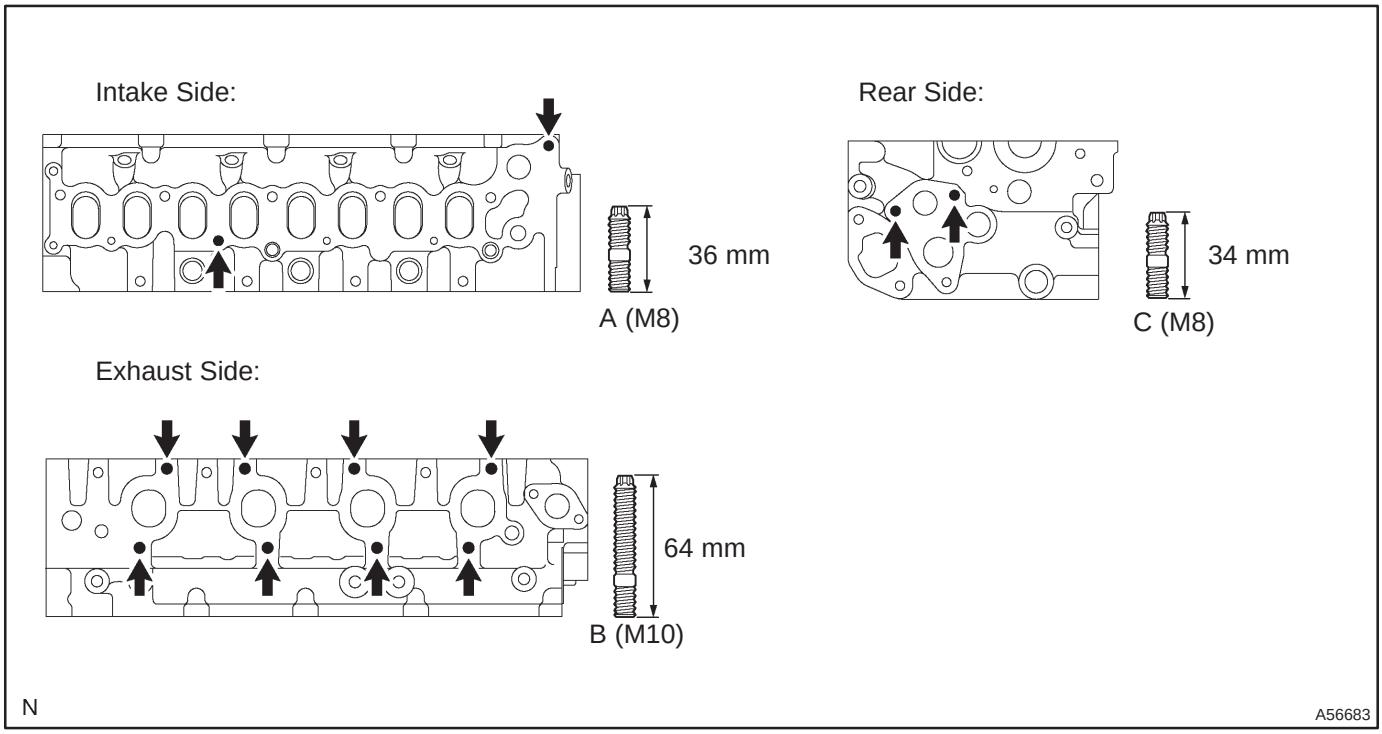

31. INSTALL W/HEAD TAPER SCREW PLUG NO.1

(a) Apply adhesive to the plugs end.
Adhesive: Part No. 08833 – 00070, THREE BOND 1324 or equivalent
(b) Using a hexagon wrench (6 mm), install the 3 plugs.
Torque:25N·m (255 kgf·cm, 18 ft·lbf)
SST 99999–70037

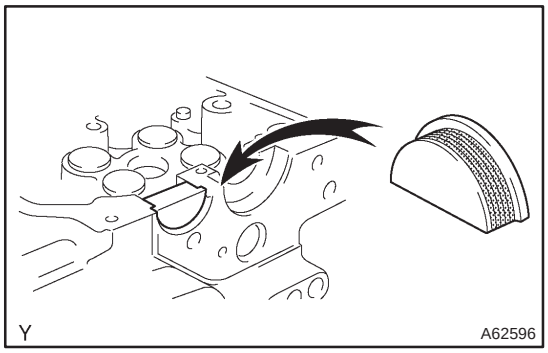

32. INSTALL SEMICIRCULAR PLUG

(a) Apply seal packing to the semi–circular plug grooves.
Seal packing: Part No. 08826 – 00080 or equivalent
(b) Install the semi–circular plug to the cylinder head.

33. INSTALL VALVE SPRING SEAT PLATE WASHER

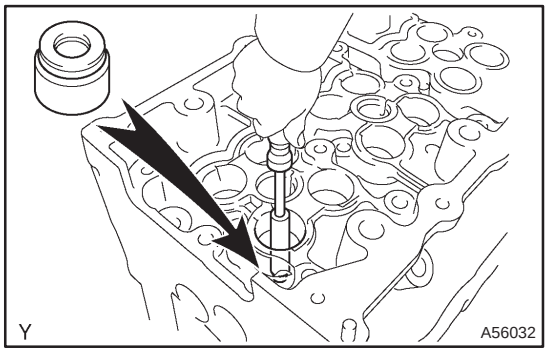

34. INSTALL VALVE STEM OIL O SEAL OR RING

(a) Apply a light coat of engine oil on the valve stem.
(b) Install a new oil seal on the valve guide bushing.

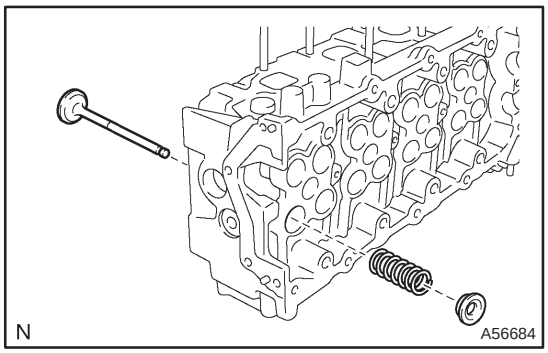

35. INSTALL INTAKE VALVE

(a) Install the valve, valve spring, and spring retainer.

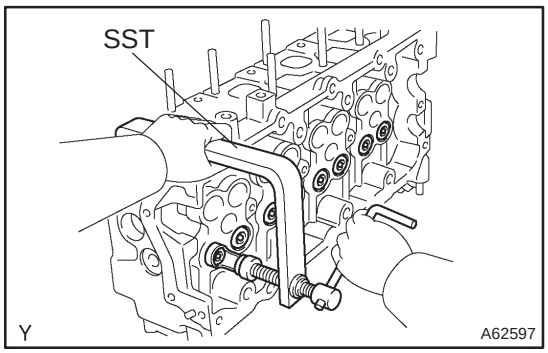

(b) Using SST, compress the valve spring and place the 2 keepers around the valve stem.
SST 09202–70020 (09202–00010)

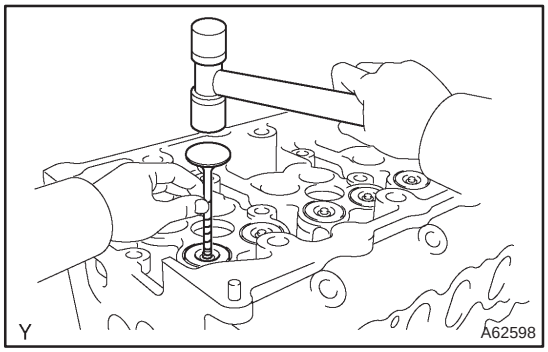

(c) Using a plastic–faced hammer and the valve stem (not in use) tip wound with vinyl tape, lightly tap the valve stem tip to ensure a proper fit.

NOTICE:
Be careful not to damage the valve stem tip.

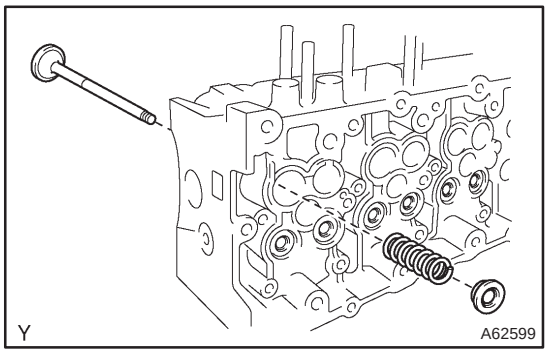

36. INSTALL EXHAUST VALVE

(a) Install the valve, valve spring, and spring retainer.

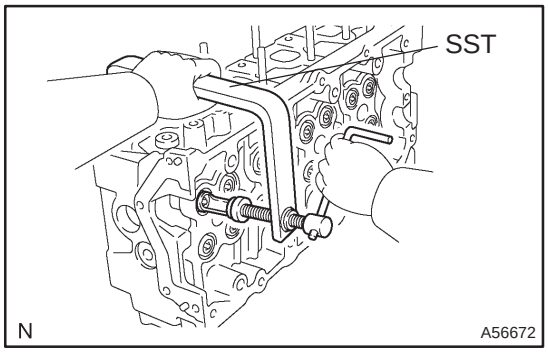

(b) Using SST, compress the valve spring and place the 2 keepers around the valve stem.
SST 09202–70020 (09202–00010)

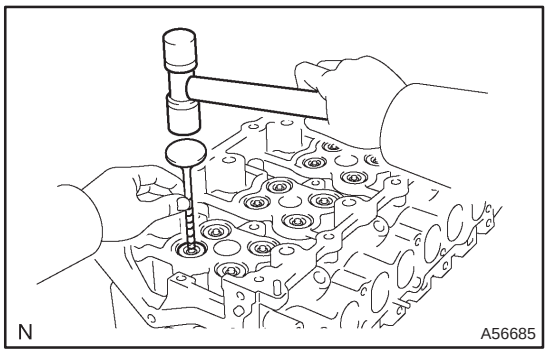

(c) Using a plastic–faced hammer and the valve stem (not in use) tip wound with vinyl tape, lightly tap the valve stem tip to assure proper fit.

NOTICE:
Be careful not to damage the valve stem tip.

CYLINDER BLOCK (1CD–FTV)

COMPONENTS

140L6–01

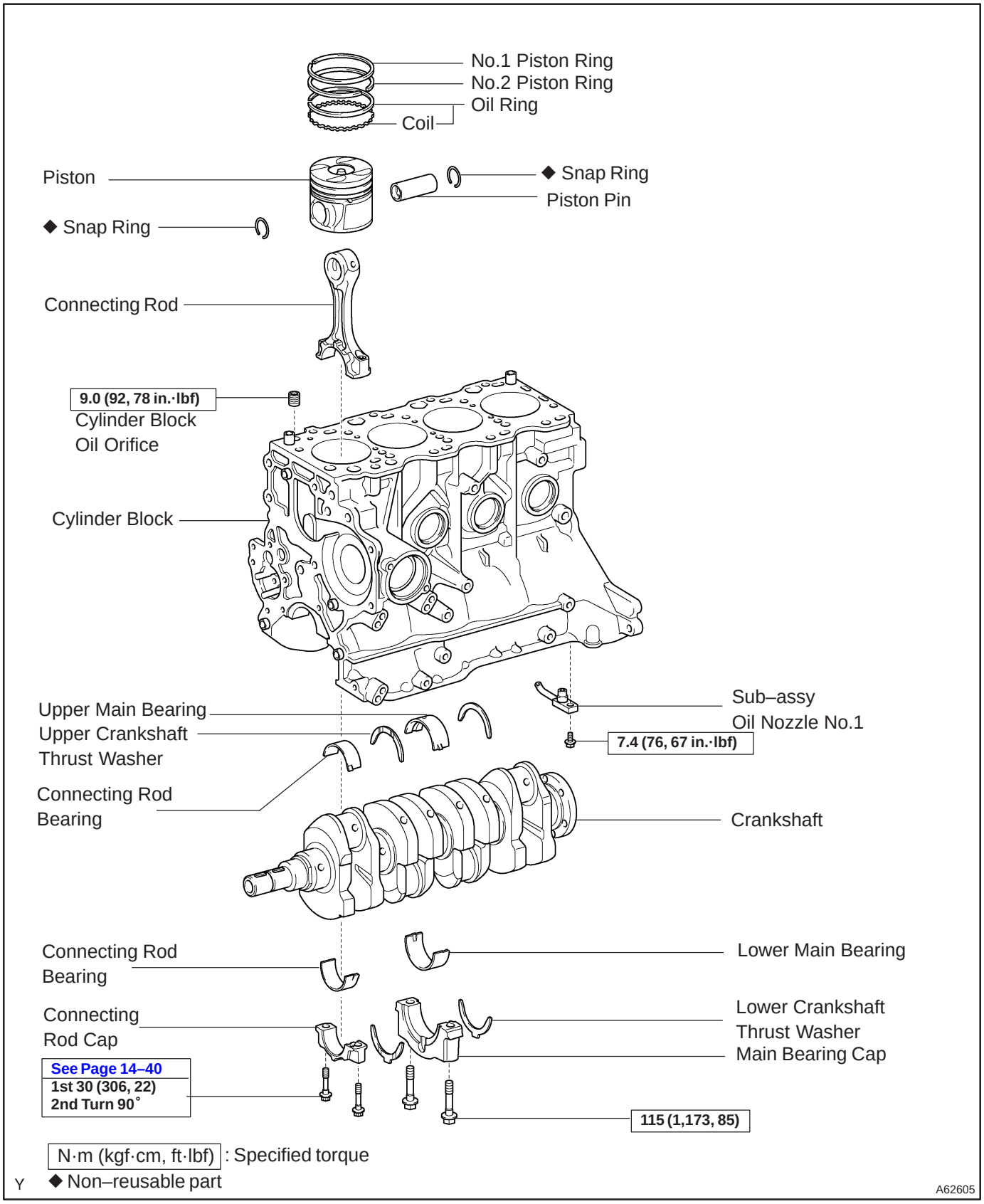

OVERHAUL

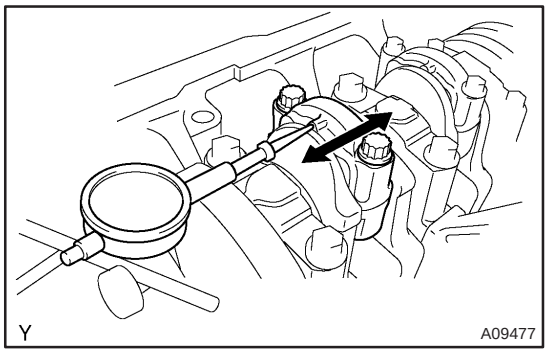

1. INSPECT CONNECTING ROD THRUST CLEARANCE

(a) Using a dial indicator, measure the thrust clearance while moving the connecting rod back and forth.

Standard thrust clearance:
0.08 – 0.30 mm (0.0031 – 0.0118 in.)
Maximum thrust clearance: 0.40 mm (0.0157 in.)

If the thrust clearance is greater then maximum, replace the connecting rod assembly(s). If necessary, replace the crankshaft.

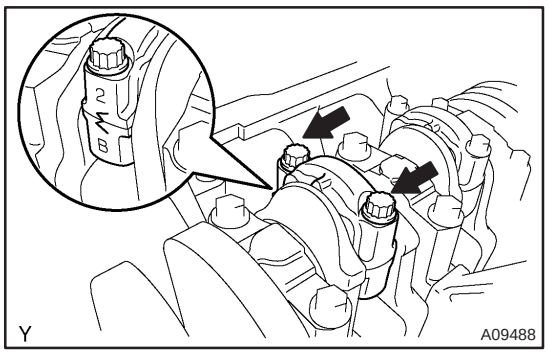

2. INSPECT CONNECTING ROD OIL CLEARANCE

(a) Check the matchmarks on the connecting rod and cap to ensure correct reassembly.

(b) Remove the 2 connecting rod cap bolts.

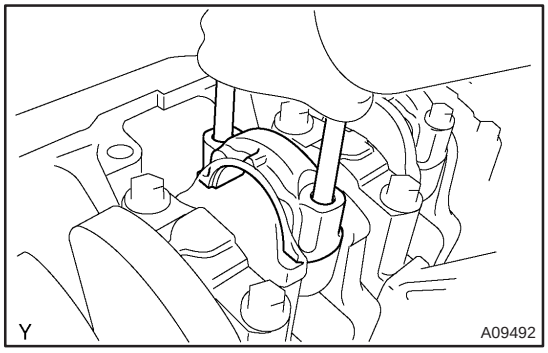

(c) Using 2 removed connecting rod cap bolts, remove the connecting rod cap and lower bearing by wiggling the connecting rod cap right and left.

HINT:
Keep the lower bearing inserted with the connecting rod cap.

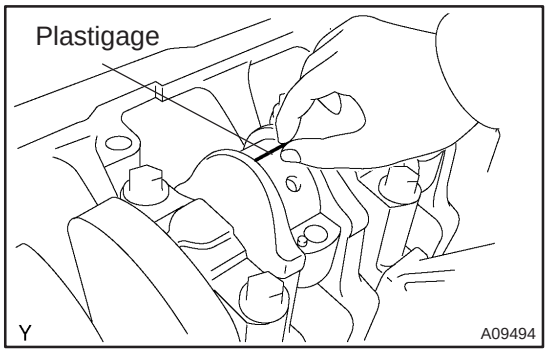

(d) Clean the crank pin and bearing.

(e) Check the crank pin and bearing for pits and scratches.

If the crank pin or bearing is damaged, replace the bearings. If necessary, replace the crankshaft.

(f) Lay a strip of plastigage across the crank pin.

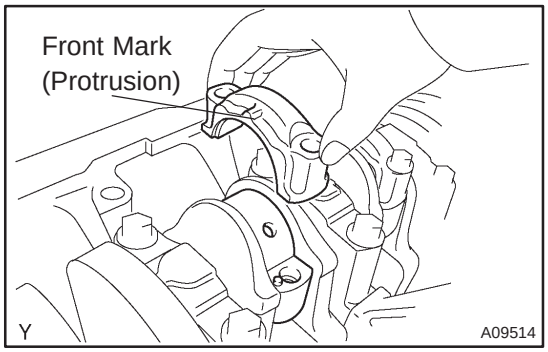

(g) Match the numbered connecting rod cap with the connecting rod.
(h) Install the connecting rod cap with the front mark facing forward.
(i) Apply a light coat of engine oil on the threads and under the heads of the connecting rod cap bolts.

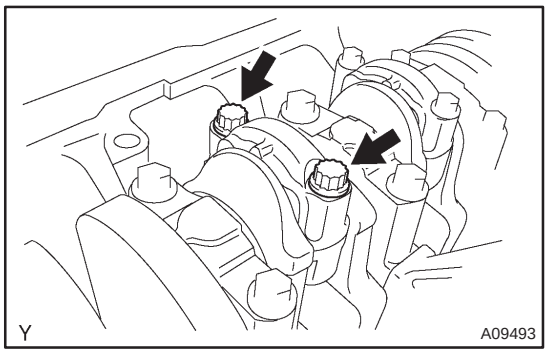

(j) Install and alternately tighten the 2 cap bolts in several passes.
Torque: 30 N·m (306 kgf·cm, 22 ft·lbf)

If any of the cap bolts does not meet the torque specification, replace the connecting rod cap bolts.

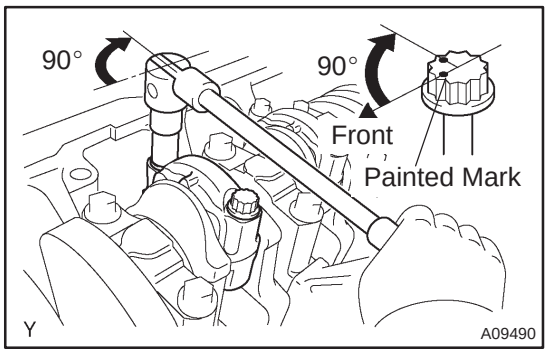

(k) Mark the front of the cap bolt with the paint.
(l) Retighten the cap bolts 90° as shown.
(m) Check that the painted mark is now at a 90° angle to the front.

NOTICE:
Do not turn the crankshaft.

(n) Remove the 2 bolts, connecting rod cap and lower bearing.

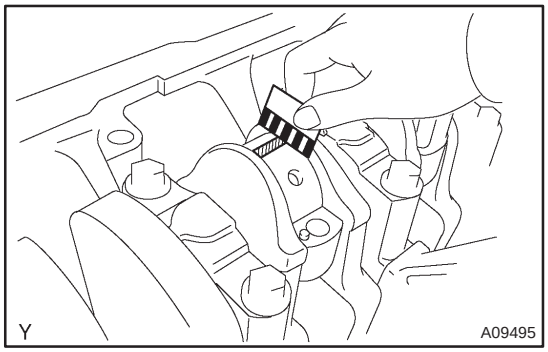

(o) Measure the Plastigage at its widest point.
Standard oil clearance:
0.038 – 0.056 mm (0.0015 – 0.0022 in.)
Maximum oil clearance: 0.10 mm (0.0039 in.)

If the oil clearance is greater than maximum, replace the bearings. If necessary, replace the crankshaft.

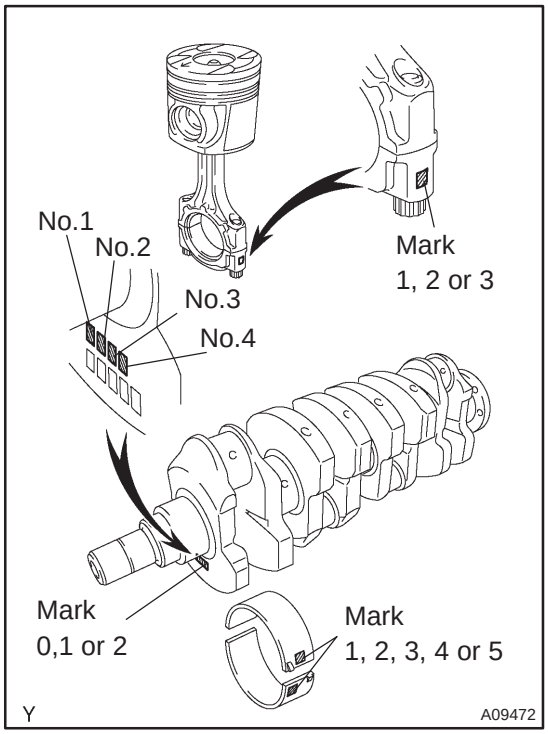

(p) If using a standard bearing, replace it with one having the same number. If the number of the bearing cannot be determined, select the correct bearing by adding together the numbers imprinted on the crankshaft and connecting rod cap, then select the bearing with the same number as the total. There are 5 sizes of standard bearings, marked "1", "2", "3", "4" and "5" accordingly.

Connecting rod cap	Crankshaft	Use bearing
1	0	1
1	1	2
1	2	3
2	0	2
2	1	3
2	2	4
3	0	3
3	1	4
3	2	5

HINT:

EXAMPLE: Connecting rod cap "2" + Crankshaft "1"
= total number 3 (Use bearing "3")

Connecting rod big end inside diameter:

Mark "1"	53.500 – 53.506 mm (2.1063 – 2.1065 in.)
Mark "2"	53.506 – 53.512 mm (2.1065 – 2.1068 in.)
Mark "3"	53.512 – 53.518 mm (2.1068 – 2.1070 in.)

Crankshaft crank pin diameter:

Mark "0"	50.494 – 50.500 mm (1.9880 – 1.9882 in.)
Mark "1"	50.488 – 50.494 mm (1.9877 – 1.9880 in.)
Mark "2"	50.482 – 50.488 mm (1.9875 – 1.9877 in.)

Standard sized bearing center wall thickness:

Mark "1"	1.478 – 1.481 mm (0.0582 – 0.0583 in.)
Mark "2"	1.481 – 1.484 mm (0.0583 – 0.0584 in.)
Mark "3"	1.484 – 1.487 mm (0.0584 – 0.0585 in.)
Mark "4"	1.487 – 1.490 mm (0.0585 – 0.0587 in.)
Mark "5"	1.490 – 1.493 mm (0.0587 – 0.0588 in.)

(q) Completely remove the Plastigage.

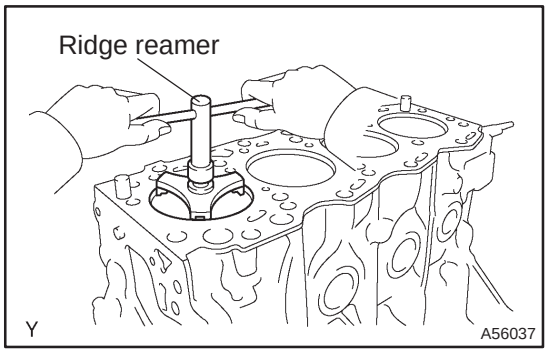

3. REMOVE PISTON SUB–ASSY W/CONNECTING ROD

(a) Using a ridge reamer, remove all the carbon from the top of the cylinder.

(b) Push the piston, connecting rod assembly and upper bearing through the top of the cylinder block.

HINT:

- Keep the bearing, connecting rod and cap together.
- Arrange the piston and connecting rod assemblies in the correct order.

4. REMOVE CONNECTING ROD BEARING

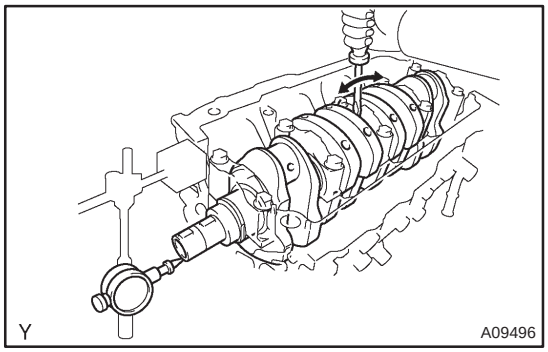

5. INSPECT CRANKSHAFT THRUST CLEARANCE

(a) Using a dial indicator, measure the thrust clearance while prying the crankshaft back and forth with a screwdriver.

Standard thrust clearance:
0.040 – 0.240 mm (0.0016 – 0.0009 in.)
Maximum thrust clearance: 0.30 mm(0.0118 in.)

If the thrust clearance is greater then maximum, replace the thrust washer as a set.

Thrust washer thickness:

STD	2.680 – 2.730 mm (0.1055 – 0.1075 in.)
O/S 0.125	2.743 – 2.793 mm (0.1080 – 0.1100 in.)
O/S 0.250	2.805 – 2.855 mm (0.1104 – 0.1124 in.)

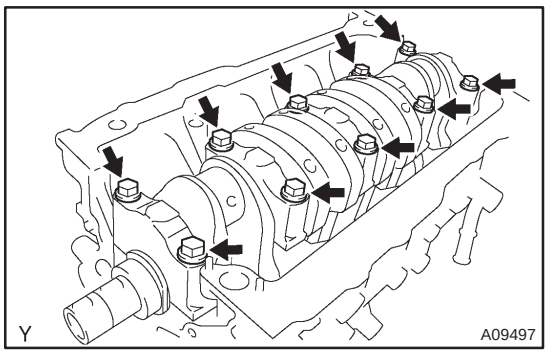

6. REMOVE CRANKSHAFT

(a) Uniformly loosen and remove the 10 main bearing cap bolts.

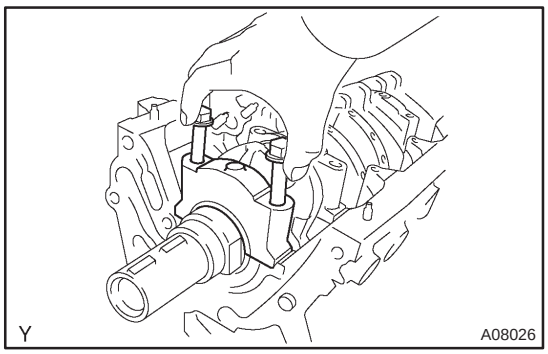

(b) Using the removed main bearing cap bolts, wiggle the cap back and forth, and remove the 5 main bearing caps, 5 lower bearings and 2 lower thrust washers (No. 3 main bearing cap only).

HINT:

- Keep the lower bearing and main bearing cap together.
- Arrange the main bearing caps and lower thrust washers in the correct order.

(c) Lift out the crankshaft.

HINT:

Keep the upper bearing and upper thrust washers together with the cylinder block.

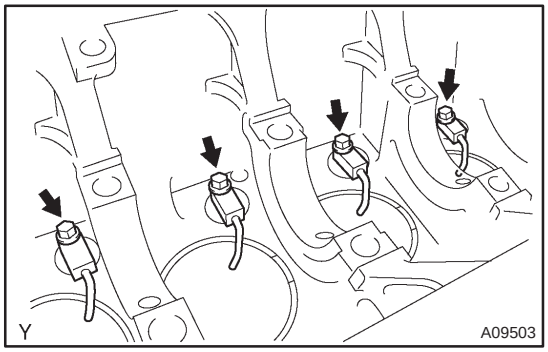

7. REMOVE SUB–ASSY OIL NOZZLE NO.1

(a) Remove the bolt and 4 oil nozzles.

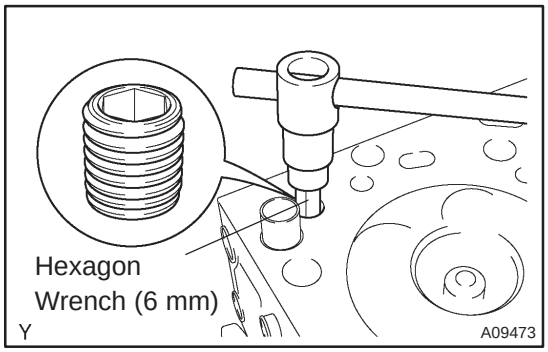

8. REMOVE CYLINDER BLOCK OIL ORIFICE

(a) Using a hexagon wrench (6 mm), remove the oil orifice.

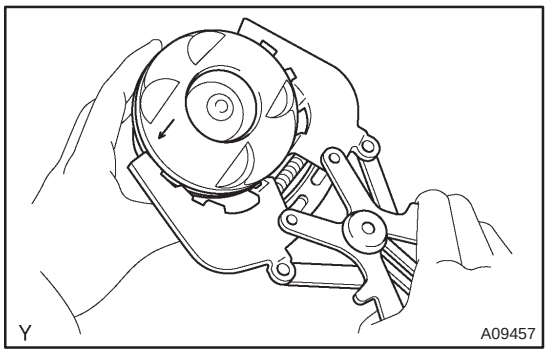

9. REMOVE PISTON RING SET

(a) Using a piston ring expander, remove the No. 1 piston ring, No. 2 piston ring and oil ring.

NOTICE:

Make the expansion of the piston ring as small as necessary.

(b) Remove the coil by hand.

HINT:

Arrange the piston rings in correct order.

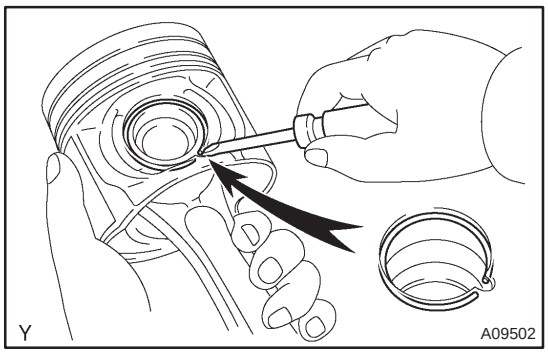

10. REMOVE W/PIN PISTON SUB–ASSY

(a) Using a small screwdriver, pry off the snap rings from the piston.

(b) Gradually heat the piston to approx. 60°C (140°F).

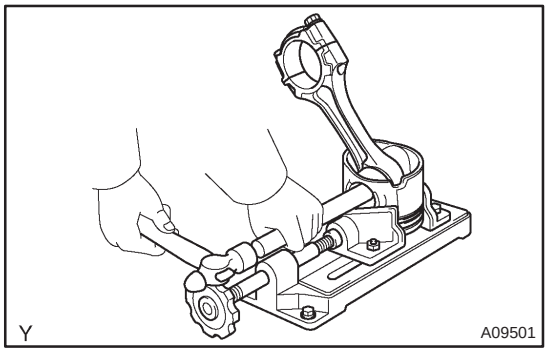

(c) Using a plastic–faced hammer and brass bar, lightly tap out the piston pin and remove the connecting rod.

HINT:

- The piston and pin are a matched set.
- Arrange the pistons, pins, rings, connecting rods and bearings in the correct order.

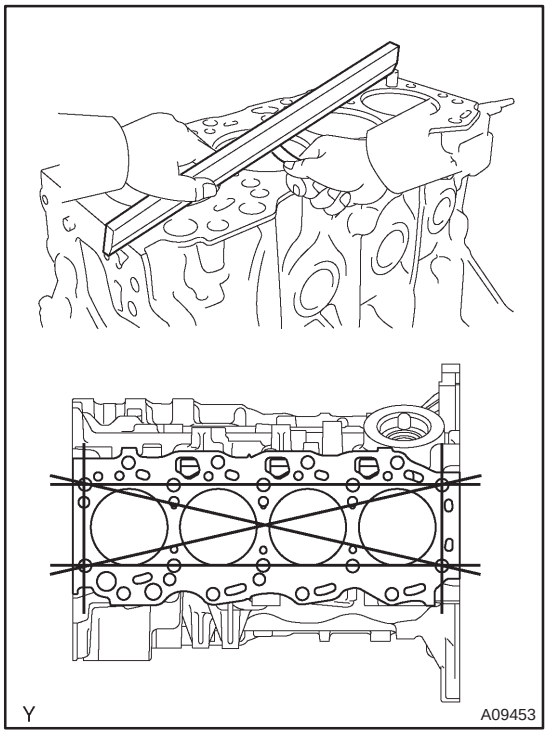

11. INSPECT CYLINDER BLOCK FOR FLATNESS

(a) Using a precision straight edge and feeler gauge, measure the surface contacting the cylinder head gasket for warpage.

Maximum warpage: 0.05 mm (0.0020 in.)

If warpage is greater than maximum, replace the cylinder block.

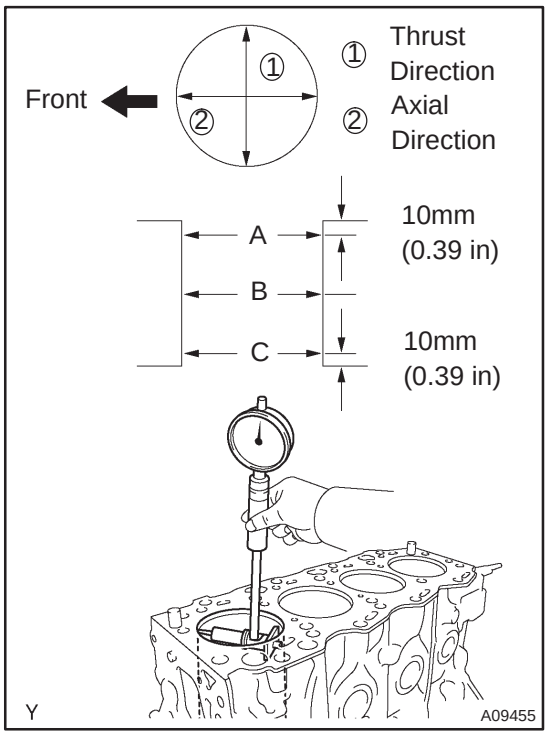

12. INSPECT CYLINDER BORE

(a) Using a cylinder gauge, measure the cylinder bore diameter at the positions A, B and C in the thrust and axial directions.

Standard diameter:
82.200 – 82.213 mm (3.2362 – 3.2367 in.)
Maximum diameter: 82.400 mm (3.2441 in.)

If the diameter is greater than maximum, replace the cylinder block.

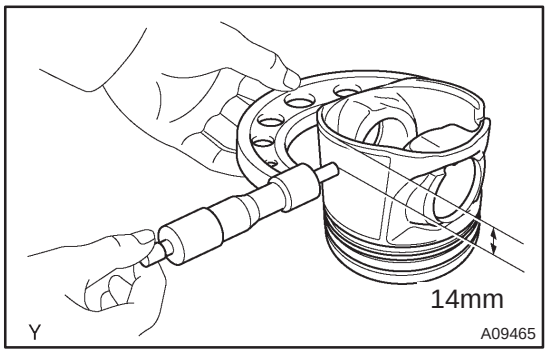

13. INSPECT W/PIN PISTON SUB–ASSY

(a) Using a micrometer, measure the piston diameter at a right angles to the piston pin center line, 14 mm (0.55 in.) below the skirt bottom edge.

Piston diameter:
82.118 – 82.132 mm (3.2330 – 3.2335 in.)

(b) Subtract the piston diameter measurement from the cylinder bore diameter measurement.
Standard oil clearance:
0.068 – 0.095 mm (0.0027 – 0.0037 in.)
Maximum oil clearance: 0.14 mm (0.0055 in.)
If the oil clearance is greater than maximum, replace all the 4 pistons. If necessary, replace the cylinder block.

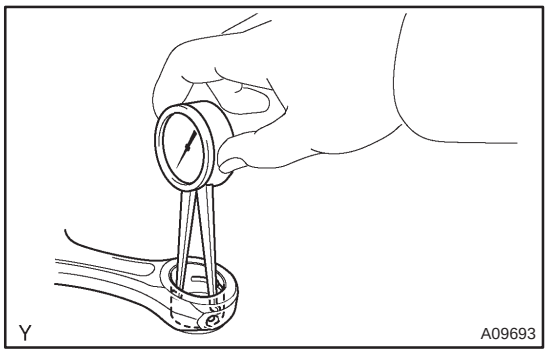

(c) Using a caliper gauge, measure the inside diameter of the connecting rod bushing.
Bushing inside diameter:
31.015 – 31.027 mm (1.2211 – 1.2215 in.)

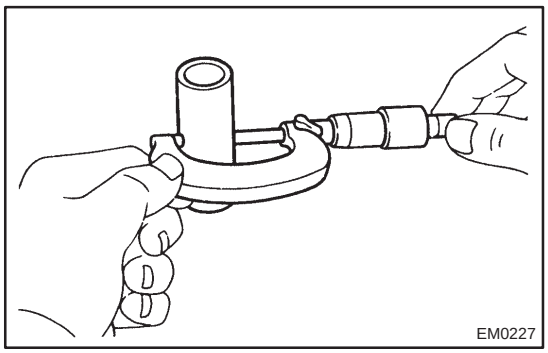

(d) Using a micrometer, measure the piston pin diameter.
Piston pin diameter:
31.000 – 31.012 mm (1.2205 – 1.2209 in.)

(e) Subtract the piston pin diameter measurement from the bushing inside diameter measurement.
Standard oil clearance:
0.003 – 0.027 mm (0.0001 – 0.0011 in.)
Maximum oil clearance: 0.025 mm (0.0010 in.)
If the oil clearance is greater than maximum, replace the connecting rod. If necessary, replace the piston and piston pin as a set.

14. INSPECT CONNECTING ROD SUB–ASSY

(a) Using a rod aligner and feeler gauge, check the connecting rod alignment.

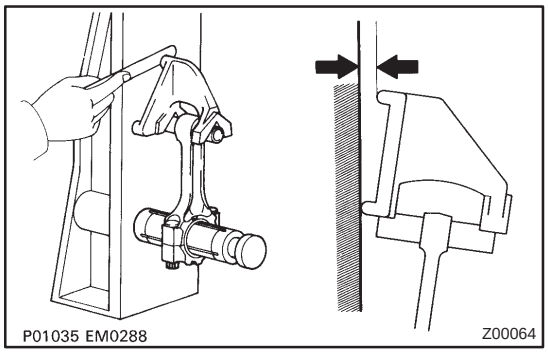

(1) Check for out–of–alignment.

Maximum out–of alignment:

0.05 mm (0.0020 in.) per 100 mm (3.94 in.)

If out–of alignment is greater than maximum, replace the connecting rod assembly.

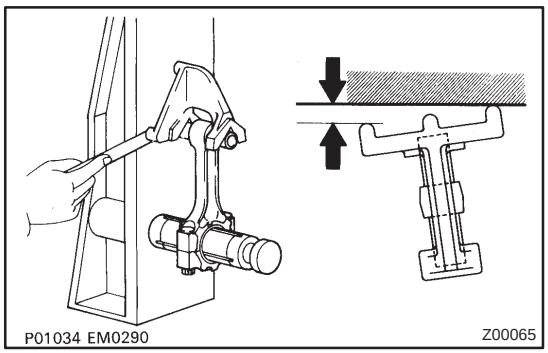

(2) Check for twist.

Maximum twist:

0.15 mm (0.0059 in.) per 100 mm (3.94 in.)

If twist is greater than maximum, replace the connecting rod assembly.

15. INSPECT RING GROOVE CLEARANCE

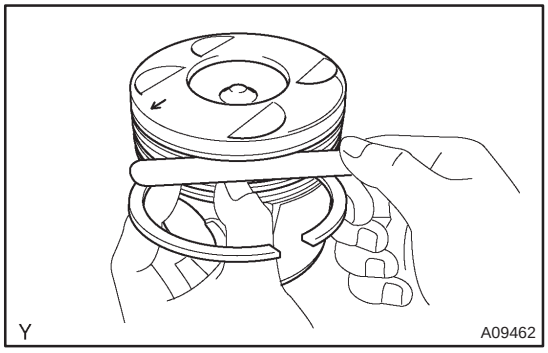

(a) Using a feeler gauge, measure the clearance between new piston ring and wall of the ring groove.

Ring groove clearance:

No. 1	0.08 – 0.12 mm (0.0031 – 0.0047 in.)
No. 2	0.05 – 0.09 mm (0.0020 – 0.0035 in.)
Oil	0.03 – 0.07 mm (0.0012 – 0.0028 in.)

If the clearance is not as specified, replace the piston.

16. INSPECT PISTON RING END GAP

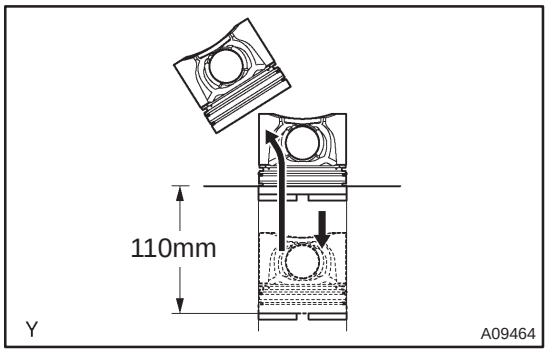

(a) Using a piston, push the piston ring a little beyond the bottom of the ring travel, 110 mm (4.33 in.) from the top of the cylinder block.

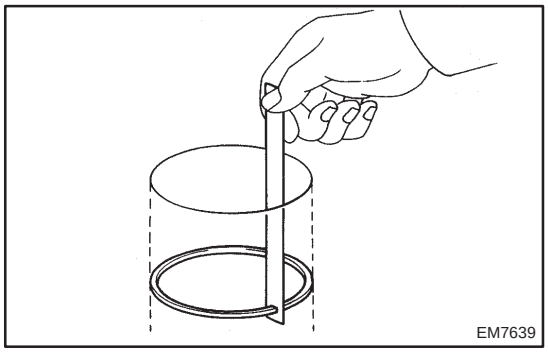

(b) Using a feeler gauge, measure the end gap.

Standard end gap:

No. 1	0.27 – 0.43 mm (0.0106 – 0.0169 in.)
No. 2	0.39 – 0.58 mm (0.0154 – 0.0228 in.)
Oil	0.20 – 0.44 mm (0.0079 – 0.0173 in.)

Maximum end gap:

No. 1	0.82 mm (0.0323 in.)
No. 2	1.00 mm (0.0394 in.)
Oil	0.90 mm (0.0354 in.)

If the end gap is greater than maximum, replace the piston ring.
If the end gap is greater than maximum, even with a new piston ring, replace the cylinder block.

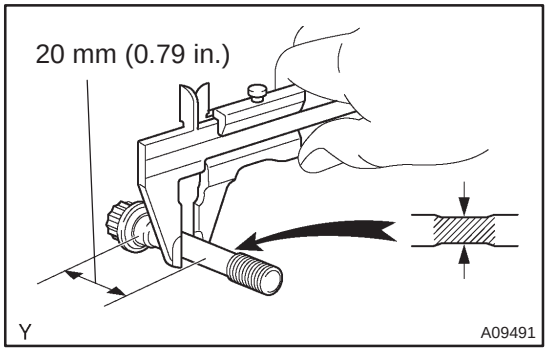

17. INSPECT CONNECTING ROD BOLT

(a) Using vernier calipers, measure the tension portion diameter.
Standard diameter:
8.2 – 8.3 mm (0.323 – 0.327 in.)
Minimum diameter: 8.0 mm (0.315 in.)

If the diameter is less than minimum, replace the connecting rod bolt.

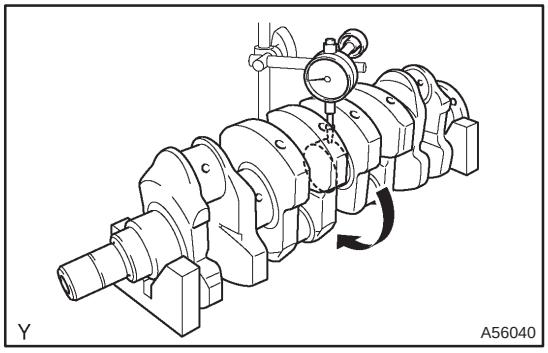

18. INSPECT CRANKSHAFT

(a) Place the crankshaft on V–blocks.
(b) Using a dial indicator, measure the circle runout at the center journal.
Maximum circle runout: 0.025 mm (0.0010 in.)

If the circle runout is greater than maximum, replace the crankshaft.

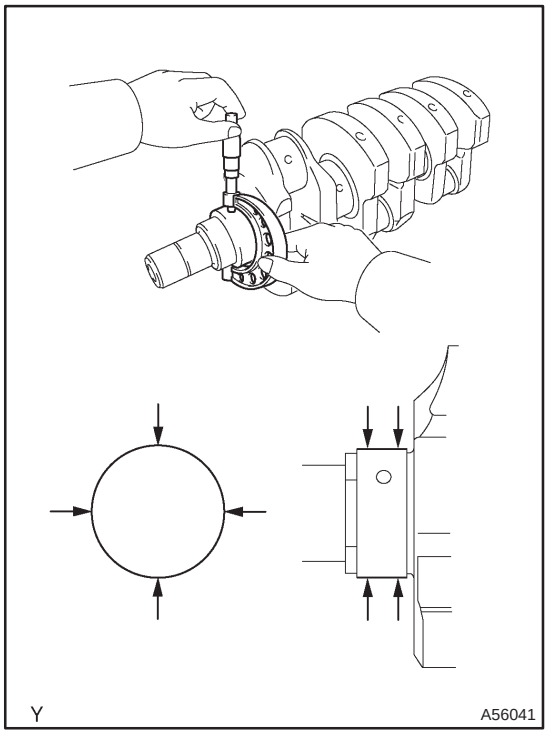

(c) Using a micrometer, measure the diameter of each main journal and crank pin.
Main journal diameter:
56.992 – 57.010 mm (2.2438 – 2.2445 in.)
Crank pin diameter:
50.482 – 50.500 mm (1.9875 – 1.9882 in.)
If the diameter is not as specified, replace the crankshaft.

(d) Check each main journal and crank pin for taper and out–of–round as shown.
Maximum taper and out–of–round:
0.01 mm (0.0004 in.)
If the taper and out–of–round is greater than maximum, replace the crankshaft.

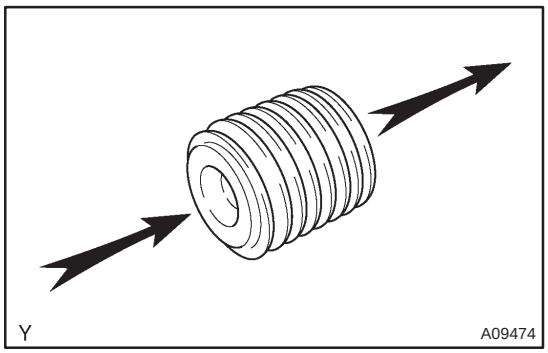

19. INSPECT CYLINDER BLOCK OIL ORIFICE

(a) Check the oil orifice for clogging.
If necessary, replace the oil orifice.

20. INSPECT CRANKSHAFT OIL CLEARANCE

(a) Clean each main journal and bearing.

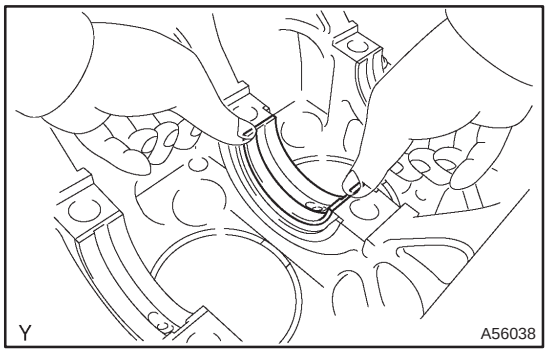

(b) Install the bearing on the cylinder block and bearing cap.
HINT:
Upper bearings have an oil groove and oil holes; lower bearings do not.

(1) Align the bearing claw with the claw groove of the cylinder clock, and push in the 5 upper bearings.

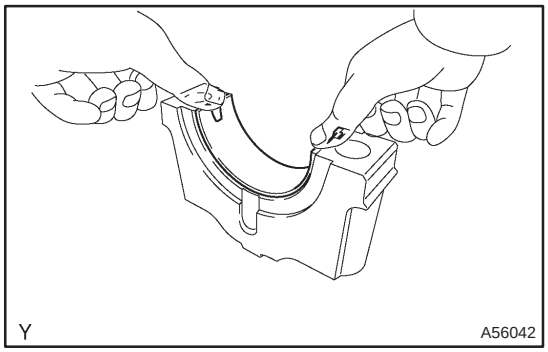

(2) Align the bearing claw with the claw groove of the main bearing cap, and push in the 5 lower bearings.

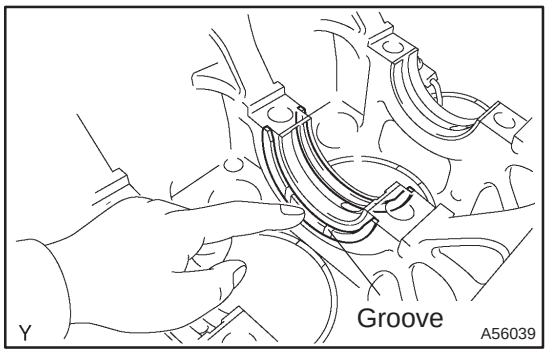

(c) Install the 2 thrust washers under the No. 3 journal position of the cylinder block with the oil grooves facing outward.

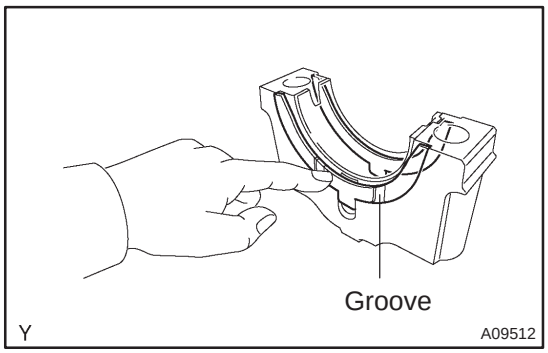

(d) Install the 2 thrust washers on the No. 3 bearing cap with the oil grooves facing outward.

(e) Place the crankshaft on the cylinder block.

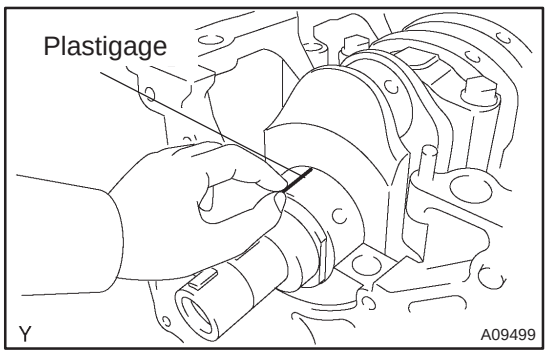

(f) Lay a strip of Plastigage across each journal.

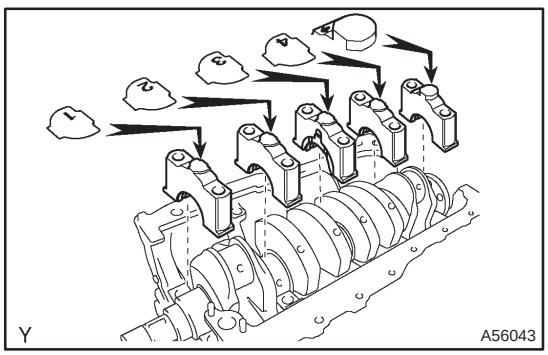

(g) Install the 5 main bearing caps in their proper locations.

HINT:

Each bearing cap has a number and a front mark.

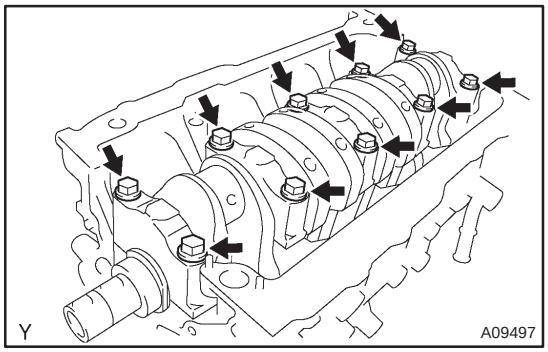

(h) Apply a light coat of engine oil on the threads and under the heads of the main bearing cap bolts.

(i) Install and uniformly tighten the 10 bolts of the main bearing cap in several passes.

Torque: 115 N·m (1,173 kgf·cm, 85 ft·lbf)

NOTICE:

Do not turn the crankshaft.

(j) Remove the bearing cap.

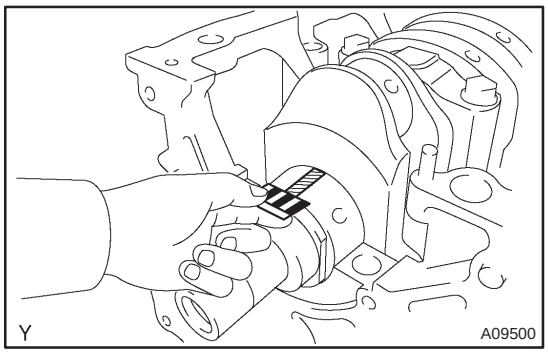

(k) Measure the Plastigage at its widest point.

Standard oil clearance:

0.026 – 0.044 mm (0.0010 – 0.0017 in.)

Maximum oil Clearance: 0.10 mm (0.0039 in.)

If the oil clearance is greater then maximum, replace the bearings. If necessary, replace the crankshaft.

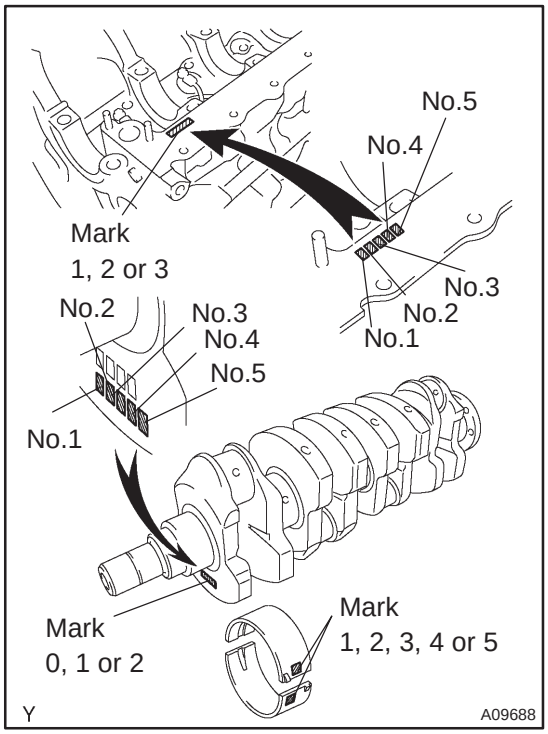

(l) If using a standard bearing, replace it with one having the same number. If the number of the bearing cannot be determined, select the correct bearing by adding together the numbers imprinted on the cylinder block and crankshaft, then select the bearing with the same number as the total. There are 5 sizes of standard bearings, marked ”1”, ”2”, ”3”, ”4” and ”5” accordingly.

Number Marked

Cylinder block	Crankshaft	Use bearing
1	0	1
1	1	2
1	2	3
2	0	2
2	1	3
2	2	4
3	0	3
3	1	4
3	2	5

HINT:

EXAMPLE

Cylinder block ”2” + Crankshaft ”1” = Total number 3 (Use bearing ”3”)

Cylinder block main journal bore diameter:

Mark ”1”	61.000 – 61.006 mm (2.4016 – 2.4018 in.)
Mark ”2”	61.006 – 61.012 mm (2.4018 – 2.4020 in.)
Mark ”3”	61.012 – 61.018 mm (2.4020 – 2.4023 in.)

Crankshaft main journal diameter:

Mark ”0”	57.004 – 57.010 mm (2.2442 – 2.2445 in.)
Mark ”1”	56.998 – 57.004 mm (2.2440 – 2.2442 in.)
Mark ”2”	56.992 – 56.998 mm (2.2438 – 2.2440 in.)

Standard sized bearing center wall thickness:

Mark ”1”	1.976 – 1.979 mm (0.0778 – 0.0779 in.)
Mark ”2”	1.979 – 1.982 mm (0.0779 – 0.0780 in.)
Mark ”3”	1.982 – 1.985 mm (0.0780 – 0.0781 in.)
Mark ”4”	1.985 – 1.988 mm (0.0781 – 0.0783 in.)
Mark ”5”	1.988 – 1.991 mm (0.0783 – 0.0784 in.)

(m) Completely remove the Plastigage.

21. INSTALL TIGHT PLUG

(a) Apply adhesive around tight plugs.
Adhesive: Part No.08833 – 00070, THREE BOND 1324 or equivalent.

(b) Using SST, tap to the tight plugs as shown tn the illustration.
SST 09950–60010 (09951–00350), 09950–70010 (09951–07100)
Standard depth:
Intake side: 2.0 mm (0.0787 in.)
Exhaust side: 2.0 mm (0.0787 in.)
Front side: 1.5 mm (0.0590 in.)
Rear side A: 1.5 mm (0.0590 in.)
B: 2.0 mm (0.0787 in.)

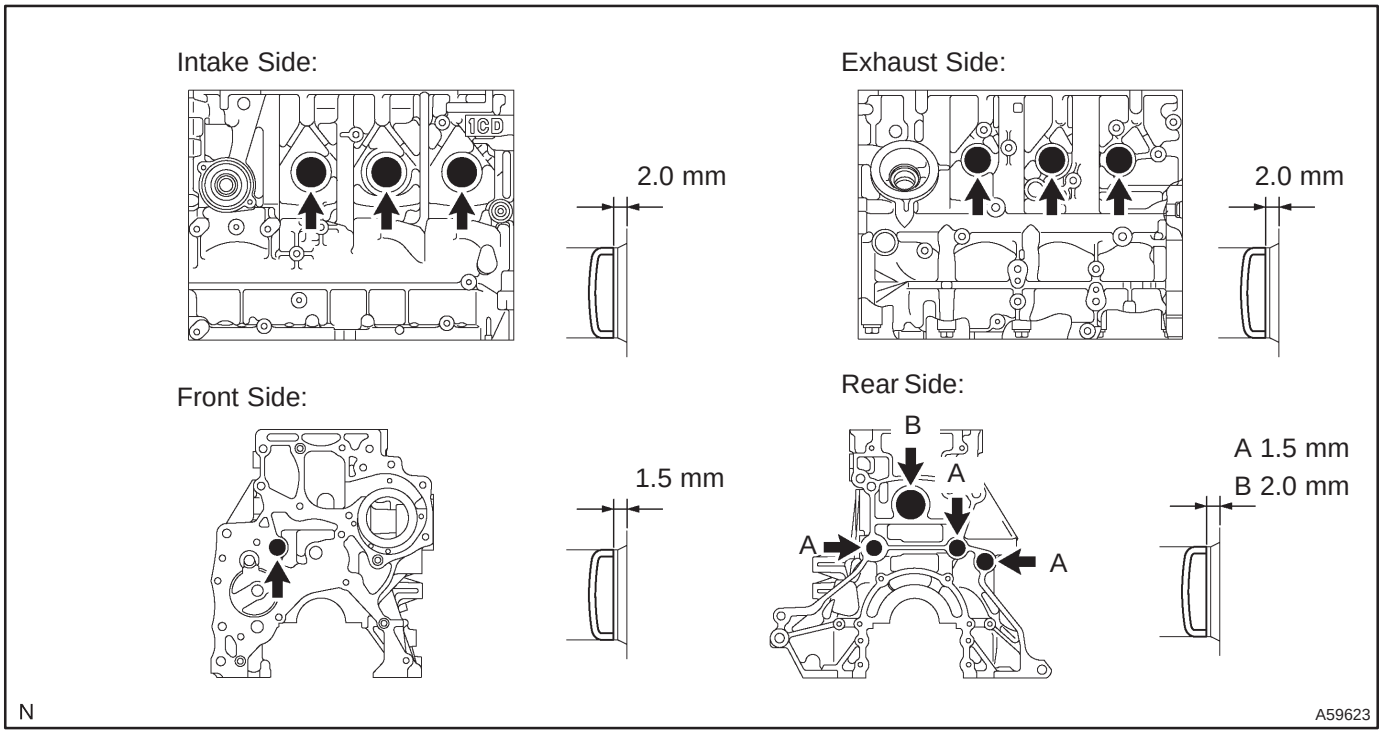

22. INSTALL RING PIN

(a) Using a plastic–faced hammer, tap in new ring pins to the specified protrusion height.

Protrusion height:

A: 7.0 mm (0.2755 in.)

B: 13 mm (0.5118 in.)

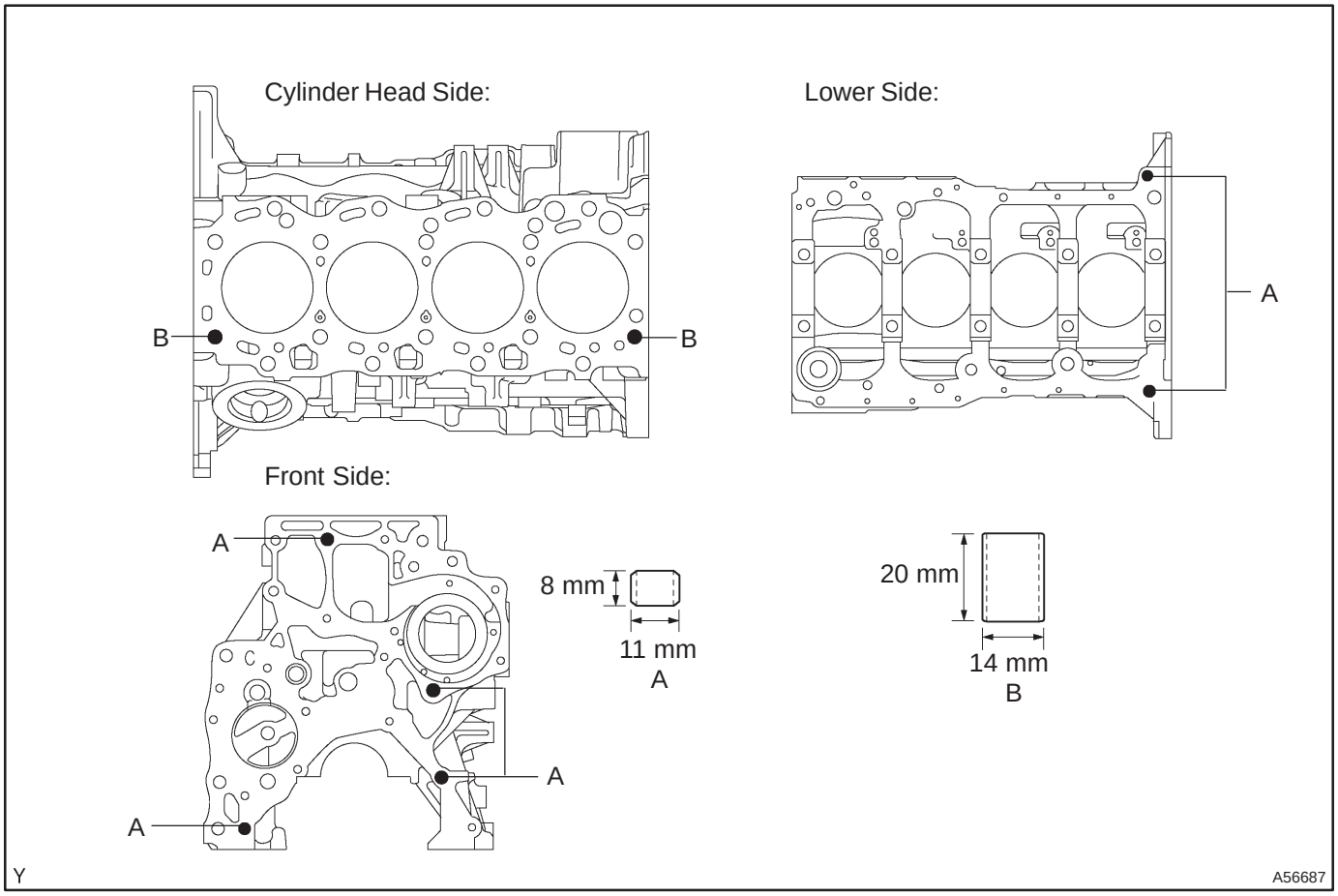

23. INSTALL STRAIGHT PIN

(a) Using a plastic–faced hammer, tap in the straight pin.

Standard protrusion:

A: 13 mm (0.5118 in.)

B: 7.0 mm (0.2755 in.)

C: 5.0 mm (0.1968 in.)

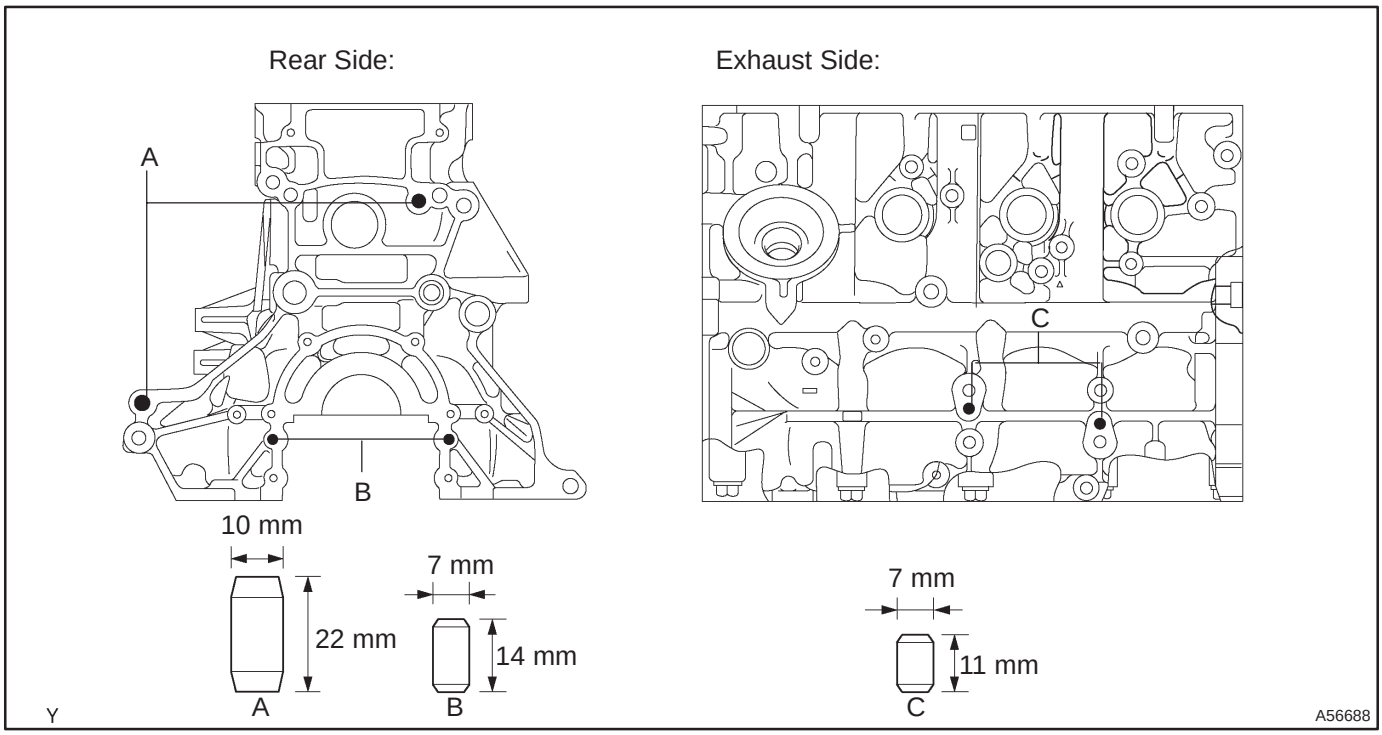

24. INSTALL STUD BOLT

(a) Install the stud bolts as shown in the illustration.

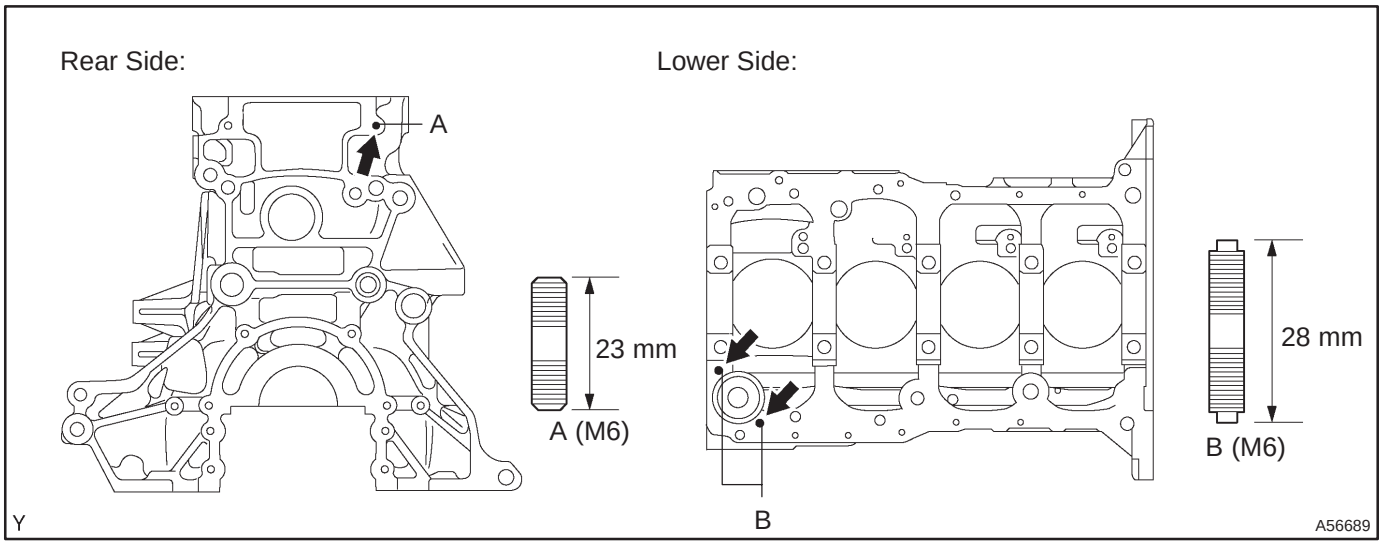

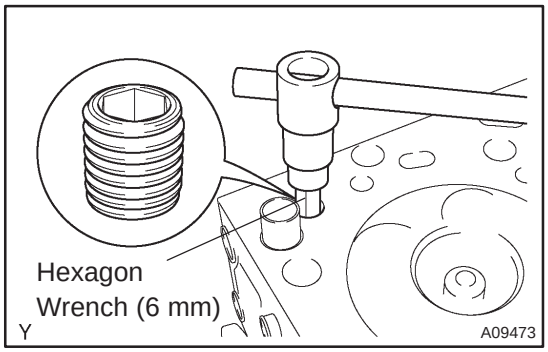

25. INSTALL CYLINDER BLOCK OIL ORIFICE

(a) Using a hexagon wrench (6 mm), install the oil orifice.
Torque: 9.0 N·m (92 kgf·cm, 78 in.·lbf)

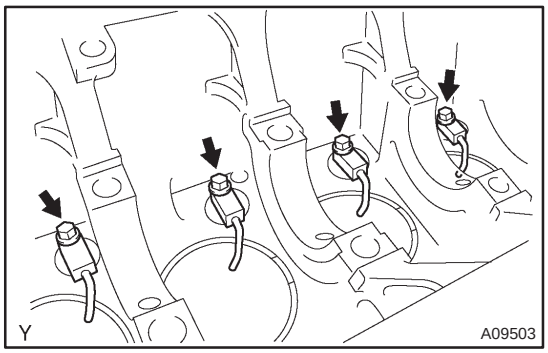

26. INSTALL SUB–ASSY OIL NOZZLE NO.1

(a) Install the oil nozzle with the bolt. Install the 4 oil nozzles.
Torque: 7.4 N·m (76 kgf·cm, 67 in.·lbf)

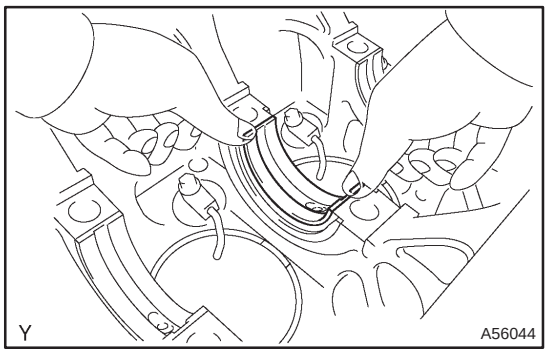

27. INSTALL CRANKSHAFT

(a) Install the bearing on the cylinder block and bearing cap.
HINT:
Upper bearings have an oil groove and oil holes; lower bearings do not.

(1) Align the bearing claw with the claw groove of the cylinder block, and push in the 5 upper bearings.

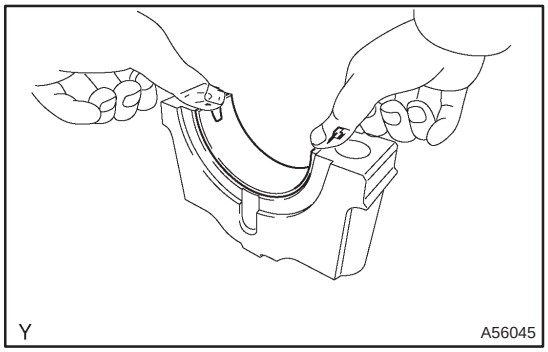

(2) Align the bearing claw with the claw groove of the main bearing cap, and push in the 5 lower bearings.

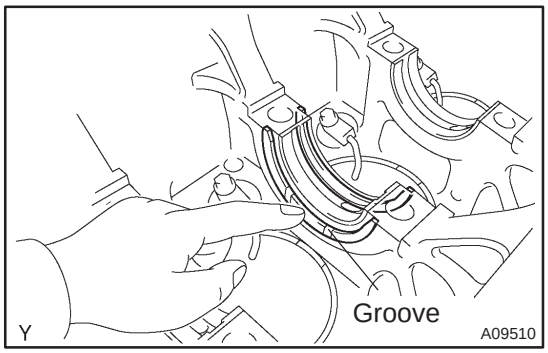

(b) Install the 2 thrust washers under the No. 3 journal position of the cylinder block with the oil grooves facing outward.

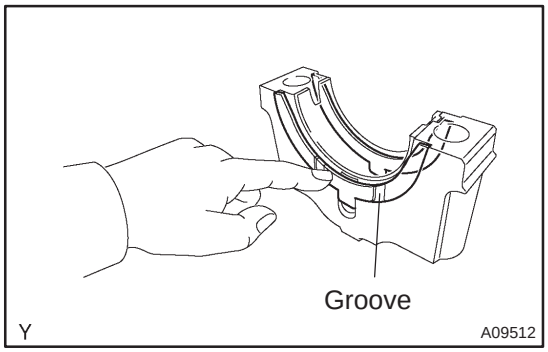

(c) Install the 2 thrust washers on the No. 3 bearing cap with the oil grooves facing outward.

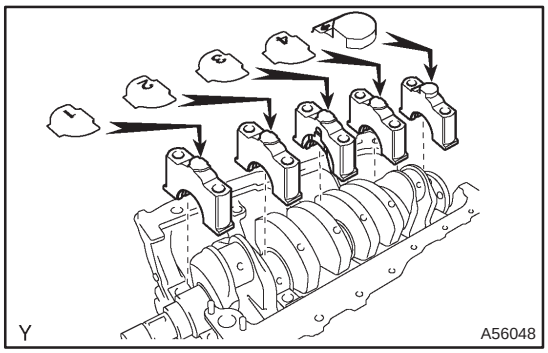

(d) Install the 5 main bearing caps in their proper locations.

HINT:

Each bearing cap has a number and a font mark.

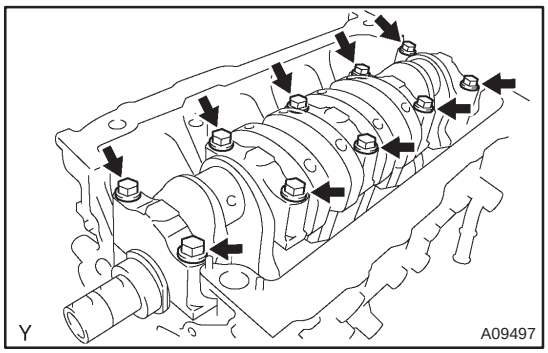

(e) Apply a light coat of engine oil on the threads and under the heads of the main bearing cap bolts.

(f) Install and uniformly tighten the 10 bolts of the main bearing cap in several passes.

Torque: 115 N·m (1,173 kgf·cm, 85 ft·lbf)

(g) Check that the crankshaft turns smoothly.

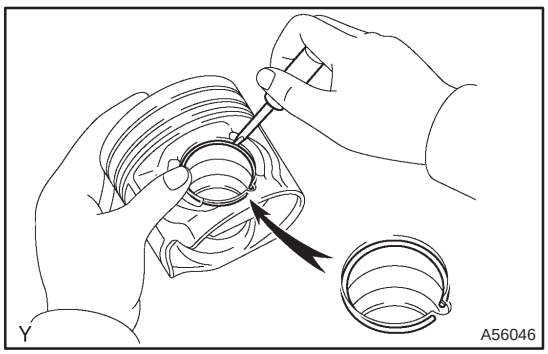

28. INSTALL W/PIN PISTON SUB–ASSY

(a) Install a new snap ring on one side of the piston pin hole.

(b) Gradually heat the piston to 60°C (140°F).

(c) Coat the piston pin and piston hole of the piston with engine oil.

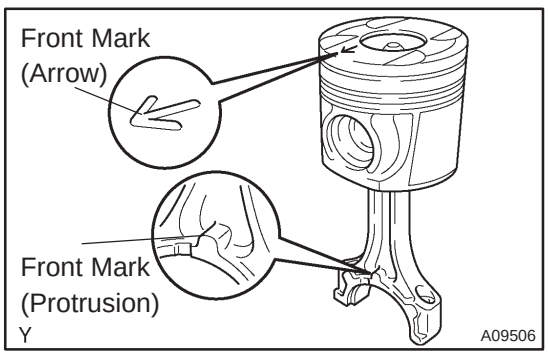

(d) Align the front marks of the piston and connecting rod, and push in the piston pin by hand.

(e) Install a new snap ring on the other side of the piston pin hole.

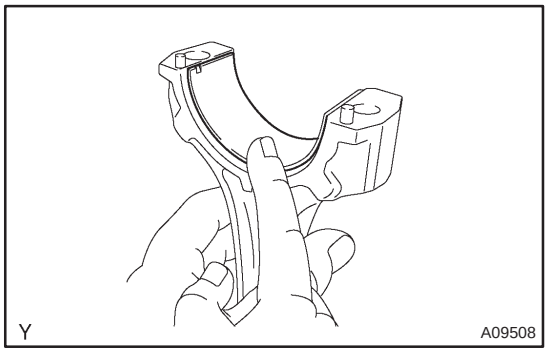

29. INSTALL CONNECTING ROD BEARING

(a) Align the bearing claw with the groove of the connecting rod or connecting cap.
(b) Install the bearings in the connecting rod and connecting rod cap.

30. INSTALL PISTON RING SET

(a) Install the coil by hand.

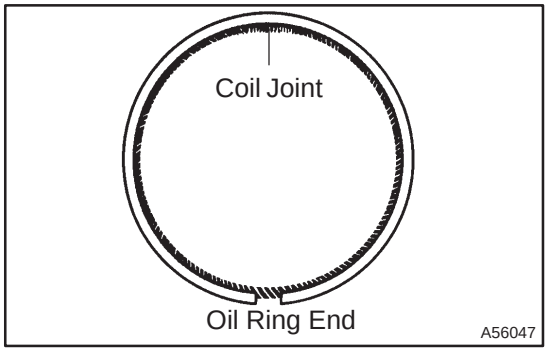

(b) Using a piston ring expander, install the oil ring.

HINT:

Face the end gap of the oil ring in the opposite direction coil joint.

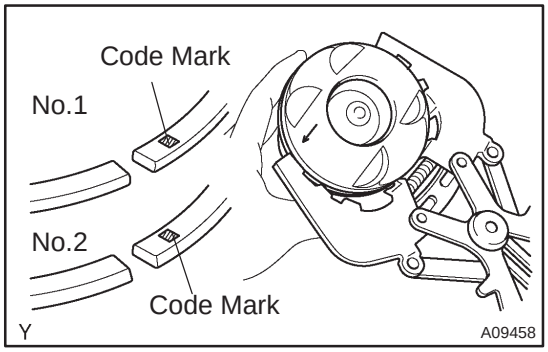

(c) Using a piston ring expander, install the No. 2 and No. 1 piston rings with the code mark facing upward.

Code mark:

No.1	1T
No.2	2T

NOTICE:

Make the expansion of the piston ring as small as necessary.

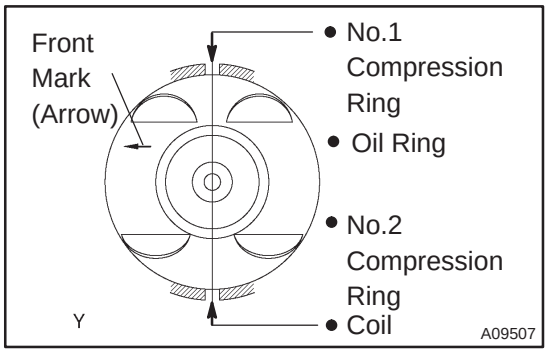

(d) Position the piston rings so that the ring ends are as shown.

31. INSTALL PISTON SUB–ASSY W/CONNECTING ROD

(a) Apply engine oil to the cylinder walls, pistons, and surfaces of connecting rod bearings.
(b) Check the position of the piston ring ends.

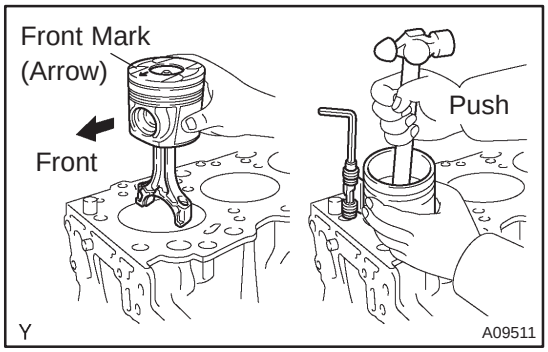

(c) Using a piston ring compressor, push the correctly numbered piston and connecting rod assemblies into each cylinder with the front mark of the piston facing forward.

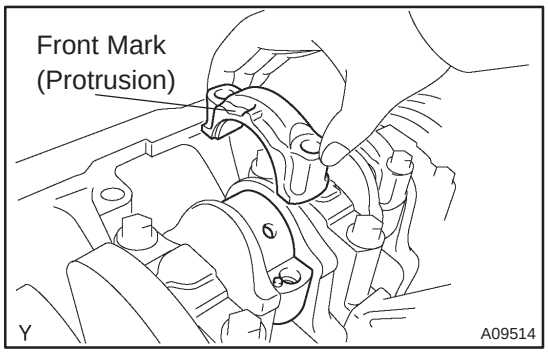

(d) Match the numbered connecting rod cap with the connecting rod.
(e) Install the connecting rod cap with the front mark facing forward.
(f) Apply a light coat of engine oil on the threads and under the heads of the connecting rod cap bolts.

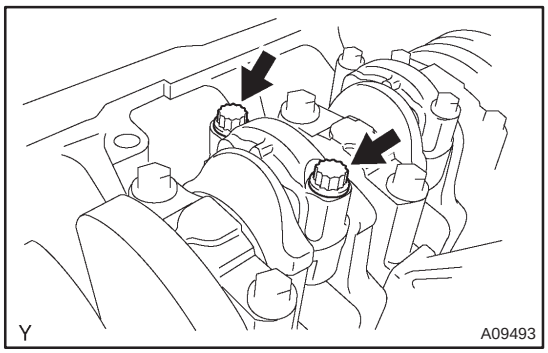

(g) Install and alternately tighten the 2 cap bolts in several passes.
Torque: 30 N·m (306 kgf·cm, 22 ft·lbf)

If any of the cap bolts does not meet the torque specification, replace the connecting rod cap bolts.

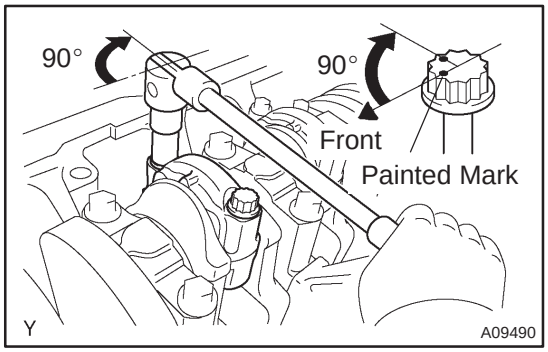

(h) Mark the front of the cap bolt with the paint.
(i) Retighten the cap bolts 90° as shown.
(j) Check that the painted mark is now at a 90° angle to the front.
(k) Check that the crankshaft turns smoothly.

WATER PUMP ASSY (1CD–FTV)

1606V–02

INSPECTION

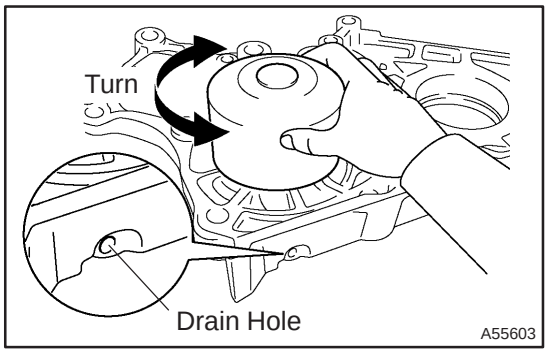

1. INSPECT WATER PUMP ASSY

(a) Visually check the drain hole for coolant leakage.
(b) Turn the pulley, and check that the water pump bearing moves smoothly and quietly.

OIL PUMP ASSY (1CD–FTV)

INSPECTION

1704C–02

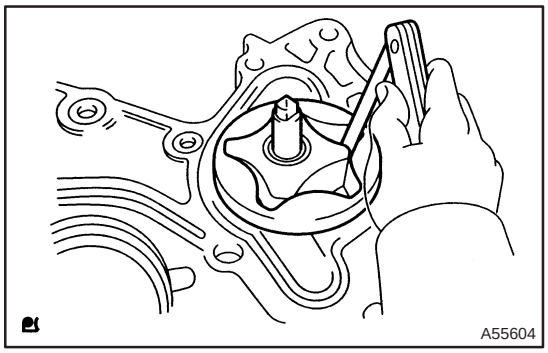

1. INSPECT OIL PUMP ASSY

(a) Inspect the rotors for tip clearance.

(1) Using a feeler gauge, measure the clearance between the drive and driven rotor tips.

Standard tip clearance:
0.08 – 0.16 mm (0.0031 – 0.0063 in.)
Maximum tip clearance: 0.2 mm (0.0079 in.)

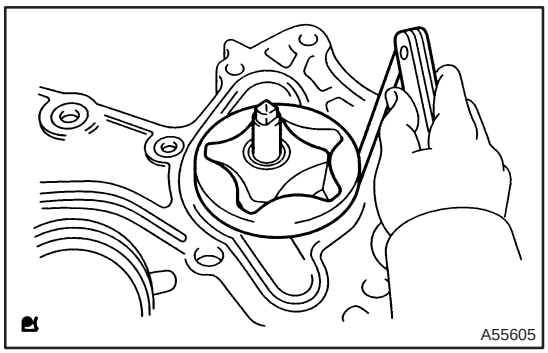

(b) Inspect the rotors for body clearance.

(1) Using a feeler gauge, measure the clearance between the driven rotor and body.

Standard body clearance:
0.1 – 0.17 mm (0.0039 – 0.0067 in.)
Maximum body clearance: 0.2 mm (0.0079 in.)

STARTER ASSY(1.4KW) (1CD–FTV)

COMPONENTS

190AE–01

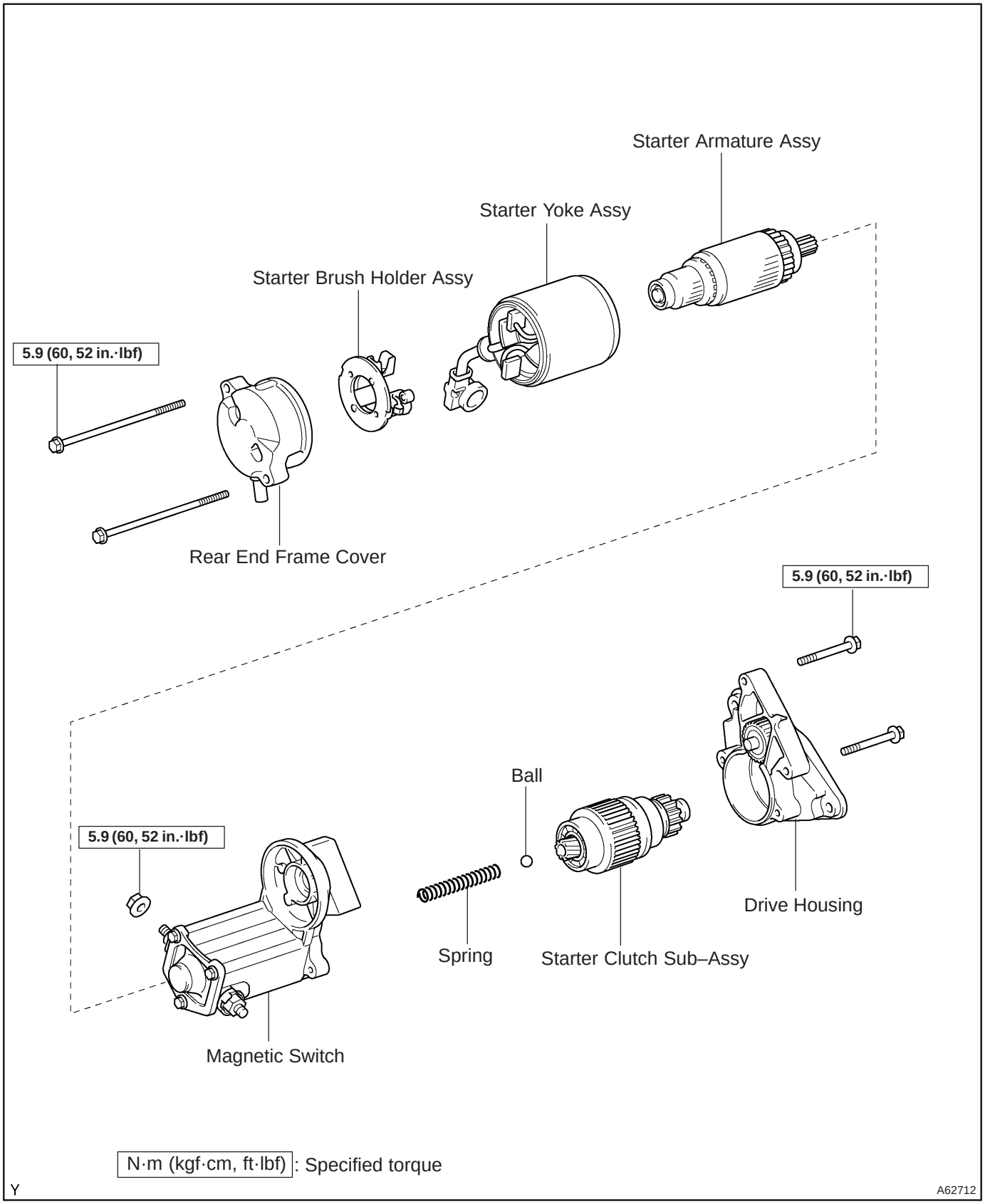

1906G–02

OVERHAUL

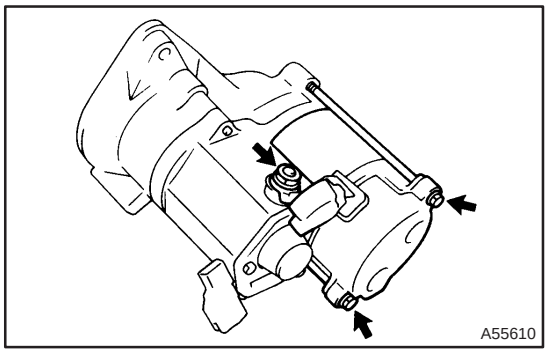

1. REMOVE STARTER YOKE ASSY

(a) Remove the nut, and disconnect the lead wire from the magnetic switch terminal.
(b) Remove the 2 through bolts.
(c) Pull out the yoke together with the armature from the magnetic switch.

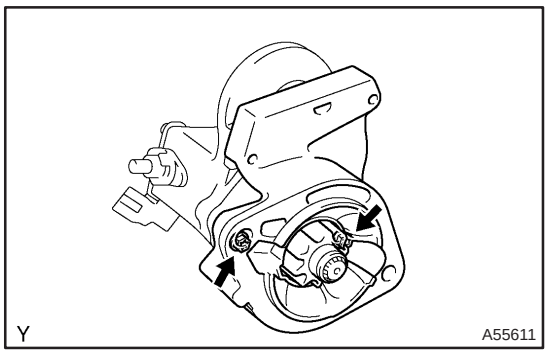

2. REMOVE STARTER CLUTCH SUB–ASSY

(a) Remove the 2 bolts and drive housing.

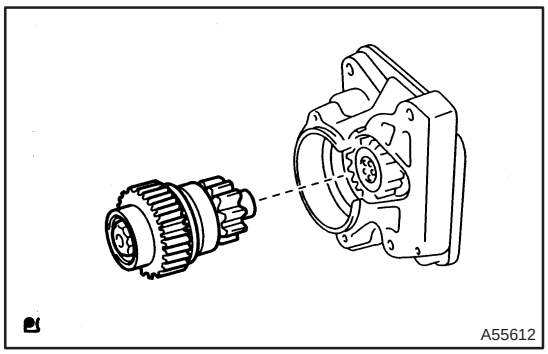

(b) Remove the clutch from the drive housing.

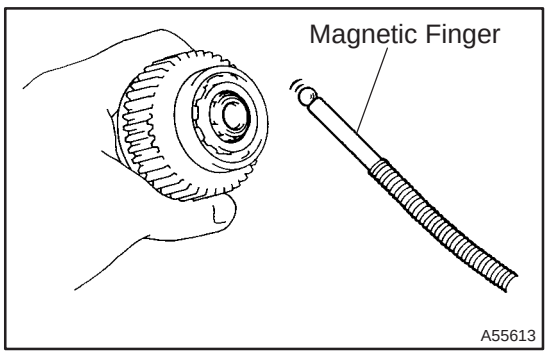

(c) Using a magnetic finger, remove the ball from the clutch shaft hole.

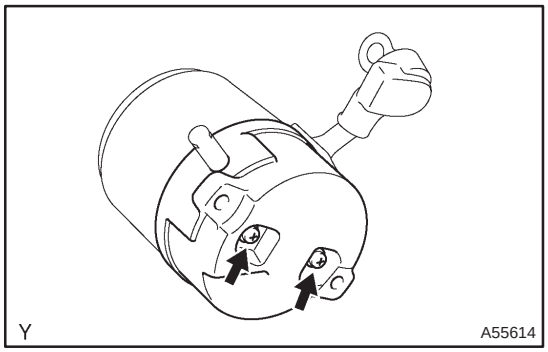

3. REMOVE STARTER BRUSH HOLDER ASSY

(a) Remove the 2 screws and end frame from the yoke.

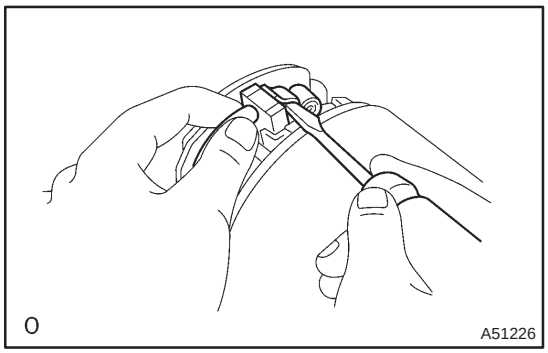

(b) Using a screwdriver, hold the spring back disconnect the brush from the brush holder. Disconnect the 4 brushers and remove the brush holder.

4. REMOVE STARTER ARMATURE ASSY

(a) Remove the armature from the yoke.

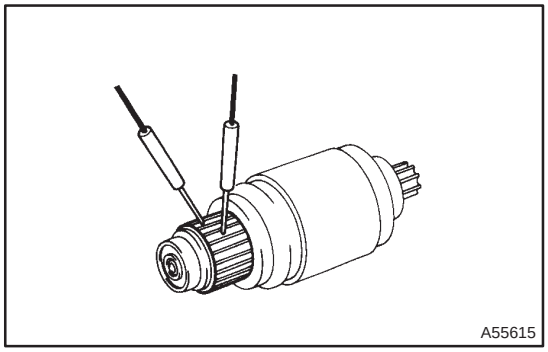

5. INSPECT STARTER ARMATURE ASSY

(a) Using an ohmmeter, check that there is continuity between the segments of the commutator.

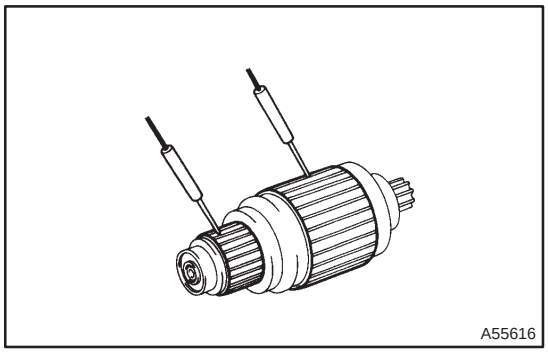

(b) Using an ohmmeter, check that there is no continuity between the commutator and armature coil core.

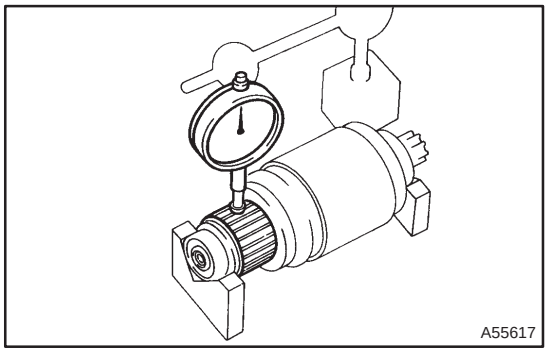

(c) Place the commutator on V–blocks.
(d) Using a dial gauge, measure the circle runout.
Maximum circle runout: 0.05 mm (0.002 in.)

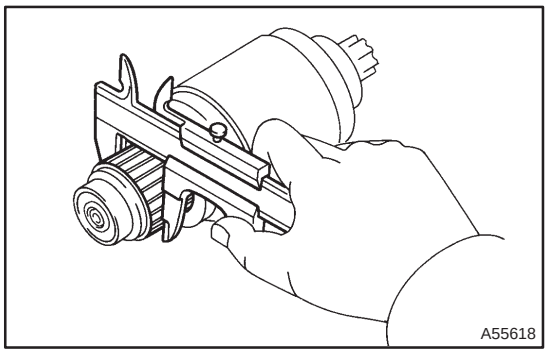

(e) Using vernier calipers, measure the commutator diameter.
Standard diameter: 30 mm (1.1811 in.)
Minimum diameter: 29 mm (1.1417 in.)

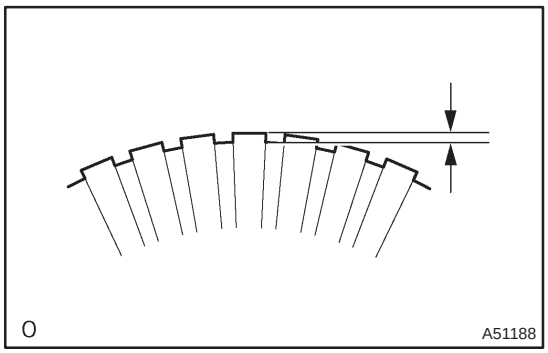

(f) Check that the undercut depth is clean and free of foreign materials. Smooth out the edge.
Standard undercut depth: 0.6 mm (0.024 in.)
Minimum undercut depth: 0.2 mm (0.008 in.)

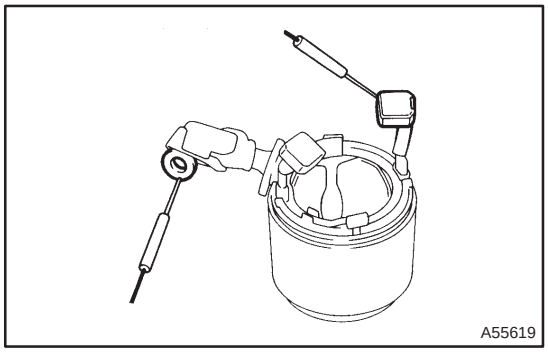

6. INSPECT STARTER YOKE ASSY

(a) Using an ohmmeter, check that there is continuity between the lead wire and field coil brush lead.

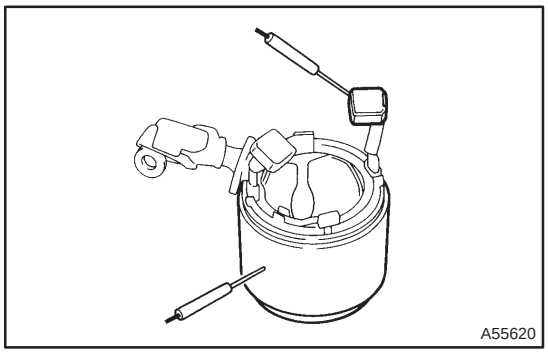

(b) Using an ohmmeter, check that there is no continuity between the field coil brush lead and yoke.

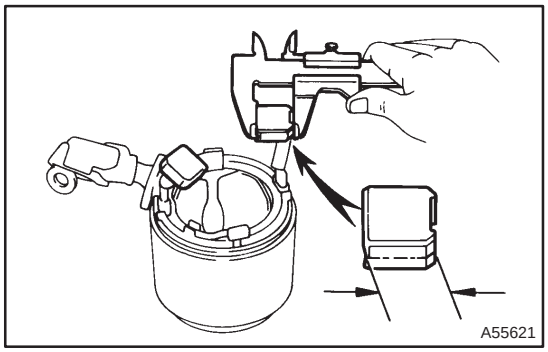

(c) Using vernier calipers, measure the brush length.
Standard length: 15.5 mm (0.6102 in.)
Minimum length: 8.5 mm (0.3346 in.)

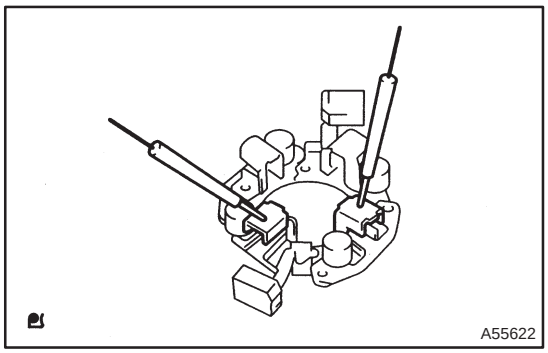

7. INSPECT STARTER BRUSH HOLDER ASSY

(a) Using an ohmmeter, check that there is no continuity between the positive (+) and negative (–) brush holders.

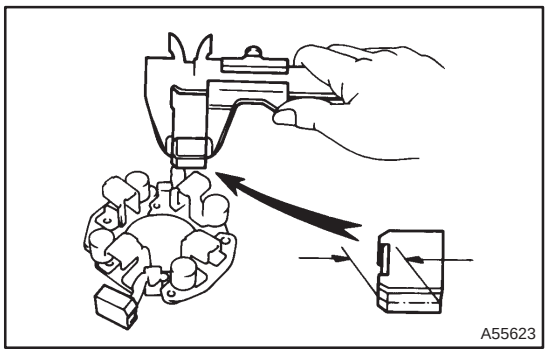

(b) Using vernier calipers, measure the brush length.
Standard length: 15.5 mm (0.6102 in.)
Minimum length: 8.5 mm (0.3346 in.)

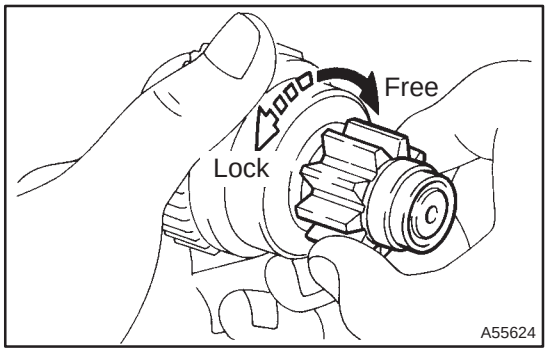

8. INSPECT STARTER CLUTCH SUB–ASSY

(a) Rotate the pinion gear clockwise, and check that it turns freely. Try to rotate the pinion gear counterclockwise and check that it locks.

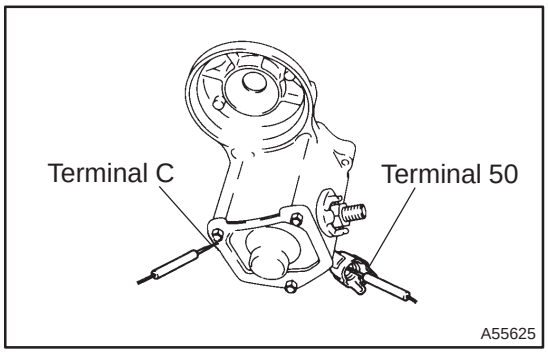

9. INSPECT MAGNET STARTER SWITCH ASSY

(a) Using an ohmmeter, check that there is continuity between terminal 50 and C.

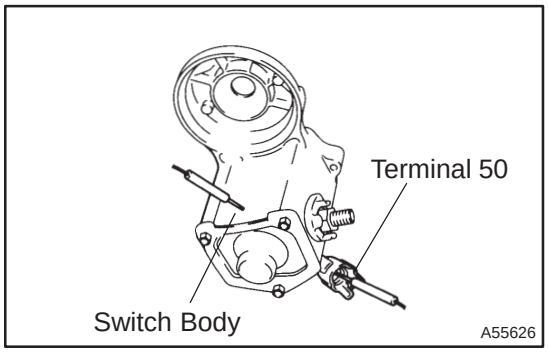

(b) Using an ohmmeter, check that there is continuity between terminal 50 and the switch body.

10. INSTALL STARTER ARMATURE ASSY

(a) Apply grease to the armature bearings and insert the armature into the yoke.

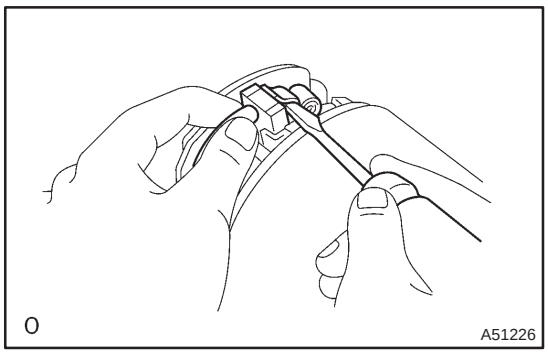

11. INSTALL STARTER BRUSH HOLDER ASSY

(a) Place the brush holder on the armature.
(b) Using a screwdriver, hold the brush spring back and connect the brush into the brush holder. Connect the 4 brushes.

NOTICE:
Check that the positive (+) lead wires are not grounded.

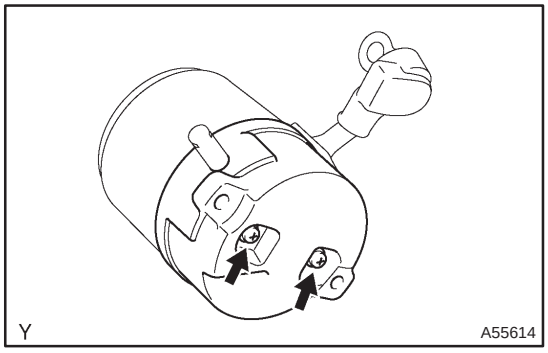

(c) Install the end frame to the yoke with the 2 screws.
Torque: 1.5 N·m (15 kgf·cm, 13 in.·lbf)

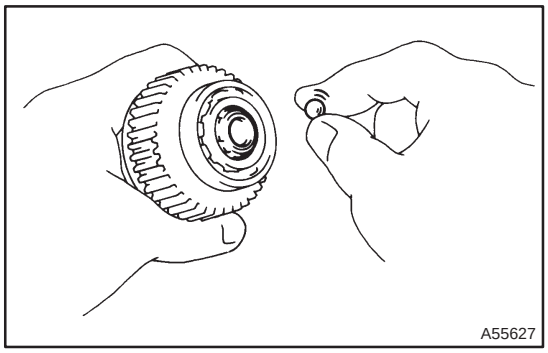

12. INSTALL STARTER CLUTCH SUB–ASSY

(a) Apply grease to the ball.
(b) Insert the ball into the clutch shaft hole.

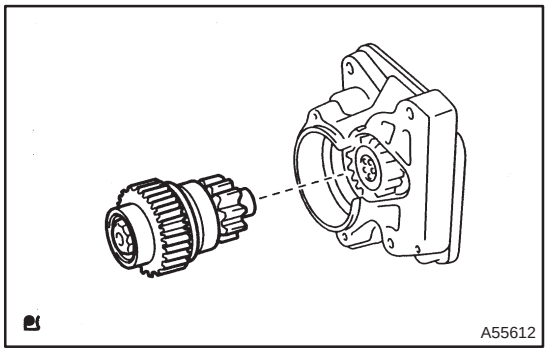

(c) Place the clutch on the drive housing.

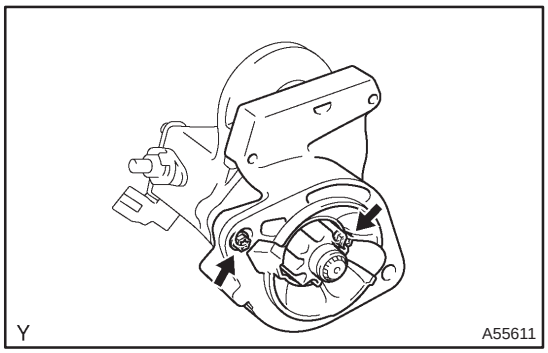

(d) Install the drive housing to the magnetic switch with the 2 bolts.
Torque: 5.9 N·m (60 kgf·cm, 52 in.·lbf)

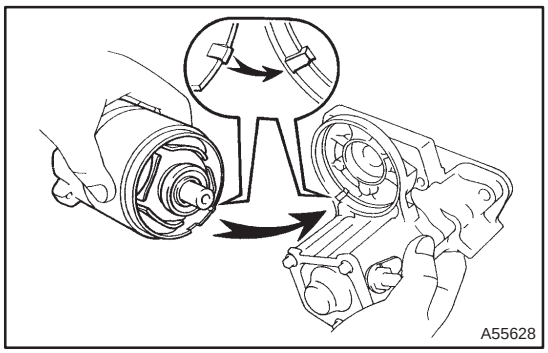

13. INSTALL STARTER YOKE ASSY

(a) Align the protrusion of the yoke with the cutout of the magnetic switch.

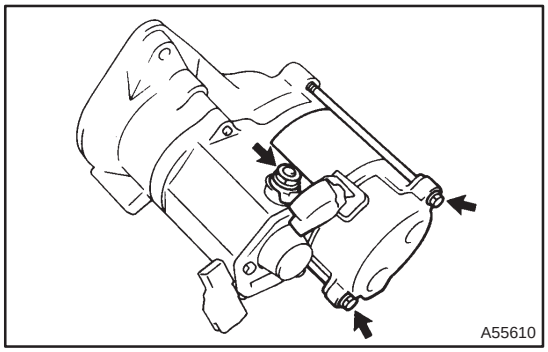

(b) Install the yoke and armature with the 2 through bolts.
Torque: 5.9 N·m (60 kgf·cm, 52 in.·lbf)

(c) Connect the lead wire to terminal C with the nut.
Torque: 5.9 N·m (60 kgf·cm, 52 in.·lbf)

STARTER ASSY(2.0KW) (1CD–FTV)

190AF–01

COMPONENTS

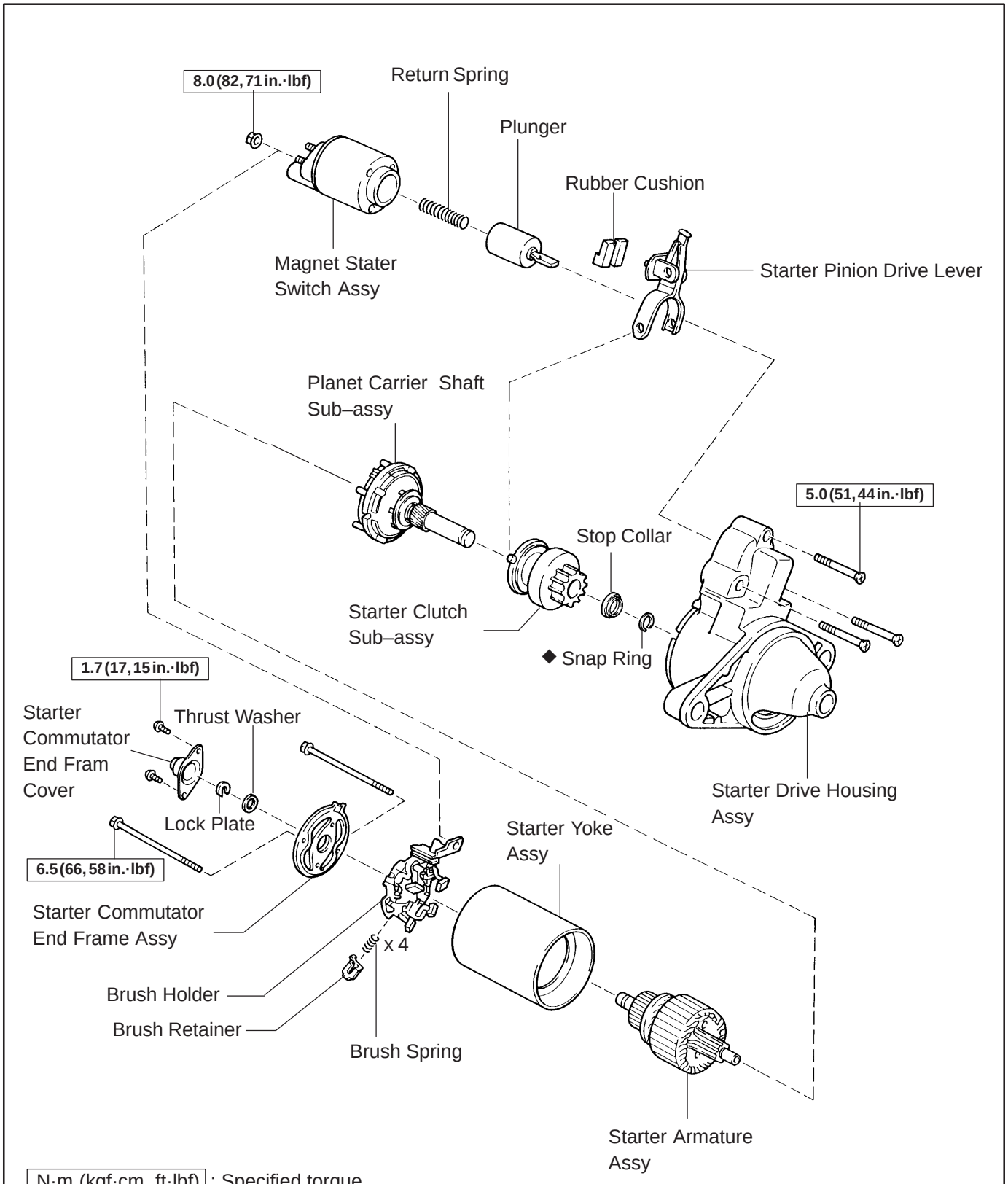

N·m (kgf·cm, ft·lbf) : Specified torque

◆ Non–reusable part

N

A62721

OVERHAUL

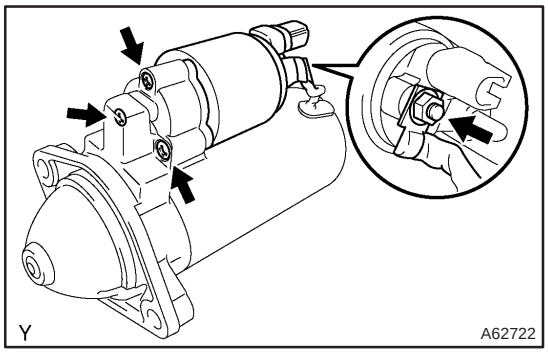

1. REMOVE MAGNET STARTER SWITCH ASSY

(a) Remove the nut, and disconnect lead wire from the magnet starter switch terminal.

(b) Remove the 3 screws, magnet starter switch and return spring.

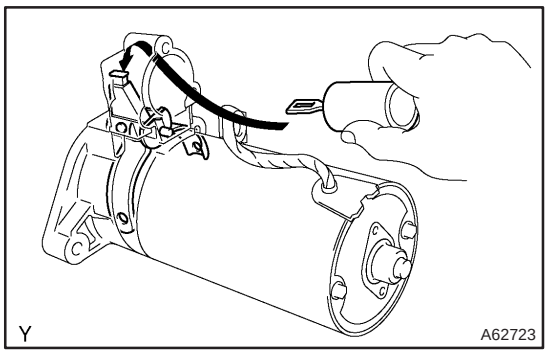

(c) Pull the plunger, and disconnect the plunger hook from the upper side of the drive lever.

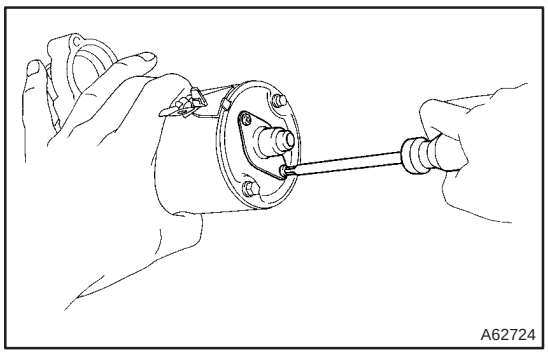

2. REMOVE STARTER COMMUTATOR END FRAM COVER

(a) Remove the 2 screws and end fram cover.

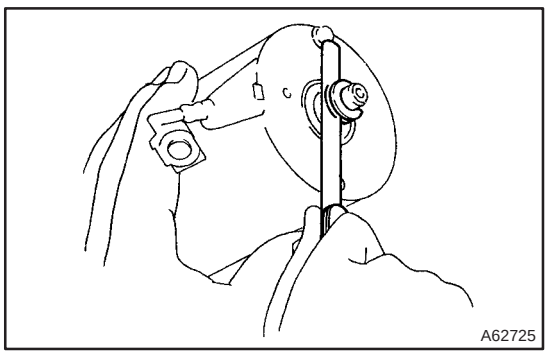

(b) Using a feeler gauge, measure the armature thrust clearance between the lock plate and end frame.

Standard thrust clearance: 0.3 mm (0.012 in.)

Maximum thrust clearance: 0.6 mm (0.024 in.)

If the thrust clearance is greater the than maximum, replace the thrust washer.

(c) Remove the lock plate and thrust washer.

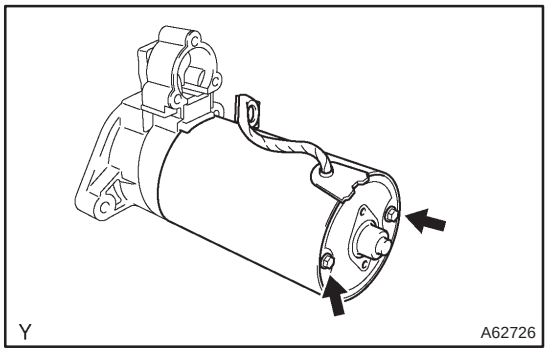

3. REMOVE STARTER YOKE ASSY

(a) Remove the 2 through bolts, and pull out the starter yoke together with the armature.

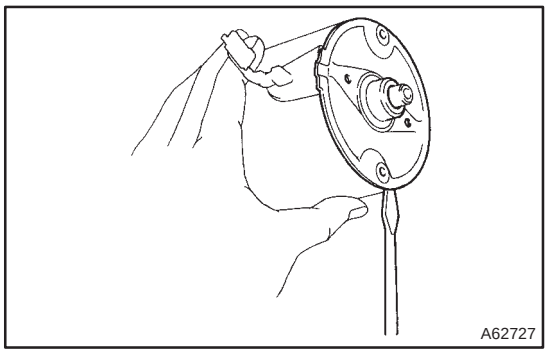

4. REMOVE STARTER COMMUTATOR END FRAM ASSY

(a) Using a screwdriver, pry out the commutator end frame.

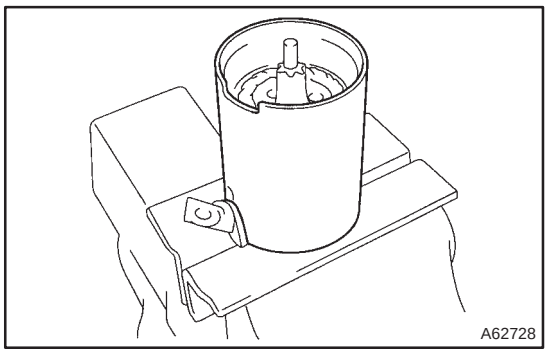

5. REMOVE STARTER ARMATURE ASSY

6. REMOVE STARTER BRUSH HOLDER ASSY

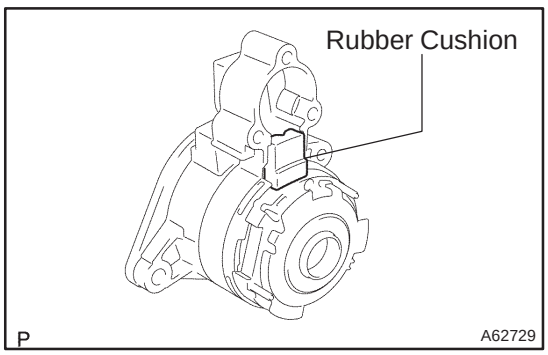

7. REMOVE PLANET CARRIER SHAFT SUB–ASSY

(a) Remove the rubber cushion.

(b) Remove the planet carrier shaft and starter clutch assembly.

8. REMOVE STARTER PINION DRIVE LEVER

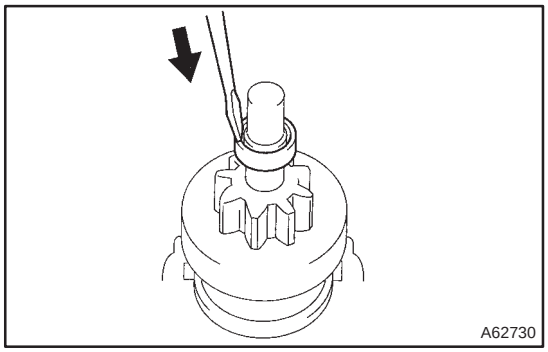

9. REMOVE STARTER CLUTCH SUB–ASSY

(a) Using a screwdriver, tap in the stop collar towards the starter clutch.

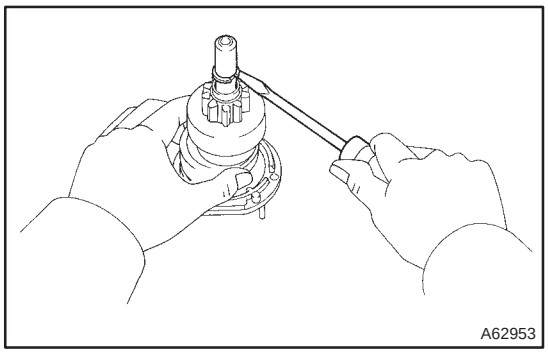

(b) Using a screwdriver, pry out the snap ring.

(c) Remove the stop collar from the shaft.

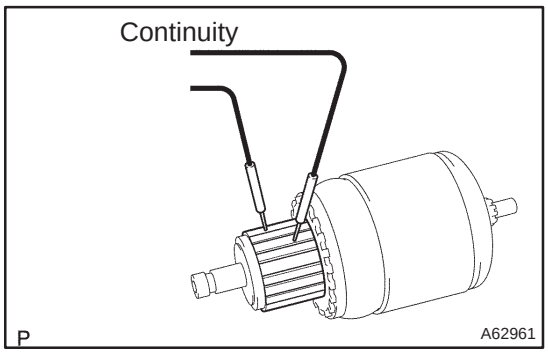

10. INSPECT STARTER ARMATURE ASSY

(a) Using an ohmmeter, check that there is continuity between the segments of the commutator.

If there is no continuity between any segments, replace the armature.

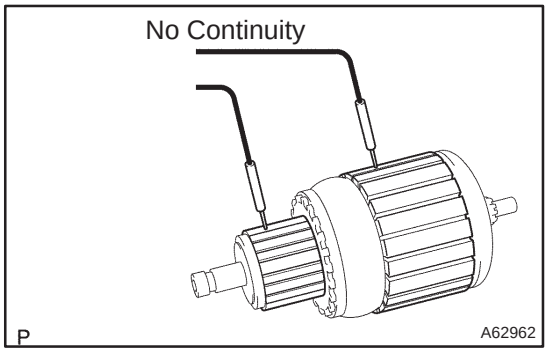

(b) Using an ohmmeter, check that there is no continuity between the commutator and armature coil core.

If there is continuity, replace the armature.

(c) Check the commutator for the dirty and burnt surface.

If the surface is dirty or burnt, correct with sandpaper (No.400) or a lathe.

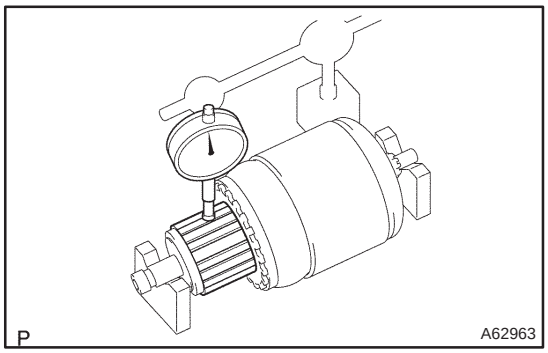

(d) Place the commutator on V–blocks.

(e) Using a dial indicator, measure the circle runout.

Maximum circle runout: 0.03 mm (0.0012 in.)

If the circle runout is greater than maximum, correct it on a lathe.

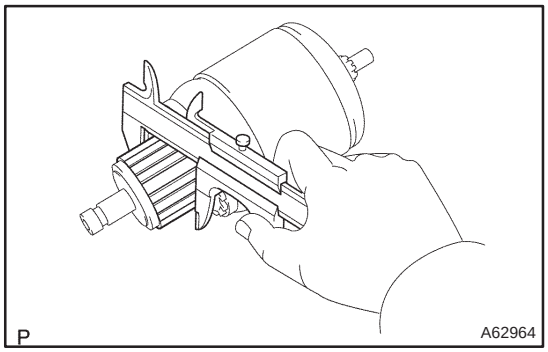

(f) Using vernier calipers, measure the commutator diameter.

Standard diameter: 32.3 mm (1.272 in.)

Minimum diameter: 30.5 mm (1.201 in.)

If the diameter is less than minimum, replace the armature.

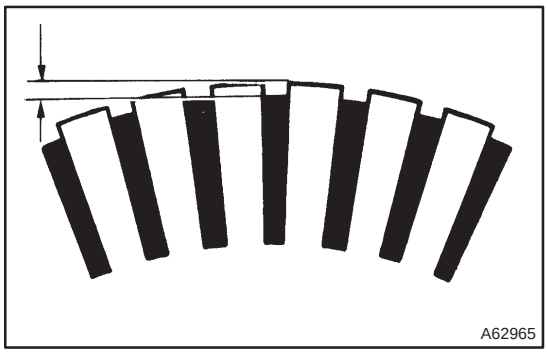

(g) Check that the undercut depth is clean and free of foreign materials. Smooth out the edge.

Standard undercut depth: 0.9 mm (0.035 in.)

Minimum undercut depth: 0.3 mm (0.012 in.)

If the undercut depth is less than minimum, correct it with a hacksaw blade.

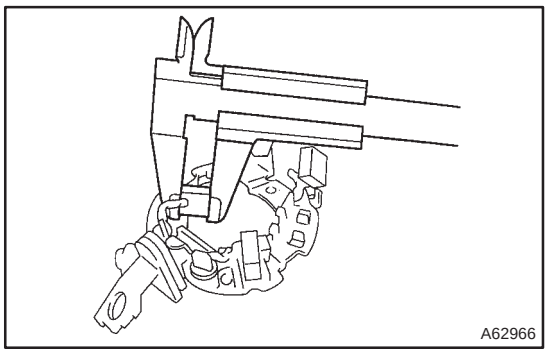

11. INSPECT STARTER BRUSH HOLDER ASSY

(a) Using vernier calipers, measure the brush length.

Standard length: 14.5 mm (0.571 in.)

Minimum length: 9.0 mm (0.354 in.)

If the length is less than minimum, replace the brush holder.

12. INSPECT STARTER CLUTCH SUB–ASSY

(a) Check the gear teeth on the starter clutch for wear or damage.

If the gear is damaged, replace it.

If damaged, replace the clutch assembly. If damaged, also check the drive plate ring gear for wear or damage.

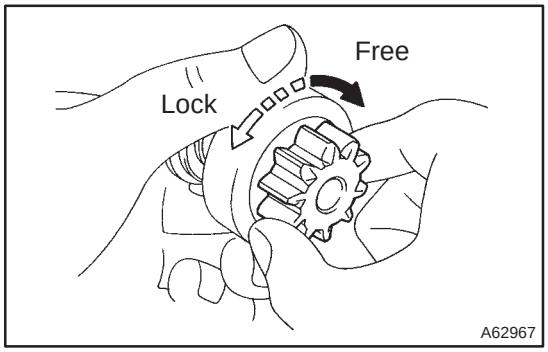

(b) Rotate the clutch pinion gear clockwise and check that it turns freely. Try to rotate the clutch pinion gear counterclockwise and check that it locks.

If necessary, replace the starter clutch.

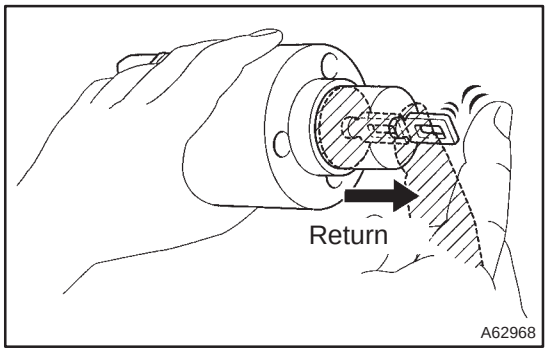

13. INSPECT MAGNET STARTER SWITCH ASSY

(a) Push in the plunger and check that it returns quickly to its original position.

If necessary, replace the magnetic switch.

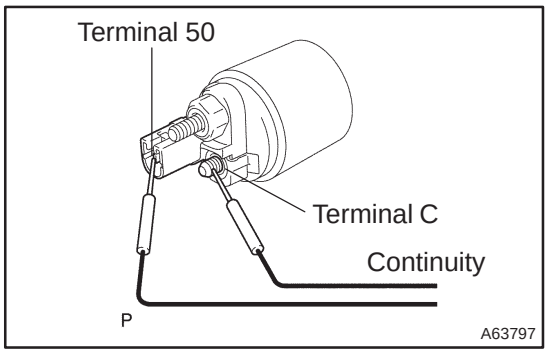

(b) Using an ohmmeter, check that there is continuity between terminals 50 and C.

If there is no continuity, replace the magnetic switch.

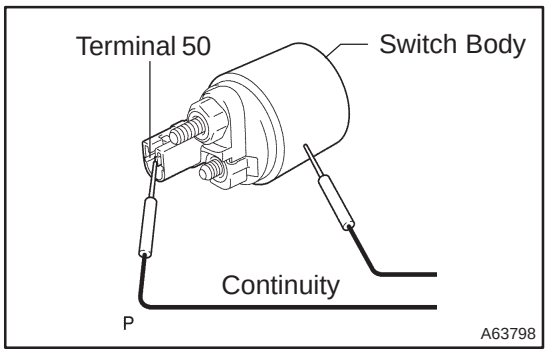

(c) Using an ohmmeter, check that there is continuity between terminal 50 and the switch body.

If there is no continuity, replace the magnet starter switch.

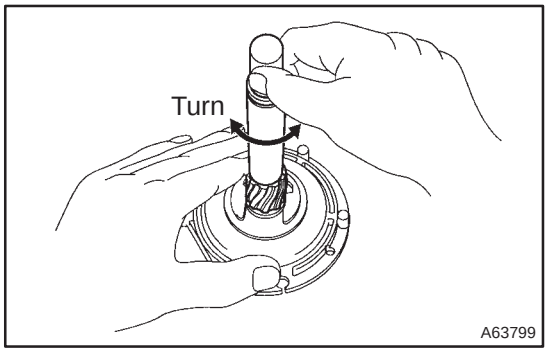

14. INSPECT PLANET CARRIER SHAFT SUB–ASSY

(a) Turn the shaft, and check that it is not rough or worn.

If it feels rough or worn, replace the planet carrier shaft.

15. INSTALL STARTER PINION DRIVE LEVER

16. INSTALL STARTER CLUTCH SUB–ASSY

(a) Apply grease to the bushing and spline of the starter clutch and planet carrier shaft.

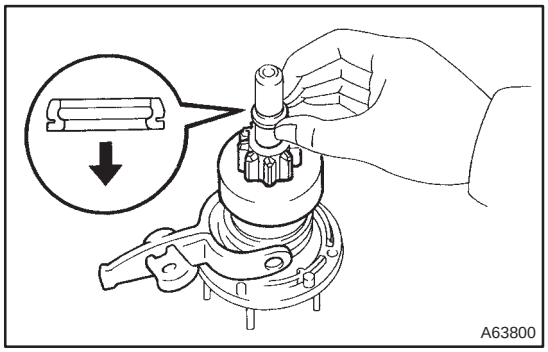

(b) Place the starter clutch and stop collar on the planet carrier shaft as shown in the illustration.

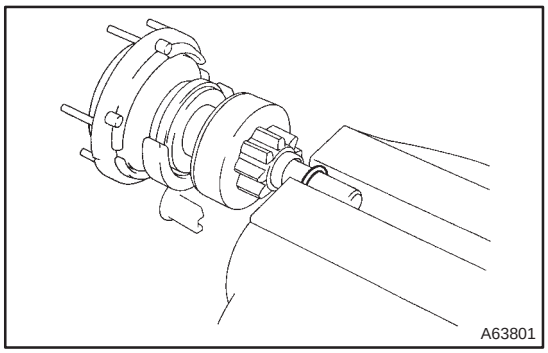

(c) Install a new snap ring to the planet carrier shaft groove.
(d) Using a vise, compress the snap ring.
(e) Check that the snap ring fits correctly.

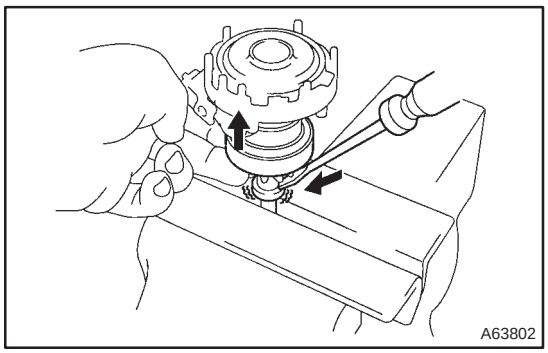

(f) Using a screwdriver, tap the stop collar to slide it onto the snap ring.

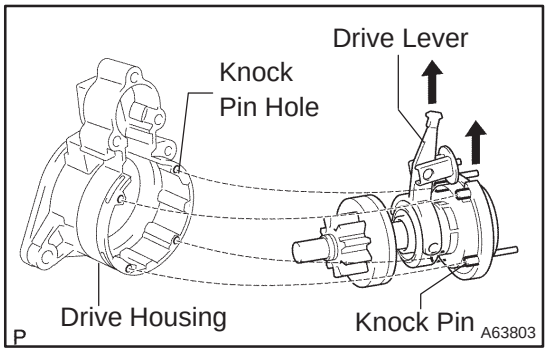

17. INSTALL PLANET CARRIER SHAFT SUB–ASSY

(a) Set the planet carrier shaft and drive lever in position as shown in the illustration.
(b) Align the holes of the drive housing with the knock pins.
(c) Install the planet carrier shaft and starter clutch to the drive housing.

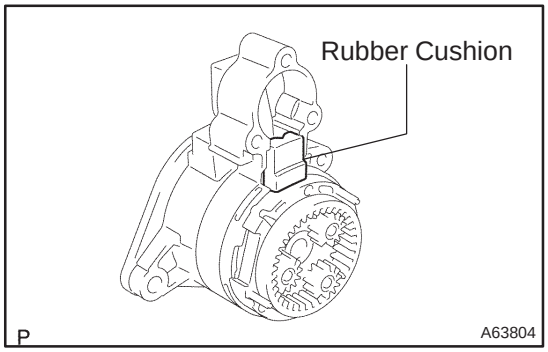

(d) Install the rubber cushion.

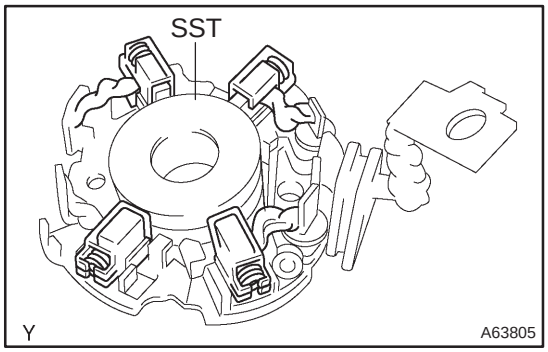

18. INSTALL STARTER BRUSH HOLDER ASSY

(a) Install the 4 brush retainers and 4 brush springs to the brush holder.

(b) Using SST, install the 4 brushes to the brush holder.
SST 09950–60010 (09951–00340)

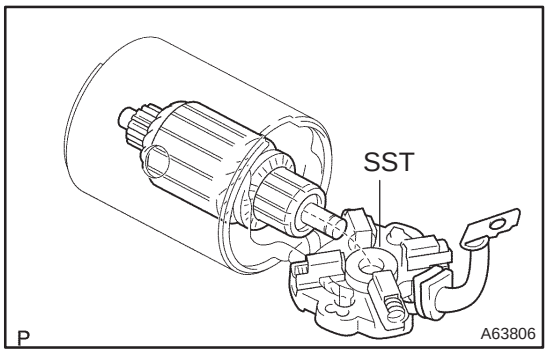

(c) Attach the brush holder to the armature.

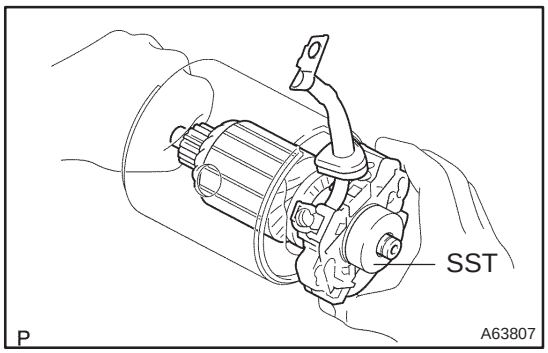

(d) Push the armature, and remove the SST.

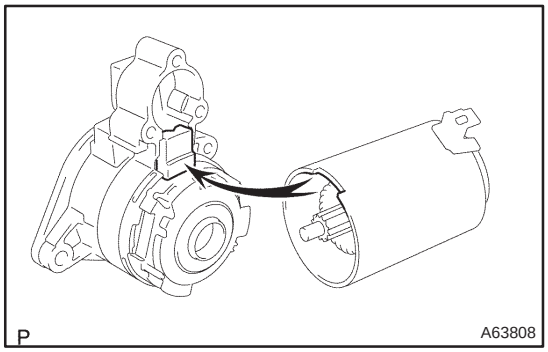

19. INSTALL STARTER YOKE ASSY

(a) Align the cushion rubber on the starter drive housing with the cutout of the starter yoke.

(b) Install the starter yoke and armature assembly.

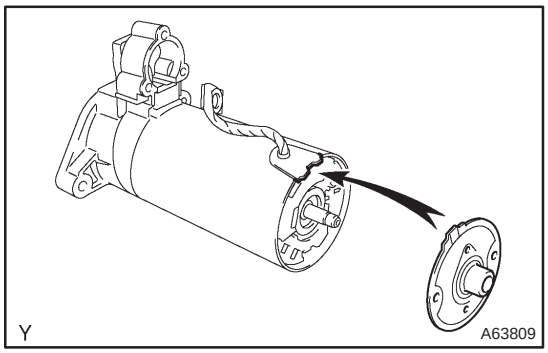

(c) Align the commutator end frame with the brush holder rubber part as shown in the illustration.

(d) Install the commutator end frame with the 2 through bolts.
6.5 N·m (66 kgf·cm, 58 in.·lbf)

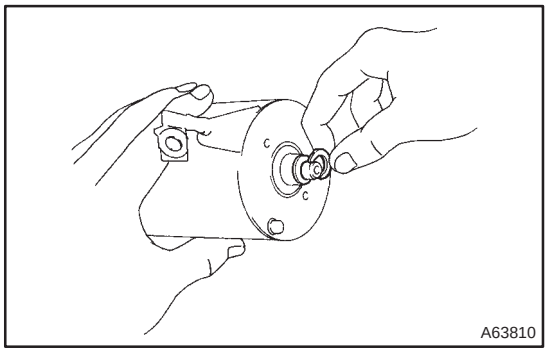

20. INSTALL STARTER COMMUTATOR END FRAM COVER

(a) Install the thrust washer and lock plate.

(b) Check the armature thrust clearance between the lock plate and the end frame cover. (See page 19–9)

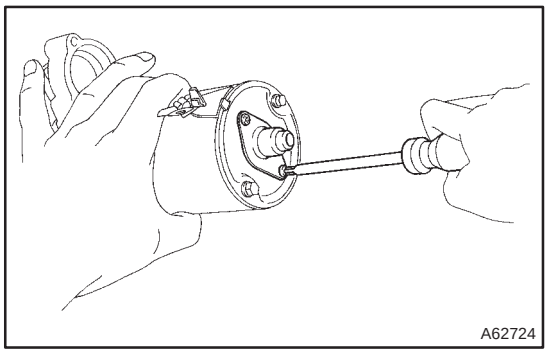

(c) Pack grease to the commutator end cover.

(d) Install the commutator end fram cover with the 2 screws.

1.7 N·m (17 kgf·cm, 15 in.·lbf)

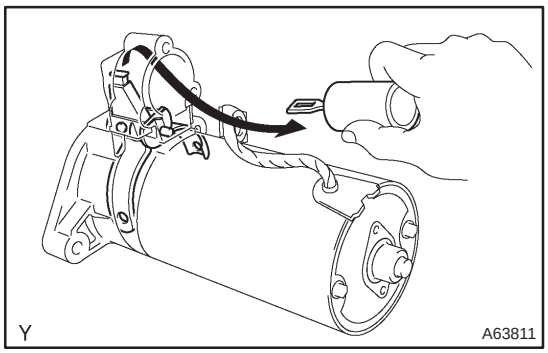

21. INSTALL MAGNET STARTER SWITCH ASSY

(a) Hang the plunger hook to the upper side of the drive lever.

(b) Install the return spring into the plunger.

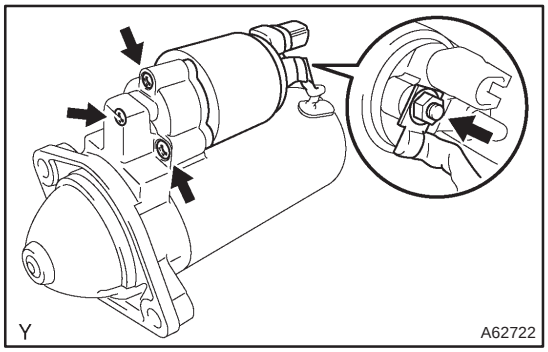

(c) Install the return spring and magnet sarter switch with the 3 screws.

5.0 N·m (51 kgf·cm, 44 in.·lbf)

(d) Connect the lead wire to the magnet starter switch terminal with the nut.

8.0 N·m (82 kgf·cm, 71 in.·lbf)

STARTER ASSY(2.2KW) (1CD–FTV)

COMPONENTS

190AH–01

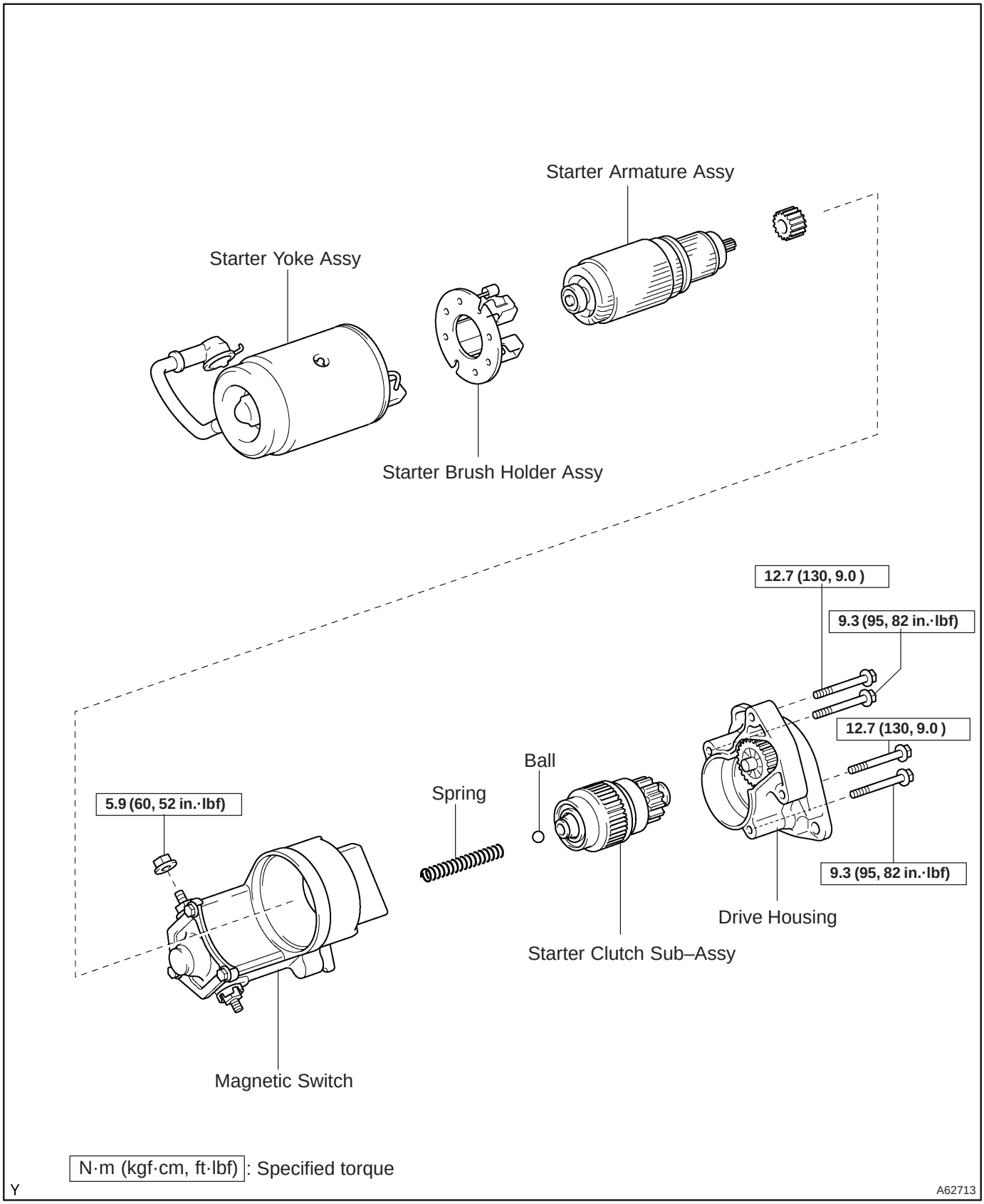

OVERHAUL

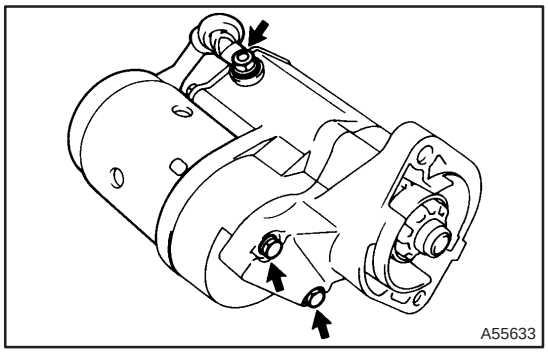

1. REMOVE STARTER YOKE ASSY

(a) Remove the nut, and disconnect the lead wire from the magnetic switch terminal.
(b) Remove the 2 through bolts.
(c) Pull out the yoke together with the armature from the magnetic switch.

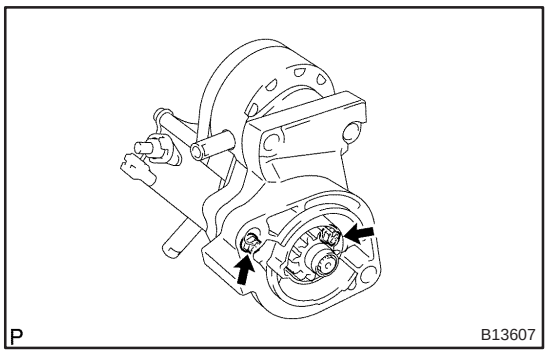

2. REMOVE STARTER CLUTCH SUB–ASSY

(a) Remove the 2 bolts and drive housing.

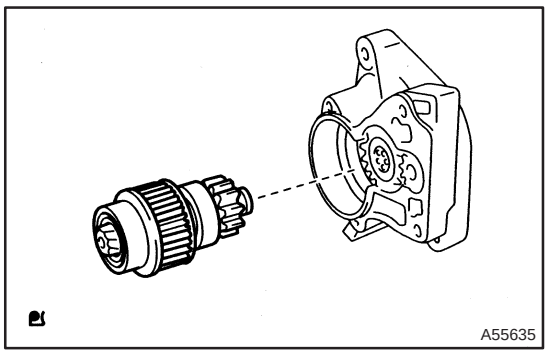

(b) Remove the clutch from the drive housing

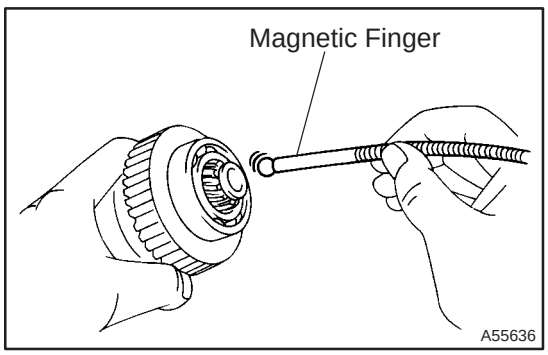

(c) Using a magnetic finger, remove the ball from the clutch shaft hole.

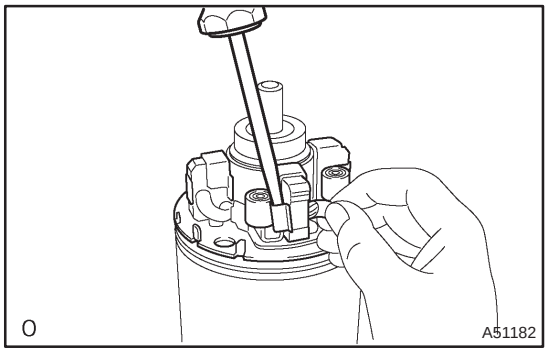

3. REMOVE STARTER BRUSH HOLDER ASSY

(a) Using a screwdriver, hold the spring back disconnect the brush from the brush holder. Disconnect the 4 brushers and remove the brush holder.

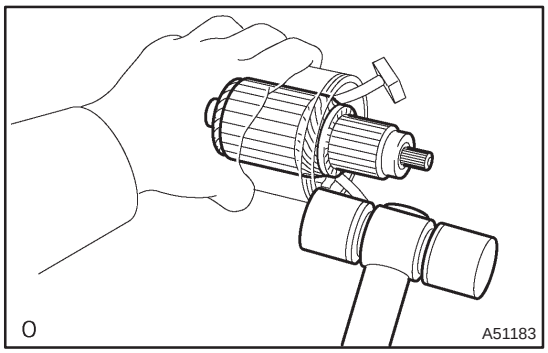

4. REMOVE STARTER ARMATURE ASSY

(a) Using a plastic–faced hammer, tap the yoke and remove the armature.

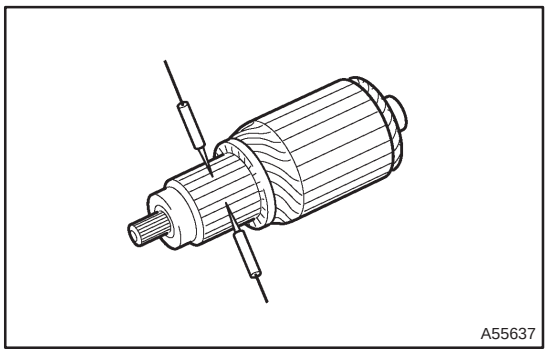

5. INSPECT STARTER ARMATURE ASSY

(a) Using an ohmmeter, check that there is continuity between the segments of the commutator.

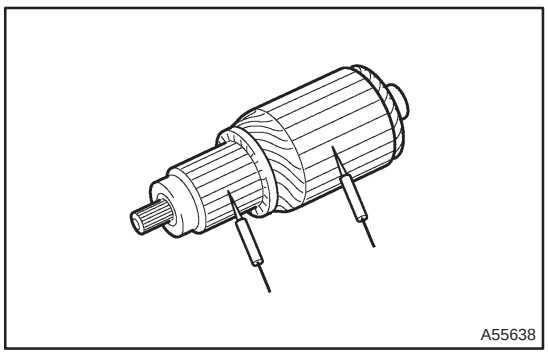

(b) Using an ohmmeter, check that there is no continuity between the commutator and armature coil core.

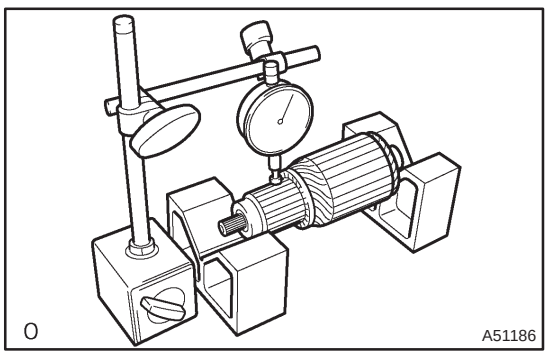

(c) Place the commutator on V–blocks.
(d) Using a dial gauge, measure the circle runout.
Maximum circle runout: 0.05 mm (0.002 in.)

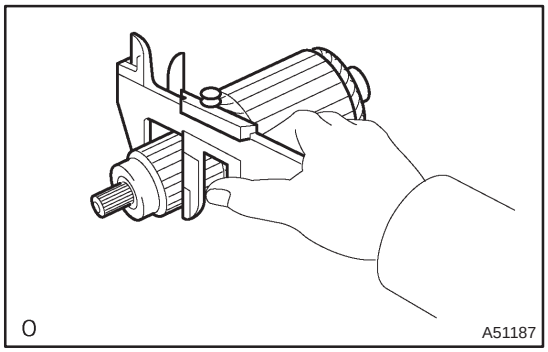

(e) Using vernier calipers, measure the commutator diameter.
Standard diameter: 35 mm (1.378 in.)
Minimum diameter: 34 mm (1.3386 in.)

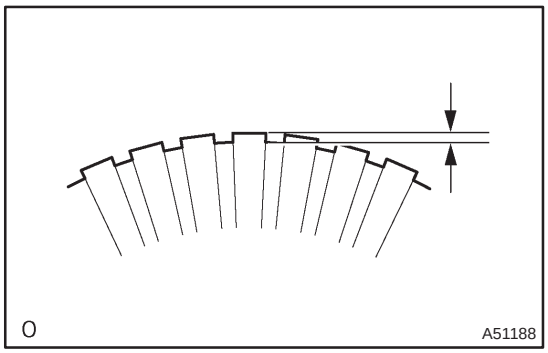

(f) Check that the undercut depth is clean and free of foreign materials. Smooth out the edge.
Standard undercut depth: 0.7 mm (0.0276 in.)
Minimum undercut depth: 0.2 mm (0.079 in.)

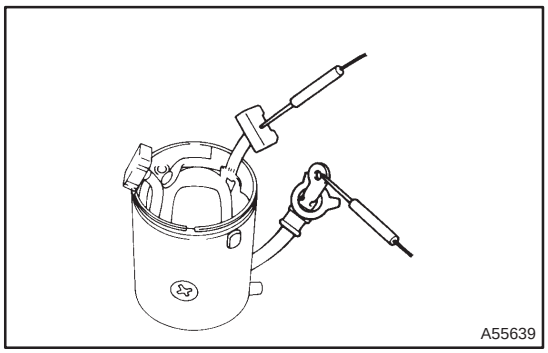

6. INSPECT STARTER YOKE ASSY

(a) Using an ohmmeter, check that there is continuity between the lead wire and field coil brush lead.

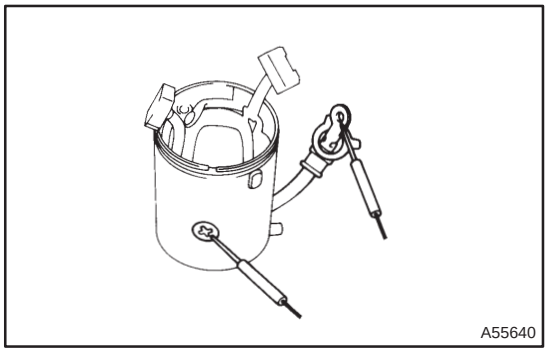

(b) Using an ohmmeter, check that there is no continuity between the field coil brush lead and yoke.

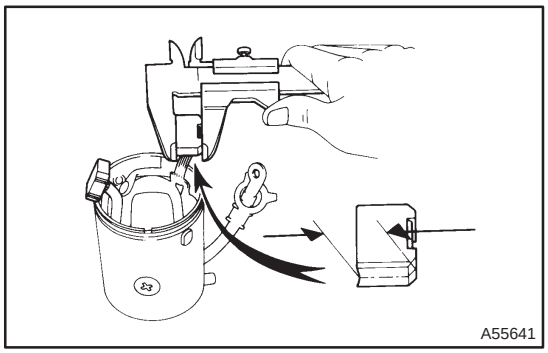

(c) Using vernier calipers, measure the brush length.
Standard length: 16.5 mm (0.6496 in.)
Minimum length: 9 mm (0.3543 in.)

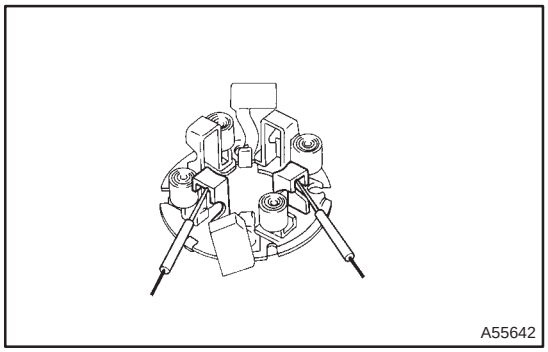

7. INSPECT STARTER BRUSH HOLDER ASSY

(a) Using an ohmmeter, check that there is no continuity between the positive (+) and negative (–) brush holders.

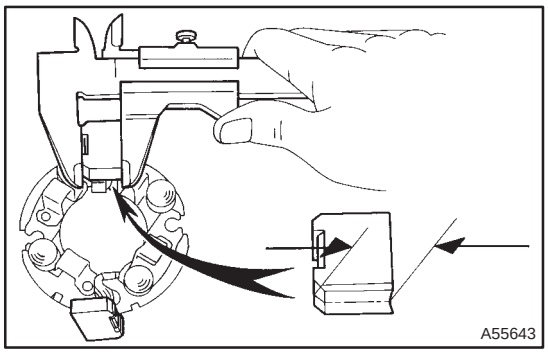

(b) Using vernier calipers, measure the brush length.
Standard length: 16.5 mm (0.6496 in.)
Minimum length: 9 mm (0.3543 in.)

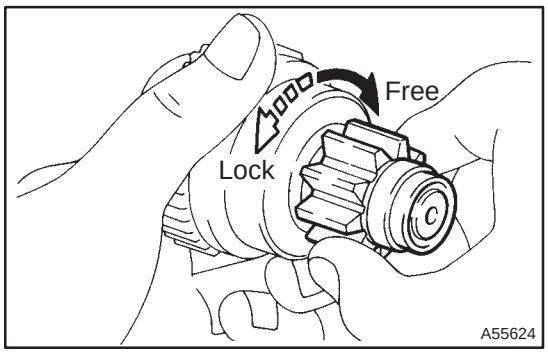

8. INSPECT STARTER CLUTCH SUB–ASSY

(a) Rotate the pinion gear clockwise, and check that it turns freely. Try to rotate the pinion gear counterclockwise and check that it locks.

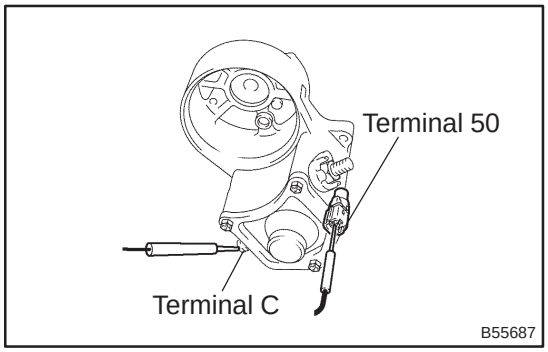

9. INSPECT MAGNET STARTER SWITCH ASSY

(a) Using an ohmmeter, check that there is continuity between terminals 50 and C.

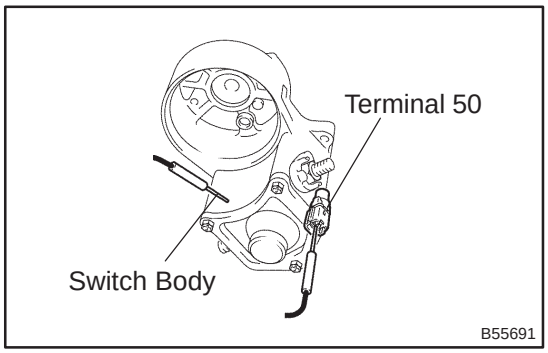

(b) Using an ohmmeter, check that there is continuity between terminal 50 and the switch body.

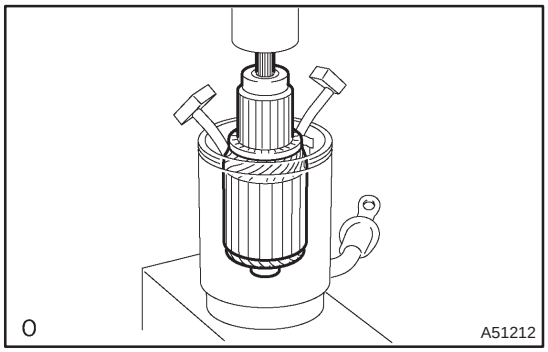

10. INSTALL STARTER ARMATURE ASSY

(a) Apply grease to the armature bearings.
(b) Using a press, press in armature.

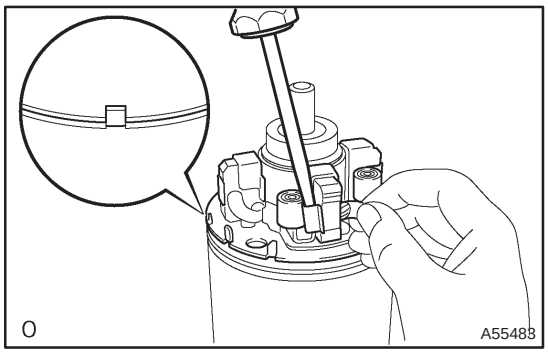

11. INSTALL STARTER BRUSH HOLDER ASSY

(a) Align the claw of the brush holder with the claw groove of the yoke.
(b) Place the brush on the yoke.
(c) Using a screwdriver, hold the brush spring back and connect the brush into the brush holder. Connect the 4 brushes.

NOTICE:
Check that the positive (+) lead wires are not grounded.

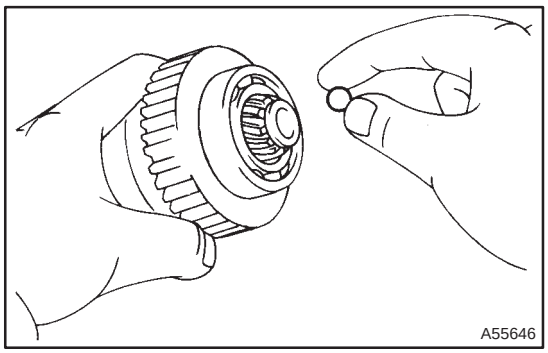

12. INSTALL STARTER CLUTCH SUB–ASSY

(a) Apply grease to the ball.
(b) Insert the ball into the clutch shaft hole.

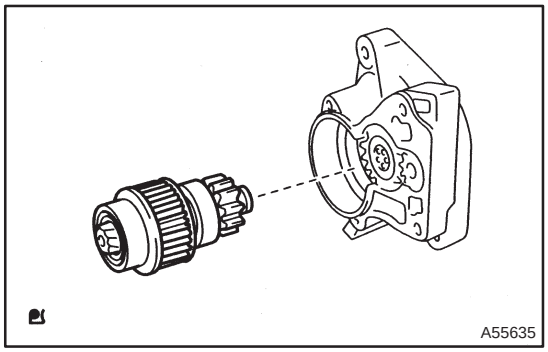

(c) Place the clutch on the drive housing.

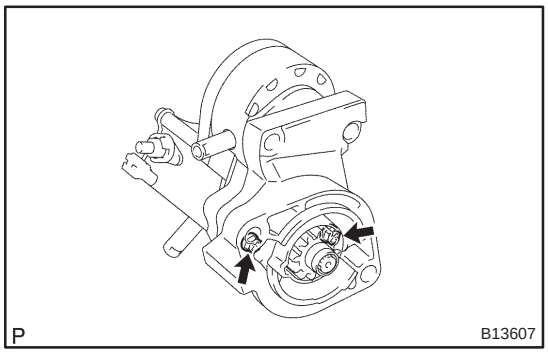

(d) Install the drive housing to the magnetic switch with the 2 bolts.
Torque: 9.3 N·m (95 kgf·cm, 82 in.·lbf)

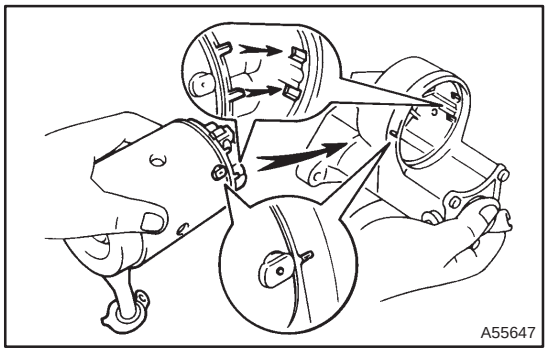

13. INSTALL STARTER YOKE ASSY

(a) Align the claws of the brush holder with the grooves of the magnetic switch, and install the yoke and armature.

(b) Align the punch mark of the yoke with the line of the magnetic switch.

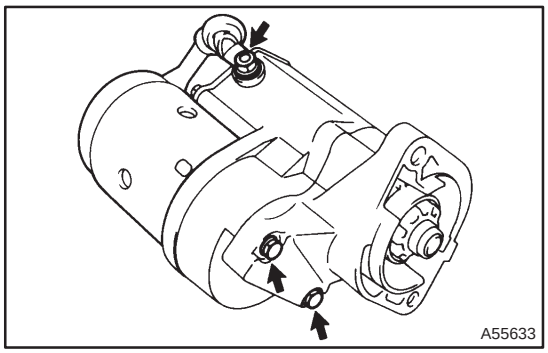

(c) Install the yoke and armature with the 2 through bolts.
Torque: 12.7 N·m (130 kgf·cm, 9 ft·lbf)

(d) Connect the lead wire to terminal C with the nut.
Torque: 5.9 N·m (60 kgf·cm, 52 in.·lbf)

GENERATOR ASSY(90A) (1CD–FTV)

19094–02

COMPONENTS

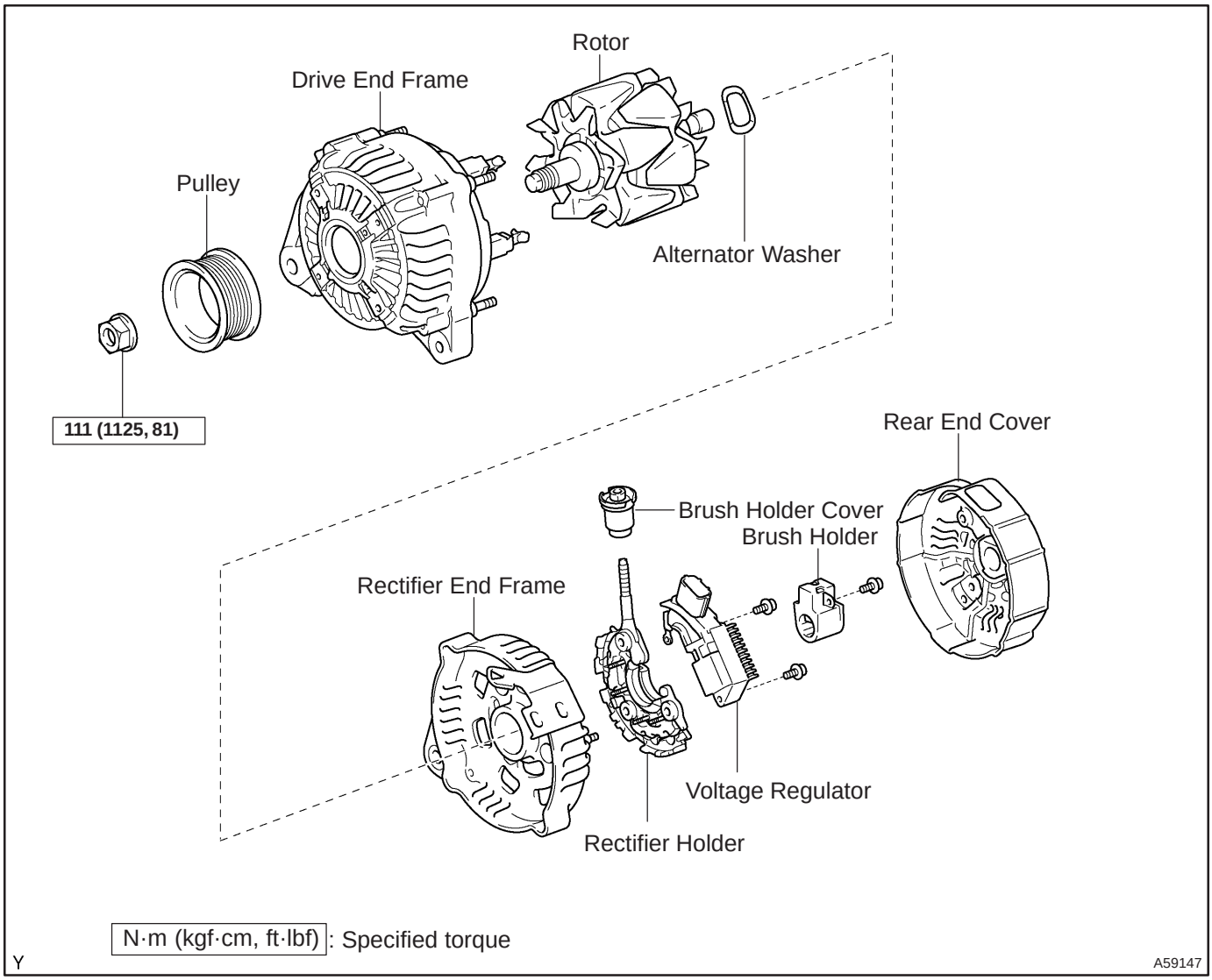

19095–02

OVERHAUL

1. REMOVE GENERATOR PULLEY

SST 09820–63010 (09820–06010, 09820–06020)

HINT:

SST1 – A, B	09820–06010
SST2	09820–06020

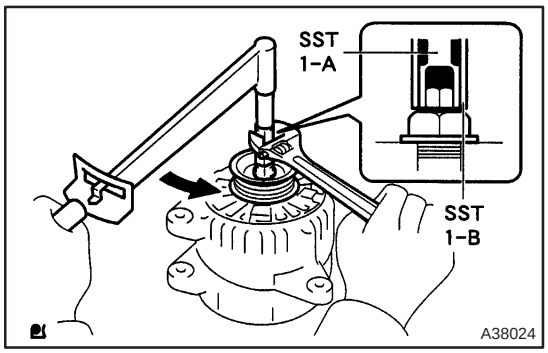

(a) Hold SST 1 – A with a torque wrench, and tighten SST 1 – B clockwise to the specified torque.
Torque: 39 N·m (400 kgf·cm, 29 ft·lbf)

NOTICE:
Check that SST is secured to the rotor shaft.

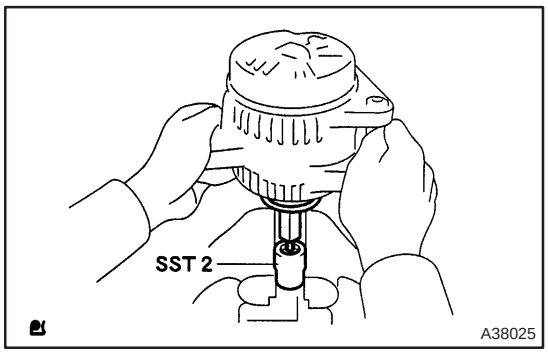

(b) Mount SST 2 in a vise.
(c) Insert SST 1 – A, B into SST 2, and attach the pulley nut to SST 2.

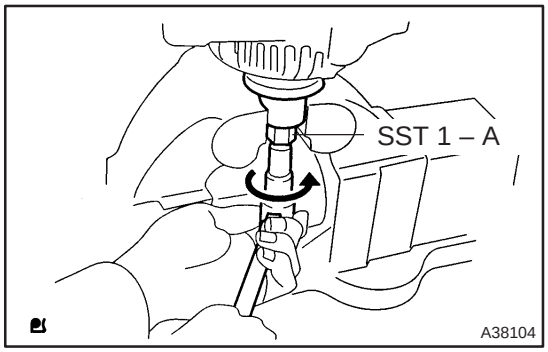

(d) To loosen the pulley nut, turn SST 1 – A in the direction shown in the illustration.

NOTICE:
To prevent damage to the rotor shaft, do not loosen the pulley nut more than one–half of a turn.

(e) Remove the alternator form SST 2.

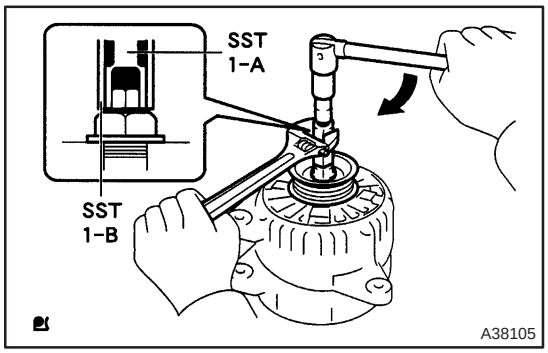

(f) Turn SST 1 – B, and remove SST 1 – A, B.
(g) Remove the pulley nut and pulley.

2. REMOVE GENERATOR BRUSH HOLDER ASSY

(a) Remove the nut and terminal insulator.
(b) Remove the bolt, 3 nuts, plate terminal and end cover.
(c) Remove the brush cover.
(d) Remove the 2 screws and brush holder.

3. REMOVE GENERATOR REGULATOR ASSY

(a) Remove the 3 screws and voltage regulator.

4. REMOVE GENERATOR HOLDER W/RECTIFIER

(a) Remove the 4 screws and rectifier holder.

5. REMOVE ALTERNATOR RECTIFIRE END FRAME

(a) Remove the rubber insulator.
(b) Remove the seal plate.
(c) Remove the 4 nuts.

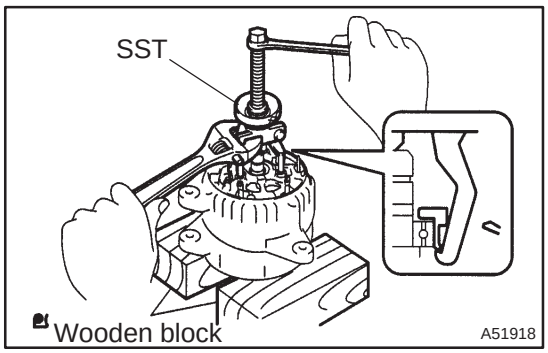

(d) Using bearing puller set, remove the rectifier end frame.

6. REMOVE GENERATOR ROTOR ASSY

(a) Remove the alternator washer from the rotor.
(b) Remove the rotor from drive end frame.

NOTICE:
Do not drop the rotor.

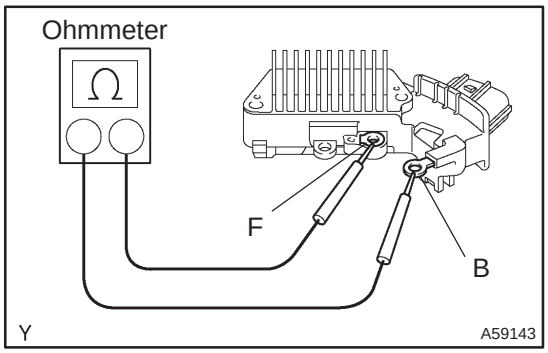

7. INSPECT GENERATOR REGULATOR ASSY

(a) Using an ohmmeter, check the continuity between terminals F and B.
Standard:
When the positive and negative poles between terminals F and B are exchanged, there is continuity in one way but no continuity in another way.

If the continuity is not as specified, replace the voltage regulator.

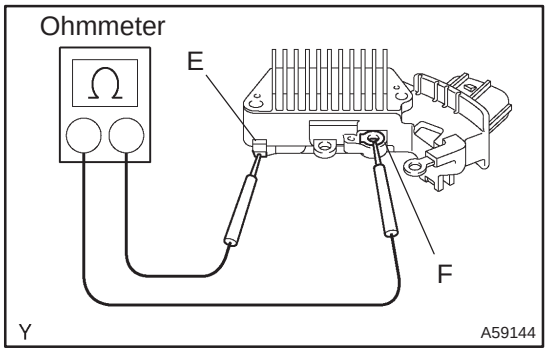

(b) Using an ohmmeter, check the continuity between terminals F and E.

Standard:

When the positive and negative poles between terminals F and E are exchanged, there is continuity in one way but no continuity in another way.

If the continuity is not as specified, replace the voltage regulator.

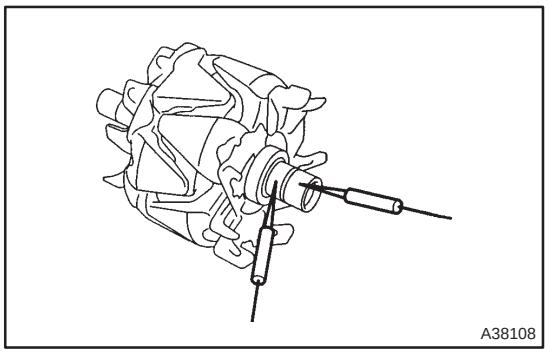

8. INSPECT GENERATOR ROTOR ASSY

(a) Inspect rotor for open circuit.

(1) Using an ohmmeter, check that there is continuity between the slip rings.

Standard resistance: 2.7 – 3.1 Ω at 20°C (68°F)

If there is no continuity, replace the rotor.

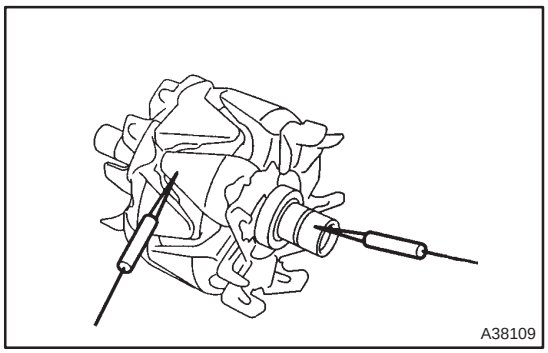

(b) Inspect rotor for ground.

(1) Using an ohmmeter, check that there is no continuity between the slip ring and rotor.

If there is continuity, replace the rotor.

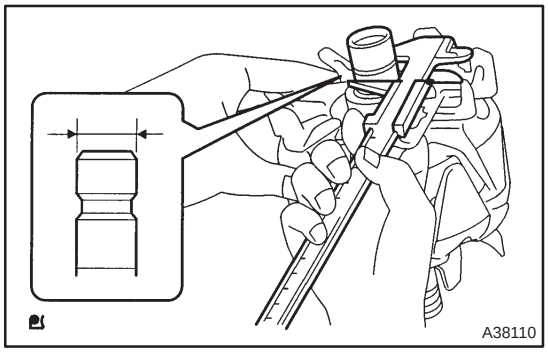

(c) Inspect slip rings.

(1) Using vernier calipers, measure the slip ring diameter.

Standard diameter: 14.2 – 14.4 mm (0.559 – 0.567 in.)

Minimum diameter: 12.8 mm (0.504 in.)

If the diameter is less than minimum, replace the rotor.

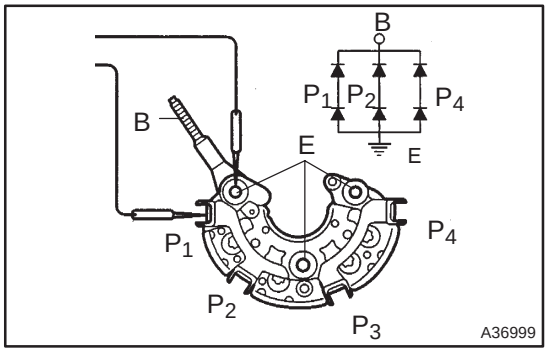

9. INSPECT GENERATOR HOLDER W/RECTIFIER

(a) Using an ohmmeter, connect one tester probe to the B or E terminal and the other to each rectifier terminal.

(b) Reverse the polarity of the tester probes and repeat step (a).

(c) Check that one shows continuity and the other shows no continuity.

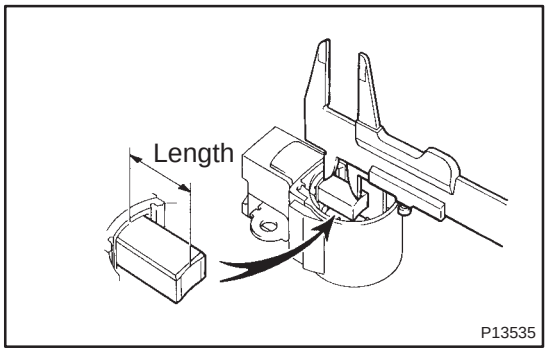

10. INSPECT BRUSH

(a) Using vernier calipers, measure the exposed brush length.
Standard exposed length:
9.5 – 11.5 mm (0.374 – 0.453 in.)
Minimum exposed length: 1.5 mm (0.059 in.)

If the exposed length is less than minimum, replace the brush holder assembly.

11. INSTALL GENERATOR ROTOR ASSY

(a) Install the generator rotor.
(b) Install the alternator washer to the rotor.

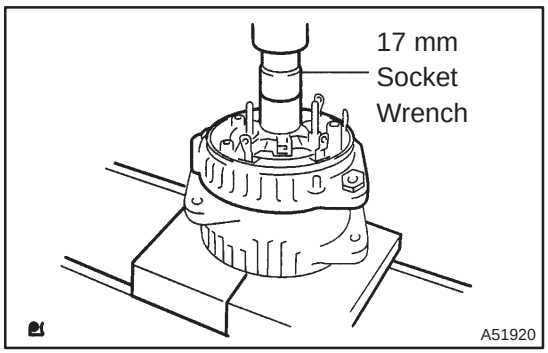

12. INSTALL ALTERNATOR RECTIFIRE END FRAME

(a) Using a 17 mm socket wrench and press, slowly press in the rectifier end frame.

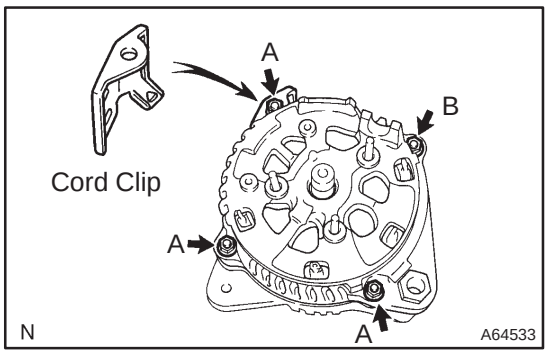

(b) Install the cord clip and 4 nuts.
Torque:
Nut A 4.5 N·m (46 kgf·cm, 39 in.·lbf)
Nut B 5.4 N·m (55 kgf·cm, 47 in.·lbf)

(c) Install the seal plate on the rectifier end frame.

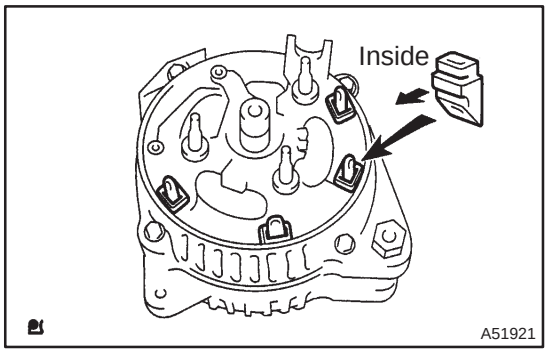

(d) Install the 4 rubber insulators on the lead wires.

NOTICE:
Be careful of the rubber insulators installation direction.

13. INSTALL GENERATOR HOLDER W/RECTIFIER

(a) Install the rectifier holder while pushing it with the 4 screws.
Torque: 2.9 N·m (30 kgf·cm, 26 in.·lbf)

14. INSTALL GENERATOR REGULATOR ASSY

(a) Install the 3 screws and voltage regulator.
Torque: 3.9 N·m (40 kgf·cm, 35 in.·lbf)

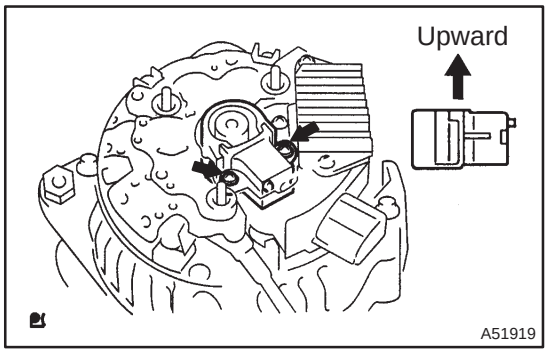

15. INSTALL GENERATOR BRUSH HOLDER ASSY

(a) Install the 2 screws and brush holder.
Torque: 2.0 N·m (20 kgf·cm, 18 in.·lbf)

NOTICE:
Be careful of the holder installation direction.

(b) Install the brush cover.
(c) Install the end cover and plate terminal with the bolt and 3 nuts.
Torque:
Nut 4.4 N·m (45 kgf·cm, 39 in.·lbf)
Bolt 3.9 N·m (39 kgf·cm, 35 in.·lbf)
(d) Install the terminal insulator with the nut.
Torque: 4.1 N·m (42 kgf·cm, 36 in.·lbf)

16. INSTALL GENERATOR PULLEY

SST 09820–63010 (09820–06010, 09820–06020)

HINT:

SST1 – A, B	09820–06010
SST2	09820–06020

(a) Install the pulley to the rotor shaft by tightening the pulley nut by hand.

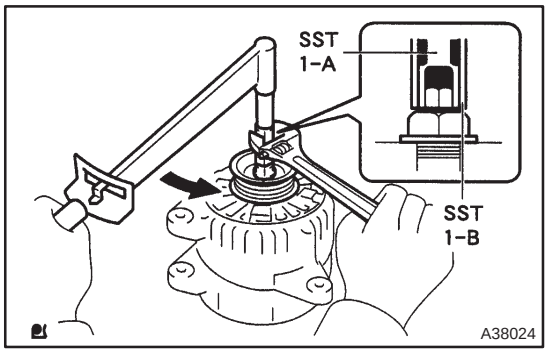

(b) Hold SST 1 – A with a torque wrench, and tighten SST 1 – B clockwise to the specified to torque.
Torque: 39 N·m (400 kgf·cm, 29 ft·lbf)

NOTICE:
Check that SST is secured to the pulley shaft.

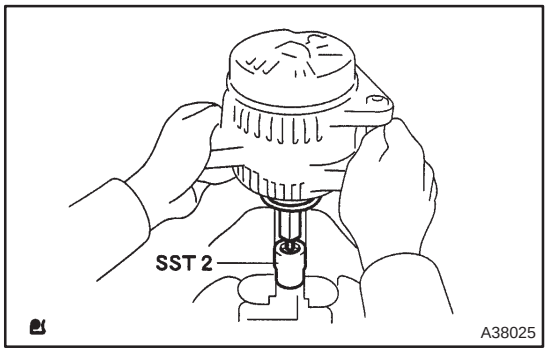

(c) Mount SST 2 in a vise.
(d) Insert SST 1 – A, B into SST 2, and attach the pulley nut to SST 2.

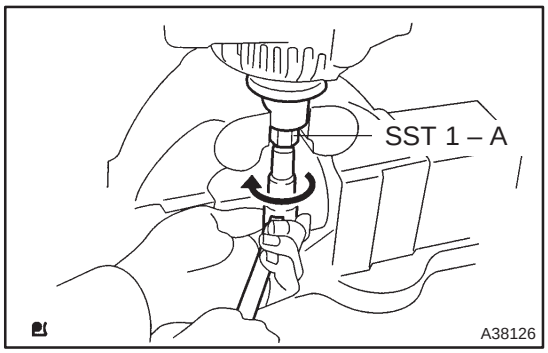

(e) Tighten the pulley nut, turn SST 1 – A in the direction shown in the illustration.
Torque: 111 N·m (1,125 kgf·cm, 81 ft·lbf)
(f) Remove the alternator form SST 2.

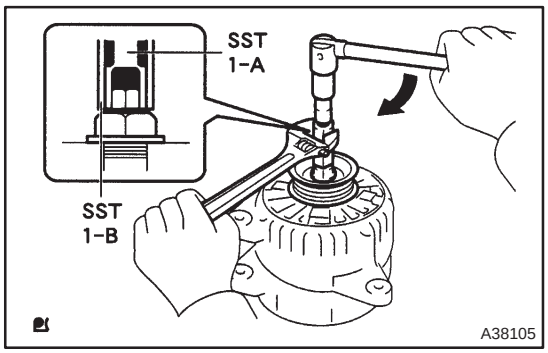

(g) Turn SST 1 – B, and remove SST 1 – A, B.
(h) Turn the pulley, and check that the pulley moves smoothly.

GENERATOR ASSY(130A) (1CD–FTV)

190AI–01

COMPONENTS

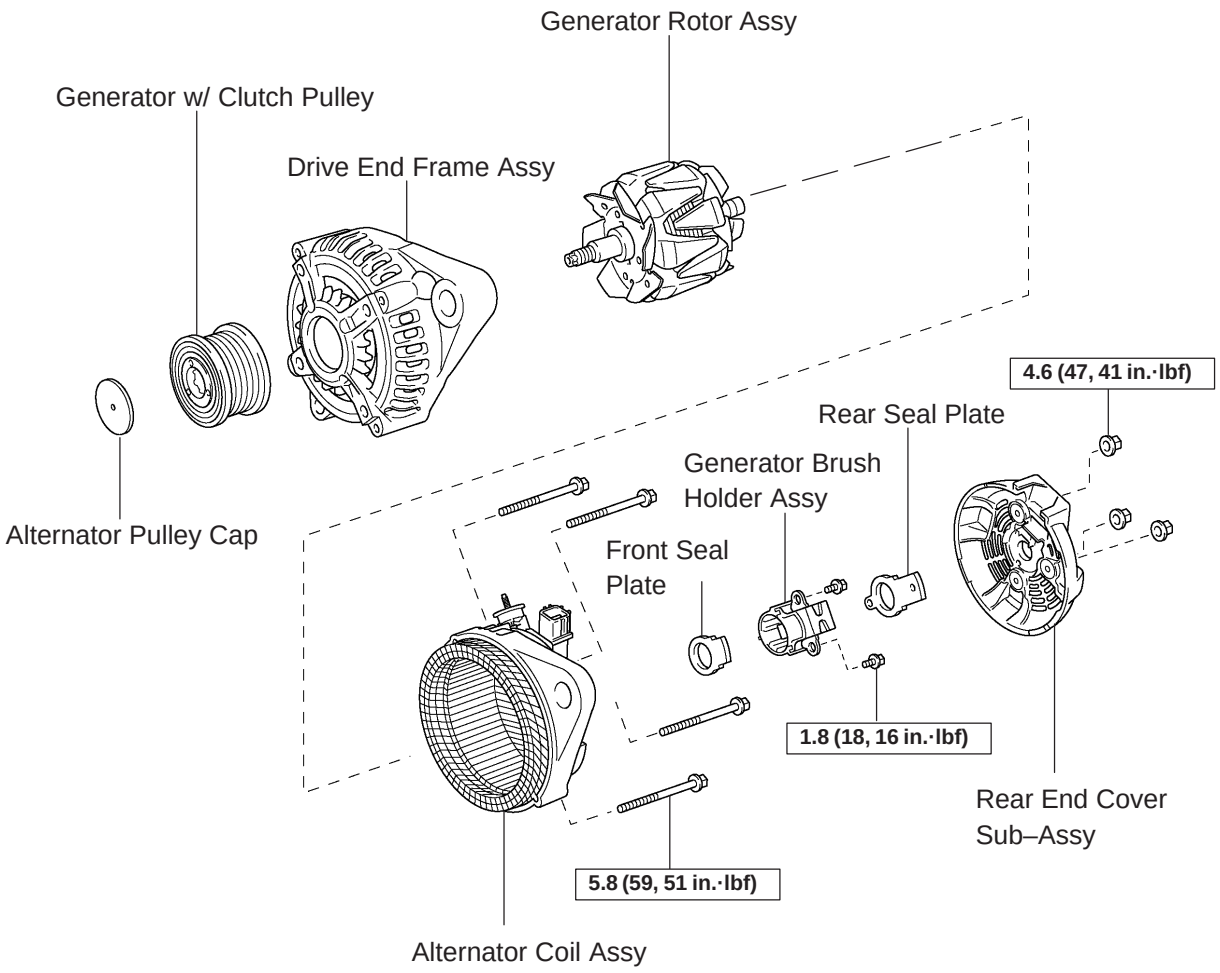

Y N·m (kgf·cm, ft·lbf): Specified torque

A62720

190AJ–01

OVERHAUL

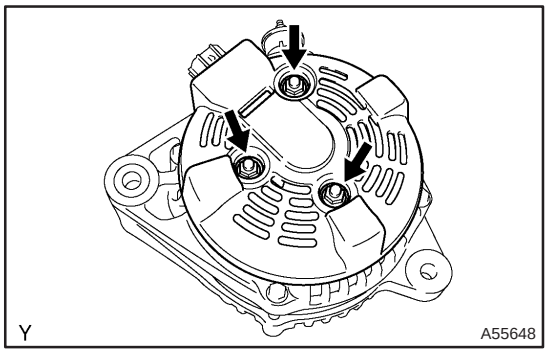

1. REMOVE GENERATOR BRUSH HOLDER ASSY

(a) Remove the 3 nuts and rear end cover.
(b) Remove the B terminal insulator.

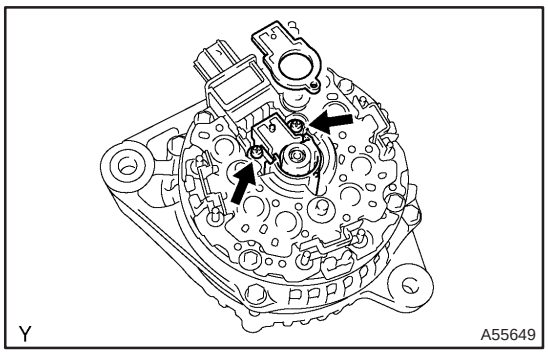

(c) Remove the rear plate seal from the brush holder.
(d) Remove the 2 screws and brush holder.
(e) Remove the front seal plate from the rear frame.

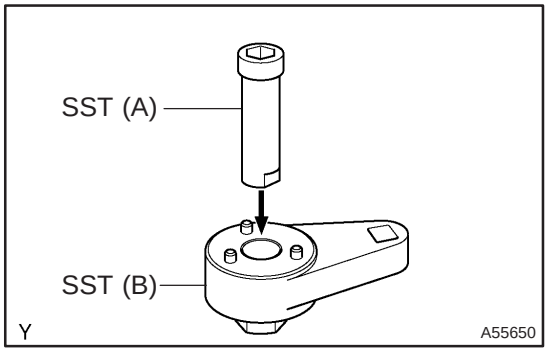

2. REMOVE GENERATOR W/CLUTCH PULLEY

(a) Set SST (A) and (B).
SST 09820–63020

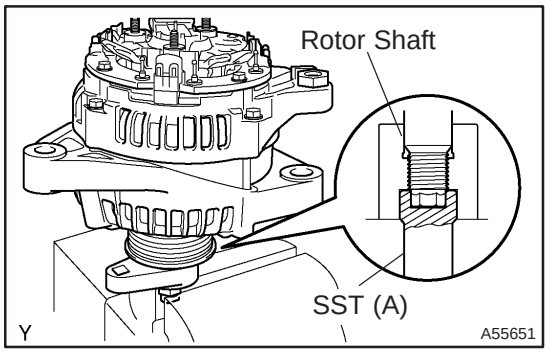

(b) Mount SST (A) in a vise.
(c) Set the alternator to SST.

NOTICE:
At this time, make sure that the alternator and SST are perpendicular to one another.

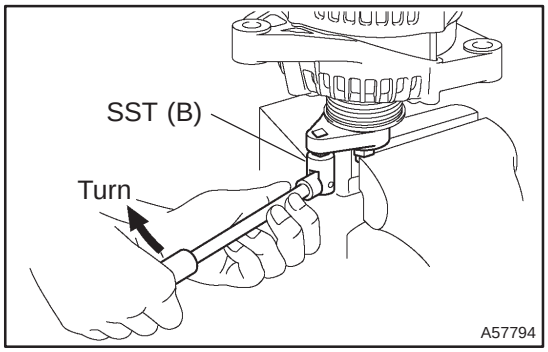

(d) Insert the 3 tabs of SST (B) into the 3 holes on the pulley.
(e) To loosen the pulley, turn SST (B) in the direction shown in the illustration.
(f) Remove the alternator from SST.
(g) Remove the pulley from the rotor shaft.

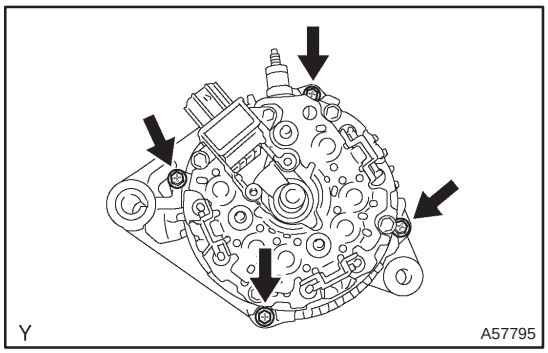

3. REMOVE GENERATOR ROTOR ASSY

(a) Remove the 4 through bolts.

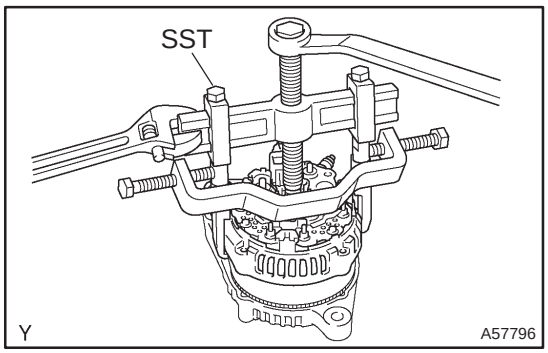

(b) Using SST, remove the coil assembly.
SST 09950–40011 (09951–04020, 09952–04010, 09953–04020, 09954–04010, 09955–04071, 09958–04011)
(c) Remove the alternator washer.
(d) Remove the rotor from the drive end frame.

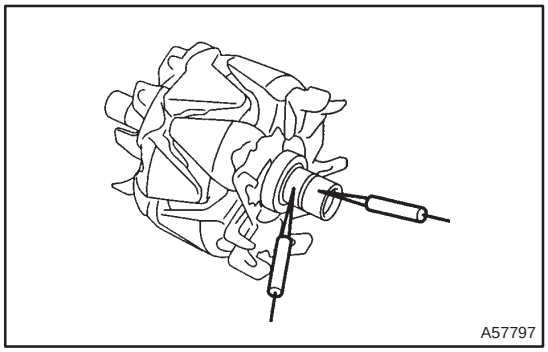

4. INSPECT GENERATOR ROTOR ASSY

(a) Using an ohmmeter, check that there is continuity between the slip rings.
Standard resistance: 2.3 – 2.7 Ω at 20°C (68°F)

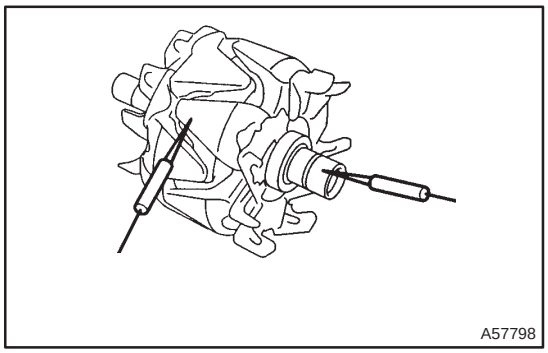

(b) Using an ohmmeter, check that there is no continuity between the slip ring and rotor.

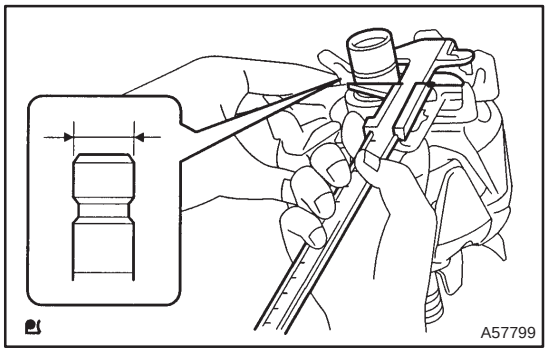

(c) Check that the slip rings are not rough or scored.
(d) Using vernier calipers, measure the slip ring diameter.
Standard diameter:
14.2 – 14.4 mm (0.5591 – 05669 in.)
Minimum diameter: 14.0 mm (0.551 in.)

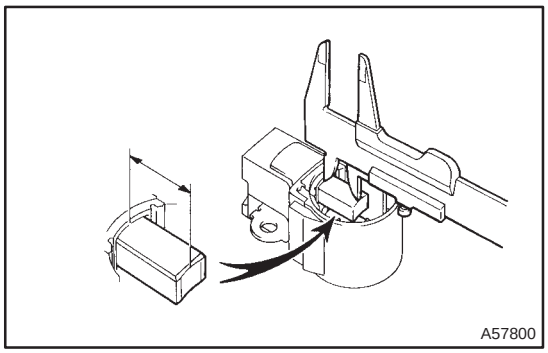

5. INSPECT GENERATOR BRUSH HOLDER ASSY

(a) Using vernier calipers, measure the exposed brush length.
Standard exposed length: 10.5 mm (0.4134 in.)
Minimum exposed length: 4.5 mm (0.177 in.)

HINT:
If the exposed length is less than minimum, replace the brush holder.

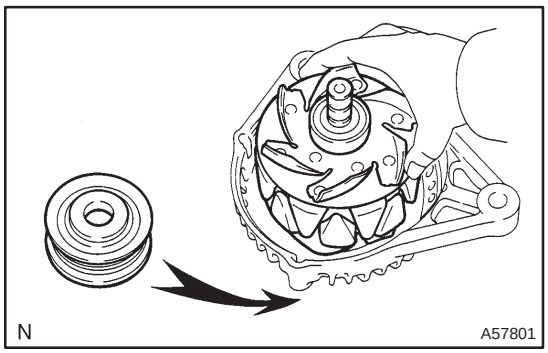

6. INSTALL GENERATOR ROTOR ASSY

(a) Place the drive end frame.
(b) Install the rotor to the drive end frame.
(c) Place the alternator washer on the rear bearing.

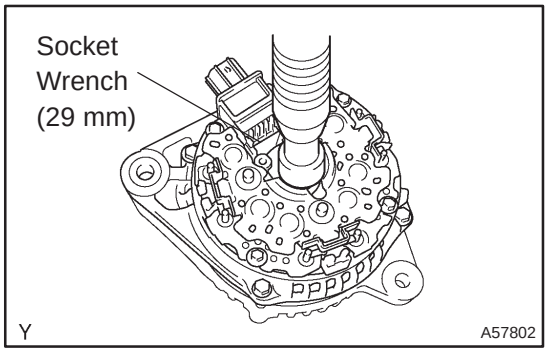

(d) Using a socket wrench (29 mm)and press, slowly press in the coil assembly.

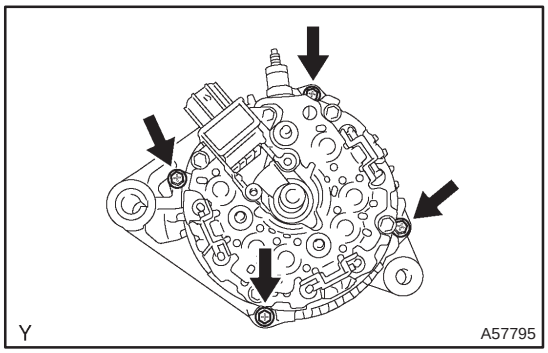

(e) Install the 4 through bolts.
Torque: 5.8 N·m (59 kgf·cm, 51in.·lbf)

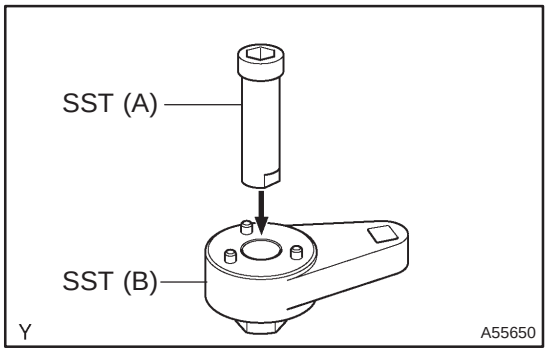

7. INSTALL GENERATOR W/CLUTCH PULLEY

(a) Temporarily install the pulley to the rotor shaft.
(b) Set SST (A) and (B).
SST 09820–63020

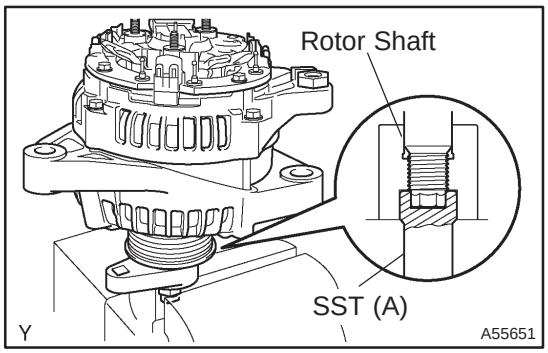

(c) Mount SST (A) in a vise.
(d) Set the alternator to SST.

NOTICE:
At this time, make sure that the alternator and SST are perpendicular to one another.

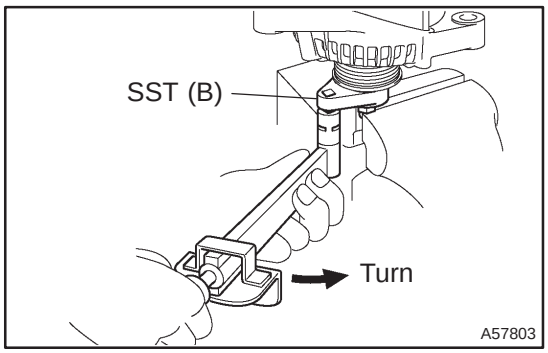

(e) Insert the 3 tabs of SST (B) into the 3 holes on the pulley.
(f) To torque the pulley, turn SST (B) in the direction shown in the illustration.
Torque: 111 N·m (1132 kgf·cm, 82 ft·lbf) for using SST

HINT:
Use a torque wrench with a fulcrum length of 50 cm (19.69 in.).

(g) Remove the alternator from SST.
(h) Install a new alternator pulley cap.

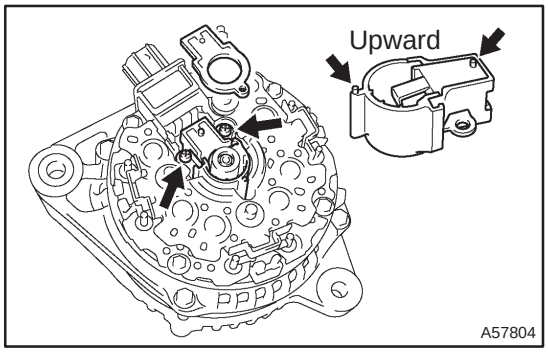

8. INSTALL GENERATOR BRUSH HOLDER ASSY

(a) Place the front seal plate to the coil assembly.
(b) Install the brush holder with the 2 screws.
Torque: 1.8 N·m (18 kgf·cm, 16 in.·lbf)

NOTICE:
Be careful of the holder installation direction.

(c) Place the plate seal on the brush holder.

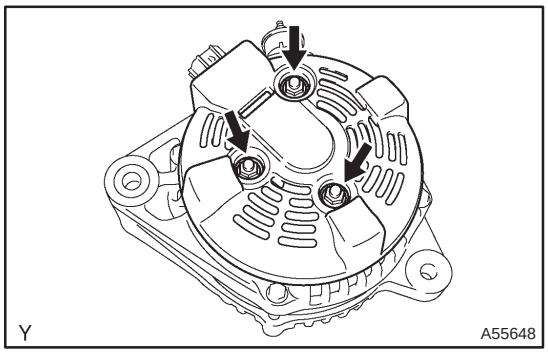

(d) Install the rear end cover with the 3 nuts.
Torque: 4.6 N·m (47 kgf·cm, 41 in.·lbf)

HOW TO USE THIS MANUAL

010B2–13

GENERAL INFORMATION

1. GENERAL DESCRIPTION

(a) This manual is made in accordance with SAE J2008.

(b) Generally, repair operations can be separated in the following 3 main processes:
1. Diagnosis
2. Removing/Installing, Replacing, Disassembling/Reassembling, Checking and Adjusting
3. Final Inspection

(c) This manual explains the 1st process of ”Diagnosis” (found in the ”Diagnostics” section), the 2nd process of ”Removing and Installing, Replacing, Disassembling, Installing and Checking, and Adjusting”, but the 3rd process of ”Final Inspection” is omitted.

(d) The following essential operations are not written in this manual. However, these operations must be performed in actual situations.
(1) Operations with a jack or lift
(2) Cleaning of a removed part when necessary
(3) Visual check

2. INDEX

(a) An alphabetical INDEX section is provided at the end of the book as a reference to help you find the item to be repaired.

3. PREPARATION

(a) Use of special service tools (SST) and special service materials (SSM) may be required, depending on the repair situation. Be sure to use SST and SSM when they are required and follow the working procedure properly. A list of SST and SSM is in the Preparation section of this manual.

4. REPAIR PROCEDURES

(a) Component drawing is placed under the title where necessary.

(b) Non–reusable parts, grease application area, precoated parts and tightening torque are specified in the component drawings.

Example:

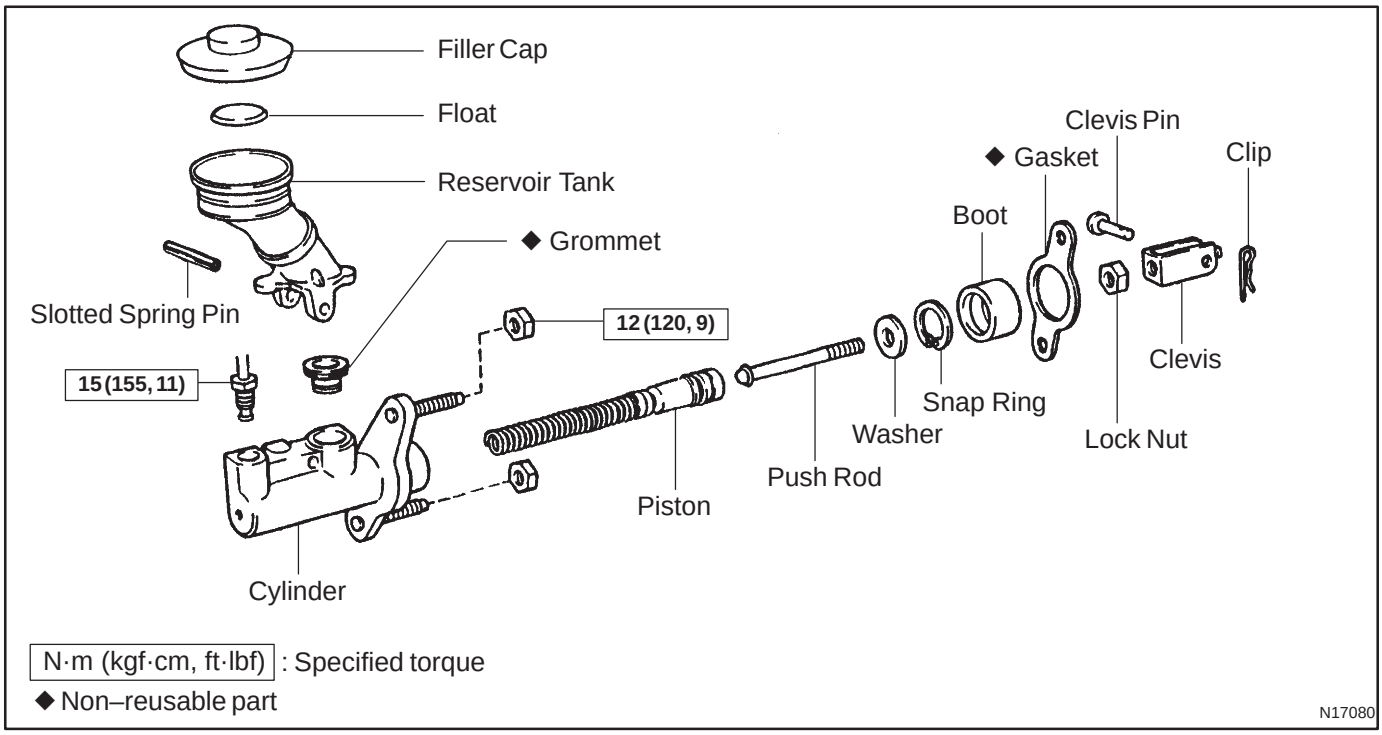

(c) Tightening torque, grease application area, and non–reusable parts are described as important points in the procedures.

NOTICE:

There are cases where such information can only be explained by using an illustration. In these cases, all the information such as torque, oil, etc. are described in the illustration.

(d) Installing procedures are performed in the reverse order of the removal and only the important points are described.

(e) Only items with points are described in the procedure, and the operational portion and content are placed using an illustration. In the explanations, details of the operational method, standard value and notices are placed.

(f) There may be a case where the illustrations of similar models are used. In that case, specific details may be different from the actual vehicle.

(g) The procedures are presented in a step–by–step format:

(1) The illustration shows what to do and where to do it.

(2) The task heading tells what to do.

(3) The explanation text tells how to perform the task and gives other information such as specifications and warnings.

Example:

Illustration:

what to do and where

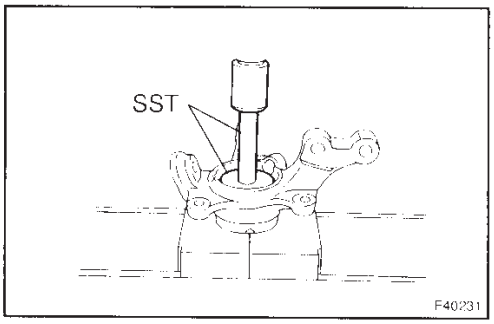

Task heading: what to do

14. INSTALL FRONT AXLE HUB LH BEARING

(a) Using SST and a press, install a new bearing to the steering knuckle. ← *Detailed text: how to perform task*

SST 09950–60020 (09951–00720), 09950–70010 (09951–07100)

Set part No

Component part No.

D31009

HINT:

This format provides an experienced technician with a FAST TRACK to the necessary information. The task heading can be read at a glance when necessary and the text below provides detailed information. Important specifications and warnings always are written in bold type to stand out from the rest of the text.

5. SERVICE SPECIFICATIONS

(a) Specifications are presented in bold type throughout the manual. You never have to leave the procedure to look up your specifications. The specifications are also found in the Service Specifications section for quick reference.

6. TERMS DEFINITION

CAUTION	Indicates the possibility of injury to you or other people.
NOTICE	Indicates the possibility of damage to the components being repaired.
HINT	Provides additional information to help you to perform the repair efficiently.

7. SI UNIT

(a) The units given in this manual are primarily expressed according to the SI UNIT (International System of Units), and alternately expressed in the metric system and in the English System.

Example:

Torque: 30 N·m (310 kgf·cm, 22 ft·lbf)

IDENTIFICATION INFORMATION

VEHICLE IDENTIFICATION AND SERIAL NUMBERS

010LE–01

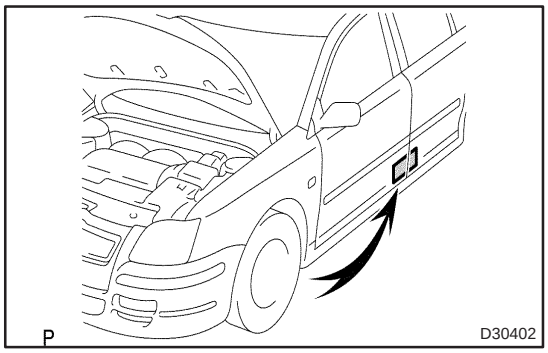

1. VEHICLE IDENTIFICATION NUMBER

(a) The vehicle identification number is stamped in the engine compartment, as shown in the illustration. This number has also been stamped on the manufacturer's plate.

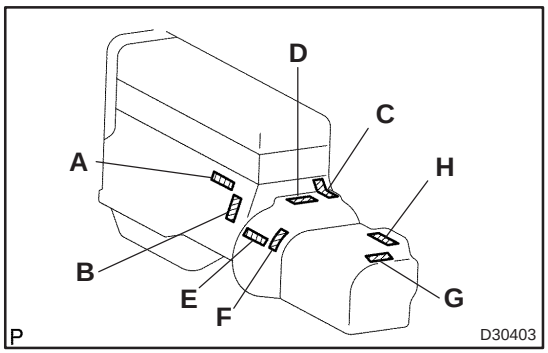

2. ENGINE SERIAL NUMBER AND TRANSAXLE SERIAL NUMBER

(a) The engine serial number is stamped on the cylinder block of the engine and the transmission serial number is stamped on the housing as shown in the illustration.

A: 1CD–FTV
B: 1AZ–FE, 1AZ–FSE
C: 1ZZ–FE, 3ZZ–FE
D: C50, C250
E: U241E
F: E354, E357, U241E
G: U241E
H: U341E

REPAIR INSTRUCTION

010LF–01

PRECAUTION

1. BASIC REPAIR HINT

(a) HINTS ON OPERATIONS

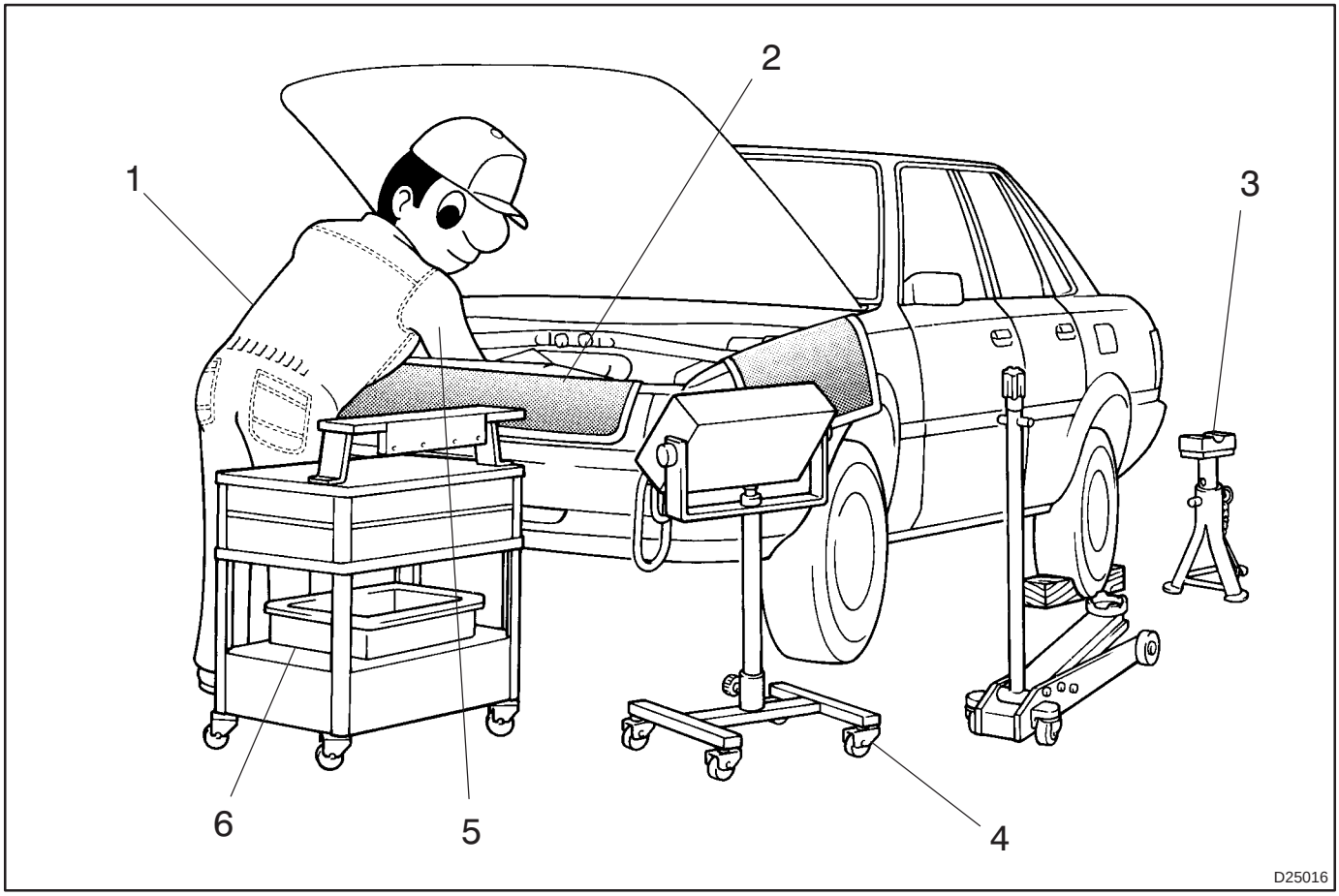

1	Looks	• Always wear a clean uniform. • Hat and safety shoes must be worn.
2	Vehicle protection	• Set a grill cover, fender cover, seat cover and floor mat before starting operation.
3	Safe operation	• When working with 2 or more persons, be sure to check the safety of one another. • When working with the engine running, pay attention to providing ventilation for exhaust fumes in the workshop. • When working with high–temperatures, rotating, moving or vibrating parts, be careful not to burn or injure yourself. • When jacking up the vehicle, be sure to support the specified location with a safety stand. • When lifting up the vehicle, use safety equipment.
4	Preparation of tools and measuring gauge	• Before starting repairs, prepare the tool stand, SST, gauge, oil, shop rag and parts for replacement.
5	Removal and installation, disassembly and assembly operations	• Diagnose with a thorough understanding of the trouble condition and perform effective operation. • Before removing the parts, check the general condition of the assembly, and for deformation and damage. • When the structure is complicated, take a notes or make matchmarks as not to make mistakes that affect the function of the parts. • Clean and wash the removed parts if necessary and assemble them after a thorough check.
6	Removed parts	• Place the removed parts in the correct order to avoid mixing them up or making them dirty. • As for non–reusable parts such as gaskets, O–rings, and self–locking nuts, replace them with new ones following the instructions in this manual. • Organize the parts that were replaced in a box and show them to the customer.

(b) JACKING UP AND SUPPORTING VEHICLE

(1) Care must be taken when jacking up and supporting the vehicle. Be sure to lift and support the vehicle at the proper locations (See page 01–19).

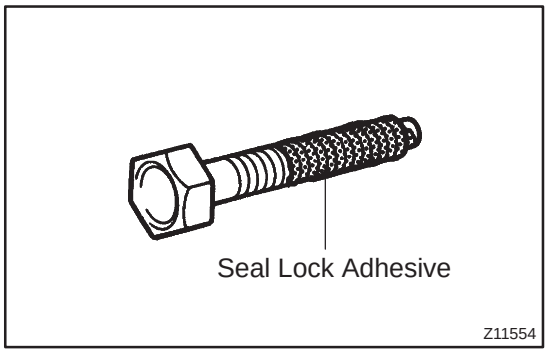

(c) PRECOATED PARTS

(1) Precoated parts such as bolts, nuts, etc., are coated with a seal lock adhesive at the factory.

(2) If a precoated part is retightened, loosened or caused to move in any way, it must be recoated with the specified adhesive.

(3) When reusing precoated parts, clean off the old adhesive and dry the part with compressed air. Then apply the specified seal lock adhesive to the bolt, nut or threads.

NOTICE:

Check the torque with the lower limit value of the torque tolerance.

(4) Depending on the seal lock agent to be applied, there may be cases where it is necessary to leave it for a specified time until it hardens.

(d) GASKETS

(1) When necessary, use a sealer on gaskets to prevent leaks.

(e) BOLTS, NUTS AND SCREWS

(1) Carefully follow all the specifications for tightening torques. Always use a torque wrench.

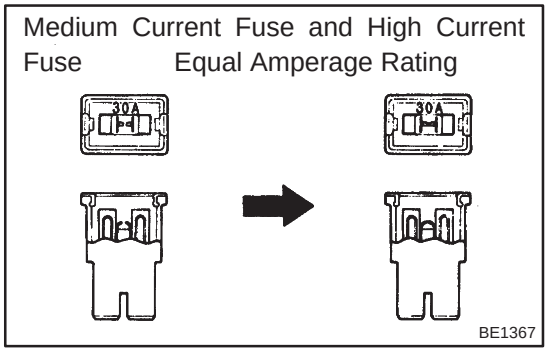

(f) FUSES

(1) When replacing fuses, be sure that a new fuse has the correct amperage rating. DO NOT exceed the rating, or use one with a lower rating.

Illustration	Symbol	Part Name	Abbreviation
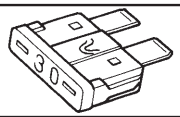 BE5594	 IN0365	FUSE	FUSE
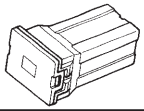 BE5595	 IN0366	MEDIUM CURRENT FUSE	M–FUSE
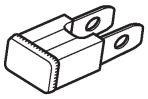 D27353	 IN0367	HIGH CURRENT FUSE	H–FUSE

V35002

(g) CLIPS

(1) The removal and installation methods of typical clips used in body parts are shown in the table below.

HINT:

If the clip is damaged during the operation, always replace it with a new clip.

Shape (Example)	Removal/Installation
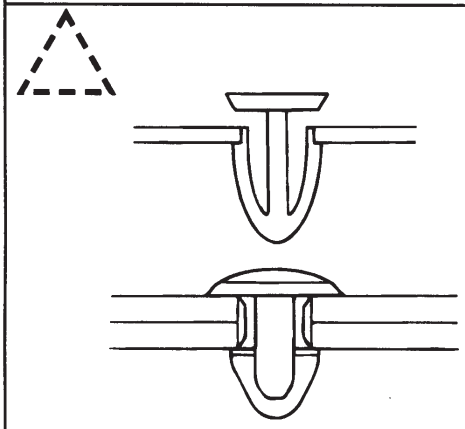	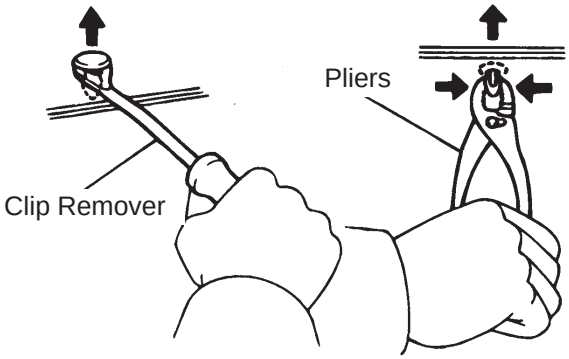
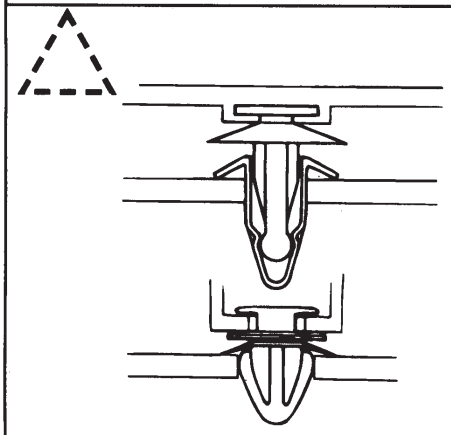	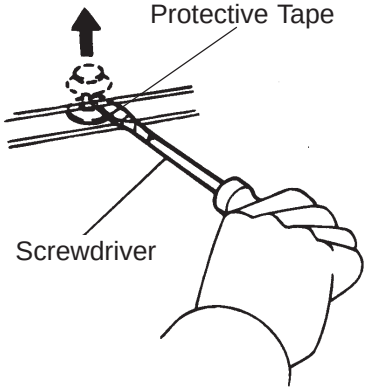
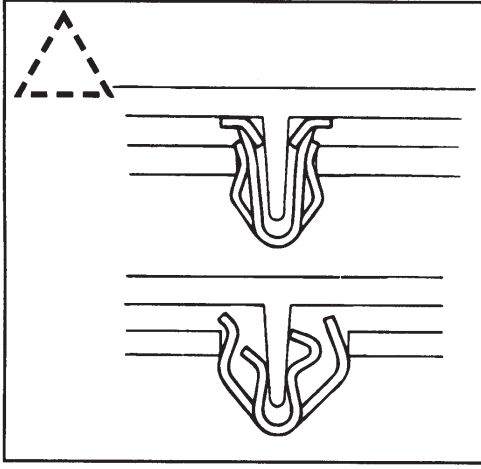	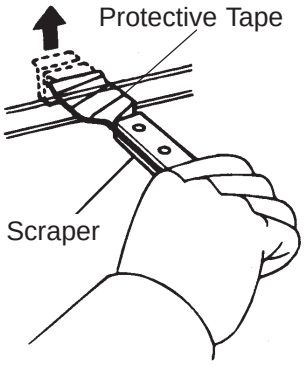

D25786

Shape (Example)	Removal/Installation
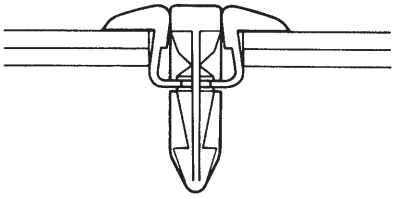	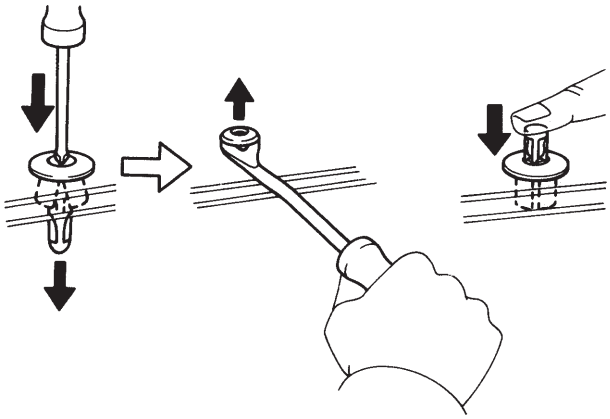
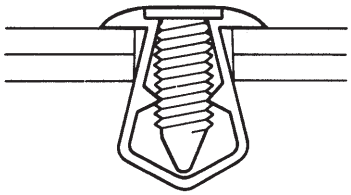	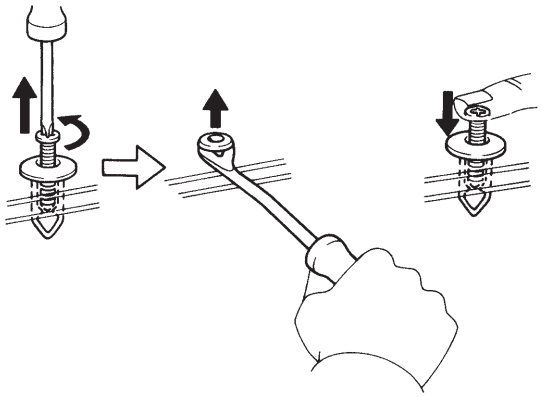

V00012

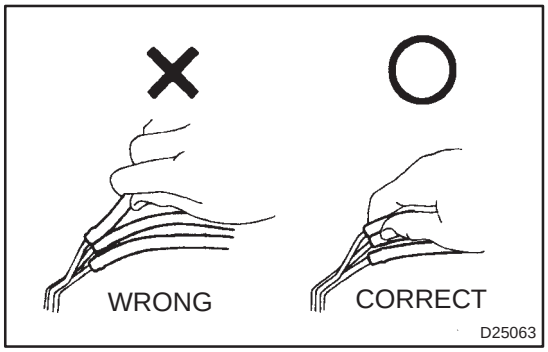

(h) REMOVAL AND INSTALLATION OF VACUUM HOSES

(1) To disconnect vacuum hoses, pull them by holding the end, not the middle of the hose.

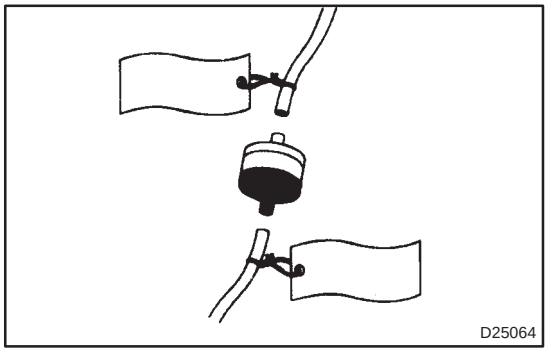

(2) When disconnecting vacuum hoses, use tags to identify where they should be reconnected.

(3) After completing the job, make a double check whether the vacuum hoses are properly connected. A label under the hood shows the proper layout.

(4) When using a vacuum gauge, never force the hose onto a connector that is too large. Use a step–down adapter for adjustment. Once the hose has been stretched, it may leak air.

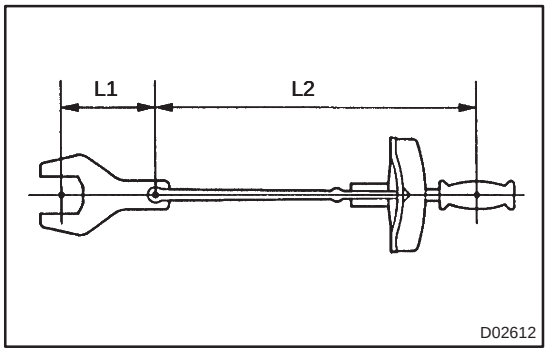

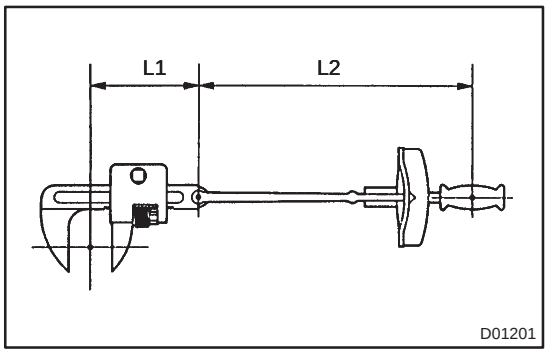

(i) TORQUE WHEN USING TORQUE WRENCH WITH EXTENSION TOOL

(1) When the torque wrench is combined with SST or an extension tool to extend the length, and you tighten until the torque wrench reads the specified torque value, the actual torque becomes excessive.

(2) In this manual, only the specified torque is described. In case of using SST or extension tool, calculate the reading of the torque wrench by the following formula.

(3) Formula T'=T x L2/(L1 + L2)

T'	Reading of torque wrench {N·m (kgf·cm, ft·lbf)}
T	Torque {N·m (kgf·cm, ft·lbf)}
L1	Length of SST or extension tool (cm)
L2	Length of torque wrench (cm)

2. FOR VEHICLES EQUIPPED WITH SRS AIRBAG AND SEAT BELT PRETENSIONER

HINT:

The AVENSIS is equipped with an SRS (Supplemental Restraint System), which includes the driver airbag, front passenger airbag and seat belt pretensioner.

Failure to carry out the service operations in the correct sequence could cause the supplemental restraint system to unexpectedly deploy while servicing. This could cause a serious accident.

Furthermore, if a mistake is made when servicing the supplemental restraint system, it is possible that the SRS will fail to operate when required. Before servicing (including removal or installation of parts, inspection or replacement), be sure to read the following items carefully. Then follow the correct procedures described in this manual.

(a) GENERAL NOTICE

(1) Malfunction symptoms of the supplemental restraint system are difficult to confirm so the diagnostic trouble codes become the most important source of information when troubleshooting. When troubleshooting the supplemental restraint system, always check the diagnostic trouble codes before disconnecting the battery (See page 05–1184).

(2) Work must be started after 90 seconds from the time that the ignition switch is turned to the LOCK position and the negative (–) terminal cable is disconnected from the battery.

(The supplemental restraint system is equipped with a back–up power source. So, if work is started within 90 seconds after disconnecting the negative (–) terminal cable from the battery, the SRS may deploy).

When the negative (–) terminal cable is disconnected from the battery, memory of the clock and audio systems is cancelled. So, before starting work, make a record of the contents recorded in each memory system. Then, when work is finished, reset the clock and audio systems as before.

(3) Even in the case of a minor collision where the SRS does not deploy, the horn button assembly, instrument panel passenger airbag assembly and seat belt pretensioner should be inspected (See pages 60–19, 60–19 and 61–9).
(4) Never use the SRS related parts from another vehicle. When replacing the parts, replace them with new parts.
(5) Before repairs, remove the airbag sensor if there is a possibility of shock during repairs.
(6) Never disassemble and repair the center airbag sensor assembly, side airbag sensor assembly, horn button assembly, instrument panel passenger airbag assembly, front seat airbag assembly, curtain shield airbag assembly or seat belt pretensioner.
(7) If the center airbag sensor assembly, the side airbag sensor assembly, the horn button assembly, the instrument panel passenger airbag assembly have been dropped, or if there are cracks, dents or other defects in the case, bracket or connector, replace them with new ones.
(8) Do not directly expose the airbag sensor assembly, the side airbag sensor assembly, the horn button assembly, the instrument panel passenger airbag assembly or the seat belt pretensioner to hot air or flames.
(9) Use a volt/ohmmeter with high impedance (10 kΩ/V minimum) for troubleshooting electrical circuits.
(10) Information labels are attached to the SRS components. Follow the instructions on the notices.
(11) After work on the supplemental restraint system is completed, check the SRS warning light (See page 05–1184)

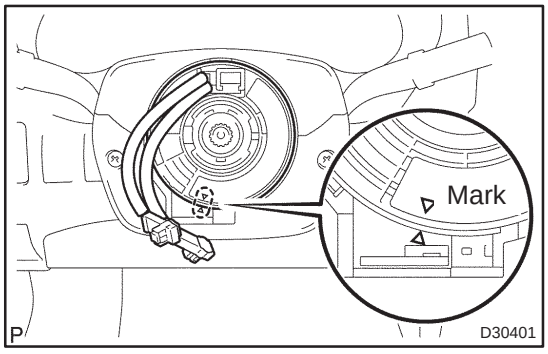

(b) SPIRAL CABLE (in Combination Switch)
(1) The steering wheel must be fitted correctly to the steering column with the spiral cable at the neutral position, otherwise cable disconnection and other troubles may occur. Refer to page 60–26 of this manual concerning the correct installation of the steering wheel.

(c) HORN BUTTON ASSEMBLY (with Airbag)
(1) When removing the horn button assembly or handling a new horn button, it should be placed with the top of the pad surface facing upward. Placing it with the pad surface facing downward may lead to a serious accident if the airbag deploys for some reasons. Also, do not place anything on top of the horn button.
(2) Never measure the resistance of the airbag squib (This may cause the airbag to inflate, which is very dangerous).
(3) Grease should not be applied to the horn button assembly, and the pad should not be cleaned with any type of detergent.
(4) Store the horn button assembly where the ambient temperature remains below 93˚C (200˚F), without high humidity and away from electrical noise.
(5) When using electric welding, disconnect the airbag connector (4 yellow pins) under the steering column near the combination switch connector before starting work.

(6) When disposing the vehicle or the horn button assembly alone, the airbag should be inflated using an SST before disposal (See page 60–19).
Perform the operation in a safe place away from electrical noise.

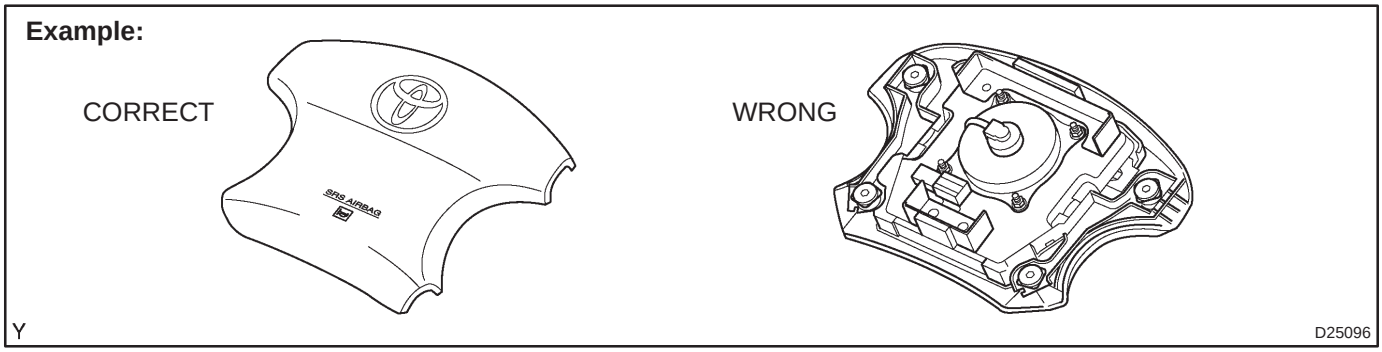

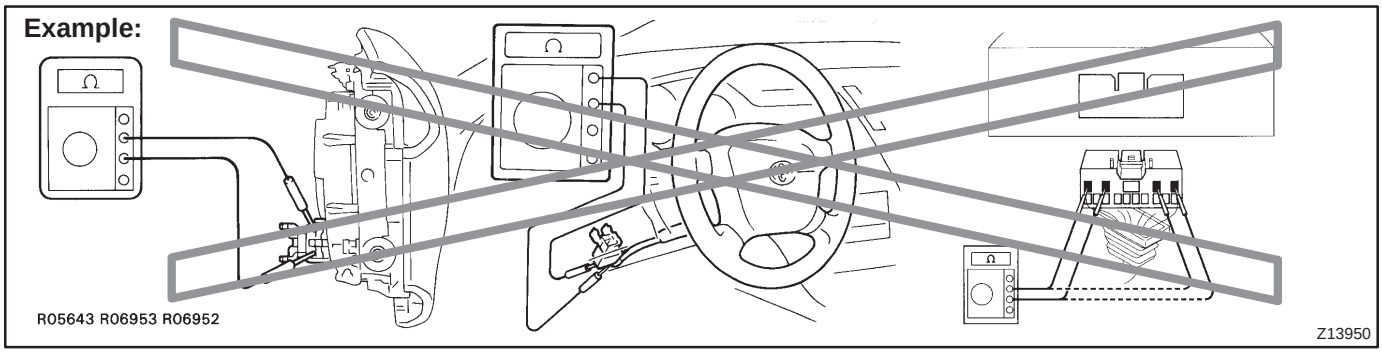

(d) INSTRUMENT PANEL PASSENGER AIRBAG ASSEMBLY

(1) Always place a removed or new instrument panel passenger airbag assembly with the airbag inflation direction facing upward. Placing the airbag assembly with the airbag inflation direction facing downward could cause a serious accident if the airbag deploys.

(2) Never measure the resistance of the airbag squib (This may cause the airbag to inflate, which is very dangerous).

(3) Grease should not be applied to the instrument panel passenger airbag assembly and the airbag door should not be cleaned with detergents of any kind.

(4) Store the airbag assembly where the ambient temperature remains below 93˚C (200˚F), without high humidity and away from electrical noise.

(5) When using electric welding, disconnect the airbag connector (4 yellow pins) installed on the assembly before starting work.

(6) When disposing of a vehicle or the airbag assembly unit, the airbag should be deployed using SST before disposal (See page 60–30).
Activate in a safe place away from electrical noise.

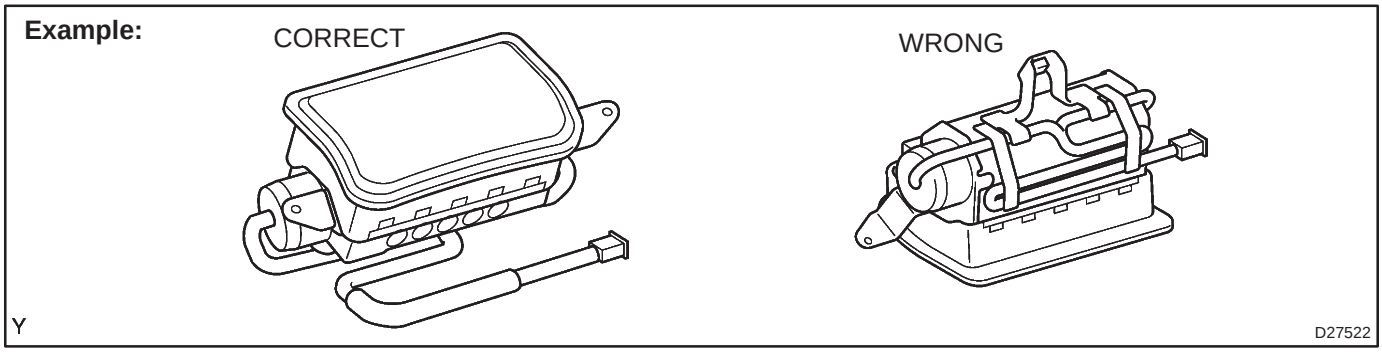

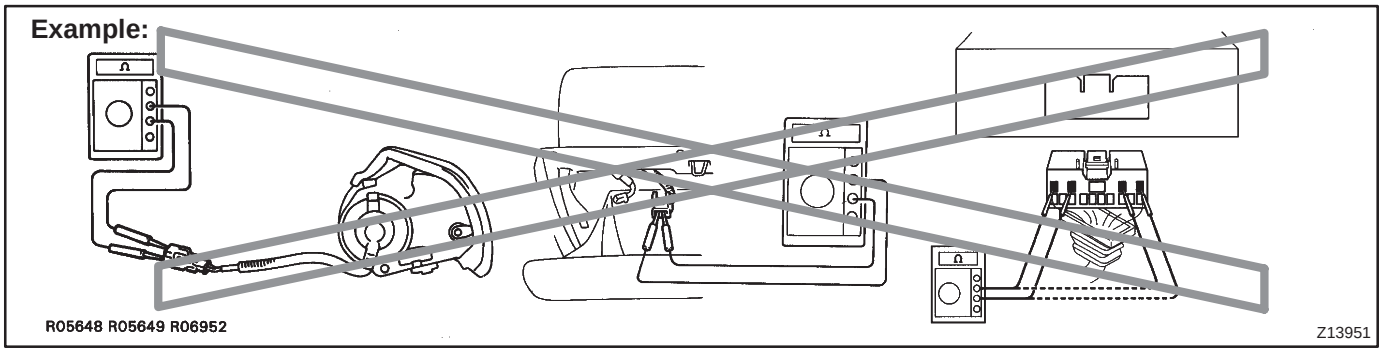

(e) FRONT SEAT AIRBAG ASSEMBLY

(1) Always store a removed or new front seat airbag assembly with the airbag inflating direction facing upward.
Placing the airbag assembly with the airbag inflation direction facing downward could cause a serious accident if the airbag inflates.

(2) Never measure the resistance of the airbag squib (This may cause the airbag to inflate, which is very dangerous.).

(3) Grease should not be applied to the front seat airbag assembly and the airbag door should not be cleaned with detergents of any kind.

(4) Store the airbag assembly where the ambient temperature remains below 93˚C (200˚F), without high humidity and away from electrical noise.

(5) When using electric welding, first disconnect the airbag connector (2 yellow pins) installed on the assembly before starting work.

(6) When disposing of a vehicle or the side airbag assembly alone, the airbag should be inflated using an SST before disposal (See page 60–47).
Perform the operation in a safe place away from electrical noise.

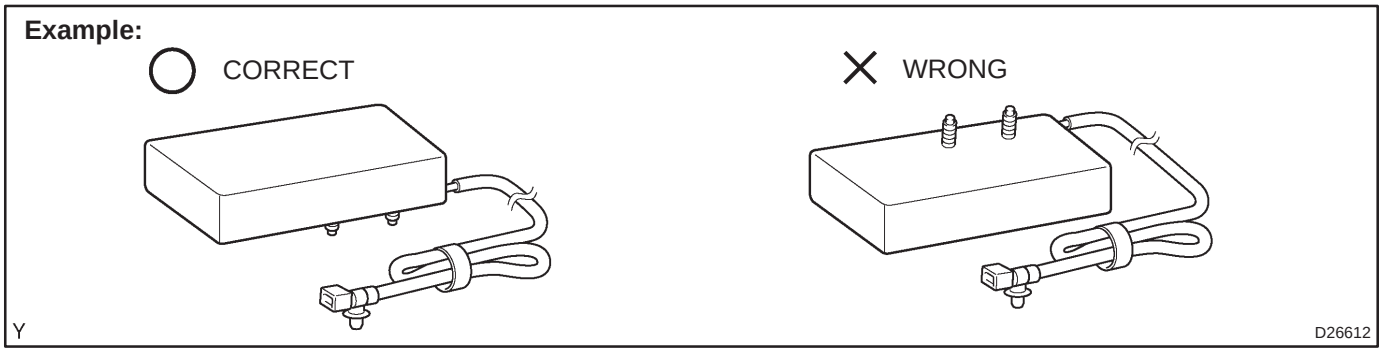

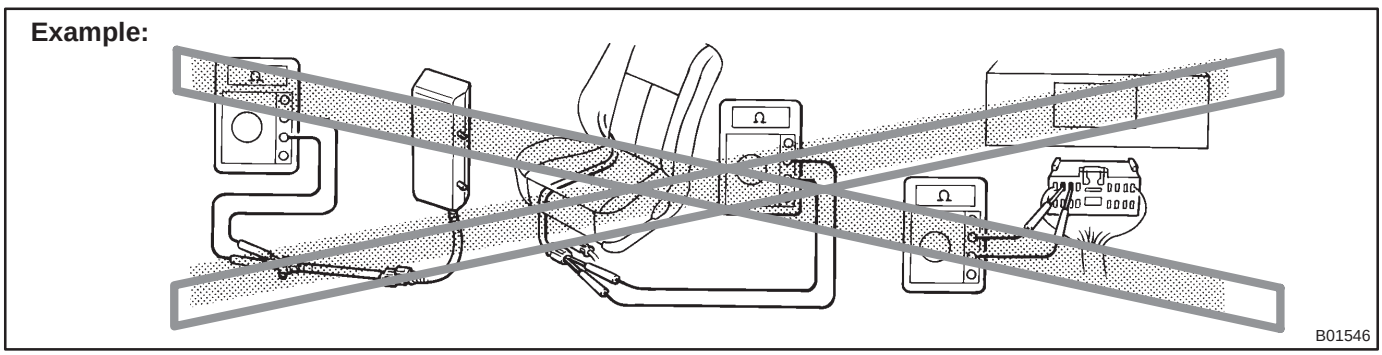

(f) INSTRUMENT PANEL LOWER AIRBAG ASSEMBLY

(1) Always store a removed or new instrument panel lower airbag assembly with the airbag inflating direction facing upward.
Placing the airbag assembly with the airbag inflation direction facing downward could cause a serious accident if the airbag inflates.

(2) Never measure the resistance of the airbag squib (This may cause the airbag to inflate, which is very dangerous.).

(3) Grease should not be applied to the instrument panel lower airbag assembly and the airbag door should not be cleaned with detergents of any kind.

(4) Store the instrument panel lower airbag assembly where the ambient temperature remains below 93˚C (200˚F), without high humidity and away from electrical noise.

(5) When using electric welding, first disconnect the airbag connector (2 yellow pins) installed on the instrument panel lower airbag assembly before starting work.

(6) When disposing of a vehicle or the instrument panel lower airbag assembly alone, the airbag should be inflated using an SST before disposal (See page 60–55).
Perform the operation in a safe place away from electrical noise.

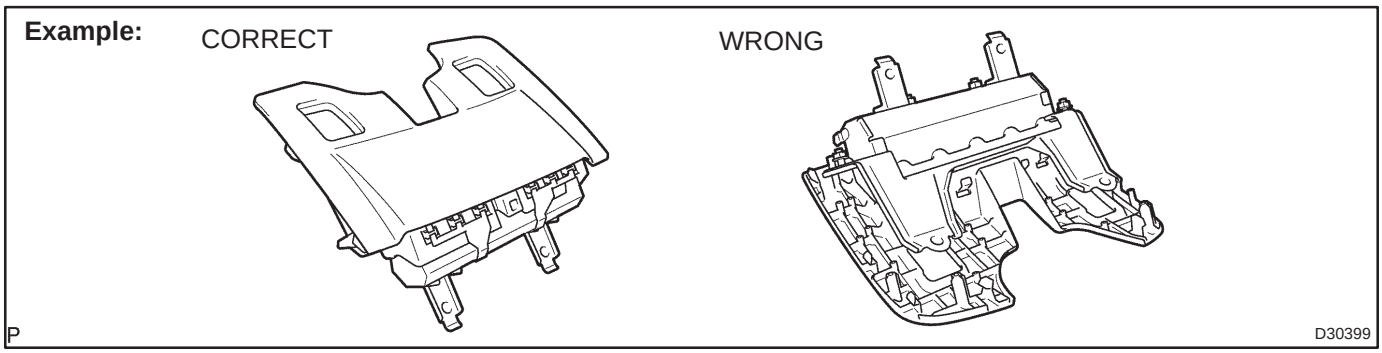

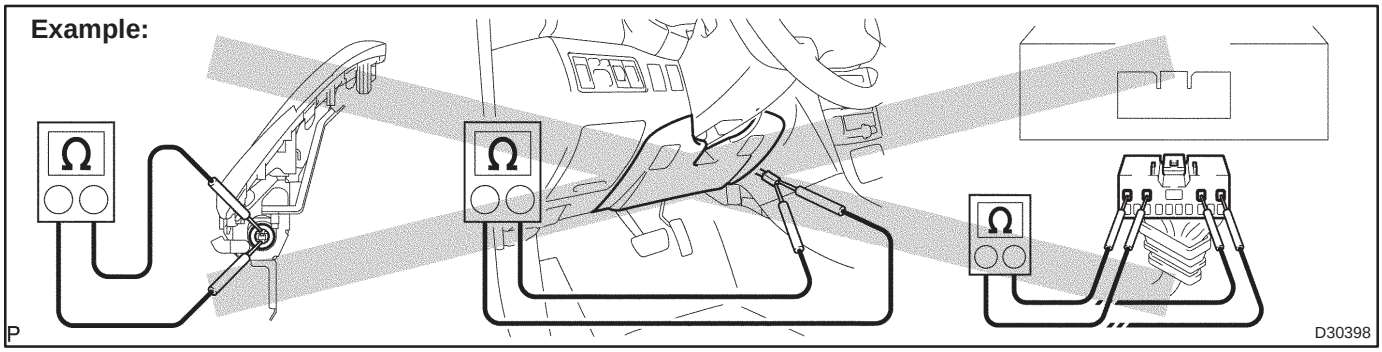

(g) CURTAIN SHIELD AIRBAG ASSEMBLY

(1) Always place the removed or new curtain shield airbag assembly in a clear plastic bag, and keep it in a safe place.

NOTICE:
Protection bag is not re–useable.
CAUTION:
Never disassemble the curtain shield airbag assembly.

(2) Never measure the resistance of the airbag squib (This may cause the airbag to inflate, which is very dangerous).

(3) Grease should not be attached to the curtain shield airbag assembly, and the surface should not be cleared with detergents of any kind.
(4) Store the airbag assembly where the ambient temperature remains below 93˚C (200˚F), without high humidity and away from electrical noise.
(5) When using electric welding, first disconnect the airbag connector (4 yellow pins) from the instrument panel before starting work.
(6) When disposing of a vehicle or the curtain shield airbag assembly alone, the airbag should be deployed using SST before the disposal (See page 60–41). Perform operation in a safe place away from electrical noise.

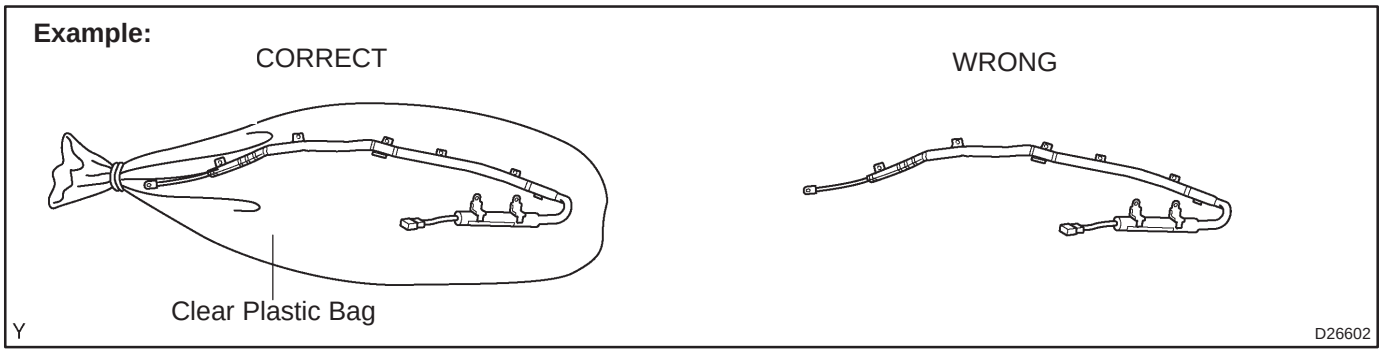

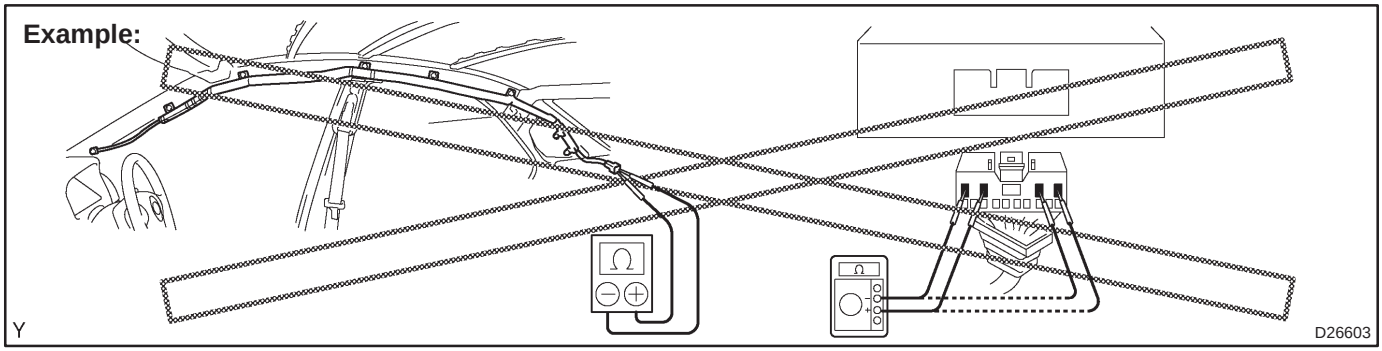

(h) SEAT BELT PRETENSIONER
(1) Never measure the resistance of the seat belt pretensioner (This may cause the seat belt pretensioner to activate, which is very dangerous.).
(2) Never disassemble the seat belt pretensioner.
(3) Never install the seat belt pretensioner in another vehicle.
(4) Store the seat belt pretensioner where the ambient temperature remains below 80˚C (176˚F) without high humidity and away from electrical noise.
(5) When using electric welding, first disconnect the connector (2 yellow pins) before starting work.
(6) When disposing of a vehicle or the seat belt pretensioner alone, the seat belt pretensioner should be activated before disposal (See page 61–9). Perform the operation in a safe place away from electrical noise.
(7) The seat belt pretensioner is hot after being activation, so allow some time for it to cool down sufficiently before disposal. Never apply water to cool down the seat belt pretensioner.

(8) Oil or water should not be put on the front seat outer belt and the front seat outer belt should be cleaned with the appropriate detergents.

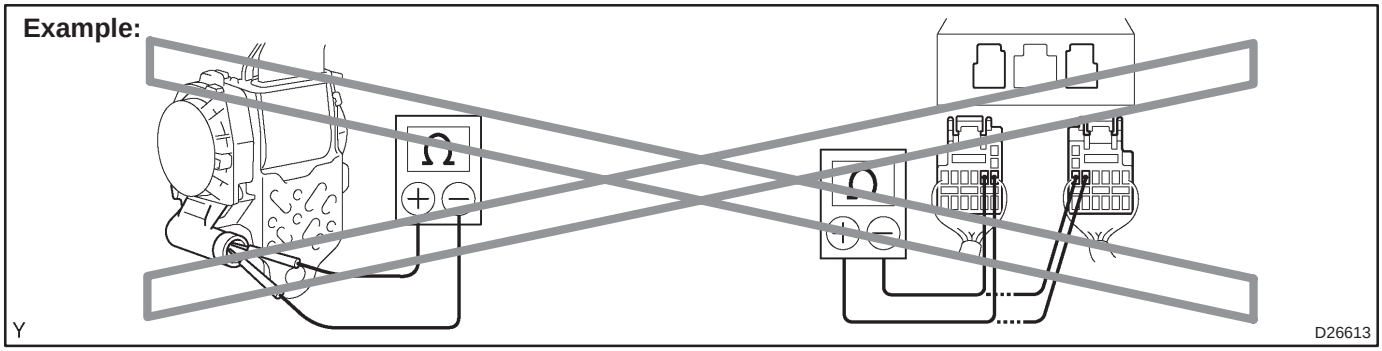

(i) AIRBAG SENSOR ASSEMBLY

(1) Never reuse the airbag sensor assembly involved in a collision where the SRS has deployed.

(2) The connectors to the airbag sensor assembly should be connected or disconnected with the sensor mounted on the floor. If the connectors are connected or disconnected while the airbag sensor assembly is not mounted to the floor, it could cause an undesired ignition of the supplemental restraint system.

(3) Work must be started after 90 seconds from the time the ignition switch is turned to the ”LOCK” position and the negative (–) terminal cable is disconnected from the battery, even if only loosening the set bolts of the airbag sensor assembly.

(j) WIRE HARNESS AND CONNECTOR

(1) The SRS wire harness is integrated with the instrument panel wire harness assembly. All connectors in the system are a standard yellow color. If the SRS wire harness becomes disconnected or the connector becomes broken due to an accident, etc., repair or replace it.

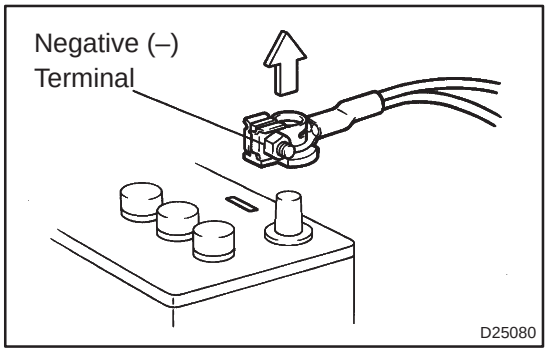

3. ELECTRONIC CONTROL

(a) REMOVAL AND INSTALLATION OF BATTERY TERMINAL

(1) Before performing electronic work, disconnect the battery negative (–) terminal cable beforehand in order to prevent it from shorting and burning out.

(2) When disconnecting and installing the terminal cable, turn the ignition switch and lighting switch OFF, and loosen the terminal nut completely. Perform these operations without twisting or prying the terminal.

(3) When the battery terminal cable is removed, the memories of the clock, radio, DTCs, etc. are erased. So before removing it, check them and make a note of their settings.

(4) When the battery negative (–) terminal cable is disconnected, memories of various systems are erased. Therefore, refer to the PRE–CHECK for each system to make sure whether or not the system needs to be initialized after the battery negative

(–) terminal cable is disconnected. If necessary, be sure to initialize the system.

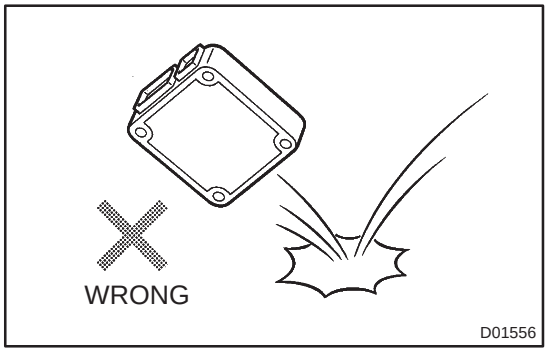

(b) HANDLING OF ELECTRONIC PARTS
- (1) Do not open the cover or case of the ECU unless absolutely necessary (If the IC terminals are touched, the IC may be rendered inoperative by static electricity).
- (2) To disconnect electronic connectors, pull the connector itself, not the wires.
- (3) Be careful not to drop electronic components, such as sensors or relays. If they are dropped on a hard floor, they should be replaced and not be reused.
- (4) When cleaning the engine with steam, protect the electronic components, air filter and emission–related components from water.
- (5) Never use an impact wrench to remove or install temperature switches or temperature sensors.
- (6) When checking the continuity at the wire connector, insert the tester probe carefully to prevent terminals from bending.

4. REMOVAL AND INSTALLATION OF FUEL CONTROL PARTS

(a) PLACE FOR REMOVING AND INSTALLING OF FUEL SYSTEM PARTS
- (1) Work in a place with good air ventilation and without anything that could cause combustion around you such as a welder, grinder, drill, electric motor or stove.
- (2) Never work in a place such as a pit or nearby a pit, as there is a possibility that vaporized fuel will collect in those places.

(b) REMOVING AND INSTALLING OF FUEL SYSTEM PARTS
- (1) Prepare a fire extinguisher before starting operations.
- (2) To prevent static electricity, install a ground on the fuel changer, vehicle and fuel tank, and do not spray much water so as to prevent slipping.
- (3) Never use any electric equipment like an electric motor or a working light, as they may create sparks or a high temperature.
- (4) Never use an iron hammer, as it may create sparks.
- (5) Dispose of shop rags containing fuel deposits separately.

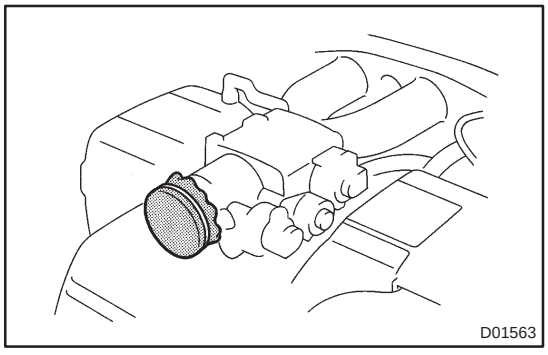

5. REMOVAL AND INSTALLATION OF ENGINE INTAKE PARTS

(a) If any metal tip is mixed in the inlet pass, this may give a bad effect to the engine and turbocharger.

(b) When removing and installing the inlet system parts, close the opening of the removed inlet system parts and the engine with a clean waste cloth or gum tape.

(c) When installing the inlet system parts, check that there is no mixing of a metal tip.

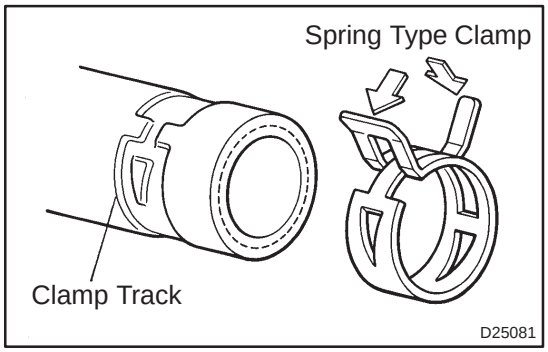

6. HANDLING OF HOSE CLAMPS

(a) Before removing the hose, check the depth of the inserting portion and the clamp position to restore it surely.

(b) Change a deformed or dented clamp for a new one.

(c) In case of reusing a hose, attach the clamp on the clamp track portion of the hose.

(d) For a spring type clamp, adjust it by adding force to the arrow mark direction after the installation.

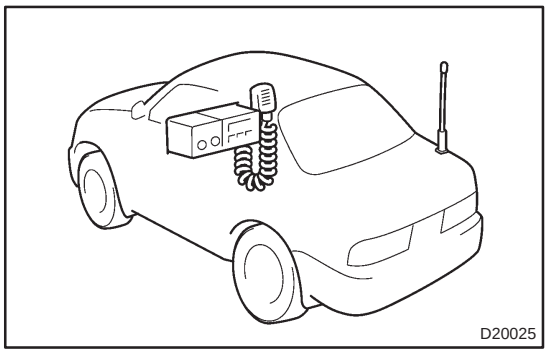

7. FOR VEHICLES EQUIPPED WITH MOBILE COMMUNICATION SYSTEMS

(a) Install the antenna as far away from the ECU and sensors of the vehicle electronic systems as possible.

(b) Install an antenna feeder at least 20 cm (7.87 in.) away from the ECU and sensors of the vehicle electronic systems. For details of the ECU and sensors locations, refer to the section on applicable components.

(c) Prevent the antenna feeder from getting entangled with the other wiring, and keep the antenna feeder separate from other wiring as much as possible.

(d) Check that the antenna and feeder are correctly adjusted.

(e) Do not install any high–powered mobile communication system.

8. FOR VEHICLES EQUIPPED WITH TRACTION CONTROL (TRC) SYSTEM

(a) NOTICES WHEN USING 2–WHEEL DRUM TESTER

(1) When using a 2–wheel drum tester such as a speedometer tester, a combination tester of speedometer and brake, chassis dynamometer or else, always turn the TRC system off via the TRC OFF switch before measurement.

NOTICE:

TRC system OFF condition can be confirmed by the indication, ”TRC OFF”, of the warning light in the combination meter.

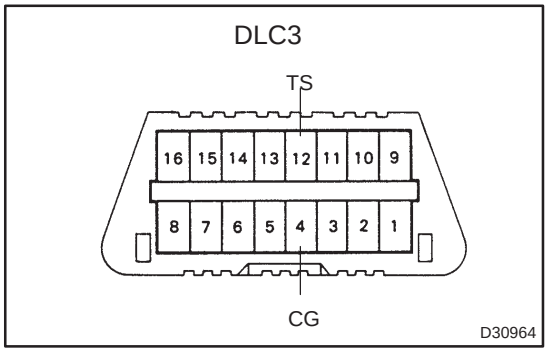

9. FOR VEHICLES EQUIPPED WITH VEHICLE SKID CONTROL (VSC) SYSTEM

(a) NOTICES WHEN USING DRUM TESTER

(1) When using a drum tester, be sure to start the engine with the ignition OFF, and connect SST to the terminals TS and CG of the DLC3 before measurement in order to prohibit the VSC operation.

SST 09843–18040

NOTICE:

- **Confirm that the VSC warning light blinks.**
- **VSC system will be reset when the engine is re-started.**
- **Fasten the vehicle with lock chains.**

(b) NOTICES OF RELATED OPERATIONS TO VSC

(1) Do not carry out unnecessary installation and removal as it might disorder the adjustment of related parts to VSC.

(2) Be sure to carry out the preparation for operation and the confirmation of operation completion in accordance with the instruction of the text and when the related operations to VSC are performed.

10. FOR VEHICLES EQUIPPED WITH CATALYTIC CONVERTER

CAUTION:

If a large amount of unburned gasoline flows into the converter, it may cause overheating and is a fire hazard. To prevent this, observe the following precautions.

(a) Use only unleaded gasoline.

(b) Avoid prolonged idling.
Avoid idling the engine for more than 20 minutes.

(c) Avoid a spark jump test.

(1) Perform a spark jump test only when absolutely necessary. Perform this test as rapidly as possible.

(2) While testing, never race the engine.

(d) Avoid a prolonged engine compression measurement.
Engine compression measurements must be performed as rapidly as possible.

(e) Do not run the engine when the fuel tank is nearly empty. This may cause the engine to misfire and create an extra load on the converter.

010B5–11

VEHICLE LIFT AND SUPPORT LOCATIONS

1. NOTICE ABOUT VEHICLE CONDITION WHEN JACKING UP

(a) As a rule, the vehicle must be unloaded when jacking up. Never jack up or lift up the vehicle loaded with things of heavy weight.

(b) When removing any parts of heavy weight like the engine and transmission, the center of gravity of the vehicle moves. Place a balance weight so as to keep it from rolling, or hold the jacking support location using the mission jack.

2. NOTICE FOR USING 4 POST LIFT

(a) Follow the instruction manual for a safety operation.

(b) Do not damage tires or wheels with a free wheel beam.

(c) Using a wheel stopper, fix the vehicle.

3. NOTICE FOR USING JACK AND SAFETY STAND

(a) Work in the flat place using a wheel stopper at all times.

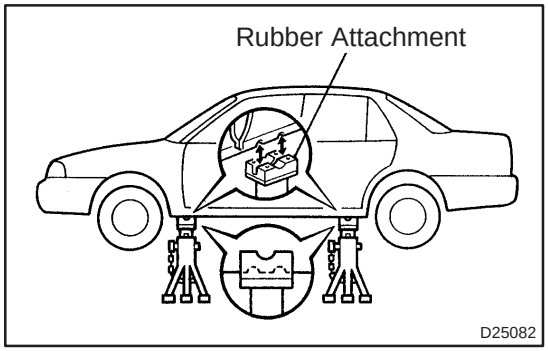

(b) Use a safety stand with a rubber attachment, as shown in the illustration.

(c) Support the specified location with a jack and safety stand accurately.

(d) When jacking up the front wheels, release the parking brake and place wheel stoppers only behind the rear wheels. When jacking up the rear wheels, place wheel stoppers only in front of the front wheels.

(e) Do not work or leave the vehicle supported only by a jack. Be sure to support the vehicle with a safety stand.

(f) When jacking up only the front wheels or only the rear wheels, place wheel stoppers to both sides of the wheels that contact ground.

(g) When jacking down the vehicle with its front wheels jacked up, release the parking brake and place wheel stoppers only in front of the rear wheels. When jacking down the vehicle with its rear wheels jacked up, place wheel stoppers only behind the front wheels.

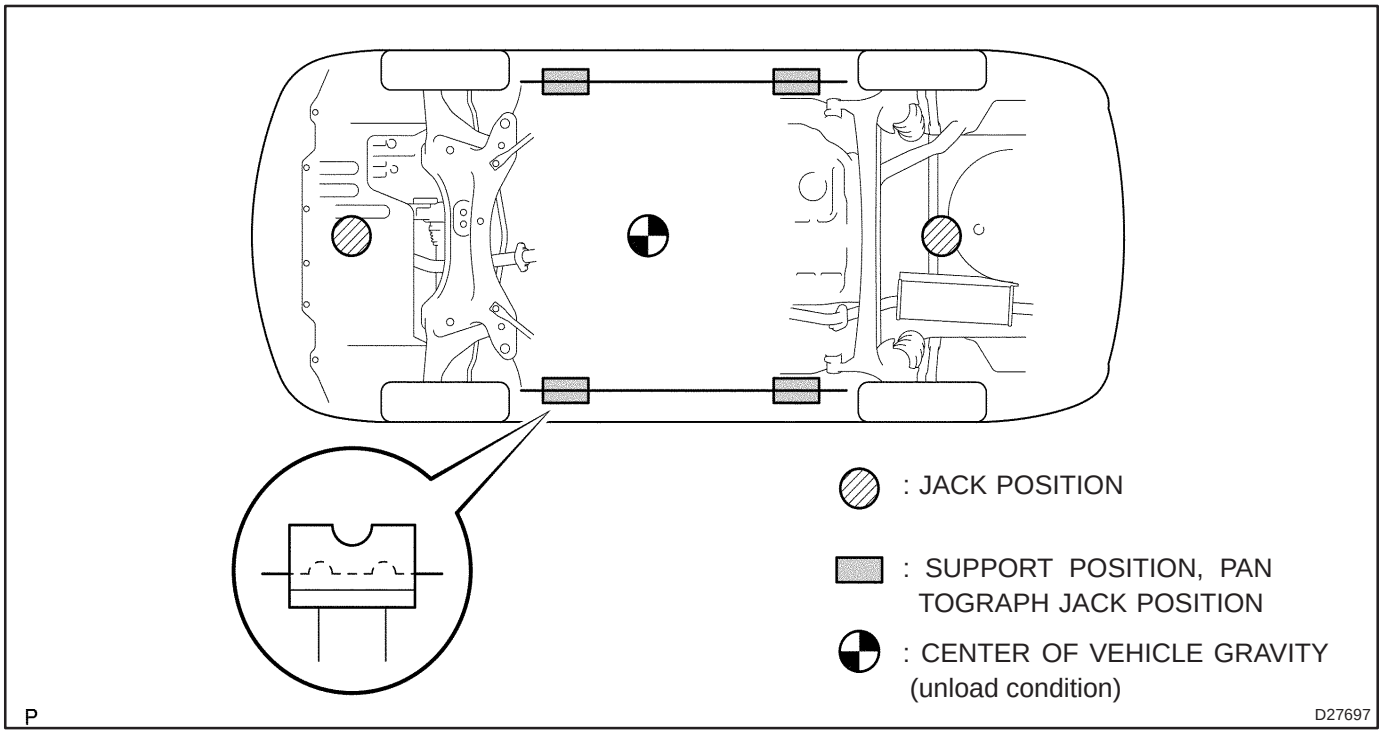

4. NOTICE FOR USING SWING ARM TYPE LIFT

(a) Follow the instruction manual of the lift for a safe operation.
(b) Use a cradle with a rubber attachment, as shown in the illustration.
(c) Set in the vehicle so as to make its center of gravity as close as possible to the center of the lift. (”L” becomes short.)
(d) Place the vehicle horizontally by adjusting the height of the cradle, and match the groove of the cradle and the safety stand support location accurately.
(e) Be sure to lock the swing arm during the operation.
(f) Lift the vehicle up until the tires float, and shake the vehicle to make sure that the vehicle is stable.

5. NOTICE FOR USING PLATE TYPE LIFT

(a) Follow the instruction manual of the lift for a safe operation.
(b) Use a plate lift attachment.
(c) Be sure to set the vehicle to the specified position.

Right and left set position	• Place the vehicle over the center of the lift.
Front and rear set position	• Align the cushion gum ends of the plate with the attachment lower ends (A and C). • Align the attachment upper end (B) with the rocker flange front side notch.

(d) Lift the vehicle up until the tires float a bit, and shake the vehicle to make sure that the vehicle is stable.

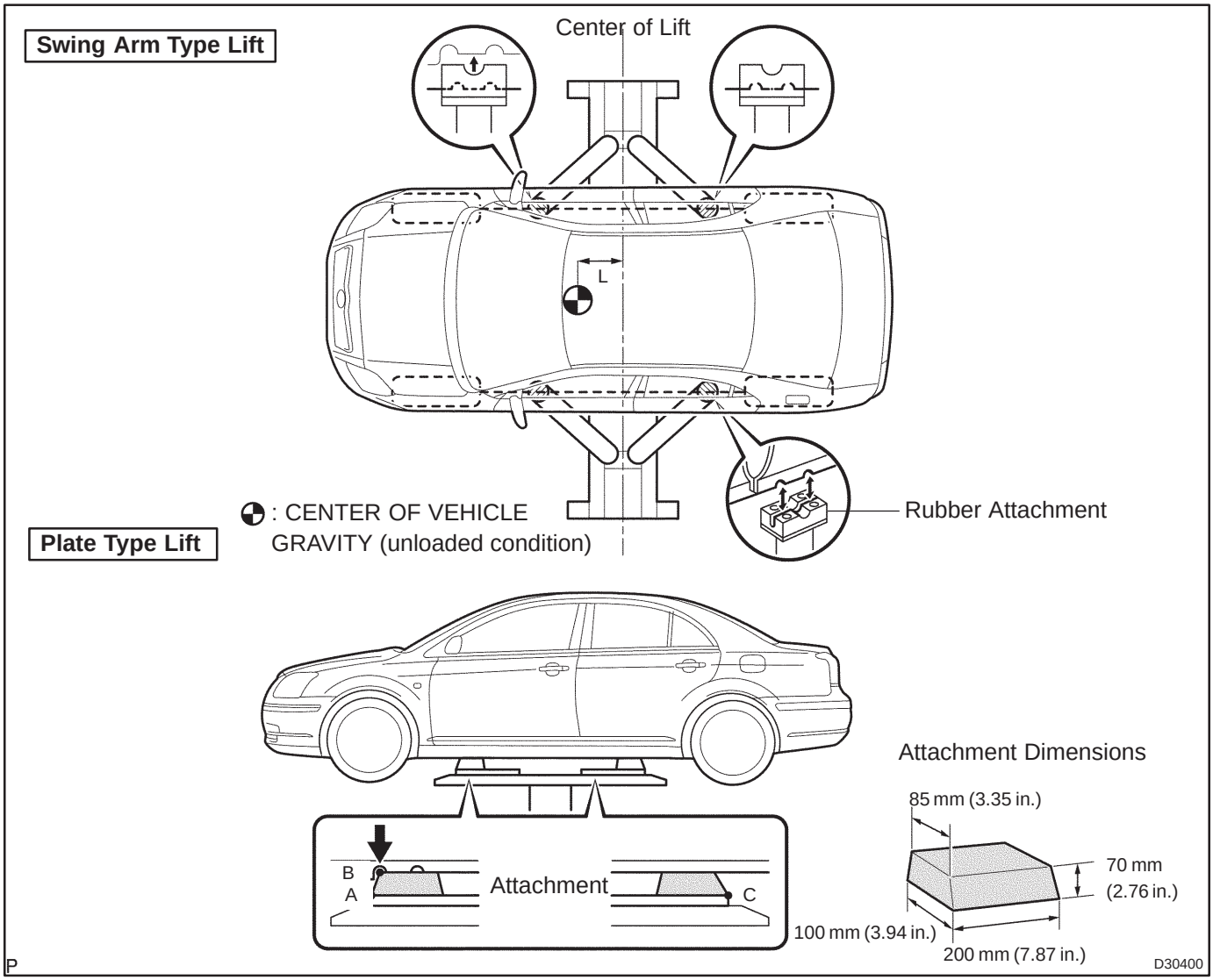

HOW TO TROUBLESHOOT ECU CONTROLLED SYSTEMS

010B6–13

GENERAL INFORMATION

There are many ECU controlled systems used in the AVENSIS. In general, ECU controlled system are considered to be very intricate and require a high level of technical knowledge and expert skill to troubleshoot. The fact is, however, that if you proceed by inspecting the circuits one by one, troubleshooting of these systems is not complex. If you have adequate understanding of the system and basic knowledge of electricity, the problem can be accurately diagnosed and fixed. This manual is designed based on the above principle to help service technicians perform accurate and effective troubleshooting, and is compiled for the following major ECU controlled systems:

The troubleshooting procedures are described on the following pages.

System	Page
1. SFI System [1ZZ–FE, 3ZZ–FE]	05–1
2. SFI System [1AZ–FE]	05–143
3. SFI System [1AZ–FSE]	05–290
4. ECD System [1CD–FTV]	05–523
5. ABS with EBD System	05–696
6. ABS with EBD & BA & TRC & VSC System	05–752
7. Electronic Controlled Automatic Transmission [ECT] [U241 (1AZ–FE)]	05–856
8. Electronic Controlled Automatic Transmission [ECT] [U241 (1AZ–FSE)]	05–915
9. Electronic Controlled Automatic Transmission [ECT] [U341]	05–980
10.Electronic Motor Power Steering System	05–1042
11.Air Conditioning System	05–1088
12.Combustion Type Power Heater System	05–1161
13.Supplemental Restraint System	05–1181
14.Audio System	05–1393
15.Navigation System	05–1435
16.Combination Meter	05–1497
17.Power Door Lock Control System	05–1534
18.Wireless Door Lock Control System	05–1568
19.Key Reminder Warning System	05–1586
20.Engine Immobiliser System	05–1599
21.Theft Deterrent System	05–1627
22.Multiplex Communication System	05–1654
23.Cruise Control System	05–1697

FOR USING HAND–HELD TESTER

- Before using the tester, the tester's operator manual should be read thoroughly.
- If the tester cannot communicate with the ECU controlled systems when you have connected the cable of tester to the DLC3, turned the ignition switch ON and operated the tester, there is a problem on the vehicle side or tester side.
  (1) If the communication is normal when the tester is connected to another vehicle, inspect the diagnosis data link line (Bus⊕line) or ECU power circuit of the vehicle.
  (2) If the communication is still impossible when the tester is connected to another vehicle, the problem is probably in the tester itself, so perform the Self Test procedures outlined in the Tester Operator's Manual.

010B7–13

HOW TO PROCEED WITH TROUBLESHOOTING

HINT:

Carry out troubleshooting in accordance with the procedures on the following page. Here, only the basic procedures are shown. Details are provided in the Diagnostics Section, showing the most effective methods for each circuit. Confirm the troubleshooting procedures first for the relevant circuit before beginning troubleshooting of that circuit.

1	Vehicle brought to workshop

2	Customer problem analysis

(a) Ask the customer about the conditions and environment when the problem occurred.

3	Symptom confirmation and DTC (and freeze frame data) check

(a) Check the battery positive voltage.
Voltage: 11 – 14 V (Engine stopped)
(b) Visually check the wire harness, connectors and fuses for open and short, etc.
(c) Warm up the engine to the normal operating temperature.
(d) Confirm the problem symptoms and conditions, and check for DTCs according to the related chart.

OK → **Go to step 5**

NG

4	DTC chart

(a) Check the results obtained in step 3, then confirm the inspection procedures for the system or the part which should be checked using the DTC chart.

→ **Go to step 6**

5	Problem symptoms chart

(a) Check the results obtained in step 3, then confirm the inspection procedures for the system or the part which should be checked using the problem symptoms table.

6	Circuit inspection or parts inspection

(a) Confirm the circuit for the system or the part which should be checked using the problem symptoms table or the results obtained in step 4.

7	Repair

(a) Repair the affected system or part in accordance with the instructions in step 6.

8	Confirmation test

(a) After completing repairs, confirm that the problem has been solved (If the problem does not recur, perform a confirmation test under the same conditions and in the same environment as when it occurred for the first time).

END

CUSTOMER PROBLEM ANALYSIS

HINT:

- In troubleshooting, the problem symptoms must be confirmed accurately, meaning that all preconceptions must be set aside in order to make an accurate judgement. To ascertain what the problem symptoms are, it is extremely important to ask the customer about the problem and conditions when it occurred.
- The following 5 items are important points in the problem analysis. Past problems which are thought to be unrelated and the repair history, etc. may also help in some cases. Therefore, as much information as possible should be gathered and its relationship with the problem symptoms should be correctly ascertained for use as reference in troubleshooting. A customer problem analysis table is provided for your use in the Diagnostics Section for each system.

Important Points with Customer Problem Analysis

- What ——— Vehicle model, system name
- When ——— Date, time, occurrence frequency
- Where ——— Road conditions
- Under what conditions? ——— Running conditions, driving conditions, weather conditions
- How did it happen? ——— Problem symptoms

(Sample) Supplemental restraint system check sheet.

CUSTOMER PROBLEM ANALYSIS CHECK

Supplemental Restraint System Check Sheet

Inspector's Name

Customer's Name		**Registration No.**	
		Registration Year	/ /
		Frame No.	
Date Vehicle Brought In	/ /	**Odometer Reading**	km miles

Date Problem First Occurred	/ /
Weather	☐ Fine ☐ Cloudy ☐ Rainy ☐ Snowy ☐ Other
Temperature	Approx.

Vehicle Operation	☐ Starting ☐ Idling ☐ Driving [☐ Constant speed ☐ Acceleration ☐ Deceleration ☐ Other]

SYMPTOM CONFIRMATION AND DIAGNOSTIC TROUBLE CODE

HINT:

- The diagnostic system in AVENSIS has various functions. The first function is the Diagnostic Trouble Code (DTC) Check, in which a malfunction in the signal circuits to the ECU is stored in code form in the ECU memory. Another function is the Input Signal Check, which checks if the signals from various switches are sent to the ECU correctly. By using these check functions, it is possible to quickly narrow down potential problem areas and troubleshooting can be performed effectively. The diagnostic functions are incorporated in the following systems in the AVENSIS.

System	Diagnostic Trouble Code Check	Input Signal Check (Sensor Check)	Diagnostic Test Mode (Active Test)
SFI System (1AZ–FE/1AZ–FSE, 1ZZ–FE/3ZZ–FE)	○ (with Check Mode)	○	○
ECD System (1CD–FTV)	○ (with Check Mode)	○	○
ABS with EBD System	○	○	○
ABS with EBD & BA & TRC & VSC System	○	○	○
Electronically Controlled Automatic Transmission [ECT]	○ (with Check Mode)	○	
Air Conditioning System	○	○	
Supplemental Restraint System	○		
Audio System	○		
Power Door Lock Control System	○		○
Wireless Door Lock Control System	○		
Key Reminder Warning System	○		
Engine Immobiliser System	○		○
Theft Deterrent System	○		○
Multiplex Communication System	○		
Cruise Control System	○	○	

- In the DTC check, it is very important to determine whether the problem indicated by the DTC is still occurring or has occurred in the past but returned to normal at present. In addition during the problem symptom check, it a check must be made on whether the malfunction indicated by the DTC is directly related to the problem symptom or not. For this reason, the DTC should be checked before and after symptom confirmation to determine the current conditions. If this is not done, it may, depending on the case, result in unnecessary troubleshooting for systems that are operating normally. This would make more difficult to detect the problem area or to try to repair irrelevant areas. Therefore, always follow the procedures in the correct order and perform the DTC check.
- A flow chart showing how to proceed with troubleshooting using the diagnostic trouble code (DTC) check is shown the this page. This flow chart shows how to utilize the DTC check effectively. Then, by carefully checking the results, this chart indicates how to proceed either to the DTC troubleshooting or to the troubleshooting of the problem symptoms table.

1	**DTC check**

2	**Make a note of DTCs displayed and then clear the memory**

3	**Symptom confirmation**

a	Symptoms exist
b	No symptoms exist

a → **Go to step 5**

b

4 Simulation test using the symptom simulation methods

5 DTC check

a	DTC displayed
b	Normal code displayed

a → **Troubleshooting of problem indicated by DTC**

b

6 Symptom confirmation

a	No symptoms exist
b	Symptoms exist

If a DTC is displayed in the initial DTC check, it indicates that a trouble may have occurred in a wire harness or connector in that circuit in the past. Therefore, check the wire harness and connectors (See page 01–32).

a → **System normal**

b

Troubleshooting of each problem symptom

The problem is still occurring in a place other than the diagnostic circuit (The DTC displayed first is either for a past problem or a secondary problem).

SYMPTOM SIMULATION

HINT:

The most difficult case in troubleshooting is when no symptoms occurs. In such cases, a thorough customer problem analysis must be carried out. Then the same or similar conditions and environment in which the problem occurred in the customer's vehicle should be simulated. No matter how much experience a technician has, or how skilled he may be, if he proceeds to troubleshoot without confirming the problem symptoms, he will tend to overlook something important in the repair operation and make a wrong guess somewhere, which will only lead to a standstill. For example, for a problem which only occurs when the engine is cold, or for a problem which occurs due to vibration caused by the road during driving, etc., the problem can never be determined when the engine is hot or when the vehicles is at a standstill. Since vibration, heat or water penetration (moisture) is a likely cause for the problem which is difficult to reproduce, the symptom simulation tests introduced here are effective measures in a point that the external causes are applied to the vehicle in a stationary condition.

Important points in the symptom simulation test:

In the symptom simulation test, the problem symptoms should be confirmed, and the problem area or parts must also be discovered. To do so, reduce the possible problem circuits according to the symptoms before starting this type of test and have the hand–held tester connected beforehand. After that, carry out the symptom simulation test, judging whether the circuit being tested is defective or normal and also confirming the problem symptoms at the same time. Refer to the problem symptoms table of each system to narrow down the possible causes of the symptom.

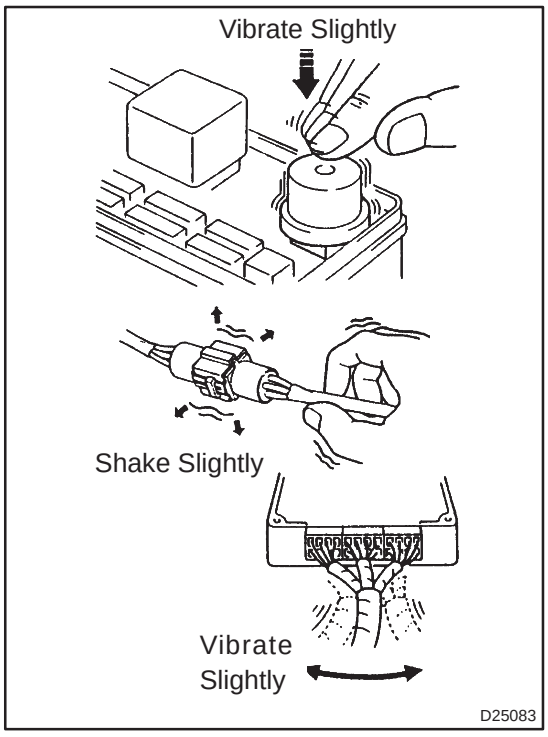

1. VIBRATION METHOD: When vibration seems to be the major cause.

(a) PART AND SENSOR

(1) Apply slight vibration with your finger to the part of the sensor considered to be the problem cause and check whether the malfunction occurs.

HINT:

Applying strong vibration to relays may result in open relays.

(b) CONNECTORS

(1) Slightly shake the connector vertically and horizontally.

(c) WIRE HARNESS

(1) Slightly shake the wire harness vertically and horizontally.

The connector joint and fulcrum of the vibration are the major areas that should be checked thoroughly.

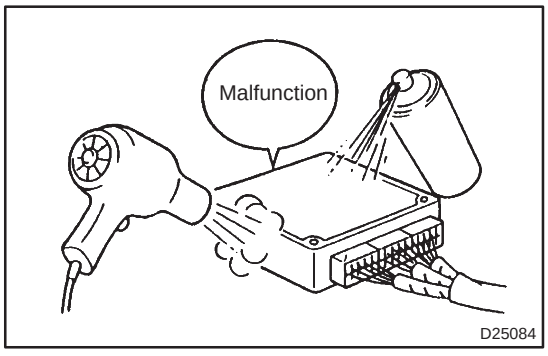

2. HEAT METHOD: If the problem seems to occur when the area in question is heated.

(a) Heat the component that is the possible cause of the malfunction with a hair dryer or similar object. Check if the malfunction occurs.

NOTICE:

- **Do not heat the components to more than 60°C (140°F) (Temperature is limited to keep the components from being damaged).**

- **Do not apply heat directly to the parts in the ECU.**

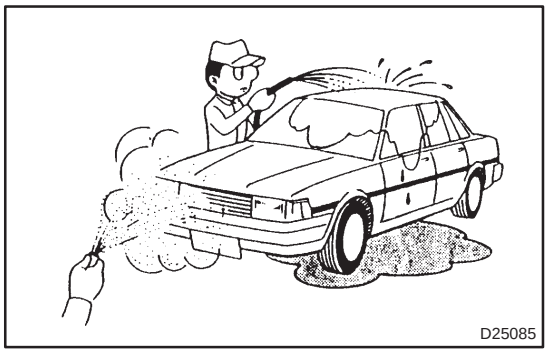

3. WATER SPRINKLING METHOD: When the malfunction seems to occur on a rainy day or in high–humidity.

(a) Sprinkle water onto the vehicle and check if the malfunction occurs.

NOTICE:

- **Never sprinkle water directly onto the engine compartment, but indirectly change the temperature and humidity by spraying a mist of water onto the radiator front surface.**
- **Never apply water directly onto the electronic components.**

HINT:

If a vehicle is subject to water leakage, the leaking water may contaminate the ECU. When testing a vehicle with a water leakage problem, this factor must also be considered.

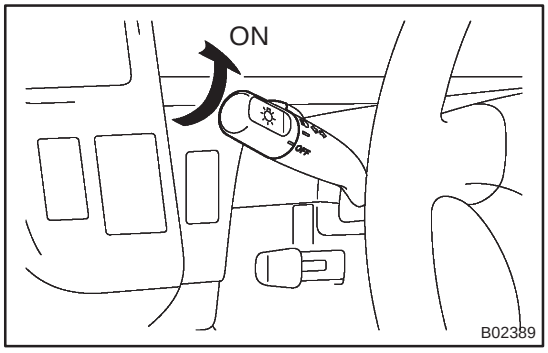

4. OTHERS: If the malfunction seems to occur when electrical load is excessive.

(a) Turn on all the electrical equipment including the heater blower, headlights, rear window defogger, etc., and check if the malfunction occurs.

DIAGNOSTIC TROUBLE CODE CHART

The inspection procedures are shown in the table below. This table allows efficient and accurate troubleshooting using the diagnostic trouble codes displayed in the diagnostic trouble code chart. Proceed with troubleshooting in accordance with the inspection procedures listed in the diagnostic chart corresponding to the diagnostic trouble codes displayed. The diagnostic trouble code chart for the Supplemental Restraint System is shown below as an example.

- DTC No.
  Indicates the diagnostic trouble code.
- Page or Instructions
  Indicates the page where the inspection procedures for each circuit is to be found, or gives instructions for checking and repairs.

- Trouble Area
  Indicates the suspect areas of the problem.

- Detection Item
  Indicates the system or details of the problem.

DIAGNOSTIC TROUBLE CODE CHART

If a malfunction code is displayed during the DTC check, check the circuit for that code listed in the table below (Proceed to the page given for that circuit).

DTC No. (See page)	Detection Item	Trouble Area	SRS Warning Light
B0100/13 (05–119)	● Short in D squib circuit	● Steering wheel pad (squib) ● Spiral cable ● Airbag sensor assembly ● Wire harness	ON
B0101/14 (05–124)	● Open in D squib circuit	● Steering wheel pad (squib) ● Spiral cable ● Airbag sensor assembly ● Wire harness	ON
B0102/11 (05–128)	● Short in D squib circuit (to ground)	● Steering wheel pad (squib) ● Spiral cable ● Airbag sensor assembly ● Wire harness	ON
B0103/12 (05–132)	● Short in D squib circuit (to B+)	● Steering wheel pad (squib) ● Spiral cable ● Airbag sensor assembly ● Wire harness	ON
B0105/53 (05–136)	● Short in P squib circuit	● Front passenger airbag assembly (squib) ● Airbag sensor assembly ● Wire harness	ON
B0106/54	● Open in P squib circuit	● Front passenger airbag assembly (squib) ● Airbag sensor assembly ● Wire harness	
	circuit (to Ground)	● Front passenger airbag assembly (squib) ● Airbag sensor assembly ● Wire harness	

PROBLEM SYMPTOMS TABLE

The suspected circuits or parts for each problem symptom are shown in the table below. Use this table to troubleshoot the problem when a Normal code is displayed in the diagnostic trouble code chart but the problem is still occurring. Numbers in the table indicate the order in which the circuits or parts should be checked.
HINT:
When the problem is not detected by the diagnostic system even though the problem symptom is present, it may be that the problem is occurring outside the detection range of the diagnostic system.

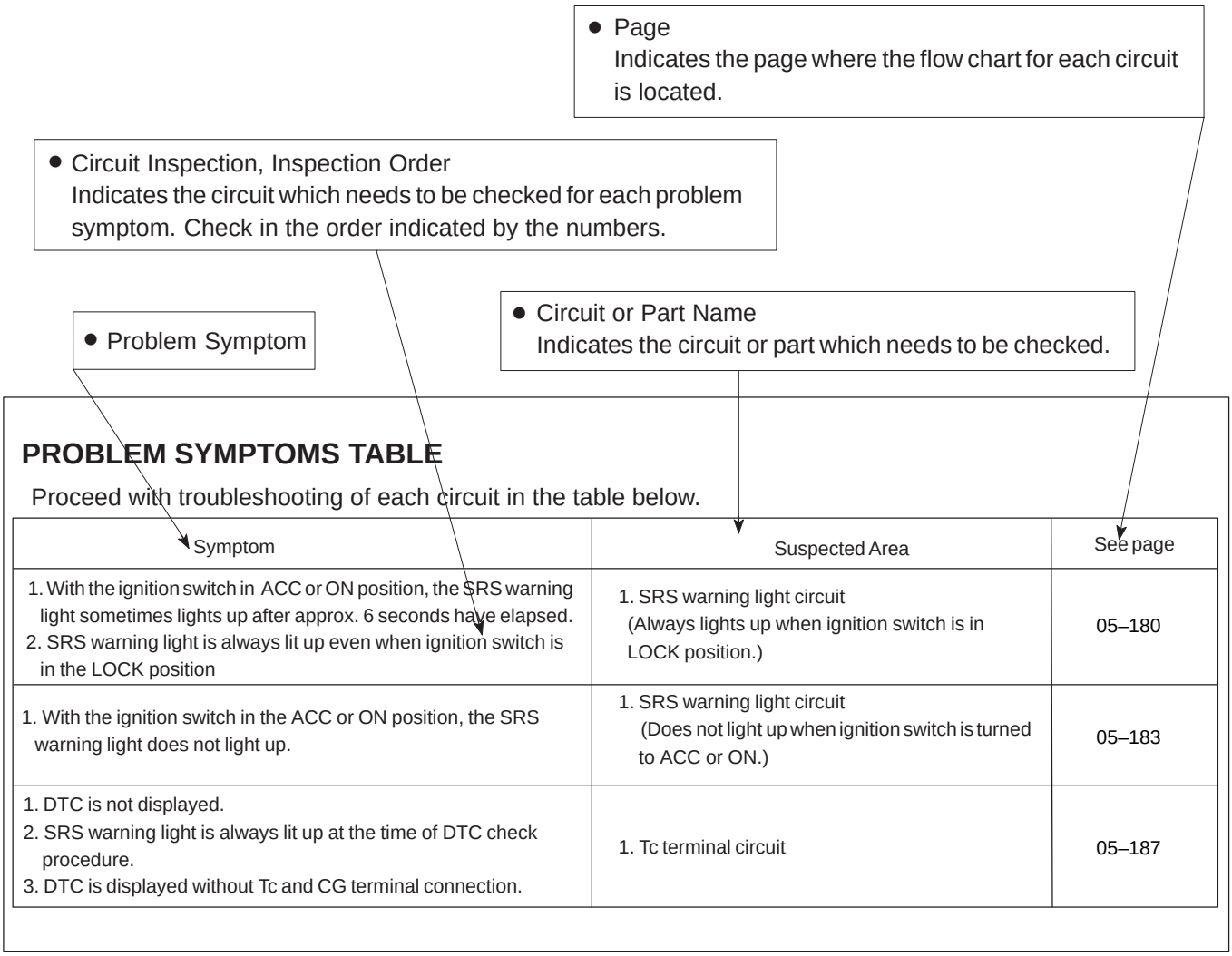

PROBLEM SYMPTOMS TABLE

Proceed with troubleshooting of each circuit in the table below.

Symptom	Suspected Area	See page
1. With the ignition switch in ACC or ON position, the SRS warning light sometimes lights up after approx. 6 seconds have elapsed. 2. SRS warning light is always lit up even when ignition switch is in the LOCK position	1. SRS warning light circuit (Always lights up when ignition switch is in LOCK position.)	05–180
1. With the ignition switch in the ACC or ON position, the SRS warning light does not light up.	1. SRS warning light circuit (Does not light up when ignition switch is turned to ACC or ON.)	05–183
1. DTC is not displayed. 2. SRS warning light is always lit up at the time of DTC check procedure. 3. DTC is displayed without Tc and CG terminal connection.	1. Tc terminal circuit	05–187

CIRCUIT INSPECTION

How to read and use each page is shown below.

● Circuit Description
The major role and, operation of the circuit and its component parts are explained.

● Diagnostic Trouble Code No. and Detection Item

● Indicates the diagnostic trouble codes, diagnostic trouble code settings and suspect areas for a problem.

● Inspection Procedures
Use the inspection procedures to determine if the circuit is normal or abnormal. If it is abnormal, use it to determine whether the problem is located in the sensors, actuators, wire harness or ECU.

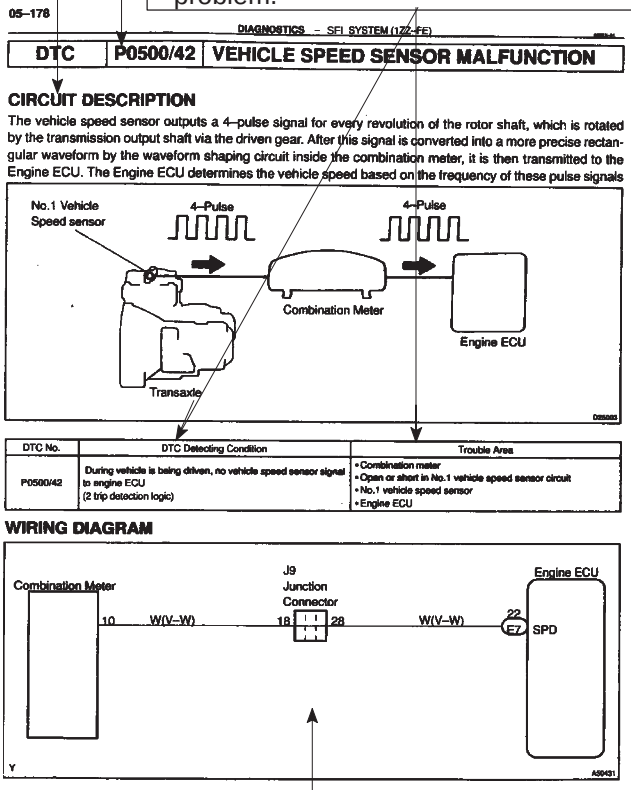

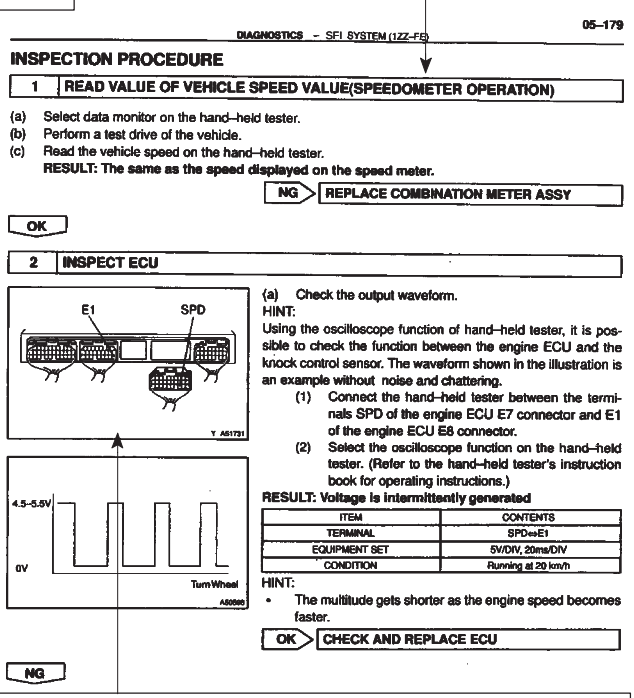

● Wiring Diagram
This shows a wiring diagram of the circuit.
Use this diagram together with ELECTRICAL WIRING DIAGRAM to thoroughly understand the circuit.
Wire colors are indicated by an alphabetical code.
B = Black, L = Blue, R = Red, BR = Brown,
LG = Light Green, V = Violet, G = Green,
O = Orange, W = White, GR = Gray, P = Pink,
Y = Yellow, SB = Sky Blue
The first letter indicates the basic wire color and the second letter indicates the color of the stripe.

● Indicates the condition of the connector of the ECU during the check.

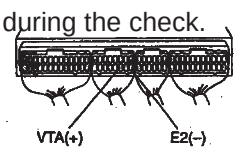

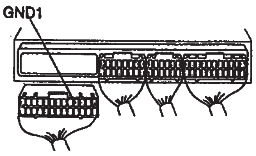

Connector being checked is connected.

Connections of tester are indicated by (+), (–) after terminals name.

Connector being checked is disconnected.

For inspection of connector with body ground, there is nothing about the body ground written down.

D25842

010B8–08

ELECTRONIC CIRCUIT INSPECTION PROCEDURE

1. BASIC INSPECTION

(a) RESISTANCE MEASURING CONDITION OF ELECTRONIC PARTS

(1) Unless stated, all resistance is measured at an ambient temperature of 20°C (68°F). As the resistance may be outside the specifications if measured at high temperatures immediately after the vehicle has been running, measurements should be made when the engine has cooled down.

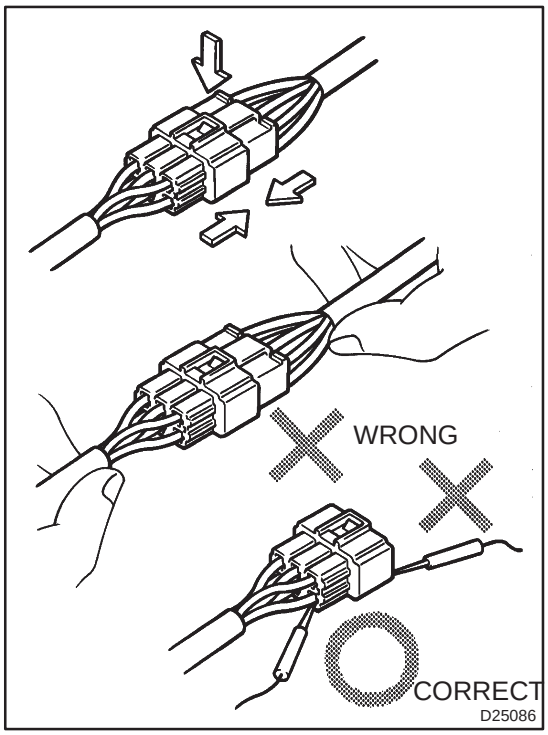

(b) HANDLING OF CONNECTOR

(1) When removing the connector with lock, press the connector in the direction of the engagement and remove the lock by lightly pressing the lock claw.

(2) When removing the connector, do not hold the harness, but hold the connector.

(3) Before connecting the connector, check that there is no deformation, damage or missing terminals.

(4) The connector with a lock should be securely connected until it makes a ”click” sound.

(5) When checking the connector with a Toyota electrical tester, check it from the backside (harness side) of the connector using a mini test lead.

NOTICE:

- **As a water proof connector cannot be checked from the backside, check by connecting the sub–harness.**
- **Do not damage the terminals by moving the inserted tester needle.**

(c) CONNECTOR CHECKING POINTS

(1) Checking when the connector is connected:
By holding the connector, check the inserted condition and locking efficiency (engaged condition).

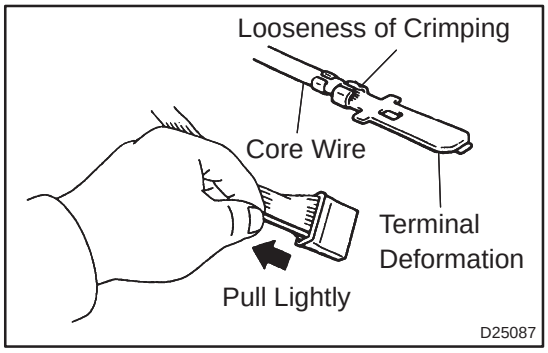

(2) Checking when the connector is removed:
Check by lightly pulling the wire harness (missing terminal, terminal crimping condition, core wire break).
Check visually for any rust, metal particles, water and bent terminals (rust, mixing of foreign object, terminal deformation).

NOTICE:

When testing a gold–plated female terminal, always use a gold–plated male terminal.

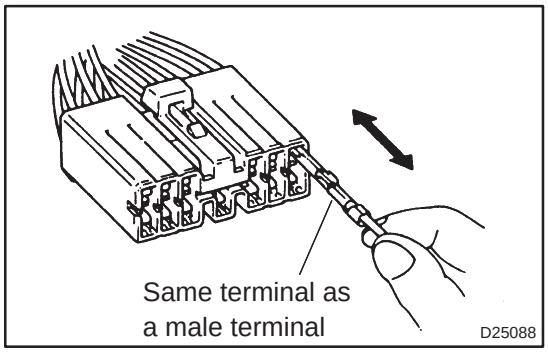

(3) Checking of the contact pressure of the terminal:
Prepare a spare male terminal.
Insert it into a female terminal, check the engaged condition and sliding resistance.

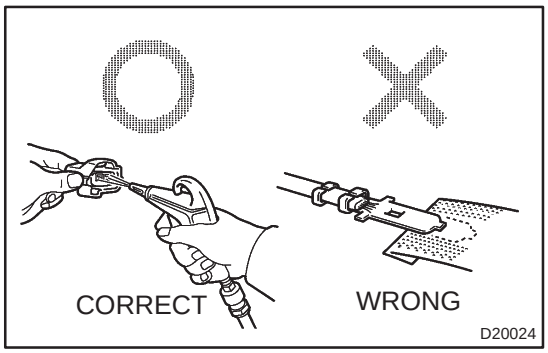

(d) REPAIR METHOD OF CONNECTOR TERMINAL

(1) If there is on the contact point, clean the contact point using an air gun or shop rag. However, never polish the contact point using sand paper as the platings may come off.

(2) In case of abnormal contact pressure, replace the female terminal. However, if a male terminal is gold–plated (gold color), use gold–plated female terminal and if it is silver–plated (silver color), use silver–plated female terminal.

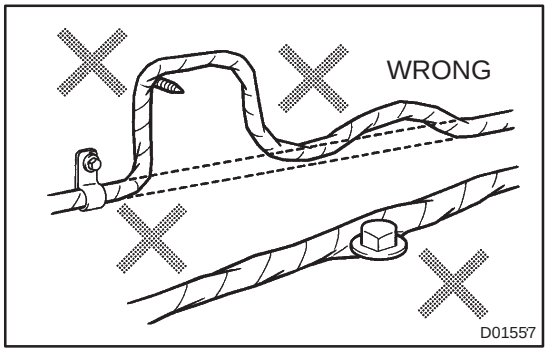

(e) HANDLING OF WIRE HARNESS

(1) When removing the wire harness, check the positioning of the wiring and clamping before starting work in order to be able to restore it correctly.

(2) Never twist, pull or loosen the wire harness more than necessary.

(3) Never allow the wire harness to come into contact with a high–temperature, rotating, moving, vibrating or sharp (edge of the panel, tip of the screw, etc.) part.

(4) When installing parts, never let the wire harness be interfered with.

(5) Never cut or break the cover of the wire harness. If one is cut or broken, replace it or securely repair it with electrical tape.

Fig. 1

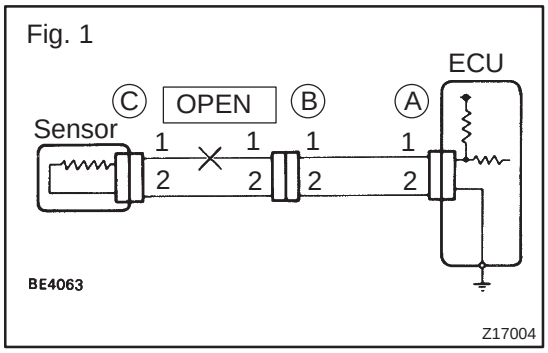

2. CHECK OPEN CIRCUIT

(a) For the open circuit in the wire harness in Fig. 1, perform a continuity check in step (b) or a voltage check in step (c) to locate the section.

Fig. 2

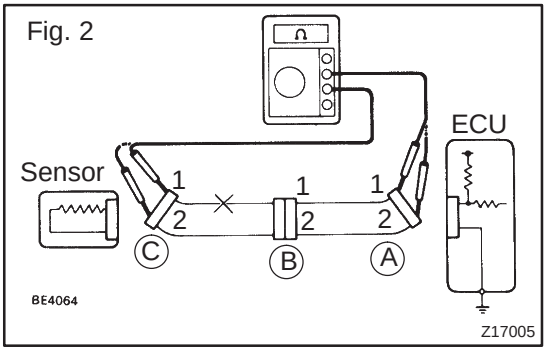

(b) Check the continuity.

(1) Disconnect connectors A and C and measure the resistance between them.

Resistance: 1 Ω or less

HINT:

Measure the resistance while lightly shaking the wire harness vertically and horizontally.

In the case of Fig. 2:

Between terminal 1 of connector A and terminal 1 of connector C → No continuity (open)

Between terminal 2 of connector A and terminal 2 of connector C → Continuity

Therefore, the cause is an open circuit between terminal 1 of connector A and terminal 1 of connector C.

Fig. 3

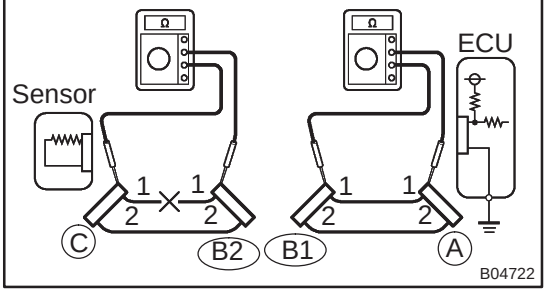

(2) Disconnect connector B and measure the resistance between the connectors.

In the case of Fig. 3:

Between terminal 1 of connector A and terminal 1 of connector B1 → Continuity

Between terminal 1 of connector B2 and terminal 1 of connector C → No continuity (open)

Therefore, the cause is an open circuit between terminal 1 of connector B2 and terminal 1 of connector C.

Fig. 4

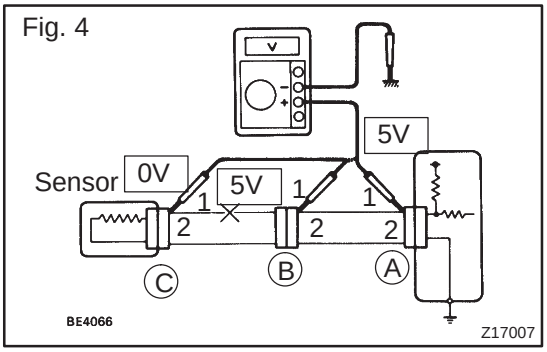

(c) Check the voltage.

(1) In a circuit in which voltage is applied (to the ECU connector terminal), an open circuit can be checked by conducting a voltage check.

As shown in Fig. 4, with each connector still connected, measure the voltage between the body ground and terminal 1 of connector A at the ECU 5 V output terminal, terminal 1 of connector B, and terminal 1 of connector C, in that order.

(2) If the results are:

5 V: Between terminal 1 of connector A and body ground

5 V: Between terminal 1 of connector B and body ground

0 V: Between terminal 1 of connector C and body ground

Therefore, the cause is an open circuit in the wire harness between terminal 1 of connector B and terminal 1 of connector C.

Fig. 5

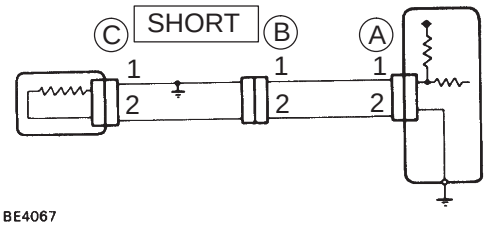

3. CHECK SHORT CIRCUIT

(a) If the wire harness is ground shorted as shown in Fig. 5, locate the section by conducting a continuity check with the body ground in step (b).

Fig. 6

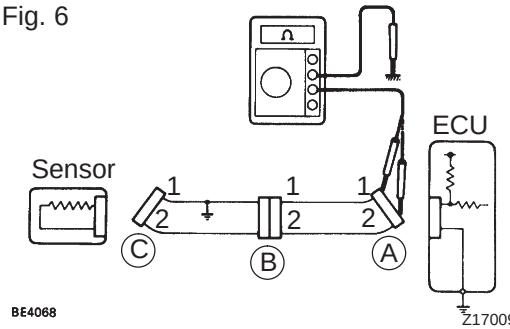

(b) Check the continuity with the body ground.

(1) Disconnect connectors A and C and measure the resistance between terminals 1 and 2 of connector A and the body ground.

Resistance: 10 kΩ or higher

HINT:

Measure the resistance while lightly shaking the wire harness vertically and horizontally.

In the case of Fig. 6:

Between terminal 1 of connector A and body ground → Continuity (short)

Between terminal 2 of connector A and body ground → No continuity

Therefore, the cause is a short circuit between terminal 1 of connector A and terminal 1 of connector C.

Fig. 7

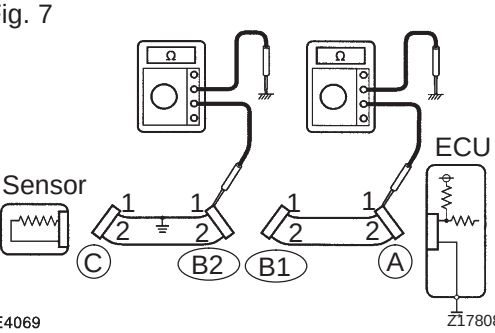

(2) Disconnect connector B and measure the resistance between terminal 1 of connector A and the body ground, and terminal 1 of connector B2 and the body ground.

In the case of Fig. 7:

Between terminal 1 of connector A and body ground → No continuity

Between terminal 1 of connector B2 and body ground → Continuity (short)

Therefore, the cause is a short circuit between terminal 1 of connector B2 and terminal 1 of connector C.

4. CHECK AND REPLACE ECU

NOTICE:

- **Start an inspection of the connector from the backside of the connector on the wire harness side with the connector connected to the ECU.**
- **When no measurement condition is specified, perform the inspection with the engine stopped and also the ignition switch ON.**

(a) First check the ECU ground circuit. If it is faulty, repair it. If it is normal, the ECU could be faulty. In this case, replace the ECU with one that functions normally and check if the symptoms appear.

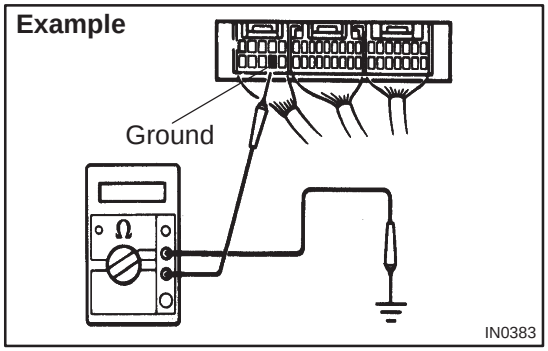

(1) Measure the resistance between the ECU ground terminal and body ground.

Resistance: 1 Ω or less

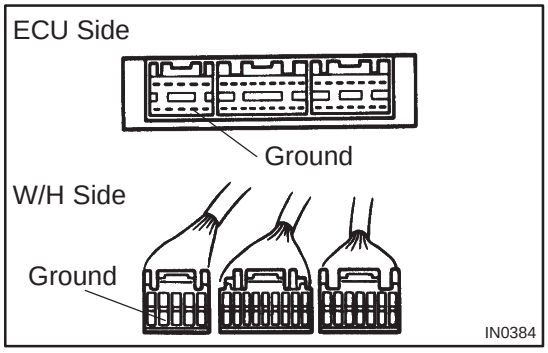

(2) Disconnect the ECU connector, check the ground terminals on the ECU side and wire harness side for bends and check the contact pressure.

TERMS

ABBREVIATIONS USED IN THIS MANUAL

010B9–11

Abbreviations	Meaning
ABS	Anti–Lock Brake System
A/C	Air Conditioner
AC	Alternating Current
ACC	Accessory
ACIS	Acoustic Control Induction System
ACSD	Automatic Cold Start Device
A.D.D.	Automatic Disconnecting Differential
A/F	Air–Fuel Ratio
AHC	Active Height Control Suspension
ALR	Automatic Locking Retractor
ALT	Alternator
AMP	Amplifier
ANT	Antenna
Approx.	Approximately
ASSY	Assembly
A/T, ATM	Automatic Transmission (Transaxle)
ATF	Automatic Transmission Fluid
AUTO	Automatic
AUX	Auxiliary
AVG	Average
AVS	Adaptive Variable Suspension
B+	Battery Voltage
BA	Brake Assist
BACS	Boost Altitude Compensation System
BAT	Battery
BDC	Bottom Dead Center
B/L	Bi–Level
B/S	Bore–Stroke Ratio
BTDC	Before Top Dead Center
BVSV	Bimetallic Vacuum Switching Valve
CAN	Controller Area Network
CB	Circuit Breaker
CCo	Catalytic Converter For Oxidation
CD	Compact Disc
CF	Cornering Force
CG	Center Of Gravity
CH	Channel
CKD	Complete Knock Down
COMB.	Combination
CPE	Coupe
CPS	Combustion Pressure Sensor
CPU	Central Processing Unit
CRS	Child Restraint System
CTR	Center
C/V	Check Valve
CV	Control Valve
CW	Curb Weight
DC	Direct Current

Abbreviations	Meaning
DEF	Defogger
DFL	Deflector
DIFF.	Differential
DIFF. LOCK	Differential Lock
D/INJ	Direct Injection
DLC	Data Link Connector
DLI	Distributorless Ignition
DOHC	Double Overhead Camshaft
DP	Dash Pot
DS	Dead Soak
DSP	Digital Signal Processor
DTC	Diagnostic Trouble Code
DVD	Digital Versatile Disc
EBD	Electric Brake Force Distribution
ECAM	Engine Control And Measurement System
ECD	Electronic Controlled Diesel
ECDY	Eddy Current Dynamometer
ECT	Electronic Control Transmission
ECU	Electronic Control Unit
ED	Electro–Deposited Coating
EDU	Electronic Driving Unit
EDIC	Electric Diesel Injection Control
EFI	Electronic Fuel Injection
E/G	Engine
EGR	Exhaust Gas Recirculation
EGR–VM	EGR–Vacuum Modulator
ELR	Emergency Locking Retractor
EMPS	Electric Motor Power Steering
ENG	Engine
ESA	Electronic Spark Advance
ETCS–i	Electronic Throttle Control System–intelligent
EVAP	Evaporative Emission Control
EVP	Evaporator
E–VRV	Electric Vacuum Regulating Valve
EX	Exhaust
FE	Fuel Economy
FF	Front–Engine Front–Wheel–Drive
F/G	Fuel Gauge
FIPG	Formed In Place Gasket
FL	Fusible Link
F/P	Fuel Pump
FPU	Fuel Pressure Up
Fr	Front
F/W	Flywheel
FW/D	Flywheel Damper
FWD	Front–Wheel–Drive
GAS	Gasoline
GND	Ground
GPS	Global Positioning System
HAC	High Altitude Compensator
H/B	Hatchback

Abbreviations	Meaning
H–FUSE	High Current Fuse
HI	High
HID	High Intensity Discharge (Head Lamp)
HSG	Housing
HT	Hard Top
HWS	Heated Windshield System
IC	Integrated Circuit
IDI	Indirect Diesel Injection
IFS	Independent Front Suspension
IG	Ignition
IIA	Integrated Ignition Assembly
IN	Intake (Manifold, Valve)
INT	Intermittent
I/P	Instrument Panel
IRS	Independent Rear Suspension
ISC	Idle Speed Control
J/B	Junction Block
J/C	Junction Connector
KD	Kick–Down
LAN	Local Area Network
LB	Liftback
LCD	Liquid Crystal Display
LED	Light Emitting Diode
LH	Left–Hand
LHD	Left–Hand Drive
L/H/W	Length, Height, Width
LLC	Long–Life Coolant
LNG	Liquified Natural Gas
LO	Low
LPG	Liquified Petroleum Gas
LSD	Limited Slip Differential
LSP & PV	Load Sensing Proportioning And Bypass Valve
LSPV	Load Sensing Proportioning Valve
MAP	Manifold Absolute Pressure
MAX.	Maximum
MIC	Microphone
MIL	Malfunction Indicator Lamp
MIN.	Minimum
MG1	Motor Generator No.1
MG2	Motor Generator No.2
MP	Multipurpose
MPI	Multipoint Electronic Injection
MPX	Multiplex Communication System
M/T, MTM	Manual Transmission (Transaxle)
MT	Mount
MTG	Mounting
N	Neutral
NA	Natural Aspiration
No.	Number
O2S	Oxygen Sensor
O/D	Overdrive

Abbreviations	Meaning
OEM	Original Equipment Manufacturing
OHC	Overhead Camshaft
OHV	Overhead Valve
OPT	Option
ORVR	On–board Refilling Vapor Recovery
O/S	Oversize
P & BV	Proportioning And Bypass Valve
PCS	Power Control System
PCV	Positive Crankcase Ventilation
PKB	Parking Brake
PPS	Progressive Power Steering
PTC	Positive Temperature Coefficient
PS	Power Steering
PTO	Power Take–Off
P/W	Power Window
R & P	Rack And Pinion
RAM	Random Access Memory
R/B	Relay Block
RBS	Recirculating Ball Type Steering
R/F	Reinforcement
RFS	Rigid Front Suspension
RH	Right–Hand
RHD	Right–Hand Drive
RLY	Relay
ROM	Read Only Memory
Rr	Rear
RRS	Rigid Rear Suspension
RWD	Rear–Wheel Drive
SDN	Sedan
SEN	Sensor
SICS	Starting Injection Control System
SOC	State Of Charge
SOHC	Single Overhead Camshaft
SPEC	Specification
SPI	Single Point Injection
SRS	Supplemental Restraint System
SSM	Special Service Materials
SST	Special Service Tools
STD	Standard
STJ	Cold–Start Fuel Injection
SW	Switch
SYS	System
T/A	Transaxle
TACH	Tachometer
TBI	Throttle Body Electronic Fuel Injection
TC	Turbocharger
TCCS	TOYOTA Computer–Controlled System
TCV	Timing Control Valve
TDC	Top Dead Center
TEMP.	Temperature
TEMS	TOYOTA Electronic Modulated Suspension

Abbreviations	Meaning
TFT	Toyota Free–Tronic
TIS	Total Information System For Vehicle Development
T/M	Transmission
TMC	TOYOTA Motor Corporation
TMMK	TOYOTA Motor Manufacturing Kentucky, Inc.
TRC	Traction Control System
TURBO	Turbocharge
TWC	Three–Way Catalyst
U/D	Underdrive
U/S	Undersize
VCV	Vacuum Control Valve
VENT	Ventilator
VIN	Vehicle Identification Number
VPS	Variable Power Steering
VSC	Vehicle Stability Control
VSV	Vacuum Switching Valve
VTV	Vacuum Transmitting Valve
VVT–i	Variable Valve Timing–intelligent
w/	With
WGN	Wagon
W/H	Wire Harness
w/o	Without
WU–TWC	Warm Up Three–way Catalytic Converter
WU–OC	Warm Up Oxidation Catalytic Converter
1st	First
2nd	Second
2WD	Two Wheel Drive Vehicle (4 x 2)
3rd	Third
4th	Fourth
4WD	Four Wheel Drive Vehicle (4 x 4)
4WS	Four Wheel Steering System
5th	Fifth

010BA–14

GLOSSARY OF SAE AND TOYOTA TERMS

This glossary lists all SAE–J1930 terms and abbreviations used in this manual in compliance with SAE recommendations, as well as their TOYOTA equivalents.

SAE ABBREVIATIONS	SAE TERMS	TOYOTA TERMS ( )—ABBREVIATIONS
A/C	Air Conditioning	Air Conditioner
ACL	Air Cleaner	Air Cleaner, A/CL
AIR	Secondary Air Injection	Air Injection (AI)
AP	Accelerator Pedal	–
B+	Battery Positive Voltage	+B, Battery Voltage
BARO	Barometric Pressure	HAC
CAC	Charge Air Cooler	Intercooler
CARB	Carburetor	Carburetor
CFI	Continuous Fuel Injection	–
CKP	Crankshaft Position	Crank Angle
CL	Closed Loop	Closed Loop
CMP	Camshaft Position	Cam Angle
CPP	Clutch Pedal Position	–
CTOX	Continuous Trap Oxidizer	–
CTP	Closed Throttle Position	LL ON, Idle ON
DFI	Direct Fuel Injection (Diesel)	Direct Injection (DI/INJ)
DI	Distributor Ignition	–
DLC1 DLC2 DLC3	Data Link Connector 1 Data Link Connector 2 Data Link Connector 3	1: Check Connector 2: Total Diagnosis Communication Link (TDCL) 3: OBD II Diagnostic Connector
DTC	Diagnostic Trouble Code	Diagnostic Trouble Code
DTM	Diagnostic Test Mode	–
ECL	Engine Control Level	–
ECM	Engine Control Module	Engine ECU (Electronic Control Unit)
ECT	Engine Coolant Temperature	Coolant Temperature, Water Temperature (THW)
EEPROM	Electrically Erasable Programmable Read Only Memory	Electrically Erasable Programmable Read Only Memory (EEPROM), Erasable Programmable Read Only Memory (EPROM)
EFE	Early Fuel Evaporation	Cold Mixture Heater (CMH), Heat Control Valve (HCV)
EGR	Exhaust Gas Recirculation	Exhaust Gas Recirculation (EGR)
EI	Electronic Ignition	Distributorless Ignition (DLI)
EM	Engine Modification	Engine Modification (EM)
EPROM	Erasable Programmable Read Only Memory	Programmable Read Only Memory (PROM)
EVAP	Evaporative Emission	Evaporative Emission Control (EVAP)
FC	Fan Control	–
FEEPROM	Flash Electrically Erasable Programmable Read Only Memory	–
FEPROM	Flash Erasable Programmable Read Only Memory	–
FF	Flexible Fuel	–
FP	Fuel Pump	Fuel Pump
GEN	Generator	Alternator
GND	Ground	Ground (GND)

HO2S	Heated Oxygen Sensor	Heated Oxygen Sensor (HO_2S)
IAC	Idle Air Control	Idle Speed Control (ISC)
IAT	Intake Air Temperature	Intake or Inlet Air Temperature
ICM	Ignition Control Module	–
IFI	Indirect Fuel Injection	Indirect Injection (IDL)
IFS	Inertia Fuel–Shutoff	–
ISC	Idle Speed Control	–
KS	Knock Sensor	Knock Sensor
MAF	Mass Air Flow	Air Flow Meter
MAP	Manifold Absolute Pressure	Manifold Pressure Intake Vacuum
MC	Mixture Control	Electric Bleed Air Control Valve (EBCV) Mixture Control Valve (MCV) Electric Air Control Valve (EACV)
MDP	Manifold Differential Pressure	–
MFI	Multiport Fuel Injection	Electronic Fuel Injection (EFI)
MIL	Malfunction Indicator Lamp	Check Engine Lamp
MST	Manifold Surface Temperature	–
MVZ	Manifold Vacuum Zone	–
NVRAM	Non–Volatile Random Access Memory	–
O2S	Oxygen Sensor	Oxygen Sensor, O_2 Sensor (O_2S)
OBD	On–Board Diagnostic	On–Board Diagnostic System (OBD)
OC	Oxidation Catalytic Converter	Oxidation Catalyst Convert (OC), CCo
OP	Open Loop	Open Loop
PAIR	Pulsed Secondary Air Injection	Air Suction (AS)
PCM	Powertrain Control Module	–
PNP	Park/Neutral Position	–
PROM	Programmable Read Only Memory	–
PSP	Power Steering Pressure	–
PTOX	Periodic Trap Oxidizer	Diesel Particulate Filter (DPF) Diesel Particulate Trap (DPT)
RAM	Random Access Memory	Random Access Memory (RAM)
RM	Relay Module	–
ROM	Read Only Memory	Read Only Memory (ROM)
RPM	Engine Speed	Engine Speed
SC	Supercharger	Supercharger
SCB	Supercharger Bypass	E–ABV
SFI	Sequential Multiport Fuel Injection	Electronic Fuel Injection (EFI), Sequential Injection
SPL	Smoke Puff Limiter	–
SRI	Service Reminder Indicator	–
SRT	System Readiness Test	–
ST	Scan Tool	–
TB	Throttle Body	Throttle Body
TBI	Throttle Body Fuel Injection	Single Point Injection Central Fuel Injection (Ci)
TC	Turbocharger	Turbocharger
TCC	Torque Converter Clutch	Torque Converter

TCM	Transmission Control Module	Transmission ECU, ECT ECU
TP	Throttle Position	Throttle Position
TR	Transmission Range	–
TVV	Thermal Vacuum Valve	Bimetallic Vacuum Switching Valve (BVSV) Thermostatic Vacuum Switching Valve (TVSV)
TWC	Three–Way Catalytic Converter	Three–Way Catalytic (TWC) Manifold Converter CC_{RO}
TWC+OC	Three–Way + Oxidation Catalytic Converter	CC_R + CCo
VAF	Volume Air Flow	Air Flow Meter
VR	Voltage Regulator	Voltage Regulator
VSS	Vehicle Speed Sensor	Vehicle Speed Sensor
WOT	Wide Open Throttle	Full Throttle
WU–OC	Warm Up Oxidation Catalytic Converter	–
WU–TWC	Warm Up Three–Way Catalytic Converter	–
3GR	Third Gear	–
4GR	Fourth Gear	–

DIAGNOSTICS

PREPARATION

022LX–01

SST

	09243–00020	Idle Adjusting Screw Wrench	SFI SYSTEM(1AZ–FE)
	09843–18040	Diagnosis Check Wire No.2	AIR CONDITIONING SYSTEM ELECTRONIC MOTOR POWER STEERING SYSTEM SUPPLEMENTAL RESTRAINT SYSTEM SFI SYSTEM(1AZ–FE) ECD SYSTEM(1CD–FTV) SFI SYSTEM(1ZZ–FE/3ZZ–FE)
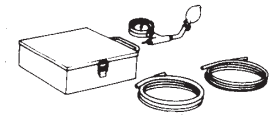	09992–00242	Turbocharger Pressure Gauge	ECD SYSTEM(1CD–FTV)

Recomended Tools

	09082–00040	TOYOTA Electrical Tester	COMBINATION METER SFI SYSTEM(1AZ–FE) SFI SYSTEM(1AZ–FSE) ECD SYSTEM(1CD–FTV) SFI SYSTEM(1ZZ–FE/3ZZ–FE) ELECTRONIC CONTROLLED AUTOMATIC TRANSAXLE [ECT](U241E(1AZ–FE)) ELECTRONIC CONTROLLED AUTOMATIC TRANSAXLE [ECT](U241E(1AZ–FSE)) ELECTRONIC CONTROLLED AUTOMATIC TRANSAXLE [ECT](U341E)

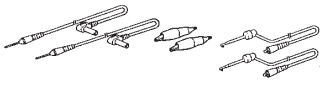	(09083–00150) Test Lead Set	AIR CONDITIONING SYSTEM ABS WITH EBD SYSTEM ELECTRONIC MOTOR POWER STEERING SYSTEM MULTIPLEX COMMUNICATION SYSTEM ENGINE IMMOBILISER SYSTEM ABS WITH EBD & BA & TRC & VSC SYSTEM WIRELESS DOOR LOCK CONTROL SYSTEM COMBINATION METER KEY REMINDER WARNING SYSTEM POWER DOOR LOCK CONTROL SYSTEM SFI SYSTEM(1AZ–FE) SFI SYSTEM(1AZ–FSE) ECD SYSTEM(1CD–FTV) SFI SYSTEM(1ZZ–FE/3ZZ–FE) ELECTRONIC CONTROLLED AUTOMATIC TRANSAXLE [ECT](U241E(1AZ–FE)) ELECTRONIC CONTROLLED AUTOMATIC TRANSAXLE [ECT](U241E(1AZ–FSE)) ELECTRONIC CONTROLLED AUTOMATIC TRANSAXLE [ECT](U341E)
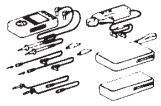	09082–00050 TOYOTA Electrical Tester Set	POWER DOOR LOCK CONTROL SYSTEM
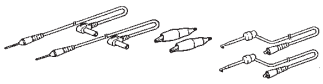	(09083–00150) Test Lead Set	AIR CONDITIONING SYSTEM ABS WITH EBD SYSTEM ELECTRONIC MOTOR POWER STEERING SYSTEM MULTIPLEX COMMUNICATION SYSTEM ENGINE IMMOBILISER SYSTEM ABS WITH EBD & BA & TRC & VSC SYSTEM WIRELESS DOOR LOCK CONTROL SYSTEM COMBINATION METER KEY REMINDER WARNING SYSTEM POWER DOOR LOCK CONTROL SYSTEM SFI SYSTEM(1AZ–FE) SFI SYSTEM(1AZ–FSE) ECD SYSTEM(1CD–FTV) SFI SYSTEM(1ZZ–FE/3ZZ–FE) ELECTRONIC CONTROLLED AUTOMATIC TRANSAXLE [ECT](U241E(1AZ–FE)) ELECTRONIC CONTROLLED AUTOMATIC TRANSAXLE [ECT](U241E(1AZ–FSE)) ELECTRONIC CONTROLLED AUTOMATIC TRANSAXLE [ECT](U341E)

ENGINE CONTROL SYSTEM

022J5–01

PREPARATION

SST

	09268–21010	Fuel Hose Puller	KNOCK SENSOR(1AZ–FE)

Recomended Tools

	09082–00040	TOYOTA Electrical Tester	SFI SYSTEM(1AZ–FE) SFI SYSTEM(1AZ–FSE) SFI SYSTEM(1ZZ–FE/3ZZ–FE)
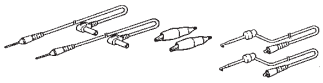	(09083–00150)	Test Lead Set	SFI SYSTEM(1AZ–FE) SFI SYSTEM(1AZ–FSE) SFI SYSTEM(1ZZ–FE/3ZZ–FE)

Equipment

Ohmmeter	
Radiator cap tester	
Service Wire Harness	
Torque wrench	
Vernier calipers	
Voltmeter	

FUEL

PREPARATION

022J6–01

SST

	09023–12700	Union Nut Wrench 17mm	INJECTOR ASSY(1CD–FTV) INJECTION OR SUPPLY PUMP ASSY(1CD–FTV) COMMON RAIL ASSY(1CD–FTV)
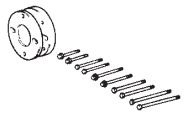	09213–54015	Crankshaft Pulley Holding Tool	INJECTION OR SUPPLY PUMP ASSY(1CD–FTV)
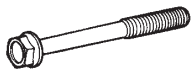	(90105–08076)	Bolt	INJECTION OR SUPPLY PUMP ASSY(1CD–FTV)
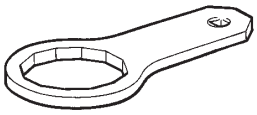	09228–64030	Fuel Filter Wrench	FUEL FILTER ASSY(1CD–FTV)
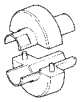	09268–21010	Fuel Hose Puller	FUEL INJECTOR ASSY(1AZ–FE) FUEL PRESSURE PULSATION DAMPER ASSY(1AZ–FE) FUEL INJECTOR ASSY (1ZZ–FE/3ZZ–FE)
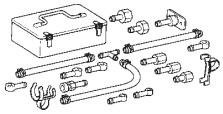	09268–41047	Injection Measuring Tool Set	FUEL SYSTEM(1AZ–FE) FUEL SYSTEM(1ZZ–FE/3ZZ–FE)
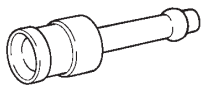	(09268–41110)	Adaptor	FUEL SYSTEM(1AZ–FE) FUEL SYSTEM(1ZZ–FE/3ZZ–FE)
	(09268–41300)	Clamp	FUEL SYSTEM(1AZ–FE) FUEL SYSTEM(1ZZ–FE/3ZZ–FE)
	(95336–08070)	Hose	FUEL SYSTEM(1AZ–FE) FUEL SYSTEM(1ZZ–FE/3ZZ–FE)
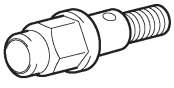	09280–00010	Union Bolt,inspection	INJECTOR ASSY(1CD–FTV)
	09330–00021	Companion Flange Holding Tool	INJECTION OR SUPPLY PUMP ASSY(1CD–FTV)
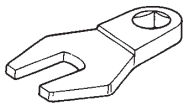	(09617–24011)	Steering Rack Wrench	FUEL PUMP ASSY(1AZ–FSE)

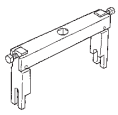	09808–14010	Fuel Sender Gauge Tool Assy	FUEL TANK ASSY(DIESEL) FUEL PUMP ASSY(GASOLINE) FUEL TANK ASSY(GASOLINE)
	09842–30080	Wire ”H” EFI Inspection	FUEL SYSTEM(1AZ–FE) FUEL SYSTEM(1ZZ–FE/3ZZ–FE)
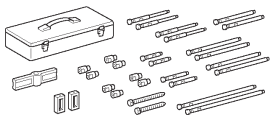	09950–50013	Puller C Set	INJECTION OR SUPPLY PUMP ASSY(1CD–FTV)
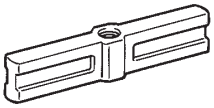	(09951–05010)	Hanger 150	INJECTION OR SUPPLY PUMP ASSY(1CD–FTV)
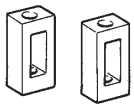	(09952–05010)	Slide Arm	INJECTION OR SUPPLY PUMP ASSY(1CD–FTV)
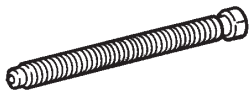	(09953–05020)	Center Bolt 150	INJECTION OR SUPPLY PUMP ASSY(1CD–FTV)
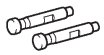	(09954–05021)	Claw No.2	INJECTION OR SUPPLY PUMP ASSY(1CD–FTV)
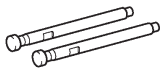	(09954–05031)	Claw No.3	INJECTION OR SUPPLY PUMP ASSY(1CD–FTV)
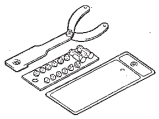	09960–10010	Variable Pin Wrench Set	INJECTION OR SUPPLY PUMP ASSY(1CD–FTV)
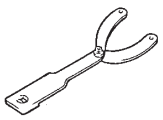	(09962–01000)	Variable Pin Wrench Arm Assy	INJECTION OR SUPPLY PUMP ASSY(1CD–FTV)
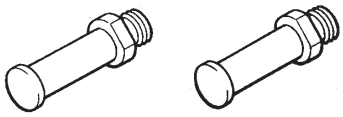	(09963–01000)	Pin 10	INJECTION OR SUPPLY PUMP ASSY(1CD–FTV)
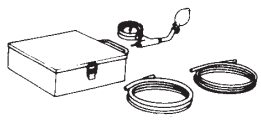	09992–00242	Turbocharger Pressure Gauge	INJECTOR ASSY(1CD–FTV)

Recomended Tools

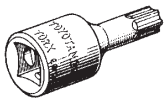	09042–00020	Torx Socket T40	FUEL INJECTOR ASSY(1AZ–FSE)

	09082–00040	TOYOTA Electrical Tester	FUEL SYSTEM(1CD–FTV) FUEL SYSTEM(1ZZ–FE/3ZZ–FE)
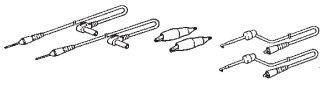	(09083–00150)	Test Lead Set	FUEL SYSTEM(1AZ–FE) FUEL SYSTEM(1AZ–FSE) FUEL SYSTEM(1ZZ–FE/3ZZ–FE)
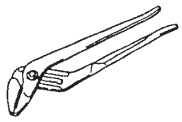	09130–00150	Water Pump Pliers	FUEL FILTER ASSY(1CD–FTV)
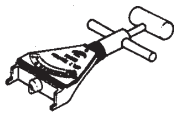	09216–00021	Belt Tension Gauge	INJECTION OR SUPPLY PUMP ASSY(1CD–FTV)

Equipment

Clip	
Hexagon wrench (6 mm)	
Measuring Flask	
Ohmmeter	
Radiator cap tester	
Service Wire Harness	
Stopwatch	
Torque wrench	
Vernier calipers	
Wooden block	

SSM

	08826–00080	Seal Packing Black or equivalent (FIPG)	INJECTOR ASSY(1CD–FTV)
	08850–00065	Butyl Tape Set	FUEL TANK ASSY(DIESEL)

INTAKE

PREPARATION

022KR–01

SST

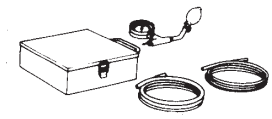	09992–00242	Turbocharger Pressure Gauge	TURBO CHARGER SYSTEM (1CD–FTV)

Recomended Tools

	09082–00040	TOYOTA Electrical Tester	TURBO CHARGER SYSTEM (1CD–FTV)
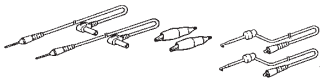	(09083–00150)	Test Lead Set	TURBO CHARGER SYSTEM (1CD–FTV)

Equipment

Vacuum gauge	
Voltmeter	
Ohmmeter	
Service wire harness	
Torque wrench	
Slide calipers	
Radiator cap testor	
Vernier calipers	
Hand–held vacuum pump	
Wooden block	

ENGINE MECHANICAL

PREPARATION

022KB–01

SST

	09023–00100	Union Nut Wrench 10 mm	PARTIAL ENGINE ASSY(1CD–FTV)
	09023–12700	Union Nut Wrench 17mm	VALVE CLEARANCE(1CD–FTV) CAMSHAFT(1CD–FTV) CYLINDER HEAD GASKET(1CD–FTV) PARTIAL ENGINE ASSY(1CD–FTV)
	09023–12900	Union Nut Wrench 19mm	VALVE CLEARANCE(1AZ–FSE) PARTIAL ENGINE ASSY(1AZ–FSE) CHAIN SUB–ASSY(1AZ–FSE) CAMSHAFT(1AZ–FSE) CYLINDER HEAD GASKET(1AZ–FSE)
	09032–00100	Oil Pan Seal Cutter	CHAIN SUB–ASSY(1AZ–FE) CYLINDER HEAD GASKET(1AZ–FE) CHAIN SUB–ASSY(1AZ–FSE) CYLINDER HEAD GASKET(1AZ–FSE)
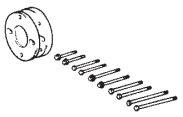	09213–54015	Crankshaft Pulley Holding Tool	PARTIAL ENGINE ASSY(1AZ–FE) CHAIN SUB–ASSY(1AZ–FE) CYLINDER HEAD GASKET(1AZ–FE) ENGINE REAR OIL SEAL(1AZ–FE) TIMING GEAR CASE OR TIMING CHAIN CASE OIL SEAL(1AZ–FE) PARTIAL ENGINE ASSY(1AZ–FSE) CHAIN SUB–ASSY(1AZ–FSE) CYLINDER HEAD GASKET(1AZ–FSE) ENGINE REAR OIL SEAL(1AZ–FSE) TIMING GEAR CASE OR TIMING CHAIN CASE OIL SEAL(1AZ–FSE) TIMING BELT(1CD–FTV) CAMSHAFT(1CD–FTV) CYLINDER HEAD GASKET(1CD–FTV) CRANKSHAFT SEAL(1CD–FTV) ENGINE REAR OIL SEAL(1CD–FTV) PARTIAL ENGINE ASSY(1CD–FTV)
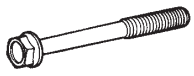	(90105–08076)	Bolt	TIMING BELT(1CD–FTV) CAMSHAFT(1CD–FTV) CYLINDER HEAD GASKET(1CD–FTV) CRANKSHAFT SEAL(1CD–FTV) ENGINE REAR OIL SEAL(1CD–FTV) PARTIAL ENGINE ASSY(1CD–FTV)

	(91651–60855)	Bolt	PARTIAL ENGINE ASSY(1AZ–FE) CHAIN SUB–ASSY(1AZ–FE) CYLINDER HEAD GASKET(1AZ–FE) ENGINE REAR OIL SEAL(1AZ–FE) TIMING GEAR CASE OR TIMING CHAIN CASE OIL SEAL(1AZ–FE) PARTIAL ENGINE ASSY(1AZ–FSE) CHAIN SUB–ASSY(1AZ–FSE) CYLINDER HEAD GASKET(1AZ–FSE) ENGINE REAR OIL SEAL(1AZ–FSE) TIMING GEAR CASE OR TIMING CHAIN CASE OIL SEAL(1AZ–FSE)
	09223–15020	Oil Seal & Bearing Replacer	ENGINE REAR OIL SEAL(1ZZ–FE/3ZZ–FE)
	09223–15030	Oil Seal & Bearing Replacer	ENGINE REAR OIL SEAL(1AZ–FE) ENGINE REAR OIL SEAL(1AZ–FSE) ENGINE REAR OIL SEAL(1CD–FTV)
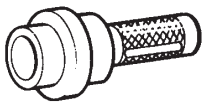	09223–22010	Crankshaft Front Oil Seal Replacer	TIMING GEAR CASE OR TIMING CHAIN CASE OIL SEAL(1AZ–FE) TIMING GEAR CASE OR TIMING CHAIN CASE OIL SEAL(1AZ–FSE) CHAIN SUB–ASSY(1ZZ–FE/3ZZ–FE) CYLINDER HEAD GASKET(1ZZ–FE/3ZZ–FE) TIMING CHAIN OR BELT COVER OIL SEAL(1ZZ–FE/3ZZ–FE)
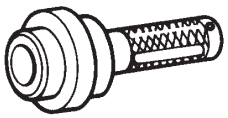	09223–46011	Crankshaft Front Oil Seal Replacer	CAMSHAFT(1CD–FTV) CYLINDER HEAD GASKET(1CD–FTV) CRANKSHAFT SEAL(1CD–FTV)
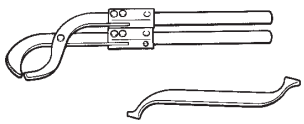	09248–55050	Valve Clearance Adjust Tool Set	VALVE CLEARANCE(1CD–FTV)
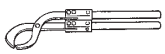	(09248–05510)	Valve Lifter Press	VALVE CLEARANCE(1CD–FTV)
	(09248–05520)	Valve Lifter Stopper	VALVE CLEARANCE(1CD–FTV)

	09249–63010	Torque Wrench Adaptor	FAN AND GENERATOR V BELT(1AZ–FE) CHAIN SUB–ASSY(1AZ–FE) CYLINDER HEAD GASKET(1AZ–FE) TIMING GEAR CASE OR TIMING CHAIN CASE OIL SEAL(1AZ–FE) FAN AND GENERATOR V BELT(1AZ–FSE) CHAIN SUB–ASSY(1AZ–FSE) CYLINDER HEAD GASKET(1AZ–FSE) TIMING GEAR CASE OR TIMING CHAIN CASE OIL SEAL(1AZ–FSE)
	09268–21010	Fuel Hose Puller	CYLINDER HEAD GASKET(1ZZ–FE/3ZZ–FE)
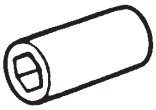	09268–46021	Nozzle Holder Retaining Nut Wrench	PARTIAL ENGINE ASSY(1AZ–FE) PARTIAL ENGINE ASSY(1AZ–FSE)
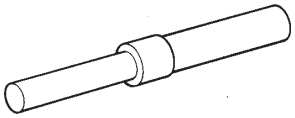	09301–00210	Clutch Guide Tool	PARTIAL ENGINE ASSY(1CD–FTV) PARTIAL ENGINE ASSY(1ZZ–FE/3ZZ–FE)
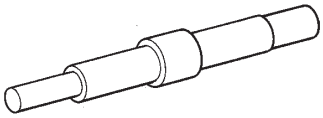	09301–00220	Clutch Guide Tool	ENGINE REAR OIL SEAL(1CD–FTV)
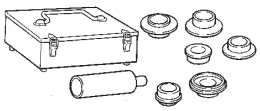	09316–60011	Transmission & Transfer Bearing Replacer	CRANKSHAFT SEAL(1CD–FTV)
	(09316–00011)	Replacer Pipe	CRANKSHAFT SEAL(1CD–FTV)
	09330–00021	Companion Flange Holding Tool	PARTIAL ENGINE ASSY(1AZ–FE) CHAIN SUB–ASSY(1AZ–FE) CYLINDER HEAD GASKET(1AZ–FE) ENGINE REAR OIL SEAL(1AZ–FE) TIMING GEAR CASE OR TIMING CHAIN CASE OIL SEAL(1AZ–FE) PARTIAL ENGINE ASSY(1AZ–FSE) CHAIN SUB–ASSY(1AZ–FSE) CYLINDER HEAD GASKET(1AZ–FSE) ENGINE REAR OIL SEAL(1AZ–FSE) TIMING GEAR CASE OR TIMING CHAIN CASE OIL SEAL(1AZ–FSE) TIMING BELT(1CD–FTV) CAMSHAFT(1CD–FTV) CYLINDER HEAD GASKET(1CD–FTV) CRANKSHAFT SEAL(1CD–FTV) ENGINE REAR OIL SEAL(1CD–FTV) PARTIAL ENGINE ASSY(1CD–FTV)

	(09330–00030)	Pin	PARTIAL ENGINE ASSY(1AZ–FE) PARTIAL ENGINE ASSY(1AZ–FSE)
	09520–01010	Drive Shaft Remover Attachment	ENGINE REAR OIL SEAL(1CD–FTV)
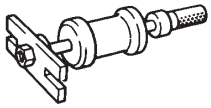	09520–24010	Differential Side Gear Shaft Puller	ENGINE REAR OIL SEAL(1CD–FTV)
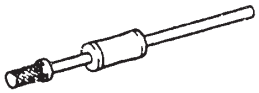	(09520–32040)	Shocker Set	ENGINE REAR OIL SEAL(1CD–FTV)
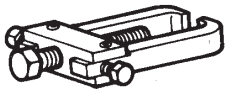	09628–62011	Boll Joint Puller	ENGINE REAR OIL SEAL(1CD–FTV) PARTIAL ENGINE ASSY(1CD–FTV) PARTIAL ENGINE ASSY(1ZZ–FE/3ZZ–FE)
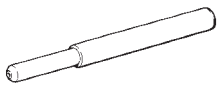	09670–00010	Front Crossmember Guide Tool	ENGINE REAR OIL SEAL(1CD–FTV) PARTIAL ENGINE ASSY(1ZZ–FE/3ZZ–FE)
	09817–33190	Sensor Socket Wrench	PARTIAL ENGINE ASSY(1AZ–FE) PARTIAL ENGINE ASSY(1AZ–FSE) PARTIAL ENGINE ASSY(1ZZ–FE/3ZZ–FE)
	09843–18020	Diagnosis Check Wire	ENGINE(1AZ–FSE) ENGINE(1ZZ–FE/3ZZ–FE)
	09843–18040	Diagnosis Check Wire No.2	ENGINE(1AZ–FE) ENGINE(1AZ–FSE) ENGINE(1CD–FTV) ENGINE(1ZZ–FE/3ZZ–FE) PARTIAL ENGINE ASSY(1ZZ–FE/3ZZ–FE) CYLINDER HEAD GASKET(1ZZ–FE/3ZZ–FE)
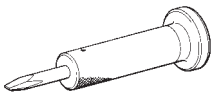	09930–00010	Drive Shaft Nut Chisel	ENGINE REAR OIL SEAL(1CD–FTV) PARTIAL ENGINE ASSY(1CD–FTV) PARTIAL ENGINE ASSY(1ZZ–FE/3ZZ–FE)

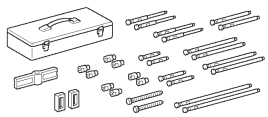	09950–50013 Puller C Set	CHAIN SUB–ASSY(1AZ–FE) CYLINDER HEAD GASKET(1AZ–FE) TIMING GEAR CASE OR TIMING CHAIN CASE OIL SEAL(1AZ–FE) CHAIN SUB–ASSY(1AZ–FSE) CYLINDER HEAD GASKET(1AZ–FSE) TIMING GEAR CASE OR TIMING CHAIN CASE OIL SEAL(1AZ–FSE) TIMING BELT(1CD–FTV) CAMSHAFT(1CD–FTV) CYLINDER HEAD GASKET(1CD–FTV) CRANKSHAFT SEAL(1CD–FTV) PARTIAL ENGINE ASSY(1CD–FTV)
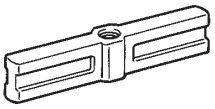	(09951–05010) Hanger 150	CHAIN SUB–ASSY(1AZ–FE) CYLINDER HEAD GASKET(1AZ–FE) TIMING GEAR CASE OR TIMING CHAIN CASE OIL SEAL(1AZ–FE) CHAIN SUB–ASSY(1AZ–FSE) CYLINDER HEAD GASKET(1AZ–FSE) TIMING GEAR CASE OR TIMING CHAIN CASE OIL SEAL(1AZ–FSE) TIMING BELT(1CD–FTV) CAMSHAFT(1CD–FTV) CYLINDER HEAD GASKET(1CD–FTV) CRANKSHAFT SEAL(1CD–FTV) PARTIAL ENGINE ASSY(1CD–FTV)
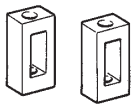	(09952–05010) Slide Arm	CHAIN SUB–ASSY(1AZ–FE) CYLINDER HEAD GASKET(1AZ–FE) TIMING GEAR CASE OR TIMING CHAIN CASE OIL SEAL(1AZ–FE) CHAIN SUB–ASSY(1AZ–FSE) CYLINDER HEAD GASKET(1AZ–FSE) TIMING GEAR CASE OR TIMING CHAIN CASE OIL SEAL(1AZ–FSE) TIMING BELT(1CD–FTV) CAMSHAFT(1CD–FTV) CYLINDER HEAD GASKET(1CD–FTV) CRANKSHAFT SEAL(1CD–FTV) PARTIAL ENGINE ASSY(1CD–FTV)
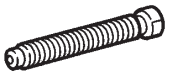	(09953–05010) Center Bolt 100	CRANKSHAFT SEAL(1CD–FTV)

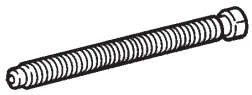	(09953–05020) Center Bolt 150	CHAIN SUB–ASSY(1AZ–FE) CYLINDER HEAD GASKET(1AZ–FE) TIMING GEAR CASE OR TIMING CHAIN CASE OIL SEAL(1AZ–FE) CHAIN SUB–ASSY(1AZ–FSE) CYLINDER HEAD GASKET(1AZ–FSE) TIMING GEAR CASE OR TIMING CHAIN CASE OIL SEAL(1AZ–FSE) TIMING BELT(1CD–FTV) CAMSHAFT(1CD–FTV) CYLINDER HEAD GASKET(1CD–FTV) CRANKSHAFT SEAL(1CD–FTV) PARTIAL ENGINE ASSY(1CD–FTV)
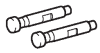	(09954–05021) Claw No.2	CHAIN SUB–ASSY(1AZ–FE) CYLINDER HEAD GASKET(1AZ–FE) TIMING GEAR CASE OR TIMING CHAIN CASE OIL SEAL(1AZ–FE) CHAIN SUB–ASSY(1AZ–FSE) CYLINDER HEAD GASKET(1AZ–FSE) TIMING GEAR CASE OR TIMING CHAIN CASE OIL SEAL(1AZ–FSE) CRANKSHAFT SEAL(1CD–FTV)
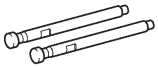	(09954–05031) Claw No.3	TIMING BELT(1CD–FTV) CAMSHAFT(1CD–FTV) CYLINDER HEAD GASKET(1CD–FTV) CRANKSHAFT SEAL(1CD–FTV) PARTIAL ENGINE ASSY(1CD–FTV)
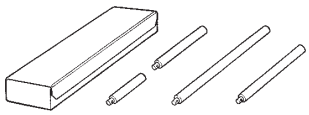	09950–70010 Handle Set	ENGINE REAR OIL SEAL(1AZ–FE) ENGINE REAR OIL SEAL(1AZ–FSE) ENGINE REAR OIL SEAL(1CD–FTV) ENGINE REAR OIL SEAL(1ZZ–FE/3ZZ–FE)
	(09951–07100) Handle 100	ENGINE REAR OIL SEAL(1AZ–FE) ENGINE REAR OIL SEAL(1AZ–FSE) ENGINE REAR OIL SEAL(1CD–FTV) ENGINE REAR OIL SEAL(1ZZ–FE/3ZZ–FE)
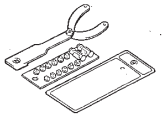	09960–10010 Variable Pin Wrench Set	TIMING BELT(1CD–FTV) CAMSHAFT(1CD–FTV) CYLINDER HEAD GASKET(1CD–FTV) CRANKSHAFT SEAL(1CD–FTV) PARTIAL ENGINE ASSY(1CD–FTV) PARTIAL ENGINE ASSY(1ZZ–FE/3ZZ–FE) CHAIN SUB–ASSY(1ZZ–FE/3ZZ–FE) CYLINDER HEAD GASKET(1ZZ–FE/3ZZ–FE) TIMING CHAIN OR BELT COVER OIL SEAL(1ZZ–FE/3ZZ–FE) ENGINE REAR OIL SEAL(1ZZ–FE/3ZZ–FE)

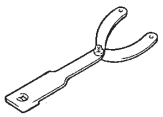	(09962–01000)	Variable Pin Wrench Arm Assy	TIMING BELT(1CD–FTV) CAMSHAFT(1CD–FTV) CYLINDER HEAD GASKET(1CD–FTV) CRANKSHAFT SEAL(1CD–FTV) PARTIAL ENGINE ASSY(1CD–FTV) PARTIAL ENGINE ASSY(1ZZ–FE/3ZZ–FE) CHAIN SUB–ASSY(1ZZ–FE/3ZZ–FE) CYLINDER HEAD GASKET(1ZZ–FE/3ZZ–FE) TIMING CHAIN OR BELT COVER OIL SEAL(1ZZ–FE/3ZZ–FE) ENGINE REAR OIL SEAL(1ZZ–FE/3ZZ–FE)
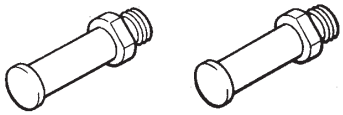	(09963–01000)	Pin 10	TIMING BELT(1CD–FTV) CAMSHAFT(1CD–FTV) CYLINDER HEAD GASKET(1CD–FTV) CRANKSHAFT SEAL(1CD–FTV) PARTIAL ENGINE ASSY(1CD–FTV) PARTIAL ENGINE ASSY(1ZZ–FE/3ZZ–FE) CHAIN SUB–ASSY(1ZZ–FE/3ZZ–FE) CYLINDER HEAD GASKET(1ZZ–FE/3ZZ–FE) TIMING CHAIN OR BELT COVER OIL SEAL(1ZZ–FE/3ZZ–FE) ENGINE REAR OIL SEAL(1ZZ–FE/3ZZ–FE)
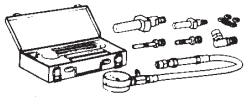	09992–00025	Cylinder Compression Check Gauge Set	ENGINE(1CD–FTV)
	(09992–00121)	No. 4 Attachment	ENGINE(1CD–FTV)
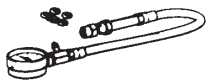	(09992–00211)	Gauge Assy	ENGINE(1CD–FTV)
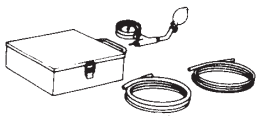	09992–00242	Turbocharger Pressure Gauge	VALVE CLEARANCE(1CD–FTV) CAMSHAFT(1CD–FTV) CYLINDER HEAD GASKET(1CD–FTV)
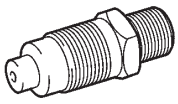	09992–00500	Compression Gauge Attachment	ENGINE(1AZ–FE) ENGINE(1AZ–FSE) ENGINE(1ZZ–FE/3ZZ–FE) CYLINDER HEAD GASKET(1ZZ–FE/3ZZ–FE)

Recomended Tools

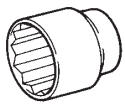	09011–12301	Socket Wrench 30 mm	ENGINE REAR OIL SEAL(1CD–FTV) PARTIAL ENGINE ASSY(1CD–FTV) PARTIAL ENGINE ASSY(1ZZ–FE/3ZZ–FE) ENGINE REAR OIL SEAL(1ZZ–FE/3ZZ–FE)
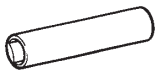	09017–38120	Deep Socket Wrench 12 mm	PARTIAL ENGINE ASSY(1CD–FTV)
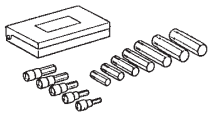	09040–00011	Hexagon Wrench Set	PARTIAL ENGINE ASSY(1ZZ–FE/3ZZ–FE)
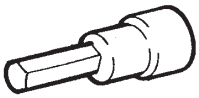	(09043–20050)	Socket Hexagon Wrench 5	PARTIAL ENGINE ASSY(1ZZ–FE/3ZZ–FE)
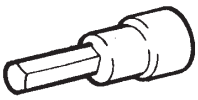	(09043–20100)	Socket Hexagon Wrench 10	PARTIAL ENGINE ASSY(1ZZ–FE/3ZZ–FE)
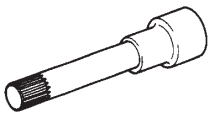	09043–50100	Bi–hexagon Wrench 10 mm	CYLINDER HEAD GASKET(1AZ–FE) CYLINDER HEAD GASKET(1AZ–FSE)
	09090–04020	Engine Sling Device	PARTIAL ENGINE ASSY(1CD–FTV) PARTIAL ENGINE ASSY(1ZZ–FE/3ZZ–FE)
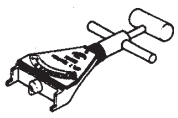	09216–00021	Belt Tension Gauge	ENGINE(1CD–FTV) DRIVE BELT(1CD–FTV) TIMING BELT(1CD–FTV) CAMSHAFT(1CD–FTV) CYLINDER HEAD GASKET(1CD–FTV) CRANKSHAFT SEAL(1CD–FTV)
	(09857–00031)	Spark Plug Gap Gauge	ENGINE(1AZ–FE) ENGINE(1AZ–FSE) ENGINE(1ZZ–FE/3ZZ–FE)

Equipment

Hexagon wrench (6mm)	
Feeler gauge	
CO/HC meter	
Compression gauge	
Dial indicator	
Dial indicator or dial indicator with magnetic base	
Micro meter	
Radiator cap tester	
Straight edge	
Tachometer	
Torque wrench	

Vernier calipers	
Tire pressure gauge	
Alignment tester	
Toe–in gauge	
OBD II scan tool	
Deep socket wrench 24 mm	
Slide calipers	
Sand paper (#400)	
Wooden block	
Chain block	
Spark plug cleaner	
Angle gauge	
Universal engine lifter	

SSM

08826–00080	Seal Packing Black or equivalent (FIPG)	VALVE CLEARANCE(1AZ–FE) CYLINDER HEAD GASKET(1AZ–FE) VALVE CLEARANCE(1AZ–FSE) CYLINDER HEAD GASKET(1AZ–FSE) VALVE CLEARANCE(1CD–FTV) TIMING BELT(1CD–FTV) CAMSHAFT(1CD–FTV) CYLINDER HEAD GASKET(1CD–FTV) CRANKSHAFT SEAL(1CD–FTV) PARTIAL ENGINE ASSY(1CD–FTV) VALVE CLEARANCE(1ZZ–FE/3ZZ–FE) CHAIN SUB–ASSY(1ZZ–FE/3ZZ–FE) CAMSHAFT(1ZZ–FE/3ZZ–FE) CYLINDER HEAD GASKET(1ZZ–FE/3ZZ–FE)
08833–00070	”Adhesive 1324,” THREE BOND 1324 or equivalent	PARTIAL ENGINE ASSY(1AZ–FE) ENGINE REAR OIL SEAL(1AZ–FE) PARTIAL ENGINE ASSY(1AZ–FSE) ENGINE REAR OIL SEAL(1AZ–FSE) ENGINE REAR OIL SEAL(1CD–FTV) PARTIAL ENGINE ASSY(1CD–FTV) PARTIAL ENGINE ASSY(1ZZ–FE/3ZZ–FE) ENGINE REAR OIL SEAL(1ZZ–FE/3ZZ–FE)

EXHAUST

022J7–01

PREPARATION

Equipment

Torque wrench	
Vernier calipers	
Wooden block	

COOLING

PREPARATION

022KA–01

SST

	09023–12700	Union Nut Wrench 17mm	WATER PUMP ASSY(1CD–FTV)
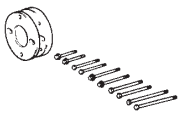	09213–54015	Crankshaft Pulley Holding Tool	WATER PUMP ASSY(1CD–FTV)
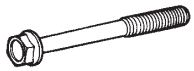	(90105–08076)	Bolt	WATER PUMP ASSY(1CD–FTV)
	09249–63010	Torque Wrench Adaptor	WATER PUMP ASSY(1AZ–FE) THERMOSTAT(1AZ–FE) WATER PUMP ASSY(1AZ–FSE) THERMOSTAT(1AZ–FSE)
	09330–00021	Companion Flange Holding Tool	WATER PUMP ASSY(1CD–FTV)
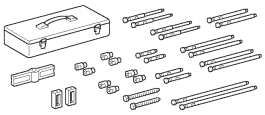	09950–50013	Puller C Set	WATER PUMP ASSY(1CD–FTV)
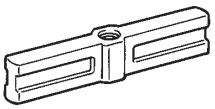	(09951–05010)	Hanger 150	WATER PUMP ASSY(1CD–FTV)
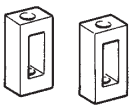	(09952–05010)	Slide Arm	WATER PUMP ASSY(1CD–FTV)
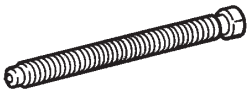	(09953–05020)	Center Bolt 150	WATER PUMP ASSY(1CD–FTV)
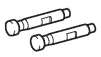	(09954–05021)	Claw No.2	WATER PUMP ASSY(1CD–FTV)
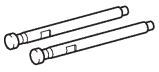	(09954–05031)	Claw No.3	WATER PUMP ASSY(1CD–FTV)
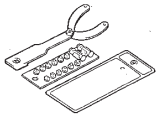	09960–10010	Variable Pin Wrench Set	WATER PUMP ASSY(1AZ–FE) WATER PUMP ASSY(1AZ–FSE) WATER PUMP ASSY(1CD–FTV)

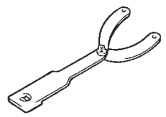	(09962–01000)	Variable Pin Wrench Arm Assy	WATER PUMP ASSY(1AZ–FE) WATER PUMP ASSY(1AZ–FSE) WATER PUMP ASSY(1CD–FTV)
	(09963–00700)	Pin 7	WATER PUMP ASSY(1AZ–FE) WATER PUMP ASSY(1AZ–FSE)
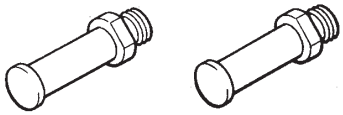	(09963–01000)	Pin 10	WATER PUMP ASSY(1CD–FTV)

Recomended Tools

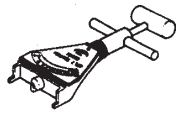	09216–00021	Belt Tension Gauge	WATER PUMP ASSY(1CD–FTV)

Equipment

Hexagon wrench (8mm)	
Ohmmeter	
Radiator cap tester	
Thermometer	
Torque wrench	
Slide calipers	
Wooden block	
Heater	

SSM

	08826–00080	Seal Packing Black or equivalent (FIPG)	WATER PUMP ASSY(1AZ–FE) WATER PUMP ASSY(1AZ–FSE) WATER PUMP ASSY(1CD–FTV)

Coolant

Item		Capacity	Classification
Engine coolant (3ZZ–FE)			TOYOTA long life coolant
Left–hand drive vehicles		5.8 liters (6.1 US qts, 5.1 Imp. qts)	
Right–hand drive vehicles		5.9 liters (6.2 US qts, 5.2 Imp. qts)	
Engine coolant (1ZZ–FE)			TOYOTA long life coolant
Left–hand drive vehicles	M/T	5.8 liters (6.1 US qts, 5.1 Imp. qts)	
	A/T	5.7 liters (6.0 US qts, 5.0 Imp. qts)	
Right–hand drive vehicles	M/T	5.9 liters (6.2 US qts, 5.2 Imp. qts)	
	A/T	5.8 liters (6.1 US qts, 5.1 Imp. qts)	
Engine coolant (1AZ–FE/1AZ–FSE)			TOYOTA long life coolant
Left–hand drive vehicles	M/T	6.0 liters (6.3 US qts, 5.3 Imp. qts)	
	A/T	6.3 liters (6.7 US qts, 5.5 Imp. qts)	
Right–hand drive vehicles	M/T	6.1 liters (6.4 US qts, 5.4 Imp. qts)	
	A/T	6.4 liters (6.8 US qts, 5.6 Imp. qts)	
Engine coolant (1CD–FTV)			TOYOTA long life coolant
w/ power heater		7.6 liters (8.0 US qts, 6.7 Imp. qts)	
w/o power heater		7.4 liters (7.8 US qts, 6.5 Imp. qts)	

LUBRICATION

PREPARATION

022K9–01

SST

	09023–12900	Union Nut Wrench 19mm	OIL PUMP ASSY(1AZ–FSE)
	09032–00100	Oil Pan Seal Cutter	OIL PUMP ASSY(1AZ–FE) OIL PUMP ASSY(1AZ–FSE) OIL PUMP ASSY(1CD–FTV)
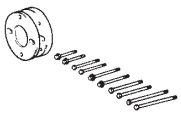	09213–54015	Crankshaft Pulley Holding Tool	OIL PUMP ASSY(1AZ–FE) OIL PUMP ASSY(1AZ–FSE) OIL PUMP ASSY(1CD–FTV)
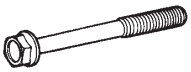	(90105–08076)	Bolt	OIL PUMP ASSY(1CD–FTV)
	(91651–60855)	Bolt	OIL PUMP ASSY(1AZ–FE) OIL PUMP ASSY(1AZ–FSE)
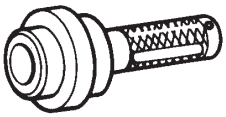	09223–46011	Crankshaft Front Oil Seal Replacer	OIL PUMP ASSY(1CD–FTV)
	09228–06501	Oil Filter Wrench	OIL FILTER SUB–ASSY(1AZ–FE) OIL FILTER SUB–ASSY(1AZ–FSE) OIL FILTER SUB–ASSY(1ZZ–FE/3ZZ–FE)
	09228–10002	Oil Filter Wrench	OIL FILTER SUB–ASSY(1CD–FTV)
	09249–63010	Torque Wrench Adaptor	OIL PUMP ASSY(1AZ–FE) OIL PUMP ASSY(1AZ–FSE)
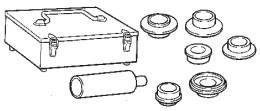	09316–60011	Transmission & Transfer Bearing Replacer	OIL PUMP ASSY(1CD–FTV)
	(09316–00011)	Replacer Pipe	OIL PUMP ASSY(1CD–FTV)
	(09316–00021)	Replacer ”A”	OIL PUMP ASSY(1CD–FTV)

	09330–00021	Companion Flange Holding Tool	OIL PUMP ASSY(1AZ–FE) OIL PUMP ASSY(1AZ–FSE) OIL PUMP ASSY(1CD–FTV)
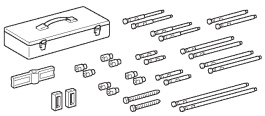	09950–50013	Puller C Set	OIL PUMP ASSY(1AZ–FE) OIL PUMP ASSY(1AZ–FSE) OIL PUMP ASSY(1CD–FTV)
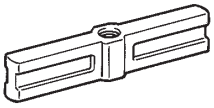	(09951–05010)	Hanger 150	OIL PUMP ASSY(1AZ–FE) OIL PUMP ASSY(1AZ–FSE) OIL PUMP ASSY(1CD–FTV)
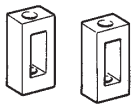	(09952–05010)	Slide Arm	OIL PUMP ASSY(1AZ–FE) OIL PUMP ASSY(1AZ–FSE) OIL PUMP ASSY(1CD–FTV)
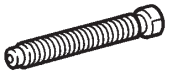	(09953–05010)	Center Bolt 100	OIL PUMP ASSY(1CD–FTV)
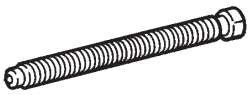	(09953–05020)	Center Bolt 150	OIL PUMP ASSY(1AZ–FE) OIL PUMP ASSY(1AZ–FSE) OIL PUMP ASSY(1CD–FTV)
	(09954–05021)	Claw No.2	OIL PUMP ASSY(1AZ–FE) OIL PUMP ASSY(1AZ–FSE) OIL PUMP ASSY(1CD–FTV)
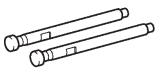	(09954–05031)	Claw No.3	OIL PUMP ASSY(1CD–FTV)
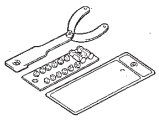	09960–10010	Variable Pin Wrench Set	OIL PUMP ASSY(1CD–FTV)
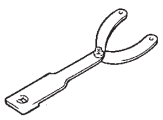	(09962–01000)	Variable Pin Wrench Arm Assy	OIL PUMP ASSY(1CD–FTV)
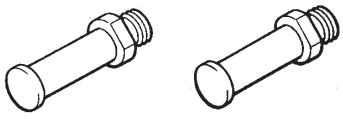	(09963–01000)	Pin 10	OIL PUMP ASSY(1CD–FTV)

Recomended Tools

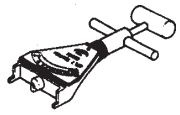	09216–00021	Belt Tension Gauge	OIL PUMP ASSY(1CD–FTV)

Equipment

Radiator cap tester	
Torque wrench	
Wooden block	

SSM

	08826–00080	Seal Packing Black or equivalent (FIPG)	OIL PUMP ASSY(1CD–FTV)

Lubricant

Item	Capacity	Classification
Oil grade (gasoline engine)	–	API grade SJ ”Energy–Conserving”, SL ”Energy–Conserving” multigrade engine oil or ILSAC multi-grade engine oil
Oil grade (Diesel engine)	–	ACEA B1, API CF–4 or CF (You may also use API CE or CD.)
Drain and refill (1ZZ–FE/3ZZ–FE) w/ oil filter change w/o oil filter change	 3.7 liters (3.9 US qts, 3.3 lmp. qts) 3.5 liters (3.7 US qts, 3.1 lmp. qts)	 –
Drain and refill (1AZ–FE/1AZ–FSE) w/ oil filter change w/o oil filter change	 4.2 liters (4.4 US qts, 3.7 lmp. qts) 4.0 liters (4.2 US qts, 3.5 lmp. qts)	 –
Drain and refill (1CD–FTV) w/ oil filter change w/o oil filter change	 5.9 liters (6.2 US qts, 5.2 lmp. qts) 5.3 liters (5.6 US qts, 4.7 lmp. qts)	 –
Dry fill (1ZZ–FE/3ZZ–FE)	4.2 liters (4.4 US qts, 3.7 lmp. qts)	–
Dry fill (1AZ–FE/1AZ–FSE)	4.9 liters (5.2 US qts, 4.3 lmp. qts)	–
Dry fill (1CD–FTV)	6.7 liters (7.1 US qts, 5.9 lmp. qts)	–

IGNITION

PREPARATION

022J8–01

SST

	09249–63010	Torque Wrench Adaptor	CRANKSHAFT POSITION SENSOR (1AZ–FE/1AZ–FSE)

Recomended Tools

	09082–00040	TOYOTA Electrical Tester	IGNITION SYSTEM(1AZ–FE) IGNITION SYSTEM(1AZ–FSE) IGNITION SYSTEM (1ZZ–FE/3ZZ–FE)
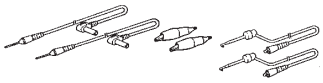	(09083–00150)	Test Lead Set	IGNITION SYSTEM(1AZ–FE) IGNITION SYSTEM(1AZ–FSE) IGNITION SYSTEM (1ZZ–FE/3ZZ–FE)
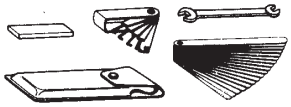	09200–00010	Engine Adjust Kit	IGNITION SYSTEM(1AZ–FE) IGNITION SYSTEM(1AZ–FSE) IGNITION SYSTEM (1ZZ–FE/3ZZ–FE)
	(09857–00031)	Spark Plug Gap Gauge	IGNITION SYSTEM(1AZ–FE) IGNITION SYSTEM(1AZ–FSE) IGNITION SYSTEM (1ZZ–FE/3ZZ–FE)

Equipment

Ohmmeter	
Service Wire Harness	
Torque wrench	

STARTING & CHARGING

022J9–01

PREPARATION

SST

	09249–63010	Torque Wrench Adaptor	GENERATOR ASSY(1AZ–FE/1AZ–FSE)

Recomended Tools

	09082–00040	TOYOTA Electrical Tester	STARTING SYSTEM(1AZ–FE) STARTING SYSTEM(1AZ–FSE) STARTING SYSTEM (1ZZ–FE/3ZZ–FE)
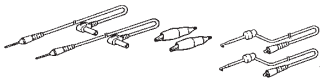	(09083–00150)	Test Lead Set	STARTING SYSTEM(1AZ–FE) STARTING SYSTEM(1AZ–FSE) STARTING SYSTEM (1ZZ–FE/3ZZ–FE)
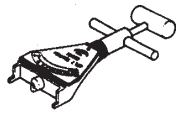	09216–00021	Belt Tension Gauge	GENERATOR ASSY(1CD–FTV)

Equipment

Slide calipers	
Ammeter(A)	
Ohmmeter	
Radiator cap tester	
Torque wrench	
Service Wire Harness	

FRONT SUSPENSION

PREPARATION

022KF–01

SST

	09628–62011	Boll Joint Puller	LOWER BALL JOINT ASSY FRONT LH STABILIZER BAR FRONT FRONT SUSPENSION ARM SUB–ASSY LOWER NO.1 LH(ATM)
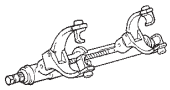	09727–30021	Coil Spring Compressor	FRONT SHOCK ABSORBER WITH COIL SPRING
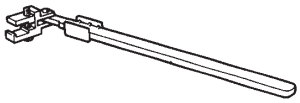	09729–22031	Front Spring Upper Seat Holder	FRONT SHOCK ABSORBER WITH COIL SPRING
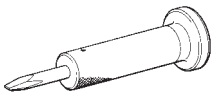	09930–00010	Drive Shaft Nut Chisel	LOWER BALL JOINT ASSY FRONT LH

Recomended Tools

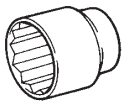	09011–12301	Socket Wrench 30 mm	LOWER BALL JOINT ASSY FRONT LH
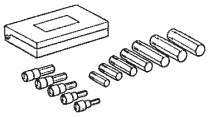	09040–00011	Hexagon Wrench Set	FRONT SHOCK ABSORBER WITH COIL SPRING STABILIZER BAR FRONT FRONT SUSPENSION ARM SUB–ASSY LOWER NO.1 LH(ATM) FRONT SUSPENSION ARM SUB–ASSY LOWER NO.1 LH(MTM)
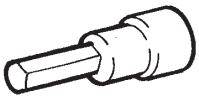	(09043–20060)	Socket Hexagon Wrench 6	FRONT SHOCK ABSORBER WITH COIL SPRING STABILIZER BAR FRONT FRONT SUSPENSION ARM SUB–ASSY LOWER NO.1 LH(ATM) FRONT SUSPENSION ARM SUB–ASSY LOWER NO.1 LH(MTM)

Equipment

Torque wrench	
Dial indicator with magnetic base	
Tire pressure gauge	
Alignment tester	
Toe–in gauge	
Angle gauge	
Camber–caster–kingpin gauge	
Engine Sling Device	
Drill	

REAR SUSPENSION

PREPARATION

022L8–01

SST

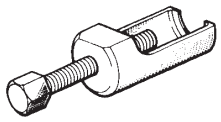	09610–20012	Pitman Arm Puller	REAR SUSPENSION ARM ASSY NO.1 LH LOWER CONTROL ARM ASSY LH
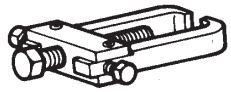	09628–62011	Boll Joint Puller	REAR SUSPENSION ARM ASSY NO.1 LH
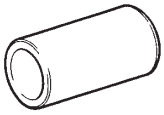	09632–36010	Steering Vane Pump Bearing Replacer	REAR SUSPENSION ARM ASSY NO.1 LH
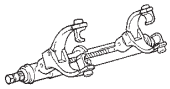	09727–30021	Coil Spring Compressor	REAR SHOCK ABSORBER WITH COIL SPRING
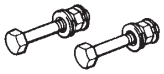	(09727–00010)	Bolt Set	REAR SHOCK ABSORBER WITH COIL SPRING
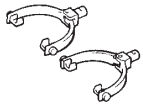	(09727–00021)	Arm Set	REAR SHOCK ABSORBER WITH COIL SPRING
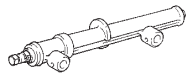	(09727–00031)	Compressor	REAR SHOCK ABSORBER WITH COIL SPRING
	09950–40011	Puller B Set	REAR SUSPENSION ARM ASSY NO.1 LH
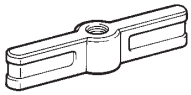	(09951–04010)	Hanger 150	REAR SUSPENSION ARM ASSY NO.1 LH
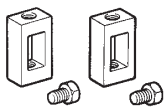	(09952–04010)	Slide Arm	REAR SUSPENSION ARM ASSY NO.1 LH
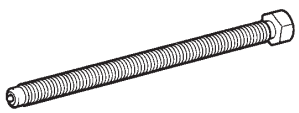	(09953–04030)	Center Bolt 200	REAR SUSPENSION ARM ASSY NO.1 LH
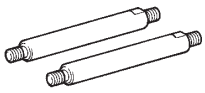	(09954–04020)	Arm 100	REAR SUSPENSION ARM ASSY NO.1 LH

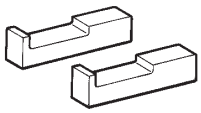	(09955–04051)	Claw No.5	REAR SUSPENSION ARM ASSY NO.1 LH
	(09957–04010)	Attachment	REAR SUSPENSION ARM ASSY NO.1 LH
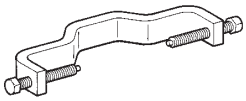	(09958–04011)	Holder	REAR SUSPENSION ARM ASSY NO.1 LH

Recomended Tools

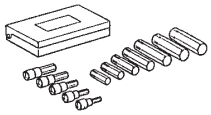	09040–00011	Hexagon Wrench Set	REAR SHOCK ABSORBER WITH COIL SPRING REAR SUSPENSION ARM ASSY NO.1 LH STABILIZER BAR REAR
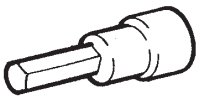	(09043–20050)	Socket Hexagon Wrench 5	REAR SHOCK ABSORBER WITH COIL SPRING REAR SUSPENSION ARM ASSY NO.1 LH STABILIZER BAR REAR
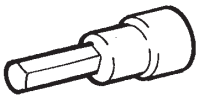	(09043–20060)	Socket Hexagon Wrench 6	REAR SHOCK ABSORBER WITH COIL SPRING

Equipment

Torque wrench	
Dial indicator with magnetic base	
Wheel balancer	
Tire pressure gauge	
Alignment tester	
Toe–in gauge	
Camber–caster–kingpin gauge	
Drill	

TIRE & WHEEL

022KG–01

PREPARATION

Equipment

Tire pressure gauge	
Dial indicator with magnetic base	
Wheel balancer	

DRIVE SHAFT / PROPELLER SHAFT

022KL–01

PREPARATION

SST

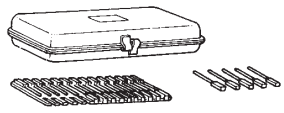	09240–00020	Wire Gauge Set	FRONT DRIVE SHAFT
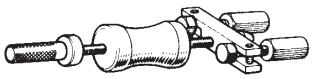	09520–00031	Rear Axle Shaft Puller	FRONT AXLE HUB SUB–ASSY LH
	09520–01010	Drive Shaft Remover Attachment	FRONT DRIVE SHAFT
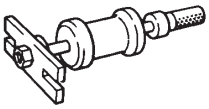	09520–24010	Differential Side Gear Shaft Puller	FRONT DRIVE SHAFT
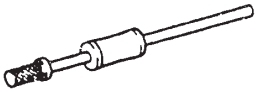	(09520–32040)	Shocker Set	FRONT DRIVE SHAFT
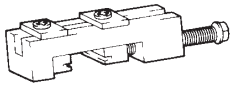	09521–24010	Rear Axle Shaft Puller	FRONT DRIVE SHAFT
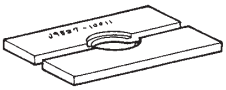	09527–10011	Rear Axle Shaft Bearing Remover	FRONT DRIVE SHAFT
	09527–17011	Rear Axle Shaft Bearing Remover	FRONT AXLE HUB SUB–ASSY LH
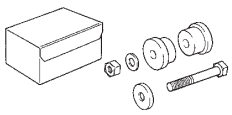	09608–16042	Front Hub Bearing Adjusting Tool	FRONT DRIVE SHAFT
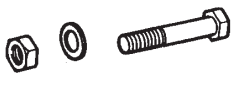	(09608–02021)	Bolt & Nut	FRONT DRIVE SHAFT
	(09608–02041)	Retainer	FRONT DRIVE SHAFT
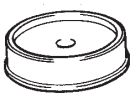	09608–32010	Steering Knuckle Oil Seal Replacer	FRONT AXLE HUB SUB–ASSY LH

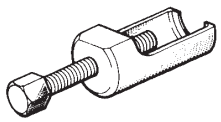	09610–20012	Pitman Arm Puller	REAR AXLE CARRIER SUB–ASSY LH
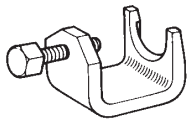	09628–10011	Ball Joint Puller	REAR AXLE LH HUB BOLT FRONT AXLE LH HUB BOLT
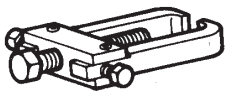	09628–62011	Boll Joint Puller	FRONT AXLE HUB SUB–ASSY LH REAR AXLE CARRIER SUB–ASSY LH FRONT DRIVE SHAFT
	09710–04081	Base	FRONT DRIVE SHAFT
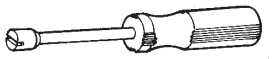	09718–00010	Shoe Hold Down Spring Driver	REAR AXLE CARRIER SUB–ASSY LH
	09726–40010	Lower Control Shaft Bearing Replacer	FRONT DRIVE SHAFT
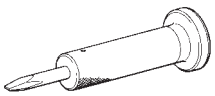	09930–00010	Drive Shaft Nut Chisel	FRONT AXLE HUB SUB–ASSY LH FRONT DRIVE SHAFT
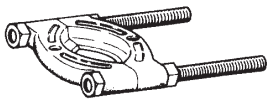	09950–00020	Bearing Remover	FRONT DRIVE SHAFT
	09950–40011	Puller B Set	FRONT AXLE HUB SUB–ASSY LH
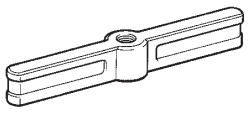	(09951–04020)	Hanger 200	FRONT AXLE HUB SUB–ASSY LH
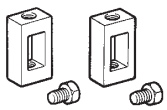	(09952–04010)	Slide Arm	FRONT AXLE HUB SUB–ASSY LH
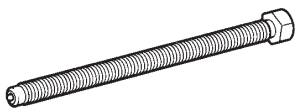	(09953–04030)	Center Bolt 200	FRONT AXLE HUB SUB–ASSY LH
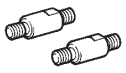	(09954–04010)	Arm 25	FRONT AXLE HUB SUB–ASSY LH

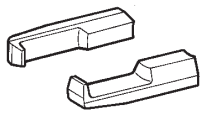	(09955–04061)	Claw No.6	FRONT AXLE HUB SUB–ASSY LH
	(09957–04010)	Attachment	FRONT AXLE HUB SUB–ASSY LH
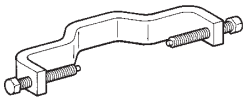	(09958–04010)	Holder (J)	FRONT AXLE HUB SUB–ASSY LH
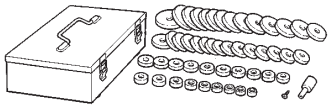	09950–60010	Replacer Set	FRONT AXLE HUB SUB–ASSY LH
	(09951–00370)	Replacer 37	FRONT AXLE HUB SUB–ASSY LH
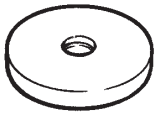	(09951–00600)	Replacer 60	FRONT AXLE HUB SUB–ASSY LH
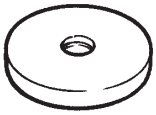	(09951–00640)	Replacer 64	FRONT AXLE HUB SUB–ASSY LH
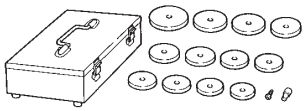	09950–60020	Replacer Set No.2	FRONT AXLE HUB SUB–ASSY LH FRONT DRIVE SHAFT
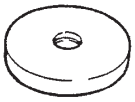	(09951–00710)	Replacer 71	FRONT DRIVE SHAFT
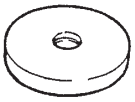	(09951–00720)	Replacer 72	FRONT AXLE HUB SUB–ASSY LH
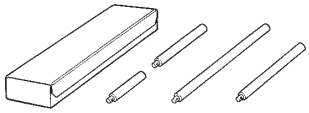	09950–70010	Handle Set	FRONT AXLE HUB SUB–ASSY LH FRONT DRIVE SHAFT
	(09951–07100)	Handle 100	FRONT AXLE HUB SUB–ASSY LH FRONT DRIVE SHAFT

Recomended Tools

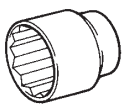	09011–12301	Socket Wrench 30 mm	FRONT AXLE HUB SUB–ASSY LH FRONT DRIVE SHAFT

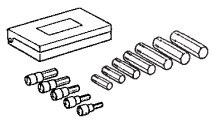	09040–00011	Hexagon Wrench Set	FRONT AXLE HUB SUB–ASSY LH FRONT DRIVE SHAFT
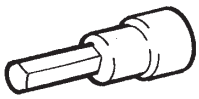	(09043–20060)	Socket Hexagon Wrench 6	FRONT AXLE HUB SUB–ASSY LH FRONT DRIVE SHAFT
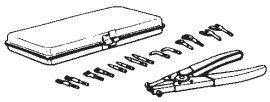	09904–00010	Expander Set	FRONT DRIVE SHAFT
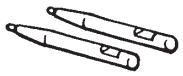	(09904–00050)	No. 4 Claw	FRONT DRIVE SHAFT
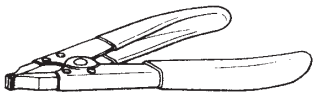	09905–00012	Snap Ring No.1 Expander	FRONT DRIVE SHAFT
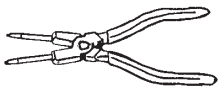	09905–00013	Snap Ring Pliers	FRONT AXLE HUB SUB–ASSY LH

Equipment

Torque wrench	
Dial indicator with magnetic base	

Lubricant

Item		Capacity
Front drive shaft		
1AZ–FSE, 1AZ–FE, 1CD–FTV	Outboard joint grease:	152.0 – 162.0 g (5.4 – 5.7 oz.)
	Inboard joint grease:	170.0 – 190.0 g (6.0 – 6.7 oz.)
3ZZ–FE, 1ZZ–FE	Outboard joint grease:	85.0 – 105.0 g (3.0 – 3.7 oz.)
	Inboard joint grease:	125.5 – 135.5 g (4.4 – 4.8 oz.)

BRAKE

PREPARATION

022KS–01

SST

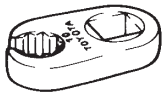	09023–00100	Union Nut Wrench 10 mm	BRAKE FLUID BRAKE MASTER CYLINDER SUB–ASSY FRONT BRAKE REAR BRAKE BRAKE BOOSTER ASSY(LHD) BRAKE BOOSTER ASSY(RHD) BRAKE ACTUATOR ASSY(W/ VSC) BRAKE ACTUATOR ASSY(W/O VSC)
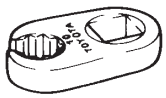	09023–38400	Union Nut Wrench 14mm	BRAKE FLUID BRAKE MASTER CYLINDER SUB–ASSY FRONT BRAKE REAR BRAKE BRAKE BOOSTER ASSY(LHD) BRAKE BOOSTER ASSY(RHD) BRAKE ACTUATOR ASSY(W/ VSC)
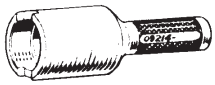	09214–76011	Crankshaft Pulley Replacer	SKID CONTROL SENSOR
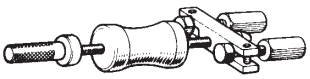	09520–00031	Rear Axle Shaft Puller	SKID CONTROL SENSOR
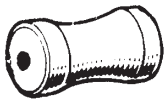	(09520–00040)	Shocker	SKID CONTROL SENSOR
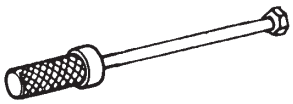	09521–00020	Drive Shaft Boot Clamping Tool	SKID CONTROL SENSOR
	09550–60010	Differential Side Bearing Replacer	FRONT BRAKE
	(09710–06051)	Replacer	REAR BRAKE
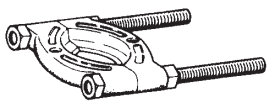	09950–00020	Bearing Remover	SKID CONTROL SENSOR

Recomended Tools

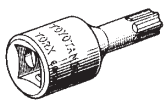	09042–00010	Torx Socket T30	STEERING SENSOR

Equipment

Micrometer	
Dial indicator w/ magnetic base	
Brake drum gauge	
Slide calipers	
Torque wrench	

Lubricant

Item	Capacity	Classification
Brake fluid	–	SAE J1704 or FMVSS No. 116 DOT4

PARKING BRAKE

022JT–01

PREPARATION

SST

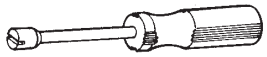	09718–00010	Shoe Hold Down Spring Driver	PARKING BRAKE ASSY PARKING BRAKE CABLE ASSY NO.3

Recomended Tools

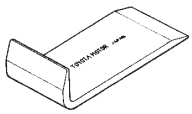	09070–20010	Moulding Remover	PARKING BRAKE CABLE ASSY NO.1 PARKING BRAKE LEVER SUB–ASSY

Equipment

Torque wrench	
Slide calipers	

AUTOMATIC TRANSMISSION / TRANS

022L4–02

PREPARATION

SST

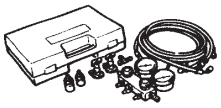	07110–58060	Air Conditioner Service Tool Set	TRANSMISSION CONTROL CABLE ASSY
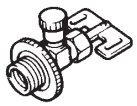	(07117–58060)	Refrigerant Drain Service Valve	TRANSMISSION CONTROL CABLE ASSY
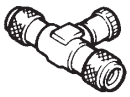	(07117–58070)	T–Joint	TRANSMISSION CONTROL CABLE ASSY
	(07117–58080)	Quick Disconnect Adapter	TRANSMISSION CONTROL CABLE ASSY
	(07117–58090)	Quick Disconnect Adapter	TRANSMISSION CONTROL CABLE ASSY
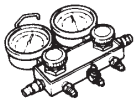	(07117–78050)	Refrigerant Charging Gauge	TRANSMISSION CONTROL CABLE ASSY
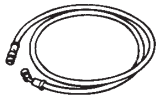	(07117–88060)	Refrigerant Charging Hose	TRANSMISSION CONTROL CABLE ASSY
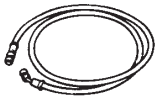	(07117–88070)	Refrigerant Charging Hose	TRANSMISSION CONTROL CABLE ASSY
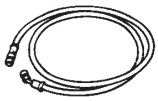	(07117–88080)	Refrigerant Charging Hose	TRANSMISSION CONTROL CABLE ASSY
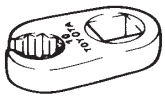	09023–12700	Union Nut Wrench 17mm	AUTOMATIC TRANSAXLE ASSY(U241E) AUTOMATIC TRANSAXLE ASSY(U341E)
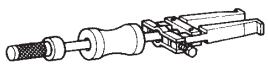	09308–00010	Oil Seal Puller	FRONT DIFFERENTIAL OIL SEAL(U241E) FRONT DIFFERENTIAL OIL SEAL(U341E)
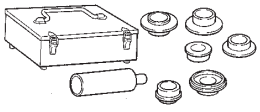	09316–60011	Transmission & Transfer Bearing Replacer	FRONT DIFFERENTIAL OIL SEAL(U241E)

	(09316–00011)	Replacer Pipe	FRONT DIFFERENTIAL OIL SEAL(U241E)
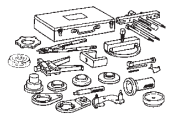	09350–32014	TOYOTA Automatic Transmission Tool Set	TORQUE CONVERTER CLUTCH AND DRIVE PLATE(ATM) AUTOMATIC TRANSAXLE ASSY(U241E) AUTOMATIC TRANSAXLE ASSY(U341E)
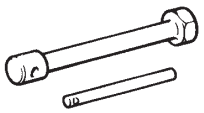	(09351–32010)	One–way Clutch Test Tool	TORQUE CONVERTER CLUTCH AND DRIVE PLATE(ATM) AUTOMATIC TRANSAXLE ASSY(U241E) AUTOMATIC TRANSAXLE ASSY(U341E)
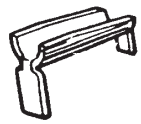	(09351–32020)	Stator Stopper	TORQUE CONVERTER CLUTCH AND DRIVE PLATE(ATM) AUTOMATIC TRANSAXLE ASSY(U241E) AUTOMATIC TRANSAXLE ASSY(U341E)
	09520–01010	Drive Shaft Remover Attachment	AUTOMATIC TRANSAXLE ASSY(U241E) AUTOMATIC TRANSAXLE ASSY(U341E) FRONT DIFFERENTIAL OIL SEAL(U341E)
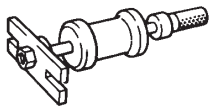	09520–24010	Differential Side Gear Shaft Puller	AUTOMATIC TRANSAXLE ASSY(U241E) AUTOMATIC TRANSAXLE ASSY(U341E) FRONT DIFFERENTIAL OIL SEAL(U341E)
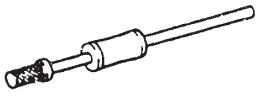	(09520–32040)	Shocker Set	AUTOMATIC TRANSAXLE ASSY(U241E) AUTOMATIC TRANSAXLE ASSY(U341E) FRONT DIFFERENTIAL OIL SEAL(U341E)
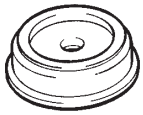	09554–14010	Differential Oil Seal Replacer	FRONT DIFFERENTIAL OIL SEAL(U341E)
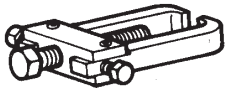	09628–62011	Boll Joint Puller	AUTOMATIC TRANSAXLE ASSY(U241E) AUTOMATIC TRANSAXLE ASSY(U341E) FRONT DIFFERENTIAL OIL SEAL(U341E)
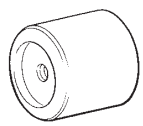	09649–17010	Steering Knuckle Tool	FRONT DIFFERENTIAL OIL SEAL(U241E)
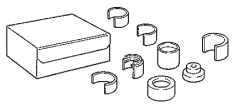	09726–27012	Front Suspension Arm Bushing Remover & Replacer	FRONT DIFFERENTIAL OIL SEAL(U341E)

	(09726–02041)	Replacer	FRONT DIFFERENTIAL OIL SEAL(U341E)
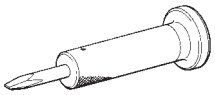	09930–00010	Drive Shaft Nut Chisel	AUTOMATIC TRANSAXLE ASSY(U241E) AUTOMATIC TRANSAXLE ASSY(U341E) FRONT DIFFERENTIAL OIL SEAL(U341E)
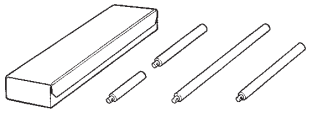	09950–70010	Handle Set	FRONT DIFFERENTIAL OIL SEAL(U241E) FRONT DIFFERENTIAL OIL SEAL(U341E)
	(09951–07150)	Handle 150	FRONT DIFFERENTIAL OIL SEAL(U241E)
	(09951–07200)	Handle 200	FRONT DIFFERENTIAL OIL SEAL(U341E)

Recomended Tools

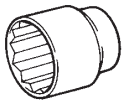	09011–12301	Socket Wrench 30 mm	AUTOMATIC TRANSAXLE ASSY(U241E) AUTOMATIC TRANSAXLE ASSY(U341E) FRONT DIFFERENTIAL OIL SEAL(U341E)
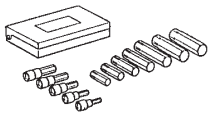	09040–00011	Hexagon Wrench Set	AUTOMATIC TRANSAXLE ASSY(U241E) TRANSMISSION WIRE(U241E) TRANSMISSION VALVE BODY ASSY(U241E) FRONT DIFFERENTIAL OIL SEAL(U241E) AUTOMATIC TRANSAXLE ASSY(U341E)
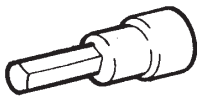	(09043–20100)	Socket Hexagon Wrench 10	AUTOMATIC TRANSAXLE ASSY(U241E) TRANSMISSION WIRE(U241E) TRANSMISSION VALVE BODY ASSY(U241E) FRONT DIFFERENTIAL OIL SEAL(U241E) AUTOMATIC TRANSAXLE ASSY(U341E) TRANSMISSION VALVE BODY ASSY(U341E) TRANSMISSION WIRE(U341E) FRONT DIFFERENTIAL OIL SEAL(U341E)
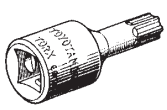	09042–00010	Torx Socket T30	TRANSMISSION CONTROL CABLE ASSY

	09090–04020	Engine Sling Device	AUTOMATIC TRANSAXLE ASSY(U241E) AUTOMATIC TRANSAXLE ASSY(U341E)
	95416–00140	Gas Leak Detector (Halogen Leak Detector) (DENSO Part No.)	TRANSMISSION CONTROL CABLE ASSY
	09216–00021	Belt Tension Gauge	AUTOMATIC TRANSAXLE ASSY(U151E/U151F)

SSM

	08833–00080	Adhesive 1344 THREE BOND 1344 LOCTITE 242 or equivalent	TRANSMISSION WIRE(U241E) TRANSMISSION VALVE BODY ASSY(U241E)

Equipment

Straight edge	Automatic transaxle assy
Torque wrench	
Vernier calipers	Automatic transaxle assy
Dial indicator with magnetic base	Torque converter and drive plate
Slide calipers	Automatic transaxle assy
Chain block	Automatic transaxle assy

Lubricant

U341E Automatic transaxle fluid Dry fill Drain and refill	 6.9 liter (7.7 USqts, 6.4 lmp.qts) 3.0 liter (3.2 USqts, 2.6 lmp.qts)	ATF type T–IV
U241F Automatic transaxle fluid Dry fill Drain and refill	 8.6 liter (9.0 USqts, 7.6 lmp.qts) 3.5 liter (3.7 USqts, 3.1 lmp.qts)	ATF type T–IV

MANUAL TRANSMISSION/TRANSAXLE

022KY–01

PREPARATION

SST

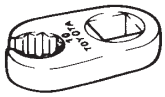	09023–00100	Union Nut Wrench 10 mm	MANUAL TRANSAXLE ASSY(1CD–FTV)
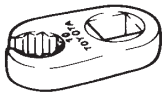	09023–12700	Union Nut Wrench 17mm	MANUAL TRANSAXLE ASSY(1AZ–FE/1AZ–FSE) MANUAL TRANSAXLE ASSY(1CD–FTV)
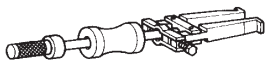	09308–00010	Oil Seal Puller	FRONT DIFFERENTIAL OIL SEAL(C50/C250) FRONT DIFFERENTIAL OIL SEAL(E354/E357)
	09520–01010	Drive Shaft Remover Attachment	MANUAL TRANSAXLE ASSY(1AZ–FE/1AZ–FSE) MANUAL TRANSAXLE ASSY(1CD–FTV) MANUAL TRANSAXLE ASSY(1ZZ–FE/3ZZ–FE) FRONT DIFFERENTIAL OIL SEAL(C50/C250) FRONT DIFFERENTIAL OIL SEAL(E354/E357)
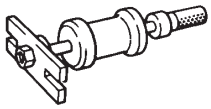	09520–24010	Differential Side Gear Shaft Puller	MANUAL TRANSAXLE ASSY(1AZ–FE/1AZ–FSE) MANUAL TRANSAXLE ASSY(1CD–FTV) MANUAL TRANSAXLE ASSY(1ZZ–FE/3ZZ–FE) FRONT DIFFERENTIAL OIL SEAL(C50/C250) FRONT DIFFERENTIAL OIL SEAL(E354/E357)
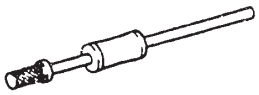	(09520–32040)	Shocker Set	MANUAL TRANSAXLE ASSY(1AZ–FE/1AZ–FSE) MANUAL TRANSAXLE ASSY(1CD–FTV) MANUAL TRANSAXLE ASSY(1ZZ–FE/3ZZ–FE) FRONT DIFFERENTIAL OIL SEAL(C50/C250) FRONT DIFFERENTIAL OIL SEAL(E354/E357)
	09554–14010	Differential Oil Seal Replacer	FRONT DIFFERENTIAL OIL SEAL(C50/C250)
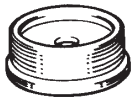	09608–10010	Steering Knuckle Oil Seal Replacer	FRONT DIFFERENTIAL OIL SEAL(E354/E357)

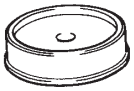	09608–32010	Steering Knuckle Oil Seal Replacer	FRONT DIFFERENTIAL OIL SEAL(E354/E357)
	09628–62011	Boll Joint Puller	MANUAL TRANSAXLE ASSY(1AZ–FE/1AZ–FSE) MANUAL TRANSAXLE ASSY(1CD–FTV) MANUAL TRANSAXLE ASSY(1ZZ–FE/3ZZ–FE) FRONT DIFFERENTIAL OIL SEAL(C50/C250) FRONT DIFFERENTIAL OIL SEAL(E354/E357)
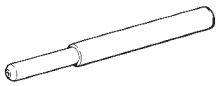	09670–00010	Front Crossmember Guide Tool	MANUAL TRANSAXLE ASSY(1AZ–FE/1AZ–FSE) MANUAL TRANSAXLE ASSY(1CD–FTV) MANUAL TRANSAXLE ASSY(1ZZ–FE/3ZZ–FE)
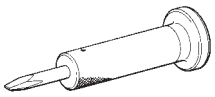	09930–00010	Drive Shaft Nut Chisel	MANUAL TRANSAXLE ASSY(1AZ–FE/1AZ–FSE) MANUAL TRANSAXLE ASSY(1CD–FTV) MANUAL TRANSAXLE ASSY(1ZZ–FE/3ZZ–FE) FRONT DIFFERENTIAL OIL SEAL(C50/C250) FRONT DIFFERENTIAL OIL SEAL(E354/E357)
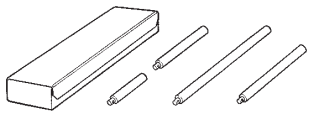	09950–70010	Handle Set	FRONT DIFFERENTIAL OIL SEAL(C50/C250) FRONT DIFFERENTIAL OIL SEAL(E354/E357)
	(09951–07200)	Handle 200	FRONT DIFFERENTIAL OIL SEAL(C50/C250) FRONT DIFFERENTIAL OIL SEAL(E354/E357)

Recomended Tools

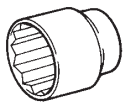	09011–12301	Socket Wrench 30 mm	MANUAL TRANSAXLE ASSY(1AZ–FE/1AZ–FSE) MANUAL TRANSAXLE ASSY(1CD–FTV) MANUAL TRANSAXLE ASSY(1ZZ–FE/3ZZ–FE) FRONT DIFFERENTIAL OIL SEAL(C50/C250) FRONT DIFFERENTIAL OIL SEAL(E354/E357)

Equipment

Torque wrench	
Hexagon wrench (6 mm)	

Lubricant

Item	Capacity	Classification
C50, C250 Manual Transaxle oil (w/ Differential oil)	1.9 litters (2.0 US qts, 1.7 Imp. qts)	API GL–4 or GL–5 SAE 75W–90
E354, E357 Manual Transaxle oil (w/ Differential oil)	2.5 litters (2.6 US qts, 2.2 Imp. qts)	API GL–4 or GL–5 SAE 75W–90

CLUTCH

022KZ–01

PREPARATION

SST

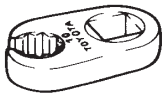	09023–00100	Union Nut Wrench 10 mm	CLUTCH ACCUMULATOR ASSY(1CD–FTV) CLUTCH RELEASE CYLINDER ASSY(MTM) CLUTCH MASTER CYLINDER ASSY(MTM)
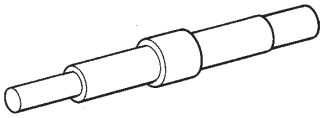	09301–00220	Clutch Guide Tool	CLUTCH UNIT(MTM)
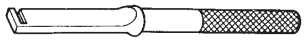	09333–00013	Universal Joint Bearing Remover & Replacer	CLUTCH UNIT(MTM)

Recomended Tools

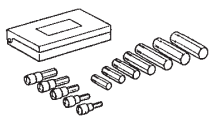	09040–00011	Hexagon Wrench Set	CLUTCH PEDAL SUB–ASSY(MTM)

Equipment

Torque wrench	
Vernier calipers	
Dial indicator with magnetic base	
Vernier calipers	

Lubricant

Item	Capacity	Classification
Brake fluid	–	SAE J1704 or FMVSS No.116 DOT 4

STEERING COLUMN

PREPARATION

022JS–01

SST

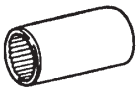	09616–00011	Steering Worm Bearing Adjusting Socket	STEERING COLUMN ASSY
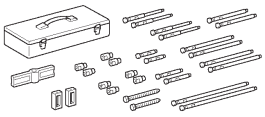	09950–50013	Puller C Set	STEERING COLUMN ASSY
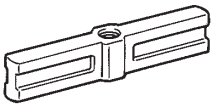	(09951–05010)	Hanger 150	STEERING COLUMN ASSY
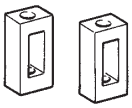	(09952–05010)	Slide Arm	STEERING COLUMN ASSY
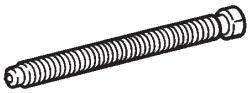	(09953–05020)	Center Bolt 150	STEERING COLUMN ASSY
	(09954–05021)	Claw No.2	STEERING COLUMN ASSY

Recomended Tools

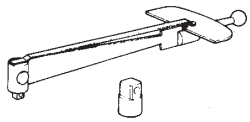	09025–00010	Torque Wrench (30 kgf–cm)	STEERING COLUMN ASSY
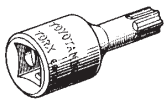	09042–00010	Torx Socket T30	STEERING COLUMN ASSY
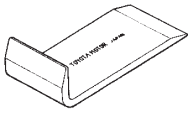	09070–20010	Moulding Remover	STEERING COLUMN ASSY POWER STEERING ECU ASSY

EQUIPMENT

Torque wrench	

POWER STEERING

PREPARATION

022KE–01

SST

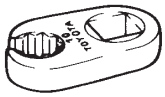	09023–12700	Union Nut Wrench 17mm	RACK & PINION POWER STEERING GEAR ASSY VANE PUMP ASSY(1CD–FTV)
	09249–63010	Torque Wrench Adaptor	VANE PUMP ASSY(AZ Series)
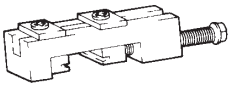	09521–24010	Rear Axle Shaft Puller	STEERING GEAR ASSY RACK & PINION POWER STEERING GEAR ASSY
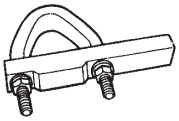	09612–00012	Rack & Pinion Steering Rack Housing Stand	STEERING GEAR ASSY
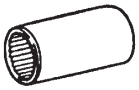	09616–00011	Steering Worm Bearing Adjusting Socket	STEERING GEAR ASSY
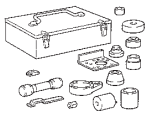	09630–00014	Power Steering Gear Housing Overhaul Tool Set	VANE PUMP ASSY(1CD–FTV) VANE PUMP ASSY(AZ Series)
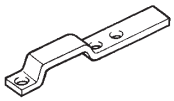	(09631–00132)	Vane Pump Bracket	VANE PUMP ASSY(1CD–FTV) VANE PUMP ASSY(AZ Series)
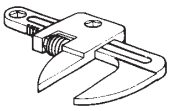	09922–10010	Variable Open Wrench	STEERING GEAR ASSY
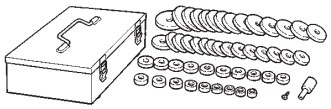	09950–60010	Replacer Set	VANE PUMP ASSY(1CD–FTV) VANE PUMP ASSY(AZ Series)
	(09951–00280)	Replacer 28	VANE PUMP ASSY(1CD–FTV) VANE PUMP ASSY(AZ Series)
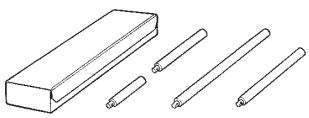	09950–70010	Handle Set	VANE PUMP ASSY(1CD–FTV) VANE PUMP ASSY(AZ Series)
	(09951–07100)	Handle 100	VANE PUMP ASSY(1CD–FTV) VANE PUMP ASSY(AZ Series)

Recomended Tools

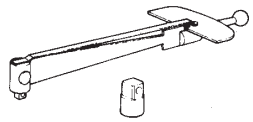	09025–00010	Torque Wrench (30 kgf–cm)	STEERING GEAR ASSY RACK & PINION POWER STEERING GEAR ASSY VANE PUMP ASSY(1CD–FTV) VANE PUMP ASSY(AZ Series)
	09090–04020	Engine Sling Device	STEERING GEAR ASSY RACK & PINION POWER STEERING GEAR ASSY
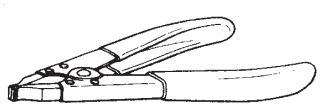	09905–00012	Snap Ring No.1 Expander	VANE PUMP ASSY(1CD–FTV) VANE PUMP ASSY(AZ Series)

Equipment

Caliper gauge	Vane pump assy
Belt tension gauge	Vane pump assy
Vernier calipers	Vane pump assy
Feeler gauge	Vane pump assy
Micrometer	Vane pump assy
Torque wrench	

HEATER & AIR CONDITIONER

022KJ–01

PREPARATION

SST

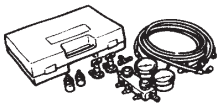	07110–58060 Air Conditioner Service Tool Set	REFRIGERANT AIR CONDITIONING RADIATOR ASSY W/RECEIVER CONDENSER ASSY W/PULLEY COMPRESSOR ASSY(1AZ–FE) W/PULLEY COMPRESSOR ASSY(1AZ–FSE) W/PULLEY COMPRESSOR ASSY(1CD–FTV) W/PULLEY COMPRESSOR ASSY(1ZZ–FE) W/PULLEY COMPRESSOR ASSY(2AZ–FSE) W/PULLEY COMPRESSOR ASSY(3ZZ–FE)
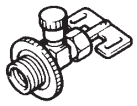	(07117–58060) Refrigerant Drain Service Valve	REFRIGERANT AIR CONDITIONING RADIATOR ASSY W/RECEIVER CONDENSER ASSY W/PULLEY COMPRESSOR ASSY(1AZ–FE) W/PULLEY COMPRESSOR ASSY(1AZ–FSE) W/PULLEY COMPRESSOR ASSY(1CD–FTV) W/PULLEY COMPRESSOR ASSY(1ZZ–FE) W/PULLEY COMPRESSOR ASSY(2AZ–FSE) W/PULLEY COMPRESSOR ASSY(3ZZ–FE)
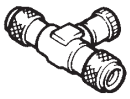	(07117–58070) T–Joint	REFRIGERANT AIR CONDITIONING RADIATOR ASSY W/RECEIVER CONDENSER ASSY W/PULLEY COMPRESSOR ASSY(1AZ–FE) W/PULLEY COMPRESSOR ASSY(1AZ–FSE) W/PULLEY COMPRESSOR ASSY(1CD–FTV) W/PULLEY COMPRESSOR ASSY(1ZZ–FE) W/PULLEY COMPRESSOR ASSY(2AZ–FSE) W/PULLEY COMPRESSOR ASSY(3ZZ–FE)

	(07117–58080) Quick Disconnect Adapter	REFRIGERANT AIR CONDITIONING RADIATOR ASSY W/RECEIVER CONDENSER ASSY W/PULLEY COMPRESSOR ASSY(1AZ–FE) W/PULLEY COMPRESSOR ASSY(1AZ–FSE) W/PULLEY COMPRESSOR ASSY(1CD–FTV) W/PULLEY COMPRESSOR ASSY(1ZZ–FE) W/PULLEY COMPRESSOR ASSY(2AZ–FSE) W/PULLEY COMPRESSOR ASSY(3ZZ–FE)
	(07117–58090) Quick Disconnect Adapter	REFRIGERANT AIR CONDITIONING RADIATOR ASSY W/RECEIVER CONDENSER ASSY W/PULLEY COMPRESSOR ASSY(1AZ–FE) W/PULLEY COMPRESSOR ASSY(1AZ–FSE) W/PULLEY COMPRESSOR ASSY(1CD–FTV) W/PULLEY COMPRESSOR ASSY(1ZZ–FE) W/PULLEY COMPRESSOR ASSY(2AZ–FSE) W/PULLEY COMPRESSOR ASSY(3ZZ–FE)
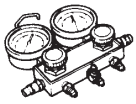	(07117–78050) Refrigerant Charging Gauge	REFRIGERANT AIR CONDITIONING RADIATOR ASSY W/RECEIVER CONDENSER ASSY W/PULLEY COMPRESSOR ASSY(1AZ–FE) W/PULLEY COMPRESSOR ASSY(1AZ–FSE) W/PULLEY COMPRESSOR ASSY(1CD–FTV) W/PULLEY COMPRESSOR ASSY(1ZZ–FE) W/PULLEY COMPRESSOR ASSY(2AZ–FSE) W/PULLEY COMPRESSOR ASSY(3ZZ–FE)

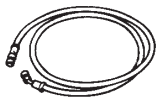	(07117–88060)	Refrigerant Charging Hose	REFRIGERANT AIR CONDITIONING RADIATOR ASSY W/RECEIVER CONDENSER ASSY W/PULLEY COMPRESSOR ASSY(1AZ–FE) W/PULLEY COMPRESSOR ASSY(1AZ–FSE) W/PULLEY COMPRESSOR ASSY(1CD–FTV) W/PULLEY COMPRESSOR ASSY(1ZZ–FE) W/PULLEY COMPRESSOR ASSY(2AZ–FSE) W/PULLEY COMPRESSOR ASSY(3ZZ–FE)
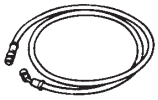	(07117–88070)	Refrigerant Charging Hose	REFRIGERANT AIR CONDITIONING RADIATOR ASSY W/RECEIVER CONDENSER ASSY W/PULLEY COMPRESSOR ASSY(1AZ–FE) W/PULLEY COMPRESSOR ASSY(1AZ–FSE) W/PULLEY COMPRESSOR ASSY(1CD–FTV) W/PULLEY COMPRESSOR ASSY(1ZZ–FE) W/PULLEY COMPRESSOR ASSY(2AZ–FSE) W/PULLEY COMPRESSOR ASSY(3ZZ–FE)
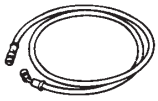	(07117–88080)	Refrigerant Charging Hose	REFRIGERANT AIR CONDITIONING RADIATOR ASSY W/RECEIVER CONDENSER ASSY W/PULLEY COMPRESSOR ASSY(1AZ–FE) W/PULLEY COMPRESSOR ASSY(1AZ–FSE) W/PULLEY COMPRESSOR ASSY(1CD–FTV) W/PULLEY COMPRESSOR ASSY(1ZZ–FE) W/PULLEY COMPRESSOR ASSY(2AZ–FSE) W/PULLEY COMPRESSOR ASSY(3ZZ–FE)
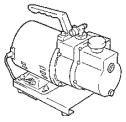	07117–48130	Vacuum Pump (220 V)	W/RECEIVER CONDENSER ASSY
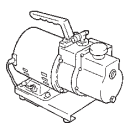	07117–48140	Vacuum Pump (240 V)	W/RECEIVER CONDENSER ASSY
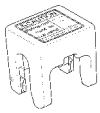	09870–00015	A/C Quick Joint Puller No.1	AIR CONDITIONING RADIATOR ASSY

	09870–00025	A/C Quick Joint Puller No.2	AIR CONDITIONING RADIATOR ASSY
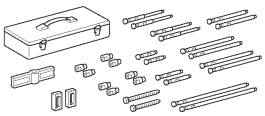	09950–50013	Puller C Set	AIR CONDITIONING RADIATOR ASSY BLOWER ASSY
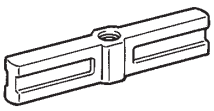	(09951–05010)	Hanger 150	AIR CONDITIONING RADIATOR ASSY BLOWER ASSY
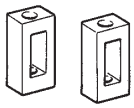	(09952–05010)	Slide Arm	AIR CONDITIONING RADIATOR ASSY BLOWER ASSY
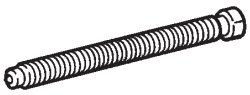	(09953–05020)	Center Bolt 150	AIR CONDITIONING RADIATOR ASSY BLOWER ASSY
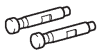	(09954–05021)	Claw No.2	AIR CONDITIONING RADIATOR ASSY BLOWER ASSY

Recomended Tools

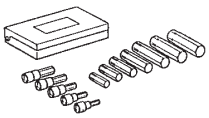	09040–00011	Hexagon Wrench Set	AIR CONDITIONING RADIATOR ASSY W/RECEIVER CONDENSER ASSY
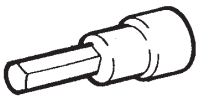	(09043–20050)	Socket Hexagon Wrench 5	AIR CONDITIONING RADIATOR ASSY
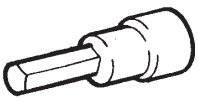	(09043–20100)	Socket Hexagon Wrench 10	W/RECEIVER CONDENSER ASSY
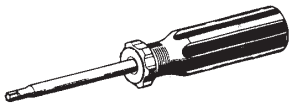	09041–00030	Torx Driver T30	AIR CONDITIONING RADIATOR ASSY BLOWER ASSY
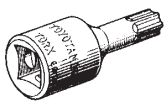	09042–00010	Torx Socket T30	AIR CONDITIONING RADIATOR ASSY BLOWER ASSY
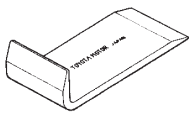	09070–20010	Moulding Remover	AIR CONDITIONING CONTROL ASSY AIR CONDITIONING RADIATOR ASSY BLOWER ASSY
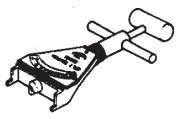	09216–00021	Belt Tension Gauge	V (COOLER COMPRESSOR TO CRANKSHAFT PULLEY) BELT NO.1

	95416–00140	Gas Leak Detector (Halogen Leak Detector) (DENSO Part No.)	REFRIGERANT AIR CONDITIONING RADIATOR ASSY W/PULLEY COMPRESSOR ASSY(1AZ–FE) W/PULLEY COMPRESSOR ASSY(1AZ–FSE) W/PULLEY COMPRESSOR ASSY(1CD–FTV) W/PULLEY COMPRESSOR ASSY(1ZZ–FE) W/PULLEY COMPRESSOR ASSY(2AZ–FSE) W/PULLEY COMPRESSOR ASSY(3ZZ–FE)

Equipment

Voltmeter	
Anmeter	
Ohmmeter	
Vinyl tape	
Hexagon wrench 4 mm (0.15 in.)	
Hexagon wrench 14 mm (0.55 in.)	
Gas leak detector	
Dial indicator with magnetic base	
Radiator cap tester	
Torque wrench	

Lubricant

Item	Capacity	Classification
Compressor oil	–	ND–OIL 8 or equivalent

SUPPLEMENTAL RESTRAINT SYSTEM

022L5–01

PREPARATION

SST

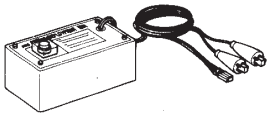	09082–00700	SRS Airbag Deployment Tool	HORN BUTTON ASSY CURTAIN SHIELD AIR BAG ASSY LH FRONT SEAT AIRBAG ASSY LH INSTRUMENT PANEL PASSENGER AIR BAG ASSY INSTRUMENT PANEL AIR BAG ASSY
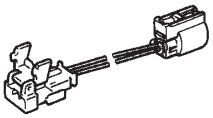	09082–00750	Airbag Deployment Wire Sub–harness No.3	FRONT SEAT AIRBAG ASSY LH
	09082–00780	Airbag Deployment Wire Sub–harness No.6	HORN BUTTON ASSY INSTRUMENT PANEL PASSENGER AIR BAG ASSY
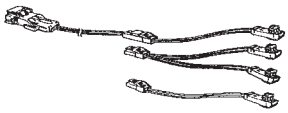	09082–00802	Airbag Deployment Wire Sub–Harness No. 8	HORN BUTTON ASSY CURTAIN SHIELD AIR BAG ASSY LH INSTRUMENT PANEL AIR BAG ASSY
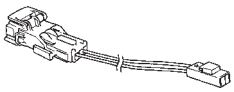	(09082–10801)	Wire A	HORN BUTTON ASSY CURTAIN SHIELD AIR BAG ASSY LH INSTRUMENT PANEL AIR BAG ASSY
	(09082–20801)	Wire B	CURTAIN SHIELD AIR BAG ASSY LH INSTRUMENT PANEL AIR BAG ASSY
	(09082–30801)	Wire C	HORN BUTTON ASSY
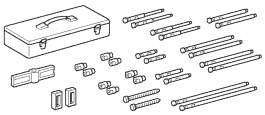	09950–50013	Puller C Set	SPIRAL CABLE SUB–ASSY
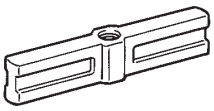	(09951–05010)	Hanger 150	SPIRAL CABLE SUB–ASSY
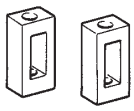	(09952–05010)	Slide Arm	SPIRAL CABLE SUB–ASSY
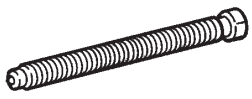	(09953–05020)	Center Bolt 150	SPIRAL CABLE SUB–ASSY
	(09954–05021)	Claw No.2	SPIRAL CABLE SUB–ASSY

Recomended Tools

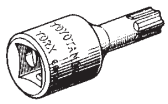	09042–00010 Torx Socket T30	HORN BUTTON ASSY SPIRAL CABLE SUB–ASSY
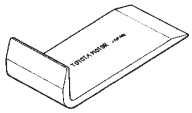	09070–20010 Moulding Remover	AIR BAG SENSOR ASSY CENTER

Equipment

Torque wrench	
Bolt Length: 35.0 mm (1.378 in.) Pitch: 1.0 mm (0.039 in.) Diam.: 6.0 mm (0.236 in.)	Airbag disposal
Tire Width: 185 mm (7.28 in.) Inner diam.: 360 mm (14.17 in.)	Airbag disposal
Tire with disc wheel Width: 185 mm (7.28 in.) Inner diam.: 360 mm (14.17 in.)	Airbag disposal
Plastic bag	Airbag disposal

WIPER & WASHER

022KW–01

PREPARATION

SST

	09843–18040	Diagnosis Check Wire No.2	WIPER AND WASHER SYSTEM

Recomended Tools

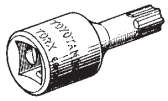	09042–00010	Torx Socket T30	WINDSHIELD WIPER MOTOR ASSY
	09082–00040	TOYOTA Electrical Tester	WIPER AND WASHER SYSTEM
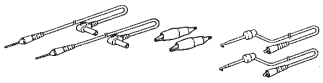	(09083–00150)	Test Lead Set	WIPER AND WASHER SYSTEM

Equipment

Torque wrench	

AUDIO & VISUAL SYSTEM

022KX–01

PREPARATION

Recomended Tools

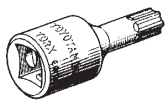	09042–00010	Torx Socket T30	NAVIGATION ANTENNA ASSY
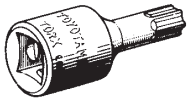	09042–00030	Torx Socket T20	CIGARETTE LIGHTER ASSY
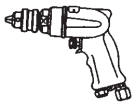	09050–00032	Air Drill	FRONT NO.1 SPEAKER ASSY REAR SPEAKER ASSY
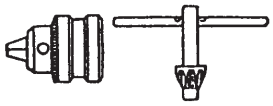	(09050–00210)	Chuck Set	FRONT NO.1 SPEAKER ASSY REAR SPEAKER ASSY
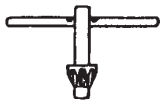	(09050–00220)	Handle	FRONT NO.1 SPEAKER ASSY REAR SPEAKER ASSY
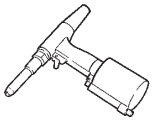	09050–20010	Air Riveter	FRONT NO.1 SPEAKER ASSY REAR SPEAKER ASSY
	(09050–02010)	Dust Cap	FRONT NO.1 SPEAKER ASSY REAR SPEAKER ASSY
	(09050–02020)	Nose Piece No.1	FRONT NO.1 SPEAKER ASSY REAR SPEAKER ASSY
	09060–60350	Revet Cutter	FRONT NO.1 SPEAKER ASSY REAR SPEAKER ASSY
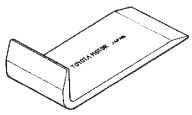	09070–20010	Moulding Remover	RADIO RECEIVER ASSY ANTENNA CORD SUB–ASSY POWER POINT SOCKET ASSY NAVIGATION ANTENNA ASSY ANTENNA CORD SUB–ASSY NO.3 AMPLIFIER ANTENNA ASSY(LIFTBACK MODELS) AMPLIFIER ANTENNA ASSY(SEDAN MODELS) AMPLIFIER ANTENNA ASSY(WAGON MODELS)

Equipment

Torque wrench	

COMMUNICATION SYSTEM

022L2–01

PREPARATION

Recomended Tools

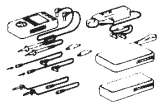	09082–00050	TOYOTA Electrical Tester Set	HORN SYSTEM

WINDSHIELD/WINDOWGLASS/MIRROR

022L7–01

PREPARATION

Recomended Tools

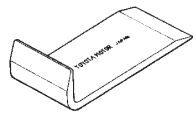	09070–20010	Moulding Remover	WINDSHIELD GLASS
	09082–00040	TOYOTA Electrical Tester	POWER WINDOW CONTROL SYSTEM WINDOW DEFOGGER SYSTEM POWER MIRROR CONTROL SYSTEM
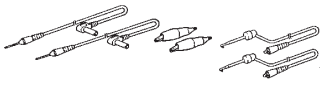	(09083–00150)	Test Lead Set	POWER WINDOW CONTROL SYSTEM
	(09083–00350)	AC/DC 400 A Probe	POWER WINDOW CONTROL SYSTEM

Equipment

Knife	
Piano wire	Windshield
Plastic sheet	To avoid surface damage.
Sealer gun	
Tape	To avoid surface damage.
Torque wrench	
Wooden block or similar object	For tying both piano wire ends

SSM

	08850–00065	Butyl Tape Set	INNER REAR VIEW MIRROR ASSY
	08850–00801	Windshield Glass Adhesive Set or equivalent	WINDSHIELD GLASS BACK DOOR GLASS(LIFTBACK MODELS) BACK WINDOW GLASS(SEDAN MODELS) QUARTER WINDOW ASSY LH(WAGON MODELS) BACK DOOR GLASS(WAGON MODELS)

INSTRUMENT PANEL/METER

022G7–01

PREPARATION

SST

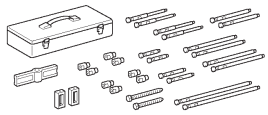	09950–50013	Puller C Set	INSTRUMENT PANEL SUB–ASSY LOWER
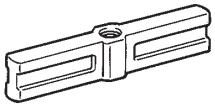	(09951–05010)	Hanger 150	INSTRUMENT PANEL SUB–ASSY LOWER
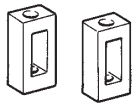	(09952–05010)	Slide Arm	INSTRUMENT PANEL SUB–ASSY LOWER
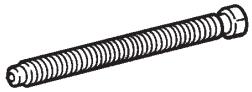	(09953–05020)	Center Bolt 150	INSTRUMENT PANEL SUB–ASSY LOWER
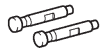	(09954–05021)	Claw No.2	INSTRUMENT PANEL SUB–ASSY LOWER

Recomended Tools

	09082–00040	TOYOTA Electrical Tester	COMBINATION METER
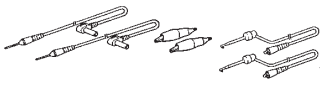	(09083–00150)	Test Lead Set	COMBINATION METER
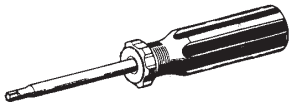	09041–00030	Torx Driver T30	INSTRUMENT PANEL SUB–ASSY LOWER
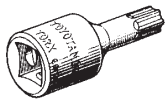	09042–00010	Torx Socket T30	INSTRUMENT PANEL SUB–ASSY LOWER
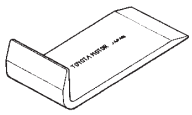	09070–20010	Moulding Remover	INSTRUMENT PANEL SUB–ASSY LOWER MULTI–DISPLAY (CRT DISPLAY) DISPLAY

Equipment

Torque wrench	
Tape	To avoid surface damage

SEAT

022L6–01

PREPARATION

Recomended Tools

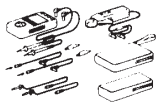	09082–00050	TOYOTA Electrical Tester Set	FRONT POWER SEAT CONTROL SYSTEM SEAT HEATER SYSTEM
	09082–00040	TOYOTA Electrical Tester	FRONT POWER SEAT CONTROL SYSTEM SEAT HEATER SYSTEM

Equipment

Hog ring	
Hog ring pliers	
Tape	To avoid surface damage
Torque wrench	

SLIDING ROOF/CONVERTIBLE

022KO–01

PREPARATION

Recomended Tools

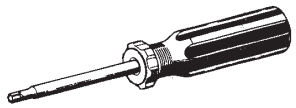	09041–00020	Torx Driver T25	SLIDING ROOF
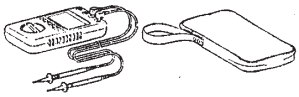	09082–00040	TOYOTA Electrical Tester	SLIDING ROOF SYSTEM

Equipment

Torque wrench	

ENGINE HOOD/DOOR

022K8–01

PREPARATION

SST

	09812–00010	Door Hinge Set Bolt Wrench	FRONT DOOR
	09812–00020	Door Hinge Set Bolt Wrench	FRONT DOOR

Recomended Tools

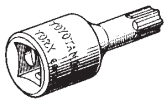	09042–00010	Torx Socket T30	FRONT DOOR REAR DOOR
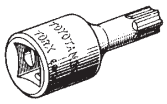	09042–00020	Torx Socket T40	FRONT DOOR REAR DOOR LUGGAGE COMPARTMENT DOOR BACK DOOR(LIFTBACK MODELS) BACK DOOR(WAGON MODELS)
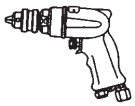	09050–00032	Air Drill	FRONT DOOR
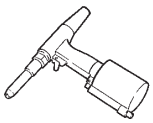	09050–20010	Air Riveter	FRONT DOOR

SSM

	08833–00070	”Adhesive 1324,” THREE BOND 1324 or equivalent	FRONT DOOR REAR DOOR

Equipment

Brass bar	
Clip remover	
Hand riveter	
Hammer	
Plastic–faced hammer	
Tape	To avoid surface damage
Torque wrench	

EXTERIOR/INTERIOR TRIM

022KP–01

PREPARATION

Recomended Tools

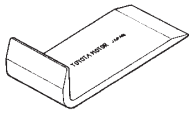 09070–20010 Moulding Remover	FRONT DOOR BELT MOULDING ASSY LH REAR DOOR BELT MOULDING ASSY LH ROOF HEADLINING ASSY(LIFTBACK MODELS) ROOF HEADLINING ASSY(SEDAN MODELS) ROOF HEADLINING ASSY(WAGON MODELS)

Equipment

Adhesive tape	To avoid surface damage.
Clip remover	
Piano wire	
Protective tape	To avoid surface damage.
Torque wrench	
Wooden block	For tying both piano wire ends

VEHICLE CONTROL SYSTEM

022L3–01

PREPARATION

Recomended Tools

	09082–00040	TOYOTA Electrical Tester	IGNITION OR STARTER SWITCH ASSY
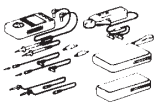	09082–00050	TOYOTA Electrical Tester Set	IGNITION OR STARTER SWITCH ASSY

STANDARD BOLT

HOW TO DETERMINE BOLT STRENGTH

030LK–05

Bolt Type				Class
Hexagon Head Bolt		Stud Bolt	Weld Bolt	
Normal Recess Bolt	Deep Recess Bolt			
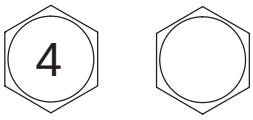		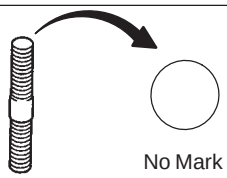	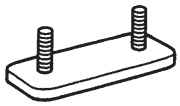	4T
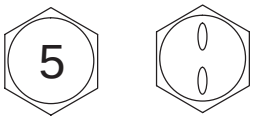				5T
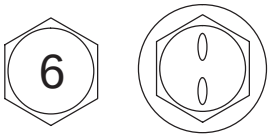	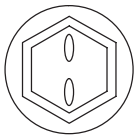			6T
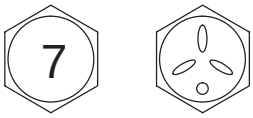	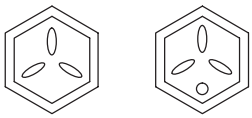			7T
				8T
				9T
	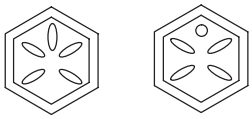			10T
	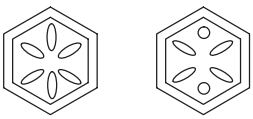			11T

B06431

030LL–05

SPECIFIED TORQUE FOR STANDARD BOLTS

Class	Diameter mm	Pitch mm	Specified torque					
			Hexagon head bolt			Hexagon flange bolt		
			N·m	kgf·cm	ft·lbf	N·m	kgf·cm	ft·lbf
4T	6	1	5	55	48 in.·lbf	6	60	52 in.·lbf
	8	1.25	12.5	130	9	14	145	10
	10	1.25	26	260	19	29	290	21
	12	1.25	47	480	35	53	540	39
	14	1.5	74	760	55	84	850	61
	16	1.5	115	1,150	83	–	–	–
5T	6	1	6.5	65	56 in.·lbf	7.5	75	65 in.·lbf
	8	1.25	15.5	160	12	17.5	175	13
	10	1.25	32	330	24	36	360	26
	12	1.25	59	600	43	65	670	48
	14	1.5	91	930	67	100	1,050	76
	16	1.5	140	1,400	101	–	–	–
6T	6	1	8	80	69 in.·lbf	9	90	78 in.·lbf
	8	1.25	19	195	14	21	210	15
	10	1.25	39	400	29	44	440	32
	12	1.25	71	730	53	80	810	59
	14	1.5	110	1,100	80	125	1,250	90
	16	1.5	170	1,750	127	–	–	–
7T	6	1	10.5	110	8	12	120	9
	8	1.25	25	260	19	28	290	21
	10	1.25	52	530	38	58	590	43
	12	1.25	95	970	70	105	1,050	76
	14	1.5	145	1,500	108	165	1,700	123
	16	1.5	230	2,300	166	–	–	–
8T	8	1.25	29	300	22	33	330	24
	10	1.25	61	620	45	68	690	50
	12	1.25	110	1,100	80	120	1,250	90
9T	8	1.25	34	340	25	37	380	27
	10	1.25	70	710	51	78	790	57
	12	1.25	125	1,300	94	140	1,450	105
10T	8	1.25	38	390	28	42	430	31
	10	1.25	78	800	58	88	890	64
	12	1.25	140	1,450	105	155	1,600	116
11T	8	1.25	42	430	31	47	480	35
	10	1.25	87	890	64	97	990	72
	12	1.25	155	1,600	116	175	1,800	130

030LM–05

HOW TO DETERMINE NUT STRENGTH

Nut Type			Class
Present Standard Hexagon Nut	Old Standard Hexagon Nut		
	Cold Forging Nut	Cutting Processed Nut	
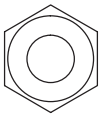 No Mark			4N
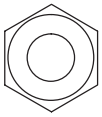 No Mark (w/ Washer)	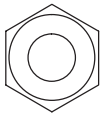 No Mark (w/ Washer)	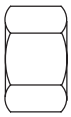 No Mark	5N (4T)
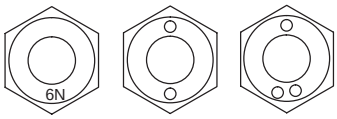 6N			6N
	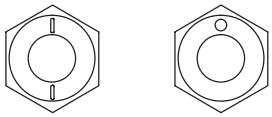	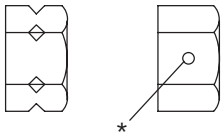 *	7N (5T)
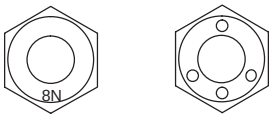 8N			8N
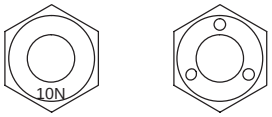 10N	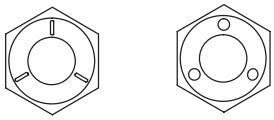	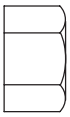 No Mark	10N (7T)
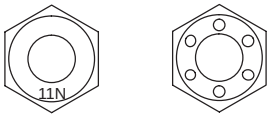 11N			11N
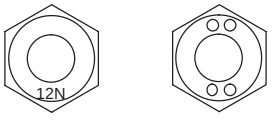 12N			12N

*: Nut with 1 or more marks on one side surface of the nut.

B06432

HINT:

Use the nut with the same number of the nut strength classification or the greater than the bolt strength classification number when tightening parts with a bolt and nut.

Example: Bolt = 4T

Nut = 4N or more

ENGINE CONTROL SYSTEM

031DY–01

SERVICE DATA

1ZZ–FE/3ZZ–FE:

Power steering oil pressure switch		
Voltage	EMPS – E2	
	Not spin the steering wheel at engine idling	8 to 14 V
	Spin the steering wheel at engine idling	0 to 1.5 V
Idle air control valve		
Movement	Ignition switch ON	Half open → fully close → fully open → half open
Mass air flow meter		
Resistance	4 (THA) – 5 (E2)	
	at –20°C (–4°F)	13.6 to 18.4 kΩ
	at 20°C (68°F)	2.21 to .69 kΩ
	at 60°C (140°F)	0.49 to 0.67 kΩ
Camshaft timing oil control valve assy		
Resistance	at 20°C (68°F)	6.9 to 7.9 Ω
Throttle position sensor		
Resistance	VC – E2	2.5 to 6.0 kΩ
E.F.I. Engine coolant temperature sensor		
Resistance	Approx. 20°C (68°F)	2.32 to 2.59 kΩ
	Approx. 80°C (176°F)	0.310 to 0.326 kΩ
Knock control sensor		
Resistance	Approx. 20°C (68°F)	120 to 280 kΩ

1AZ–FE/1AZ–FSE:

Power steering oil pressure switch		
Voltage	PSW – E2	
	Not spin the steering wheel at engine idling	9 to 14 V
	Spin the steering wheel at engine idling	0 to 3 V
Idle air control valve		
Movement	Ignition switch ON	Half open → fully close → fully open → half open
Throttle body assy (1AZ–FSE)		
Throttle valve opening percentage		60 % or more
Idle speed		700 ± 50 rpm
Accelerator pedal position sensor (1AZ–FSE)		
Voltage	ACCEL POS Released	0.5 to 1.1 V
	Depress	2.6 to 4.5 V
	ACCEL POS #2 Released	1.2 to 2.0 V
	Depress	3.4 to 5.3 V
Mass air flow meter		
Resistance	4 (THA) – 5 (E2)	
	at –20°C (–4°F)	13.6 to 18.4 kΩ
	at 20°C (68°F)	2.21 to .69 kΩ
	at 60°C (140°F)	0.49 to 0.67 kΩ
Camshaft timing oil control valve assy		
Resistance	at 20°C (68°F)	6.9 to 7.9 Ω
Throttle position sensor (1AZ–FE)		
Resistance	VC – E2	2.5 to 5.0 kΩ
Throttle body assy (1AZ–FSE)		
Resistance	2 (M+) – 1 (M–)	0.3 to 100 Ω at 20°C (68°F)
E.F.I. Engine coolant temperature sensor		
Resistance	Approx. 20°C (68°F)	2.32 to 2.59 kΩ
	Approx. 80°C (176°F)	0.310 to 0.326 kΩ
Knock control sensor		
Resistance	Approx. 20°C (68°F)	120 to 280 kΩ

1CD–FTV:

Mass air flow meter		
Resistance	2 (THA) – 1 (E2)	
	at –20°C (–4°F)	12.5 to 16.9 kΩ
	at 20°C (68°F)	2.19 to 2.67 kΩ
	at 60°C (140°F)	0.50 to 0.68 kΩ
Intake shutter assy		
Resistance	at 20°C (68°F)	
	2 – 1, 3	18 to 22 Ω
	5 – 4, 6	18 to 22 Ω
Accelerator pedal assy (See page 10–56)		
Resistance	VPA1 – EP1	5.0 kΩ or less
	VPA2 – EP2	5.0 kΩ or less
	VCP1 – EP1	1.5 to 6.0 kΩ
	VCP2 – EP2	1.5 to 6.0 kΩ
Diesel turbo inlet air temperature sensor		
Resistance	Approx. 20°C (68°F)	2.21 to 2.65 kΩ
Crankshaft position sensor		
Resistance	at cold	1630 to 2740 Ω
	at hot	2065 to 3225 Ω
Camshaft position sensor		
Resistance	at cold	1630 to 2740 Ω
	at hot	2065 to 3225 Ω
Diesel engine engine coolant temperature sensor		
Resistance	Approx. 20°C (68°F)	2.32 to 2.59 kΩ
	Approx. 80°C (176°F)	0.310 to 0.326 kΩ
Injection or supply pump assy		
Resistance	THF – E2	
	Approx. 20°C (68°F)	2.21 to 2.69 kΩ
	Approx. 80°C (176°F)	0.287 to 0.349 kΩ

031DZ–02

TORQUE SPECIFICATION

1ZZ–FE/3ZZ–FE:

Part Tightened	N·m	kgf·cm	ft·lbf
Throttle position sensor x Throttle body assy	2.0	20	18 in.·lbf
ISC valve x Throttle body assy	3.7	38	33 in.·lbf
Accelerator control cable bracket x Throttle body assy	13	133	10
Throttle body assy x Intake manifold	30	306	22
Throttle body bracket x Cylinder block sub–assy (1ZZ–FE)	30	306	22
Manifold stay No. 2 x Throttle body assy (M/T)	13	133	10
Accelerator control cable assy x Accelerator control cable bracket	13	129	9
Air cleaner hose No. 1 x Throttle body assy	1.5	15	13 in.·lbf
Cylinder head cover No. 2 x Cylinder head cover sub–assy	7.0	71	62 in.·lbf
Knock sensor x Cylinder block sub–assy	20	204	15

1AZ–FE:

Part Tightened	N·m	kgf·cm	ft·lbf
Throttle body assy x Intake manifold	30	306	22
Accelerator control cable assy x Throttle body assy	13	129	9
Engine cover sub–assy No. 1 x Cylinder head cover sub–assy	7.0	71	62 in.·lbf
Knock sensor x Cylinder block sub–assy	20	204	15
Intake manifold x Cylinder head sub–assy	30	306	22
Variable resister x Body (Leaded gasoline (Steering position LHD))	5.0	51	44 in.·lbf

1AZ–FSE:

Part Tightened	N·m	kgf·cm	ft·lbf
Throttle body assy x Intake manifold	9.0	92	80 in.·lbf
Throttle body bracket x Throttle body assy	21	210	15
Throttle body bracket x Cylinder head sub–assy	21	210	15
Ground terminal x Throttle body bracket	8.4	86	74 in.·lbf
Wire harness protector x Throttle body bracket	8.4	86	74 in.·lbf
Air cleaner hose No. 1 x Throttle body assy	1.5	15	13 in.·lbf
Engine cover sub–assy No. 1 x Cylinder head cover sub–assy	7.0	71	62 in.·lbf
Accelerator pedal x Body	5.4	55	48 in.·lbf
Knock control sensor x Cylinder block	20	204	15
Engine cover bracket x Cylinder head	38	388	28

1CD–FTV:

Part Tightened	N·m	kgf·cm	ft·lbf
Intake shutter assy x Intake air connector	21	214	15
Engine cover No. 1 x Cylinder head cover sub–assy	8.0	82	71 in.·lbf
Engine cover No. 1 x Intake manifold	8.0	82	71 in.·lbf
Air tube No. 2 x Transmission	25	255	18
Air tube No. 1 x Air tube No. 2	25	255	18
Camshaft position sensor x Camshaft oil seal retainer	8.8	90	79 in.·lbf
Return tube sub–assy x Engine hanger No. 1	9.0	92	80 in.·lbf
Crankshaft position sensor x Oil pump assy	8.8	90	79 in.·lbf
ECM x Body	5.5	56	49 in.·lbf

FUEL

031E0–01

SERVICE DATA

GASOLINE:

Compression spring		
Free length	Minimum Front x Manifold (1ZZ–FE/3ZZ–FE)	41.5 mm (1.634 in.)
	Front x Tail (1ZZ–FE/3ZZ–FE)	38.5 mm (1.516 in.)
	Center x Tail (1AZ–FE/1AZ–FSE)	38.5 mm (1.516 in.)

031E1–02

TORQUE SPECIFICATION

1ZZ–FE/3ZZ–FE:

Part Tightened		N·m	kgf·cm	ft·lbf
Fuel delivery pipe sub–assy x Cylinder head sub–assy	Bolt A	19	194	14
	Bolt B	9.0	92	80 in.·lbf

1AZ–FE:

Part Tightened	N·m	kgf·cm	ft·lbf
Fuel delivery pipe sub–assy x Cylinder head sub–assy	20	204	15
Fuel pressure pulsation damper assy x Fuel delivery pipe sub–assy	9.0	92	80 in.·lbf

1AZ–FSE:

Part Tightened		N·m	kgf·cm	ft·lbf
Cylinder head cover x Fuel pump assy		25	255	18
Fuel pipe sub–assy No.1 x Fuel delivery pipe sub–assy		9.0	92	80 in.·lbf
Fuel pipe sub–assy No.1 x Fuel pump assy		30	306	22
Fuel pressure pulsation damper assy x Fuel pump assy		33	331	24
Engine cover bracket x Cylinder head		38	388	28
Engine cover sub–assy No.1 x Cylinder head cover		7.0	71	62 in.·lbf
Nozzle holder clamp x Cylinder head		13	127	9
Fuel delivery pipe sub–assy x Cylinder head		19	194	14
Surge tank stay No.1 x Cylinder block		21	210	15
Intake manifold x Cylinder head	Stud bolt	9.5	97	84 in.·lbf
	Bolt	30	306	22
	Nut	30	306	22

GASOLINE:

Part Tightened	N·m	kgf·cm	ft·lbf
Fuel tank band sub–assy No. 1 LH x Body	40	400	29
Fuel tank band sub–assy No. 1 RH x Body	40	400	29
Parking brake cable assy No. 3 x Body	5.0	51	44 in.·lbf
Parking brake cable assy No. 2 x Body	5.0	51	44 in.·lbf
Fuel tank protector No. 1 x Body	5.4	54	47 in.·lbf
Fuel tank protector No. 1 x Fuel tank band sub–assy No. 1 RH	5.4	54	47 in.·lbf
Exhaust pipe assy front x Exhaust manifold (1ZZ–FE/3ZZ–FE)	43	440	33
Exhaust pipe assy front x Exhaust pipe assy tail (1ZZ–FE/3ZZ–FE)	43	440	33
Exhaust pipe assy center x Exhaust pipe assy front (1AZ–FE/1AZ–FSE)	43	440	33
Exhaust pipe assy center x Exhaust pipe assy tail (1AZ–FE/1AZ–FSE)	43	440	33

1CD–FTV:

Part Tightened		N·m	kgf·cm	ft·lbf
Nozzle holder clamp x Cylinder head sub–assy		26	265	19
Nozzle leakage pipe assy x Injector assy	Hollow screw	18	184	13
	Union bolt	22	224	16
Nozzle leakage pipe No. 2 x Cylinder head sub–assy	Hollow screw	21	214	16
	Bolt	8.8	90	79 in.·lbf
Injection pipe sub–assy No. 1 – No. 4 x Injector assy				
	Used pipe using SST	42	428	31
	Used pipe not using SST	46	469	34
	New pipe using SST	31	316	23
	New pipe not using SST	34	347	25
Injection pipe sub–assy No. 1 – No. 4 x Common rail assy				
	Used pipe using SST	42	428	31
	Used pipe not using SST	46	469	34
	New pipe using SST	31	316	23
	New pipe not using SST	34	347	25

Part Tightened	N·m	kgf·cm	ft·lbf
Injection pipe clamp No. 2 x Intake manifold	5.0	51	44 in.·lbf
Fuel inlet pipe sub–assy x Common rail assy			
Used pipe using SST	42	428	31
Used pipe not using SST	46	469	34
New pipe using SST	31	316	23
New pipe not using SST	34	347	25
Fuel inlet pipe sub–assy x Injection pump assy			
Used pipe using SST	42	428	31
Used pipe not using SST	46	469	34
New pipe using SST	31	316	23
New pipe not using SST	34	347	25
Air cleaner case x Body	7.0	71	62 in.·lbf
Air cleaner case x Transverse engine engine mounting bracket	7.0	71	62 in.·lbf
Engine cover No. 1 x Cylinder head cover sub–assy	8.0	82	71 in.·lbf
Engine cover No. 1 x Intake manifold	8.0	82	71 in.·lbf
Vacuum reservoir sub–assy x Cowl top panel outer	8.3	85	74 in.·lbf
Injection pump assy x Water pump assy	21	210	15
Injection pump drive pulley x Injection pump assy	64	650	47
Intake manifold insulator No. 1 x Intake manifold	5.0	51	44 in.·lbf
Common rail assy x Cylinder head sub–assy	43	438	32
Transverse engine engine mounting bracket x Water pump assy	64	650	47
Transverse engine engine mounting bracket x Cylinder block sub–assy	37	375	27
Idler pulley sub–assy x V–ribbed belt tensioner assy	40	408	30
Battery clamp sub–assy x Body	5.0	51	44 in.·lbf
Front wheel	103	1,050	76
Fuel filter assy x Fuel filter support	18	178	13

DIESEL:

Part Tightened	N·m	kgf·cm	ft·lbf
Fuel tank band sub–assy x Body	40	400	29
Parking brake cable assy x Body	5.4	55	48 in.·lbf
Fuel tank protector No. 1 x Body	5.4	55	48 in.·lbf
Fuel tank protector No. 1 x Fuel tank band sub–assy No. 1	5.4	55	48 in.·lbf

EMISSION CONTROL

031FP–01

SERVICE DATA

1ZZ–FE/3ZZ–FE:

Heated oxygen sensor		
Resistance	Bank 1 sensor 1	
	1 (HT1A) – 2 (+B)	5 to 10 Ω at 20°C (68°F)
	1 (HT1A) – 4 (E1)	No continuity
Heated oxygen sensor		
Resistance	Bank 1 sensor 2	
	1 (HT1A) – 2 (+B)	5 to 10 Ω at 20°C (68°F)
	1 (HT1A) – 4 (E1)	No continuity
Vacuum switching valve		
Resistance	at 20°C (68°F)	26 to 30 Ω

1AZ–FE:

Vacuum switching valve assy No. 1		
Resistance	at 20°C (68°F)	26 to 30 Ω
Heated oxygen sensor		
Resistance	1 (HT) – 2 (+B)	11 to 16 Ω at 20°C (68°F)
Resistance	1 (HT) – 4 (E1)	No continuity
Air fuel ratio sensor		
Resistance	1 (HT) – 2 (+B)	1.8 to 3.4 Ω at 20°C (68°F)
	1 (HT) – 2 (+B)	5.0 to 7.5 Ω at 500°C (932°F)
	1 (HT) – 4 (E1)	No continuity

1AZ–FSE:

Vacuum switching valve assy No. 1		
Resistance	at 20°C (68°F)	26 to 30 Ω
Heated oxygen sensor		
Resistance	1 (HT) – 2 (+B)	11 to 16 Ω at 20°C (68°F)
Resistance	1 (HT) – 4 (E1)	No continuity

1CD–FTV:

EGR valve assy		
Resistance	+B1 – EGR1	19.6 ± 1.4 Ω at 20°C (68°F)
	+B1 – EGR2	19.6 ± 1.4 Ω at 20°C (68°F)
	+B1 – EGR3	19.6 ± 1.4 Ω at 20°C (68°F)
	+B1 – EGR4	19.6 ± 1.4 Ω at 20°C (68°F)
Vacuum switching valve assy		
Resistance	at 20°C (68°F)	10 to 14 Ω

INTAKE

031FQ–01

SERVICE DATA

1AZ–FSE:

Vacuum switching valve assy No. 1		
Resistance	at 20°C (68 °F)	33 to 39 Ω

1CD–FTV:

Turbocharging pressure		
Standard pressure		15 to 45 kPa (0.15 to 0.46 kgf/cm^2, 2.2 to 6.5 psi)
Turbo pressure sensor		
Voltage	3 (VC) – 1 (E2)	4.5 to 5.5 V
Voltage drop	apply vacuum 13.3 kPa (100 mmHg, 3.94 in.Hg)	0.1 to 0.3 V
	apply vacuum 26.7 kPa (200 mmHg, 7.87 in.Hg)	0.3 to 0.5 V
	apply vacuum 40.0 kPa (300 mmHg, 11.81 in.Hg)	0.5 to 0.7 V
	apply vacuum 57.3 kPa (400 mmHg, 15.75 in.Hg)	0. 7 to 0.9 V
	apply vacuum 66.7 kPa (500 mmHg, 19.96 in.Hg)	0. 9 to 1.0 V
Voltage up	applied vacuum 19.6 kPa (0.20 kgf/cm2, 2.84 psi)	0.1 to 0.4 V
	applied vacuum 39.2 kPa (0.40 kgf/cm2, 5.69psi)	0.4 to 0.7 V
	applied vacuum 58.8 kPa (0.60 kgf/cm2, 8.53psi)	0.7 to 1.0 V
	applied vacuum 78.5 kPa (0.80 kgf/cm2, 11.4psi)	1.0 to 1.3 V
	applied vacuum 98.0 kPa (1.00 kgf/cm2, 14.2psi)	1.3 to 1.6 V

031FR–02

TORQUE SPECIFICATION

1CD–FTV:

Part Tightened		N·m	kgf·cm	ft·lbf
Turbo water pipe sub–assy No.1 x Turbocharger sub–assy		13	135	9.7
Turbocharger sub–assy x Exhaust manifold		53	540	39
Turbo oil outlet pipe x Turbocharger sub–assy		13	135	9.7
Manifold converter sub–assy x Turbocharger sub–assy	1st	8.0	82	71 in.·lbf
	2nd	25	255	18
Manifold stay x Manifold converter sub–assy	1st	8.0	82	71 in.·lbf
	2nd	61	622	45
Manifold stay x Cylinder block sub–assy	1st	8.0	82	71 in.·lbf
	2nd	61	622	45
Turbohcharger stay x Turbocharger sub–assy	1st	8.0	82	71 in.·lbf
	2nd	56	571	41
Turbocharger stay x Cylinder head sub–assy	1st	8.0	82	71 in.·lbf
	2nd	56	571	41
Manifold stay No. 2 x Manifold converter sub–assy	1st	8.0	82	71 in.·lbf
	2nd	56	571	41
Manifold stay No. 2 x Cylinder head sub–assy	1st	8.0	82	71 in.·lbf
	2nd	56	571	41
Exhaust manifold heat insulator No. 2 x Turbocharger sub–assy		12	122	8.9
Turbo insulator No. 1 x Manifold converter sub–assy		20	204	15
Turbo insulator No. 1 x Turbocharger sub–assy		20	204	15
Turbo insulator No. 2 x Manifold converter sub–assy		20	204	15
Exhaust pipe assy x Heater bracket sub–assy	w/ Cold area	7.5	76	66 in.·lbf
Exhaust pipe assy x Body	w/ Cold area	7.5	76	66 in.·lbf
Heater bracket x Body	w/ Cold area	7.5	76	66 in.·lbf
Heater pump assy x Heater bracket	w/ Cold area	7.5	76	66 in.·lbf
Air tube No. 1 x Air tube No. 2		25	255	18
Air tube No. 1 x Intake air connector		25	255	18
Air tube No. 1 x Cylinder head cover		25	255	18
Air tube No. 1 x Engine mounting bracket FR		25	255	18
Air cleaner case x Body		7.0	71	62 in.·lbf
Intercooler assy x Body		7.0	71	62 in.·lbf
Intercooler cooling air duct x Intercooler assy		5.0	51	44 in.·lbf
Air cleaner case x Engine mounting insulator LH		7.0	71	62 in.·lbf
Engine cover No. 1 x Cylinder head cover sub–assy		8.0	82	71 in.·lbf
Engine cover No. 1 x Intake manifold		8.0	82	71 in.·lbf
Vacuum reservoir sub–assy x Cowl top panel outer		8.3	85	73 in.·lbf

ENGINE MECHANICAL

031H1–01

SERVICE DATA

1ZZ–FE/3ZZ–FE:

Ignition timing	w/ Terminal TC and CG of DLC3 connected	8 to 12° BTDC
	W/ Terminal TC and CG of DLC3 disconnected	10 to 18° BTDC (1ZZ–FE) 3.5 to 11.5° BTDC (3ZZ–FE)
Idle speed		600 to 700 rpm
Compression		
Compression pressure		1,300 kPa (13.3 kgf·cm^2, 189 psi)
Minimum pressure		1,000 kPa (10.2 kgf·cm^2, 145 psi)
Difference between each cylinder		100 kPa (1.0 kgf·cm^2, 14 psi)
Cylinder head set bolt Length	Standard	146.8 to 148.2 mm (5.780 to 5.835 in.)
	Maximum	148.5 mm (5.846 in.)
Valve clearance (Cold)		
No. 1 Cylinder TDC/Compression	Intake	0.15 to 0.25 mm (0.0059 to 0.0098 in.)
	Exhaust	0.25 to 0.35 mm (0.0098 to 0.0138 in.)
No. 4 Cylinder TDC/Compression	Intake	0.15 to 0.25 mm (0.0059 to 0.0098 in.)
	Exhaust	0.25 to 0.35 mm (0.0098 to 0.0138 in.)

1AZ–FE:

Battery specific gravity	at 20°C (68°F)	1.25 to 1.29
Ignition timing	w/ Terminals TC and CG of DLC3 connected	8 to 12° BTDC
	w/ Terminals TC and CG of DLC3 disconnected	5 to 15° BTDC
Idle speed		650 to 750 rpm
Compression		
	Compression pressure	1,300 kPa (13.3 kgf/cm^2, 189 psi)
	Minimum pressure	1,000 kPa (10.2 kgf/cm^2, 145 psi)
	Difference between each cylinder	100 kPa (1.0 kgf/cm^2, 14 psi)
Cylinder head set bolt		
Bolt length	Standard	161.3 to 162.3 mm (6.350 to 6.390 in.)
	Maximum	164.2 mm (6.465 in.)
Valve clearance		
Intake	(Cold)	0.19 to 0.29 mm (0.0075 to 0.0114 in.)
Exhaust		0.30 to 0.40 mm (0.0118 to 0.0157 in.)

1AZ–FSE:

Battery specific gravity	at 20°C (68°F)	1.25 to 1.29
Ignition timing	w/ Terminals TC and CG of DLC3 connected	8 to 12° BTDC
	w/ Terminals TC and CG of DLC3 disconnected	5 to 23° BTDC
Idle speed		625 to 725 rpm
Compression		
	Compression pressure	1,300 kPa (13.3 kgf/cm^2, 189 psi)
	Minimum pressure	1,000 kPa (10.2 kgf/cm^2, 145 psi)
	Difference between each cylinder	100 kPa (1.0 kgf/cm^2, 14 psi)
Cylinder head set bolt		
Bolt length	Standard	161.3 to 162.3 mm (6.350 to 6.390 in.)
	Maximum	164.2 mm (6.465 in.)
Valve clearance		
Intake	(Cold)	0.19 to 0.29 mm (0.0075 to 0.0114 in.)
Exhaust		0.30 to 0.40 mm (0.0118 to 0.0157 in.)

1CD–FTV:

New drive belt deflection	Pressing force: 98 N (10 kgf, 22 lbf)	
	For vane pump V belt (A/C equipped)	9.5 to 11.5 mm (0.37 to 0.45 in.)
	For vane pump V belt (A/C not equipped)	10 to 12 mm (0.39 to 0.47 in.)
Used drive belt deflection	Pressing force: 98 N (10 kgf, 22 lbf)	
	For vane pump V belt (A/C equipped)	12.5 to 15.5 mm (0.49 to 0.61 in.)
	For vane pump V belt (A/C not equipped)	14 to 17 mm (0.55 to 0.67 in.)
New drive belt tension		
	For vane pump V belt (A/C equipped)	519 to 755 N (53 to 77 kgf, 117 to 170 lbf)
	For vane pump V belt (A/C not equipped)	686 to 784 N (70 to 80 kgf, 154 to 176 lbf)
Used drive belt tension		
	For vane pump V belt (A/C equipped)	196 to 392 N (20 to 40 kgf, 44 to 88 lbf)
	For vane pump V belt (A/C not equipped)	294 to 441 N (30 to 45 kgf, 66 to 99 lbf)
Idle speed		750 to 850 rpm.
Maximum speed		5,100 to 5,250 rpm.
Compression pressure		
	at 250 rpm.	2,628 kPa (26.8 kgf/cm2, 381 psi) or more
	Minimum	2,157 kPa (22.0 kgf/cm2, 312 psi) or more
Difference between each cylinder		490 kPa (5.0 kgf/cm2, 71 psi) or less
Cylinder head set bolt		
Outside diameter	Standard	10.75 to 11.00 mm (0.4232 to 0.4331 in.)
	Minimum	10.40 mm (0.4904 in.)
Valve clearance		
Intake	(cold)	0.20 to 0.30 mm (0.008 to 0.012 in.)
Exhaust		0.35 to 0.45 mm (0.014 to 0.018 in.)
Adjusting shim thickness	Mark 2.500	2.500 mm (0.0984 in.)
	Mark 2.550	2.550 mm (0.1004 in.)
	Mark 2.600	2.600 mm (0.1024 in.)
	Mark 2.650	2.650 mm (0.1043 in.)
	Mark 2.700	2.700 mm (0.1063 in.)
	Mark 2.750	2.750 mm (0.1083 in.)
	Mark 2.800	2.800 mm (0.1102 in.)
	Mark 2.850	2.850 mm (0.1122 in.)
	Mark 2.900	2.900 mm (0.1142 in.)
	Mark 2.950	2.950 mm (0.1161 in.)
	Mark 3.000	3.000 mm (0.1181 in.)
	Mark 3.050	3.050 mm (0.1201 in.)
	Mark 3.100	3.100 mm (0.1220 in.)
	Mark 3.150	3.150 mm (0.1240 in.)
	Mark 3.200	3.200 mm (0.1260 in.)
	Mark 3.250	3.250 mm (0.1280 in.)
	Mark 3.300	3.300 mm (0.1299 in.)
Cylinder head set bolt		
Outside diameter	Standard	10.75 to 11.00 mm (0.4232 to 0.4331 in.)
	Minimum	10.40 mm (0.4904 in.)

031H2–01

TORQUE SPECIFICATION

1ZZ–FE/3ZZ–FE:

Part Tightened		N·m	kgf·cm	ft·lbf
Camshaft bearing cap No. 3 x Cylinder head sub–assy		13	133	10
Camshaft bearing cap No. 1 x Cylinder head sub–assy		23	235	17
Camshaft timing gear or sprocket x Camshaft No. 2		54	551	40
Chain tensioner assy No. 1 x Timing chain or belt cover sub–assy		9.0	92	80 in.·lbf
V–ribbed belt tensioner assy x Cylinder block sub–assy		69	704	51
V–ribbed belt tensioner assy x Cylinder head sub–assy		29	296	21
Engine mounting insulator RH x Body		52	530	38
Engine mounting insulator RH x Transverse engine engine mounting bracket		52	530	38
Cylinder head cover sub–assy x Cylinder head sub–assy	A B	11 9.0	112 92	8 80 in.·lbf
Cylinder head cover sub–assy x Timing chain or belt cover sub–assy		11	112	8
Ignition coil assy x Cylinder head cover sub–assy		9.0	92	80 in.·lbf
Engine wire x Cylinder head cover sub–assy		9.0	92	80 in.·lbf
Cylinder head cover No. 2 x Cylinder head cover sub–assy		7.0	71	62 in.·lbf
Engine hanger x Cylinder head sub–assy		38	387	28
Radio setting condenser x Cylinder head sub–assy		10	102	7
Engine coolant temperature sensor x Cylinder head sub–assy		20	204	15
Exhaust manifold x Cylinder head sub–assy		37	377	27
Exhaust manifold heat insulator No. 1 x Exhaust manifold	Bolt Nut	18 12	184 122	13 9
Manifold stay No. 2 x Exhaust manifold		49	500	36
Manifold stay No. 2 x Cylinder block sub–assy		49	500	36
Manifold stay x Exhaust manifold	A	49	500	36
Manifold stay x Cylinder block sub–assy	B	37	377	27
Transverse engine engine mounting bracket x Timing chain or belt cover sub–assy		47	479	35
V–ribbed idler assy No.1 x Cylinder block sub–assy		39.2	400	29
Knock sensor x Cylinder block sub–assy		20	204	15
Crankshaft position sensor x Timing chain or belt cover		9.0	92	80 in.·lbf
Camshaft position sensor x Cylinder head sub–assy		9.0	92	80 in.·lbf
Water inlet x Cylinder block sub–assy		11	112	8
Water by–pass pipe No. 1 x Cylinder block sub–assy		9.0	92	80 in.·lbf
Water by–pass pipe No. 1 x Cylinder head sub–assy		9.0	92	80 in.·lbf
Oil level gage guide x Water by–pass pipe No. 1		13	133	10
Intake manifold x Cylinder head sub–assy		30	306	22
Flywheel sub–assy x Crankshaft	1st 2nd	49 Turn 90°	500 Turn 90°	36 Turn 90°
Drive plate & ring gear sub–assy x Crankshaft		88	897	65
Transverse engine engine mounting bracket front x Transverse engine engine mounting insulator front		52	530	38
Transverse engine engine mounting bracket rear x Transverse engine engine mounting insulator rear		87	887	64
Transverse engine engine mounting bracket LH x Transverse engine engine mounting insulator LH		80	816	59
Transverse engine engine mounting bracket RH x Transverse engine engine mounting insulator RH		52	530	38
Front suspension crossmember sub–assy x Body	A B	45 133	459 1,356	33 98
Front suspension member brace x Body	Bolt A Bolt B	133 80	1,356 816	98 59

Part Tightened		N·m	kgf·cm	ft·lbf
Floor panel brace front x Body		30	306	22
Battery carrier x Body		12.8	131	9
Battery x Body		5.0	51	44 in.·lbf
Air cleaner case x Body		5.0	51	44 in.·lbf
Air cleaner case x Transverse engine engine mounting bracket LH		5.0	51	44 in.·lbf
Radiator support upper x Body		19	194	14
Front wheel RH & LH x Front axle hub sub–assy RH & LH		103	1,050	76
Camshaft timing gear assy x Camshaft		54	551	40
Chain tensioner slipper x Cylinder block sub–assy		19	194	14
Timing chain or belt cover sub–assy x Cylinder head sub–assy		13	133	10
Timing chain or belt cover sub–assy x Cylinder block sub–assy	M6 M8	13 19	133 194	10 14
Crankshaft pulley x Crankshaft		138	1,407	102
Cylinder head sub–assy x Cylinder block sub–assy	1st 2nd	49 Turn 90°	500 Turn 90°	36 Turn 90°
Camshaft timing oil control valve assy x Cylinder head sub–assy		9.0	92	80 in.·lbf
Chain vibration damper No. 1 x Cylinder head sub–assy		9.0	92	80 in.·lbf
Chain vibration damper No. 1 x Cylinder block sub–assy		9.0	92	80 in.·lbf

1AZ–FE:

Part Tightened		N·m	kgf·cm	ft·lbf
Front wheel RH		103	1,050	76
Drain plug (M/T)		49	500	36
Engine hanger No.1 x Cylinder head		38	387	28
Engine hanger No.2 x Cylinder head		38	387	28
Engine coolant temperature sensor x Cylinder head		20	208	15
Knock sensor x Cylinder block		20	208	15
Engine oil pressure switch assy x Cylinder head		15	153	11
Water by–pass pipe No.1 x Cylinder block		9.0	92	80 in.·lbf
Drive shaft bearing bracket x Cylinder block		54	551	40
V–ribbed belt tensioner assy x Timing chain cover		60	607	44
Ignition coil assy x Cylinder head		9.0	92	80 in.·lbf
Water inlet x Cylinder block		9.0	92	80 in.·lbf
Exhaust manifold converter x Cylinder head		37	378	27
Exhaust manifold stay x Exhaust manifold converter		44	449	32
Manifold converter insulator No. 1 x Exhaust manifold converter		12	122	9
Intake manifold x Cylinder head		30	306	22
Fly wheel (M/T) x Crank shaft		130	1,327	96
Drive plate & ring gear (A/T) x Crankshaft		98	1,000	72
Transverse engine engine mounting bracket front x Transverse engine engine mounting insulator front		87	887	64
Transverse engine engine mounting bracket rear x Transverse engine engine mounting insulator rear		87	887	64
Front suspension cross member sub–assy front x Body	Front Rear	45 133	459 1,356	33 98
Front suspension brace RH x Frame	Bolt A Bolt B	133 80	1,356 816	98 59
Front suspension brace LH x Frame	Bolt A Bolt B	133 80	1,356 816	98 59
Transverse engine engine mounting insulator LH x Engine mounting bracket LH		87	887	64
Transverse engine engine mounting insulator RH x Engine mounting bracket RH		52	530	38

Part Tightened		N·m	kgf·cm	ft·lbf
Engine mounting bracket x No, 2 RH x Transverse engine engine mounting insulator	A	52	530	38
	B	113	1,152	83
Clutch release cylinder x manual transaxle	Bolt A	12	122	89
	Bolt B	9.0	92	80 in.·lbf
	Bolt C	5.0	51	44 in.·lbf
Vane pump assy x Timing chain cover		43	439	31
Front suspension arm sub–assy lower No. 1 x Lower ball joint		127	1,296	94
Front stabilizer link assy x Front suspension		74	755	55
Floor panel brace front x Floor		30	306	22
Engine service cover bracket RH x Body				
	w/o Air conditioning	9.0	92	80 in.·lbf
	RHD (w/ Air conditioning) steering position type	9.0	92	80 in.·lbf
Cooler bracket x Body	LHD (w/ Air conditioning) steering position type	9.0	92	80 in.·lbf
Oil reservoir bracket No. 1 x Body		8.0	82	71 in.·lbf
Return tube sub–assy x Frame		8.0	82	71 in.·lbf
Radiator reserve tank x sub–assy x body		5.0	51	44 in.·lbf
Compressor and magnetic clutch x Cylinder block	w/ Air conditioning	25	255	18
Radiator relay block x Frame		5.0	51	44 in.·lbf
Engine cover No. 1 x Cylinder head cover		7.0	71	62 in.·lbf
Air cleaner assy x Body		5.0	51	44 in.·lbf
Cylinder head x Cylinder block	1st	79	806	58
	2nd	Turn 90°	Turn 90°	Turn 90°
Camshaft timing control valve assy x Cylinder head		9.0	92	80 in.·lbf
Camshaft timing gear assy x Camshaft		54	551	40
Camshaft timing sprocket x Camshaft		54	551	40
Camshaft bearing cap No. 1 x Cylinder head		30	301	22
Camshaft bearing cap No. 2 x Cylinder head		30	301	22
Camshaft bearing cap No. 3 x Cylinder head		9.0	92	80 in.·lbf
Chain tensioner assy No. 1 x Timing chain cover		9.0	92	80 in.·lbf
Chain tensioner plate x Stiffening crankcase assy		12	122	9
Oil pump drive sprocket x Oil pump		30	301	22
Chain vibration damper No. 1 x Cylinder head		9.0	92	80 in.·lbf
Chain vibration damper No. 1 x Cylinder block		9.0	92	80 in.·lbf
Timing chain guide x Cylinder block		9.0	92	80 in.·lbf
Chain tensioner slipper x Cylinder block		19	194	14
Timing chain cover (See page 14–139)	Bolt A	9.0	92	80 in.·lbf
	Bolt B	21	214	15
	Bolt C	43	438	32
	Nut	9.0	92	80 in.·lbf
Oil pan x Stiffening crankcase assy		9.0	92	80 in.·lbf
Oil pan drain plug x Oil pan		25	255	18
Crankshaft pulley x Crankshaft		170	1,733	125
Cylinder head cover x Cylinder head	Bolt A	11	112	8.0
	Bolt B	14	143	10
	Bolt C	21	214	15

1AZ–FSE:

Part Tightened	N·m	kgf·cm	ft·lbf
Front wheel RH	103	1,050	76
Drain plug (M/T)	49	500	36
Engine hanger No.1 x Cylinder head	38	387	28
Engine hanger No.2 x Cylinder head	38	387	28
Engine coolant temperature sensor x Cylinder head	20	208	15

Part Tightened		N·m	kgf·cm	ft·lbf
Knock sensor x Cylinder block		20	208	15
Engine oil pressure switch assy x Cylinder head		15	153	11
Water by–pass pipe No.1 x Cylinder block		9.0	92	80 in.·lbf
Drive shaft bearing bracket x Cylinder block		54	551	40
Oil level gauge guide x Cylinder block		9.0	92	80 in.·lbf
V–ribbed belt tensioner assy x Timing chain cover		60	607	44
Ignition coil assy x Cylinder head		9.0	92	80 in.·lbf
Water inlet x Cylinder block		9.0	92	80 in.·lbf
Exhaust manifold converter x Cylinder head		37	378	27
Exhaust manifold stay x Exhaust manifold converter		44	449	32
Manifold converter insulator No. 1 x Exhaust manifold converter		12	122	9
Surge tank stay No. 1 x Intake manifold		21	210	15
Intake manifold x Cylinder head		30	306	22
Throttle Body bracket x Throttle body		21	210	15
Fly wheel (M/T) x Crank shaft		130	1,327	96
Drive plate & ring gear (A/T) x Crankshaft		98	1,000	72
Transverse engine engine mounting bracket front x Transverse engine engine mounting insulator front		87	887	64
Transverse engine engine mounting bracket rear x Transverse engine engine mounting insulator rear		87	887	64
Front suspension cross member sub–assy front x Body	Front Rear	45 133	459 1,356	33 98
Front suspension brace RH x Frame	Bolt A Bolt B	133 80	1,356 816	98 59
Front suspension brace LH x Frame	Bolt A Bolt B	133 80	1,356 816	98 59
Transverse engine engine mounting insulator LH x Engine mounting bracket LH		87	887	64
Transverse engine engine mounting insulator RH x Engine mounting bracket RH		52	530	38
Engine mounting bracket x No, 2 RH x Transverse engine engine mounting insulator	A B	52 113	530 1,152	38 83
Clutch release cylinder x manual transaxle	Bolt A Bolt B Bolt C	12 9.0 5.0	122 92 51	89 80 in.·lbf 44 in.·lbf
Vane pump assy x Timing chain cover		43	439	31
Front suspension arm sub–assy lower No. 1 x Lower ball joint		127	1,296	94
Front stabilizer link assy x Front suspension		74	755	55
Floor panel brace front x Floor		30	306	22
Engine service cover bracket RH x Body	RHD steering position type	9.0	92	80 in.·lbf
Cooler bracket x Body	LHD steering position type	9.0	92	80 in.·lbf
Oil reservoir bracket No. 1 x Body		8.0	82	71 in.·lbf
Return tube sub–assy x Frame		8.0	82	71 in.·lbf
Radiator reserve tank x sub–assy x body		5.0	51	44 in.·lbf
Compressor and magnetic clutch x Cylinder block		25	255	18
Radiator relay block x Frame		5.0	51	44 in.·lbf
Engine cover No. 1 x Cylinder head cover		7.0	71	62 in.·lbf
Air cleaner assy x Body		5.0	51	44 in.·lbf
Cylinder head x Cylinder block	1st 2nd	79 Turn 90°	806 Turn 90°	58 Turn 90°
Camshaft timing control valve assy x Cylinder head		9.0	92	80 in.·lbf
Camshaft timing gear assy x Camshaft		54	551	40

Part Tightened		N·m	kgf·cm	ft·lbf
Camshaft timing sprocket x Camshaft		54	551	40
Camshaft bearing cap No. 1 x Cylinder head		30	301	22
Camshaft bearing cap No. 2 x Cylinder head		30	301	22
Camshaft bearing cap No. 3 x Cylinder head		9.0	92	80 in.·lbf
Chain tensioner assy No. 1 x Timing chain cover		9.0	92	80 in.·lbf
Chain tensioner plate x Stiffening crankcase assy		12	122	9
Oil pump drive sprocket x Oil pump		30	301	22
Chain vibration damper No. 1 x Cylinder head		9.0	92	80 in.·lbf
Chain vibration damper No. 1 x Cylinder block		9.0	92	80 in.·lbf
Timing chain guide x Cylinder block		9.0	92	80 in.·lbf
Chain tensioner slipper x Cylinder block		19	194	14
Timing chain cover (See page 14–222)	Bolt A	9.0	92	80 in.·lbf
	Bolt B	21	214	15
	Bolt C	43	438	32
	Nut	9.0	92	80 in.·lbf
Oil pan x Stiffening crankcase assy		9.0	92	80 in.·lbf
Oil pan drain plug x Oil pan		25	255	18
Crankshaft pulley x Crankshaft		170	1,733	125
Cylinder head cover x Cylinder head	Bolt A	11	112	8.0
	Bolt B	14	143	10
	Bolt C	21	214	15

1CD–FTV:

Part Tightened		N·m	kgf·cm	ft·lbf
Idle pulley set nut		38	390	28
Air tube No. 1 x Air tube No. 2		25	255	18
Air tube No. 1 x Intake air connector		25	255	18
Air tube No. 1 x Cylinder head sub–assy		25	255	18
Air tube No. 1 x Engine mounting bracket FR		25	255	18
Engine cover No. 1 x Cylinder head cover sub–assy		8.0	82	71 in.·lbf
Engine cover No. 1 x Intake manifold		8.0	82	71 in.·lbf
Front wheel		103	1,050	76
Drain plug (Manual transaxle)		49	500	36
Engine hanger No.1 x Cylinder head		37	377	27
Engine hanger No.2 x Cylinder head		37	377	27
Engine hanger No. 1 UPR x Engine hanger No. 1		37	377	27
Engine coolant temperature sensor x Cylinder head		20	204	15
Crankshaft position sensor x Oil pump assy		8.8	90	78 in.·lbf
Camshaft position sensor x Camshaft oil seal retainer		8.8	90	78 in.·lbf
Fuel filler to injection pump fuel pipe x Cylinder block	M6 and Nut	8.8	90	78 in.·lbf
	M8	21	209	15
Oil cooler pipe x Cylinder block		59	600	43
Compressor mounting bracket x Cylinder block		42	428	31
Injection pump x Water pump		21	214	15
Oil level gage guide x Cylinder block		18	184	13
Timing belt No.3 cover x Cylinder head		7.4	75	65 in.·lbf
Intake manifold x Cylinder head		21	214	15
Wiring harness clamp bracket x Intake manifold		3.9 to 6.9	40 to 70	35 to 61 in.·lbf
Power steering idle pulley bracket x Cylinder head	Bolt A	72	734	53
	Bolt B	39	398	29
Intake manifold insulator No. 1 x Intake manifold		5.0	51	44 in.·lbf

Part Tightened		N·m	kgf·cm	ft·lbf
Injection pipe, Fuel inlet pipe x Common rail				
	Used pipe using SST	42	428	31
	Used pipe not using SST	46	469	34
	New pipe using SST	31	316	23
	New pipe not using SST	34	347	25
Injection pipe x Injector				
	Used pipe using SST	42	428	31
	Used pipe not using SST	46	469	34
	New pipe using SST	31	316	23
	New pipe not using SST	34	347	25
Injection pipe clamp x Intake manifold		5.0	51	44 in.·lbf
Fuel inlet pipe x Common rail				
	Used pipe using SST	42	428	31
	Used pipe not using SST	46	469	34
	New pipe using SST	31	316	23
	New pipe not using SST	34	347	25
Fuel inlet pipe x injection pump				
	Used pipe using SST	42	428	31
	Used pipe not using SST	46	469	34
	New pipe using SST	31	316	23
	New pipe not using SST	34	347	25
Nozzle leakage pipe No.2 x Cylinder head	Check valve	21	214	15
	Bolt	8.8	90	78 in.·lbf
Vacuum pump x Cylinder head		21	214	15
EGR valve assy x Cylinder head		18	184	13
Intake air connector with diesel throttle body x Intake manifold		21	214	15
Water inlet x Cylinder block		8.8	90	78 in.·lbf
Water outlet sub–assy x Cylinder head		21	214	15
Exhaust manifold x Cylinder head		47	479	35
EGR pipe sub–assy x Cylinder head	Bolt	37	375	27
	Nut	25	250	18
Oil filter bracket x Oil pan sub–assy		34	347	25
V–ribbed belt tensioner assy x Oil pump		31	316	23
Generator bracket No.1 x Cylinder block		37	377	27
Idler pulley Sub–assy x V–ribbed belt tensioner assy		40	408	30
Engine mounting bracket RR x Engine mounting insulator RR		64	653	47
Engine mounting bracket FR x Engine mounting insulator FR		64	653	47
Drive shaft bearing bracket x Cylinder block		64	653	47
Rear end plate x Cylinder block		8.4	86	74 in.·lbf
Flywheel x Crankshaft		71	720	52
Engine mounting member sub–assy center x Body		45	459	33
Front suspension crossmember sub–assy x Rear engine mounting bracket		87	887	64
Front suspension crossmember sub–assy x Front engine mounting bracket		52	530	38
Front suspension crossmember sub–assy x Body		133	1,356	98
Front suspension member brace x Front suspension crossmember sub–assy		133	1,356	98
Front suspension member brace x Body		80	816	59
Return tube sub–assy x Body		8.0	82	71 in.·lbf
Engine mounting insulator RH x Body		52	530	38
Engine mounting bracket LH x Engine mounting insulator LH		80	816	59
Injector driver x Engine mounting insulator RH		5.0	51	44 in.·lbf
Engine wire x Body		8.4	85	74 in.·lbf
Air tube No.2 x Manual transaxle		25	255	18
Relay box x Radiator assy		5.3	54	46 in.·lbf
Fuel filter assy x Fuel filter support		18	178	13

Part Tightened	N·m	kgf·cm	ft·lbf
Air cleaner assy x Body x Engine mounting bracket LH	7.0	71	62 in.·lbf
Engine cover No.1 x Cylinder head cover sub–assy	8.0	82	71 in.·lbf
Engine cover No. 1 x Intake manifold	8.0	82	71 in.·lbf
Timing belt tensioner x Cylinder block	21	214	15
Timing chain cover plate x Cylinder block	9.0	92	80 in.·lbf
Transverse engine engine mounting bracket x Cylinder block For 14 mm head bolt For 17 mm head bolt	 37 64	 375 650	 27 47
Timing belt No. 1 cover x Transverse engine engine mounting bracket	7.4	75	65 in.·lbf
Timing belt No. 1 cover x Oil pump assy	7.4	75	65 in.·lbf
Timing belt No. 2 cover x Transverse engine engine mounting bracket	7.4	75	65 in.·lbf
Timing belt No. 2 cover x Cylinder head cover sub–assy	7.4	75	65 in.·lbf
Timing belt No. 2 cover x Camshaft oil seal retainer	7.4	75	65 in.·lbf
Timing belt No. 2 cover x Timing belt cover No. 3	7.4	75	65 in.·lbf
Crankshaft pulley x Crankshaft	180	1,835	133
Engine mounting bracket No.2 RH x Transverse engine engine mounting bracket	52	530	38
Camshaft bearing cap x Cylinder head	20	204	15
Camshaft oil seal retainer x Cylinder head	8.8	90	78 in.·lbf
Camshaft timing pulley x Camshaft	88	899	65
Cylinder head cover x Cylinder head	13	135	9.7
Vacuum reservoir sub–assy x Cowl top panel outer	8.3	85	73 in.·lbf
Cylinder head x Cylinder block	45	459	33
Drain plug (oil pan)	34	350	25

EXHAUST

031E2–02

SERVICE DATA

1ZZ–FE/3ZZ–FE:

Compression spring		
Free length	Minimum Front x Manifold	41.5 mm (1.634 in.)
	Front x Tail	38.5 mm (1.516 in.)

1AZ–FE/1AZ–FSE:

Compression spring		
Free length	Minimum Front x Manifold	41.5 mm (1.634 in.)
	Center x Tail	38.5 mm (1.516 in.)

1CD–FTV:

Compression spring		
Minimum length	Exhaust pipe assy front x Exhaust manifold	41.5mm (1.634 in)
Compression spring		
Minimum length	Exhaust pipe assy front x Tail pipe assy	38.5mm (1.515 in)

031E3–02

TORQUE SPECIFICATION

1ZZ–FE/3ZZ–FE:

Part Tightened	N·m	kgf·cm	ft·lbf
Exhaust pipe assy front x Exhaust manifold	43	440	32
Exhaust pipe assy front x Exhaust pipe assy tail	43	440	32
Heated oxygen sensor x Exhaust pipe assy front	44	449	33
Floor panel brace front x Body	30	302	22

1AZ–FE/1AZ–FSE:

Part Tightened	N·m	kgf·cm	ft·lbf
Exhaust pipe assy front x Exhaust manifold	43	440	32
Exhaust pipe assy center x Exhaust pipe assy front	43	440	32
Exhaust pipe assy tail x Exhaust pipe assy center	43	440	32
Floor panel brace front x Body	30	302	22

1CD–FTV:

Part Tightened	N·m	kgf·cm	ft·lbf
Exhaust pipe assy front x Exhaust manifold	43	440	32
Exhaust pipe assy front x Tail pipe assy	43	440	32
Floor panel brace front x Body	30	302	22

COOLING

031H3–01

SERVICE DATA

1ZZ–FE/3ZZ–FE:

Thermostat		
Valve opening temperature		86 to 90°C (187 to 198°F)
Valve lift	at 95°C (203°F)	10 mm (0.394 in.) or more
Radiator cap sub–assy		
Standard opening pressure		74 to 103 kPa (0.75 to 1.05 kgf/cm2, 10.7 to 14.9 psi)
Minimum opening pressure		59 kPa (0.6 kgf/cm2, 8.6 psi)
Cooling fan		
Standard amperage	at 20°C (68°F)	8 to 12 A
Cooling fan relay		
Specified condition	Between terminals 1 and 2	Continuity
	Between terminals 3 and 5	No continuity
		Continuity (Apply battery voltage terminals 1 and 2)
Cooling fan relay No.2		
Specified condition	Between terminals 1 and 2	Continuity
	Between terminals 3 and 4	Continuity
	Between terminals 3 and 5	No continuity
		Continuity (Apply battery voltage terminals 1 and 2)

1AZ–FE:

Thermostat		
Valve opening temperature		80 to 84°C (176 to 183°F)
Valve lift	at 95°C (203°F)	10 mm (0.394 in.) or more
Radiator cap sub–assy		
Standard opening pressure		93 – 122 kPa (0.95 – 1.25 kgf/cm2, 13.4 – 17.6 psi)
Minimum opening pressure		78 kPa (0.8 kgf/cm2, 11.2 psi)
Cooling fan		
Standard amperage	at 20°C (68°F)	5.2 to 8.2 A (M/T) 8.3 to 11.3 (A/T)
Standard amperage (No.2 (With Air Conditioner))	at 20°C (68°F)	5.2 to 8.2 A (M/T) 8.3 to 11.3 (A/T)
Cooling fan relay		
Specified condition	Between terminals 1 and 2	Continuity
	Between terminals 3 and 5	No continuity
		Continuity (Apply battery voltage terminals 1 and 2)
Cooling fan relay No.2		
Specified condition	Between terminals 1 and 2	Continuity
	Between terminals 3 and 4	Continuity
	Between terminals 3 and 5	No continuity
		Continuity (Apply battery voltage terminals 1 and 2)
Cooling fan relay No.3		
Specified condition	Between terminals 1 and 2	Continuity
	Between terminals 3 and 5	No continuity
		Continuity (Apply battery voltage terminals 1 and 2)

1AZ–FSE:

Thermostat		
Valve opening temperature		86 to 90°C (187 to 198°F)
Valve lift	at 95°C (203°F)	10 mm (0.394 in.) or more
Radiator cap sub–assy		
Standard opening pressure		74 to 103 kPa (0.75 to 1.05 kgf/cm2, 10.7 to 14.9 psi)
Minimum opening pressure		59 kPa (0.6 kgf/cm2, 8.5 psi)

Cooling fan		
Standard amperage	at 20°C (68°F)	5.2 to 8.2 A (M/T) 8.3 to 11.3 (A/T)
Standard amperage (No.2 (With Air Conditioner))	at 20°C (68°F)	5.2 to 8.2 A (M/T) 8.3 to 11.3 (A/T)
Cooling fan relay		
Specified condition	Between terminals 1 and 2	Continuity
	Between terminals 3 and 5	No continuity
		Continuity (Apply battery voltage terminals 1 and 2)
Cooling fan relay No.2		
Specified condition	Between terminals 1 and 2	Continuity
	Between terminals 3 and 4	Continuity
	Between terminals 3 and 5	No continuity
		Continuity (Apply battery voltage terminals 1 and 2)
Cooling fan relay No.3		
Specified condition	Between terminals 1 and 2	Continuity
	Between terminals 3 and 5	No continuity
		Continuity (Apply battery voltage terminals 1 and 2)

1CD–FTV:

Thermostat		
Valve opening temperature		80 – 84°C (176 – 183°F)
Valve lift	at 95°C (203°F)	8.5 mm (0.33 in.) or more
Radiator cap sub–assy		
Standard opening pressure		93 – 122 kPa (0.95 – 1.25 kgf/cm2, 13.4 – 17.6 psi)
Minimum opening pressure		78 kPa (0.8 kgf/cm2, 11.4 psi)
Cooling fan		
Standard amperage	at 20°C (68°F)	13.2 A
Cooling fan relay		
Specified condition	Between terminals 1 and 2	Continuity
	Between terminals 3 and 5	No continuity
		Continuity (Apply battery voltage terminals 1 and 2)
Cooling fan relay No.2		
Specified condition	Between terminals 1 and 2	Continuity
	Between terminals 3 and 4	Continuity
	Between terminals 3 and 5	No continuity
		Continuity (Apply battery voltage terminals 1 and 2)
Cooling fan relay No.3		
Specified condition	Between terminals 1 and 2	Continuity
	Between terminals 3 and 5	No continuity
		Continuity (Apply battery voltage terminals 1 and 2)

031H4–01

TORQUE SPECIFICATION

1ZZ–FE/3ZZ–FE:

Part Tightened		N·m	kgf·cm	ft·lbf
Radiator drain plug		13	130	9
Water pump x Cylinder block	Bolt A	9.0	92	8.0 in.lbf
	Bolt B	11	113	8
Water inlet x Cylinder block sub–assy		11	112	8
Radiator x Radiator support upper		19	194	14

1AZ–FE:

Part Tightened	N·m	kgf·cm	ft·lbf
Water pump x Cylinder block	9.0	92	80 in.·lbf
Water pump x Water pump pulley	26	265	19
Water inlet x Cylinder block	9.0	92	80 in.·lbf
Radiator support upper x body	19	194	14

1AZ–FSE:

Part Tightened	N·m	kgf·cm	ft·lbf
Water pump x Cylinder block	9.0	92	80 in.·lbf
Water pump x Water pump pulley	26	265	19
Water inlet x Cylinder block	9.0	92	80 in.·lbf
Radiator support upper x body	19	194	14

1CD–FTV:

Part Tightened		N·m	kgf·cm	ft·lbf
Drain plug		13	133	10
Water pump x Cylinder block		31	320	23
Fuel inlet pipe sub–assy x Common rail assy				
	Used pipe using SST	42	428	31
	Used pipe not using SST	46	469	34
	New pipe using SST	31	316	23
	New pipe not using SST	34	347	25
Fuel inlet pipe sub–assy x Injection pump				
	Used pipe using SST	42	428	31
	Used pipe not using SST	46	469	34
	New pipe using SST	31	316	23
	New pipe not using SST	34	347	25
Engine cover No. 1 x Cylinder head cover sub–assy		8.0	82	71 in.·lbf
Engine cover No. 1 x Intake manifold		8.0	82	71 in.·lbf
Timing belt idler Sub–assy No.1 x Cylinder block		35	357	26
Water inlet x Cylinder block		8.8	90	78 in.·lbf
Radiator reserve tank assy x Radiator assy		6.0	61	53 in.·lbf
Fan assy w/ motor x Fan shroud assy		7.5	76	66 in.·lbf
Upper support x Body		19	194	14
Relay box x Radiator assy		5.3	54	47 in.·lbf
Front wheel		103	1,050	76

LUBRICATION

031H5–01

SERVICE DATA

1ZZ–FE/3ZZ–FE:

Oil pressure	at idle speed at 3,000 r/min	29 kPa (0.3 kgf·cm^2, 4.2 psi) or more 294 to 539 kPa (3.0 to 5.5 kgf·cm^2, 43 to 78 psi) or more
Adhesive		Part No. 08833 – 00080, THREE BOND 1344, LOCTITE 242, or equivalent

1AZ–FE:

Oil pressure	at idle speed at 3,000 rpm	29 kPa (0.3 kgf·cm^2, 4.3 psi) or more 245 to 539 kPa (2.5 to 5.5 kgf·cm^2, 36 to 78 psi) or more
Adhesive		Part No. 08833 – 00080, THREE BOND 1344, LOCTITE 242, or equivalent

1AZ–FSE:

Oil pressure	at idle speed at 3,000 rpm	29 kPa (0.3 kgf·cm^2, 4.3 psi) or more 245 to 539 kPa (2.5 to 5.5 kgf·cm^2, 36 to 78 psi) or more
Adhesive		Part No. 08833 – 00080, THREE BOND 1344, LOCTITE 242, or equivalent

1CD–FTV:

Oil pressure	at idle speed at 4,500 rpm	29 kPa (0.3 kgf·cm^2, 4.3 psi) or more 245 – 588 kPa (2.5 – 6.0 kgf·cm^2, 36 – 85 psi)
Adhesive		Part No. 08833 – 00080, THREE BOND 1344, LOCTITE 242, or equivalent

031H6–01

TORQUE SPECIFICATION

1ZZ–FE/3ZZ–FE:

Part Tightened	N·m	kgf·cm	ft·lbf
Oil pressure switch x Cylinder head	15	153	11
Oil pan drain plug x Oil pan	37	377	27
Oil pump x Cylinder block	9.0	92	80 in.·lbf

1AZ–FE:

Part Tightened	N·m	kgf·cm	ft·lbf
Oil pressure switch x Cylinder head	15	153	11
Oil pan drain plug x Oil pan	25	250	18
Oil pump x Cylinder block	19	195	15
Timing chain guide x Cylinder block	9.0	92	80 in.·lbf
Chain vibration damper No.1 x Cylinder block	9.0	92	80 in.·lbf
Oil pan sub–assy x Cylinder block	9.0	92	80 in.·lbf
Transverse engine engine mounting insulator x Cylinder block	52	530	38
Engine service cover bracket RH x Body w/o Air conditioning RHD (w/ Air conditioning) steering position type	9.0 9.0	92 92	80 in.·lbf 80 in.·lbf
Cooler bracket RH x Body LHD (w/ Air conditioning) steering position type	9.0	92	80 in.·lbf
Engine x wire	7.0	71	62 in.·lbf
Oil reservoir bracket No. 1 x Body	8.0	82	71 in.·lbf
Cooler refrigerant suction hose No. 1 x cooler bracket No, 1 LHD (w/ Air conditioning) steering position type	9.0	92	80 in.·lbf
Return tube x Body	8.0	82	71 in.·lbf
Ignition coil assy x Cylinder head cover	9.0	92	80 in.·lbf
Vane pump x Cylinder block	37	377	27
Engine cover sub–assy x Cylinder block	7.0	71	62 in.·lbf
Front wheel RH	103	1,050	76

1AZ–FSE:

Part Tightened	N·m	kgf·cm	ft·lbf
Oil pressure switch x Cylinder head	15	153	11
Oil pan drain plug x Oil pan	25	250	18
Oil pump x Cylinder block	19	195	15
Timing chain guide x Cylinder block	9.0	92	80 in.·lbf
Chain vibration damper No.1 x Cylinder block	9.0	92	80 in.·lbf
Oil pan sub–assy x Cylinder block	9.0	92	80 in.·lbf
Transverse engine engine mounting insulator x Cylinder block	52	530	38
Engine service cover bracket RH x Body RHD steering position type	9.0	92	80 in.·lbf
Cooler bracket RH x Body LHD steering position type	9.0	92	80 in.·lbf
Engine x wire	7.0	71	62 in.·lbf
Oil reservoir bracket No. 1 x Body	8.0	82	71 in.·lbf
Cooler refrigerant suction hose No. 1 x cooler bracket No, 1 LHD steering position type	9.0	92	80 in.·lbf
Return tube x Body	8.0	82	71 in.·lbf
Ignition coil assy x Cylinder head cover	9.0	92	80 in.·lbf
Vane pump x Cylinder block	37	377	27
Engine cover sub–assy x Cylinder block	7.0	71	62 in.·lbf
Front wheel RH	103	1,050	76

1CD–FTV:

Part Tightened	N·m	kgf·cm	ft·lbf
Oil drain plug x Oil pan sub–assy No. 2	34	350	25
Oil pump x Cylinder block	31	320	23

Part Tightened		N·m	kgf·cm	ft·lbf
Crankshaft position sensor x Oil pump assy		8.8	90	78 in.·lbf
Oil pan sub–assy x Cylinder block	Bolt A	42	428	31
	Bolt B	21	214	15
	Bolt C	11	112	8
	Bolt D	12	122	9
Oil pan insulator x Oil pan sub–assy		7.5	76	66 in.·lbf
Oil strainer sub–assy x Oil pan sub–assy	Bolt	21	209	15
	Nut	13	135	10
Oil pan Sub–assy No.2 x Oil pan sub–assy		12	119	9
Engine oil level sensor x Oil pan sub–assy No.2		7.0	71	62 in.·lbf
Oil level gage guide x Cylinder block		18	184	13
V–ribbed belt tensioner assy x Oil pump assy		31	320	23
Timing belt idler sub–assy No. 1 x Cylinder head		35	357	26
Timing belt idler sub–assy No. 2 x Oil pump assy		47	479	35
Engine mounting insulator sub–assy RH x Transverse engine engine mounting bracket		52	530	38
Engine mounting insulator sub–assy RH x Body		52	530	38
Engine cover No. 1 x Cylinder head cover sub–assy		8.0	82	71 in.·lbf
Engine cover No. 1 x Intake manifold		8.0	82	71 in.·lbf
Front wheel RH		103	1,050	76
Oil cooler assy x Cylinder block		45	454	33

IGNITION

031E4–01

SERVICE DATA

1ZZ–FE/3ZZ–FE:

Spark plug		
Recommended spark plug	DENSO made	K16R–U11
	NGK made	BKR5EYA11
Electrode gap	K16R–U11, BKR5EYA11	1.0 to 1.1 mm (0.039 to 0.043 in.)
Camshaft position sensor		
Resistance	Cold	835 to 1,400 Ω
	Hot	1,060 to 1,645 Ω
Crankshaft position sensor		
Resistance	Cold	1,630 to 2,740 Ω
	Hot	2,065 to 3,225 Ω

1AZ–FE:

Spark plug		
Recommended spark plug	DENSO made	K20R–U11
	NGK made	BKR6EYA11
Electrode gap	K20R–U11, BKR6EYA11	1.0 to 1.1 mm (0.039 to 0.043 in.)
Camshaft position sensor		
Resistance	Cold	835 to 1,400 Ω
	Hot	1,060 to 1,645 Ω
Crankshaft position sensor		
Resistance	Cold	985 to 1,600 Ω
	Hot	1,265 to 1,890 Ω

1AZ–FSE:

Spark plug		
Recommended spark plug	DENSO made	SK20BR11
Electrode gap	SK20BR11	1.0 to 1.1 mm (0.039 to 0.043 in.)
Camshaft position sensor		
Resistance	Cold	835 to 1,400 Ω
	Hot	1,060 to 1,645 Ω
Crankshaft position sensor		
Resistance	Cold	985 to 1,600 Ω
	Hot	1,265 to 1,890 Ω

031E5–01

TORQUE SPECIFICATION

1ZZ–FE/3ZZ–FE:

Part Tightened	N·m	kgf·cm	ft·lbf
Spark plug x Cylinder head	18	184	13
Ignition coil (with igniter) x Cylinder head cover	9.0	92	80 in.·lbf
Camshaft position sensor x Cylinder head sub–assy	9.0	92	80 in.·lbf
Crankshaft position sensor x Timing chain cover sub–assy	9.0	92	80 in.·lbf
Cord clamp x Timing chain cover sub–assy	9.0	92	80 in.·lbf

1AZ–FE/1AZ–FSE:

Part Tightened	N·m	kgf·cm	ft·lbf
Spark plug x Cylinder head	19	194	14
Ignition coil (with igniter) x Cylinder head cover	9.0	92	80 in.·lbf
Camshaft position sensor x Cylinder head sub–assy	9.0	92	80 in.·lbf
Crankshaft position sensor x Timing chain cover sub–assy	9.0	92	80 in.·lbf

STARTING & CHARGING

031E6–01

SERVICE DATA

1ZZ–FE/3ZZ–FE:

Starter assy		
	Rated voltage and output power	12 V 1.3 kW
Specified current		85 A or less at 11.5 V
Starter relay		
Specified condition	1 – 2	Continuity
	3 – 5	No continuity
Battery		
Voltage	at 20 ˚C (68 ˚F)	12.5 to 12.9 V
Voltage regulator	Regulating voltage	12.9 to 14.9 V
	Standard amperage	10 A or less

1AZ–FE:

Starter assy		
	Rated voltage and output power	12 V 1.3 kW
Specified current		85 A or less at 11.5 V
Starter relay		
Specified condition	1 – 2	Continuity
	3 – 5	No continuity
Battery		
Voltage	at 20 ˚C (68 ˚F)	12.5 to 12.9 V
Voltage regulator	Regulating voltage	12.9 to 14.9 V
	Standard amperage	10 A or less

1AZ–FSE:

Starter (1.3 kW type)		
	Rated voltage and output power	12 V 1.3 kW
No–load characteristics	Current	85 A or less at 11.5 V
Starter (1.6 kW type)		
	Rated voltage and output power	12 V 1.6 kW
No–load characteristics	Current	75 A or less at 11.5 V
Starter relay		
Specified condition	1 – 2	Continuity
	3 – 5	No continuity
Battery		
Voltage	at 20 ˚C (68 ˚F)	12.5 to 12.9 V
Voltage regulator	Regulating voltage	12.9 to 14.9 V
	Standard amperage	10 A or less

1CD–FTV:

Starter assy		
	Rated voltage and output power	12 V 2.0 kW
Specified current		190 A or less at 11.5 V
Starter relay		
Specified condition	1 – 2	Continuity
	3 – 5	No continuity
Battery		
Except maintenance–free battery	Standard specific gravity	1.25 to 1.29 at 20 ˚C (68 ˚F)
Voltage	at 20 ˚C (68 ˚F)	12.5 to 12.9 V
Voltage regulator	Regulating voltage	13.2 to 14.8 V
	Standard amperage	10 A or less
Glow plugs		
Resistance	at 20 ˚C (68 ˚F)	Approx. 0.72 Ω
Glow plug relay		
Specified condition	1 – 2	No continuity
	3 – 4	Continuity

031E7–03

TORQUE SPECIFICATION

1ZZ–FE/3ZZ–FE:

Part Tightened	N·m	kgf·cm	ft·lbf
Starter assy x Transaxle housing	37	378	28
Starter wire x Starter assy	9.8	100	7
Generator assy x Transverse engine engine mounting bracket	25	255	18
Generator assy x Cylinder block sub–assy	54	551	40
Generator wire x Generator assy	9.8	100	7
Lead wire of field coil x Terminal C	5.9	60	52 in.·lbf

1AZ–FE/1AZ–FSE:

Part Tightened		N·m	kgf·cm	ft·lbf
Wire harness clamp bracket x Starter assy		8.4	86	74 in.·lbf
Starter assy x Cylinder block sub–assy		37	380	28
Starter wire x Starter assy		9.8	100	7
Battery carrier x Body		13	131	9
Battery clamp sub–assy x Body		5.0	51	44 in.·lbf
Battery clamp sub–assy x Battery clamp bolt		3.6	36	31 in.·lbf
Terminal x Battery		5.4	55	48 in.·lbf
Wire harness clamp bracket x Generator assy		8.4	86	74 in.·lbf
Generator assy x Cylinder block sub–assy	Bolt A	52	530	38
	Bolt B	21	214	16
Generator wire x Generator assy		9.8	100	7
Lead wire of field coil x Terminal C		5.9	60	52 in.·lbf

1CD–FTV:

Part Tightened		N·m	kgf·cm	ft·lbf
Starter x Transaxle	Bolt	37	377	27
	Terminal 30	9.8	100	7.2
Generator assy x Engine	M8	31	320	23
	M10	47	475	34
	Alternator wire	9.8	100	7
	Wire harness	5.0	51	44 in.·lbf
Glow plug assy x Cylinder head	Glow plug	12.3	125	9
	Nut	2.2	22	19 in.·lbf
Engine cover No. 1 x Cylinder head cover sub–assy		8.0	82	71 in.·lbf
Engine cover No. 1 x Intake manifold		8.0	82	71 in.·lbf
Front wheel RH		103	1,050	76

FRONT SUSPENSION

0313B–05

SERVICE DATA

Front wheel alignment	Vehicle height		
	(Normal package)	Front: A *1 – B *2	92 mm (3.62 in.)
		Rear: D *4 – C *3	61 mm (2.40 in.)
	(Rough road package)	Front: A *1 – B *2	72 mm (2.83 in.)
		Rear: D *4 – C *3	41 mm (1.61 in.)
	Toe–in (total)		0°06' ± 12' (0.1° ± 0.2°), 1 ± 2 mm (0.04 ± 0.08 in.)
		Rack end length difference	1.5 mm (0.059 in.) or less
	Wheel angle [Electric motor power steering]		
	(Normal package)	Inside wheel	38°17' ± 2° (38.28° ± 2°)
		Outside wheel: Reference	32°52' (32.87°)
	(Rough road package)	Inside wheel	38°42' ± 2° (38.70° ± 2°)
		Outside wheel: Reference	33°16' (33.27°)
	Wheel angle [Oil pressure power steering]		
	(Normal package)	Inside wheel	35°47' ± 2° (35.78° ± 2°)
		Outside wheel: Reference	31°15' (31.25°)
	(Rough road package)	Inside wheel	36°09' ± 2° (36.15° ± 2°)
		Outside wheel: Reference	31°38' (31.63°)
	Camber		
		Normal package	–0°34' ± 45' (–0.57° ± 0.75°)
		Rough road package	–0°19' ± 45' (–0.32° ± 0.75°)
		Right–left error	45' (0.75°) or less
	Caster		
		Normal package	2°54' ± 45' (2.90° ± 0.75°)
		Rough road package	2°40' ± 45' (2.67° ± 0.75°)
		Right–left error	45' (0.75°) or less
	Steering axis inclination		
		Normal package	12°27' ± 45' (12.45° ± 0.75°)
		Rough road package	11°56' ± 45' (11.93° ± 0.75°)
		Right–left error	45' (0.75°) or less
Front suspension	Lower ball joint turning torque		0.98 – 4.9 N·m (10 – 50 kgf·cm, 9 – 43 in.·lbf)
	Stabilizer bar link ball joint turning torque		0.05 – 1.96 N·m (0.5 – 20 kgf·cm, 0.4 – 17 in.·lbf)

***1: Ground clearance of front wheel center**
***2: Ground clearance of lower suspension arm front bolt center**
***3: Ground clearance of toe control arm inner bolt center**
***4: Ground clearance of rear wheel center**

0313A–05

TORQUE SPECIFICATION

Part Tightened		N·m	kgf·cm	ft·lbf
Tie rod end lock nut		74	755	55
Steering knuckle x Shock absorber		220	2,240	162
Hub nut		103	1,050	76
Suspension support x Piston rod		47	479	35
Suspension support x Body		39	398	29
Suspension crossmember sub–assy x Body		133	1,360	98
Suspension crossmember sub–assy x Engine mounting insulator		80	816	59
Suspension crossmember sub–assy x Center member		96	979	71
Suspension member brace x Body	Bolt A:	80	816	59
	Bolt B:	133	1,360	98
Speed sensor wire harness bracket set bolt		19	192	14
Stabilizer bracket No.1 x Suspension crossmember (w/o HID)		19	194	14
Stabilizer bracket No.1 x Suspension crossmember (w/ HID)	Bolt A:	5.4	55	48
	Bolt B:	19	194	14
Stabilizer bar link set nut		74	755	55
Lower suspension arm x Lower ball joint		89	908	66
Lower ball joint x Steering knuckle		103	1,050	76
Lower suspension arm x Suspension crossmember		137	1,400	101

REAR SUSPENSION

SERVICE DATA

031HF–01

Rear wheel alignment	Toe–in (total)	
	Normal package:	0°18’ ± 12’ (0.3° ± 0.2°, 3.0 ± 2.0 mm, 0.12 ± 0.08 in.)
	Rough road package:	0°18’ ± 12’ (0.3° ± 0.2°, 3.0 ± 2.0 mm, 0.12 ± 0.08 in.)
	Camber	
	Normal package:	–0°54’ ± 30’ (–0.9° ± 0.5°)
	Rough road package:	–0°30’ ± 30’ (–0.5° ± 0.5°)
	Right–left error	30’ (0.5°) or less

031HG–01

TORQUE SPECIFICATION

Part Tightened	N·m	kgf·cm	ft·lbf
Hub nut	103	1,050	76
Piston rod set nut	56	571	41
Shock absorber x Body	80	816	59
Shock absorber x Rear suspension arm	160	1,632	118
Parking brake cable set bolt	5.0	51	44 in.·lbf
Skid control sensor wire harness bracket set bolt	5.0	51	44 in.·lbf
Rear suspension arm bracket x body	65	663	48
Rear suspension arm x Rear suspension member	74	755	55
Rear suspension arm bracket x Rear suspension arm	110	1,122	81
Rear axle carrier (front side) x Rear suspension arm	105	1,071	77
Rear axle carrier (rear side) x Rear suspension arm	74	755	55
Upper control arm x Rear axle carrier	74	755	55
Upper control arm x Suspension member	74	755	55
Lower control arm x Rear axle carrier	60	612	44
Lower control arm x Suspension member	105	1,071	77
Stabilizer bar x Stabilizer link	44	449	32
Stabilizer link x Suspension arm	44	449	32
Stabilizer bar bracket x Suspension member	35	357	26

TIRE & WHEEL

SERVICE DATA

0313C–05

Cold tire inflation pressure	Engine type: 3ZZ–FE, 1ZZ–FE, 1AZ–FE		
	Tire size	Front kPa (kgf/cm^2, psi)	Rear kPa (kgf/cm^2, psi)
	195/65R16 91V: 205/55R16 91V: with 4 or less occupants	220 (2.2, 32) *1 240 (2.4, 35) *2	220 (2.2, 32) *1 240 (2.4, 35) *2
	with 5 or more occupants	220 (2.2, 32) *1 250 (2.5, 36) *2	220 (2.2, 32) *1 280 (2.8, 41) *1
	Engine type: 1CD–FTV		
	Tire size	Front kPa (kgf/cm^2, psi)	Rear kPa (kgf/cm^2, psi)
	205/55R16 91V: with 4 or less occupants	240 (2.4, 35) *1 270 (2.7, 39) *2	240 (2.4, 35) *1 270 (2.7, 39) *2
	with 5 or more occupants	240 (2.4, 35) *1 280 (2.8, 41) *2	240 (2.4, 35) *1 290 (2.9, 42) *2
	Engine type: 1AZ–FSE		
	Tire size	Front kPa (kgf/cm^2, psi)	Rear kPa (kgf/cm^2, psi)
	205/55R16 91V: with 4 or less occupants	220 (2.2, 32) *1 250 (2.5, 36) *2	220 (2.2, 32) *1 250 (2.5, 36) *2
	with 5 or more occupants	220 (2.2, 32) *1 270 (2.7, 39) *2	220 (2.2, 32) *1 280 (2.8, 41) *2
	215/45R17 87W: with 4 or less occupants	240 (2.4, 35) *1 290 (2.9, 42) *2	240 (2.4, 35) *1 290 (2.9, 42) *2
	with 5 or more occupants	240 (2.4, 35) *1 310 (3.1, 45) *2	240 (2.4, 35) *1 330 (3.3, 48) *2
Tire runout	1.4 mm (0.055 in.) or less		
Imbalance after adjustment	8.0 g (0.018 lb) or less		

***1: For driving under 160 km/h (100 mph)**

***2: For driving at 160 km/h (100 mph) or over**

DRIVE SHAFT / PROPELLER SHAFT / AXLE

030KB–05

SERVICE DATA

Front axle hub bearing	Backlash	Maximum: 0.05 mm (0.0020 in.)
Front axle hub sub–assy	Deviation	Maximum: 0.05 mm (0.0020 in.)
Rear axle hub & bearing assy	Backlash	Maximum: 0.05 mm (0.0020 in.)
	Deviation	Maximum: 0.07 mm (0.0028 in.)

030KC–06

TORQUE SPECIFICATION

Part Tightened		N·m	kgf·cm	ft·lbf
Front wheel set nut		103	1,050	76
Rear wheel set nut		103	1,050	76
Manual transaxle oil drain plug	C50/C250: E354/E357:	39 49	400 500	29 36
Lower ball joint assy front x Suspension arm sub–assy lower No.1		89	908	66
Tie rod end sub–assy x Steering knuckle		49	500	36
Flexible hose and speed sensor front x Shock absorber assy front		19	194	14
Speed sensor front x Steering knuckle		8.0	82	71 in.·lbf
Front stabilizer link assy x Shock absorber assy front		74	755	55
Front axle hub nut		216	2,200	159
Disc brake dust cover front x Steering knuckle		8.3	85	73 in.·lbf
Lower ball joint assy front x Steering knuckle		103	1,050	76
Front axle assy x Shock absorber assy front		220	2,243	162
Front disc brake caliper assy x Steering knuckle		102	1,040	75
Automatic transaxle fluid drain plug		49	500	36
Drive shaft bearing case x Bearing bracket		64	650	47
Rear axle hub & bearing assy x Rear axle carrier sub–assy		56	571	41
Rear axle carrier sub–assy x Back plate assy		140	1,428	103
Rear axle carrier sub–assy x Skid control sensor wire		5.0	51	44 in.·lbf
Rear disk brake caliper assy x Rear axle carrier sub–assy		47	475	34
Rear axle carrier sub–assy x Upper control arm assy		74	755	55
Rear axle carrier sub–assy x Lower control arm assy	ball joint side: member side:	60 105	612 1,071	44 77
Rear axle carrier sub–assy x Rear suspension arm assy	ball joint side: member side:	105 74	1,071 755	77 55

BRAKE

SERVICE DATA

030MU–02

Brake pedal height (from asphalt sheet)	RHD: LHD: M/T A/T	142.5 – 152.5 mm (5.610 – 6.004 in.) 148.1 – 158.1 mm (5.831 – 6.224 in.) 149.9 – 159.9 mm (5.902 – 6.295 in.)
Brake Pedal free play		1 – 6 mm (0.04 – 0.24 in.)
Stop light switch clearance		0.5 – 2.6 mm (0.020 – 0.102 in.)
Pedal reserve distance from asphalt sheet at 490 N (50 kgf, 110.2 lbf)		More than 60 mm (2.36 in.)
Brake booster push rod to piston clearance (w/ SST)		0 mm (0 in.)
Front disc brake pad thickness	Standard Minimum	12.5 mm (0.492 in.) 2.0 mm (0.079 in.)
Front brake disc thickness	Standard Minimum	26.0 mm (1.024 in.) 24.0 mm (0.945 in.)
Front disc runout	Maximum	0.05 mm (0.0020 in.)
Rear disc brake pad thickness	Standard Minimum	10.0 mm (0.394 in.) 2.0 mm (0.079 in.)
Rear disc thickness	Standard Minimum	10.0 mm (0.394 in.) 8.0 mm (0.315 in.)
Rear disc runout	Maximum	0.05 mm (0.0020 in.)

030MV–02

TORQUE SPECIFICATION

Part Tightened		N·m	kgf·cm	ft·lbf
Wheel nut		103	1,050	76
Brake line union nut	10 mm	15	155	11
	14 mm	29	296	21
Brake booster clevis lock nut		19	194	14
Brake master cylinder sub–assy x Brake booster assy		20	204	15
Charcoal canister bracket x Body		5.4	55	48 in.·lbf
Brake booster assy x Body		13	130	9
Brake pedal support x Instrument panel reinforcement		24	241	17
Brake pedale support x Brake pedal		37	375	27
Brake pedale support x Body		13	130	9
Brake tube clamp x body		5.4	55	48 in.·lbf
Vacuum pump x Engine		21	214	15
Vacuum pump union nut		14	140	10
Vacuum pump check valve sub–assy x End cover		74	214	54
Vacuum pump end cover x vacuum pump housing		7.8	80	69 in.·lbf
Front disc brake bleeder plug		10	102	7
Front brake cylinder mounting x Steering knuckle		102	1,040	75
Front disc brake cylinder x Front disc brake cylinder mounting		30	306	22
Front disc brake caliper x Flexible hose		29	296	21
Rear disc brake bleeder plug		10	102	7
Rear disc brake cylinder mounting x Steering knuckle		47	475	34
Rear disc brake cylinder x Rear disc brake cylinder mounting		30	306	22
Rear disc brake caliper x Flexible hose		29	296	21
Brake actuator x Brake actuator bracket	w/o VSC:	7.0	71	62 in.·lbf
	w/ VSC:	4.7	48	42 in.·lbf
Front speed sensor wire harness clamp x shock absorber		29	296	21
Brake actuator bracket x Body		19	195	14
Front speed sensor x Steering knuckle		8.0	82	71 in.·lbf
Yawrate sensor bracket set bolt		21	214	15
Yawrate sensor x Yawrate sensor bracket		6	61	53 in.·lbf
Yawrate sensor bracket x Body		21	214	15

PARKING BRAKE

031FV–01

SERVICE DATA

Parking brake lever travel at 196 N (20 kgf, 44.1 lbf):		6 – 9 clicks
Rear brake disc inside diameter	Standard	173 mm (6.81 in.)
	Maximum	174 mm (6.85 in.)
Parking brake shoe lining thickness	Standard	3.5 mm (0.138 in.)
	Maximum	1.0 mm (0.039 in.)

031FW–01

TORQUE SPECIFICATION

Part Tightened	N·m	kgf·cm	ft·lbf
Wheel nut	103	1,050	76
Parking brake lock nut	5.0	51	44 in.·lbf
Parking brake lever sub–assy x Body	13	127	9
Front floor heat insulator No.2 x Body	5.5	56	49 in.·lbf
Front floor heat insulator No.1 x Body	5.5	56	49 in.·lbf
Exhaust pipe installation bolt	43	440	32
Front floor panel brace x Body	30	302	21
Fuel tank protector No.1 x Body	5.5	56	49 in.·lbf
Parking brake cable assy No.3 x Fram	5.0	51	44 in.·lbf

AUTOMATIC TRANSMISSION / TRANSAXLE

030A9–10

SERVICE DATA

U341E (RHD)		
Line pressure (Wheel locked)		
	Engine idling	
	D range	370 – 410 kPa (3.8 – 4.2 kgf·cm^2, 54 – 60 psi)
	R range	540 – 640 kPa (5.5 – 6.5 kgf·cm^2, 78 – 92 psi)
	AT stall (Throttle valve fully opened)	
	D range	1,110 – 1,230 kPa (11.3 – 12.5 kgf·cm^2, 161 – 178 psi)
	R range	1,700 – 1,810 kPa (17.3 – 18.5 kgf·cm^2, 246 – 263 psi)
Engine stall revolution	D and R range	2,400 ± 150 rpm
Time lag	N → D range	Less than 1.2 seconds
	N → R range	Less than 1.5 seconds
Engine idle speed (A/C OFF)	N range	650 ± 50 rpm
Drive plate runout	Max.	0.20 mm (0.0079 in.)
Torque converter clutch runout	Max.	0.30 mm (0.0118 in.)
Differential oil seal drive in depth	LH side	2.7 ± 0.5 mm (0.106 ± 0.020 in.)
	RH side	0 ± 0.5 mm (0 ± 0.020 in.)
Shift schedule		
D range		
(Throttle valve fully opened)	1 → 2	53 – 59 km/h (33 – 37 mph)
	2 → 3	100 – 108 km/h (62 – 67 mph)
	3 → 4	156 – 165 km/h (97 – 103 mph)
	4 → 3	151 – 159 km/h (94 – 99 mph)
	3 → 2	91 – 99 km/h (57 – 62 mph)
	2 → 1	43 – 47 km/h (27 – 29 mph)
(Throttle valve fully closed)	3 → 4	36 – 40 km/h (22 – 25 mph)
	4 → 3	31 – 35 km/h (19 – 22 mph)
2 range		
(Throttle valve fully opened)	1 → 2	53 – 59 km/h (33 – 37 mph)
	3 → 2	96 – 103 km/h (60 – 64 mph)
	2 → 1	43 – 47 km/h (27 – 29 mph)
L range		
(Throttle valve fully opened)	3 → 2	96 – 103 km/h (60 – 64 mph)
	2 → 1	48 – 52 km/h (30 – 32 mph)
Lock–up point	Throttle valve opening 5 %	
O/D gear	Lock–up ON	67 – 71 km/h (42 – 44 mph)
	Lock–up OFF	61 – 66 km/h (38 – 41 mph)
3rd gear (3 position only)	Lock–up ON	114 – 123 km/h (71 – 76 mph)
	Lock–up OFF	109 – 117 km/h (67 – 73 mph)
U341E (LHD)		
Line pressure (Wheel locked)		
	Engine idling	
	D range	370 – 410 kPa (3.8 – 4.2 kgf·cm^2, 54 – 60 psi)
	R range	540 – 640 kPa (5.5 – 6.5 kgf·cm^2, 78 – 92 psi)
	AT stall (Throttle valve fully opened)	
	D range	1,110 – 1,230 kPa (11.3 – 12.5 kgf·cm^2, 161 – 178 psi)
	R range	1,700 – 1,810 kPa (17.3 – 18.5 kgf·cm^2, 246 – 263 psi)
Engine stall revolution	D and R range	2,400 ± 150 rpm
Time lag	N → D range	Less than 1.2 seconds
	N → R range	Less than 1.5 seconds
Engine idle speed (A/C OFF)	N range	650 ± 50 rpm
Drive plate runout	Max.	0.20 mm (0.0079 in.)
Torque converter clutch runout	Max.	0.30 mm (0.0118 in.)
Differential oil seal drive in depth	LH side	2.7 ± 0.5 mm (0.106 ± 0.020 in.)
	RH side	0 ± 0.5 mm (0 ± 0.020 in.)

Shift schedule		
D range		
(Throttle valve fully opened)	1 → 2	53 – 59 km/h (33 – 37 mph)
	2 → 3	100 – 108 km/h (62 – 67 mph)
	3 → 4	156 – 165 km/h (97 – 103 mph)
	4 → 3	119 – 127 km/h (74 – 79 mph)
	3 → 2	70 – 74 km/h (43 – 46 mph)
	2 → 1	9 – 12 km/h (6 – 7 mph)
(Throttle valve fully closed)	3 → 4	36 – 40 km/h (22 – 25 mph)
	4 → 3	31 – 35 km/h (19 – 22 mph)
2 range		
(Throttle valve fully opened)	1 → 2	53 – 59 km/h (33 – 37 mph)
	3 → 2	96 – 103 km/h (60 – 64 mph)
	2 → 1	9 – 12 km/h (6 – 7 mph)
L range		
(Throttle valve fully opened)	3 → 2	96 – 103 km/h (60 – 64 mph)
	2 → 1	48 – 52 km/h (30 – 32 mph)
Lock–up point	Throttle valve opening 5 %	
O/D gear	Lock–up ON	67 – 71 km/h (42 – 44 mph)
	Lock–up OFF	61 – 66 km/h (38 – 41 mph)
3rd gear (3 position only)	Lock–up ON	114 – 123 km/h (71 – 76 mph)
	Lock–up OFF	109 – 117 km/h (67 – 73 mph)
Shift schedule(When kick down switch turns ON)		
D range		
(Throttle valve fully opened)	1 → 2	53 – 59 km/h (33 – 37 mph)
	2 → 3	100 – 108 km/h (62 – 67 mph)
	3 → 4	156 – 165 km/h (97 – 103 mph)
	4 → 3	151 – 159 km/h (94 – 99 mph)
	3 → 2	91 – 99 km/h (57 – 62 mph)
	2 → 1	43 – 47 km/h (27 – 29 mph)
(Throttle valve fully closed)	3 → 4	36 – 40 km/h (22 – 25 mph)
	4 → 3	31 – 35 km/h (19 – 22 mph)
2 range		
(Throttle valve fully opened)	1 → 2	53 – 59 km/h (33 – 37 mph)
	3 → 2	96 – 104 km/h (60 – 65 mph)
	2 → 1	43 – 47 km/h (27 – 29 mph)
L range		
(Throttle valve fully opened)	3 → 2	96 – 104 km/h (60 – 65 mph)
	2 → 1	48 – 52 km/h (30 – 32 mph)
Lock–up point	Throttle valve opening 5 %	
O/D gear	Lock–up ON	67 – 71 km/h (42 – 44 mph)
	Lock–up OFF	61 – 66 km/h (38 – 41 mph)
3rd gear (3 position only)	Lock–up ON	114 – 123 km/h (71 – 76 mph)
	Lock–up OFF	109 – 117 km/h (67 – 73 mph)
U241E (1AZ–FSE) (RHD)		
Line pressure (Wheel locked)		
	Engine idling	
	D range	372 – 412 kPa (3.8 – 4.2 kgf·cm^2, 53 – 60 psi)
	R range	672 – 742 kPa (6.9 – 7.6 kgf·cm^2, 97 – 108 psi)
	AT stall (Throttle valve fully opened)	
	D range	931 – 1,031 kPa (9.5 – 10.5 kgf·cm^2, 135 – 150 psi)
	R range	1,768 – 1,968 kPa (18.0 – 20.1 kgf·cm^2, 256 – 285 psi)
Engine stall revolution	D and R range	2,550 ± 150 rpm
Time lag	N → D range	Less than 1.2 seconds
	N → R range	Less than 1.5 seconds
Engine idle speed		
(A/C OFF)	N range	650 ± 50 rpm
Drive plate runout	Max.	0 20 mm (0.0079 in.)
Torque converter clutch runout	Max.	0 30 mm (0.0118 in.)
Differential oil seal drive in depth	LH side	0 ± 0.5 mm (0 ± 0.020 in.)
	RH side	0 ± 0.5 mm (0 ± 0.020 in.)

Shift schedule		
D range		
(Throttle valve fully opened)	1 → 2	53 – 62 km/h (33 – 39 mph)
	2 → 3	102 – 111 km/h (63 – 69 mph)
	3 → 4	158 – 173 km/h (98 – 108 mph)
	4 → 3	150 – 165 km/h (93 – 102 mph)
	3 → 2	94 – 103 km/h (58 – 64 mph)
	2 → 1	46 – 53 km/h (29 – 33 mph)
(Throttle valve fully closed)	3 → 4	36 – 43 km/h (22 – 27 mph)
	4 → 3	16 – 22 km/h (10 – 13 mph)
2 range		
(Throttle valve fully opened)	1 → 2	53 – 62 km/h (33 – 39 mph)
	3 → 2	102 – 111 km/h (63 – 69 mph)
	2 → 1	46 – 53 km/h (29 – 33 mph)
L range		
(Throttle valve fully opened)	2 → 1	50 – 57 km/h (31 – 35 mph)
Lock–up point	Throttle valve opening 5 %	
O/D gear	Lock–up ON	59 – 67 km/h (37 – 42 mph)
	Lock–up OFF	55 – 63 km/h (34 – 39 mph)
U241E (1AZ–FSE) (LHD)		
Line pressure (Wheel locked)		
	Engine idling	
	D range	382 – 422 kPa (3.9 – 4.3 kgf·cm^2, 55 – 61 psi)
	R range	647 – 760 kPa (6.6 – 7.8 kgf·cm^2, 94 – 111 psi)
	AT stall (Throttle valve fully opened)	
	D range	931 – 1,031 kPa (9.5 – 10.5 kgf·cm^2, 135 – 150 psi)
	R range	1,768 – 1,968 kPa (18.0 – 20.1 kgf·cm^2, 256 – 285 psi)
Engine stall revolution	D and R range	2,550 ± 150 rpm
Time lag	N → D range	Less than 1.2 seconds
	N → R range	Less than 1.5 seconds
Engine idle speed		
(A/C OFF)	N range	650 ± 50 rpm
Drive plate runout	Max.	0.20 mm (0.0079 in.)
Torque converter clutch runout	Max.	0.30 mm (0.0118 in.)
Differential oil seal drive in depth	LH side	0 ± 0.5 mm (0 ± 0.020 in.)
	RH side	0 ± 0.5 mm (0 ± 0.020 in.)
Shift schedule		
D range		
(Throttle valve fully opened)	1 → 2	53 – 62 km/h (33 – 39 mph)
	2 → 3	102 – 111 km/h (63 – 69 mph)
	3 → 4	158 – 173 km/h (98 – 108 mph)
	4 → 3	119 – 133 km/h (74 – 82 mph)
	3 → 2	69 – 77 km/h (43 – 48 mph)
	2 → 1	8 – 14 km/h (5 – 9 mph)
(Throttle valve fully closed)	3 → 4	36 – 43 km/h (22 – 27 mph)
	4 → 3	16 – 22 km/h (10 – 14 mph)
2 range		
(Throttle valve fully opened)	1 → 2	53 – 62 km/h (33 – 39 mph)
	3 → 2	102 – 111 km/h (63 – 69 mph)
	2 → 1	8 – 14 km/h (5 – 9 mph)
L range		
(Throttle valve fully opened)	2 → 1	50 – 57 km/h (31 – 35 mph)

Shift schedule(When kick down switch turns ON)		
D range		
(Throttle valve fully opened)	1 → 2	53 – 62 km/h (33 – 39 mph)
	2 → 3	102 – 111 km/h (63 – 69 mph)
	3 → 4	158 – 173 km/h (98 – 108 mph)
	4 → 3	150 – 165 km/h (93 – 103 mph)
	3 → 2	94 – 103 km/h (58 – 64 mph)
	2 → 1	46 – 53 km/h (29 – 33 mph)
(Throttle valve fully closed)	3 → 4	36 – 43 km/h (22 – 27 mph)
	4 → 3	16 – 22 km/h (10 – 14 mph)
2 range		
(Throttle valve fully opened)	1 → 2	53 – 62 km/h (33 – 39 mph)
	3 → 2	102 – 111 km/h (63 – 69 mph)
	2 → 1	46 – 53 km/h (29 – 33 mph)
L range		
(Throttle valve fully opened)	2 → 1	50 – 57 km/h (31 – 35 mph)
Lock–up point	Throttle valve opening 5 %	
O/D gear	Lock–up ON	59 – 67 km/h (37 – 42 mph)
	Lock–up OFF	55 – 63 km/h (34 – 39 mph)
U241E (1AZ–FE) (RHD)		
Line pressure (Wheel locked)		
	Engine idling	
	D range	372 – 412 kPa (3.8 – 4.2 kgf·cm^2, 53 – 60 psi)
	R range	672 – 742 kPa (6.9 – 7.6 kgf·cm^2, 97 – 108 psi)
	AT stall (Throttle valve fully opened)	
	D range	931 – 1,031 kPa (9.5 – 10.5 kgf·cm^2, 135 – 150 psi)
	R range	1,768 – 1,968 kPa (18.0 – 20.1 kgf·cm^2, 256 – 285 psi)
Engine stall revolution	D and R range	2,550 ± 150 rpm
Time lag	N → D range	Less than 1.2 seconds
	N → R range	Less than 1.5 seconds
Engine idle speed		
(A/C OFF)	N range	650 ± 50 rpm
Drive plate runout	Max.	0 20 mm (0.0079 in.)
Torque converter clutch runout	Max.	0 30 mm (0.0118 in.)
Differential oil seal drive in depth	LH side	0 ± 0.5 mm (0 ± 0.020 in.)
	RH side	0 ± 0.5 mm (0 ± 0.020 in.)
Shift schedule		
D range		
(Throttle valve fully opened)	1 → 2	53 – 62 km/h (33 – 39 mph)
	2 → 3	102 – 111 km/h (63 – 69 mph)
	3 → 4	158 – 173 km/h (98 – 108 mph)
	4 → 3	150 – 165 km/h (93 – 102 mph)
	3 → 2	94 – 103 km/h (58 – 64 mph)
	2 → 1	46 – 53 km/h (29 – 33 mph)
(Throttle valve fully closed)	3 → 4	36 – 43 km/h (22 – 27 mph)
	4 → 3	16 – 22 km/h (10 – 13 mph)
2 range		
(Throttle valve fully opened)	1 → 2	53 – 62 km/h (33 – 39 mph)
	3 → 2	102 – 111 km/h (63 – 69 mph)
	2 → 1	46 – 53 km/h (29 – 33 mph)
L range		
(Throttle valve fully opened)	2 → 1	50 – 57 km/h (31 – 35 mph)
Lock–up point	Throttle valve opening 5 %	
O/D gear	Lock–up ON	59 – 67 km/h (37 – 42 mph)
	Lock–up OFF	55 – 63 km/h (34 – 39 mph)

U241E (1AZ–FE) (LHD)		
Line pressure (Wheel locked)		
	Engine idling	
	D range	372 – 412 kPa (3.8 – 4.2 kgf·cm^2, 53 – 60 psi)
	R range	672 – 742 kPa (6.9 – 7.6 kgf·cm^2, 97 – 108 psi)
	AT stall (Throttle valve fully opened)	
	D range	931 – 1,031 kPa (9.5 – 10.5 kgf·cm^2, 135 – 150 psi)
	R range	1,768 – 1,968 kPa (18.0 – 20.1 kgf·cm^2, 256 – 285 psi)
Engine stall revolution	D and R range	2,550 ± 150 rpm
Time lag	N → D range	Less than 1.2 seconds
	N → R range	Less than 1.5 seconds
Engine idle speed (A/C OFF)	N range	650 ± 50 rpm
Drive plate runout	Max.	0 20 mm (0.0079 in.)
Torque converter clutch runout	Max.	0 30 mm (0.0118 in.)
Differential oil seal drive in depth	LH side	0 ± 0.5 mm (0 ± 0.020 in.)
	RH side	0 ± 0.5 mm (0 ± 0.020 in.)
Shift schedule		
D range		
(Throttle valve fully opened)	1 → 2	53 – 62 km/h (33 – 39 mph)
	2 → 3	102 – 111 km/h (63 – 69 mph)
	3 → 4	158 – 173 km/h (98 – 108 mph)
	4 → 3	119 – 133 km/h (74 – 83 mph)
	3 → 2	83 – 92 km/h (52 – 57 mph)
	2 → 1	46 – 53 km/h (29 – 33 mph)
(Throttle valve fully closed)	3 → 4	36 – 43 km/h (22 – 27 mph)
	4 → 3	16 – 22 km/h (10 – 13 mph)
2 range		
(Throttle valve fully opened)	1 → 2	53 – 62 km/h (33 – 39 mph)
	3 → 2	102 – 111 km/h (63 – 69 mph)
	2 → 1	46 – 53 km/h (29 – 33 mph)
L range		
(Throttle valve fully opened)	2 → 1	50 – 57 km/h (31 – 35 mph)
Shift schedule(When kick down switch turns ON)		
D range		
(Throttle valve fully opened)	1 → 2	53 – 62 km/h (33 – 39 mph)
	2 → 3	102 – 111 km/h (63 – 69 mph)
	3 → 4	158 – 173 km/h (98 – 108 mph)
	4 → 3	150 – 165 km/h (93 – 102 mph)
	3 → 2	94 – 103 km/h (58 – 64 mph)
	2 → 1	46 – 53 km/h (29 – 33 mph)
(Throttle valve fully closed)	3 → 4	36 – 43 km/h (22 – 27 mph)
	4 → 3	16 – 22 km/h (10 – 13 mph)
2 range		
(Throttle valve fully opened)	1 → 2	53 – 62 km/h (33 – 39 mph)
	3 → 2	102 – 111 km/h (63 – 69 mph)
	2 → 1	46 – 53 km/h (29 – 33 mph)
L range		
(Throttle valve fully opened)	2 → 1	50 – 57 km/h (31 – 35 mph)
Lock–up point	Throttle valve opening 5 %	
O/D gear	Lock–up ON	59 – 67 km/h (37 – 42 mph)
	Lock–up OFF	55 – 63 km/h (34 – 39 mph)

030AA–10

TORQUE SPECIFICATION

U341E				
Part Tightened		N·m	kgf·cm	ft·lbf
Park/neutral position switch x Transaxle	Bolt	5.4	55	48 in.·lbf
	Nut	6.9	70	61 in.·lbf
Control shaft lever x Park/neutral position switch		13	130	9
Battery carrier x Body		13	132	10
Engine hanger x Engine		38	387	28
Drain plug x Oil pan		49	500	36
Transaxle x Engine	Bolt A:	64	650	47
	Bolt B:	46	470	34
	Bolt C:	23	235	17
Torque converter clutch x Drive plate		28	285	20
Engine mounting bracket RR x Transaxle		64	653	47
Engine mounting bracket FR x Transaxle		64	653	47
Center member x Body	Bolt A:	45	459	33
Center member x Suspension member	Bolt B:	96	979	71
	BoltC:	52	530	38
Engine mounting insulator RR x Engine mounting bracket RR		87	887	64
Engine mounting insulator RR x Suspension member		52	530	38
Engine mounting insulator FR x Engine mounting bracket FR		52	530	38
Engine mounting bracket LH x Transaxle		64	653	47
Engine mounting insulator LH x Body	Bolt A:	52	530	38
	Nut B:	80	815	59
Starter x Transaxle		37	377	27
Starter wire x Starter		9.8	100	87 in.·lbf
Froor panel brace x Body		30	302	22
Oil filler tube x Transaxle	Bolt A:	12	122	9
Oil cooler tube clamp x Oil filler tube	Bolt B:	5.5	56	49 in.·lbf
Oil cooler outlet tube x Transaxle		35	357	25
Oil cooler inlet tube x Transaxle		35	357	25
Wire harness clamp bracket x Transaxle		12	122	9
Wire harness x Transaxle	Bolt A:	5	51	44 in.·lbf
	Bolt B:	26	265	19
Control cable bracket x Transaxle		12	122	9
Control cable support x Transaxle		12	122	9
Air cleaner assy x Body		7.0	71	62 in.·lbf
Cylinder head cover No. 2 x Engine		7.0	71	62 in.·lbf
Speed sensor x Transaxle		5.4	55	48 in.·lbf
Transmission wire x Transaxle		5.4	55	48
Solenoid valve x Valve body	Bolt A:	11	110	8
	Bolt B:	11	110	8
Valve body x Transaxle		11	110	8
ATF temperature sensor x Valve body		11	110	8
Oil strainer x Valve body		11	110	8
Oil pan x Transaxle		7.8	80	69 in.·lbf
Floor shift assembly x Body		12	122	9
Control cable x Control shaft lever		12	122	9

U241E				
Part Tightened		N·m	kgf·cm	ft·lbf
Park/neutral position switch x Transaxle	Bolt	5.4	55	48 in.·lbf
	Nut	6.9	70	61 in.·lbf
Control shaft lever x Park/neutral position switch		13	130	9
Battery carrier x Body		13	132	10
Engine hanger x Engine		38	387	28
Drain plug x Oil pan		49	500	36
Transaxle x Engine	Bolt A:	64	650	47
	Bolt B:	46	470	34
	Bolt C:	44	449	32
Torque converter clutch x Drive plate		41	420	30
Engine mounting bracket RR x Transaxle		64	652	47
Engine mounting bracket FR x Transaxle		64	652	47
Center member x Body		45	459	33
Center member x Suspension member	Bolt B:	96	979	71
	Boltc:	52	530	38
Engine mounting insulator RR x Engine mounting bracket RR		87	887	64
Engine mounting insulator RR x Suspension member		52	530	38
Engine mounting insulator FR x Engine mounting bracket FR		52	530	38
Engine mounting bracket LH x Transaxle		64	653	47
Engine mounting insulator LH x Body	Bolt A:	52	530	38
	Nut B:	80	816	59
Starter x Transaxle		37	377	27
Starter wire x Starter		9.8	100	87 in.·lbf
Oil filler tube x Transaxle		5.5	56	49 in.·lbf
Oil cooler tube clamp x Oil filler tube		5.4	55	47 in.·lbf
Oil cooler outlet tube x Transaxle		34	347	25
Oil cooler inlet tube x Transaxle		34	347	25
Wire harness clamp bracket x Transaxle		13	132	10
Wire harness x Transaxle	Bolt A:	5.0	51	44 in.·lbf
	Bolt B:	8.4	86	74 in.·lbf
Control cable bracket x Transaxle		12	122	8
Control cable clamp x Transaxle		12	122	9
Air cleaner assy x Body		5.0	50	49 in.·lbf
Cylinder head cover sub–assy No. 1 x Engine		9.0	92	80 in.·lbf
Transmission wire x Transaxle		5.4	55	48 in.·lbf
Solenoid valve x Valve body	Bolt A:	6.6	67	58 in.·lbf
	Bolt B:	11	110	8
Valve body x Transaxle		11	110	8
Manual detent spring x Valve body		11	110	8
Oil strainer x Valve body		11	110	8
Oil pan x Transaxle		7.8	80	69 in.·lbf
Floor shift assy x Body		12	122	9
Control cable x Control shaft lever		12	122	9
Control cable x Body	Bolt	5.0	50	43 in.·lbf
	Nut	5.0	50	43 in.·lbf
Speed sensor x Transaxle		12	122	9
Drive shaft bearing cace x Bearing bracket		64	650	47

MANUAL TRANSMISSION / TRANSAXLE

030NC–02

SERVICE DATA

C50, C250	
Transmission case oil seal drive in depth	9.9 ± 0.3 mm (0.390 ± 0.012 in.)
Transaxle case oil seal drive in depth	1.9 ± 0.3 mm (0.075 ± 0.012 in.)
E354, E357	
Transmission case oil seal drive in depth	3.5 ± 0.5 mm (0.138 ± 0.020 in.)
Transaxle case cover oil seal drive in depth	0 ± 0.5 mm (0 ± 0.020 in.)

030ND–02

TORQUE SPECIFICATION

Part Tightened		N·m	kgf·cm	ft·lbf
FLOOR SHIFT TRANSMISSION CONTROL CABLE ASSY				
Floor shift transmission control cable assy x Body		5.0	51	44 in.·lbf
Front floor heat insulator No.1 x Body		5.5	56	49 in.·lbf
FLOOR SHIFT SHIFT LEVER ASSY				
Floor shift shift lever assy x Body		12	122	9
MANUAL TRANSAXLE ASSY (1ZZ–FE/ 3ZZ–FE)				
Filler and drain plugs		39	400	29
Engine hanger set bolt		38	387	28
Engine mounting bracket RR x Transaxle		64	653	47
Engine mounting bracket RR x Engine mounting insulator RR		87	887	64
Engine mounting bracket FR x Transaxle		64	653	47
Engine mounting bracket FR x Engine mounting insulator FR		52	530	38
Manual transaxle assy x Engine	Bolt A:	64	650	47
	Bolt B:	47	480	35
	Bolt C:	23	230	17
Transverse engine engine mounting bracket LH x Transaxle		64	653	47
Engine mounting bracket LH x Engine mounting insulator LH	Bolt A:	52	530	38
	Nut B:	80	816	59
Starter assy x Manual transaxle assy		37	380	27
Starter wire set nut		13	130	9
Clutch release cylinder assy x Transaxle	Bolt A:	25	250	19
	Bolt B:	14	141	10
	Bolt C:	5.0	21	44 in.·lbf
Manual transaxle assy x Wire harness clmap	Bolt A:	26	260	19
	Bolt B:	19	195	14
Manual transaxle assy x Ground cable	Bolt A:	26	260	19
	Bolt B:	40	410	30
Battery carrier x Body		13	131	9
Battery clamp sub–assy x Body	Bolt:	5.0	51	44 in.·lbf
	Nut:	3.5	36	31 in.·lbf
Air cleaner assy x Body		5.0	51	44 in.·lbf
Cylinder head cover No.2 x Engine		7.0	71	62 in.·lbf
Hood set bolt		13	133	10
MANUAL TRANSAXLE ASSY (1AZ–FE/ 1AZ–FSE)				
Filler and drain plugs		49	500	36
Engine hanger x Engine		38	387	28
Transmission case protector x Transaxle		18	184	13
Engine mounting bracket RR x Transaxle		64	653	47
Engine mounting bracket RR x Engine mounting insulator RR		87	887	64
Engine mounting bracket FR x Transaxle		64	653	47
Engine mounting bracket FR x Engine mounting insulator FR		52	530	38
Manual transaxle assy x Engine	Bolt A:	64	650	47
	Bolt B:	46	470	34
	Bolt C:	44	449	32
Transverse engine engine mounting bracket LH x Transaxle		64	653	47
Engine mounting bracket LH x Engine mounting insulator LH	Bolt A:	52	530	38
	Nut B:	80	816	59
Manual transaxle assy x Ground cable	Bolt A:	26	260	19
	Bolt C:	40	410	30
Manual transaxle assy x Wire harness clamp		8.4	85	74 in.·lbf
Clutch release cylinder assy x Transaxle	Bolt A:	9.0	92	80 in.·lbf
	Bolt B:	12	120	9

Part Tightened		N·m	kgf·cm	ft·lbf
Battery carrier x Body		13	131	9
Battery clamp sub–assy x Body	Bolt: Nut:	5.0 3.5	51 36	44 in.·lbf 31 in.·lbf
Air cleaner assy x Body		5.0	51	44 in.·lbf
Engine cover sub–assy No.1 x Engine		9.0	92	80 in.·lbf
Hood set bolt		13	132	10
MANUAL TRANSAXLE ASSY (1CD–FTV)				
Filler and drain plugs		49	500	36
Engine hanger x Engine		37	377	27
Transmission case protector x Transaxle		18	184	13
Engine mounting bracket RR x Transaxle		64	653	47
Engine mounting bracket RR x Engine mounting insulator RR		87	887	64
Engine mounting bracket FR x Transaxle		64	653	47
Engine mounting bracket FR x Engine mounting insulator FR		52	530	38
Manual transaxle assy x Engine	Bolt A: Bolt B: Bolt C: Bolt D: Bolt E:	64 46 40 20 8.0	653 469 408 200 82	47 34 30 14 71 in.·lbf
Transverse engine engine mounting bracket LH x Transaxle		64	653	47
Engine mounting bracket LH x Engine mounting insulator LH	Bolt A: Nut B:	52 80	530 816	38 59
Accumulator to flexible hose tube x Transaxle	Bolt A: Bolt B: Bolt C:	12 5.0 9.0	120 51 92	9 44 in.·lbf 80 in.·lbf
Manual transaxle assy x Ground cable		13	131	9
Air tube No.2 x Transaxle		25	255	18
Starter assy x Transaxle		37	380	27
Starter wire set nut		13	130	9
Radiator reserve tank assy x Body		6.0	61	53 in.·lbf
Air tube No.1 x Engine		25	255	18
Battery clamp sub–assy x Body	Bolt: Nut:	5.0 3.5	51 36	44 in.·lbf 31 in.·lbf
Air cleaner assy x Body		7.0	71	62 in.·lbf
Engine cover No.1 x Engine		8.0	82	71 in.·lbf
Hood set bolt		13	133	10

CLUTCH

030L1–03

SERVICE DATA

Pedal height from asphalt sheet LHD steering position type		
	1CD–FTV engine type w/ intercooler	154.0 – 164.0 mm (6.063 – 6.457 in.)
	Others	139.6 – 149.6 mm (5.496 – 5.890 in.)
Pedal height from asphalt sheet RHD steering position type		
	1CD–FTV engine type w/ intercooler	158.4 – 168.4 mm (6.236 – 6.630 in.)
	Others	148.4 – 158.4 mm (5.843 – 6.236 in.)
Clutch pedal free play		5.0 – 15.0 mm (0.197 – 0591 in.)
Clutch pedal push rod play at pedal top		1.0 – 5.0 mm (0.039 – 0.197 in.)
Slotted spring pin protrusion		1.5 – 3.5 mm (0.059 – 0.138 in.)
Clutch release point from pedal full stroke end position		25 mm (0.98 in.) or more
Clutch disc rivet head depth	Maximum	0.3 mm (0.012 in.)
Clutch disc assy runout	Minimum	0.8 mm (0.031 in.)
Diaphragm spring finger wear	Maximum depth:	0.5 mm (0.020 in.)
	Maximum width:	6.0 mm (0.236 in.)
Flywheel sub–assy runout	Maximum	0.1 mm (0.004 in.)
Diaphragm tip alignment	Maximum	0.5 mm (0.020 in.)

030L2–04

TORQUE SPECIFICATION

Part Tightened	N·m	kgf·cm	ft·lbf
Clutch pedal support x Stopper bolt	25	250	18
Clutch pedal sub–assy x Clutch pedal support	37	375	27
Clutch pedal support x Body	19	195	14
Clutch pedal support x Clutch start switch assy	16	160	12
Clutch master cylinder push rod clevis lock nut	12	120	9
Clutch master cylinder x Flexible hose tube	15	155	11
Clutch master cylinder x Body	12	120	9
Clutch release cylinder bleeder plug	8.4	85	74 in.·lbf
Clutch release cylinder x Transaxle housing 1CD–FTV/1AZ–FSE/1AZ–FE engine type	12	120	9
Clutch release cylinder x Transaxle housing 1ZZ–FE/3ZZ–FE engine type	14	141	10
Clutch release cylinder x Flexible hose tube bracket 1ZZ–FE/3ZZ–FE engine type	5.0	51	44 in.·lbf
Clutch release cylinder x Clutch line clamp 1AZ–FSE/1AZ–FE engine type	12	122	9
Clutch release cylinder x Flexible hose tube	15	155	11
Clutch release cylinder x Clutch accumulator assy 1CD–FTV engine type	12	120	9
Clutch accumulator assy x Flexible hose tube 1CD–FTV engine type	15	155	11
Clutch cover assy x Flywheel sub–assy	19	195	14
Release fork support x Transaxle assy 1AZ–FSE/1AZ–FE engine type 1ZZ–FE/3ZZ–FE/1CD–FTV engine type	48 37	480 375	35 27

STEERING COLUMN

031FX–01

SERVICE DATA

STEERING SYSTEM		
Steering wheel freeplay	Maximum	30 mm (1.18 in.)

031FZ–01

TORQUE SPECIFICATION

Part Tightened	N·m	kgf·cm	ft·lbf
Steering intermediate shaft assy No. 2 x Oil pressure power steering column assy (LHD steering positoin type)	28	286	21
Steering sliding yoke sub–assy x Oil pressure power steering column assy (RHD steering positoin type)	28	286	21
Steering intermediate shaft assy No. 2 x Electric power steering column assy (LHD steering positoin type)	35	360	26
Steering sliding yoke sub–assy x Electric power steering column assy (RHD steering positoin type)	35	360	26
Steering sliding yoke sub–assy x Steering intermediate shaft assy No. 2	35	360	26
Steering column assy set bolt	21	214	15
Steering sliding yoke sub–assy x Steering gear assy (LHD steering positoin type)	35	360	26
Steering intermediate shaft assy No. 2 x Steering gear assy (RHD steering positoin type)	35	360	26
Steering wheel set nut	50	510	37
Steering wheel pad set screw (Torx screw)	8.8	90	78 in.·lbf
Steering column cover LWR x Steering column assy	5.0	51	44 in.·lbf
Instrument panel airbag assy	18	184	13
Power steering ECU assy (Bolt A)	8	82	71 in.·lbf
Power steering ECU assy (Bolt B)	15.5	158	11

POWER STEERING

030G6–04

SERVICE DATA

POWER STEERING FLUID		
Fluid level rise	Maximum	5 mm (0.20 in.)
Fluid pressure at idle speed with valve closed	AZ Series: 1CD–FTV:	8,300 to 9,000 kPa (85 to 92 kgf/cm^2, 1,204 to 1,305 psi) 8,800 to 9,500 kPa (90 to 97 kgf/cm^2, 1,276 to 1,378 psi)
STEERING WHEEL		
Steering effort at idle speed	(Reference)	5.5 N·m (56 kgf·cm, 49 in.·lbf)
VANE PUMP ASSY		
Vane pump rotating torque		0.27 N·m (2.8 kgf·cm, 2.4 in.·lbf) or less
Vane pump shaft and vane pump housing oil clearance	Maximum	0.07 mm (0.0028 in.)
Vane plate thickness	Minimum	1.405 to 1.411 mm (0.05531 to 0.05555 in.)
Clearance between the rotor groove and plate	Maximum	0.03 mm (0.0012 in.)
Spring free length	Minimum	36.9 mm (1.453 in.)
STEERING GEAR ASSY		
Total preload (Tie rod rotating torque)	(Turning)	0.29 to 1.96 N·m (3 to 20 kgf·cm, 2.57 to 17.35 in.·lbf)
Total preload (Control valve rotating torque)	(Turning)	0.6 to 1.1 N·m (6 to 11 kgf·cm, 5.3 to 9.7 in.·lbf)
RACK & PINION POWER STEERING GEAR ASSY		
Total preload (Tie rod rotating torque)	(Turning)	0.49 to 3.43 N·m (5 to 35 kgf·cm, 4.34 to 30.38 in.·lbf)

030G7–04

TORQUE SPECIFICATION

Part tightened	N·m	kgf·cm	ft·lbf
VANE PUMP ASSY (AZ Series)			
Vane pump housing sub–assy rear x Vane pump housing sub–assy front	22	224	16
Power steering oil pressure switch	21	214	15
Pressure port union sub–assy	69	704	51
Power steering suction port union set bolt	12	122	9
Vane pump assy x Pump bracket rear	44	449	32
Vane pump assy set bolt	26 (37)	264 (377)	19 (27)
Pressure feed tube assy x Vane pump assy	52	525	38
Pressure feed tube assy clamp set bolt	8.0	82	71 in.·lbf
VANE PUMP ASSY (1CD–FTV)			
Vane pump housing sub–assy rear x Vane pump housing sub–assy front	22	224	16
Pressure port union sub–assy	69	704	51
Power steering suction port union set bolt	12	122	9
Vane pump assy set bolt Bolt A:	72	734	53
Bolt B:	39	398	29
Pressure feed tube assy x Vane pump assy	41 (44.1)	414 (450)	30 (33)
Pressure feed tube assy clamp set bolt	8.0	82	71 in.·lbf
STEERING GEAR ASSY			
Engine hanger set bolt	38	387	28
Steering rack x Steering rack end sub–assy	60 (83.5)	616 (851)	45 (62)
Tie rod end sub–assy lock nut	74	750	54
Steering gear assy set bolt	49	500	36
Steering intermediate shaft x Steering pinion shaft	35	360	26
RACK & PINION POWER STEERING GEAR ASSY			
Engine hanger set bolt AZ Series:	38	390	28
1CD–FTV:	37	375	27
Tie rod end sub–assy lock nut	74	750	54
Rack & pinion power steering gear assy set bolt	49	500	36
Steering intermediate shaft x Control valve pinion shaft	35	360	26
Front suspension crossmember sub–assy x Frame	113	1,356	98
Crossmember bracket x Frame Bolt A:	113	1,356	98
Bolt B:	80	816	59
Crossmember x Engine mounting insulator RR	52	530	38
Center member x Frame	45	459	33
Center member x Engine mounting insulator FR	52	530	38
Front suspension arm sub–assy lower No.1 x Lower ball joint	89	908	66
Front stabilizer link assy set nut	74	755	55
Pressure feed tube assy x Rack & pinion steering gear assy	41 (44.1)	414 (450)	30 (33)
Steering gear outlet return tube x Rack & pinion steering gear assy	41 (44.1)	414 (450)	30 (33)
Outlet return tube clamp set bolt (LHD)	8.0	82	71 in.·lbf
Tie rod end sub–assy x Steering knuckle	49	500	36
Steering intermediate shaft assy No.2 set bolts	35	360	26
Front wheel hub nut	103	1,050	76

( ): For use without SST(s)

HEATER AND AIR CONDITIONING

031HH–01

SERVICE DATA

Refrigerant charge volume	Standard:	440 ± 30 g (15.51 ± 1.06 oz.)
Belt deflection	New belt:	11 – 13 mm (0.43 – 0.51 in.)
	Used belt:	13.5 – 16.5 mm (0.53 – 0.64 in.)

031HI–01

TORQUE SPECIFICATION

Part Tightened	N·m	kgf·cm	ft·lbf
V (COOLER COMPRESSOR TO CRANKSHAFT PULLEY) BELT NO. 1			
Tighten	2.5	25	22 in.·lbf
Fully tighten	39	390	29
AIR CONDITIONER RADIATOR ASSY			
Air conditioning tube assy x Cooler evaporator sub–assy No. 1	3.5	35	30 in.·lbf
Air conditioner unit assy x Body	9.8	100	87 in.·lbf
BLOWER ASSY			
Blower assy x Body Bolt:	9.8	100	87 in.·lbf
W/PULLEY COMPRESSOR ASSY (3ZZ–FE)			
W/pulley compressor assy x Engine	29	300	21
Cooler refrigerant discharge hose No. 1 x W/pulley compressor assy	9.8	100	87 in.·lbf
Cooler refrigerant suction hose No. 1 x W/pulley compressor assy	9.8	100	87 in.·lbf
W/PULLEY COMPRESSOR ASSY (1ZZ–FE)			
W/pulley compressor assy x Engine	29	300	21
Cooler refrigerant discharge hose No. 1 x W/pulley compressor assy	9.8	100	87 in.·lbf
Cooler refrigerant suction hose No. 1 x W/pulley compressor assy	9.8	100	87 in.·lbf
W/PULLEY COMPRESSOR ASSY (1AZ–FSE)			
W/pulley compressor assy x Engine	29	300	21
Cooler refrigerant discharge hose No. 1 x W/pulley compressor assy	9.8	100	87 in.·lbf
Cooler refrigerant suction hose No. 1 x W/pulley compressor assy	9.8	100	87 in.·lbf
W/PULLEY COMPRESSOR ASSY (1AZ–FE)			
W/pulley compressor assy x Engine	29	300	21
Cooler refrigerant discharge hose No. 1 x W/pulley compressor assy	9.8	100	87 in.·lbf
Cooler refrigerant suction hose No. 1 x W/pulley compressor assy	9.8	100	87 in.·lbf
W/PULLEY COMPRESSOR ASSY (1CD–FTV)			
W/pulley compressor assy x Engine	29	300	21
Cooler refrigerant discharge hose No. 1 x W/pulley compressor assy	9.8	100	87 in.·lbf
Cooler refrigerant suction hose No. 1 x W/pulley compressor assy RHD:	9.8	100	87 in.·lbf
Suction servic valve x W/pulley compressor assy LHD:	9.8	100	87 in.·lbf
Cooler refrigerant suction hose No. 1 x Suction servic valve	9.8	100	87 in.·lbf
W/RECEIVER CONDENSER ASSY			
Cap x W/receiver condenser assy	2.9	29	25 in.·lbf
Magnet valve x W/receiver condenser assy	3.4	35	30 in.·lbf
Discharge tube x Magnet valve	3.4	35	30 in.·lbf
Discharge tube x W/receiver condenser assy	5.4	55	47 in.·lbf
Liquid tube sub–assy B x W/receiver condenser assy	5.4	55	47 in.·lbf
Discharge hose sub–assy x W/receiver condenser assy	5.4	55	47 in.·lbf
Liquid tube sub–assy A x W/receiver condenser assy	5.4	55	47 in.·lbf
HEAER ASSY			
Heater assy x Body	7.5	76	66 in.·lbf

SUPPLEMENTAL RESTRAINT SYSTEM

TORQUE SPECIFICATION

031HM–01

Part Tightened	N·m	kgf·cm	ft·lbf
Horn button assy x Steering wheel assy	8.8	90	78 in.·lbf
Steering wheel assy x Steering column assy	50	510	37
Instrument panel passenger airbag assy x Instrument panel reinforcement	20	200	14
Curtain shield airbag assy x Body	3.5 14	36 143	31 in.·lbf 10
Instrument panel airbag assy x Instrument panel reinforcement	18	184	13
Airbag sensor assy center x Body	17.5	178	13
Airbag front sensor set bolt	7.5	76	66 in.·lbf
Side airbag sensor assy LH x Body	17.5	178	13
Airbag sensor rear LH x Body	17.5	178	13
Seat position airbag sensor x Front seat	8.0	82	71 in.·lbf

SEAT BELT

TORQUE SPECIFICATION

031H8–01

Part Tightened	N·m	kgf·cm	ft·lbf
FRONT SEAT BELT			
Front seat outer belt assy RH (Upper bolt) x Body	7.5	76.5	66 in.·lbf
Front seat outer belt assy RH (Lower bolt) x Body	42	430	31
Front seat inner belt assy RH x Front seat assy	42	430	31
Front shoulder belt anchor adjuster assy x Body	42	430	31
Front seat outer belt (Floor anchor side) x Body	42	430	31
Front seat outer belt (Shoulder anchor side) x Body	42	430	31
REAR SEAT BELT			
Rear seat 3 point type belt assy inner x Body	42	430	31
CRS anchor bracket sub–assy RH x Body	31	316	23
Rear seat belt assy outer center (Retractor side) x Body	42	430	31
Rear seat belt assy outer center (Floor anchor side) x Body	42	430	31
Rear seat 3 point type belt assy outer (Upper bolt) x Body	7.5	76.5	66 in.·lbf
Rear seat 3 point type belt assy outer (Lower bolt) x Body	42	430	31
Rear seat 3 point type belt assy outer (Floor anchor side) x Body	42	430	31

LIGHTING

TORQUE SPECIFICATION

031HC–01

Part Tightened	N·m	kgf·cm	ft·lbf
Height control sensor sub–assy Fr RH x Body	7.9	81	70 in.·lbf
Height control sensor sub–assy Fr RH x Stabilizer bar rear	5.8	59	51 in.·lbf
Height control sensor sub–assy Rr RH x Suspension menber	7.9	81	70 in.·lbf
Height control sensor sub–assy Rr RH x Upper control arm assy	5.8	59	51 in.·lbf

WIPER & WASHER

TORQUE SPECIFICATION

031HA–01

Part Tightened	N·m	kgf·cm	ft·lbf
Wiper motor x Wiper link	7.5	76	66 in.·lbf
Wiper link x Body	5.5	56	49 in.·lbf
Wiper arm x Wiper link	21	210	15
Rear wiper motor x Body	5.5	56	49 in.·lbf
Rear wiper motor x Rear wiper arm	5.5	56	49 in.·lbf

AUDIO & VISUAL SYSTEM

TORQUE SPECIFICATION

031HB–01

Part Tightened	N·m	kgf·cm	ft·lbf
Amplifier antenna assy x Body	7.0	71	62 in.·lbf
Antenna cord sub–assy x Body	7.0	71	62 in.·lbf
Antenna cord sub–assy No.3 x Body	7.0	71	62 in.·lbf

COMMUNICATION SYSTEM

TORQUE SPECIFICATION

031HJ–01

Part Tightened	N·m	kgf·cm	ft·lbf
HIGH PITCHED HORN ASSY			
High pitched horn assy x Body	20	199	15
LOW PITCHED HORN ASSY			
Low pitched horn assy x Body	20	199	15

WINDSHIELD/WINDOWGLASS/MIRROR

031HO–01

TORQUE SPECIFICATION

Part Tightened	N·m	kgf·cm	ft·lbf
OUTER REAR VIEW MIRROR ASSY LH			
Outer rear view mirrror assy x Front door	10	102	7

INSTRUMENT PANEL/METER

TORQUE SPECIFICATION

031I3–01

Part Tightened	N·m	kgf·cm	ft·lbf
Instrument Panel Reinforcement × Passenger Airbag	20	204	15

SEAT

TORQUE SPECIFICATION

031HN–01

Part Tightened		N·m	kgf·cm	ft·lbf
FRONT SEAT				
Seat Inner belt assy x Seat adjuster assy		42	428	31
Seatback cover bracket x Seat adjuster assy (w/ Side airbag)		6.0	61	53 in.·lbf
Seat assy x Body		37	375	27
Seat position airbag sensor x Seat adjuster assy		8.0	82	71 in.·lbf
Power seat motor assy (Reclining) x Seat adjuster assy		4.5	46	40 in.·lbf
Power seat motor assy (Slide) x Seat adjuster assy	Bolt Nut	4.0 3.5	41 36	35 in.·lbf 31 in.·lbf
Power seat motor assy (lifter) x Seat adjuster assy	Bolt Nut	2.5 25	25 255	22 in.·lbf 18
Power seat motor assy (Front vertical) x Seat adjuster assy	Bolt Nut	2.5 25	25 255	22 in.·lbf 18
Front seatback spring assy x Front seat adjuster		25	255	18
REAR SEAT				
Armrest assy x Seatback assy		8.0	82	71 in.·lbf
Seat belt assy outer center x Seatback frame		42	428	31
Seat belt assy outer center x Body		42	428	31
Seatback lock assy x Seatback frame		30	306	22
Seatback hinge x Seatback frame		18	185	13
Seatback hinge x Body		18	185	13
Seatback hinge center x Body		18	185	13
Seatback hinge center x Seatback frame		18	185	13
Side seatback assy x Body		18	185	13
Bench type seatback assy x Body		18	185	13
Seat cushion frame x Body		18	185	13

SLIDING ROOF/CONVERTIBLE

TORQUE SPECIFICATION

031GX–01

Part Tightened	N·m	kgf·cm	ft·lbf
Sliding roof glass assembly × Drive cable	4.0	40	35 in.·lbf
Sliding roof housing sub–assy × Body			
Bolt	5.0	51	44 in.·lbf
Nut	5.5	56	49 in.·lbf

ENGINE HOOD/DOOR

TORQUE SPECIFICATION

031GG–01

Part Tightened	N·m	kgf·cm	ft·lbf
HOOD			
Hood hinge x Hood	13	133	10
Hood hinge x Body	5.5	56	49 in.·lbf
Hood lock x Hood	8.0	82	71 in.·lbf
FRONT DOOR			
Door check x Body	30	306	22
Door check x Door panel	5.5	56	46 in.·lbf
Door frame sub–assy rear lower x Door panel	8.0	82	71 in.·lbf
Door glass x Front door window regulator	5.5	56	49 in.·lbf
Door hinge x Body	26	265	19
Door hinge x Door panel	26	265	19
Door lock x Door panel	5.0	51	44 in.·lbf
Door lock striker x Body	23	235	17
Door outside handle cover x Door panel	7.0	71	62 in.·lbf
Door outside handle frame x Door panel	4.0	41	35 in.·lbf
Outer view mirror x Door panel	10	102	7
Window regulator x Door panel	8.0	82	71 in.·lbf
REAR DOOR			
Door check x Body	30	306	22
Door check x Door panel	5.5	56	49 in.·lbf
Door hinge x Body	26	265	19
Door hinge x Door panel	26	265	19
Door lock x Door panel	5.0	51	44 in.·lbf
Door lock striker x Body	23	235	17
Door outside handle cover x Door panel	4.0	41	35 in.·lbf
Door outside handle frame x Door panel	7.0	71	62 in.·lbf
Window division bar sub–assy x Door panel	5.5	56	49 in.·lbf
LAGGAGE COMPERTMENT DOOR			
Back door striker assy x Body	11.5	120	8.0
Luggage compertment door x Hinge	7.0	70	62 in.·lbf
Luggage lock assy x Luggage compertment door	5.0	51	44 in.·lbf
Luggage compertment outside garnish x Luggage compertment door	4.9	49	43 in.·lbf
BACK DOOR (LIFTBACK MODEL)			
Back door femaie stopper x Door panel	5.5	56	49 in.·lbf
Back door hinge assy x Body	19.5	200	14
Back door hinge assy x Door panel	19.5	200	14
Back door lock assy x Door panel	8.0	82	71 in.·lbf
Back door lock Striker x Body	11.5	120	8.0
Back door stay sub–assy x Body	7.0	71	62 in.·lbf
Back door stay sub–assy x Door panel	22	224	16
Center stop lamp assy x Door panel	5.5	56	49 in.·lbf
BACK DOOR (WAGON MODEL)			
Back door femaie stopper x Door panel	5.5	56	49 in.·lbf
Back door hinge assy x Body	19.5	200	14
Back door hinge assy x Door panel	19.5	200	14
Back door lock assy x Door panel	8.0	82	71 in.·lbf
Back door lock Striker x Body	11.5	120	8.0
Back door stay sub–assy x Body	7.0	71	62 in.·lbf

Part Tightened	N·m	kgf·cm	ft·lbf
Back door stay sub–assy x Door panel	22	224	16
Center stop lamp assy x Door panel	5.5	56	49 in.·lbf

EXTERIOR/INTERIOR TRIM

TORQUE SPECIFICATION

031GY–01

Part Tightened	N·m	kgf·cm	ft·lbf
FUEL LID CONTROL ASSY			
Fuel lid control assy x Body	8.0	82	71 in.·lbf
REAR BUMPER COVER			
Rear bumper cover x Body	5.5	56	49 in.·lbf
Rear bumper reinforcement No. 1 x Body	11.5	115	16
BACK DOOR GARNISH OUTSIDE			
Back door garnish × Body	4.9	50	43 in.·lbf
REAR SPOILER (WAGON MODELS)			
Rear spoiler × Body	9.8	99	87 in.·lbf

SFI SYSTEM (1ZZ–FE/3ZZ–FE)

0505G–04

HOW TO PROCEED WITH TROUBLESHOOTING

1	VEHICLE BROUGHT TO WORKSHOP

2	CUSTOMER PROBLEM ANALYSIS (See page 05–4)

3	CONNECT THE HAND–HELD TESTER TO DLC3

HINT:
If the display indicates a communication fault in the tool, inspect DLC3.

4	CHECK DTC AND FREEZE FRAME DATA (See page 05–5)

HINT:
Record or print DTC and freeze frame data, if needed.

5	CLEAR DTC AND FREEZE FRAME DATA (See page 05–5)

6	VISUAL INSPECTION

7	SETTING THE CHECK (TEST) MODE DIAGNOSIS (See page 05–5)

8	PROBLEM SYMPTOM CONFIRMATION

HINT:
If the engine does not start, perform steps 10 and 12 first.

A	Malfunction does not occur
B	Malfunction occurs

B → GO TO STEP 10

A

9	SYMPTOM SIMULATION

10	DTC CHECK (See page 05–5)

A	Malfunction code
B	No code

B → GO TO STEP 12

A

11	DTC CHART (See page 05–16)

GO TO STEP 14

12	BASIC INSPECTION (See page 05–5)

A	Wrong parts not confirmed
B	Wrong parts confirmed

B → GO TO STEP 17

A

13	PROBLEM SYMPTOMS TABLE (See page 05–22)

A	Wrong circuit confirmed
B	Wrong parts confirmed

B → GO TO STEP 17

A

14	CHECK ECM POWER SOURCE CIRCUIT (See page 05–124)

15	CIRCUIT INSPECTION

A	Malfunction not confirmed
B	Malfunction confirmed

B → GO TO STEP 18

A

16	CHECK FOR INTERMITTENT PROBLEMS (See page 05–5)

GO TO STEP 18

17	PARTS INSPECTION

18	IDENTIFICATION OF PROBLEM

19	ADJUSTMENT, REPAIR

20	CONFIRMATION TEST

END

0505N–04

CUSTOMER PROBLEM ANALYSIS CHECK

ENGINE CONTROL SYSTEM Check Sheet

Inspector's Name

Customer's Name		VIN	
Driver's Name		Production Date	
Date Vehicle Brought in		Licence No.	
License No.		Odometer Reading	km miles

Problem Symptoms	☐ Engine does not Start	☐ Engine does not crank ☐ No initial combustion ☐ No complete combustion
	☐ Difficult to Start	☐ Engine cranks slowly ☐ Other _____
	☐ Poor Idling	☐ Incorrect first idle ☐ Idling rpm is abnormal ☐ High (rpm) ☐ Low (rpm) ☐ Rough idling ☐ Other _____
	☐ Poor Driveability	☐ Hesitation ☐ Back fire ☐ Muffler explosion (after–fire) ☐ Surging ☐ Knocking ☐ Other _____
	☐ Engine Stall	☐ Soon after starting ☐ After accelerator pedal depressed ☐ After accelerator pedal released ☐ During A/C operation ☐ Shifting from N to D ☐ Other _____
	☐ Others	

Data Problem Occurred		
Problem Frequency		☐ Constant ☐ Sometimes (times per day/month) ☐ Once only ☐ Other _____
Condition When Problem Occurs	Weather	☐ Fine ☐ Cloudy ☐ Rainy ☐ Snowy ☐ Various/Other _____
	Outdoor Temperature	☐ Hot ☐ Warm ☐ Cool ☐ Cold (approx.____ °C/____ °F)
	Place	☐ Highway ☐ Suburbs ☐ Inner City ☐ Uphill ☐ Downhill ☐ Rough road ☐ Other _____
	Engine Temp.	☐ Cold ☐ Warming up ☐ After Warming up ☐ Any temp. ☐ Other _____
	Engine Operation	☐ Starting ☐ Just after starting (min.) ☐ Idling ☐ Racing ☐ Driving ☐ Constant speed ☐ Acceleration ☐ Deceleration ☐ A/C switch ON/OFF ☐ Other _____

Condition of check engine warning light (CHK ENG)		☐ Remains on	☐ Sometimes lights up ☐ Does not light up
DTC Inspection	Normal mode (Pre–check)	☐ Normal	☐ Malfunction code(s) (code) ☐ Freeze frame data ( )
	Check Mode	☐ Normal	☐ Malfunction code(s) (code) ☐ Freeze frame data ( )

05C66–01

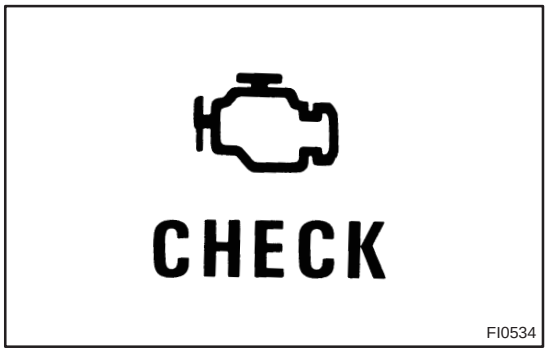

PRE–CHECK

1. DIAGNOSIS SYSTEM

(a) Description for Euro–OBD (European spec.)

- When troubleshooting Euro–OBD vehicles, the only difference from the usual troubleshooting procedure is that you connect the vehicle to the OBD scan tool complying with ISO 15031–4 or hand–held tester, and read the various data output from the vehicle's ECM.
- Euro–OBD regulations require that the vehicle's on–board computer illuminates the check engine warning light (CHK ENG) on the instrument panel when the computer detects a malfunction in the emission control system / components or in the power train control components which affect vehicle emissions, or a malfunction in the computer. In addition to an illumination of the CHK ENG when a malfunction is detected, the applicable Diagnostic Trouble Codes (DTC) prescribed by ISO 15031–4 are recorded in the engine ECU memory (See page 05–16). If the malfunction does not reoccur in 3 consecutive trips, the CHK ENG goes off automatically but the DTCs remain recorded in the ECM memory.

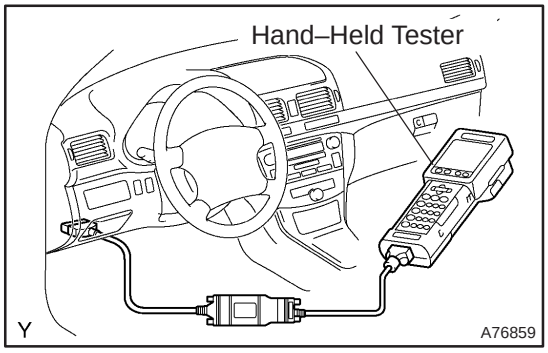

- To check the DTCs, connect the OBD scan tool or hand–held tester to Data Link Connector 3 (DLC3) on the vehicle. The OBD scan tool or hand–held tester also enables you to erase the DTCs and check freezed frame data and various forms of engine data. (For operating instructions, see the OBD scan tool's instruction book.)
  DTCs include ISO controlled codes and manufacturer controlled codes. ISO controlled codes must be set as prescribed by the ISO, while manufacturer controlled codes can be set freely by the manufacturer within the prescribed limits (See DTC chart on page 05–16).
- The diagnosis system operates in the normal mode during normal vehicle use. It also has a check (test) mode for technicians to simulate malfunction symptoms and troubleshoot. Most DTCs use 2 trip detection logic* to prevent erroneous detection, and to ensure a thorough malfunction detection. By switching the ECM to the check (test) mode using hand–held tester when troubleshooting, a technician can cause the CHK ENG to illuminate for a malfunction that is only detected once or momentarily (Hand–held tester only) (See step 3).
- * 2 trip detection logic
  When a logic malfunction is first detected, the pend-

ing fault code is stored in the ECM memory (1st trip). If the same malfunction is detected again during the second drive test, this second detection causes the CHK ENG to illuminate (2nd trip) (However, the ignition switch must be turned OFF between the 1st trip and 2nd trip).

- Freeze frame data:
  Freeze frame data records the engine condition when a misfire (DTCs P0300 – P0304) or fuel trim malfunction (DTCs P0171) or other malfunction (first malfunction only), is detected.
  Because freeze frame data records the engine conditions (fuel system, calculated load, engine coolant temperature, fuel trim, engine speed, vehicle speed, etc.) when the malfunction is detected, when troubleshooting it is useful for determining whether the vehicle was running or stopped, the engine warmed up or not, the air–fuel ratio lean or rich, etc. at the time of the malfunction.
- Priorities for troubleshooting:
  If troubleshooting priorities for multiple DTCs are given in the applicable DTC chart, these should be followed.

If no instructions are given, troubleshoot according to the following priorities.

(1) DTCs other than fuel trim malfunction (DTCs P0171) and misfire (DTCs P0300 – P0304).
(2) Fuel trim malfunction (DTCs P0171).
(3) Misfire (DTCs P0300 – P0304).

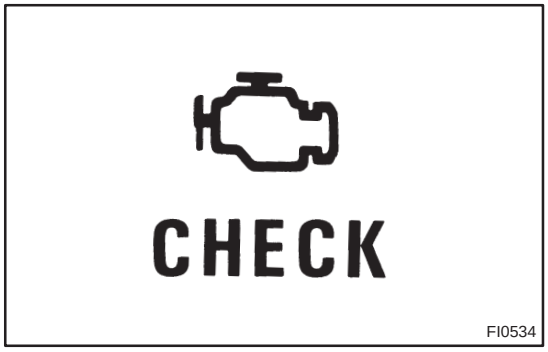

(b) Description for M–OBD (Except European spec.)

- When troubleshoot Multiplex OBD (M–OBD) vehicles, the only difference from the usual troubleshooting procedure is that you connect the hand–held tester to the vehicle, and read the various data output from the vehicle's ECM.

- The vehicle's on–board computer illuminates the check engine warning light (CHK ENG) on the instrument panel when the computer detects a malfunction in the computer itself or in drive system components. In addition to an illumination of the CHK ENG when a malfunction is detected, the applicable Diagnostic Trouble Codes (DTCs) are recorded in the ECM memory (See page 05–16). When the malfunction does not reoccur, the CHK ENG is indicated until the ignition switch is turned off, and then the CHK ENG is not indicated when the ignition switch is turned on but the DTCs remain recorded in the ECM memory.

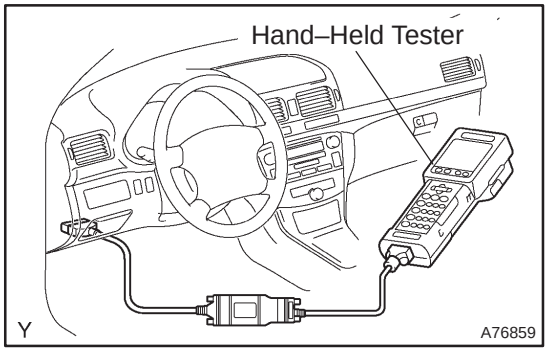

- To check the DTCs, connect the hand–held tester to the Data Link Connector 3 (DLC3) on the vehicle or read the DTC which is indicated on the multi information display when TC and CG terminals on the DLC3 are connected. The hand–held tester also enables you to erase the DTCs and check the freeze frame data and various forms of engine data. (for operating instructions, see the instruction book.)
- The diagnosis system operates in the normal mode during normal vehicle use. It also has a check (test) mode for technicians to simulate malfunction symptoms and troubleshoot. Most DTCs use 2 trip detection logic* to prevent erroneous detection, and to ensure a thorough malfunction detection. By switching the ECM to the check (test) mode using hand–held tester when troubleshooting, a technician can cause the CHK ENG to illuminate for a malfunction that is only detected once or momentarily (Hand–held tester only) (See step 3).
- * 2 trip detection logic
  When a logic malfunction is first detected, the pending fault code is stored in the ECM memory (1st trip). If the same malfunction is detected again during the second drive test, this second detection causes the CHK ENG to illuminate (2nd trip) (However, the ignition switch must be turned OFF between the 1st trip and 2nd trip).

- Freeze frame data:
  Freeze frame data records the engine conditions (fuel system, calculator load, water temperature, fuel trim, engine speed, vehicle speed, etc.) when a malfunction is detected. When troubleshooting, it is useful for determining whether the vehicle was running or stopped, the engine was warmed up or not, the air–fuel ratio was lean or rich, etc. at the time of the malfunction.

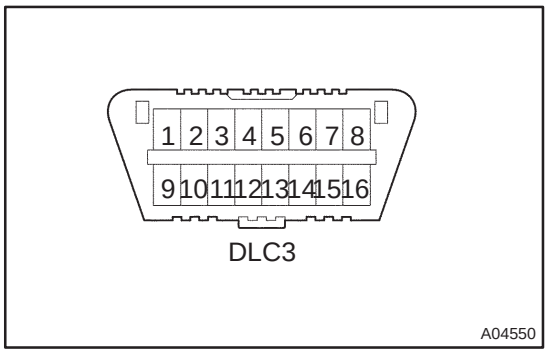

(c) Check the DLC3.
The vehicle's ECM uses the ISO 9141–2 (Euro–OBD)/ ISO 14230(M–OBD) communication protocol. The terminal arrangement of DLC3 complies with ISO 15031–03 and matches the ISO 9141–2/ ISO 14230 format.

Terminal No.	Connection / Voltage or Residence	Condition
7	Bus + Line / Pulse generation+	During transmission
4	Chassis Ground – Body Ground / 1 Ω or less	Always
16	Battery Positive – Body Ground / 9 to 14 V	Always

HINT:
If the display shows "UNABLE TO CONNECT TO VEHICLE" when you have connected the cable of the hand–held tester to the DLC3, turned the ignition switch ON and operated the hand–held tester, there is a problem on the vehicle side or tool side.

- If communication is normal when the tool is connected to another vehicle, inspect the DLC3 on the original vehicle.
- If communication is still not possible is when the tool is connected to another vehicle, the problem is probably in the tool itself, so consult the Service Deparment listed in the tool's instruction manual.

(d) Inspect the battery voltage.
Battery voltage: 11 to 14 V
If voltage is below 11V, recharge the battery before proceeding.

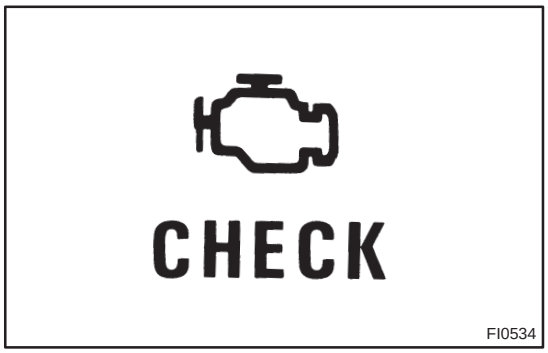

(e) Check the CHK ENG.
(1) The CHK ENG lamp comes on when the ignition switch is turned ON and the engine is not running.

HINT:
If the CHK ENG lamp is not illuminated, troubleshoot the combination meter.

(2) When the engine is started, the CHK ENG should go off. If the lamp remains on, it means that the diagnosis system has detected a malfunction or abnormality in the system.

2. DTC CHECK (Nomal Mode) :

NOTICE:

Hand–held tester only:

When the diagnosis system is switched from the normal mode to the check (test) mode, it erases all DTCs and freeze frame data recorded in the normal mode. So before switching modes, always check the DTCs and freeze frame data, and then write them down.

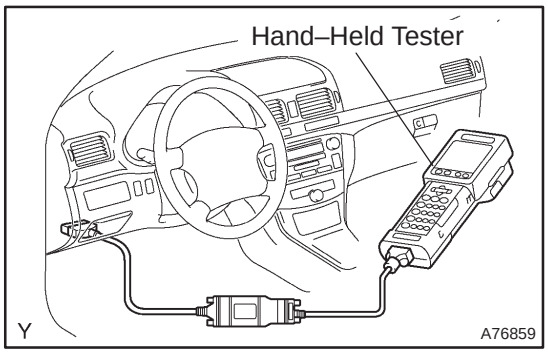

(a) Checking DTCs using the hand–held tester.
  (1) Connect the hand–held tester to the DLC3.
  (2) Turn the ignition switch ON and switch the hand–held tester main switch ON.
  (3) Use the hand–held tester to check the DTCs and freeze frame data and then write them down. The hand–held tester's instruction book.
  (4) See page 05–16 to confirm the details of the DTCs.

(b) Clearing the DTCs using the hand–held tester:
  (1) Connect the hand–held tester to the DLC3.
  (2) Turn the ignition switch ON.
  (3) When operating hand–held tester to erase the codes, the DTCs and freeze frame data will be erased. (See the hand–held tester's instruction book for operating instructions.)

(c) Clearing the DTCs not using the hand–held tester:
  (1) Disconnect the battery terminal or remove the EFI fuse for more than 60 seconds.

3. DTC CHECK (Check Mode):

HINT:

Hand–held tester only:

Compared to the normal mode, the check mode has more sensing ability to detect malfunctions.

Furthermore, the same diagnostic items which are detected in the normal mode can also be detected in the check (test) mode.

(a) Proceduce for check mode using hand–held tester.
  (1) Check the initial conditions
    - Battery positive voltage 11V or more.
    - Throttle valve fully closed.
    - Transmission in the "P" or "N" position.
    - Air conditioning switched OFF.
  (2) Turn the ignition switch OFF.

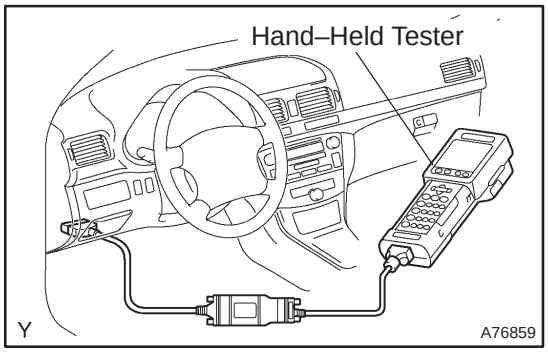

(3) Connect the hand–held tester to the DLC3.
(4) Turn the ignition switch and the hand–held tester main switch ON.

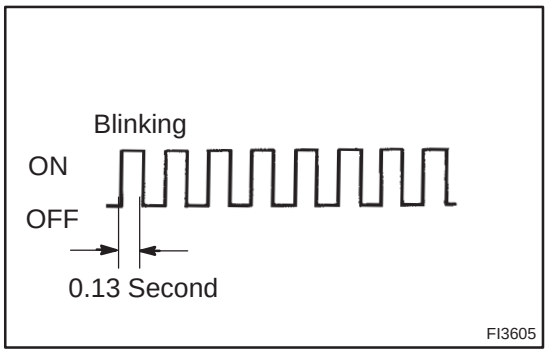

(5) Switch the hand–held tester from the normal mode to the check (test) mode. The CHK ENG blinks in 0.13 sec interval as shown in the illustration.

NOTICE:

If the hand–held tester switches the ECM from the normal mode to the check mode or vice–versa, or if the ignition switch is turned from ON to ACC or OFF during the check mode, the DTC and freeze frame data will be erased.

(6) Start the engine. (The CHK ENG lamp goes out after the engine start.)
(7) Simulate the conditions of the malfunction described by the customer.

NOTICE:

Leave the ignition switch ON until you have checked the DTC, etc.

(8) After simulating the malfunction conditions, use the hand–held tester diagnosis selector to check the DTCs and freeze frame data, etc.

HINT:

Be sure not to turn the ignition switch OFF, because the diagnosis system is changed from the check mode to the nomal mode and will result in all of the DTCs and freeze frame data being erased.

(9) After checking the DTCs, inspect the applicable circuit.

(b) Clearing the DTCs using the hand–held tester
(1) Connect the hand–held tester to DLC3.
(2) Turn the ignition switch ON.
(3) When operating hand–held tester to erase the codes, the DTCs and freeze frame data will be erased. (See the hand–held tester's instruction book for operating instructions.)

(c) Clearing the DTCs not using the hand–held tester:
(1) Disconnect the battery terminal or remove the EFI fuse for more than 60 seconds.

4. FAIL–SAFE CHART

If any of the following codes are recorded, the engine ECM enters the fail–safe mode.

DTC No.	Fail–Safe Operation	Fail–Safe Deactivation Conditions
P0100	Ignition timing is fixed at 5° BTDC	If the ECM detects "Pass" condition, the ECM will return to "Nomal mode".
P0110	Intake air temperature is fixed at 20°C (68°F)	If the ECM detects "Pass" condition, the ECM will return to "Nomal mode".
P0115	Water temperature is fixed at 80°C (176°F)	If the ECM detects "Pass" condition, the ECM will return to "Nomal mode".
P0120	VTA is fixed at 0°	The following condition must be repeated at least 2 times consecutively when closed throttle position switch is OFF: VTA greater than 0.1 V and less than 0.95 V
P0135 P0141	The heater circuit in which an abnormality is detected is turned off	Ignition switch OFF
P0325	Max. timing retardation	Ignition switch OFF
P1300 P1305 P1310 P1315	Fuel cut	If the ECM detects "Pass" condition, the ECM will return to "Nomal mode".
P1656	It cut electrically the circuit in which an abnormality is detected	If the ECM detects "Pass" condition, the ECM will return to "Nomal mode".

5. CHECK FOR INTERMITTENT PROBLEMS

Hand–held tester only:

By putting the vehicle's engine ECM in check (test) mode, 1 trip detection logic is possible instead of 2 trip detection logic, and sensitivity to detect faults is increased. This makes it easier to detect intermittent problems.

(a) Clear the DTC. (See step 3.)
(b) Set the check (test) mode. (See step 3.)
(c) Perform a simulation test. (See page 01–32)
(d) Check the connector and terminal. (See page 01–32)
(e) Wiggle the harness and the connector. (See page 01–32)

6. DATA LIST

HINT:

Using the DATA LIST displayed by the hand–held tester, you can read the value of the switches, sensors, actuators and so on without parts removal. Reading the DATA LIST as a first step of troubleshooting is one of the method to shorten diagnostic time.

NOTICE:

The values given below for "Normal Condition" are representative values. A vehicle may still be normal even if the measured values are a little different from those listed here. Do not decide whether a part is faulty or not solely according to the "Normal Condition" here.

(a) Warm up the engine.
(b) Turn the ignition switch OFF.
(c) Connect the Hand–held tester to the DLC3.
(d) Turn the ignition switch ON.
(e) Push the "ON" button of the hand–held tester.
(f) Select the item "DIAGNOSIS / OBD/MOBD / DATA LIST / ALL".
(g) According to the display on tester, read the "DATA LIST".

Hand–held tester display	MeasurementItem/Range (Display)	Normal Condition*1	Diagnostic Note
FUEL SYS #1	Fuel System Bank 1 OPEN: Air–fuel ratio feedback stopped CLOSED: Air–fuel ratio feedback operating	Idling after warming up: CLOSED	—
CALC LOAD	Calculator Load: Current intake air volume as a proportion of max. intake air volume	Idling: 3.3 to 26.7 % Runnig without load (2,500rpm): 12.0 to 14.7 %	—
COOLANT TEMP	Coolanttemperature/ Min.: –40 °C, Max.: 140 °C	After warming up: 80 to 95°C (176 to 203°F)	If the value is "–40 °C" or "140 °C", sensor circuit is open or shorted.
INTAKE AIR	Intake air temperature/ Min.: –40 °C, Max.: 140 °C	Equivalent to Ambient Temp.	
SHORT FT #1	Short–term Fuel Trim Bank 1	0 ± 20%	—
LONG FT #1	Long–term Fuel Trim Bank 1	0 ± 20%	—
MAF/AFM	Air flow rate from mass air flow Meter	Idling: M/T 0.54 to 4.33 gm/sec. A/T 0.58 to 4.67 gm/sec. Running without load (2,500 rpm): 3.33 to 9.17 gm/sec.	—
ENGINE SPD	Engine Speed	Idling: 600 to 700 rpm	—
VEHICLE SPD	Vehicle Speed	Actual vehicle speed	Speed indicated on speedmeter.
IGN ADVANCE	Ignition Advance: Ignition Timing of Cylinder No. 1	Idling: BTDC 5 to 15°	—
THROTTLE POS	Voltage Output of Throttle Position Sensor Calculated as a percentage: 0 V → 0%, 5 V → 100%	Throttle Fully Closed: 6 to 16 % Throttle Fully Open: 64 to 98 %	Read the value with ignition switch ON (Do not start engine)
O2S B1, S1	Voltage Output of Heated Oxygen Sensor Bank 1, Sensor 1	Idling: 0.05 to 0.95 V	—
O2FT B1, S1	Heated Oxygen Sensor Fuel Trim Bank 1, Sensor 1 (Same as SHORT FT #1)	0 ± 20 %	—
INJECTOR	Fuel injection time for cylinder No.1	Idling: 1.0 to 3.0 ms	—
ISC DUTY RATIO	Intake Air Control Valve duty ratio Opening ratio rotary solenoid type ISC valve	Idling: 20 to 40 %	—
STARTER SIG	Starter Signal	Cranking: ON	—
CTP SW	Closed Throttle Position Switch Signal	Cranking: ON	—
A/C SIG	A/C Switch Signal	A/C ON: ON	—
STOP LIGHT SW *2	Stop Light Switch Signal	Stop light switch ON: ON	—
FC IDL	Fuel Cut Idle: Fuel cut when throttle valve fully closed, during deceleration	Fuel cut operating: ON	—
PNP SW/NSW *2	Neutral start switch signal	P or N position: ON	—
FC TAU	Fuel Cut TAU: Fuel cut during very light load	Fuel cut operating: ON	—
CYL#1, CYL#2, CYL#3, CYL#4	Abnormal revolution variation for each cylinder	0 %	—
FUEL PUMP	Fuel Pump Signal	Idling: ON	—
EVAP (PURGE) VSV	EVAP VSV Signal	VSV operation: Above 30 %	—

*1: If no conditions are specifically stated for ”Idling”, it means the shift lever is in the N or P position, the A/C switch is OFF and all accessory switches are OFF.
*2: A/T only

7. ACTIVE TEST

HINT:

Performing the ACTIVE TEST using the hand–held tester allows the relay, VSV, actuator and so on to operate without parts removal. Performing the ACTIVE TEST as a first step of troubleshooting is one of the method to shorten labor time.

It is possible to display the DATA LIST during the ACTIVE TEST.

(a) Warm up the engine.
(b) Turn the ignition switch OFF.
(c) Connect the hand–held tester to the DLC3.
(d) Turn the ignition switch ON.
(e) Push the ”ON” button of the hand–held tester.
(f) Select the item ”DIAGNOSIS / OBD/MOBD / ACTIVE TEST”.
(g) According to the display on tester, perform the ”ACTIVE TEST”.

Hand–held Tester Display	Test Details	Diagnostic Note
INJ VOL	[Test Details] Control the injection volume Min.: –12.5 %, Max.: 25 % [Vehicle Condition] Engine speed: 3,000 rpm or less	• All injectors are tested at once. • Injection volume is gradually changed between –12.5 and 25%.
A/F CONTROL	[Test Details] Control the injection volume –12.5 or 25 % (Change the injection volume –12.5 % or 25 %.) [Vehicle Condition] Engine speed: 3,000 rpm or less	The following procedure of A/F CONTROL enables the technician to check and graph voltage outputs of the heated oxygen sensor. To display the graph indication, select O2S B1 S1 and press button ”F4” after selecting ”ACTIVE TEST/A/F CONTROL/USER DATA”.
ISC DUTY RATIO	[Test Details] Control the ISC duty ratio 0 to 90 % [Vehicle Condition] • Engine speed: 3,000 rpm or less • Vehicle speed: 0 km/h (0 mph) • Battery voltage: 8.5 V or more	—
EVAP VSV (ALONE)	[Test Details] Activate the VSV for EVAP control ON or OFF	—
FUEL PUMP / SPD	[Test Details] Control the fuel pump ON or OFF	—
TC/TE1	[Test Details] Connect the TC and TE1 ON or OFF	—
FC IDL PROHBT	[Test Details] Control the idle fuel cut prohibit ON or OFF	—

BASIC INSPECTION

When the malfunction is not confirmed in the DTC check, troubleshooting should be carried out in all the possible circuits considered as causes of the problem. In many cases, by carrying out the basic engine check shown in the following flow chart, the location causing the problem can be found quickly and efficiently. Therefore, using this check is essential in the engine troubleshooting.

1	CHECK BATTERY VOLTAGE

NOTICE:
Carry out this check with the engine stopped and ignition switch off.

Reference:

	OK	NG
Voltage	11 V or more	Less than 11 V

NG → **CHARGE OR REPLACE BATTERY**

OK

2	CHECK IF ENGINE WILL CRANK

NG → **PROCEED TO PROBLEM SYMPTOMS TABLE ON PAGE 05–22**

OK

3	CHECK IF ENGINE STARTS

NG → **GO TO STEP 6**

OK

4	CHECK AIR FILTER

(a) Visually check that the air filter is not excessively dirty or oily.

HINT:
If necessary, clean the filter with compressed air. First blow from the inside thoroughly, then blow from the outside of filter.

NG → **REPAIR OR REPLACE**

OK

5	CHECK IDLE SPEED (See page 14–1)

NG → **PROCEED TO PROBLEM SYMPTOMS TABLE ON PAGE 05–22**

OK

6	CHECK FUEL PRESSURE (See page 11–5)

NG → PROCEED TO PAGE 11–1 AND CONTINUE TO TROUBLESHOOT

OK

7	CHECK FOR SPARK (See page 18–1)

NG → PROCEED TO PAGE 18–1 AND CONTINUE TO TROUBLESHOOT

OK

PROCEED TO PROBLEM SYMPTOMS TABLE ON PAGE 05–22

0505J–04

DIAGNOSTIC TROUBLE CODE CHART

HINT:

Parameters listed in the chart may not be exactly the same as your reading due to the type of instrument or other factors.

If a malfunction code is displayed during the DTC check in the check mode, check the circuit for the codes listed in the table below. For details of each code, refer to the ”See page ” under the respective ”DTC No.” in the DTC chart.

DTC No. (See page)	Detection Item	Trouble Area	*1 CHK ENG	Memory
P0100 (05–24)	Mass Air Flow Circuit Malfunction	• Open or short in mass air flow meter circuit • Mass air flow meter • ECM	○	○
P0110 (05–30)	Intake Air Temperature Circuit Malfunction	• Open or short in intake air temp. sensor circuit • Intake air temp. sensor (built into mass air flow meter) • ECM	○	○
P0115 (05–34)	Engine Coolant Temperature Circuit Malfunction	• Open or short in engine coolant temperature sensor circuit • Engine coolant temperature sensor • ECM	○	○
P0116 (05–38)	Engine Coolant Temperature Circuit Range/Performance Problem	• Engine coolant temperature sensor • Thermostat	○	○
P0120 (05–39)	Throttle Pedal Position Sensor/ Switch ”A” Circuit Malfunction	• Open or short in throttle position sensor circuit • Throttle position sensor • ECM	○	○
P0121 (05–44)	Throttle Pedal Position Sensor/ Switch ”A” Circuit Range/Performance Problem	• Throttle position sensor	○	○
P0125 (05–45)	Insufficient Coolant Temp. for Closed Loop Fuel Control	• Open or short in heated oxygen sensor circuit • Heated oxygen sensor • Air induction system • Fuel pressure • Injector • Gas leakage on exhaust system • ECM	○	○
P0130*3 (05–54)	Oxygen Sensor Circuit Malfunction (Bank 1 Sensor 1)	• Open or short in heated oxygen sensor circuit • Heated oxygen sensor • Air induction system • Fuel pressure • Injector	○	○
P0133*3 (05–60)	Oxygen Sensor Circuit Slow Response (Bank 1 Sensor 1)	• Open or short in heated oxygen sensor circuit • Heated oxygen sensor • Air induction system • Fuel pressure • Injector • ECM	○	○
P0135 (05–65)	Oxygen Sensor Heater Circuit Malfunction (Bank 1 Sensor 1)	• Open or short in heater circuit of heated oxygen sensor • Heated oxygen sensor heater • ECM	○	○
P0136 (05–54)	Oxygen Sensor Circuit Malfunction (Bank 1 Sensor 2)	• Open or short in heated oxygen sensor circuit • Heated oxygen sensor	○	○
P0141 (05–65)	Oxygen Sensor Heater Circuit Malfunction (Bank 1 Sensor 2)	• Open or short in heater circuit of heated oxygen sensor • Heated oxygen sensor heater • ECM	○	○

P0171*3 (05–67)	System too Lean (Fuel Trim) (Bank1)	• Air induction system • Injector blockage • PCV hose • Mass air flow meter • Engine coolant temperature sensor • Fuel pressure • Open or short in heated oxygen sensor circuit • Heated oxygen sensor • ECM	○	○
P0172*3 (05–67)	System too Rich (Fuel Trim) (Bank1)	• Injector leak, blockage • Mass air flow meter • Engine coolant temperature sensor • Ignition system • Fuel pressure • Open or short in heated oxygen sensor circuit • Gas leakage in exhaust system • Heated oxygen sensor • ECM	○	○
P0300*3 (05–73)	Random/Multiple Cylinder Misfire Detected	• Open or short in engine wire • Connector connection • Vacuum hose connection • PCV hose • Ignition system • Injector • Fuel pressure • Mass air flow meter • Engine coolant temperature sensor • Compression pressure • Valve clearance • Valve timing • ECM	○	○
P0301*3 (05–73)	Cylinder 1 Misfire Detected			
P0302*3 (05–73)	Cylinder 2 Misfire Detected			
P0303*3 (05–73)	Cylinder 3 Misfire Detected			
P0304*3 (05–73)	Cylinder 4 Misfire Detected			
P0325 (05–81)	Knock Sensor 1 Circuit Malfunction (Bank 1)	• Open or short in knock sensor circuit • Knock sensor (under–torqued or loose) • ECM	○	○
P0335 (05–84)	Crankshaft Position Sensor ”A” Circuit Malfunction	• Open or short in crankshaft position sensor circuit • Crankshaft position sensor • Crank angle sensor plate • ECM	○	○
P0340 (05–88)	Camshaft Position Sensor Circuit Malfunction	• Open or short in camshaft position sensor circuit • Camshaft position sensor • Intake camshaft • Timing chain has jumped a tooth • ECM	○	○
P0420*3 (05–91)	Catalyst System Efficiency Below Threshold (Bank 1)	• Gas leakage in exhaust system • Heated oxygen sensor • Three–way catalytic converter • ECM	○	○
P0443 (05–94)	Evaporative Emission Control System Purge Control Vent Circuit Malfunction	• Open or short in VSV for EVAP circuit • VSV for EVAP • ECM	○	○
P0500 (05–98)	Vehicle Speed Sensor Malfunction	• Open or short in speed sensor circuit • Speed sensor • Combination meter • ECM • Skid control ECU	○	○

P0505*3 (05–100)	Idle Control System Malfunction	• Open or short in ISC valve circuit • ISC valve is stuck or closed • PCV hose • A/C switch circuit • Air induction system • ECM	○	○
P1300 (05–103)	Igniter Circuit Malfunction (No. 1)	• Ignition system • Open or short in IGF or IGT1 circuit from No. 1 ignition coil with igniter to ECM • No. 1 ignition coil with igniter • ECM	○	○
P1305 (05–103)	Igniter Circuit Malfunction (No. 2)	• Ignition system • Open or short in IGF or IGT2 circuit from No. 2 ignition coil with igniter to ECM • No. 2 ignition coil with igniter • ECM	○	○
P1310 (05–103)	Igniter Circuit Malfunction (No. 3)	• Ignition system • Open or short in IGF or IGT3 circuit from No. 3 ignition coil with igniter to ECM • No. 3 ignition coil with igniter • ECM	○	○
P1315 (05–103)	Igniter Circuit Malfunction (No. 4)	• Ignition system • Open or short in IGF or IGT4 circuit from No. 4 ignition coil with igniter to ECM • No. 4 ignition coil with igniter • ECM	○	○
P1335 (05–84)	Crankshaft Position Sensor Circuit Malfunction (During engine running)	• Open or short in crankshaft position sensor circuit • Crankshaft position sensor • Crank angle sensor plate • ECM	—	○
P1346 (05–111)	VVT Sensor/Camshaft Position Sensor Circuit Range/Performance Problem (Bank 1)	• Mechanical system (Timing chain has janped a tooth, chain stretched) • ECM	○	○
P1349 (05–112)	VVT System Malfunction (Bank 1)	• Valve timing • OCV • VVT controller assembly • ECM	○	○
P1520*2 (05–115)	Stop Light Switch Circuit Malfunction	• Open or short in stop light switch signal circuit • Stop light switch • ECM	○	○
P1600 (05–119)	ECM BATT Malfunction	• Open in back up power source circuit • ECM	○	○
P1656 (05–122)	OCV Circuit Malfunction (Bank 1)	• Open or short in OCV circuit • OCV • ECM	○	○

*1: ○ ... CHK ENG is illuminated. — ... CHK ENG is not illuminated.
*2: Only for A/T models.
*3: For European spec. only

05B3M–03

LOCATION

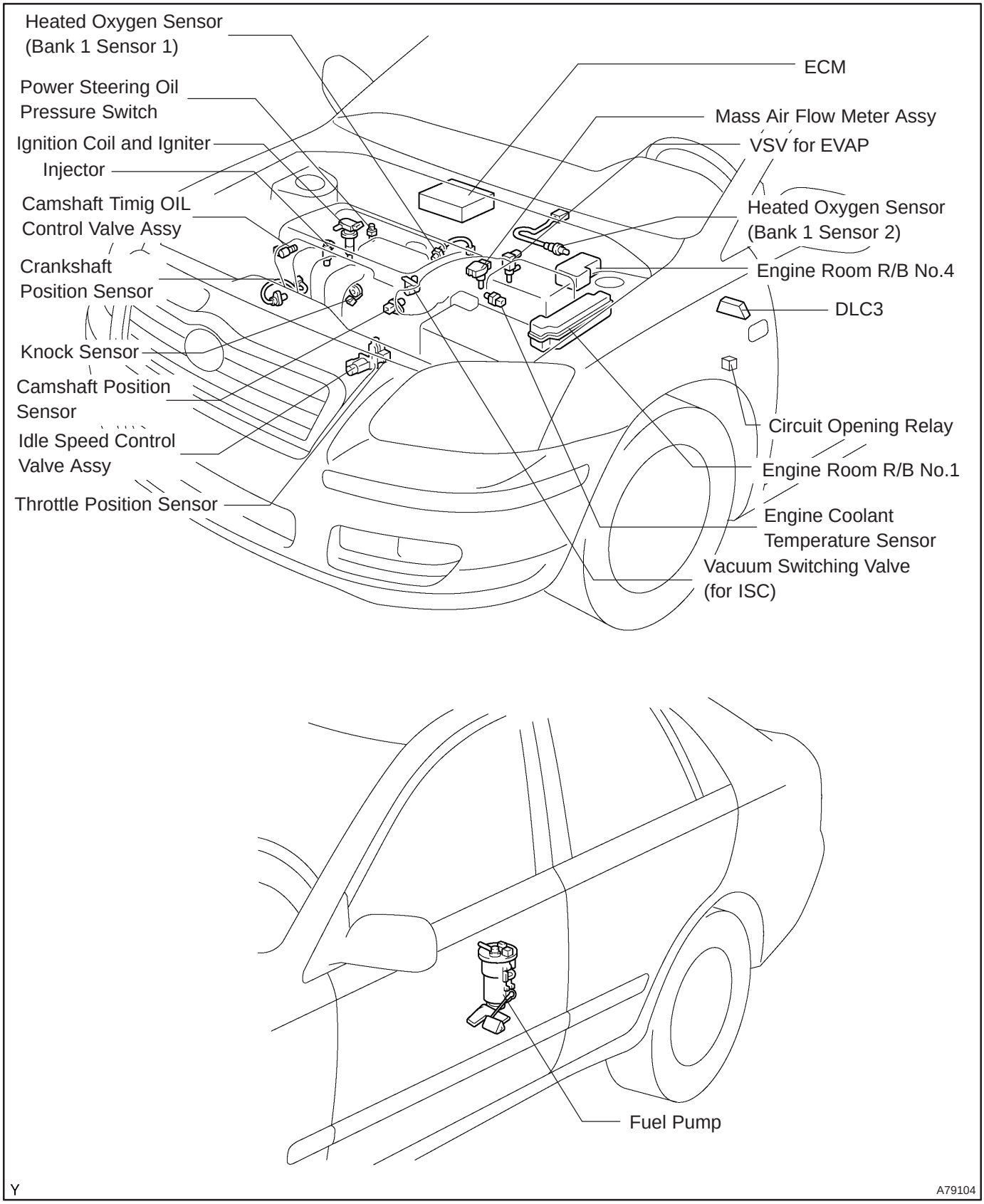

05C67–01

TERMINALS OF ECM

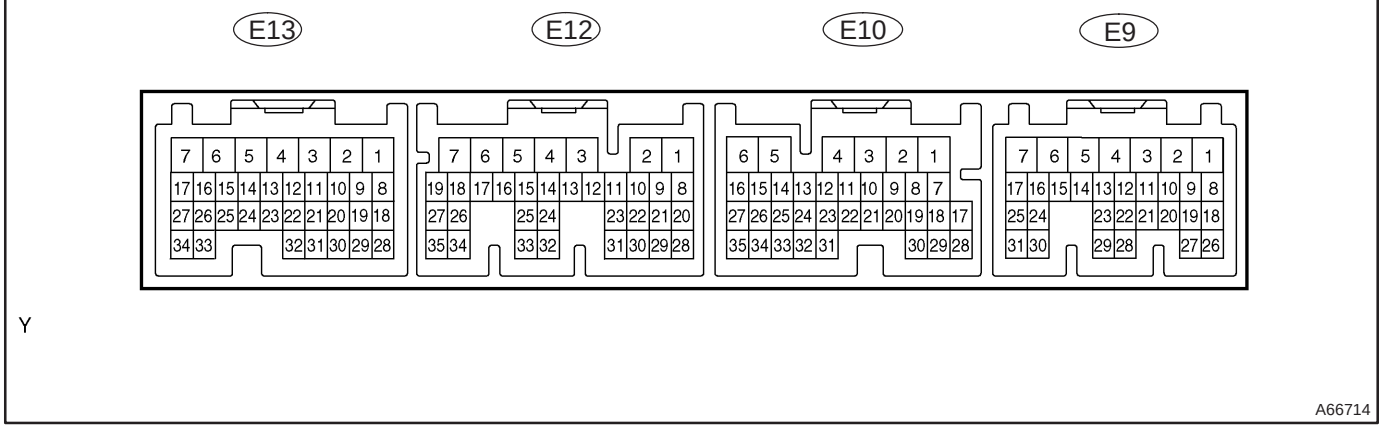

Symbols (Terminals No.)	Wiring Color	Condition	STD Voltage (V)
BATT (E9 – 3) – E1 (E12 – 7)	B–Y – BR	Always	8 to 14
FC (E9 – 10) – E1 (E12 – 7)	G–Y – BR	IG switch ON	8 to 14
FC (E9 – 10) – E1 (E12 – 7)	G–Y – BR	Idling	Below 1.5
W (E9 – 11) – E1 (E12 – 7)	W – BR	Idling	8 to 14
W (E9 – 11) – E1 (E12 – 7)	W – BR	IG switch ON	Below 3.5
+B (E9 – 1) – E1 (E12 – 7)	B–R – BR	IG switch ON	8 to 14
STP (E10 – 19) – E1 (E12 – 7)	G–W – BR	IG switch ON, brake pedal depressed	8 to 14
STP (E10 – 19) – E1 (E12 – 7)	G–W – BR	IG switch ON, brake pedal released	Below 1.5
F/PS (E9 – 14) – E1 (E12 – 7)	LG–B – BR	IG switch ON	Pulse generation
STA (E12 – 9) – E1 (E12 – 7)	B–Y – BR	Cranking	5.5 or more
HT1B (E10 – 4) – E03 (E12 – 5)	P – W–B	Idling	Below 3.0
HT1B (E10 – 4) – E03 (E12 – 5)	P – W–B	IG switch ON	9 to 14
EMPS (E12 – 29) – E1 (E12 – 7)	GR – BR	IG switch ON	8 to 14
SPD (E10 – 17) – E1 (E12 – 7)	V–W – BR	IG switch ON, rotate driving wheel slowly	Pulse generation (See page 05–98)
OX1B (E12 – 21) – E2 (E13 – 28)	B – BR	Maintain engine speed at 2,500 rpm for 2 min. after warning up	Pulse generation (See page 05–91)
TACH (E9 – 5) – E1 (E12 – 7)	GR–R – BR	Idling	Pulse generation
VC (E13 – 18) – E2 (E13 – 28)	R–W – BR	IG switch ON	4.5 to 5.5
HT1A (E12 – 4) – E03 (E12 – 5)	Y – W–B	Idling	Below 3.0
HT1A (E12 – 4) – E03 (E12 – 5)	Y – W–B	IG switch ON	9 to 14
EVP1 (E13 – 12) – E01 (E13 – 7)	W–G – W–B	IG switch ON	8 to 14
VG (E12 – 24) – EVG (E12 – 32)	G – L–Y	Idling, A/C switch OFF	1.1 to 1.5
OX1A (E12 – 23) – E2 (E13 – 28)	B – BR	Maintain engine speed at 2,500 rpm for 2 min. after warning up	Pulse generation (See page 05–91)
THW (E13 – 19) – E2 (E13 – 28)	B–W – BR	Idling, Engine coolant temp. at 80°C (176°F)	0.2 to 1.0
G2 (E13 – 26) – NE– (E13 – 34)	W – R	Idling	Pulse generation (See page 05–84)
NE+ (E13 – 27) – NE– (E13 – 34)	G – R	Idling	Pulse generation (See page 05–84)
THA (E13 – 20) – E2 (E13 – 28)	G–R – BR	Idling, intake air temp. at 20 °C (68 °F)	0.5 to 3.4

VTA (E13 – 21) – E2 (E13 – 28)	L–W – BR	IG switch ON, throttle valve fully closed	0.3 to 1.0
VTA (E13 – 21) – E2 (E13 – 28)	L–W – BR	IG switch ON, throttle valve fully open	3.2 to 4.9
#10 (E13 – 1) – E01 (E13 – 7)	B–R – W–B	IG switch ON	8 to 14
#20 (E13 – 2) – E01 (E13 – 7)	Y – W–B	IG switch ON	8 to 14
#30 (E13 – 3) – E01 (E13 – 7)	W – W–B	IG switch ON	8 to 14
#40 (E13 – 4) – E01 (E13 – 7)	B – W–B	IG switch ON	8 to 14
IGT1 (E13 – 8) – E1 (E12 – 7)	R–W – BR	Idling	Pulse generation (See page 05–103)
IGT2 (E13 – 9) – E1 (E12 – 7)	P – BR	Idling	Pulse generation (See page 05–103)
IGT3 (E13 – 10) – E1 (E12 – 7)	LG–B – BR	Idling	Pulse generation (See page 05–103)
IGT4 (E13 – 11) – E1 (E12 – 7)	L–Y – BR	Idling	Pulse generation (See page 05–103)
IGF (E13 – 23) – E1 (E12 – 7)	W–R – BR	IG switch ON	4.5 to 5.5
IGF (E13 – 23) – E1 (E12 – 7)	W–R – BR	Idling	Pulse generation (See page 05–103)
RSO (E13 – 5) – E01 (E13 – 7)	G–R – W–B	IG switch ON	9 to 14
OCV+ (E13 – 15) – OCV– (E13 – 14)	W–G – Y–B	IG switch ON	Pulse generation (See page 05–112)
FKN+ (E12 – 1) – FKN– (E12 – 2)	B – W	Idling	Pulse generation (See page 05–81)
ELS2 (E9 – 13) – E1 (E12 – 7)	G – BR	Defoger switch ON	9 to 14
ELS2 (E9 – 13) – E1 (E12 – 7)	G – BR	IG switch ON	Below 3.0
MREL (E9 – 8) – E1 (E12 – 7)	GR – BR	IG switch ON	9 to 14
IGSW (E9 – 9) – E1 (E12 – 7)	B–W – BR	IG switch ON	9 to 14
TC (E9 – 20) – E1 (E12 – 7)	W–L – BR	IG switch ON	9 to 14
SIL (E9 – 18) – E1 (E12 – 7)	W–G – BR	Connect hand–held tester to DLC3	Pulse generation

0505L–04

PROBLEM SYMPTOMS TABLE

When the malfunction code is not confirmed in the diagnostic trouble code check and the problem still can not be confirmed in the basic inspection, proceed to this problem symptoms tables and troubleshoot according to the numbered order given below.

Symptom	Suspect Area	See page
Engine does not crank (Does not start)	1. Starter and starter relay 2. Neutral start switch circuit*	19–1 —
No initial combustion (Does not start)	1. ECM power source circuit 2. Ignition coil (w/ Igniter) circuit 3. Fuel pump control circuit 4. Fuel system	05–124 05–103 05–131 11–1
No complete combustion (Does not start)	1. Fuel pump control circuit 2. Ignition coil (w/ Igniter) circuit 3. Fuel system	05–131 05–103 11–1
Engine cranks normally (Difficult to start)	1. Starter signal circuit 2. ISC valve circuit 3. Fuel pump control circuit 4. Ignition coil (w/ Igniter) 5. Spark plug 6. Compression 7. Fuel system	05–135 05–100 05–131 05–103 18–3 14–1 11–1
Cold engine (Difficult to start)	1. Starter signal circuit 2. ISC valve circuit 3. Fuel pump control circuit 4. Fuel system 5. Ignition coil (w/ Igniter) 6. Spark plug	05–135 05–100 05–131 11–1 05–103 18–3
Hot engine (Difficult to start)	1. Starter signal circuit 2. ISC valve circuit 3. Fuel pump control circuit 4. Fuel system 5. Ignition coil (w/ Igniter) 6. Spark plug	05–135 05–100 05–131 11–1 05–103 18–3
Incorrect first idle (Poor idling)	1. ISC valve circuit	05–100
High engine idle speed (Poor idling)	1. ISC valve circuit 2. ECM power source circuit 3. Neutral start switch circuit*	05–100 05–124 —
Low engine idle speed (Poor idling)	1. ISC valve circuit 2. Neutral start switch circuit* 3. Fuel pump control circuit 4. Fuel system	05–100 — 05–131 11–1
Rough idling (Poor idling)	1. ISC valve circuit 2. ECM power source circuit 3. Fuel pump control circuit	05–100 05–124 05–131
Hunting (Poor idling)	1. ISC valve circuit 2. ECM power source circuit 3. Fuel pump control circuit	05–100 05–124 05–131
Hesitation/Poor acceleration (Poor drivability)	1. Fuel system 2. Fuel pump control circuit 3. Ignition coil (w/ Igniter) circuit	11–1 05–131 05–103
Muffler explosion, after fire (Poor drivability)	1. Ignition coil (w/ Igniter) circuit 2. Spark plug 3. Fuel system	05–103 18–3 11–1
Surging (Poor drivability)	1. Fuel pump control circuit 2. Spark plug 3. Fuel system	05–131 18–3 11–1

Engine stall (Soon after starting)	1. Fuel pump control circuit 2. ISC valve circuit	05–131 05–100
Engine stall (After accelerator pedal released)	1. Injector circuit 2. ISC valve circuit 3. ECM	11–8 05–100 05–20
Engine stall (When shifting from N to D)	1. Neutral start switch circuit 2. ISC valve circuit	— 05–100

*: A/T only.

DTC	P0100	MASS AIR FLOW CIRCUIT MALFUNCTION

CIRCUIT DESCRIPTION

The mass air flow meter uses a platinum hot wire. The hot wire air flow meter consists of a platinum hot wire, temprature sensor and a control circuit installed in a plastic housing. The hot wire air flow meter works on the principle that the hot wire and temprature sensor located in the intake air bypass of the housing detect any changes in the intake air temperature.

The hot wire is maintained at the set temperature by controlling the current flow through the hot wire. This current flow is then measured as the output voltage of the mass air flow meter.

The circuit is constructed so that the platinum hot wire and temprature sensor provide a bridge circuit, with the power transistor controlled so that the potential of A and B remains equal to maintain the set temperature.

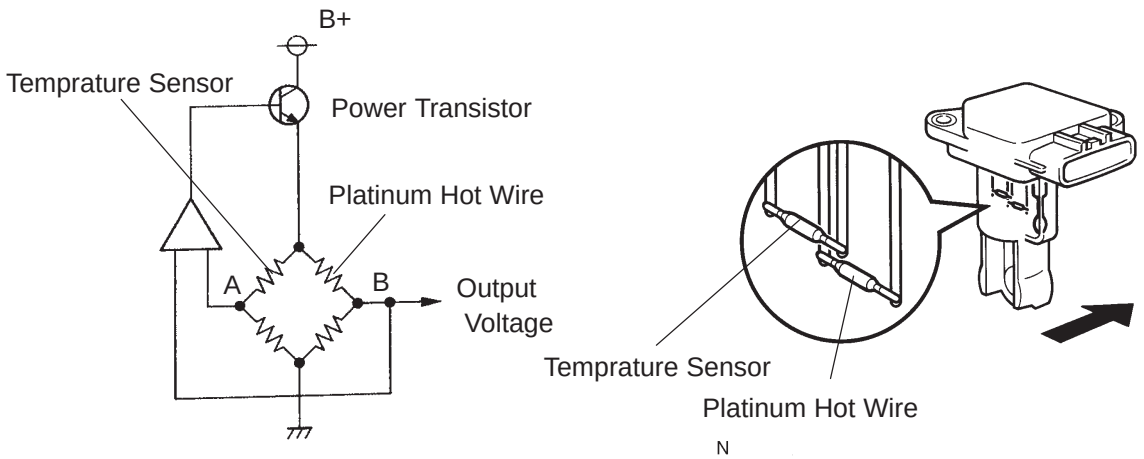

DTC No	DTC Detecting Condition	Trouble Area
P0100	Open or short in mass air flow meter circuit with engine speed less than 4,000 rpm for more than 3 sec.	• Open or short in mass air flow meter circuit • Mass air flow meter • ECM

HINT:

After confirming DTC ”P0100”, use the hand–held tester to confirm the air flow ratio in the ”DIAGNOSIS / OBD/MOBD / DATA LIST / ALL”.

Air Flow Value (gm/sec)	Malfunction
Approx. 0.0	• Mass air flow meter power source circuit open • VG circuit open or short
271.0 or more	• EVG circuit open

WIRING DIAGRAM

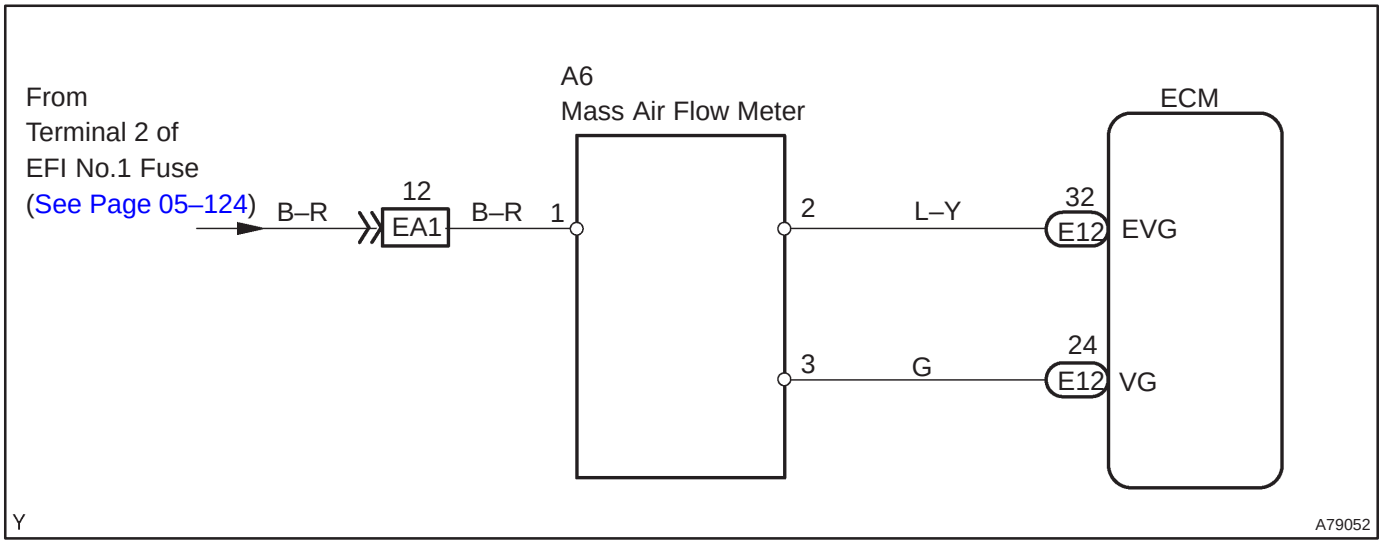

INSPECTION PROCEDURE

HINT:

Read freeze frame data using the hand – held tester. Freeze frame data records the engine conditions when a malfunction is detected. When troubleshooting, it is useful for determining whether the vehicle was running or stopped, the engine was warmed up or not, the air–fuel ratio was lean or rich, etc. at the time of the malfunction.

1	READ VALUE OF HAND–HELD TESTER(MASS AIR FLOW RATE)

(a) Connect the hand–held tester to the DLC3.
(b) Start the engine.
(c) Read air flow rate on the hand–held tester.
(d) Select the item ”DIAGNOSIS / OBD/MOBD / DATA LIST / ALL / MAF” and read its value displayed on the hand–held tester.

Result:

Air flow rate (gm/sec)	Proceed to
0.0	A
271.0 or more	B
1 less than Mass Air Flow Rate less than 270.0 or more (*1)	C

*1: The value must be changed when the throttle valve is opend or closed.

B	**Go to step 6**
C	**CHECK FOR INTERMITTENT PROBLEMS (See Page 05–5)**

A

2 INSPECT MASS AIR FLOW METER(POWER SORUCE VOLTAGE)

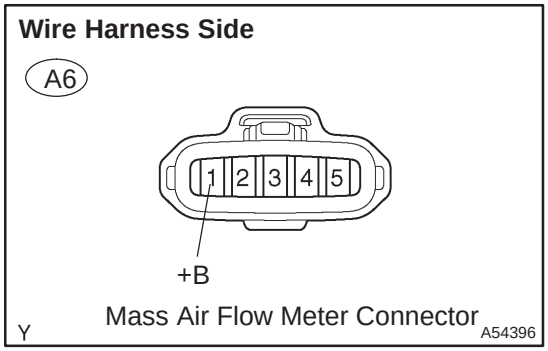

(a) Disconnect the mass air flow meter connector.
(b) Turn the ignition switch ON.
(c) Measure the voltage between the terminal of the wire harness side connector and the body ground.

Standard:

Symbols (Terminal No.)	Specified condition
+B (A6–1) – Body ground	9 to 14 V

NG → **Go to step 5**

OK

3 INSPECT ECM

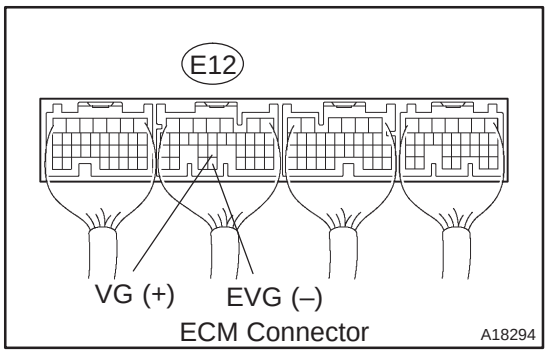

(a) Turn the ignition switch ON.
(b) Measure the voltage between the terminals of the E12 ECM connector.

HINT:
The shift position should be P or N and the A/C switch should be turned OFF.

Standard:

Symbols (Terminal No.)	Condition	Specified condition
VG (E12–24) – EVG (E12–32)	Engine is idling	0.5 to 3.0 V

OK → **CHECK AND REPLACE ECM (See page 01–32)**

NG

4 CHECK HARNESS AND CONNECTOR(ECM – MASS AIR FLOW METER)

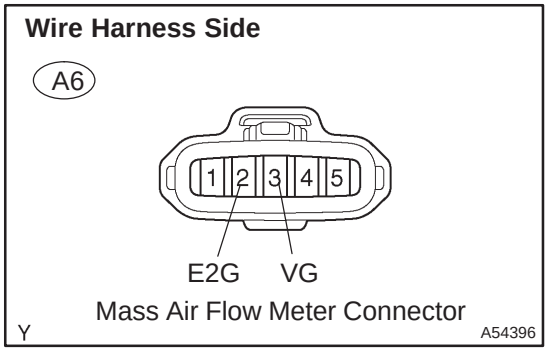

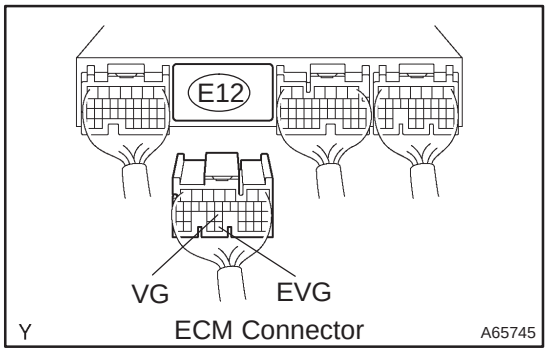

(a) Disconnect the mass air flow meter connector.
(b) Disconnect the E12 ECM connector.
(c) Check for continuity between the wire harness side connectors.

Standard (Check for open):

Symbols (Terminal No.)	Specified condition
VG (A6–3) – VG (E12–24)	Continuity
E2G (A6–2) – EVG (E12–32)	

Standard (Check for short):

Symbols (Terminal No.)	Specified condition
VG (A6–3) or VG (E12–24) – Body ground	No continuity

NG → **REPAIR OR REPLACE HARNESS OR CONNECTOR**

OK

REPLACE MASS AIR FLOW METER

5 CHECK HARNESS AND CONNECTOR(EFI RELAY – MASS AIR FLOW METER)

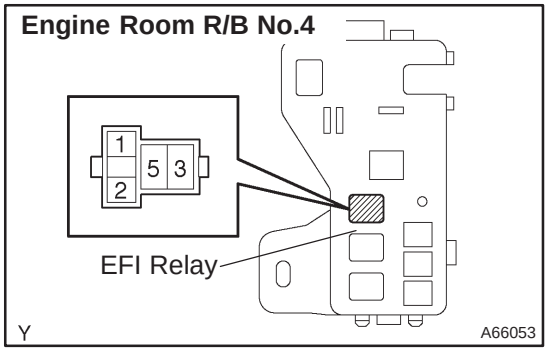

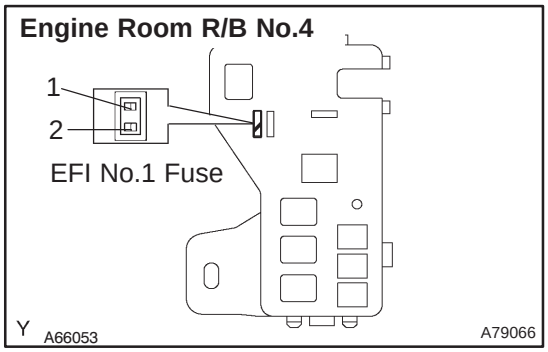

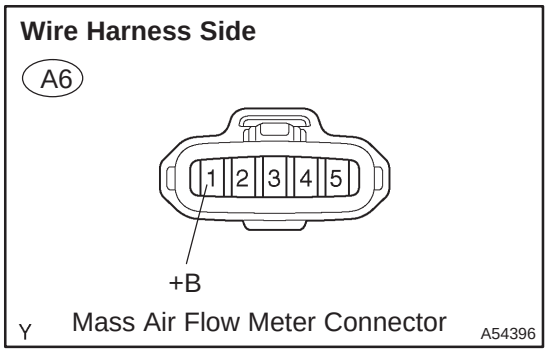

(a) Remove the EFI relay from the engine room R/B No.4.
(b) Remove the EFI No.1 fuse from the engine room R/B No.4.
(c) Disconnect the mass air flow meter connector.
(d) Check for continuity between the wire harness side connectors.

Standard (Check for open):

Symbols (Terminal No.)	Specified condition
EFI relay (3) – EFI No.1 fuse (1)	Continuity
EFI No.1 fuse (2) – +B (A6–1)	

Standard (Check for short):

Symbols (Terminal No.)	Specified condition
EFI relay (3) or EFI No.1 fuse (1) – Body ground	No continuity
EFI No.1 fuse (2) or +B (A6–1) – Body ground	

NOTICE:
Do not insert the tester leads hard in the procedure (c), the holder may be damaged.

NG → **REPAIR OR REPLACE HARNESS OR CONNECTOR**

OK

CHECK ECM POWER SOURCE CIRCUIT (See page 05–124)

6 INSPECT ECM

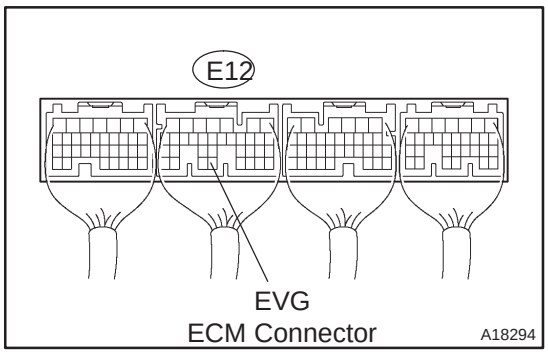

(a) Check for continuity between the terminal of the E12 ECM connector and the body ground.

Standard:

Symbols (Terminal No.)	Specified condition
EVG (E12–32) – Body ground	Continuity

NG → **CHECK AND REPLACE ECM (See page 01–32)**

OK

7 CHECK HARNESS AND CONNECTOR(ECM – MASS AIR FLOW METER)

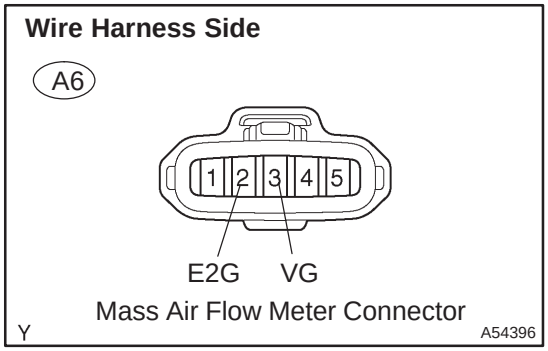

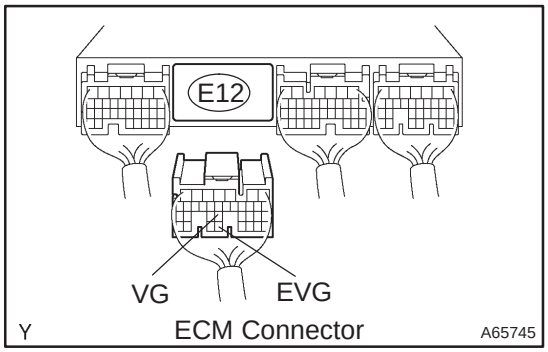

(a) Disconnect the mass air flow meter connector.
(b) Disconnect the E12 ECM connector.
(c) Check for continuity between the wire harness side connectors.

Standard (Check for open):

Symbols (Terminal No.)	Specified condition
VG (A6–3) – VG (E12–24)	Continuity
E2G (A6–2) – EVG (E12–32)	

Standard (Check for short):

Symbols (Terminal No.)	Specified condition
VG (A6–3) or VG (E12–24) – Body ground	No continuity

NG → **REPAIR OR REPLACE HARNESS OR CONNECTOR**

OK

CHECK AND REPLACE ECM (See page 01–32)

DTC P0110 INTAKE AIR TEMPERATURE CIRCUIT

CIRCUIT DESCRIPTION

(fig. 1)

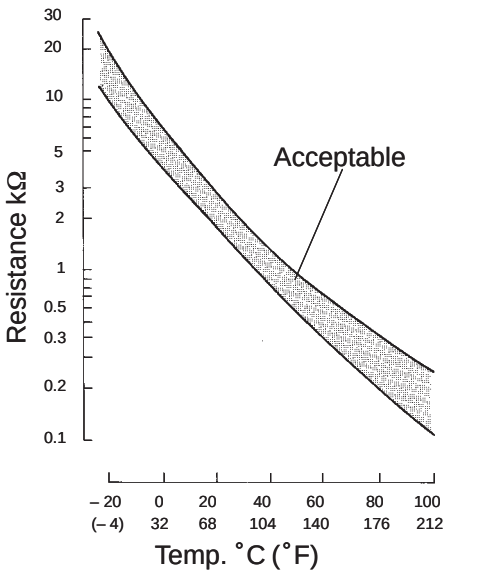

The intake air temperature sensor is built into the mass air flow meter and senses the intake air temperature.
A thermistor built in the sensor changes the resistance value according to the intake air temperature.
The lower the intake air temperature, the greater the thermistor resistance value, and the higher the intake air temperature, the lower the thermistor resistance value (See fig. 1).
The intake air temperature sensor is connected to the ECM (See below). The 5 V power source voltage in the ECM is applied to the intake air temperature sensor from the terminal THA via resistor R.
That is, the resistor R and the intake air temperature sensor are connected in series. When the resistance value of the intake air temperature sensor changes in accordance with changes in the intake air temperature, the potential at terminal THA also changes. Based on this signal, the ECM increases the fuel injection volume to improve driveability during cold engine operation.

DTC No.	DTC Detecting Condition	Trouble Area
P0110	Open or short in intake air temp. sensor circuit	• Open or short in intake air temp. sensor circuit • Intake air temp. sensor (built into mass air flow meter) • ECM

If the ECM detects the DTC ”P0110”, it enters the fail–safe mode in which the intake air temperature is assumed to be 20 °C (68 °F).
HINT:
After confirming DTC ”P0110”, use the hand–held tester to confirm the intake air temperature from the ”DIAGNOSIS / OBD/MOBD / DATA LIST / ALL”.

Temperature Displayed	Malfunction
–40 °C (–40 °F)	Open circuit
140 °C (284 °F) or more	Short circuit

WIRING DIAGRAM

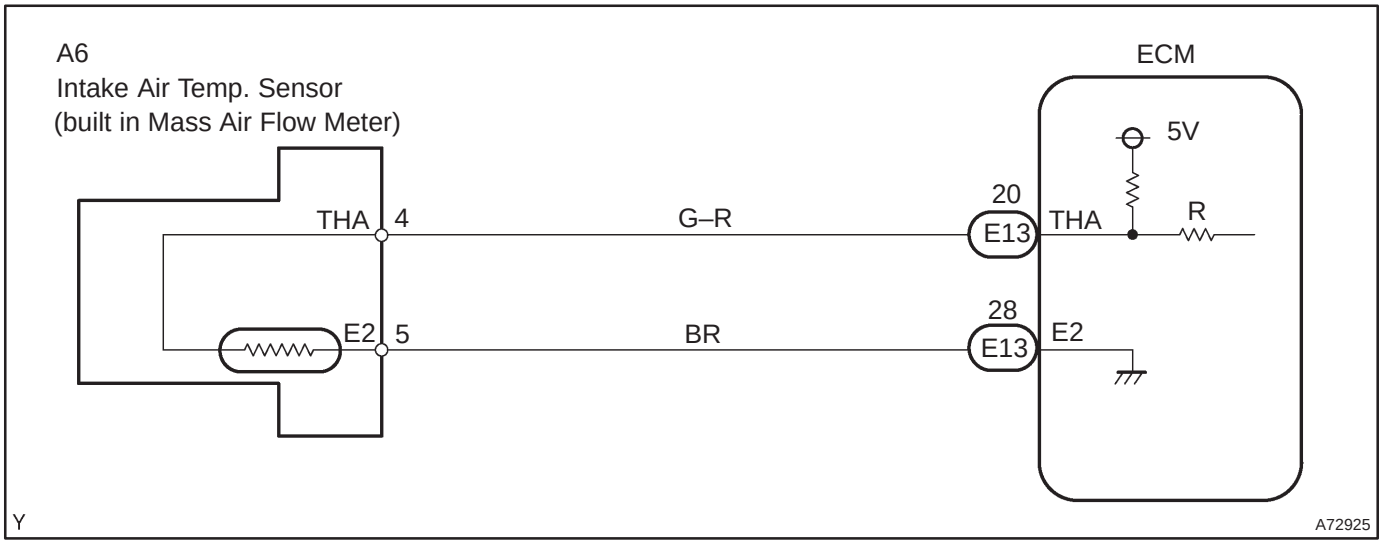

INSPECTION PROCEDURE

HINT:

- Read freeze frame data using the hand–held tester. Freeze frame data records the engine conditions when a malfunction is detected. When troubleshooting, it is useful for determining whether the vehicle was running or stopped, the engine was warmed up or not, the air–fuel ratio was lean or rich, etc. at the time of the malfunction.
- If different DTCs that are related to a different system are output simultaneously while terminal E2 is used as a ground terminal, terminal E2 may be open.

1	READ VALUE OF HAND–HELD TESTER(INTAKE AIR TEMPERATURE)

(a) Connect the hand–held tester to the DLC3.
(b) Turn the ignition switch ON.
(c) Select the item ”DIAGNOSIS / OBD/MOBD / DATA LIST / ALL / INTAKE AIR” and read its value displayed on the hand–held tester.
Temperature: The same as actual intake air temperature
Result:

Temperature Displayed	Proceed to
–40 °C (–40 °F)	A
140 °C (284 °F) or more	B
OK (Same as present temperature)	C

HINT:

- If there is an open circuit, the hand–held tester indicates –40˚C (–40˚F).
- If there is a short circuit, the hand–held tester indicates 140˚C (284˚F) or more.

B → **Go to step 4**

C → **CHECK FOR INTERMITTENT PROBLEMS (See Page 05–5)**

A

2 READ VALUE OF HAND–HELD TESTER(CHECK FOR OPEN IN HARNESS)

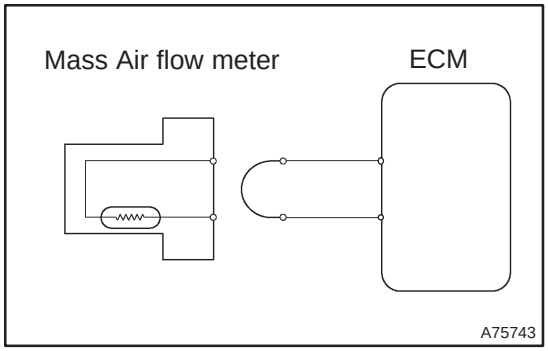

(a) Disconnect the mass air flow meter connector.
(b) Connect terminals THA and E2 of the mass air flow meter connector.
(c) Turn the ignition switch ON.
(d) Select the item ”DIAGNOSIS / OBD/MOBD / DATA LIST / ALL / INTAKE AIR” and read its value displayed on the hand–held tester.
Temperature value: 140°C (284°F) or more

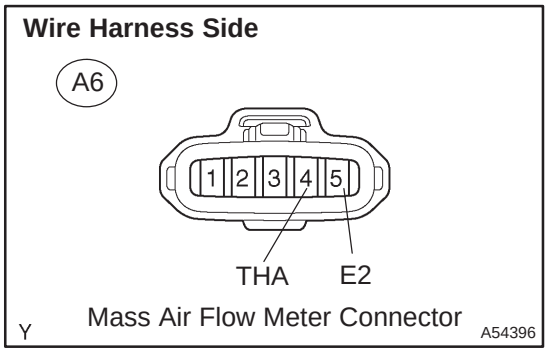

OK → **REPLACE MASS AIR FLOW METER**

NG

3 READ VALUE OF HAND–HELD TESTER(CHECK FOR OPEN IN ECM)

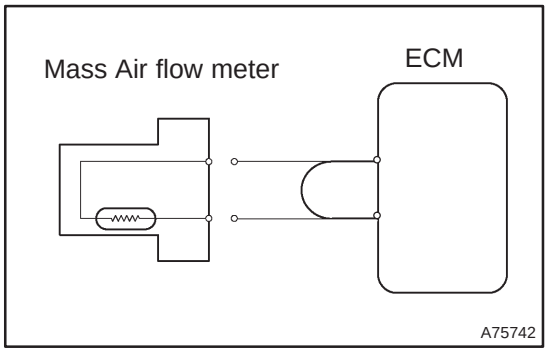

(a) Disconnect the mass air flow meter connector.
(b) Connect terminals THA and E2 of the E13 ECM connector.

HINT:
Before checking, do a visual and contact pressure check for the ECM connector.

(c) Turn the ignition switch ON.
(d) Select the item ”DIAGNOSIS / OBD/MOBD / DATA LIST / ALL / INTAKE AIR” and read its value displayed on the hand–held tester.
Temperature value: 140°C (284°F) or more

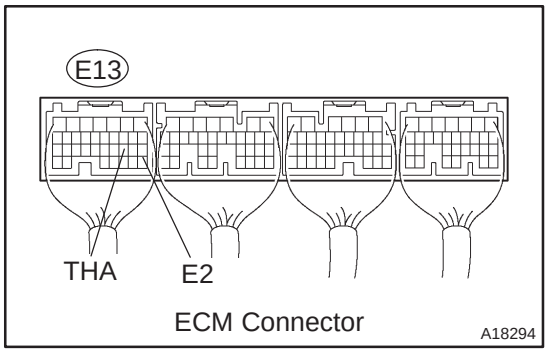

NG → **CHECK AND REPLACE ECM** (See page 01–32)

OK

REPAIR OR REPLACE HARNESS OR CONNECTOR

4 READ VALUE OF HAND–HELD TESTER(CHECK FOR SHORT IN HARNESS)

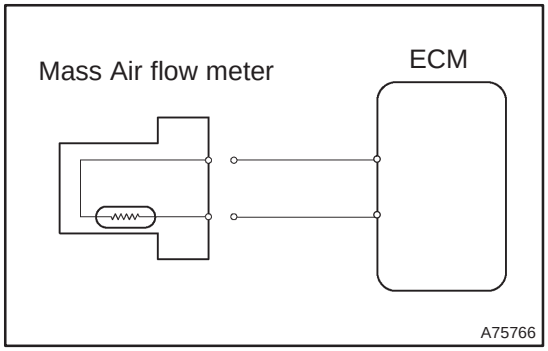

(a) Disconnect the mass air flow meter connector.
(b) Turn the ignition switch ON.
(c) Select the item ”DIAGNOSIS / OBD/MOBD / DATA LIST / ALL / INTAKE AIR” and read its value displayed on the hand–held tester.
Temperature: –40°C (–40°F)

OK → **REPLACE MASS AIR FLOW METER**

NG

5 READ VALUE OF HAND–HELD TESTER(CHECK FOR SHORT IN ECM)

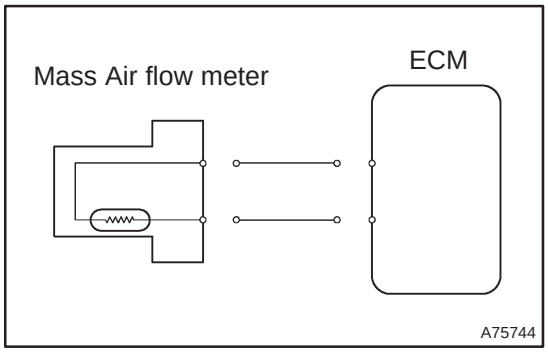

(a) Disconnect the E13 ECM connector.
(b) Turn the ignition switch ON.
(c) Select the item ”DIAGNOSIS / OBD/MOBD / DATA LIST / ALL / INTAKE AIR” and read its value displayed on the hand–held tester.
Temperature value: –40°C (–40°F)

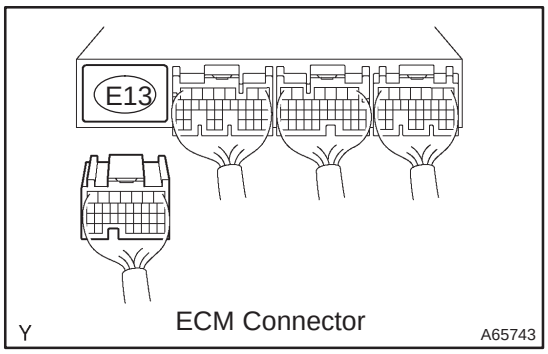

OK → **REPAIR OR REPLACE HARNESS OR CONNECTOR**

NG

CHECK AND REPLACE ECM (See page 01–32)

DTC P0115 ENGINE COOLANT TEMPERATURE CIRCUIT

CIRCUIT DESCRIPTION

A thermistor is built into the engine coolant temperature sensor and changes the resistance value according to the engine coolant temperature.

The structure of the sensor and connection to the ECM is the same as the ones of the intake air temperature sensor.

DTC No.	DTC Detecting Condition	Trouble Area
P0115	Open or short in water temp. sensor circuit	• Open or short in Engine coolant temperature sensor circuit • Engine coolant temperature sensor • ECM

If the ECM detects the DTC ”P0115”, it enters the fail–safe mode in which the engine coolant temperature is assumed to be 80 °C (176 °F).

HINT:

After confirming DTC P0115, use the hand–held tester to confirm the engine coolant temperature in ”DIAGNOSIS / OBD/MOBD / DATA LIST / ALL”.

Temperature Displayed	Malfunction
–40 °C (–40 °F)	Open circuit
140 °C (284 °F) or more	Short circuit

WIRING DIAGRAM

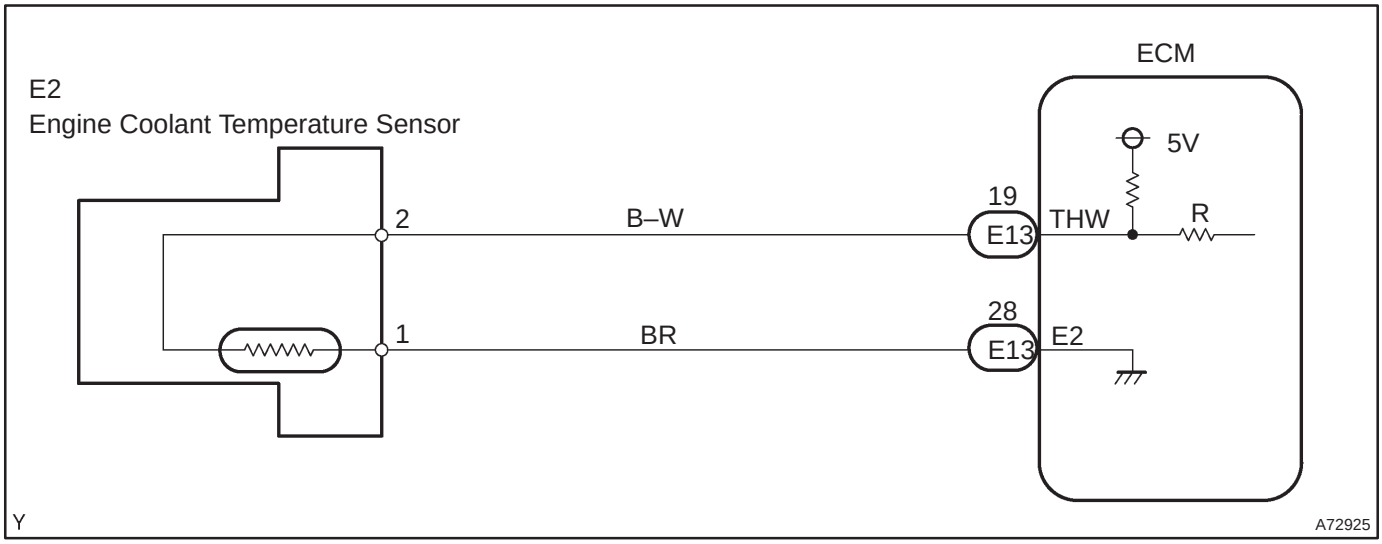

INSPECTION PROCEDURE

HINT:

- Read freeze frame data using the hand–held tester. Freeze frame data records the engine conditions when a malfunction is detected. When troubleshooting, it is useful for determining whether the vehicle was running or stopped, the engine was warmed up or not, the air–fuel ratio was lean or rich, etc. at the time of the malfunction.
- If different DTCs that are related to a different system are output simultaneously while terminal E2 is used as a ground terminal, terminal E2 may be open.

1 READ VALUE OF HAND–HELD TESTER(WATER TEMPERATURE)

(a) Connect the hand–held tester to the DLC3.
(b) Turn the ignition switch ON.
(c) Select the item ”DIAGNOSIS / OBD/MOBD / DATA LIST / ALL / COOLANT TEMP” and read its value displayed on the hand–held tester.
Temperature: Same as actual engine coolant temperature
Result:

Temperature Displayed	Proceed to
–40 °C (–40 °F)	A
140 °C (284 °F) or more	B
OK (Same as present temperature)	C

HINT:
- If there is an open circuit, the hand–held tester indicates –40˚C (–40˚F).
- If there is a short circuit, the hand–held tester indicates 140˚C (284˚F) or more.

B → **Go to step 4**

C → **CHECK FOR INTERMITTENT PROBLEMS (See Page 05–5)**

A

2 READ VALUE OF HAND–HELD TESTER(CHECK FOR OPEN IN HARNESS)

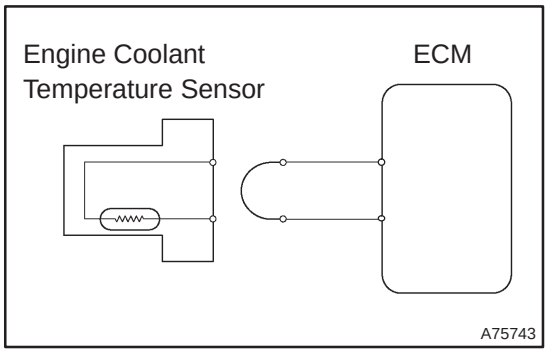

(a) Disconnect the engine coolant temperature sensor connector.
(b) Connect terminals 1 and 2 of the engine coolant temperature sensor connector.
(c) Turn the ignition switch ON.
(d) Select the item ”DIAGNOSIS / OBD/MOBD / DATA LIST / ALL / COOLANT TEMP” and read its value displayed on the hand–held tester.
Temperature: 140 °C (284 °F) or more

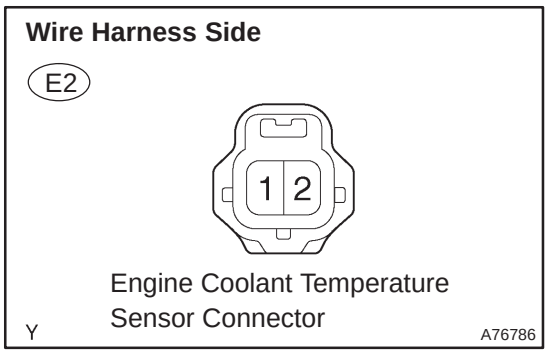

OK → **CONFIRM GOOD CONNECTION AT SENSOR. IF OK, REPLACE ENGINE COOLANT TEMP. SENSOR**

NG

3 READ VALUE OF HAND–HELD TESTER(CHECK FOR OPEN IN ECM)

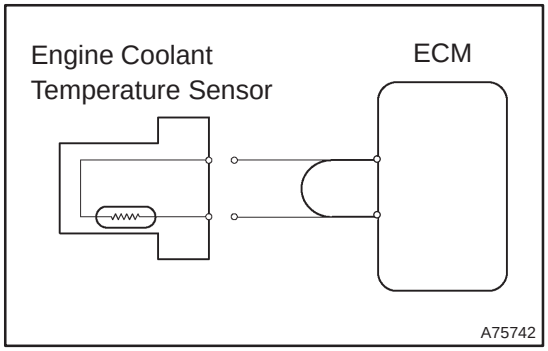

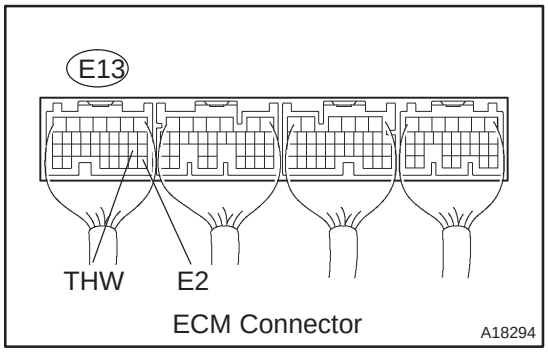

(a) Disconnect the engine coolant temperature sensor connector.
(b) Connect terminals THW and E2 of the E13 ECM connector.

HINT:
Before checking, do a visual and contact pressure check for the ECM connector.

(c) Turn the ignition switch ON.
(d) Select the item ”DIAGNOSIS / OBD/MOBD / DATA LIST / ALL / COOLANT TEMP” and read its value displayed on the hand–held tester.
Temperature: 140 °C (284 °F) or more

OK → **REPAIR OR REPLACE HARNESS OR CONNECTOR**

NG

CONFIRM GOOD CONNECTION AT ECM. IF OK, CHECK AND REPLACE ECM (See page 01–32)

4 READ VALUE OF HAND–HELD TESTER(CHECK FOR SHORT IN HARNESS)

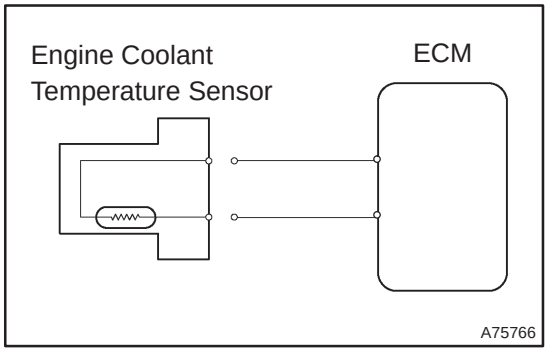

(a) Disconnect the engine coolant temperature sensor connector.
(b) Turn the ignition switch ON.
(c) Select the item ”DIAGNOSIS / OBD/MOBD / DATA LIST / ALL / COOLANT TEMP” and read its value displayed on the hand–held tester.
Temperature: –40°C (–40°F)

OK → **REPLACE ENGINE COOLANT TEMPERATURE SENSOR**

NG

5	READ VALUE OF HAND–HELD TESTER(CHECK FOR SHORT IN ECM)

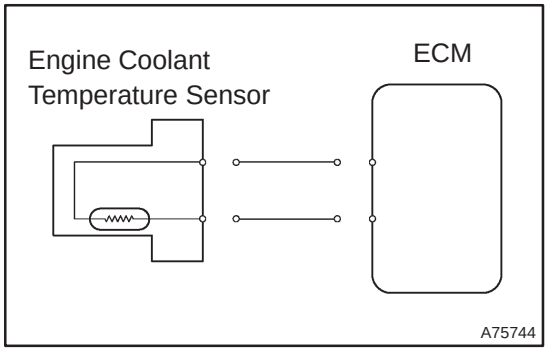

(a) Disconnect the E13 ECM connector.
(b) Disconnect the engine coolant temperature sensor connector.
(c) Turn the ignition switch ON.
(d) Select the item ”DIAGNOSIS / OBD/MOBD / DATA LIST / ALL / COOLANT TEMP” and read its value displayed on the hand–held tester.
Temperature: –40 °C (–40 °F)

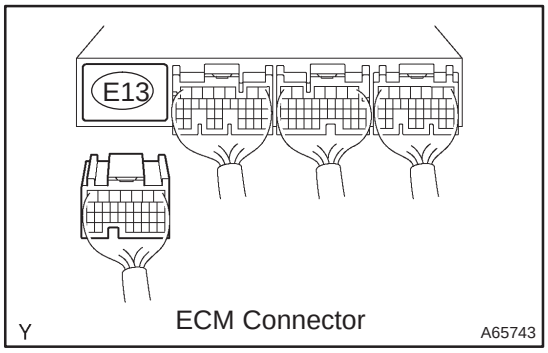

OK → **REPAIR OR REPLACE HARNESS OR CONNECTOR**

NG

CHECK AND REPLACE ECM (See page 01–32)

DTC	P0116	ENGINE COOLANT TEMPERATURE CIRCUIT RANGE/PERFORMANCE PROBLEM

CIRCUIT DESCRIPTION

Rfer to DTC P0115 on page 05–34

DTC No.	DTC Detecting Condition	Trouble Area
P0116	When the temperature of engine coolant is –7 °C (20 °F) with a cold engine, and if the engine coolant temperature sensor value is 20 °C (68 °F) or less even if it has been 20 min or more since the engine was warmed up. (2 trip detection logic)	• Engine coolant temperature sensor • Thermostat

INSPECTION PROCEDURE

HINT:

- Read freeze frame data using the hand–held tester. Freeze frame data records the engine conditions when a malfunction is detected. When troubleshooting, it is useful for determining whether the vehicle was running or stopped, the engine was warmed up or not, the air–fuel ratio was lean or rich, etc. at the time of the malfunction.
- If different DTCs that are related to a different systems are output simultaneously while terminal E2 is used as a ground terminal, terminal E2 may be open.

1	READ OUTPUT DTC(BESIDES P0116)

(a) Read the DTC using the hand–held tester.
Result:

Display (DTC output)	Proceed to
Only ”P0116” is output	A
”P0116” and other DTCs are output	B

HINT:
If any other codes besides ”P0116” are output, perform the troubleshooting for those DTCs first.

B → GO TO RELEVANT DTC CHART

A

2	INSPECT THERMOSTAT (See Page 16–3)

NG → REPLACE THERMOSTAT

OK

REPLACE ENGINE COOLANT TEMPERATURE SENSOR

DTC	P0120	THROTTLE PEDAL POSITION SENSOR/SWITCH ”A” CIRCUIT MALFUNCTION

CIRCUIT DESCRIPTION

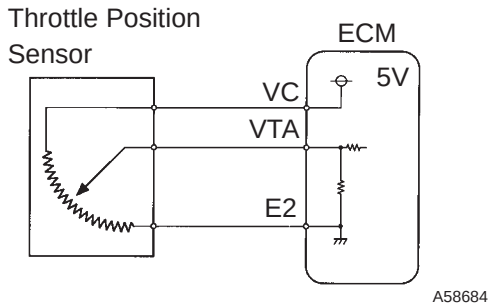

The throttle position sensor is mounted in the throttle body and detects the throttle valve opening angle.
When the throttle valve is fully closed, a voltage of approximately 0.7 V is applied to terminal VTA of the ECM. The voltage applied to terminal VTA of the ECM increases in proportion to the opening angle of the throttle valve and becomes approximately 3.5 to 5.0 V when the throttle valve is fully opened. The ECM judges the vehicle driving conditions from these signals input from terminal VTA, uses them as one of the conditions for deciding the air–fuel ratio correction, power increase correction and fuel–cut control etc.

DTC No.	DTC Detecting Condition	Trouble Area
P0120	Condition (a) or (b) continues for more than 5 sec. (a) VTA is less than 0.1 V (b) VTA is greater than 4.9 V	• Open or short in throttle position sensor circuit • Throttle position sensor • ECM

HINT:
After confirming DTC ”P0120”, use the hand–held tester to confirm the throttle valve opening percentage.

Throttle valve opening position expressed as percentage		Trouble Area
Throttle valve fully closed	Throttle valve fully open	
0 %	0 %	VC circuit open VTA circuit open or short
Approx. 100 %	Approx. 100 %	E2 circuit open

WIRING DIAGRAM

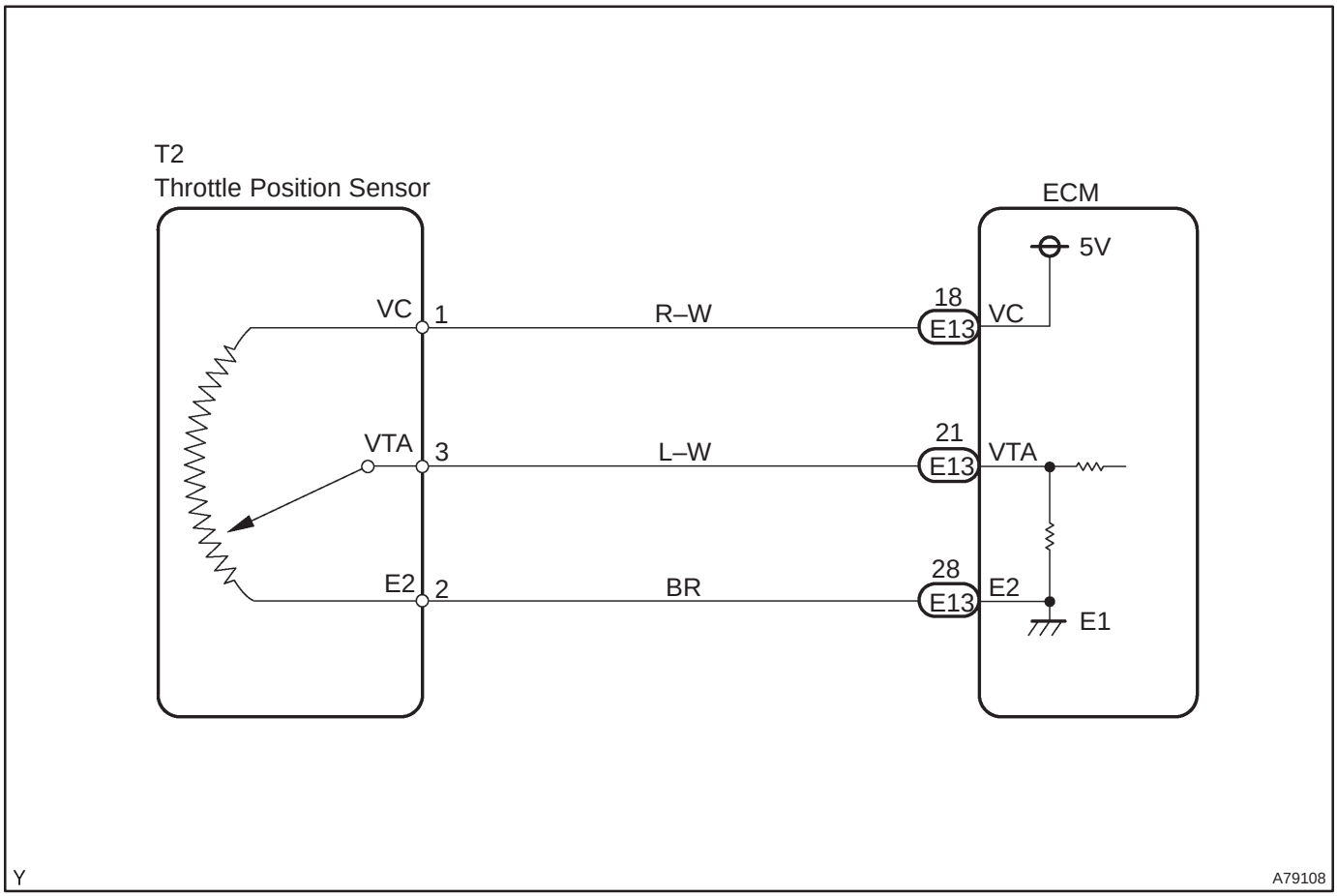

INSPECTION PROCEDURE

HINT:

- Read freeze frame data using the hand–held tester. Freeze frame data records the engine conditions when a malfunction is detected. When troubleshooting, it is useful for determining whether the vehicle was running or stopped, the engine was warmed up or not, the air–fuel ratio was lean or rich, etc. at the time of the malfunction.
- If different DTCs that are related to a different system are output simultaneously while terminal E2 is used as a ground terminal, terminal E2 may be open.

1	READ VALUE OF HAND–HELD TESTER(THROTTLE VALVE OPENING PERCENTAGE)

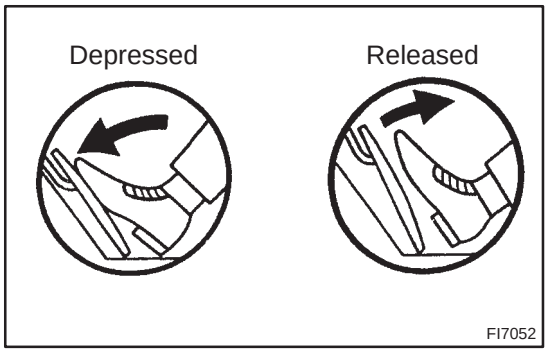

(a) Turn the ignition switch ON.
(b) Select the item ”DIAGNOSIS / OBD/MOBD / DATA LIST / ALL / THROTTLE POS” and read its value displayed on the hand–held tester.

Result:

Accelerator pedal operatuin	Throttle valve opening position expressed as percentage	Proceed to
Released→Depressed	0 %	A
	Approx. 10 %→ Approx. 75 %	B
	Approx. 100 %	C

B → **CHECK FOR INTERMITTENT PROBLEMS (See page 05–5)**

C → **Go to step 4**

A

2	INSPECT THROTTLE POSITION SENSOR

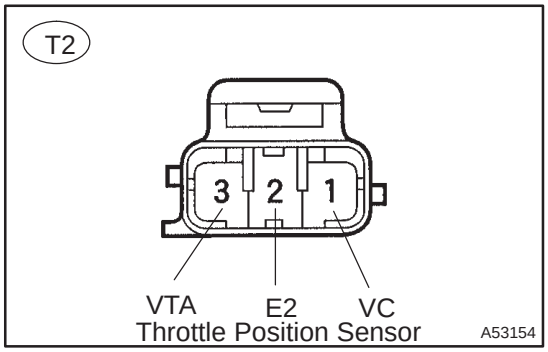

(a) Disconnect the throttle position sensor connector.
(b) Measure the resistance between the terminals of the throttle position sensor.

Standard:

Symbols (Terminal No.)	Throttle Valve	Resistance
VC (T2–1) – E2 (T2–2)	—	2.5 to 5.9 kΩ
VTA (T2–3) – E2 (T2–2)	Fully closed	0.2 to 5.7 kΩ
	Fully open	2.0 to 10.2 kΩ

NG → **REPLACE THROTTLE POSITION SENSOR**

OK

3 CHECK HARNESS AND CONNECTOR(ECM – THROTTLE POSITION SENSOR)

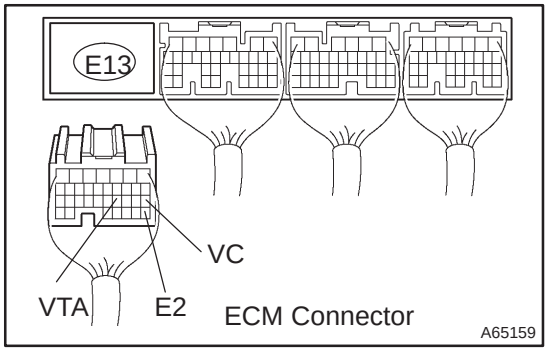

(a) Disconnect the E13 ECM connector.
(b) Measure the resistance between the terminals of the E13 ECM connector.
Standard:

Symbols (Terminal No.)	Throttle valve	Resistance
VC (E13–18) – E2 (E13–28)	—	2.5 to 5.9 kΩ
VTA(E13–21) – E2 (E13–28)	Fully closed	0.2 to 5.7 kΩ
	Fully open	2.0 to 10.2 kΩ

(c) Check for continuity between the terminals of the E13 ECM connector.
Standard (Check for short):

Symbols (Terminal No.)	Specified condition
VC (E13–18) – Body ground	No Continuity
VTA (E13–28) – Body ground	

NG → **REPAIR OR REPLACE HARNESS OR CONNECTOR**

OK

CHECK AND REPLACE ECM (See page 01–32)

4 INSPECT THROTTLE POSITION SENSOR

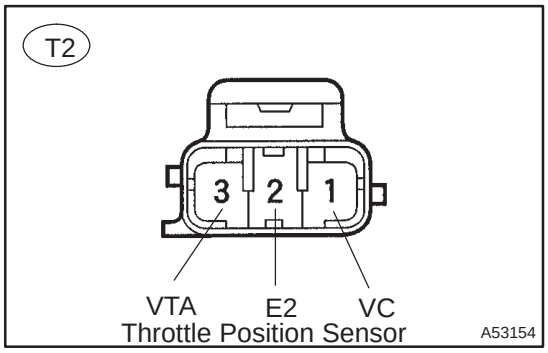

(a) Disconnect the throttle position sensor connector.
(b) Measure the resistance between the terminals of the throttle position sensor.
Standard:

Symbols (Terminal No.)	Throttle Valve	Resistance
VC (T2–1) – E2 (T2–2)	—	2.5 to 5.9 kΩ
VTA (T2–3) – E2 (T2–2)	Fully closed	0.2 to 5.7 kΩ
	Fully open	2.0 to 10.2 kΩ

NG → **REPLACE THROTTLE POSITION SENSOR**

OK

5 CHECK HARNESS AND CONNECTOR(ECM – THROTTLE POSITION SENSOR)

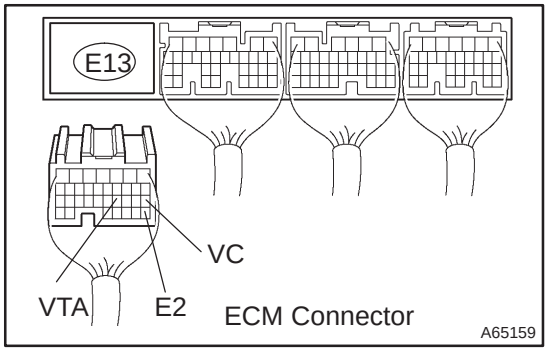

(a) Disconnect the E13 ECM connector.
(b) Disconnect the throttle position sensor connector.
(c) Check for continuity between the wire harness side connectors.

Standard (Check for open):

Symbols (Terminal No.)	Specified condition
VC (T2–1) – VC (E13–18)	Continuity
VTA (T2–3) – VTA (E13–21)	
E2 (T2–2) – E2 (E13–28)	

Standard (Check for short):

Symbols (Terminal No.)	Specified condition
VC (T2–1) or VC (E13–18) – Body ground	No continuity
VTA (T2–3) or VTA (E13–21) – Body ground	

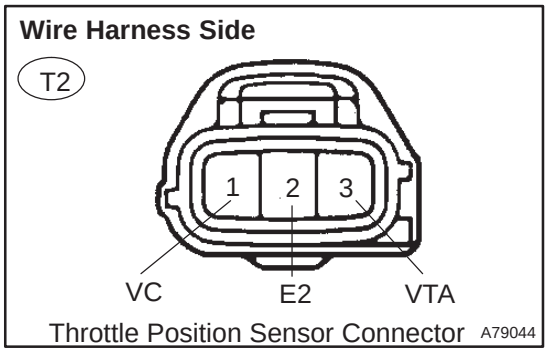

NG → **REPAIR OR REPLACE HARNESS OR CONNECTOR**

OK →

CHECK AND REPLACE ECM (See page 01–32)

DTC	P0121	THROTTLE/PEDAL POSITION SENSOR/SWITCH ”A” CIRCUIT RANGE/PERFORMANCE PROBLEM

CIRCUIT DESCRIPTION

Refer to DTC P0120 on page 05–39

HINT:

This is the troubleshooting procedure of the throttle position sensor.

DTC No.	DTC Detecting Condition	Trouble Area
P0121	After the vehicle speed has exceeded 30 km/h (19 mph) once, and an output value of the throttle position sensor is out of the applicable range, althought the vehicle speed is more than 0 km/h (0 mph). (2 trip detection logic)	• Throttle position sensor

INSPECTION PROCEDURE

HINT:

- Read freeze frame data using the hand–held tester. Freeze frame data records the engine conditions when a malfunction is detected. When troubleshooting, it is useful for determining whether the vehicle was running or stopped, the engine was warmed up or not, the air–fuel ratio was lean or rich, etc. at the time of the malfunction.
- If different DTCs that are related to a different system are output simultaneously while terminal E2 is used as a ground terminal, terminal E2 may be open.

1	ARE THERE ANY DTC BEING OUTPUT(BESIDES P0121)

(a) Read the DTC using the hand–held tester.

Result:

Display (DTC output)	Proceed to
Only ”P0121” is output	A
”P0121” and other DTCs are output	B

HINT:

If any other codes besides ”P0121” are output, perform the troubleshooting for those DTCs first.

B → GO TO RELEVANT DTC CHART

A

REPLACE THROTTLE POSITION SENSOR

DTC	P0125	INSUFFICIENT COOLANT TEMP. FOR CLOSED LOOP FUEL CONTROL

CIRCUIT DESCRIPTION

The heated oxygen sensor is the planar type. Compared to the conventional type, the sensor element and the heater portions have a narrower overall. The heater can directly conduct its heat to the zirconia element via the alumina, it helps to accerate the sensor activation.

To obtain a high purification rate for the CO, HC and NOx components of the exhaust gas, a three – way catalytic converter is used. For the most efficient use of the three – way catalytic converter, the air – fuel ratio must be precisely controlled so that it is always close to the stoichiometric air – fuel ratio.

The heated oxygen sensor has the characteristic whereby its output voltage changes suddenly in the vicinity of the stoichiometric air–fuel ratio. This is used to detect the oxygen concentration in the exhaust gas and provide the ECM with feedback control the air–fuel ratio.

When the air–fuel ratio becomes LEAN, the oxygen concentration in the exhaust gas increases. And the heated oxygen sensor informs the ECM of the LEAN condition (low voltage, i. e. less than 0.45 V).

When the air–fuel ratio is RICHER than the stoichiometric air–fuel ratio, the oxygen concentration in the exhaust gas is reduced. And the heated oxygen sensor informs the ECM of the RICH condition (high voltage, i. e. more than 0.45V). The ECM judges by the voltage output from the heated oxygen sensor whether the air–fuel ratio is RICH or LEAN and controls the injection time accordingly. If the malfunction of the heated oxygen sensor causes an output of abnomal voltage, the ECM becomes unable to perform accurate air–fuel ratio control.

The heated oxygen sensors include a heater which heats the zirconia element. The heater is controlled by the ECM. When the intake air volume is low (the temperature of the exhaust gas is low), current flows to the heater in order to heat the sensor for the accurate oxygen concentration detection.

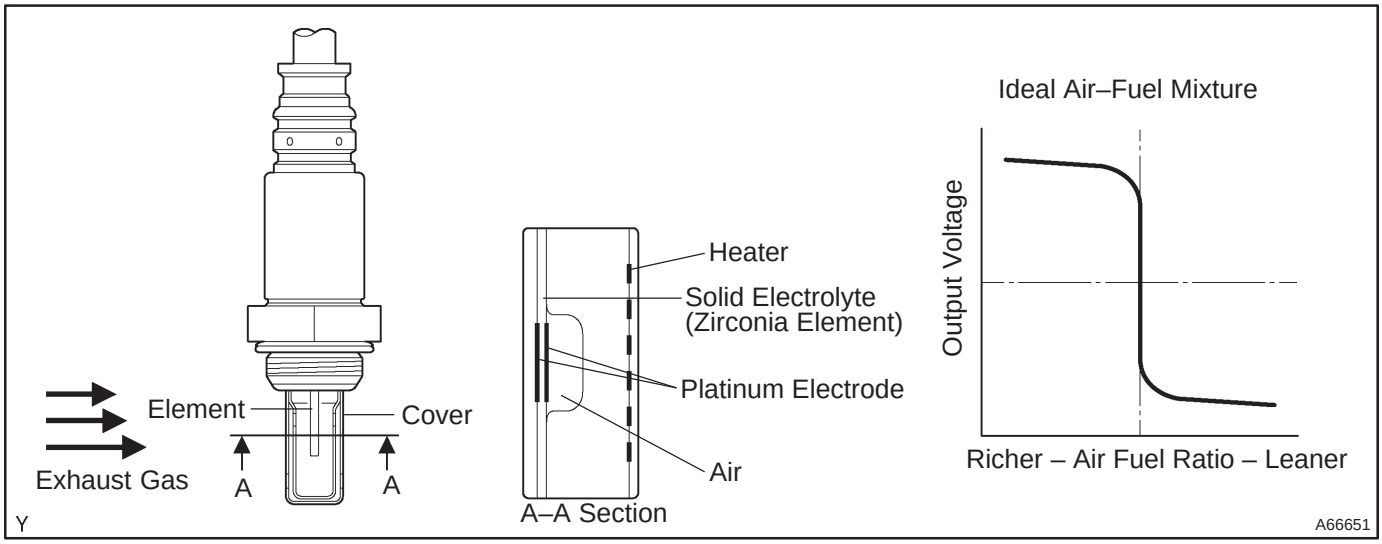

DTC No	DTC Detecting Condition	Trouble Area
P0125	After engine is warmed up, heated oxygen sensor output* does not change when conditions (a), (b), (c) and (d) continue for at least 1.5 min: *: Output value changes at inside of the ECM only (a) Engine speed: 1,400 rpm or more (b) Vehicle speed: 40 to 100 km/h (25 to 62 mph) (c) Throttle valve is not fully closed (d) 180 sec. or more after starting engine	• Open or short in heated oxygen sensor circuit • Heated oxygen sensor • Air induction system • Fuel pressure • Injector • Gas leakage in exhaust system • ECM

HINT:

- After confirming DTC ”P0125”, use the hand–held tester to confirm output voltage of the heated oxygen sensor the ”DIAGNOSIS / OBD/MOBD / DATA LIST / ALL”.

WIRING DIAGRAM

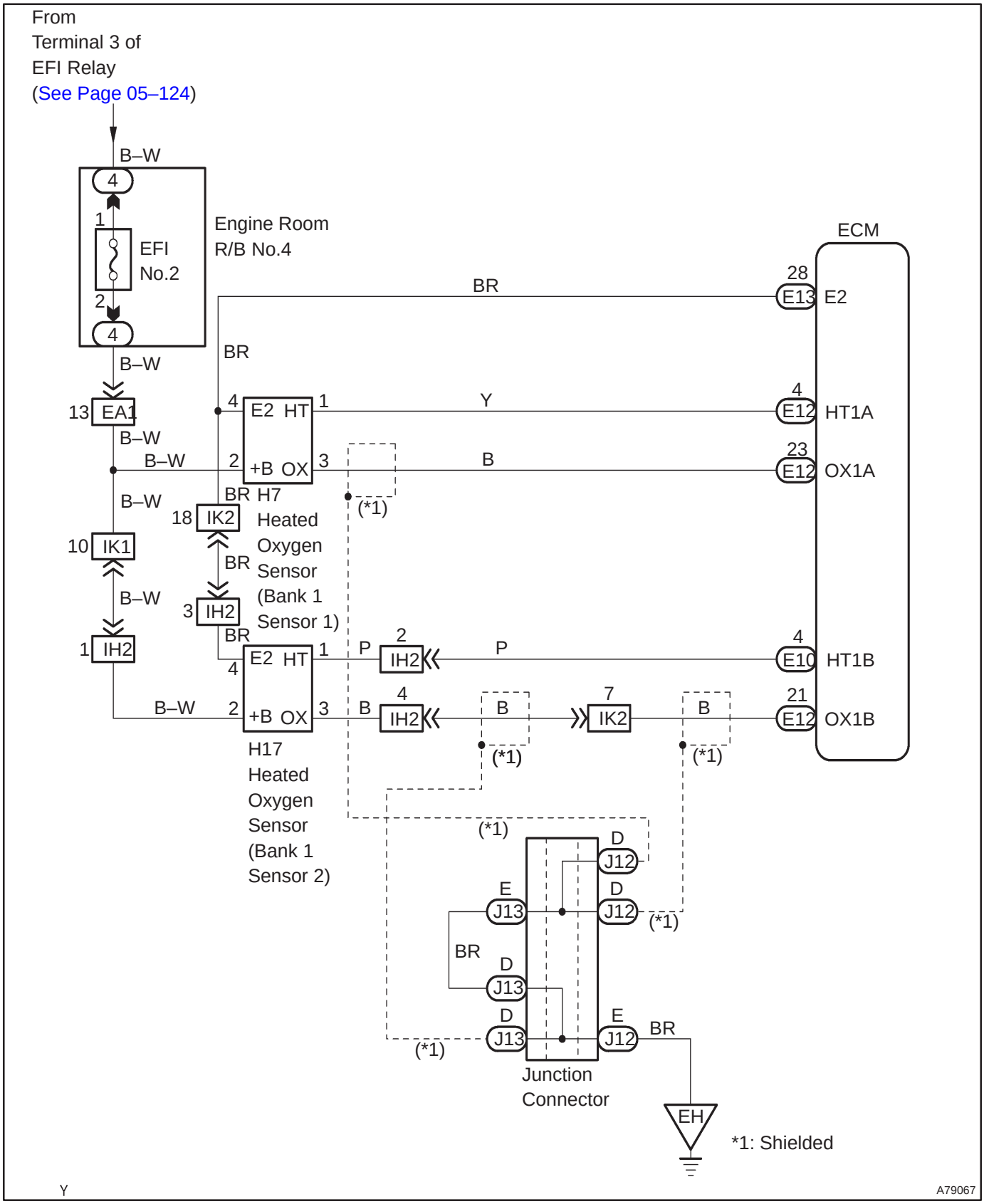

INSPECTION PROCEDURE

HINT:

Hand–held tester only:

Narrowing down the trouble area is possible by performing ACTIVE TEST of the following ”A/F CONTROL” (heated oxygen sensor or other trouble areas can be distinguished).

(a) Perform ACTIVE TEST by the hand–held tester (A/F CONTROL).

HINT:

”A/F CONTROL” is an ACTIVE TEST which changes the injection volume –12.5 % or +25 %.

(1) Connect the hand–held tester to the DLC3 on the vehicle.
(2) Turn the ignition switch ON.
(3) Warm up the engine with the engine speed at 2,500 rpm for approximately 90 sec.
(4) Select the item ”DIAGNOSIS / OBD/MOBD / ACTIVE TEST / A/F CONTROL”.
(5) Perform ”A/F CONTROL” with the engine in an idle condition (press the right or left button).

Result:

Heated oxygen sensor reacts in accordance with increase and decrease of injection volume:
+25 % → rich output: More than 0.55 V
–12.5 % → lean output: Less than 0.4 V

NOTICE:

There is a few second delay in the sensor 1 (front sensor) output, and there is about 20 seconds delay in the sensor 2 (rear sensor)output.

	Output voltage of heated oxygen sensor (sensor 1: front sensor)	Output voltage of heated oxygen sensor (sensor 2: rear sensor)	Mainly suspect trouble area
Case 1	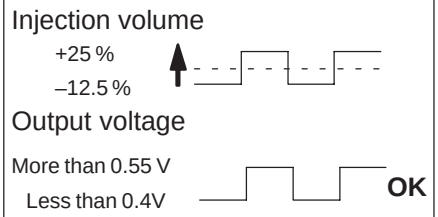	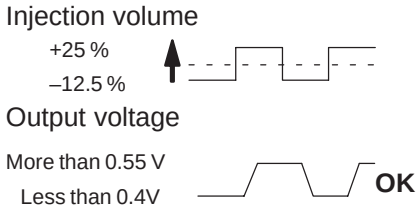	—
Case 2	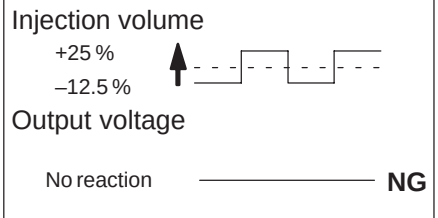	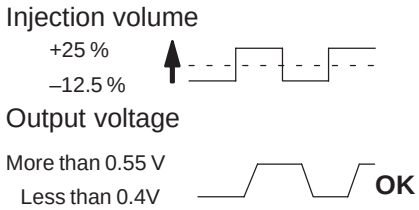	Sensor 1: front sensor (sensor 1, heater, sensor 1 circuit)
Case 3	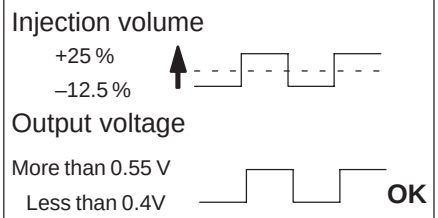	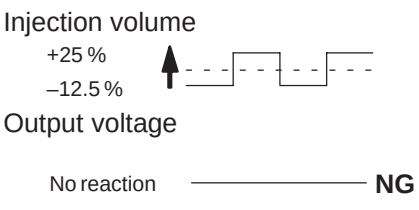	Sensor 2: rear sensor (sensor 2, heater, sensor 2 circuit)
Case 4	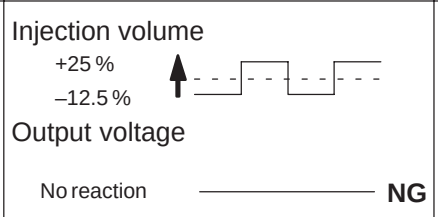	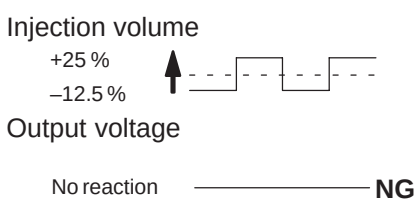	Extremely rich or lean of the actual air–fuel ratio (Injector, fuel pressure, gas leakage in exhaust system, etc.)

The following procedure of A/F CONTROL enable the technician to check and graph voltage output of the heated oxygen sensor.
For displaying the graph indication, enter ”ACTIVE TEST / A/F CONTROL / USER DATA,” then select ”O2S B1S1 and O2S B1S2” by pressing ”YES” button and push ”ENTER” button before pressing ”F4” button.
HINT:

- If different DTCs that are related to a different system are output simultaneously while terminal E2 is used as a ground terminal, terminal E2 may be open.
- Read freeze frame data using the hand–held tester. Freeze frame data records the engine conditions when a malfunction is detected. When troubleshooting, it is useful for determining whether the vehicle was running or stopped, the engine was warmed up or not, the air–fuel ratio was lean or rich, etc. at the time of the malfunction.
- A high heated oxygen sensor (sensor 1) voltage (0.55 V or more) could be caused by a rich air fuel mixture. Check for conditions that would cause the engine to run rich.
- A low heated oxygen sensor (sensor 1) voltage (0.4 V or less) could be caused by a lean air fuel mixture. Check for conditions that would cause the engine to run lean.

1	CHECK OTHER DTC OUTPUT(BESIDES DTC P0125)

(a) Read the DTC using the hand–held tester.
Result:

Display (DTC output)	Proceed to
Only ”P0125” is output	A
”P0125” and other DTCs are output	B

HINT:
If any other codes besides ”P0125” are output, perform the troubleshoot on that DTC before.

B → **GO TO RELEVANT DTC CHART (See page 05–16)**

A

2	READ VALUE OF HAND–HELD TESTER(OUTPUT VOLTAGE OF HEATED OXYGEN SENSOR)

(a) Warm up the engine to the normal operating temperature above 75°C (169°F).
(b) Read the output voltage of the heated oxygen sensor when the engine rpm is suddenly increased.
HINT:
Quickly accelerate the engine to 4,000 rpm 3 times using the accelerator pedal.
Standard:
Heated oxygen sensor outputs a RICH signal (0.45 V or more) at least once.

OK → **Go to step 13**

NG

3 INSPECT HEATED OXYGEN SENSOR(HEATER RESISTANCE)

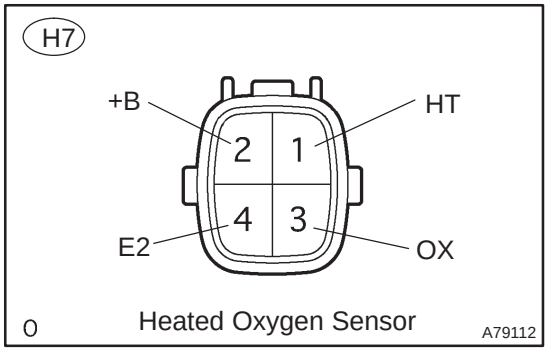

(a) Disconnect the heated oxygen sensor connector.
(b) Inspect the heated oxygen sensor.

Standard: (Bank1 Sensor1)

Symbols (Terminal No.)	Condition	Specified condition
HT (H7–1) – +B (H7–2)	20°C (68°F)	6 to 9 Ω
HT (H7–1) – E2 (H7–4)	—	No Continuity

Standard: (Bank1 Sensor2)

Symbols (Terminal No.)	Condition	Specified condition
HT (H17–1) – +B (H17–2)	20°C (68°F)	11 to 16 Ω
HT (H17–1) – E2 (H17–4)	—	No Continuity

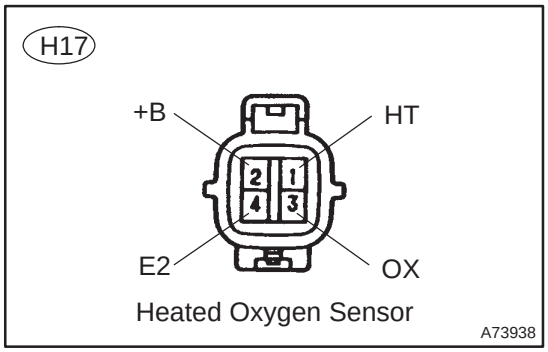

NG → **REPLACE HEATED OXYGEN SENSOR**

OK

4 INSPECT EFI RELAY (See page 10–3)

NG → **REPLACE EFI RELAY**

OK

5 CHECK FUSE(EFI No.2)

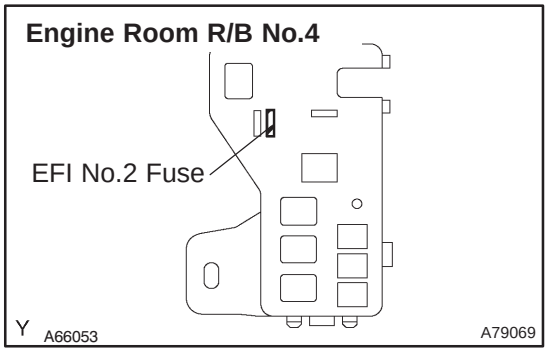

(a) Remove the EFI No.2 fuse from the engine room R/B No.4.
(b) Check for continuity in the EFI fuse.

Standard: Continuity

NG → **CHECK FOR SHORT IN ALL HARNESS AND COMPONENTS CONNECTED FUSE**

OK

6 CHECK HARNESS AND CONNECTOR(HEATED OXYGEN SENSOR – ECM)

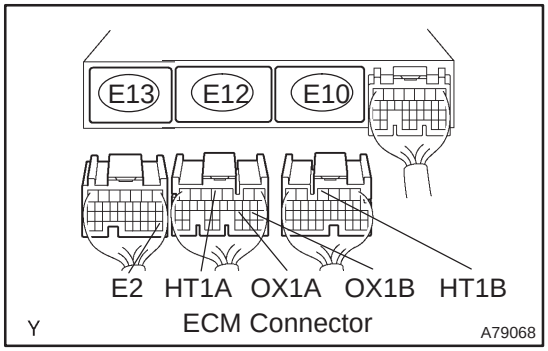

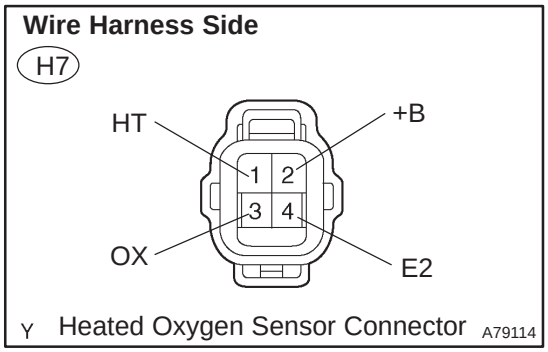

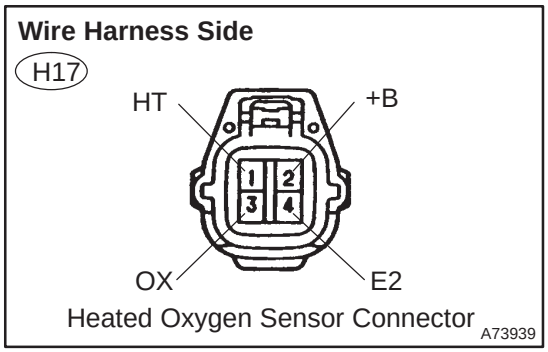

(a) Disconnect the heated oxygen sensor connector.
(b) Disconnect the E10, E12 and E13 ECM connector.
(c) Check for continuity between the wire harness side connectors.

Standard (Check for open): (Bank1 Sensor1)

Symbols (Terminal No.)	Specified condition
HT (H7–1) – HT1A (E12–4)	Continuity
OX (H7–3) – OX1A (E12–23)	
E2 (H7–4) – E2 (E13–28)	

Standard (Check for short): (Bank1 Sensor1)

Symbols (Terminal No.)	Specified condition
HT (H7–1) or HT1A (E12–4) – Body ground	No continuity
OX (H7–3) or OX1A (E12–23) – Body ground	

Standard (Check for open): (Bank1 Sensor2)

Symbols (Terminal No.)	Specified condition
HT (H17–1) – HT1B (E10–4)	Continuity
OX (H17–3) – OX1B (E12–21)	
E2 (H17–4) – E2 (E13–28)	

Standard (Check for short): (Bank1 Sensor2)

Symbols (Terminal No.)	Specified condition
HT (H17–1) or HT1B (E10–4) – Body ground	No continuity
OX (H17–3) or OX1B (E12–21) – Body ground	

NG → **REPAIR OR REPLACE HARNESS OR CONNECTOR**

OK

7 CHECK HARNESS AND CONNECTOR(EFI RELAY – HEATED OXYGEN SENSOR)

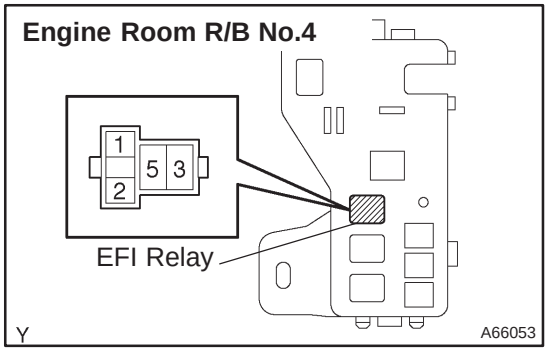

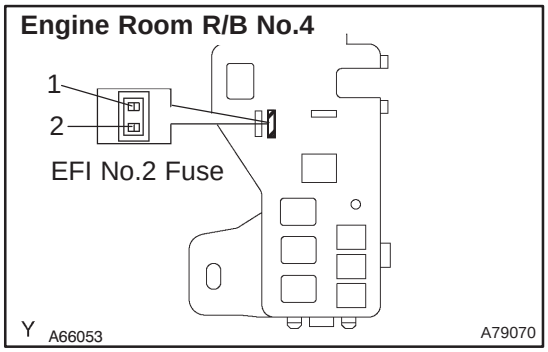

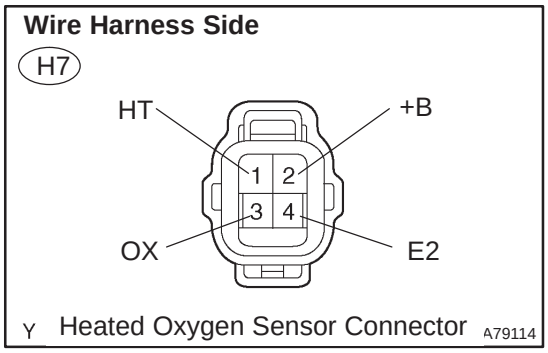

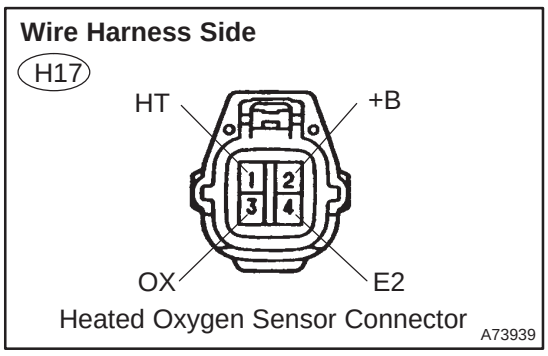

(a) Remove the EFI relay from the engine room R/BNo.4.
(b) Remove the EFI No.2 fuse from the engine room R/B No.4.
(c) Disconnect the heated oxygen sensor connector.
(d) Check for continuity between the wire harness side connectors.

Standard (Check for open):

Symbols (Terminal No.)	Specified condition
EFI relay (3) – EFI No.2 fuse (1)	Continuity

Standard (Check for short):

Symbols (Terminal No.)	Specified condition
EFI relay (3) or EFI No.2 fuse (1) – Body ground	No continuity

Standard (Check for open): (Bank1 Sensor1)

Symbols (Terminal No.)	Specified condition
EFI No.2 fuse (2) – +B (H7–2)	Continuity

Standard (Check for short): (Bank1 Sensor1)

Symbols (Terminal No.)	Specified condition
EFI No.2 fuse (2) or +B (H7–2) – Body ground	No continuity

Standard (Check for open): (Bank1 Sensor2)

Symbols (Terminal No.)	Specified condition
EFI No.2 fuse (2) – +B (H17–2)	Continuity

Standard (Check for short): (Bank1 Sensor2)

Symbols (Terminal No.)	Specified condition
EFI No.2 fuse (2) or +B (H17–2) – Body ground	No continuity

NG → **REPAIR OR REPLACE HARNESS OR CONNECTOR**

OK

8	CHECK WHETHER MISFIRE IS OCCURRED OR NOT BY MONITORING DTC AND DATA LIST

NG → PERFORM TROUBLESHOOTING FOR MISFIRE (See page 05–5)

OK

9	CHECK AIR INDUCTION SYSTEM

(a) Check for vacuum leaks in air induction system.

NG → REPAIR OR REPLACE AIR INDUCTION SYSTEM

OK

10	CHECK FUEL PRESSURE (See page 11–5)

(a) Check the fuel pressure (high or low pressure).

NG → REPAIR OR REPLACE FUEL SYSTEM

OK

11	INSPECT FUEL INJECTOR ASSY(INJECTION AND VOLUME) (See page 11–8)

NG → REPLACE FUEL INJECTOR ASSY

OK

12	CHECK FOR EXHAUST GAS LEAK

NG → REPAIR OR REPLACE EXHAUST GAS LEAKAGE POINT

OK

REPLACE HEATED OXYGEN SENSOR

13	PERFORM CONFIRMATION DRIVING PATTERN (See page 05–54)

GO

14	READ OUTPUT DTC(DTC P0125 IS OUTPUT AGAIN)

(a) Read the DTC using the hand–held tester.
Result:

Display (DTC output)	Proceed to
”P0125” is not output again	A
”P0125” is output again	B

B → **CHECK AND REPLACE ECM (See page 01–32)**

A

15	CONFIRM IF VEHICLE HAS RUN OUT OF FUEL IN PAST

NO → **CHECK FOR INTERMITTENT PROBLEMS**

YES

DTC IS CAUSED BY RUNNING OUT OF FUEL

DTC	P0130	OXYGEN SENSOR CIRCUIT MALFUNCTION (BANK 1 SENSOR 1)

DTC	P0136	OXYGEN SENSOR CIRCUIT MALFUNCTION (BANK 1 SENSOR 2)

CIRCUIT DESCRIPTION

Refer to DTC P0125 on page 05–45.

DTC No	DTC Detecting Condition	Trouble Area
P0130	Voltage output of heated oxygen sensor remains between 0.40 V and 0.55 V during idling after the engine is warmed up	• Open or short in heated oxygen sensor circuit • Heated oxygen sensor • Air induction system • Fuel pressure • Injector • ECM
P0136	Voltage output of heated oxygen sensor remains 0.4 V or more or 0.5 V or less when vehicle is driven at 30 km/h (19 mph) or more after the engine is warmed up (2 trip detection loginc)	• Open or short in heated oxygen sensor circuit • Heated Oxygen sensor

HINT:

- Bank 1 refers to the bank that includes cylinder No. 1.
- Sensor 1 refers to the sensor closer to the engine assembly.
- The heated oxygen sensor output voltage and the short−term fuel trim value can be read using the hand−held tester.

WIRING DIAGRAM

Refer to DTC P0125 on page 05–45.

CONFIRMATION DRIVING PATTERN

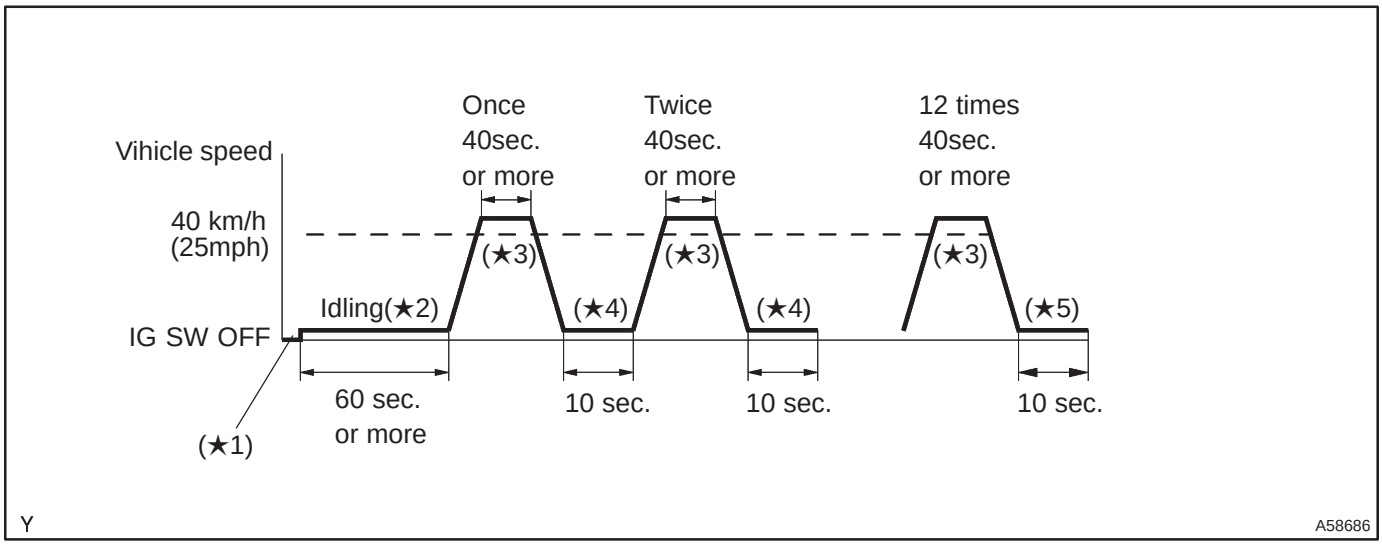

1. **Connect the hand–held tester to the DLC3. (★1)**
2. **Switch the hand–held tester from the normal mode to the check mode (See page 05–5). (★1)**
3. **Start the engine and let the engine idle for 60 seconds or more. (★2)**
4. **Drive the vehicle at 40 km/h (25 mph) or more for 40 seconds or more. (★3)**
5. **Let the engine idle for 10 seconds or more. (★4)**
6. **Perform steps 4 to 5 12 times. (★5)**

HINT:

If a malfunction exists, the CHECK ENG will be illuminated on the multi–information display during step 6.

NOTICE:

If the conditions in this test are not strictly followed, detection of the malfunction will not be possible. If you do not have a hand–held tester, turn the ignition switch OFF after performing steps from 3 to 6, then perform steps from 3 to 6 again.

INSPECTION PROCEDURE

HINT:

Hand–held tester only:

Narrowing down the trouble area is possible by performing ACTIVE TEST of the following ”A/F CONTROL” (heated oxygen sensor or other trouble areas can be distinguished).

(a) Perform ACTIVE TEST using hand–held tester (A/F CONTROL).

HINT:

”A/F CONTROL” is an ACTIVE TEST which changes the injection volume –12.5 % or +25 %.

(1) Connect the hand–held tester to the DLC3 on the vehicle.
(2) Turn the ignition switch ON.
(3) Warm up the engine with the engine speed at 2,500 rpm for approximately 90 sec.
(4) Select the item ”DIAGNOSIS / OBD/MOBD / ACTIVE TEST / A/F CONTROL”.
(5) Perform ”A/F CONTROL” whith the engine in an idle condition (press the right or left button).

Result:

Heated oxygen sensor reacts in accordance with increase and decrease of injection volume:
+25 % → rich output: More than 0.55 V
–12.5 % → lean output: Less than 0.4 V

NOTICE:
There is a few second delay in the sensor 1 (front sensor) output, and there is about 20 seconds delay in the sensor 2 (rear sensor) output.

	Output voltage of heated oxygen sensor (sensor 1: front sensor)	Output voltage of heated oxygen sensor (sensor 2: rear sensor)	Mainly suspect trouble area
Case 1	Injection volume +25 % –12.5 % Output voltage More than 0.55 V Less than 0.4V **OK**	Injection volume +25 % –12.5 % Output voltage More than 0.55 V Less than 0.4V **OK**	—
Case 2	Injection volume +25 % –12.5 % Output voltage No reaction **NG**	Injection volume +25 % –12.5 % Output voltage More than 0.55 V Less than 0.4V **OK**	Sensor 1: front sensor (sensor 1, heater, sensor 1 circuit)
Case 3	Injection volume +25 % –12.5 % Output voltage More than 0.55 V Less than 0.4V **OK**	Injection volume +25 % –12.5 % Output voltage No reaction **NG**	Sensor 2: rear sensor (sensor 2, heater, sensor 2 circuit)
Case 4	Injection volume +25 % –12.5 % Output voltage No reaction **NG**	Injection volume +25 % –12.5 % Output voltage No reaction **NG**	Extremely rich or lean of the actual air–fuel ratio (Injector, fuel pressure, gas leakage in exhaust system, etc.)

The following procedure of A/F CONTROL enable the technician to check and graph voltage output of the heated oxygen sensor.
For displaying the graph indication, enter ”ACTIVE TEST / A/F CONTROL / USER DATA,” then select ”O2S B1S1 and O2S B1S2” by pressing ”YES” button and push ”ENTER” button before pressing ”F4” button.
NOTICE:
If the vehicle has low fuel, the air–fuel ratio becomes LEAN and heated oxygen sensor DTCs will be recorded, and the CHK ENG lamp then comes on.
HINT:

- If different DTCs that are related to a different system are output simultaneously while terminal E2 is used as a ground terminal, terminal E2 may be open.
- Read freeze frame data using the hand–held tester. Freeze frame data records the engine conditions when a malfunction is detected. When troubleshooting, it is useful for determining whether the vehicle was running or stopped, the engine was warmed up or not, the air–fuel ratio was lean or rich, etc. at the time of the malfunction.
- A high heated oxygen sensor (sensor 1) voltage (0.55 V or more) could be caused by a rich air fuel mixture. Check for conditions that would cause the engine to run rich.
- A low heated oxygen sensor (sensor 1) voltage (0.4 V or less) could be caused by a lean air fuel mixture. Check for conditions that would cause the engine to run lean.

1	CHECK OTHER DTC OUTPUT(BESIDES HEATED OXYGEN SENSOR DTCS)

(a) Read the DTC using the hand–held tester.
Result:

Display (DTC output)	Proceed to
Only ”P0130 and/or P0136” are output	A
”P0130 and/or P0136” and other DTCs are output	B

HINT:
If any other codes besides ”P0130 and/or P0136” are output, perform the troubleshooting for those DTCs first.

B → **GO TO RELEVANT DTC CHART (See page 05–16)**

A

2	READ VALUE OF HAND–HELD TESTER(OUTPUT VOLTAGE OF HEATED OXYGEN SENSOR)

(a) Warm up the heated oxygen sensor with the engine speed at 2,500 rpm for approximately 90 seconds.
(b) Read the output voltage of the heated oxygen sensor during idling.
Heated oxygen sensor output voltage:
Alternates less than 0.4 V and more than 0.55 V (See the following table).

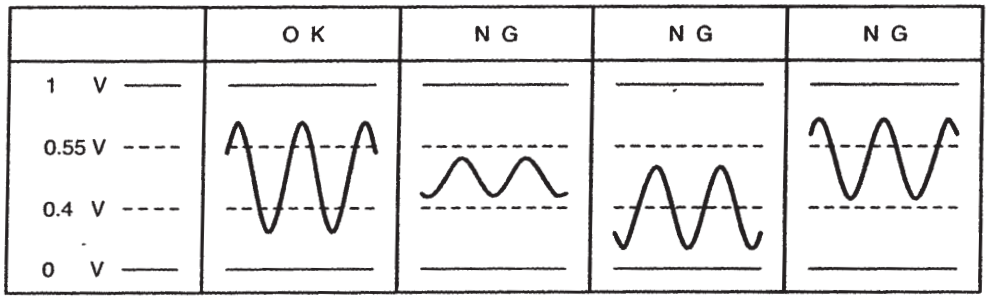

P18349

OK → **Go to step 11**

NG

3	INSPECT HEATED OXYGEN SENSOR(HEATER RESISTANCE) (See page 05–45)

NG → **REPLACE HEATED OXYGEN SENSOR**

OK

4	INSPECT EFI RELAY (See page 10–3)

NG → **REPLACE EFI RELAY**

OK

5	CHECK FUSE(EFI No.2) (See page 05–45)

NG → CHECK FOR SHORT IN ALL HARNESS AND COMPONENTS CONNECTED FUSE

OK

6	CHECK HARNESS AND CONNECTOR(HEATED OXYGEN SENSOR – ECM) (See page 05–45)

NG → REPAIR OR REPLACE HARNESS OR CONNECTOR

OK

7	CHECK HARNESS AND CONNECTOR(EFI RELAY – HEATED OXYGEN SENSOR) (See page 05–45)

NG → REPAIR OR REPLACE HARNESS OR CONNECTOR

OK

8	CHECK AIR INDUCTION SYSTEM

(a) Check for vacuum leaks in air induction system.

NG → REPAIR OR REPLACE AIR INDUCTION SYSTEM

OK

9	CHECK FUEL PRESSURE (See page 11–5)

(a) Check the fuel pressure (high or low pressure).

NG → REPAIR OR REPLACE FUEL SYSTEM

OK

10	INSPECT FUEL INJECTOR ASSY(INJECTION AND VOLUME) (See page 11–8)

NG → REPLACE FUEL INJECTOR ASSY

OK

REPLACE HEATED OXYGEN SENSOR

11	PERFORM CONFIRMATION DRIVING PATTERN

GO

12	READ OUTPUT DTC(HEATED OXYGEN SENSOR DTCS ARE OUTPUT AGAIN)

(a) Read the DTC using the hand–held tester.
Result:

Display (DTC output)	Proceed to
”P0130 and/or P0136” are not output again	A
”P0130 and/or P136” are output again	B

B → **CHECK FOR INTERMITTENT PROBLEMS**

A

REPLACE HEATED OXYGEN SENSOR

DTC	P0133	OXYGEN SENSOR CIRCUIT SLOW RESPONSE (BANK 1 SENSOR 1)

CIRCUIT DESCRIPTION

Refer to DTC P0125 on page 05–45.

DTC No	DTC Detecting Condition	Trouble Area
P0133	Response time for heated oxygen sensor voltage output to change from rich to lean, or from lean to rich, is 1.0 sec. or more during idling after engine is warmed up (2 trip detection logic)	• Open or short in heated oxygen sensor circuit • Heated oxygen sensor • Air induction system • Fuel pressure • Injector • ECM

HINT:

- Bank 1 refers to bank that includes cylinder No. 1.
- Sensor 1 refers to the sensor closer to the engine assembly.
- The heated oxygen sensor output voltage and the short−term fuel trim value can be read using the hand−held tester.

WIRING DIAGRAM

Refer to DTC P0125 on page 05–45.

INSPECTION PROCEDURE

HINT:

Hand–held tester only:

Narrowing down the trouble area is possible by performing ACTIVE TEST of the following ”A/F CONTROL” (heated oxygen sensor or other trouble areas can be distinguished).

(a) Perform ACTIVE TEST using hand–held tester (A/F CONTROL).

HINT:

”A/F CONTROL” is an ACTIVE TEST which changes the injection volume –12.5 % or +25 %.

(1) Connect the hand–held tester to the DLC3 on the vehicle.
(2) Turn the ignition switch ON.
(3) Warm up the engine with the engine speed at 2,500 rpm for approximately. 90 sec.
(4) Select the item ”DIAGNOSIS / OBD/MOBD / ACTIVE TEST / A/F CONTROL”.
(5) Perform ”A/F CONTROL” with the engine in an idle condition (press the right or left button).

Result:

Heated oxygen sensor reacts in accordance with increase and decrease of injection volume:
+25 % → rich output: More than 0.55 V
–12.5 % → lean output: Less than 0.4 V

NOTICE:

There is a few second delay in the sensor 1 (front sensor) output, and there is about 20 seconds delay in the sensor 2 (rear sensor) output.

	Output voltage of heated oxygen sensor (sensor 1: front sensor)	Output voltage of heated oxygen sensor (sensor 2: rear sensor)	Mainly suspect trouble area
Case 1	Injection volume +25 % –12.5 % 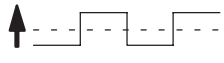 Output voltage More than 0.55 V Less than 0.4V  **OK**	Injection volume +25 % –12.5 % 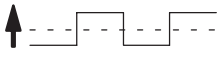 Output voltage More than 0.55 V Less than 0.4V 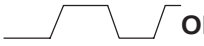 **OK**	—
Case 2	Injection volume +25 % –12.5 % 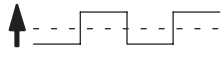 Output voltage No reaction **NG**	Injection volume +25 % –12.5 % 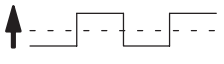 Output voltage More than 0.55 V Less than 0.4V 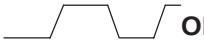 **OK**	Sensor 1: front sensor (sensor 1, heater, sensor 1 circuit)
Case 3	Injection volume +25 % –12.5 % 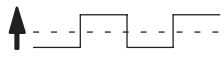 Output voltage More than 0.55 V Less than 0.4V  **OK**	Injection volume +25 % –12.5 % 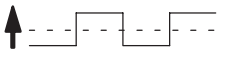 Output voltage No reaction **NG**	Sensor 2: rear sensor (sensor 2, heater, sensor 2 circuit)
Case 4	Injection volume +25 % –12.5 % 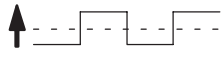 Output voltage No reaction **NG**	Injection volume +25 % –12.5 % 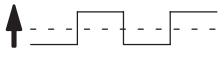 Output voltage No reaction **NG**	Extremely rich or lean of the actual air–fuel ratio (Injector, fuel pressure, gas leakage in exhaust system, etc.)

The following procedure of A/F CONTROL enable the technician to check and graph volatge output of the heated oxygen sensor.

For displaying the graph indication, enter ”ACTIVE TEST / A/F CONTROL / USER DATA,” then select ”O2S B1S1 and O2S B1S2” by pressing ”YES” button and push ”ENTER” button before pressing ”F4” button.

NOTICE:

If the vehicle is lack of fuel, the air–fuel ratio becomes LEAN and DTC P0133 will be set, and the CHK ENG then comes on.

HINT:

- If different DTCs that are related to a different system are output simultaneously while terminal E2 is used as a ground terminal, terminal E2 may be open.
- Read freeze frame data using the hand–held tester. Freeze frame data records the engine conditions when a malfunction is detected. When troubleshooting, it is useful for determining whether the vehicle was running or stopped, the engine was warmed up or not, the air–fuel ratio was lean or rich, etc. at the time of the malfunction.
- A high heated oxygen sensor (sensor 1) voltage (0.55 V or more) could be caused by a rich air fuel mixture. Check for conditions that would cause the engine to run rich.
- A low heated oxygen sensor (sensor 1) voltage (0.4 V or less) could be caused by a lean air fuel mixture. Check for conditions that would cause the engine to run lean.

1	CHECK OTHER DTC OUTPUT(BESIDES DTC P0133)

(a) Read the DTC using the hand–held tester.
Result:

Display (DTC output)	Proceed to
Only ”P0133” is output	A
”P0133 or P0133” and other DTCs are output	B

HINT:
If any other codes besides ”P0133” are output, perform the troubleshooting for those DTCs first.

B → **GO TO RELEVANT DTC CHART (See page 05–16)**

A

2	READ VALUE OF HAND–HELD TESTER(HEATED OXYGEN SENSOR DURING IDLING)

(a) Warm up the heated oxygen sensor with the engine speed at 2,500 rpm for approximately 90 seconds.
(b) Read the output voltage of the heated oxygen sensor during idling.
Heated oxygen sensor output voltage:
Alternates less than 0.4 V and more than 0.55 V, and duration ”t” must exist more than 0.9 sec. (See the following table).

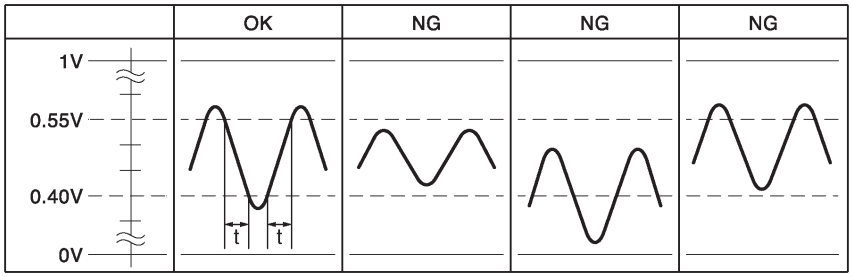

N

A73686

OK → **Go to step 11**

NG

3	INSPECT HEATED OXYGEN SENSOR(HEATER RESISTANCE) (See page 05–45)

NG → **REPLACE HEATED OXYGEN SENSOR**

OK

4	INSPECT EFI RELAY (See page 10–3)

NG → **REPLACE EFI RELAY**

OK

5	CHECK FUSE(EFI No.2) (See page 05–45)

NG → CHECK FOR SHORT IN ALL HARNESS AND COMPONENTS CONNECTED FUSE

OK

6	CHECK HARNESS AND CONNECTOR(HEATED OXYGEN SENSOR – ECM) (See page 05–45)

NG → REPAIR OR REPLACE HARNESS OR CONNECTOR

OK

7	CHECK HARNESS AND CONNECTOR(EFI RELAY – HEATED OXYGEN SENSOR) (See page 05–45)

NG → REPAIR OR REPLACE HARNESS OR CONNECTOR

OK

8	CHECK AIR INDUCTION SYSTEM

(a) Check for vacuum leaks in air induction system.

NG → REPAIR OR REPLACE AIR INDUCTION SYSTEM

OK

9	CHECK FUEL PRESSURE (See page 11–5)

(a) Check the fuel pressure (high or low pressure).

NG → REPAIR OR REPLACE FUEL SYSTEM

OK

10	INSPECT FUEL INJECTOR ASSY(INJECTION AND VOLUME) (See page 11–8)

NG → REPLACE HEATED OXYGEN SENSOR

OK

REPLACE HEATED OXYGEN SENSOR

11	PERFORM CONFIRMATION DRIVING PATTERN (See page 05–54)

GO

12	READ OUTPUT DTC(DTC P0133 IS OUTPUT AGAIN)

(a) Read the DTC using the hand–held tester.
Result:

Display (DTC output)	Proceed to
”P0133” is not output again	A
”P0133” is output again	B

B → **CHECK FOR INTERMITTENT PROBLEMS (See Page 05–5)**

A →

REPLACE HEATED OXYGEN SENSOR

DTC	P0135	OXYGEN SENSOR HEATER CIRCUIT MALFUNCTION (BANK 1 SENSOR 1)

DTC	P0141	OXYGEN SENSOR HEATER CIRCUIT MALFUNCTION (BANK 1 SENSOR 2)

CIRCUIT DESCRIPTION

Refer to DTC P0125 on page 05–45.

DTC No.	DTC Detecting Condition	Trouble Area
P0135	• When the heater operates, heater current exceeds 3.5 A (1 trip detection logic) • Heater current is 0.2 A or less when the heater operates (1 trip detection logic)	• Open or short in heater circuit of heated oxygen sensor • Heated oxygen sensor heater • ECM
P0141	• When the heater operates, heater current exceeds 2 A (1 trip detection logic) • Heater current is 0.2 A or less when the heater operates (1 trip detection logic)	• Open or short in heater circuit of heated oxygen sensor • Heated oxygen sensor heater • ECM

WIRING DIAGRAM

Refer to DTC P0125 on page 05–45.

INSPECTION PROCEDURE

HINT:

- If different DTCs that are related to a different system are output simultaneously while terminal E2 is used as a ground terminal, terminal E2 may be open.
- Read freeze frame data using the hand−held tester. Freeze frame data records the engine conditions when a malfunction is detected. When troubleshooting, it is useful for determining whether the vehicle was running or stopped, the engine was warmed up or not, the air–fuel ratio was lean or rich, etc. at the time of the malfunction.

1	INSPECT HEATED OXYGEN SENSOR(HEATER RESISTANCE) (See page 05–45)

NG → REPLACE HEATED OXYGEN SENSOR

OK

2	INSPECT EFI RELAY (See page 10–3)

NG → REPLACE EFI RELAY

OK

3	CHECK FUSE(EFI No.2) (See page 05–45)

NG → CHECK FOR SHORT IN ALL HARNESS AND COMPONENTS CONNECTED FUSE

OK

4	INSPECT ECM(HTL OR HTL2 VOLTAGE)

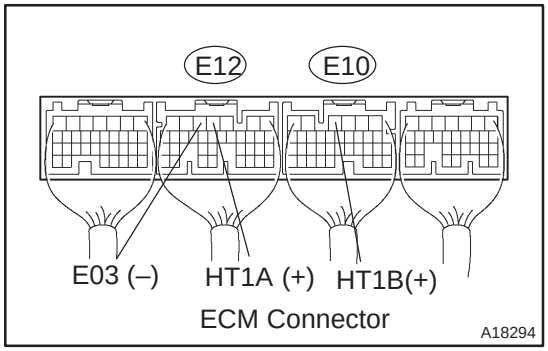

(a) Turn the ignition switch ON.
(b) Measure the voltage between the terminals of the E10 and E12 ECM connector.

Standard:

Symbols (Terminal No.)	Specified condition
HT1A (E12–4) – E03 (E12–5)	9 to 14 V
HT1B (E10–4) – E03 (E12–5)	

OK → **CHECK AND REPLACE ECM (See page 01–32)**

NG

5	CHECK HARNESS AND CONNECTOR(EFI RELAY – HEATED OXYGEN SENSOR) (See page 05–45)

NG → **REPAIR OR REPLACE HARNESS OR CONNECTOR**

OK

CHECK AND REPLACE ECM (See page 01–32)

DTC	P0171	SYSTEM TOO LEAN (FUEL TRIM) (BANK 1)

DTC	P0172	SYSTEM TOO RICH (FUEL TRIM) (BANK 1)

CIRCUIT DESCRIPTION

Fuel trim refers to the feedback compensation value compared against the basic injection time. Fuel trim includes short–term fuel trim and long–term fuel trim.

Short–term fuel trim is the short–term fuel compensation used to maintain the air–fuel ratio at stoichiometric air–fuel ratio. The signal from the heated oxygen sensor indicates whether the air–fuel ratio is RICH or LEAN compared to the stoichiometric air–fuel ratio, This variance triggers a reduction in fuel volume if the air–fuel ratio is rich, and an increase in the fuel volume if it is lean.

Long–term fuel trim is overall fuel compensation carried out long–term to compensate for a continual deviation of the short–term fuel trim from the central value, due to individual engine differences, wear over time and changes in the operating environment.

If both the short–term fuel trim and long–term fuel trim are LEAN or RICH beyond a certain value, it is detected as a malfunction and the CHK ENG is illuminated.

DTC No.	DTC Detecting Condition	Trouble Area
P0171	When air fuel ratio feedback is stable after warming up engine, fuel trim is considerably in error on LEAN side (2 trip detection logic)	• Air induction system • Injector blockage • PCV hose • Mass air flow meter • Engine coolant temperature sensor • Fuel pressure • Open or short in heated oxygen sensor circuit • Heated oxygen sensor • ECM
P0172	When air fuel ratio feedback is stable after warming up engine, fuel trim is considerably in error on RICH side (2 trip detection logic)	• Injector leak, blockage • Mass air flow meter • Engine coolant temperature sensor • Ignition system • Fuel pressure • Open or short in heated oxygen sensor circuit • Gas leakage in exhaust system • Heated oxygen sensor • ECM

HINT:

If the total of the short–term fuel trim value and long–term fuel trim value is within ± 25 %, the system is functioning normally.

WIRING DIAGRAM

Refer to DTC P0125 on page 05–45.

INSPECTION PROCEDURE

HINT:

Hand–held tester only:

Narrowing down the trouble area is possible by performing ACTIVE TEST of the following ”A/F CONTROL” (heated oxygen sensor or other trouble areas can be distinguished).

(a) Perform ACTIVE TEST using the hand–held tester (A/F CONTROL).

HINT:

”A/F CONTROL” is an ACTIVE TEST which changes the injection volume –12.5 % or +25 %.

(1) Connect the hand–held tester to the DLC3 on the vehicle.
(2) Turn the ignition switch ON.
(3) Warm up the engine with the engine speed at 2,500 rpm for approximately 90 sec.
(4) Select the item ”DIAGNOSIS / OBD/MOBD / ACTIVE TEST / A/F CONTROL”.
(5) Perform ”A/F CONTROL” with the engine in an idle condition (press the right or left button).

Result:

Heated oxygen sensor reacts in accordance with increase and decrease of injection volume:
+25 % → rich output: More than 0.55 V
–12.5 % → lean output: Less than 0.4 V

NOTICE:

There is a few second delay in the sensor 1 (front sensor) output, and there is about 20 seconds delay in the sensor 2 (rear sensor) output.

	Output voltage of heated oxygen sensor (sensor 1: front sensor)	Output voltage of heated oxygen sensor (sensor 2: rear sensor)	Mainly suspect trouble area
Case 1	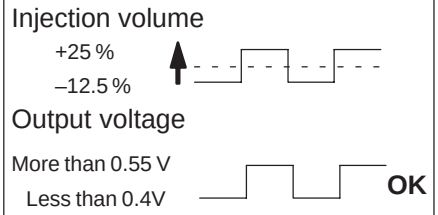	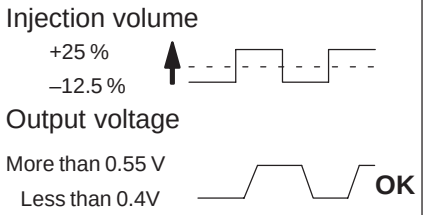	—
Case 2	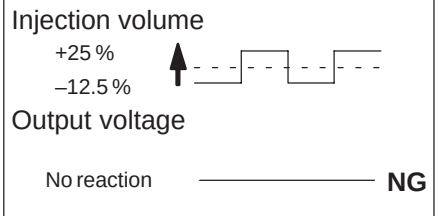	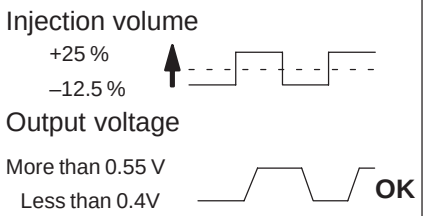	Sensor 1: front sensor (sensor 1, heater, sensor 1 circuit)
Case 3	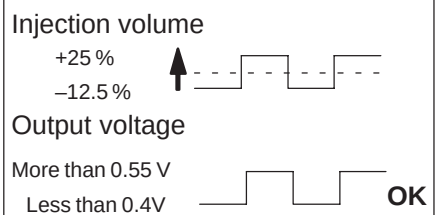	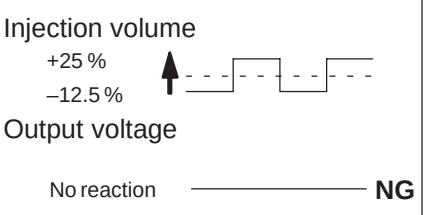	Sensor 2: rear sensor (sensor 2, heater, sensor 2 circuit)
Case 4	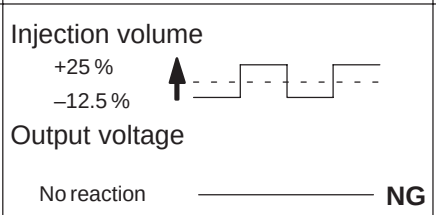	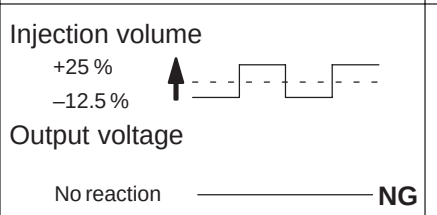	Extremely rich or lean of the actual air–fuel ratio (Injector, fuel pressure, gas leakage in exhaust system, etc.)

The following procedure of A/F CONTROL enable the technician to check and graph voltage output of the heated oxygen sensor.
For displaying the graph indication, enter ”ACTIVE TEST / A/F CONTROL / USER DATA,” then select ”O2S B1S1 and O2S B1S2” by pressing ”YES” button and push ”ENTER” button before pressing ”F4” button.
HINT:

- If different DTCs that are related to a different system are output simultaneously while terminal E2 is used as a ground terminal, terminal E2 may be open.
- Read freeze frame data using the hand–held tester. Freeze frame data records the engine conditions when a malfunction is detected. When troubleshooting, it is useful for determining whether the vehicle was running or stopped, the engine was warmed up or not, the air–fuel ratio was lean or rich, etc. at the time of the malfunction.
- A high heated oxygen sensor (sensor 1) voltage (0.55 V or more) could be caused by a rich air fuel mixture. Check for conditions that would cause the engine to run rich.
- A low heated oxygen sensor (sensor 1) voltage (0.4 V or less) could be caused by a lean air fuel mixture. Check for conditions that would cause the engine to run lean.

1	CHECK AIR INDUCTION SYSTEM

(a) Check for vacuum leaks in air induction system.

NG → REPAIR OR REPLACE AIR INDUCTION SYSTEM

OK

2	INSPECT FUEL INJECTOR ASSY(INJECTION AND VOLUME) (See page 11–8)

NG → REPLACE FUEL INJECTOR ASSY

OK

3	INSPECT MASS AIR FLOW METER (See page 10–3)

NG → REPLACE MASS AIR FLOW METER

OK

4	INSPECT ENGINE COOLANT TEMPERATURE SENSOR(RESISTANCE) (See page 10–3)

NG → REPLACE ENGINE COOLANT TEMPERATURE SENSOR

OK

5	CHECK FOR SPARK AND IGNITION (See page 18–1)

NG → REPAIR OR REPLACE

OK

6	CHECK FUEL PRESSURE (See page 11–5)

(a) Check the fuel pressure (high or low pressure).

NG → CHECK AND REPLACE FUEL SYSTEM

OK

7	CHECK FOR EXHAUST GAS LEAKAGE

NG → REPAIR OR REPLACE EXHAUST GAS LEAKAGE POINT

OK

8	READ VALUE OF HAND–HELD TESTER(OUTPUT VOLTAGE OF HEATED OXYGEN SENSOR) (See page 05–54)

OK → Go to step 18

NG

9	INSPECT HEATED OXYGEN SENSOR(HEATER RESISTANCE) (See page 05–45)

NG → REPLACE HEATED OXYGEN SENSOR

OK

10	INSPECT EFI RELAY (See page 10–3)

NG → REPLACE EFI RELAY

OK

11	CHECK FUSE(EFI No.2) (See page 05–45)

NG → CHECK FOR SHORT IN ALL HARNESS AND COMPONENTS CONNECTED FUSE

OK

12	CHECK HARNESS AND CONNECTOR(HEATED OXYGEN SENSOR – ECM) (See page 05–45)

NG → REPAIR OR REPLACE HARNESS OR CONNECTOR

OK

13	CHECK HARNESS AND CONNECTOR(EFI RELAY – HEATED OXYGEN SENSOR) (See page 05–45)

NG → REPAIR OR REPLACE HARNESS OR CONNECTOR

OK

14	REPLACE HEATED OXYGEN SENSOR

GO

15	PERFORM CONFIRMATION DRIVING PATTERN (See page 05–54)

GO

16	READ OUTPUT DTC(DTC P0171 AND/OR P0172 ARE OUTPUT AGAIN)

(a) Read the DTC using the hand–held tester.

Result:

Display (DTC output)	Proceed to
DTC ”P0171 and/or P0172” are not output again	A
DTC ”P0171 and/or P0172” are output again	B

B → CHECK AND REPLACE ECM (See page 01–32) AND PERFORM CONFIRMATION DRIVING PATTERN (See page 05–54)

A

17	CONFIRM IF VEHICLE HAS RUN OUT OF FUEL IN PAST

NO → CHECK FOR INTERMITTENT PROBLEMS (See page 05–5)

YES

DTC IS CAUSED BY RUNNING OUT OF FUEL (DTCS P0171 AND/OR P0172)

18	PERFORM CONFIRMATION DRIVING PATTERN (See page 05–54)

GO

19	READ OUTPUT DTC(DTC P0171 AND/OR P0172 ARE OUTPUT AGAIN)

(a) Read the DTC using the hand–held tester.
Result:

Display (DTC output)	Proceed to
DTC "P0171 and/or P0172" are not output again	A
DTC "P0171 and/or P0172" are output again	B

B → **Go to step 22**

A

20	REPLACE HEATED OXYGEN SENSOR

GO

21	READ OUTPUT DTC(DTC P0171 AND/OR P0172 ARE OUTPUT AGAIN)

(a) Read the DTC using the hand–held tester.
Result:

Display (DTC output)	Proceed to
DTC "P0171 and/or P0172" are not output again	A
DTC "P0171 and/or P0172" are output again	B

B → **CHECK AND REPLACE ECM (See page 01–32) AND PERFORM CONFIRMATION DRIVING PATTERN (See page 05–54)**

A

22	CONFIRM IF VEHICLE HAS RUN OUT OF FUEL IN PAST

NO → **CHECK FOR INTERMITTENT PROBLEMS (See Page 05–5)**

YES

DTC IS CAUSED BY RUNNING OUT OF FUEL

DTC	P0300	RANDOM/MULTIPLE CYLINDER MISFIRE DETECTED

DTC	P0301	CYLINDER 1 MISFIRE DETECTED

DTC	P0302	CYLINDER 2 MISFIRE DETECTED

DTC	P0303	CYLINDER 3 MISFIRE DETECTED

DTC	P0304	CYLINDER 4 MISFIRE DETECTED

CIRCUIT DESCRIPTION

Misfire: The ECM uses the crankshaft position sensor and camshaft position sensor to monitor changes in the crankshaft rotation of each cylinder.

The ECM counts the number of times from the engine speed change rate, indicating that misfire has occurred. When the misfire rate equals to or exceeds the count, indicating that the engine condition has deteriorated, the CHK ENG is illuminated.

If the misfire rate is high enough and the driving conditions causes the catalyst to overheat, the CHK ENG blinks when the misfire occurs.

HINT:

- For any particular 200 revolutions of engine, misfiring which could result in overheating of catalyst is detected. This cause CHK ENG to blink (1 trip detection logic).
- For any particular 1,000 revolutions of engine, misfiring which could result in a deterioration of emissions is detected. This cause CHK ENG to illuminate (2 trip detection logic).

DTC No.	DTC Detecting Condition	Trouble Area
P0300	Misfiring of random cylinders is detected	• Open or short in engine wire • Connector connection • Vacuum hose connection • PCV hose • Ignition system • Injector • Fuel pressure • Mass air flow meter • Engine coolant temperature sensor • Compression pressure • Valve clearance • Valve timing • ECM
P0301 P0302 P0303 P0304	Misfiring of each cylinder is detected	

HINT:

When 2 or more codes for a misfiring cylinder are recorded repeatedly but no random misfire code is recorded, it is indicated that the misfires were detected and recorded at different times.

Reference: Inspection using an oscilloscope for injector signal waveform.

(1) With the engine idling, check the waveforms between terminals #1 – #4 and E1 of the ECM connector.

HINT:

The correct waveforms are shown below.

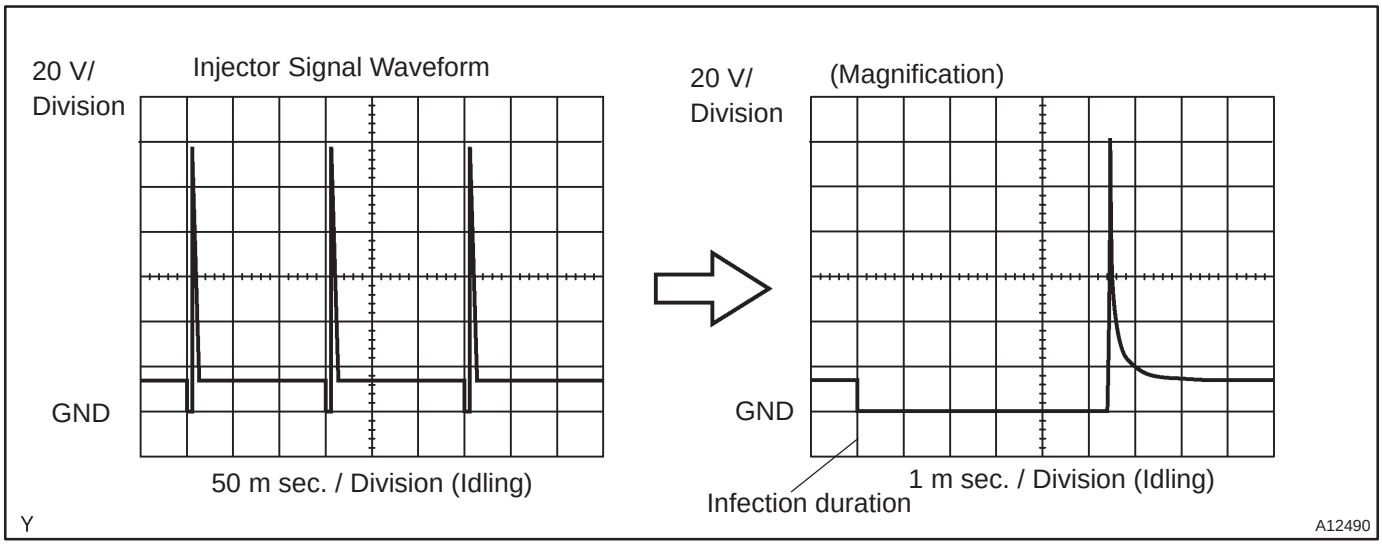

WIRING DIAGRAM

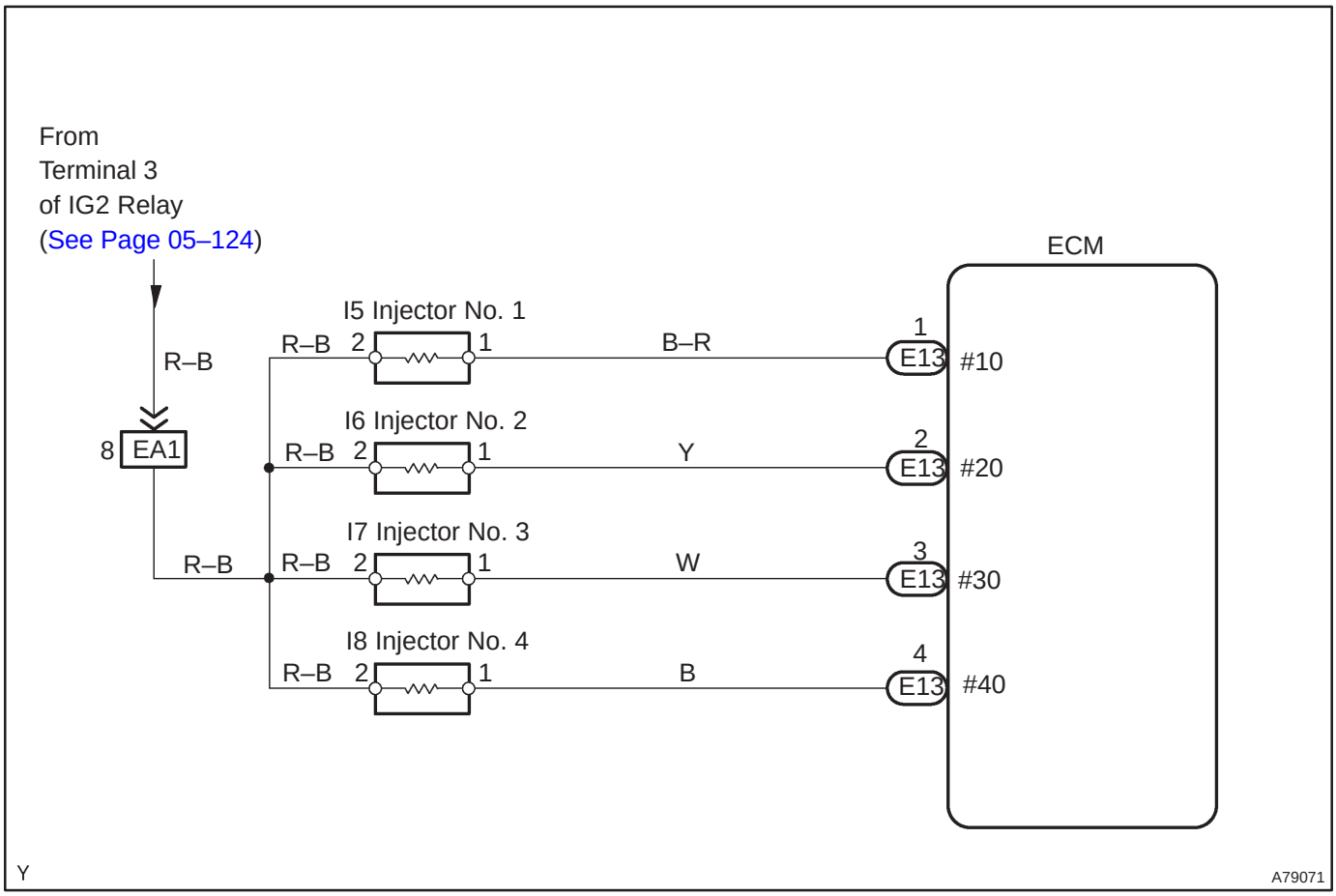

CONFIRMATION DRIVING PATTERN

(a) Connect the hand–held tester to the DLC3.
(b) Record the DTC and freeze frame data.
(c) Use the hand–held tester to set to the check mode (See page 05–5).
(d) Read the value on the misfire counter for each cylinder when idling. If the value is displayed on the misfire counter, skip the following procedure of confirmation driving.
(e) Drive the vehicle several times with the engine speed, load and its surrounding range shown with ENGINE SPD, CALC LOAD in the freeze frame data or MISFIRE RPM, MISFIRE LOAD in the data list. If you do not have the hand–held tester, turn the ignition switch OFF after the symptom is simulated once. Then repeat the simulation process again.

HINT:
In order to memorize the DTC of the misfire, it is necessary to drive around MISFIRE RPM, MISFIRE LOAD in the following data list. Be sure not to turn the ignition switch OFF, because the diagnosis system is changed from the check mode to the nomal mode and will result in all of the DTCs and the freeze frame data being erased.

Engine Speed	Time
Idling	5 minutes and 45 seconds or more
1,000 rpm	4 minutes or more
2,000 rpm	2 minutes and 30 seconds or more
3,000 rpm	1 minute and 30 seconds or more

(f) Check if there is misfire by monitoring the DTC and the freeze frame data, and then record them.
(g) Turn the ignition switch OFF and wait for at least 5 seconds.

INSPECTION PROCEDURE

HINT:

- If the other DTCs besides misfire are memorized simultaneously, perform the troubleshooting for them first.
- Read freeze frame data using the hand–held tester. Freeze frame data records the engine conditions when a malfunction is detected. When troubleshooting, it is useful for determining whether the vehicle was running or stopped, the engine was warmed up or not, the air–fuel ratio was lean or rich, etc. at the time of the malfunction.
- If the misfire is not occured when the vehicle is brought to the workshop, it can be confirmed by reproducing the condition of the freeze frame data. After finishing the repair, confirm that there is no misfire (See the confirmation driving pattern).
- When either of SHORT FT #1 or LONG FT #1 the freeze frame data is over the range of ±20%, there is a possibility that the air–fuel ratio is inclining either to ”RICH” (–20% or less) or ”LEAN” (+20% or more).
- When COOLANT TEMP in the freeze frame data is less than 80˚C (176˚F), there is a possibility of misfire only during warming up.
- In case that the misfire cannot be reproduced, this may be because of the driving with the shortage of fuel, the use of improper fuel, a stain of ignition plug and etc.

1	CHECK OTHER DTC OUTPUT(BESIDES MISFIRE DTCS)

(a) Read the DTC using the hand–held tester.
Result:

Display (DTC output)	Proceed to
Only ”P0300, P0301, P0302, P0303 and/or P0304” are output	A
”P0300, P0301, P0302, P0303 and/or P0304” and other DTCs are output	B

HINT:
If any other codes besides ”P0300, P0301, P0302, P0303 and/or P0304” are output, perform the trouble-shooting for those DTCs first.

B → **GO TO RELEVANT DTC CHART (See page 05–16)**

A

2	CHECK WIRE HARNESS, CONNECTOR AND VACUUM HOSE IN ENGINE ROOM

(a) Check the connection of the wire harness and the connector.
(b) Check the vacuum hose for disconnection, blockage and break.

NG → **REPAIR OR REPLACE, THEN CONFIRM THAT THERE IS NO MISFIRE**

OK

3	READ VALUE OF HAND–HELD TESTER(NUMBER OF MISFIRE)

(a) Connect the hand–held teste to the DLC3.
(b) Turn the ignition switch ON and push the hand–held tester main switch ON.
(c) Start the engine.
(d) Select the item ”DIAGNOSIS / OBD/MOBD / DATA LIST / ALL/CYL#1 – CYL#4”.
(e) Read the number of misfire on the hand–held tester.
HINT:
When a misfire is not reproduced, be sure to branch below based on the stored DTC.
Result:

High Misfire Rate Cylinder	Proceed to
1 or 2 cylinders	A
More than 3 cylinders	B

B → **Go to step 15**

A

4	CHECK SPARK PLUG AND SPARK OF MISFIRING CYLINDER (See page 18–1)

OK → **Go to step 7**

NG

5	CHANGE NORMAL SPARK PLUG AND CHECK SPARK OF MISFIRING CYLINDER (See page 18–1)

OK → REPLACE SPARK PLUG

NG

6	CHECK HARNESS AND CONNECTOR OF MISFIRING CYLINDER(IGNITION COIL – ECM) (See page 05–103)

OK → REPLACE IGNITION COIL ASSY (THEN CONFIRM THAT THERE IS NO MISFIRE)

NG

REPAIR OR REPLACE HARNESS OR CONNECTOR

7	INSPECT ECM TERMINAL OF MISFIRING CYLINDER(#1, #2, #3 OR #4 VOLTAGE)

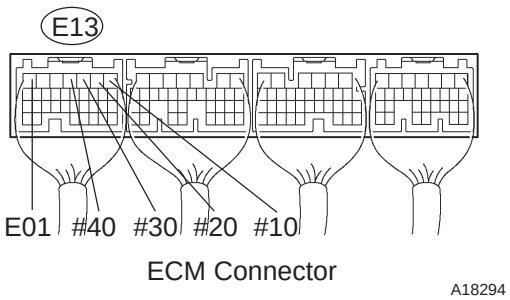

(a) Turn the ignition switch ON.
(b) Measure the voltage between the terminals of the E13 ECM connector.

Standard:

Symbols (Terminal No.)	Specified condition
#10 (E13–1) – E01 (E13–7)	8 to 14 V
#20 (E13–2) – E01 (E13–7)	
#30 (E13–3) – E01 (E13–7)	
#40 (E13–4) – E01 (E13–7)	

OK → Go to step 10

NG

8	INSPECT FUEL INJECTOR RESISTANCE OF MISFIRING CYLINDER (See page 11–8)

NG → REPLACE FUEL INJECTOR ASSY

OK

9	CHECK HARNESS AND CONNECTOR OF MISFIRING CYLINDER(IG2 RELAY – INJECTOR – ECM)

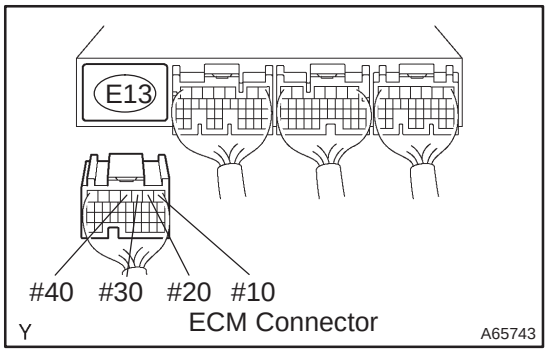

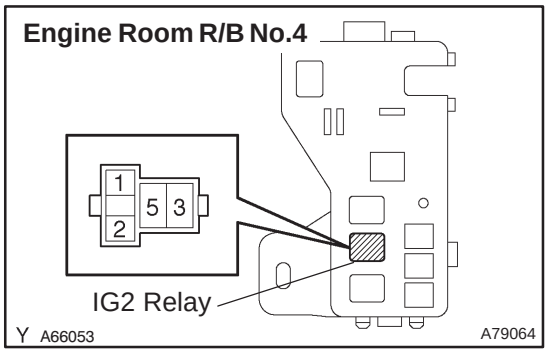

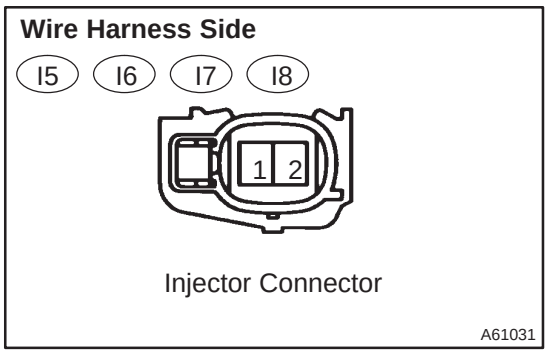

(a) Disconnect the ECM E13 connector.
(b) Remove the IG2 relay from the engine room R/B No.4.
(c) Disconnect the injector connector.
(d) Check for continuity between the wire harness side connectors.

Standard (Check for open):

Symbols (Terminal No.)	Specified condition
IG2 Relay (3) – Injector No.1 (I5–2)	Continuity
IG2 Relay (3) – Injector No.2 (I6–2)	
IG2 Relay (3) – Injector No.3 (I7–2)	
IG2 Relay (3) – Injector No.4 (I8–2)	

Standard (Check for short):

Symbols (Terminal No.)	Specified condition
IG2 Relay (3) or Injector No.1 (I5–2) – Body ground	No continuity
IG2 Relay (3) or Injector No.2 (I6–2) – Body ground	
IG2 Relay (3) or Injector No.3 (I7–2) – Body ground	
IG2 Relay (3) or Injector No.4 (I8–2) – Body ground	

Standard (Check for open):

Symbols (Terminal No.)	Specified condition
Injector No.1 (I5–1) – #10 (E13–1)	Continuity
Injector No.2 (I6–1) – #20 (E13–2)	
Injector No.3 (I7–1) – #30 (E13–3)	
Injector No.4 (I8–1) – #40 (E13–4)	

Standard (Check for short):

Symbols (Terminal No.)	Specified condition
Injector No.1 (I5–1) or #10 (E13–1) – Body ground	No continuity
Injector No.2 (I6–1) or #20 (E13–2) – Body ground	
Injector No.3 (I7–1) or #30 (E13–3) – Body ground	
Injector No.4 (I8–1) or #40 (E13–4) – Body ground	

NG → **REPAIR OR REPLACE HARNESS OR CONNECTOR**

OK

10	INSPECT FUEL INJECTOR INJECTION AND VOLUME OF MISFIRING CYLINDER (See page 11–8)

NG → **REPLACE FUEL INJECTOR ASSY**

OK

11	CHECK CYLINDER COMPRESSION PRESSURE OF MISFIRING CYLINDER (See page 14–1)

NG → **REPAIR OR REPLACE**

OK

12	CHECK VALVE CLEARANCE OF MISFIRING CYLINDER (See page 14–6)

NG → ADJUST VALVE CLEARANCE

OK

13	SWITCH STEP BY NUMBER OF MISFIRE CYLINDER(REFER RESULT OF STEP 4)

High Misfire Rate Cylinder	Proceed to
1 or 2 cylinders	A
More than 3 cylinders	B

B → CHECK FOR INTERMITTENT PROBLEMS

A

14	CHECK VALVE TIMING(CHECK FOR LOOSE AND JUMPING TEETH OF TIMING BELT) (See page 14–49)

NG → ADJUST VALVE TIMING

OK

15	CHECK FUEL PRESSURE (See page 11–5)

NG → CHECK AND REPLACE FUEL PUMP, PRESSURE REGULATOR, FUEL PIPE LINE AND FILTER

OK

16	READ VALUE OF HAND–HELD TESTER(INTAKE AIR TEMPERATURE AND MASS AIR FLOW RATE)

(a) Connect the hand–held tester to the DLC3.
(b) Turn the ignition switch ON.
(c) Check the intake air temperature.
  (1) Select the item ”DIAGNOSIS / OBD/MOBD / DATA LIST / ALL / INTAKE AIR” and read its value displayed on the hand–held tester.

  Temperature: Equivalent to ambient temperature

(d) Check the air flow rate.
  (1) Select the item ”DIAGNOSIS / OBS/MOBD / DATA LIST / ALL / MAF” and read its value displayed on the hand–held tester.

  Standard:

Condition	Air flow rate (gm/s)
Ignition switch On (do not start engine)	0
Idling	4 to 6
Running without load (2,500 rpm)	13 to 20
Idling – Running	Air flow rate fluctuates

NG → REPLACE MASS AIR FLOW METER

OK

17	INSPECT ENGINE COOLANT TEMPERATURE SENSOR(RESISTANCE) (See page 10–3)

NG → REPLACE ENGINE COOLANT TEMPERATURE SENSOR

OK

18	SWITCH STEP BY NUMBER OF MISFIRE CYLINDER(REFER RESULT OF STEP 4)

High Misfire Rate Cylinder	Proceed to
1 or 2 cylinders	A
More than 3 cylinders	B

B → AGAIN GO TO STEP5

A

CHECK FOR INTERMITTENT PROBLEMS (See page 05–5)

DTC	P0325	KNOCK SENSOR 1 CIRCUIT MALFUNCTION (BANK 1)

CIRCUIT DESCRIPTION

Knock sensor is fitted on the cylinder block to detect the engine knocking. This sensor contains a piezoelectric element which generates a voltage when it becomes deformed, which occurs when the cylinder block vibrates due to knocking. If engine knocking occurs, the ignition timing is delayed to suppress it.

DTC No.	DTC Detecting Condition	Trouble Area
P0325	No knock sensor signal to the ECM with engine speed 3,000 rpm or more	• Open or short in knock sensor circuit • Knock sensor (under–torqued or loose) • ECM

HINT:

If the ECM detects the DTC "P0325", it enters the fail–safe mode in which the corrective retarded angle value is set to the maximum value.

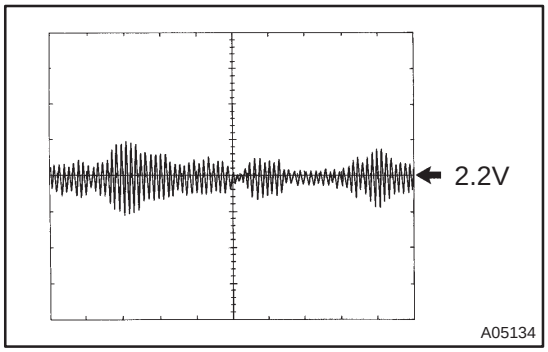

Reference:

Inspection using the oscillascope.

(1) Run the engine at 4,000 rpm, check the waveform between terminal KNKL of the ECM connector and body ground.

HINT:

The correct waveform is as shown on the left.

(2) Spread the time on the horizontal axis, and confirm that period of the wave is 80 μ seconds (Normal mode vibration frequency of knock sensor: 11.7 kHz).

HINT:

If the vibration frequency in the normal mode is not 11.7 kHz, the sensor is out of order.

WIRING DIAGRAM

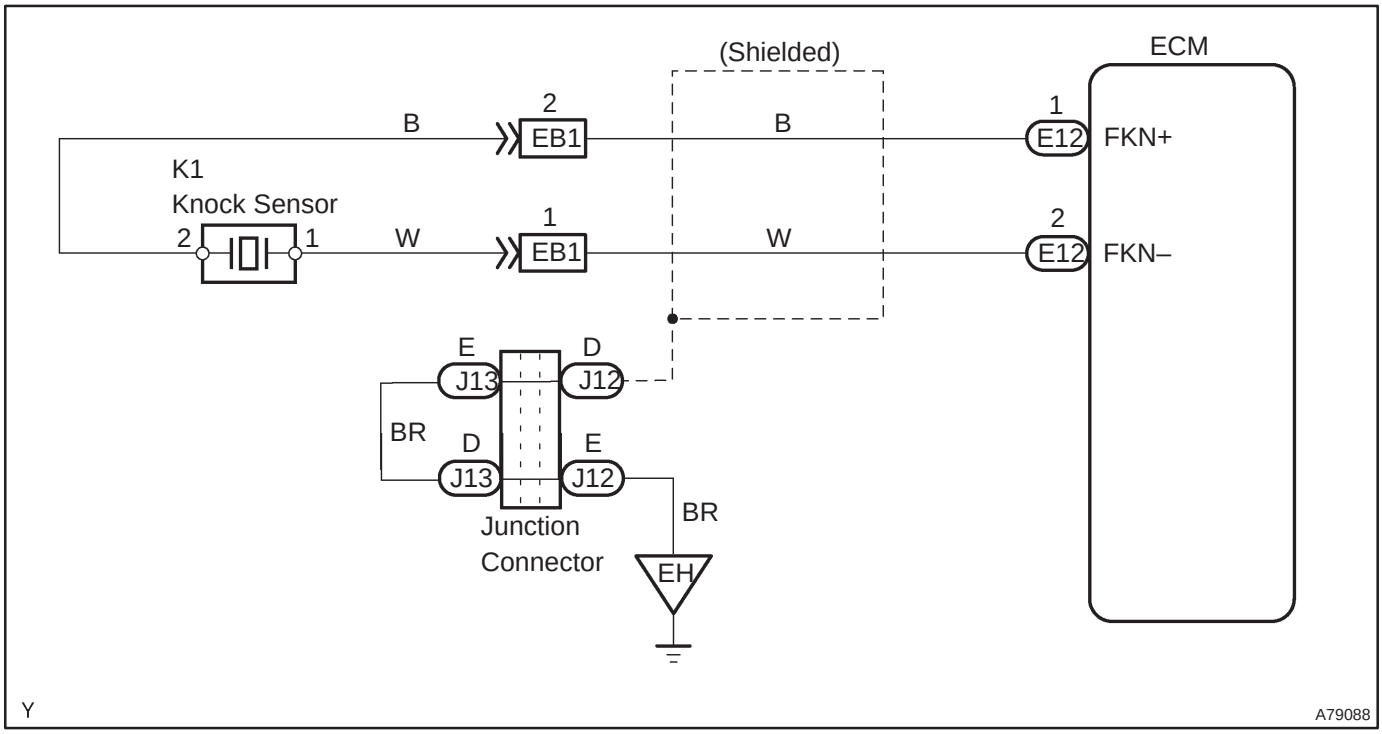

INSPECTION PROCEDURE

HINT:

Read freeze frame data using the hand–held tester. Freeze frame data records the engine conditions when a malfunction is detected. When troubleshooting, it is useful for determining whether the vehicle was running or stopped, the engine was warmed up or not, the air–fuel ratio was lean or rich, etc. at the time of the malfunction.

1	CHECK HARNESS AND CONNECTOR

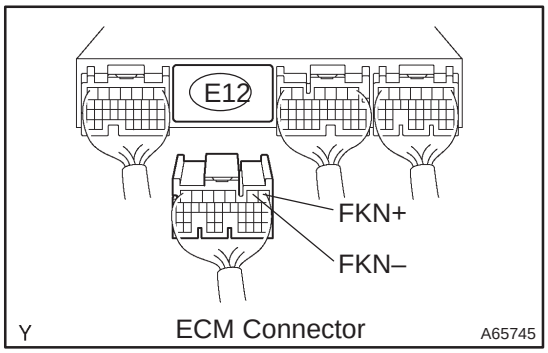

(a) Disconnect the E12 ECM connector.
(b) Check for continuity between the wire harness side connectors.

Standard (Check for short):

Symbols (Terminal No.)	Specified condition
FKN+ (E12–1) – FKN– (E12–2)	No continuity

OK → **Go to step 3**

NG

2	INSPECT KNOCK SENSOR (See page 10–3)

NG → **REPLACE KNOCK SENSOR**

OK

3	CHECK HARNESS AND CONNECTOR(ECM – KNOCK SENSOR)

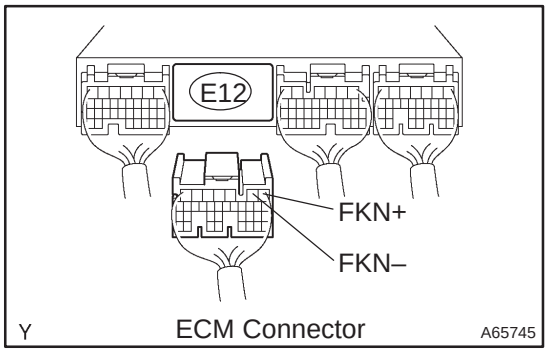

(a) Disconnect the E12 ECM connector.
(b) Disconnect the knock sensor connector.
(c) Check for continuity between the wire harness side connectors.

Standard (Check for open):

Symbols (Terminal No.)	Specified condition
FKN+ (E12–1) – Knock sensor (K1–2)	Continuity
FKN– (E12–2) – Knock sensor (K1–1)	

Standard (Check for short):

Symbols (Terminal No.)	Specified condition
FKN+ (E12–1) or Knock sensor (K1–2) – Body ground	No continuity
FKN– (E12–2) or Knock sensor (K1–1) – Body ground	

NG → **REPAIR OR REPLACE HARNESS OR CONNECTOR**

OK

4	CONFIRM THE MALFUNCTION DISAPPEAR WHEN A GOOD KNOCK SENSOR IS INSTALLED

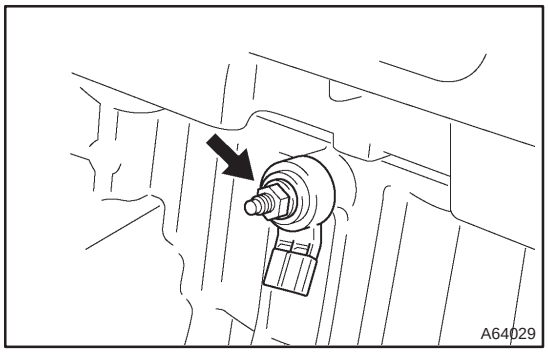

(a) Change the knock sensor to a new one.
  (1) Remove the knock sensor.
  (2) Install a new knock sensor.
  Torque: 20 N·m (204 kgf·cm, 15 ft·lbf)
(b) Clear the DTC (See page 05–5).
(c) Perform the driving test.
(d) Read the DTC using the hand–held tester (See page 05–5).

Result:

Display (DTC output)	Proceed to
”P0325” is output	A
”P0325” is not output	B

B → **REPLACE KNOCK SENSOR**

A

CHECK AND REPLACE ECM(See page 01–32)

DTC	P0335	CRANKSHAFT POSITION SENSOR ”A” CIRCUIT MALFUNCTION

DTC	P1335	CRANKSHAFT POSITION SENSOR CIRCUIT MALFUNCTION (DURING ENGINE RUNNING)

CIRCUIT DESCRIPTION

The crankshaft position sensor (NE signal) consists of a magnet, iron core and pick up coil.
The NE signal plate (crankshaft timing pulley) has 34 teeth and is installed to the crankshaft. The NE signal sensor generates 34 signals at every engine revolution. The ECM detects the crankshaft angle and the engine revolution based on the NE signals, and the cylinder and the angle of the VVT based on the combination of the G2 and NE signals.

DTC No.	DTC Detecting Condition	Trouble Area
P0335	• No crankshaft position sensor signal to the ECM during cranking • Open in NE– circuit	• Open or short in crankshaft position sensor circuit • Crankshaft position sensor • Crank angle sensor plate • ECM
P1335	If conditions from (a) through (c) are met: (a) NE greater than 1,000 rpm (b) NE signal is not detected for over 0.05 sec. (c) Not during cranking	• Open or short in crankshaft position sensor circuit • Crankshaft position sensor • Crank angle sensor plate • ECM

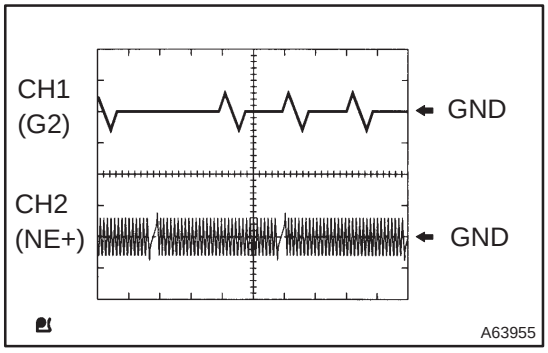

Reference: Inspection using the oscilloscope.
HINT:
The correct waveform is as shown on the left.

Item	Contents
Terminal	CH1: G2 – NE– CH2: NE+ – NE–
Equipment Set	5V/DIV, 20ms/DIV
Condition	During cranking or idling

WIRING DIAGRAM

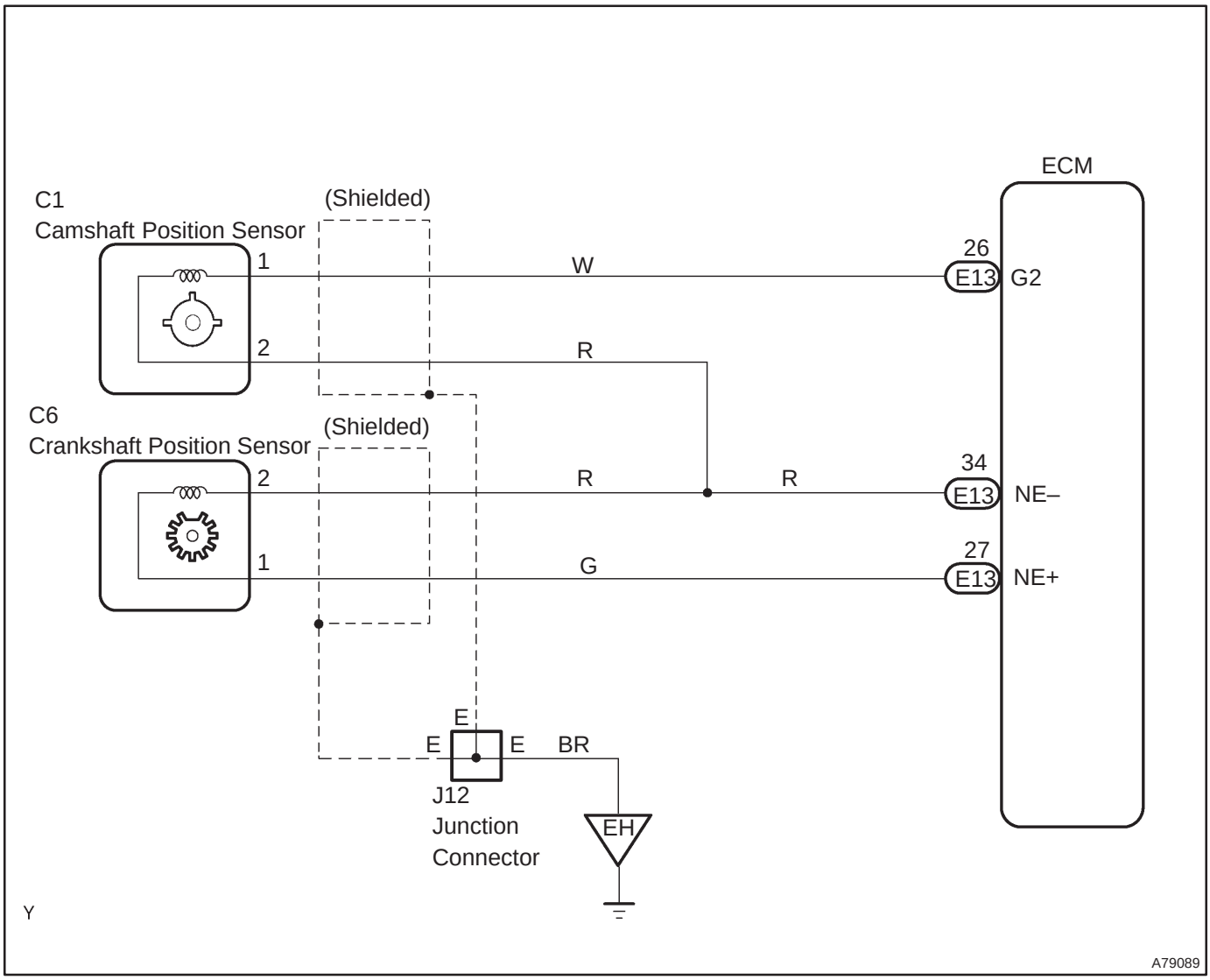

INSPECTION PROCEDURE

HINT:

- Read freeze frame data using the hand–held tester. Freeze frame data records the engine conditions when a malfunction is detected. When troubleshooting, it is useful for determining whether the vehicle was running or stopped, the engine was warmed up or not, the air–fuel ratio was lean or rich, etc. at the time of the malfunction.
- Perform troubleshooting on ”DTC P0335” first. If no trouble is found, troubleshoot the following mechanical system.

1 INSPECT CRANKSHAFT POSITION SENSOR(CHECK RESISTANCE)

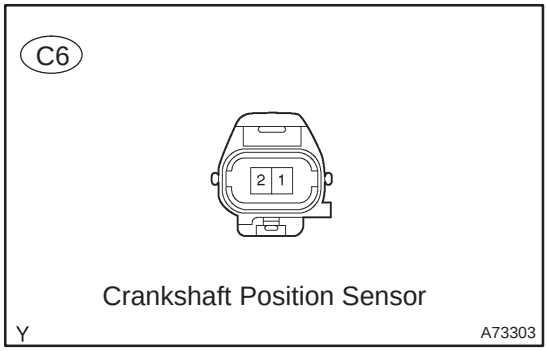

(a) Measure the resistance between the terminals of the crankshaft posision sensor connector.

Resistance:
985 to 1,600 Ω (Cold)
1,265 to 1,890 Ω (Hot)

NOTICE:
"Cold" and "Hot" mean the temperature of the coils themselves. "Cold" is from –10°C (14°F) to 50°C (122°F) and "Hot" is from 50°C (122°F) to 100°C (212°F).

NG → **REPLACE CRANKSHAFT POSITION SENSOR**

OK

2 CHECK HARNESS AND CONNECTOR(ECM – CRANKSHAFT POSITION SENSOR)

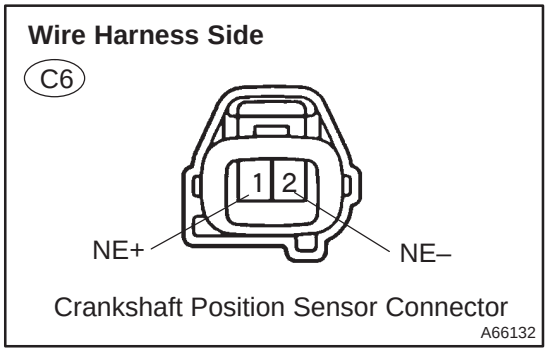

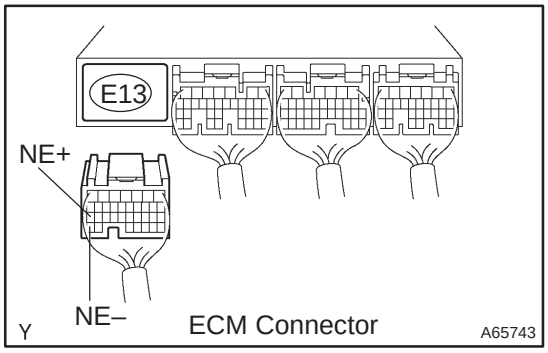

(a) Disconnect the crankshaft position sensor connector.
(b) Disconnect the E13 ECM connector.
(c) Check for continuity between the wire harness side connectors.

Standard (Check for open):

Symbols (Terminal No.)	Specified condition
NE+ (C6–1) – NE+ (E13–27)	Continuity
NE– (C6–2) – NE– (E13–34)	

Standard (Check for short):

Symbols (Terminal No.)	Specified condition
NE+ (C6–1) or NE+ (E13–27) – Body ground	No continuity
NE– (C6–2) or NE– (E13–34) – Body ground	

NG → **REPAIR OR REPLACE HARNESS AND CONNECTOR**

OK

3 CHECK SENSOR INSTALLATION

(a) Check the crankshaft position sensor installation .

NG → **TIGHTEN SENSOR**

OK

4	INSPECT CRANKSHAFT(TEETH OF SIGNAL PLATE)

(a) Remove the oil pump assembly. (See page 17–3)
(b) Check the teeth of the signal plate.

NG → REPAIR OR REPLACE CRANKSHAFT

OK

CHECK AND REPLACE ECM (See page 01–32)

DTC	P0340	CAMSHAFT POSITION SENSOR CIRCUIT MALFUNCTION

CIRCUIT DESCRIPTION

The camshaft position sensor (G2 signal) consists of a magnet, iron core and pickup coil.
The G2 signal plate has 3 teeth on its outer circumference and is installed on the camshaft timing pulley. When the camshafts rotate, the protrusion on the signal plate and the air gap on the pickup coil changes, causing fluctuations in the magnetic field and generating an electromotive force in the pickup coil.
The NE signal plate (crankshaft timing pulley) has 34 teeth and is installed to the crankshaft. The NE signal sensor generates 34 signals at every engine revolution. The ECM detects the crankshaft angle and the engine revolution based on the NE signals, and the cylinder and the angle of the VVT based on the combination of the G2 and NE signals.

DTC No.	DTC Detecting Condition	Trouble Area
P0340	• No camshaft position sensor signal to the ECM during cranking • Open in NE– circuit	• Open or short in camshaft position sensor circuit • Camshaft position sensor • Intake camshaft • Timing chain has jumped a tooth • ECM

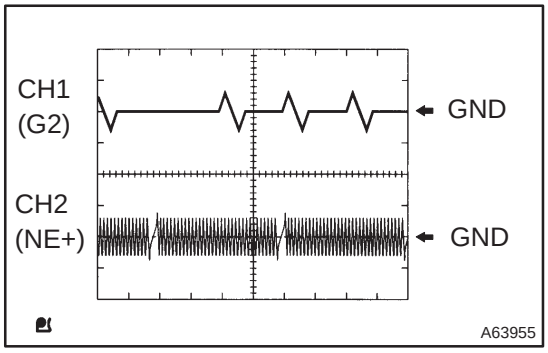

Reference: Inspection using the oscilloscope.
HINT:
The correct waveform is as shown on the left.

Item	Contents
Terminal	CH1: G2 – NE– CH2: NE+ – NE–
Equipment Set	5V/DIV, 20ms/DIV
Condition	During cranking or idling

WIRING DIAGRAM

Refer to DTC P0335 on page05–84.

INSPECTION PROCEDURE

HINT:
Read freeze frame data using the hand–held tester. Freeze frame data records the engine conditions when a malfunction is detected. When troubleshooting, it is useful for determining whether the vehicle was running or stopped, the engine was warmed up or not, the air–fuel ratio was lean or rich, etc. at the time of the malfunction.

1 INSPECT CAMSHAFT POSITION SENSOR(CHECK RESISTANCE)

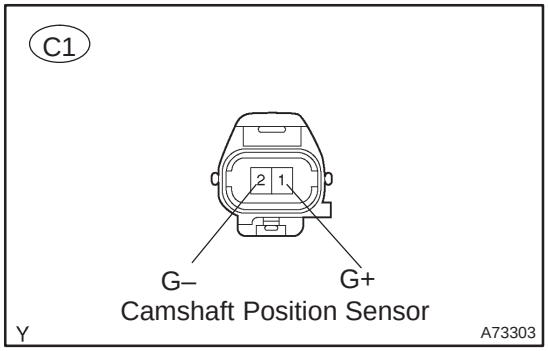

(a) Measure the resistance between the terminals of the camshaft posision sensor connector.

Resistance:

1,630 to 2,740 Ω (Cold)

2,065 to 3,225 Ω (Hot)

NOTICE:

"Cold" and "Hot" mean the temperature of the coils themselves. "Cold" is from –10°C (14°F) to 50°C (122°F) and "Hot" is from 50°C (122°F) to 100°C (212°F).

NG → **REPLACE CAMSHAFT POSITION SENSOR**

OK

2 CHECK HARNESS AND CONNECTOR(ECM – CAMSHAFT POSITION SENSOR)

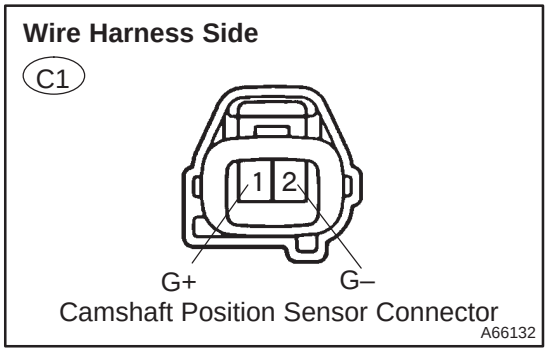

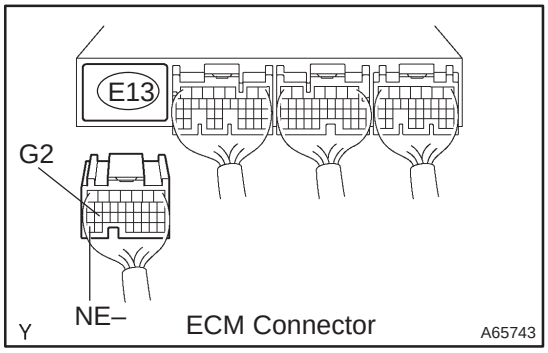

(a) Disconnect the camshaft position sensor connector.

(b) Disconnect the E13 ECM connector.

(c) Check for continuity between the wire harness side connectors.

Standard (Check for open):

Symbols (Terminal No.)	Specified condition
G+ (C1–1) – G2 (E13–26)	Continuity
G– (C1–2) – NE– (E13–34)	

Standard (Check for short):

Symbols (Terminal No.)	Specified condition
G+ (C1–1) or G2+ (E13–26) – Body ground	No continuity
G– (C1–2) or NE– (E13–34) – Body ground	

NG → **REPAIR OR REPLACE HARNESS AND CONNECTOR**

OK

3 CHECK SENSOR INSTALLATION

(a) Check the camshaft position sensor installation.

NG → **TIGHTEN SENSOR**

OK

4	INSPECT CAMSHAFT

(a) Check the teeth of the signal plate.

NG → **REPAIR OR REPLACE CAMSHAFT**

OK

CHECK AND REPLACE ECM (See page 01–32)

DTC	P0420	CATALYST SYSTEM EFFICIENCY BELOW THRESHOLD (BANK 1)

CIRCUIT DESCRIPTION

The ECM compares the 2 waveforms of the heated oxygen sensors located before and after the catalyst to determine whether or not the catalyst performance has deteriorated.

Air–fuel ratio feedback compensation keeps the waveform of the heated oxygen sensor in front of the catalyst alternates between back and forth, from rich to lean.

If the catalyst is functioning normally, the waveform of the heated oxygen sensor behind the catalyst switches back and forth between rich and lean much more slowly than the waveform of the heated oxygen sensor in front of the catalyst.

When both waveforms change at a similar rate, it indicates that the catalyst performance has deteriorated.

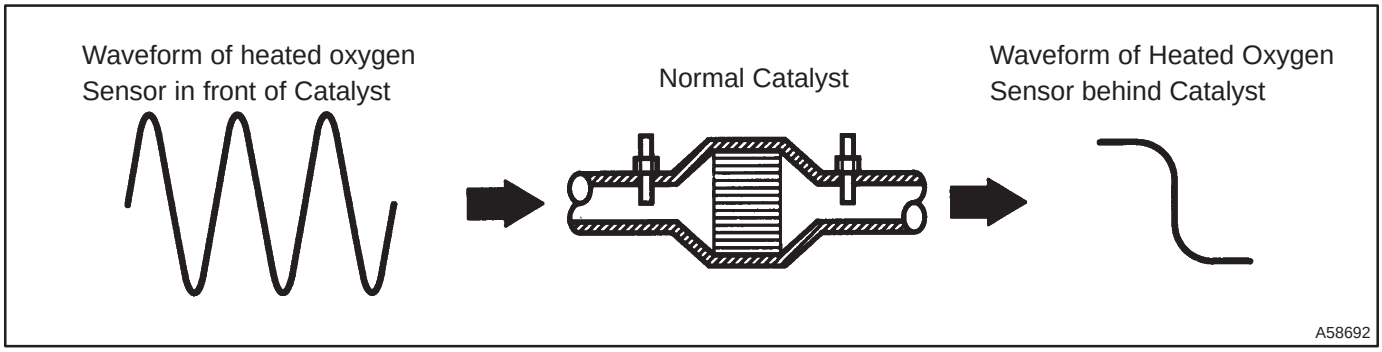

DTC No.	DTC Detecting Condition	Trouble Area
P0420	After engine and catalyst are warmed up, and while vehicle is driven within set vehicle and engine speed range, waveforms of heated oxygen sensors have same amplitude (2 trip detection logic)	• Gas leakage in exhaust system • Heated oxygen sensor • Three–way catalytic converter • ECM

CONFIRMATION DRIVING PATTERN

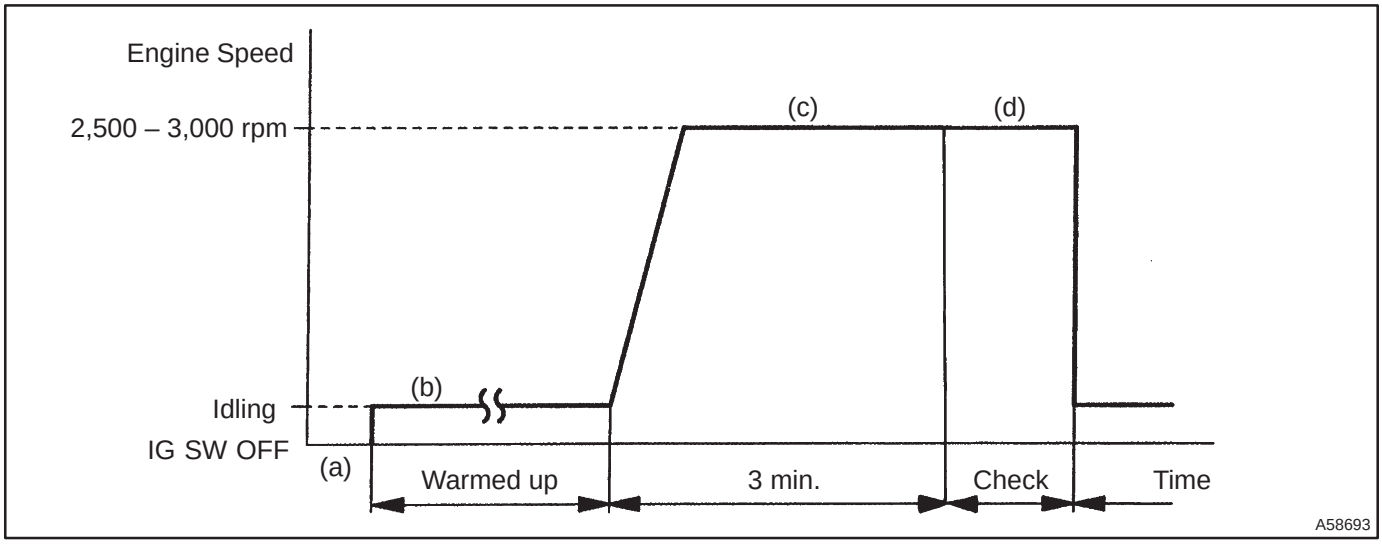

(a) Connect the hand–held tester to the DLC3, or connect the probe of the oscilloscope between terminals HT1A, HT1B, OX1A, OX1B and E1 of the ECM connector.
(b) Start the engine and warm it up with all the accessories switched OFF until the engine coolant temperature is stable.
(c) Run the engine at 2,500 to 3,000 rpm for about 3 min.
(d) After confirming that the waveform of the heated oxygen sensor (bank 1 sensor 1 (OX)) which oscillates around 0.5 V during feedback to the ECM, check the waveform of the heated oxygen sensor (bank 1 sensor 2 (OX)).

HINT:

- If there is a malfunction in the system, the waveform of the heated oxygen sensor (bank 1 sensor 2 (OX)) is similar to the wave from of the heated oxygen sensor (bank 1 sensor 1 (OX)) snown in the diagram on the left.
- There are some cases that, even though a malfunction exists, the CHK ENG may not be illuminated.

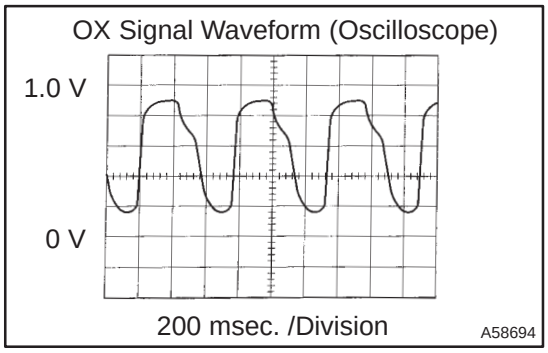

INSPECTION PROCEDURE

HINT:
Read freeze frame data using the hand – held tester. Freeze frame data records the engine conditions when a malfunction is detected. When troubleshooting, it is useful for determining whether the vehicle was running or stopped, the engine was warmed up or not, the air–fuel ratio was lean or rich, etc. at the time of the malfunction.

1	READ OUTPUT DTC(BESIDES P0420)

(a) Read the DTC using the hand–held tester.
Result:

Display (DTC output)	Proceed to
Only ”P0420” is output	A
”P0420” and other DTCs are output	B

HINT:
If any other codes besides ”P0420” are output, perform the troubleshooting for those DTCs first.

B → **GO TO RELEVANT DTC CHART (See page 05–16)**

A

2	CHECK FOR EXHAUST GAS LEAKS

NG → REPAIR OR REPLACE

OK

3	INSPECT HEATED OXYGEN SENSOR(BANK 1 SENSOR 1) (See Page 12–3)

NG → REPAIR OR REPLACE HEATED OXYGEN SENSOR

OK

4	INSPECT HEATED OXYGEN SENSOR(BANK 1 SENSOR 2) (See Page 12–3)

NG → REPAIR OR REPLACE HEATED OXYGEN SENSOR

OK

REPLACE THREE–WAY CATALYTIC CONVERTER

DTC	P0443	EVAPORATIVE EMISSION CONTROL SYSTEM PURGE CONTROL VALVE CIRCUIT MALFUNCTION

CIRCUIT DESCRIPTION

To reduce HC emissions, evaporated fuel from the fuel tank is routed through the charcoal canister to the intake manifold for combustion in the cylinders.
The ECM changes the duty signal to the VSV for EVAP so that the intake quantity of HC emissions becomse properly for the driving conditions (engine load, engine speed, vehicle speed, etc.) after the engine is warmed up.

DTC No.	DTC Detecting Condition	Trouble Area
P0443	Proper response to ECM command does not occur (1 trip detection logic)	• Open or short in VSV for EVAP circuit • VSV for EVAP • ECM

WIRING DIAGRAM

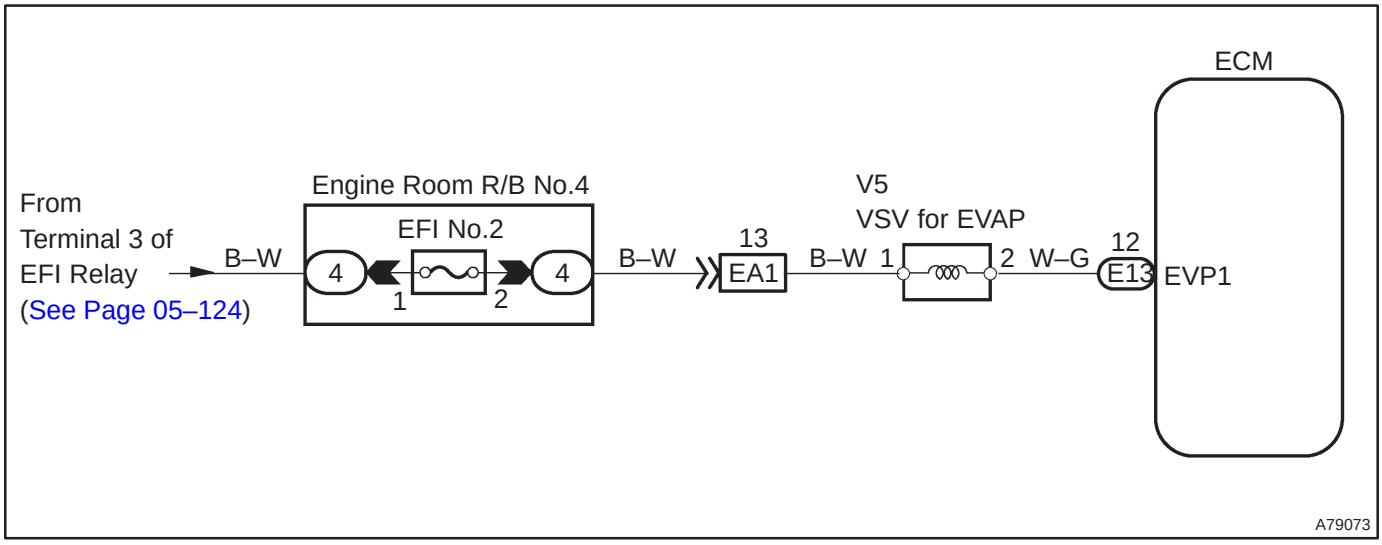

INSPECTION PROCEDURE

HINT:
Read freeze frame data using the hand–held tester. Freeze frame data records the engine conditions when a malfunction is detected. When troubleshooting, it is useful for determining whether the vehicle was running or stopped, the engine was warmed up or not, the air–fuel ratio was lean or rich, etc. at the time of the malfunction.

1 PERFORM ACTIVE TEST BY HAND–HELD TESTER(VSV FOR EVAP)

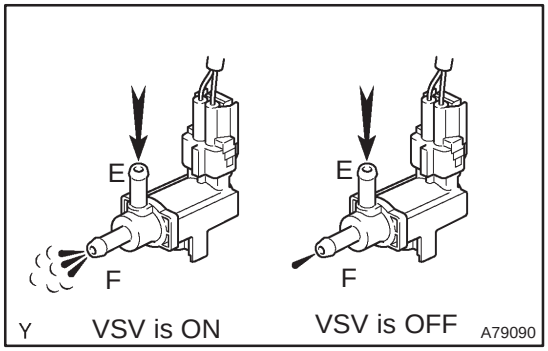

(a) Select the ACTIVE TEST mode on the hand–held tester.
(b) Disconnect the vacuum hose from the VSV for EVAP.
(c) Start the engine.
(d) When the VSV for EVAP is operated by the hand–held tester, apply the disconnected hose to your finger to check the suction.

Result:
VSV is ON: Disconnected port sucks.
VSV is OFF: Disconnected port does not suck.

OK → **CHECK FOR INTERMITTENT PROBLEMS**

NG

2 INSPECT ECM(CHECK VOLTAGE)

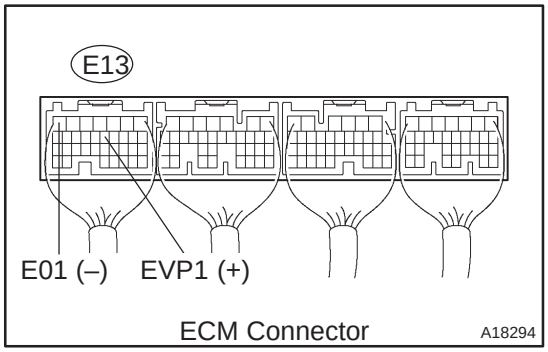

(a) Turn the ignition switch ON.
(b) Measure the voltage between the terminals of the E13 ECM connector.

Standard:

Symbols (Terminal No.)	Specified condition
EVP1 (E13–12) – E01 (E13–7)	8 to 14 V

OK → **CHECK AND REPLACE ECM**

NG

3 INSPECT VACUUM SWITCHING VALVE ASSY NO.1

NG → **REPLACE VACUUM SWITCHING VALVE ASSY NO.1**

OK

4 CHECK FUSE(EFI No.2) (See page 05–45)

NG → **CHECK FOR SHORT IN ALL HARNESS AND COMPONENTS CONNECTED FUSE**

OK

5 CHECK HARNESS AND CONNECTOR(ECM – VSV FOR EVAP)

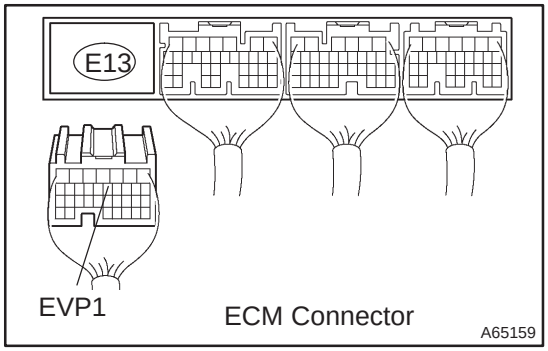

(a) Disconnect the E13 ECM connector.
(b) Disconnect the VSV connector.
(c) Check for continuity between the wire harness side connectors.

Standard (Check for open):

Symbols (Terminal No.)	Specified condition
VSV (V5–2) – EVP1 (E13–12)	Continuity

Standard (Check for short):

Symbols (Terminal No.)	Specified condition
VSV (V5–2) or EVP1 (E13–12) – Body ground	No continuity

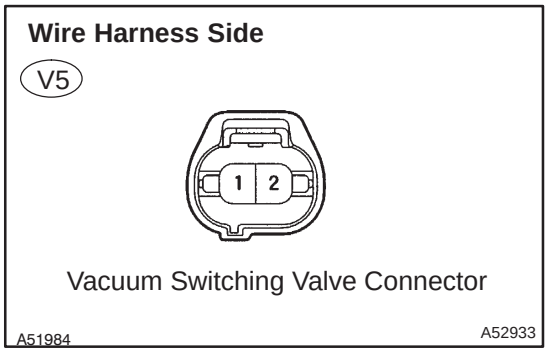

NG → **REPAIR OR REPLACE HARNESS OR CONNECTOR**

OK

6 CHECK HARNESS AND CONNECTOR(EFI RELAY – VSV FOR EVAP)

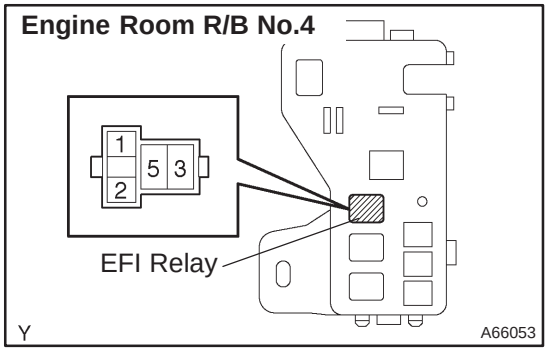

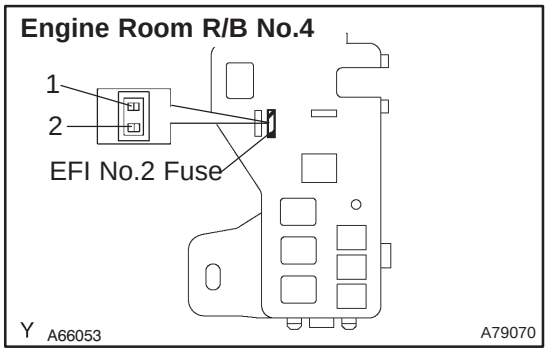

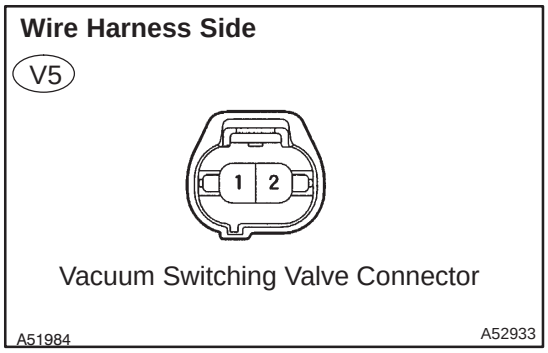

(a) Remove the EFI relay from the engine room R/B No.4.
(b) Remove the EFI No.2 fuse from the engine room R/B No.4.
(c) Disconnect the VSV connector.
(d) Check for continuity between the wire harness side connectors.

Standard (Check for open):

Symbols (Terminal No.)	Specified condition
EFI relay (3) – EFI No.2 fuse (1)	Continuity
EFI No.2 fuse (2) – VSV (V5–1)	

Standard (Check for short):

Symbols (Terminal No.)	Specified condition
EFI relay (3) or EFI No.2 fuse (1) – Body ground	No continuity
EFI No.2 fuse (2) or VSV (V5–1) – Body ground	

NOTICE:
Do not insert the tester leads hard in the procedure (c), the holder may be damaged.

NG → **REPAIR OR REPLACE HARNESS OR CONNECTOR**

OK

CHECK FOR ECM POWER SOURCE CIRCUIT (See page 05–124)

DTC	P0500	VEHICLE SPEED SENSOR MALFUNCTION

CIRCUIT DESCRIPTION

The speed sensor for skid control ECU detects the wheel speed and sends the appropriate signals to the skid control ECU.

The skid control ECU converts these signals into a 4–pulse signal and outputs it to the combination meter. After this signal is converted into a more precise rectangular waveform by the waveform shaping circuit inside the combination meter, it is then transmitted to the ECM. The ECM determines the vehicle speed based on the frequency of these pulse signals.

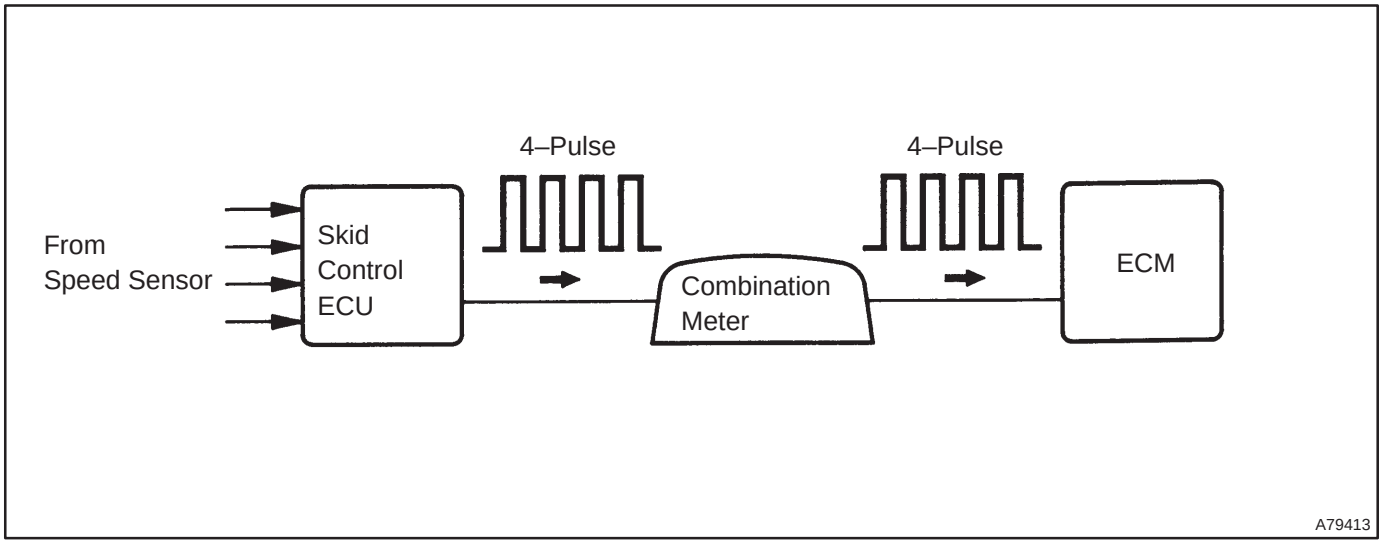

DTC No.	DTC Detecting Condition	Trouble Area
P0500	During the vehicle is being driven, no vehicle speed sensor signal to the ECM (1 trip detection logic: A/T) (2 trip detection logic: M/T)	• Open or short in speed sensor circuit • Speed sensor • Combination meter • ECM • Skid control ECU

WIRING DIAGRAM

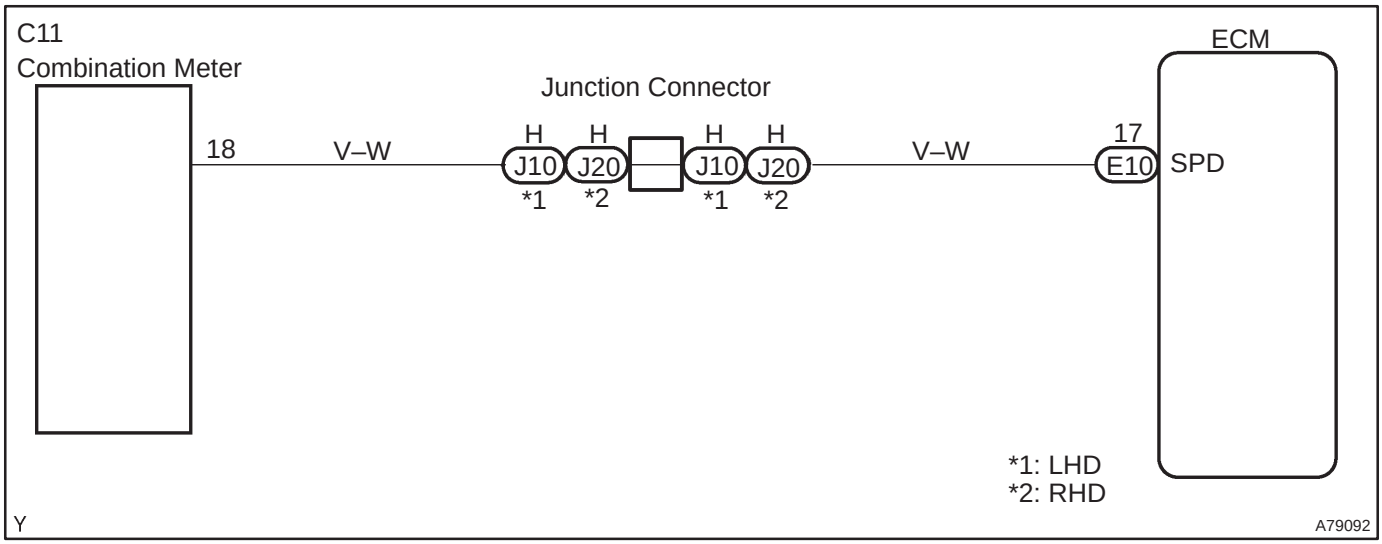

INSPECTION PROCEDURE

HINT:

Read freeze frame data using the hand–held tester. Freeze frame data records the engine conditions when a malfunction is detected. When troubleshooting, it is useful for determining whether the vehicle was running or stopped, the engine was warmed up or not, the air–fuel ratio was lean or rich, etc. at the time of the malfunction.

1	CHECK OPERATION OF SPEEDOMETER(SPEEDOMETER OPERATION)

(a) Drive the vehicle and check that the operation of the speedometer in the combination meter is normal.

HINT:

The vehicle speed sensor is operating normally if the speedometer display is normal.

NG → CHECK SPEEDOMETER CIRCUIT

OK

2	INSPECT ECM(CHECK VOLTAGE)

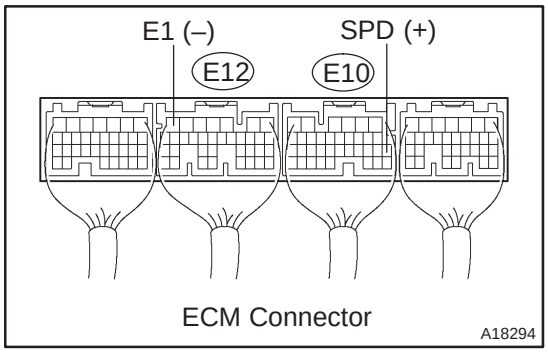

(a) Shift the lever to the neutral position.
(b) Jack up the vehicle.
(c) Turn the ignition switch ON.
(d) Measure the voltage between the terminals of the E10 and E12 ECM connectors as the wheel is turned slowly.

Standard:

Symbols (Terminal No.)	Specified condition
SPD (E10–17) – E1 (E12–7)	Generated intermittently

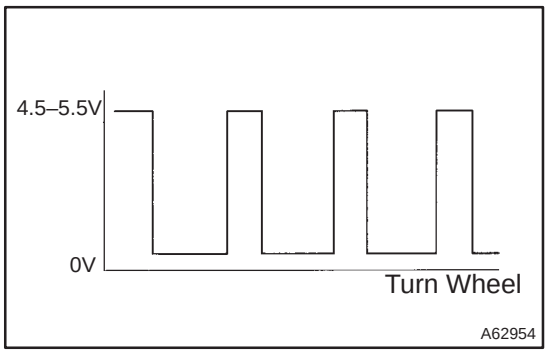

HINT:

The output voltage should fluctuate up and down similarly to the diagram on the left when the wheel is turned slowly.

NG → REPAIR OR REPLACE HARNESS AND CONNECTOR

OK

CHECK AND REPLACE ECM (See page 01–32)

DTC P0505 IDLE CONTROL SYSTEM MALFUNCTION

CIRCUIT DESCRIPTION

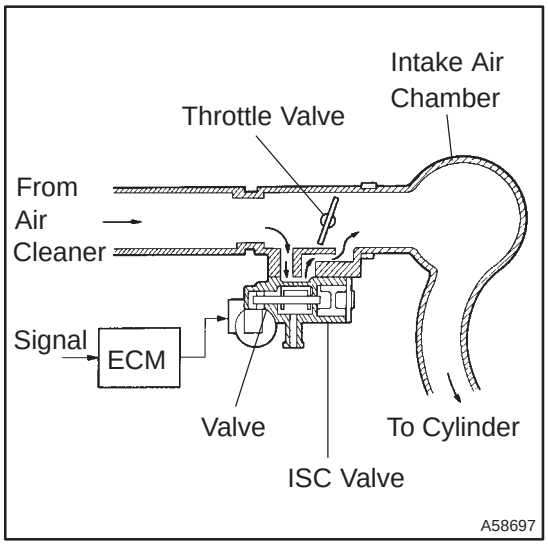

The rotary solenoid type of the idle speed control (ISC) valve is located under the throttle body and intake air bypassing the throttle valve is directed to the ISC valve through the passage. In this way the intake air volume bypassing the throttle valve is regulated, controls the engine speed.
The ECM operates the ISC valve only to perform idle–up and provide feedback for the target idling speed.

DTC No.	DTC Detecting Condition	Trouble Area
P0505	Idle speed continues to vary greatly from target speed (1 trip detection logic)	• Open or short in ISC valve circuit • ISC valve is stuck or closed • PCV hose • A/C switch circuit • Air induction system • ECM

WIRING DIAGRAM

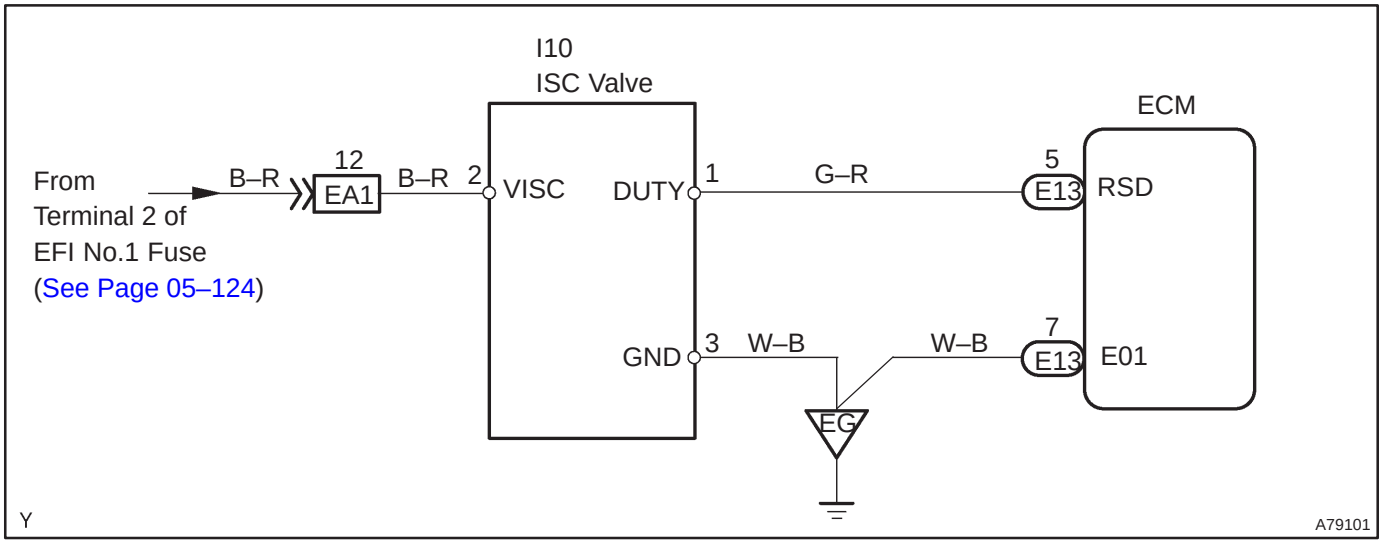

INSPECTION PROCEDURE

HINT:
Read freeze frame data using the hand–held tester. Freeze frame data records the engine conditions when a malfunction is detected. When troubleshooting, it is useful for determining whether the vehicle was running or stopped, the engine was warmed up or not, the air–fuel ratio was lean or rich, etc. at the time of the malfunction.

1	PERFORM ACTIVE TEST USING HAND–HELD TESTER(CHECK ISC VALVE OPERATION)

(a) Warm up the engine to the normal operating temperature.
(b) Switch off all the accessories.
(c) Switch off the A/C.
(d) Shift the lever to the neutral position.
(e) Connect the hand–held tester to the DLC3 on the vehicle.
(f) Select the item ”DIAGNOSIS / OBD/MOBD / ACTIVE TEST / ISC DUTY RATIO”.
(g) Check that the engine RPM varies when changing the ISC duty ratio.
Engine RPM:
Engine RPM fluctuates ups and downs in respose to the ISC duty ratio variation.

OK → **CHECK FOR INTERMITTENT PROBLEMS (See page 05–5)**

NG

2	CHECK HARNESS AND CONNECTOR

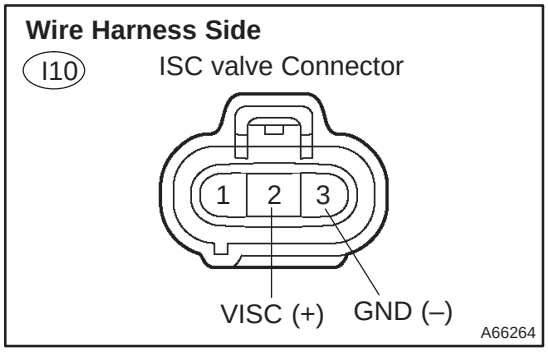

(a) Disconnect the ISC valve connector.
(b) Turn the ignition switch ON.
(c) Measure the voltage between the terminals of the ISC valve wire harness side connector.
Standard:

Symbols (Terminal No.)	Specified condition
VISC (I10–2) – GND (I10–3)	9 to 14 V

NG → **REPAIR OR REPLACE HARNESS OR CONNECTOR**

OK

3	CHECK HARNESS AND CONNECTOR(RSD CIRCUIT)

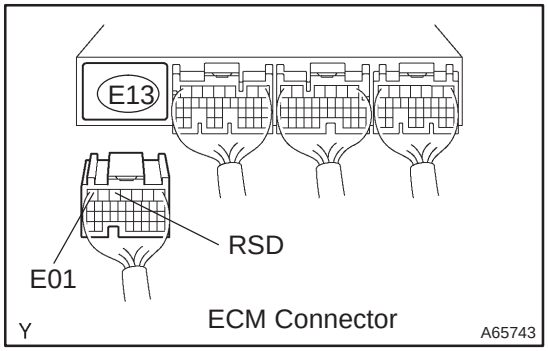

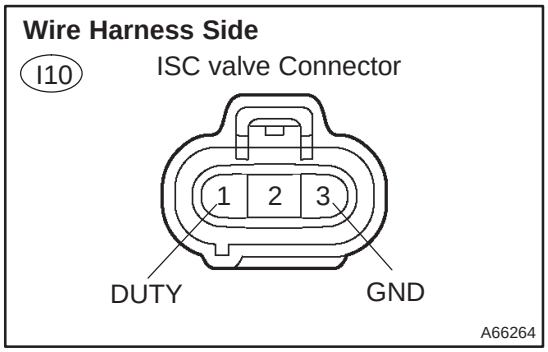

(a) Disconnect the ISC valve connector.
(b) Disconnect the E13 ECM connector.
(c) Check for continuity between the wire harness side connectors.

Standard (Check for open):

Symbols (Terminal No.)	Specified condition
DUTY (I10–1) – RSD (E13–5)	Continuity
GND (I10–3) – E01 (E13–7)	

Standard (Check for short):

Symbols (Terminal No.)	Specified condition
DUTY (I10–1) or RSD (E13–5) – Body groundr	No continuity

NG → **REPAIR OR REPLACE HARNESS OR CONNECTOR**

OK

4	INSPECT THLOTTLE BODY IDLE SPEED CONTROL VALVE ASSY (See page 10–1)

NG → **REPLACE THLOTTLE BODY IDLE SPEED CONTROL VALVE ASSY**

OK

CHECK AND REPLACE ECM (See page 01–32)

DTC	P1300	IGNITER CIRCUIT MALFUNCTION (NO.1)

DTC	P1305	IGNITER CIRCUIT MALFUNCTION (NO.2)

DTC	P1310	IGNITER CIRCUIT MALFUNCTION (NO.3)

DTC	P1315	IGNITER CIRCUIT MALFUNCTION (NO.4)

CIRCUIT DESCRIPTION

HINT:

- If DTC P1300 is displayed, check No.1 ignition coil with igniter circuit.
- If DTC P1305 is displayed, check No.2 ignition coil with igniter circuit.
- If DTC P1310 is displayed, check No.3 ignition coil with igniter circuit.
- If DTC P1315 is displayed, check No.4 ignition coil with igniter circuit.

A Direct Ignition System (DIS) has been adopted. The DIS improves the ignition timing accuracy, reduces the high–voltage loss, and enhances overall reliability of the ignition system by eliminating the distributor. The DIS is a 1–cylinder ignition system which ignites one cylinder with one ignition coil. In the 1–cylinder ignition system, the spark plug is connected to the end of the secondary coil. High voltage generated in the secondary coil is applied directly to the spark plug. The spark of the spark plug passes through from the center electrode to the ground electrode.

The ECM determines ignition timing and outputs the ignition (IGT) signals of each cylinder. Based on IGT signals, the power transistors cut off the current to the primary coil in the ignition coil. At the same time, the igniter also sends an ignition confirmation (IGF) signal as a fail–safe measurement to the ECM.

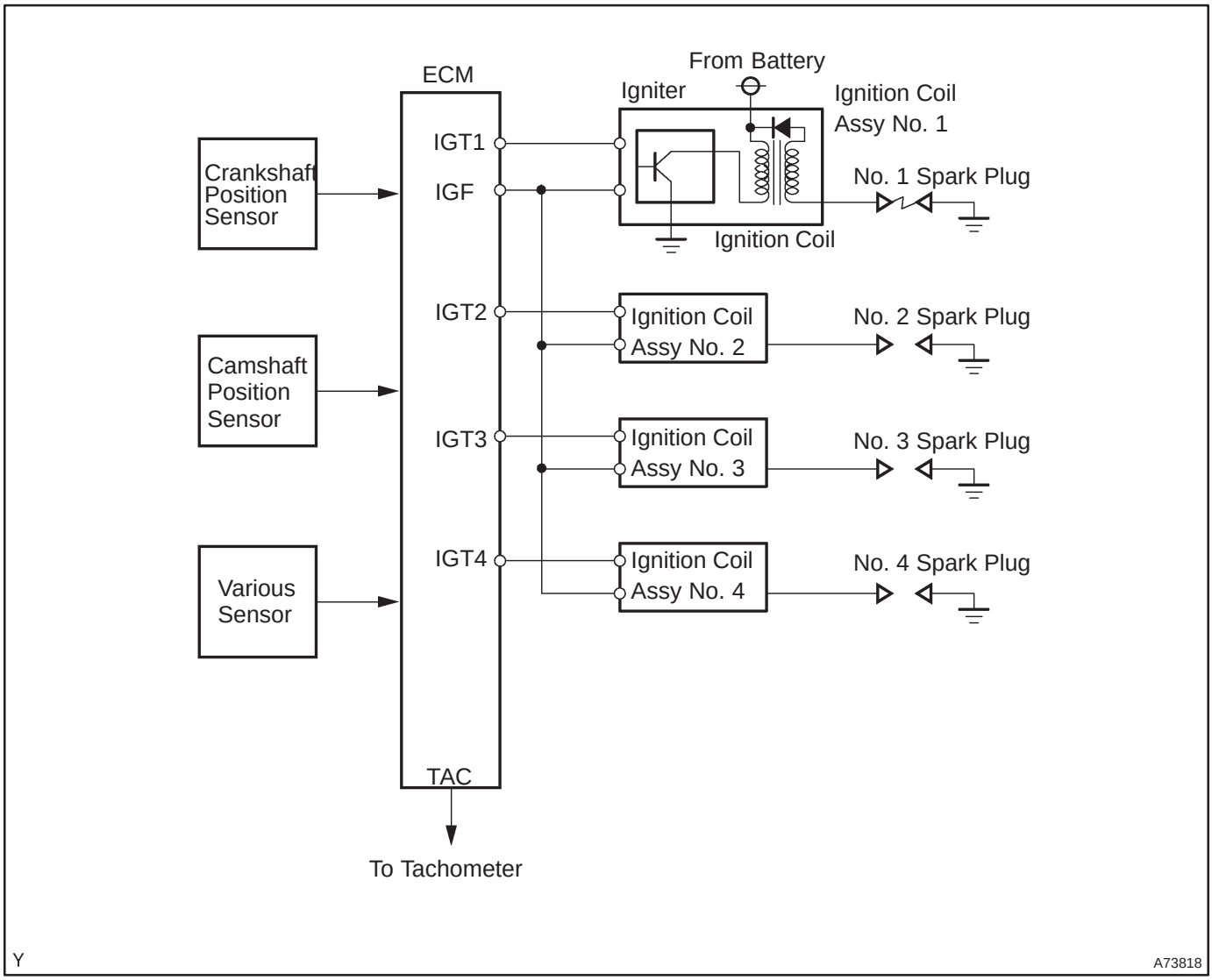

DTC No.	DTC Detecting Condition	Trouble Area
P1300 P1305 P1310 P1315	No IGF signal to the ECM while engine is running	• Ignition system • Open or short in IGF or IGT1 circuit from No. 1 ignition coil with igniter to ECM • No.1 – No.4 ignition coil with igniter • ECM

WIRING DIAGRAM

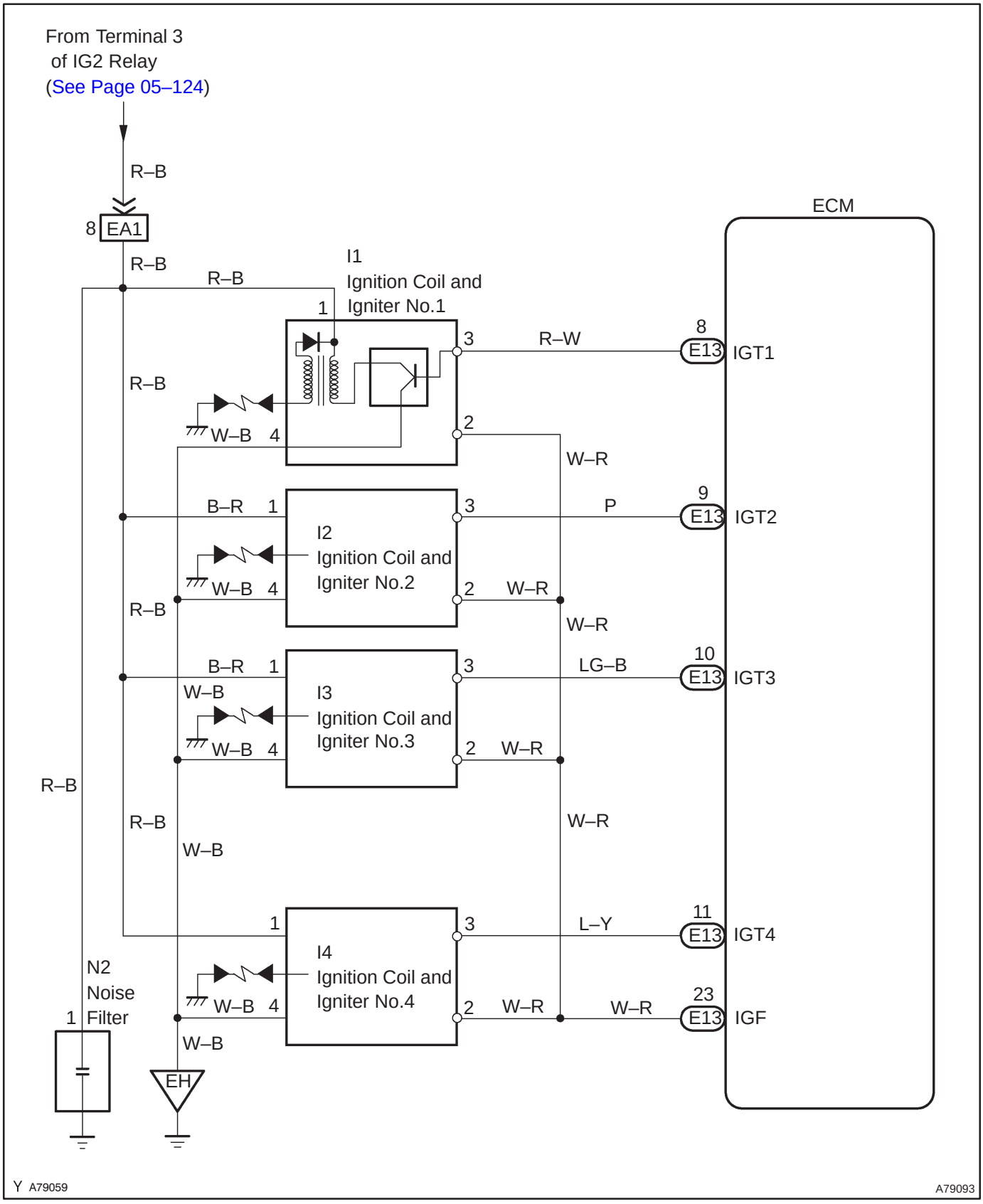

INSPECTION PROCEDURE

HINT:

Read freeze frame data using the hand–held tester. Freeze frame data records the engine conditions when a malfunction is detected. When troubleshooting, it is useful for determining whether the vehicle was running or stopped, the engine was warmed up or not, the air–fuel ratio was lean or rich, etc. at the time of the malfunction.

1 PERFORM SIMULATION TEST

(a) Clear the DTC (See page 05–5)

(b) Shuffle arrangement of the ighition coil and igniters.

NOTICE:

Do not shuffle the connectors.

(c) Perform the simulation test.

(d) Clear the DTC (See page 05–5)

Result:

Display (DTC output)	Proceed to
The same DTC is output again	A
The other DTC is output	B

B → **REPLACE IGNITION COIL**

A

2 INSPECT ECM(IGT1, IGT2, IGT3, IGT4 AND IGF SIGNAL)

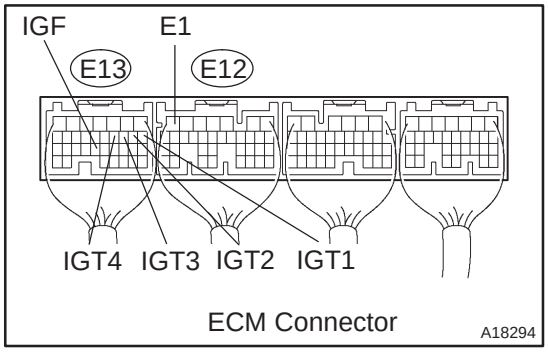

(a) Inspection using the oscilloscope.

(b) During cranking or idling, check the waveform between terminals IGT1 to IGT4 and E1, and IGF1 and E1 of the ECM connector.

Standard:

Item	Contents
Terminal	CH1: IGT1, IGT2, IGT3, IGT4 – E1 CH2: IGF – E1
Equipment Set	2V/DIV, 20ms/DIV
Condition	While the engine is cranking or idling

HINT:

Correct waveform is as shown in the diagram on the left.

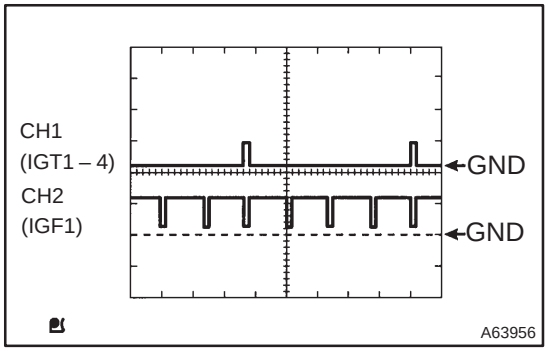

NG → **CHECK AND REPLACE ECM (See page 01–32)**

OK

3 INSPECT IGNITION COIL(POWER SOURCE)

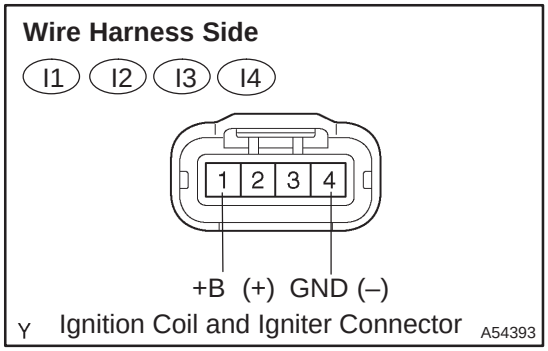

(a) Disconnect the ignition coil and igniter connector.
(b) Check for continuity between the wire harness side connectors.

Standard (Check for open):

Symbols (Terminal No.)	Specified condition
GND (I1–4) – Body ground	Continuity
GND (I2–4) – Body ground	
GND (I3–4) – Body ground	
GND (I4–4) – Body ground	

(c) Turn the ignition switch ON.
(d) Measure the voltage between the terminals of the ignition coil and igniter connector.

Standard:

Symbols (Terminal No.)	Specified condition
+B (I1–1) – GND (4)	9 to 14 V
+B (I2–1) – GND (4)	
+B (I3–1) – GND (4)	
+B (I4–1) – GND (4)	

NG → **Go to step 5**

OK

4 CHECK HARNESS AND CONNECTOR(ECM – IGNITION COIL)

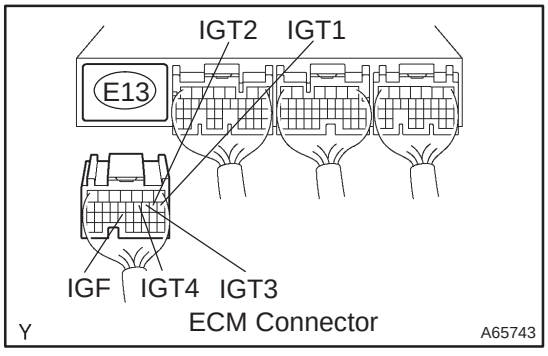

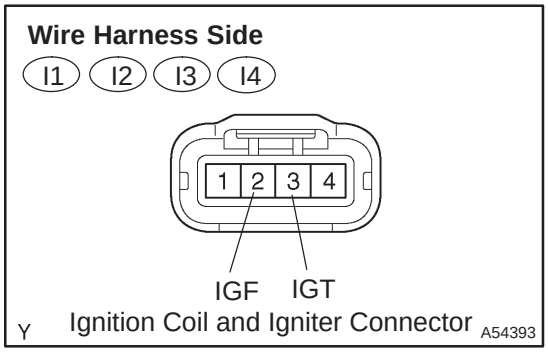

HINT:
The procedure below is for No.1 cylinder. If a malfunction is found on other cylinders, check the circuit for the cylinder with referring to this procedure.

(a) Disconnect the ignition coil and igniter connector.
(b) Disconnect the E13 ECM connector.
(c) Check for continuity between the wire harness side connectors.

Standard (Check for open):

Symbols (Terminal No.)	Specified condition
IGT (I1–3) – IGT1 (E13–8)	Continuity
IGT (I2–3) – IGT2 (E13–9)	
IGT (I3–3) – IGT3 (E13–10)	
IGT (I4–3) – IGT4 (E13–11)	
IGF (I1–2) – IGF (E13–23)	
IGF (I2–2) – IGF (E13–23)	
IGF (I3–2) – IGF (E13–23)	
IGF (I4–2) – IGF (E13–23)	

Standard (Check for short):

Symbols (Terminal No.)	Specified condition
IGT (I1–3) or IGT1 (E13–8) – Body ground	No continuity
IGT (I2–3) or IGT2 (E13–9) – Body ground	
IGT (I3–3) or IGT3 (E13–10) – Body ground	
IGT (I4–3) or IGT4 (E13–11) – Body ground	
IGF (I1–2) or IGF (E13–23) – Body ground	
IGF (I2–2) or IGF (E13–23) – Body ground	
IGF (I3–2) or IGF (E13–23) – Body ground	
IGF (I4–2) or IGF (E13–23) – Body ground	

NG → **REPLACE HARNESS OR CONNECTOR**

OK

REPLACE IGNITION COIL

5 INSPECT IG2 RELAY

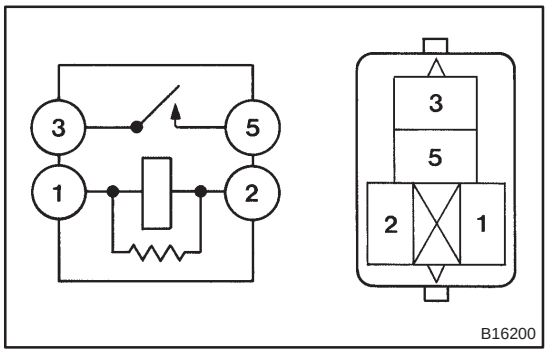

(a) Remove the IG2 relay from the engine room R/B No.4.
(b) Inspect the IG2 relay.

Standard:

Terminal No.	Specified condition
1 – 2	Continuity
3 – 5	No Continuity
	Continuity (Apply battery voltage Terminals 1 and 2)

NG → **REPLACE IG2 RELAY**

OK

6 CHECK HARNESS AND CONNECTOR(IG2 RELAY – IGNITION COIL)

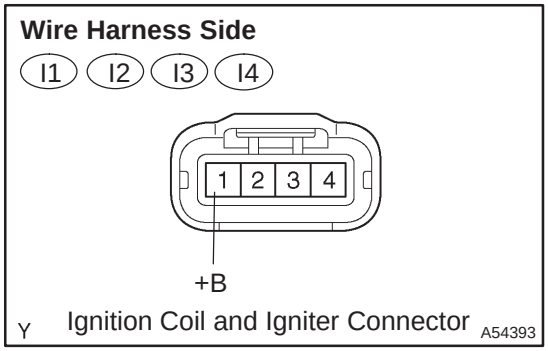

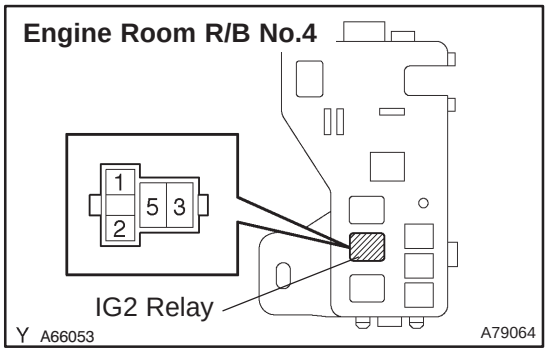

(a) Disconnect the ignition coil and igniter connector.
(b) Remove the IG2 relay from the engine room R/B No.4.
(c) Check for continuity between the wire harness side connectors.

Standard (Check for open):

Symbols (Terminal No.)	Specified condition
+B (I1–1) – IG2 relay (3)	Continuity
+B (I2–1) – IG2 relay (3)	
+B (I3–1) – IG2 relay (3)	
+B (I4–1) – IG2 relay (3)	

Standard (Check for short):

Symbols (Terminal No.)	Specified condition
+B (I1–1) or IG2 relay (3) – Body ground	No continuity
+B (I2–1) or IG2 relay (3) – Body ground	
+B (I3–1) or IG2 relay (3) – Body ground	
+B (I4–1) or IG2 relay (3) – Body ground	

NG → **REPLACE HARNESS OR CONNECTOR**

OK

7 CHECK FUSE(IGN FUSE) (See page 05–124)

NG → **CHECK FOR SHORT IN ALL HARNESSES AND COMPONENTS CONNECTED FUSE**

OK

8 CHECK HARNESS AND CONNECTOR(IGNITION SWITCH – IG2 RELAY)

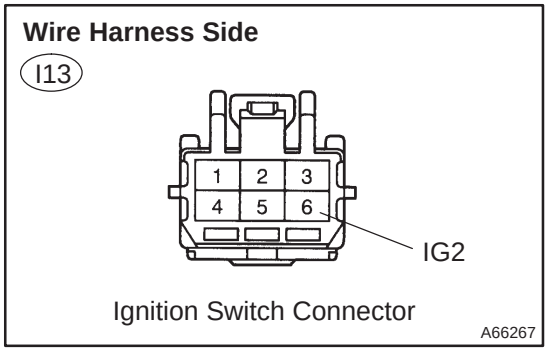

(a) Disconnect the battery negative (–) terminal.
(b) Disconnect the ignition switch connector.
(c) Remove the IGN fuse from the driver side J/B.
(d) Remove the IG2 relay from the engine room R/B No.4.
(e) Check for continuity between the wire harness side connectors.

Standard (Check for open):

Symbols (Terminal No.)	Specified condition
IG2 (I13–6) – IGN fuse (1)	Continuity
IGN fuse (2) – IG2 relay (1)	

Standard (Check for short):

Symbols (Terminal No.)	Specified condition
IG2 (I13–6) or IGN fuse (1) – Body ground	No continuity
IGN fuse (2) or IG2 relay (1) – Body ground	

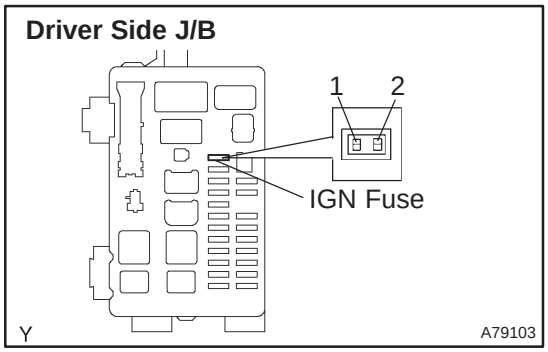

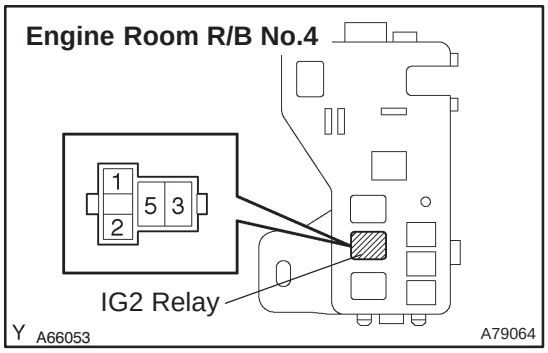

NG → **REPLACE HARNESS OR CONNECTOR**

OK

CHECK AND REPLACE POWER SOURCE CIRCUIT

DTC	P1346	VVT SENSOR/CAMSHAFT POSITION SENSOR CIRCUIT RANGE/PERFORMANCE PROBLEM (BANK 1)

CIRCUIT DESCRIPTION

Refer to DTC P0335 on page 05–84

DTC No.	Detection Item	Trouble Area
P1346	Deviation in crankshaft position sensor signal and camshaft position sensor signal (2 trip detection logic)	• Mechanical system (Timing chain has jumped a tooth, chain stretched) • ECM

WIRING DIAGRAM

Refer to DTC P0335 on page 05–84

INSPECTION PROCEDURE

HINT:

Read freeze frame data using the hand–held tester. Freeze frame data records the engine conditions when the malfunction is detected. When troubleshooting, it is useful for determining whether the vehicle was running or stopped, the engine was warmed up or not, the air–fuel ratio was lean or rich, etc. at the time of the malfunction.

1	CHECK VALVE TIMING (See page 14–49)

NG → ADJUST VALVE TIMING (See page 14–49)

OK

CHECK AND REPLACE ECM (See page 01–32)

DTC	P1349	VVT SYSTEM MALFUNCTION (BANK 1)

CIRCUIT DESCRIPTION

VVT system controls the intake valve timing to proper timing in response to driving condition.
The ECM controls the oil control valve (OCV) to make the intake valve timing properly, oil pressure regulated by the OCV is supplied to the valiable valve timing (VVT) controller, and then the VVT controller changes relative position between the camshaft and the crankshaft.

DTC No.	DTC Detecting Condition	Trouble Area
P1349	Condition (a) or (b) continues with engine speed at 400 to 4,000 rpm after the engine is warmed up (a) Valve timing does not change from the current valve timing (b) Current valve timing is fixed	• Valve timing • OCV • VVT controller assembly • ECM

WIRING DIAGRAM

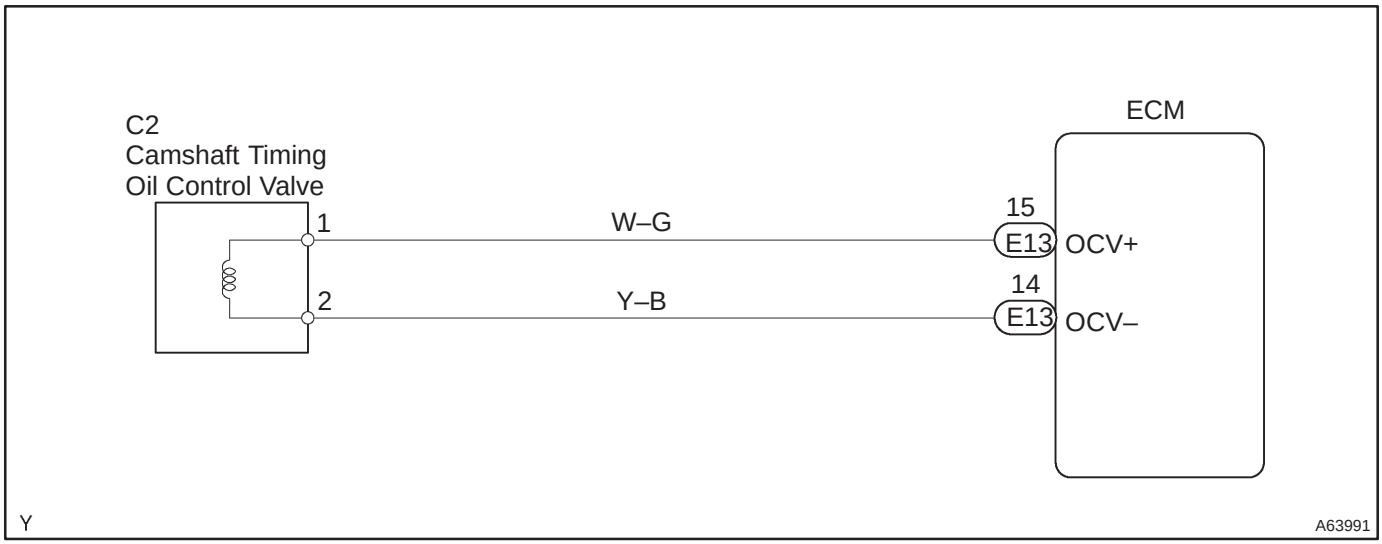

INSPECTION PROCEDURE

HINT:
Read freeze frame data using the hand–held tester. Freeze frame data records the engine conditions when a malfunction is detected. When troubleshooting, it is useful for determining whether the vehicle was running or stopped, the engine was warmed up or not, the air–fuel ratio was lean or rich, etc. at the time of the malfunction.

1	CHECK VALVE TIMING (See page 14–49)

NG → ADJUST VALVE TIMING (See page 14–49)

OK

2	PERFORM ACTIVE TEST BY HAND–HELD TESTER(OPERATE OF OCV)

(a) Start the engine and warm it up.
(b) Connect the hand–held tester and select VVT from the ACTIVE TEST menu.
(c) Check the engine speed while operating the OCV by the hand–held tester.
OCV is OFF: Normal engine speed
OCV is ON: Rough idle or engine stall

HINT:
DTC P1349 is also output when a foreign object is detected in some parts of the system in engine oil, and then the system returns to normal in a short time. There is also no problem on the VVT as the oil filter should catch the foreign object in engine oil.

OK	VVT SYSTEM OK

NG

3	INSPECT ECM(CHECK VOLTAGE)

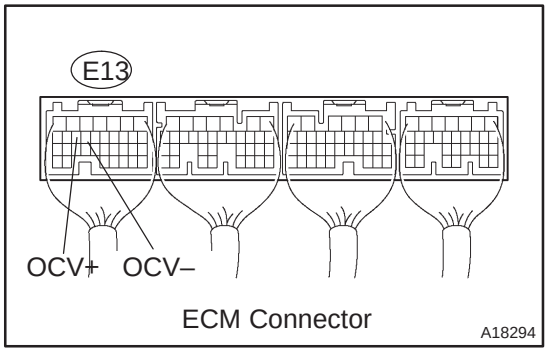

(a) Turn the ignition switch ON.
(b) Check the waveform between terminals OCV+ and OCV– of the E13 ECM connector.

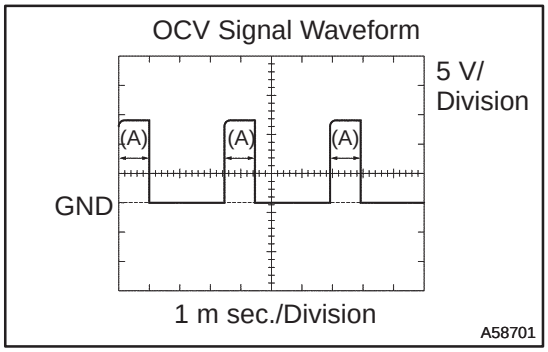

HINT:
- The correct waveform is as shown on the left.
- The waveform frequency (A) becomes longer as the engine speed becomes higher.

NG	CHECK AND REPLACE ECM (See page 01–32)

OK

4	INSPECT CAMSHAFT TIMING GEAR ASSY (See page14–64)

NG	REPLACE VVT CONTROLLER ASSEMBLY, AND THEN GO TO NEXT STEP

OK

5	INSPECT CAMSHAFT TIMING OIL CONTROL VALVE ASSY (See page 10–3)

NG → REPLACE CAMSHAFT TIMING OIL CONTROL VALVE ASSEMBLY, AND THEN GO TO NEXT STEP

OK

6	CHECK OIL CONTROL VALVE FILTER(CHECK BLOCKAGE)

NG → REPAIR OR REPLACE OIL CONTROL VALVE FILTER

OK

7	PERFORM SIMULATION TEST(DTC CHECK)

(a) Clear the DTC (See page 05–5).
(b) Perform the simulation test.
(c) Check whether or not DTC P1349 is stored (See page 05–5).
Result:

DTC	Proceed to
”P1349” is output.	A
”P1349” is not output.	B

HINT:
DTC P1349 is also output when a foreign object is detected in some parts of the system in engine oil, and then the system returns to normal in a short time. There is also no problem on the VVT as the oil filter should catch the foreign object in the engine oil.

B → VVT SYSTEM OK

A

CHECK AND REPLACE ECM (See page 01–32)

DTC	P1520	STOP LIGHT SWITCH CIRCUIT MALFUNCTION

CIRCUIT DESCRIPTION

This signal is used to detect that the brakes have been applied. The STP signal voltage is the same as the one supplied to the stop lights.
The STP signal is used mainly to control the fuel cut–off engine speed (The fuel cut–off engine speed is reduced slightly when the vehicle is braking.).

DTC No.	DTC Detecting Condition	Trouble Area
P1520	Condition (a), (b) and (c) continue for 0.5 sec. or more: (a) Ignition switch ON (b) Brake pedal released (c) STP signal is OFF when the STP signal is OFF	• Open or short in stop light switch signal circuit • Stop light switch • ECM

WIRING DIAGRAM

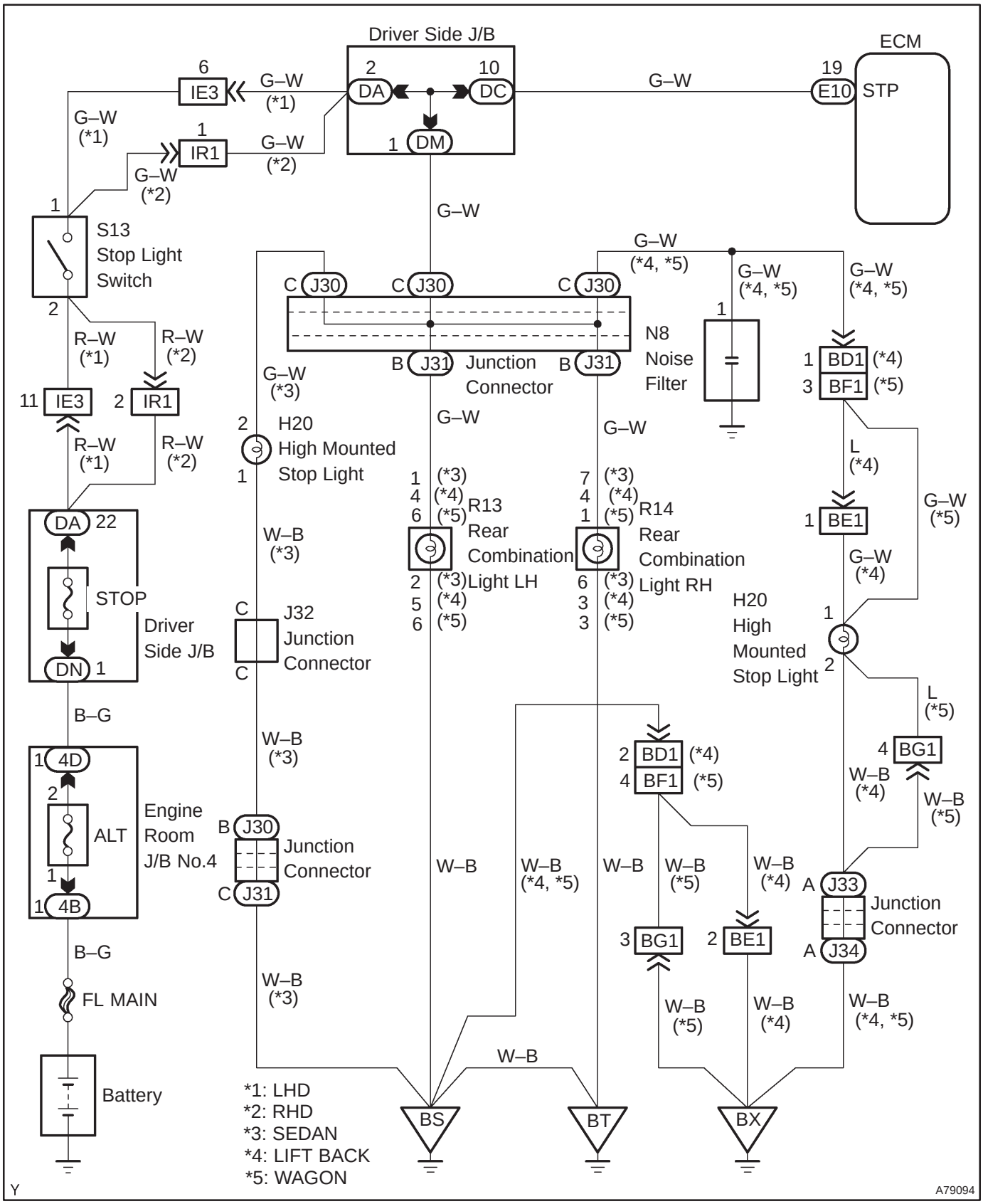

INSPECTION PROCEDURE

HINT:

Read freeze frame data using the hand – held tester. Freeze frame data records the engine conditions when a malfunction is detected. When troubleshooting, it is useful for determining whether the vehicle was running or stopped, the engine was warmed up or not, the air–fuel ratio was lean or rich, etc. at the time of the malfunction.

1	CHECK OPERATION OF STOP LIGHT

(a) Check if the stop lights go on and off normally when the brake pedal is depressed and released.

NG → **REPAIR OR REPLACE STOP LAMP SWITCH CIRCUIT**

OK

2	READ VALUE OF HAND–HELD TESTER

(a) Connect the hand–held tester to the DLC3.
(b) Select the item ”DIAGNOSIS / OBD/MOBD / DATA LIST / ALL / STOP LIGHT SW” and read its value displayed the hand–held tester.
(c) Turn the ignition switch ON and push the hand–held tester main switch ON.
(d) Read the STP signal on the hand–held tester.

Result:

Brake Pedal	STP Signal
Depressed	ON
Released	OFF

OK → **CHECK FOR INTERMITTENT PROBLEMS**

NG

3	CHECK WIRE HARNESS OR CONNECTOR(ECM – STOP LIGHT SWITCH)

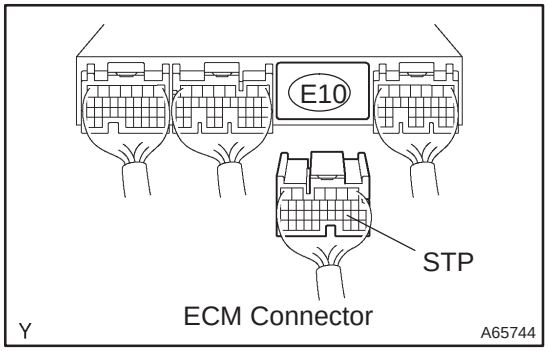

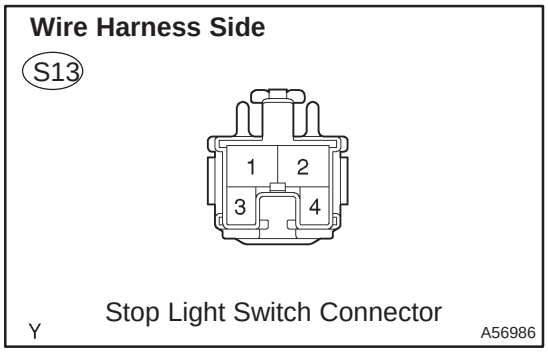

(a) Disconnect the stop light switch connector.
(b) Disconnect the the E10 ECM connector.
(c) Check for continuity between the wire harness side connectors.

Standard (Check for open):

Symbols (Terminal No.)	Specified condition
Stop light switch (S13–1) – STP (E10–19)	Continuity

Standard (Check for short):

Symbols (Terminal No.)	Specified condition
Stop light switch (S13–1) or STP (E10–19) – Body ground	No continuity

NG → **REPAIR OR REPLACE HARNESS OR CONNECTOR**

OK

CHECK AND REPLACE ECM (See page 01–32)

DTC	P1600	ECM BATT MALFUNCTION

CIRCUIT DESCRIPTION

Battery positive voltage is applied to terminal BATT of the ECM even the ignition switch is OFF for the DTC memory and air–fuel ratio adaptive control value memory, etc.

DTC No.	DTC Detecting Condition	Trouble Area
P1600	Open in back up power source circuit	• Open in back up power source circuit • ECM

HINT:

If DTC P1600 is displayed, the ECM does not store other DTCs.

WIRING DIAGRAM

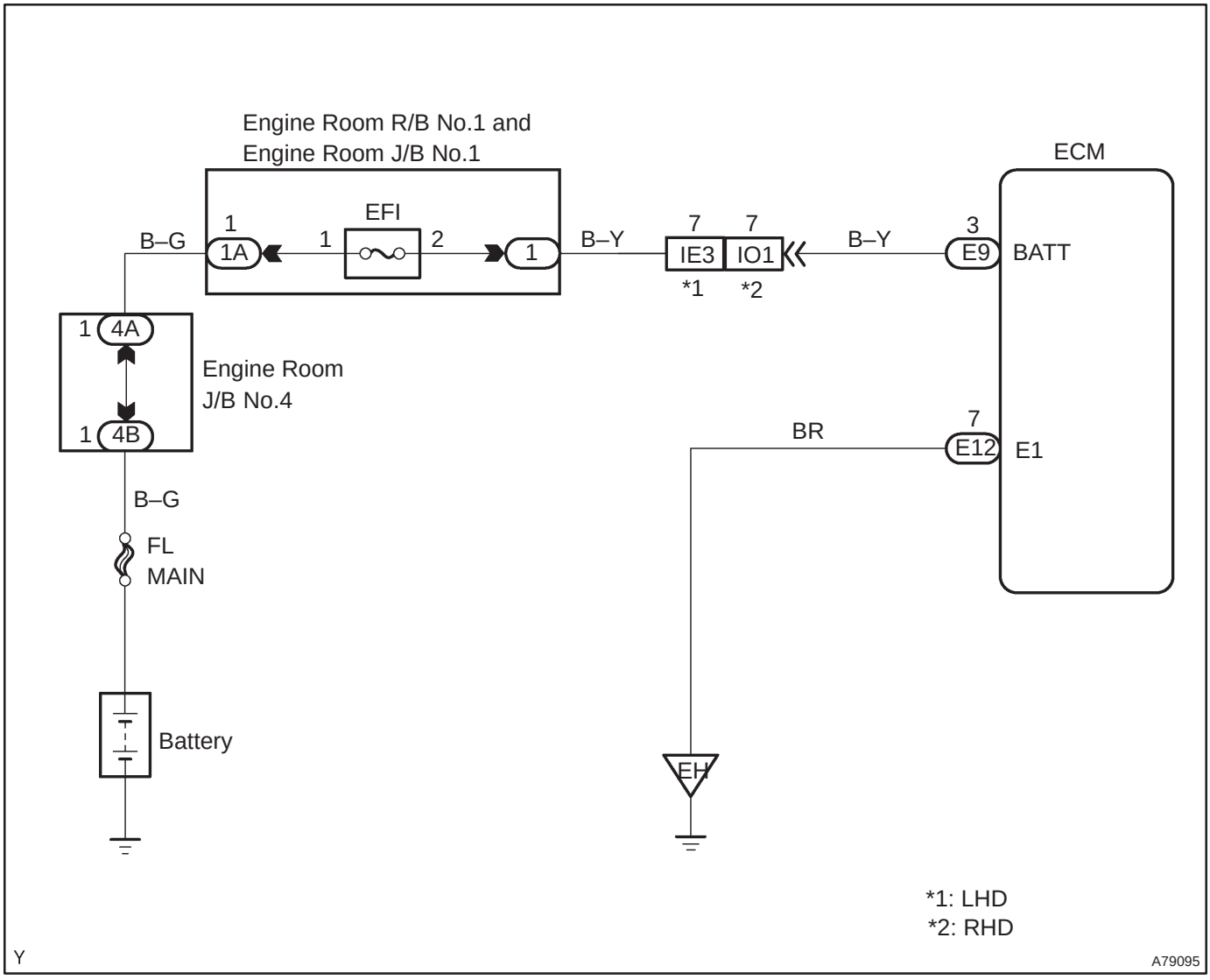

INSPECTION PROCEDURE

HINT:

Read freeze frame data using the hand–held tester. Freeze frame data records the engine conditions when a malfunction is detected. When troubleshooting, it is useful for determining whether the vehicle was running or stopped, the engine was warmed up or not, the air–fuel ratio was lean or rich, etc. at the time of the malfunction.

1 CHECK FUSE(EFI FUSE)

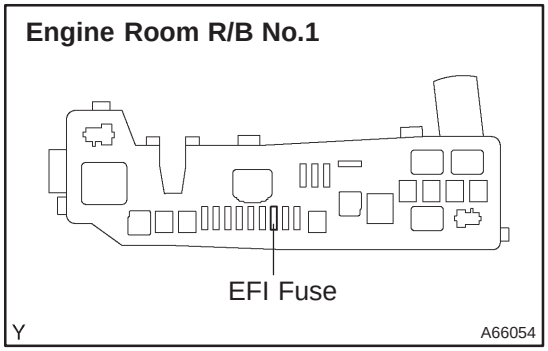

(a) Remove the EFI fuse from the engine room R/B No.1.
(b) Check for continuity in the EFI fuse.
Standard: Continuity

NG → **CHECK FOR SHORT IN ALL HARNESSES AND COMPONENTS CONNECTED FUSE**

OK

2 INSPECT ECM(CHECK VOLTAGE)

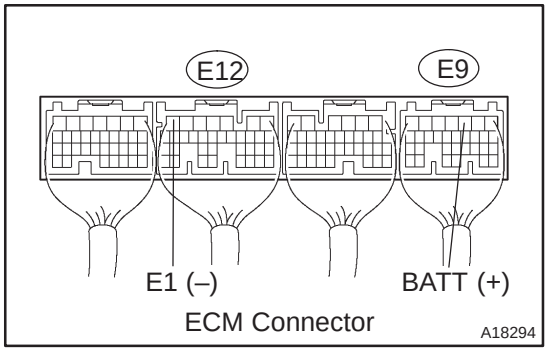

(a) Turn the ignition switch ON.
(b) Measure the voltage between the terminals of the E9 and E12 ECM connector.
Standard:

Symbols (Terminal No.)	Specified condition
BATT (E9–3) – E1 (E12–7)	8 to 14 V

OK → **CHECK AND REPLACE ECM (See page 01–32)**

NG

3 CHECK WIRE HARNESS OR CONNECTOR(EFI FUSE – ECM)

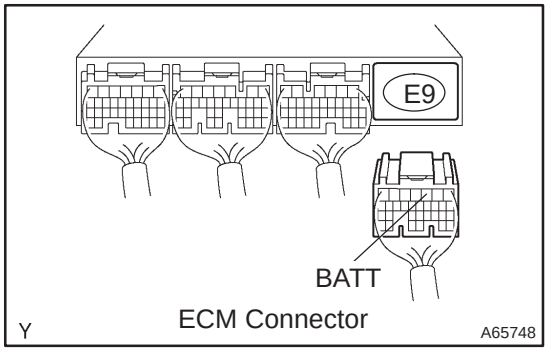

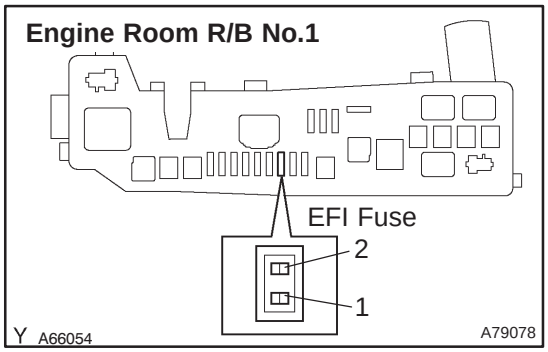

(a) Remove the EFI fuse from the engine room R/B No.1.
(b) Disconnect the ECM E9 connector.
(c) Check for continuity between the wire harness side connectors.

Standard (Check for open):

Symbols (Terminal No.)	Specified condition
EFI fuse (2) – BATT (E9–3)	Continuity

Standard (Check for short):

Symbols (Terminal No.)	Specified condition
EFI fuse (2) or BATT (E9–3) – Body ground	No continuity

NG → **REPAIR OR REPLACE HARNESS OR CONNECTOR**

OK →

CHECK AND REPLACE HARNESS OR CONNECTOR (BATTERY – EFI FUSE)

DTC	P1656	OCV CIRCUIT MALFUNCTION (BANK 1)

CIRCUIT DESCRIPTION

Refer to DTC P1349 on page 05–112.

DTC No.	DTC Detecting Condition	Trouble Area
P1656	Open or short in oil control valve (OCV) circuit	• Open or short in OCV circuit • OCV • ECM

WIRING DIAGRAM

Refer to DTC P1349 on page 05–112.

INSPECTION PROCEDURE

HINT:

Read freeze frame data using the hand – held tester. Freeze frame data records the engine conditions when a malfunction is detected. When troubleshooting, it is useful for determining whether the vehicle was running or stopped, the engine was warmed up or not, the air–fuel ratio was lean or rich, etc. at the time of the malfunction.

1	PERFORM ACTIVE TEST BY HAND–HELD TESTER(OCV OPERATION)

(a) Start the engine and warm it up.
(b) Connect the hand–held tester and select the VVT on the ACTIVE TEST menu.
(c) Check the engine speed while operating the OCV by using the hand–held tester.

Result:

VVT system is OFF (OCV is OFF): Normal engine speed
VVT system is ON (OCV is ON): Rough idle or engine stalled

OK → **CHECK FOR INTERMITTENT PROBLEMS (See page 05–5)**

NG

2	INSPECT CAMSHAFT TIMING OIL CONTROL VALVE ASSY (See page 10–3)

NG → **REPLACE CAMSHAFT TIMING OIL CONTROL VALVE ASSY**

OK

3	INSPECT ECM(CHECK VOLTAGE) (See page 05–20)

NG → **CHECK AND REPLACE ECM (See page 01–32)**

OK

4 CHECK HARNESS AND CONNECTOR(ECM – OCV)

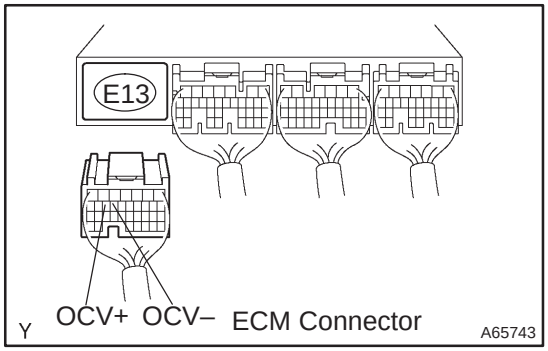

(a) Disconnect the camshaft timing oil control valve connector.
(b) Disconnect the E13 ECM connector.
(c) Check for continuity between the wire harness side connectors.

Standard (Check for open):

Symbols (Terminal No.)	Specified condition
Oil control valve (C2–1) – OCV+ (E13–14)	Continuity
Oil control valve (C2–2) – OCV– (E13–15)	

Standard (Check for short):

Symbols (Terminal No.)	Specified condition
Oil control valve (C2–1) or OCV+ (E13–14) – Body ground	No continuity
Oil control valve (C2–2) or OCV– (E13–15) – Body ground	

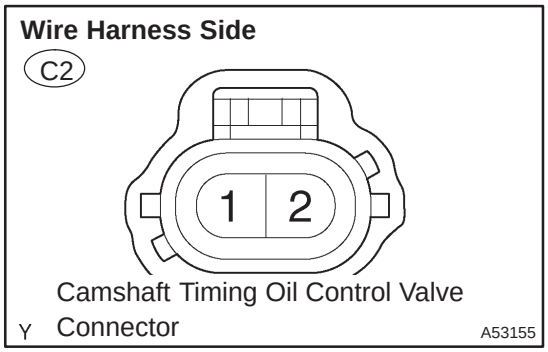

NG → **REPAIR OR REPLACE HARNESS OR CONNECTOR**

OK

CHECK FOR INTERMITTENT PROBLEMS (See page 05–5)

ECM POWER SOURCE CIRCUIT

CIRCUIT DESCRIPTION

When the ignition switch is turned ON, battery positive voltage is applied to terminal IGSW of the ECM and the EFI relay (Marking: EFI) control circuit in the ECM sends a signal to terminal MREL of the ECM switching on the EFI relay.

This signal causes current to flow to the coil, closing the contacts of the EFI relay and supplying power to terminal +B of the ECM.

If the ignition switch is turned off, the ECM continues to switch on the EFI relay for a maximum of 2 seconds for the initial setting of the throttle valve.

WIRING DIAGRAM

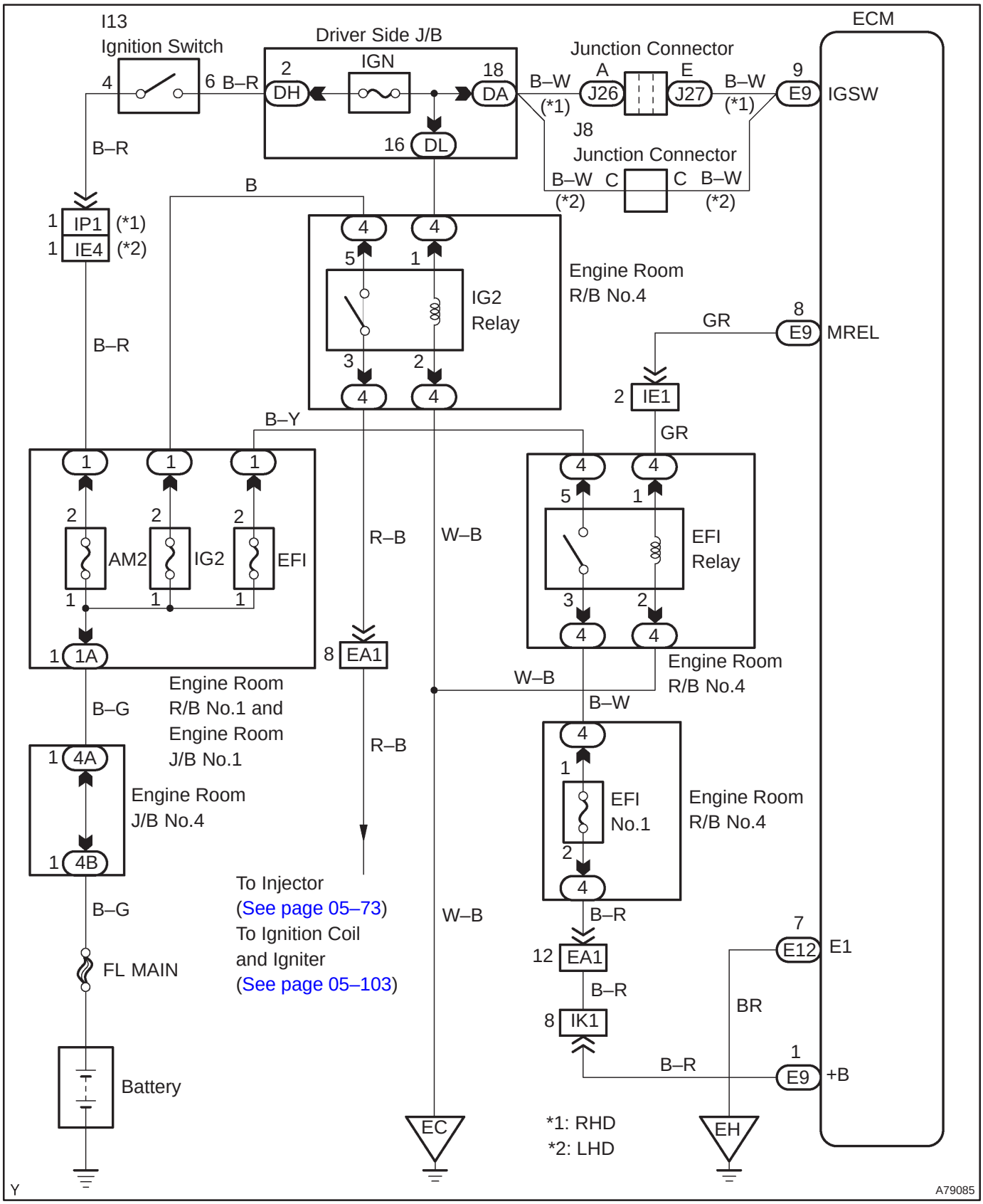

INSPECTION PROCEDURE

1 INSPECT ECM(+B VOLTAGE)

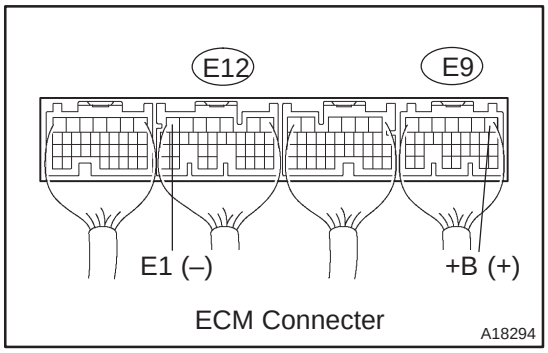

(a) Turn the ignition switch ON.
(b) Measure the voltage between the terminals of the E9 and E12 ECM connector.
Standard:

Symbols (Terminal No.)	Specified condition
+B (E9–1) – E1 (E12–7)	9 to 14 V

OK → **PROCEED TO NEXT CIRCUIT INSPECTION SHOWN ON PROBLEM SYMPTOMS TABLE (See page 05–5)**

NG

2 CHECK HARNESS AND CONNECTOR(ECM – BODY GROUND)

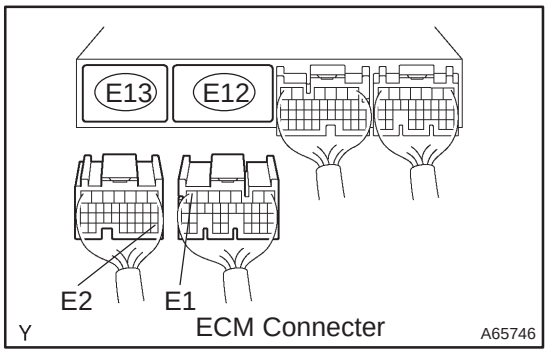

(a) Disconnect the negative (–) battery terminal.
(b) Disconnect the E12 and E13 ECM connector.
(c) Check for continuity between the wire harness side connectors.
Standard (Check for open):

Symbols (Terminal No.)	Specified condition
E1 (E12–7) – Body ground	Continuity
E2 (E13–28) – Body ground	

NG → **REPAIR OR REPLACE HARNESS OR CONNECTOR**

OK

3 INSPECT ECM(IGSW VOLTAGE)

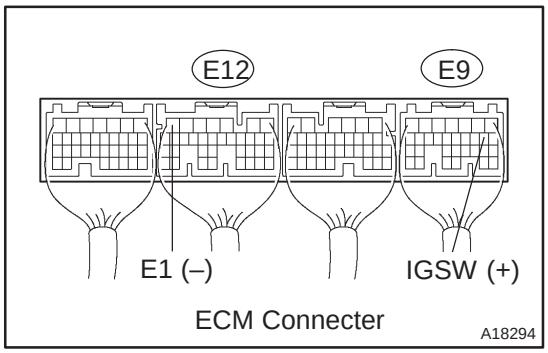

(a) Turn the ignition switch ON.
(b) Measure the voltage between the terminals of the E9 and E12 ECM connector.
Standard:

Symbols (Terminal No.)	Specified condition
IGSW (E9–9) – E1 (E12–7)	9 to 14 V

OK → **Go to step 8**

NG

4 CHECK FUSE(IGN FUSE)

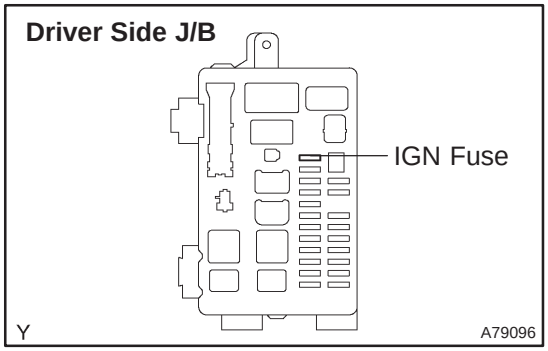

(a) Remove the IGN fuse from the driver side J/B.
(b) Check for continuity in the IGN fuse.
Standard: Continuity

NG → **CHECK FOR SHORT IN ALL HARNESSES AND COMPONENTS CONNECTED FUSE**

OK

5 CHECK FUSE(IG2 FUSE)

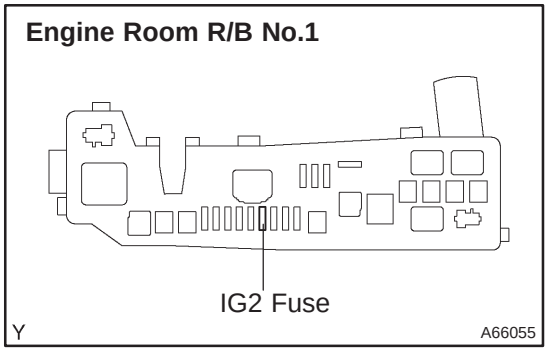

(a) Remove the IG2 fuse from the engine room R/B No.1.
(b) Check for continuity in the IG2 fuse.
Standard: Continuity

NG → **CHECK FOR SHORT IN ALL HARNESSES AND COMPONENTS CONNECTED FUSE**

OK

6 INSPECT IG2 RELAY

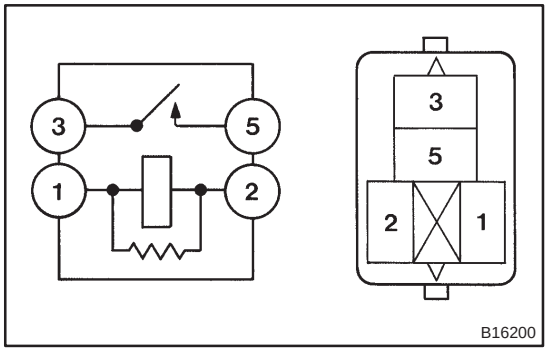

(a) Remove the IG2 relay from the engine room R/B No.4.
(b) Inspect the IG2 relay.
Standard:

Terminal No.	Specified condition
1 – 2	Continuity
3 – 5	No Continuity
	Continuity (Apply battery voltage Terminals 1 and 2)

NG → **REPLACE IG2 RELAY**

OK

7 INSPECT IGNITION OR STARTER SWITCH ASSY

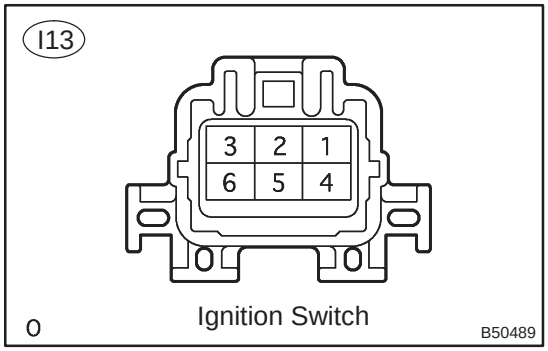

(a) Measure the resistance between the connector terminals shown in the chart below.

Switch	Terminal No.	Resisitance
LOCK	All Terminals	1MΩ or more
ACC	1–3	1Ω or less
ON	1–2, 1–3, 2–3, 5–6	1Ω or less
START	4–5, 4–6, 5–6, 1–2	1Ω or less

NG → **REPLACE IGNITION OR STARTER SWITCH ASSY**

OK

CHECK AND REPAIR HARNESS AND CONNECTOR (BATTERY – IGNITION SWITCH, IGNITION SWITCH – ECM)

8 INSPECT ECM(MREL VOLTAGE)

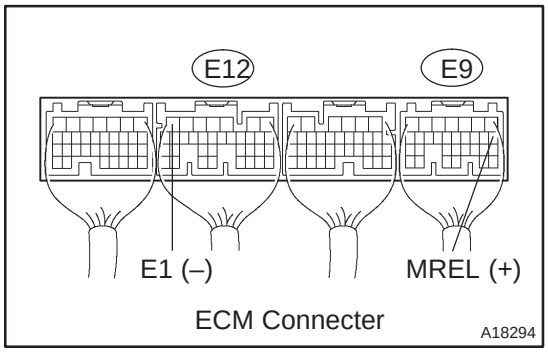

(a) Turn the ignition switch ON.
(b) Measure the voltage between the terminals of the E9 and E12 ECM connector.
Standard:

Symbols (Terminal No.)	Specified condition
MREL (E9–8) – E1 (E12–7)	9 to 14 V

NG → **CHECK AND REPLACE ECM**

OK

9 CHECK FUSE(EFI FUSE)

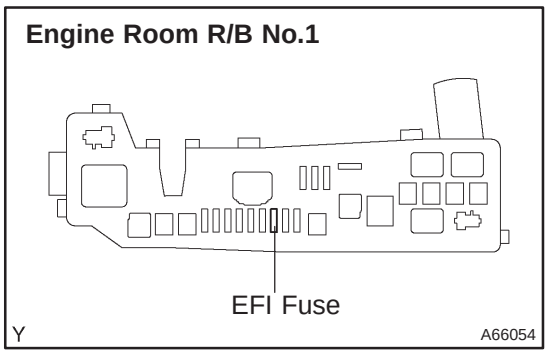

(a) Remove the EFI fuse from the engine room R/B No.1.
(b) Check for continuity in the EFI fuse.
Standard: Continuity

NG → **CHECK FOR SHORT IN ALL HARNESSES AND COMPONENTS CONNECTED FUSE**

OK

10 CHECK FUSE(EFI No.1 FUSE)

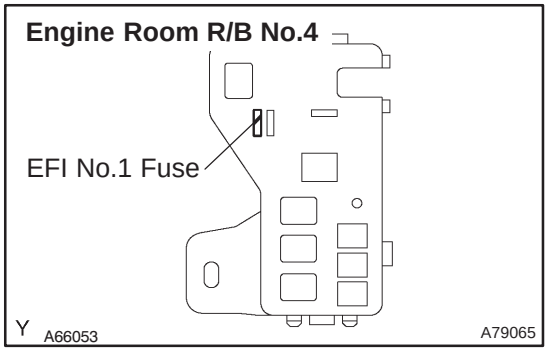

(a) Remove the EFI No.1 fuse from the engine room R/B No.4.
(b) Check for continuity in the EFI No.1 fuse.
Standard: Continuity

NG → **CHECK FOR SHORT IN ALL HARNESSES AND COMPONENTS CONNECTED FUSE**

OK

11 INSPECT EFI RELAY

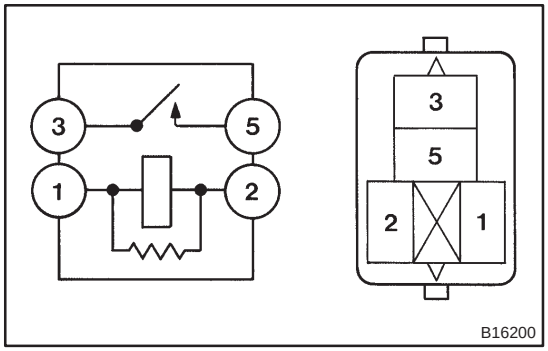

(a) Remove the EFI relay from the engine room R/B No.4.
(b) Inspect the EFI relay.
Standard:

Terminal No.	Specified condition
1 – 2	Continuity
3 – 5	No Continuity
	Continuity (Apply battery voltage Terminals 1 and 2)

NG → **REPLACE EFI RELAY**

OK

12	CHECK HARNESS AND CONNECTOR(EFI RELAY – ECM, EFI RELAY – BODY GROUND)

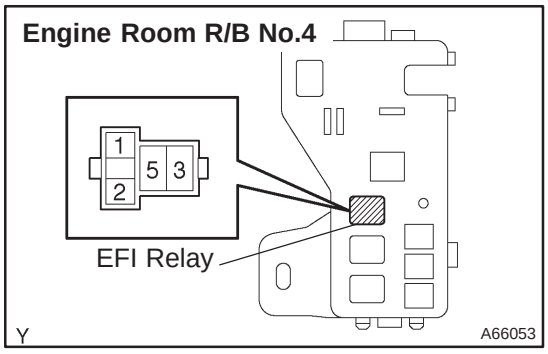

(a) Check the harness and connector between the EFI relay and ECM connector.
(1) Remove the EFI relay from the engine room R/B No.4.
(2) Remove the EFI No.1 fuse from the engine room R/B No.4.
(3) Disconnect the E9 ECM connector.
(4) Check for continuity between the wire harness side connectors.

Standard (Check for open):

Symbols (Terminal No.)	Specified condition
EFI relay (1) – MREL (E9–8)	Continuity
EFI relay (3) – EFI No.1 fuse (1)	
EFI No.1 fuse (2) – +B (E9–1)	

Standard (Check for short):

Symbols (Terminal No.)	Specified condition
EFI relay (1) or MREL (E9–8) – Body ground	No continuity
EFI relay (3) or EFI No.1 fuse (1) – Body ground	
EFI No.1 fuse (2) or +B (E9–1) – Body ground	

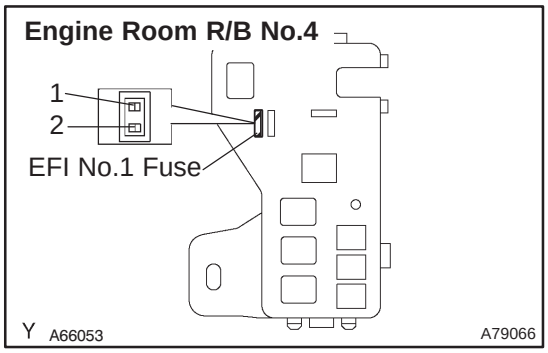

(b) Check the harness and connector between the EFI relay and body ground.
(1) Remove the EFI relay from the engine room J/B No.4.
(2) Check for continuity between the wire harness side connector and the body ground.

Standard (Check for open):

Symbols (Terminal No.)	Specified condition
EFI relay (2) – Body ground	Continuity

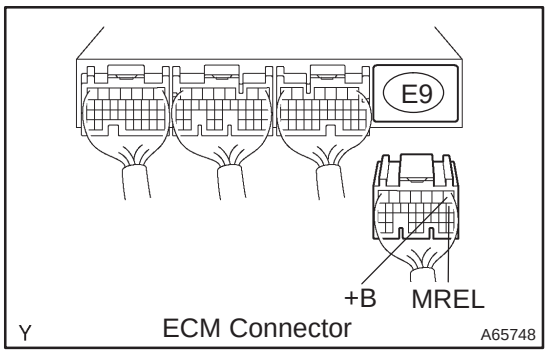

OK → **REPAIR OR REPLACE HARNESS OR CONNECTOR**

NG

CHECK AND REPAIR HARNESS AND CONNECTOR (TERMINAL +B OF ECM – BATTERY POSITIVE TERMINAL)

FUEL PUMP CONTROL CIRCUIT

CIRCUIT DESCRIPTION

In the diagram below, when the engine is cranked, current flows from terminal ST of the ignition switch to the starter relay coil and also current flows to terminal STA of the ECM (STA signal).
When the STA signal and NE signal are input to the ECM, Tr is turned ON, current flows to the coil of the circuit opening relay, the relay switches on, power is supplied to the fuel pump and the fuel pump operates. While the NE signal is generated (engine running), the ECM keeps Tr ON (circuit opening relay ON) and the fuel pump also keeps operating.

WIRING DIAGRAM

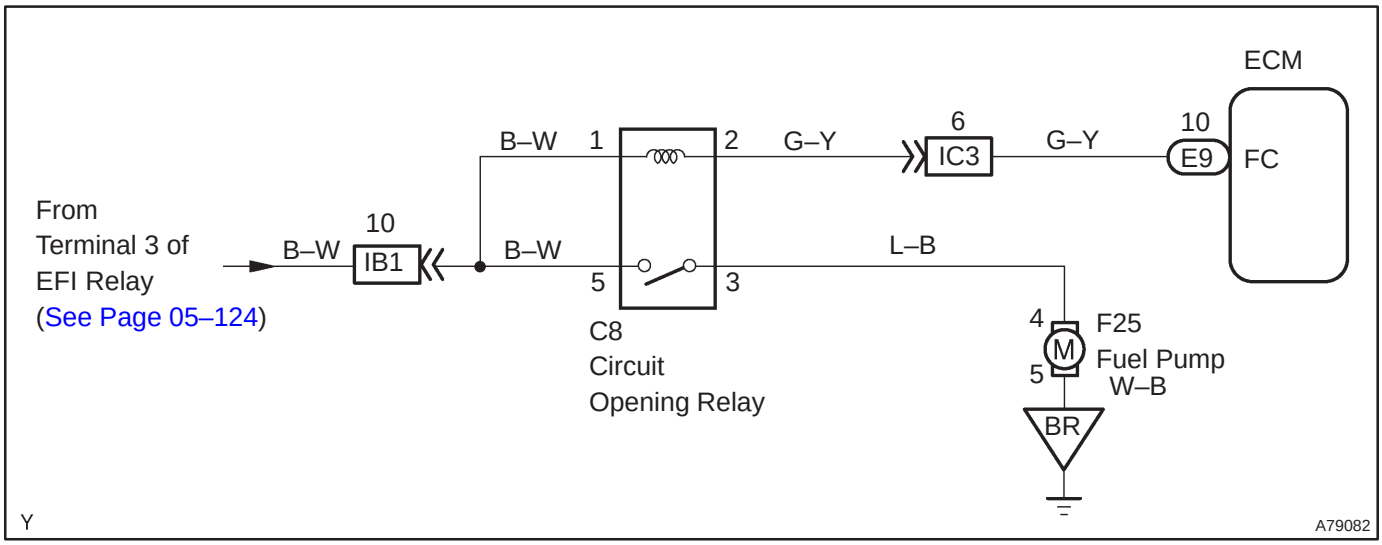

INSPECTION PROCEDURE

1	**PERFORM ACTIVE TEST USING HAND–HELD TESTER(OPERATION OF CIRCUIT OPENING RELAY)**

(a) Turn the ignition switch ON.
(b) Select the item ”DIAGNOSIS / OBD/MOBD / ACTIVE TEST / FUEL PUMP / SPD”.
(c) Perform the active test with the engine stopped.
Result: The circuit opening relay operates.

OK → **PROCEED TO NEXT CIRCUIT INSPECTION SHOWN ON PROBLEM SYMPTOMS TABLE**

NG

2	**CHECK FOR ECM POWER SOURCE CIRCUIT(See page 05–124)**

NG → **REPAIR OR REPLACE POWER SOURCE CIRCUIT**

OK

3 INSPECT CIRCUIT OPENING RELAY

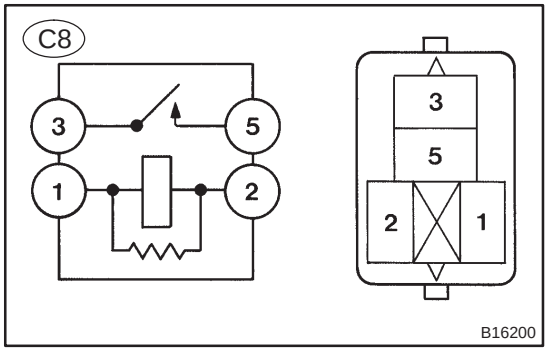

(a) Remove the circuit opening relay.
(b) Inspect the circuit opening relay.

Standard:

Terminal No.	Specified condition
1 – 2	Continuity
3 – 5	No Continuity
	Continuity (Apply battery voltage Terminals 1 and 2)

NG → **REPLACE CIRCUIT OPENING RELAY**

OK

4 INSPECT ECM

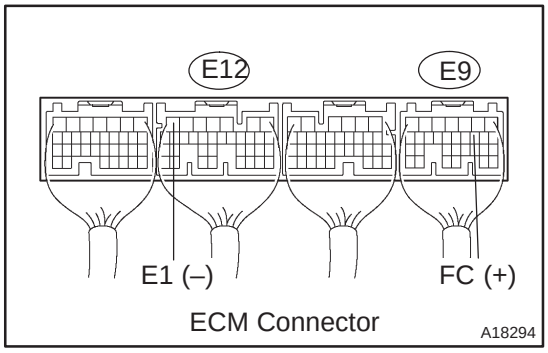

(a) Turn the ignition switch ON.
(b) Measure the voltage between the terminals of the E9 and E12 ECM connector.

Standard:

Symbols (Terminal No.)	Specified condition
FC (E9–10) – E1 (E12–7)	8 to 14 V

OK → **Go to step 6**

NG

5	CHECK HARNESS AND CONNECTOR(EFI RELAY – CIRCUIT OPENING RELAY, CIRCUIT OPENING RELAY – ECM)

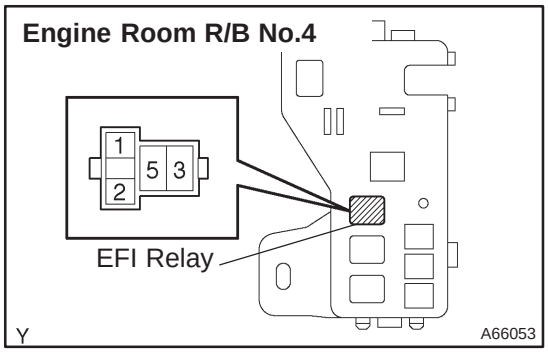

(a) Remove the EFI relay from the engine room R/B No.4.
(b) Remove the circuit opening relay.
(c) Disconnect the E9 ECM connector.
(d) Check for continuity between the wire harness side connectors.

Standard (Check for open):

Symbols (Terminal No.)	Specified condition
EFI relay (3) – Circuit opening relay (C8–1)	Continuity
Circuit opening relay (C8–2) – FC (E9–10)	
EFI relay (1) – MREL (E9–8)	

Standard (Check for short):

Symbols (Terminal No.)	Specified condition
EFI relay (3) or Circuit opening relay (C8–1) – Body ground	No continuity
Circuit opening relay (C8–2) or FC (E9–10) – Body ground	
EFI relay (1) or MREL (E9–8) – Body ground	

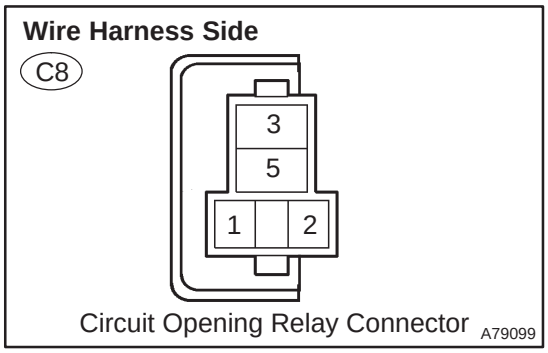

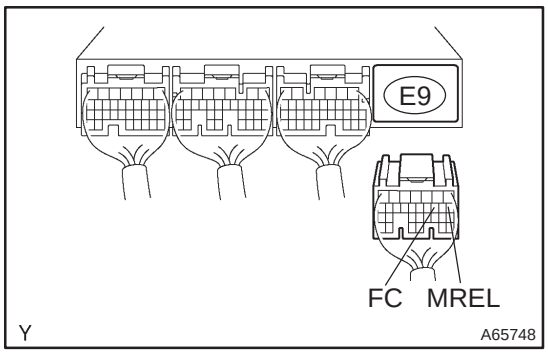

NG → **REPAIR OR REPLACE HARNESS OR CONNECTOR**

OK

CHECK AND REPLACE ECM (See page 01–32)

6	INSPECT FUEL PUMP ASSY (See page 11–8)

NG → **REPAIR OR REPLACE FUEL PUMP ASSY**

OK

7	CHECK HARNESS AND CONNECTOR(CIRCUIT OPENING RELAY – FUEL PUMP, FUEL PUMP – BODY GROUND)

Wire Harness Side

C8

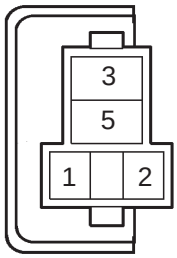

Circuit Opening Relay Connector

A79099

(a) Remove the circuit opening relay.
(b) Disconnect the fuel pump connector.
(c) Check for continuity between the wire harness side connectors.

Standard (Check for open):

Symbols (Terminal No.)	Specified condition
Circuit opening relay (C8–3) – Fuel pump (F24–4)	Continuity
Fuel pump (F25–5) – Body ground	

Standard (Check for short):

Symbols (Terminal No.)	Specified condition
Circuit opening relay (C8–3) or Fuel pump (F24–4) – Body ground	No continuity

Wire Harness Side

F25



Fuel Pump Connector

A66276

NG → **REPAIR OR REPLACE HARNESS OR CONNECTOR**

OK →

CHECK AND REPLACE ECM (See page 01–32)

STARTER SIGNAL CIRCUIT

CIRCUIT DESCRIPTION

When the engine is cranked, the intake air flow becomes slow, so fuel vaporization is poor. A rich mixture is therefore necessary in order to achieve good startability. While the engine is being cranked, the battery voltage is applied to terminal STA of the ECM. The starter signal is mainly used to increase the fuel injection volume for the starting injection control and after–start injection control.

WIRING DIAGRAM

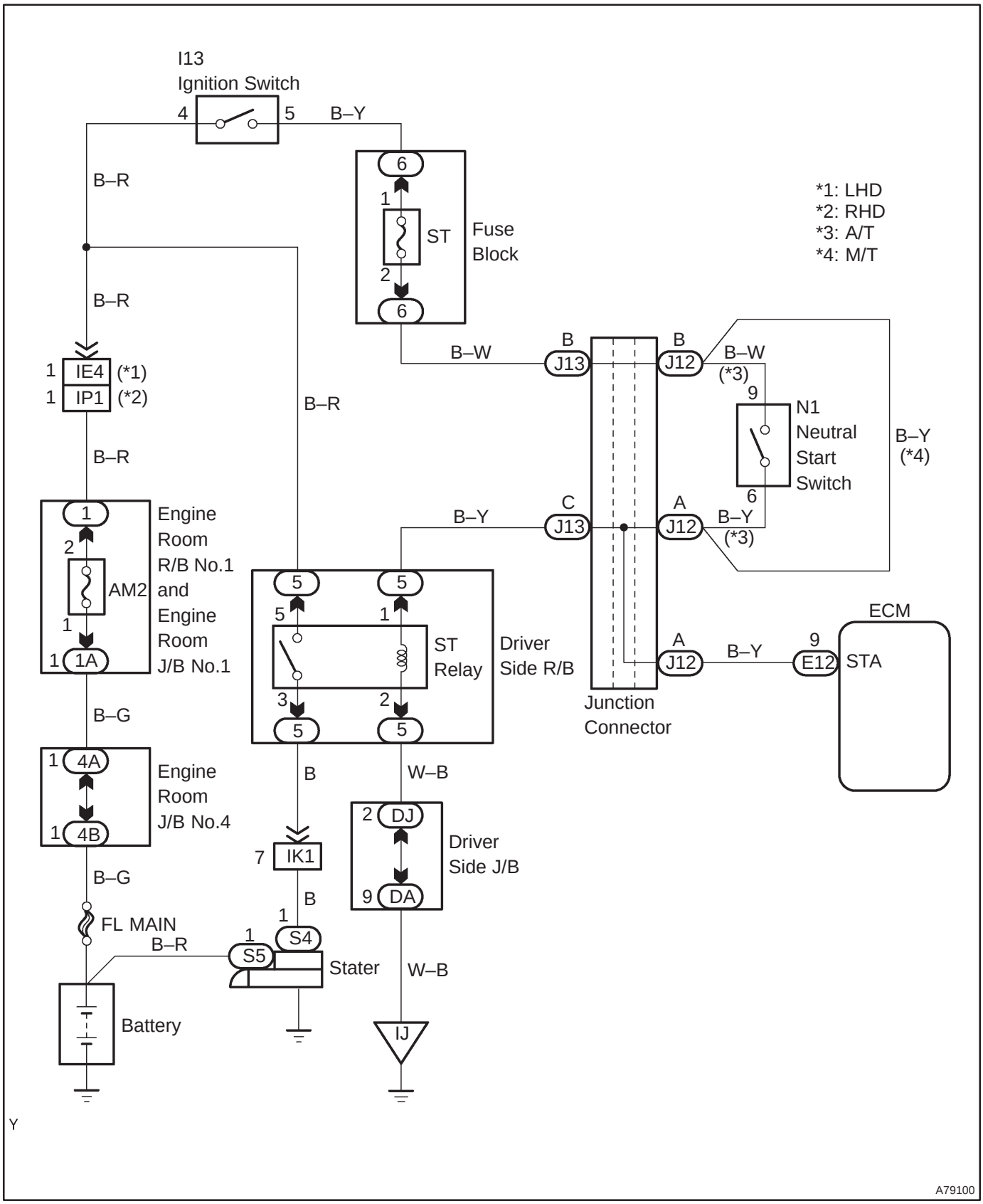

NSPECTION PROCEDURE

HINT:

This diagnostic chart is on the premise that the engine is cranked normally. If the engine is not cranked, proceed to the problem symptoms table on page 05–22.

1	READ VALUE OF HAND–HELD TESTER(STARTER SIGNAL)

(a) Connect the hand–held tester to the DLC3.
(b) Turn the ignition switch ON and push the hand–held tester main switch ON.
(c) Select the item ”DIAGNOSIS / OBD/MOBD / DATA LIST / ALL / STARTER SIG” and read its value displayed on the hand–held tester.

Result:

Ignition Switch Position	ON	START
STA Signal	OFF	ON

OK → **PROCEED TO NEXT CIRCUIT INSPECTION SHOWN ON PROBLEM SYMPTOMS TABLE**

NG

2	CHECK HARNESS AND CONNECTOR(ECM – STARTER RELAY)

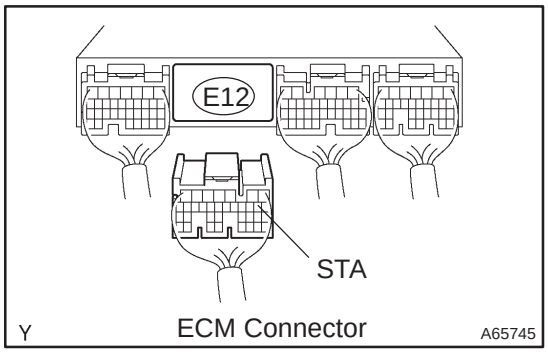

(a) Disconnect the ECM E12 connector.
(b) Remove the starter relay from the driver side R/B.
(c) Check for continuity between the wire harness side connectors.

Standard (Check for open):

Symbols (Terminal No.)	Specified condition
Starter relay (1) – STA (E12–9)	Continuity

Standard (Check for short):

Symbols (Terminal No.)	Specified condition
Starter relay (1) or STA (12–9) – Body ground	No continuity

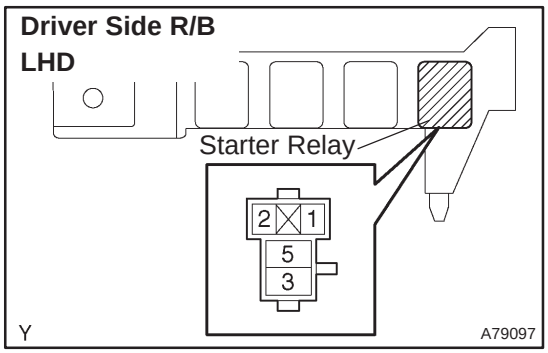

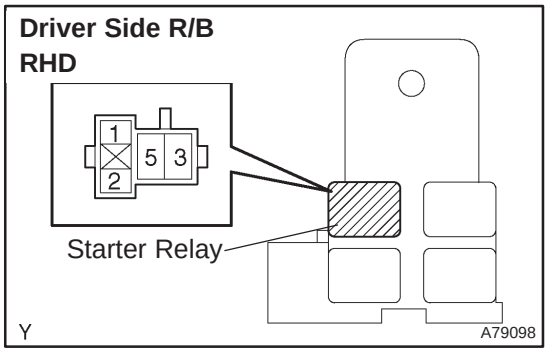

NG → REPAIR OR REPLACE HARNESS OR CONNECTOR

OK

CHECK AND REPLACE ECM (See page 01–32)

CHECK ENGINE WARNING LIGHT CIRCUIT

CIRCUIT DESCRIPTION

If the ECM detects a trouble, the CHK ENG is illuminated. At this time, the ECM records a DTC in the memory.

WIRING DIAGRAM

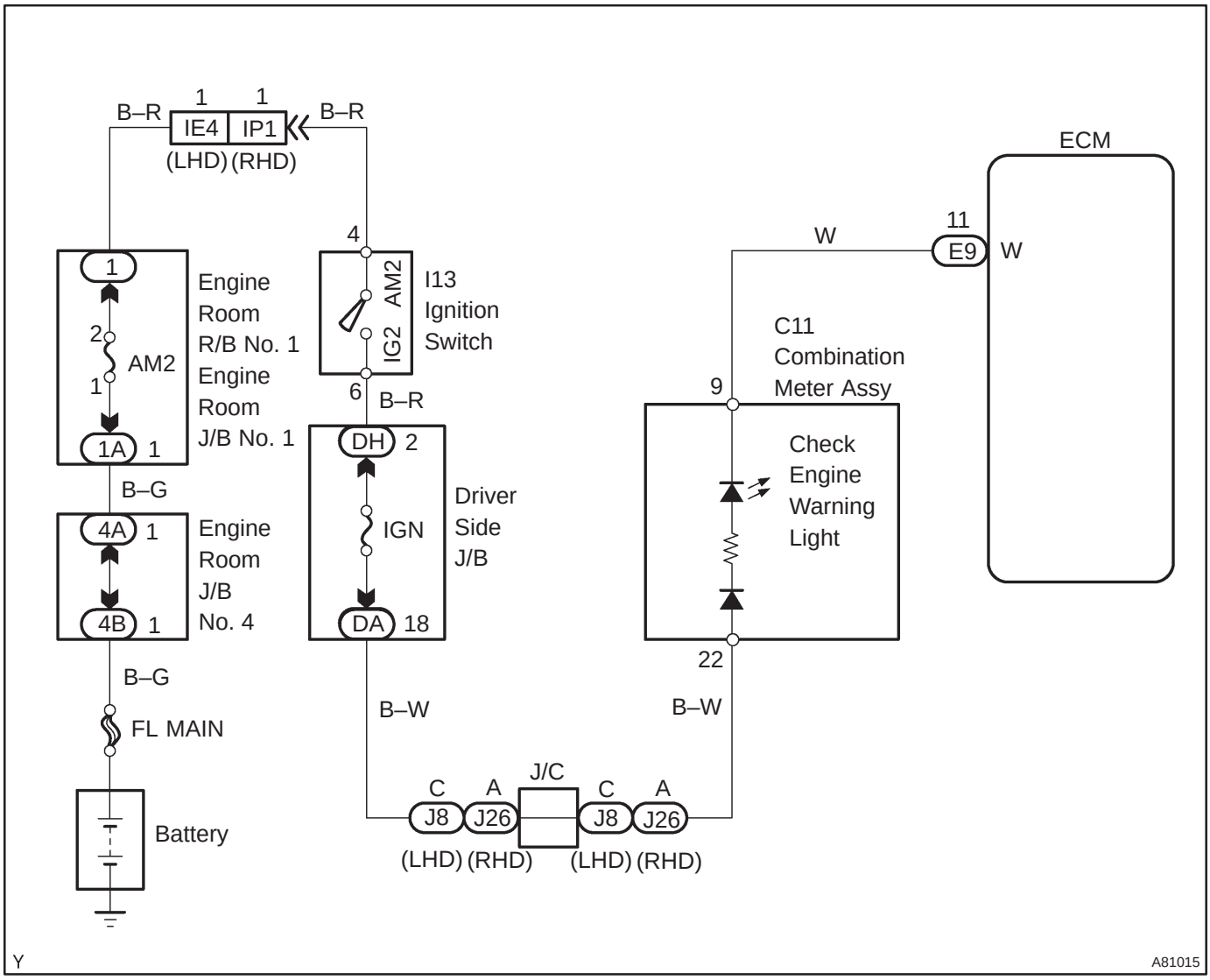

INSPECTION PROCEDURE

HINT:

Troubleshoot each trouble symptom in accordance with the chart below .

CHK ENG remains on	Start inspection from step 1
CHK ENG is not illuminated	Start inspection from step 3

1	CLEAR DTC

(a) Connect the hand–held tester to the DLC 3.
(b) Turn the ignition switch ON and push the hand–held tester main switch ON.
(c) Read the DTC (See page 05–5).
(d) Clear the DTC (See page 05–5).
(e) Check that the CHK ENG is OFF.
Standard: CHK ENG is OFF

OK	REPAIR CIRCUIT INDICATED BY OUTPUT CODE (See page 05–16)

NG

2	CHECK HARNESS AND CONNECTOR(CHECK FOR SHORT IN WIRE HARNESS)

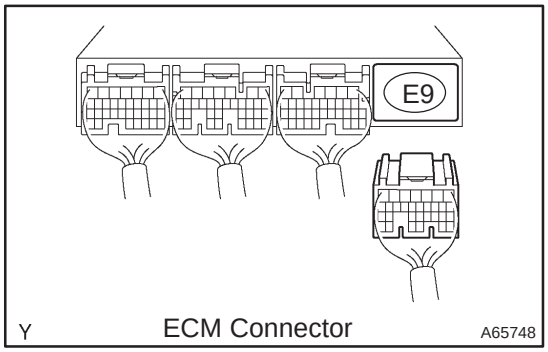

(a) Disconnect the E9 ECM connector.
(b) Turn the ignition switch ON.
(c) Check that the CHK ENG is OFF.
Standard: CHK ENG is OFF

OK	CHECK AND REPLACE ECM (See page 01–32)

NG

CHECK AND REPAIR HARNESS AND CONNECTOR

3	CHECK CHK ENG CONDITION

(a) Check that the CHK ENG is illuminated when turning the ignition switch ON.
Standard: CHK ENG is illuminated

OK	SYSTEM OK

NG

4	INSPECT COMBINATION METER ASSY(CHK ENG CIRCUIT)

(a) See the combination meter troubleshooting on page 05–1509.

NG	REPAIR OR REPLACE BULB OR COMBINATION METER ASSEMBLY

OK

CHECK AND REPAIR HARNESS AND CONNECTOR (COMBINATION METER – ECM)

TC TERMINAL CIRCUIT

CIRCUIT DESCRIPTION

Terminals TC and CG are located in the DLC3. When connecting these terminals, DTCs in normal mode or check mode can be read through the CHK ENG flashing in the combination meter.

WIRING DIAGRAM

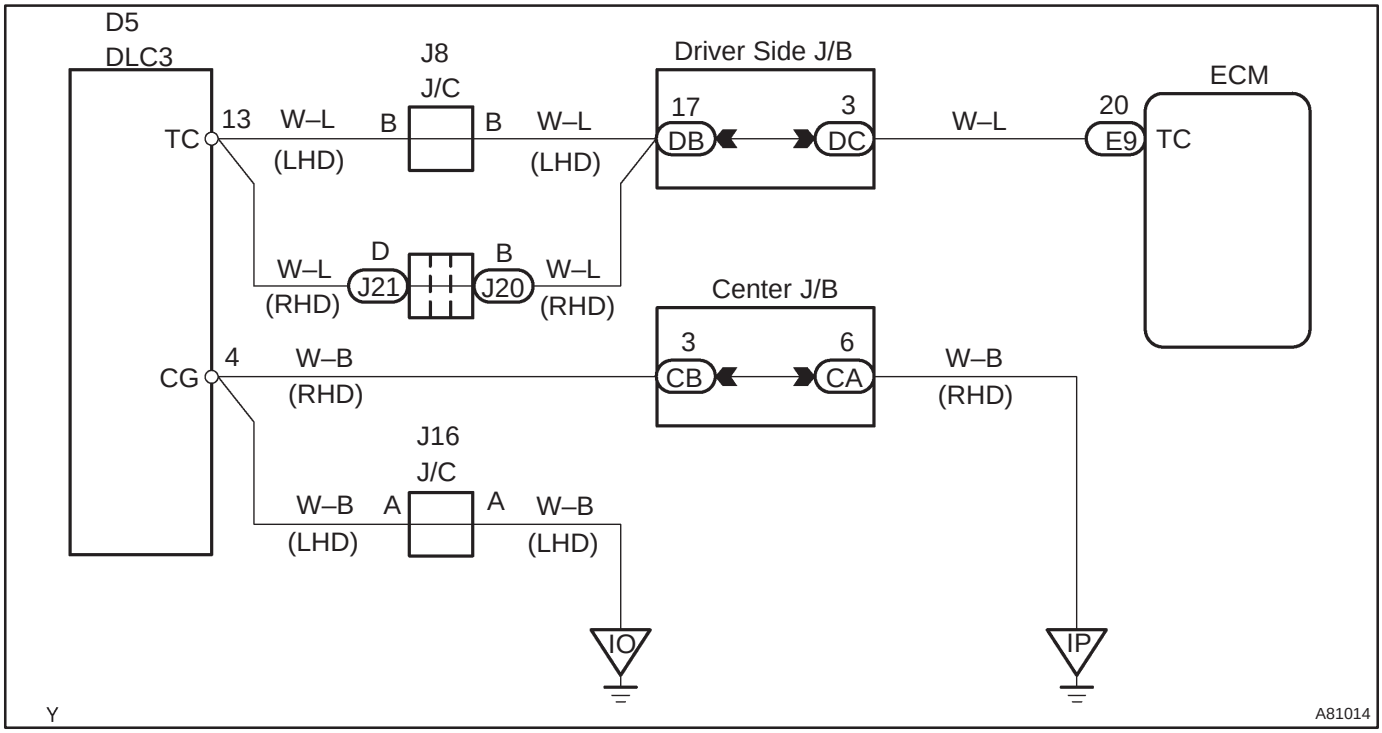

INSPECTION PROCEDURE

HINT:

- Even though terminal TC is not connected to terminal CG, the CHK ENG blinks.
- For the above phenomenon, an open or short in the wire harness, or malfunction inside the ECM is the likely cause.

1	CHECK DLC3(TC VOLTAGE)

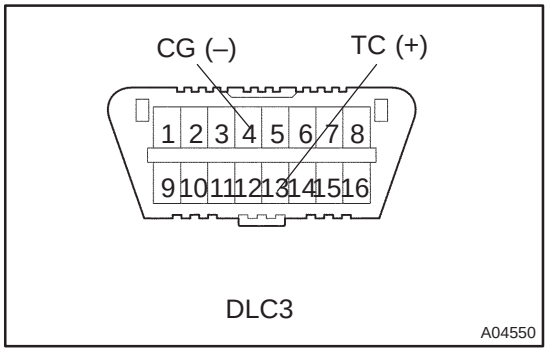

(a) Turn the ignition switch ON.

(b) Measure the voltage between the terminals of the DLC3.

Standard:

Symbols (Terminal No.)	Specified condition
TC (13) – CG (4)	9 to 14 V

OK → **Go to step 3**

NG

2 CHECK HARNESS AND CONNECTOR(DLC3 – ECM)

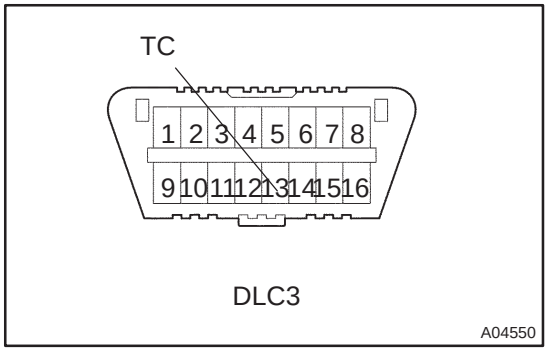

(a) Disconnect the E9 ECM connector.
(b) Check for continuity between the wire harness side connectors.

Standard (Check for open):

Symbols (Terminal No.)	Specified condition
TC (13) – TC (E9–20)	Continuity

Standard (Check for short):

Symbols (Terminal No.)	Specified condition
TC (13) or TC (E9–20) – Body ground	No continuity

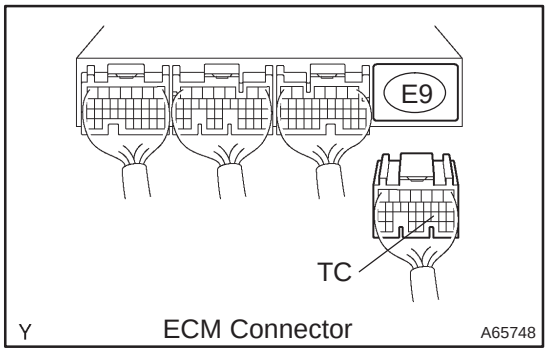

NG → **REPAIR OR REPLACE HARNESS OR CONNECTOR**

OK

CHECK AND REPAIR HARNESS AND CONNECTOR (DLC3 – BODY GROUND)

3 CHECK CHK ENG CONDITION

SST 09843–18040

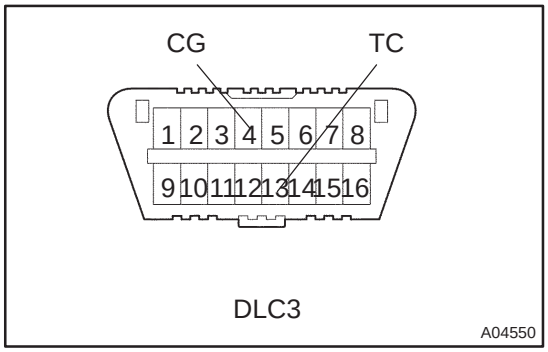

(a) Turn the ignition switch ON.
(b) Connect between terminals TC and CG of the DLC3 connector.
(c) Check that the CHK ENG blinks.

Standard: CHK ENG blinks

NG → **CHECK AND REPLACE ECM (See page 01–32)**

OK

NO PROBLEM

SFI SYSTEM (1AZ–FE)

HOW TO PROCEED WITH TROUBLESHOOTING

05C7H–01

When using hand–held tester, troubleshoot in accordance with the procedure shown below.

1	VEHICLE BROUGHT TO WORKSHOP

2	CUSTOMER PROBLEM ANALYSIS (See page 05–148)

3	CONNECT THE HAND–HELD TESTER TO DLC3

HINT:
If the display indicates a communication fault in the tool, inspect DLC3.

4	CHECK DTC AND FREEZE FRAME DATA (See page 05–149)

HINT:
Record or print DTC and freeze frame data, if needed.

5	CLEAR DTC AND FREEZE FRAME DATA (See page 05–149)

6	VISUAL INSPECTION

7	SETTING THE CHECK (TEST) MODE DIAGNOSIS (See page 05–149)

8	PROBLEM SYMPTOM CONFIRMATION

HINT:
If the engine does not start, perform steps 10 and 12 first.

A	Malfunction does not occur
B	Malfunction occurs

B → GO TO STEP 10

A

9	SYMPTOM SIMULATION

10	DTC CHECK (See page 05–149)

A	Malfunction code
B	No code

B → GO TO STEP 12

A

11	DTC CHART (See page 05–161)

GO TO STEP 14

12	BASIC INSPECTION (See page 05–149)

A	Wrong parts not confirmed
B	Wrong parts confirmed

B → GO TO STEP 17

A

13	PROBLEM SYMPTOMS TABLE (See page 05–168)

A	Wrong circuit confirmed
B	Wrong parts confirmed

B → GO TO STEP 17

A

14	CHECK ECM POWER SOURCE CIRCUIT (See page 05–257)

15	CIRCUIT INSPECTION

A	Malfunction not confirmed
B	Malfunction confirmed

B → GO TO STEP 18

A

16	CHECK FOR INTERMITTENT PROBLEMS (See page 05–149)

GO TO STEP 18

17	PARTS INSPECTION

18	IDENTIFICATION OF PROBLEM

19	ADJUSTMENT, REPAIR

20	CONFIRMATION TEST

END

When not using hand–held tester, troubleshoot in accordance with the procedure shown below.

1	VEHICLE BROUGHT TO WORKSHOP

2	CUSTOMER PROBLEM ANALYSIS (See page 05–148)

3	CHECK AND CLEAR DTC (See page 05–149)

4	PROBLEM SYMPTOM CONFIRMATION

A	Malfunction occurs
B	Malfunction does not occur

B → SYMPTOM SIMULATION (See page 01–22)

A

5	DTC CHECK (See page 05–149)

A	Malfunction code
B	No code

B → GO TO STEP 7

A

6	DTC CHART (See page 05–161)

GO TO STEP 9

7	BASIC INSPECTION (See page 05–149)

A	Wrong parts not confirmed
B	Wrong parts confirmed

B → GO TO STEP 12

A

8	PROBLEM SYMPTOMS TABLE (See page 05–168)

A	Wrong circuit confirmed
B	Wrong parts confirmed

B → GO TO STEP 12

A

9	CHECK ECM POWER SOURCE CIRCUIT (See page 05–257)

10	CIRCUIT INSPECTION

A	Malfunction not confirmed
B	Malfunction confirmed

B → GO TO STEP 13

A

11	CHECK FOR INTERMITTENT PROBLEMS (See page 05–149)

GO TO STEP 13

12	PARTS INSPECTION

13	IDENTIFICATION OF PROBLEM

14	ADJUSTMENT, REPAIR

15	CONFIRMATION TEST

END

05C6L–01

CUSTOMER PROBLEM ANALYSIS CHECK

ENGINE CONTROL SYSTEM Check Sheet

Inspector's Name

Customer's Name		VIN	
Driver's Name		Production Date	
Date Vehicle Brought in		Licence No.	
License No.		Odometer Reading	km miles

Problem Symptoms	☐ Engine does not Start	☐ Engine does not crank ☐ No initial combustion ☐ No complete combustion
	☐ Difficult to Start	☐ Engine cranks slowly ☐ Other _____
	☐ Poor Idling	☐ Incorrect first idle ☐ Idling rpm is abnormal ☐ High (rpm) ☐ Low (rpm) ☐ Rough idling ☐ Other _____
	☐ Poor Driveability	☐ Hesitation ☐ Back fire ☐ Muffler explosion (after–fire) ☐ Surging ☐ Knocking ☐ Other _____
	☐ Engine Stall	☐ Soon after starting ☐ After accelerator pedal depressed ☐ After accelerator pedal released ☐ During A/C operation ☐ Shifting from N to D ☐ Other _____
	☐ Others	

Data Problem Occurred		
Problem Frequency		☐ Constant ☐ Sometimes (times per day/month) ☐ Once only ☐ Other _____
Condition When Problem Occurs	Weather	☐ Fine ☐ Cloudy ☐ Rainy ☐ Snowy ☐ Various/Other _____
	Outdoor Temperature	☐ Hot ☐ Warm ☐ Cool ☐ Cold (approx.____ °C/____ °F)
	Place	☐ Highway ☐ Suburbs ☐ Inner City ☐ Uphill ☐ Downhill ☐ Rough road ☐ Other _____
	Engine Temp.	☐ Cold ☐ Warming up ☐ After Warming up ☐ Any temp. ☐ Other _____
	Engine Operation	☐ Starting ☐ Just after starting (min.) ☐ Idling ☐ Racing ☐ Driving ☐ Constant speed ☐ Acceleration ☐ Deceleration ☐ A/C switch ON/OFF ☐ Other _____

Condition of check engine warning light (CHK ENG)		☐ Remains on ☐ Sometimes lights up ☐ Does not light up
DTC Inspection	Normal mode (Pre–check)	☐ Normal ☐ Malfunction code(s) (code) ☐ Freeze frame data ( )
	Check Mode	☐ Normal ☐ Malfunction code(s) (code) ☐ Freeze frame data ( )

05C6M–01

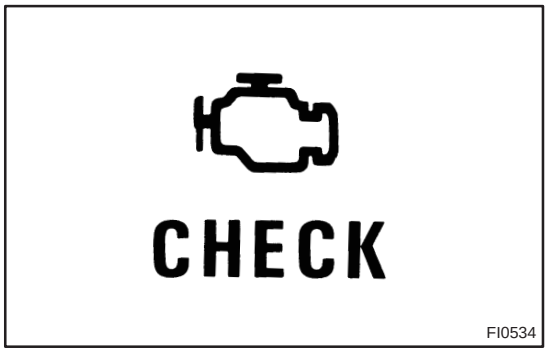

PRE–CHECK

1. DIAGNOSIS SYSTEM

(a) Description for Euro–OBD (European spec.)

- When troubleshooting Euro–OBD vehicles, the only difference from the usual troubleshooting procedure is that you connect the vehicle to the OBD scan tool complying with ISO 15031–4 or hand–held tester, and read the various data output from the vehicle's ECM.
- Euro–OBD regulations require that the vehicle's on–board computer illuminates the check engine warning light (CHK ENG) on the instrument panel when the computer detects a malfunction in the emission control system / components or in the power train control components which affect vehicle emissions, or a malfunction in the computer. In addition to an illumination of the CHK ENG when a malfunction is detected, the applicable Diagnostic Trouble Codes (DTC) prescribed by ISO 15031–4 are recorded in the engine ECU memory (See page 05–161). If the malfunction does not reoccur in 3 consecutive trips, the CHK ENG goes off automatically but the DTCs remain recorded in the ECM memory.

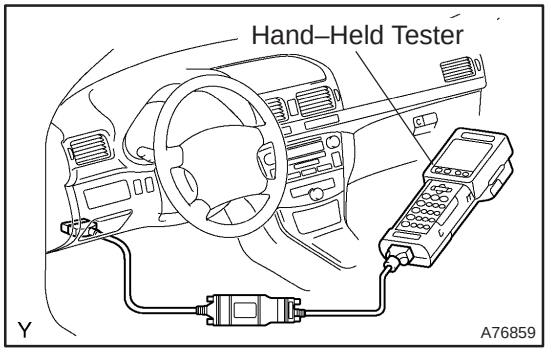

- To check the DTCs, connect the OBD scan tool or hand–held tester to Data Link Connector 3 (DLC3) on the vehicle. The OBD scan tool or hand–held tester also enables you to erase the DTCs and check freezed frame data and various forms of engine data. (For operating instructions, see the OBD scan tool's instruction book.)
  DTCs include ISO controlled codes and manufacturer controlled codes. ISO controlled codes must be set as prescribed by the ISO, while manufacturer controlled codes can be set freely by the manufacturer within the prescribed limits (See DTC chart on page 05–161).
- The diagnosis system operates in the normal mode during normal vehicle use. It also has a check (test) mode for technicians to simulate malfunction symptoms and troubleshoot. Most DTCs use 2 trip detection logic* to prevent erroneous detection, and to ensure a thorough malfunction detection. By switching the ECM to the check (test) mode using hand–held tester when troubleshooting, a technician can cause the CHK ENG to illuminate for a malfunction that is only detected once or momentarily (Hand–held tester only) (See step 3).

- * 2 trip detection logic
  When a logic malfunction is first detected, the pending fault code is stored in the ECM memory (1st trip). If the same malfunction is detected again during the second drive test, this second detection causes the CHK ENG to illuminate (2nd trip) (However, the ignition switch must be turned OFF between the 1st trip and 2nd trip).
- Freeze frame data:
  Freeze frame data records the engine condition when a misfire (DTCs P0300 – P0304) or fuel trim malfunction (DTCs P0171) or other malfunction (first malfunction only), is detected.
  Because freeze frame data records the engine conditions (fuel system, calculated load, engine coolant temperature, fuel trim, engine speed, vehicle speed, etc.) when the malfunction is detected, when troubleshooting it is useful for determining whether the vehicle was running or stopped, the engine warmed up or not, the air–fuel ratio lean or rich, etc. at the time of the malfunction.
- Priorities for troubleshooting:
  If troubleshooting priorities for multiple DTCs are given in the applicable DTC chart, these should be followed.

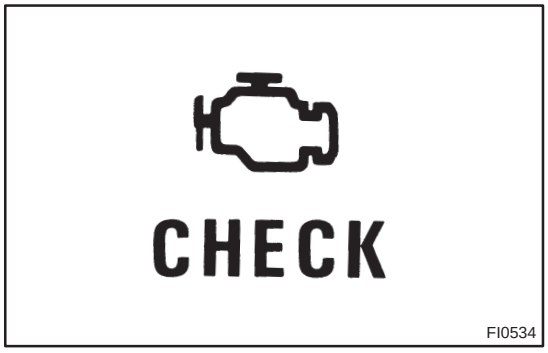

(b) Description for M–OBD (Except European spec.)

- When troubleshoot Multiplex OBD (M–OBD) vehicles, the only difference from the usual troubleshooting procedure is that you connect the hand–held tester to the vehicle, and read the various data output from the vehicle's ECM.
- The vehicle's on–board computer illuminates the check engine warning light (CHK ENG) on the instrument panel when the computer detects a malfunction in the computer itself or in drive system components. In addition to an illumination of the CHK ENG when a malfunction is detected, the applicable Diagnostic Trouble Codes (DTCs) are recorded in the ECM memory (See page 05–161). When the malfunction does not reoccur, the CHK ENG is indicated until the ignition switch is turned off, and then the CHK ENG is not indicated when the ignition switch is turned on but the DTCs remain recorded in the ECM memory.

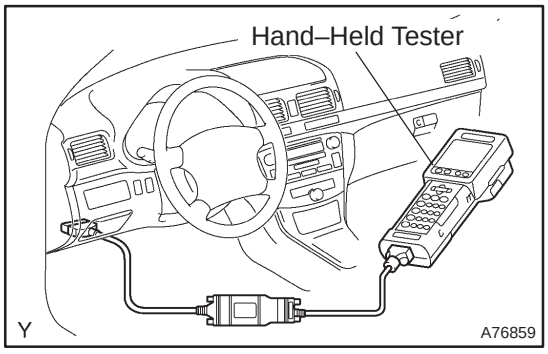

- To check the DTCs, connect the hand–held tester to the Data Link Connector 3 (DLC3) on the vehicle or read the DTC which is indicated on the multi information display when TC and CG terminals on the DLC3 are connected. The hand–held tester also enables you to erase the DTCs and check the freeze frame data and various forms of engine data. (for operating instructions, see the instruction book.)
- The diagnosis system operates in the normal mode during normal vehicle use. It also has a check (test) mode for technicians to simulate malfunction symptoms and troubleshoot. Most DTCs use 2 trip detection logic* to prevent erroneous detection, and to ensure a thorough malfunction detection. By switching the ECM to the check (test) mode using hand–held tester when troubleshooting, a technician can cause the CHK ENG to illuminate for a malfunction that is only detected once or momentarily (Hand–held tester only) (See step 3).
- * 2 trip detection logic
  When a logic malfunction is first detected, the pending fault code is stored in the ECM memory (1st trip). If the same malfunction is detected again during the second drive test, this second detection causes the CHK ENG to illuminate (2nd trip) (However, the ignition switch must be turned OFF between the 1st trip and 2nd trip).
- Freeze frame data:
  Freeze frame data records the engine conditions (fuel system, calculator load, water temperature, fuel trim, engine speed, vehicle speed, etc.) when a malfunction is detected. When troubleshooting, it is useful for determining whether the vehicle was running or stopped, the engine was warmed up or not, the air–fuel ratio was lean or rich, etc. at the time of the malfunction.

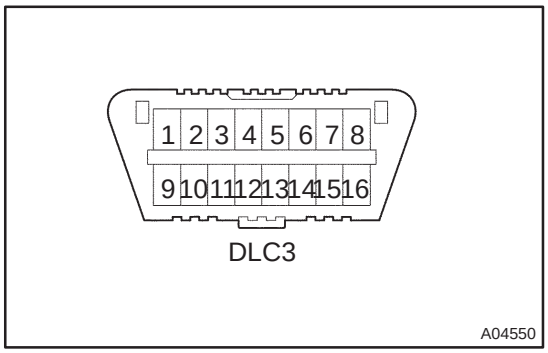

(c) Check the DLC3.
The vehicle's ECM uses the ISO 14230(M–OBD) communication protocol. The terminal arrangement of DLC3 complies with ISO 15031–03 and matches the ISO 14230 format.

Terminal No.	Connection / Voltage or Residence	Condition
7	Bus + Line / Pulse generation+	During transmission
4	Chassis Ground – Body Ground / 1 Ω or less	Always
16	Battery Positive – Body Ground / 9 to 14 V	Always

HINT:
If the display shows ”UNABLE TO CONNECT TO VEHICLE” when you have connected the cable of the hand–held tester to the DLC3, turned the ignition switch ON and operated the hand–held tester, there is a problem on the vehicle side or tool side.

- If communication is normal when the tool is connected to another vehicle, inspect the DLC3 on the original vehicle.
- If communication is still impossible when the tool is connected to another vehicle, the problem is probably in the tool itself, so consult the Service Deparment listed in the tool’s instruction manual.

(d) Inspect the battery voltage.
Battery voltage: 11 to 14 V

If voltage is below 11V, recharge the battery before proceeding.

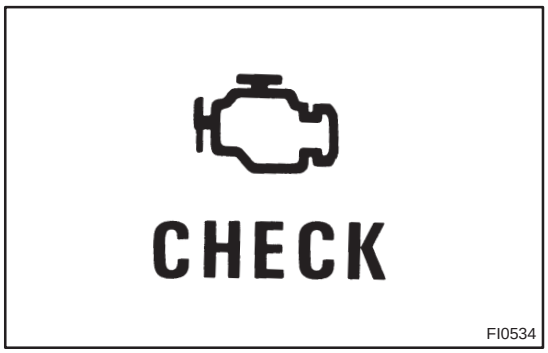

(e) Check the CHK ENG.
(1) The CHK ENG lamp comes on when the ignition switch is turned ON and the engine is not running.

HINT:
If the CHK ENG lamp is not illuminated, troubleshoot the combination meter.

(2) When the engine is started, the CHK ENG should go off. If the lamp remains on, it means that the diagnosis system has detected a malfunction or abnormality in the system.

2. DTC CHECK (Nomal Mode) :

NOTICE:

Hand–held tester only:

When the diagnosis system is switched from the normal mode to the check (test) mode, it erases all DTCs and freeze frame data recorded in the normal mode. So before switching modes, always check the DTCs and freeze frame data, and then write them down.

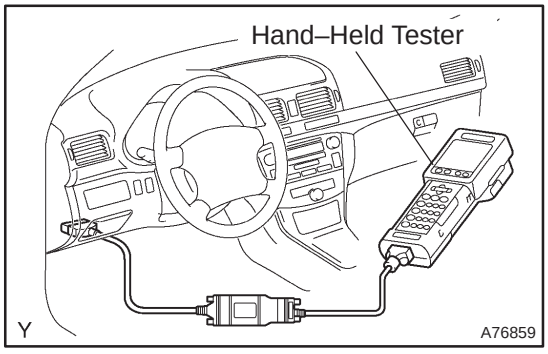

(a) Checking DTCs using the hand–held tester.
(1) Connect the hand–held tester to the DLC3.
(2) Turn the ignition switch ON and switch the hand–held tester main switch ON.
(3) Use the hand–held tester to check the DTCs and freeze frame data and then write them down. The hand–held tester’s instruction book.
(4) See page 05–161 to confirm the details of the DTCs.

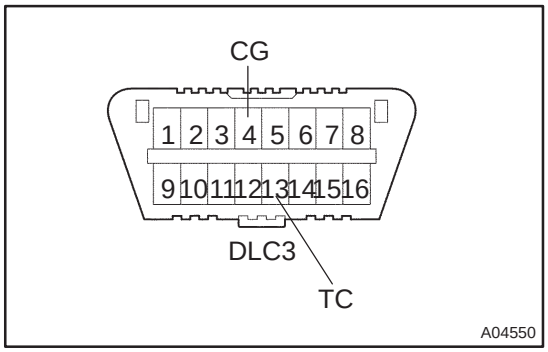

(b) If you have no hand–held tester, perform the following steps (1) to (6).
(1) Turn the ignition switch ON.
(2) Using SST, connect between terminals 13 (TC) and 4 (CG) of the DLC3.
SST 09843–18040

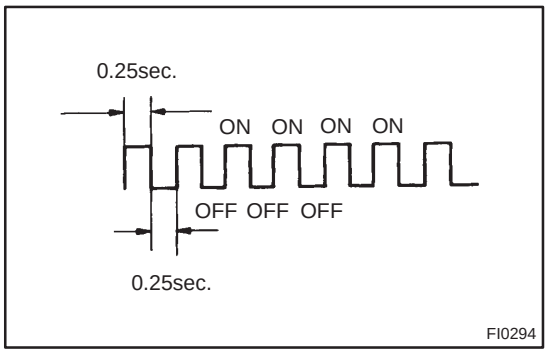

(3) Read DTC by observing the CHK ENG lamp. If any DTC is not detected, the CHK ENG lamp blinks as shown in the illustration.

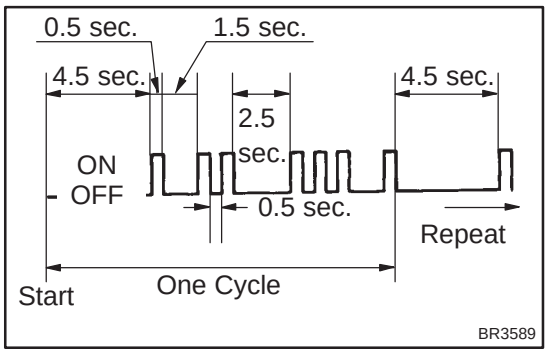

(4) Example
If DTC 12 and DTC 31 are detected, the CHK ENG flashes 1 time (for 0.5 sec) and flashes 2 times after the 1.5 sec interval, then flashes 3 times after a 2.5 sec interval from the previous DTC and flashes 1 time.
If the interval between the previous DTC and the next DTC is 4.5 sec, it means the previous DTC is the last one of the multiple string DTCs. The CHK ENG lamp repeats the indication of DTCs from the initial cycle. (Refer to the illustration on the left)
(5) Check the details of the malfunction using the DTC chart on page 05–16.
(6) After completing the check, disconnect terminals 13 (TC) and 4 (CG) and turn off the display.

HINT:
In the event that 2 or more DTCs are detected, the CHK ENG lamp will indicate the smaller number DTC first.

(c) Clearing the DTCs using the hand–held tester:
(1) Connect the hand–held tester to the DLC3.
(2) Turn the ignition switch ON.
(3) When operating hand–held tester to erase the codes, the DTCs and freeze frame data will be erased. (See the hand–held tester's instruction book for operating instructions.)

(d) Clearing the DTCs not using the hand–held tester:
(1) Disconnect the battery terminal or remove the EFI fuse for more than 60 seconds.

3. DTC CHECK (Check Mode):

HINT:

Hand–held tester only:

Compared to the normal mode, the check mode has more sensing ability to detect malfunctions.

Furthermore, the same diagnostic items which are detected in the normal mode can also be detected in the check (test) mode.

(a) Proceduce for check mode using hand–held tester.

(1) Check the initial conditions
- Battery positive voltage 11V or more.
- Throttle valve fully closed.
- Transmission in the ”P” or ”N” position.
- Air conditioning switched OFF.

(2) Turn the ignition switch OFF.

(3) Connect the hand–held tester to the DLC3.

(4) Turn the ignition switch and the hand–held tester main switch ON.

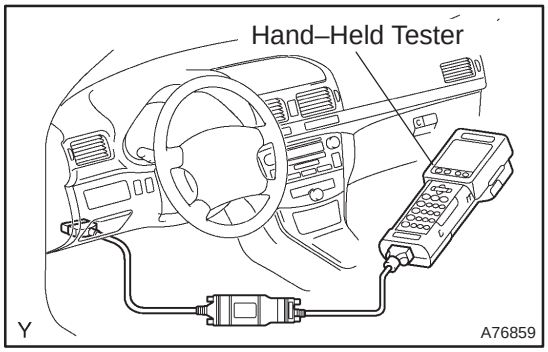

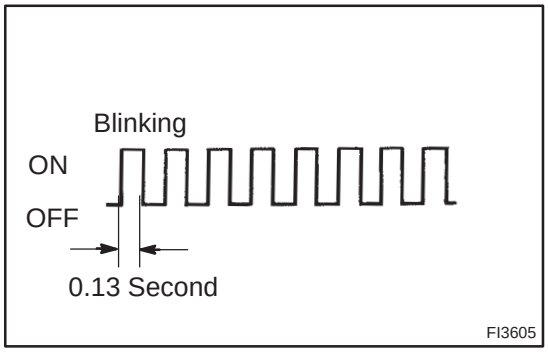

(5) Switch the hand–held tester from the normal mode to the check (test) mode. The CHK ENG blinks in 0.13 sec interval as shown in the illustration.

NOTICE:

If the hand–held tester switches the ECM from the normal mode to the check mode or vice–versa, or if the ignition switch is turned from ON to ACC or OFF during the check mode, the DTC and freeze frame data will be erased.

(6) Start the engine. (The CHK ENG lamp goes out after the engine start.)

(7) Simulate the conditions of the malfunction described by the customer.

NOTICE:

Leave the ignition switch ON until you have checked the DTC, etc.

(8) After simulating the malfunction conditions, use the hand–held tester diagnosis selector to check the DTCs and freeze frame data, etc.

HINT:

Be sure not to turn the ignition switch OFF, because the diagnosis system is changed from the check mode to the nomal mode and will result in all of the DTCs and freeze frame data being erased.

(9) After checking the DTCs, inspect the applicable circuit.

(b) Clearing the DTCs using the hand–held tester
(1) Connect the hand–held tester to DLC3.
(2) Turn the ignition switch ON.
(3) When operating hand–held tester to erase the codes, the DTCs and freeze frame data will be erased. (See the hand–held tester's instruction book for operating instructions.)

(c) Clearing the DTCs not using the hand–held tester:
(1) Disconnecting the battery terminal or remove the EFI fuse for more than 60 seconds.

4. FAIL–SAFE CHART

If any of the following codes are recorded, the engine ECM enters the fail–safe mode.

DTC No.	Fail–Safe Operation	Fail–Safe Deactivation Conditions
P0031/21 P0032/21 P0051/28 P0052/28	The heater circuit in which the abnormality is detected is turned off	Ignition switch OFF
P0100/31 P0102/31 P0103/31	Ignition timing is calculated from engine speed and a throttle angle	If the ECM detects "Pass" condition, the ECM will return to "Nomal mode".
P0110/24 P0112/24 P0113/24	Intake air temp. is fixed at 20°C (68°F)	If the ECM detects "Pass" condition, the ECM will return to "Nomal mode".
P0115/22 P0117/22 P0118/22	Engine coolant temp. is fixed at 80°C (176°F)	If the ECM detects "Pass" condition, the ECM will return to "Nomal mode".
P0120/41 P0122/41 P0123/41	Fuel cut intermittently while idling	Returned to normal condition and ignition switch OFF
P0325/52 P0327/52 P0328/52	Max. timing retardation	Ignition switch OFF
P0351/14 P0352/15 P0353/14 P0354/15	Fuel cut	If the ECM detects "Pass" condition, the ECM will return to "Nomal mode".

5. CHECK FOR INTERMITTENT PROBLEMS

Hand–held tester only:

By putting the vehicle's engine ECM in check (test) mode, 1 trip detection logic is possible instead of 2 trip detection logic, and sensitivity to detect faults is increased. This makes it easier to detect intermittent problems.

(a) Clear the DTC. (See step 3.)
(b) Set the check (test) mode. (See step 3.)
(c) Perform a simulation test. (See page 01–22)
(d) Check the connector and terminal. (See page 01–32)
(e) Wiggle the harness and the connector. (See page 01–32)

6. DATA LIST

HINT:

Using the DATA LIST displayed by the hand–held tester, you can read the value of the switches, sensors, actuators and so on without parts removal. Reading the DATA LIST as a first step of troubleshooting is one of the method to shorten diagnostic time.

NOTICE:

The values given below for ”Normal Condition” are representative values. A vehicle may still be normal even if the measured values are a little different from those listed here. Do not decide whether a part is faulty or not solely according to the ”Normal Condition” here.

(a) Warm up the engine.
(b) Turn the ignition switch OFF.
(c) Connect the Hand–held tester to the DLC3.
(d) Turn the ignition switch ON.
(e) Push the ”ON” button of the hand–held tester.
(f) Select the item ”DIAGNOSIS / OBD/MOBD / DATA LIST / ALL”.
(g) According to the display on tester, read the ”DATA LIST”.

Hand–held Tester Display	Measurement Item/Range (Display)	Normal Condition	Diagnostic Note
INJECTOR	Injection period/ Min.: 0 ms, Max.: 32.64 ms	Idling: 1.92 to 3.37 ms	—
IGN ADVANCE	Ignition timing advance/ Min.: –64 deg., Max.: 63.5 deg.	Idling: BTDC 5 to 15 deg.	—
CALC LOAD	Calculated load by engine ECM/ Min.: 0 %, Max.: 100 %	• Idling: 3.3 to 26.7 % • Running without load (2,500 rpm): 12.0 to 14.7 %	—
MAF	Air flow rate from MAF sensor/ Min.: 0 gm/s, Max.: 655 gm/s	• Idling: M/T 0.54 to 4.33 gm/sec. A/T 0.58 to 4.67 gm/sec. • Runnning without load (2,500 rpm): 3.33 to 9.17 gm/sec.	—
ENGINE SPD	Engine Speed/ Min.: 0 rpm, Max.: 16,383 rpm	Idling: M/T 650 to 750 rpm A/T 550 to 750 rpm	—
COOLANT TEMP	Coolant temperature/ Min.: –40 °C, Max.: 140 °C	After warming up: 80 to 95°C (176 to 203°F)	If the value is ”–40 °C” or ”140 °C”, sensor circuit is open or shorted.
INTAKE AIR	Intake air temperature/ Min.: –40 °C, Max.: 140 °C	Equivalent to ambient temp.	
THROTTLE POS	Absolute throttle position sensor/ Min.: 0 %, Max.: 100 %	• Throttle fully closed: 6 to 16 % • Throttle fully open: 64 to 98 %	Read the value with ignition switch ON (Do not start engine)
CTP SW	Closed throttle position switch/ ON or OFF	• Throttle fully closed: ON • Throttle open: OFF	—
VEHICLE SPD	Vehicle speed/ Min.: 0 km/h, Max.: 255 km/h	Vehicle stopped: 0 km/h (0 mph)	—
O2S B1 S2	Oxygen sensor output voltage of the bank 1 sensor 2/ Min.: 0 V, Max.: 1.275 V	Idling: 0.1 to 0.9 V	—
AFS B1 S1	A/F sensor output voltage of the bank 1 sensor 1/ Min.: 0 V, Max.: 7.999 V	Idling: 2.8 to 3.8 V	—

SHORT FT #1	Short term fuel trim of bank 1/ Min.: –100 %, Max.: 100%	0 ± 20 %	—
LONG FT #1	Long term fuel trim of bank 1/ Min.: –100 %, Max.: 100 %	0 ± 20 %	—
TOTAL FT #1	Total fuel trim of bank 1/ Min.: 0.5, Max.: 1.496	Idling: 0.5 to 1.4	—
TOTAL FT #2	Total fuel trim of bank 2/ Min.: 0.5, Max.: 1.496	Idling: 0.5 to 1.4	—
AF FT B1 S1	Short term fuel trim associated with the bank 1, sensor 1/ Min.: 0, Max.: 1.999	• Lean: 0 < 1 • Stoichiometric Air–Fuel Ratio = 1 • Rich: 1 < 1.999	—
FUEL SYS #1	Fuel system status (Bank1) / OL or CL or OLDRIVE or OLFAULT or CLFAULT	Idling after warming up: CL	• OL: Open Loop–has not yet satisfied conditions to go closed loop. • CL: Closed Loop–using oxygen sensor(s) as feed back for fuel control. • OL DRIVE: Open loop due to driving conditions. (power enrichment, deceleration enleanment) • OL FAULT: Open loop due to detected system fault. • CL FAULT: Closed loop, but fault with at least one oxygen sensor may be using single oxygen sensor for fuel control.
FC IDL	Idle fuel cut / ON or OFF	Fuel cut operation: ON	—
CHK ENG	CHK ENG status / ON or OFF	CHK ENG ON: ON	—
STARTER SIG	Starter signal / ON or OFF	Cranking: ON	—
A/C SIG	A/C signal / ON or OFF	A/C ON: ON	—
PNP SW [NSW]	Neutral position switch signal / ON or OFF	P or N position: ON	—
ELECT LOAD SIG	Electrical load signal / ON or OFF	Defogger switch ON: ON	—
STOP LIGHT SW	Stop light switch / ON or OFF	• Brake pedal depressed: ON • Brake pedal released: OFF	—
PS OIL PRESS SW	Power steering signal / ON or OFF	Steering position is; center: OFF Except center:ON	—
PS SIGNAL	Power steering signal/ ON or OFF	• After engine start: OFF • After steer the steering: ON	—
FUEL PUMP / SPD	Fuel pump / speed status / ON/H or OFF/M,L	Idling: ON	—
EVAP VSV	VSV status for EVAP control / ON or OFF	VSV operating: ON	—
VVT CTRL B1	VVT control status / ON or OFF	VVT system operation: ON	—
IGNITION	Ignition counter/ Min.: 0, Max.: 400	0 to 400	—
CYL #1, #2, #3, #4	Misfire ratio of the cylinder 1/ Min.: 0 %, Max.: 50 %	0 %	—

THROTTLE POS	Throttle position sensor output voltage/ Min.: 0 V, Max.: 5 V	• Throttle fully closed: 0.3 to 0.8 V • Throttle fully open: 3.2 to 4.9 V	Read the value with ignition switch ON (Do not start engine)
THROTTLE TARGT	Target position of throttle valve/ Min.: 0 V, Max.: 5 V	Idling: 0.4 to 1.0 V	Read the value with ignition switch ON (Do not start engine)

If no conditions are specifically stated for ”Idling”, it means the shift lever is at N or P position, the A/C switch is OFF and all accessory switches are OFF.

7. ACTIVE TEST

HINT:

Performing the ACTIVE TEST using the hand–held tester allows the relay, VSV, actuator and so on to operate without parts removal. Performing the ACTIVE TEST as a first step of troubleshooting is one of the method to shorten diagnostic time.

It is possible to display the DATA LIST during the ACTIVE TEST.

(a) Warm up the engine.
(b) Turn the ignition switch OFF.
(c) Connect the hand–held tester to the DLC3.
(d) Turn the ignition switch ON.
(e) Push the ”ON” button of the hand–held tester.
(f) Select the item ”DIAGNOSIS / OBD/MOBD / ACTIVE TEST”.
(g) According to the display on tester, perform the ”ACTIVE TEST”.

Hand–held Tester Display	Test Details	Diagnostic Note
INJ VOL	[Test Details] Control the injection volume Min.: –12.5 %, Max.: 25 % [Vehicle Condition] Engine speed: 3000 rpm or less.	• All injectors are tested at once. • Injection volume is gradually changed between –12.5 and 25%.
A/F CONTROL	[Test Details] Control the injection volume –12.5 % ⇔ 25 % (Change the injection volume –12.5 % or 25 %.) [Vehicle Condition] Engine speed: 3000 rpm or less.	The following procedure of A/F CONTROL enables the technician to check and graph the voltage outputs of both the A/F sensor and heated oxygen sensor. To display the graph indication, select O2S B1 S1 or A/F B1S1 and press button ”4” after selecting ”ACTIVE TEST/A/F CONTROL/ USER DATA”.
EVAP VSV (ALONE)	[Test Details] Activate the VSV for EVAP control. ON or OFF	—
FUEL PUMP / SPD	[Test Details] Control the fuel pump. ON or OFF	—
VVT CTRL B1	[Test Details] Activate the VVT system. ON or OFF	• ON: Rough idle or engine stall. • OFF: Normal engine speed.
TC/TE1	[Test Details] Connect the TC and TE1 ON or OFF	—
FC IDL PROHBT	[Test Details] Control the idle fuel cut prohibit ON or OFF	—

BASIC INSPECTION

When the malfunction is not confirmed in the DTC check, troubleshooting should be carried out in all the possible circuits considered as causes of the problem. In many cases, by carrying out the basic engine check shown in the following flow chart, the location causing the problem can be found quickly and efficiently. Therefore, using this check is essential in the engine troubleshooting.

1	CHECK BATTERY VOLTAGE

NOTICE:
Carry out this check with the engine stopped and ignition switch off.

Reference:

	OK	NG
Voltage	11 V or more	Less than 11 V

NG → **CHARGE OR REPLACE BATTERY**

OK

2	CHECK IF ENGINE WILL CRANK

NG → **PROCEED TO PROBLEM SYMPTOMS TABLE ON PAGE 05–168**

OK

3	CHECK IF ENGINE STARTS

NG → **GO TO STEP 6**

OK

4	CHECK AIR FILTER

(a) Visually check that the air filter is not excessively dirty or oily.

HINT:
If necessary, clean the filter with compressed air. First blow from the inside thoroughly, then blow from the outside of filter.

NG → **REPAIR OR REPLACE**

OK

5	CHECK IDLE SPEED (See page 14–101)

NG → **PROCEED TO PROBLEM SYMPTOMS TABLE ON PAGE 05–168**

OK

6	CHECK FUEL PRESSURE (See page 11–19)

NG → PROCEED TO PAGE 11–15 AND CONTINUE TO TROUBLESHOOT

OK

7	CHECK FOR SPARK (See page 18–7)

NG → PROCEED TO PAGE 18–7 AND CONTINUE TO TROUBLESHOOT

OK

PROCEED TO PROBLEM SYMPTOMS TABLE ON PAGE

05C6N–01

DIAGNOSTIC TROUBLE CODE CHART

HINT:

Parameters listed in the chart may not be exactly the same as your readings due to the type of instrument or other factors.

If a malfunction code is displayed during the DTC check in the check mode, check the circuit for the codes listed in the table below. For details of each code, refer to the ”See page ” under the respective ”DTC No.” in the DTC chart.

DTC No. (See Page)	Detection Item	Trouble Area	*1 CHK ENG	Memory
P0010/39 *4 (05–169)	Camshaft Position ”A” Actuator Circuit (Bank 1)	• Open or short in oil control valve (OCV) circuit • Oil control valve • ECM	○	○
P0011/59 *4 (05–174)	Camshaft Position ”A” –Timing Over–Advanced or System Performance (Bank 1)	• Valve timing • Oil control valve (OCV) • Camshaft timing gear assy • ECM	—	○
P0012/59 *4 (05–174)	Camshaft Position ”A” –Timing Over– Retarded (Bank 1)		—	○
P0016/18 *4 (05–181)	Crankshaft Position – Camshaft Position Correlation (Bank 1 Sensor A)	• Mechanical system (Timing chain has jumped a tooth, chain stretched) • ECM	—	○
P0031/21 *2, *4 (05–182)	Oxygen (A/F) Sensor Heater Control Circuit Low (Bank 1 Sensor 1)	• Open or short in heater circuit of A/F sensor • A/F sensor heater • A/F relay • ECM	—	○
P0032/21 *2, *4 (05–182)	Oxygen (A/F) Sensor Heater Control Circuit High (Bank 1 Sensor 1)		—	○
P0051/28 *2, *4 (05–182)	Oxygen (A/F) Sensor Heater Control Circuit Low (Bank 2 Sensor 1)		—	○
P0052/28 *2, *4 (05–182)	Oxygen (A/F) Sensor Heater Control Circuit High (Bank 2 Sensor 1)		—	○
P0100/31 (05–186)	Mass Air Flow Circuit	• Open or short in mass air flow meter circuit • Mass air flow meter • ECM	○	○
P0102/31 (05–186)	Mass or volume Air Flow Circuit Low Input		○	○
P0103/31 (05–186)	Mass or volume Air Flow Circuit High Input		○	○
P0110/24 (05–194)	Intake Air Temperature Circuit	• Open or short in intake air temp. sensor circuit • Intake air temp. sensor (built in mass air flow meter) • ECM	—	○
P0112/24 (05–194)	Intake Air Temperature Circuit Low Input		—	○
P0113/24 (05–194)	Intake Air Temperature Circuit High Input		—	○
P0115/22 (05–199)	Engine Coolant Temperature Circuit	• Open or short in engine coolant temperature sensor circuit • Engine coolant temperature sensor • ECM	○	○
P0117/22 (05–199)	Engine Coolant Temperature Circuit Low Input		○	○
P0118/22 (05–199)	Engine Coolant Temperature Circuit High Input		○	○
P0120/41 (05–204)	Throttle/Pedal Position Sensor/ Switch ”A” Circuit	• Throttle position sensor (built in throttle body) • ECM	—	○
P0122/41 (05–204)	Throttle/Pedal Position Sensor/ Switch ”A” Circuit Low Input	• Throttle position sensor (built in throttle body) • Short in VTA1 circuit • Open in VC circuit • ECM	—	○

P0123/41 (05–204)	Throttle/Pedal Position Sensor/ Switch "A" Circuit High Input	• Throttle position sensor (built in throttle body) • Open in VTA1 circuit • open in E2 circuit • VC and VTA1 circuit are short–circuited • ECM	—	○
P0136/27*4 (05–211)	Oxygen Sensor Circuit Malfunction (Bank 1 Sensor 2)	• Open or short in heated oxygen sensor circuit • Heated oxygen sensor • Heated oxygen sensor heater • EFI relay	—	○
P0141/27*4 (05–218)	Oxygen Sensor Heater Circuit malfunction (Bank 1 Sensor 2)	• Open or short in heater circuit of heated oxygen sensor • Heated oxygen sensor heater • EFI relay • ECM	—	○
P0156/29*4 (05–211)	Oxygen Sensor Circuit Malfunction (Bank 2 Sensor 2)	• Open or short in heated oxygen sensor circuit • Heated oxygen sensor • Heated oxygen sensor heater • EFI relay	—	○
P0161/29*4 (05–218)	Oxygen Sensor Heater Circuit (Bank 2 Sensor 2)	• Open or short in heater circuit of heated oxygen sensor • Heated oxygen sensor heater • EFI relay • ECM	—	○
P0325/52 (05–222)	Knock Sensor 1 Circuit (Bank 1 or Single Sensor)	• Knock sensor 1 • Knock sensor 1 (under–torqued or loose) • ECM	○	○
P0327/52 (05–222)	Knock Sensor 1 Circuit Low Input (Bank 1 or Single Sensor)	• Short in knock sensor 1 circuit • Knock sensor 1 • ECM	○	○
P0328/52 (05–222)	Knock Sensor 1 Circuit High Input (Bank 1 or Single Sensor)	• Open in knock sensor 1 circuit • Knock sensor 1 • ECM	○	○
P0335/12, 13 (05–226)	Crankshaft Position Sensor "A" Circuit	• Open or short in crankshaft position sensor circuit • Crankshaft position sensor • Signal plate (crankshaft) • ECM	○	○
P0339/13 (05–226)	Crankshaft Position Sensor "A" Circuit Intermittent		—	○
P0340/12 (05–229)	Camshaft Position Sensor "A" Circuit (Bank 1 or Single Sensor)	• Open or short in camshaft position sensor circuit • Camshaft position sensor • Camshaft timing pulley • Timing chain has jumped a tooth • ECM	○	○
P0341/12 (05–229)	Camshaft Position Sensor "A" CircuitRange/Performance (Bank 1 or Single Sensor)		○	○
P0351/14*3 (05–232)	Ignition Coil "A" Primary/Secondary Circuit	• Ignition system • Open or short in IGF or IGT1 to 4 circuit from ignition coil with igniter to ECM • No. 1 to No. 4 ignition coil with igniter • IG2 relay • ECM	○	○
P0352/15*3 (05–232)	Ignition Coil "B" Primary/Secondary Circuit		○	○
P0353/14*3 (05–232)	Ignition Coil "C" Primary/Secondary Circuit		○	○
P0354/15*3 (05–232)	Ignition Coil "D" Primary/Secondary Circuit		○	○
P0500/42 (05–240)	Vehicle Speed Sensor "A"	• Open or short in speed sensor circuit • Speed sensor • Combinationmeter • ECM • Skid control ECU	○	○
P0511/33 (05–243)	Idle Air Control Circuit	• Open or short in idle speed control (ISC) valve circuit • Idle speed control (ISC) valve is stuck or closed • A/C switch circuit • Air induction system • ECM	○	○
P0606/89 (05–247)	ECM/PCM Processor	• ECM	○	○

P0710/38 (05–882)	Transmission Fluid Temperature Sensor "A" Circuit	• Electronic controlled automatic transmission (ECT)	○	○
P0712/38 (05–882)	Transmission Fluid Temperature Sensor "A" Circuit Low Input		○	○
P0713/38 (05–882)	Transmission Fluid Temperature Sensor "A" Circuit High Input		○	○
P0717/37 (05–884)	Input/Turbine Speed Sensor "A" Circuit No Signal		○	○
P0748/62 (05–886)	Pressure Control Solenoid "A" Electrocal (Shift Solenoid Valve SL1)		○	○
P0778/63 (05–886)	Pressure Control Solenoid "B" Electrocal (Shift Solenoid Valve SL2)		○	○
P0793/67 (05–892)	Intermediate Shaft Speed Sensor "A"		○	○
P0982/65 (05–886)	Shift Solenoid "D" Control Circuit Low (Shift Solenoid Valve S4)		○	○
P0983/65 (05–886)	Shift Solenoid "D" Control Circuit High (Shift Solenoid Valve S4)		○	○
P2237/21 *2, *4 (05–248)	Oxygen Sensor Pumping Current Circuit/ Open (for A/F sensor) (Bank 1 Sensor 1)	• Open or short in A/F sensor circuit • A/F sensor • A/F sensor heater • A/F sensor heater relay • A/F sensor heater and relay circuit • ECM	—	○
P2238/21 *2, *4 (05–248)	Oxygen Sensor Pumping Current Circuit Low (for A/F sensor) (Bank 1 Sensor 1)		—	○
P2239/21 *2, *4 (05–248)	Oxygen Sensor Pumping Current Circuit High (for A/F sensor) (Bank 1 Sensor 1)		—	○
P2240/28 *2, *4 (05–248)	Oxygen Sensor Pumping Current Circuit/ Open (for A/F sensor) (Bank 2 Sensor 1)		—	○
P2241/28 *2, *4 (05–248)	Oxygen Sensor Pumping Current Circuit Low (for A/F sensor) (Bank 2 Sensor 1)		—	○
P2242/28 *2, *4 (05–248)	Oxygen Sensor Pumping Current Circuit High (for A/F sensor) (Bank 2 Sensor 1)		—	○
P2251/21 *2, *4 (05–248)	Oxygen Sensor Reference Ground Circuit/ Open (for A/F senor) (Bank 1 Sensor 1)		—	○
P2252/21 *2, *4 (05–248)	Oxygen Sensor Reference Ground Circuit Low (for A/F senor) (Bank 1 Sensor 1)		—	○
P2253/21 *2, *4 (05–248)	Oxygen Sensor Reference Ground Circuit High (for A/F senor) (Bank 1 Sensor 1)		—	○
P2254/28 *2, *4 (05–248)	Oxygen Sensor Reference Ground Circuit/ Open (for A/F senor) (Bank 2 Sensor 1)		—	○
P2255/28 *2, *4 (05–248)	Oxygen Sensor Reference Ground Circuit Low (for A/F senor) (Bank 2 Sensor 1)		—	○
P2256/28 *2, *4 (05–248)	Oxygen Sensor Reference Ground Circuit High (for A/F senor) (Bank 2 Sensor 1)		—	○

P2716/77 (05–894)	Pressure Control Solenoid "D" Electrical	• Electronic controlled automatic transmission (ECT)	—	○
P2769/64 (05–897)	DSL Solenoid Circuit Low (Shift Solenoid Valve DSL)		—	○
P2770/64 (05–897)	DSL Solenoid Circuit High (Shift Solenoid Valve DSL)		—	○
B2799/99 (05–1625)	Engine Immobilizer System Malfunction	• Immobilizer system	—	○

*1: ○ ... CHK ENG is illuminated. — ... CHK ENG is not illuminated.
*2: This DTC is related to A/F sensor, although the caption is heated oxygen sensor.
*3: This DTC indicate a malfunction related to primary circuit.
*4: For European spec. only

05C6O–01

LOCATION

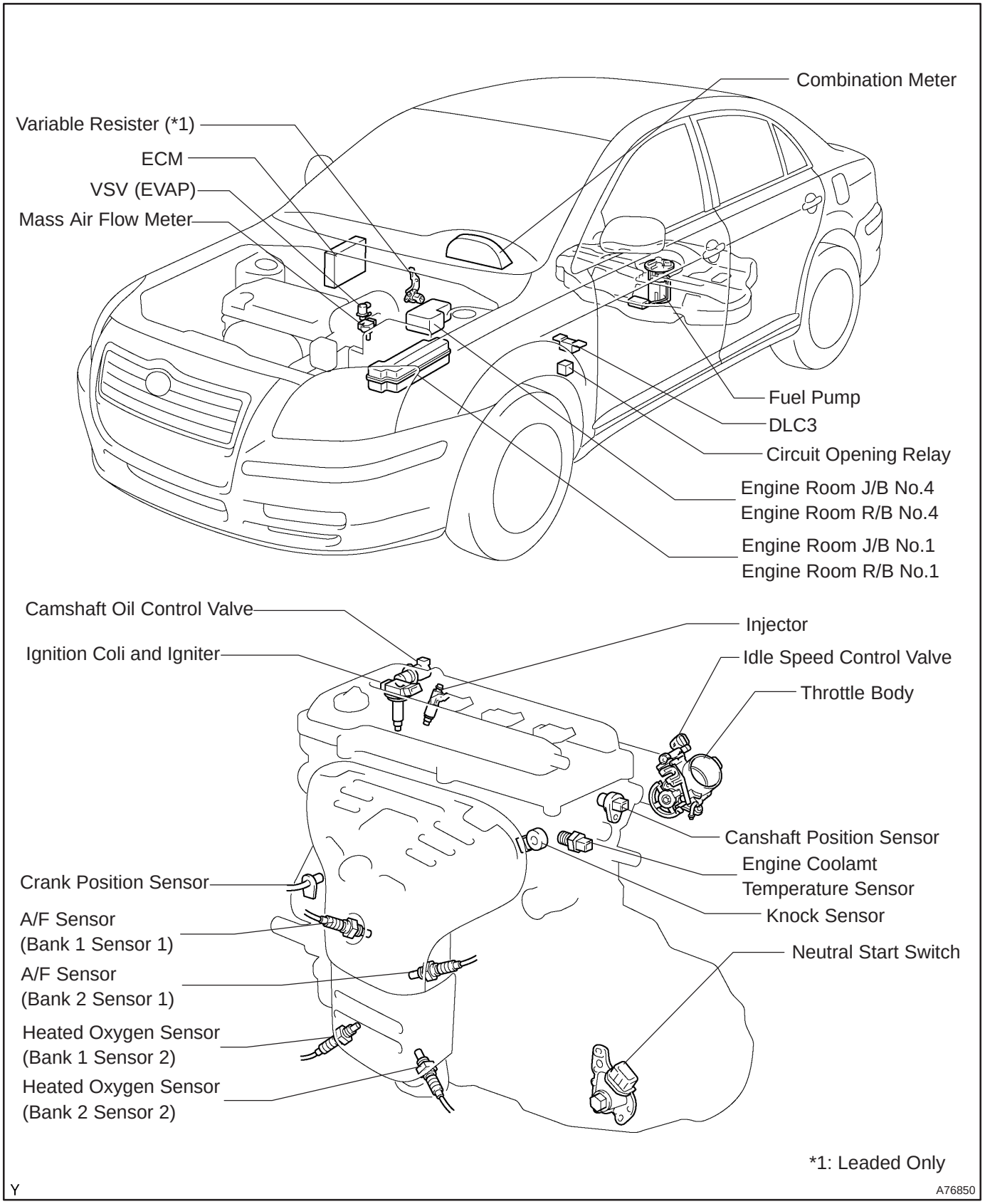

05C6P–01

TERMINALS OF ECM

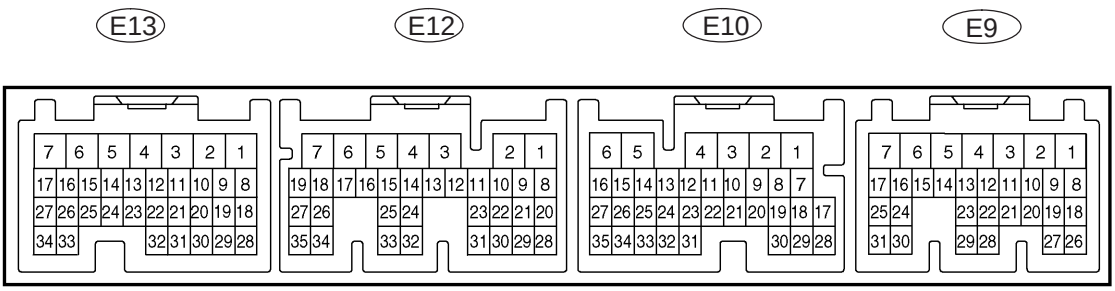

Y

A66714

Symbols (Terminals No.)	Wiring Color	Condition	STD Voltage (V)
BATT (E9 – 3) – E1 (E12 – 7)	B–Y – BR	Always	8 to 14
FC (E9 – 10) – E1 (E12 – 7)	G–Y – BR	IG switch ON	8 to 14
		Idling	Below 1.5
W (E9 – 11) – E1 (E12 – 7)	W – BR	Idling	8 to 14
		IG switch ON	Below 3.5
+B (E9 – 1) – E1 (E12 – 7)	B–R – BR	IG switch ON	8 to 14
STP (E10 – 19) – E1 (E12 – 7)	G–W – BR	IG switch ON, brake pedal depressed	8 to 14
		IG switch ON, brake pedal released	Below 1.5
F/PS (E9 – 14) – E1 (E12 – 7)	LG–B – BR	IG switch ON	Pulse generation
STA (E12 – 9) – E1 (E12 – 7)	B–Y – BR	Cranking	5.5 or more
HA1A (E12 – 6) – E04 (E12 – 4) *1	L – W–B	Idling	Below 3.0
		IG switch ON	9 to 14
A1A+ (E12 – 23) – E1 (E12 – 7) *1	W – BR	IG switch ON	3.0 to 3.6
A1A– (E12 – 31) – E1 (E12 – 7) *1	B – BR	IG switch ON	2.7 to 3.3
HA2A (E12 – 5) – E05 (E12 – 3) *1	Y – W–B	Idling	Below 3.0
		IG switch ON	9 to 14
A2A+ (E12 – 22) – E1 (E12 – 7) *1	G – BR	IG switch ON	3.0 to 3.6
A2A– (E12 – 30) – E1 (E12 – 7) *1	L – BR	IG switch ON	2.7 to 3.3
HT1B (E10 – 4) – E01 (E13 – 7) *1	L – W–B	Idling	Below 3.0
		IG switch ON	9 to 14
OX1B (E12 – 21) – 01B (E13 – 32) *1	B – BR	IG switch ON	0 to 1.0
O1B– (E13 – 32) – E1 (E12 – 7) *1	W – BR	IG switch ON	0.4 to 1.1
HT2B (E10 – 3) – E01 (E13 – 7) *1	L–R – W–B	Idling	Below 3.0
		IG switch ON	9 to 14
OX2B (E12 – 29) – 01B (E13 – 32) *1	R – BR	IG switch ON	0 to 1.0
O2B– (E13 – 31) – E1 (E12 – 7) *1	G – BR	IG switch ON	0.4 to 1.1

SPD (E10 – 17) – E1 (E12 – 7)	V–W – BR	IG switch ON, rotate driving wheel slowly	Pulse generation (See page 05–240)
TACH (E9 – 5) – E1 (E12 – 7)	GR–R – BR	Idling	Pulse generation
VC (E13 – 18) – E2 (E13 – 28)	R–W – BR	IG switch ON	4.5 to 5.5
PRG (E13 – 12) – E01 (E13 – 7)	W–G – W–B	IG switch ON	8 to 14
VG (E12 – 24) – EVG (E12 – 32)	G – L–Y	Idling, A/C switch OFF	1.1 to 1.5
THW (E13 – 19) – E2 (E13 – 28)	B–W – BR	Idling, Engine coolant temp. at 80°C (176°F)	0.2 to 1.0
G2+ (E13 – 26) – NE– (E13 – 34)	W – R	Idling	Pulse generation (See page 05–229)
NE+ (E13 – 27) – NE– (E13 – 34)	G – R	Idling	Pulse generation (See page 05–226)
THA (E13 – 20) – E2 (E13 – 28)	G–R – BR	Idling, intake air temp. at 20 °C (68 °F)	0.5 to 3.4
VTA1 (E13 – 21) – E2 (E13 – 28)	L–W – BR	IG switch ON, throttle valve fully closed	0.3 to 1.0
		IG switch ON, throttle valve fully open	3.2 to 4.9
#1 (E13 – 1) – E01 (E13 – 7) #2 (E13 – 2) – E01 (E13 – 7) #3 (E13 – 3) – E01 (E13 – 7) #4 (E13 – 4) – E01 (E13 – 7)	B–R – W–B Y – W–B W – W–B B – W–B	IG switch ON	8 to 14
IGT1 (E13 – 8) – E1 (E12 – 7) IGT2 (E13 – 9) – E1 (E12 – 7) IGT3 (E13 – 10) – E1 (E12 – 7) IGT4 (E13 – 11) – E1 (E12 – 7)	R–W – BR P – BR LG–B – BR L–Y – BR	Idling	Pulse generation (See page 05–232)
IGF (E13 – 13) – E1 (E12 – 7)	W–R – BR	IG switch ON	4.5 to 5.5
		Idling	Pulse generation (See page 05–232)
RSD (E12 – 10) – E1 (E12 – 7)	G–R – W–B	IG switch ON	9 to 14
OC1+ (E13 – 15) – OC1– (E13 – 14) *1	W–G – Y–B	IG switch ON	Pulse generation (See page 05–169)
KNK1 (E12 – 1) – EKNK (E12 – 2)	B – W	Idling	Pulse generation (See page 05–222)
ELS2 (E9 – 13) – E1 (E12 – 7)	G – BR	Defoger switch ON	9 to 14
		IG switch ON	Below 3.0
MREL (E9 – 8) – E1 (E12 – 7)	GR – BR	IG switch ON	9 to 14
IGSW (E9 – 9) – E1 (E12 – 7)	B–W – BR	IG switch ON	9 to 14
TC (E9 – 20) – E1 (E12 – 7)	W–L – BR	IG switch ON	9 to 14
SIL (E9 – 18) – E1 (E12 – 7)	W–G – BR	Connect hand–held tester to DLC3	Pulse generation
ELS (E9 – 12) – E1 (E12 – 7)	G – BR	Taillight ON	9 to 14
		IG switch ON	Below 3.0
VAF (E13 – 32) – E2 (E13 – 28) *2	P – BR	IG switch ON	2.0 to 3.5

*1: For European spec. only

*2: Leaded only

05C6Q–01

PROBLEM SYMPTOMS TABLE

Symptom	Suspected Area	See page
Engine does not crank (Does not start)	1. Starter 2. Starter relay	19–8 19–8
No initial combustion (Does not start)	1. ECM power source circuit 2. Fuel pump control circuit 3. ECM	05–257 05–264 01–32
No complete combustion (Does not start)	1. Fuel pump control circuit	05–264
Engine cranks normally (Difficult to start)	1. Starter signal circuit 2. Fuel pump control circuit 3. Compression	05–278 05–264 14–101
Cold engine (Difficult to start)	1. Starter signal circuit 2. Fuel pump control circuit	05–278 05–264
Hot engine (Difficult to start)	1. Starter signal circuit 2. Fuel pump control circuit	05–278 05–264
High engine idle speed (Poor idling)	1. A/C signal circuit (Compressor circuit) 2. ECM power source circuit	– 05–257
Low engine idle speed (Poor idling)	1. A/C signal circuit (Compressor circuit) 2. Fuel pump control circuit	– 05–264
Rough idling (Poor idling)	1. Compression 2. Fuel pump control circuit	14–101 05–264
Hunting (Poor idling)	1. ECM power source circuit 2. Fuel pump control circuit	05–257 05–264
Hesitation/Poor acceleration (Poor driveability)	1. Fuel pump control circuit 2. A/T faulty	05–264 05–879
Surging (Poor driveability)	1. Fuel pump control circuit	05–264
Engine stalls soon after starting	1. Fuel pump control circuit	05–264
Engine stalls during A/C operation	1. A/C signal circuit (Compressor circuit) 2. ECM	– 01–32
Unable to refuel/Difficult to refuel	1. ORVR system	–

DTC	P0010/39	CAMSHAFT POSITION ”A” ACTUATOR CIRCUIT (BANK 1)

CIRCUIT DESCRIPTION

The VVT system controls the intake camshaft to provide the optimal valve timing for every driving condition. This control is performed based on the signals, such conditions as intake air volume, throttle position and engine coolant temperature.

The ECM controls the oil control valve (OCV), based on the signals output from the sensors. The VVT controller regulates the intake camshaft angle using oil pressure through the oil control valve (OCV). As result, the relative position between the camshaft and the crankshaft becomes optimal, and the engine torque improves, fuel economy improves, exhaust emissions decrease under overall driving conditions. Also, the ECM detects the actual valve timing using the signals from the camshaft position sensor and the crankshaft position sensor, and performs feedback control. This is how target valve timing is achieved by the ECM.

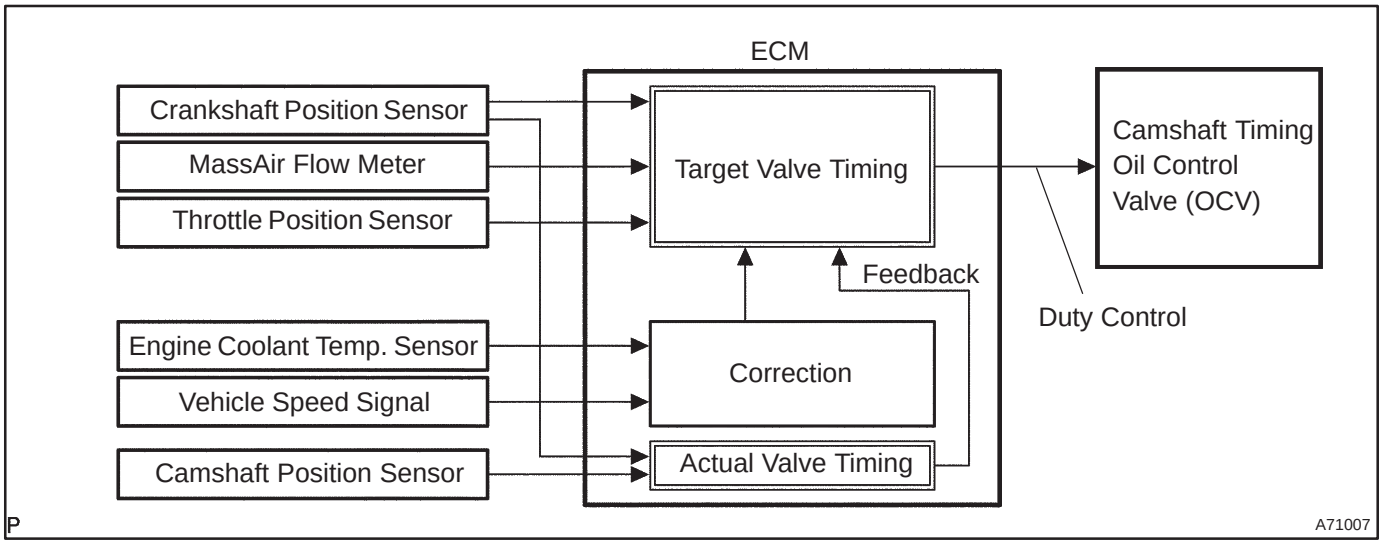

DTC No.	DTC Detection Condition	Trouble Area
P0010/39	Open or short in oil control valve (OCV) circuit	• Open or short in oil control valve circuit • Oil control valve • ECM

WIRING DIAGRAM

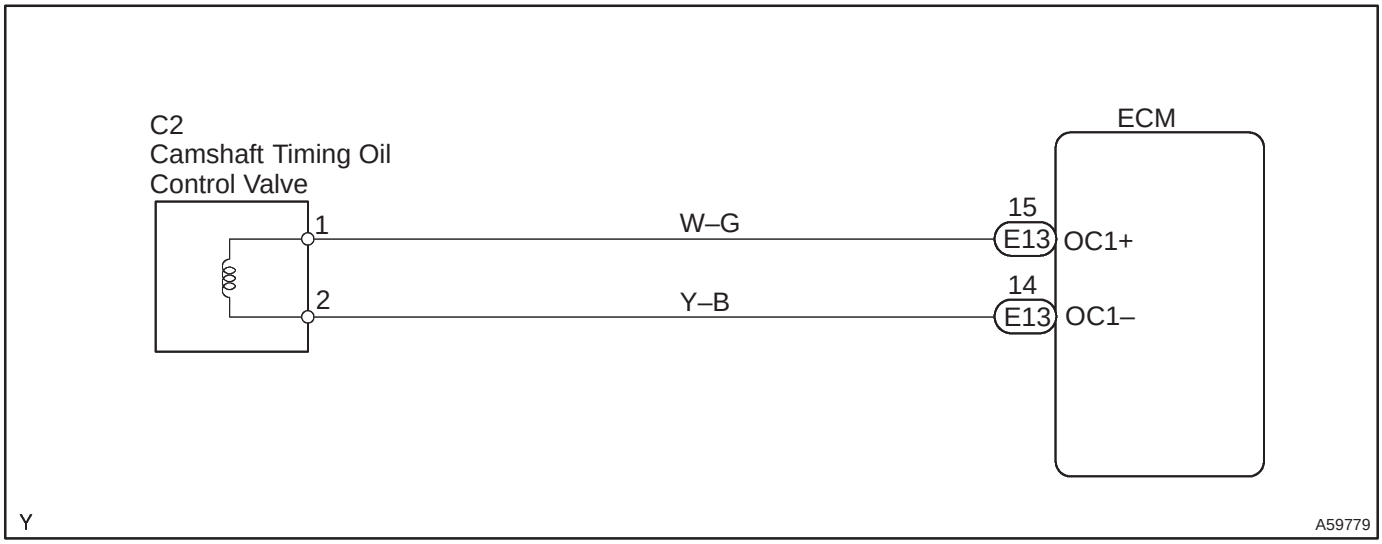

INSPECTION PROCEDURE

HINT:

Read freeze frame data using the hand–held tester. Freeze frame data records the engine conditions when a malfunction is detected. When troubleshooting, it is useful for determining whether the vehicle was running or stopped, the engine was warmed up or not, the air–fuel ratio was lean or rich, etc. at the time of the malfunction.

When using hand–held tester:

1	PERFORM ACTIVE TEST BY HAND–HELD TESTER(OCV OPERATION)

(a) Connect the hand–held tester to the DLC3.
(b) Start the engine and warm it up.
(c) Turn the ignition switch ON and push the hand–held tester main switch ON.
(d) Select the item ”DIAGNOSIS / OBD/MOBD/ ACTIVE TEST / VVT CTRL B1 or VVT CTRL B2”.
(e) Check the engine speed when operating the OCV by the hand–held tester.

Standard:

Tester operation	Specified condition
OCV is OFF	Normal engine speed
OCV is ON	Rough idle or engine stall

OK → **CHECK FOR INTERMITTENT PROBLEMS (See page 05–149)**

NG

2	INSPECT CAMSHAFT TIMING OIL CONTROL VALVE ASSY (See page 10–20)

NG → **REPLACE CAMSHAFT TIMING OIL CONTROL VALVE ASSY**

OK

3 INSPECT ECM(OCV SIGNAL)

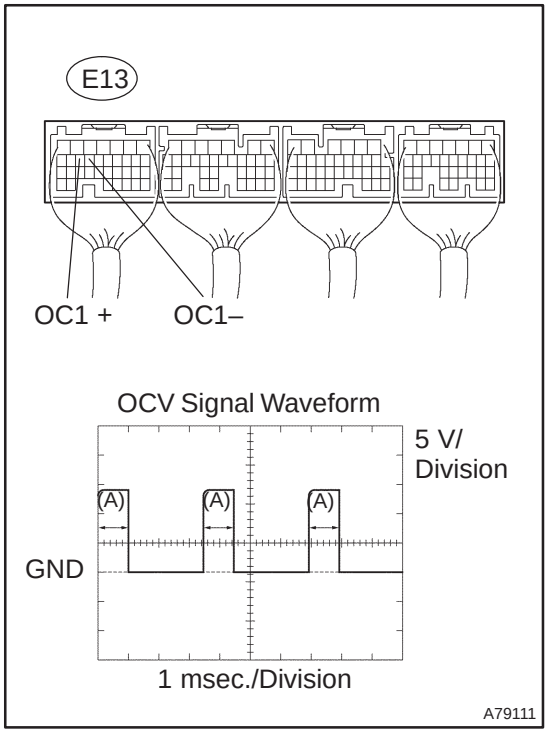

(a) Inspection using the oscilloscope.
(b) During idling, check the waveform between the terminals of the E13 ECM connector.

Standard:

Symbols (Terminal No.)	Specified condition
OC1+ (E13–15) – OC1– (E13–14)	Correct waveform is as shown

HINT:
The waveform frequency (A) is lengthened as the engine speed becomes higher.

NG → **CHECK AND REPLACE ECM (See page 01–32)**

OK

4 CHECK HARNESS AND CONNECTOR(ECM – OCV)

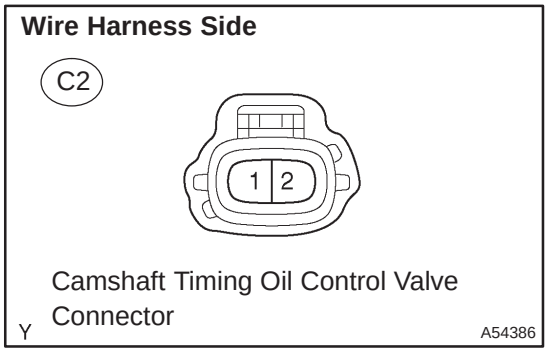

(a) Disconnect the camshaft timing oil control valve connector.
(b) Disconnect the E13 ECM connector.
(c) Check for continuity between the wire harness side connectors.

Standard (Check for open):

Symbols (Terminal No.)	Specified condition
Oil control valve (C2–1) – OC1+ (E13–15)	Continuity
Oil control valve (C2–2) – OC1– (E13–14)	

Standard (Check for short):

Symbols (Terminal No.)	Specified condition
Oil control valve (C2–1) or OC1+ (E13–15) – Body ground	No continuity
Oil control valve (C2–2) or OC1– (E13–14) – Body ground	

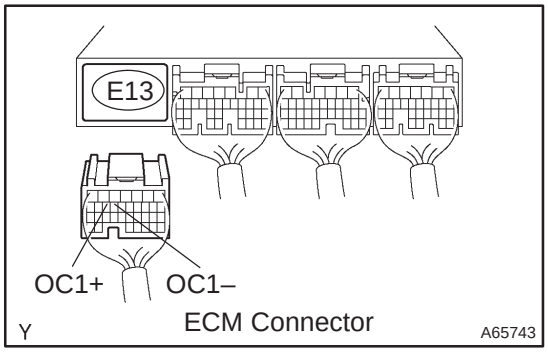

NG → **REPAIR OR REPLACE HARNESS OR CONNECTOR**

OK

CHECK FOR INTERMITTENT PROBLEMS

When not using hand–held tester:

1	CHECK OPERATION OF OCV

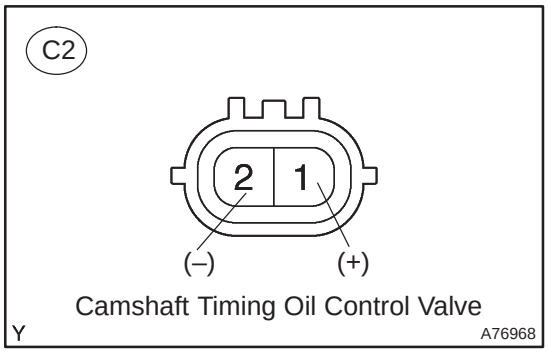

(a) Disconnect the camshaft timing oil control valve connector.
(b) Apply battery positive voltage between the terminals of the camshaft timing oil control valve.
(c) Check the engine speed.
Standard:
Engine speed is rough idle or engine is stalled.

NG → **REPLACE CAMSHAFT TIMING OIL CONTROL VALVE ASSY**

OK

2	INSPECT ECM(OCV SIGNAL)

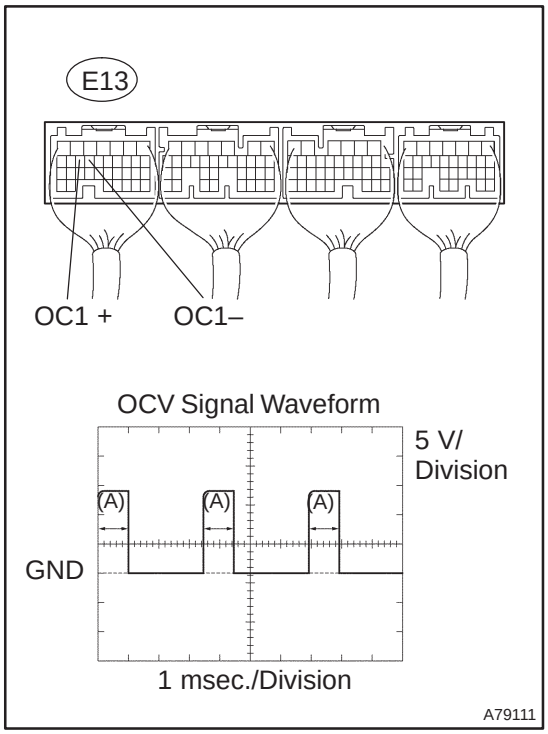

(a) Inspection using the oscilloscope.
(b) During idling, check the waveform between the terminals of the E13 ECM connector.
Standard:

Symbols (Terminal No.)	Specified condition
OC1+ (E13–15) – OC1– (E13–14)	Correct waveform is as shown

HINT:
The waveform frequency (A) is lengthened as the engine speed becomes higher.

NG → **CHECK AND REPLACE ECM (See page)**

OK

3 CHECK HARNESS AND CONNECTOR(ECM – OCV)

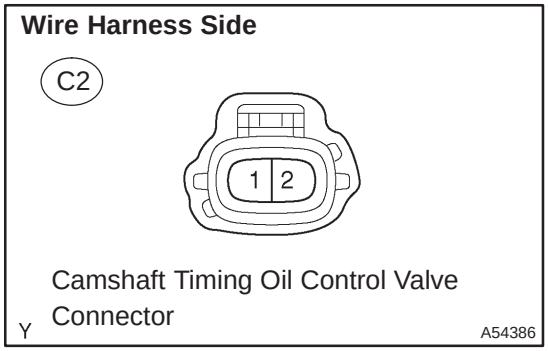

(a) Disconnect the camshaft timing oil control valve connector.
(b) Disconnect the E13 ECM connector.
(c) Check for continuity between the wire harness side connectors.

Standard (Check for open):

Symbols (Terminal No.)	Specified condition
Oil control valve (C2–1) – OC1+ (E13–15)	Continuity
Oil control valve (C2–2) – OC1– (E13–14)	

Standard (Check for short):

Symbols (Terminal No.)	Specified condition
Oil control valve (C2–1) or OC1+ (E13–15) – Body ground	No continuity
Oil control valve (C2–2) or OC1– (E13–14) – Body ground	

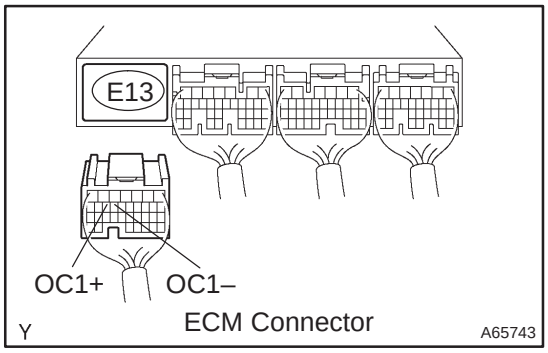

NG → **REPAIR OR REPLACE HARNESS OR CONNECTOR**

OK →

CHECK FOR INTERMITTENT PROBLEMS (See page 05–149)

DTC	P0011/59	CAMSHAFT POSITION ”A” –TIMING OVER–ADVANCED OR SYSTEM PERFORMANCE (BANK 1)

DTC	P0012/59	CAMSHAFT POSITION ”A” –TIMING OVER–RETARDED (BANK 1)

CIRCUIT DESCRIPTION

Refer to DTC P0010/39 on page 05–169.

DTC No.	DTC Detection Condition	Trouble Area
P0011/59	Condition (a) or (b) continues after engine is warmed up and engine speed at 400 to 4,000 rpm (Problem of the advanced oil control valve.): (a) Valve timing does not change from current valve timing (b) Current valve timing is fixed	• Valve timing • Oil control valve • Camshaft timing gear assy • ECM
P0012/59	Condition (a) or (b) continues after engine is warmed up and engine speed at 400 to 4,000 rpm (Problem of the retarded oil control valve.): (a) Valve timing does not change from current valve timing (b) Current valve timing is fixed	

WIRING DIAGRAM

Refer to DTC P0010/39 on page 05–169.

INSPECTION PROCEDURE

HINT:

Advanced timing over (Valve timing is out of specified range)	P0011/59
Retarded timing over (Valve timing is out of specified range)	P0012/59

- If DTC ”P0011/59 or P0012/59” is displayed, check VVT system circuit.
- Read freeze frame data using the hand–held tester. Freeze frame data records the engine conditions when a malfunction is detected. When troubleshooting, it is useful for determining whether the vehicle was running or stopped, the engine was warmed up or not, the air–fuel ratio was lean or rich, etc. at the time of the malfunction.

When using hand–held tester:

1	CHECK VALVE TIMING (See page 14–139)

NG → ADJUST VALVE TIMING (See page 14–139)

OK

2	PERFORM ACTIVE TEST BY HAND–HELD TESTER(OPERATION OF OCV)

(a) Connect the hand–held tester to the DLC3.
(b) Start the engine and warm it up.
(c) Turn the ignition switch ON and push the hand–held tester main switch ON.
(d) Select the item ”DIAGNOSIS / OBD/MOBD / ACTIVE TEST / VVT CTRL B1”.
(e) Check the engine speed when operating the OCV by the hand–held tester.
Standard:

Tester operation	Specified condition
OCV is OFF	Normal engine speed
OCV is ON	Rough idle or engine stall

OK → **Go to step 4**

NG

3	READ OUTPUT DTC(CHECK IF DTC OUTPUT RECURS)

(a) Clear the DTC.
  (1) Operating the hand–held tester to erase the codes, or disconnecting the battery terminal or the EFI and ECTS fuses for more than 60 sec.
(b) Start and warm up the engine.
(c) Drive the vehicle around for 10 minutes or more.
(d) Read output DTC using the hand–held tester.

Standard: No DTC output.

HINT:

*: DTCs P0011/59 or P0012/59 is output when a foreign object in engine oil is caught in some part of the system. These codes will stay registered even if the system returns to normal after a short time. These foreign objects are then captured by the oil filter, thus eliminating the source of the problem.

OK → **VVT SYSTEM OK***

NG

4	CHECK ECM(OCV SIGNAL)

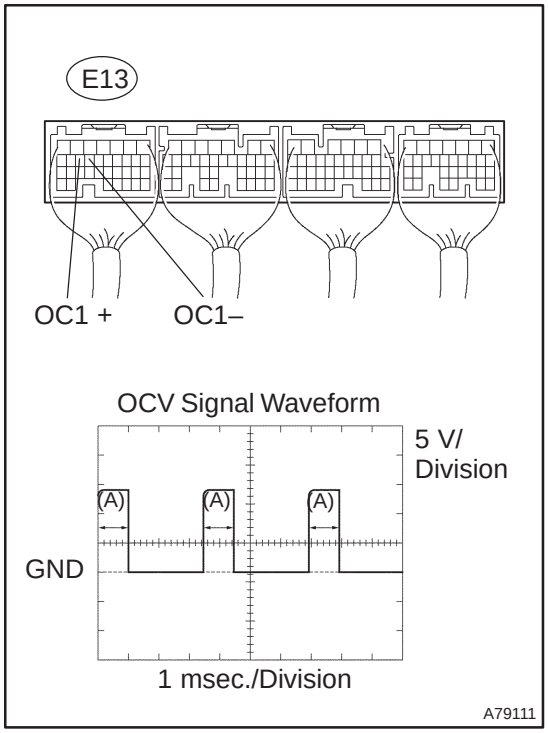

(a) Inspection using the oscilloscope.
(b) During idling, check the waveform between the terminals of the E13 ECM connector.

Standard:

Symbols (Terminal No.)	Specified condition
OC1+ (E13–15) – OC1– (E13–14)	Correct waveform is as shown

HINT:
The waveform frequency (A) is lengthened as the engine speed becomes higher.

NG → **CHECK AND REPLACE ECM (See page 01–32)**

OK

5	CHECK OIL CONTROL VALVE FILTER

NG → **REPLACE OIL CONTROL VALVE FILTER**

OK

6	CHECK CAMSHAFT TIMING OIL CONTROL VALVE ASSY(OCV) (See page 10–20)

OK → **Go to step 8**

NG

7	REPLACE CAMSHAFT TIMING OIL CONTROL VALVE ASSY(OCV)

GO

8	CHECK CAMSHAFT TIMING GEAR ASSY (See page 14–171)

OK → **Go to step 10**

NG

9	REPLACE CAMSHAFT TIMING GEAR ASSY

GO

10	CHECK FOR BLOCKAGE(OCV, OIL CHECK VALVE AND OIL HOLE)

NG → REPAIR OR REPLACE

OK

11	READ OUTPUT DTC(CHECK IF DTC OUTPUT RECURS)

(a) Clear the DTC.
  (1) Operating the hand–held tester to erase the codes, or disconnecting the battery terminal or the EFI and ECTS fuses for more than 60 sec.
(b) Start and warm up the engine.
(c) Drive the vehicle around for 10 minutes or more.
(d) Read output DTC using the hand–held tester.

Standard: No DTC output.

HINT:

*: DTCs P0011/59 or P0012/59 is output when a foreign object in engine oil is caught in some part of the system. These codes will stay registered even if the system returns to normal after a short time. These foreign objects are then captured by the oil filter, thus eliminating the source of the problem.

OK → VVT SYSTEM OK*

NG

CHECK AND REPLACE ECM (See page 01–32)

When not using hand–held tester:

1	CHECK VALVE TIMING (See page 14–139)

NG → ADJUST VALVE TIMING (See page 14–139)

OK

2 CHECK OPERATION OF OCV

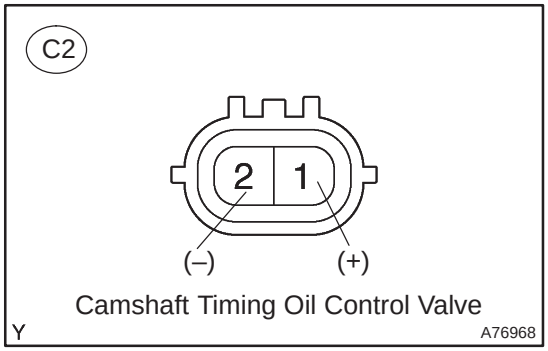

(a) Start the engine.
(b) Check the engine speed with conditions (1) and then (2).
  (1) Disconnect the camshaft timing oil control valve connector.
  (2) Apply battery positive voltage between the terminals of the camshaft timing oil control valve.

Result:

Proceed to	Check (1)	Check (2)
A	Normal engine speed	Rough idle or engine stall
B	Conditions other than A	

B → **Go to step 4**

A

3 READ OUTPUT DTC(CHECK IF DTC OUTPUT RECURS)

(a) Clear the DTC.
  (1) Disconnecting the battery terminal or removing the EFI and ECTS fuses for more than 60 sec.
(b) Start and warm up the engine.
(c) Drive the vehicle around for 10 minutes or more.
(d) Read output DTC.

Standard: No DTC output.

HINT:

*: DTCs P0011/59 or P0012/59 is output when a foreign object in engine oil is caught in some part of the system. These codes will stay registered even if the system returns to normal after a short time. These foreign objects are then captured by the oil filter, thus eliminating the source of the problem.

OK → **VVT SYSTEM OK***

NG

4	CHECK ECM(OCV SIGNAL)

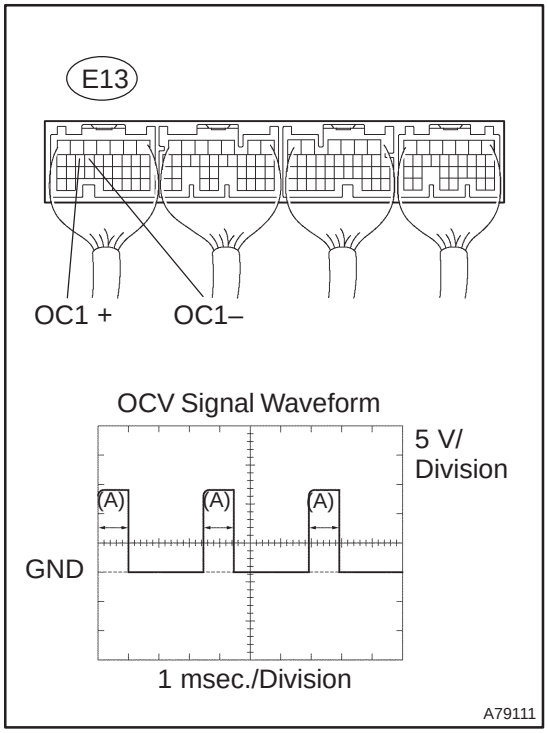

(a) Inspection using the oscilloscope.
(b) During idling, check the waveform between the terminals of the E13 ECM connector.

Standard:

Symbols (Terminal No.)	Specified condition
OC1+ (E13–15) – OC1– (E13–14)	Correct waveform is as shown

HINT:
The waveform frequency (A) is lengthened as the engine speed becomes higher.

NG → **CHECK AND REPLACE ECM (See page 01–32)**

OK

5	CHECK OIL CONTROL VALVE FILTER

NG → **REPLACE OIL CONTROL VALVE FILTER**

OK

6	CHECK CAMSHAFT TIMING OIL CONTROL VALVE ASSY(OCV) (See page 10–20)

OK → **Go to step 8**

NG

7	REPLACE CAMSHAFT TIMING OIL CONTROL VALVE ASSY(OCV)

GO

8	CHECK CAMSHAFT TIMING GEAR ASSY (See page 14–171)

OK → **Go to step 10**

NG

9	REPLACE CAMSHAFT TIMING GEAR ASSY

GO

10	CHECK FOR BLOCKAGE(OCV, OIL CHECK VALVE AND OIL HOLE)

NG → REPAIR OR REPLACE

OK

11	READ OUTPUT DTC(CHECK IF DTC OUTPUT RECURS)

(a) Clear the DTC.
  (1) Disconnecting the battery terminal or removing the EFI and ECTS fuses for more than 60 sec.
(b) Start and warm up the engine.
(c) Drive the vehicle around for 10 minutes or more.
(d) Read output DTC.

Standard: No DTC output.

HINT:

*: DTCs P0011/59 or P0012/59 is output when a foreign object in engine oil is caught in some part of the system. These codes will stay registered even if the system returns to normal after a short time. These foreign objects are then captured by the oil filter, thus eliminating the source of the problem.

OK → VVT SYSTEM OK*

NG

CHECK AND REPLACE ECM (See page 01–32)

DTC	P0016/18	CRANKSHAFT POSITION –CAMSHAFT POSITION CORRELATION (BANK 1 SENSOR A)

CIRCUIT DESCRIPTION

Refer to DTC P0335/12, 13 and P0339/13 on page 05–226.

DTC No.	DTC Detection Condition	Trouble Area
P0016/18	Deviation in crankshaft position sensor signal and VVT sensor 1 signal (2 trip detection logic)	• Mechanical system (Timing chain has jumped a tooth, chain stretched) • ECM

WIRING DIAGRAM

Refer to DTC P0335/12, 13 and P0339/13 on page 05–226.

INSPECTION PROCEDURE

Read freeze frame data using the hand–held tester. Freeze frame data records the engine conditions when a malfunction is detected. When troubleshooting, it is useful for determining whether the vehicle was running or stopped, the engine was warmed up or not, the air–fuel ratio was lean or rich, etc. at the time of the malfunction.

1	CHECK VALVE TIMING (See page 14–139)

NG → ADJUST VALVE TIMING (See page 14–139)

OK

CHECK AND REPLACE ECM (See page 01–32)

DTC	P0031/21	OXYGEN (A/F) SENSOR HEATER CONTROL CIRCUIT LOW (BANK 1 SENSOR 1)

DTC	P0032/21	OXYGEN (A/F) SENSOR HEATER CONTROL CIRCUIT HIGH (BANK 1 SENSOR 1)

DTC	P0051/28	OXYGEN (A/F) SENSOR HEATER CONTROL CIRCUIT LOW (BANK 2 SENSOR 1)

DTC	P0052/28	OXYGEN (A/F) SENSOR HEATER CONTROL CIRCUIT HIGH (BANK 2 SENSOR 1)

CIRCUIT DESCRIPTION

Refer to DTC P2237/21 on page 05–248.

HINT:

- These DTCs are related to the air fuel raito (A/F) sensor, although the caption is the heated oxygen sensor.
- The ECM provides a pulse width modulated control circuit to adjust current through the heater. The heated oxygen sensor heater circuit uses a relay on the B+ side of the circuit.

Reference (Bank 1 Sensor 1 System Drawing)

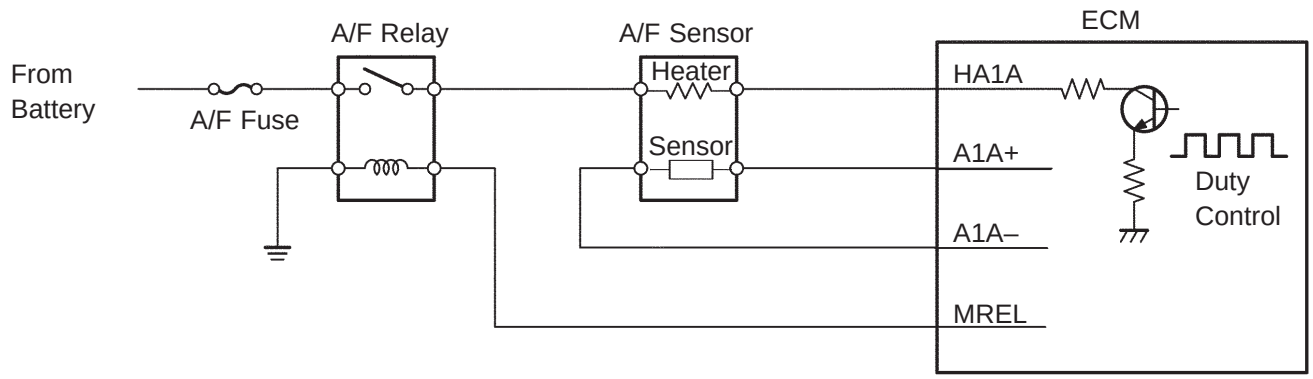

DTC No.	DTC Detection Condition	Trouble Area
P0031/21 P0051/28	Heated current is 0.8 A or less when heater operates (1 trip detection logic)	• Open or short in heater circuit of A/F sensor • A/F sensor heater • A/F relay • ECM
P0032/21 P0052/28	When the heater operates, heated current exceeds 19.7 A (1 trip detection logic)	

HINT:

- Bank 1 refers to the bank that includes cylinder No.1.
- Bank 2 refers to the bank that does not include cylinder No.1.
- Sensor 1 refers to the sensor closest to the engine assembly.
- Sensor 2 refers to the sensor farthest away from the engine assembly.

WIRING DIAGRAM

Refer to DTC P2237/21 on page 05–248.

INSPECTION PROCEDURE

HINT:

- If different DTCs that are related to a different system are output simultaneously while terminal E2 is used as a ground terminal, terminal E2 may be open.
- Read freeze frame data using the hand–held tester. Freeze frame data records the engine conditions when a malfunction is detected. When troubleshooting, it is useful for determining whether the vehicle was running or stopped, the engine was warmed up or not, the air–fuel ratio was lean or rich, etc. at the time of the malfunction.

1	INSPECT AIR FUEL RATIO SENSOR(RESISTANCE OF A/F SENSOR HEATER)

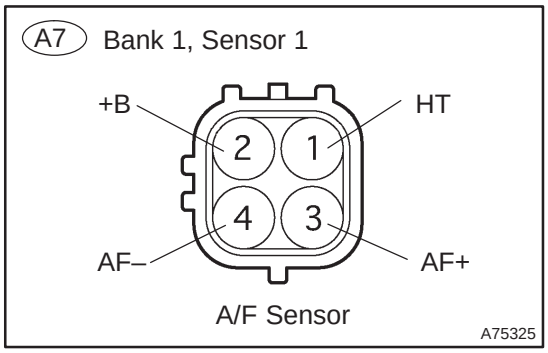

(a) Disconnect the A/F sensor connector.
(b) Measure resistance between terminals HT and +B of the A/F sensor.
Resistance: 1.8 to 3.4 Ω (20 °C)

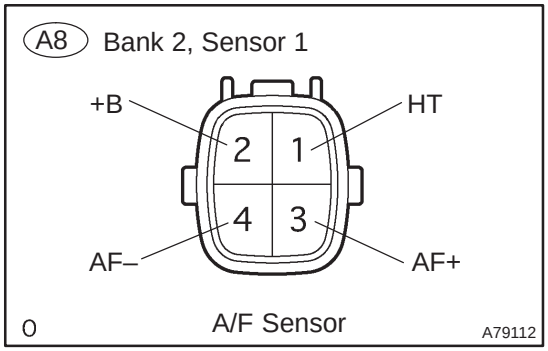

NG → **REPLACE AIR FUEL RATIO SENSOR**

OK

2	INSPECT A/F RELAY

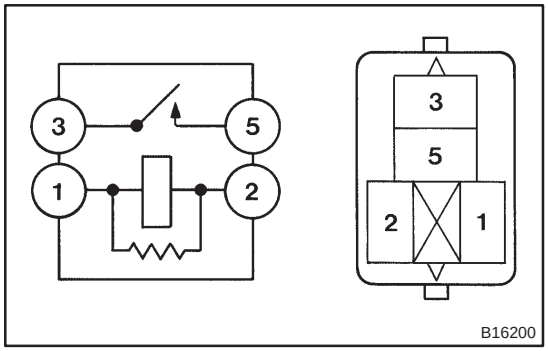

(a) Remove the A/F relay from the engine room R/B No.4.
(b) Inspect the A/F relay.
Standard:

Terminal No.	Specified condition
1 – 2	Continuity
3 – 5	No Continuity
	Continuity (Apply battery voltage terminals 1 and 2)

NG → **REPLACE A/F RELAY**

OK

3 INSPECT ECM(VOLTAGE)

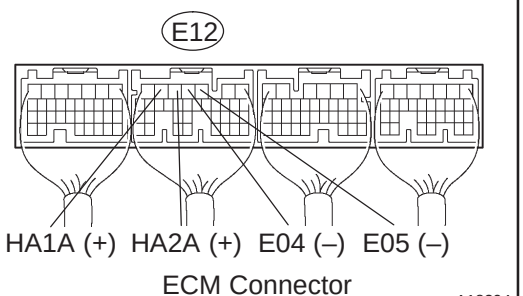

(a) Turn the ignition switch ON.
(b) Measure the voltage between the applicable terminals of the E12 ECM connectors.

Standard:

Symbols (Terminal No.)	Specified condition
HA1A (E12–6) – E04 (E12–4)	9 to 14 V
HA2A (E12–5) – E05 (E12–3)	

HINT:

- The HA1A means the heated oxygen sensor bank 1 sensor 1.
- The HA2A means the heated oxygen sensor bank 2 sensor 1.

OK → **CHECK AND REPLACE ECM (See page 01–32)**

NG

4 CHECK HARNESS AND CONNECTOR(A/F SENSOR – ECM, A/F SENSOR – A/F RELAY)

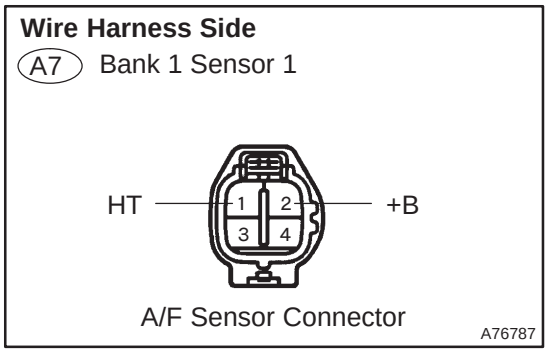

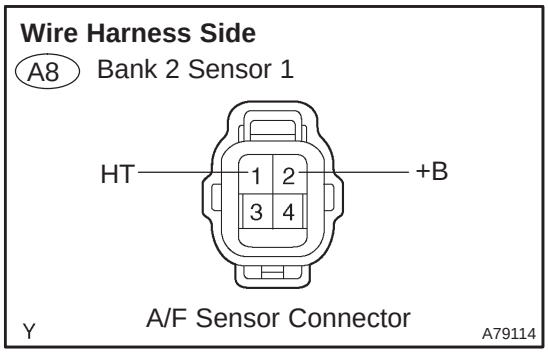

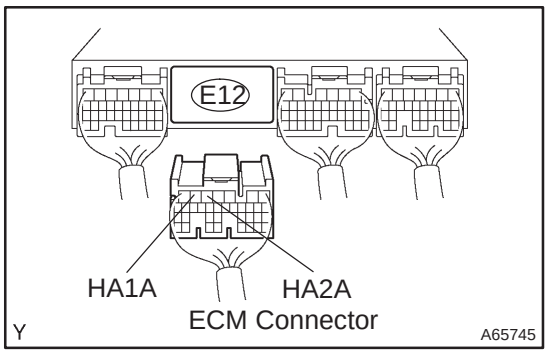

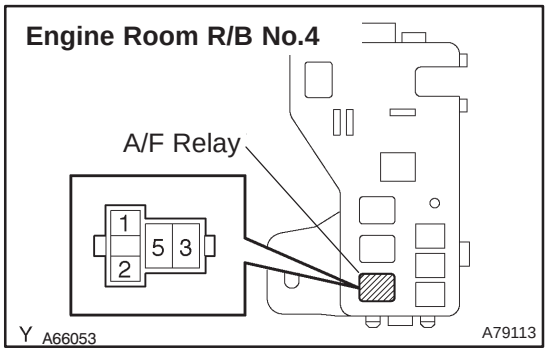

(a) Check the harness and connector between the ECM and A/F sensor connectors.

(1) Disconnect the A7 or A8 A/F sensor connector.

(2) Disconnect the E12 ECM connector.

(3) Check for continuity between the wire harness side connectors.

Standard (Check for open):

Symbols (Terminal No.)	Specified condition
HT (A7–1) – HA1A (E12–6)	Continuity
HT (A8–1) – HA2A (E12–5)	

Standard (Check for short):

Symbols (Terminal No.)	Specified condition
HT (A7–1) or HA1A (E12–6) – Body ground	No continuity
HT (A8–1) or HA2A (E12–5) – Body ground	

(b) Check the harness and connector between the A/F sensor connector and A/F relay.

(1) Disconnect the A7 or A8 A/F sensor connector.

(2) Remove the A/F relay from the engine room R/B No.4.

(3) Check for continuity between the wire harness side connectors.

Standard (Check for open):

Symbols (Terminal No.)	Specified condition
+B (A7–2) – A/F relay (3)	Continuity
+B (A8–2) – A/F relay (3)	

Standard (Check for short):

Symbols (Terminal No.)	Specified condition
+B (A7–2) or A/F relay (3) – Body ground	No continuity
+B (A8–2) or A/F relay (3) – Body ground	

NG → **REPAIR OR REPLACE HARNESS OR CONNECTOR**

OK

CHECK AND REPLACE ECM (See page 01–32)

DTC	P0100/31	MASS OR VOLUME AIR FLOW CIRCUIT

DTC	P0102/31	MASS OR VOLUME AIR FLOW CIRCUIT LOW INPUT

DTC	P0103/31	MASS OR VOLUME AIR FLOW CIRCUIT HIGH INPUT

CIRCUIT DESCRIPTION

The mass air flow meter uses a platinum hot wire. The hot wire mass air flow meter consists of a platinum hot wire, a temperature sensor and a control circuit installed in a plastic housing. The hot wire mass air flow meter works on the principle that the hot wire and temperature sensor located in the intake air bypass of the housing detect any changes in the intake air temperature.

The hot wire is maintained at the set temperature by controlling the current flow through the hot wire. This current flow is then measured as the output voltage of the mass air flow meter.

The circuit is constructed so that the platinum hot wire and temperature sensor provide a bridge circuit, with the power transistor controlled so that the potential of A and B remains equal to maintain the set temperature.

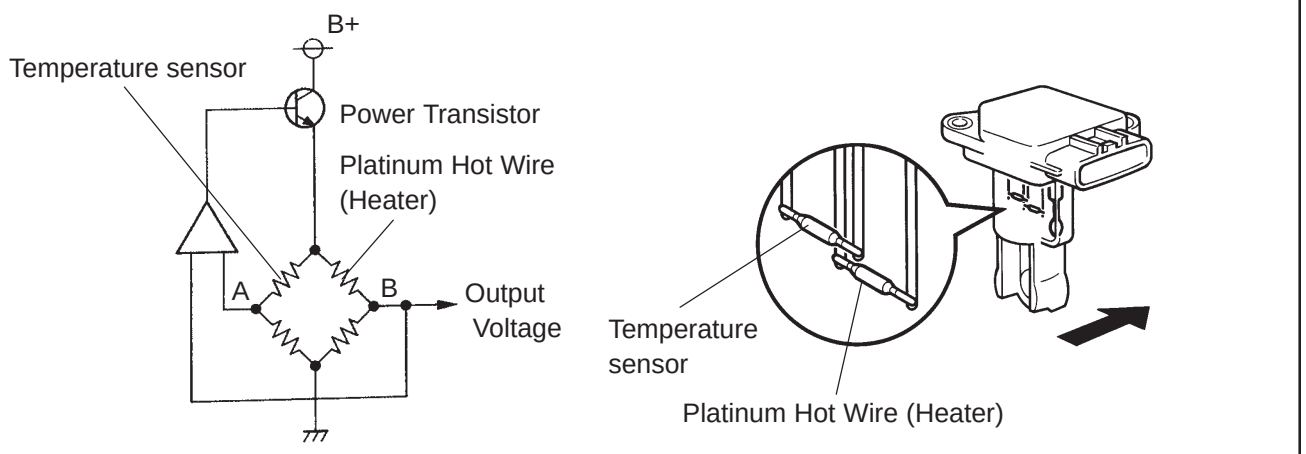

DTC No.	DTC Detection Condition	Trouble Area
P0100/31	Open or short in mass air flow meter circuit with engine speed 4,000 rpm or less for more than 3 sec.	• Open or short in mass air flow meter circuit • Mass air flow meter • ECM
P0102/31	Open in mass air flow meter circuit with engine speed 4,000 rpm or less for more than 3 sec.	
P0103/31	Short in mass air flow meter circuit with engine speed 4,000 rpm or less for more than 3 sec. (+B circuit)	

HINT:

After confirming DTC ”P0100/31, P0102/31 or P0103/31”, use the hand–held tester to confirm the mass air flow ratio in the ”DIAGNOSIS / OBD/MOBD / DATA LIST / ALL”.

Air Flow Value (gm/s)	Malfunction
Approx. 0.0	• Mass air flow meter power source circuit open • VG circuit open or short
271.0 or more	• E2G circuit open

WIRING DIAGRAM

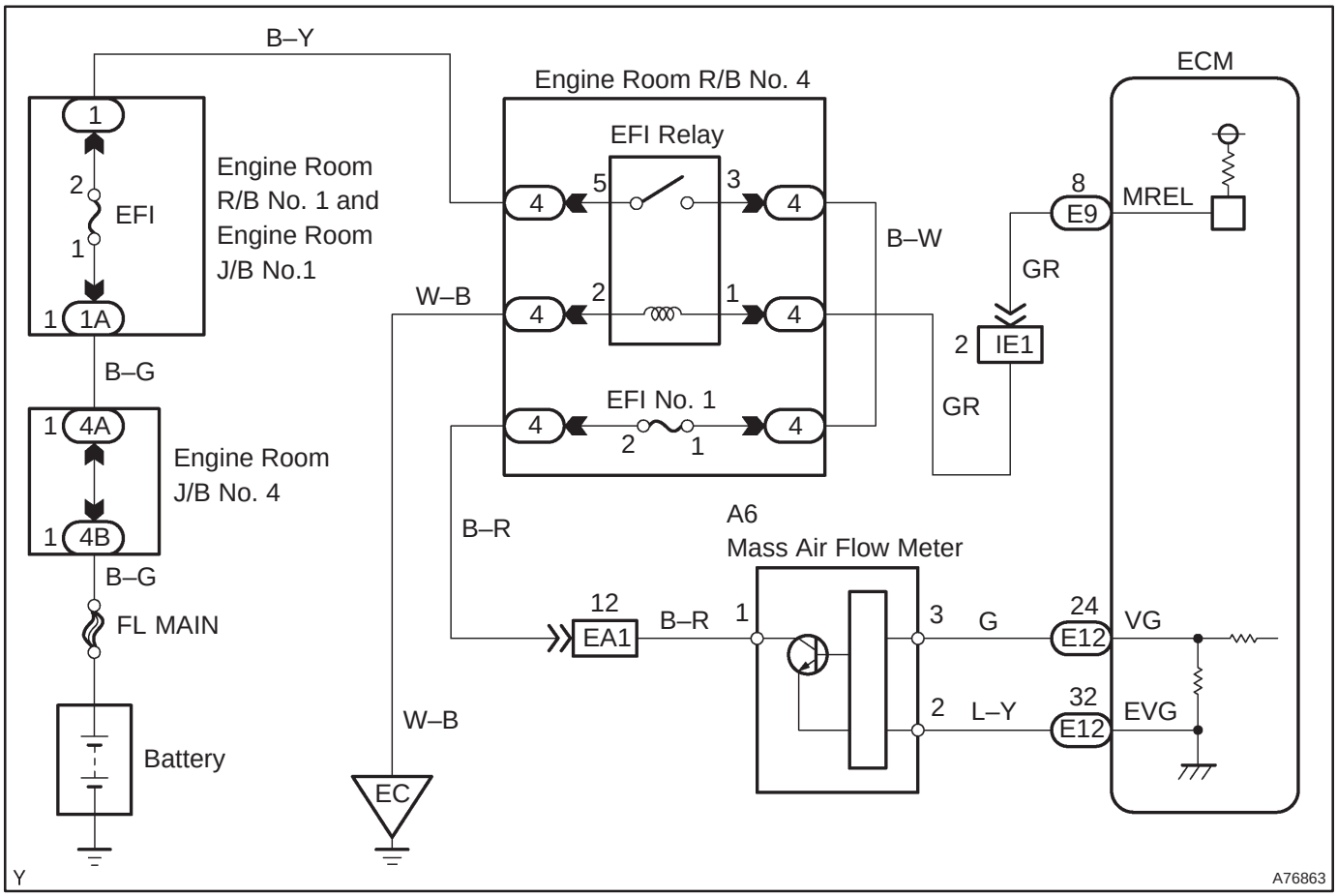

INSPECTION PROCEDURE

HINT:

Read freeze frame data using the hand–held tester. Freeze frame data records the engine conditions when a malfunction is detected. When troubleshooting, it is useful for determining whether the vehicle was running or stopped, the engine was warmed up or not, the air–fuel ratio was lean or rich, etc. at the time of the malfunction.

When using hand–held tester:

1	READ VALUE OF HAND–HELD TESTER(MASS AIR FLOW RATE)

(a) Connect the hand–held tester to the DLC3.
(b) Start the engine.
(c) Push the hand–held tester main switch ON.
(d) Select the item ”DIAGNOSIS / OBD/MOBD / DATA LIST / ALL / MAF” and read its value displayed on the hand–held tester.

Result:

Air flow rate (gm/s)	Proceed to
0.0	A
271.0 or more	B
1 ≦ Mass Air Flow Rate ≦ 270.0 or more (*1)	C

*1: The value must be changed when the throttle valve is opened or closed.

B → **Go to step 6**

C → **CHECK FOR INTERMITTENT PROBLEMS (See page 05–149)**

A

2	INSPECT MASS AIR FLOW METER(POWER SOURCE)

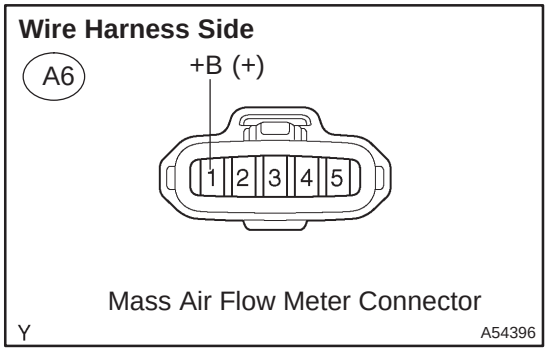

(a) Turn the ignition switch ON.
(b) Disconnect the mass air flow meter connector.
(c) Measure the voltage between the terminal of the wire harness side connector and the body ground.

Standard:

Symbols (Terminal No.)	Specified condition
+B (A6–1) – Body ground	9 to 14 V

NG → **Go to step 5**

OK

3 INSPECT ECM(VG VOLTAGE)

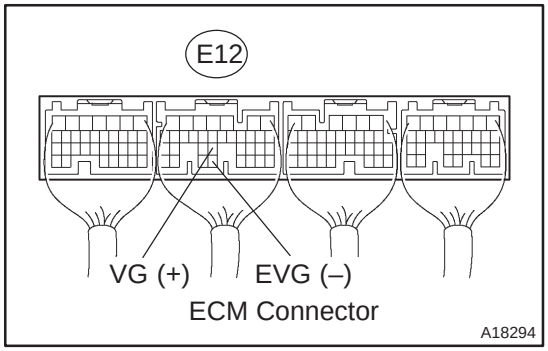

(a) Start the engine.
(b) Measure the voltage between the terminals of the E12 ECM connector.

HINT:
The shift position should be P or N and the A/C switch should be turned OFF.

Standard:

Symbols (Terminal No.)	Condition	Specified condition
VG (E12–24) – EVG (E12–32)	Engine is idling	0.5 to 3.0 V

OK → **CHECK AND REPLACE ECM (See page 01–32)**

NG

4 CHECK HARNESS AND CONNECTOR(MASS AIR FLOW METER – ECM)

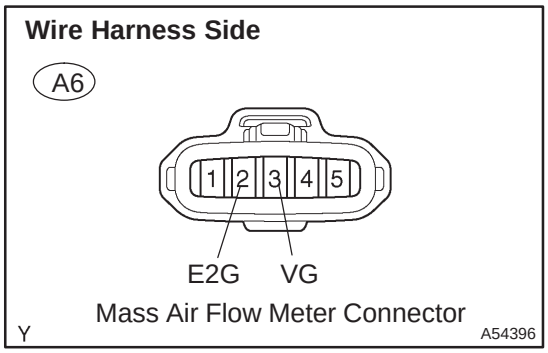

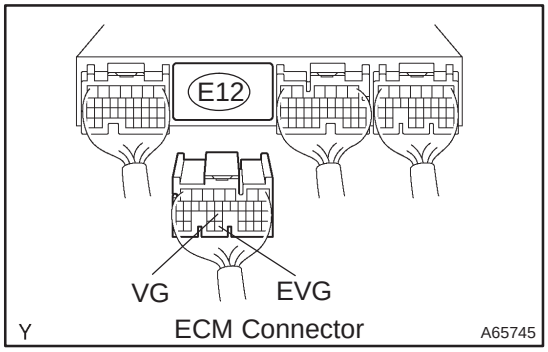

(a) Disconnect the mass air flow meter connector.
(b) Disconnect the E12 ECM connector.
(c) Check for continuity between the wire harness side connectors.

Standard (Check for open):

Symbols (Terminal No.)	Specified condition
VG (A6–3) – VG (E12–24)	Continuity
E2G (A6–2) – EVG (E12–32)	

Standard (Check for short):

Symbols (Terminal No.)	Specified condition
VG (A6–3) or VG (E12–24) – Body ground	No continuity

NG → **REPAIR OR REPLACE HARNESS OR CONNECTOR**

OK

REPLACE MASS AIR FLOW METER

5 CHECK HARNESS AND CONNECTOR(MASS AIR FLOW METER – EFI RELAY)

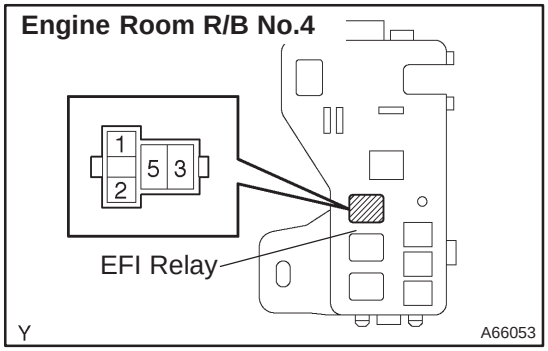

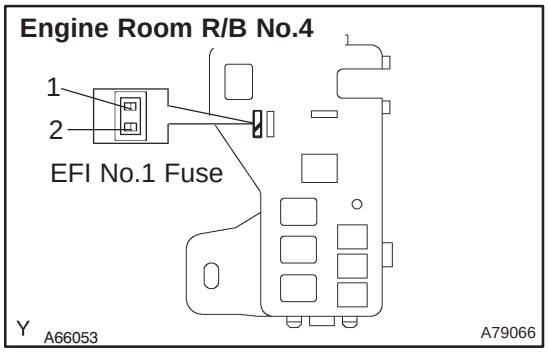

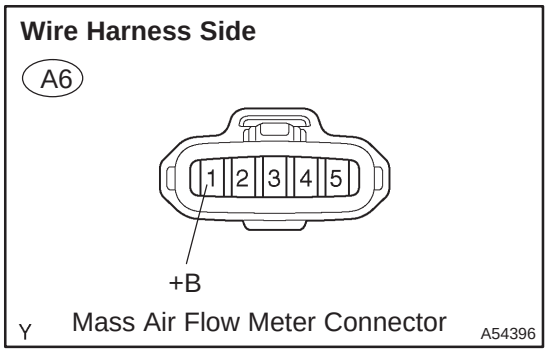

(a) Remove the EFI relay from the engine room R/B No.4.
(b) Remove the EFI No.1 fuse from the engine room R/B No.4.
(c) Disconnect the mass air flow meter connector.
(d) Check for continuity between the wire harness side connectors.

Standard (Check for open):

Symbols (Terminal No.)	Specified condition
EFI relay (3) – EFI No.1 fuse (1)	Continuity
EFI No.1 fuse (2) – +B (A6–1)	

Standard (Check for short):

Symbols (Terminal No.)	Specified condition
EFI relay (3) or EFI No.1 fuse (1) – Body ground	No continuity
EFI No.1 fuse (2) or +B (A6–1) – Body ground	

NOTICE:
Do not insert the tester leads hard in the procedure (c), the holder may be damaged.

NG → **REPAIR OR REPLACE HARNESS OR CONNECTOR**

OK

CHECK FOR ECM POWER SOURCE CIRCUIT (See page 05–257)

6 INSPECT ECM(SENSOR GROUND)

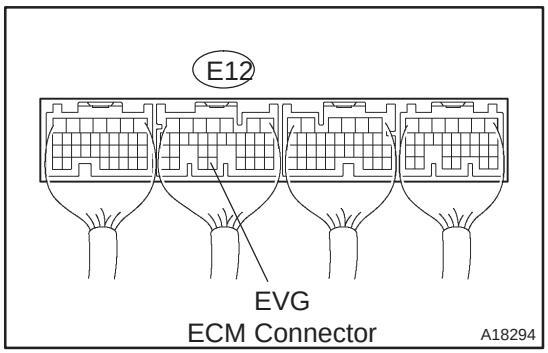

(a) Check for continuity between the terminal of the E12 ECM connector and the body ground.

Standard:

Symbols (Terminal No.)	Specified condition
EVG (E12–32) – Body ground	Continuity

NG → **CHECK AND REPLACE ECM (See page 01–32)**

OK

7	CHECK HARNESS AND CONNECTOR(MASS AIR FLOW METER – ECM)

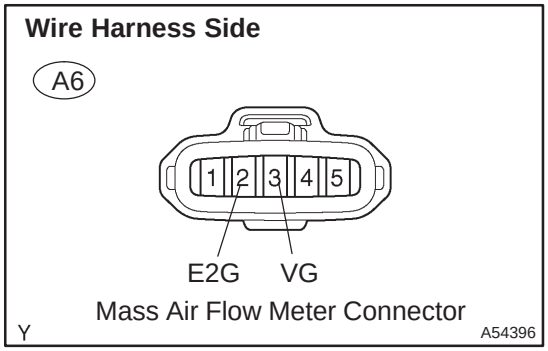

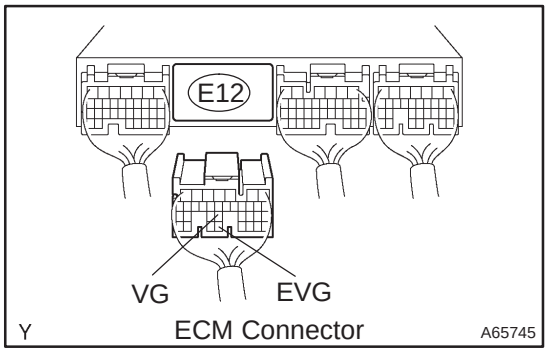

(a) Disconnect the mass air flow meter connector.
(b) Disconnect the E12 ECM connector.
(c) Check for continuity between the wire harness side connectors.

Standard (Check for open):

Symbols (Terminal No.)	Specified condition
VG (A6–3) – VG (E12–24)	Continuity
E2G (A6–2) – EVG (E12–32)	

Standard (Check for short):

Symbols (Terminal No.)	Specified condition
VG (A6–3) or VG (E12–24) – Body ground	No continuity

NG → **REPAIR OR REPLACE HARNESS OR CONNECTOR**

OK

REPLACE MASS AIR FLOW METER

When not using hand–held tester:

1	INSPECT ECM(VG VOLTAGE)

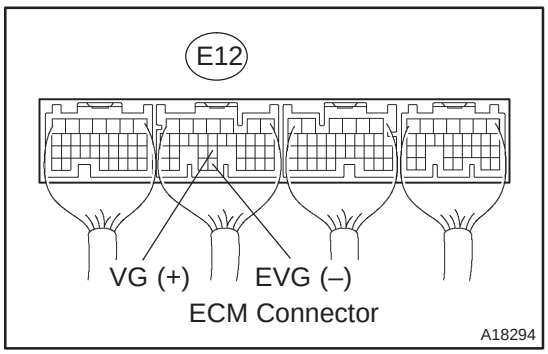

(a) Start the engine.
(b) Measure the voltage between the terminals of the E12 ECM connector.

HINT:
The shift position should be P or N and the A/C switch should be turned OFF.

Standard:

Symbols (Terminal No.)	Condition	Specified condition
VG (E12–24) – EVG (E12–32)	Engine is idling	0.5 to 3.0 V

OK → **CHECK AND REPLACE ECM (See page 01–32)**

NG

2 INSPECT MASS AIR FLOW METER(POWER SOURCE)

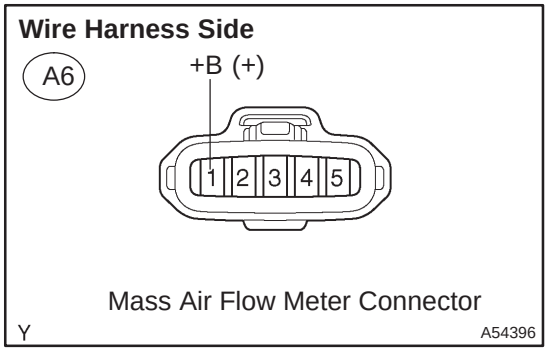

(a) Turn the ignition switch ON.
(b) Disconnect the mass air flow meter connector.
(c) Measure the voltage between the terminal of the wire harness side connector and the body ground.

Standard:

Symbols (Terminal No.)	Specified condition
+B (A6–1) – Body ground	9 to 14 V

NG → **Go to step 4**

OK

3 CHECK HARNESS AND CONNECTOR(MASS AIR FLOW METER – ECM)

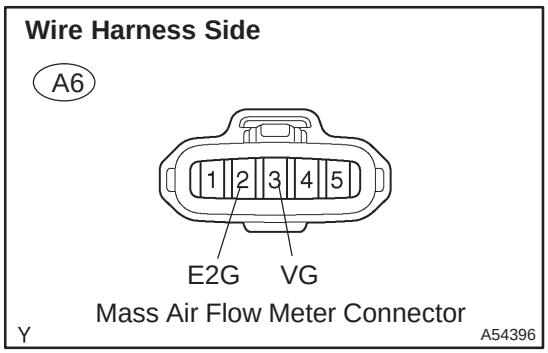

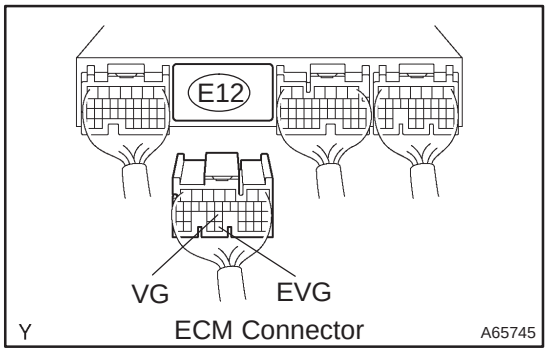

(a) Disconnect the mass air flow meter connector.
(b) Disconnect the E12 ECM connector.
(c) Check for continuity between the wire harness side connectors.

Standard (Check for open):

Symbols (Terminal No.)	Specified condition
VG (A6–3) – VG (E12–24)	Continuity
E2G (A6–2) – EVG (E12–32)	

Standard (Check for short):

Symbols (Terminal No.)	Specified condition
VG (A6–3) or VG (E12–24) – Body ground	No continuity

NG → **REPAIR OR REPLACE HARNESS OR CONNECTOR**

OK

REPLACE MASS AIR FLOW METER

4 CHECK HARNESS AND CONNECTOR(MASS AIR FLOW METER – EFI RELAY)

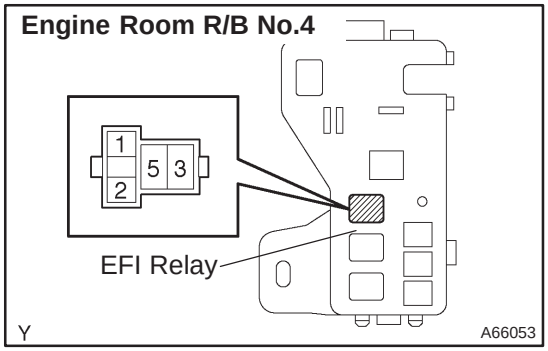

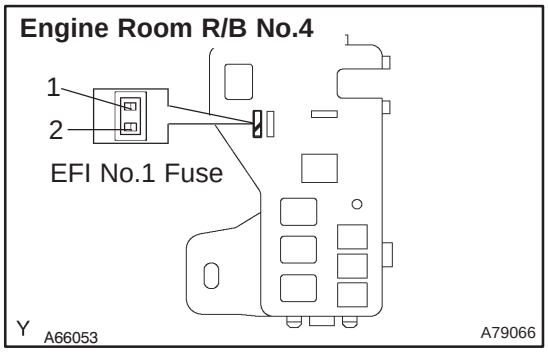

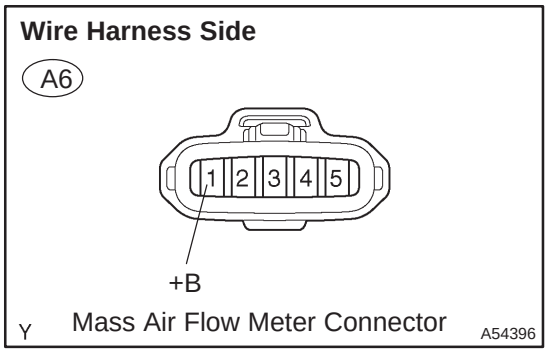

(a) Remove the EFI relay from the engine room R/B No.4.
(b) Remove the EFI No.1 fuse from the engine room R/B No.4.
(c) Disconnect the mass air flow meter connector.
(d) Check for continuity between the wire harness side connectors.

Standard (Check for open):

Symbols (Terminal No.)	Specified condition
EFI relay (3) – EFI No.1 fuse (1)	Continuity
EFI No.1 fuse (2) – +B (A6–1)	

Standard (Check for short):

Symbols (Terminal No.)	Specified condition
EFI relay (3) or EFI No.1 fuse (1) – Body ground	No continuity
EFI No.1 fuse (2) or +B (A6–1) – Body ground	

NOTICE:
Do not insert the tester leads hard in the procedure (c), the holder may be damaged.

NG → **REPAIR OR REPLACE HARNESS OR CONNECTOR**

OK

CHECK FOR ECM POWER SOURCE CIRCUIT (See page 05–257)

DTC	P0110/24	INTAKE AIR TEMPERATURE CIRCUIT MALFUNCTION

DTC	P0112/24	INTAKE AIR TEMPERATURE CIRCUIT LOW INPUT

DTC	P0113/24	INTAKE AIR TEMPERATURE CIRCUIT HIGH INPUT

CIRCUIT DESCRIPTION

(Fig.1)

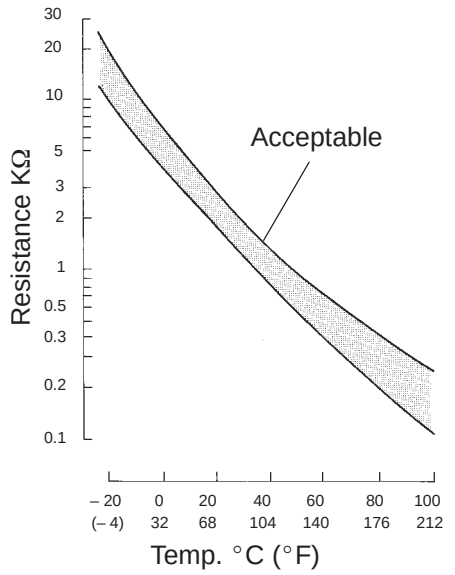

The intake air temperature sensor is built in the mass air flow meter and senses the intake air temperature.
A thermistor built in the sensor changes the resistance value according to the intake air temperature.
The lower the intake air temperature is the greater the thermistor resistance value becomes and the higher the intake air temperature is the lower the thermistor resistance value becomes (See Fig. 1).
The intake air temperature sensor is connected to the ECM (See below). The 5 V power source voltage in the ECM is applied to the intake air temperature sensor from terminal THA (THAR) via resistor R.
That is, the resistor R and the intake air temperature sensor are connected in series. When the resistance value of the intake air temperature sensor changes in accordance with changes in the intake air temperature, the potential at terminal THA (THAR) also changes. Based on this signal, the ECM increases the fuel injection volume to improve the driveability during cold engine operation.

DTC No.	Proceed to	DTC Detection Condition	Trouble Area
P0110/24	Step 1	Open or short in intake air temp. sensor circuit for 0.5 sec.	• Open or short in intake air temperature sensor circuit • Intake air temperature sensor (built in mass air flow meter) • ECM
P0112/24	Step 4	Short in intake air temp. sensor circuit for 0.5 sec.	
P0113/24	Step 2	Open in intake air temp. sensor circuit for 0.5 sec.	

After confirming DTC ”P0110/24, P0112/24 or P0113/24”, use the hand–held tester to confirm the intake air temperature from the ”DIAGNOSIS / OBD/MOBD / DATA LIST / ALL”.

Temperature Displayed	Malfunction
–40˚C (–40˚F)	Open circuit
140˚C (284˚F) or more	Short circuit

WIRING DIAGRAM

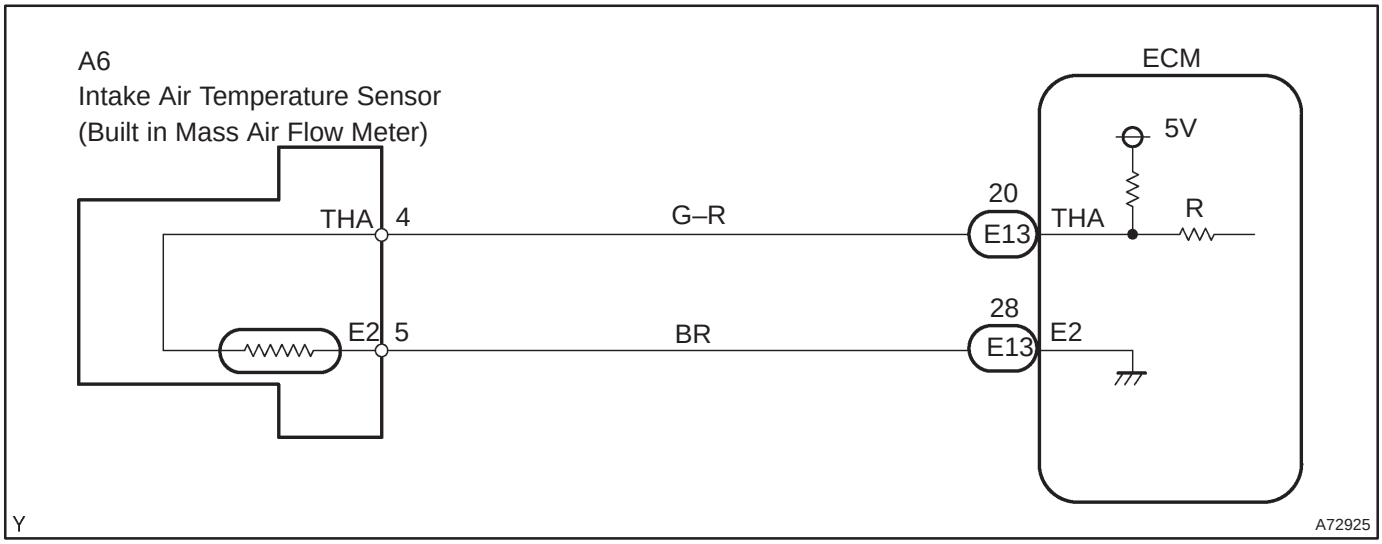

INSPECTION PROCEDURE

HINT:

- If different DTCs that are related to a different system are output simultaneously while terminal E2 is used as a ground terminal, terminal E2 may be open.
- Read freeze frame data using the hand–held tester. Freeze frame data records the engine conditions when a malfunction is detected. When troubleshooting, it is useful for determining whether the vehicle was running or stopped, the engine was warmed up or not, the air–fuel ratio was lean or rich, etc. at the time of the malfunction.

When using hand–held tester:

1	READ VALUE OF HAND–HELD TESTER(INTAKE AIR TEMPERATURE)

(a) Connect the hand–held tester to the DLC3.
(b) Turn the ignition switch ON and push the hand–held tester main switch ON.
(c) Select the item ”DIAGNOSIS / OBD/MOBD / DATA LIST / ALL / INTAKE AIR” and read its value displayed on the hand–held tester.
Temperature: Same value as the actual intake air temperature.
Result:

Temperature Displayed	Proceed to
–40˚C (–40˚F)	A
140˚C (284˚F) or more	B
OK (Same as present temperature)	C

HINT:

- If there is an open circuit, the hand–held tester indicates –40˚C (–40˚F).
- If there is a short circuit, the hand–held tester indicates 140˚C (284˚F) or more.

B → **Go to step 4**

C → **CHECK FOR INTERMITTENT PROBLEMS (See page 05–149)**

A

2 READ VALUE OF HAND–HELD TESTER(CHECK FOR OPEN IN WIRE HARNESS)

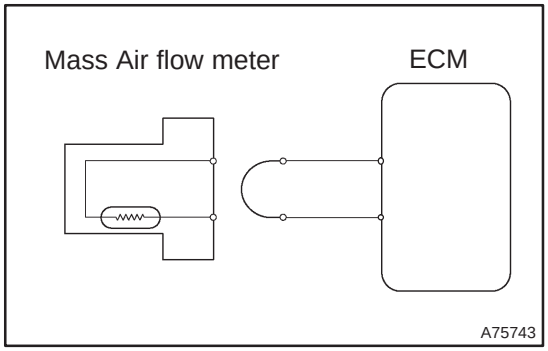

(a) Disconnect the mass air flow meter connector.
(b) Connect terminals THA and E2 of the mass air flow meter connector.
(c) Turn the ignition switch ON.
(d) Select the item ”DIAGNOSIS / OBD/MOBD / DATA LIST / ALL / INTAKE AIR” and read its value displayed on the hand–held tester.
Temperature value: 140°C (284°F) or more

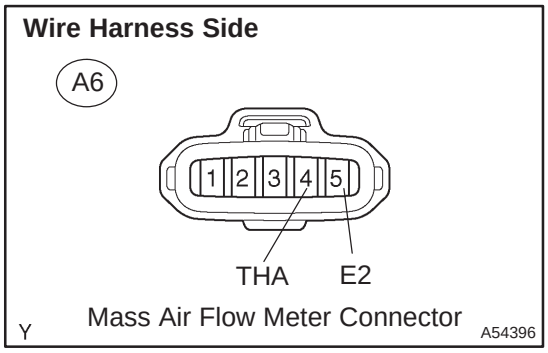

OK → **CONFIRM GOOD CONNECTION AT SENSOR. IF OK, REPLACE MASS AIR FLOW METER**

NG

3 READ VALUE OF HAND–HELD TESTER(CHECK FOR OPEN IN ECM)

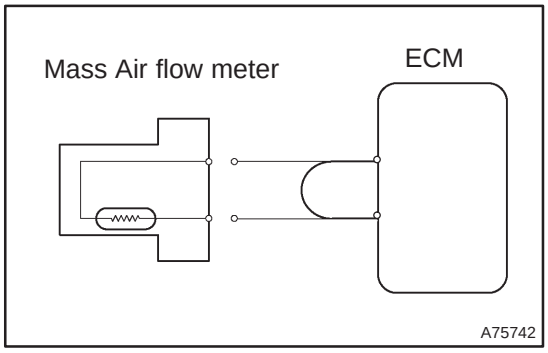

(a) Disconnect the mass air flow meter connector.
(b) Connect terminals THA and E2 of the E13 ECM connector.

HINT:
Before checking, do a visual and contact pressure check for the ECM connector.

(c) Turn the ignition switch ON.
(d) Select the item ”DIAGNOSIS / OBD/MOBD / DATA LIST / ALL / INTAKE AIR” and read its value displayed on the hand–held tester.
Temperature value: 140°C (284°F) or more

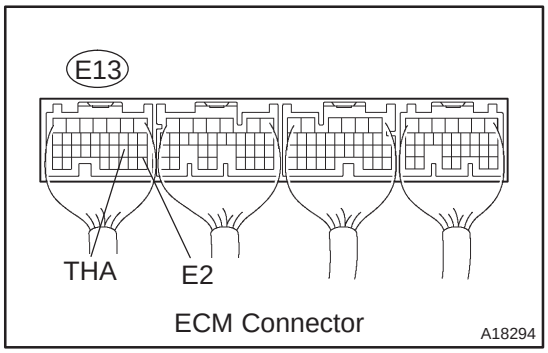

OK → **REPAIR OR REPLACE HARNESS OR CONNECTOR**

NG

CONFIRM GOOD CONNECTION AT ECM. IF OK, CHECK AND REPLACE ECM (See page 01–32)

4	READ VALUE OF HAND–HELD TESTER(CHECK FOR SHORT IN WIRE HARNESS)

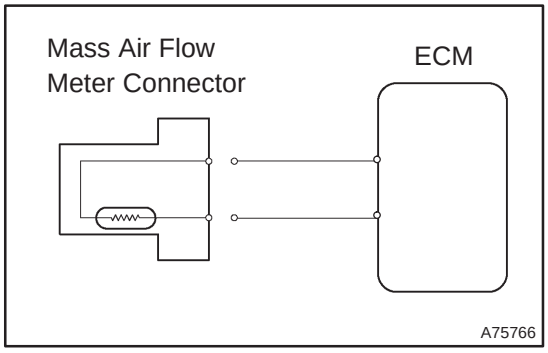

(a) Disconnect the mass air flow meter connector.
(b) Turn the ignition switch ON.
(c) Select the item ”DIAGNOSIS / OBD/MOBD / DATA LIST / ALL / INTAKE AIR” and read its value displayed on the hand–held tester.
Temperature value: –40°C (–40°F)

OK → **REPLACE MASS AIR FLOW METER**

NG

5	READ VALUE OF HAND–HELD TESTER(CHECK FOR SHORT IN ECM)

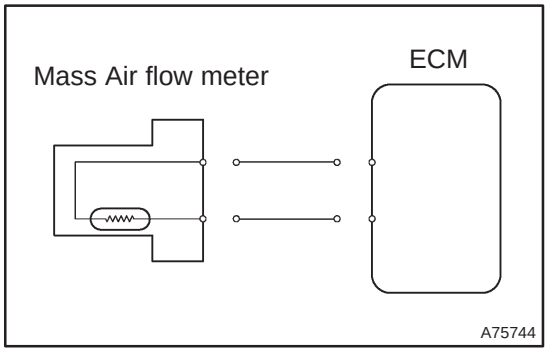

(a) Disconnect the E13 ECM connector.
(b) Turn the ignition switch ON.
(c) Select the item ”DIAGNOSIS / OBD/MOBD / DATA LIST / ALL / INTAKE AIR” and read its value displayed on the hand–held tester.
Temperature value: –40°C (–40°F)

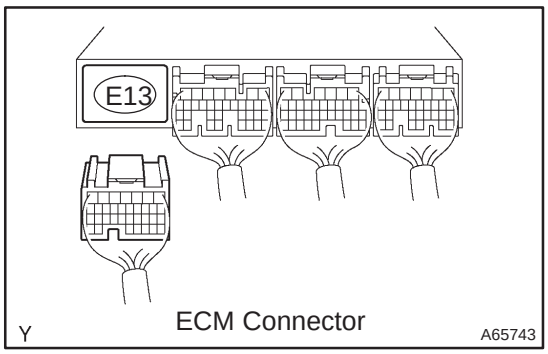

OK → **REPAIR OR REPLACE HARNESS OR CONNECTOR**

NG

CHECK AND REPLACE ECM (See page 01–32)

When not using hand–held tester:

1	INSPECT ECM(THA VOLTAGE)

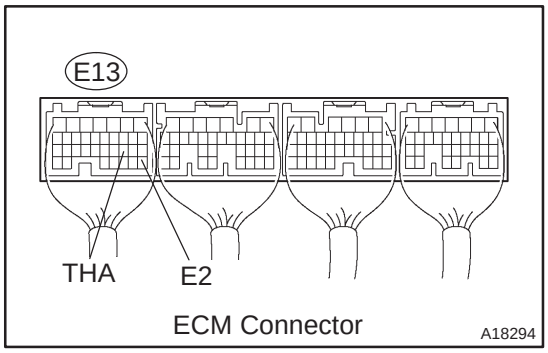

(a) Turn the ignition switch ON.
(b) Measure the voltage between terminals THA and E2 of the E13 ECM connector.

Voltage:

Intake air temp.	Voltage
20 °C (68 °F)	0.5 to 3.4 V
60 °C (140 °F)	0.2 to 1.0 V

OK → **CHECK FOR INTERMITTENT PROBLEMS (See page 05–149)**

NG

2	INSPECT MASS AIR FLOW METER (See page 10–20)

NG → **REPLACE MASS AIR FLOW METER**

OK

3	CHECK HARNESS AND CONNECTOR(ECM – MASS AIR FLOW METER)

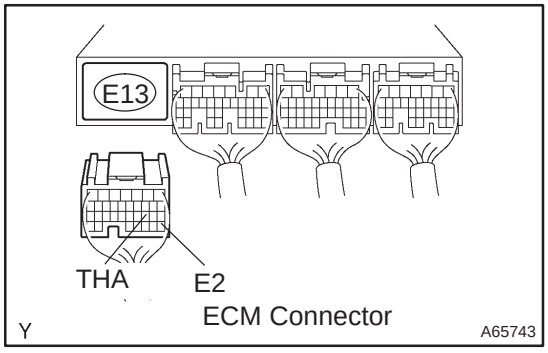

(a) Disconnect the E13 ECM connector.
(b) Disconnect the mass air flow meter connector.
(c) Check for continuity between the wire harness side connector.

Standard (Check for open):

Symbols (Terminal No.)	Specified condition
THA (E13–20) – THA (A6–4)	Continuity
E2 (E13–28) – E2 (A6–5)	

Standard (Check for short):

Symbols (Terminal No.)	Specified condition
THA (E13–20) or THA (A6–4) – Body ground	Continuity

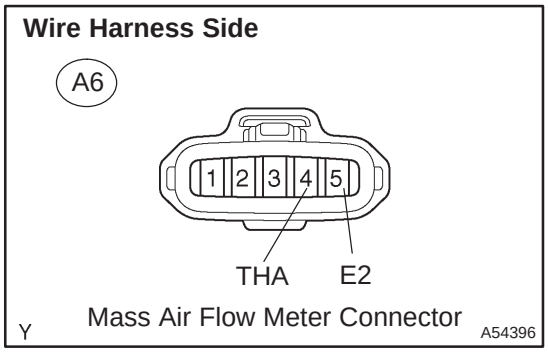

NG → **REPAIR OR REPLACE HARNESS OR CONNECTOR**

OK

CHECK AND REPLACE ECM (See page 01–32)

DTC	P0115/22	ENGINE COOLANT TEMPERATURE CIRCUIT

DTC	P0117/22	ENGINE COOLANT TEMPERATURE CIRCUIT LOW INPUT

DTC	P0118/22	ENGINE COOLANT TEMPERATURE CIRCUIT HIGH INPUT

CIRCUIT DESCRIPTION

A thermistor is built in the engine coolant temperature sensor and changes the resistance value according to the engine coolant temperature.

The structure of the sensor and connection to the ECM is the same as those of the intake air temperature sensor.

HINT:

If the ECM detects the DTC ”P0115/22, P0117/22 or P0118/22” it enters the fail–safe mode in which the engine coolant temperature is assumed to be 80 °C (176 °F).

DTC No.	Proceed to	DTC Detection Condition	Trouble Area
P0115/22	Step 1	Open or short in engine coolant temp. sensor circuit for 0.5 sec.	• Open or short in engine coolant temperature sensor circuit • Engine coolant temperature sensor • ECM
P0117/22	Step 4	Short in engine coolant temp. sensor circuit for 0.5 sec.	
P0118/22	Step 2	Open in engine coolant temp. sensor circuit for 0.5 sec.	

HINT:

After confirming DTC ”P0115/22, P0117/22 or P0118/22”, use the hand–held tester to confirm the engine coolant temperature in the ”DIAGNOSIS / OBD/MOBD / DATA LIST / ALL”.

Temperature Displayed	Malfunction
–40˚C (–40˚F)	Open circuit
140˚C (284˚F) or more	Short circuit

WIRING DIAGRAM

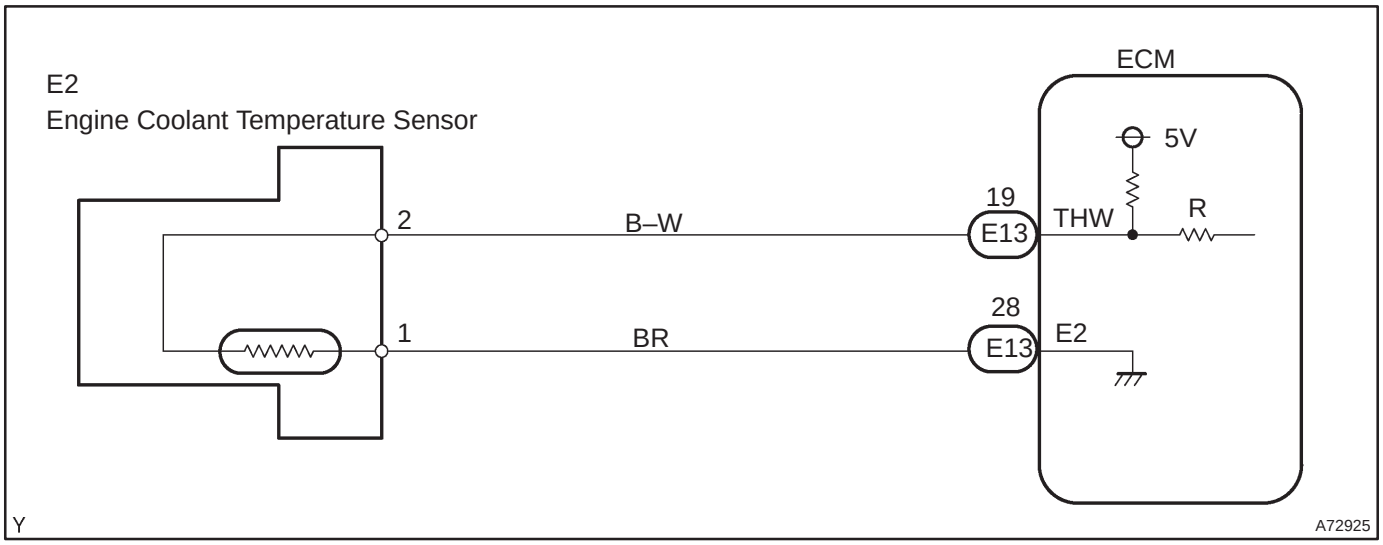

INSPECTION PROCEDURE

HINT:

- If different DTCs that are related to a different system are output simultaneously while terminal E2 is used as a ground terminal, terminal E2 may be open.
- Read freeze frame data using the hand–held tester. Freeze frame data records the engine conditions when a malfunction is detected. When troubleshooting, it is useful for determining whether the vehicle was running or stopped, the engine was warmed up or not, the air–fuel ratio was lean or rich, etc. at the time of the malfunction.

When using hand–held tester:

1	READ VALUE OF HAND–HELD TESTER(ENGINE COOLANT TEMPERATURE)

(a) Connect the hand–held tester to the DLC3.
(b) Turn the ignition switch ON and push the hand–held tester main switch ON.
(c) Select the item ”DIAGNOSIS / OBD/MOBD / DATA LIST / ALL / COOLANT TEMP” and read its value displayed on the hand–held tester.
Temperature: Same value as the actual intake air temperature.
Result:

Temperature Displayed	Proceed to
–40˚C (–40˚F)	A
140˚C (284˚F) or more	B
OK (Same as present temperature)	C

HINT:

- If there is an open circuit, the hand–held tester indicates –40˚C (–40˚F).
- If there is a short circuit, the hand–held tester indicates 140˚C (284˚F) or more.

B → **Go to step 4**

C → **CHECK FOR INTERMITTENT PROBLEMS (See page 05–149)**

A

2 READ VALUE OF HAND–HELD TESTER(CHECK FOR OPEN IN WIRE HARNESS)

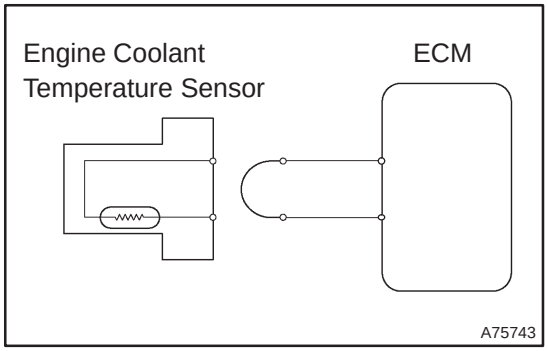

(a) Disconnect the engine coolant temperature sensor connector.
(b) Connect terminals 1 and 2 of the engine coolant temperature sensor connector.
(c) Turn the ignition switch ON.
(d) Select the item "DIAGNOSIS / OBD/MOBD / DATA LIST / ALL / COOLANT TEMP" and read its value displayed on the hand–held tester.
Temperature value: 140°C (284°F) or more

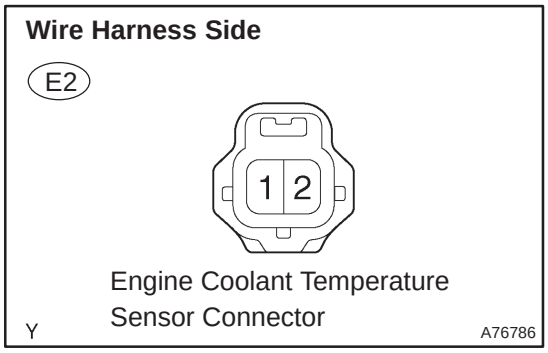

OK → **CONFIRM GOOD CONNECTION AT SENSOR. IF OK, REPLACE WATER TEMP. SENSOR**

NG

3 READ VALUE OF HAND–HELD TESTER(CHECK FOR OPEN IN ECM)

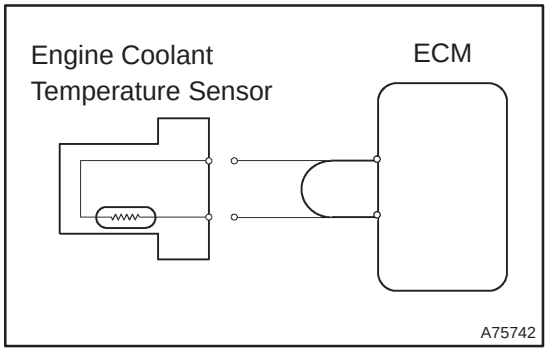

(a) Disconnect the engine coolant temperature sensor connector.
(b) Connect terminals THW and E2 of the E13 ECM connector.

HINT:
Before checking, do a visual and contact pressure check for the ECM connector.

(c) Turn the ignition switch ON.
(d) Select the item "DIAGNOSIS / OBD/MOBD / DATA LIST / ALL / COOLANT TEMP" and read its value displayed on the hand–held tester.
Temperature value: 140°C (284°F) or more

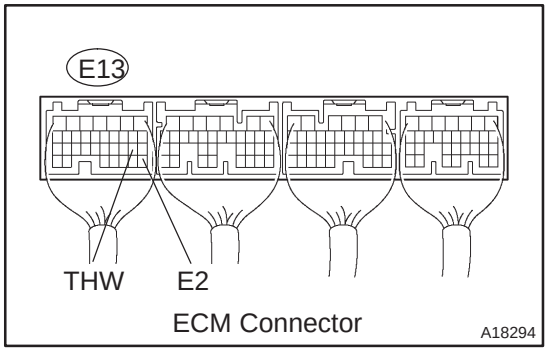

OK → **REPAIR OR REPLACE HARNESS OR CONNECTOR**

NG

CONFIRM GOOD CONNECTION AT ECM. IF OK, CHECK AND REPLACE ECM (See page 01–32)

4	READ VALUE OF HAND–HELD TESTER(CHECK FOR SHORT IN WIRE HARNESS)

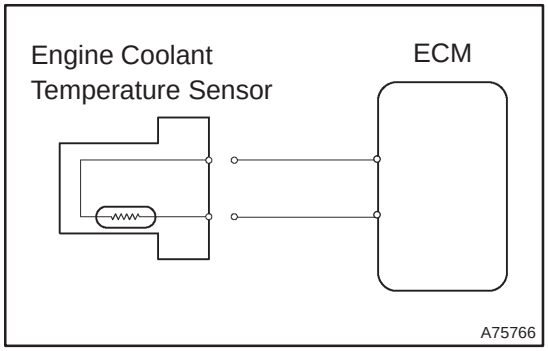

(a) Disconnect the engine coolant temperature sensor connector.
(b) Turn the ignition switch ON.
(c) Select the item "DIAGNOSIS / OBD/MOBD / DATA LIST / ALL / COOLANT TEMP" and read its value displayed on the hand–held tester.
Temperature value: –40°C (–40°F)

OK → **REPLACE ENGINE COOLANT TEMPERATURE SENSOR**

NG

5	READ VALUE OF HAND–HELD TESTER(CHECK FOR SHORT IN ECM)

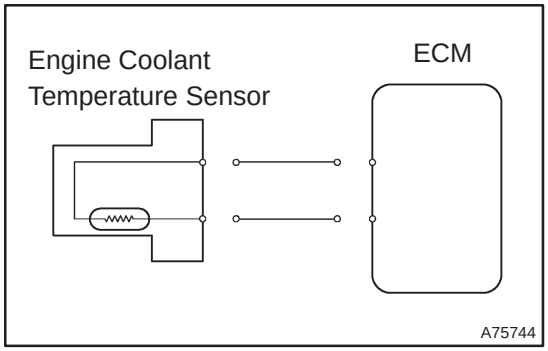

(a) Disconnect the E13 ECM connector.
(b) Disconnect the engine coolant temperature sensor connector.
(c) Turn the ignition switch ON.
(d) Select the item "DIAGNOSIS / OBD/MOBD / DATA LIST / ALL / COOLANT TEMP" and read its value displayed on the hand–held tester.
Temperature: –40°C (–40°F)

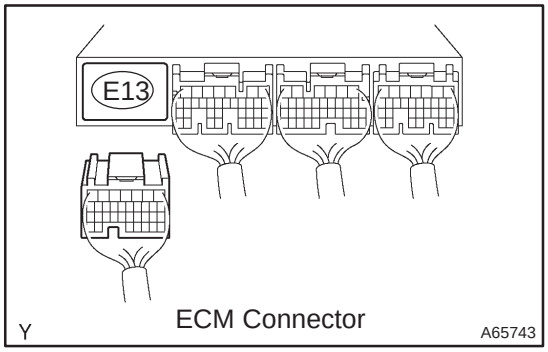

OK → **REPAIR OR REPLACE HARNESS OR CONNECTOR**

NG

CHECK AND REPLACE ECM (See page 01–32)

When not using hand–held tester:

1 INSPECT ECM(THW VOLTAGE)

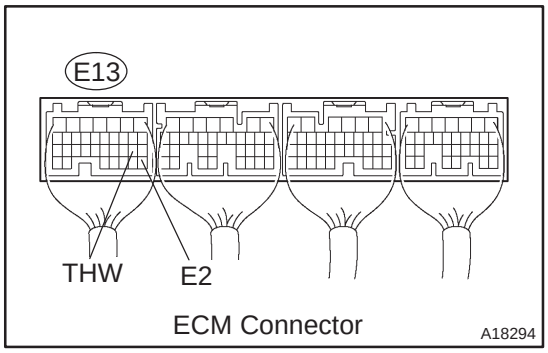

(a) Turn the ignition switch ON.
(b) Measure the voltage between terminals THW and E2 of the ECM connector.

Voltage:

Intake air temp.	Voltage
20 °C (68 °F)	0.5 to 3.4 V
60 °C (140 °F)	0.2 to 1.0 V

OK → **CHECK FOR INTERMITTENT PROBLEMS (See page 05–149)**

NG

2 INSPECT ENGINE COOLANT TEMPERATURE SENSOR (See page 10–20)

NG → **REPLACE ENGINE COOLANT TEMPERATURE SENSOR**

OK

3 CHECK HARNESS AND CONNECTOR(ECM – EFI WATER TEMP. SENSOR)

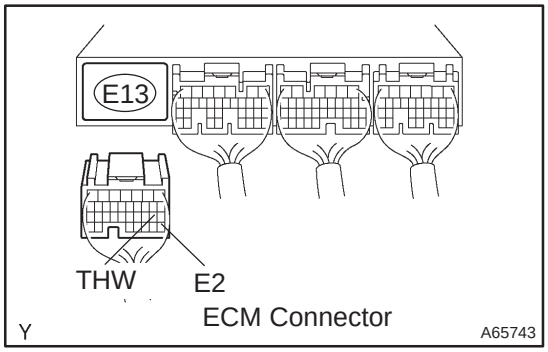

(a) Disconnect the E13 ECM connector.
(b) Disconnect the engine coolant temperature sensor connector.
(c) Check for continuity between the wire harness side connector.

Standard (Check for open):

Symbols (Terminal No.)	Specified condition
THW (E13–19) – Engine coolant temperature sensor (E2–2)	Continuity
E2 (E13–28) – Engine coolant temperature sensor (E2–1)	

Standard (Check for short):

Symbols (Terminal No.)	Specified condition
THW (E13–19) or Engine coolant temperature sensor (E2–2) – Body ground	Continuity

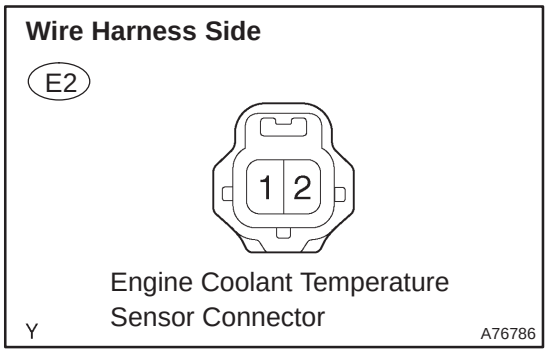

MG → **REPAIR OR REPLACE HARNESS OR CONNECTOR**

OK

CHECK AND REPLACE ECM (See page 01–32)

DTC	P0120/41	THROTTLE/PEDAL POSITION SENSOR/SWITCH ”A” CIRCUIT

DTC	P0122/41	THROTTLE/PEDAL POSITION SENSOR/SWITCH ”A” CIRCUIT LOW INPUT

DTC	P0123/41	THROTTLE/PEDAL POSITION SENSOR/SWITCH ”A” CIRCUIT HIGH INPUT

CIRCUIT DESCRIPTION

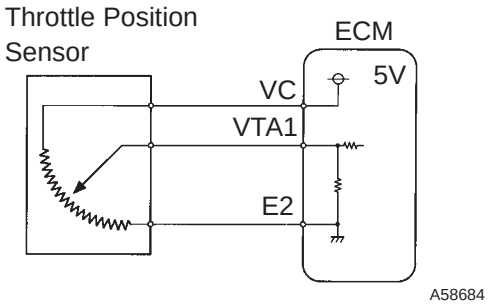

The throttle position sensor is mounted in the throttle body and detects the throttle valve opening angle.
When the throttle valve is fully closed, a voltage of approximately 0.7 V is applied to terminal VTA1 of the ECM. The voltage applied to terminal VTA1 of the ECM increases in proportion to the opening angle of the throttle valve and becomes approximately 3.5 to 5.0 V when the throttle valve is fully opened. The ECM judges the vehicle driving conditions from these signals input from terminal VTA1, uses them as one of the conditions for deciding the air–fuel ratio correction, power increase correction and fuel–cut control etc.

DTC No.	DTC Detection Condition	Trouble Area
Condition (a) of DTC P0120/41, P0122/41 or P0123/41 continues for 2 sec. (Open or short in throttle position sensor circuit)		
P0120/41	Detection conditions for DTCs P0122 and P0123 are not satisfied but condition (a) is satisfied (a) VTA1 less than 0.1 V, or VTA1 greater than 4.9 V	• Throttle position sensor (built in throttle body) • ECM
P0122/41	(a) VTA1 less than 0.1 V	• Throttle position sensor (built in throttle body) • Short in VTA1 circuit • Open in VC circuit • ECM
P0123/41	(a) VTA1 greater than 4.9 V	• Throttle position sensor (built in throttle body) • Open in VTA1 circuit • Open in E2 circuit • VC and VTA1 circuit are short–circuited • ECM

NOTICE:
When a malfunction is detected, the throttle valve is locked at a certain opening angle. Also, the whole electronically controlled throttle operation is cancelled until the system returns to normal and the ignition switch is turned OFF.
HINT:

- After confirming DTCs, use the hand–held tester to confirm the throttle valve opening percentage and closed throttle position switch condition.

Throttle valve opening position expressed as percentage		Trouble Area
Throttle valve fully closed	Throttle valve fully open	
0 %	0 %	VC circuit open VTA circuit open or short
Approx. 100 %	Approx. 100 %	E2 circuit open

WIRING DIAGRAM

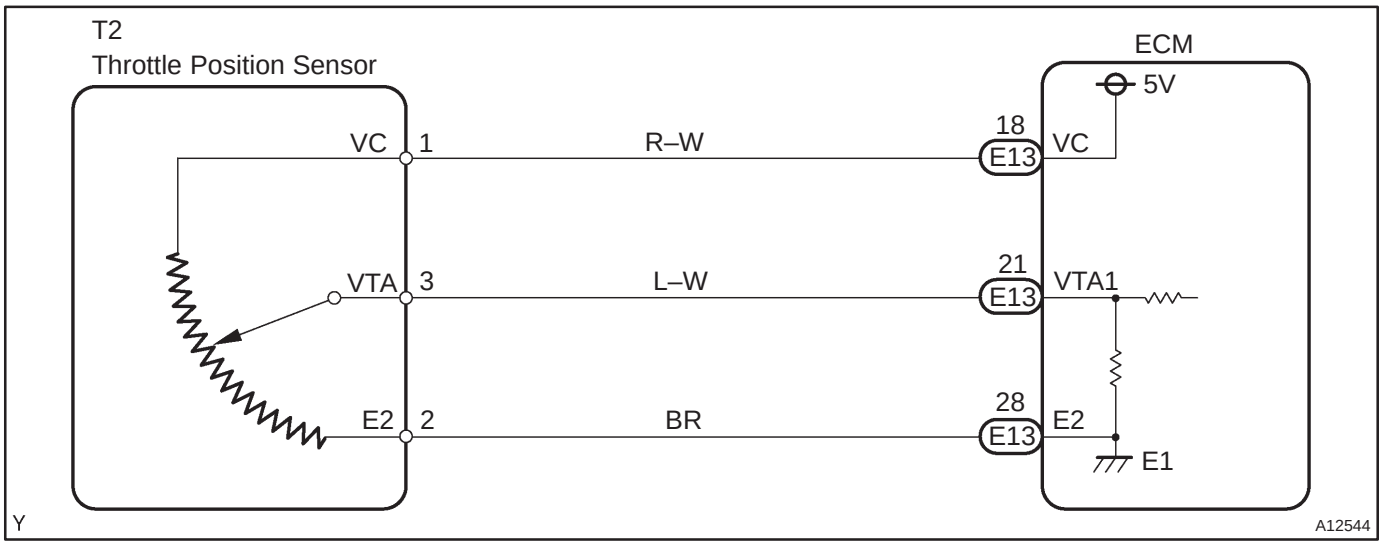

INSPECTION PROCEDURE

HINT:

- Read freeze frame data using the hand−held tester. Freeze frame data records the engine conditions when a malfunction is detected. When troubleshooting, it is useful for determining whether the vehicle was running or stopped, the engine was warmed up or not, the air–fuel ratio was lean or rich, etc. at the time of the malfunction.
- If different DTCs that are related to a different system are output simultaneously while terminal E2 is used as a ground terminal, terminal E2 may be open.

When using hand–held tester:

1	READ VALUE OF HAND–HELD TESTER(THROTTLE VALVE OPENING PERCENTAGE)

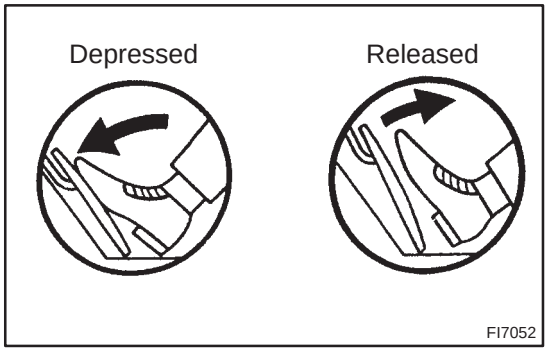

(a) Turn the ignition switch ON.
(b) Select the item ”DIAGNOSIS / OBD/MOBD / DATA LIST / ALL / THROTTLE POS” and read its value displayed on the hand–held tester.

Result:

Accelerator pedal operation	Throttle valve opening position expressed as percentage	Proceed to
Released→Depressed	0 %	A
	Approx. 10 %→ Approx. 75 %	B
	Approx. 100 %	C

B → **CHECK FOR INTERMITTENT PROBLEMS (See page 05–149)**

C → **Go to step 4**

A

2	INSPECT THROTTLE POSITION SENSOR

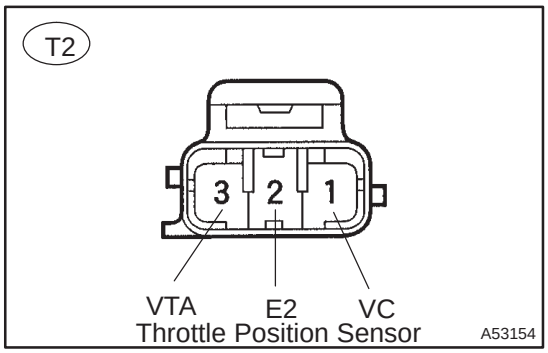

(a) Disconnect the throttle position sensor connector.
(b) Measure the resistance between the terminals of the throttle position sensor.

Standard:

Symbols (Terminal No.)	Throttle Valve	Resistance
VC (T2–1) – E2 (T2–2)	—	2.5 to 5.9 kΩ
VTA (T2–3) – E2 (T2–2)	Fully closed	0.2 to 5.7 kΩ
	Fully open	2.0 to 10.2 kΩ

NG → **REPLACE THROTTLE POSITION SENSOR**

OK

3 INSPECT ECM

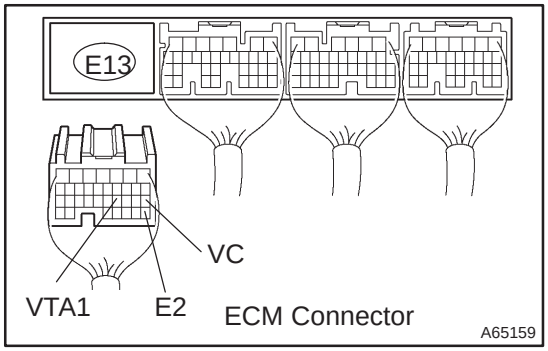

(a) Reconnect the throttle position sensor connector.
(b) Disconnect the E13 ECM connector.
(c) Measure the resistance between the terminals of the E13 ECM connector.

Standard:

Symbols (Terminal No.)	Throttle valve	Resistance
VC (E13–18) – EC (E13–28)	—	2.5 to 5.9 kΩ
VTA1 (E13–21) – E2 (E13–28)	Fully closed	0.2 to 5.7 kΩ
	Fully open	2.0 to 10.2 kΩ

(d) Check for continuity between the terminals of the E13 ECM connector.

Standard (Check for short):

Symbols (Terminal No.)	Specified condition
VC (E13–18) – Body ground	No Continuity
VTA1 (E13–21) – Body ground	

NG → **REPAIR OR REPLACE HARNESS OR CONNECTOR**

OK

CHECK AND REPLACE ECM (See page 01–32)

4 INSPECT THROTTLE POSITION SENSOR

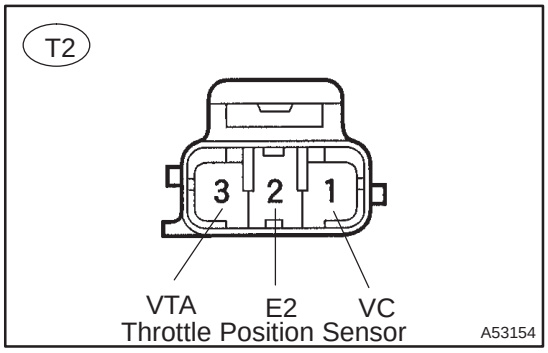

(a) Disconnect the throttle position sensor connector.
(b) Measure the resistance between the terminals of the throttle position sensor.

Standard:

Symbols (Terminal No.)	Throttle Valve	Resistance
VC (T2–1) – E2 (T2–2)	—	2.5 to 5.9 kΩ
VTA (T2–3) – E2 (T2–2)	Fully closed	0.2 to 5.7 kΩ
	Fully open	2.0 to 10.2 kΩ

NG → **REPLACE THROTTLE POSITION SENSOR**

OK

5 CHECK HARNESS AND CONNECTOR(ECM – THROTTLE POSITION SENSOR)

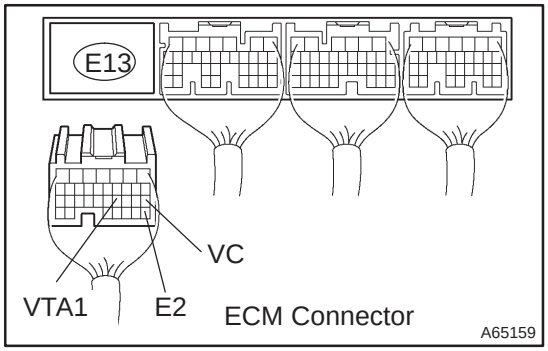

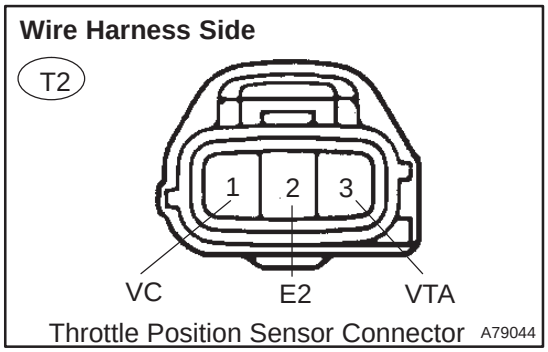

(a) Disconnect the E13 ECM connector.
(b) Disconnect the throttle position sensor connector.
(c) Check for continuity between the wire harness side connectors.

Standard (Check for open):

Symbols (Terminal No.)	Specified condition
VC (T2–1) – VC (E13–18)	Continuity
VTA (T2–3) – VTA1 (E13–21)	
E2 (T2–2) – E2 (E13–28)	

Standard (Check for short):

Symbols (Terminal No.)	Specified condition
VC (T2–1) or VC (E13–18) – Body ground	No continuity
VTA (T2–3) or VTA1 (E13–21) – Body ground	

NG → **REPAIR OR REPLACE HARNESS OR CONNECTOR**

OK

CHECK AND REPLACE ECM (See page 01–32)

When not using hand–held tester:

1 CHECK HARNESS AND CONNECTOR(THROTTLE POSITION SENSOR – ECM)

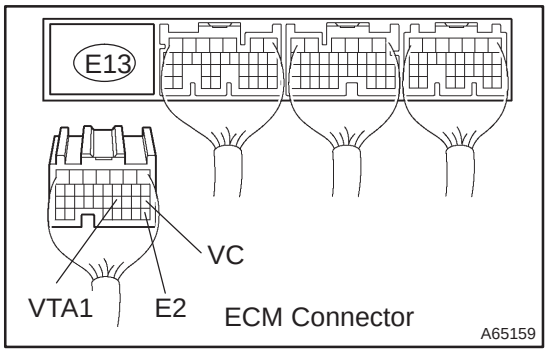

(a) Disconnect the E13 ECM connector.
(b) Disconnect the throttle position sensor connector.
(c) Check for continuity between the wire harness side connectors.

Standard (Check for open):

Symbols (Terminal No.)	Specified condition
VC (T2–1) – VC (E13–18)	Continuity
VTA (T2–3) – VTA1 (E13–21)	
E2 (T2–2) – E2 (E13–28)	

Standard (Check for short):

Symbols (Terminal No.)	Specified condition
VC (T2–1) or VC (E13–18) – Body ground	No continuity
VTA (T2–3) or VTA1 (E13–21) – Body ground	

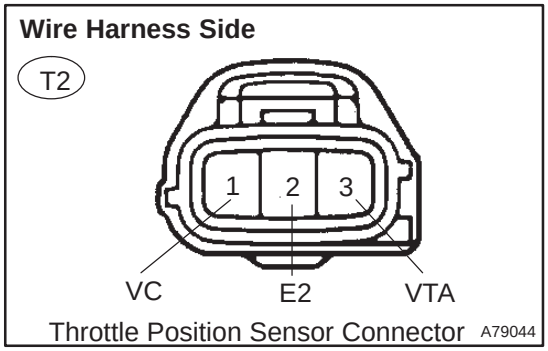

NG → **REPAIR OR REPLACE HARNESS OR CONNECTOR**

OK

2 INSPECT ECM(VC VOLTAGE)

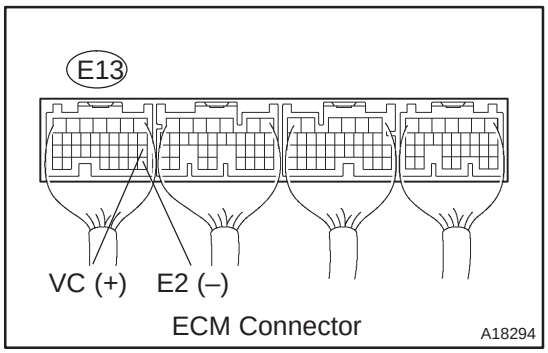

(a) Disconnect the throttle position sensor connector.
(b) Turn the ignition switch ON.
(c) Measure the voltage between the terminals of the E13 ECM connector.

Standard:

Symbols (Terminal No.)	Specified condition
VC (E13–18) – E2 (E13–28)	4.5 to 5.5 V

NG → **CHECK AND REPLACE ECM (See page 01–32)**

OK

3 REPLACE THROTTLE BODY ASSY

GO

4	READ OUTPUT DTC(THROTTLE POSITION SENSOR DTCS ARE OUTPUT AGAIN)

(a) Clear the DTC (See page 05–149).
(b) Start the engine.
(c) Run the engine at idle for more than 15 seconds.
(d) Read the DTC (See page 05–149).

Result:

Display (DTC output)	Proceed to
”P0120/41, P0122/41 or P0123/41” is output again	A
”P0120/41, P0122/41 or P0123/41” is not output again	B

B → **SYSTEM OK**

A

CHECK AND REPLACE ECM (See page 01–32)

DTC	P0136/27	OXYGEN SENSOR CIRCUIT MALFUNCTION (BANK 1 SENSOR 2)

DTC	P0156/29	OXYGEN SENSOR CIRCUIT MALFUNCTION (BANK 2 SENSOR 2)

CIRCUIT DESCRIPTION

The heated oxygen sensor is the lamination type. Compared to the conventional type, the sensor and heater portions of the lamination type are narrower overall. Because the heat of the heater acts directly on the alumina and zirconia (of the sensor portion) it accelerates the activation of the sensor.

To obtain a high purification rate for the CO, HC and NOx components of the exhaust gas, a three–way catalytic converter is used. But for the most efficient use of the three–way catalytic converter, the air–fuel ratio must be precisely controlled so that it is always close to the stoichiometric air–fuel ratio.

The heated oxygen sensor has the characteristic whereby its output voltage changes suddenly in the vicinity of the stoichiometric air–fuel ratio. This is used to detect the oxygen concentration in the exhaust gas and provide the ECM with feedback control the air–fuel ratio.

When the air–fuel ratio becomes LEAN, the oxygen concentration in the exhaust gas increases. And the heated oxygen sensor informs the ECM of the LEAN condition (low voltage, i.e. less than 0.45 V).

When the air–fuel ratio is RICHER than the stoichiometric air–fuel ratio, the oxygen concentration in the exhaust gas is reduced. And the heated oxygen sensor informs the ECM of the RICH condition (high voltage, i.e. more than 0.45 V). The ECM judges by the voltage output from the heated oxygen sensor whether the air–fuel ratio is RICH or LEAN and controls the injection time accordingly. However, if the malfunction of the heated oxygen sensor causes an output of abnormal voltage, the ECM becomes unable to perform accurate air–fuel ratio control.

The heated oxygen sensors include a heater which heats the zirconia element. The heater is controlled by the ECM. When the intake air volume is low (the temperature of the exhaust gas is low), current flows to the heater in order to heat the sensor for the accurate oxygen concentration detection.

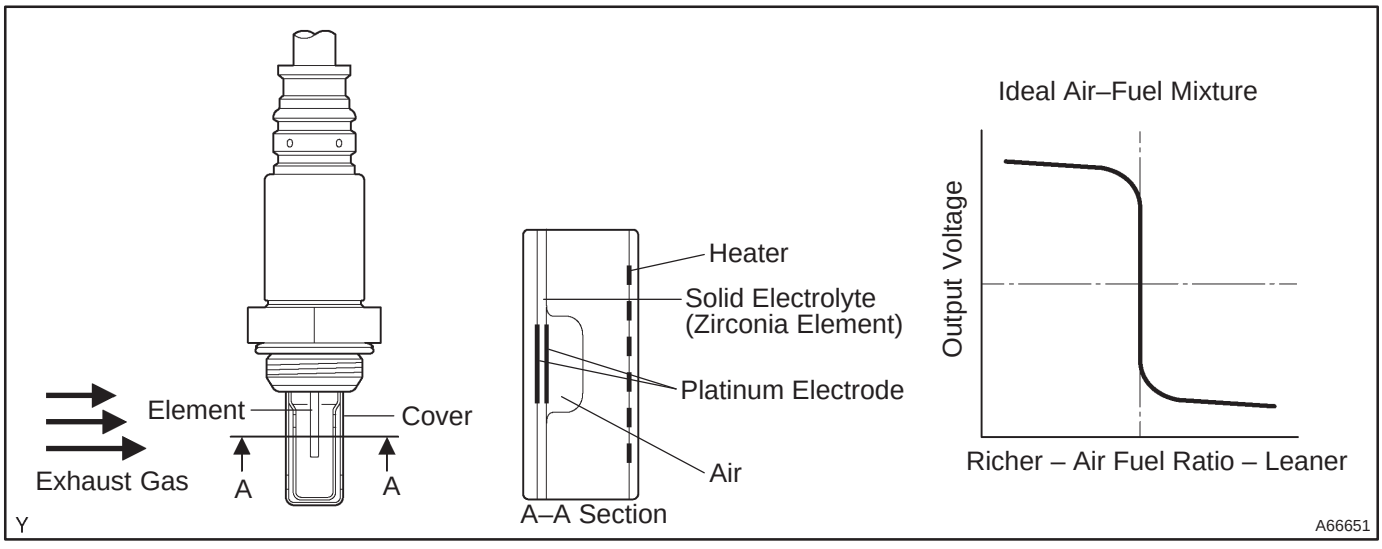

DTC No	DTC Detection Condition	Trouble Area
P0136/27 P0156/29	The following condition continues for 480 sec. or more: • During driving with the engine warmed up, voltage output of the heated oxygen sensor remains at 0.45 V or more, or 0.60 V or less.	• Open or short in heated oxygen sensor (bank 1, 2 sensor 2) circuit • Heated oxygen sensor (bank 1, 2 sensor 2) • Heated oxygen sensor heater (bank 1, 2 sensor 2) • EFI relay

HINT:

- Bank 1 refers to the bank that includes cylinder No.1.
- Bank 2 refers to the bank that does not include cylinder No.1.
- Sensor 2 refers to the sensor farthest away from the engine assembly.

WIRING DIAGRAM

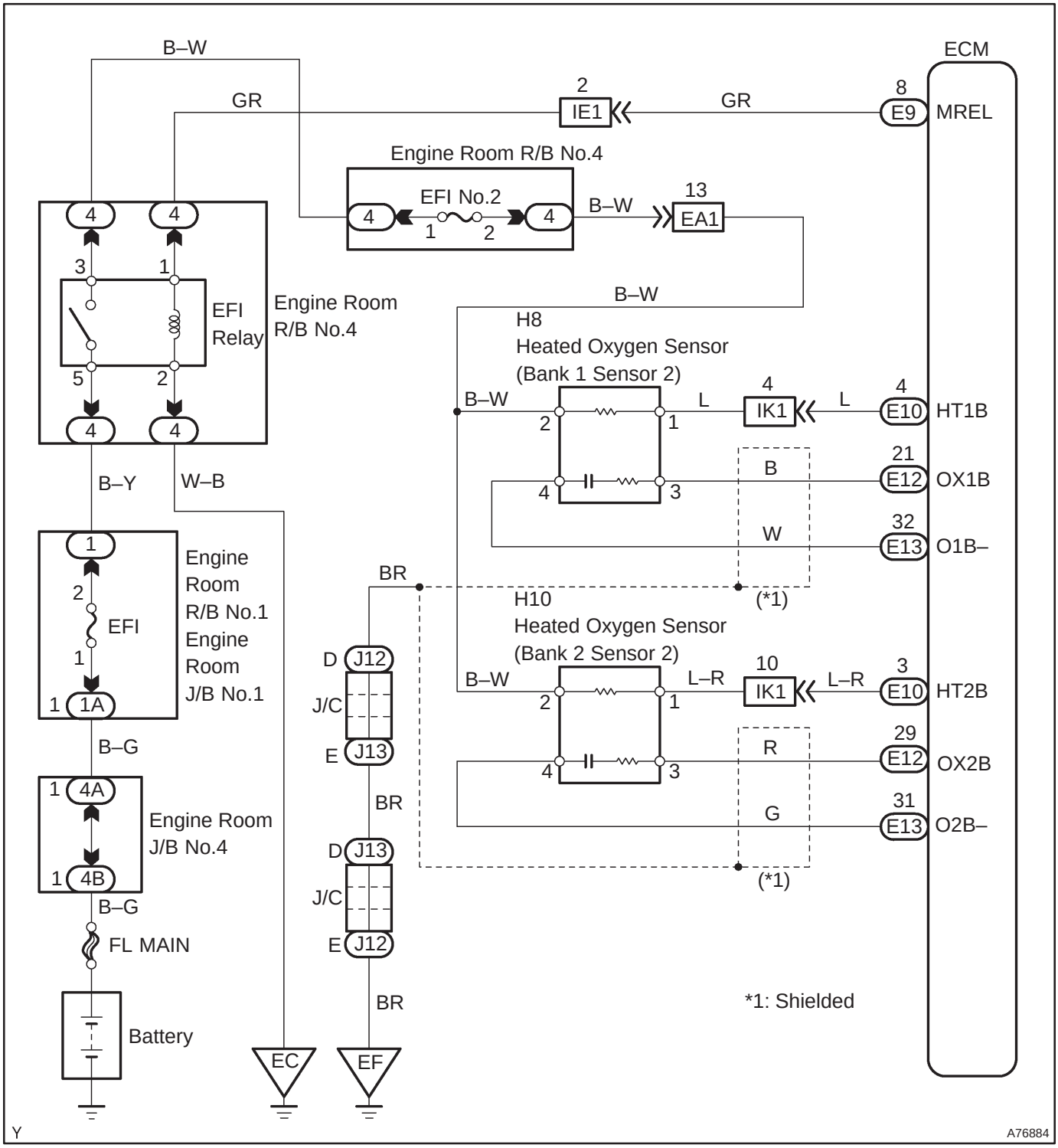

CONFIRMATION DRIVING PATTERN

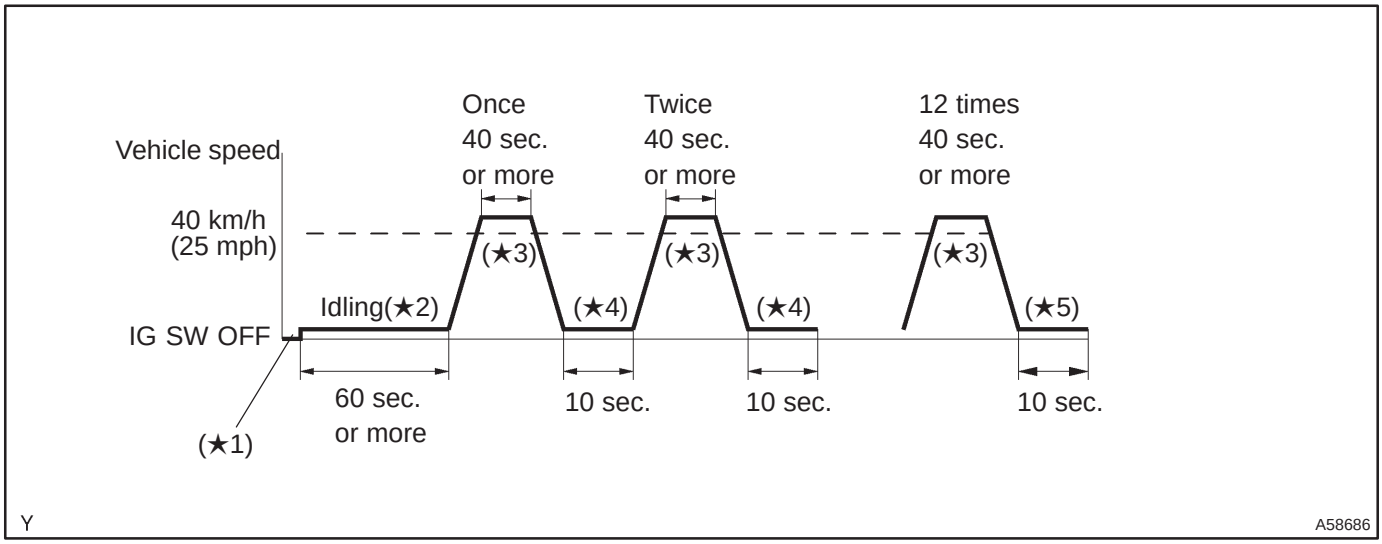

1. **Connect the hand–held tester to the DLC3. (★1)**
2. **Switch the hand–held tester from the normal mode to the check mode (See page 05–149). (★1)**
3. **Start the engine and let the engine idle for 60 seconds or more. (★2)**
4. **Drive the vehicle at 40 km/h (25 mph) or more for 40 seconds or more. (★3)**
5. **Let the engine idle for 10 seconds or more. (★4)**
6. **Perform steps 4 to 5 12 times. (★5)**

HINT:

If a malfunction exists, the CHK ENG will be illuminated on the multi–information display during step 6.

NOTICE:

If the conditions in this test are not strictly followed, detection of the malfunction will be impossible. If you do not have a hand–held tester, turn the ignition switch OFF after performing steps from 3 to 6, then perform steps from 3 to 6 again.

INSPECTION PROCEDURE

HINT:

Hand–held tester only:

Narrowing down the trouble area is possible by performing ACTIVE TEST of the following ”A/F CONTROL” (A/F sensor, heated oxygen sensor or other trouble areas can be distinguished).

(a) Perform ACTIVE TEST using the hand–held tester (A/F CONTROL).

HINT:

”A/F CONTROL” is an ACTIVE TEST which changes the injection volume –12.5 % or +25 %.

(1) Connect the hand–held tester to the DLC3 on the vehicle.
(2) Turn the ignition switch ON.
(3) Warm up the engine with the engine speed at 2,500 rpm for approximately. 90 sec.
(4) Select the item ”DIAGNOSIS / OBD/MOBD / ACTIVE TEST / A/F CONTROL”.
(5) Perform ”A/F CONTROL” with the engine in an idle condition (press the right or left button).

Result:

A/F sensor reacts in accordance with increase and decrease of injection volume:
+25 % → rich output: Less than 3.0 V
–12.5 % → lean output: More than 3.35 V
Heated oxygen sensor reacts in accordance with increase and decrease of injection volume:
+25 % → rich output: More than 0.55 V
–12.5 % → lean output: Less than 0.4 V

NOTICE:
There is a few second delay in the A/F sensor output, and there is about 20 seconds delay in the heated oxygen sensor output.

	Output voltage of A/F sensor (sensor 1)	Output voltage of heated oxygen sensor (sensor 2)	Mainly suspect trouble area
Case 1	Injection volume +25 % –12.5 % 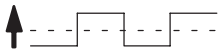 Output voltage More than 3.35 V Less than 3.0 V  **OK**	Injection volume +25 % –12.5 % 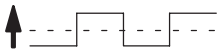 Output voltage More than 0.55 V Less than 0.4V 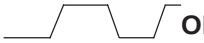 **OK**	—
Case 2	Injection volume +25 % –12.5 % 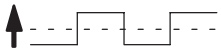 Output voltage No reaction **NG**	Injection volume +25 % –12.5 % 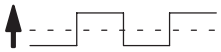 Output voltage More than 0.55 V Less than 0.4V  **OK**	A/F sensor (A/F sensor, heater, A/F sensor circuit)
Case 3	Injection volume +25 % –12.5 % 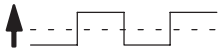 Output voltage More than 3.35 V Less than 3.0V  **OK**	Injection volume +25 % –12.5 % 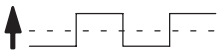 Output voltage No reaction **NG**	Heated oxygen sensor (heated oxygen sensor, heater, heated oxygen sensor circuit)
Case 4	Injection volume +25 % –12.5 % 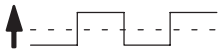 Output voltage No reaction **NG**	Injection volume +25 % –12.5 % 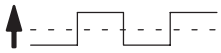 Output voltage No reaction **NG**	Extremely rich or lean actual air–fuel ratio (Injector, fuel pressure, gas leakage in exhaust system, etc.)

The following procedure of A/F CONTROL enables the technician to check and graph the voltage outputs of both the A/F sensor and heated oxygen sensor.
For displaying the graph indication, enter ”ACTIVE TEST/ A/F CONTROL/USER DATA”, then select ”AFS B1S1 and O2S B1S2” or ”AFS B2S1 and O2S B2S2” by pressing ”YES” button and push ”ENTER” button before pressing ”F4” button.
HINT:

- If different DTCs that are related to a different system are output simultaneously while terminal E2 is used as a ground terminal, terminal E2 may be open.
- Read freeze frame data using the hand−held tester Freeze frame data records the engine conditions when a malfunction is detected. When troubleshooting, it is useful for determining whether the vehicle was running or stopped, the engine was warmed up or not, the air–fuel ratio was lean or rich, etc. at the time of the malfunction.

1	READ OUTPUT DTC(BESIDES DTC P0136/27)

(a) Read the DTC.
Result:

Display (DTC output)	Proceed to
Only ”P0136/27” is output	A
”P0136/27” and other DTCs are output	B

HINT:
If any other codes besides ”P0136/27” are output, perform the troubleshooting for those DTCs first.

B → **GO TO RELEVANT DTC CHART (See page 05–161)**

A

2	READ VALUE OF HAND–HELD TESTER(OUTPUT VOLTAGE OF HEATED OXYGEN SENSOR)

(a) After warming up the engine, run the engine at 2,500 rpm for 3 minutes.
(b) Read the output voltage of the heated oxygen sensor when the engine rpm is suddenly increased.
HINT:
Quickly accelerate the engine to 4,000 rpm 3 times by using the accelerator pedal.
Heated oxygen sensor output voltage: Alternates from 0.4 V or less to 0.5 V or more.

OK → **Go to step 6**

NG

3	INSPECT HEATED OXYGEN SENSOR(HEATER RESISTANCE)

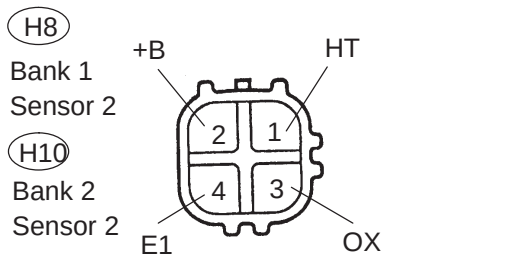

Heated Oxygen Sensor Connector
A79117

(a) Disconnect the heated oxygen sensor connector.
(b) Inspect the heated oxygen sensor.
Standard:

Symbols (Terminal No.)	Condition	Specified condition
HT (H8–1) – +B (H8–2)	20°C (68°F)	11 to 16 Ω
HT (H8–1) – E1 (H8–4)	—	No Continuity
HT (H10–1) – +B (H10–2)	20°C (68°F)	11 to 16 Ω
HT (H10–1) – E1 (H10–4)	—	No Continuity

NG → **REPLACE HEATED OXYGEN SENSOR**

OK

4 INSPECT EFI RELAY

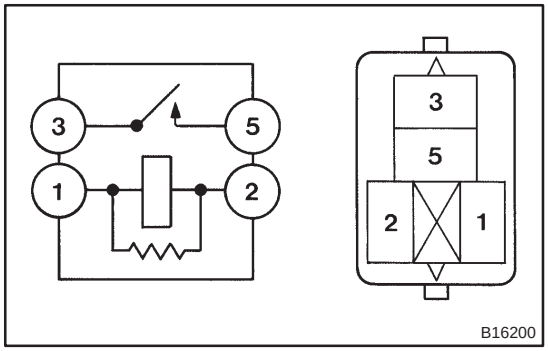

(a) Remove the EFI relay from the engine room R/B No.4.
(b) Inspect the EFI relay.

Standard:

Terminal No.	Specified condition
1 – 2	Continuity
3 – 5	No Continuity
	Continuity (Apply battery voltage Terminals 1 and 2)

NG → **REPLACE EFI RELAY**

OK

5 CHECK HARNESS AND CONNECTOR(HEATED OXYGEN SENSOR – ECM)

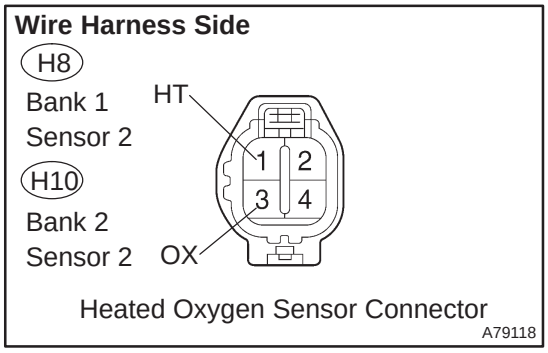

(a) Disconnect the H8 or H10 heated oxygen sensor connector.
(b) Disconnect the E10 and E12 ECM connector.
(c) Check for continuity between the wire harness side connectors.

Standard (Check for open):

Symbols (Terminal No.)	Specified condition
OX (H8–3) – OX1B (E12–21)	Continuity
HT (H8–1) – HT1B (E10–4)	
OX (H10–3) – OX2B (E12–29)	
HT (H10–1) – HT2B (E10–3)	

Standard (Check for short):

Symbols (Terminal No.)	Specified condition
OX (H8–3) or OX1B (E12–21) – Body ground	No continuity
HT (H8–1) or HT1B (E10–4) – Body ground	
OX (H10–3) or OX2B (E12–29) – Body ground	
HT (H10–1) or HT2B (E10–3) – Body ground	

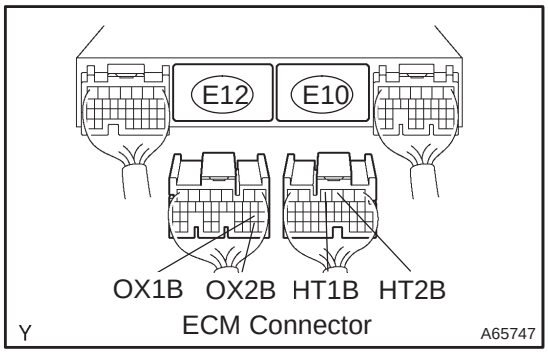

Reference (Bank 1 Sensor 2 System Drawing)

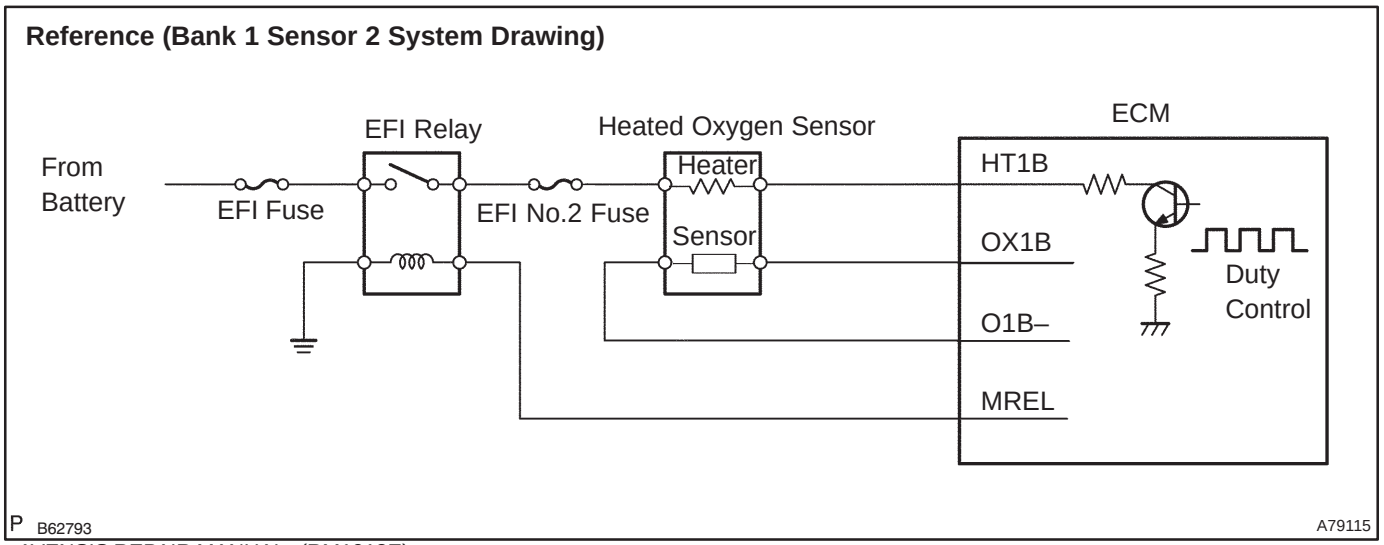

NG → REPAIR OR REPLACE HARNESS OR CONNECTOR

OK

REPLACE HEATED OXYGEN SENSOR

6	PERFORM CONFIRMATION DRIVING PATTERN

HINT:
Clear all DTCs prior to perform the confirmation driving pattern.

GO

7	READ OUTPUT DTC(DTC P0136/27 IS OUTTPUT AGAIN)

(a) Read the DTC using the hand–held tester.
Result:

Display (DTC output)	Proceed to
”P0136/27” is not output again	A
”P0136/27” is output again	B

B → REPLACE HEATED OXYGEN SENSOR

A

CHECK FOR INTERMITTENT PROBLEMS (See page 05–149)

DTC	P0141/27	OXYGEN SENSOR HEATER CIRCUIT MALFUNCTION (BANK 1 SENSOR 2)

DTC	P0161/29	OXYGEN SENSOR HEATER CIRCUIT (BANK 2 SENSOR 2)

CIRCUIT DESCRIPTION

Refer to DTC P0136/27 on page 05–211.

HINT:

The ECM provides a pulse width modulated control circuit to adjust current through the heater. The heated oxygen sensor heater circuit uses a relay on the B+ side of the circuit.

Reference (Bank 1 Sensor 2 System Drawing)

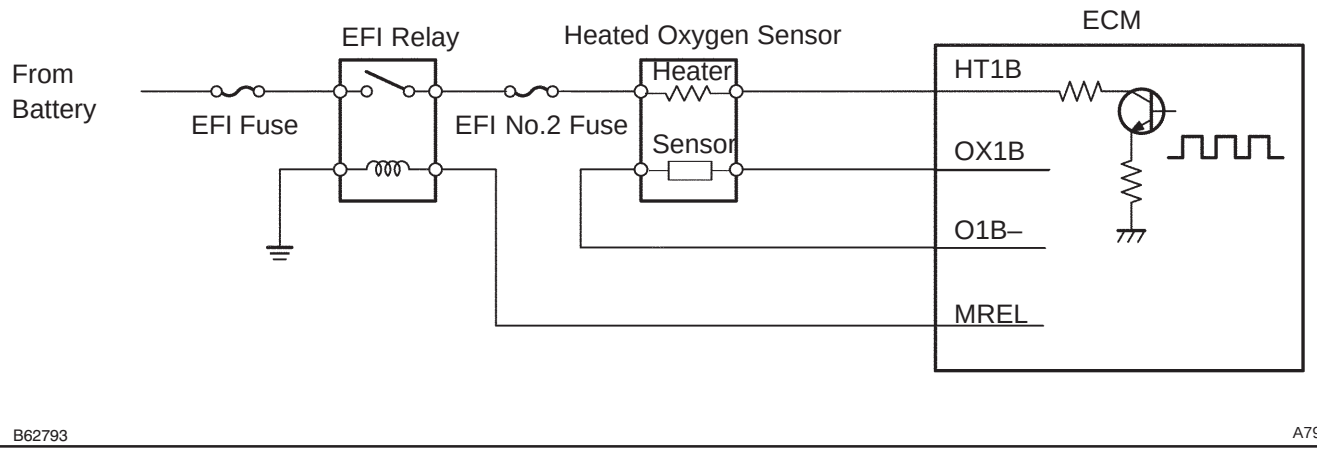

DTC No.	DTC Detection Condition	Trouble Area
P0141/27 P0161/29	Heated current is 0.2 A or less when heater operates (1 trip detection logic)	• Open or short in heater circuit of heated oxygen sensor • Heated oxygen sensor heater • EFI relay • ECM
	When heater operates, heated current exceeds 2 A (1 trip detection logic)	

HINT:

- Bank 1 refers to the bank that includes cylinder No.1.
- Bank 2 refers to the bank that does not include cylinder No.1.
- Sensor 1 refers to the sensor closest to the engine assembly.
- Sensor 2 refers to the sensor farthest away from the engine assembly.

WIRING DIAGRAM

Refer to DTC P0136/27 on page 05–211.

INSPECTION PROCEDURE

HINT:

- If different DTCs that are related to a different system are output simultaneously while terminal E2 is used as a ground terminal, terminal E2 may be open.
- Read freeze frame data using the hand–held tester. Freeze frame data records the engine conditions when a malfunction is detected. When troubleshooting, it is useful for determining whether the vehicle was running or stopped, the engine was warmed up or not, the air–fuel ratio was lean or rich, etc. at the time of the malfunction.

1 INSPECT HEATED OXYGEN SENSOR(HEATER RESISTANCE)

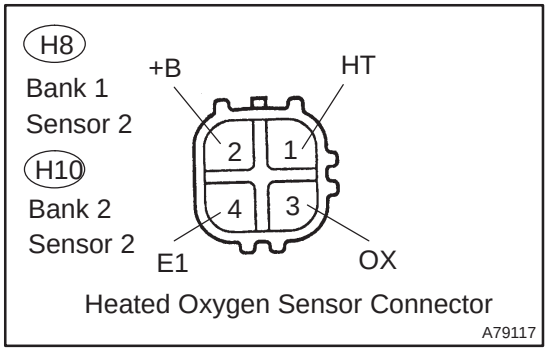

(a) Disconnect the heated oxygen sensor connector.
(b) Inspect the heated oxygen sensor.

Standard:

Symbols (Terminal No.)	Condition	Specified condition
HT (H8–1) – +B (H8–2)	20°C (68°F)	11 to 16 Ω
HT (H8–1) – E1 (H8–4)	—	No Continuity
HT (H10–1) – +B (H10–2)	20°C (68°F)	11 to 16 Ω
HT (H10–1) – E1 (H10–4)	—	No Continuity

NG → **REPLACE HEATED OXYGEN SENSOR**

OK

2 INSPECT EFI RELAY

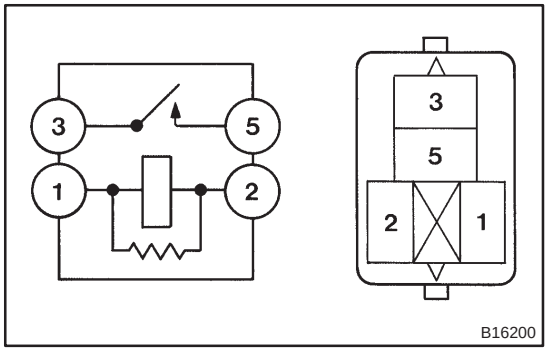

(a) Remove the EFI relay from the engine room R/B.
(b) Inspect the EFI relay.

Standard:

Terminal No.	Specified condition
1 – 2	Continuity
3 – 5	No Continuity
	Continuity (Apply battery voltage terminals 1 and 2)

NG → **REPLACE EFI RELAY**

OK

3 INSPECT ECM(HT1B OR HT2B VOLTAGE)

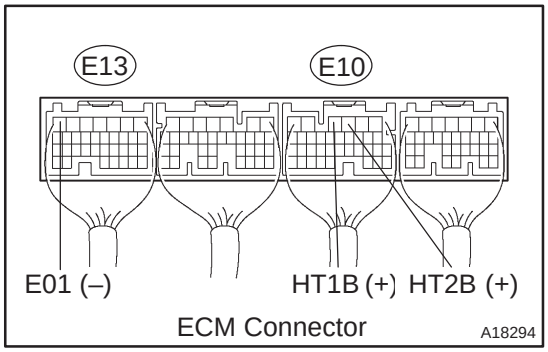

(a) Turn the ignition switch ON.
(b) Measure the voltage between the applicable terminals of the E10 and E13 ECM connector.

Standard:

Symbols (Terminal No.)	Specified condition
HT1B (E10–4) – E01 (E13–7)	9 to 14 V
HT2B (E10–3) – E01 (E13–7)	

HINT:

- The HT1B means the heated oxygen sensor bank 1 sensor 2.
- The HT2B means the heated oxygen sensor bank 2 sensor 2.

OK → **CHECK AND REPLACE ECM (See page 01–32)**

NG

4	CHECK FUSE(EFI No.2)

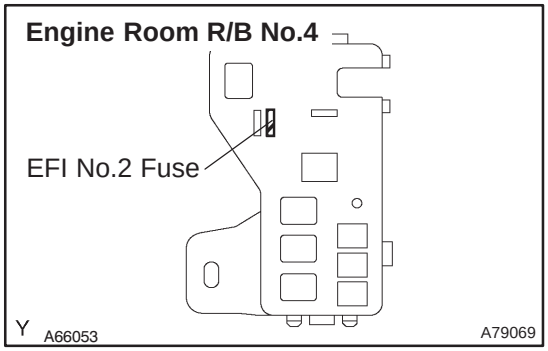

(a) Remove the EFI No.2 fuse from the engine room R/B No.4.

(b) Check for continuity in the EFI No.4 fuse.
Standard: Continuity

NG → **CHECK FOR SHORT IN ALL HARNESS AND COMPONENTS CONNECTED FUSE**

OK

5 CHECK HARNESS AND CONNECTOR(HEATED OXYGEN SENSOR – ECM, HEATED OXYGEN SENSOR – EFI RELAY)

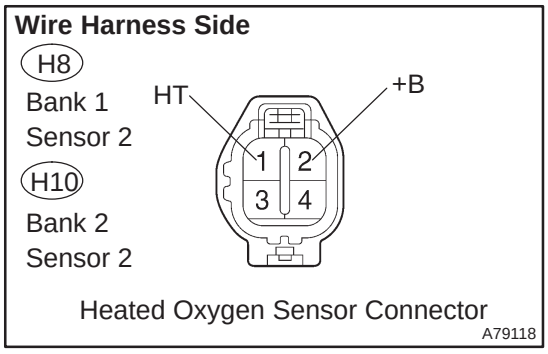

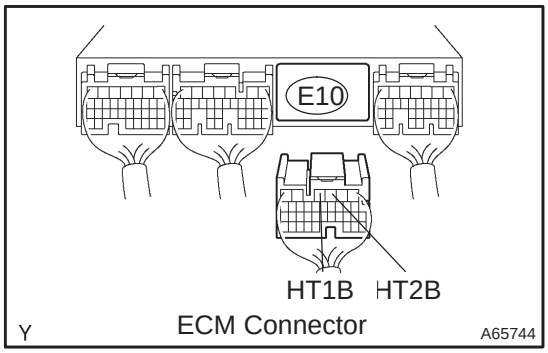

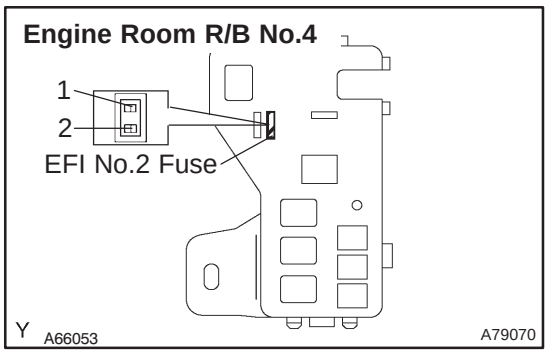

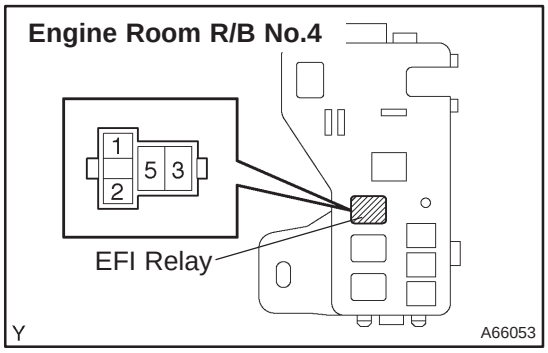

(a) Check the harness and connector between the ECM and heated oxygen sensor connectors.

(1) Disconnect the H8 or H10 heated oxygen sensor connector.

(2) Disconnect the E10 ECM connector.

(3) Check for continuity between the wire harness side connectors.

Standard (Check for open):

Symbols (Terminal No.)	Specified condition
HT (H8–1) – HT1B (E10–4)	Continuity
HT (H10–1) – HT2B (E10–3)	

Standard (Check for short):

Symbols (Terminal No.)	Specified condition
HT (H8–1) or HT1B (E10–4) – Body ground	No continuity
HT (H10–1) or HT2B (E10–3) – Body ground	

(b) Check the harness and connector between the heated oxygen sensor connector and EFI relay.

(1) Disconnect the H8 or H10 heated oxygen sensor connector.

(2) Remove the EFI No.2 fuse from the engine room R/B No.4.

(3) Remove the EFI relay from the engine room R/B No.4.

(4) Check for continuity between the wire harness side connectors.

Standard (Check for open):

Symbols (Terminal No.)	Specified condition
+B (H8–2) – EFI No.2 fuse (2)	Continuity
+B (H10–2) – EFI No.2 fuse (2)	
EFI No.2 fuse (1) – EFI relay (3)	

Standard (Check for short):

Symbols (Terminal No.)	Specified condition
+B (H8–2) or EFI No.2 fuse (2) – Body ground	No continuity
+B (H10–2) or EFI No.2 fuse (2) – Body ground	
EFI No.2 fuse (1) or EFI relay (3) – Body ground	

NG → **REPAIR OR REPLACE HARNESS OR CONNECTOR**

OK

CHECK AND REPLACE ECM (See page 01–32)

DTC	P0325/52	KNOCK SENSOR 1 CIRCUIT (BANK 1 OR SINGLE SENSOR)

DTC	P0327/52	KNOCK SENSOR 1 CIRCUIT LOW INPUT (BANK 1 OR SINGLE SENSOR)

DTC	P0328/52	KNOCK SENSOR 1 CIRCUIT HIGH INPUT (BANK 1 OR SINGLE SENSOR)

CIRCUIT DESCRIPTION

A flat type knock sensor (non–resonant type) has the structure that can detect the vibration in a wider band of frequency from about 6 kHz to 15 kHz and has the following features.
Knock sensors are fitted on the cylinder block to detect the engine knocking.
Sensor contains a piezoelectric element which generates a voltage when it becomes deformed, which occurs when the cylinder block vibrates due to knocking. If engine knocking occurs, the ignition timing is retarded to suppress it.

DTC No.	DTC Detection Condition	Trouble Area
P0325/52	Output voltage of the knock sensor 1 decreases beyond a threshold. (Threshold varies according to an engine speed.)	• Knock sensor 1 • Knock sensor 1 (under–torqued or loose) • ECM
P0327/52	Output voltage the knock sensor 1 is 0.5 V or less.	• Short in knock sensor 1 circuit • Knock sensor 1 • ECM
P0328/52	Output voltage the knock sensor 1 is 4.5 V or more.	• Open in knock sensor 1 circuit • Knock sensor 1 • ECM

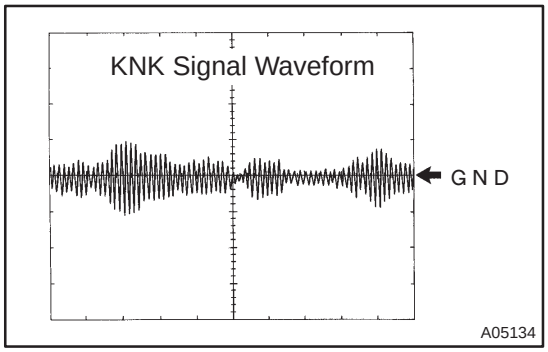

Reference:
The correct waveform is as shown.

Item	Contents
Terminal	KNK1 – EKNK
Equipment Set	0.01 to 10 V/ DIV, 0.01 to 10 msec./ DIV
Condition	After warming up the engine, keep the engine speed 4,000 rpm.

WIRING DIAGRAM

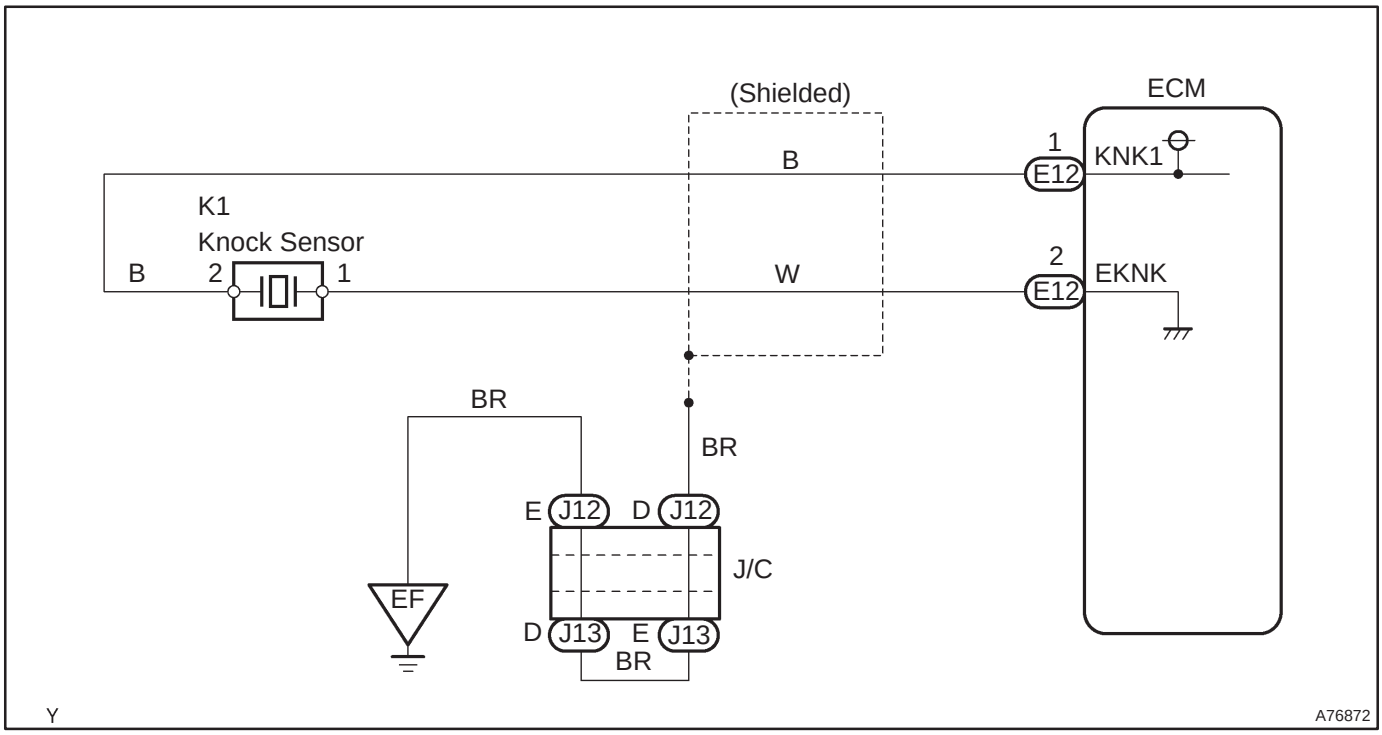

INSPECTION PROCEDURE

HINT:

Read freeze frame data using the hand–held tester. Freeze frame data records the engine conditions when a malfunction is detected. When troubleshooting, it is useful for determining whether the vehicle was running or stopped, the engine was warmed up or not, the air–fuel ratio was lean or rich, etc. at the time of the malfunction.

1	READ OUTPUT DTC

(a) Clear the DTC (See page 05–149).
(b) Warm up the engine.
(c) Accelerate the engine to 3,000 rpm for 10 seconds or more.
(d) Read the DTC (See page 05–149).

Result :

Display (DTC output)	Proceed to
Only "P0325/52" is output again	A
"P0325/52, P0327/52 and/or P0328/52" are output again	B

B → **Go to step 3**

A

2 CHECK KNOCK SENSOR

(a) Check the knock sensor installation.
Torque: 20 N·m (204 kgf·cm, 15 ft·lbf)

NG → **TIGHTEN SENSOR**

OK

REPLACE KNOCK SENSOR

3 CHECK HARNESS AND CONNECTOR(ECM – KNOCK SENSOR)

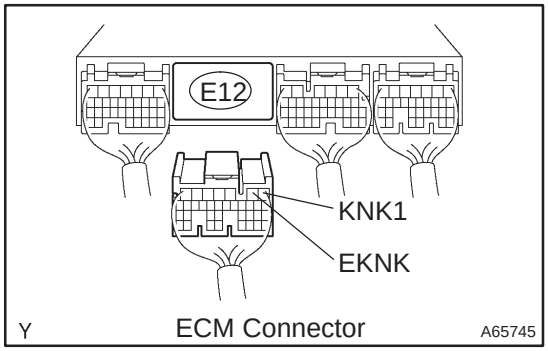

(a) Disconnect the E12 ECM connector.
(b) Disconnect the knock sensor connector.
(c) Check for continuity between the wire harness side connectors.

Standard (Check for open):

Symbols (Terminal No.)	Specified condition
KNK1 (E12–1) – Knock sensor (K1–2)	Continuity
EKNK (E12–2) – Knock sensor (K1–1)	

Standard (Check for short):

Symbols (Terminal No.)	Specified condition
KNK1 (E12–1) or Knock sensor (K1–2) – Body ground	No continuity
EKNK (E12–2) or Knock sensor (K1–1) – Body ground	

NG → **Go to step 5**

OK

4 INSPECT ECM(KNK1 VOLTAGE)

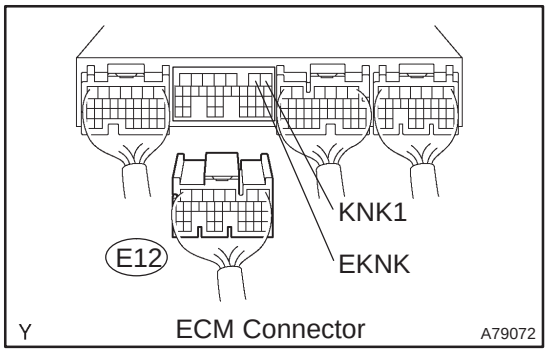

(a) Disconnect the E12 ECM connector.
(b) Turn the ignition switch ON.
(c) Measure the voltage between the terminals of the E12 ECM side terminals.

Standard:

Symbols (Terminal No.)	Specified condition
KNK1 (E12–1) – EKNK (E12–2)	4.5 to 5.5 V

NG → **REPLACE ECM**

OK

CHECK AND REPLACE ECM (See page 01–32)

5 INSPECT KNOCK SENSOR

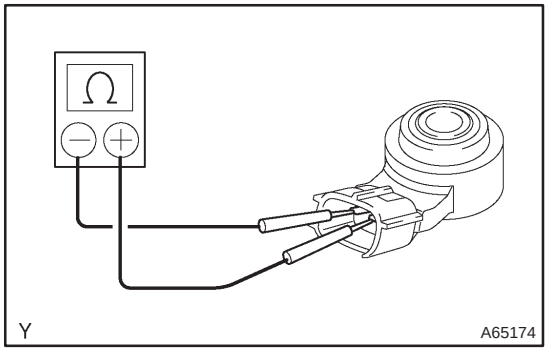

(a) Remove knock sensor.
(b) Measure the resistance between the terminals.
Standard:

Symbols (Terminal No.)	Condition	Specified condition
FKN+ (1) – FKN– (2)	20 °C (68 °F)	120 to 280 Ω

NG → **REPLACE KNOCK SENSOR**

OK

REPAIR OR REPLACE HARNESS OR CONNECTOR

DTC	P0335/12	CRANKSHAFT POSITION SENSOR ”A” CIRCUIT

DTC	P0335/13	CRANKSHAFT POSITION SENSOR ”A” CIRCUIT

DTC	P0339/13	CRANKSHAFT POSITION SENSOR ”A” CIRCUIT INTERMITTENT

CIRCUIT DESCRIPTION

The crankshaft position sensor (NE signal) consists of a magnet, iron core and pickup coil.
The NE signal plate (crankshaft position sensor plate) has 34 teeth and is installed on the crankshaft. The NE signal sensor generates 34 signals at every engine revolution. The ECM detects the crankshaft angle and the engine revolution based on the NE signal, and the cylinder and the angle of the VVT based on the combination of the G and NE signal.

DTC No.	DTC Detection Condition	Trouble Area
P0335/12	No crankshaft position sensor signal to ECM during cranking (2 trip detection logic)	• Open or short in crankshaft position sensor circuit • Crankshaft position sensor • Signal plate (crankshaft) • ECM
P0335/13	No crankshaft position sensor signal to ECM with engine speed 600 rpm or more (1 trip detection logic)	
P0339/13	In condition (a), (b) and (c), when no crankshaft position sensor (NE) signal is input for 0.05 sec. or more. (a) Engine revolution 1,000 rpm or more (b) STA signal is OFF (c) 3 sec. or more has lapsed after STA signal is switched from ON to OFF.	

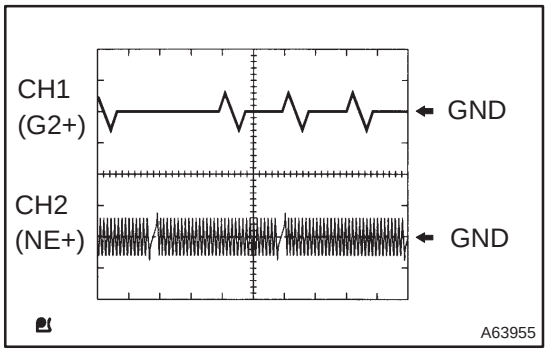

Reference: Inspection using the oscilloscope.
HINT:
The correct waveform is as shown on the left.

Item	Contents
Terminal	CH1: G2+ – NE– CH2: NE+ – NE–
Equipment Set	5V/DIV, 20ms/DIV
Condition	During cranking or idling

WIRING DIAGRAM

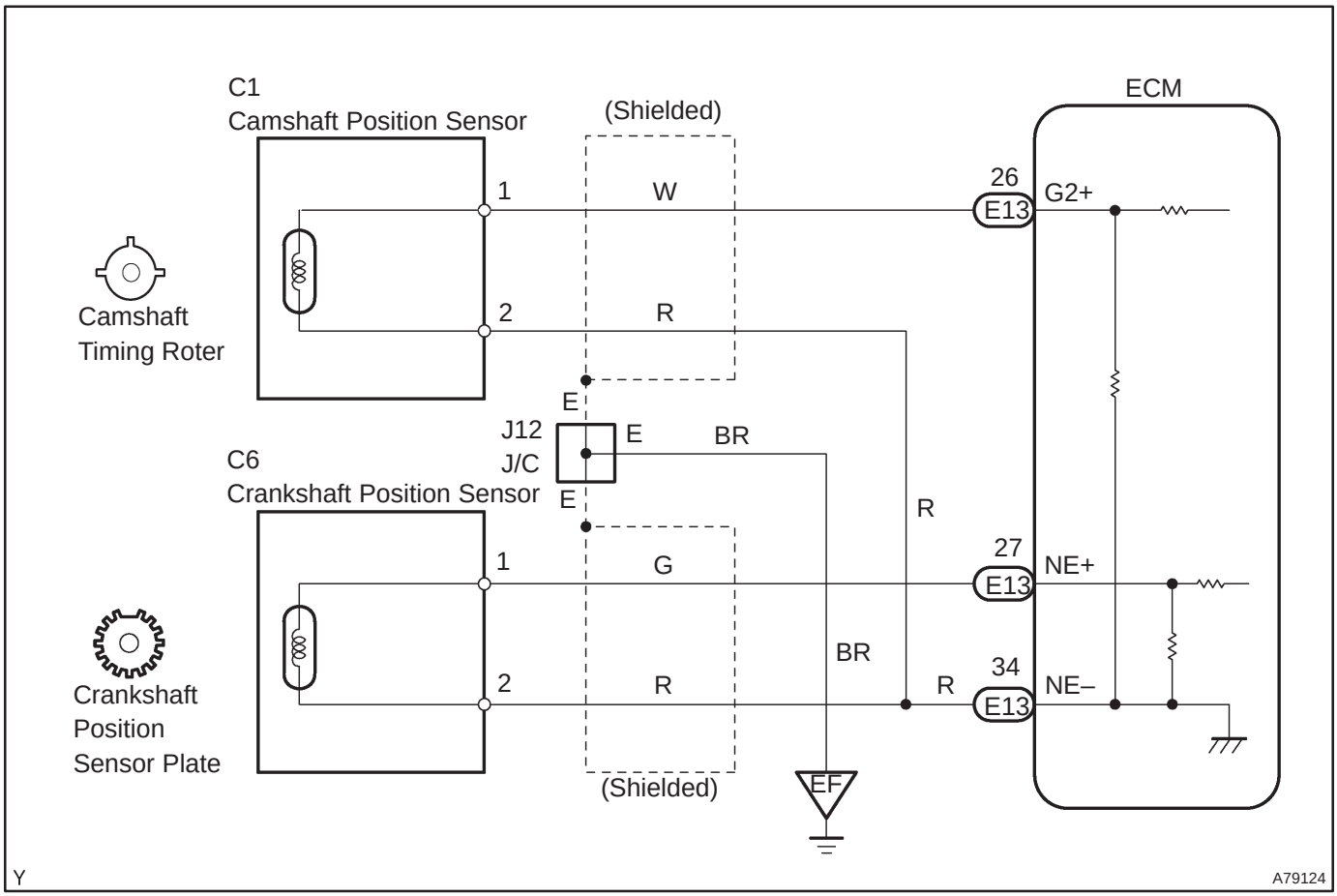

INSPECTION PROCEDURE

HINT:

- Perform troubleshooting of DTC P0335/12, 13 first. If no trouble is found, troubleshoot the engine mechanical systems.
- Read freeze frame data using the hand–held tester. Freeze frame data records the engine conditions when a malfunction is detected. When troubleshooting, it is useful for determining whether the vehicle was running or stopped, the engine was warmed up or not, the air–fuel ratio was lean or rich, etc. at the time of the malfunction.

1	INSPECT CRANKSHAFT POSITION SENSOR(RESISTANCE)

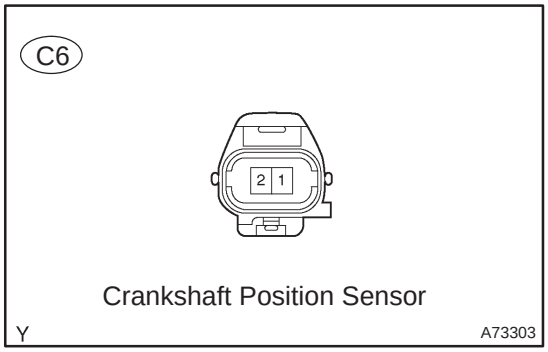

(a) Measure the resistance between the terminals of the crankshaft posision sensor connector.

Resistance:

985 to 1,600 Ω at cold

1,265 to 1,890 Ω at hot

NOTICE:

"Cold" and "Hot" shown above mean the temperature of the coils themselves. "Cold" is from –10°C (14°F) to 50 °C (122 °F) and "Hot" is from 50 °C (122 °F) to 100 °C (212 °F).

NG → **REPLACE CRANKSHAFT POSITION SENSOR**

OK

2	CHECK HARNESS AND CONNECTOR(CRANKSHAFT POSITION SENSOR – ECM)

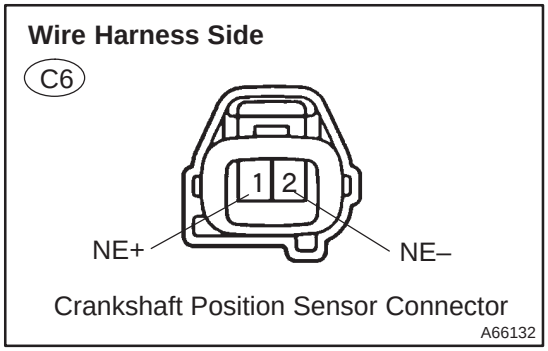

(a) Disconnect the crankshaft position sensor connector.
(b) Disconnect the E13 ECM connector.
(c) Check for continuity between the wire harness side connectors.

Standard (Check for open):

Symbols (Terminal No.)	Specified condition
NE+ (C6–1) – NE+ (E13–27)	Continuity
NE– (C6–2) – NE– (E13–34)	

Standard (Check for short):

Symbols (Terminal No.)	Specified condition
NE+ (C6–1) or NE+ (E13–27) – Body ground	No continuity
NE– (C6–2) or NE– (E13–34) – Body ground	

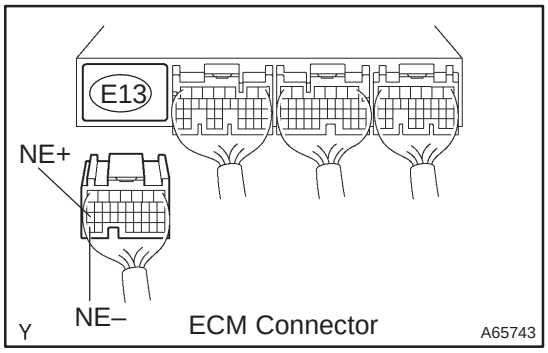

NG → **REPAIR OR REPLACE HARNESS OR CONNECTOR**

OK

3	CHECK SENSOR INSTALLATION(CRANKSHAFT POSITION SENSOR)

(a) Check the crankshaft position sensor installation .

NG → **TIGHTEN SENSOR**

OK

4	CHECK CRANKSHAFT POSITION SENSOR PLATE(TEETH OF SENSOR PLATE(CRANKSHAFT))

(a) Check the teeth of the sensor plate.

NG → **REPLACE CRANKSHAFT POSITION SENSOR PLATE (CRANKSHAFT)**

OK

CHECK AND REPLACE ECM (See page 01–32)

DTC	P0340/12	CAMSHAFT POSITION SENSOR ”A” CIRCUIT (BANK 1 OR SINGLE SENSOR)

DTC	P0341/12	CAMSHAFT POSITION SENSOR ”A” CIRCUIT RANGE/PERFORMANCE (BANK 1 OR SINGLE SENSOR)

CIRCUIT DESCRIPTION

The camshaft position sensor (G signal) consists of a magnet, iron core and pickup coil.
The G signal rotor has 3 teeth on its outer circumference and is installed on the intake camshaft.
When the camshafts rotate, the protrusion on the signal plate and the air gap on the pickup coil changes, causing fluctuations in the magnetic field and generating an electromotive force in the pickup coil.
The NE signal plate (crankshaft position sensor plate) has 34 teeth and is installed to the crankshaft. The NE signal sensor generates 34 signals at every engine revolution. The ECM detects the crankshaft angle and the engine revolution based on the NE signals, and the cylinder and the angle of the VVT based on the combination of the G and NE signals.

DTC No.	DTC Detection Condition	Trouble Area
P0340/12	• No camshaft position sensor signal to ECM during cranking (1 trip detection logic) • No camshaft position sensor signal to ECM with engine speed 600 rpm or more (1 trip detection logic)	• Open or short in camshaft position sensor circuit • Camshaft position sensor • Camshaft timing pulley • Timing chain has jumped a tooth • ECM
P0341/12	While crankshaft rotates twice, camshaft position sensor signal is input to ECM 12 times or more (1 trip detection logic)	

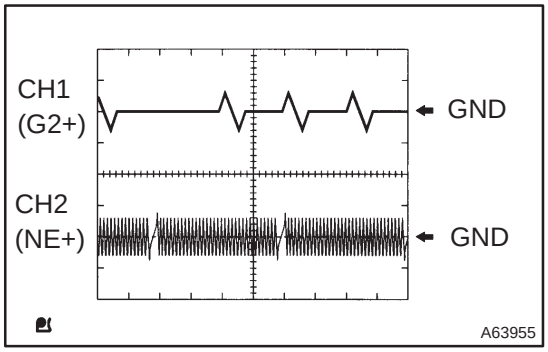

Reference: Inspection using the oscilloscope.
HINT:
The correct waveform is as shown on the left.

Item	Contents
Terminal	CH1: G2+ – NE– CH2: NE+ – NE–
Equipment Set	5V/DIV, 20ms/DIV
Condition	During cranking or idling

WIRING DIAGRAM

Refer to DTC P0335/12, 13 and P0339/13 on page 05–226.

INSPECTION PROCEDURE

HINT:
Read freeze frame data using the hand–held tester. Freeze frame data records the engine conditions when a malfunction is detected. When troubleshooting, it is useful for determining whether the vehicle was running or stopped, the engine was warmed up or not, the air–fuel ratio was lean or rich, etc. at the time of the malfunction.

1 INSPECT CAMSHAFT POSITION SENSOR

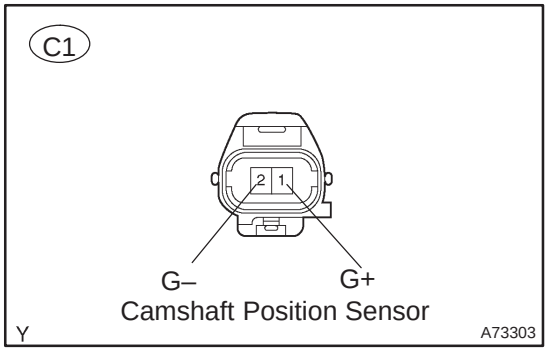

(a) Measure the resistance between the terminals of camshaft posision sensor connector.

Resistance:

835 to 1,400 Ω (Cold)

1,060 to 1,645 Ω (Hot)

NOTICE:

"Cold" and "Hot" mean the temperature of the coils themselves. "Cold" is from –10°C (14°F) to 50°C (122°F) and "Hot" is from 50°C (122°F) to 100°C (212°F).

NG → **REPLACE CAMSHAFT POSITION SENSOR**

OK

2 CHECK HARNESS AND CONNECTOR(ECM – CAMSHAFT POSITION SENSOR)

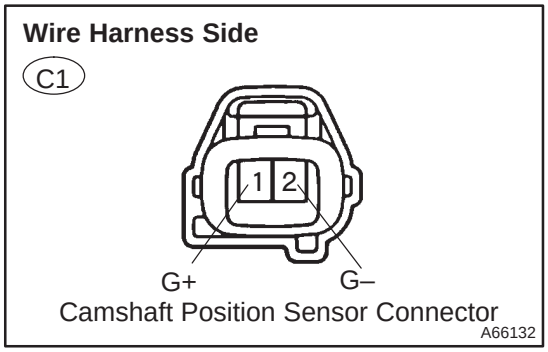

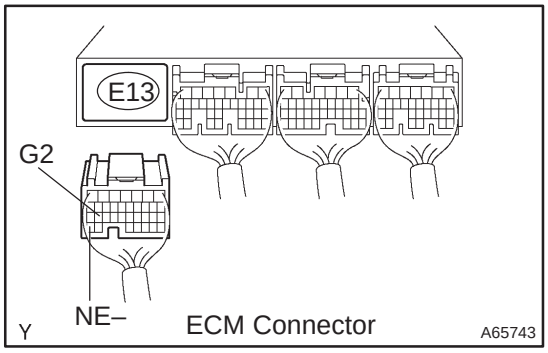

(a) Disconnect the camshaft position sensor connector.

(b) Disconnect the E13 ECM connector.

(c) Check for continuity between the wire harness side connectors.

Standard (Check for open):

Symbols (Terminal No.)	Specified condition
G+ (C1–1) – G2 (E13–26)	Continuity
G– (C1–2) – NE– (E13–34)	

Standard (Check for short):

Symbols (Terminal No.)	Specified condition
G+ (C1–1) or G2+ (E13–26) – Body ground	No continuity
G– (C1–2) or NE– (E13–34) – Body ground	

NG → **REPAIR OR REPLACE HARNESS OR CONNECTOR**

OK

3 CHECK SENSOR INSTALLATION(CAMSHAFT POSITION SENSOR)

(a) Check the camshaft position sensor installation.

NG → **TIGHTEN SENSOR**

OK

4	INSPECT CAMSHAFT

(a) Check the teeth of the signal plate.

NG → REPLACE CAMSHAFT

OK

CHECK AND REPLACE ECM (See page 01–32)

DTC	P0351/14	IGNITION COIL ”A” PRIMARY/SECONDARY CIRCUIT

DTC	P0352/15	IGNITION COIL ”B” PRIMARY/SECONDARY CIRCUIT

DTC	P0353/14	IGNITION COIL ”C” PRIMARY/SECONDARY CIRCUIT

DTC	P0354/15	IGNITION COIL ”D” PRIMARY/SECONDARY CIRCUIT

CIRCUIT DESCRIPTION

HINT:

- These DTCs indicate a malfunction related to primary circuit.
- If DTC P0351/14 is displayed, check No.1 ignition coil with igniter circuit.
- If DTC P0352/15 is displayed, check No.2 ignition coil with igniter circuit.
- If DTC P0353/14 is displayed, check No.3 ignition coil with igniter circuit.
- If DTC P0354/15 is displayed, check No.4 ignition coil with igniter circuit.

A Direct Ignition System (DIS) has been adopted. The DIS improves the ignition timing accuracy, reduces high–voltage loss, and enhances the overall reliability of the ignition system by eliminating the distributor. The DIS is a 1–cylinder ignition system which ignites one cylinder with one ignition coil. In the 1–cylinder ignition system, the one spark plug is connected to the end of the secondary winding. High voltage generated in the secondary winding is applied directly to the spark plug. The spark of the spark plug passes from the center electrode to the ground electrode.

The ECM determines the ignition timing and outputs the ignition (IGT) signals for each cylinder. Based on the IGT signals, the power transistors in the igniter cut off the current to the primary coil in the ignition coil is supplied to the spark plug that is connected to the end of the secondary coil. At the same time, the igniter also sends an ignition confirmation (IGF) signal as a fail–safe measure to the ECM.

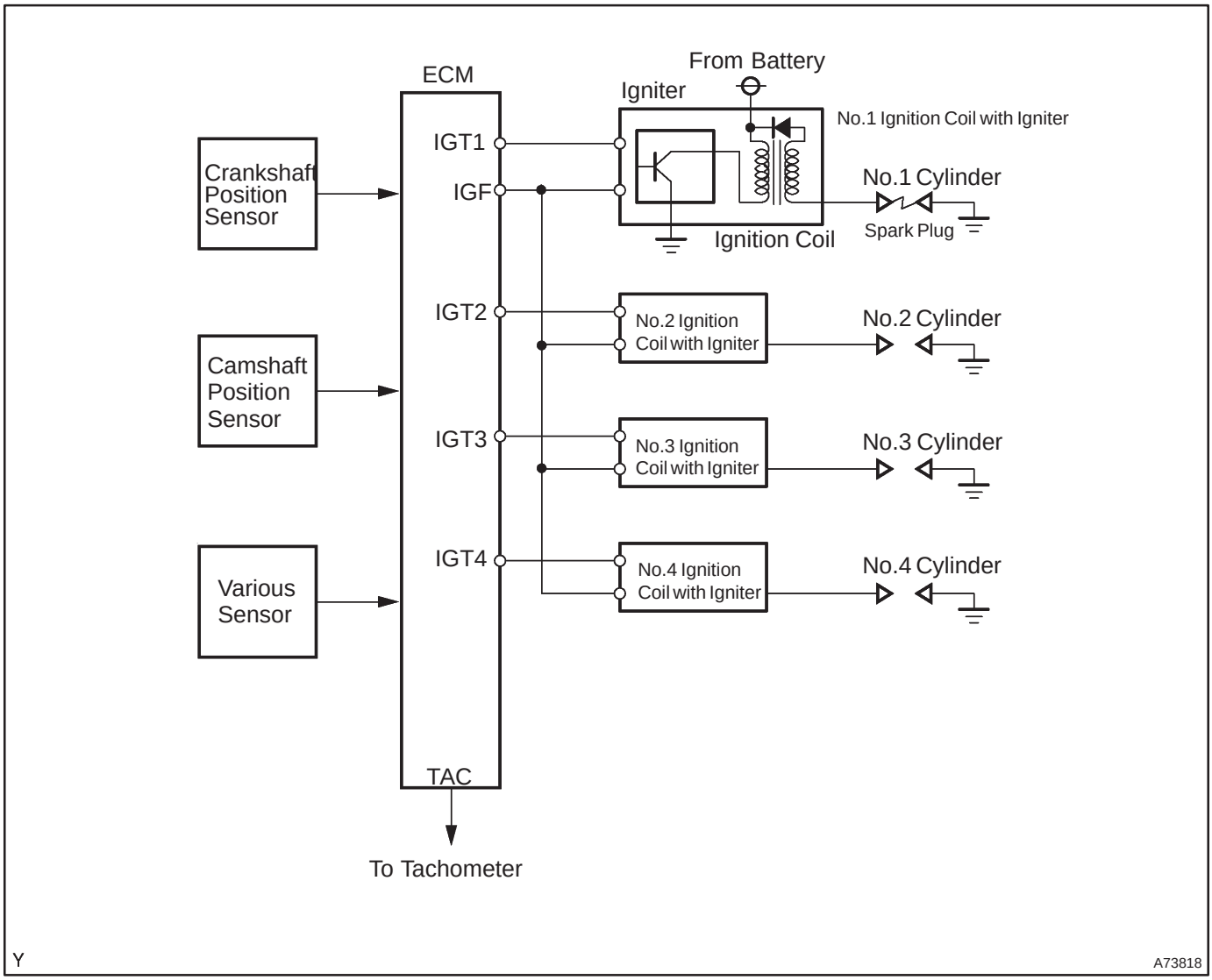

DTC No.	DTC Detection Condition	Trouble Area
P0351/14 P0352/15 P0353/14 P0354/15	No IGF signal to ECM while engine is running	• Ignition system • Open or short in IGF and IGT1 to 4 circuit from ignition coil with igniter to ECM • No. 1 to 4 ignition coil with igniter • IG2 relay • ECM

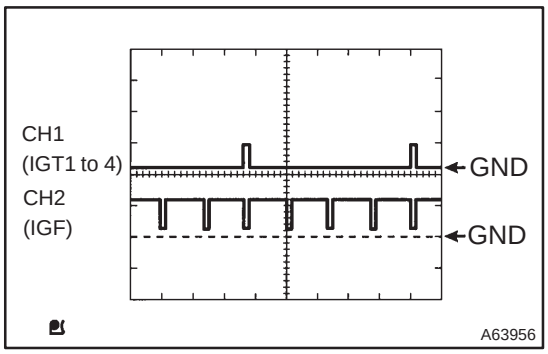

Reference: Inspection using the oscilloscope.
During cranking or idling, check the waveform between terminals IGT1 to IGT4 and E1, and IGF and E1 of the E4 and ECM connectors.

WIRING DIAGRAM

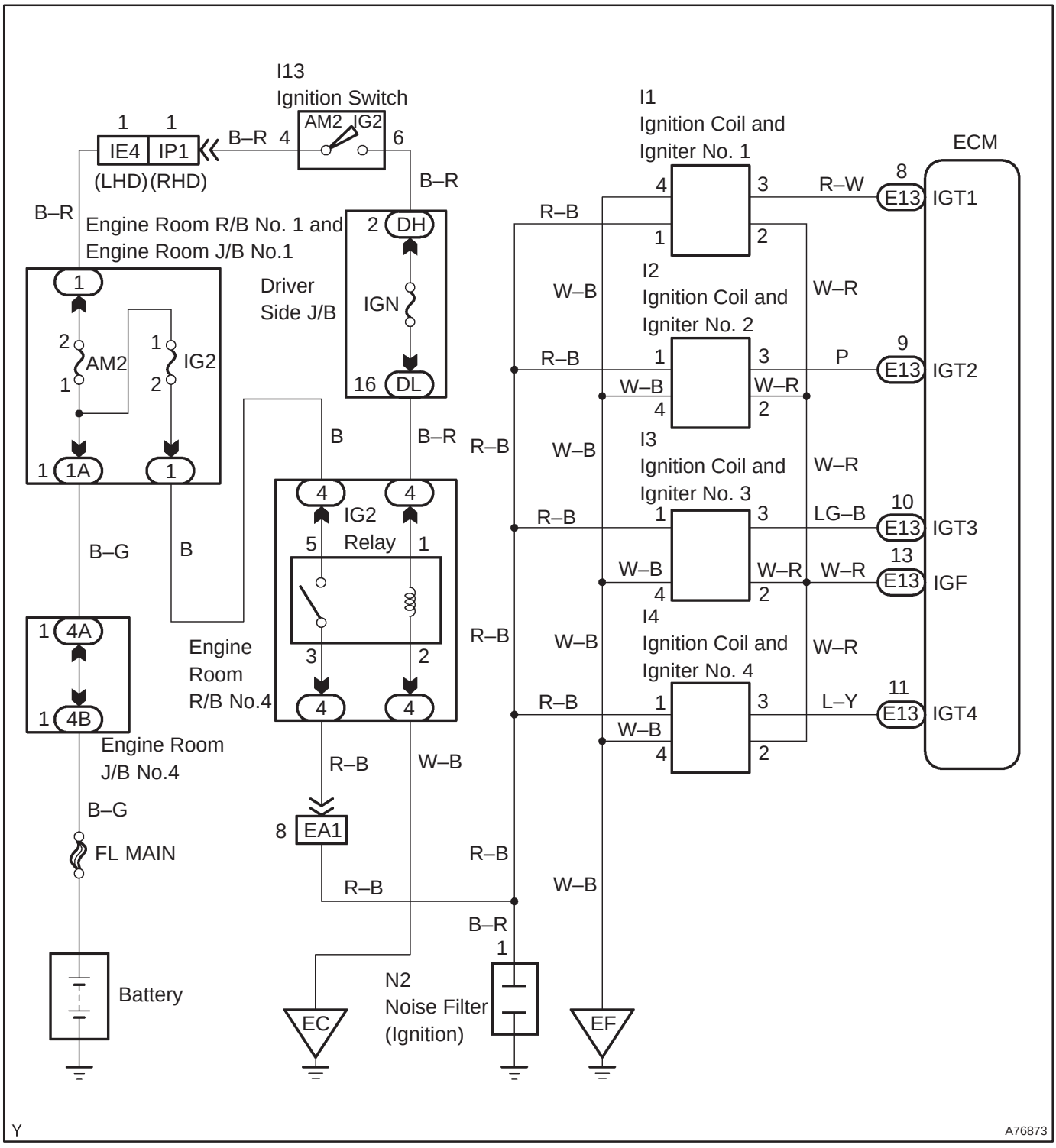

INSPECTION PROCEDURE

HINT:

Read freeze frame data using the hand–held tester. Freeze frame data records the engine conditions when a malfunction is detected. When troubleshooting, it is useful for determining whether the vehicle was running or stopped, the engine was warmed up or not, the air–fuel ratio was lean or rich, etc. at the time of the malfunction.

1	CHECK SPARK PLUG AND SPARK OF MISFIRING CYLINDER

NG → Go to step 4

OK

2	CHECK HARNESS AND CONNECTOR(ECM – IGNITION COIL)

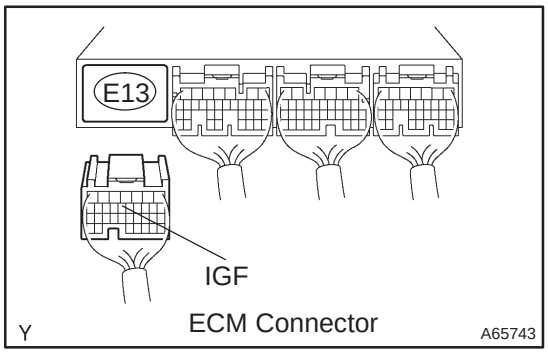

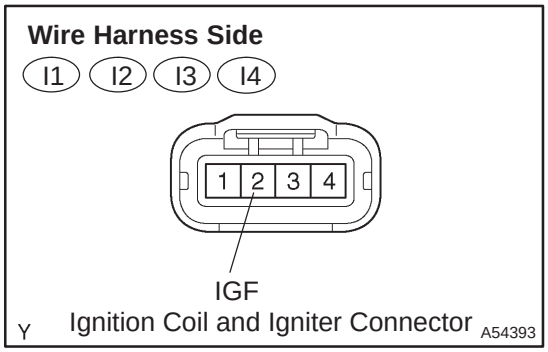

(a) Disconnect the I1, I2, I3 or I4 ignition coil and igniter connector.
(b) Disconnect the E13 ECM connector.
(c) Check for continuity between the wire harness side connectors.

Standard (Check for open):

Symbols (Terminal No.)	Specified condition
IGF (I1–2) – IGF (E13–13)	Continuity
IGF (I2–2) – IGF (E13–13)	
IGF (I3–2) – IGF (E13–13)	
IGF (I4–2) – IGF (E13–13)	

Standard (Check for short):

Symbols (Terminal No.)	Specified condition
IGF (I1–2) or IGF (E13–13) – Body ground	No continuity
IGF (I2–2) or IGF (E13–13) – Body ground	
IGF (I3–2) or IGF (E13–13) – Body ground	
IGF (I4–2) or IGF (E13–13) – Body ground	

NG → REPAIR OR REPLACE HARNESS OR CONNECTOR

OK

3	INSPECT ECM

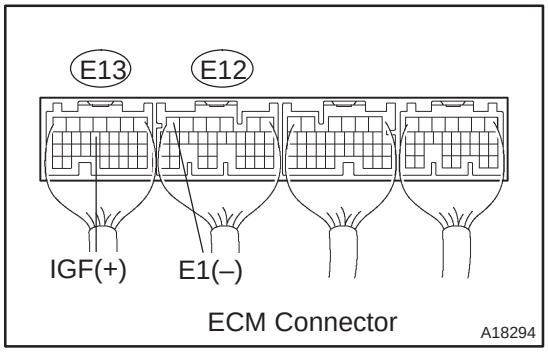

(a) Disconnect the ignition coil and igniter connector.
(b) Turn the ignition switch ON.
(c) Measure the voltage between the terminals of the E12 and E13 ECM connector.

Standard:

Symbols (Terminal No.)	Specified condition
IGF (E13–13) – E1 (E12–7)	4.5 to 5.5 V

NG → CHECK AND REPLACE ECM (See page 01–32)

OK

REPLACE IGNITION COIL ASSY

4 CHECK HARNESS AND CONNECTOR(ECM (IGT TERMINAL) – IGNITION COIL)

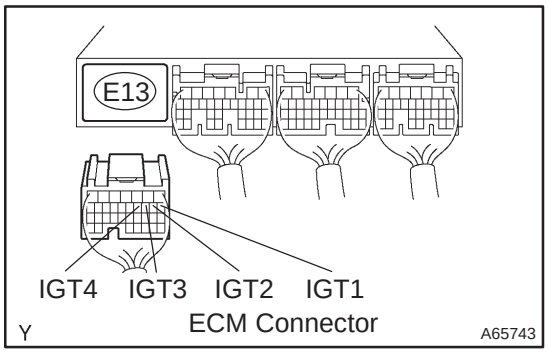

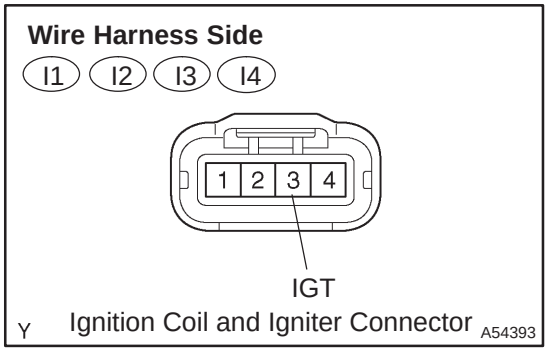

(a) Disconnect the I1, I2, I3 or I4 ignition coil and igniter connector.
(b) Disconnect the E13 ECM connector.
(c) Check for continuity between the wire harness side connectors.

Standard (Check for open):

Symbols (Terminal No.)	Specified condition
IGT (I1–3) – IGT1 (E13–8)	Continuity
IGT (I2–3) – IGT2 (E13–9)	
IGT (I3–3) – IGT3 (E13–10)	
IGT (I4–3) – IGT4 (E13–11)	

Standard (Check for short):

Symbols (Terminal No.)	Specified condition
IGT (I1–3) or IGT1 (E13–8) – Body ground	No continuity
IGT (I2–3) or IGT2 (E13–9) – Body ground	
IGT (I3–3) or IGT3 (E13–10) – Body ground	
IGT (I4–3) or IGT4 (E13–11) – Body ground	

NG → REPAIR OR REPLACE HARNESS OR CONNECTOR

OK

5 INSPECT ECM(IGT1, IGT2, IGT3 AND IGT4 VOLTAGE)

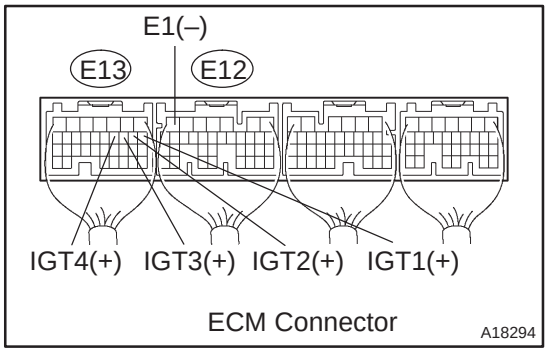

(a) Measure the voltage between the terminals of the E12 and E13 ECM connectors when the engine is cranked.

Standard:

Symbols (Terminal No.)	Specified condition
IGT1 (E13–8) – E1 (E12–7)	Between 0.1 V and 4.5 V
IGT2 (E13–9) – E1 (E12–7)	
IGT3 (E13–10) – E1 (E12–7)	
IGT4 (E13–11) – E1 (E12–7)	

NG → CHECK AND REPLACE ECM (See page 01–32)

OK

6 INSPECT ECM(IGT1, IGT2, IGT3 AND IGT4 VOLTAGE)

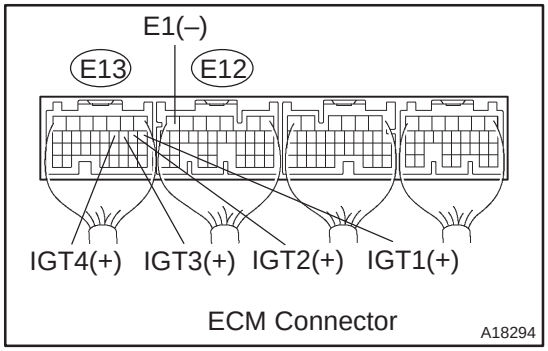

(a) Disconnect the I1, I2, I3 or I4 ignition coil and igniter connector.

(b) Measure the voltage between the terminals of the E12 and E13 ECM connectors when the engine is cranked.

Standard:

Symbols (Terminal No.)	Specified condition
IGT1 (E13–8) – E1 (E12–7)	4.5 V or more
IGT2 (E13–9) – E1 (E12–7)	
IGT3 (E13–10) – E1 (E12–7)	
IGT4 (E13–11) – E1 (E12–7)	

NG → **CHECK AND REPLACE ECM (See page 01–32)**

OK

7 INSPECT IGNITION COIL ASSY(POWER SOUSE CIRCUIT)

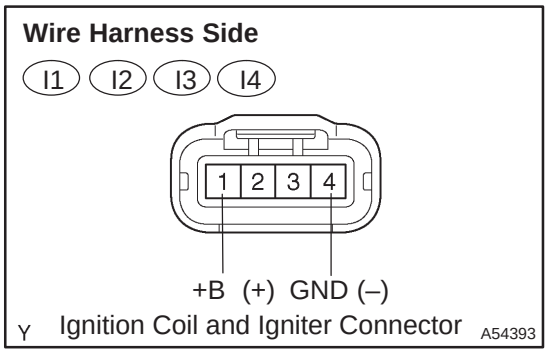

(a) Disconnect the I1, I2, I3 or I4 ignition coil and igniter connector.

(b) Turn the ignition switch ON position.

(c) Measure the voltage between the terminal of the wire harness side connector and body ground.

Standard:

Symbols (Terminal No.)	Specified condition
+B (I1–1) – GND (I1–4)	9 to 14 V
+B (I2–1) – GND (I2–4)	
+B (I3–1) – GND (I3–4)	
+B (I4–1) – GND (I4–4)	

OK → **REPLACE IGNITION COIL ASSY**

NG

8 INSPECT IG2 RELAY

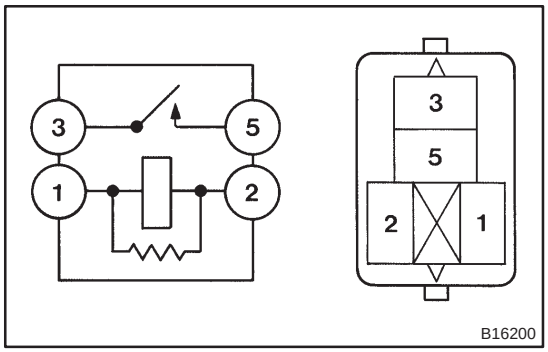

(a) Remove the IG2 relay from the engine room R/B No.4.

(b) Inspect the IG2 relay.

Standard:

Terminal No.	Specified condition
1 – 2	Continuity
3 – 5	No Continuity
	Continuity (Apply battery voltage Terminals 1 and 2)

NG → **REPLACE IG2 RELAY**

OK

9 CHECK FUSE(IGN)

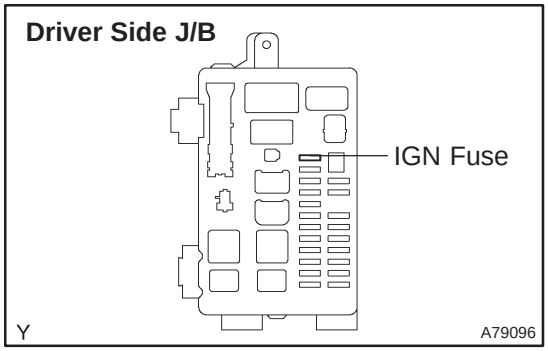

(a) Remove the IGN fuse from the driver side J/B.
(b) Check for continuity in the IGN fuse.
Standard: Continuity

NG → **CHECK FOR SHORT IN ALL HARNESS AND COMPONENTS CONNECTED FUSE**

OK

10 CHECK HARNESS AND CONNECTOR(IG2 RELAY – IGNITION COIL AND IGNITER)

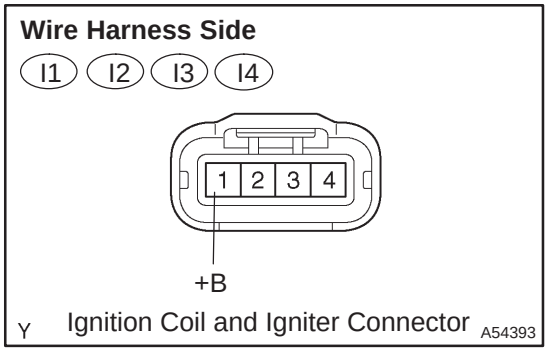

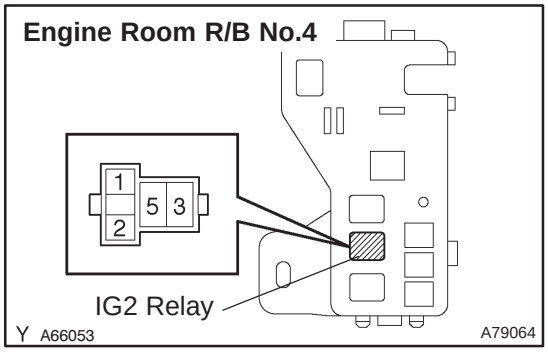

(a) Disconnect the I1, I2, I3 or I4 ignition coil and igniter connector.
(b) Remove the IG2 relay from the engine room R/B No.4.
(c) Check for continuity between the wire harness side connectors.

Standard (Check for open):

Symbols (Terminal No.)	Specified condition
+B (I1–1) – IG2 relay (3)	Continuity
+B (I2–1) – IG2 relay (3)	
+B (I3–1) – IG2 relay (3)	
+B (I4–1) – IG2 relay (3)	

Standard (Check for short):

Symbols (Terminal No.)	Specified condition
+B (I1–1) or IG2 relay (3) – Body ground	No continuity
+B (I2–1) or IG2 relay (3) – Body ground	
+B (I3–1) or IG2 relay (3) – Body ground	
+B (I4–1) or IG2 relay (3) – Body ground	

NG → **REPAIR OR REPLACE HARNESS OR CONNECTOR**

OK

11 CHECK HARNESS AND CONNECTOR(IGNITION SWITCH – IG2 RELAY)

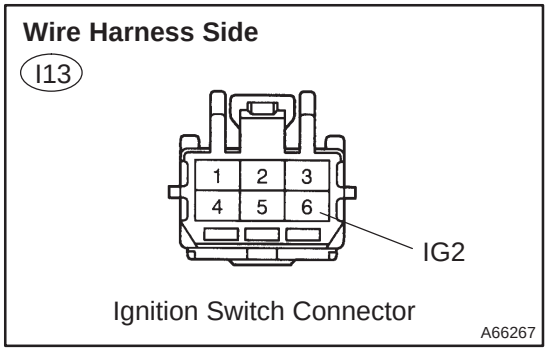

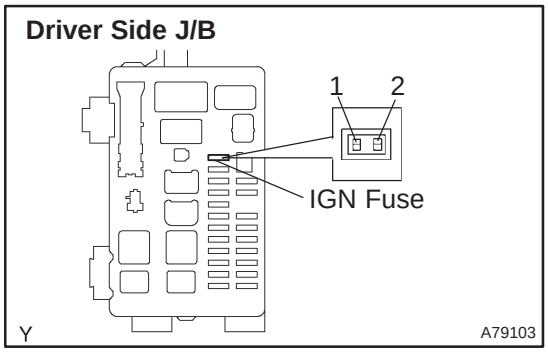

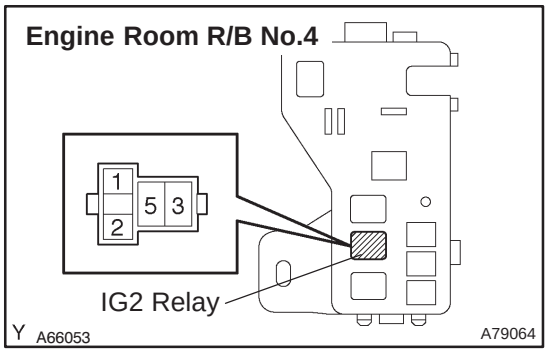

(a) Disconnect the battery negative (–) terminal.
(b) Disconnect the ignition switch connector.
(c) Remove the IGN fuse from the driver side J/B.
(d) Remove the IG2 relay from the engine room R/B No.4.
(e) Check for continuity between the wire harness side connectors.

Standard (Check for open):

Symbols (Terminal No.)	Specified condition
IG2 (I13–6) – IGN fuse (1)	Continuity
IGN fuse (2) – IG2 relay (1)	

Standard (Check for short):

Symbols (Terminal No.)	Specified condition
IG2 (I13–6) or IGN fuse (1) – Body ground	No continuity
IGN fuse (2) or IG2 relay (1) – Body ground	

NG → **REPAIR OR REPLACE HARNESS OR CONNECTOR**

OK

CHECK AND REPLACE POWER SOURCE CIRCUIT

DTC	P0500/42	VEHICLE SPEED SENSOR ”A”

CIRCUIT DESCRIPTION

The speed sensor for skid control ECU detects the wheel speed and sends the appropriate signals to the skid control ECU.

The skid control ECU converts these signals into a 4–pulse signal and outputs it to the combination meter. After this signal is converted into a more precise rectangular waveform by the waveform shaping circuit inside the combination meter, it is then transmitted to the ECM. The ECM determines the vehicle speed based on the frequency of these pulse signals.

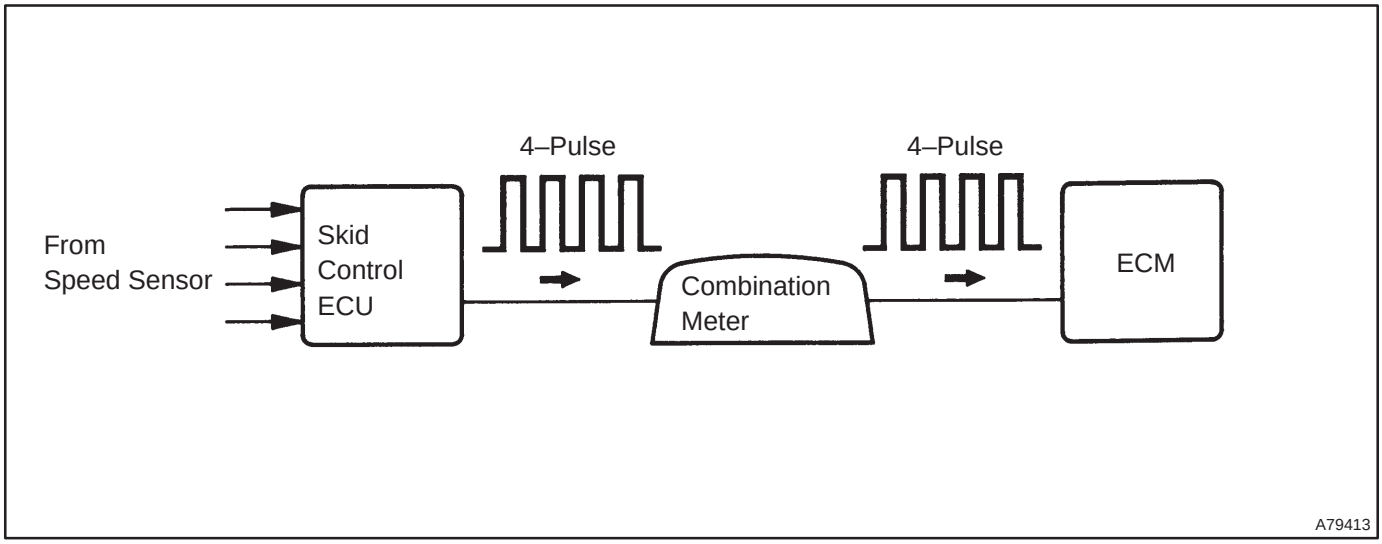

DTC No.	DTC Detection Condition	Trouble Area
P0500/42	During the vehicle is being driven, no vehicle speed sensor signal to the ECM (2 trip detection logic)	• Open or short in speed sensor circuit • Speed sensor • Combination meter • ECM • Skid control ECU

WIRING DIAGRAM

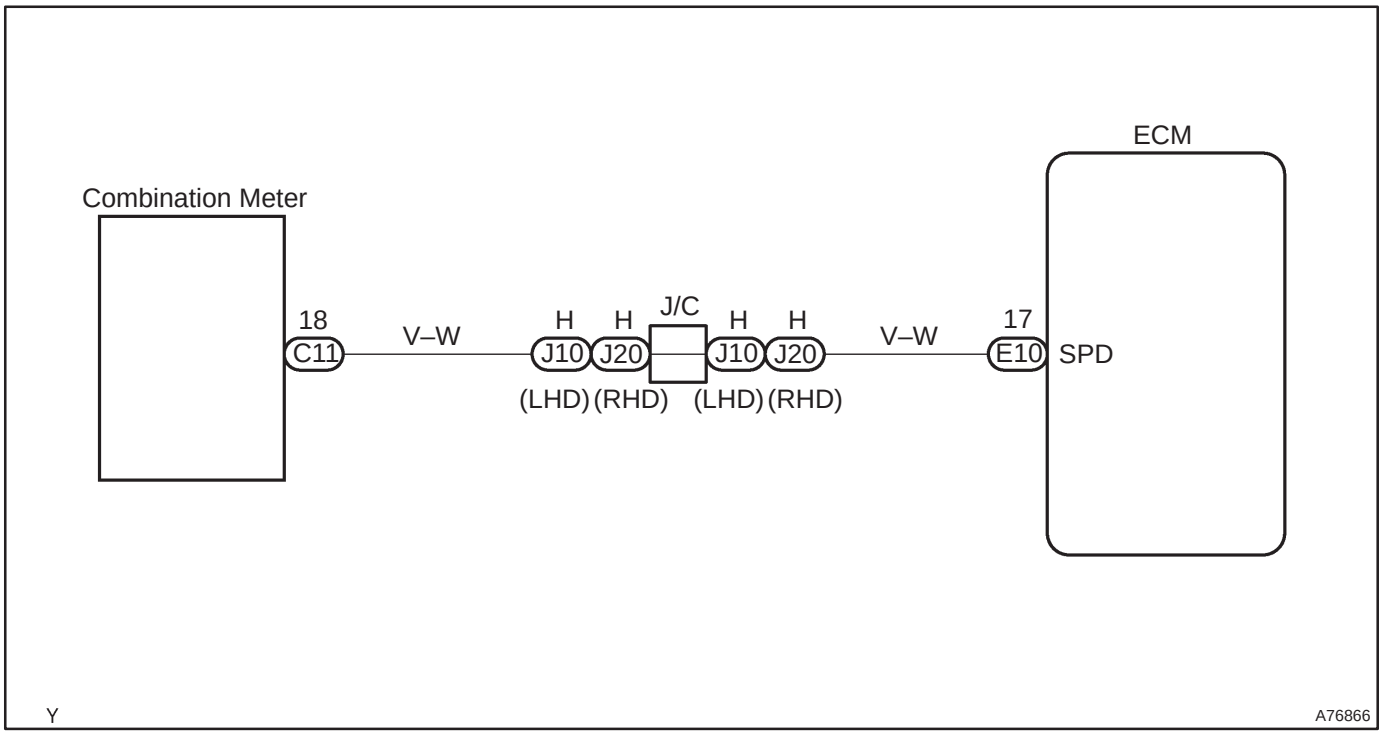

INSPECTION PROCEDURE

HINT:

Read freeze frame data using the hand–held tester. Freeze frame data records the engine conditions when a malfunction is detected. When troubleshooting, it is useful for determining whether the vehicle was running or stopped, the engine was warmed up or not, the air–fuel ratio was lean or rich, etc. at the time of the malfunction.

1	CHECK OPERATION OF SPEEDOMETER

(a) Drive the vehicle and check that the operation of the speedometer in the combination meter is normal.

HINT:

The vehicle speed sensor is operating normally if the speedometer display is normal.

NG → **CHECK SPEEDOMETER CIRCUIT (See page 05–1500)**

OK

2 INSPECT ECM

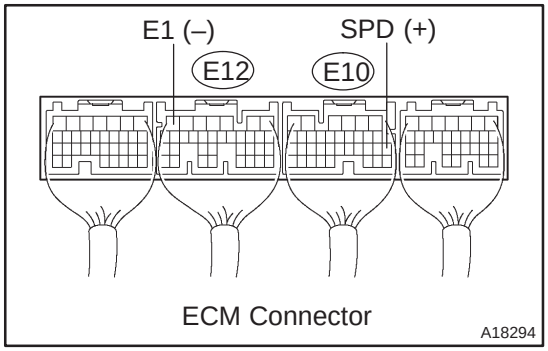

(a) Shift the lever to the neutral position.
(b) Jack up the vehicle.
(c) Turn the ignition switch ON.
(d) Measure the voltage between the terminals of the E10 and E12 ECM connectors as the wheel is turned slowly.
Standard:

Symbols (Terminal No.)	Specified condition
SPD (E10–17) – E1 (E12–7)	Generated intermittently

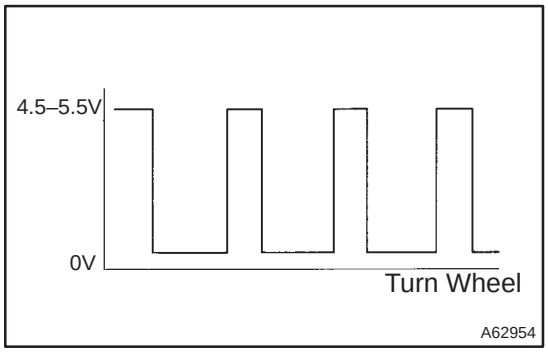

HINT:
The output voltage should fluctuate up and down similarly to the diagram on the left when the wheel is turned slowly.

NG → **REPAIR OR REPLACE HARNESS OR CONNECTOR**

OK

CHECK AND REPLACE ECM (See page 01–32)

DTC P0511/33 IDLE AIR CONTROL CIRCUIT

CIRCUIT DESCRIPTION

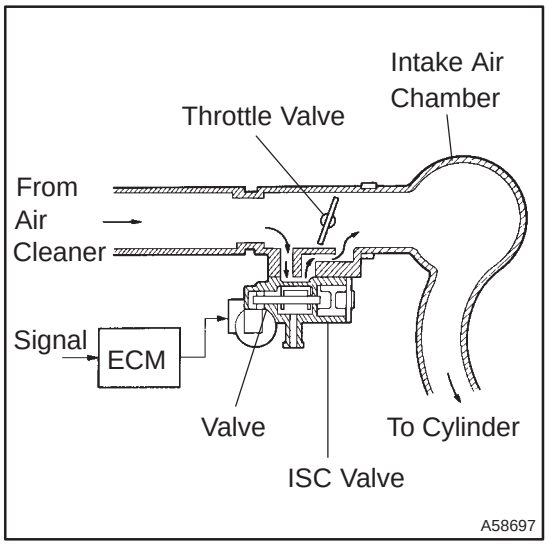

The rotary solenoid type idle speed control (ISC) valve is located under the throttle body and intake air bypassing the throttle valve is directed to the idle speed control (ISC) valve through the passage.
In this way the intake air volume bypassing the throttle valve is regulated, controls the engine speed.
The ECM operates the idle speed control (ISC) valve only to perform idle–up and provide feedback for the target idling speed.

DTC No.	DTC Detecting Condition	Trouble Area
P0511/33	Idle speed continues to vary greatly from target speed (1 trip detection logic)	• Open or short in idle speed control (ISC) valve circuit • Idle speed control (ISC) valve is stuck or closed • A/C switch circuit • Air induction system • ECM

WIRING DIAGRAM

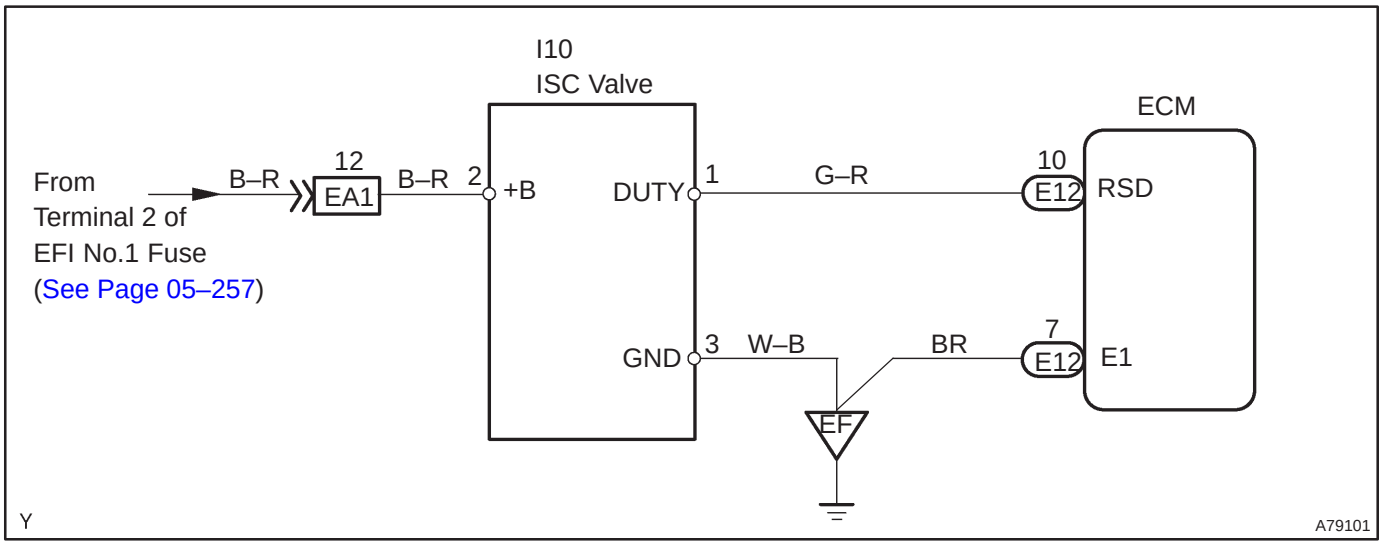

INSPECTION PROCEDURE

HINT:
Read freeze frame data using the hand–held tester. Freeze frame data records the engine conditions when a malfunction is detected. When troubleshooting, it is useful for determining whether the vehicle was running or stopped, the engine was warmed up or not, the air–fuel ratio was lean or rich, etc. at the time of the malfunction.

When using hand–held tester:

1	PERFORM ACTIVE TEST USING HAND–HELD TESTER(CHECK ISC VALVE OPERATION)

(a) Warm up the engine to the normal operating temperature.
(b) Switch off all the accessories.
(c) Switch off the A/C.
(d) Shift the lever to the neutral position.
(e) Connect the hand–held tester to the DLC3 on the vehicle.
(f) Select the item ”DIAGNOSIS / OBD/MOBD / ACTIVE TEST / ISC DUTY RATIO”.
(g) Check that the engine RPM varies when changing the ISC duty ratio.
Engine RPM:
Engine RPM fluctuates ups and downs in respose to the ISC duty ratio variation.

OK → **CHECK FOR INTERMITTENT PROBLEMS (See page 05–149)**

NG

2	CHECK HARNESS AND CONNECTOR

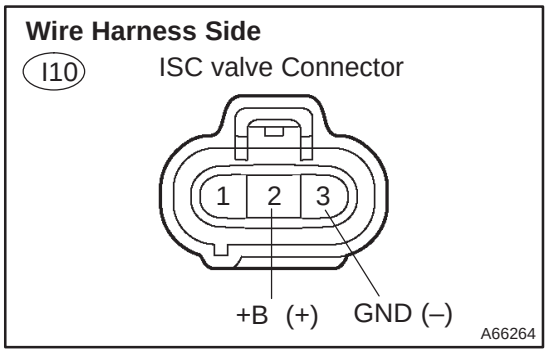

(a) Disconnect the ISC valve connector.
(b) Turn the ignition switch ON.
(c) Measure the voltage between the terminals of the ISC valve wire harness side connector.
Standard:

Symbols (Terminal No.)	Specified condition
+B (I10–2) – GND (I10–3)	9 to 14 V

NG → **REPAIR OR REPLACE HARNESS OR CONNECTOR**

OK

3	CHECK HARNESS AND CONNECTOR(RSD CIRCUIT)

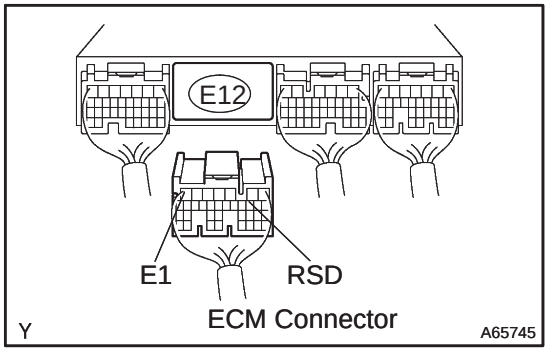

(a) Disconnect the ISC valve connector.
(b) Disconnect the E12 ECM connector.
(c) Check for continuity between the wire harness side connectors.

Standard (Check for open):

Symbols (Terminal No.)	Specified condition
DUTY (I10–1) – RSD (E12–10)	Continuity
GND (I10–3) – E1 (E12–7)	

Standard (Check for short):

Symbols (Terminal No.)	Specified condition
DUTY (I10–1) or RSD (E12–10) – Body groundr	No continuity

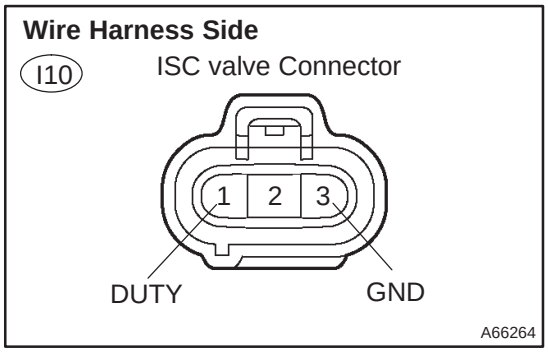

NG → **REPAIR OR REPLACE HARNESS OR CONNECTOR**

OK

4	INSPECT THLOTTLE BODY IDLE SPEED CONTROL VALVE ASSY (See page 10–18)

NG → **REPLACE THLOTTLE BODY IDLE SPEED CONTROL VALVE ASSY**

OK

CHECK AND REPLACE ECM (See page 01–32)

When not using hand–held tester:

1	INSPECT ECM

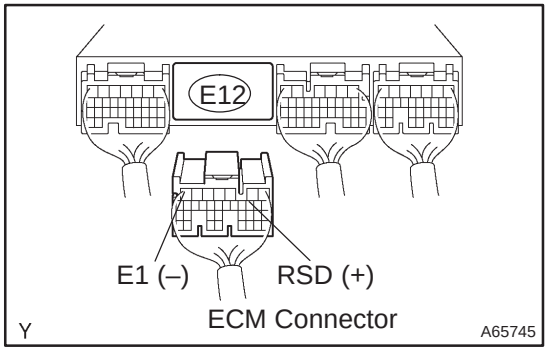

(a) Disconnect the E12 ECM connector.
(b) Turn the ignition switch ON.
(c) Measure the voltage between the terminals of the E4 ECM connector.

Standard:

Symbols (Terminal No.)	Specified condition
RSD (E12–10) – E1 (E12–7)	9 to 14 V

OK → **Go to step 3**

NG

2	INSPECT THLOTTLE BODY IDLE SPEED CONTROL VALVE ASSY (See page 10–18)

NG → REPAIR OR REPLACE THLOTTLE BODY IDLE SPEED CONTROL VALVE ASSY

OK

REPAIR OR REPLACE HARNESS OR CONNECTOR

3	INSPECT THLOTTLE BODY IDLE SPEED CONTROL VALVE ASSY (See page 10–18)

NG → REPAIR OR REPLACE THLOTTLE BODY IDLE SPEED CONTROL VALVE ASSY

OK

4	CHECK BLOCKAGE OF ISC VALVE AND PASSAGE TO BYPASS THROTTLE VALVE

NG → REPAIR OR REPLACE THLOTTLE BODY IDLE SPEED CONTROL VALVE ASSY

OK

CHECK AND REPLACE ECM (See page 01–32)

DTC	P0606/89	ECM/PCM PROCESSOR

CIRCUIT DESCRIPTION

DTC No.	DTC Detection Condition	Trouble Area
P0606/89	ECM inside error	• ECM

INSPECTION PROCEDURE

HINT:

Read freeze frame data using the hand – held tester. Freeze frame data records the engine conditions when a malfunction is detected. When troubleshooting, it is useful for determining whether the vehicle was running or stopped, the engine was warmed up or not, the air–fuel ratio was lean or rich, etc. at the time of the malfunction.

CHECK AND REPLACE ECM (See page 01–32)

DTC	P2237/21	OXYGEN SENSOR PUMPING CURRENT CIRCUIT/OPEN (FOR A/F SENSOR)(BANK 1 SENSOR 1)

DTC	P2238/21	OXYGEN SENSOR PUMPING CURRENT CIRCUIT LOW (FOR A/F SENSOR)(BANK 1 SENSOR 1)

DTC	P2239/21	OXYGEN SENSOR PUMPING CURRENT CIRCUIT HIGH (FOR A/F SENSOR)(BANK 1 SENSOR 1)

DTC	P2240/28	OXYGEN SENSOR PUMPING CURRENT CIRCUIT/OPEN (FOR A/F SENSOR)(BANK 2 SENSOR 1)

DTC	P2241/28	OXYGEN SENSOR PUMPING CURRENT CIRCUIT LOW (FOR A/F SENSOR)(BANK 2 SENSOR 1)

DTC	P2242/28	OXYGEN SENSOR PUMPING CURRENT CIRCUIT HIGH (FOR A/F SENSOR)(BANK 2 SENSOR 1)

DTC	P2251/21	OXYGEN SENSOR REFERENCE GROUND CIRCUIT/OPEN (FOR A/F SENSOR)(BANK 1 SENSOR 1)

DTC	P2252/21	OXYGEN SENSOR REFERENCE GROUND CIRCUIT LOW (FOR A/F SENSOR)(BANK 1 SENSOR 1)

DTC	P2253/21	OXYGEN SENSOR REFERENCE GROUND CIRCUIT HIGH (FOR A/F SENSOR)(BANK 1 SENSOR 1)

DTC	P2254/28	OXYGEN SENSOR REFERENCE GROUND CIRCUIT/OPEN (FOR A/F SENSOR)(BANK 2 SENSOR 1)

DTC	P2255/28	OXYGEN SENSOR REFERENCE GROUND CIRCUIT LOW (FOR A/F SENSOR)(BANK 2 SENSOR 1)

DTC	P2256/28	OXYGEN SENSOR REFERENCE GROUND CIRCUIT HIGH (FOR A/F SENSOR)(BANK 2 SENSOR 1)

CIRCUIT DESCRIPTION

HINT:

This DTC is recorded when A/F sensor has a malfunction, although the caption is healed oxygen sensor. The air–fuel ratio sensor are the lamination type. Compared to the conventional type, the sensor and heater portions of the lamination type are narrower overall. Because the heat of the heater acts directly on the alumina and zirconia (of the sensor portion) it accelerates the activation of the sensor.

To obtain a high purification rate of the CO, HC and NOx components of the exhaust gas, a three–way catalytic converter is used. For the most efficient use of the three–way catalytic converter, the air–fuel ratio must be precisely controlled so that it is always close to the stoichiometric air–fuel ratio.

The A/F sensor has the characteristic that it provides output voltage* being approximately proportional to the existing air–fuel ratio. The A/F sensor output voltage* is used to provide feedback for the ECM to control the air–fuel ratio.

By the A/F sensor output, the ECM can determine the deviation amount from the stoichiometric air–fuel ratio and control the proper injection time immediately. If the A/F sensor is out of order, ECM is unable to perform the accurate air–fuel ratio control.

The A/F sensor is equipped with a heater which heats the zirconia element. The heater is controlled by the ECM. When the intake air volume is low (the temperature of the exhaust gas is low), the current flows to the heater to heat the sensor for the accurate oxygen concentration detection.

*: The voltage value changes at the inside of the ECM only.

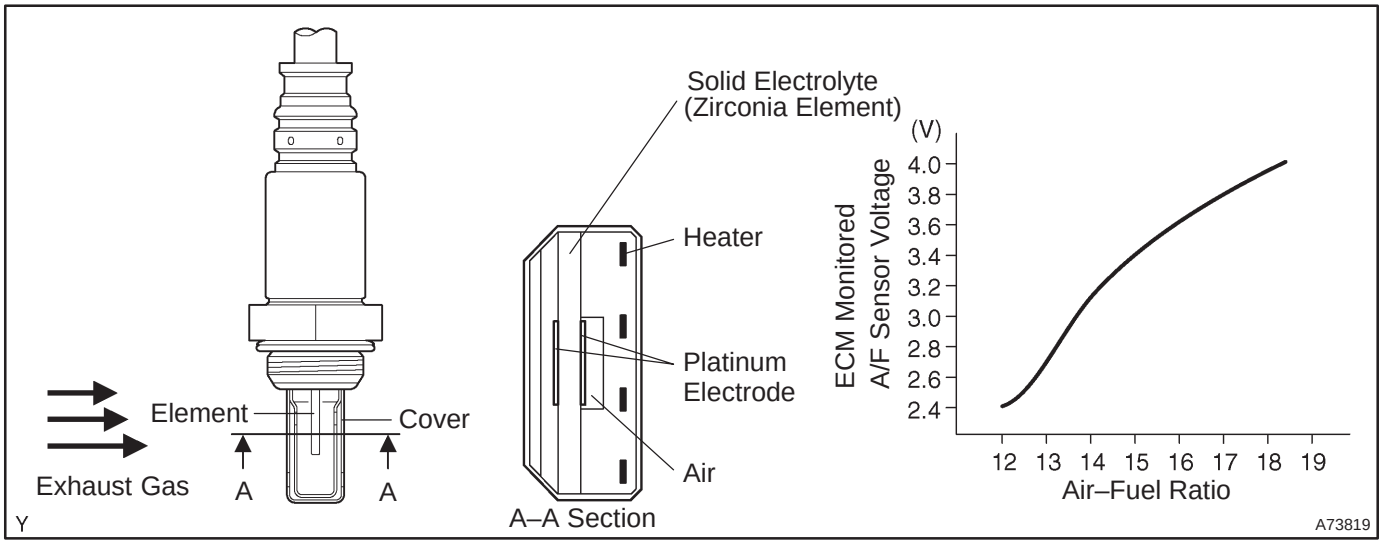

DTC No.	DTC Detecting Condition	Trouble Area
P2237/21 P2240/28	A/F sensor circuit (bank 1 sensor 1)	HINT : Main trouble area • Open or short in A/F sensor circuit
	Conditions (a) and (b) continue for 5.0 sec. or more : (a) AF+ less than 0.5 V (b) AF+ greater than 4.5 V	• Open or short in A/F sensor circuit • A/F sensor • A/F sensor heater • A/F sensor heater relay • A/F sensor heater and relay circuit • ECM
	Conditions (a) and (b) continue for 5.0 sec. or more : (a) (AF+) – (AF–) less than 0.1 V (b) (AF+) – (AF–) greater than 0.8 V	
P2238/21 P2241/28	A/F sensor circuit low (bank 1 sensor 1)	HINT : Main trouble area • Open in A/F sensor circuit
	Condition (a) continues for 5.0 sec. or more : (a) AF+ less than 0.5 V	• Open or short in A/F sensor circuit • A/F sensor • A/F sensor heater • A/F sensor heater relay • A/F sensor heater and relay circuit • ECM
	Condition (a) continues for 5.0 sec. or more : (a) (AF+) – (AF–) less than 0.1 V	
P2239/21 P2242/28	A/F sensor circuit high (bank 1 sensor 1)	HINT : Main trouble area • Short in A/F sensor circuit
	Condition (a) continue for 5.0 sec. or more : (a) AF+ greater than 4.5 V	• Open or short in A/F sensor circuit • A/F sensor • A/F sensor heater • A/F sensor heater relay • A/F sensor heater and relay circuit • ECM
	Condition (a) continue for 5.0 sec. or more : (a) (AF+) – (AF–) greater than 0.8 V	
P2251/21 P2254/28	Conditions (a) and (b) continue for 5.0 sec. or more : (a) AF– less than 0.5 V (b) AF– greater than 4.5 V	• Open or short in A/F sensor circuit • A/F sensor • A/F sensor heater • A/F sensor heater relay • A/F sensor heater and relay circuit • ECM
P2252/21 P2255/28	Condition (a) continue for 5.0 sec. or more : (a) AF– less than 0.5 V	
P2253/21 P2256/28	Condition (a) continue for 5.0 sec. or more : (b) AF– greater than 4.5 V	

HINT:

- DTC P2237/28, P2238/28, P2239/28, P2251/28, P2252/28 and P2253/28 means malfunction related to bank 1 A/F sensor circuit.
- DTC P2240/21, P2241/21, P2242/21, P2254/21, P2255/21 and P2256/21 means malfunction related to bank 2 A/F sensor circuit.
- Bank 1 refers to the bank that includes cylinder No. 1.
- Bank 2 refers to the bank that includes cylinder No. 2.

WIRING DIAGRAM

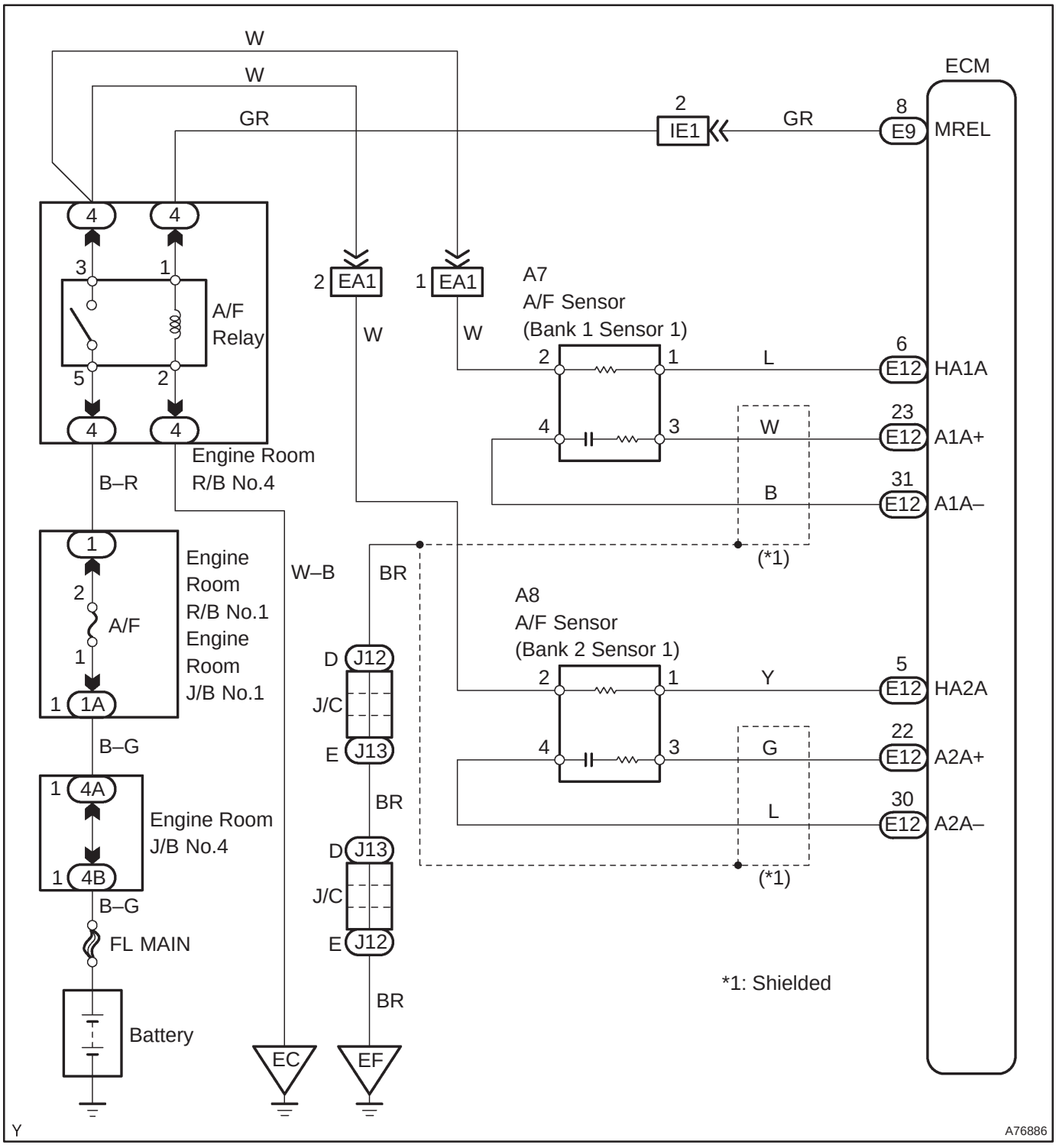

INSPECTION PROCEDURE

HINT:

Hand–held tester only:

Narrowing down the trouble area is possible by performing ACTIVE TEST of the following ”A/F CONTROL” (A/F sensor, heated oxygen sensor or other trouble areas can be distinguished).

(a) Perform ACTIVE TEST using the hand–held tester (A/F CONTROL).

HINT:

”A/F CONTROL” is an ACTIVE TEST which changes the injection volume –12.5 % or +25 %.

(1) Connect the hand–held tester to the DLC3 on the vehicle.
(2) Turn the ignition switch ON.
(3) Warm up the engine with the engine speed at 2,500 rpm for approximately 90 sec.
(4) Select the item ”DIAGNOSIS / OBD/MOBD / ACTIVE TEST / A/F CONTROL”.
(5) Perform ”A/F CONTROL” with the engine in an idle condition (press the right or left button).

Result:

A/F sensor reacts in accordance with increase and decrease of injection volume:

+25 % → rich output: Less than 3.0 V

–12.5 % → lean output: More than 3.35 V

Heated oxygen sensor reacts in accordance with increase and decrease of injection volume:

+25 % → rich output: More than 0.55 V

–12.5 % → lean output: Less than 0.4 V

NOTICE:

There is a few second delay in the A/F sensor output, and there is about 20 seconds delay in the heated oxygen sensor output.

	Output voltage of A/F sensor (sensor 1)	Output voltage of heated oxygen sensor (sensor 2)	Mainly suspect trouble area
Case 1	Injection volume +25 % –12.5 % 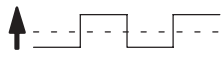 Output voltage More than 3.35 V Less than 3.0 V 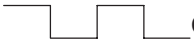 **OK**	Injection volume +25 % –12.5 % 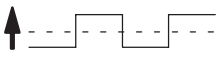 Output voltage More than 0.55 V Less than 0.4V  **OK**	—
Case 2	Injection volume +25 % –12.5 % 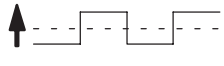 Output voltage No reaction **NG**	Injection volume +25 % –12.5 % 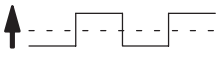 Output voltage More than 0.55 V Less than 0.4V 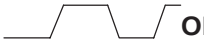 **OK**	A/F sensor (A/F sensor, heater, A/F sensor circuit)
Case 3	Injection volume +25 % –12.5 % 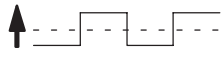 Output voltage More than 3.35 V Less than 3.0V 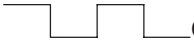 **OK**	Injection volume +25 % –12.5 % 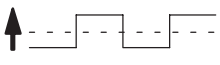 Output voltage No reaction **NG**	Heated oxygen sensor (heated oxygen sensor, heater, heated oxygen sensor circuit)
Case 4	Injection volume +25 % –12.5 % 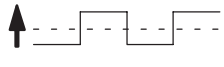 Output voltage No reaction **NG**	Injection volume +25 % –12.5 % 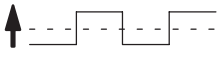 Output voltage No reaction **NG**	Extremely rich or lean actual air–fuel ratio (Injector, fuel pressure, gas leakage in exhaust system, etc.)

The following procedure of A/F CONTROL enables the technician to check and graph voltage output of both the A/F sensor and heated oxygen sensor.
For displaying the graph indication, enter ”ACTIVE TEST/ A/F CONTROL/USER DATA”, then select ”AFS B1S1 and O2S B1S2” or ”AFS B2S1 and O2S B2S2” by pressing ”YES” button and push ”ENTER” button before pressing ”F4” button.
HINT:

- If DTC P2237/21, P2238/21, P2239/21, P2251/21, P2252/21 or P2253/21 is displayed, check bank 1 sensor 1 circuit.
- If DTC P2240/28, P2241/28, P2242/28, P2254/28, P2255/28 or P2256/28 is displayed, check bank 2 sensor 1 circuit.
- Read freeze frame data using the hand–held tester. Freeze frame data records the engine conditions when a malfunction is detected. When troubleshooting, it is useful for determining whether the vehicle was running or stopped, the engine was warmed up or not, the air–fuel ratio was lean or rich, etc. at the time of the malfunction.

1 INSPECT AIR FUEL RATIO SENSOR(RESISTANCE OF A/F SENSOR HEATER)

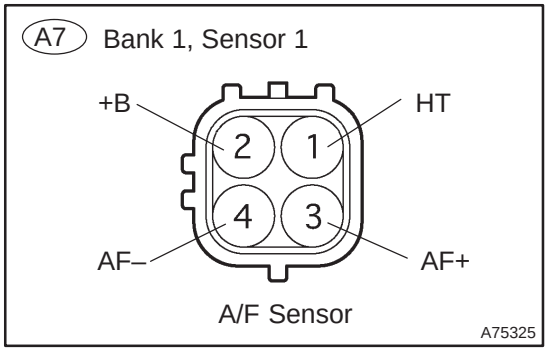

(a) Disconnect the A/F sensor connector.
(b) Measure resistance between terminals HT and +B of the A/F sensor.
Resistance: 1.8 to 3.4 Ω (20°C)

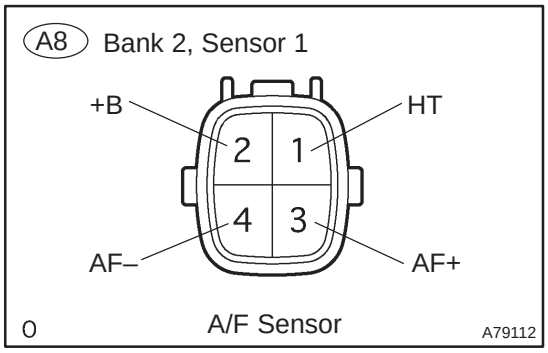

NG → **REPLACE AIR FUEL RATIO SENSOR**

OK

2 INSPECT A/F RELAY

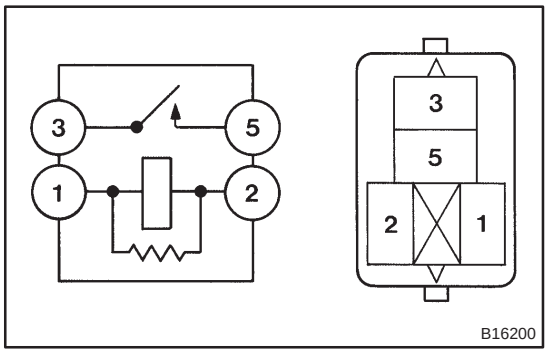

(a) Remove the A/F sensor heater relay from the engine room R/B.
(b) Inspect the A/F senor heater relay.
Standard:

Terminal No.	Specified condition
1 – 2	Continuity
3 – 5	No Continuity
	Continuity (Apply battery voltage Terminals 1 and 2)

NG → **REPLACE A/F RELAY**

OK

3 CHECK HARNESS AND CONNECTOR(ECM – A/F SENSOR)

Wire Harness Side
A7 Bank 1 Sensor 1

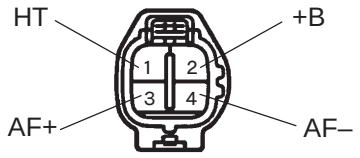

A/F Connector

A76787

Wire Harness Side
A8 Bank 2 Sensor 1

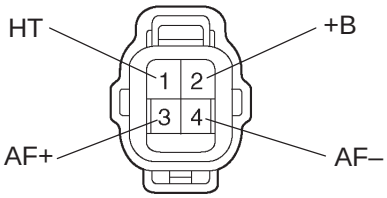

A/F Connector

Y

A79114

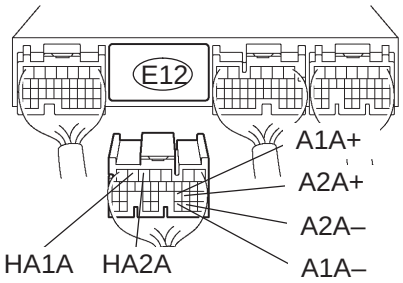

Y

A65745

(a) Disconnect the A7 or A8 A/F sensor connector.
(b) Disconnect the E12 ECM connector.
(c) Check for continuity between the wire harness side connectors.

Standard (Check for open):

Symbols (Terminal No.)	Specified condition
AF+ (A7–3) – A1A+ (E12–23)	Continuity
AF– (A7–4) – A1A– (E12–31)	
HT (A7–1) – HA1A (E12–6)	
AF+ (A8–3) – A2A+ (E12–22)	
AF– (A8–4) – A2A– (E12–30)	
HT (A8–1) – HA2A (E12–5)	

Standard (Check for short):

Symbols (Terminal No.)	Specified condition
AF+ (A7–3) or A1A+ (E12–23) – Body ground	No continuity
AF– (A7–4) or A1A– (E12–31) – Body ground	
HT (A7–1) or HA1A (E12–6) – Body ground	
AF+ (A8–3) or A2A+ (E12–22) – Body ground	
AF– (A8–4) or A2A– (E12–30) – Body ground	
HT (A8–1) or HA2A (E12–5) – Body ground	

Reference (Bank 1 Sensor 1 System Drawing)

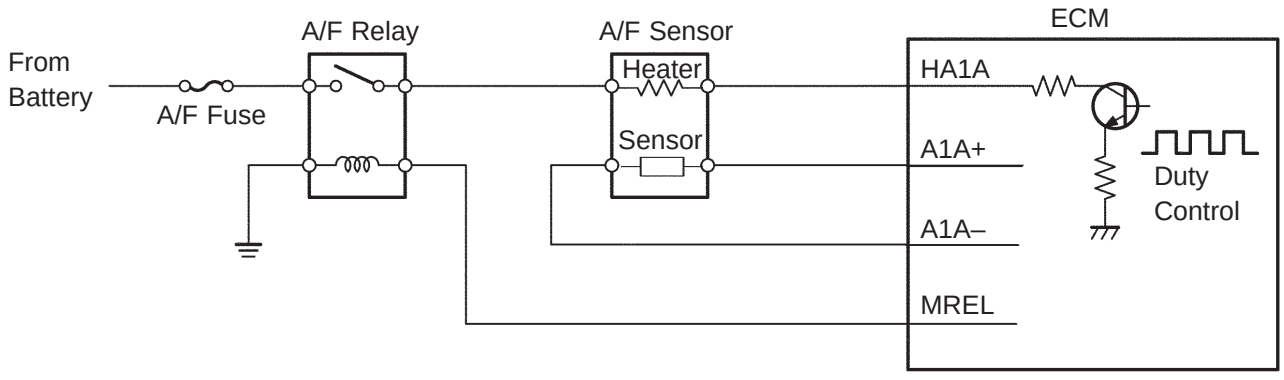

P

B62793

NG → REPAIR OR REPLACE HARNESS OR CONNECTOR

OK

CHECK AND REPLACE ECM (See page 01–32)

ECM POWER SOURCE CIRCUIT

CIRCUIT DESCRIPTION

When the ignition switch is turned ON, battery positive voltage is applied to terminal IGSW of the ECM and the EFI relay (Marking: EFI) control circuit in the ECM sends a signal to terminal MREL of the ECM switching on the EFI relay.

This signal causes current to flow to the coil, closing the contacts of the EFI relay and supplying power to terminal +B of the ECM.

If the ignition switch is turned off, the ECM continues to switch on the EFI relay for a maximum of 2 seconds for the initial setting of the throttle valve.

WIRING DIAGRAM

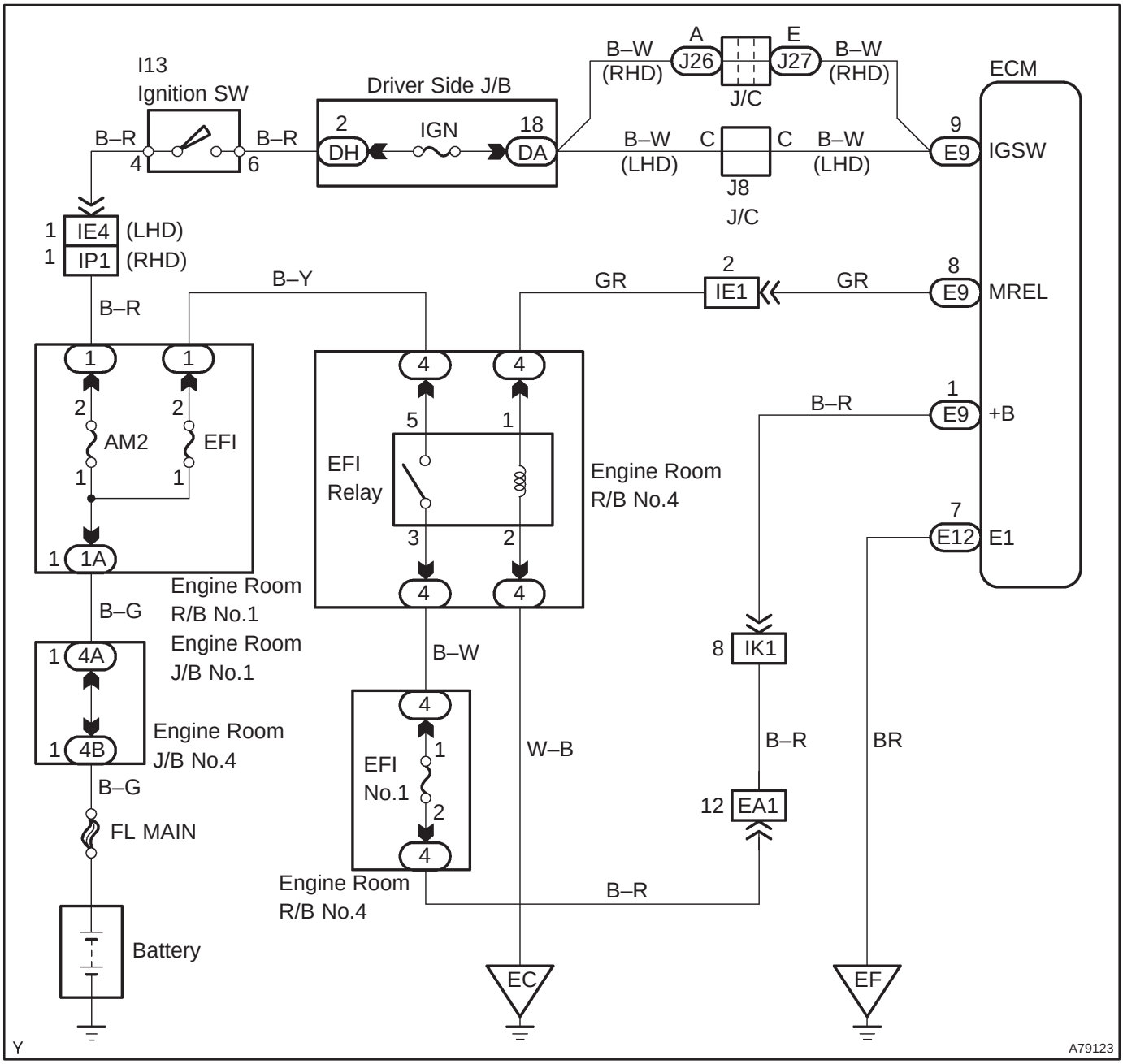

INSPECTION PROCEDURE

1 INSPECT ECM(+B VOLTAGE)

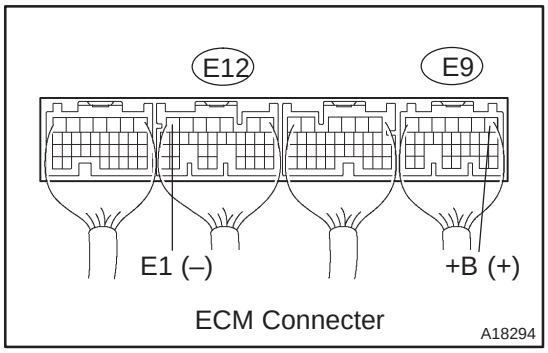

(a) Turn the ignition switch ON.
(b) Measure the voltage between the terminals of the E9 and E12 ECM connector.

Standard:

Symbols (Terminal No.)	Specified condition
+B (E9–1) – E1 (E12–7)	9 to 14 V

OK → **PROCEED TO NEXT CIRCUIT INSPECTION SHOWN ON PROBLEM SYMPTOMS TABLE (See page 05–168)**

NG

2 CHECK HARNESS AND CONNECTOR(ECM – BODY GROUND)

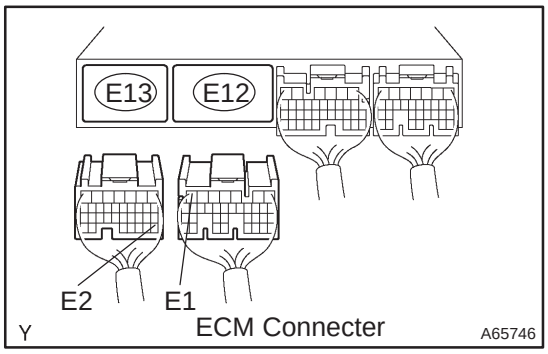

(a) Disconnect the negative (–) battery terminal.
(b) Disconnect the E12 and E13 ECM connector.
(c) Check for continuity between the wire harness side connectors.

Standard (Check for open):

Symbols (Terminal No.)	Specified condition
E1 (E12–7) – Body ground	Continuity
E2 (E13–28) – Body ground	

NG → **REPAIR OR REPLACE HARNESS OR CONNECTOR**

OK

3 INSPECT ECM(IGSW VOLTAGE)

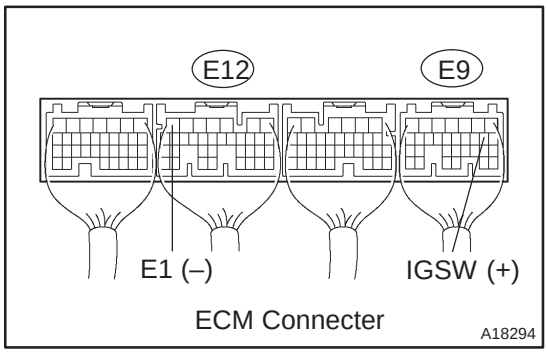

(a) Turn the ignition switch ON.
(b) Measure the voltage between the terminals of the E9 and E12 ECM connector.

Standard:

Symbols (Terminal No.)	Specified condition
IGSW (E9–9) – E1 (E12–7)	9 to 14 V

OK → **Go to step 6**

NG

4 CHECK FUSE(IGN FUSE)

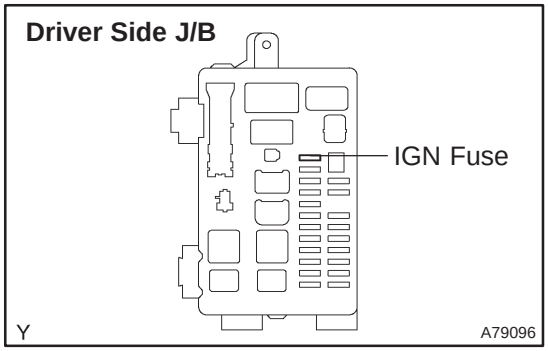

(a) Remove the IGN fuse from the driver side J/B.
(b) Check for continuity in the IGN fuse.
Standard: Continuity

NG → **CHECK FOR SHORT IN ALL HARNESSES AND COMPONENTS CONNECTED FUSE**

OK

5 INSPECT IGNITION OR STARTER SWITCH ASSY

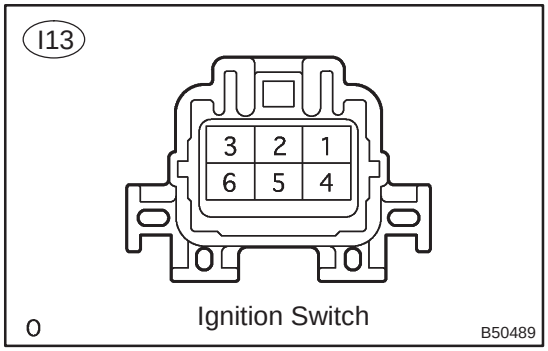

(a) Measure the resistance between the connector terminals shown in the chart below.

Switch	Terminal No.	Resisitance
LOCK	All Terminals	1MΩ or more
ACC	1–3	1Ω or less
ON	1–2, 1–3, 2–3, 5–6	1Ω or less
START	4–5, 4–6, 5–6, 1–2	1Ω or less

NG → **REPLACE IGNITION OR STARTER SWITCH ASSY**

OK

CHECK AND REPAIR HARNESS AND CONNECTOR (BATTERY – IGNITION SWITCH, IGNITION SWITCH – ECM)

6 INSPECT ECM(MREL VOLTAGE)

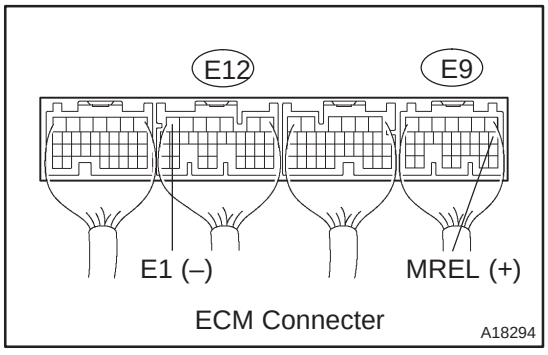

(a) Turn the ignition switch ON.
(b) Measure the voltage between the terminals of the E9 and E12 ECM connector.
Standard:

Symbols (Terminal No.)	Specified condition
MREL (E9–8) – E1 (E12–7)	9 to 14 V

NG → **CHECK AND REPLACE ECM**

OK

7 CHECK FUSE(EFI FUSE)

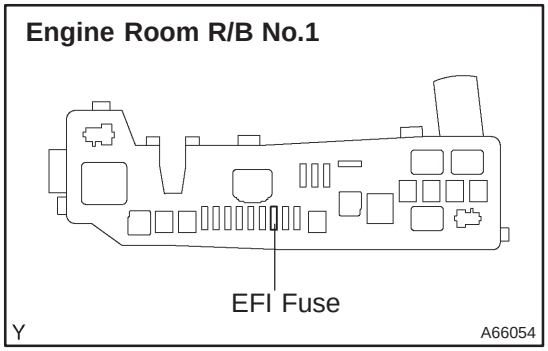

(a) Remove the EFI fuse from the engine room R/B No.1.
(b) Check for continuity in the EFI fuse.
Standard: Continuity

NG → **CHECK FOR SHORT IN ALL HARNESSES AND COMPONENTS CONNECTED FUSE**

OK

8 INSPECT EFI RELAY

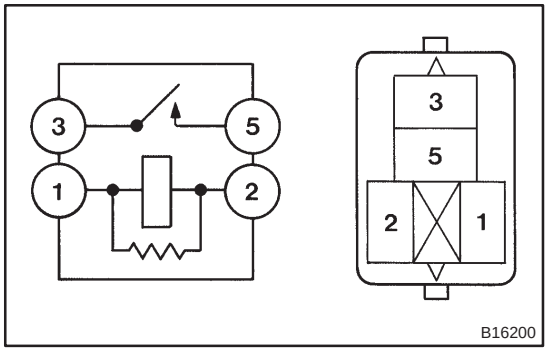

(a) Remove the EFI relay from the engine room R/B No.4.
(b) Inspect the EFI relay.
Standard:

Terminal No.	Specified condition
1 – 2	Continuity
3 – 5	No Continuity
	Continuity (Apply battery voltage Terminals 1 and 2)

NG → **REPLACE EFI RELAY**

OK

9 CHECK FUSE(EFI No,1 FUSE)

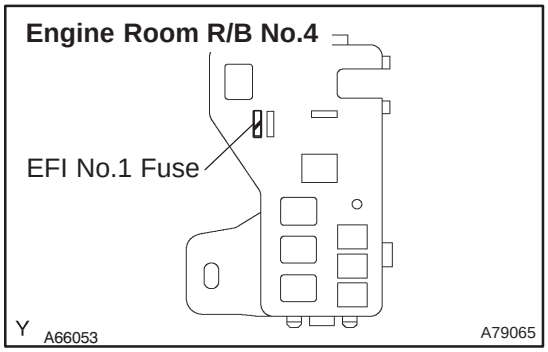

(a) Remove the EFI No.4 fuse from the engine room R/B No.4.
(b) Check for continuity in the EFI No.4 fuse.
Standard: Continuity

NG → **CHECK FOR SHORT IN ALL HARNESSES AND COMPONENTS CONNECTED FUSE**

OK

10	CHECK HARNESS AND CONNECTOR(EFI RELAY – ECM, EFI RELAY – BODY GROUND)

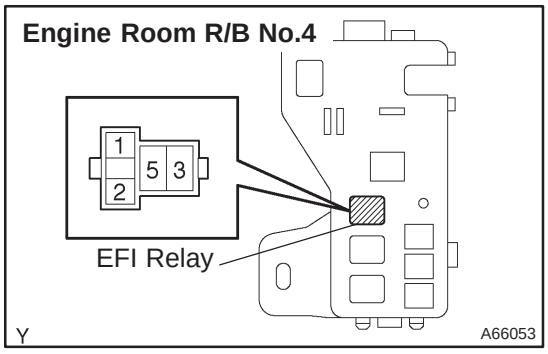

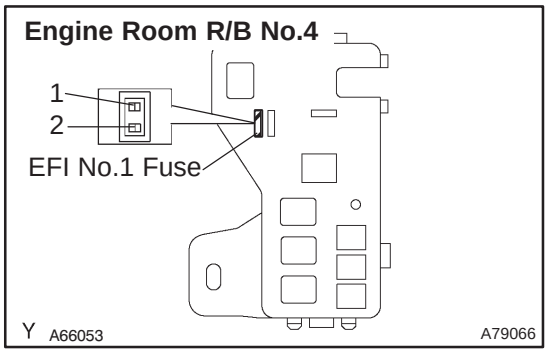

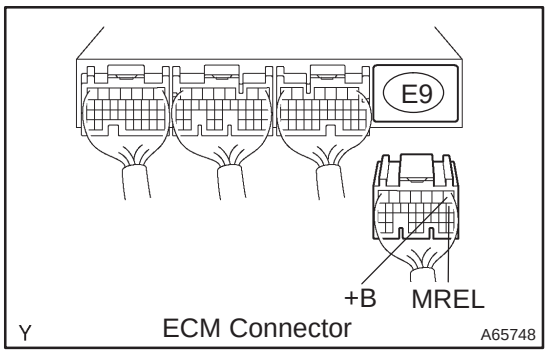

(a) Check the harness and connector between the EFI relay and ECM connector.

(1) Remove the EFI relay from the engine room R/B No.4.

(2) Remove the EFI No.1 fuse from the engine room R/B No.4.

(3) Disconnect the E9 ECM connector.

(4) Check for continuity between the wire harness side connectors.

Standard (Check for open):

Symbols (Terminal No.)	Specified condition
EFI relay (1) – MREL (E9–8)	Continuity
EFI relay (3) – EFI No.1 fuse (1)	
EFI No.1 fuse (2) – +B (E9–1)	

Standard (Check for short):

Symbols (Terminal No.)	Specified condition
EFI relay (1) or MREL (E9–8) – Body ground	No continuity
EFI relay (3) or EFI No.1 fuse (1) – Body ground	
EFI No.1 fuse (2) or +B (E9–1) – Body ground	

(b) Check the harness and connector between the EFI relay and body ground.

(1) Remove the EFI relay from the engine room J/B No.4.

(2) Check for continuity between the wire harness side connector and the body ground.

Standard (Check for open):

Symbols (Terminal No.)	Specified condition
EFI relay (2) – Body ground	Continuity

OK → **REPAIR OR REPLACE HARNESS OR CONNECTOR**

NG

CHECK AND REPAIR HARNESS AND CONNECTOR (TERMINAL +B OF ECM – BATTERY POSITIVE TERMINAL)

ECM BACK–UP POWER SOURCE CIRCUIT

CIRCUIT DESCRIPTION

While the ignition switch is OFF, the battery positive voltage is supplied to terminal BATT of the ECM for the DTCs memory and air–fuel ratio adaptive control value memory, etc.

WIRING DIAGRAM

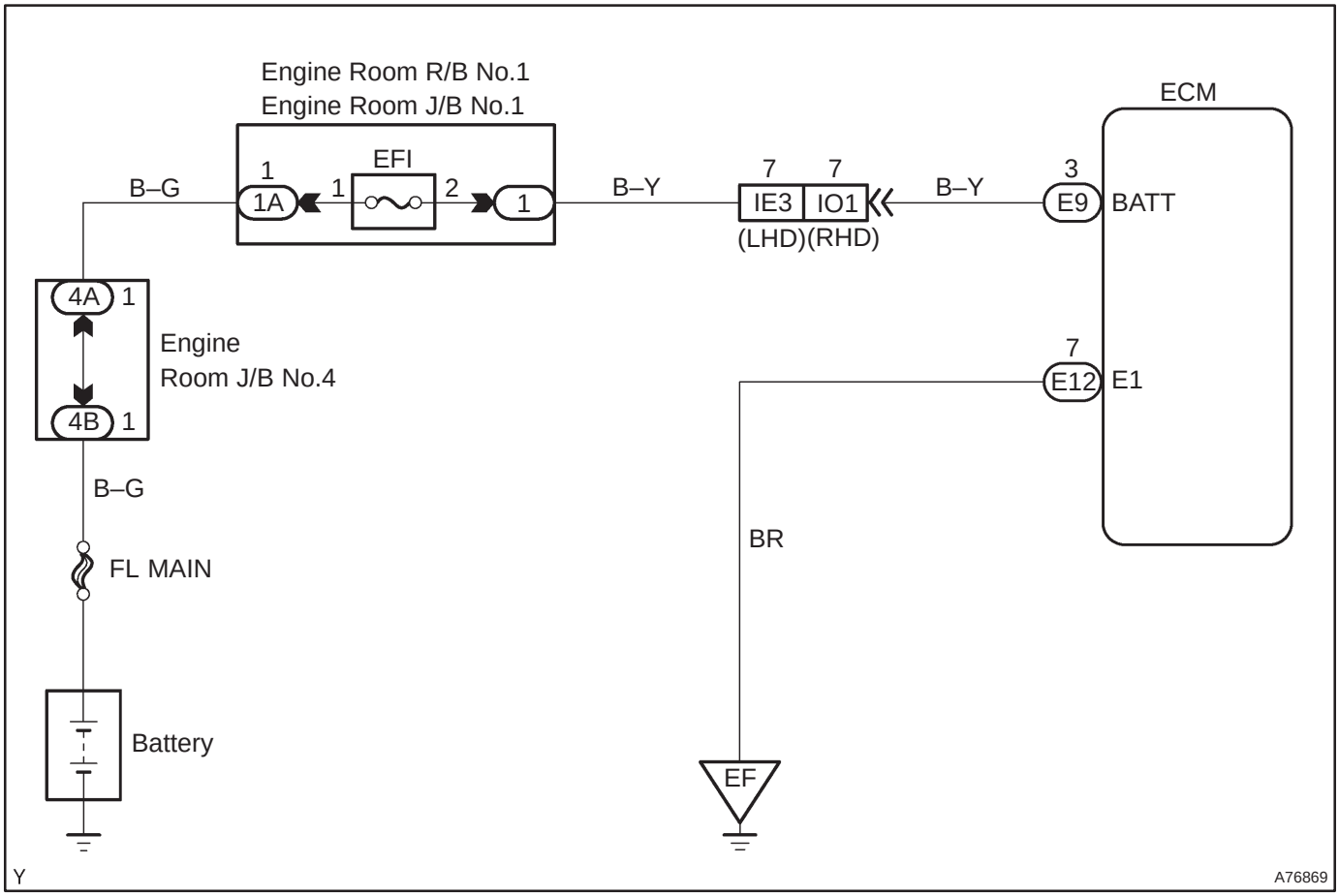

INSPECTION PROCEDURE

1	CHECK FUSE(EFI FUSE)

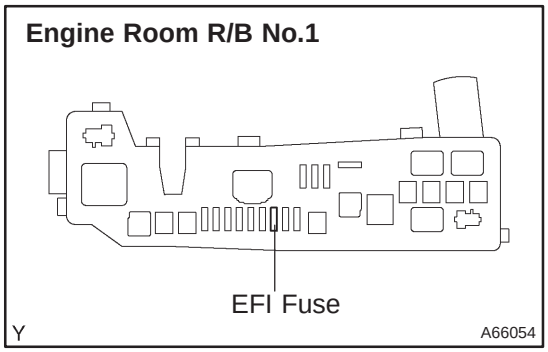

(a) Remove the EFI fuse from the engine room R/B No.1.
(b) Check for continuity in the EFI fuse.
Standard: Continuity

NG → **CHECK FOR SHORT IN ALL HARNESSES AND COMPONENTS CONNECTED FUSE**

OK

2 INSPECT ECM(BATT VOLTAGE)

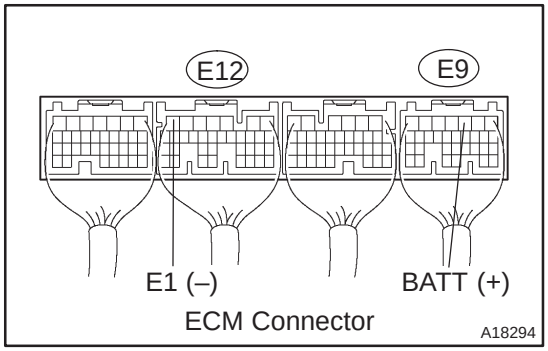

(a) Turn the ignition switch ON.
(b) Measure the voltage between the terminals of the E9 and E12 ECM connector.

Standard:

Symbols (Terminal No.)	Specified condition
BATT (E9–3) – E1 (E12–7)	8 to 14 V

OK → **CHECK AND REPLACE ECM (See page 01–32)**

NG

3 CHECK HARNESS AND CONNECTOR(ECM – EFI FUSE, EFI FUSE – BATTERY)

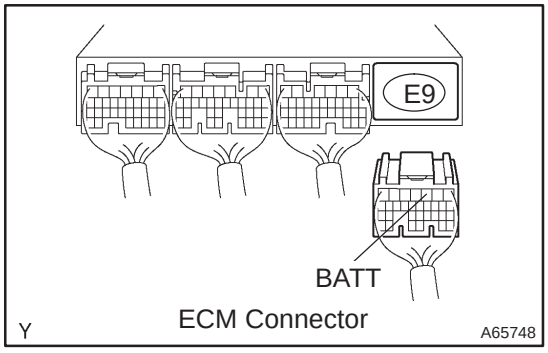

(a) Check the harness and connector between the EFI fuse and ECM.
(1) Remove the EFI fuse from the engine room R/B.
(2) Disconnect the E9 ECM connector.
(3) Check for continuity between the wire harness side connectors.

Standard (Check for open):

Symbols (Terminal No.)	Specified condition
EFI fuse (2) – BATT (E9–3)	Continuity

Standard (Check for short):

Symbols (Terminal No.)	Specified condition
EFI fuse (2) or BATT (E9–3) – Body ground	No continuity

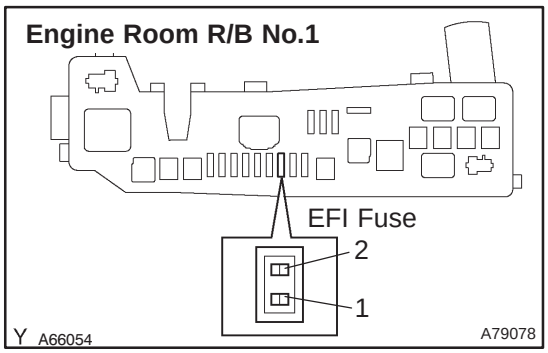

(b) Check the harness and connector between the EFI fuse and battery.
(1) Remove the EFI fuse from the engine room R/B.
(2) Disconnect the battery positive terminal.
(3) Check for continuity between the wire harness side connectors.

Standard (Check for open):

Symbols (Terminal No.)	Specified condition
Battery positive terminal – EFI fuse (1)	Continuity

Standard (Check for short):

Symbols (Terminal No.)	Specified condition
Battery positive terminal or EFI fuse (1) – Body ground	No continuity

NG → **REPAIR OR REPLACE HARNESS OR CONNECTOR**

OK

CHECK AND REPLACE ENGINE ROOM RELAY BLOCK

FUEL PUMP CONTROL CIRCUIT

CIRCUIT DESCRIPTION

In the diagram below, when the engine is cranked, current flows from terminal ST2 of the ignition switch to the starter relay coil and also current flows to terminal STA of the ECM (STA signal).
When the STA signal and NE signal are input to the ECM, Tr is turned ON, current flows to the coil of the E.F.I. circuit opening relay, the relay switches on, power is supplied to the fuel pump and the fuel pump operates.
While the NE signal is generated (engine running), the ECM keeps Tr ON (circuit opening relay ON) and the fuel pump also keeps operating.

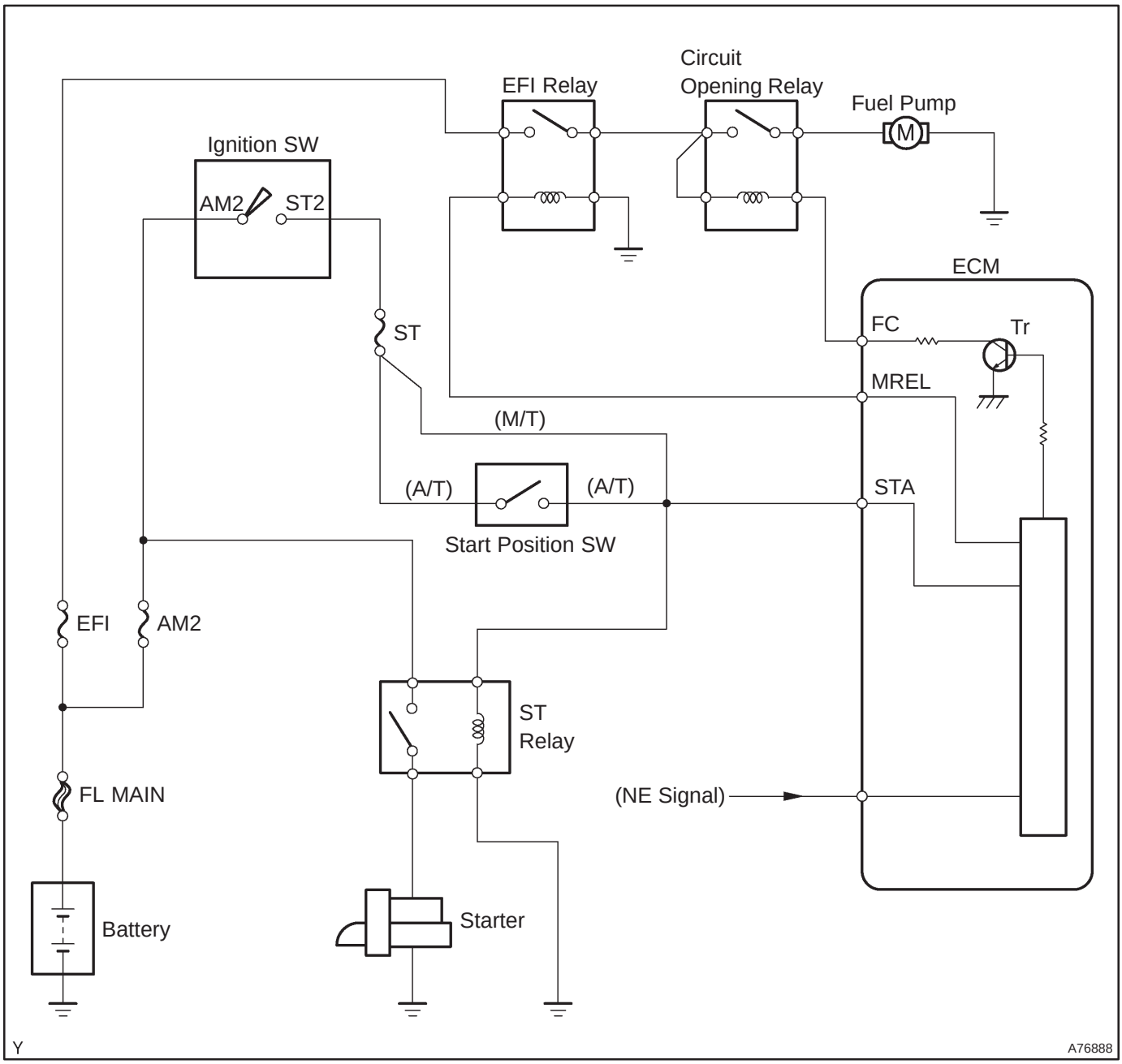

WIRING DIAGRAM

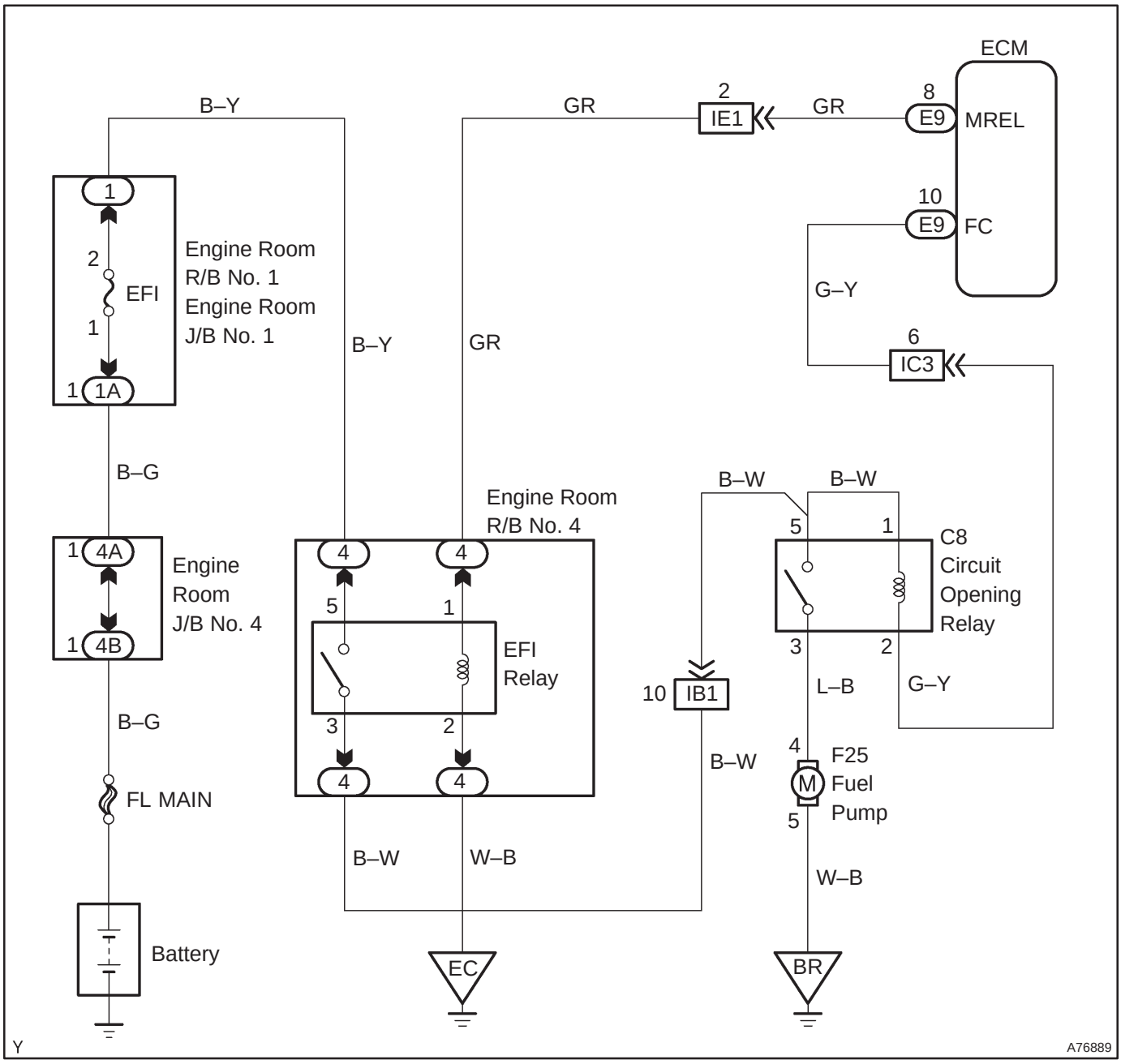

INSPECTION PROCEDURE

When using hand–held tester:

1	PERFORM ACTIVE TEST BY HAND–HELD TESTER(OPERATION OF CIRCUIT OPENING RELAY)

(a) Turn the ignition switch ON.
(b) Select the item ”DIAGNOSIS / OBD/MOBD / ACTIVE TEST / FUEL PUMP / SPD”.
(c) Perform the active test with the engine stopped.
Result: The circuit opening relay operates.

OK → **PROCEED TO NEXT CIRCUIT INSPECTION SHOWN ON PROBLEM SYMPTOMS TABLE**

NG

2	CHECK ECM POWER SOURCE CIRCUIT (See page 05–257)

NG → **REPAIR OR REPLACE POWER SOURCE CIRCUIT**

OK

3	INSPECT CIRCUIT OPENING RELAY

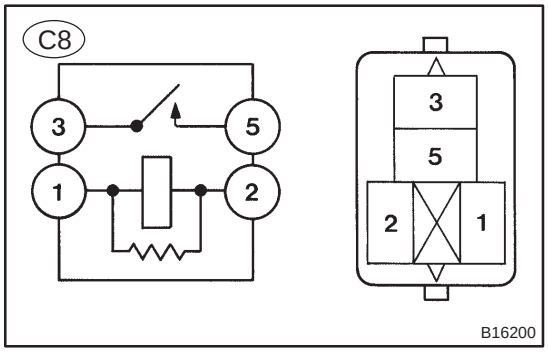

(a) Remove the circuit opening relay.
(b) Inspect the circuit opening relay.
Standard:

Terminal No.	Specified condition
1 – 2	Continuity
3 – 5	No Continuity
	Continuity (Apply battery voltage Terminals 1 and 2)

NG → **REPLACE CIRCUIT OPENING RELAY**

OK

4	INSPECT ECM(CHECK VOLTAGE)

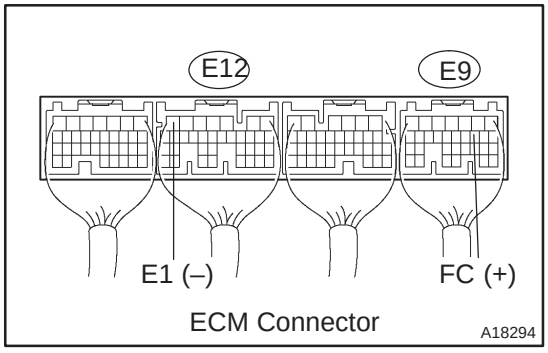

(a) Turn the ignition switch ON.
(b) Measure the voltage between the terminals of the E9 and E12 ECM connector.
Standard:

Symbols (Terminal No.)	Specified condition
FC (E9–10) – E1 (E12–7)	8 to 14 V

OK → **Go to step 6**

NG

5	CHECK HARNESS AND CONNECTOR(EFI RELAY – CIRCUIT OPENING RELAY, CIRCUIT OPENING RELAY – ECM)

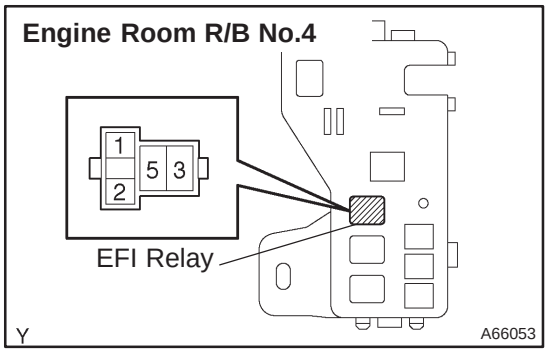

(a) Remove the EFI relay from the engine room R/B No.4.
(b) Remove the circuit opening relay.
(c) Disconnect the E9 ECM connector.
(d) Check for continuity between the wire harness side connectors.

Standard (Check for open):

Symbols (Terminal No.)	Specified condition
EFI relay (3) – Circuit opening relay (C8–1)	Continuity
Circuit opening relay (C8–2) – FC (E9–10)	
EFI relay (1) – MREL (E9–8)	

Standard (Check for short):

Symbols (Terminal No.)	Specified condition
EFI relay (3) or Circuit opening relay (C8–1) – Body ground	No continuity
Circuit opening relay (C8–2) or FC (E9–10) – Body ground	
EFI relay (1) or MREL (E9–8) – Body ground	

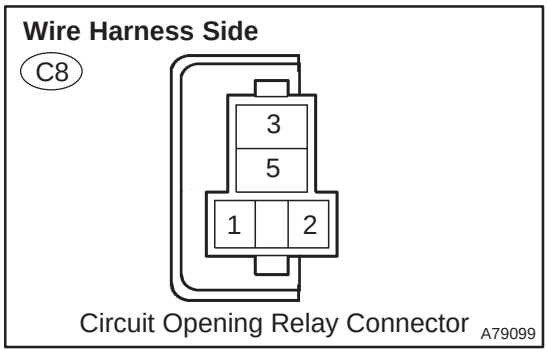

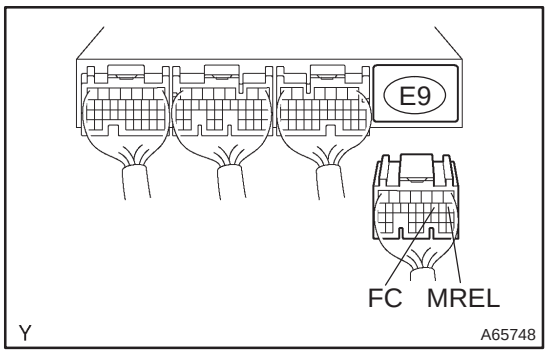

NG → **REPAIR OR REPLACE HARNESS OR CONNECTOR**

OK

CHECK AND REPLACE ECM (See page 01–32)

6	INSPECT FUEL PUMP ASSY (See page 11–22)

NG → **REPAIR OR REPLACE FUEL PUMP ASSY**

OK

7	CHECK HARNESS AND CONNECTOR(CIRCUIT OPENING RELAY – FUEL PUMP, FUEL PUMP – BODY GROUND)

Wire Harness Side

C8

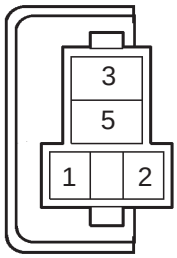

Circuit Opening Relay Connector

A79099

(a) Remove the circuit opening relay.
(b) Disconnect the fuel pump connector.
(c) Check for continuity between the wire harness side connectors.

Standard (Check for open):

Symbols (Terminal No.)	Specified condition
Circuit opening relay (C8–3) – Fuel pump (F25–4)	Continuity
Fuel pump (F25–5) – Body ground	

Standard (Check for short):

Symbols (Terminal No.)	Specified condition
Circuit opening relay (C8–3) or Fuel pump (F25–4) – Body ground	No continuity

Wire Harness Side

F25



Fuel Pump Connector

A66276

NG → **REPAIR OR REPLACE HARNESS OR CONNECTOR**

OK

CHECK AND REPLACE ECM (See page 01–32)

When not using hand–held tester:

1	CHECK OPERATION OF FUEL PUMP (See page 11–19)

OK → **PROCEED TO NEXT CIRCUIT INSPECTION SHOWN ON PROBLEM SYMPTOMS TABLE**

NG

2	CHECK ECM POWER SOURCE CIRCUIT (See page 05–257)

NG → **CHECK FOR ECM POWER SOURCE CIRCUIT**

OK

3 INSPECT CIRCUIT OPENING RELAY

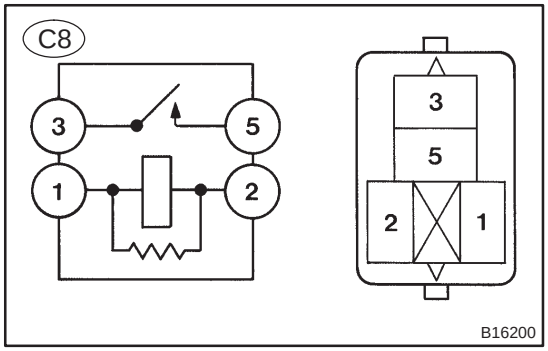

(a) Remove the circuit opening relay.
(b) Inspect the circuit opening relay.

Standard:

Terminal No.	Specified condition
1 – 2	Continuity
3 – 5	No Continuity
	Continuity (Apply battery voltage Terminals 1 and 2)

NG → **REPLACE CIRCUIT OPENING RELAY**

OK

4 INSPECT ECM(CHECK VOLTAGE)

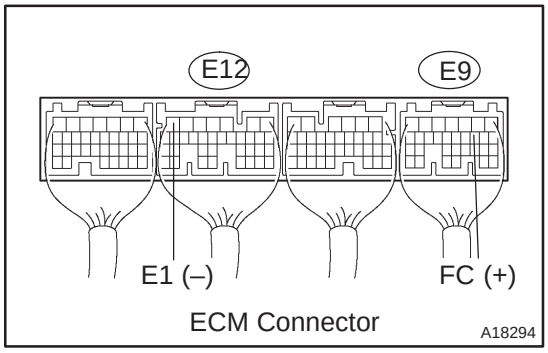

(a) Turn the ignition switch ON.
(b) Measure the voltage between the terminals of the E9 and E12 ECM connector.

Standard:

Symbols (Terminal No.)	Specified condition
FC (E9–10) – E1 (E12–7)	8 to 14 V

OK → **Go to step 6**

NG

5	CHECK HARNESS AND CONNECTOR(EFI RELAY – CIRCUIT OPENING RELAY, CIRCUIT OPENING RELAY – ECM)

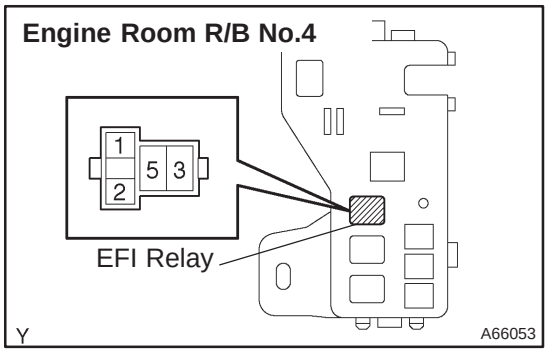

(a) Remove the EFI relay from the engine room R/B No.4.
(b) Remove the circuit opening relay.
(c) Disconnect the E9 ECM connector.
(d) Check for continuity between the wire harness side connectors.

Standard (Check for open):

Symbols (Terminal No.)	Specified condition
EFI relay (3) – Circuit opening relay (C8–1)	Continuity
Circuit opening relay (C8–2) – FC (E9–10)	
EFI relay (1) – MREL (E9–8)	

Standard (Check for short):

Symbols (Terminal No.)	Specified condition
EFI relay (3) or Circuit opening relay (C8–1) – Body ground	No continuity
Circuit opening relay (C8–2) or FC (E9–10) – Body ground	
EFI relay (1) or MREL (E9–8) – Body ground	

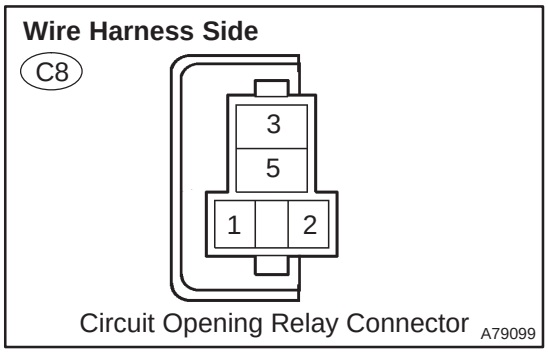

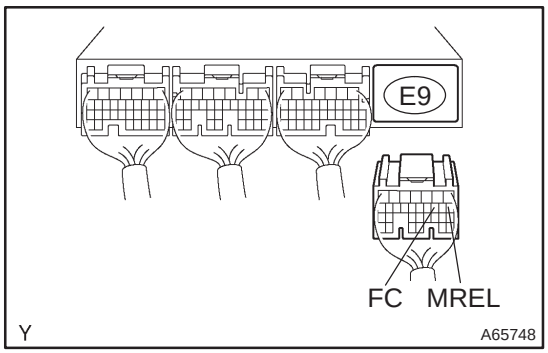

NG → **REPAIR OR REPLACE HARNESS OR CONNECTOR**

OK

CHECK AND REPLACE ECM (See page 01–32)

6	INSPECT FUEL PUMP ASSY (See page 11–22)

NG → **REPAIR OR REPLACE FUEL PUMP ASSY**

OK

7	CHECK HARNESS AND CONNECTOR(CIRCUIT OPENING RELAY – FUEL PUMP, FUEL PUMP – BODY GROUND)

Wire Harness Side

C8

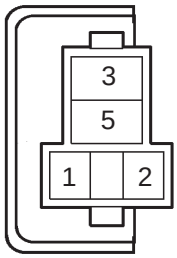

Circuit Opening Relay Connector

A79099

(a) Remove the circuit opening relay.
(b) Disconnect the fuel pump connector.
(c) Check for continuity between the wire harness side connectors.

Standard (Check for open):

Symbols (Terminal No.)	Specified condition
Circuit opening relay (C8–3) – Fuel pump (F25–4)	Continuity
Fuel pump (F25–5) – Body ground	

Standard (Check for short):

Symbols (Terminal No.)	Specified condition
Circuit opening relay (C8–3) or Fuel pump (F25–4) – Body ground	No continuity

Wire Harness Side

F25



Fuel Pump Connector

A66276

NG → **REPAIR OR REPLACE HARNESS OR CONNECTOR**

OK →

CHECK AND REPLACE ECM (See page 01–32)

FUEL INJECTOR CIRCUIT

CIRCUIT DESCRIPTION

The fuel injectors are located on the intake manifold.
They inject fuel into the cylinders based on the signals from the ECM.
Reference: Inspection using oscilloscope
With the engine idling, check the waveform between terminals #1 to #4 and E01 of the ECM connectors.
HINT:

The correct waveform is as shown in the diagram below.

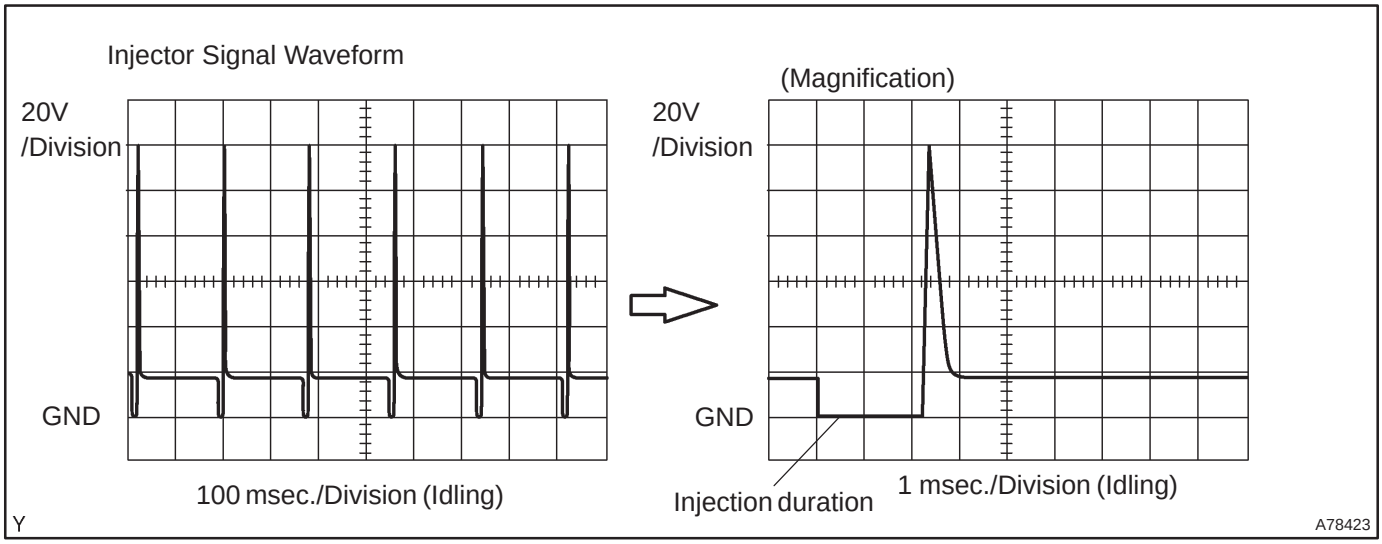

WIRING DIAGRAM

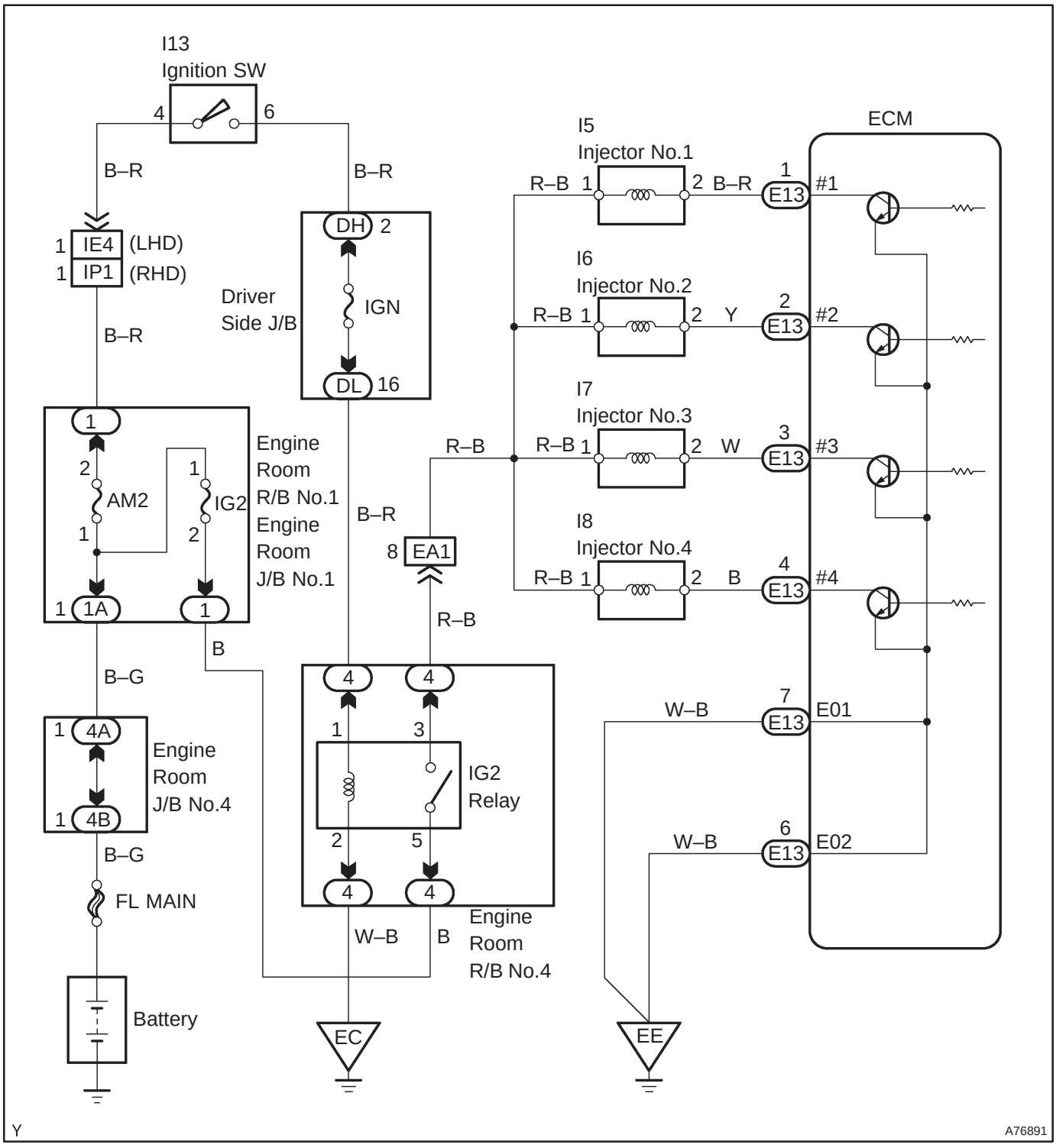

INSPECTION PROCEDURE

1 INSPECT ECM(#1, #2, #3 OR #4 VOLTAGE)

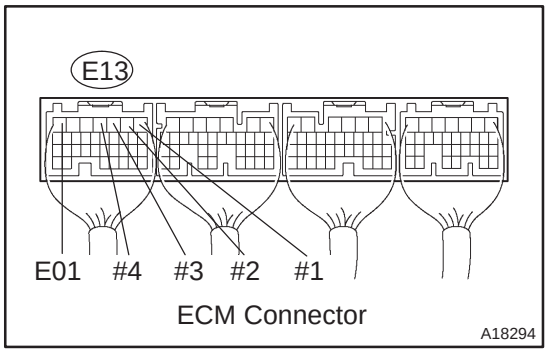

(a) Turn the ignition switch ON.
(b) Measure the voltage between the terminals of the E13 ECM connector.
Standard:

Symbols (Terminal No.)	Specified condition
#1 (E13–1) – E01 (E13–7)	9 to 14 V
#2 (E13–2) – E01 (E13–7)	
#3 (E13–3) – E01 (E13–7)	
#4 (E13–4) – E01 (E13–7)	

OK → **Go to step 7**

NG

2 INSPECT FUEL INJECTOR ASSY(CHECK RESISTANCE) (See page 11–22)

NG → **REPLACE FUEL INJECTOR ASSY**

OK

3 INSPECT IG2 RELAY

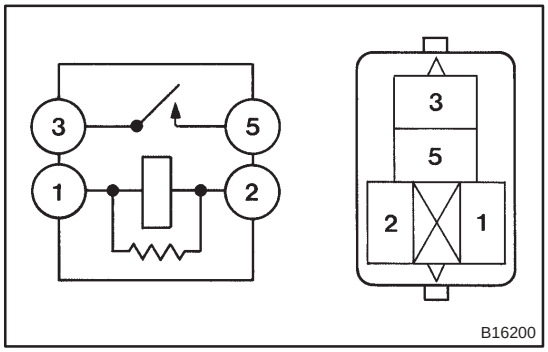

(a) Remove the IG2 relay from the engine room R/B No.4.
(b) Inspect the IG2 relay.
Standard:

Terminal No.	Specified condition
1 – 2	Continuity
3 – 5	No Continuity
	Continuity (Apply battery voltage Terminals 1 and 2)

NG → **REPLACE IG2 RELAY**

OK

4 CHECK FUSE(IGN FUSE)

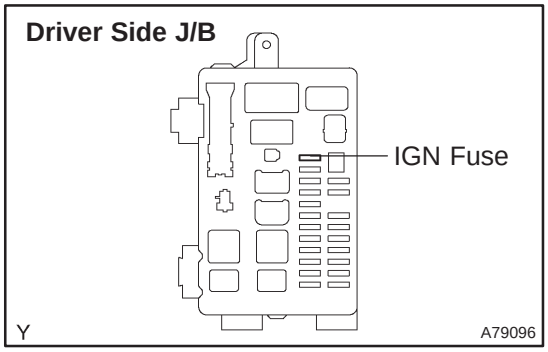

(a) Remove the IGN fuse from the driver side J/B.
(b) Check for continuity in the IGN fuse.
Standard: Continuity

NG → **CHECK FOR SHORT IN ALL HARNESS AND COMPONENTS CONNECTED FUSE**

OK

5	CHECK HARNESS AND CONNECTOR OF MISFIRING CYLINDER(INJECTOR – ECM, INJECTOR – IG2 RELAY)

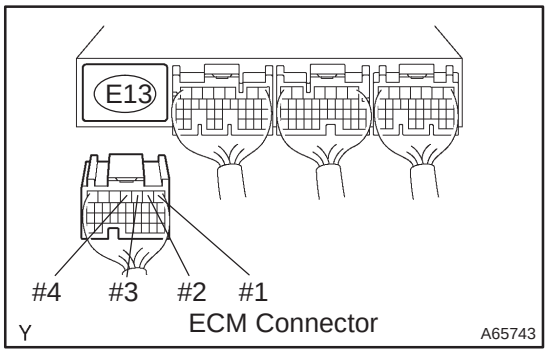

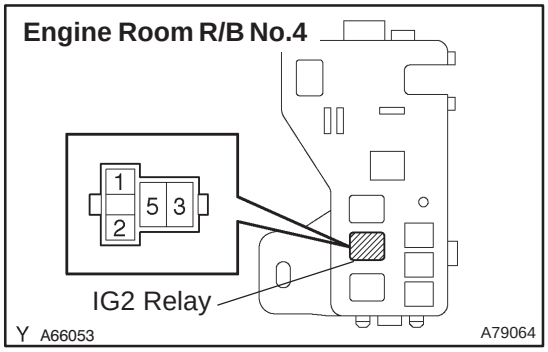

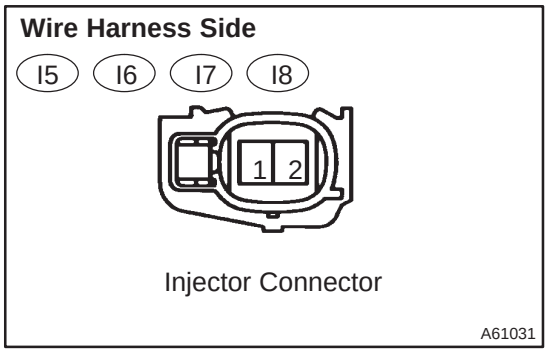

(a) Check the harness and connector between the injector connector and ECM connector.
(1) Disconnect the I5, I6, I7 or I8 injector connector.
(2) Disconnect the E13 ECM connector.
(3) Check for continuity between the wire harness side connectors.

Standard (Check for open):

Symbols (Terminal No.)	Specified condition
Injector (I5–1) – #1 (E13–1)	Continuity
Injector (I6–1) – #2 (E13–2)	
Injector (I7–1) – #3 (E13–3)	
Injector (I8–1) – #4 (E13–4)	

Standard (Check for short):

Symbols (Terminal No.)	Specified condition
Injector (I5–1) or #1 (E13–1) – Body ground	No continuity
Injector (I6–1) or #2 (E13–2) – Body ground	
Injector (I7–1) or #3 (E13–3) – Body ground	
Injector (I8–1) or #4 (E13–4) – Body ground	

(b) Check the harness and connector between the injector connector and ignition switch connector.
(1) Disconnect the I5, I6, I7 or I8 injector connector.
(2) Remove theIG2 relay from the engine room R/B No.4.
(3) Check for continuity between the wire harness side connectors.

Standard (Check for open):

Symbols (Terminal No.)	Specified condition
Injector (I5–2) – IG2 Relay (3)	Continuity
Injector (I6–2) – IG2 Relay (3)	
Injector (I7–2) – IG2 Relay (3)	
Injector (I8–2) – IG2 Relay (3)	

Standard (Check for short):

Symbols (Terminal No.)	Specified condition
Injector (I5–2) or IG2 Relay (3) – Body ground	No continuity
Injector (I6–2) or IG2 Relay (3) – Body ground	
Injector (I7–2) or IG2 Relay (3) – Body ground	
Injector (I8–2) or IG2 Relay (3) – Body ground	

NG → **REPAIR OR REPLACE HARNESS OR CONNECTOR**

OK

6 CHECK HARNESS AND CONNECTOR(IGNITION SWITCH – IG2 RELAY)

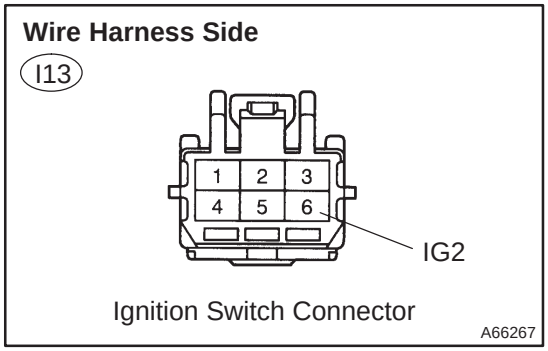

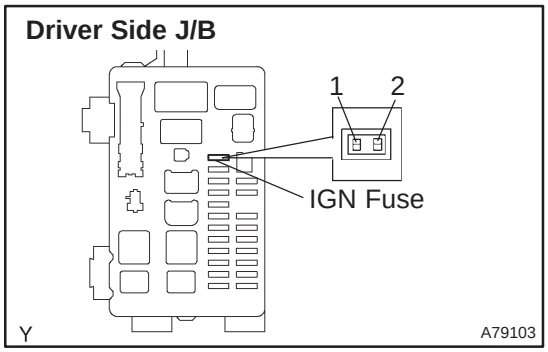

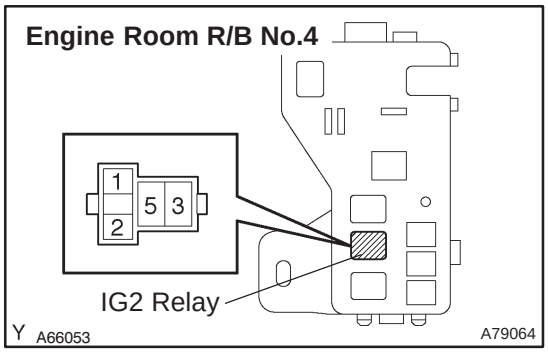

(a) Disconnect the battery negative (–) terminal.
(b) Disconnect the ignition switch connector.
(c) Remove the IGN fuse from the driver side J/B.
(d) Remove the IG2 relay from the engine room R/B No.4.
(e) Check for continuity between the wire harness side connectors.

Standard (Check for open):

Symbols (Terminal No.)	Specified condition
IG2 (I13–6) – IGN fuse (1)	Continuity
IGN fuse (2) – IG2 relay (1)	

Standard (Check for short):

Symbols (Terminal No.)	Specified condition
IG2 (I13–6) or IGN fuse (1) – Body ground	No continuity
IGN fuse (2) or IG2 relay (1) – Body ground	

NG → **REPAIR OR REPLACE HARNESS OR CONNECTOR**

OK

CHECK FOR ECM POWER SOURCE CIRCUIT

7	INSPECT ECM

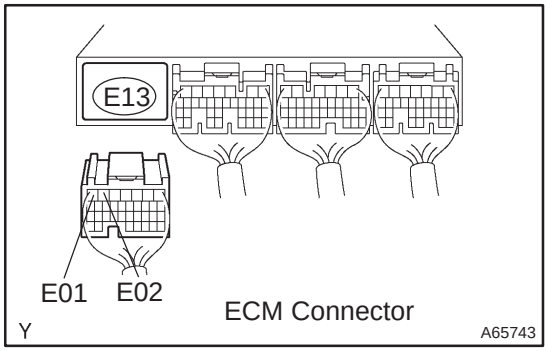

(a) Disconnect the ECM E13 connector.
(b) Check for continuity between the ECM connector and body ground.

Standard (Check for open):

Symbols (Terminal No.)	Specified condition
E01 (E13–7) – Body ground	Continuity
E02 (E13–6) – Body ground	

NG → **REPAIR OR REPLACE HARNESS OR CONNECTOR**

OK

8	INSPECT FUEL INJECTOR ASSY(CHECK INJECTOR VOLUME) (See page 11–22)

NG → **REPLACE FUEL INJECTOR ASSY**

OK

PROCEED TO NEXT CIRCUIT INSPECTION SHOWN ON PROBLEM SYMPTOMS TABLE (See page 05–168)

STARTER SIGNAL CIRCUIT

CIRCUIT DESCRIPTION

When the engine is cranked, the intake air flow becomes slow, so fuel vaporization is poor. A rich mixture is therefore necessary in order to achieve good startability. While the engine is being cranked, the battery voltage is applied to terminal STA of the ECM. The starter signal is mainly used to increase the fuel injection volume for the starting injection control and after–start injection control.

WIRING DIAGRAM

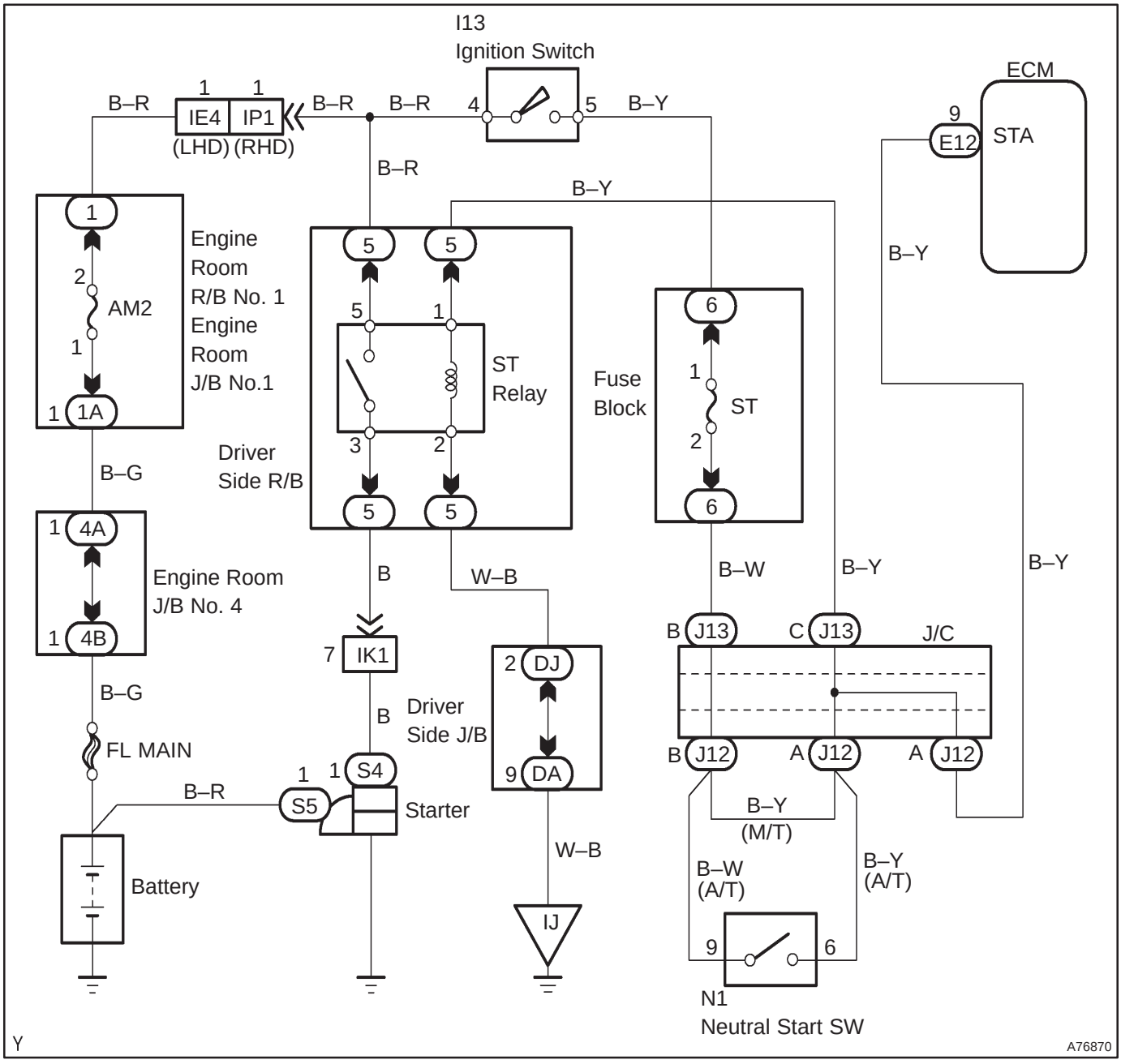

INSPECTION PROCEDURE

HINT:

This chart is on the premise that the engine is cranked normally. If the engine is not cranked, proceed to the problem symptoms table on page 05–168.

When using hand–held tester:

1	READ VALUE OF HAND–HELD TESTER(STA SIGNAL)

(a) Connect the hand–held tester to the DLC3.
(b) Turn the ignition switch ON and push the hand–held tester main switch ON.
(c) Select the item ”DIAGNOSIS / OBD/MOBD / DATA LIST / ALL / STARTER SIG” and read its value displayed on the hand–held tester.

Result:

Ignition Switch Position	ON	START
STA Signal	OFF	ON

OK → **PROCEED TO NEXT CIRCUIT INSPECTION SHOWN ON PROBLEM SYMPTOMS TABLE (See page 05–149)**

NG

2	CHECK HARNESS AND CONNECTOR

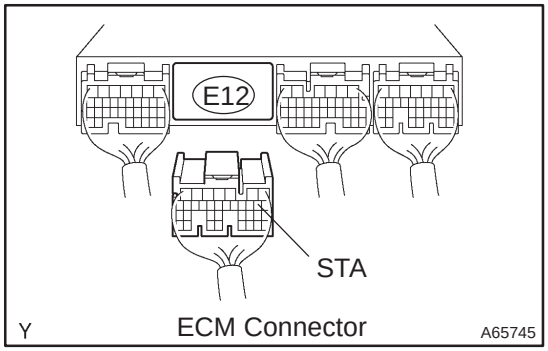

(a) Disconnect the E12 ECM connector.
(b) Remove the starter relay from the driver side R/B.
(c) Check for continuity between the wire harness side connectors.

Standard (Check for open):

Symbols (Terminal No.)	Specified condition
Starter relay (1) – STA (E12–9)	Continuity

Standard (Check for short):

Symbols (Terminal No.)	Specified condition
Starter relay (1) or STA (12–9) – Body ground	No continuity

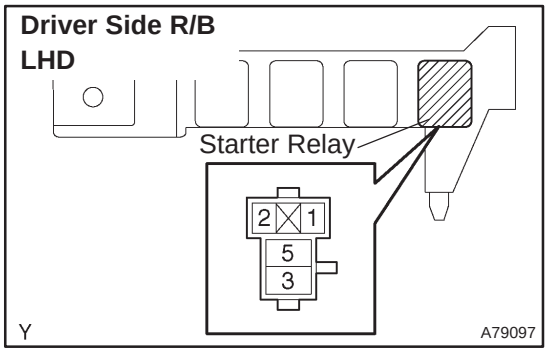

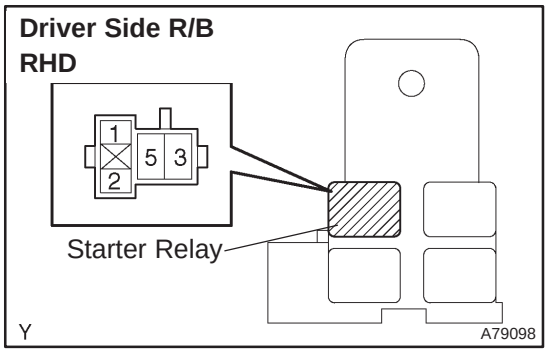

NG → **REPAIR OR REPLACE HARNESS OR CONNECTOR**

OK →

CHECK AND REPLACE ECM (See page 01–32)

When not using hand–held tester:

1	INSPECT ECM(STA VOLTAGE)

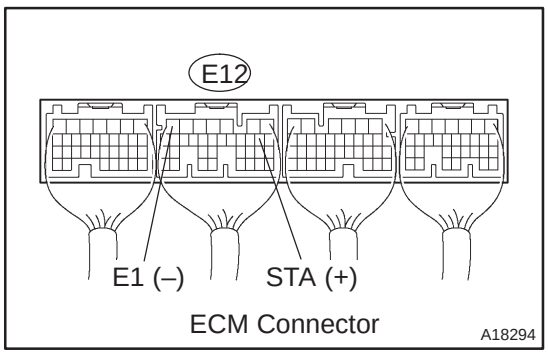

(a) Turn the ignition switch ON.
(b) Measure the voltage between the terminals of the E12 ECM connector.

Standard:

Symbols (Terminal No.)	Specified condition
STA (E12–9) – E1 (E12–7)	0 V

(c) Measure the voltage between the terminals of the E12 ECM connector when the engine is cranked.

Standard:

Symbols (Terminal No.)	Specified condition
STA (E12–9) – E1 (E12–7)	6 V or more

OK → **PROCEED TO NEXT CIRCUIT INSPECTION SHOWN ON PROBLEM SYMPTOMS TABLE (See page 05–149)**

NG

2 CHECK HARNESS AND CONNECTOR

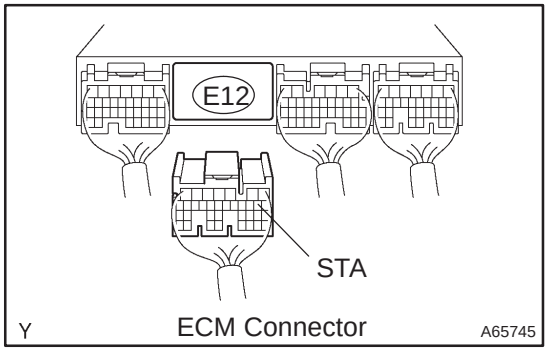

(a) Disconnect the E12 ECM connector.
(b) Remove the starter relay from the driver side R/B.
(c) Check for continuity between the wire harness side connectors.

Standard (Check for open):

Symbols (Terminal No.)	Specified condition
Starter relay (1) – STA (E12–9)	Continuity

Standard (Check for short):

Symbols (Terminal No.)	Specified condition
Starter relay (1) or STA (12–9) – Body ground	No continuity

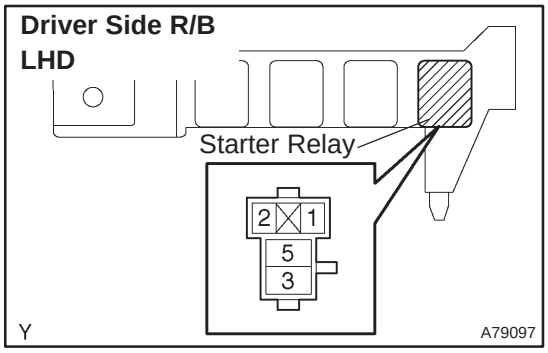

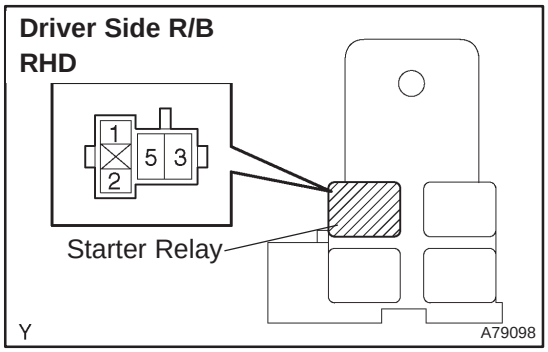

NG → **REPAIR OR REPLACE HARNESS OR CONNECTOR**

OK

CHECK AND REPLACE ECM (See page 01–32)

CHECK ENGINE WARNING LIGHT CIRCUIT

CIRCUIT DESCRIPTION

If the ECM detects a trouble, the CHK ENG is illuminated. At this time, the ECM records a DTC in the memory.

WIRING DIAGRAM

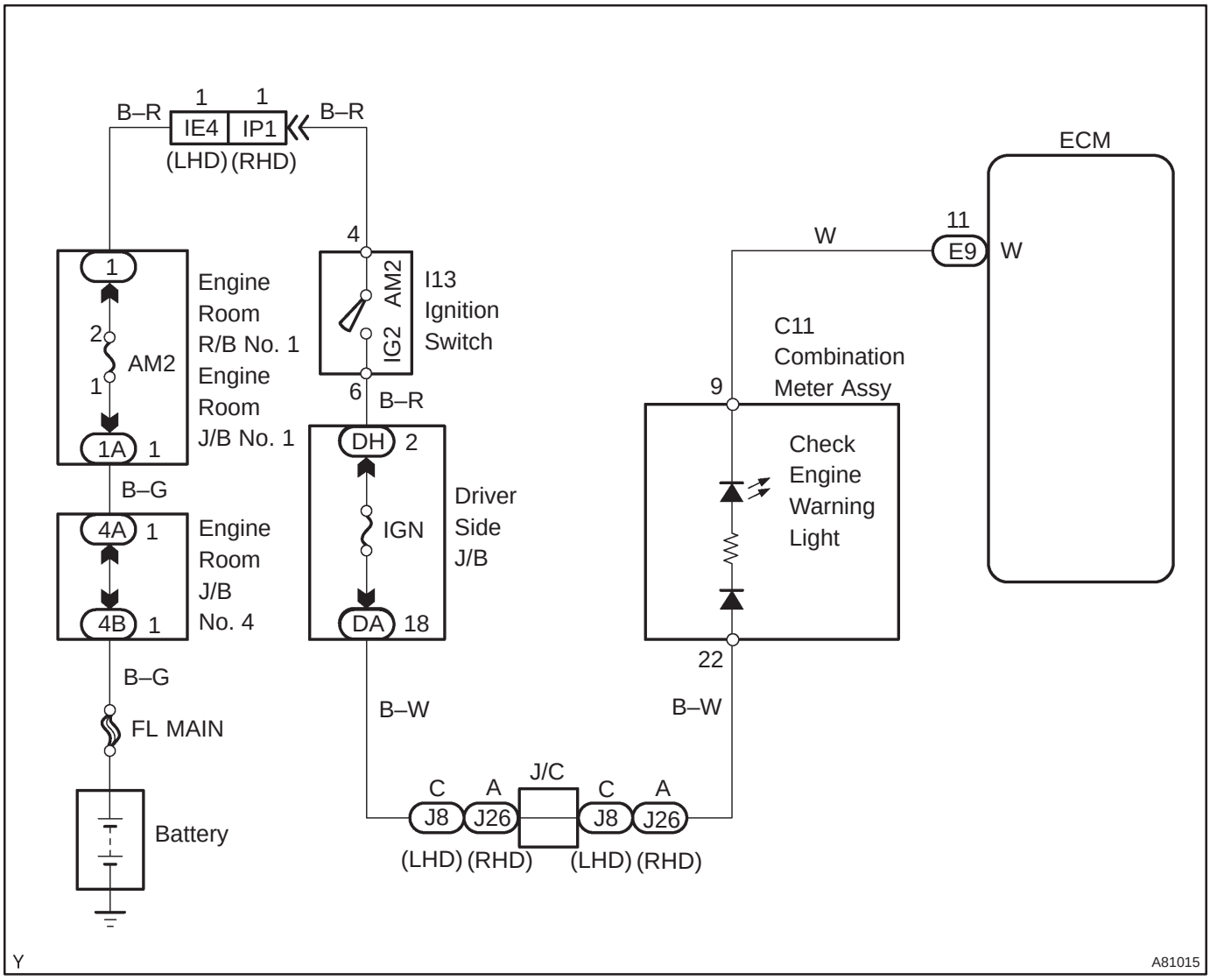

INSPECTION PROCEDURE

HINT:

Troubleshoot each trouble symptom in accordance with the chart below .

CHK ENG remains on	Start inspection from step 1
CHK ENG is not illuminate	Start inspection from step 3

1	CLEAR DTC

(a) Connect the hand–held tester to the DLC 3.
(b) Turn the ignition switch ON and push the hand–held tester main switch ON.
(c) Read the DTC (See page 05–149).
(d) Clear the DTC (See page 05–149).
(e) Check that the CHK ENG is OFF.
Standard: CHK ENG is OFF

OK → **REPAIR CIRCUIT INDICATED BY OUTPUT CODE (See page 05–161)**

NG

2	CHECK HARNESS AND CONNECTOR(CHECK FOR SHORT IN WIRE HARNESS)

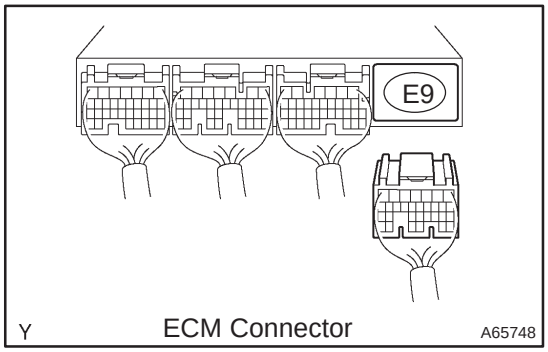

(a) Disconnect the E9 ECM connector.
(b) Turn the ignition switch ON.
(c) Check that the CHK ENG is OFF.
Standard: CHK ENG is OFF

OK → **CHECK AND REPLACE ECM (See page 01–32)**

NG

CHECK AND REPAIR HARNESS AND CONNECTOR

3	CHECK CHK ENG CONDITION

(a) Check that the CHK ENG is illuminated when turning the ignition switch ON.
Standard: CHK ENG is illuminated

OK → **CHECK AND REPAIR HARNESS AND CONNECTOR**

NG

4	INSPECT COMBINATION METER ASSY(CHK ENG CIRCUIT)

(a) See the combination meter troubleshooting on page 05–1509.

NG → **REPAIR OR REPLACE BULB OR COMBINATION METER ASSEMBLYSYSTEM OK**

OK

CHECK AND REPAIR HARNESS AND CONNECTOR

TC TERMINAL CIRCUIT

CIRCUIT DESCRIPTION

Terminals TC and CG are located in the DLC3. When connecting these terminals, DTCs in normal mode or check mode can be read through the CHK ENG flashing in the combination meter.

WIRING DIAGRAM

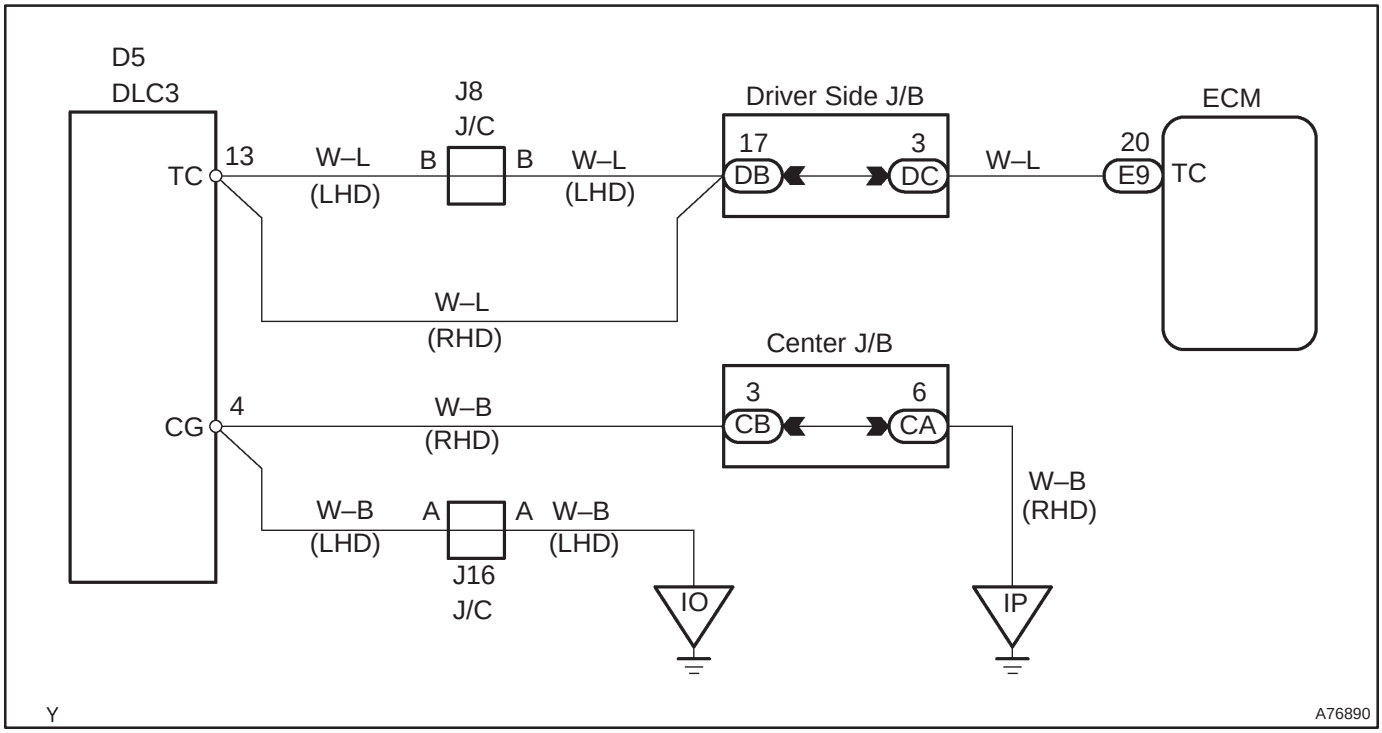

INSPECTION PROCEDURE

HINT:

- Even though terminal TC is not connected to terminal CG, the CHK ENG blinks.
- For the above phenomenon, an open or short in the wire harness, or malfunction inside the ECM is the likely cause.

1	CHECK DLC3(TC VOLTAGE)

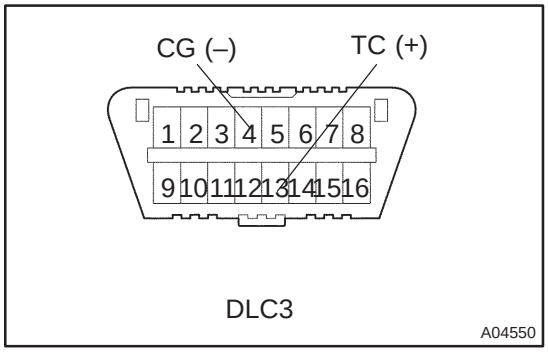

(a) Turn the ignition switch ON.

(b) Measure the voltage between the terminals of the DLC3.

Standard:

Symbols (Terminal No.)	Specified condition
TC (13) – CG (4)	9 to 14 V

OK → **Go to step 3**

NG

2 CHECK HARNESS AND CONNECTOR(DLC3 – ECM)

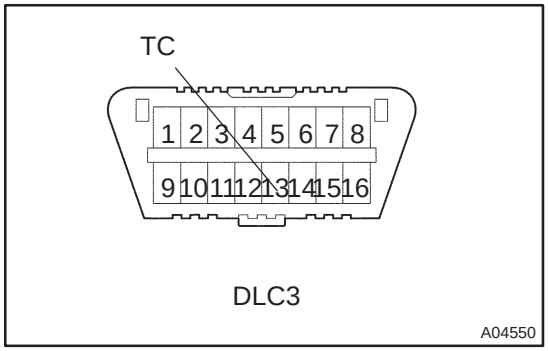

(a) Disconnect the E9 ECM connector.
(b) Check for continuity between the wire harness side connectors.

Standard (Check for open):

Symbols (Terminal No.)	Specified condition
TC (13) – TC (E9–20)	Continuity

Standard (Check for short):

Symbols (Terminal No.)	Specified condition
TC (13) or TC (E9–20) – Body ground	No continuity

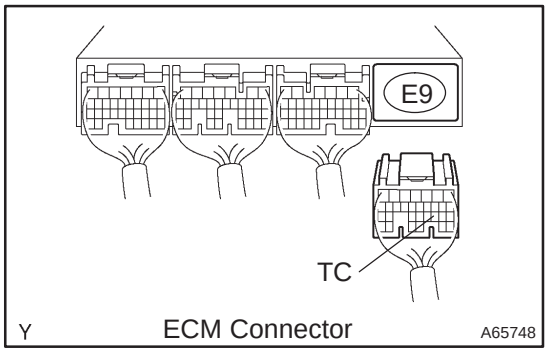

NG → **REPAIR OR REPLACE HARNESS OR CONNECTOR**

OK

CHECK AND REPAIR HARNESS AND CONNECTOR

3 CHECK CHK ENG CONDITION

SST 09843–18040

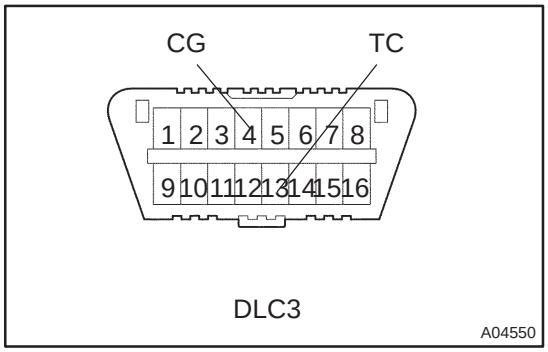

(a) Turn the ignition switch ON.
(b) Connect between terminals TC and CG of the DLC3 connector.
(c) Check that the CHK ENG blinks.

Standard: CHK ENG blinks

NG → **CHECK AND REPLACE ECM (See page 01–32)**

OK

NO PROBLEM

VARIABLE RESISTOR CIRCUIT

CIRCUIT DESCRIPTION

The variable resister has been adopted to leaded–type vehicle only.
This resistor is used change the air–fuel ratio of the air–fuel mixture.
The idle mixture is adjusted using this resistor.
Turning the idle mixture adjusting screw clockwise moves the contacts inside the resistor, raising the terminal VAF voltage. Conversely, turning the screw counterclockwise lowers the terminal VAF voltage.
When the terminal VAF voltage rises, the ECM increases the injection volume slightly, marking the air–fuel mixture a little richer.

WIRING DIAGRAM

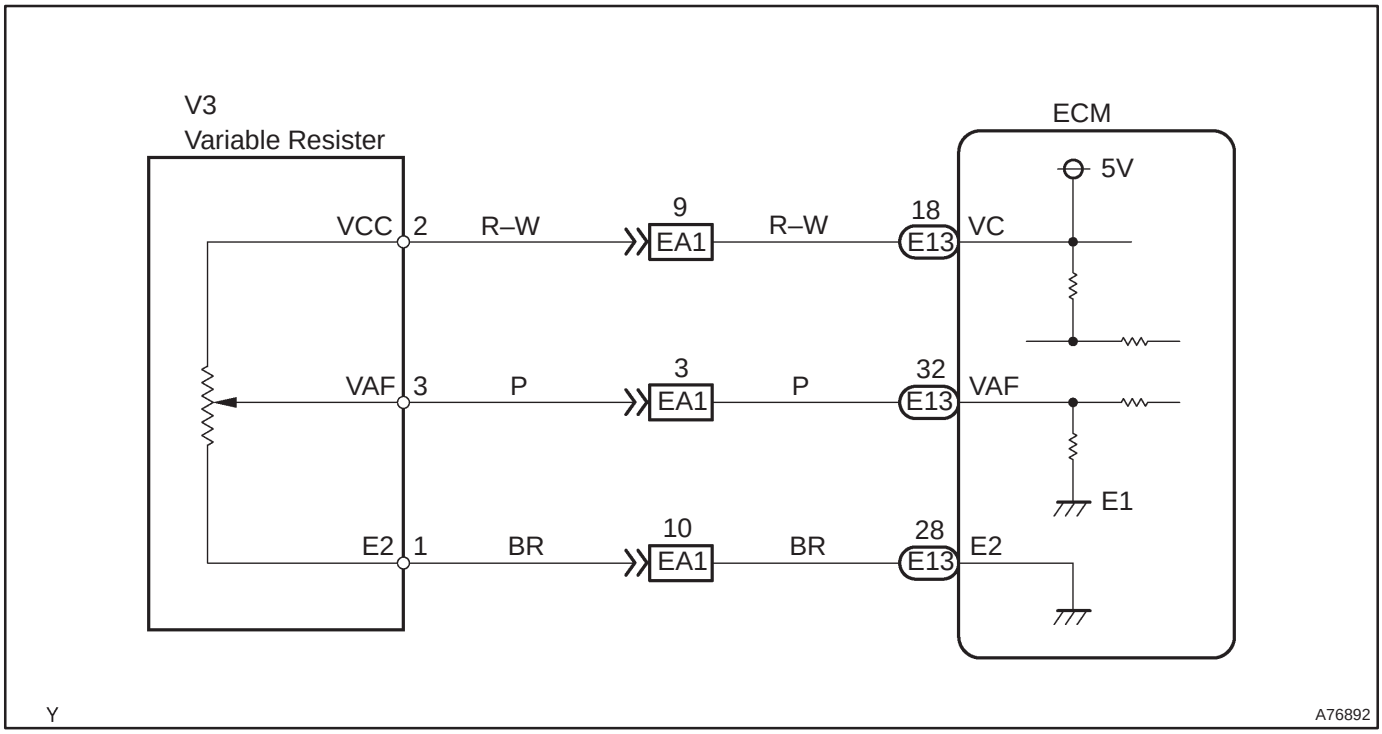

INSPECTION PROCEDURE

NOTICE:

Always use a CO meter when adjusting the idle mixture. If a CO meter is not available, DO NOT ATTEMPT TO ADJUST IDLE MIXTURE.

1	CHECK CO/HC (See page 14–101)

OK → CHECK FOR PROBLEM SYMPTOMS TABLE (See page 05–168)

NG

2	ADJUST CO CONCENTRATION

SST 09243–00020

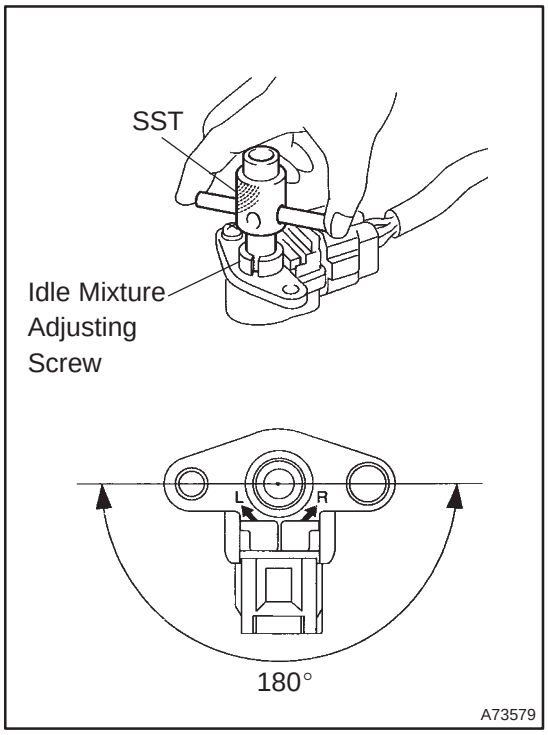

(a) Same condition as step 1 this chart.

(b) Using SST, adjusting the idle mixture by turning the idle mixture adjusting screw in the variable resistor.

Result:

Result	Proceed
Connection: 1.5 ± 0.5 %	B
Change in CO connection	C
No change in CO connection	A

HINT:

- Always check idle speed after turning the idle mixture adjusting screw. If it is incorrect, readjust idle speed.
- Adjustable range of the idle mixture adjust to turn this screw is 180 degrees. Do not turn this screw more than it.

B → ADJUSTMENT COMPLETE

C → CHECK CO/HC (See page 14–101)

A

3 INSPECT VARIABLE RESISTOR

SST 09243–00020

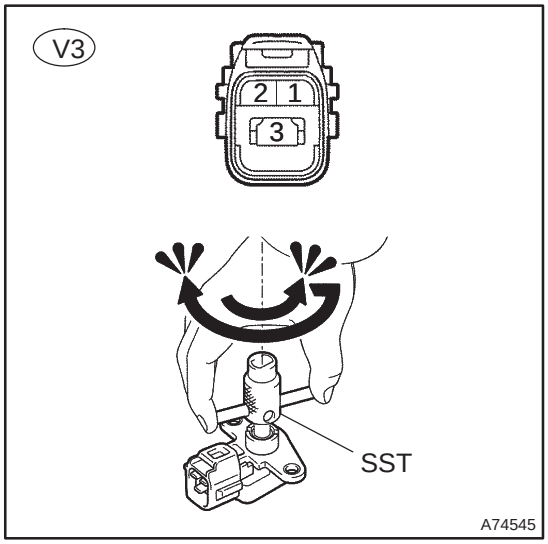

(a) Measure the resistance between the terminals.
Resistance:

Symbols (Terminal No.)	Specified condition
1 – 2	3.5 – 6.5 Ω

(b) Measure the resistance between terminals 2 and 3 when turning the idle mixture adjusting screw fully clockwise and counterclockwise using SST
Resistance:

Symbols (Terminal No.)	Specified condition
2 – 3	Change from about 5 kΩ to 0 kΩ accordingly

NG → **REPLACE VARIABLE RESISTOR**

OK

4 CHECK ECM

SST 09243–00020

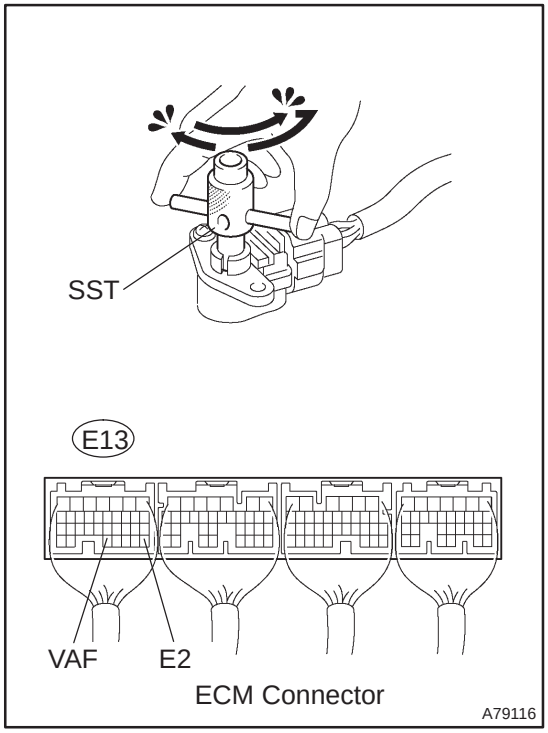

(a) Turn the ignition switch ON.
(b) Measure the voltage between the terminals of the E13 ECM connector while slowly turning the idle mixture adjusting screw first fully counterclockwise and then fully clockwise, using SST.
Voltage:

Symbols (Terminal No.)	Specified condition
VAF (E13–32) – E2 (E13–28)	Voltage changes smoothly from 0 V to about 5 V, i.e. does not suddenly jump up to 5 V down to 0 V

OK → **CHECK AND REPLACE ECM** **(See page 01–32)**

NG

5 CHECK HARNESS AND CONNECTOR(ECM – VARIABLE RESISTOR)

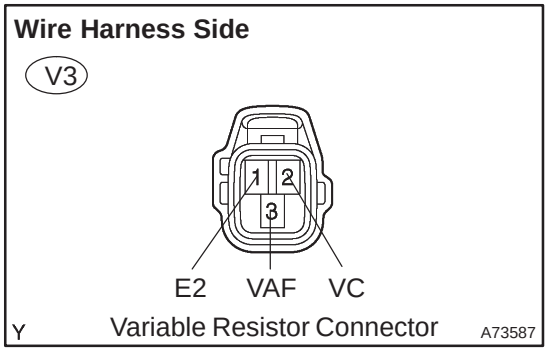

(a) Disconnect the V3 variable resistor connector.
(b) Disconnect the E13 ECM connector.
(c) Check for continuity between the wire harness side connectors.

Standard (Check for open):

Symbols (Terminal No.)	Specified condition
VC (V3–2) – VC (E13–18)	Continuity
VAF (V3–3) – VAF (E13–32)	
E2 (V3–1) – E2 (E13–28)	

Standard (Check for short):

Symbols (Terminal No.)	Specified condition
VC (V3–2) or VC (E13–18) – Body ground	No continuity
VAF (V3–3) or VAF (E13–32) – Body ground	

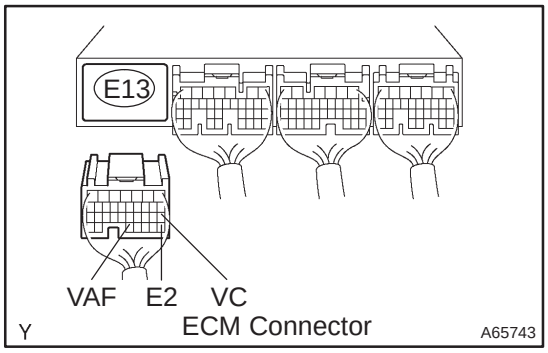

OK

NG → **REPAIR OR REPLACE HARNESS OR CONNECTOR**

CHECK AND REPLACE ECM (See page 01–32)

SFI SYSTEM (1AZ–FSE)

05CDS–01

HOW TO PROCEED WITH TROUBLESHOOTING

1	VEHICLE BROUGHT TO WORKSHOP

2	CUSTOMER PROBLEM ANALYSIS (See page 05–293)

3	CONNECT THE HAND–HELD TESTER TO DLC3

HINT:
If the display indicates a communication fault in the tool, inspect the DLC3.

4	CHECK DTC AND FREEZE FRAME DATA (See page 05–294)

HINT:
Record or print DTC and freeze frame data, if needed.

5	CLEAR DTC AND FREEZE FRAME DATA (See page 05–294)

6	VISUAL INSPECTION

7	SETTING THE CHECK (TEST) MODE DIAGNOSIS (See page 05–294)

8	PROBLEM SYMPTOM CONFIRMATION

HINT:
If the engine does not start, perform steps 10 and 12 first.

A	Malfunction does not occur
B	Malfunction occurs

B → GO TO STEP 10

A

9	SYMPTOM SIMULATION

10	DTC CHECK (See page 05–294)

A	Malfunction code
B	No code

B → GO TO STEP 12

A

11	DTC CHART (See page 05–309)

GO TO STEP 14

12	BASIC INSPECTION (See page 05–294)

A	Wrong parts not confirmed
B	Wrong parts confirmed

B → GO TO STEP 17

A

13	PROBLEM SYMPTOMS TABLE (See page 05–320)

A	Wrong circuit confirmed
B	Wrong parts confirmed

B → GO TO STEP 17

A

14	CHECK ECM POWER SOURCE CIRCUIT (See page 05–502)

15	CIRCUIT INSPECTION

A	Malfunction not confirmed
B	Malfunction confirmed

B → GO TO STEP 18

A

16	CHECK FOR INTERMITTENT PROBLEMS (See page 05–294)

GO TO STEP 18

17	PARTS INSPECTION

18	IDENTIFICATION OF PROBLEM

19	ADJUSTMENT, REPAIR

20	CONFIRMATION TEST

END

05CDT–01

CUSTOMER PROBLEM ANALYSIS CHECK

ENGINE CONTROL SYSTEM Check Sheet

Inspector's Name _____

Customer's Name		VIN	
Driver's Name		Production Date	
Date Vehicle Brought in		Licence No.	
License No.		Odometer Reading	km / miles

Problem Symptoms	☐ Engine does not Start	☐ Engine does not crank ☐ No initial combustion ☐ No complete combustion
	☐ Difficult to Start	☐ Engine cranks slowly ☐ Other _____
	☐ Poor Idling	☐ Incorrect first idle ☐ Idling rpm is abnormal ☐ High (rpm) ☐ Low (rpm) ☐ Rough idling ☐ Other _____
	☐ Poor Driveability	☐ Hesitation ☐ Back fire ☐ Muffler explosion (after–fire) ☐ Surging ☐ Knocking ☐ Other _____
	☐ Engine Stall	☐ Soon after starting ☐ After accelerator pedal depressed ☐ After accelerator pedal released ☐ During A/C operation ☐ Shifting from N to D ☐ Other _____
	☐ Others	

Data Problem Occurred		
Problem Frequency		☐ Constant ☐ Sometimes (times per day/month) ☐ Once only ☐ Other _____
Condition When Problem Occurs	Weather	☐ Fine ☐ Cloudy ☐ Rainy ☐ Snowy ☐ Various/Other _____
	Outdoor Temperature	☐ Hot ☐ Warm ☐ Cool ☐ Cold (approx.____ °C/____ °F)
	Place	☐ Highway ☐ Suburbs ☐ Inner City ☐ Uphill ☐ Downhill ☐ Rough road ☐ Other _____
	Engine Temp.	☐ Cold ☐ Warming up ☐ After Warming up ☐ Any temp. ☐ Other _____
	Engine Operation	☐ Starting ☐ Just after starting (min.) ☐ Idling ☐ Racing ☐ Driving ☐ Constant speed ☐ Acceleration ☐ Deceleration ☐ A/C switch ON/OFF ☐ Other _____

Condition of check engine warning light (CHK ENG)		☐ Remains on	☐ Sometimes lights up ☐ Does not light up
DTC Inspection	Normal mode (Pre–check)	☐ Normal	☐ Malfunction code(s) (code) ☐ Freeze frame data ( )
	Check Mode	☐ Normal	☐ Malfunction code(s) (code) ☐ Freeze frame data ( )

05CDU–01

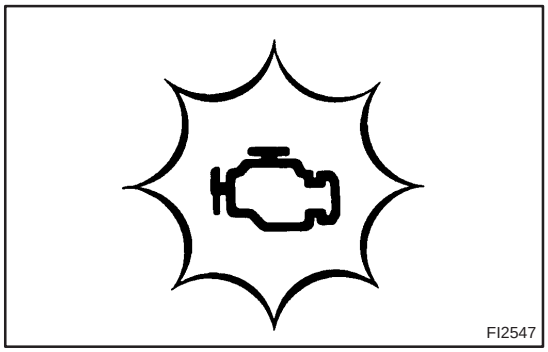
FI2547

PRE–CHECK

1. DIAGNOSIS SYSTEM

(a) Description for Euro–OBD (European spec.)

- When troubleshooting Euro–OBD vehicles, the only difference from the usual troubleshooting procedure is that you connect an OBD scan tool complying with ISO 15031–4 or a hand–held tester to the vehicle, and read off various data output from the vehicle's ECM.
- Euro–OBD regulations require that the vehicle's on–board computer illuminates the check engine warning light (CHK ENG) on the instrument panel when the computer detects a malfunction in the emission control system / components or in the power train control components which affect vehicle emissions, or a malfunction in the computer. In addition to an illumination of the CHK ENG when a malfunction is detected, the applicable Diagnostic Trouble Codes (DTCs) prescribed by ISO 15031–4 are recorded in the ECM memory (See page 05–309). If the malfunction does not reoccur in 3 consecutive trips, the CHK ENG goes off automatically but the DTCs remain recorded in the ECM memory.

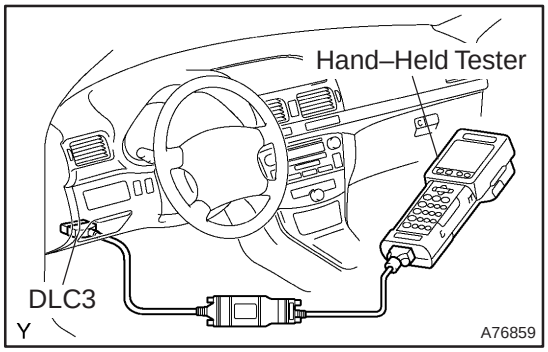

- To check the DTCs, connect the OBD scan tool or hand–held tester to Data Link Connector 3 (DLC3) on the vehicle. The OBD scan tool or hand–held tester also enables you to erase the DTCs and check freeze frame data and various forms of engine data. (For operating instructions, see the OBD scan tool's instruction book.)
  DTCs include ISO controlled codes and manufacturer controlled codes. ISO controlled codes must be set as prescribed by the ISO, while manufacturer controlled codes can be set freely by the manufacturer within the prescribed limits (See DTC chart on page 05–309).
- The diagnosis system operates in the normal mode during normal vehicle use. It also has a check (test) mode for technicians to simulate malfunction symptoms and troubleshoot. Most DTCs use 2 trip detection logic* to prevent erroneous detection, and to ensure a thorough malfunction detection. By switching the ECM to the check (test) mode using hand–held tester when troubleshooting, a technician can cause the CHK ENG to illuminate for a malfunction that is only detected once or momentarily (Hand–held tester only) (See step 3).

- * 2 trip detection logic
  When a logic malfunction is first detected, the malfunction is temporally stored in the ECM memory (1st trip). If the same malfunction is detected again during the second drive test, this second detection causes the CHK ENG to illuminate (2nd trip) (However, the ignition switch must be turned OFF between the 1st trip and 2nd trip).
- Freeze frame data:
  Freeze frame data records the engine condition when a misfire (DTCs P0300 – P0304) or fuel trim malfunction (DTCs P0171, P0172, P0174 and P0175) or other malfunction (first malfunction only) is detected.
  Because freeze frame data records the engine conditions (fuel system, calculated load, engine coolant temperature, fuel trim, engine speed, vehicle speed, etc.) when the malfunction is detected. When troubleshooting, it is useful for determining whether the vehicle was running or stopped, the engine warmed up or not, the air–fuel ratio lean or rich, etc. at the time of the malfunction.
- Priorities for troubleshooting:
  If troubleshooting priorities for multiple DTCs are given in the applicable DTC chart, these should be followed.

If no instructions are given, troubleshoot according to the following priorities.

(1) DTCs other than fuel trim malfunction (DTCs P0171, P0172, P0174 and P0175) and misfire (DTCs P0300 – P0304).
(2) Fuel trim malfunction (DTCs P0171, P0172, P0174 and P0175).
(3) Misfire (DTCs P0300 – P0304).

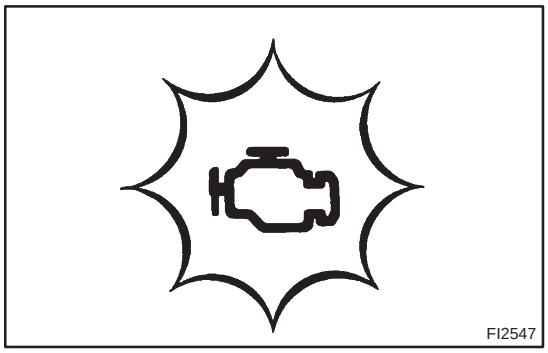
FI2547

(b) Description for M–OBD (Except European spec.)

- When troubleshoot Multiplex OBD (M–OBD) vehicles, the only difference from the usual troubleshooting procedure is that you connect the hand–held tester to the vehicle, and read off various data output from the vehicle's ECM.

- The vehicle's on–board computer illuminates the check engine warning light (CHK ENG) on the instrument panel when the computer detects a malfunction in the computer itself or in drive system components. In addition to an illumination of the CHK ENG when a malfunction is detected, the applicable Diagnostic Trouble Codes (DTCs) are recorded in the ECM memory (See page 05–309). If the malfunction does not recur, the CHK ENG lamp will be disappeared by turning off the ignition switch but the recorded DTC will be remaining in the ECM memory.

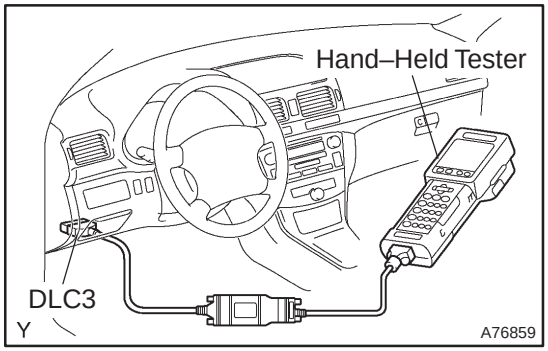

- To check the DTCs, connect the hand–held tester to the Data Link Connector 3 (DLC3) on the vehicle. The hand–held tester also enables you to erase the DTCs and check the freeze frame data and various forms of engine data. (for operating instructions, see the instruction book.)
- The diagnosis system operates in the normal mode during normal vehicle use. It also has a check (test) mode for technicians to simulate malfunction symptoms and troubleshoot. Most DTCs use 2 trip detection logic* to prevent erroneous detection, and to ensure a thorough malfunction detection. By switching the ECM to the check (test) mode using hand–held tester when troubleshooting, a technician can cause the CHK ENG to illuminate for a malfunction that is only detected once or momentarily (Hand–held tester only) (See step 3).
- * 2 trip detection logic
  When a logic malfunction is first detected, the malfunction is temporally stored in the ECM memory (1st trip). If the same malfunction is detected again during the second drive test, this second detection causes the CHK ENG to illuminate (2nd trip) (However, the ignition switch must be turned OFF between the 1st trip and 2nd trip).
- Freeze frame data:
  Freeze frame data records the engine conditions (fuel system, calculator load, water temperature, fuel trim, engine speed, vehicle speed, etc.) when a malfunction is detected. When troubleshooting, it is useful for determining whether the vehicle was running or stopped, the engine was warmed up or not, the air–fuel ratio was lean or rich, etc. at the time of the malfunction.

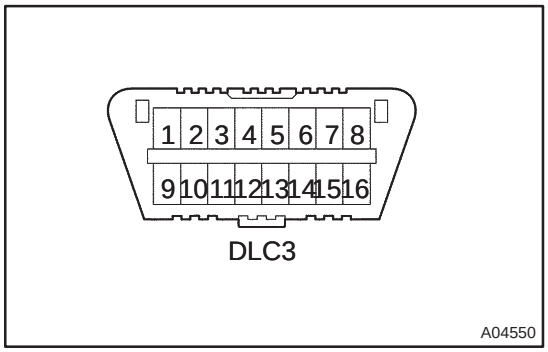

(c) Check the DLC3.
The vehicle's ECM uses the ISO 9141–2 (Euro–OBD)/ ISO 14230(M–OBD) communication protocol. The terminal arrangement of the DLC3 complies with ISO 15031–03 and matches the ISO 9141–2/ ISO 14230 format.

Symbol	Terminal No.	Connection/Voltage or Resistance	Condition
SIL	7	Bus + Line/Pulse generation	During transmission
CG	4	Chassis Ground – Body Ground/1 Ω or less	Always
SG	5	Signal Ground – Body Ground/1 Ω or less	Always
BAT	16	Battery Positive – Body Ground/9 to 14 V	Always

HINT:
If the display shows "UNABLE TO CONNECT TO VEHICLE" when you have connected the cable of the hand–held tester to the DLC3, turned the ignition switch ON and operated the hand–held tester, there is a problem on the vehicle side or tool side.

- If communication is normal when the tool is connected to another vehicle, inspect the DLC3 on the original vehicle.
- If communication is still impossible when the tool is connected to another vehicle, the problem is probably in the tool itself, so consult the Service Department listed in the tool's instruction manual.

(d) Inspect the battery voltage.
Battery voltage: 11 to 14 V

If voltage is below 11 V, recharge the battery before proceeding.

(e) Check the CHK ENG.
(1) The CHK ENG lamp comes on when the ignition switch is turned ON and the engine is not running.

HINT:
If the CHK ENG is not illuminated, troubleshoot the combination meter.

(2) When the engine is started, the CHK ENG should go off. If the lamp remains on, it means that the diagnosis system has detected a malfunction or abnormality in the system.

2. DTC CHECK (Normal Mode)

NOTICE:

Hand–held tester only:

When the diagnosis system is switched from the normal mode to the check (test) mode, it erases all DTCs and freeze frame data recorded in the normal mode. So before switching modes, always check the DTCs and freeze frame data, and note them down.

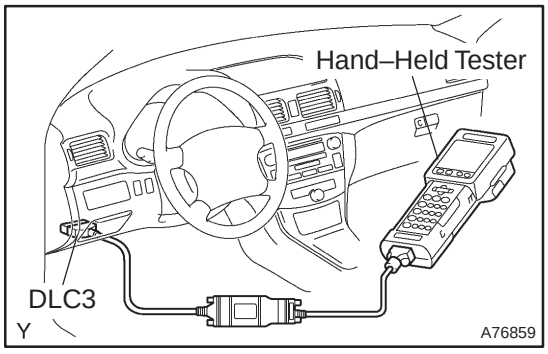

(a) Checking the DTCs using the hand–held tester.
  (1) Connect the hand–held tester to the DLC3.
  (2) Turn the ignition switch ON and switch the hand–held tester main switch ON.
  (3) Use the hand–held tester to check the DTCs and freeze frame data and note them down (for operating instructions, see the hand–held tester's instruction book).
  (4) See page 05–309 to confirm the details of the DTCs.

HINT:
In the event that 2 or more DTCs are detected, the CHK ENG lamp will indicate the smaller number DTC first.

(b) Clearing the DTCs using the hand–held tester.
  (1) Connect the hand–held tester to the DLC3.
  (2) Turn the ignition switch ON.
  (3) When operating the hand–held tester to erase the codes, the DTCs and freeze frame data will be erased. (See the hand–held tester's instruction book for operating instructions.)

(c) Clearing the DTCs not using the hand–held tester.
  (1) Disconnect the battery terminal or remove the EFI and THROTTLE fuses from the engine room R/B No. 1 for more than 60 seconds.

3. DTC CHECK (Check Mode)

HINT:
Hand–held tester only:
Compared to the normal mode, the check mode has more sensing ability to detect malfunctions.
Furthermore, the same diagnostic items which are detected in the normal mode can also be detected in the check (test) mode.

(a) Procedure for check mode using the hand–held tester.
  (1) Check the initial conditions
    - Battery positive voltage 11 V or more.
    - Throttle valve fully closed.
    - Transmission in the "P" or "N" position.
    - Air conditioning switched OFF.
  (2) Turn the ignition switch OFF.
  (3) Connect the hand–held tester to the DLC3.
  (4) Turn the ignition switch ON and switch the hand–held tester main switch ON.

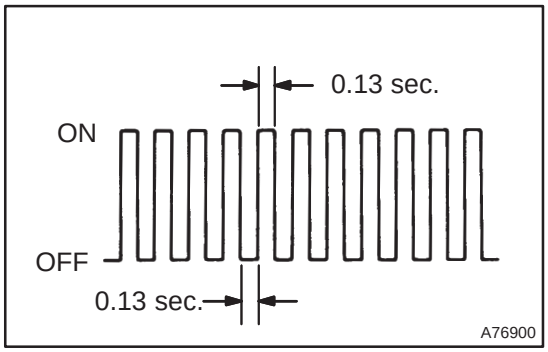

(5) Switch the hand–held tester from the normal mode to the check (test) mode. The CHK ENG blinks in 0.13 sec. intervals as shown in the illustration.

NOTICE:

If the hand–held tester switches the ECM from the normal mode to the check mode or vice–versa, or if the ignition switch is turned from ON to ACC or OFF during the check mode, the DTC and freeze frame data will be erased.

(6) Start the engine. (The CHK ENG goes off after the engine start.)

(7) Simulate the conditions of the malfunction described by the customer.

NOTICE:

Leave the ignition switch ON until you have checked the DTC, etc.

(8) After simulating the malfunction conditions, use the hand–held tester diagnosis selector to check the DTCs and freeze frame data, etc.

HINT:

Be sure not to turn the ignition switch OFF, because the diagnosis system is changed from the check mode to the normal mode and will result in all of the DTCs and freeze frame data being erased.

(9) After checking the DTC, inspect the applicable circuit.

(b) Clearing the DTCs using the hand–held tester.

(1) Connect the hand–held tester to the DLC3.

(2) Turn the ignition switch ON.

(3) When operating the hand–held tester to erase the codes, the DTCs and freeze frame data will be erased. (See the hand–held tester's instruction book for operating instructions.)

(c) Clearing the DTCs not using the hand–held tester.

(1) Disconnect the battery terminal or remove the EFI and THROTTLE fuses from the engine room R/B No. 1 for more than 60 seconds.

4. FAIL–SAFE CHART

If any of the following codes is recorded, the ECM enters into the fail–safe mode.

DTC No.	Fail–Safe Operation	Fail–Safe Deactivation Conditions
P0031 P0032 P0037 P0038 P0051 P0052 P0057 P0058	Faulty heater circuit is turned off.	Ignition switch is OFF.
P0100 P0102 P0103	Ignition timing is calculated based on an engine speed and a throttle opening angle.	”Pass” detection has occurred. Upon this occurrence, the ECM will return to normal mode.
P0105 P0107 P0108	• Intake air pressure is controlled with a calculated value in proportion to the throttle opening angle and the engine speed. • Limit the engine speed to 3,000 rpm or less.	”Pass” detection has occurred. Upon this occurrence, the ECM will return to normal mode.
P0110 P0112 P0113	Intake air temperature is fixed at 20°C (68°F)	”Pass” detection has occurred. Upon this occurrence, the ECM will return to normal mode.
P0115 P0117 P0118	Engine coolant temperature is fixed at 80°C (176°F)	”Pass” detection has occurred. Upon this occurrence, the ECM will return to normal mode.
P0120 P0121 P0122 P0123 P0220 P0222 P0223 P2135	Turn off the power for the throttle motor, return the throttle valve in position using the return spring, and fuel cut intermittent.	Repeat the following conditions at least 2 seconds or more with the throttle position switch closed: • VTA is more than 0.1 V but less than 0.95 V • Engine speed is 0 km/h
P0190 P0191	• Stop the high–pressure pump operation. • Limit the engine speed to 2,000 rpm or less.	After it is returned to normal condition, turn the ignition switch ON.
P0200	Turn off the INJ relay and cut the power for the EDU.	After it is returned to normal condition, turn the ignition switch ON.
P0201 P0202 P0203 P0204	• Stop fuel injection for an abnormal cylinder and related other cylinders. • Limit the engine speed to 3,000 rpm or less.	
P0325 P0327 P0328	Maximum timing retardation	Ignition switch is OFF.
P0351 P0352 P0353 P0354	Stop fuel injection for all the cylinders.	”Pass” detection has occurred. Upon this occurrence, the ECM will return to normal mode.
P0604 P0606 P0607 P0657	Turn off the power for the throttle motor, return the throttle valve in position using the return spring, and fuel cut intermittent.	After it is returned to normal condition, turn the ignition switch ON.
P1235	• Stop the high–pressure pump operation. • Limit the engine speed to 2,000 rpm or less.	After it is returned to normal condition, turn the ignition switch ON.
P2008	Force IACV to close.	After it is returned to normal condition, turn the ignition switch ON.

DTC No.	Fail–Safe Operation	Fail–Safe Deactivation Conditions
P2102 P2103 P2111 P2112 P2118 P2119	Turn off the power for the throttle motor, return the throttle valve in position using the return spring, and fuel cut intermittent.	After it is returned to normal condition, turn the ignition switch ON.
P2120 P2121 P2122 P2123 P2125 P2127 P2128 P2138	• If both VPA1 and VPA2 are malfunctioning: Fixed at idle • If either of VPA1 or VPA2 is malfunctioning: Fuel cut intermittently	After it is returned to normal condition, turn the ignition switch ON.

5. CHECK FOR INTERMITTENT PROBLEMS

Hand–held tester only:

By putting the vehicle's ECM in the check mode, the 1 trip detection logic is possible instead of the 2 trip detection logic, and the sensitivity to detect faults is increased. This makes it easier to detect intermittent problems.

(a) Clear the DTCs (See step 2).
(b) Set the check mode (See step 3).
(c) Perform a simulation test (See page 01–22).
(d) Check the connector and terminal (See page 01–32).
(e) Wiggle the harness and the connector (See page 01–32).

6. DATA LIST

HINT:

Using the DATA LIST displayed by the hand–held tester, you can read the value of the switches, sensors, actuators and so on without parts removal. Reading the DATA LIST as a first step of troubleshooting is one method to shorten diagnostic time.

NOTICE:

The values given below for "Normal Condition" are representative values. A vehicle may still be normal even if its value differs from those listed here. So, do not solely depend on the "Normal Condition" here when deciding whether a part is faulty or not.

(a) Warm up the engine.
(b) Turn the ignition switch OFF.
(c) Connect the hand–held tester to the DLC3.
(d) Turn the ignition switch ON.
(e) Push the "ON" button of the hand–held tester.
(f) Select the item "DIAGNOSIS / OBD/MOBD / DATA LIST".
(g) According to the display on tester, read the "DATA LIST".

Hand–held Tester Display	Measurement Item/Range (Display)	Normal Condition *1	Diagnostic Note
INJECTOR	Injection period of the No. 1 cylinder/ Min.: 0 ms, Max.: 32.64 ms	Idling: 0.40 to 0.78 ms	—
IGN ADVANCE	Ignition timing advance for No. 1 cylinder/ Min.: –64 deg., Max.: 63.5 deg.	Idling: BTDC 5 to 23°	—
CALC LOAD	Calculated load by ECM/ Min.: 0 %, Max.: 100 %	• Idling: 21.6 to 31.4 % • Running without load (2,500 rpm): 19.6 to 29.4 %	—

Hand–held Tester Display	MeasurementItem/Range (Display)	Normal Condition *1	Diagnostic Note
MAF	Air flow rate from MAF sensor/ Min.: 0 gm/s, Max.: 655 gm/s	• Idling: 3.2 to 4.7 gm/s • Running without load (2,500 rpm): 13.1 to 18.9 gm/s	If the value is Approximately 0.0 gm/s: • Mass air flow meter power source circuit open • VG circuit open or short If the value is 160.0 gm/s or more: • E2G circuit open
MAP	Absolute pressure inside intake manifold/ Min.: 0 kPa, Max.: 224 kPa	• Idling: 22 to 32 kPa • Running without load (2,500 rpm): 20 to 30 kPa	If the value is Approximately 0.0 kPa: • PIM circuit short If the value is 142.0 kPa or more: • VC circuit open or short • PIM circuit open • E2 circuit open
ENGINE SPD	Engine speed/ Min.: 0 rpm, Max.: 16383 rpm	Idling: 625 to 725 rpm	—
COOLANT TEMP	Coolant temperature/ Min.: –40°C, Max.: 140°C	After warming up: 80 to 95°C (176 to 203°F)	If the value is –40°C (–40°F): • Sensor circuit is open. If the value is 140°C (284°F): • Sensor circuit is shorted.
INTAKE AIR	Intake air temperature/ Min.: –40°C, Max.: 140°C	Equivalent to Ambient Temp.	
THROTTLE POS	Absolute throttle position sensor/ Min.: 0 %, Max.: 100 %	• Throttle fully closed: 10 to 24 % • Throttle fully open: 64 to 96 %	Read the value with ignition switch ON (Do not start engine).
CTP SW	Closed throttle position switch/ ON or OFF	• Throttle fully closed: ON • Throttle open: OFF	—
VEHICLE SPD	Vehicle speed/ Min.: 0 km/h, Max.: 255 km/h	Actual vehicle speed	Speed indicated on speedometer
ACCEL POS #1	Accelerator pedal position sensor No.1 output voltage/ Min.: 0 V, Max.: 5 V	• Accelerator pedal released: 0.5 to 1.1 V • Accelerator pedal depressed: 2.5 to 4.6 V	Read the value with ignition switch ON (Do not start engine).
ACCEL POS #2	Accelerator pedal position sensor No.2 output voltage/ Min.: 0 V, Max.: 5 V	• Accelerator pedal released: 1.5 to 2.9 V • Accelerator pedal depressed: 3.5 to 5.5 V	Read the value with ignition switch ON (Do not start engine).
THROTTLE POS #2	Throttle position sensor No.2 output voltage/ Min.: 0 V, Max.: 5 V	• Throttle fully closed: 2.1 to 3.1 V • Throttle fully open: 4.5 to 5.5 V	Read the value with ignition switch ON (Do not start engine).
THROTTLE TARGT	Target position of throttle valve/ Min.: 0 V, Max.: 5 V	Idling: 0.4 to 1.1 V	—
THROTTLE OPN DUTY	Throttle motor opening duty ratio/ Min.: 0 %, Max.: 100 %	Throttle fully closed: 0 %	• When accelerator pedal is depressed, duty ratio is increased. • Read the value with ignition switch ON (Do not start engine)
THROTTLE CLS DUTY	Throttle motor closed duty ratio/ Min.: 0 %, Max.: 100 %	Throttle fully closed: 0 %	• When accelerator pedal is released quickly, duty ratio is increased. • Read the value with ignition switch ON (Do not start engine)
THROTTLE MOT	Whether or not throttle motor control is permitted/ ON or OFF	Idling: ON	—
+BM	Whether or not electric throttle control system power is inputted/ ON or OFF	Idling: ON	—

Hand–held Tester Display	MeasurementItem/Range (Display)	Normal Condition *1	Diagnostic Note
ACCEL IDL POS	Whether or not accelerator pedal position sensor is detecting idle/ ON or OFF	Idling: ON	—
THROTTLE IDL POS	Whether or not throttle position sensor is detecting idle/ ON or OFF	Idling: ON	—
FAIL #1	Whether or not fail safe function is executed/ ON or OFF	ETCS has failed: ON	—
FAIL #2	Whether or not fail safe function is executed/ ON or OFF	ETCS has failed: ON	—
THROTTLE INITIAL	Throttle fully closed learned value Min.: 0 V, Max.: 5 V	0.5 to 0.9 V	—
ACCEL LEARN VAL	Accelerator fully closed learned value Min.: 0 V, Max.: 5 V	0.4 to 1.4 V	—
THROTTLE MOT	Throttle motor current Min.: 0 A, Max.: 20 A	Idling: 0 to 3.0 A	—
O2S B1 S1	Heated oxygen sensor output voltage for bank 1 sensor 1/ Min.: 0 V, Max.: 1.0 V	Driving (50 km/h, 31 mph): 0.1 to 0.9 V	Performing the INJ VOL or A/F CONTROL function of the ACTIVE TEST enables the user to check the voltage output of each sensor.
O2S B1 S2	Heated oxygen sensor output voltage for bank 1 sensor 2/ Min.: 0 V, Max.: 1.0 V		
O2S B2 S1	Heated oxygen sensor output voltage for bank 2 sensor 1/ Min.: 0 V, Max.: 1.0 V		
O2S B2 S2	Heated oxygen sensor output voltage for bank 2 sensor 2/ Min.: 0 V, Max.: 1.0 V		
SHORT FT #1	Short term fuel trim of bank 1/ Min.: –100 %, Max.: 100%	0 ± 20 %	This item is the short–term fuel compensation used to maintain the air–fuel ratio at stoichiometric air–fuel ratio
LONG FT #1	Long term fuel trim of bank 1/ Min.: –100 %, Max.: 100 %	0 ± 20 %	This item is the overall fuel compensation carried out in long–term to compensate for a continual deviation of the short–term fuel trim from the central value.
TOTAL FT #1	Total fuel trim bank 1: Average value for fuel trim system of bank 1/ Min.: 0.5, Max.: 1.496	Idling: 0.5 to 1.4	—
SHORT FT #2	Short term fuel trim of bank 2/ Min.: –100 %, Max.: 100 %	0 ± 20 %	This item is the short–term fuel compensation used to maintain the air–fuel ratio at stoichiometric air–fuel ratio
LONG FT #2	Long term fuel trim of bank 2/ Min.: –100 %, Max.: 100 %	0 ± 20 %	This item is the overall fuel compensation carried out in long–term to compensate for a continual deviation of the short–term fuel trim from the central value.
TOTAL FT #2	Total fuel trim bank 2: Average value for fuel trim system of bank 2/ Min.: 0.5, Max.: 1.496	Idling: 0.5 to 1.4	—

Hand–held Tester Display	MeasurementItem/Range (Display)	Normal Condition *1	Diagnostic Note
O2FT B1 S1	Short term fuel trim associated with the bank 1 sensor 1/ Min.: –100 %, Max.: 100 %	0 ± 20 %	Same as SHORT FT #1
O2FT B1 S2	Short term fuel trim associated with the bank 1 sensor 2/ Min.: –100 %, Max.: 100 %	0 ± 20 %	Same as SHORT FT #1
O2FT B2 S1	Short term fuel trim associated with the bank 2 sensor 1/ Min.: –100 %, Max.: 100 %	0 ± 20 %	Same as SHORT FT #2
O2FT B2 S2	Short term fuel trim associated with the bank 2 sensor 2/ Min.: –100 %, Max.: 100 %	0 ± 20 %	Same as SHORT FT #2
FUEL SYS #1	Fuel system status (Bank1) / OL or CL or OL DRIVE or OL FAULT or CL FAULT	Idling after warming up: CL	• OL: Open Loop–has not yet satisfied conditions to go closed loop. • CL: Closed Loop–using heated oxygen sensor(s) as feed back for fuel control. • OL DRIVE: Open loop due to driving conditions. (fuel enrichment) • OL FAULT: Open loop due to detected system fault. • CL FAULT: Closed loop but one of heated oxygen sensors, which is used for fuel control, is functioningimproperly.
FUEL SYS #2	Fuel system status (Bank2) / OL or CL or OL DRIVE or OL FAULT or CL FAULT		
FC IDL	Fuel cut idle/ ON or OFF	Fuel cut operation: ON	FC IDL= ”ON” when throttle valve fully closed and engine speed is over 1,500 rpm.
MIL	MIL status/ ON or OFF	MIL ON: ON	—
O2 LR B1 S1	Oxygen sensor lean rich bank 1 sensor 1: Response time for oxygen sensor output to switch from lean to rich/ Min.: 0 ms, Max.: 16,711 ms	Idling after warming up: 0 to 1,000 msec.	—
O2 LR B2 S1	Oxygen sensor lean rich bank 2 sensor 1: Response time for oxygen sensor output to switch from lean to rich/ Min.: 0 ms, Max.: 16,711 ms		
O2 RL B1 S1	Oxygen sensor rich lean bank 1 sensor 1: Response time for oxygen sensor output to switch from rich to lean/ Min.: 0 ms, Max.: 16,711 ms		
O2 RL B2 S1	Oxygen sensor rich lean bank 2 sensor 1: Response time for oxygen sensor output to switch from rich to lean/ Min.: 0 ms, Max.: 16,711 ms		
STARTER SIG	Starter signal/ ON or OFF	Cranking: ON	—
A/C SIG	A/C signal/ ON or OFF	A/C ON: ON	—
PNP SW [NSW] *2	Park/neutral position switch signal/ ON or OFF	P or N position: ON	—

Hand–held Tester Display	MeasurementItem/Range (Display)	Normal Condition *1	Diagnostic Note
ELECT LOAD SIG	Electrical load signal/ ON or OFF	• Tail light switch ON: ON • Defogger switch ON: ON	—
STOP LIGHT SW	Stop light switch/ ON or OFF	• Brake pedal depressed: ON • Brake pedal released: OFF	—
PS OIL PRESS SW	Power steering signal/ ON or OFF	• While turning the steering wheel: ON • While not turning the steering wheel: OFF	The idle–up control is performed when PS is ON.
PS SIGNAL	Power steering signal/ ON or OFF	When the steering wheel is turned: ON	This signal is usually ON status until the IG switch is turned OFF.
SCV VSV	VSV status for intake air control valve/ ON or OFF	VSV operation: ON	—
FUEL PUMP / SPD	Fuel pump/speed status/ ON/H or OFF/M,L	Idling: ON	—
EVAP VSV	VSV status for EVAP control/ ON or OFF	VSV operating: ON	VSV for EVAP is controlled by the ECM (ground side duty control)
VVT CTRL B1	VVT control status (bank 1)/ ON or OFF	VVT system operation: ON	—
IGNITION	Ignition counter/ Min.: 0, Max.: 400	0 to 400	—
CYL #1, #2, #3, #4	Misfire ratio of the cylinder 1 to 4/ Min.: 0 %, Max.: 50 %	0 %	This item is displayed in only idling
MISFIRE RPM	Engine RPM for first misfire range/ Min.: 0 rpm, Max.: 6,375 rpm	Misfire 0: 0 rpm	—
FC TAU	Fuel Cut TAU: Fuel cut during very light load/ ON or OFF	Fuel cut operating: ON	The fuel cut is being performed under very light load to prevent the engine combustion from becoming incomplete.
CHECK MODE	Check mode/ ON or OFF	Check mode ON: ON	See step 3
O2 RL B1 S2	Oxygen sensor rich lean bank 1 sensor 2: Response time for oxygen sensor output to switch from rich to lean/ Min.: 0 ms, Max.: 16,702.5 ms	Idling after warming up: 0 to 1,000 msec.	—
O2 RL B2 S2	Oxygen sensor rich lean bank 2 sensor 2: Response time for oxygen sensor output to switch from rich to lean/ Min.: 0 ms, Max.: 16,702.5 ms		
MIL ON RUN DIST	Distance since activation of check engine warning light/ Min.: 0 km, Max.: 65,535 km	When there is no DTC: 0 km	—
FUEL PRESS	Fuel high pressure inside fuel delivery pipe/ Min.: 0 MPa, Max.: 819 MPa	• Idling: 8 to 13 MPa • Running without load (3,000 rpm): 9.5 to 10.5 MPa	—

*1: If no conditions are specifically stated for ”Idling”, it means the shift lever is at the N or P position, the A/C switch is OFF and all accessory switches are OFF.
*2: For A/T only

7. ACTIVE TEST

HINT:

Performing the ACTIVE TEST using the hand–held tester allows the relay, VSV, actuator and so on to operate without parts removal. Performing the ACTIVE TEST as a first step of troubleshooting is one method to shorten diagnostic time.

It is possible to display the DATA LIST during the ACTIVE TEST.

(a) Warm up the engine.
(b) Turn the ignition switch OFF.
(c) Connect the hand–held tester to the DLC3.
(d) Turn the ignition switch ON.
(e) Push the ”ON” button of the hand–held tester.
(f) Select the item ”DIAGNOSIS / OBD/MOBD / ACTIVE TEST”
(g) According to the display on tester, perform the ”ACTIVE TEST”.

Hand–held Tester Display	Test Details	Diagnostic Note
INJ VOL	[Test Details] Control the injection volume Min.: –12.5 %, Max.: 25 % [Vehicle Condition] Engine speed: 3,000 rpm or less	• All injectors are tested at once. • Injection volume is gradually changed between –12.5 and 25 %.
A/F CONTROL	[Test Details] Control the injection volume –12.5 or 25 % (Change the injection volume –12.5 % or 25 %.) [Vehicle Condition] Engine speed: 3,000 rpm or less	The following procedure of A/F CONTROL enables the user to check its output (show its graph indication) of sensor 1 and sensor 2: For displaying the graph indication, enter ”ACTIVE TEST / A/F CONTROL / USER DATA”, then select ”O2S B1 S1 and O2S B1 S2” by pressing ”YES” button and push ”ENTER” button before pressing ”F4” button.
SCV VSV	[Test Details] Activate the VSV for intake air control valve. ON or OFF	—
EVAP VSV (ALONE)	[Test Details] Activate the VSV for EVAP control ON or OFF	—
FUEL PUMP / SPD	[Test Details] Control the fuel pump ON or OFF	—
VVT CTRL B1	[Test Details] Active the VVT system (Bank 1). ON or OFF	• ON: Rough idle or engine stall. • OFF: Normal engine speed.
TC/TE1	[Test Details] Connect the TC and TE1 ON or OFF	—
FC IDL PROHBT	[Test Details] Control the idle fuel cut prohibit ON or OFF	—

BASIC INSPECTION

When the malfunction code is not confirmed in the DTC check, troubleshooting should be carried out in all the possible circuits considered as causes of the problems. In many cases, by carrying out the basic engine check shown in the following flow chart, the location causing the problem can be found quickly and efficiently. Therefore, using this check is essential in the engine troubleshooting.

1	CHECK BATTERY VOLTAGE

NOTICE:
Carry out this check with the engine stopped and ignition switch OFF.

	OK	NG
Voltage	11 V or more	Less than 11 V

NG → **CHARGE OR REPLACE BATTERY**

OK

2	CHECK IF ENGINE WILL CRANK

NG → **PROCEED TO PROBLEM SYMPTOMS TABLE ON PAGE 05–320**

OK

3	CHECK IF ENGINE STARTS

NG → **GO TO STEP 7**

OK

4	CHECK AIR FILTER

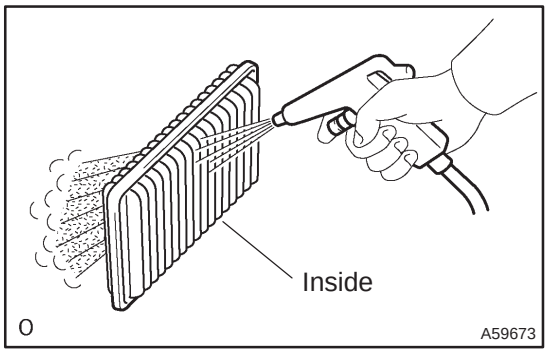

(a) Visually check that the air filter is not excessively dirty or oily.

NOTICE:
If necessary, clean the filter with compressed air. First blow from the inside thoroughly, then blow from the outside of the filter.

NG → **CLEAN OR REPLACE**

OK

5	CHECK IDLE SPEED (See page 14–181)

NG → **PROCEED TO PROBLEM SYMPTOMS TABLE ON PAGE 05–320**

OK

6	CHECK IGNITION TIMING (See page 14–181)

NG → PROCEED TO PAGE AND CONTINUE TO TROUBLESHOOT

OK

PROCEED TO PROBLEM SYMPTOMS TABLE ON PAGE 05–320

7	CHECK FUEL PRESSURE (See page 11–33)

NG → PROCEED TO PAGE 11–33 AND CONTINUE TO TROUBLESHOOT

OK

8	CHECK FOR SPARK (See page 18–12)

NG → PROCEED TO PAGE 18–12 AND CONTINUE TO TROUBLESHOOT

OK

PROCEED TO PROBLEM SYMPTOMS TABLE ON PAGE 05–320

05CID–01

DIAGNOSTIC TROUBLE CODE CHART

HINT:

Parameters listed in the chart may not be exactly the same as your readings due to the type of instrument or other factors.

If a malfunction code is displayed during the DTC check in the check mode, check the circuit for the codes listed in the table below. For details of each code, refer to the ”See page ” under the respective ”DTC No.” in the DTC chart.

DTC No. (See Page)	Detection Item	Trouble Area	*1 CHK ENG	Memory
P0010 (05–322)	Camshaft Position ”A” Actuator Circuit (Bank 1)	• Open or short in OCV circuit • OCV • ECM	○	○
P0011 (05–325)	Camshaft Position ”A” –Timing Over– Advanced or System Performance (Bank 1)	• Valve timing • OCV • VVT controller assembly • ECM	○	○
P0012 (05–325)	Camshaft Position ”A” –Timing Over– Retarded (Bank 1)		○	○
P0016 (05–329)	Crankshaft Position – Camshaft Position Correlation (Bank 1 Sensor A)	• Mechanical system (Timing chain has jumped a tooth, chain stretched) • ECM	○	○
P0031 (05–330)	Oxygen Sensor Heater Circuit Low (Bank 1 Sensor 1)	• Open in heater circuit of heated oxygen sensor • Heated oxygen sensor heater • EFI relay • EFI fuse • EFI No. 2 fuse • ECM	○	○
P0032 (05–330)	Oxygen Sensor Heater Circuit High (Bank 1 Sensor 1)	• Short in heater circuit of heated oxygen sensor • Heated oxygen sensor heater • ECM	○	○
P0037 (05–330)	Oxygen Sensor Heater Control Circuit Low (Bank 1 Sensor 2)	• Same as DTC No. P0031	○	○
P0038 (05–330)	Oxygen Sensor Heater Control Circuit High (Bank 1 Sensor 2)	• Same as DTC No. P0032	○	○
P0051 (05–330)	Oxygen Sensor Heater Circuit Low (Bank 2 Sensor 1)	• Same as DTC No. P0031	○	○
P0052 (05–330)	Oxygen Sensor Heater Circuit High (Bank 2 Sensor 1)	• Same as DTC No. P0032	○	○
P0057 (05–330)	Oxygen Sensor Heater Control Circuit Low (Bank 2 Sensor 2)	• Same as DTC No. P0031	○	○
P0058 (05–330)	Oxygen Sensor Heater Control Circuit High (Bank 2 Sensor 2)	• Same as DTC No. P0032	○	○
P0100 (05–336)	Mass or volume Air Flow Circuit	• Open or short in mass air flow meter circuit • Mass air flow meter • ECM	○	○
P0102 (05–336)	Mass or volume Air Flow Circuit Low Input		○	○
P0103 (05–336)	Mass or volume Air Flow Circuit High Input		○	○
P0105 (05–342)	Manifold Absolute Pressure/ Barometric Pressure Circuit	• Open or short in manifold absolute pressure sensor circuit • Manifold absolute pressure sensor • ECM	○	○
P0107 (05–342)	Manifold Absolute Pressure/ Barometric Pressure Circuit Low Input		○	○
P0108 (05–342)	Manifold Absolute Pressure/ Barometric Pressure Circuit High Input		○	○

DTC No. (See Page)	Detection Item	Trouble Area	*1 CHK ENG	Memory
P0110 (05–347)	Intake Air Temperature Circuit	• Open or short in intake air temperature sensor circuit • Intake air temperature sensor (built in mass air flow meter) • ECM	○	○
P0112 (05–347)	Intake Air Temperature Circuit Low Input	• Short in intake air temperature sensor circuit • Intake air temperature sensor (built in mass air flow meter) • ECM	○	○
P0113 (05–347)	Intake Air Temperature Circuit High Input	• Open in intake air temperature sensor circuit • Intake air temperature sensor (built in mass air flow meter) • ECM	○	○
P0115 (05–351)	Engine Coolant Temperature Circuit	• Open or short in engine coolant temperature sensor circuit • Engine coolant temperature sensor • ECM	○	○
P0116 (05–355)	Engine Coolant Temperature Circuit Range/Performance Problem	• Cooling system • Engine coolant temperature sensor • Thermostat	○	○
P0117 (05–351)	Engine Coolant Temperature Circuit Low Input	• Short in engine coolant temperature sensor circuit • Engine coolant temperature sensor • ECM	○	○
P0118 (05–351)	Engine Coolant Temperature Circuit High Input	• Open in engine coolant temperature sensor circuit • Engine coolant temperature sensor • ECM	○	○
P0120 (05–356)	Throttle/Pedal Position Sensor/ Switch "A" Circuit	• Throttle position sensor (built in throttle body) • ECM	○	○
P0121 (05–362)	Throttle/Pedal Position Sensor/ Switch "A" Circuit Range/Performance Problem	• Throttle position sensor (built in throttle body)	○	○
P0122 (05–356)	Throttle/Pedal Position Sensor/ Switch "A" Circuit Low Input	• Throttle position sensor (built in throttle body) • VTA1 circuit short • VC circuit open • ECM	○	○
P0123 (05–356)	Throttle/Pedal Position Sensor/ Switch "A" Circuit High Input	• Throttle position sensor (built in throttle body) • VTA1 circuit open • E2 circuit open • VC and VTA1 circuit are short–circuited • ECM	○	○
P0130 *3 (05–363)	Oxygen Sensor Circuit (Bank 1 Sensor 1)	• Open or short in heated oxygen sensor circuit • Heated oxygen sensor • Heated oxygen sensor heater • EFI relay • Air induction system • Fuel pressure • Injector • ECM	○	○
P0133 *3 (05–374)	Oxygen Sensor Circuit Slow Response (Bank 1 Sensor 1)	• Open or short in heated oxygen sensor circuit • Heated oxygen sensor • Heated oxygen sensor heater • EFI relay • Air induction system • Fuel pressure • Injector • ECM	○	○

DTC No. (See Page)	Detection Item	Trouble Area	*1 CHK ENG	Memory
P0134 (05–381)	Oxygen Sensor Circuit No Activity Detected (Bank 1 Sensor 1)	• Open or short in heated oxygen sensor circuit • Heated oxygen sensor • Heated oxygen sensor heater • EFI relay • Air induction system • Fuel pressure • Injector • Gas leakage in exhaust system • PCV valve and hose • PCV hose connection • ECM	○	○
P0136 *3 (05–388)	Oxygen Sensor Circuit Malfunction (Bank 1 Sensor 2)	• Open or short in heated oxygen sensor circuit • Heated oxygen sensor • Heated oxygen sensor heater • EFI relay	○	○
P0150 *3 (05–363)	Oxygen Sensor Circuit (Bank 2 Sensor 1)	• Same as DTC No. P0130	○	○
P0153 *3 (05–374)	Oxygen Sensor Circuit Slow Response (Bank 2 Sensor 1)	• Same as DTC No. P0133	○	○
P0154 (05–381)	Oxygen Sensor Circuit No Activity Detected (Bank 2 Sensor 1)	• Same as DTC No. P0134	○	○
P0156 *3 (05–388)	Oxygen Sensor Circuit Malfunction (Bank 2 Sensor 2)	• Same as DTC No. P0136	○	○
P0171 *3 (05–394)	System too Lean (Bank 1)	• Air induction system • Injector blockage • Mass air flow meter • Manifold absolute pressure sensor • Engine coolant temperature sensor • Fuel pressure • Gas leakage in exhaust system • Open or short in heated oxygen sensor (bank 1 sensor 1) circuit • Heated oxygen sensor (bank 1 sensor 1) • Heated oxygen sensor heater (bank 1 sensor 1) • EFI relay • PCV valve and hose • PCV hose connection • ECM	○	○
P0172 *3 (05–394)	System too Rich (Bank 1)	• Injector leak, blockage • Mass air flow meter • Manifold absolute pressure sensor • Engine coolant temperature sensor • Ignition system • Fuel pressure • Gas leakage in exhaust system • Open or short in heated oxygen sensor (bank 1 sensor 1) circuit • Heated oxygen sensor (bank 1 sensor 1) • ECM	○	○

DTC No. (See Page)	Detection Item	Trouble Area	*1 CHK ENG	Memory
P0174 *3 (05–394)	System too Lean (Bank2)	• Air induction system • Injector blockage • Mass air flow meter • Manifold absolute pressure sensor • Engine coolant temperature sensor • Fuel pressure • Gas leakage in exhaust system • Open or short in heated oxygen sensor (bank 2 sensor 1) circuit • Heated oxygen sensor (bank 2 sensor 1) • Heated oxygen sensor heater (bank 2 sensor 1) • EFI relay • PCV valve and hose • PCV hose connection • ECM	○	○
P0175 *3 (05–394)	System too Rich (Bank2)	• Injector leak, blockage • Mass air flow meter • Manifold absolute pressure sensor • Engine coolant temperature sensor • Ignition system • Fuel pressure • Gas leakage in exhaust system • Open or short in heated oxygen sensor (bank 2 sensor 1) circuit • Heated oxygen sensor (bank 2 sensor 1) • ECM	○	○
P0190 (05–406)	Fuel Rail Pressure Sensor Circuit	• Open or short in fuel pressure sensor circuit • Fuel pressure sensor • ECM	○	○
P0191 (05–410)	Fuel Rail Pressure Sensor Circuit Range/Performance	• Open or short in high–pressure fuel pump (spill valve) circuit • High–pressure fuel pump • Low–pressure fuel pump • Fuel pipe • Fuel relief valve • Fuel pressure regulator • ECM	○	○
P0200 (05–415)	Injector Circuit/Open	• Open or short in EDU circuit • EDU (Injector driver) • Fuel injector assy • ECM	○	○
P0201 (05–415)	Injector Circuit/Open – (Cylinder 1)		○	○
P0202 (05–415)	Injector Circuit/Open – (Cylinder 2)		○	○
P0203 (05–415)	Injector Circuit/Open – (Cylinder 3)		○	○
P0204 (05–415)	Injector Circuit/Open – (Cylinder 4)		○	○
P0220 (05–356)	Throttle/Pedal Position Sensor/ Switch "B" Circuit	• Throttle position sensor (built in throttle body) • ECM	○	○
P0222 (05–356)	Throttle/Pedal Position Sensor/ Switch "B" Circuit Low Input	• Throttle position sensor (built in throttle body) • VTA2 circuit short • VC circuit open • ECM	○	○
P0223 (05–356)	Throttle/Pedal Position Sensor/ Switch "B" Circuit High Input	• Throttle position sensor (built in throttle body) • VTA2 circuit open • E2 circuit open • VC and VTA2 circuit are short–circuited • ECM	○	○

DTC No. (See Page)	Detection Item	Trouble Area	*1 CHK ENG	Memory
P0300 *3 (05–420)	Random/Multiple Cylinder Misfire Detected	• Open or short in engine wire • Connector connection • Vacuum hose connection • Ignition system • Injector • Fuel pressure • Mass air flow meter • Engine coolant temperature sensor • Compression pressure • Valve clearance • Valve timing • PCV hose connection • PCV hose • ECM	○*2	○
P0301 *3 (05–420)	Cylinder 1 Misfire Detected		○*2	○
P0302 *3 (05–420)	Cylinder 2 Misfire Detected		○*2	○
P0303 *3 (05–420)	Cylinder 3 Misfire Detected		○*2	○
P0304 *3 (05–420)	Cylinder 4 Misfire Detected		○*2	○
P0325 (05–429)	Knock Sensor 1 Circuit (Bank 1 or Single Sensor)	• Knock sensor • Knock sensor (under–torqued or loose) • ECM	○	○
P0327 (05–429)	Knock Sensor 1 Circuit Low Input (Bank 1 or Single Sensor)	• Short in knock sensor circuit • Knock sensor • ECM	○	○
P0328 (05–429)	Knock Sensor 1 Circuit High Input (Bank 1 or Single Sensor)	• Open in knock sensor circuit • Knock sensor • ECM	○	○
P0335 (05–433)	Crankshaft Position Sensor "A" Circuit	• Open or short in crankshaft position sensor circuit • Crankshaft position sensor • Signal plate (crankshaft position sensor plate No. 1) • ECM	○	○
P0339 (05–433)	Crankshaft Position Sensor "A" Circuit Intermittent		—	○
P0340 (05–436)	Camshaft Position Sensor "A" Circuit (Bank 1 or Single Sensor)	• Open or short in camshaft position sensor circuit • Camshaft position sensor • Camshaft timing gear • Timing chain has jumped a tooth • ECM	○	○
P0341 (05–436)	Camshaft Position Sensor "A" Circuit Range/Performance (Bank 1 or Single Sensor)		○	○
P0351 (05–439)	Ignition Coil "A" Primary/Secondary Circuit	• Ignition system • Open or short in IGF and IGT circuit from ignition coil with igniter to ECM (ignition coil circuit 1 through 4) • Ignition coil with igniter (ignition coil 1 through 4) • IG2 relay • ECM	○	○
P0352 (05–439)	Ignition Coil "B" Primary/Secondary Circuit		○	○
P0353 (05–439)	Ignition Coil "C" Primary/Secondary Circuit		○	○
P0354 (05–439)	Ignition Coil "D" Primary/Secondary Circuit		○	○
P0420 *3 (05–446)	Catalyst System Efficiency Below Threshold (Bank 1)	• Gas leakage in exhaust system • Heated oxygen sensor • Three–way catalytic converter (inside exhaust manifold)	○	○
P0430 *3 (05–446)	Catalyst System Efficiency Below Threshold (Bank 2)		○	○
P0443 (05–449)	Evaporative Emission Control System Purge Control Valve Circuit	• Open of short in VSV circuit for EVAP • VSV for EVAP • ECM	○	○
P0500 (05–453)	Vehicle Speed Sensor "A"	• Combination meter • Open or short in speed sensor circuit • Vehicle speed sensor • ECM • Skid control ECU • Clutch or brake slips or gear is broken	○	○
P0504 (05–455)	Brake Switch Correlation	• Short in stop light switch signal circuit • Stop light switch • ECM	—	○

DTC No. (See Page)	Detection Item	Trouble Area	*1 CHK ENG	Memory
P0555 (05–459)	Brake Booster Pressure Sensor Circuit	• Open or short in brake booster pressure sensor circuit • Brake booster pressure sensor • Vacuum hose • ECM	○	○
P0556 (05–462)	Brake Booster Pressure Sensor CircuitRange/Performance	• Vacuum hose (between the brake booster and intake manifold, the brake booster and brake booster pressure sensor, and the intake manifold and manifold absolute pressure sensor) • Open or short in brake booster pressure sensor circuit • Brake booster pressure sensor • Manifold absolute pressure sensor • Brake booster • Open or short in stop light switch circuit • Stop light switch • ECM	○	○
P0557 (05–459)	Brake Booster Pressure Sensor Circuit Low Input	• Same as DTC No. P0555	○	○
P0558 (05–459)	Brake Booster Pressure Sensor Circuit High Input	• Same as DTC No. P0555	○	○
P0560 (05–467)	System Voltage	• Open in back–up power source circuit • ECM	○	○
P0571 (05–1711)	Brake Switch "A" Circuit	• Cruise control system	—	○
P0604 (05–470)	Internal Control Module Random Access Memory (RAM) Error	• ECM	○	○
P0606 (05–470)	ECM/PCM Processor		○	○
P0607 (05–470)	Control Module Performance		○	○
P0617 (05–471)	Starter Relay Circuit High	• Short in park/neutral position switch (A/T) • Park/neutral position switch (A/T) • Ignition switch • ECM	○	○
P0657 (05–470)	Actuator Supply Voltage Circuit / Open	• ECM	○	○
P0705 *4 (05–474)	Transmission Range Sensor Circuit Malfunction (PRNDL Input)	• Short in park/neutral position switch circuit • Park/neutral position switch • ECM	○	○
P0710 *4 (05–941)	Transmission Fluid Temperature Sensor "A" circuit	• Electronic controlled automatic transmission (ECT)	○	○
P0711 *3,4 (05–943)	Transmission Fluid Temperature Sensor "A" Performance	• Electronic controlled automatic transmission (ECT)	○	○
P0712 *4 (05–941)	Transmission Fluid Temperature Sensor "A" Circuit Low Input	• Electronic controlled automatic transmission (ECT)	○	○
P0713 *4 (05–941)	Transmission Fluid Temperature Sensor "A" Circuit High Input	• Electronic controlled automatic transmission (ECT)	○	○
P0717 *4 (05–945)	Input/Turbine Speed Sensor "A" Circuit No Signal	• Electronic controlled automatic transmission (ECT)	○	○
P0724 *4 (05–947)	Brake Switch "B" Circuit High	• Short in stop light switch signal circuit • Stop light switch • ECM	○	○
P0741 *3,4 (05–948)	Torque Converter Clutch Circuit Performance or Stuck Off	• Electronic controlled automatic transmission (ECT)	○	○
P0743 *4 (05–951)	Torque Converter Clutch Circuit Electrical	• Electronic controlled automatic transmission (ECT)	○	○

DTC No. (See Page)	Detection Item	Trouble Area	*1 CHK ENG	Memory
P0746 *3,4 (05–954)	Pressure Control Solenoid "A" Performance (Shift Solenoid Valve SL1)	• Electronic controlled automatic transmission (ECT)	○	○
P0748 *4 (05–956)	Pressure Control Solenoid "A" Electrical (Shift Solenoid Valve SL1)	• Electronic controlled automatic transmission (ECT)	○	○
P0766 *3,4 (05–962)	Shift Solenoid "D" Performance (Shift Solenoid Valve S4)	• Electronic controlled automatic transmission (ECT)	○	○
P0776 *3,4 (05–963)	Pressure Control Solenoid "B" Performance (Shift Solenoid Valve SL2)	• Electronic controlled automatic transmission (ECT)	○	○
P0778 *4 (05–956)	Pressure Control Solenoid "B" Electrical (Shift Solenoid Valve SL2)	• Electronic controlled automatic transmission (ECT)	○	○
P0793 *4 (05–965)	Intermediate Shaft Speed Sensor "A" Circuit No Signal	• Electronic controlled automatic transmission (ECT)	○	○
P0982 *4 (05–956)	Shift Solenoid "D" Control Low	• Electronic controlled automatic transmission (ECT)	○	○
P0983 *4 (05–956)	Shift Solenoid "D" Control High	• Electronic controlled automatic transmission (ECT)	○	○
P1235 (05–477)	High Pressure Fuel Pump Circuit	• Open or short in fuel pump (high pressure) • Fuel pump (high pressure) • ECM	○	○
P2008 (05–480)	Intake Manifold Runner Control Circuit/Open (Bank 1)	• Open of short in VSV for IACV circuit • VSV for IACV • ECM	○	○
P2102 (05–483)	Throttle Actuator Control Motor Circuit Low	• Open in throttle control motor circuit • Throttle control motor • ECM	○	○
P2103 (05–483)	Throttle Actuator Control Motor Circuit High	• Short in throttle control motor circuit • Throttle control motor • ECM	○	○
P2111 (05–485)	Throttle Actuator Control System – Stuck Open	• Throttle control motor circuit • Throttle control motor • Throttle body • Throttle valve	○	○
P2112 (05–485)	Throttle Actuator Control System – Stuck Closed		○	○
P2118 (05–487)	Actuator Control Motor Current Range/Performance	• Open in ETCS power source circuit • ECM	○	○
P2119 (05–490)	Throttle Actuator Control Throttle Body Range/Performance	• Electric throttle control system • ECM	○	○
P2120 (05–492)	Throttle/Pedal Position Sensor/ Switch "D" Circuit	• Open or short in accelerator pedal position sensor circuit • Accelerator pedal position sensor • ECM	○	○
P2121 (05–499)	Throttle/Pedal Position Sensor/ Switch "D" Circuit Range/Performance	• Open or short in accelerator pedal position sensor circuit • Accelerator pedal position sensor • ECM	○	○

DTC No. (See Page)	Detection Item	Trouble Area	*1 CHK ENG	Memory
P2122 (05–492)	Throttle/Pedal Position Sensor/ Switch "D" Circuit Low Input	• Same as DTC No. P2120	○	○
P2123 (05–492)	Throttle/Pedal Position Sensor/ Switch "D" Circuit High Input		○	○
P2125 (05–492)	Throttle/Pedal Position Sensor/ Switch "E" Circuit		○	○
P2127 (05–492)	Throttle/Pedal Position Sensor/ Switch "E" Circuit Low Input		○	○
P2128 (05–492)	Throttle/Pedal Position Sensor/ Switch "E" Circuit High Input		○	○
P2135 (05–356)	Throttle Pedal Position Sensor/ Switch "A"/"B" Voltage Correlation	• VTA1 and VTA2 circuit are short–circuited • Throttle position sensor (built in throttle body) • ECM	○	○
P2138 (05–492)	Throttle Pedal Position Sensor/ Switch "D"/"E" Voltage Correlation	• Same as DTC No. P2120	○	○
P2195 *3 (05–363)	Oxygen Sensor Signal Stuck Lean (Bank 1 Sensor 1)	• Open or short in heated oxygen sensor (bank 1, 2 sensor 1) circuit • Heated oxygen sensor (bank 1, 2 sensor 1) • Heated oxygen sensor heater (bank 1, 2 sensor 1) • EFI relay • Air induction system • Fuel pressure • Injector • ECM	○	○
P2196 *3 (05–363)	Oxygen Sensor Signal Stuck Rich (Bank 1 Sensor 1)		○	○
P2197 *3 (05–363)	Oxygen Sensor Signal Stuck Lean (Bank 2 Sensor 1)		○	○
P2198 *3 (05–363)	Oxygen Sensor Signal Stuck Rich (Bank 2 Sensor 1)		○	○
P2716 *4 (05–967)	Pressure Control Solenoid "D" Electrical	• Electronic controlled automatic transmission (ECT)	○	○
B2799 (05–1625)	Engine Immobiliser System Malfunction	• Immobiliser system	—	○

*1: CHK ENG (Check engine warning light) is illuminated
*2: CHK ENG (Check engine warning light) is illuminated or blinks
*3: For Euro–OBD vehicles only.
*4: For A/T only.

05CDV–01

LOCATION

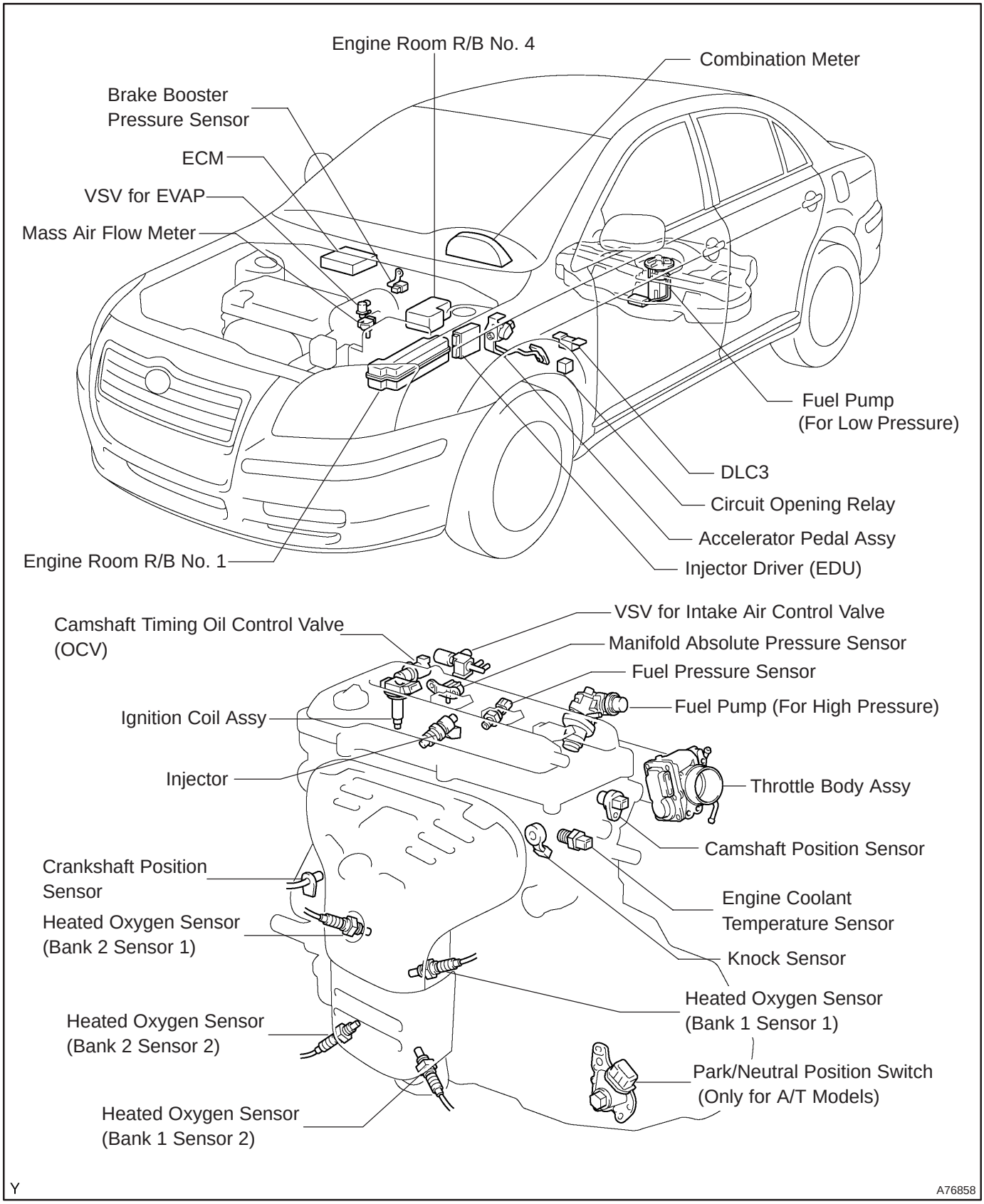

05CDW–01

TERMINALS OF ECM

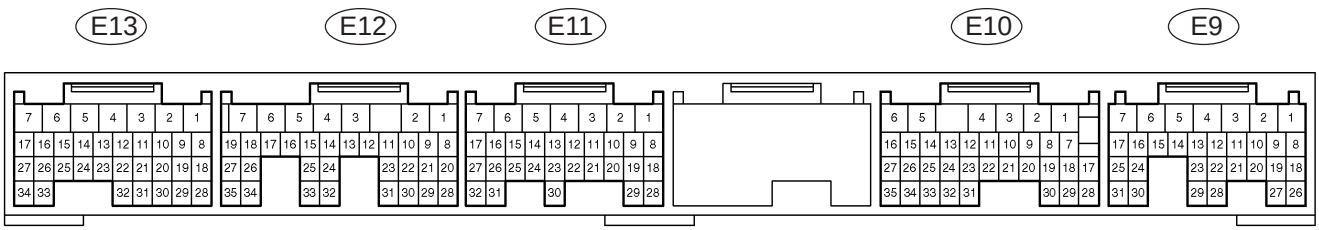

Y

A53766

Symbols (Terminal No.)	Wiring Color	Condition	STD Voltage (V)
BATT (E9–3) – E1 (E11–1)	B–Y – BR	Always	9 to 14
+BM (E10–6) – E1 (E11–1)	G–Y – BR	Always	9 to 14
IGSW (E9–9) – E1 (E11–1)	B–W – BR	IG switch ON	9 to 14
+B (E9–1) – E1 (E11–1)	B–R – BR	IG switch ON	9 to 14
+B2 (E9–2) – E1 (E11–1)	B–R – BR	IG switch ON	9 to 14
MREL (E9–8) – E1 (E11–1)	GR – BR	IG switch ON	9 to 14
IREL (E10–35) – E1 (E11–1)	V – BR	IG switch ON	9 to 14
VC (E13–18) – E2 (E13–28)	R–W – BR	IG switch ON	4.5 to 5.5
VTA1 (E13–21) – E2 (E13–28)	L–W – BR	IG switch ON, Accelerator pedal fully released	0.4 to 1.0
		IG switch ON, Accelerator pedal fully depressed	3.2 to 4.8
VTA2 (E13–31) – E2 (E13–28)	B–R – BR	IG switch ON, Accelerator pedal fully released	2.1 to 3.1
		IG switch ON, Accelerator pedal fully depressed	4.5 to 5.5
VPA (E9–22) – EPA (E9–28)	G – Y	IG switch ON, Accelerator pedal fully released	0.5 to 1.1
		IG switch ON, Accelerator pedal fully depressed	2.5 to 4.6
VPA2 (E9–23) – EPA2 (E9–29)	W – Y	IG switch ON, Accelerator pedal fully released	1.5 to 2.9
		IG switch ON, Accelerator pedal fully depressed	3.5 to 5.5
VCPA (E9–26) – EPA (E9–28)	B – Y	IG switch ON	4.5 to 5.5
VCP2 (E9–27) – EPA2 (E9–29)	B – Y	IG switch ON	4.5 to 5.5
VG (E13–30) – EVG (E13–29)	L–Y – G	Idling, P or N position, A/C switch OFF	0.5 to 3.0
THA (E13–20) – E2 (E13–28)	GR – BR	Idling, Intake air temperature 20°C (68°F)	0.5 to 3.4
THW (E13–19) – E2 (E13–28)	B–W – BR	Idling, Coolant temperature 80°C (176°F)	0.2 to 1.0
#1 (E13–1) – E01 (E13–7) #2 (E13–2) – E01 (E13–7) #3 (E13–3) – E01 (E13–7) #4 (E13–4) – E01 (E13–7)	G–W – W–B W–R – W–B R–W – W–B W–L – W–B	IG switch ON	9 to 14
		Idling	Pulse generation (See page 05–415)
IJF1 (E13–25) – E01 (E13–7)	R–B – W–B	Idling	Pulse generation (See page 05–415)
IGT1 (E13–8) – E1 (E11–1) IGT2 (E13–9) – E1 (E11–1) IGT3 (E13–10) – E1 (E11–1) IGT4 (E13–11) – E1 (E11–1)	R–W – BR P – BR LG–B – BR L–Y – BR	Idling	Pulse generation (See page 05–439)
IGF1 (E13–24) – E1 (E11–1)	W–R – BR	IG switch ON	4.5 to 5.5
		Idling	Pulse generation (See page 05–439)
G2+ (E11–27) – NE– (E11–24)	W – R	Idling	Pulse generation (See page 05–436)
NE+ (E11–25) – NE– (E11–24)	G – R	Idling	Pulse generation (See page 05–433)
FC (E9–10) – E1 (E11–1)	G–Y – BR	IG switch ON	9 to 14
M+ (E11–3) – E01 (E13–7) M– (E11–2) – E01 (E13–7)	B – W–B W – W–B	Idling	Pulse generation

Symbols (Terminal No.)	Wiring Color	Condition	STD Voltage (V)
OX1A (E12–22) – E2 (E13–28)	B – BR	Maintain engine speed at 2,500 rpm for 2 minutes after warming up	Pulse generation (See page 05–363)
OX1B (E12–21) – O1B– (E11–26)	B – W		
OX2A (E12–23) – E2 (E13–28)	R – BR		
OX2B (E12–29) – O2B– (E11–31)	R – G		
HT1A (E12–5) – E03 (E11–7) HT1B (E12–25) – E03 (E11–7) HT2A (E12–4) – E03 (E11–7) HT2B (E12–33) – E03 (E11–7)	Y – W–B P – W–B L – W–B L–B – W–B	Idling	Below 3.0
		IG switch ON	9 to 14
KNK1 (E12–1) – EKNK (E12–2)	B – W	Maintain engine speed at 4,000 rpm after warming up	Pulse generation (See page 05–429)
OC1+ (E11–16) – OC1– (E11–15)	W–G – Y–B	IG switch ON	Pulse generation (See page 05–322)
EVP1 (E13–34) – E01 (E13–7)	W–G – W–B	IG switch ON	9 to 14
SCV (E13–5) – E1 (E11–1)	L–B – BR	IG switch ON	9 to 14
PIM (E13–33) – E2 (E13–28)	G–W – BR	IG switch ON	3.3 to 3.9
		Apply vacuum 26.7 kPa (200 mmHg, 7.9 in.Hg)	2.6 to 3.0
PB (E13–26) – E2 (E13–28)	Y – BR	IG switch ON	3.3 to 3.9
		Apply vacuum 26.7 kPa (200 mmHg, 7.9 in.Hg)	2.6 to 3.0
PR (E13–23) – E2 (E13–28)	Y–G – BR	Idling	2.1 to 3.2
FP+ (E12–6) – E1 (E11–1) FP– (E12–3) – E1 (E11–1)	R – BR G – BR	Idling	Pulse generation (See page 05–477)
STA (E13–17) – E1 (E11–1)	B–Y – BR	Shift position in neutral, IG switch START	6.0 or more
STP (E10–19) – E1 (E11–1)	G–W – BR	Brake pedal is depressed	9 to 14
		Brake pedal is released	Below 1.5
ST1– (E10–12) – E1 (E11–1)	G–W – BR	IG switch ON, Brake pedal is depressed	Below 1.5
		IG switch ON, Brake pedal is released	7.5 to 14
W (E9–11) – E01 (E13–7)	W – W–B	Idling	9 to 14
		IG switch ON	Below 3.0
ELS (E9–12) – E1 (E11–1)	G – BR	Taillight switch ON, Defogger switch ON	7.5 to 14
		Taillight switch OFF, Defogger switch OFF	0 to 1.5
TACH (E9–5) – E1 (E11–1)	GR–R – BR	Idling	Pulse generation
SPD (E10–17) – E01 (E13–7)	V–W – W–B	IG switch ON	4.5 to 5.5
TC (E9–20) – E1 (E11–1)	W–L – BR	IG switch ON	9 to 14
SIL (E9–18) – E1 (E11–1)	W–G – BR	During charge of gears	Pulse generation
PSW (E11–10) – E1 (E11–1)	G – BR	While turning the steering wheel	Below 1.5
F/PS (E9–14) – E1 (E11–1)	LG–B – BR	IG switch ON	Below 1.5

05CDX–01

PROBLEM SYMPTOMS TABLE

When the malfunction is not confirmed in the DTC check and the problem still can not be confirmed in the basic inspection either, proceed to this problem symptoms table and troubleshoot according to the number given below.

Symptom	Suspected Area	See page
Engine does not crank (Does not start)	2. Starter	19–10
	3. Starter relay	19–10
	4. Park/neutral position switch	40–8
No initial combustion (Does not start)	1. ECM power source circuit	05–502
	2. Ignition coil assy	05–439
	3. Fuel pump control circuit	05–507
	4. Injector circuit	05–415
No complete combustion (Does not start)	1. Ignition coil assy	05–439
	2. Fuel pump control circuit	05–507
	3. Injector circuit	05–415
Engine cranks normally (Difficult to start)	1. Starter signal circuit	05–513
	2. Ignition coil assy	05–439
	3. Spark plug	18–14
	4. Compression	14–181
	5. Injector circuit	05–415
	6. Fuel pump control circuit	05–507
Cold engine (Difficult to start)	1. Starter signal circuit	05–513
	2. Injector circuit	05–415
	3. Ignition coil assy	05–439
	4. Spark plug	18–14
	5. Fuel pump control circuit	05–507
Hot engine (Difficult to start)	1. Starter signal circuit	05–513
	2. Injector circuit	05–415
	3. Ignition coil assy	05–439
	4. Spark plug	18–14
	5. Fuel pump control circuit	05–507
High engine idle speed (Poor idling)	1. ECM power source circuit	05–502
	2. Park/neutral position switch	40–8
	3. Back up power source circuit	05–467
Low engine idle speed (Poor idling)	1. Park/neutral position switch	40–8
	2. Injector circuit	05–415
	3. Back up power source circuit	05–467
	4. Fuel pump control circuit	05–507
Rough idling (Poor idling)	1. Mass air flow meter circuit	05–336
	2. Vacuum sensor circuit	05–342
	3. Injector circuit	05–415
	4. Fuel pump control circuit	05–507
	5. Ignition coil assy	05–439
	6. Compression	14–181
	7. Back up power source circuit	05–467
Hunting (Poor idling)	1. Mass air flow meter circuit	05–336
	2. Vacuum sensor circuit	05–342
	3. ECM power source circuit	05–502
Hesitation/Poor acceleration (Poor driveability)	1. Mass air flow meter circuit	05–336
	2. Vacuum sensor circuit	05–342
	3. Injector circuit	05–415
	4. Ignition coil assy	05–439
	5. Fuel pump control circuit	05–507
Muffler explosion after fire (Poor driveability)	1. Ignition coil assy	05–439
	2. Spark plug	18–14
	3. Injector circuit	05–415

Symptom	Suspected Area	See page
Surging (Poor driveability)	1. Spark plug 2. Injector circuit	18–14 05–415
Engine stall (Soon after starting)	1. Mass air flow meter circuit 2. Vacuum sensor circuit	05–336 05–342
Engine stall (After accelerator pedal depressed)	1. Mass air flow meter circuit 2. Vacuum sensor circuit	05–336 05–342
Engine stall (After accelerator pedal released)	1. Mass air flow meter circuit 2. Vacuum sensor circuit 3. ECM	05–336 05–342 01–32
Engine stall (During A/C operation)	1. A/C signal circuit (Compressor circuit) 2. ECM	05–1100 01–32
Engine stall (When shifting N to D)	1. Park/neutral position switch	40–8

DTC	P0010	CAMSHAFT POSITION ”A” ACTUATOR CIRCUIT (BANK 1)

HINT:
This is the procedure of oil control valve (OCV).

CIRCUIT DESCRIPTION

The VVT system controls the intake camshaft to provide the optimal valve timing for every driving condition. This control is performed based on the signals, such conditions as intake air volume, throttle position and engine coolant temperature.
The ECM controls the oil control valve (OCV), based on the signals output from the sensors. The VVT controller regulates the intake camshaft angle using oil pressure through the OCV. As result, the relative position between the camshaft and the crankshaft becomes optimal, and the engine torque improves, fuel economy improves, exhaust emissions decrease under overall driving conditions. Also, the ECM detects the actual valve timing using the signals from the camshaft position sensor and the crankshaft position sensor, and performs feedback control. This is how target valve timing is achieved by the ECM.

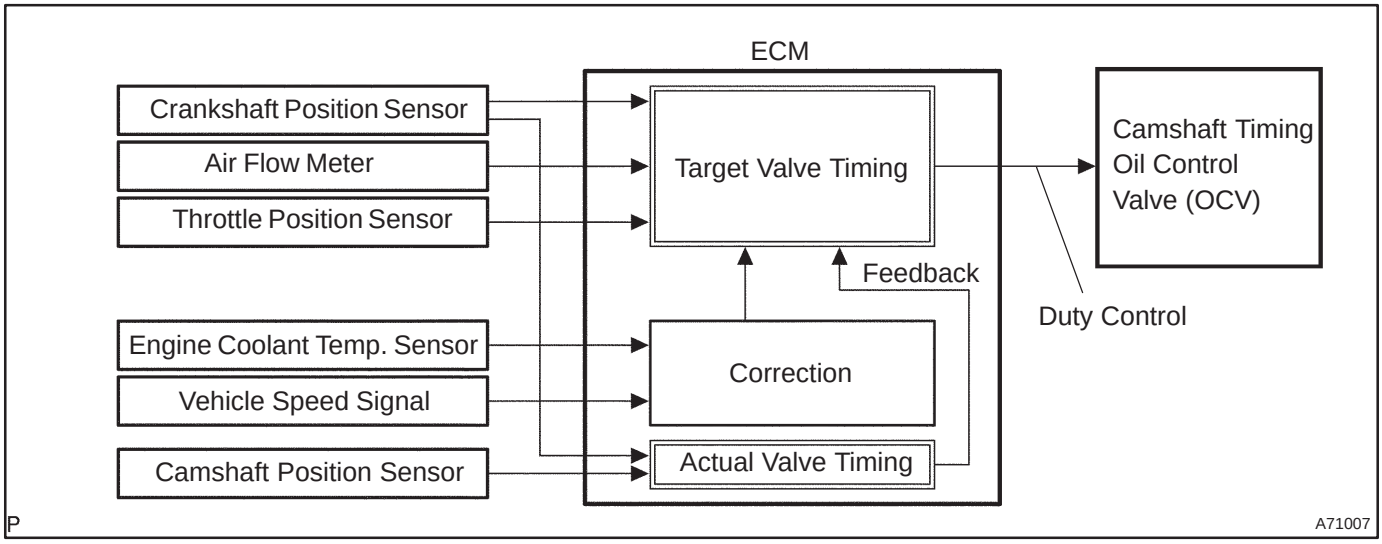

DTC No.	DTC Detection Condition	Trouble Area
P0010	Open or short in OCV circuit	• Open or short in OCV circuit • OCV • ECM

WIRING DIAGRAM

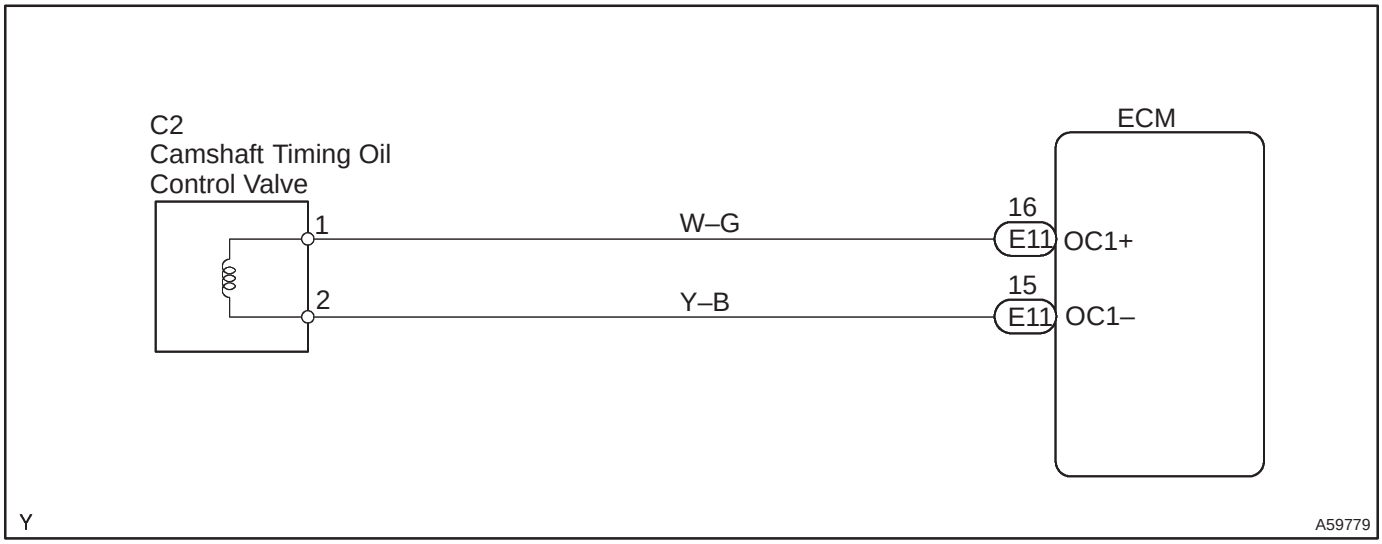

INSPECTION PROCEDURE

HINT:

Read freeze frame data using the hand–held tester. Freeze frame data records the engine conditions when a malfunction is detected. When troubleshooting, it is useful for determining whether the vehicle was running or stopped, the engine was warmed up or not, the air–fuel ratio was lean or rich, etc. at the time of the malfunction.

1	PERFORM ACTIVE TEST BY HAND–HELD TESTER(OPERATE OCV)

(a) Connect the hand–held tester to the DLC3.
(b) Start the engine and warm it up.
(c) Turn the ignition switch ON and push the hand–held tester main switch ON.
(d) Select the item ”DIAGNOSIS / OBD/MOBD / ACTIVE TEST / VVT CTRL B1”.
(e) Check the engine speed when operating the OCV by the hand–held tester.
Standard:

Tester operation	Specified condition
OCV is OFF	Normal engine speed
OCV is ON	Rough idle or engine stall

OK → CHECK FOR INTERMITTENT PROBLEMS

NG

2	INSPECT CAMSHAFT TIMING OIL CONTROL VALVE ASSY(OCV) (See page 10–39)

NG → REPLACE CAMSHAFT TIMING OIL CONTROL VALVE ASSY

OK

3 INSPECT ECM(OCV SIGNAL)

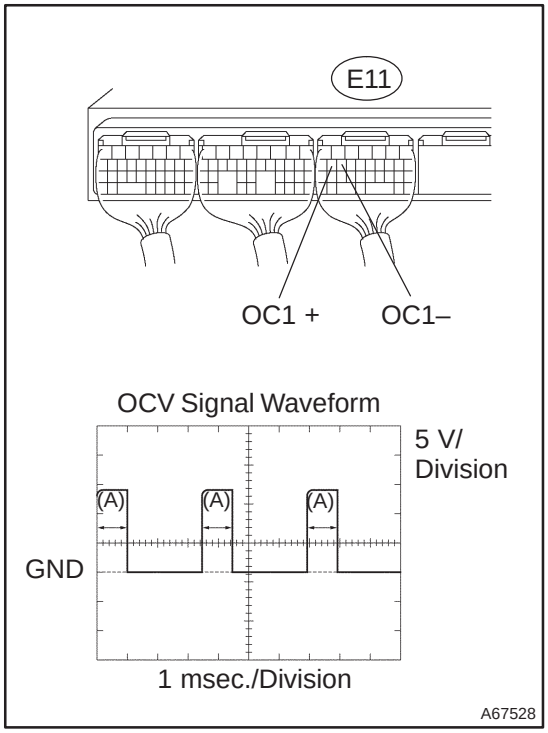

(a) Inspection using the oscilloscope.
(b) During idling, check the waveform between the terminals of the E11 ECM connector.

Standard:

Symbols (Terminal No.)	Specified condition
OC1+ (E11–16) – OC1– (E11–15)	Correct waveform is as shown

HINT:
The waveform frequency (A) is lengthened as the engine speed becomes higher.

NG → **CHECK AND REPLACE ECM (See page 01–32)**

OK

4 CHECK HARNESS AND CONNECTOR(ECM – OCV)

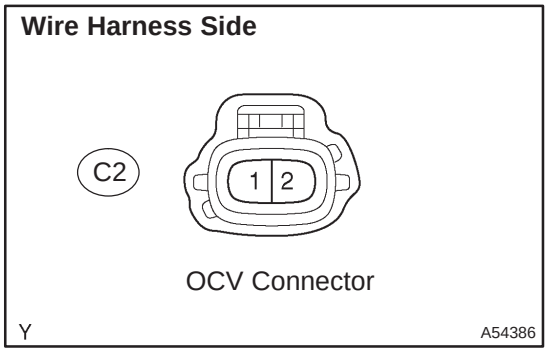

(a) Disconnect the C2 OCV connector.
(b) Disconnect the E11 ECM connector.
(c) Check for continuity between the wire harness side connectors.

Standard (Check for open):

Symbols (Terminal No.)	Specified condition
OCV (C2–1) – OC1+ (E11–16)	Continuity
OCV (C2–2) – OC1– (E11–15)	

Standard (Check for short):

Symbols (Terminal No.)	Specified condition
OCV (C2–1) or OC1+ (E11–16) – Body ground	No continuity
OCV (C2–2) or OC1– (E11–15) – Body ground	

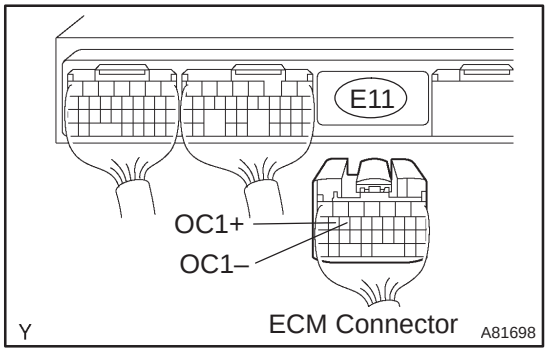

NG → **REPAIR OR REPLACE HARNESS OR CONNECTOR**

OK

CHECK FOR INTERMITTENT PROBLEMS

DTC	P0011	CAMSHAFT POSITION ”A” –TIMING OVER–ADVANCED OR SYSTEM PERFORMANCE (BANK 1)

DTC	P0012	CAMSHAFT POSITION ”A” –TIMING OVER–RETARDED (BANK 1)

CIRCUIT DESCRIPTION

Refer to DTC P0010 on page 05–322.

DTC No.	DTC Detection Condition	Trouble Area
P0011	Condition (a) or (b) continues after engine is warmed up and engine speed at 400 to 4,000 rpm (Problem of the advanced OCV.): (a) Valve timing does not change from current valve timing (b) Current valve timing is fixed	• Valve timing • OCV • Camshaft timing gear assy • ECM
P0012	Condition (a) or (b) continues after engine is warmed up and engine speed at 400 to 4,000 rpm (Problem of the retarded OCV.): (a) Valve timing does not change from current valve timing (b) Current valve timing is fixed	

WIRING DIAGRAM

Refer to DTC P0010 on page 05–322.

INSPECTION PROCEDURE

HINT:

Advanced timing over (Valve timing is out of specified range)	P0011
Retarded timing over (Valve timing is out of specified range)	P0012

- If DTC ”P0011 or P0012” is displayed, check VVT system circuit.
- Read freeze frame data using the hand–held tester. Freeze frame data records the engine conditions when a malfunction is detected. When troubleshooting, it is useful for determining whether the vehicle was running or stopped, the engine was warmed up or not, the air–fuel ratio was lean or rich, etc. at the time of the malfunction.

1	CHECK VALVE TIMING (See page 14–186)

NG → ADJUST VALVE TIMING (See page 14–186)

OK

2	PERFORM ACTIVE TEST BY HAND–HELD TESTER(OPERATE OCV)

(a) Connect the hand–held tester to the DLC3.
(b) Start the engine and warm it up.
(c) Turn the ignition switch ON and push the hand–held tester main switch ON.
(d) Select the item ”DIAGNOSIS / OBD/MOBD / ACTIVE TEST / VVT CTRL B1”.
(e) Check the engine speed when operating the OCV by the hand–held tester.
Standard:

Tester operation	Specified condition
OCV is OFF	Normal engine speed
OCV is ON	Rough idle or engine stall

NG → **Go to step 4**

OK

3	CHECK IF DTC OUTPUTS REOCCUR

(a) Clear the DTC.
(1) Operating the hand–held tester to erase the codes, or disconnecting the battery terminal or the EFI and ETCS fuses for 60 seconds or more.
(b) Start the engine and warm it up.
(c) Drive the vehicle around for 10 minutes or more.
(d) Read output DTC using the hand–held tester.
Standard: No DTC output.
HINT:
*: DTCs P0011 or P0012 is output when a foreign object in engine oil is caught in some part of the system. These codes will stay registered even if the system returns to normal after a short time. These foreign objects are then captured by the oil filter, thus eliminating the source of the problem.

OK → **VVT SYSTEM OK ***

NG

4	INSPECT ECM(OCV SIGNAL)

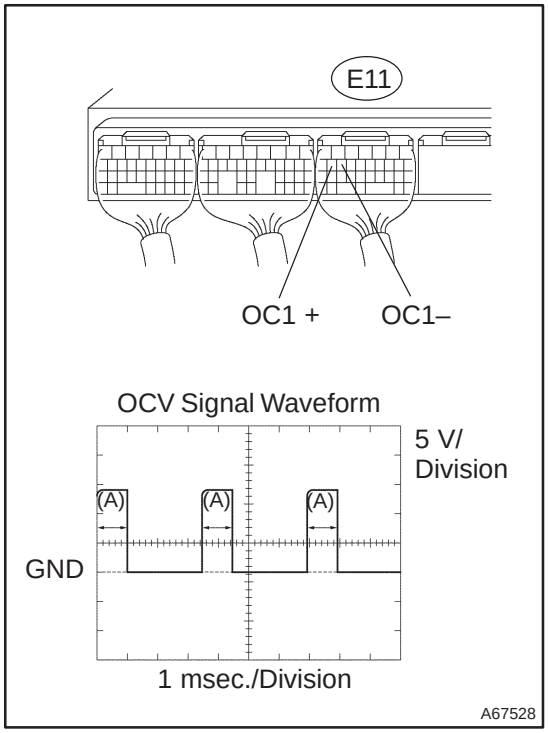

(a) Inspection using the oscilloscope.
(b) During idling, check the waveform between the terminals of the E11 ECM connector.
Standard:

Symbols (Terminal No.)	Specified condition
OC1+ (E11–16) – OC1– (E11–15)	Correct waveform is as shown

HINT:
The waveform frequency (A) is lengthened as the engine speed becomes higher.

NG → **CHECK AND REPLACE ECM (See page 01–32)**

OK

5	INSPECT OIL CONTROL VALVE FILTER

NG → **REPLACE OIL CONTROL VALVE FILTER**

OK

6	INSPECT CAMSHAFT TIMING OIL CONTROL VALVE ASSY(OCV) (See page 10–39)

OK → **Go to step 8**

NG

7	REPLACE CAMSHAFT TIMING OIL CONTROL VALVE ASSY(OCV)

GO

8	INSPECT CAMSHAFT TIMING GEAR ASSY (See page 14–240)

OK → **Go to step 10**

NG

9	REPLACE CAMSHAFT TIMING GEAR ASSY (See page 14–240)

GO

10	CHECK BLOCKAGE(OCV, OIL CHECK VALVE AND OIL HOLE)

NG → REPAIR OR REPLACE

OK

11	CHECK IF DTC OUTPUTS REOCCUR

(a) Clear the DTC.
  (1) Operating the hand–held tester to erase the codes, or disconnecting the battery terminal or the EFI and ETCS fuses for 60 seconds or more.
(b) Start the engine and warm it up.
(c) Drive the vehicle around for 10 minutes or more.
(d) Read output DTC using the hand–held tester.

Standard: No DTC output.

HINT:

*: DTCs P0011 or P0012 is output when a foreign object in engine oil is caught in some part of the system. These codes will stay registered even if the system returns to normal after a short time. These foreign objects are then captured by the oil filter, thus eliminating the source of the problem.

OK → VVT SYSTEM OK

NG

CHECK AND REPLACE ECM (See page 01–32)

DTC	P0016	CRANKSHAFT POSITION –CAMSHAFT POSITION CORRELATION (BANK 1 SENSOR A)

CIRCUIT DESCRIPTION

Refer to DTC P0335 on page 05–433.

DTC No.	DTC Detection Condition	Trouble Area
P0016	Deviation in crankshaft position sensor signal and camshaft position sensor (bank 1) signal (2 trip detection logic)	• Mechanical system (Timing chain has jumped a tooth, chain stretched) • ECM

WIRING DIAGRAM

Refer to DTC P0335 on page 05–433.

INSPECTION PROCEDURE

HINT:

Read freeze frame data using the hand–held tester. Freeze frame data records the engine conditions when a malfunction is detected. When troubleshooting, it is useful for determining whether the vehicle was running or stopped, the engine was warmed up or not, the air–fuel ratio was lean or rich, etc. at the time of the malfunction.

1	CHECK VALVE TIMING (See page 14–186)

(a) Check for loose and jumping teeth of timing chain.

NG → ADJUST VALVE TIMING (See page 14–186) (REPAIR OR REPLACE TIMING CHAIN)

OK ↓

CHECK AND REPLACE ECM (See page 01–32)

DTC	P0031	OXYGEN SENSOR HEATER CONTROL CIRCUIT LOW (BANK 1 SENSOR 1)

DTC	P0032	OXYGEN SENSOR HEATER CONTROL CIRCUIT HIGH (BANK 1 SENSOR 1)

DTC	P0037	OXYGEN SENSOR HEATER CONTROL CIRCUIT LOW (BANK 1 SENSOR 2)

DTC	P0038	OXYGEN SENSOR HEATER CONTROL CIRCUIT HIGH (BANK 1 SENSOR 2)

DTC	P0051	OXYGEN SENSOR HEATER CONTROL CIRCUIT LOW (BANK 2 SENSOR 1)

DTC	P0052	OXYGEN SENSOR HEATER CONTROL CIRCUIT HIGH (BANK 2 SENSOR 1)

DTC	P0057	OXYGEN SENSOR HEATER CONTROL CIRCUIT LOW (BANK 2 SENSOR 2)

DTC	P0058	OXYGEN SENSOR HEATER CONTROL CIRCUIT HIGH (BANK 2 SENSOR 2)

CIRCUIT DESCRIPTION

Refer to DTC P0130 on page 05–363.

HINT:

The ECM provides a pulse width modulated control circuit to adjust current through the heater. The heated oxygen sensor heater circuit uses a relay on the B+ side of the circuit.

Reference (Bank 1 Sensor 1 System Drawing)

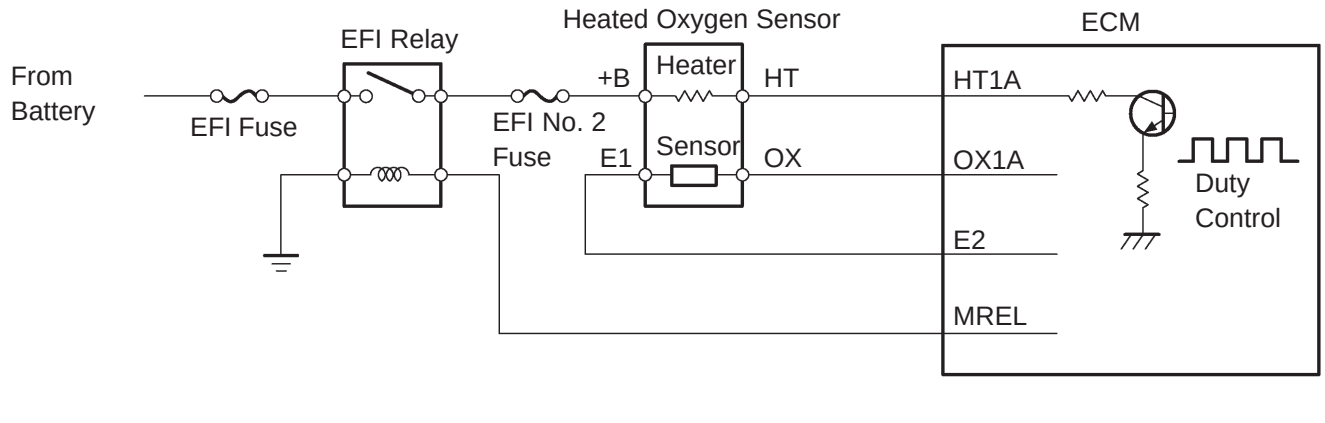

DTC No.	DTC Detection Condition	Trouble Area
P0031 P0037 P0051 P0057	Heated current is 0.2 A or less when heater operates with +B > 10.5 V and < 11.5 V (1 trip detection logic)	• Open in heater circuit of heated oxygen sensor • Heated oxygen sensor heater • EFI relay • EFI fuse • EFI No. 2 fuse • ECM
	Heated current is 0.25 A or less when heater operates with +B ≧ 11.5 V (1 trip detection logic)	
P0032 P0038 P0052 P0058	Heated current exceeds 2 A when heater operates. (1 trip detection logic)	• Short in heater circuit of heated oxygen sensor • Heated oxygen sensor heater • ECM

HINT:

- Bank 1 refers to the No. 1 and No. 4 cylinders.
- Bank 2 refers to the No. 2 and No. 3 cylinders.
- Sensor 1 refers to the sensor closest to the engine assembly.
- Sensor 2 refers to the sensor farthest away from the engine assembly.

WIRING DIAGRAM

Refer to DTC P0130 on page 05–363.

INSPECTION PROCEDURE

HINT:

- If different DTCs related to different systems that have terminal E2 as the ground terminal are output simultaneously, terminal E2 may be open.
- Read freeze frame data using the hand–held tester. Freeze frame data records the engine conditions when a malfunction is detected. When troubleshooting, it is useful for determining whether the vehicle was running or stopped, the engine was warmed up or not, the air–fuel ratio was lean or rich, etc. at the time of the malfunction.

1 INSPECT HEATED OXYGEN SENSOR(HEATER RESISTANCE)

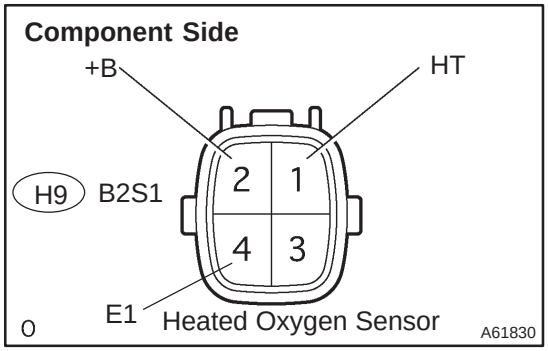

(a) Disconnect the H7, H8, H9 or H10 heated oxygen sensor connector.

(b) Measure the resistance between the terminals of the heated oxygen sensor connector.

Standard (Bank 2 sensor 1):

Terminal No.	Resistance
1 (HT) – 2 (+B)	11 to 16 Ω at 20°C (68°F)
1 (HT) – 4 (E1)	No Continuity

(c) Measure the resistance between the terminals of the heated oxygen sensor connector.

Standard (Except Bank 2 sensor 1):

Terminal No.	Resistance
1 (HT) – 2 (+B)	11 to 16 Ω at 20°C (68°F)
1 (HT) – 4 (E1)	No Continuity

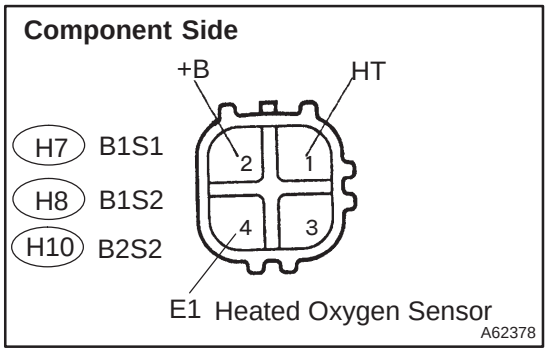

NG → **REPLACE HEATED OXYGEN SENSOR**

OK

2 INSPECT EFI RELAY

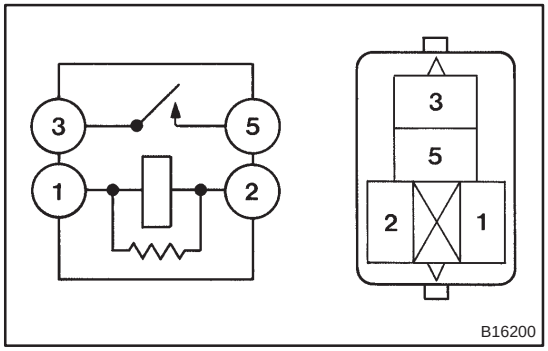

(a) Remove the EFI relay from the engine room R/B No. 4.

(b) Inspect the EFI relay.

Standard:

Terminal No.	Specified condition
1 – 2	Continuity
3 – 5	No Continuity
	Continuity (Apply battery voltage terminals 1 and 2)

NG → **REPLACE EFI RELAY**

OK

3 INSPECT ECM(HT1A, HT1B, HT2A OR HT2B VOLTAGE)

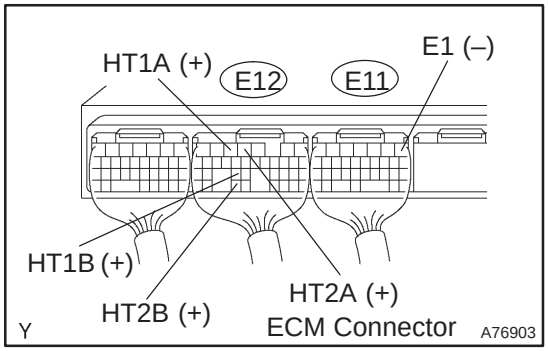

(a) Turn the ignition switch ON.

(b) Measure the voltage between the applicable terminals of the E11 and E12 ECM connectors.

Standard:

Symbols (Terminal No.)	Specified condition
HT1A (E12–5) – E1 (E11–1)	9 to 14 V
HT1B (E12–25) – E1 (E11–1)	
HT2A (E12–4) – E1 (E11–1)	
HT2B (E12–33) – E1 (E11–1)	

HINT:

- The HT1A means the heated oxygen sensor bank 1 sensor 1.
- The HT1B means the heated oxygen sensor bank 1 sensor 2.
- The HT2A means the heated oxygen sensor bank 2 sensor 1.
- The HT2B means the heated oxygen sensor bank 2 sensor 2.

OK → **CHECK AND REPLACE ECM (See page 01–32)**

NG

4 CHECK HARNESS AND CONNECTOR(HEATED OXYGEN SENSOR – ECM, HEATED OXYGEN SENSOR – EFI RELAY)

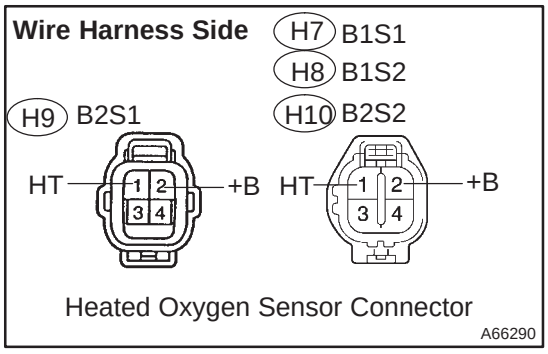

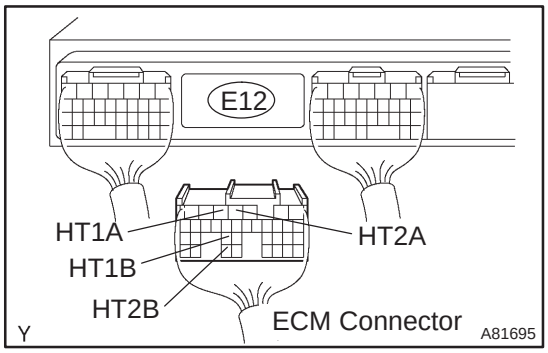

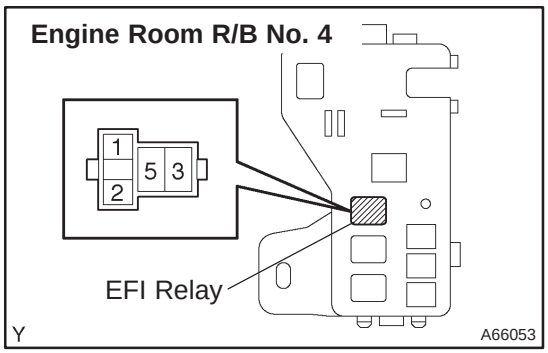

(a) Check the harness and connector between the ECM and heated oxygen sensor connectors.

(1) Disconnect the H7, H8, H9 or H10 heated oxygen sensor connector.

(2) Disconnect the E12 ECM connector.

(3) Check for continuity between the wire harness side connectors.

Standard (Check for open):

Symbols (Terminal No.)	Specified condition
HT (H7–1) – HT1A (E12–5)	Continuity
HT (H8–1) – HT1B (E12–25)	
HT (H9–1) – HT2A (E12–4)	
HT (H10–1) – HT2B (E12–33)	

Standard (Check for short):

Symbols (Terminal No.)	Specified condition
HT (H7–1) or HT1A (E12–5) – Body ground	No continuity
HT (H8–1) or HT1B (E12–25) – Body ground	
HT (H9–1) or HT2A (E12–4) – Body ground	
HT (H10–1) or HT2B (E12–33) – Body ground	

(b) Check the harness and connector between the heated oxygen sensor connector and EFI relay.

(1) Inspect the EFI No.2 fuse.

- Remove the EFI No.2 fuse from the engine room R/B No. 4.
- Check for continuity in the EFI No.2 fuse.

Standard: Continuity

(2) Disconnect the H7, H8, H9 or H10 heated oxygen sensor connector.

(3) Remove the EFI relay from the engine room R/B No. 4.

(4) Check for continuity between the wire harness side connectors.

Standard (Check for open):

Symbols (Terminal No.)	Specified condition
+B (H7–2) – EFI relay (3)	Continuity
+B (H8–2) – EFI relay (3)	
+B (H9–2) – EFI relay (3)	
+B (H10–2) – EFI relay (3)	

Standard (Check for short):

Symbols (Terminal No.)	Specified condition
+B (H7–2) or EFI relay (3) – Body ground	No continuity
+B (H8–2) or EFI relay (3) – Body ground	
+B (H9–2) or EFI relay (3) – Body ground	
+B (H10–2) or EFI relay (3) – Body ground	

NG → REPAIR OR REPLACE HARNESS OR CONNECTOR

OK

CHECK AND REPLACE ECM (See page 01–32)

DTC	P0100	MASS OR VOLUME AIR FLOW CIRCUIT

DTC	P0102	MASS OR VOLUME AIR FLOW CIRCUIT LOW INPUT

DTC	P0103	MASS OR VOLUME AIR FLOW CIRCUIT HIGH INPUT

CIRCUIT DESCRIPTION

The mass air flow meter uses a platinum hot wire. The hot wire mass air flow meter consists of a platinum hot wire, a temperature sensor and a control circuit installed in a plastic housing. The hot wire mass air flow meter works on the principle that the hot wire and temperature sensor located in the intake air bypass of the housing detect any changes in the intake air temperature.

The hot wire is maintained at the set temperature by controlling the current flow through the hot wire. This current flow is then measured as the output voltage of the mass air flow meter.

The circuit is constructed so that the platinum hot wire and temperature sensor provide a bridge circuit, with the power transistor controlled so that the potential of A and B remains equal to maintain the set temperature.

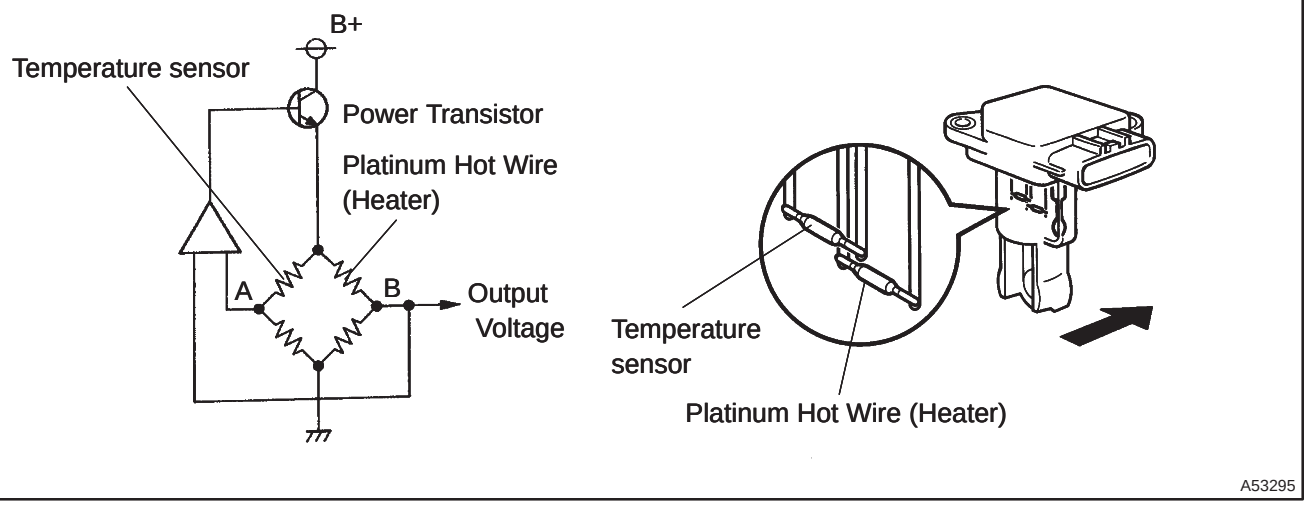

DTC No.	DTC Detection Condition	Trouble Area
P0100	Open or short in mass air flow meter circuit with engine speed 4,000 rpm or less for more than 3 seconds.	• Open or short in mass air flow meter circuit • Mass air flow meter • ECM
P0102	Open in mass air flow meter circuit with engine speed 4,000 rpm or less for more than 3 seconds.	
P0103	Short in mass air flow meter circuit with engine speed 4,000 rpm or less for more than 3 seconds.	

HINT:

After confirming DTC ”P0100, P0102 or P0103”, use the hand–held tester to confirm the air flow rate from the ”DIAGNOSIS / OBD/MOBD / DATA LIST / ALL”.

Air flow rate (gm/s)	Malfunction
Approximately 0.0	• Mass air flow meter power source circuit open • VG circuit open or short
271.0 or more	• EVG circuit open

WIRING DIAGRAM

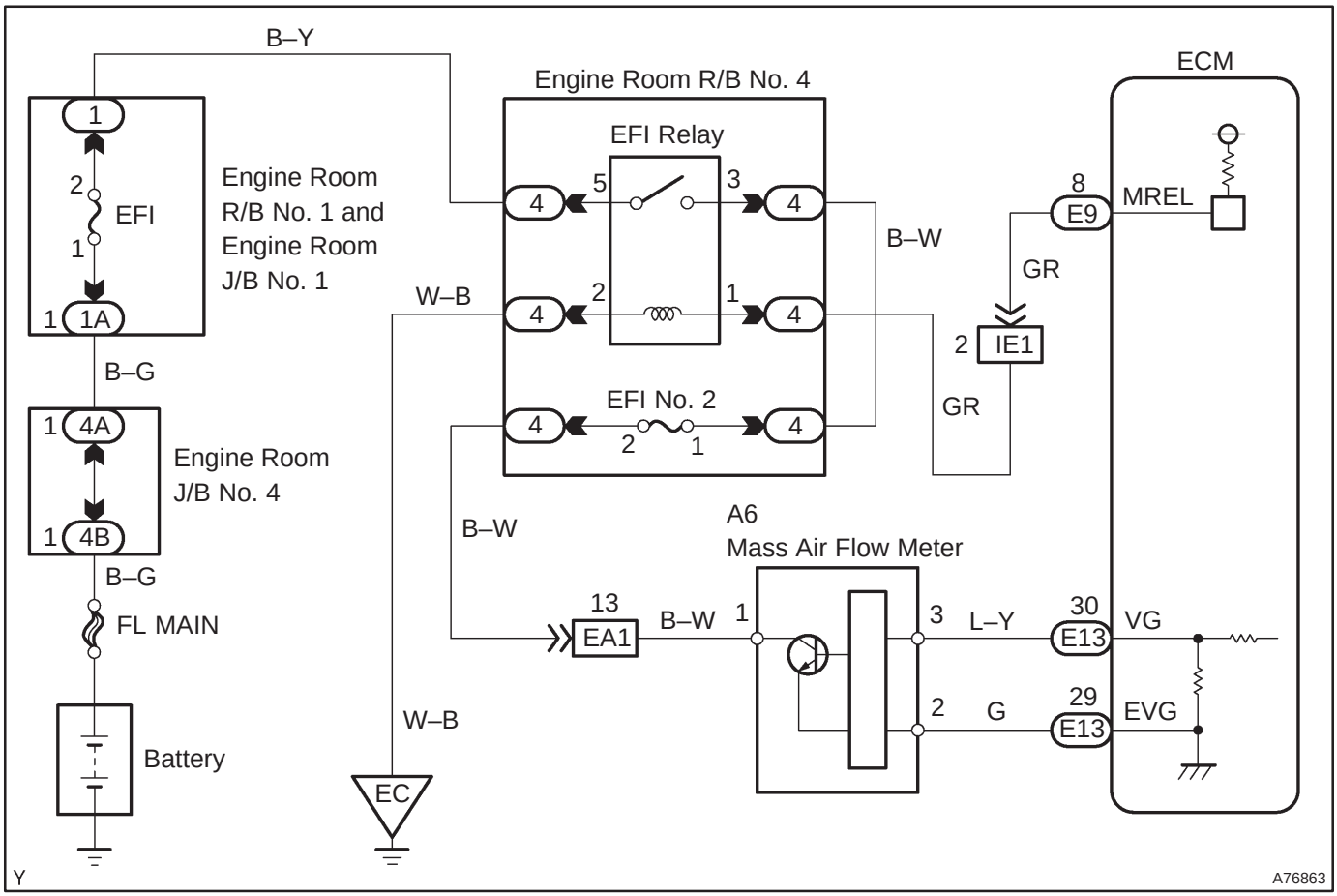

INSPECTION PROCEDURE

HINT:

Read freeze frame data using the hand–held tester. Freeze frame data records the engine conditions when a malfunction is detected. When troubleshooting, it is useful for determining whether the vehicle was running or stopped, the engine was warmed up or not, the air–fuel ratio was lean or rich, etc. at the time of the malfunction.

1	READ VALUE OF HAND–HELD TESTER(MASS AIR FLOW RATE)

(a) Connect the hand–held tester to the DLC3.
(b) Start the engine.
(c) Push the hand–held tester main switch ON.
(d) Select the item ”DIAGNOSIS / OBD/MOBD / DATA LIST / ALL / MAF” and read its value displayed on the hand–held tester.

Result:

Air flow rate (gm/s)	Proceed to
0.0	A
271.0 or more	B
1 ≦ Mass Air Flow Rate ≦ 270.0 (*1)	C

*1: The value must be changed when the throttle valve is opened or closed.

B	Go to step 5
C	CHECK FOR INTERMITTENT PROBLEMS

A

2 INSPECT MASS AIR FLOW METER(POWER SOURCE)

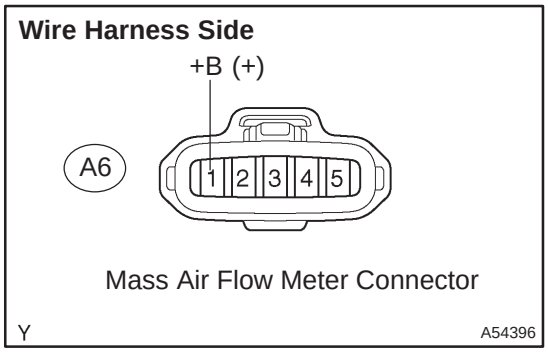

(a) Disconnect the A6 mass air flow meter connector.
(b) Turn the ignition switch ON.
(c) Measure the voltage between the terminal of the wire harness side connector and body ground.

Standard:

Symbols (Terminal No.)	Specified condition
+B (A6–1) – Body ground	9 to 14 V

NG	Go to step 7

OK

3 INSPECT ECM(VG VOLTAGE)

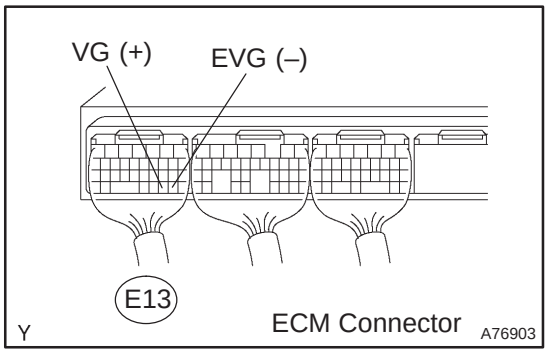

(a) Start the engine.
(b) Measure the voltage between the specified terminals of the E13 ECM connector.

Standard:

Symbols (Terminal No.)	Condition	Specified condition
VG (E13–30) – EVG (E13–29)	Engine is idling	0.5 to 3.0 V

HINT:
The shift position should be P or N and the A/C switch should be turned OFF.

OK	CHECK AND REPLACE ECM (See page 01–32)

NG

4 CHECK HARNESS AND CONNECTOR(ECM – MASS AIR FLOW METER)

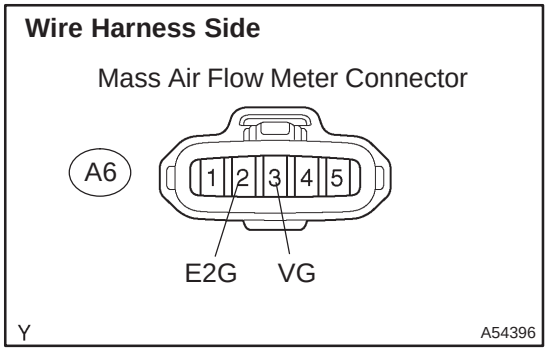

(a) Disconnect the A6 mass air flow meter connector.
(b) Disconnect the E13 ECM connector.
(c) Check for continuity between the wire harness side connectors.

Standard (Check for open):

Symbols (Terminal No.)	Specified condition
VG (A6–3) – VG (E13–30)	Continuity
E2G (A6–2) – EVG (E13–29)	

Standard (Check for short):

Symbols (Terminal No.)	Specified condition
VG (A6–3) or VG (E13–30) – Body ground	No continuity

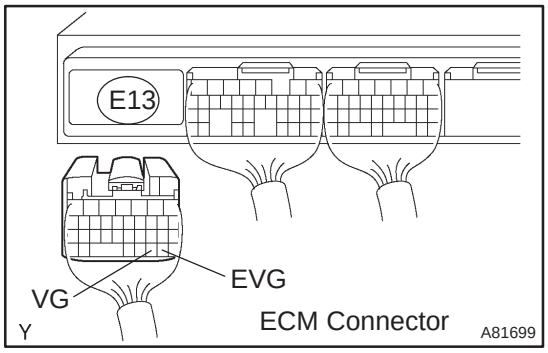

NG → **REPAIR OR REPLACE HARNESS OR CONNECTOR**

OK

REPLACE MASS AIR FLOW METER

5 INSPECT ECM(SENSOR GROUND)

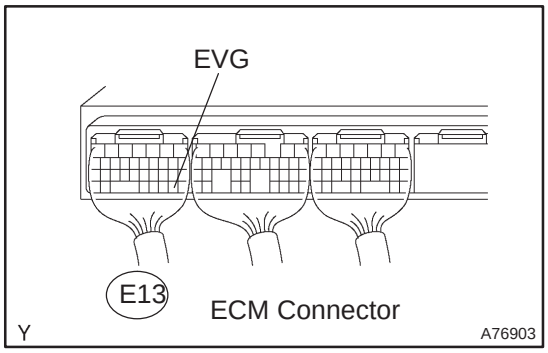

(a) Check for continuity between the terminal of the E13 ECM connector and body ground.

Standard:

Symbols (Terminal No.)	Specified condition
EVG (E13–29) – Body ground	Continuity

NG → **CHECK AND REPLACE ECM (See page 01–32)**

OK

6 CHECK HARNESS AND CONNECTOR(ECM – MASS AIR FLOW METER)

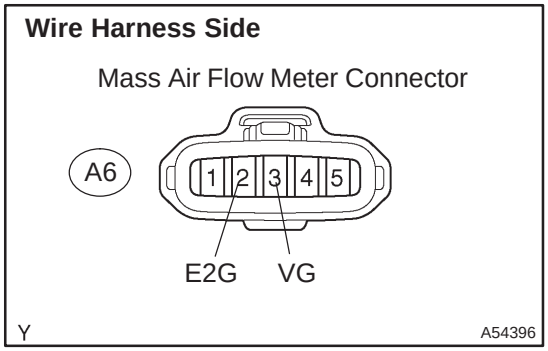

(a) Disconnect the A6 mass air flow meter connector.
(b) Disconnect the E13 ECM connector.
(c) Check for continuity between the wire harness side connectors.

Standard (Check for open):

Symbols (Terminal No.)	Specified condition
VG (A6–3) – VG (E13–30)	Continuity
E2G (A6–2) – EVG (E13–29)	

Standard (Check for short):

Symbols (Terminal No.)	Specified condition
VG (A6–3) or VG (E13–30) – Body ground	No continuity

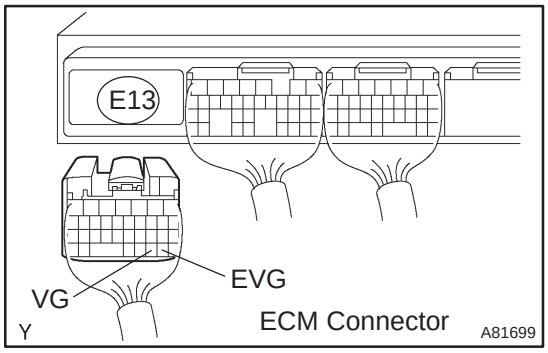

NG → **REPAIR OR REPLACE HARNESS OR CONNECTOR**

OK

REPLACE MASS AIR FLOW METER

7	CHECK HARNESS AND CONNECTOR(EFI RELAY – MASS AIR FLOW METER)

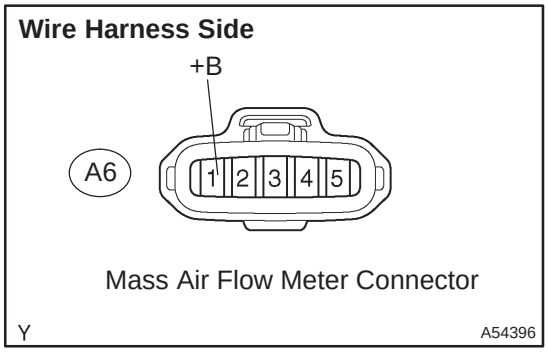

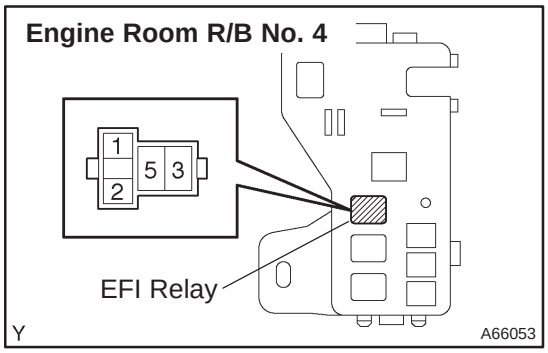

(a) Inspect the EFI No. 2 fuse.
  (1) Remove the EFI No. 2 fuse from the engine room R/B No. 4.
  (2) Check for continuity in the EFI No. 2 fuse.

Standard: Continuity

(b) Disconnect the A6 mass air flow meter connector.

(c) Remove the EFI relay from the engine room R/B No. 4.

(d) Check for continuity between the wire harness side connectors.

Standard (Check for open):

Symbols (Terminal No.)	Specified condition
+B (A6–1) – EFI relay (3)	Continuity

Standard (Check for short):

Symbols (Terminal No.)	Specified condition
+B (A6–1) or EFI relay (3) – Body ground	No continuity

NG → **REPAIR OR REPLACE HARNESS OR CONNECTOR**

OK

CHECK FOR ECM POWER SOURCE CIRCUIT (See page 05–502)

DTC	P0105	MANIFOLD ABSOLUTE PRESSURE/BAROMETRIC PRESSURE CIRCUIT

DTC	P0107	MANIFOLD ABSOLUTE PRESSURE/BAROMETRIC PRESSURE CIRCUIT LOW INPUT

DTC	P0108	MANIFOLD ABSOLUTE PRESSURE/BAROMETRIC PRESSURE CIRCUIT HIGH INPUT

CIRCUIT DESCRIPTION

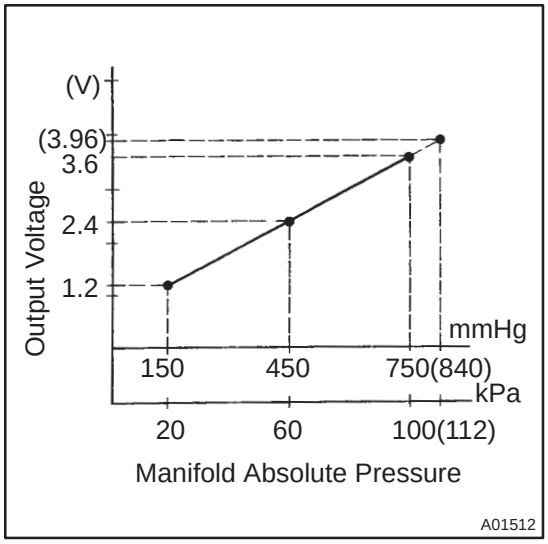

By a built–in sensor unit, the manifold absolute pressure sensor detects the intake manifold pressure as a voltage. The ECM then determines the basic injection duration and basic ignition advance angle based on this voltage.
Since the manifold absolute pressure sensor does not use the atmospheric pressure as a criterion, but senses the absolute pressure inside the intake manifold (the pressure in proportion to the preset absolute vacuum 0), it is not influenced by fluctuations in the atmospheric pressure due to high altitude and other factors. This permits it to control the air fuel ratio at the proper level under all conditions.
If the ECM detects the DTC ”P0105, P0107 or P0108”, it operates the fail–safe function, keeping the ignition timing and fuel injection volume constant and making it possible to drive the vehicle.

DTC No.	DTC Detection Condition	Trouble Area
P0105	Open or short in manifold absolute pressure sensor circuit for 0.5 sec. or more	• Open or short in manifold absolute pressure sensor circuit • Manifold absolute pressure sensor • ECM
P0107	Open in manifold absolute pressure sensor circuit for 0.5 sec. or more	
P0108	Short in manifold absolute pressure sensor circuit for 0.5 sec. or more	

HINT:
After confirming DTC ”P0105, P0107 or P0108”, use the hand–held tester to confirm the manifold absolute pressure from ”DIAGNOSIS / OBD/MOBD / DATA LIST / ALL”.

Manifold Absolute Pressure (kPa)	Malfunction
Approximately 0	• PIM circuit short
142 or more	• VC circuit open or short • PIM circuit open • E2 circuit open

WIRING DIAGRAM

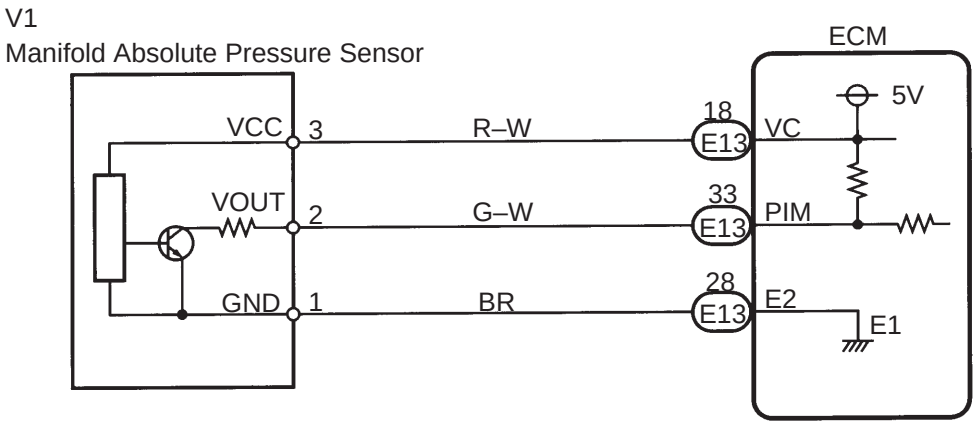

INSPECTION PROCEDURE

HINT:

- If different DTCs related to different systems that have terminal E2 as the ground terminal are output simultaneously, terminal E2 may be open.
- Read freeze frame data using the hand–held tester. Freeze frame data records the engine conditions when a malfunction is detected. When troubleshooting, it is useful for determining whether the vehicle was running or stopped, the engine was warmed up or not, the air–fuel ratio was lean or rich, etc. at the time of the malfunction.

1	**READ VALUE OF HAND–HELD TESTER(INTAKE MANIFOLD ABSOLUTE PRESSURE)**

(a) Connect the hand–held tester to the DLC3.
(b) Turn the ignition switch ON.
(c) Push the hand–held tester main switch ON.
(d) Select the item ”DIAGNOSIS / OBD/MOBD / DATA LIST / ALL / MAP” and read its value displayed on the hand–held tester.
Pressure: Same as the atmospheric pressure
Result:

Manifold Absolute Pressure (kPa)	Proceed to
142 or more	A
0.0	B
OK (Same as present pressure) (*1)	C

*1: The value must be changed when the engine is run or stopped.

B → **Go to step 3**

C → **CHECK FOR INTERMITTENT PROBLEMS**

A

2 INSPECT MANIFOLD ABSOLUTE PRESSURE SENSOR(VCC VOLTAGE)

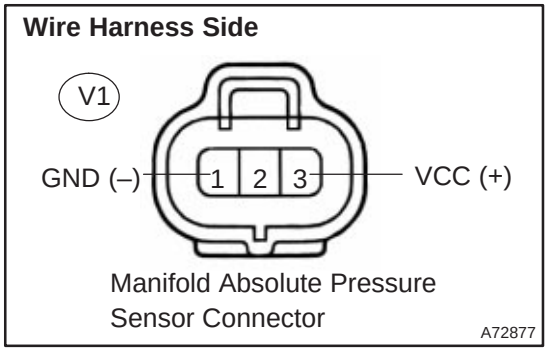

(a) Disconnect the V1 manifold absolute pressure sensor connector.
(b) Turn the ignition switch ON.
(c) Measure the voltage between the specified terminals of the V1 manifold absolute pressure sensor connector.

Standard:

Symbols (Terminal No.)	Specified condition
VCC (V1–3) – GND (V1–1)	4.5 to 5.5 V

NG → **Go to step 4**

OK

3 INSPECT ECM(PIM VOLTAGE)

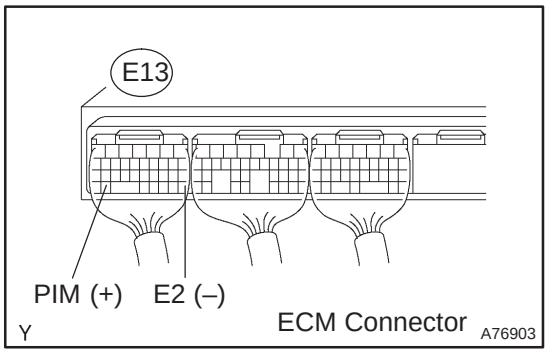

(a) Turn the ignition switch ON.
(b) Measure the voltage between the specified terminals of the E13 ECM connector.

Standard:

Symbols (Terminal No.)	Specified condition
PIM (E13–33) – E2 (E13–28)	3.4 to 3.8 V

NG → **Go to step 5**

OK

CHECK AND REPLACE ECM (See page 01–32)

4 CHECK HARNESS AND CONNECTOR(ECM – MANIFOLD ABSOLUTE PRESSURE SENSOR)

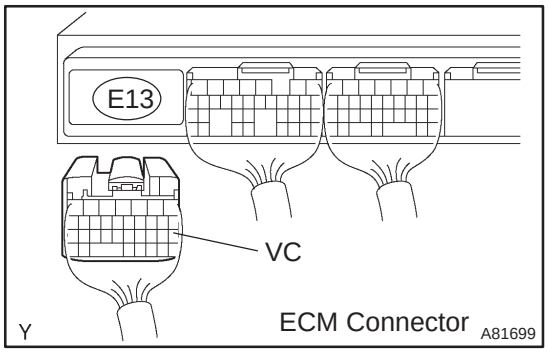

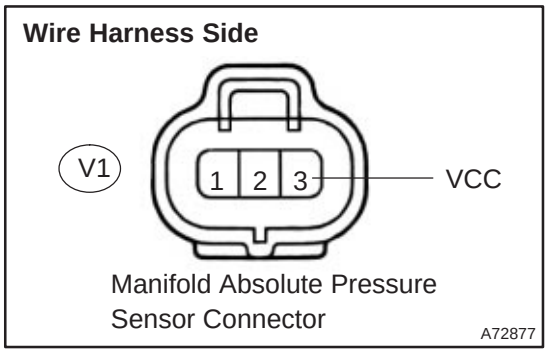

(a) Disconnect the E13 ECM connector.
(b) Disconnect the V1 manifold absolute pressure sensor connector.
(c) Check for continuity between the wire harness side connectors.

Standard (Check for open):

Symbols (Terminal No.)	Specified condition
VC (E13–18) – VCC (V1–3)	Continuity

Standard (Check for short):

Symbols (Terminal No.)	Specified condition
VC (E13–18) or VCC (V1–3) – Body ground	No continuity

NG → **REPAIR OR REPLACE HARNESS OR CONNECTOR**

OK

CHECK AND REPLACE ECM (See page 01–32)

5 CHECK HARNESS AND CONNECTOR(ECM – MANIFOLD ABSOLUTE PRESSURE SENSOR)

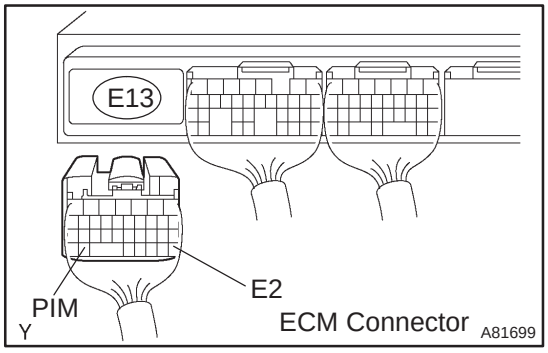

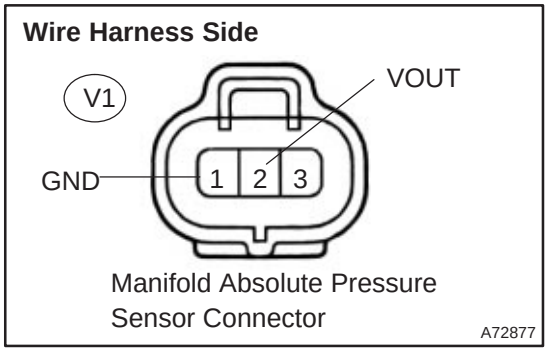

(a) Disconnect the E13 ECM connector.
(b) Disconnect the V1 manifold absolute pressure sensor connector.
(c) Check for continuity between the wire harness side connectors.

Standard (Check for open):

Symbols (Terminal No.)	Specified condition
PIM (E13–33) – VOUT (V1–2)	Continuity
E2 (E13–28) – GND (V1–1)	

Standard (Check for short):

Symbols (Terminal No.)	Specified condition
PIM (E13–33) or VOUT (V1–2) – Body ground	No continuity

NG → REPAIR OR REPLACE HARNESS OR CONNECTOR

OK

REPLACE MANIFOLD ABSOLUTE PRESSURE SENSOR

DTC	P0110	INTAKE AIR TEMPERATURE CIRCUIT

DTC	P0112	INTAKE AIR TEMPERATURE CIRCUIT LOW INPUT

DTC	P0113	INTAKE AIR TEMPERATURE CIRCUIT HIGH INPUT

CIRCUIT DESCRIPTION

(Fig.1)

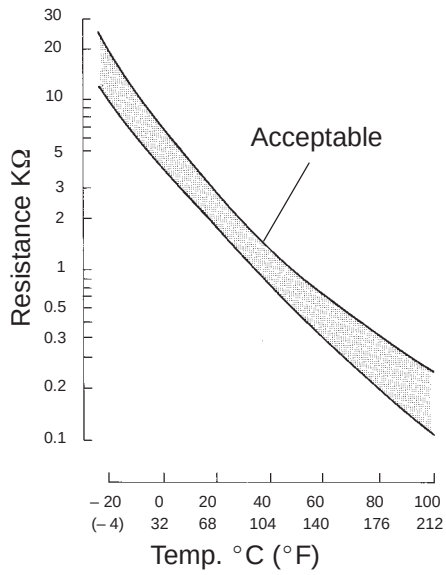

The intake air temperature sensor is built in the mass air flow meter and senses the intake air temperature.
A thermistor built in the sensor changes the resistance value according to the intake air temperature.
The lower the intake air temperature is the greater the thermistor resistance value becomes and the higher the intake air temperature is the lower the thermistor resistance value becomes (See Fig. 1).
The intake air temperature sensor is connected to the ECM (See below). The 5 V power source voltage in the ECM is applied to the intake air temperature sensor from terminal THA via resistor R.
That is, the resistor R and the intake air temperature sensor are connected in series. When the resistance value of the intake air temperature sensor changes in accordance with changes in the intake air temperature, the potential at terminal THA also changes. Based on this signal, the ECM increases the fuel injection volume to improve the driveability during cold engine operation.
If the ECM detects the DTC ”P0110, P0112 or P0113”, it operates the fail–safe functions in which the intake air temperature is assumed to be 20°C (68°F).

DTC No.	Proceed to	DTC Detection Condition	Trouble Area
P0110	Step 1	Open or short in intake air temp. sensor circuit for 0.5 sec.	• Open or short in intake air temperature sensor circuit • Intake air temperature sensor (built in mass air flow meter) • ECM
P0112	Step 4	Short in intake air temp. sensor circuit for 0.5 sec.	• Short in intake air temperature sensor circuit • Intake air temperature sensor (built in mass air flow meter) • ECM
P0113	Step 2	Open in intake air temp. sensor circuit for 0.5 sec.	• Open in intake air temperature sensor circuit • Intake air temperature sensor (built in mass air flow meter) • ECM

HINT:
After confirming DTC ”P0110, P0112 or P0113”, use the hand–held tester to confirm the intake air temperature from the ”DIAGNOSIS / OBD/MOBD / DATA LIST / ALL”.

Temperature Displayed	Malfunction
–40˚C (–40˚F)	Open circuit
140˚C (284˚F) or more	Short circuit

WIRING DIAGRAM

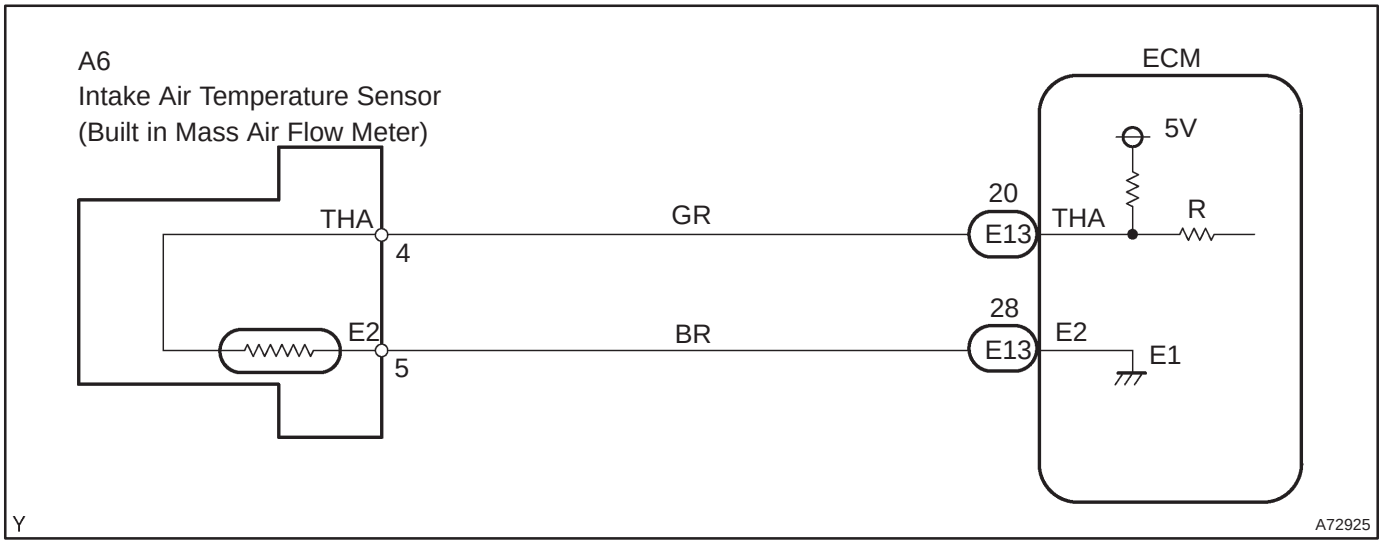

INSPECTION PROCEDURE

HINT:

- If different DTCs related to different systems that have terminal E2 as the ground terminal are output simultaneously, terminal E2 may be open.
- Read freeze frame data using the hand–held tester. Freeze frame data records the engine conditions when a malfunction is detected. When troubleshooting, it is useful for determining whether the vehicle was running or stopped, the engine was warmed up or not, the air–fuel ratio was lean or rich, etc. at the time of the malfunction.

1	READ VALUE OF HAND–HELD TESTER(INTAKE AIR TEMPERATURE)

(a) Connect the hand–held tester to the DLC3.
(b) Turn the ignition switch ON.
(c) Push the hand–held tester main switch ON.
(d) Select the item ”DIAGNOSIS / OBD/MOBD / DATA LIST / ALL / INTAKE AIR” and read its value displayed on the hand–held tester.
Temperature: Same value as the actual intake air temperature
Result:

Display	Proceed to
–40˚C (–40˚F)	A
140˚C (284˚F) or more	B
OK (Same as present temperature)	C

HINT:

- If there is an open circuit, the hand–held tester indicates –40˚C (–40˚F).
- If there is a short circuit, the hand–held tester indicates 140˚C (284˚F) or more.

B → **Go to step 4**

C → **CHECK FOR INTERMITTENT PROBLEMS**

A

2 READ VALUE OF HAND–HELD TESTER(CHECK FOR OPEN IN HARNESS)

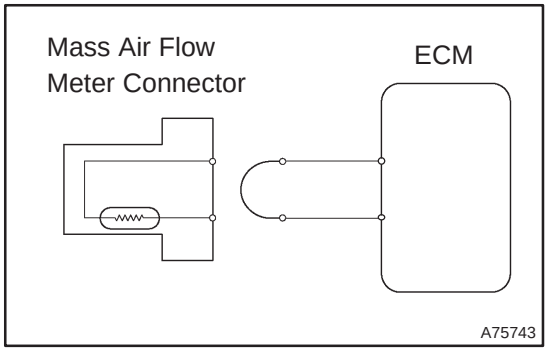

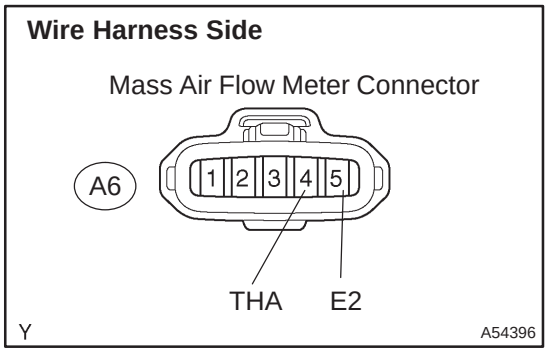

(a) Disconnect the A6 mass air flow meter connector.
(b) Connect the terminals THA and E2 of the mass air flow meter wire harness side connector.
(c) Connect the hand–held tester to the DLC3.
(d) Turn the ignition switch ON.
(e) Push the hand–held tester main switch ON.
(f) Select the item "DIAGNOSIS / OBD/MOBD / DATA LIST / ALL / INTAKE AIR" and read its value displayed on the hand–held tester.
Temperature value: 140°C (284°F) or more

OK	**CONFIRM GOOD CONNECTION AT SENSOR. IF OK, REPLACE MASS AIR FLOW METER**

NG

3 READ VALUE OF HAND–HELD TESTER(CHECK FOR OPEN IN ECM)

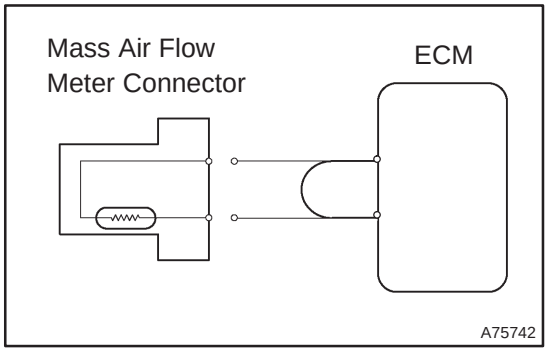

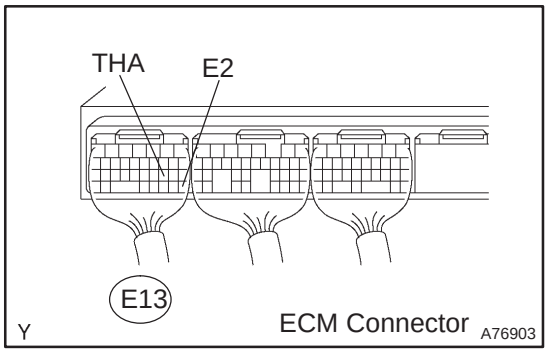

(a) Disconnect the A6 mass air flow meter connector.
(b) Connect terminals THA and E2 of the E13 ECM connector.

HINT:
Before checking, do a visual and contact pressure check for the ECM connector.

(c) Connect the hand–held tester to the DLC3.
(d) Turn the ignition switch ON.
(e) Push the hand–held tester main switch ON.
(f) Select the item "DIAGNOSIS / OBD/MOBD / DATA LIST / ALL / INTAKE AIR" and read its value displayed on the hand–held tester.
Temperature value: 140°C (284°F) or more

OK	**REPAIR OR REPLACE HARNESS OR CONNECTOR**

NG

CONFIRM GOOD CONNECTION AT ECM. IF OK, CHECK AND REPLACE ECM (See page 01–32)

4	READ VALUE OF HAND–HELD TESTER(CHECK FOR SHORT IN HARNESS)

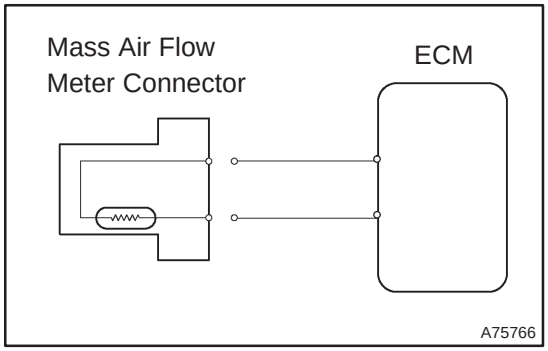

(a) Disconnect the A6 mass air flow meter connector.
(b) Connect the hand–held tester to the DLC3.
(c) Turn the ignition switch ON.
(d) Push the hand–held tester main switch ON.
(e) Select the item ”DIAGNOSIS / OBD/MOBD / DATA LIST / ALL / INTAKE AIR” and read its value displayed on the hand–held tester.
Temperature value: –40°C (–40°F)

OK → **REPLACE MASS AIR FLOW METER**

NG

5	READ VALUE OF HAND–HELD TESTER(CHECK FOR SHORT IN ECM)

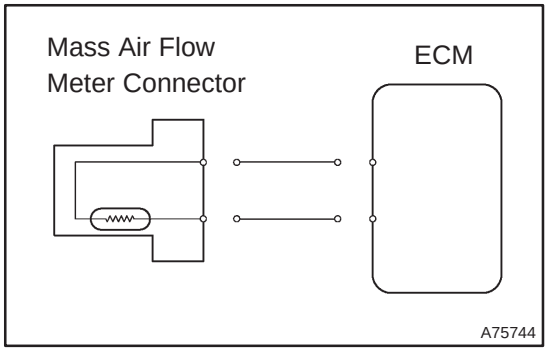

(a) Disconnect the E13 ECM connector.
(b) Connect the hand–held tester to the DLC3.
(c) Turn the ignition switch ON.
(d) Push the hand–held tester main switch ON.
(e) Select the item ”DIAGNOSIS / OBD/MOBD / DATA LIST / ALL / INTAKE AIR” and read its value displayed on the hand–held tester.
Temperature value: –40°C (–40°F)

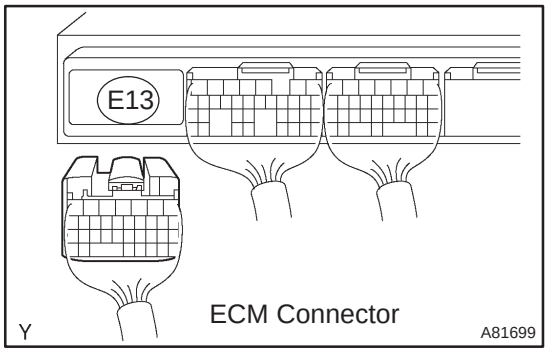

OK → **REPAIR OR REPLACE HARNESS OR CONNECTOR**

NG

CHECK AND REPLACE ECM (See page 01–32)

DTC	P0115	ENGINE COOLANT TEMPERATURE CIRCUIT

DTC	P0117	ENGINE COOLANT TEMPERATURE CIRCUIT LOW INPUT

DTC	P0118	ENGINE COOLANT TEMPERATURE CIRCUIT HIGH INPUT

CIRCUIT DESCRIPTION

A thermistor is built in the engine coolant temperature sensor and changes the resistance value according to the engine coolant temperature.

The structure of the sensor and connection to the ECM is the same as those of the intake air temperature sensor.

If the ECM detects the DTC ”P0115, P0117 or P0118”, it operates the fail–safe functions in which the engine coolant temperature is assumed to be 80°C (176°F).

DTC No.	Proceed to	DTC Detection Condition	Trouble Area
P0115	Step 1	Open or short in engine coolant temp. sensor circuit for 0.5 sec.	• Open or short in engine coolant temperature sensor circuit • Engine coolant temperature sensor • ECM
P0117	Step 4	Short in engine coolant temp. sensor circuit for 0.5 sec.	• Short in engine coolant temperature sensor circuit • Engine coolant temperature sensor • ECM
P0118	Step 2	Open in engine coolant temp. sensor circuit for 0.5 sec.	• Open in engine coolant temperature sensor circuit • Engine coolant temperature sensor • ECM

HINT:

After confirming DTC ”P0115, P0117 or P0118”, use the hand–held tester to confirm the engine coolant temperature from the ”DIAGNOSIS / OBD/MOBD / DATA LIST / ALL”.

Temperature Displayed	Malfunction
–40˚C (–40˚F)	Open circuit
140˚C (284˚F) or more	Short circuit

WIRING DIAGRAM

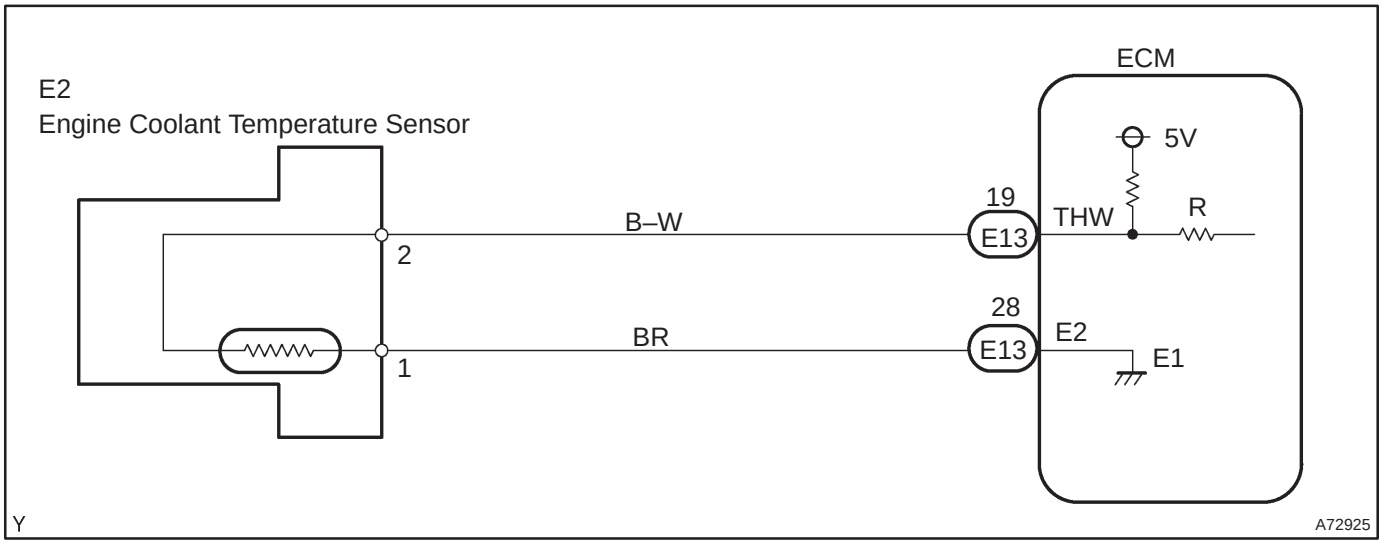

INSPECTION PROCEDURE

HINT:

- If different DTCs related to different systems that have terminal E2 as the ground terminal are output simultaneously, terminal E2 may be open.
- Read freeze frame data using the hand–held tester. Freeze frame data records the engine conditions when a malfunction is detected. When troubleshooting, it is useful for determining whether the vehicle was running or stopped, the engine was warmed up or not, the air–fuel ratio was lean or rich, etc. at the time of the malfunction.

1	READ VALUE OF HAND–HELD TESTER(ENGINE COOLANT TEMPERATURE)

(a) Connect the hand–held tester to the DLC3.
(b) Turn the ignition switch ON.
(c) Push the hand–held tester main switch ON.
(d) Select the item ”DIAGNOSIS / OBD/MOBD / DATA LIST / ALL / COOLANT TEMP” and read its value displayed on the hand–held tester.
Temperature: Same value as the actual engine coolant temperature
Result:

Display	Proceed to
–40˚C (–40˚F)	A
140˚C (284˚F) or more	B
OK (Same as present temperature)	C

HINT:

- If there is an open circuit, the hand–held tester indicates –40˚C (–40˚F).
- If there is a short circuit, the hand–held tester indicates 140˚C (284˚F) or more.

B → **Go to step 4**

C → **CHECK FOR INTERMITTENT PROBLEMS**

A

2 READ VALUE OF HAND–HELD TESTER(CHECK FOR OPEN IN HARNESS)

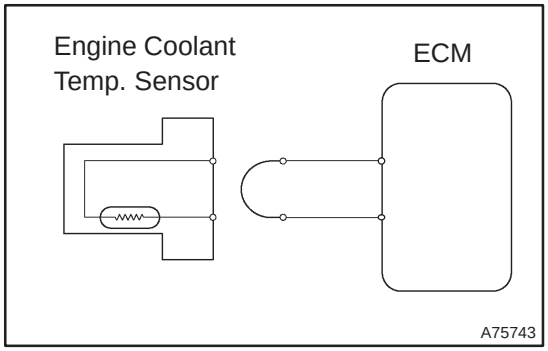

(a) Disconnect the E2 engine coolant temperature sensor connector.
(b) Connect terminals 1 and 2 of the engine coolant temperature sensor wire harness side connector.
(c) Connect the hand–held tester to the DLC3.
(d) Turn the ignition switch ON.
(e) Push the hand–held tester main switch ON.
(f) Select the item ”DIAGNOSIS / OBD/MOBD / DATA LIST / ALL / COOLANT TEMP” and read its value displayed on the hand–held tester.
Temperature value: 140°C (284°F) or more

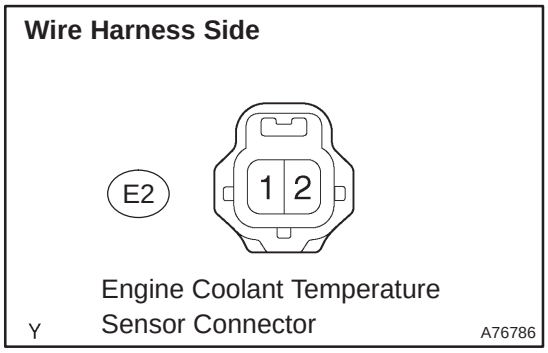

OK → **CONFIRM GOOD CONNECTION AT SENSOR. IF OK, REPLACE ENGINE COOLANT TEMP. SENSOR**

NG

3 READ VALUE OF HAND–HELD TESTER(CHECK FOR OPEN IN ECM)

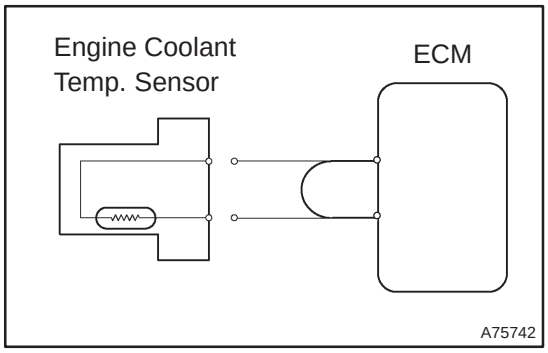

(a) Disconnect the E2 engine coolant temperature sensor connector.
(b) Connect terminals THW and E2 of the E13 ECM connector.

HINT:
Before checking, do a visual and contact pressure check for the ECM connector.

(c) Connect the hand–held tester to the DLC3.
(d) Turn the ignition switch ON.
(e) Push the hand–held tester main switch ON.
(f) Select the item ”DIAGNOSIS / OBD/MOBD / DATA LIST / ALL / COOLANT TEMP” and read its value displayed on the hand–held tester.
Temperature value: 140°C (284°F) or more

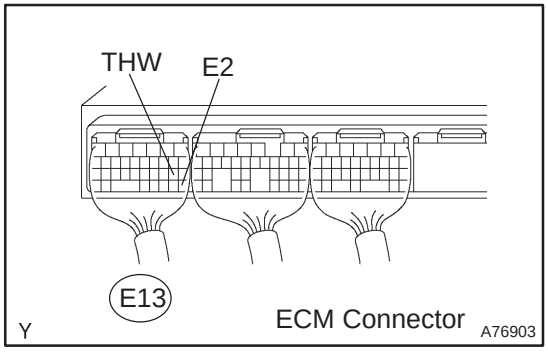

OK → **REPAIR OR REPLACE HARNESS OR CONNECTOR**

NG

CONFIRM GOOD CONNECTION AT ECM. IF OK, CHECK AND REPLACE ECM (See page 01–32)

4 READ VALUE OF HAND–HELD TESTER(CHECK FOR SHORT IN HARNESS)

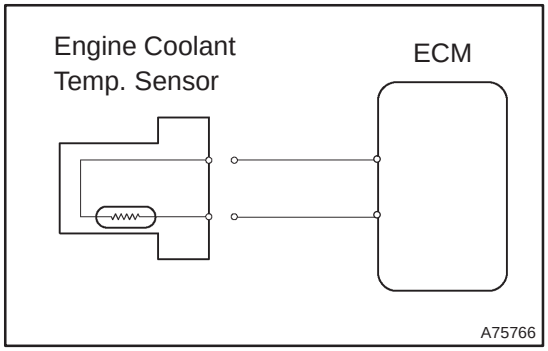

(a) Disconnect the E2 engine coolant temperature sensor connector.
(b) Connect the hand–held tester to the DLC3.
(c) Turn the ignition switch ON.
(d) Push the hand–held tester main switch ON.
(e) Select the item ”DIAGNOSIS / OBD/MOBD / DATA LIST / ALL / COOLANT TEMP” and read its value displayed on the hand–held tester.
Temperature value: –40°C (–40°F)

OK	**REPLACE ENGINE COOLANT TEMPERATURE SENSOR**

NG

5 READ VALUE OF HAND–HELD TESTER(CHECK FOR SHORT IN ECM)

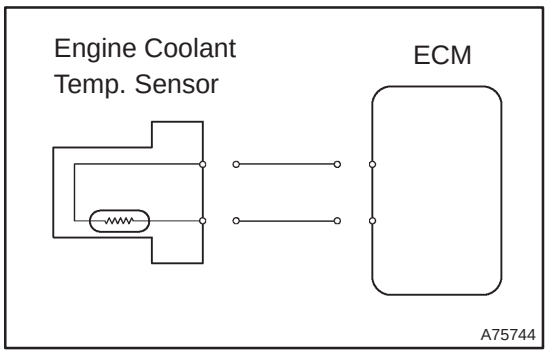

(a) Disconnect the E13 ECM connector.
(b) Connect the hand–held tester to the DLC3.
(c) Turn the ignition switch ON.
(d) Push the hand–held tester main switch ON.
(e) Select the item ”DIAGNOSIS / OBD/MOBD / DATA LIST / ALL / COOLANT TEMP” and read its value displayed on the hand–held tester.
Temperature: –40°C (–40°F)

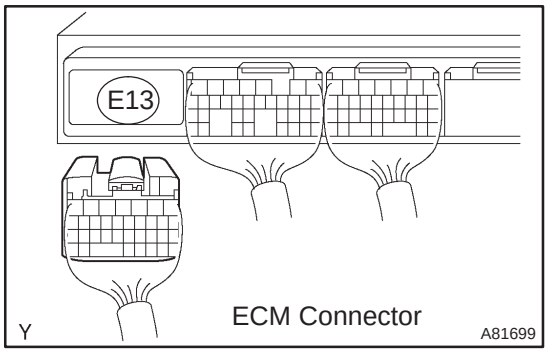

OK	**REPAIR OR REPLACE HARNESS OR CONNECTOR**

NG

CHECK AND REPLACE ECM (See page 01–32)

DTC	P0116	ENGINE COOLANT TEMP. CIRCUIT RANGE/PERFORMANCE PROBLEM

CIRCUIT DESCRIPTION

Refer to DTC P0115 on page 05–351.

DTC No.	DTC Detection Condition	Trouble Area
P0116	When THW is greater than –40°C (–40°F) but less than 60°C (140°F), and THA is greater than –6.7°C (20°F), and when starting engine, conditions (a) and (b) continue (2 trip detection logic): (a) Vehicle speed is changing (Not stable) (b) THW change is lower than 3°C (5.4°F) from THW since when starting engine	• Cooling system • Engine coolant temperature sensor • Thermostat

INSPECTION PROCEDURE

HINT:

- If different DTCs related to different systems that have terminal E2 as the ground terminal are output simultaneously, terminal E2 may be open.
- Read freeze frame data using the hand–held tester. Freeze frame data records the engine conditions when a malfunction is detected. When troubleshooting, it is useful for determining whether the vehicle was running or stopped, the engine was warmed up or not, the air–fuel ratio was lean or rich, etc. at the time of the malfunction.

1	READ OUTPUT DTC(IN ADDITION TO P0116)

(a) Read the DTC using the hand–held tester.

Result:

Display	Proceed to
Only ”P0116” is output.	A
”P0116” and other DTCs are output.	B

HINT:

If any other codes besides ”P0116” are output, perform the troubleshooting for those DTCs first.

B → GO TO RELEVANT DTC CHART (See page 05–309)

A

2	INSPECT THERMOSTAT (See page 16–27)

NG → REPLACE THERMOSTAT (See page 16–35)

OK

REPLACE ENGINE COOLANT TEMPERATURE SENSOR

DTC	P0120	THROTTLE/PEDAL POSITION SENSOR/SWITCH ”A” CIRCUIT

DTC	P0122	THROTTLE/PEDAL POSITION SENSOR/SWITCH ”A” CIRCUIT LOW INPUT

DTC	P0123	THROTTLE/PEDAL POSITION SENSOR/SWITCH ”A” CIRCUIT HIGH INPUT

DTC	P0220	THROTTLE/PEDAL POSITION SENSOR/SWITCH ”B” CIRCUIT

DTC	P0222	THROTTLE/PEDAL POSITION SENSOR/SWITCH ”B” CIRCUIT LOW INPUT

DTC	P0223	THROTTLE/PEDAL POSITION SENSOR/SWITCH ”B” CIRCUIT HIGH INPUT

DTC	P2135	THROTTLE/PEDAL POSITION SENSOR/SWITCH ”A”/”B” VOLTAGE CORRELATION

HINT:
This is repair procedure of ”throttle position sensor”.

CIRCUIT DESCRIPTION

HINT:

- This electrical throttle system is no used throttle cable.
- This throttle position sensor is non–contact type.

The throttle position sensor is mounted on the throttle body to detect the opening angle of the throttle valve. Since this sensor is electronically controlled with hall elements, accurate control and reliability can be obtained. It has 2 sensors to detect the throttle opening angle and a malfunction of the throttle position sensor. The voltage is applied to the terminals VTA1 and VTA2 of the ECM changes between 0 V and 5 V in proportion to the opening angle of the throttle valve. The VTA1 is a signal to indicate the actual throttle valve opening angle which is used for the engine control, and the VTA2 is a signal to indicate the information about the opening angle which is used for detecting a malfunction.

The ECM judges the current opening angle of the throttle valve from these signals input from terminals VTA1 and VTA2, and the ECM controls the throttle motor to make the throttle valve angle properly in response to the driving condition.

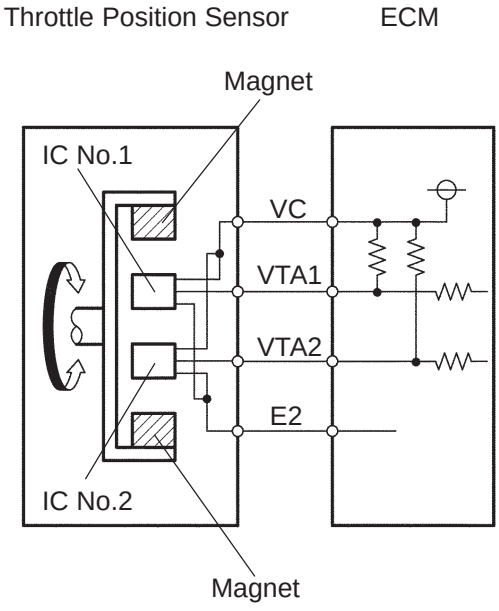

A19755

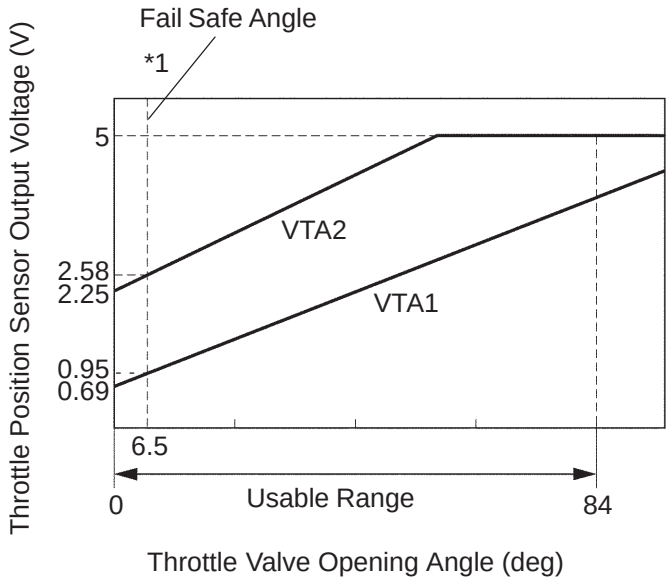

A19802

Throttle Valve Fully Closed
(Throttle Position Opening Position Expressed as Percentage
(VTA1) 10 to 24 %)

Throttle Valve Fully Opened
(Throttle Position Opening Position Expressed as Percentage
(VTA1) 64 to 96 %)

*1: Fail Safe Angle 6.5°
(Throttle Position Opening Position Expressed as Percentage
(VTA1) about 16 %)

DTC No.	DTC Detection Condition	Trouble Area
Condition (a) of DTC P0120, P0122, P0123, P0220, P0222 or P0223 continues for 2 sec. (Open or short in throttle position sensor circuit)		
P0120	Detection conditions for DTCs P0122 and P0123 are not satisfied but condition (a) is satisfied (a) VTA1 ≦ 0.2 V or VTA1 ≧ 4.8 V	• Throttle position sensor (built in throttle body) • ECM
P0122	(a) VTA1 ≦ 0.2 V	• Throttle position sensor (built in throttle body) • VTA1 circuit short • VC circuit open • ECM
P0123	(a) VTA1 ≧ 4.8 V	• Throttle position sensor (built in throttle body) • VTA1 circuit open • E2 circuit open • VC and VTA1 circuit are short–circuited • ECM
P0220	Detection conditions for DTCs P0222 and P0223 are not satisfied but condition (a) is satisfied (a) VTA2 ≦ 0.5 V or VTA2 ≧ 4.97 V and 0.2 V ≦ VTA1 ≦ 1.8 V	• Throttle position sensor (built in throttle body) • ECM
P0222	(a) VTA2 ≦ 0.5 V	• Throttle position sensor (built in throttle body) • VTA2 circuit short • VC circuit open • ECM
P0223	(a) VTA2 ≧ 4.97 V and 0.2 V ≦ VTA1 ≦ 1.8 V	• Throttle position sensor (built in throttle body) • VTA2 circuit open • E2 circuit open • VC and VTA2 circuit are short–circuited • ECM
P2135	Condition (a) continues for 0.5 sec. or more, or condition (b) continues for 0.4 sec. or more: (a) |VTA1 – VTA2| ≦ 0.02 V (b) VTA1 ≦ 0.2 V and VTA2 ≦ 0.5 V	• VTA1 and VTA2 circuit are short–circuited • Throttle position sensor (built in throttle body) • ECM

NOTICE:

When a malfunction is detected, the throttle valve is locked at a certain opening angle. Also, the whole electronically controlled throttle operation is cancelled until the system returns to normal and the ignition switch is turned OFF.

HINT:

- After confirming DTCs, use the hand–held tester to confirm the throttle valve opening percentage and closed throttle position switch condition.
- The THROTTLE POS means VTA1 signal as well as the THROTTLE POS #2 for the VTA2 signal.

Reference (Normal condition):

Tester display	Accelerator pedal fully released	Accelerator pedal fully depressed
THROTTLE POS	10 to 24 %	64 to 96 %
THROTTLE POS #2	2.1 to 3.1 V	4.5 to 5.5 V

WIRING DIAGRAM

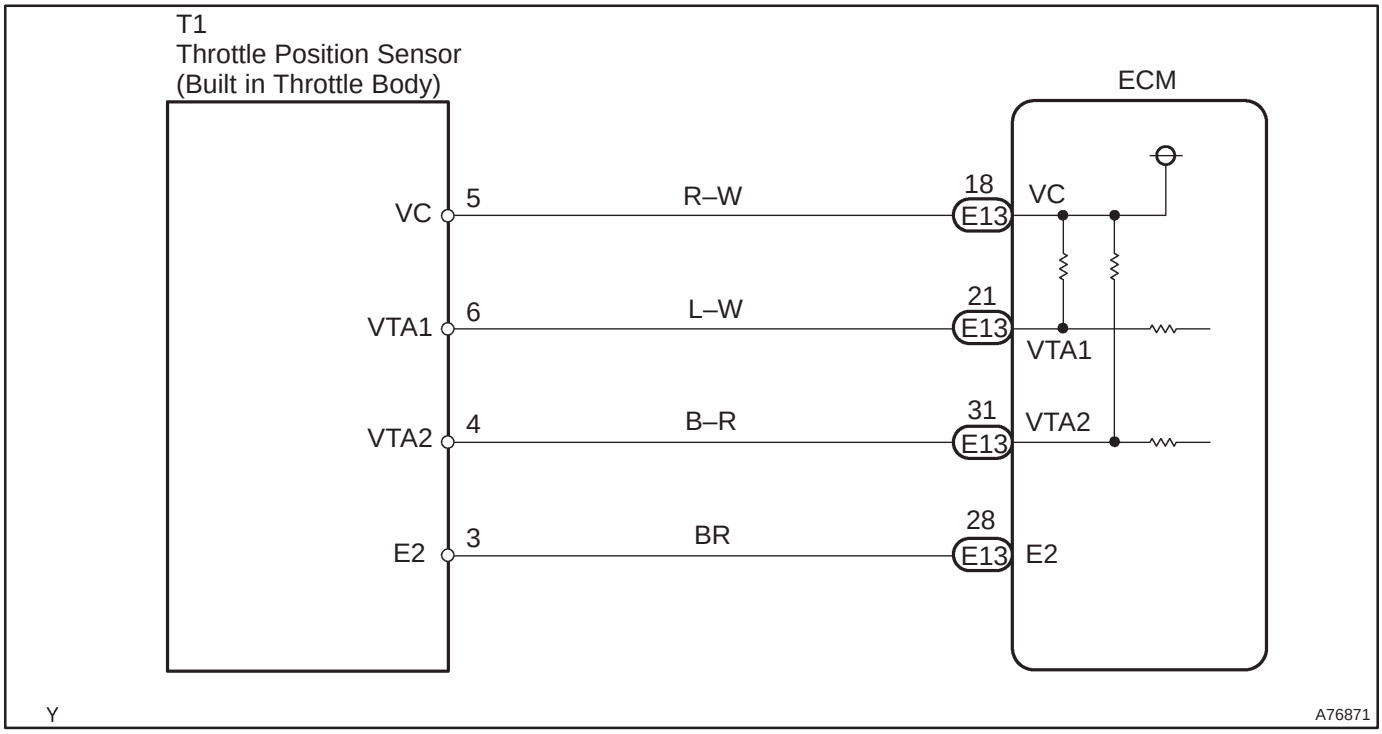

INSPECTION PROCEDURE

HINT:

- If different DTCs related to different systems that have terminal E2 as the ground terminal are output simultaneously, terminal E2 may be open.
- Read freeze frame data using the hand–held tester. Freeze frame data records the engine conditions when a malfunction is detected. When troubleshooting, it is useful for determining whether the vehicle was running or stopped, the engine was warmed up or not, the air–fuel ratio was lean or rich, etc. at the time of the malfunction.

1	**READ VALUE OF HAND–HELD TESTER(THROTTLE POS AND THROTTLE POS #2)**

(a) Select the item ”DIAGNOSIS / OBD/MOBD / DATA LIST / ETCS / THROTTLE POS and THROTTLE POS #2” and read its value displayed on the hand–held tester.

Result:

Throttle position expressed as percentage and voltage				Trouble area	Proceed to
Accelerator pedal released		Accelerator pedal depressed			
THROTTLE POS (VTA1)	THROTTLE POS #2 (VTA2)	THROTTLE POS (VTA1)	THROTTLE POS #2 (VTA2)		
0 %	0 to 0.2 V	0 %	0 to 0.2 V	VC circuit open	A
100 %	4.5 to 5.5 V	100 %	4.5 to 5.5 V	E2 circuit open	
0 % or 100 %	2.1 to 3.1 V (Fail safe)	0 % or 100 %	2.1 to 3.1 V (Fail safe)	VTA1 circuit open or ground short	
About 16 % (Fail safe)	0 to 0.2 or 4.5 to 5.5 V	About 16 % (Fail safe)	0 to 0.2 or 4.5 to 5.5 V	VTA2 circuit open or ground short	
10 to 24 %	2.1 to 3.1 V	64 to 96 % (Does not fail safe)	4.5 to 5.5 V (Does not fail safe)	Throttle position sensor circuit is normal	B

B	Go to step 5

A

2 CHECK HARNESS AND CONNECTOR(THROTTLE POSITION SENSOR – ECM)

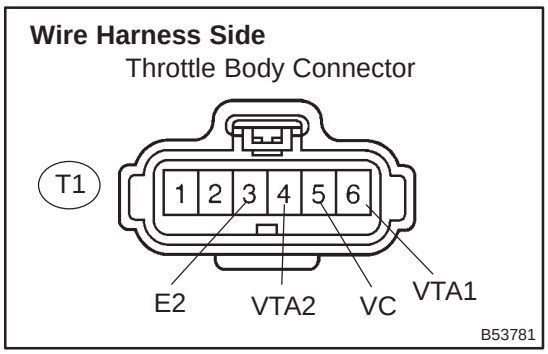

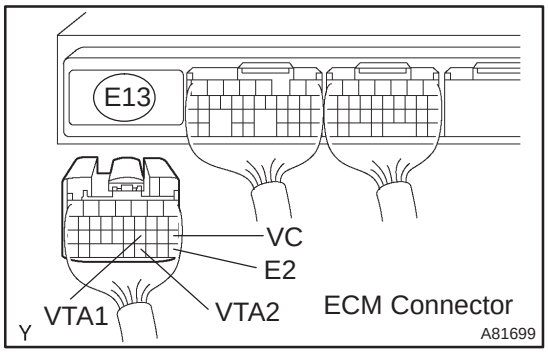

(a) Disconnect the T1 throttle body connector.
(b) Disconnect the E13 ECM connector.
(c) Check for continuity between the wire harness side connectors.

Standard (Check for open):

Symbols (Terminal No.)	Specified condition
VC (T1–5) – VC (E13–18)	Continuity
VTA1 (T1–6) – VTA1 (E13–21)	
VTA2 (T1–4) – VTA2 (E13–31)	
E2 (T1–3) – E2 (E13–28)	

Standard (Check for short):

Symbols (Terminal No.)	Specified condition
VC (T1–5) or VC (E13–18) – Body ground	No continuity
VTA1 (T1–6) or VTA1 (E13–21) – Body ground	
VTA2 (T1–4) or VTA2 (E13–31) – Body ground	

NG	REPAIR OR REPLACE HARNESS OR CONNECTOR

OK

3 INSPECT ECM(VC VOLTAGE)

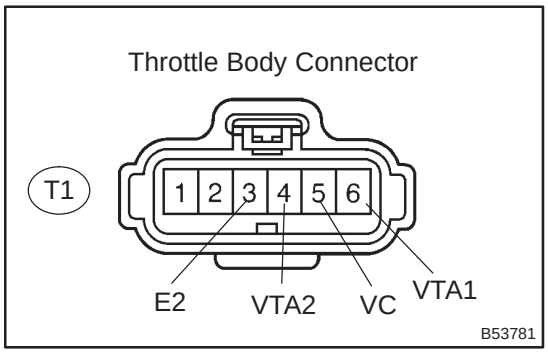

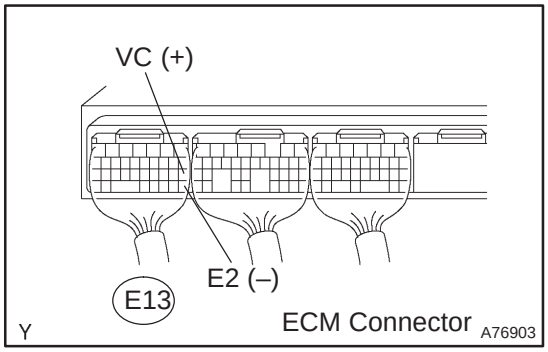

(a) Disconnect the T1 throttle body connector.
(b) Measure the voltage between the specified terminals of the E13 ECM connector.

Standard:

Symbols (Terminal No.)	Specified condition
VC (E13–18) – E2 (E13–28)	4.5 to 5.5 V

NG → CHECK AND REPLACE ECM (See page 01–32)

OK

4	REPLACE THROTTLE BODY ASSY

GO

5	READ OUTPUT DTC(THROTTLE POSTION SENSOR DTCS ARE OUTPUT AGAIN)

(a) Clear the DTC (See page 05–294).
(b) Start the engine.
(c) Run the engine at idle for 15 sec. or more.
(d) Read the DTC (See page 05–294).

Result:

Display (DTC output)	Proceed to
”P0120, P0122, P0123, P0220, P0222, P0223 and/or P2135” are output again	A
No DTC output	B

B → SYSTEM OK

A

CHECK AND REPLACE ECM (See page 01–32)

DTC	P0121	THROTTLE/PEDAL POSITION SENSOR/SWITCH ”A” CIRCUIT RANGE/PERFORMANCE PROBLEM

HINT:
This is the procedure of the ”throttle position sensor”.

CIRCUIT DESCRIPTION

Refer to DTC P0120 on page 05–356.

DTC No.	DTC Detection Condition	Trouble Area
P0121	Condition (a) continues for 2.0 seconds: (a) Difference between VTA1 and VTA2 is out of threshold	Throttle position sensor (built in throttle body)

INSPECTION PROCEDURE

HINT:
Read freeze frame data using the hand–held tester. Freeze frame data records the engine conditions when a malfunction is detected. When troubleshooting, it is useful for determining whether the vehicle was running or stopped, the engine was warmed up or not, the air–fuel ratio was lean or rich, etc. at the time of the malfunction.

REPLACE THROTTLE BODY ASSY

DTC	P0130	OXYGEN SENSOR CIRCUIT (BANK 1 SENSOR 1)

DTC	P0150	OXYGEN SENSOR CIRCUIT (BANK 2 SENSOR 1)

DTC	P2195	OXYGEN SENSOR SIGNAL STUCK LEAN (BANK 1 SENSOR 1)

DTC	P2196	OXYGEN SENSOR SIGNAL STUCK RICH (BANK 1 SENSOR 1)

DTC	P2197	OXYGEN SENSOR SIGNAL STUCK LEAN (BANK 2 SENSOR 1)

DTC	P2198	OXYGEN SENSOR SIGNAL STUCK RICH (BANK 2 SENSOR 1)

CIRCUIT DESCRIPTION

To obtain a high purification rate for the CO, HC and NOx components of the exhaust gas, a three–way catalytic converter is used. For the most efficient use of the three–way catalytic converter, the air–fuel ratio must be precisely controlled so that it is always close to the stoichiometric air–fuel ratio.

The heated oxygen sensor has the characteristic whereby its output voltage changes suddenly in the vicinity of the stoichiometric air–fuel ratio. This is used to detect the oxygen concentration in the exhaust gas and provide the ECM with feedback control the air–fuel ratio.

When the air–fuel ratio becomes LEAN, the oxygen concentration in the exhaust gas increases. And the heated oxygen sensor informs the ECM of the LEAN condition (low voltage, i.e. less than 0.45 V).

When the air–fuel ratio is RICHER than the stoichiometric air–fuel ratio, the oxygen will be vanished from the exhaust gas. And the heated oxygen sensor informs the ECM of the RICH condition (high voltage, i.e. more than 0.45 V). The ECM judges by the voltage output from the heated oxygen sensor whether the air–fuel ratio is RICH or LEAN and controls the injection time accordingly. If the malfunction of the heated oxygen sensor causes an output of abnormal voltage, the ECM becomes unable to perform accurate air–fuel ratio control.

The heated oxygen sensors include a heater which heats the zirconia element. The heater is controlled by the ECM. When the intake air volume is low (the temperature of the exhaust gas is low), current flows to the heater in order to heat the sensor for the accurate oxygen concentration detection.

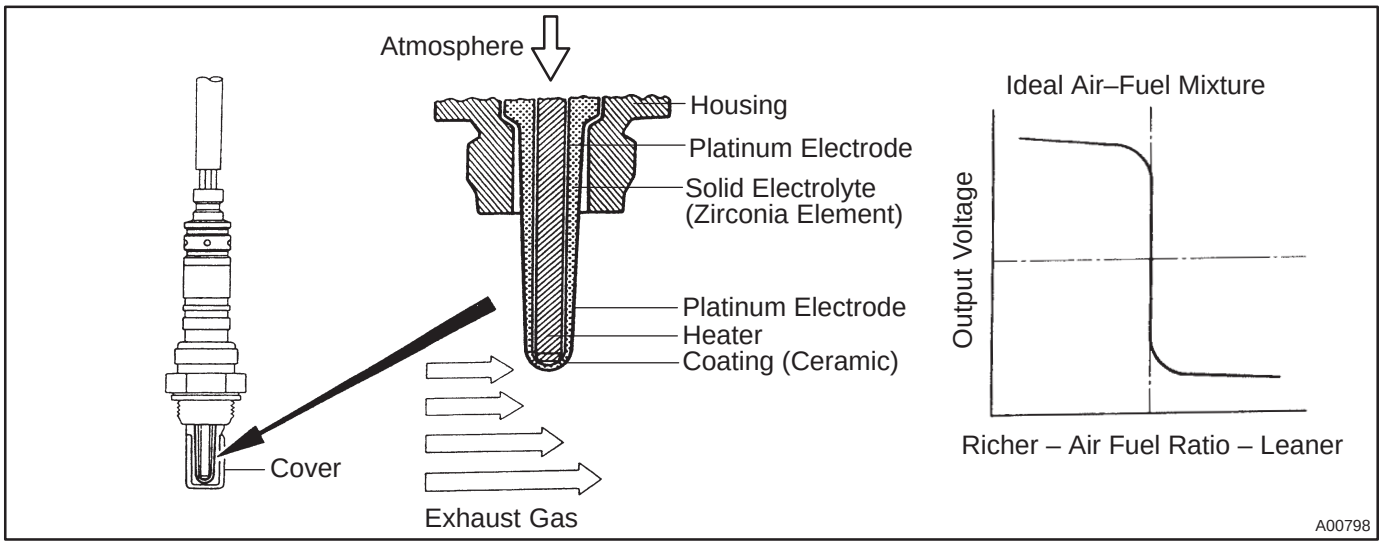

DTC No.	DTC Detection Condition	Trouble Area
P0130 P0150	Output voltage of heated oxygen sensor (sensor 1) remains at 0.4 V or more, or 0.55 V or less, during idling after engine is warmed up (2 trip detection logic)	• Open or short in heated oxygen sensor (bank 1, 2 sensor 1) circuit • Heated oxygen sensor (bank 1, 2 sensor 1) • Heated oxygen sensor heater (bank 1, 2 sensor 1) • EFI relay • Air induction system • Fuel pressure • Injector • ECM
P2195 P2197	Output voltage of heated oxygen sensor (sensor 1) remains at 0.55 V or less, during idling after engine is warmed up (2 trip detection logic)	
P2196 P2198	Output voltage of heated oxygen sensor (sensor 1) remains at 0.4 V or more, during idling after engine is warmed up (2 trip detection logic)	

HINT:

- Bank 1 refers to the No. 1 and No. 4 cylinders.
- Bank 2 refers to the No. 2 and No. 3 cylinders.
- Sensor 1 refers to the sensor closest to the engine assembly.
- The output voltage of the heated oxygen sensor and the short–term fuel trim value can be read using the hand–held tester.

WIRING DIAGRAM

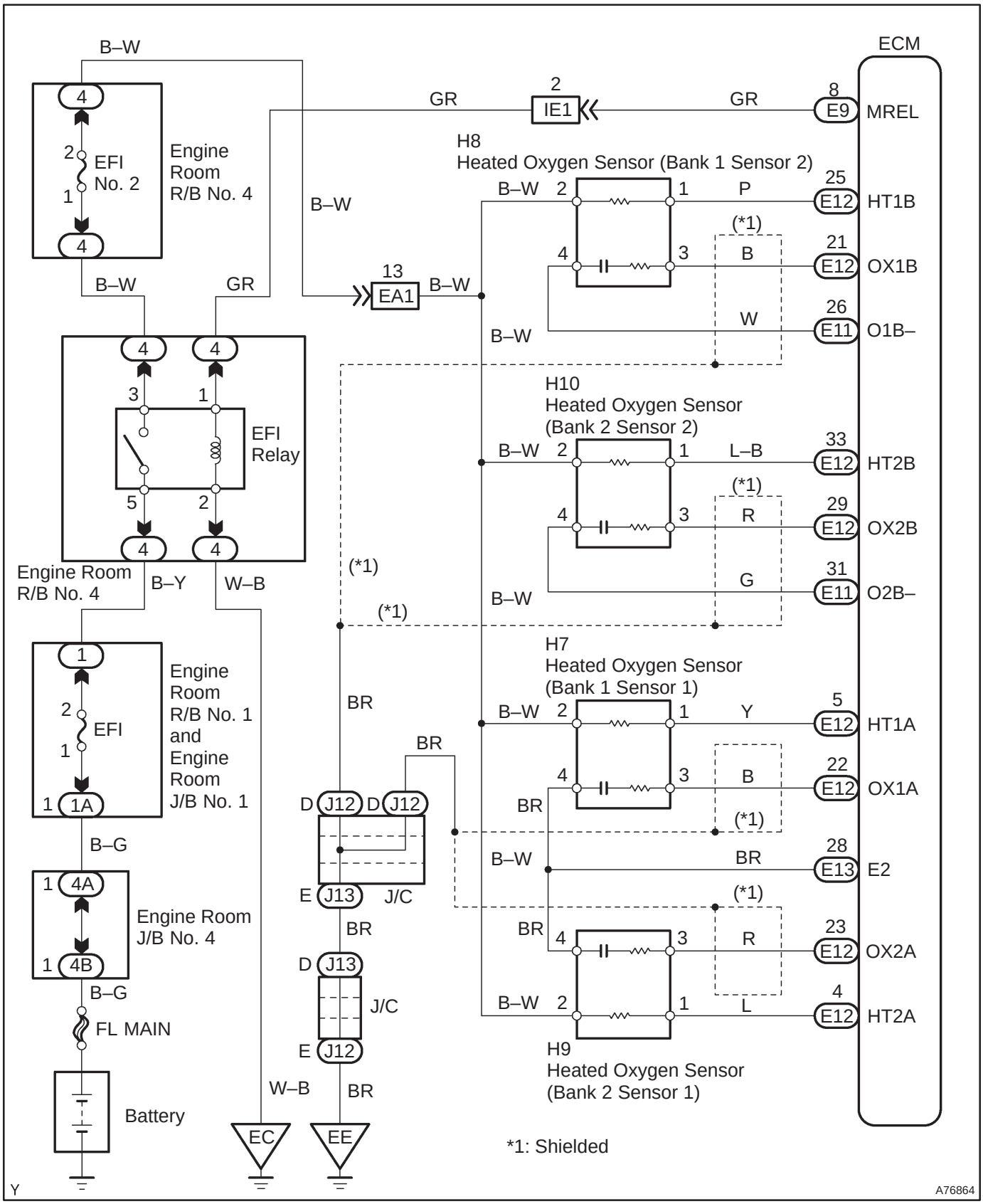

CONFIRMATION DRIVING PATTERN

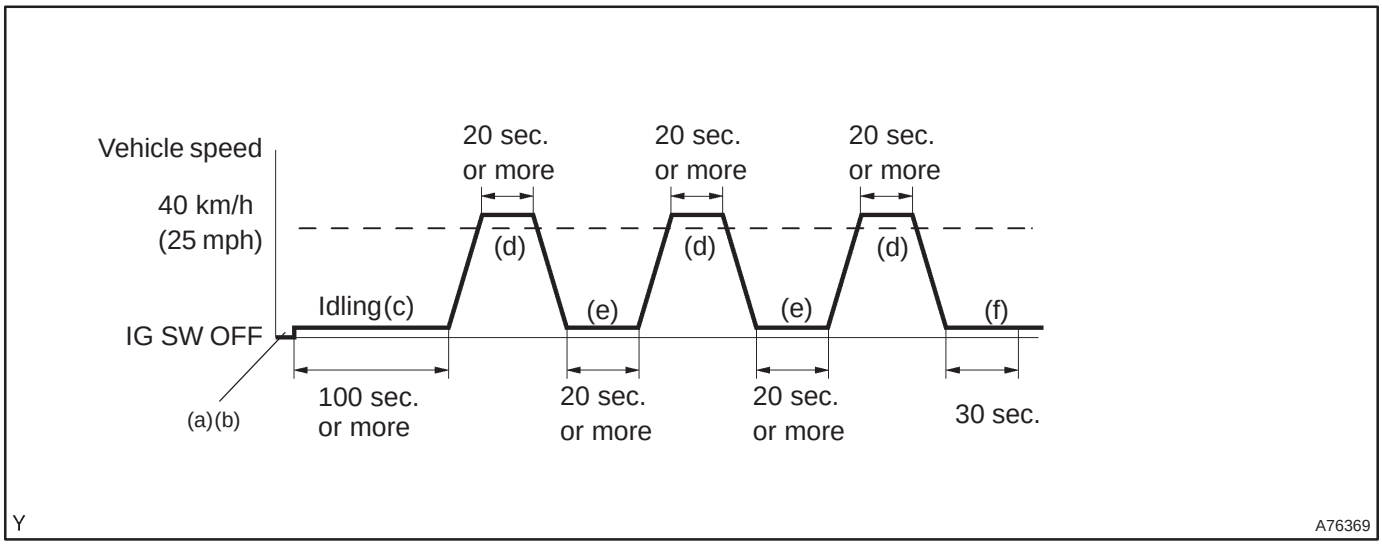

(a) Connect the hand–held tester to the DLC3.
(b) Switch the hand–held tester from the ”normal mode” to the ”check mode” (See page 05–294).
(c) Start the engine and let the engine idle for 100 seconds or more.
(d) Drive the vehicle at 40 km/h (25 mph) or more for 20 seconds or more.
(e) Let the engine idle for 20 seconds or more. Perform steps from (d) to (e) 3 times.
(f) Let the engine idle for 30 seconds.

HINT:
If a malfunction exists, the CHK ENG will be illuminated on the multi information display during step (f).

NOTICE:
If the conditions in this test are not strictly followed, detection of a malfunction will not occur.
If you do not have a hand–held tester, turn the ignition switch OFF after performing steps from (c) to (f), then perform steps from (c) to (f) again.

INSPECTION PROCEDURE

HINT:

Hand–held tester only:

Narrowing down the trouble area is possible by performing the ”A/F CONTROL” ACTIVE TEST (heated oxygen sensor or other trouble areas can be distinguished).

(a) Perform ACTIVE TEST using the hand–held tester (A/F CONTROL).

HINT:

”A/F CONTROL” is an ACTIVE TEST which changes the injection volume –12.5 % or +25 %.

(1) Connect the hand–held tester to the DLC3 on the vehicle.
(2) Turn the ignition switch ON.
(3) Warm up the engine by running the engine at 2,500 rpm for approximately 90 sec.
(4) Select the item ”DIAGNOSIS / OBD/MOBD / ACTIVE TEST / A/F CONTROL”.
(5) Perform ”A/F CONTROL” with the engine in an idle condition (press the right or left button).

Result:

Heated oxygen sensor reacts in accordance with increase and decrease of injection volume:
+25 % → rich output: More than 0.55 V
–12.5 % → lean output: Less than 0.4 V

NOTICE:

There is a few seconds delay in the sensor 1 (front sensor) output. And there is about 20 seconds delay in the sensor 2 (rear sensor).

	Output voltage of heated oxygen sensor (sensor 1: front sensor)	Output voltage of heated oxygen sensor (sensor 2: rear sensor)	Mainly suspect trouble area
Case 1	Injection volume +25 % –12.5 % Output voltage More than 0.55 V Less than 0.4V **OK**	Injection volume +25 % –12.5 % Output voltage More than 0.55 V Less than 0.4V **OK**	—
Case 2	Injection volume +25 % –12.5 % Output voltage No reaction **NG**	Injection volume +25 % –12.5 % Output voltage More than 0.55 V Less than 0.4V **OK**	Sensor 1: front sensor (sensor 1, heater, sensor 1 circuit)
Case 3	Injection volume +25 % –12.5 % Output voltage More than 0.55 V Less than 0.4V **OK**	Injection volume +25 % –12.5 % Output voltage No reaction **NG**	Sensor 2: rear sensor (sensor 2, heater, sensor 2 circuit)
Case 4	Injection volume +25 % –12.5 % Output voltage No reaction **NG**	Injection volume +25 % –12.5 % Output voltage No reaction **NG**	Extremely rich or lean actual air–fuel ratio (Injector, fuel pressure, gas leakage in exhaust system, etc.)

The following A/F CONTROL procedure enables the technician to check and graph the voltage outputs of both the heated oxygen sensors.
For displaying the graph indication, enter ”ACTIVE TEST / A/F CONTROL / USER DATA”, then select ”O2S B1S1 and O2S B1S2” or ”O2S B2S1 and O2S B2S2” by pressing ”YES” button and push ”ENTER” button before pressing ”F4” button.

NOTICE:

If the vehicle is short of fuel, the air–fuel ratio becomes LEAN and heated oxygen sensor DTCs will be recorded, and the CHK ENG then comes on.

HINT:

- If different DTCs related to different systems that have terminal E2 as the ground terminal are output simultaneously, terminal E2 may be open.
- Read freeze frame data using the hand–held tester. Freeze frame data records the engine conditions when a malfunction is detected. When troubleshooting, it is useful for determining whether the vehicle was running or stopped, the engine was warmed up or not, the air–fuel ratio was lean or rich, etc. at the time of the malfunction.
- A high heated oxygen sensor (sensor 1) voltage (0.55 V or more) could be caused by a rich air fuel mixture. Check for conditions that would cause the engine to run rich.
- A low heated oxygen sensor (sensor 1) voltage (0.4 V or less) could be caused by a lean air fuel mixture. Check for conditions that would cause the engine to run lean.

1	**CHECK OTHER DTC OUTPUT(IN ADDITION TO HEATED OXYGEN SENSOR DTCS)**

(a) Read the DTC using the hand–held tester.
Result:

Display (DTC output)	Proceed to
Only ”P0130, P0150, P2195, P2196, P2197 and/or P2198” are output	A
”P0130, P0150, P2195, P2196, P2197 or P2198” and other DTCs are output	B

HINT:

- If any other codes besides ”P0130, P0150, P2195, P2196, P2197 and/or P2198” are output, perform the troubleshooting for those DTCs first.
- If a misfiring DTC(s) is present, record the DTC(s) that indicates misfiring cylinder(s), then proceed to A.

B → **GO TO RELEVANT DTC CHART**
(See page 05–309)

A

2	READ VALUE OF HAND–HELD TESTER(OUTPUT VOLTAGE OF HEATED OXYGEN SENSOR)

(a) Warm up the heated oxygen sensor (sensor 1) with the engine speed at 2,500 rpm for approximately 90 seconds.

(b) Read the output voltage of the heated oxygen sensor during idling.
Heated oxygen sensor (sensor 1) output voltage:
Alternates repeatedly between less than 0.4 V and more than 0.55 V (See the following table).

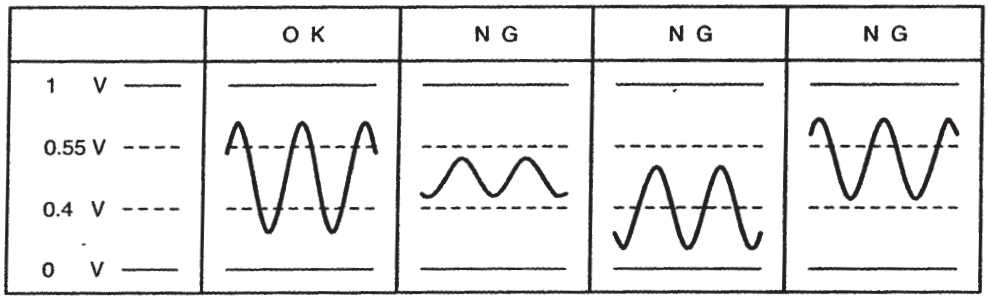

P18349

NG → **Go to step 5**

OK

3	PERFORM CONFIRMATION DRIVING PATTERN

HINT:
Clear all DTCs prior to performing the confirmation driving pattern.

GO

4	READ OUTPUT DTC(HEATED OXYGEN SENSOR DTCS ARE OUTPUT AGAIN)

(a) Read the DTC using the hand–held tester.
Result:

Display (DTC output)	Proceed to
”P0130, P0150, P2195, P2196, P2197 and/or P2198” are output again	A
”P0130, P0150, P2195, P2196, P2197 and/or P2198” are not output again	B

B → **CHECK FOR INTERMITTENT PROBLEMS**

A

REPLACE HEATED OXYGEN SENSOR

5 INSPECT HEATED OXYGEN SENSOR(HEATER RESISTANCE)

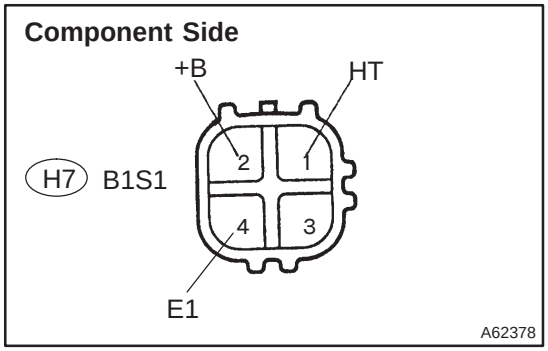

(a) Disconnect the H7 or H9 heated oxygen sensor connector.

(b) Measure the resistance between the terminals of the heated oxygen sensor connector.

Standard (Bank 1, 2 Sensor 1):

Terminal No.	Resistance
1 (HT) – 2 (+B)	11 to 16 Ω at 20°C (68°F)
1 (HT) – 4 (E1)	No Continuity

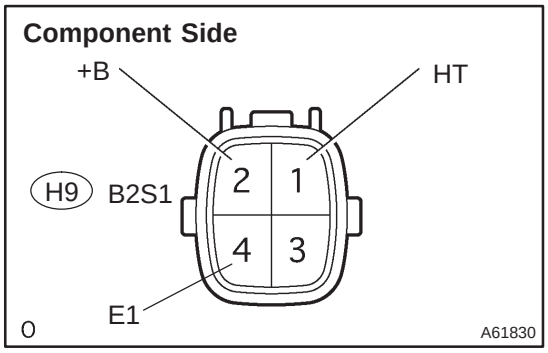

NG → **REPLACE HEATED OXYGEN SENSOR**

OK

6 INSPECT EFI RELAY

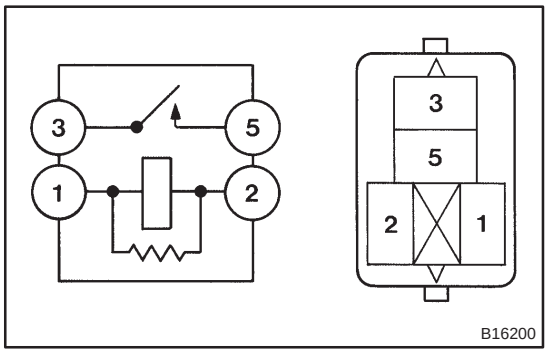

(a) Remove the EFI relay from the engine room R/B No. 4.

(b) Inspect the EFI relay.

Standard:

Terminal No.	Specified condition
1 – 2	Continuity
3 – 5	No Continuity
	Continuity (Apply battery voltage terminals 1 and 2)

NG → **REPLACE EFI RELAY**

OK

7 CHECK HARNESS AND CONNECTOR(HEATED OXYGEN SENSOR – ECM)

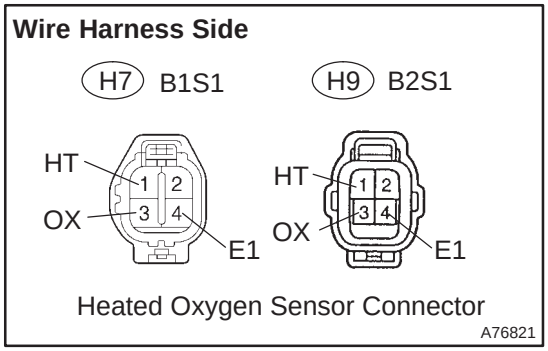

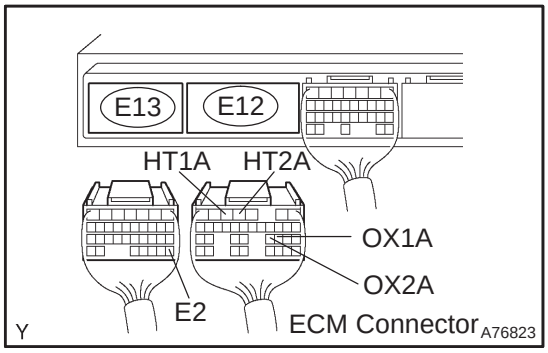

(a) Disconnect the H7 or H9 heated oxygen sensor connector.

(b) Disconnect the E12 and E13 ECM connectors.

(c) Check for continuity between the wire harness side connectors.

Standard (Check for open):

Symbols (Terminal No.)	Specified condition
OX (H7–3) – OX1A (E12–22)	Continuity
HT (H7–1) – HT1A (E12–5)	
E1 (H7–4) – E2 (E13–28)	
OX (H8–3) – OX2A (E12–23)	
HT (H8–1) – HT2A (E12–4)	
E1 (H8–4) – E2 (E13–28)	

Standard (Check for short):

Symbols (Terminal No.)	Specified condition
OX (H7–3) or OX1A (E12–22) – Body ground	No continuity
HT (H7–1) or HT1A (E12–5) – Body ground	
OX (H8–3) or OX2A (E12–23) – Body ground	
HT (H8–1) or HT2A (E12–4) – Body ground	

HINT:

- The OX1A and HT1A means the heated oxygen sensor bank 1 sensor 1.
- The OX2A and HT2A means the heated oxygen sensor bank 2 sensor 1.

Reference (Bank 1 Sensor 1 System Drawing)

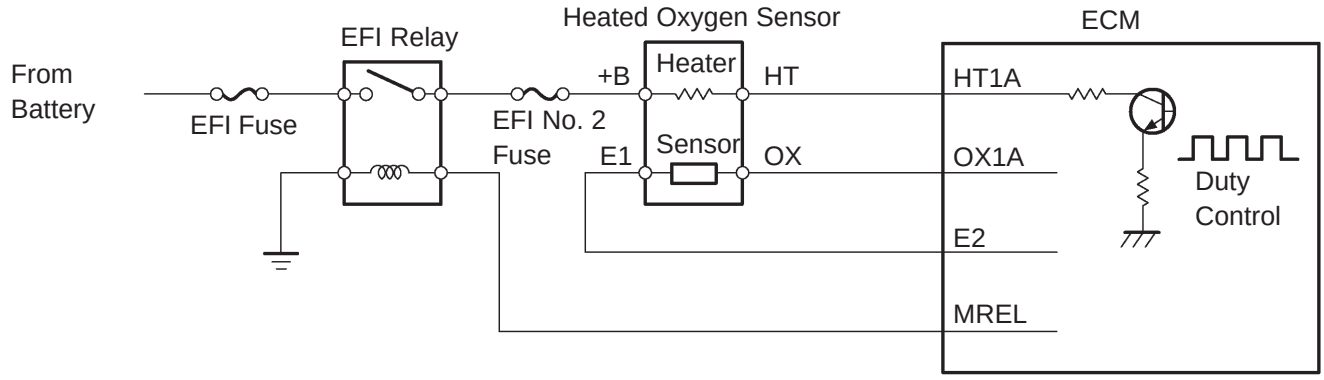

NG → **REPAIR OR REPLACE HARNESS OR CONNECTOR**

OK

8	CHECK AIR INDUCTION SYSTEM

(a) Check for vacuum leaks in the air induction system.

NG → REPAIR OR REPLACE AIR INDUCTION SYSTEM

OK

9	CHECK FUEL PRESSURE(LOW PRESSURE) (See page 11–33)

NG → CHECK AND REPLACE FUEL PUMP, PRESSURE REGULATOR, FUEL PIPE LINE AND FILTER

OK

10	CHECK FUEL PRESSURE(HIGH PRESSURE) (See page 11–33)

NG → CHECK AND REPLACE FUEL PUMP, FUEL PRESSURE SENSOR, WIRING AND FUEL LEAKAGE

OK

11	CONFIRM IF ANY MISFIRING DTCS WERE PRESENT AT STEP 1

(a) Misfiring DTC ”P0301, P0302, P0303 and/or P0304” was present at step 1.

NO → REPLACE HEATED OXYGEN SENSOR

YES

12	REPLACE FUEL INJECTOR ASSY (See page 11–42)

HINT:
If one or more the misfiring DTCs ”P0301, P0302, P0303 and/or P0304” were present at step 1, replace the injector(s) mounted on the misfiring cylinder(s) that is referred by the DTC(s) with normal injector(s).

GO

13	PERFORM CONFIRMATION DRIVING PATTERN

HINT:
Clear all DTCs prior to performing the confirmation driving pattern.

GO

14	READ OUTPUT DTC(HEATED OXYGEN SENSOR DTCS ARE OUTPUT AGAIN)

(a) Read the DTC using the hand–held tester.
Result:

Display (DTC output)	Proceed to
”P0130, P0150, P2195, P2196, P2197 and/or P2198” are output again	A
”P0130, P0150, P2195, P2196, P2197 and/or P2198” are not output again	B

B → **REPLACE FUEL INJECTOR ASSY**

A

REPLACE HEATED OXYGEN SENSOR

DTC	P0133	OXYGEN SENSOR CIRCUIT SLOW RESPONSE (BANK 1 SENSOR 1)

DTC	P0153	OXYGEN SENSOR CIRCUIT SLOW RESPONSE (BANK 2 SENSOR 1)

CIRCUIT DESCRIPTION

Refer to DTC P0130 on page 05–363.

DTC No.	DTC Detection Condition	Trouble Area
P0133 P0153	Response time for output voltage of heated oxygen sensor (sensor 1) to change from rich to lean, or from lean to rich, is 1.0 sec. or more during idling after engine is warmed up (2 trip detection logic)	• Open or short in heated oxygen sensor (bank 1, 2 sensor 1) circuit • Heated oxygen sensor (bank 1, 2 sensor 1) • Heated oxygen sensor heater (bank 1, 2 sensor 1) • EFI relay • Air induction system • Fuel pressure • Injector • ECM

HINT:

- Bank 1 refers to the No. 1 and No. 4 cylinders.
- Bank 2 refers to the No. 2 and No. 3 cylinders.
- Sensor 1 refers to the sensor closest to the engine assembly.

WIRING DIAGRAM

Refer to DTC P0130 on page 05–363.

INSPECTION PROCEDURE

HINT:

Hand–held tester only:

Narrowing down the trouble area is possible by performing the ”A/F CONTROL” ACTIVE TEST (heated oxygen sensor or other trouble areas can be distinguished).

(a) Perform ACTIVE TEST using the hand–held tester (A/F CONTROL).

HINT:

”A/F CONTROL” is an ACTIVE TEST which changes the injection volume –12.5 % or +25 %.

(1) Connect the hand–held tester to the DLC3 on the vehicle.
(2) Turn the ignition switch ON.
(3) Warm up the engine by running the engine at 2,500 rpm for approximately 90 sec.
(4) Select the item ”DIAGNOSIS / OBD/MOBD / ACTIVE TEST / A/F CONTROL”.
(5) Perform ”A/F CONTROL” with the engine in an idle condition (press the right or left button).

Result:

Heated oxygen sensor reacts in accordance with increase and decrease of injection volume:
+25 % → rich output: More than 0.55 V
–12.5 % → lean output: Less than 0.4 V

NOTICE:

There is a few seconds delay in the sensor 1 (front sensor) output. And there is about 20 seconds delay in the sensor 2 (rear sensor).

	Output voltage of heated oxygen sensor (sensor 1: front sensor)	Output voltage of heated oxygen sensor (sensor 2: rear sensor)	Mainly suspect trouble area
Case 1	Injection volume +25 % –12.5 % 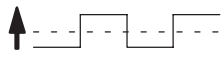 Output voltage More than 0.55 V Less than 0.4V  **OK**	Injection volume +25 % –12.5 % 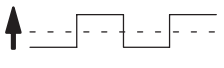 Output voltage More than 0.55 V Less than 0.4V  **OK**	—
Case 2	Injection volume +25 % –12.5 % 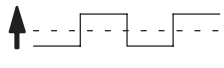 Output voltage No reaction **NG**	Injection volume +25 % –12.5 % 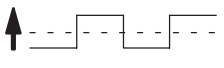 Output voltage More than 0.55 V Less than 0.4V  **OK**	Sensor 1: front sensor (sensor 1, heater, sensor 1 circuit)
Case 3	Injection volume +25 % –12.5 % 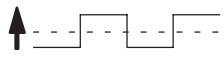 Output voltage More than 0.55 V Less than 0.4V  **OK**	Injection volume +25 % –12.5 % 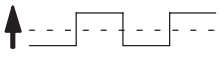 Output voltage No reaction **NG**	Sensor 2: rear sensor (sensor 2, heater, sensor 2 circuit)
Case 4	Injection volume +25 % –12.5 % 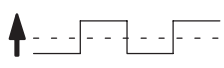 Output voltage No reaction **NG**	Injection volume +25 % –12.5 % 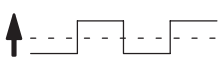 Output voltage No reaction **NG**	Extremely rich or lean actual air–fuel ratio (Injector, fuel pressure, gas leakage in exhaust system, etc.)

The following A/F CONTROL procedure enables the technician to check and graph the voltage outputs of both the heated oxygen sensors.

For displaying the graph indication, enter ”ACTIVE TEST / A/F CONTROL / USER DATA”, then select ”O2S B1S1 and O2S B1S2” or ”O2S B2S1 and O2S B2S2” by pressing ”YES” button and push ”ENTER” button before pressing ”F4” button.

NOTICE:

If the vehicle is short of fuel, the air–fuel ratio becomes LEAN and DTCs P0133 and/or P0153 will be recorded, and the CHK ENG then comes on.

HINT:

- If different DTCs related to different systems that have terminal E2 as the ground terminal are output simultaneously, terminal E2 may be open.
- Read freeze frame data using the hand–held tester. Freeze frame data records the engine conditions when a malfunction is detected. When troubleshooting, it is useful for determining whether the vehicle was running or stopped, the engine was warmed up or not, the air–fuel ratio was lean or rich, etc. at the time of the malfunction.
- A high heated oxygen sensor (sensor 1) voltage (0.55 V or more) could be caused by a rich air fuel mixture. Check for conditions that would cause the engine to run rich.
- A low heated oxygen sensor (sensor 1) voltage (0.4 V or less) could be caused by a lean air fuel mixture. Check for conditions that would cause the engine to run lean.

1	CHECK OTHER DTC OUTPUT(IN ADDITION TO DTC P0133 AND/OR P0153)

(a) Read the DTC using the hand–held tester.
Result:

Display (DTC output)	Proceed to
Only ”P0133 and/or P0153” are output	A
”P0133 or P0153” and other DTCs are output	B

HINT:

- If any other codes besides ”P0133 and/or P0153” are output, perform the troubleshooting for those DTCs first.
- If a misfiring DTC(s) is present, record the DTC(s) that indicates misfiring cylinder(s), then proceed to A.

B → **GO TO RELEVANT DTC CHART (See page 05–309)**

A

2	READ VALUE OF HAND–HELD TESTER(HEATED OXYGEN SENSOR DURING IDLING)

(a) Warm up the heated oxygen sensor (sensor 1) with the engine speed at 2,500 rpm for approximately 90 seconds.
(b) Read the output voltage of the heated oxygen sensor (sensor 1) during idling.
Heated oxygen sensor output voltage:
Alternates repeatedly between less than 0.4 V and more than 0.55 V, and period of ”t” must exist less than 1.0 sec. (See the following table).

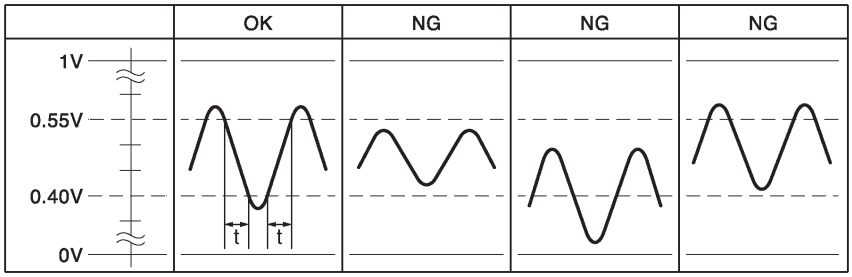

N A73686

NG → **Go to step 5**

OK

3	PERFORM CONFIRMATION DRIVING PATTERN (See page 05–363)

HINT:
Clear all DTCs prior to performing the confirmation driving pattern.

GO

4 READ OUTPUT DTC(DTC P0133 AND/OR P0153 ARE OUTPUT AGAIN)

(a) Read the DTC using the hand–held tester.
Result:

Display (DTC output)	Proceed to
”P0133 and/or P0153” are output again	A
”P0133 and/or P0153” are not output again	B

B → **CHECK FOR INTERMITTENT PROBLEMS**

A

REPLACE HEATED OXYGEN SENSOR

5 INSPECT HEATED OXYGEN SENSOR(HEATER RESISTANCE)

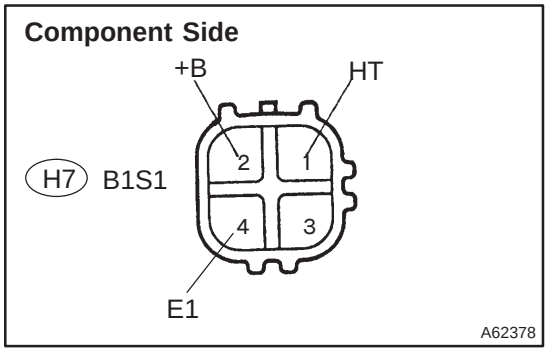

(a) Disconnect the H7 or H9 heated oxygen sensor connector.
(b) Measure the resistance between the terminals of the heated oxygen sensor connector.
Standard (Bank 1, 2 Sensor 1):

Terminal No.	Resistance
1 (HT) – 2 (+B)	11 to 16 Ω at 20°C (68°F)
1 (HT) – 4 (E1)	No Continuity

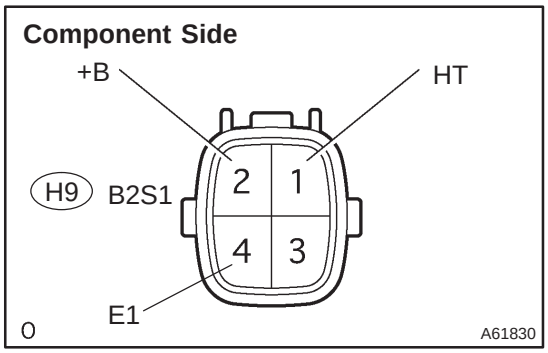

NG → **REPLACE HEATED OXYGEN SENSOR**

OK

6 INSPECT EFI RELAY

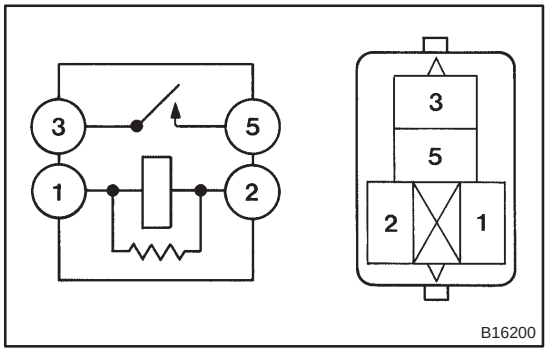

(a) Remove the EFI relay from the engine room R/B No. 4.
(b) Inspect the EFI relay.
Standard:

Terminal No.	Specified condition
1 – 2	Continuity
3 – 5	No Continuity
	Continuity (Apply battery voltage terminals 1 and 2)

NG → REPLACE EFI RELAY

OK

7 CHECK HARNESS AND CONNECTOR(HEATED OXYGEN SENSOR – ECM)

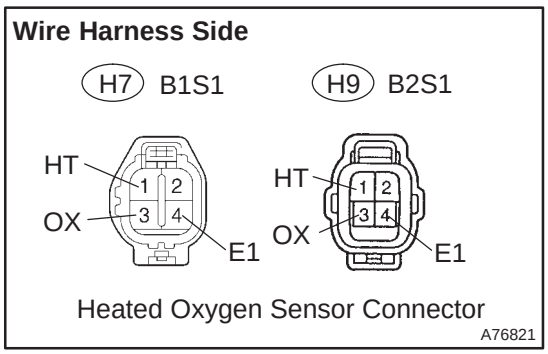

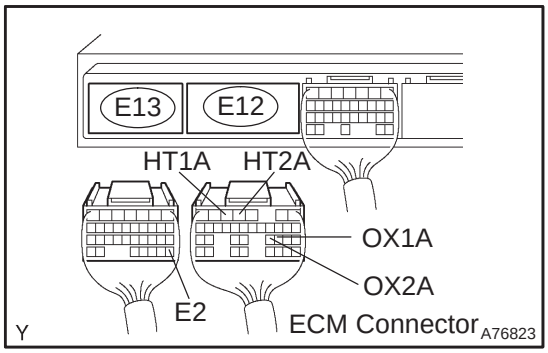

(a) Disconnect the H7 or H9 heated oxygen sensor connector.
(b) Disconnect the E12 and E13 ECM connectors.
(c) Check for continuity between the wire harness side connectors.

Standard (Check for open):

Symbols (Terminal No.)	Specified condition
OX (H7–3) – OX1A (E12–22)	Continuity
HT (H7–1) – HT1A (E12–5)	
E1 (H7–4) – E2 (E13–28)	
OX (H8–3) – OX2A (E12–23)	
HT (H8–1) – HT2A (E12–4)	
E1 (H8–4) – E2 (E13–28)	

Standard (Check for short):

Symbols (Terminal No.)	Specified condition
OX (H7–3) or OX1A (E12–22) – Body ground	No continuity
HT (H7–1) or HT1A (E12–5) – Body ground	
OX (H8–3) or OX2A (E12–23) – Body ground	
HT (H8–1) or HT2A (E12–4) – Body ground	

HINT:

- The OX1A and HT1A means the heated oxygen sensor bank 1 sensor 1.
- The OX2A and HT2A means the heated oxygen sensor bank 2 sensor 1.

Reference (Bank 1 Sensor 1 System Drawing)

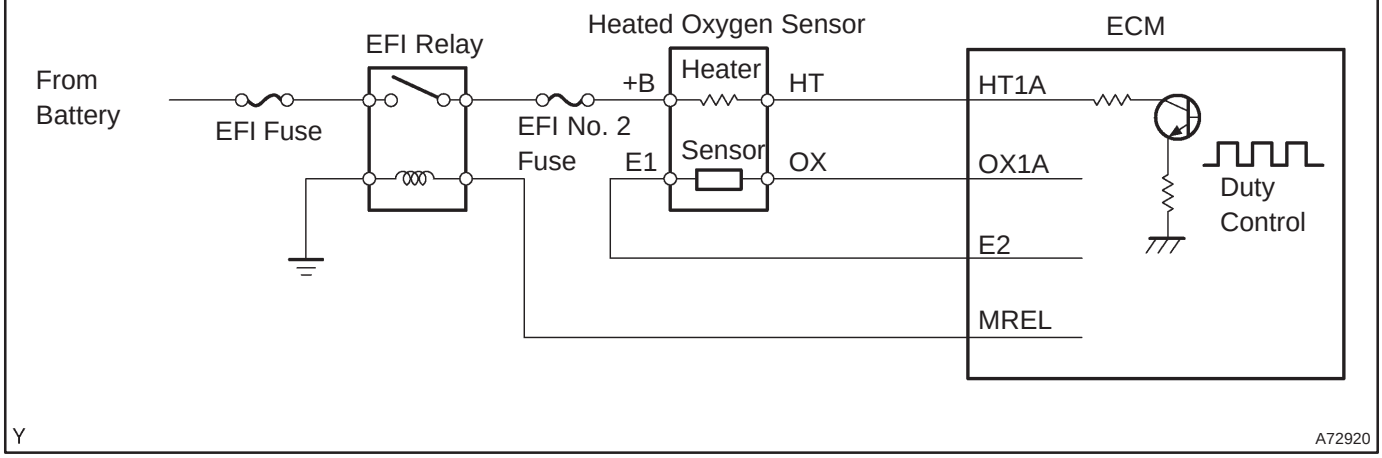

NG → REPAIR OR REPLACE HARNESS OR CONNECTOR

OK

8	CHECK AIR INDUCTION SYSTEM

(a) Check for vacuum leaks in the air induction system.

NG → REPAIR OR REPLACE AIR INDUCTION SYSTEM

OK

9	CHECK FUEL PRESSURE(LOW PRESSURE) (See page 11–33)

NG → CHECK AND REPLACE FUEL PUMP, PRESSURE REGULATOR, FUEL PIPE LINE AND FILTER

OK

10	CHECK FUEL PRESSURE(HIGH PRESSURE) (See page 11–33)

NG → CHECK AND REPLACE FUEL PUMP, PRESSURE REGULATOR, FUEL PIPE LINE AND FILTER

OK

11	CONFIRM IF ANY MISFIRING DTCS WERE PRESENT AT STEP 1

(a) Misfiring DTC ”P0301, P0302, P0303 and/or P0304” was present at step 1.

NO → REPLACE HEATED OXYGEN SENSOR

YES

12	REPLACE FUEL INJECTOR ASSY (See page 11–42)

HINT:
If one or more the misfiring DTCs ”P0301, P0302, P0303 and/or P0304” were present at step 1, replace the injector(s) mounted on the misfiring cylinder(s) that is referred by the DTC(s) with normal injector(s).

GO

13	PERFORM CONFIRMATION DRIVING PATTERN (See page 05–363)

HINT:
Clear all DTCs prior to performing the confirmation driving pattern.

GO

14	READ OUTPUT DTC(DTC P0133 AND/OR P0153 ARE OUTPUT AGAIN)

(a) Read the DTC using the hand–held tester.
Result:

Display (DTC output)	Proceed to
”P0133 and/or P0153” are output again	A
”P0133 and/or P0153” are not output again	B

B → **REPLACE FUEL INJECTOR ASSY**

A

REPLACE HEATED OXYGEN SENSOR

DTC	P0134	OXYGEN SENSOR CIRCUIT NO ACTIVITY DETECTED (BANK 1 SENSOR 1)

DTC	P0154	OXYGEN SENSOR CIRCUIT NO ACTIVITY DETECTED (BANK 2 SENSOR 1)

CIRCUIT DESCRIPTION

Refer to DTC P0130 on page 05–363.

DTC No.	DTC Detection Condition	Trouble Area
P0134 P0154	After engine is warmed up, heated oxygen sensor (sensor 1) output does not indicate RICH (≧ 0.45 V) even once when conditions (a), (b), (c) and (d) continue for at least 65 sec.: (a) Engine speed: 1,400 rpm or more (b) Vehicle speed: 130 km/h (81 mph) (c) Throttle valve is not fully closed (d) 180 sec. or more after starting engine	• Open or short in heated oxygen sensor (bank 1, 2 sensor 1) circuit • Heated oxygen sensor (bank 1, 2 sensor 1) • Heated oxygen sensor heater (bank 1, 2 sensor 1) • EFI relay • Air induction system • Fuel pressure • PCV hose connection • PCV valve and hose • Injector • Gas leakage in exhaust system • ECM

HINT:

- After confirming DTCs ”P0134 and P0154”, use the hand–held tester to confirm the output voltage of the heated oxygen sensor (bank 1, 2 sensor 1) from the ”DIAGNOSIS / OBD/MOBD / DATA LIST / ALL”. If the output voltage of the heated oxygen sensor is less than 0.1 V, the heated oxygen sensor circuit may be open or short.
- Bank 1 refers to the No. 1 and No. 4 cylinders.
- Bank 2 refers to the No. 2 and No. 3 cylinders.
- Sensor 1 refers to the sensor closest to the engine assembly.

WIRING DIAGRAM

Refer to DTC P0130 on page 05–363.

INSPECTION PROCEDURE

HINT:

Hand–held tester only:

Narrowing down the trouble area is possible by performing the ”A/F CONTROL” ACTIVE TEST (heated oxygen sensor or other trouble areas can be distinguished).

(a) Perform ACTIVE TEST using the hand–held tester (A/F CONTROL).

HINT:

”A/F CONTROL” is an ACTIVE TEST which changes the injection volume –12.5 % or +25 %.

(1) Connect the hand–held tester to the DLC3 on the vehicle.
(2) Turn the ignition switch ON.
(3) Warm up the engine by running the engine at 2,500 rpm for approximately 90 sec.
(4) Select the item ”DIAGNOSIS / OBD/MOBD / ACTIVE TEST / A/F CONTROL”.
(5) Perform ”A/F CONTROL” with the engine in an idle condition (press the right or left button).

Result:

Heated oxygen sensor reacts in accordance with increase and decrease of injection volume:
+25 % → rich output: More than 0.55 V
–12.5 % → lean output: Less than 0.4 V

NOTICE:
There is a few seconds delay in the sensor 1 (front sensor) output. And there is about 20 seconds delay in the sensor 2 (rear sensor).

	Output voltage of heated oxygen sensor (sensor 1: front sensor)	Output voltage of heated oxygen sensor (sensor 2: rear sensor)	Mainly suspect trouble area
Case 1	Injection volume +25 % –12.5 % Output voltage More than 0.55 V Less than 0.4V **OK**	Injection volume +25 % –12.5 % Output voltage More than 0.55 V Less than 0.4V **OK**	—
Case 2	Injection volume +25 % –12.5 % Output voltage No reaction **NG**	Injection volume +25 % –12.5 % Output voltage More than 0.55 V Less than 0.4V **OK**	Sensor 1: front sensor (sensor 1, heater, sensor 1 circuit)
Case 3	Injection volume +25 % –12.5 % Output voltage More than 0.55 V Less than 0.4V **OK**	Injection volume +25 % –12.5 % Output voltage No reaction **NG**	Sensor 2: rear sensor (sensor 2, heater, sensor 2 circuit)
Case 4	Injection volume +25 % –12.5 % Output voltage No reaction **NG**	Injection volume +25 % –12.5 % Output voltage No reaction **NG**	Extremely rich or lean actual air–fuel ratio (Injector, fuel pressure, gas leakage in exhaust system, etc.)

The following A/F CONTROL procedure enables the technician to check and graph the voltage outputs of both the heated oxygen sensors.
For displaying the graph indication, enter ”ACTIVE TEST / A/F CONTROL / USER DATA”, then select ”O2S B1S1 and O2S B1S2” or ”O2S B2S1 and O2S B2S2” by pressing ”YES” button and push ”ENTER” button before pressing ”F4” button.
HINT:

- If different DTCs related to different systems that have terminal E2 as the ground terminal are output simultaneously, terminal E2 may be open.
- Read freeze frame data using the hand–held tester. Freeze frame data records the engine conditions when a malfunction is detected. When troubleshooting, it is useful for determining whether the vehicle was running or stopped, the engine was warmed up or not, the air–fuel ratio was lean or rich, etc. at the time of the malfunction.
- A high heated oxygen sensor (sensor 1) voltage (0.55 V or more) could be caused by a rich air fuel mixture. Check for conditions that would cause the engine to run rich.
- A low heated oxygen sensor (sensor 1) voltage (0.4 V or less) could be caused by a lean air fuel mixture. Check for conditions that would cause the engine to run lean.

1	CHECK OTHER DTC OUTPUT(IN ADDITION TO DTC P0134 AND/OR P0154)

(a) Read the DTC using the hand–held tester.
Result:

Display (DTC output)	Proceed to
Only ”P0134 and/or P0154” are output	A
”P0134 or P0154” and other DTCs are output	B

HINT:
- If any other codes besides ”P0134 and/or P0154” are output, perform the troubleshooting for those DTCs first.
- If a misfiring DTC(s) is present, record the DTC(s) that indicates misfiring cylinder(s), then proceed to A.

B → **GO TO RELEVANT DTC CHART (See page 05–309)**

A

2	READ VALUE OF HAND–HELD TESTER(OUTPUT VOLTAGE OF HEATED OXYGEN SENSOR)

(a) Warm up the engine to the normal operating temperature above 75°C (169°F).
(b) Read the output voltage of the heated oxygen sensor (sensor 1) when the engine rpm is suddenly increased.

HINT:
Quickly accelerate the engine to 4,000 rpm 3 times using the accelerator pedal.
Standard:
Heated oxygen sensor (sensor 1) outputs a RICH signal (0.45 V or more) at least once.

NG → **Go to step 6**

OK

3	PERFORM CONFIRMATION DRIVING PATTERN (See page 05–363)

HINT:
Clear all DTCs prior to performing the confirmation driving pattern.

GO

4	READ OUTPUT DTC(DTC P0134 AND/OR P0154 ARE OUTPUT AGAIN)

(a) Read the DTC using the hand–held tester.
Result:

Display (DTC output)	Proceed to
”P0134 and/or P0154” are not output again	A
”P0134 and/or P0154” are output again	B

B → **CHECK AND REPLACE ECM (See page 01–32)**

A

5	CONFIRM IF VEHICLE HAS RUN OUT OF FUEL IN PAST

NO → CHECK FOR INTERMITTENT PROBLEMS

YES

DTC IS CAUSED BY RUNNING OUT OF FUEL (DTC P0134 AND/OR P0154)

6	CHECK CONNECTION OF PCV HOSE

NG → REPAIR OR REPLACE PCV HOSE

OK

7	INSPECT HEATED OXYGEN SENSOR(HEATER RESISTANCE)

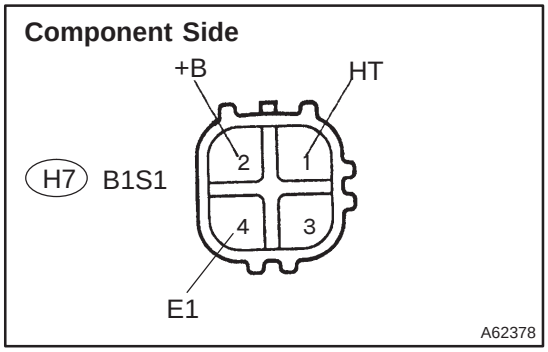

(a) Disconnect the H7 or H9 heated oxygen sensor connector.

(b) Measure the resistance between the terminals of the heated oxygen sensor connector.

Standard (Bank 1, 2 Sensor 1):

Terminal No.	Resistance
1 (HT) – 2 (+B)	11 to 16 Ω at 20°C (68°F)
1 (HT) – 4 (E1)	No Continuity

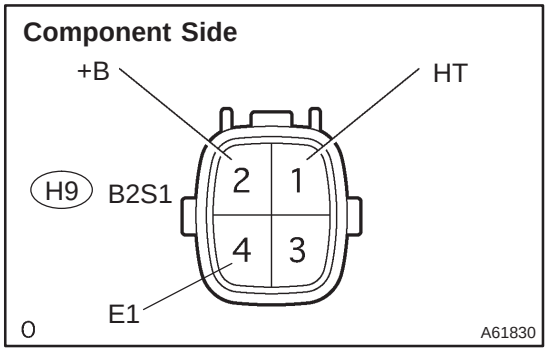

NG → REPLACE HEATED OXYGEN SENSOR

OK

8	INSPECT EFI RELAY

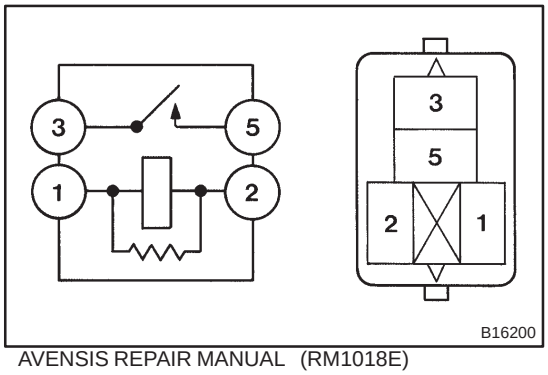

(a) Remove the EFI relay from the engine room R/B No. 4.

(b) Inspect the EFI relay.

Standard:

Terminal No.	Specified condition
1 – 2	Continuity
3 – 5	No Continuity
	Continuity (Apply battery voltage terminals 1 and 2)

NG → REPLACE EFI RELAY

OK

9 CHECK HARNESS AND CONNECTOR(HEATED OXYGEN SENSOR – ECM)

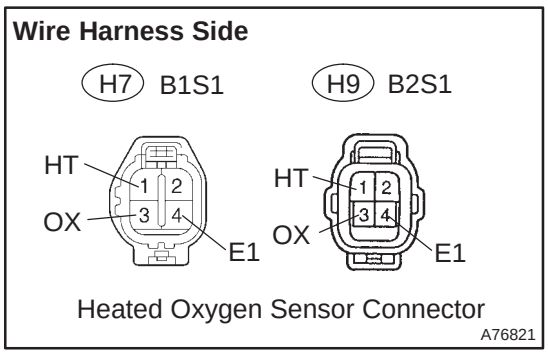

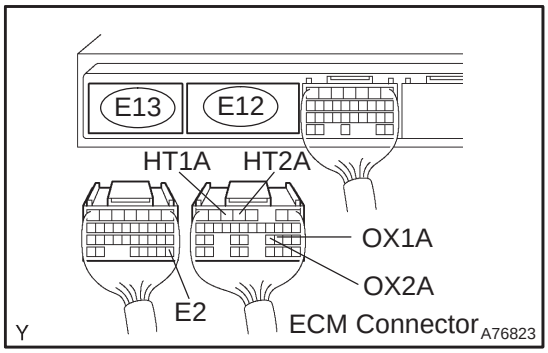

(a) Disconnect the H7 or H9 heated oxygen sensor connector.
(b) Disconnect the E12 and E13 ECM connectors.
(c) Check for continuity between the wire harness side connectors.

Standard (Check for open):

Symbols (Terminal No.)	Specified condition
OX (H7–3) – OX1A (E12–22)	Continuity
HT (H7–1) – HT1A (E12–5)	
E1 (H7–4) – E2 (E13–28)	
OX (H8–3) – OX2A (E12–23)	
HT (H8–1) – HT2A (E12–4)	
E1 (H8–4) – E2 (E13–28)	

Standard (Check for short):

Symbols (Terminal No.)	Specified condition
OX (H7–3) or OX1A (E12–22) – Body ground	No continuity
HT (H7–1) or HT1A (E12–5) – Body ground	
OX (H8–3) or OX2A (E12–23) – Body ground	
HT (H8–1) or HT2A (E12–4) – Body ground	

HINT:

- The OX1A and HT1A means the heated oxygen sensor bank 1 sensor 1.
- The OX2A and HT2A means the heated oxygen sensor bank 2 sensor 1.

Reference (Bank 1 Sensor 1 System Drawing)

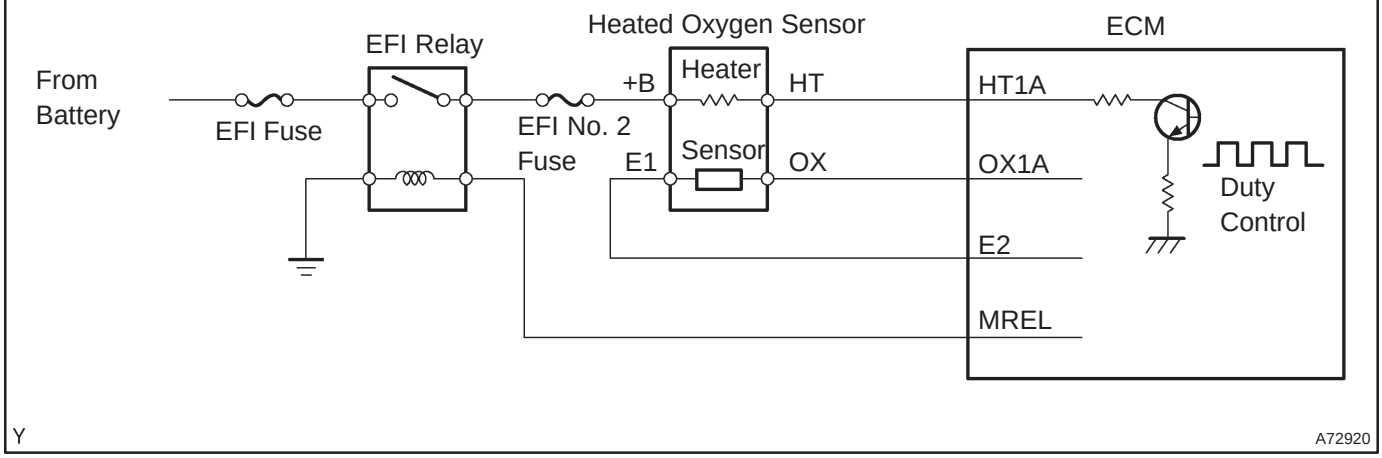

NG → REPAIR OR REPLACE HARNESS OR CONNECTOR

OK

10	CHECK WHETHER MISFIRE IS OCCURRED OR NOT BY MONITORING DTC AND DATA LIST

NG → PERFORM TROUBLESHOOTING FOR MISFIRE (See page 05–294)

OK

11	CHECK AIR INDUCTION SYSTEM

(a) Check for vacuum leaks in the air induction system.

NG → REPAIR OR REPLACE AIR INDUCTION SYSTEM

OK

12	CHECK FUEL PRESSURE(LOW PRESSURE) (See page 11–33)

NG → CHECK AND REPLACE FUEL PUMP, PRESSURE REGULATOR, FUEL PIPE LINE AND FILTER

OK

13	CHECK FUEL PRESSURE(HIGH PRESSURE) (See page 11–33)

NG → CHECK AND REPLACE FUEL PUMP, FUEL PRESSURE SENSOR, WIRING AND FUEL LEAKAGE

OK

14	CHECK FOR EXHAUST GAS LEAK

NG → REPAIR OR REPLACE EXHAUST GAS LEAKAGE POINT

OK

15	CONFIRM IF ANY MISFIRING DTCS WERE PRESENT AT STEP 1

(a) Misfiring DTC ”P0301, P0302, P0303 and/or P0304” was present at step 1.

NO → REPLACE HEATED OXYGEN SENSOR

YES

16	REPLACE FUEL INJECTOR ASSY (See page 11–42)

HINT:
If one or more the misfiring DTCs ”P0301, P0302, P0303 and/or P0304” were present at step 1, replace the injector(s) mounted on the misfiring cylinder(s) that is referred by the DTC(s) with normal injector(s).

GO

17	PERFORM CONFIRMATION DRIVING PATTERN (See page 05–363)

HINT:
Clear all DTCs prior to performing the confirmation driving pattern.

GO

18	READ OUTPUT DTC(DTC P0134 AND/OR P0154 ARE OUTPUT AGAIN)

(a) Read the DTC using the hand–held tester.
Result:

Display (DTC output)	Proceed to
”P0134 and/or P0154” are not output again	A
”P0134 and/or P0154” are output again	B

B → REPLACE FUEL INJECTOR ASSY

A

REPLACE HEATED OXYGEN SENSOR

DTC	P0136	OXYGEN SENSOR CIRCUIT MALFUNCTION (BANK 1 SENSOR 2)

DTC	P0156	OXYGEN SENSOR CIRCUIT MALFUNCTION (BANK 2 SENSOR 2)

CIRCUIT DESCRIPTION

Refer to DTC P0130 on page 05–363.

DTC No	DTC Detection Condition	Trouble Area
P0136 P0156	If the following two conditions are satisfied at a time (2 trip detection logic): (a) The ECM records cycles which the vehicle driving and stops 8 times or more. (b) There was no change in the rich and lean outputs from heated oxygen sensor (sensor 2) for the 360 seconds under air fuel ratio feedback control. (Throttle was not closed)	• Open or short in heated oxygen sensor (bank 1, 2 sensor 2) circuit • Heated oxygen sensor (bank 1, 2 sensor 2) • Heated oxygen sensor heater (bank 1, 2 sensor 2) • EFI relay

HINT:

- Bank 1 refers to the No. 1 and No. 4 cylinders.
- Bank 2 refers to the No. 2 and No. 3 cylinders.
- Sensor 2 refers to the sensor farthest away from the engine assembly.

WIRING DIAGRAM

Refer to DTC P0130 on page 05–363.

CONFIRMATION DRIVING PATTERN

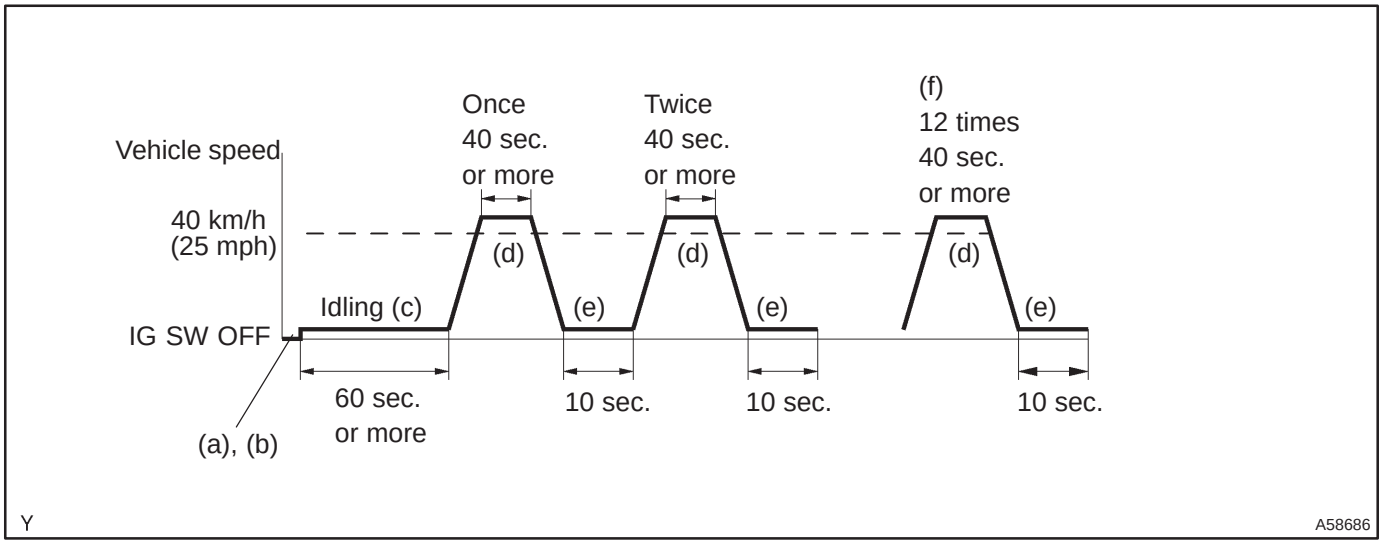

(a) Connect the hand–held tester to the DLC3.
(b) Switch the hand–held tester from the normal mode to the check (test) mode (See page 05–294).
(c) Start the engine and let the engine idle for 60 seconds or more.
(d) Drive the vehicle at 40 km/h (25 mph) or more for 40 seconds or more.
(e) Let the engine idle for 10 seconds or more.
(f) Perform steps (d) and (e) 12 times.

HINT:

If a malfunction exists, the CHK ENG will be illuminated on the multi information display during step (f).

NOTICE:

If the conditions in this test are not strictly followed, detection of a malfunction will not occur. If you do not have a hand–held tester, turn the ignition switch OFF after performing steps from (c) to (f), then perform steps from (c) to (f) again.

INSPECTION PROCEDURE

HINT:

Hand–held tester only:

Narrowing down the trouble area is possible by performing the ”A/F CONTROL” ACTIVE TEST (heated oxygen sensor or other trouble areas can be distinguished).

(a) Perform ACTIVE TEST using the hand–held tester (A/F CONTROL).

HINT:

”A/F CONTROL” is an ACTIVE TEST which changes the injection volume –12.5 % or +25 %.

(1) Connect the hand–held tester to the DLC3 on the vehicle.
(2) Turn the ignition switch ON.
(3) Warm up the engine by running the engine at 2,500 rpm for approximately 90 sec.
(4) Select the item ”DIAGNOSIS / OBD/MOBD / ACTIVE TEST / A/F CONTROL”.
(5) Perform ”A/F CONTROL” with the engine in an idle condition (press the right or left button).

Result:

Heated oxygen sensor reacts in accordance with increase and decrease of injection volume:
+25 % → rich output: More than 0.55 V
–12.5 % → lean output: Less than 0.4 V

NOTICE:
There is a few seconds delay in the sensor 1 (front sensor) output. And there is about 20 seconds delay in the sensor 2 (rear sensor).

	Output voltage of heated oxygen sensor (sensor 1: front sensor)	Output voltage of heated oxygen sensor (sensor 2: rear sensor)	Mainly suspect trouble area
Case 1	Injection volume +25 % –12.5 % Output voltage More than 0.55 V Less than 0.4V **OK**	Injection volume +25 % –12.5 % Output voltage More than 0.55 V Less than 0.4V **OK**	—
Case 2	Injection volume +25 % –12.5 % Output voltage No reaction **NG**	Injection volume +25 % –12.5 % Output voltage More than 0.55 V Less than 0.4V **OK**	Sensor 1: front sensor (sensor 1, heater, sensor 1 circuit)
Case 3	Injection volume +25 % –12.5 % Output voltage More than 0.55 V Less than 0.4V **OK**	Injection volume +25 % –12.5 % Output voltage No reaction **NG**	Sensor 2: rear sensor (sensor 2, heater, sensor 2 circuit)
Case 4	Injection volume +25 % –12.5 % Output voltage No reaction **NG**	Injection volume +25 % –12.5 % Output voltage No reaction **NG**	Extremely rich or lean actual air–fuel ratio (Injector, fuel pressure, gas leakage in exhaust system, etc.)

The following A/F CONTROL procedure enables the technician to check and graph the voltage outputs of both the heated oxygen sensors.
For displaying the graph indication, enter ”ACTIVE TEST / A/F CONTROL / USER DATA”, then select ”O2S B1S1 and O2S B1S2” or ”O2S B2S1 and O2S B2S2” by pressing ”YES” button and push ”ENTER” button before pressing ”F4” button.
HINT:

- If different DTCs related to different systems that have terminal E2 as the ground terminal are output simultaneously, terminal E2 may be open.
- Read freeze frame data using the hand–held tester. Freeze frame data records the engine conditions when a malfunction is detected. When troubleshooting, it is useful for determining whether the vehicle was running or stopped, the engine was warmed up or not, the air–fuel ratio was lean or rich, etc. at the time of the malfunction.

1	CHECK OTHER DTC OUTPUT(IN ADDITION TO DTC P0136 AND/OR P0156)

(a) Read the DTC using the hand–held tester.
Result:

Display (DTC output)	Proceed to
Only ”P0136 and/or P0156” are output	A
”P0136 or P0156” and other DTCs are output	B

HINT:
If any other codes besides ”P0136 and/or P0156” are output, perform the troubleshooting for those DTCs first.

B → **GO TO RELEVANT DTC CHART (See page 05–309)**

A

2	READ VALUE OF HAND–HELD TESTER(OUTPUT VOLTAGE OF HEATED OXYGEN SENSOR)

(a) After warming up the engine, run the engine at 2,500 rpm for 3 minutes.
(b) Read the output voltage of the heated oxygen sensor (sensor 2) when the engine rpm is suddenly increased.

HINT:
Quickly accelerate the engine to 4,000 rpm 3 times by using the accelerator pedal.

The output voltage of heated oxygen sensor (sensor 2): Alternates from 0.4 V or less to 0.5 V or more.

OK → **Go to step 6**

NG

3	INSPECT HEATED OXYGEN SENSOR(HEATER RESISTANCE)

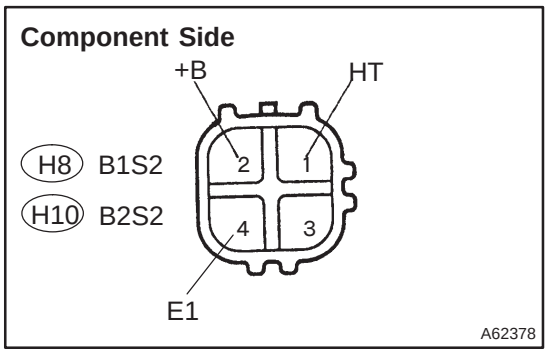

(a) Disconnect the H8 or H10 heated oxygen sensor connector.
(b) Measure the resistance between the terminals of the heated oxygen sensor connector.
Standard (Bank 1, 2 Sensor 2):

Terminal No.	Resistance
1 (HT) – 2 (+B)	11 to 16 Ω at 20°C (68°F)
1 (HT) – 4 (E1)	No Continuity

NG → **REPLACE HEATED OXYGEN SENSOR**

OK

4 INSPECT EFI RELAY

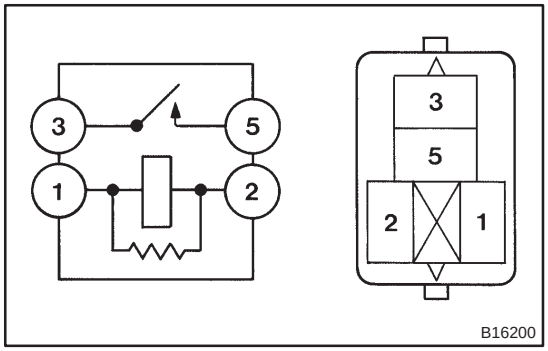

(a) Remove the EFI relay from the engine room R/B No. 4.
(b) Inspect the EFI relay.

Standard:

Terminal No.	Specified condition
1 – 2	Continuity
3 – 5	No Continuity
	Continuity (Apply battery voltage terminals 1 and 2)

NG → **REPLACE EFI RELAY**

OK

5 CHECK HARNESS AND CONNECTOR(HEATED OXYGEN SENSOR – ECM)

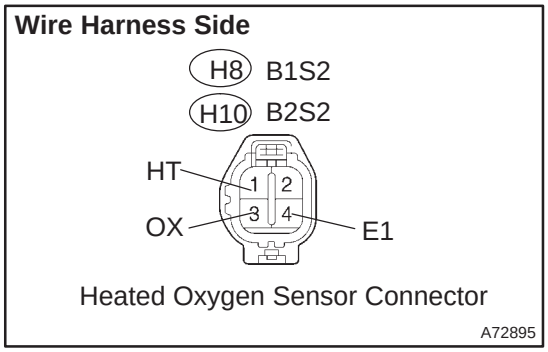

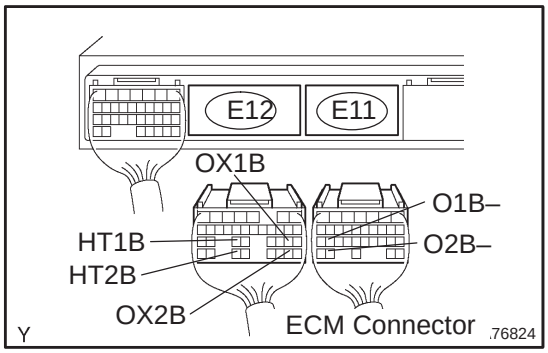

(a) Disconnect the H8 or H10 heated oxygen sensor connector.
(b) Disconnect the E11 and E12 ECM connectors.
(c) Check for continuity between the wire harness side connectors.

Standard (Check for open):

Symbols (Terminal No.)	Specified condition
OX (H8–3) – OX1B (E12–21)	Continuity
HT (H8–1) – HT1B (E12–25)	
E1 (H8–4) – O1B– (E11–26)	
OX (H10–3) – OX2B (E12–29)	
HT (H10–1) – HT2B (E12–33)	
E1 (H10–4) – O2B– (E11–31)	

Standard (Check for short):

Symbols (Terminal No.)	Specified condition
OX (H8–3) or OX1B (E12–21) – Body ground	No continuity
HT (H8–1) or HT1B (E12–25) – Body ground	
OX (H10–3) or OX2B (E12–29) – Body ground	
HT (H10–1) or HT2B (E12–33) – Body ground	

HINT:

- The OX1B and HT1B means the heated oxygen sensor bank 1 sensor 2.
- The OX2B and HT2B means the heated oxygen sensor bank 2 sensor 2.

Reference (Bank 1 Sensor 2 System Drawing)

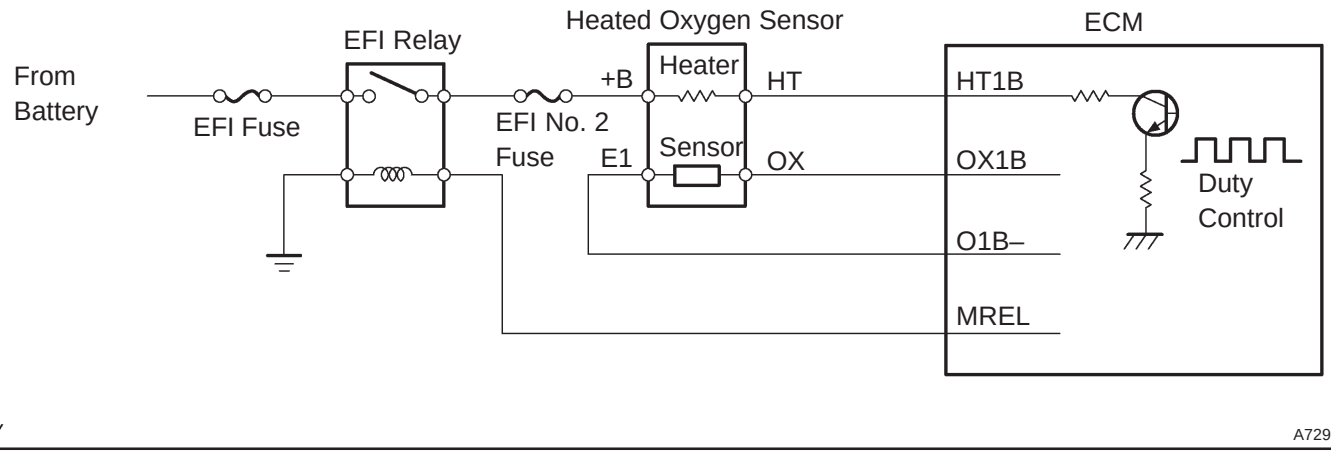

NG → **REPAIR OR REPLACE HARNESS OR CONNECTOR**

OK

REPLACE HEATED OXYGEN SENSOR

6	PERFORM CONFIRMATION DRIVING PATTERN

HINT:
Clear all DTCs prior to performing the confirmation driving pattern.

GO

7	READ OUTPUT DTC(DTC P0136 AND/OR P0156 ARE OUTPUT AGAIN)

(a) Read the DTC using the hand–held tester.
Result:

Display (DTC output)	Proceed to
”P0136 and/or P0156” are not output again	A
”P0136 and/or P0156” are output again	B

B → **REPLACE HEATED OXYGEN SENSOR**

A

CHECK FOR INTERMITTENT PROBLEMS

DTC	P0171	SYSTEM TOO LEAN (BANK 1)

DTC	P0172	SYSTEM TOO RICH (BANK 1)

DTC	P0174	SYSTEM TOO LEAN (BANK 2)

DTC	P0175	SYSTEM TOO RICH (BANK 2)

CIRCUIT DESCRIPTION

The fuel trim is related to the feedback compensation value, not to the basic injection time. The fuel trim includes the short–term fuel trim and the long–term fuel trim.

The short–term fuel trim is the short–term fuel compensation used to maintain the air–fuel ratio at stoichiometric air–fuel ratio. The signal from the heated oxygen sensor indicates whether the air–fuel ratio is RICH or LEAN compared to the stoichiometric air–fuel ratio. This variance triggers a reduction in the fuel volume if the air–fuel ratio is RICH, and an increase in the fuel volume if it is LEAN.

The long–term fuel trim is the overall fuel compensation carried out in long–term to compensate for a continual deviation of the short–term fuel trim from the central value, due to individual engine differences, wear overtime and changes in the operating environment.

If both the short–term fuel trim and the long–term fuel trim are LEAN or RICH beyond a certain value, it is detected as a malfunction and the CHK ENG is illuminated.

DTC No.	DTC Detection Condition	Trouble Area
P0171 P0174	When air–fuel ratio feedback is stable after warming up engine, fuel trim is considerably in error on LEAN side (2 trip detection logic)	• Air induction system • Injector blockage • Mass air flow meter • Manifold absolute pressure sensor • Engine coolant temperature sensor • Fuel pressure • Gas leakage in exhaust system • Open or short in heated oxygen sensor (bank 1, 2 sensor 1) circuit • Heated oxygen sensor (bank 1, 2 sensor 1) • Heated oxygen sensor heater (bank 1, 2 sensor 1) • EFI relay • PCV valve and hose • PCV hose connection • ECM
P0172 P0175	When air–fuel ratio feedback is stable after warming up engine, fuel trim is considerably in error on RICH side (2 trip detection logic)	• Injector leakage blockage • Mass air flow meter • Manifold absolute pressure sensor • Engine coolant temperature sensor • Ignition system • Fuel pressure • Gas leakage in exhaust system • Open or short in heated oxygen sensor (bank 1, 2 sensor 1) circuit • Heated oxygen sensor (bank 1, 2 sensor 1) • ECM

HINT:

- When DTC ”P0171 or P0174” is recorded, the actual air–fuel ratio is on the LEAN side. When DTC ”P0172 or P0175” is recorded, the actual air–fuel ratio is on the RICH side.
- If the vehicle runs out of fuel, the air–fuel ratio is LEAN and DTC ”P0171 or P0174” is recorded. The CHK ENG then comes on.

- If the total of the short–term fuel trim value and long–term fuel trim value is within ± 25 % (Engine coolant temperature is greater than 75°C), the system is functioning normally.
- Bank 1 refers to the No. 1 and No. 4 cylinders.
- Bank 2 refers to the No. 2 and No. 3 cylinders.

WIRING DIAGRAM

Refer to DTC P0130 on page 05–363.

INSPECTION PROCEDURE

HINT:

Hand–held tester only:

Narrowing down the trouble area is possible by performing the ”A/F CONTROL” ACTIVE TEST (heated oxygen sensor or other trouble areas can be distinguished).

(a) Perform ACTIVE TEST using the hand–held tester (A/F CONTROL).

HINT:

”A/F CONTROL” is an ACTIVE TEST which changes the injection volume –12.5 % or +25 %.

(1) Connect the hand–held tester to the DLC3 on the vehicle.
(2) Turn the ignition switch ON.
(3) Warm up the engine by running the engine at 2,500 rpm for approximately 90 sec.
(4) Select the item ”DIAGNOSIS / OBD/MOBD / ACTIVE TEST / A/F CONTROL”.
(5) Perform ”A/F CONTROL” with the engine in an idle condition (press the right or left button).

Result:

Heated oxygen sensor reacts in accordance with increase and decrease of injection volume:
+25 % → rich output: More than 0.55 V
–12.5 % → lean output: Less than 0.4 V

NOTICE:

There is a few seconds delay in the sensor 1 (front sensor) output. And there is about 20 seconds delay in the sensor 2 (rear sensor).

	Output voltage of heated oxygen sensor (sensor 1: front sensor)	Output voltage of heated oxygen sensor (sensor 2: rear sensor)	Mainly suspect trouble area
Case 1	Injection volume +25 % –12.5 % 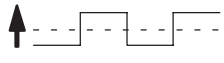 Output voltage More than 0.55 V Less than 0.4V  **OK**	Injection volume +25 % –12.5 % 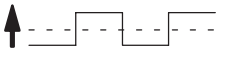 Output voltage More than 0.55 V Less than 0.4V 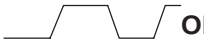 **OK**	—
Case 2	Injection volume +25 % –12.5 % 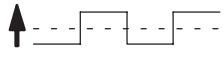 Output voltage No reaction **NG**	Injection volume +25 % –12.5 % 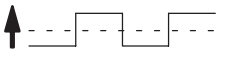 Output voltage More than 0.55 V Less than 0.4V 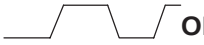 **OK**	Sensor 1: front sensor (sensor 1, heater, sensor 1 circuit)
Case 3	Injection volume +25 % –12.5 % 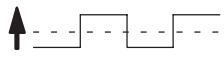 Output voltage More than 0.55 V Less than 0.4V  **OK**	Injection volume +25 % –12.5 % 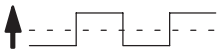 Output voltage No reaction **NG**	Sensor 2: rear sensor (sensor 2, heater, sensor 2 circuit)
Case 4	Injection volume +25 % –12.5 % 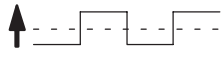 Output voltage No reaction **NG**	Injection volume +25 % –12.5 % 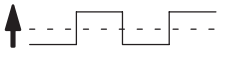 Output voltage No reaction **NG**	Extremely rich or lean actual air–fuel ratio (Injector, fuel pressure, gas leakage in exhaust system, etc.)

The following A/F CONTROL procedure enables the technician to check and graph the voltage outputs of both the heated oxygen sensors.

For displaying the graph indication, enter ”ACTIVE TEST / A/F CONTROL / USER DATA”, then select ”O2S B1S1 and O2S B1S2” or ”O2S B2S1 and O2S B2S2” by pressing ”YES” button and push ”ENTER” button before pressing ”F4” button.

HINT:

- If different DTCs related to different systems that have terminal E2 as the ground terminal are output simultaneously, terminal E2 may be open.
- Read freeze frame data using the hand–held tester. Freeze frame data records the engine conditions when a malfunction is detected. When troubleshooting, it is useful for determining whether the vehicle was running or stopped, the engine was warmed up or not, the air–fuel ratio was lean or rich, etc. at the time of the malfunction.
- A high heated oxygen sensor (sensor 1) voltage (0.55 V or more) could be caused by a rich air fuel mixture. Check for conditions that would cause the engine to run rich.
- A low heated oxygen sensor (sensor 1) voltage (0.4 V or less) could be caused by a lean air fuel mixture. Check for conditions that would cause the engine to run lean.

1	CHECK OTHER DTC OUTPUT(IN ADDITION TO DTC P0171, P0172, P0174 AND/OR P0175)

(a) Read the DTC using the hand–held tester.
Result:

Display (DTC output)	Proceed to
Only ”P0171, P0172, P0174 and/or P0175” are output	A
”P0171, P0172, P0174 or P0175” and other DTCs are output	B

HINT:

- If any other codes besides ”P0171, P0172, P0174 and/or P0175” are output, perform the troubleshooting for those DTCs first.
- If a misfiring DTC(s) is present, record the DTC(s) that indicates misfiring cylinder(s), then proceed to A.

B → **GO TO RELEVANT DTC CHART (See page 05–309)**

A

2	CHECK AIR INDUCTION SYSTEM

(a) Check for vacuum leaks in air the induction system.

NG → **REPAIR OR REPLACE AIR INDUCTION SYSTEM**

OK

3	CHECK CONNECTION OF PCV HOSE

NG → **REPAIR OR REPLACE PCV HOSE**

OK

4 INSPECT MASS AIR FLOW METER

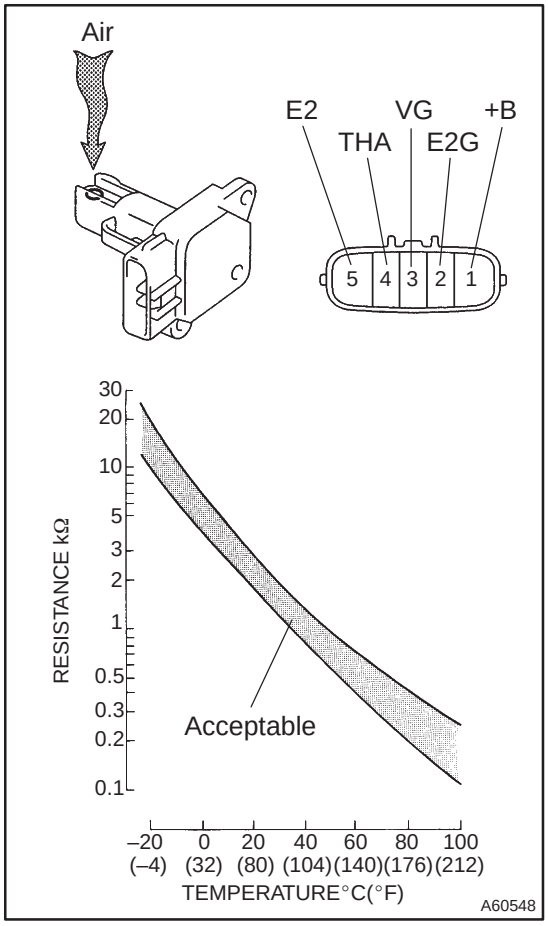

(a) Remove the mass air flow meter.
(b) Output voltage inspection.
  (1) Apply battery voltage across terminals +B and E2G.
  (2) Connect the positive (+) tester prove to terminal VG, and negative (–) tester prove to terminal E2G.
  (3) Blow air into the mass air flow meter, and check that the voltage fluctuates.
(c) Resistance inspection.
  (1) Measure the resistance between terminals THA and E2.

Resistance:
13.6 to 18.4 kΩ at –20°C (–4°F)
2.21 to 2.69 kΩ at 20°C (68°F)
0.49 to 0.67 kΩ at 60°C (140°F)

NG → **REPLACE MASS AIR FLOW METER**

OK

5	INSPECT ENGINE COOLANT TEMPERATURE SENSOR(RESISTANCE)

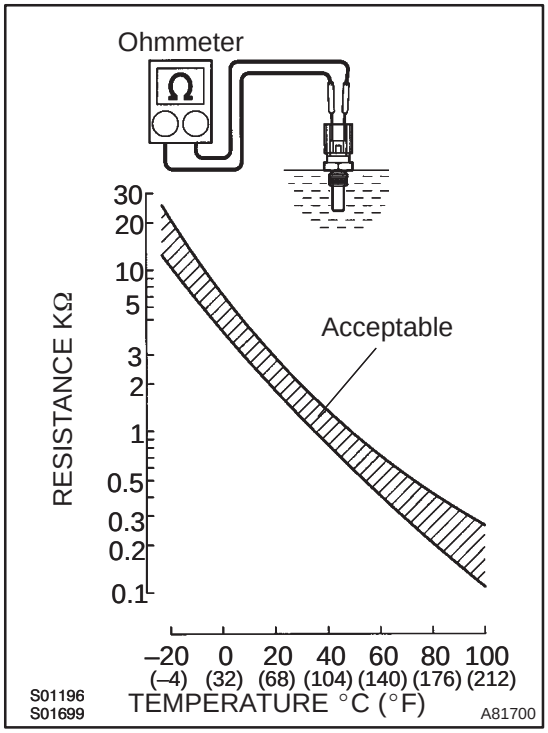

(a) Remove the engine coolant temperature sensor.
(b) Measure the resistance between the terminals.
Resistance:
2.32 to 2.59 kΩ at 20°C (68°F)
0.310 to 0.326 kΩ at 80°C (176°F)

NOTICE:
In case of checking the engine coolant temperature sensor in the water, be careful not to allow water to go into the terminals. After checking, dry the sensor.

HINT:
Alternate procedure: Connect an ohmmeter to the installed engine coolant temperature sensor and read the resistance. Use an infrared thermometer to measure the engine temperature in the immediate vicinity of the sensor. Compare these values to the resistance/temperature graph. Change the engine temperature (warm up or allow to cool down) and repeat the test.

NG → **REPLACE ENGINE COOLANT TEMPERATURE SENSOR**

OK ↓

6	CHECK FOR SPARK AND IGNITION (See page 18–12)

NG → **REPAIR OR REPLACE**

OK ↓

7	CHECK FUEL PRESSURE(LOW PRESSURE) (See page 11–33)

NG → **CHECK AND REPLACE FUEL PUMP, PRESSURE REGULATOR, FUEL PIPE LINE AND FILTER**

OK ↓

8	CHECK FUEL PRESSURE(HIGH PRESSURE) (See page 11–33)

NG → **CHECK AND REPLACE FUEL PUMP, FUEL PRESSURE SENSOR, WIRING AND FUEL LEAKAGE**

OK ↓

9	CHECK FOR EXHAUST GAS LEAKAGE

NG → REPAIR OR REPLACE EXHAUST GAS LEAKAGE POINT (See page 15–6)

OK

10	CONFIRM IF ANY MISFIRING DTCS WERE PRESENT AT STEP 1

(a) Misfiring DTC ”P0301, P0302, P0303 and/or P0304” was present at step 1.

NO → Go to step 14

YES

11	REPLACE FUEL INJECTOR ASSY (See page 11–42)

HINT:
If one or more the misfiring DTCs ”P0301, P0302, P0303 and/or P0304” were present at step 1, replace the injector(s) mounted on the misfiring cylinder(s) that is referred by the DTC(s) with normal injector(s).

GO

12	PERFORM CONFIRMATION DRIVING PATTERN (See page 05–363)

HINT:
Clear all DTCs prior to performing the confirmation driving pattern.

GO

13	READ OUTPUT DTC(DTC P0171, P0172, P0174 AND/OR P0175 ARE OUTPUT AGAIN)

(a) Read the DTC using the hand–held tester.
Result:

Display (DTC output)	Proceed to
DTC ”P0171, P0172, P0174 and/or P0175” are output again	A
DTC ”P0171, P0172, P0174 and/or P0175” are not output again	B

B → REPLACE FUEL INJECTOR ASSY

A

14	READ VALUE OF HAND–HELD TESTER(OUTPUT VOLTAGE OF HEATED OXYGEN SENSOR (BANK 1, 2 SENSOR 1))

(a) Warm up the heated oxygen sensor (sensor 1) with the engine speed at 2,500 rpm for approximately 90 seconds.

(b) Read the output voltage of the heated oxygen sensor (sensor 1) during idling.
The output voltage of heated oxygen sensor (sensor 1):
Alternates repeatedly between less than 0.4 V and more than 0.55 V (See the following table).

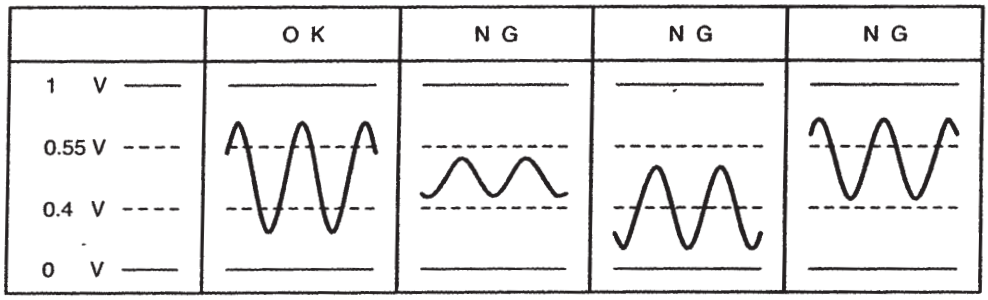

P18349

NG → **Go to step 21**

OK

15	PERFORM CONFIRMATION DRIVING PATTERN (See page 05–363)

HINT:
Clear all DTCs prior to performing the confirmation driving pattern.

GO

16	READ OUTPUT DTC(DTC P0171, P0172, P0174 AND/OR P0175 ARE OUTPUT AGAIN)

(a) Read the DTC using the hand–held tester.
Result:

Display (DTC output)	Proceed to
DTC "P0171, P0172, P0174 and/or P0175" are output again	A
DTC "P0171, P0172, P0174 and/or P0175" are not output again	B

B → **Go to step 20**

A

17	REPLACE HEATED OXYGEN SENSOR

GO

18	PERFORM CONFIRMATION DRIVING PATTERN (See page 05–363)

HINT:
Clear all DTCs prior to performing the confirmation driving pattern.

GO

19	READ OUTPUT DTC(DTC P0171, P0172, P0174 AND/OR P0175 ARE OUTPUT AGAIN)

(a) Read the DTC using the hand–held tester.
Result:

Display (DTC output)	Proceed to
DTC "P0171, P0172, P0174 and/or P0175" are not output again	A
DTC "P0171, P0172, P0174 and/or P0175" are output again	B

B → CHECK AND REPLACE ECM (See page 01–32) AND PERFORM CONFIRMATION DRIVING PATTERN (See page 05–363)

A

20	CONFIRM IF VEHICLE HAS RUN OUT OF FUEL IN PAST

NO → CHECK FOR INTERMITTENT PROBLEMS

YES

DTC IS CAUSED BY RUNNING OUT OF FUEL (DTCS P0171, P0172, P0174 AND/OR P0175)

21 INSPECT HEATED OXYGEN SENSOR(HEATER RESISTANCE)

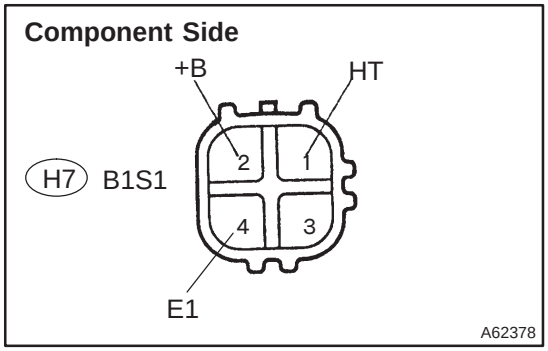

(a) Disconnect the H7 or H9 heated oxygen sensor connector.

(b) Measure the resistance between the terminals of the heated oxygen sensor connector.

Standard (Bank 1, 2 Sensor 1):

Terminal No.	Resistance
1 (HT) – 2 (+B)	11 to 16 Ω at 20°C (68°F)
1 (HT) – 4 (E1)	No Continuity

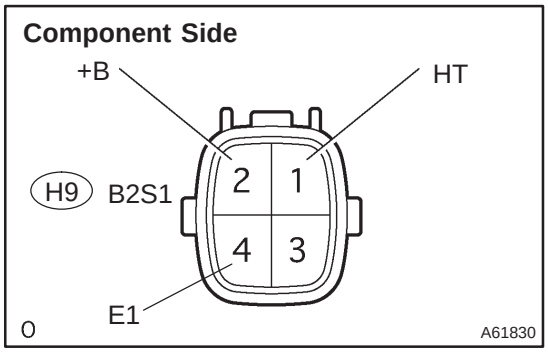

NG → **REPLACE HEATED OXYGEN SENSOR**

OK

22 INSPECT EFI RELAY

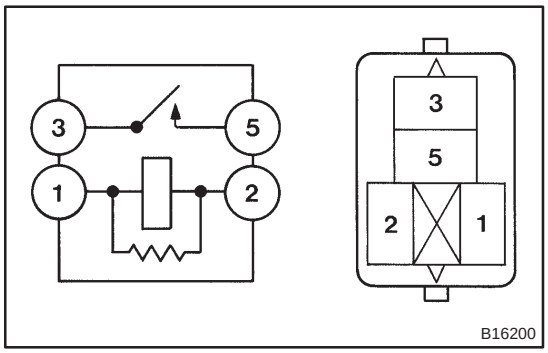

(a) Remove the EFI relay from the engine room R/B No. 4.

(b) Inspect the EFI relay.

Standard:

Terminal No.	Specified condition
1 – 2	Continuity
3 – 5	No Continuity
	Continuity (Apply battery voltage terminals 1 and 2)

NG → **REPLACE EFI RELAY**

OK

23 CHECK HARNESS AND CONNECTOR(HEATED OXYGEN SENSOR – ECM)

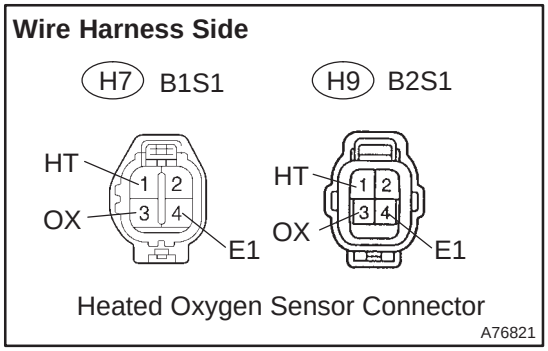

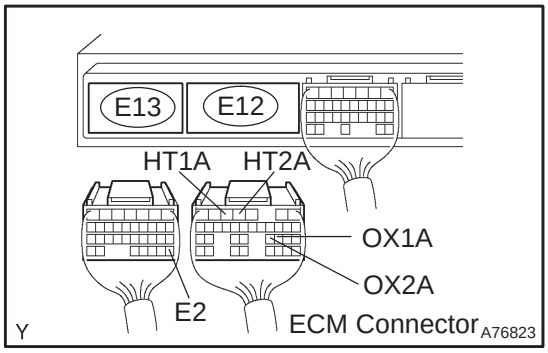

(a) Disconnect the H7 or H9 heated oxygen sensor connector.

(b) Disconnect the E12 and E13 ECM connectors.

(c) Check for continuity between the wire harness side connectors.

Standard (Check for open):

Symbols (Terminal No.)	Specified condition
OX (H7–3) – OX1A (E12–22)	Continuity
HT (H7–1) – HT1A (E12–5)	
E1 (H7–4) – E2 (E13–28)	
OX (H8–3) – OX2A (E12–23)	
HT (H8–1) – HT2A (E12–4)	
E1 (H8–4) – E2 (E13–28)	

Standard (Check for short):

Symbols (Terminal No.)	Specified condition
OX (H7–3) or OX1A (E12–22) – Body ground	No continuity
HT (H7–1) or HT1A (E12–5) – Body ground	
OX (H8–3) or OX2A (E12–23) – Body ground	
HT (H8–1) or HT2A (E12–4) – Body ground	

HINT:

- The OX1A and HT1A means the heated oxygen sensor bank 1 sensor 1.
- The OX2A and HT2A means the heated oxygen sensor bank 2 sensor 1.

Reference (Bank 1 Sensor 1 System Drawing)

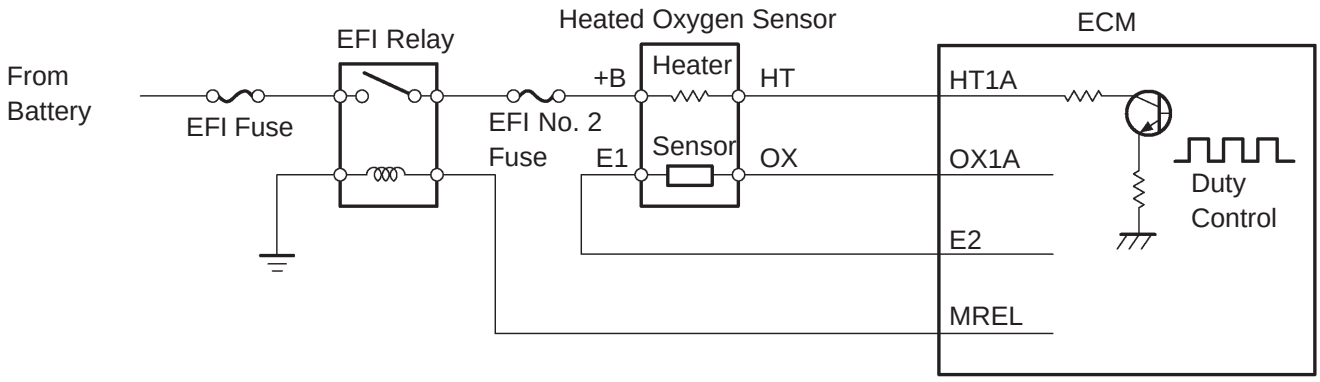

NG → **REPAIR OR REPLACE HARNESS OR CONNECTOR**

OK

24 REPLACE HEATED OXYGEN SENSOR

GO

25	PERFORM CONFIRMATION DRIVING PATTERN (See page 05–363)

HINT:
Clear all DTCs prior to performing the confirmation driving pattern.

GO

26	READ OUTPUT DTC(DTC P0171, P0172, P0174 AND/OR P0175 ARE OUTPUT AGAIN)

(a) Read the DTC using the hand–held tester.
Result:

Display (DTC output)	Proceed to
DTC "P0171, P0172, P0174 and/or P0175" are not output again	A
DTC "P0171, P0172, P0174 and/or P0175" are output again	B

B → CHECK AND REPLACE ECM (See page 01–32) AND PERFORM CONFIRMATION DRIVING PATTERN (See page 05–363)

A

27	CONFIRM IF VEHICLE HAS RUN OUT OF FUEL IN PAST

NO → CHECK FOR INTERMITTENT PROBLEMS

YES

DTC IS CAUSED BY RUNNING OUT OF FUEL (DTCS P0171, P0172, P0174 AND/OR P0175)

DTC P0190 FUEL RAIL PRESSURE SENSOR CIRCUIT

CIRCUIT DESCRIPTION

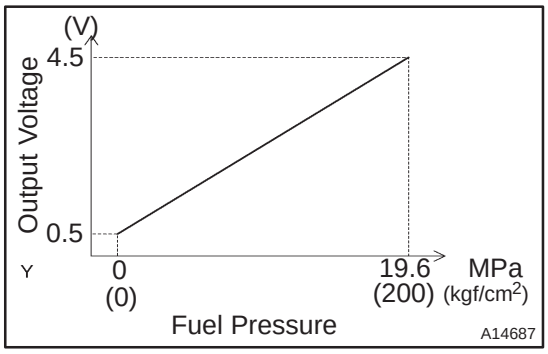

The fuel pressure sensor is installed on a fuel delivery pipe and detects the fuel pressure. It controls of feedback the pump discharge in order to keep the fuel at target pressure 8 to 13 MPa (81.6 to 132.6 kgf/cm^2, 1,160 to 1,885 psi) by the ECM.

DTC No.	DTC Detection Condition	Trouble Area
P0190	Open or short in fuel pressure sensor circuit	• Open or short in fuel pressure sensor circuit • Fuel pressure sensor • ECM

HINT:

After confirming DTC ”P0190”, use the hand–held tester to confirm the delivery pipe pressure from ”DIAGNOSIS / OBD/MOBD / DATA LIST / ALL”.

Fuel Pressure (MPa)	Malfunction
Approximately 0	• PR circuit short
19.6 or more	• VC circuit open or short • PR circuit open • E2 circuit open

WIRING DIAGRAM

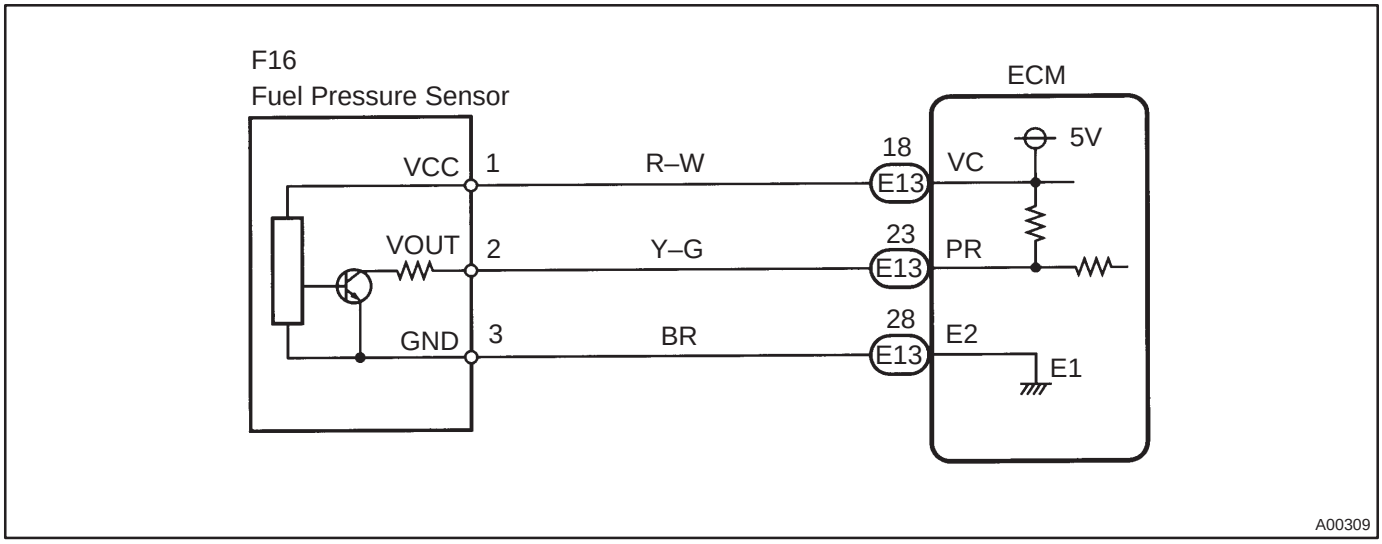

INSPECTION PROCEDURE

HINT:

- If different DTCs related to different systems that have terminal E2 as the ground terminal are output simultaneously, terminal E2 may be open.
- Read freeze frame data using the hand–held tester. Freeze frame data records the engine conditions when a malfunction is detected. When troubleshooting, it is useful for determining whether the vehicle was running or stopped, the engine was warmed up or not, the air–fuel ratio was lean or rich, etc. at the time of the malfunction.

1 READ VALUE OF HAND–HELD TESTER(FUEL PRESSURE)

(a) Connect the hand–held tester to the DLC3.
(b) Start the engine.
(c) Push the hand–held tester main switch ON.
(d) Select the item ”DIAGNOSIS / OBD/MOBD / DATA LIST / ALL / FUEL PRESS” and read its value displayed on the hand–held tester.
Pressure: 8 to 13 MPa (81.6 to 132.6 kgf/cm^2, 1,160 to 1,885 psi)
Result:

Fuel Pressure (MPa)	Proceed to
19.6 or more	A
0.0	B
OK (8 to 13 MPa (81.6 to 132.6 kgf/cm^2, 1,160 to 1,885 psi)) (*1)	C

*1: The value must be changed when the engine is run or stopped.

B → **Go to step 3**

C → **CHECK FOR INTERMITTENT PROBLEMS**

A

2 INSPECT FUEL PRESSURE SENSOR(VCC VOLTAGE)

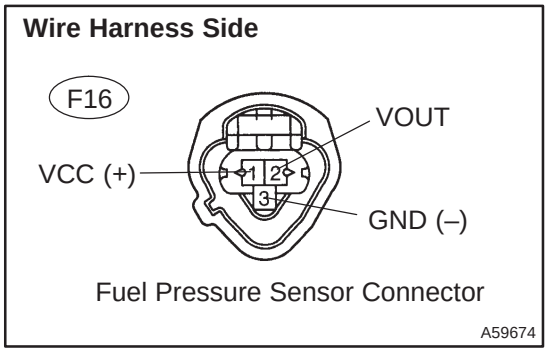

(a) Turn the ignition switch ON.
(b) Measure the voltage between the specified terminals of the F16 fuel pressure sensor connector.
Standard:

Symbols (Terminal No.)	Specified condition
VCC (F16–1) – GND (F16–3)	4.5 to 5.5 V

NG → **Go to step 4**

OK

3 INSPECT ECM(PR VOLTAGE)

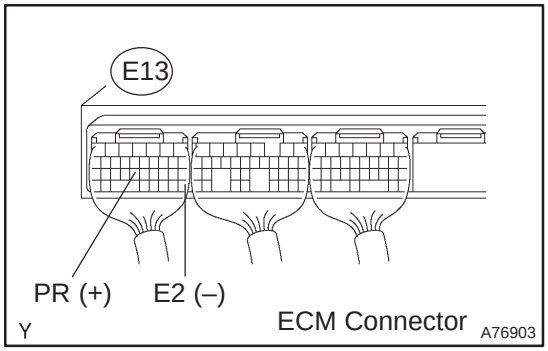

(a) Start the engine.
(b) Measure the voltage between the specified terminals of the E13 ECM connector.

Standard:

Symbols (Terminal No.)	Specified condition
PR (E13–23) – E2 (E13–28)	2.1 to 3.2 V at 25°C (77°F)

HINT:
The fuel pressure in the delivery pipe is 8 to 13 MPa (81.6 to 132.6 kgf/cm^2, 1,160 to 1,885 psi)

NG → **Go to step 5**

OK

CHECK AND REPLACE ECM (See page 01–32)

4 CHECK HARNESS AND CONNECTOR(ECM – FUEL PRESSURE SENSOR)

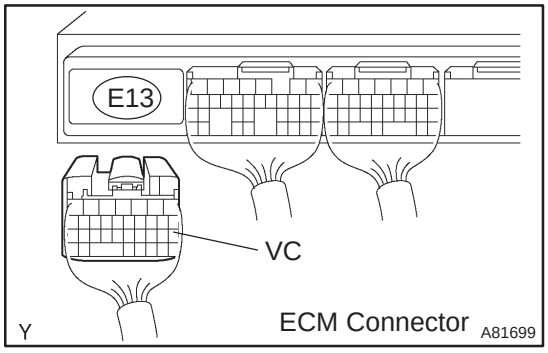

(a) Disconnect the E13 ECM connector.
(b) Disconnect the F16 fuel pressure sensor connector.
(c) Check for continuity between the wire harness side connectors.

Standard (Check for open):

Symbols (Terminal No.)	Specified condition
VC (E13–18) – VCC (F16–1)	Continuity

Standard (Check for short):

Symbols (Terminal No.)	Specified condition
VC (E13–18) or VCC (F16–1) – Body ground	No continuity

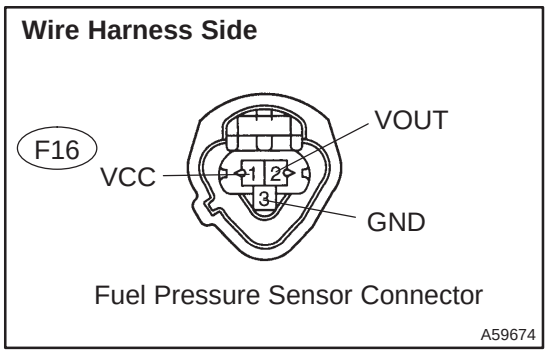

NG → **REPAIR OR REPLACE HARNESS OR CONNECTOR**

OK

CHECK AND REPLACE ECM (See page 01–32)

5 CHECK HARNESS AND CONNECTOR(ECM – FUEL PRESSURE SENSOR)

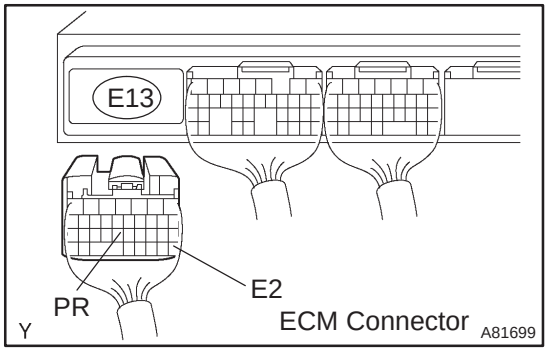

(a) Disconnect the E13 ECM connector.
(b) Disconnect the F16 fuel pressure sensor connector.
(c) Check for continuity between the wire harness side connectors.

Standard (Check for open):

Symbols (Terminal No.)	Specified condition
PR (E13–23) – VOUT (F16–2)	Continuity
E2 (E13–28) – GND (F16–3)	

Standard (Check for short):

Symbols (Terminal No.)	Specified condition
PR (E13–23) or VOUT (F16–2) – Body ground	No continuity

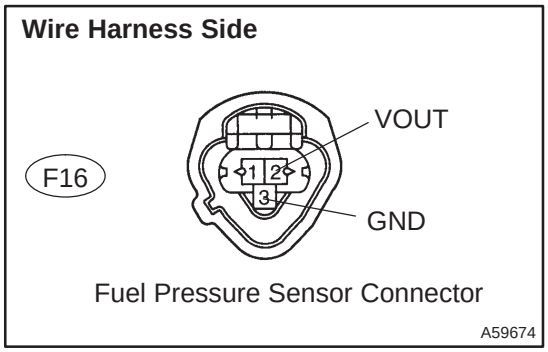

NG → **REPAIR OR REPLACE HARNESS OR CONNECTOR**

OK

REPLACE FUEL PRESSURE SENSOR

DTC	P0191	FUEL RAIL PRESSURE SENSOR CIRCUIT RANGE/PERFORMANCE

CIRCUIT DESCRIPTION

The high–pressure fuel system consists of the spill valve, pump plunger, check valve, fuel relief valve and fuel pressure sensor. The spill valve opens and closes the low–pressure fuel line (from the fuel tank), the pump plunger operated by the camshaft pressurizes fuel, the check valve mechanically opens and closes the high–pressure fuel line (to the fuel delivery pipe), the fuel relief valve prevents fuel pressure from becoming extremely high, and the fuel pressure sensor located on the fuel delivery pipe monitors fuel pressure.
The high–pressure fuel pump is mounted on the cylinder head cover, and its plunger is operated by the cam located between #3 and #4 on the intake camshaft. Let the plunger moves up and down by the camshaft rotations, it produces vacuum to suck fuel and pressurizes the fuel. This fuel then pushes the check valve open and flows into the fuel delivery pipe. The ECM opens and closes the spill valve to regulate the fuel pressure to the target fuel pressure 8 to 13 MPa (81.6 to 132.6 kgf/cm^2, 1,160 to 1,885 psi). In order to obtain and maintain the target pressure, the ECM monitors the fuel pressure using the fuel pressure sensor and performs the feedback control.
If the internal fuel pressure of the fuel delivery pipe exceeds beyond the standard pressure 14 MPa (142.8 kgf/cm^2, 2,030 psi), the fuel relief valve installed on gateway of the fuel delivery pipe discharges the fuel pressure and then returns the fuel back to the fuel tank.

Reference (Fuel system diagram)

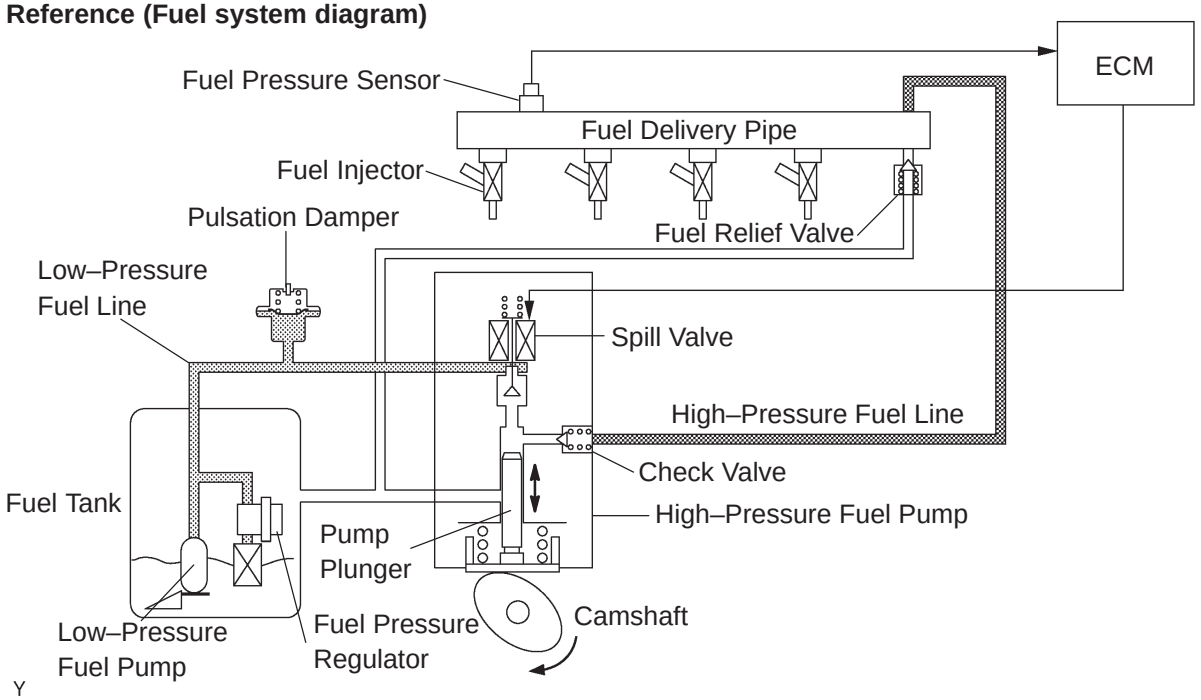

DTC No.	DTC Detection Condition	Trouble Area
P0191	After the fuel pressure is stable for 3 seconds or more, the following condition (a) or (b) continues for more than 10 seconds: (a) ECM did not command the high–pressure fuel pump to open the spill valve, but fuel pressure increases 3 MPa (30.6 kgf/cm^2, 435 psi). (b) Despite ECM commanded the high–pressure fuel pump to open the spill valve, fuel pressure decreases 5 MPa (51.0 kgf/cm^2, 725 psi).	• Open or short in high–pressure fuel pump (spill valve) circuit • High–pressure fuel pump • Low–pressure fuel pump • Fuel pipe • Fuel relief valve • Fuel pressure regulator • ECM

WIRING DIAGRAM

Refer to DTC P1235 on page 05–477.

INSPECTION PROCEDURE

HINT:

- If different DTCs related to different systems that have terminal E2 as the ground terminal are output simultaneously, terminal E2 may be open.
- Read freeze frame data using the hand–held tester. Freeze frame data records the engine conditions when a malfunction is detected. When troubleshooting, it is useful for determining whether the vehicle was running or stopped, the engine was warmed up or not, the air–fuel ratio was lean or rich, etc. at the time of the malfunction.

1 CHECK OTHER DTC OUTPUT(IN ADDITION TO DTC P0191)

(a) Read the DTC using the hand–held tester.
Result:

Display (DTC output)	Proceed to
Only ”P0191” is output	A
”P0191” and other DTCs are output	B

HINT:
If any other codes besides ”P0191” are output, perform the troubleshooting for those DTCs first.

B → **GO TO RELEVANT DTC CHART (See page 05–309)**

A

2 READ VALUE OF HAND–HELD TESTER(FUEL PRESSURE)

(a) Connect the hand–held tester to the DLC3.
(b) Start the engine.
(c) Push the hand–held tester main switch ON.
(d) Select the item ”DIAGNOSIS / OBD/MOBD / DATA LIST / ALL / FUEL PRESS” and read its value displayed on the hand–held tester.
Pressure: 8 to 13 MPa (81.6 to 132.6 kgf/cm^2, 1,160 to 1,885 psi)

NG → **Go to step 10**

OK

3 CHECK FUEL PRESSURE(LOW PRESSURE) (See page 11–33)

NG → **Go to step 12**

OK

4 CHECK FOR FUEL LEAKS(HIGH PRESSURE)

(a) Check if there is leakage in the fuel pipe located between the high–pressure fuel pump and the injectors.

NG → REPAIR OR REPLACE A PLACE FUEL LEAKS

OK

5 CHECK FUEL PUMP(HIGH PRESSURE)

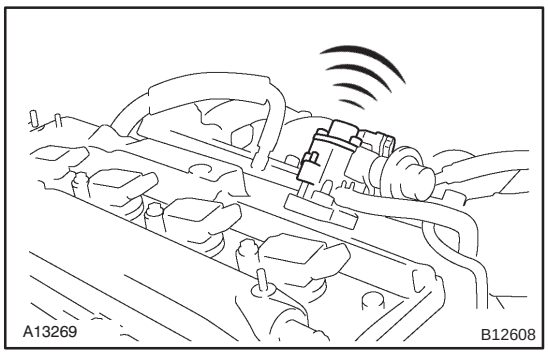

(a) With the engine running or cranking, use a sound scope to check that there is the normal operating sounds of the fuel pump (high–pressure) when it is operated.

Standard:

There is the operating sounds of the fuel pump (high–pressure).

NG → REPAIR OR REPLACE FUEL PUMP ASSY

OK

6 CHECK HARNESS AND CONNECTOR(ECM – HIGH PRESSURE FUEL PUMP (SPILL VALVE))

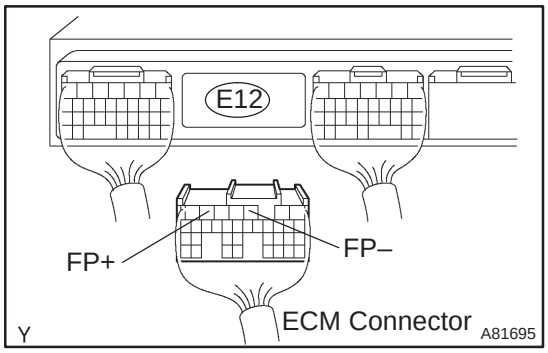

(a) Disconnect the E12 ECM connector.

(b) Disconnect the S3 high–pressure fuel pump (spill valve) connector.

(c) Check for continuity between the wire harness side connectors.

Standard (Check for open):

Symbols (Terminal No.)	Specified condition
FP+ (E12–6) – Fuel pump (S3–1)	Continuity
FP– (E12–3) – Fuel pump (S3–2)	

Standard (Check for short):

Symbols (Terminal No.)	Specified condition
FP+ (E12–6) or Fuel pump (S3–1) – Body ground	No continuity
FP– (E12–3) or Fuel pump (S3–2) – Body ground	

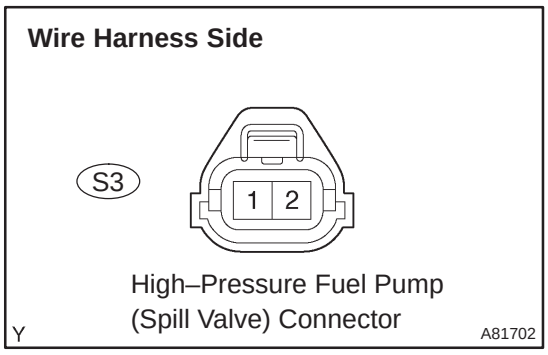

NG → REPAIR OR REPLACE HARNESS OR CONNECTOR

OK

7	CHECK IF DTC OUTPUTS REOCCUR(DTC P0191 IS OUTPUT AGAIN)

(a) Clear the DTC (See page 05–294).
(b) Warm up the engine.
(c) Let the engine idle for 30 seconds or more.
(d) Read the DTC (See page 05–294).

Result:

Display (DTC output)	Proceed to
”P0191” is output again	A
No DTC output	B

B → CHECK FOR INTERMITTENT PROBLEMS

A

8	REPLACE FUEL RELIEF VALVE ASSY

GO

9	CHECK IF DTC OUTPUTS REOCCUR(DTC P0191 IS OUTPUT AGAIN)

(a) Clear the DTC (See page 05–294).
(b) Warm up the engine.
(c) Let the engine idle for 30 seconds or more.
(d) Read the DTC (See page 05–294).

Result:

Display (DTC output)	Proceed to
”P0191” is output again	A
No DTC output	B

B → SYSTEM OK

A

REPLACE FUEL PUMP ASSY (HIGH PRESSURE)

10	CHECK OPERATION OF FUEL PUMP(LOW PRESSURE) (See page 11–33)

OK → Go to step 3

NG

11	CHECK VOLTAGE FUEL PUMP(LOW PRESSURE) (See page 05–507)

OK → Go to step 3

NG

CHECK FOR FUEL PUMP CONTROL CIRCUIT (See page 05–507)

12	CHECK FOR FUEL LEAKS(LOW PRESSURE)

(a) Check if there is leakage in the fuel pipe located between the fuel tank and the high–pressure fuel pump.

NG → REPAIR OR REPLACE A PLACE FUEL LEAKS

OK

REPLACE FUEL PRESSURE REGULATOR ASSY

DTC	P0200	INJECTOR CIRCUIT / OPEN

DTC	P0201	INJECTOR CIRCUIT / OPEN – (CYLINDER 1)

DTC	P0202	INJECTOR CIRCUIT / OPEN – (CYLINDER 2)

DTC	P0203	INJECTOR CIRCUIT / OPEN – (CYLINDER 3)

DTC	P0204	INJECTOR CIRCUIT / OPEN – (CYLINDER 4)

CIRCUIT DESCRIPTION

The Electronic Driver Unit (EDU) has been adopted to operate the injector at high speed. The EDU enables the injector to drive in high–speed rate under high–pressure fuel condition using its internal DC/DC converter that provides high voltage and quick–charging system.
The ECM constantly monitors the EDU. If the ECM detects abnormal condition, it will stop the engine.

DTC No.	DTC Detection Condition	Trouble Area
P0200	No IJF signals to ECM despite crankshaft rotating 10 times (1 trip detection logic).	• Open or short in EDU circuit • EDU (Injector driver) • Fuel injector assy • ECM
	No IJF signals to ECM despite crankshaft rotating 20 times during cranking (2 trip detection logic).	
P0201 P0202 P0203 P0204	No IJF signals of each cylinder to ECM 20 times successively (1 trip detection logic).	

WIRING DIAGRAM

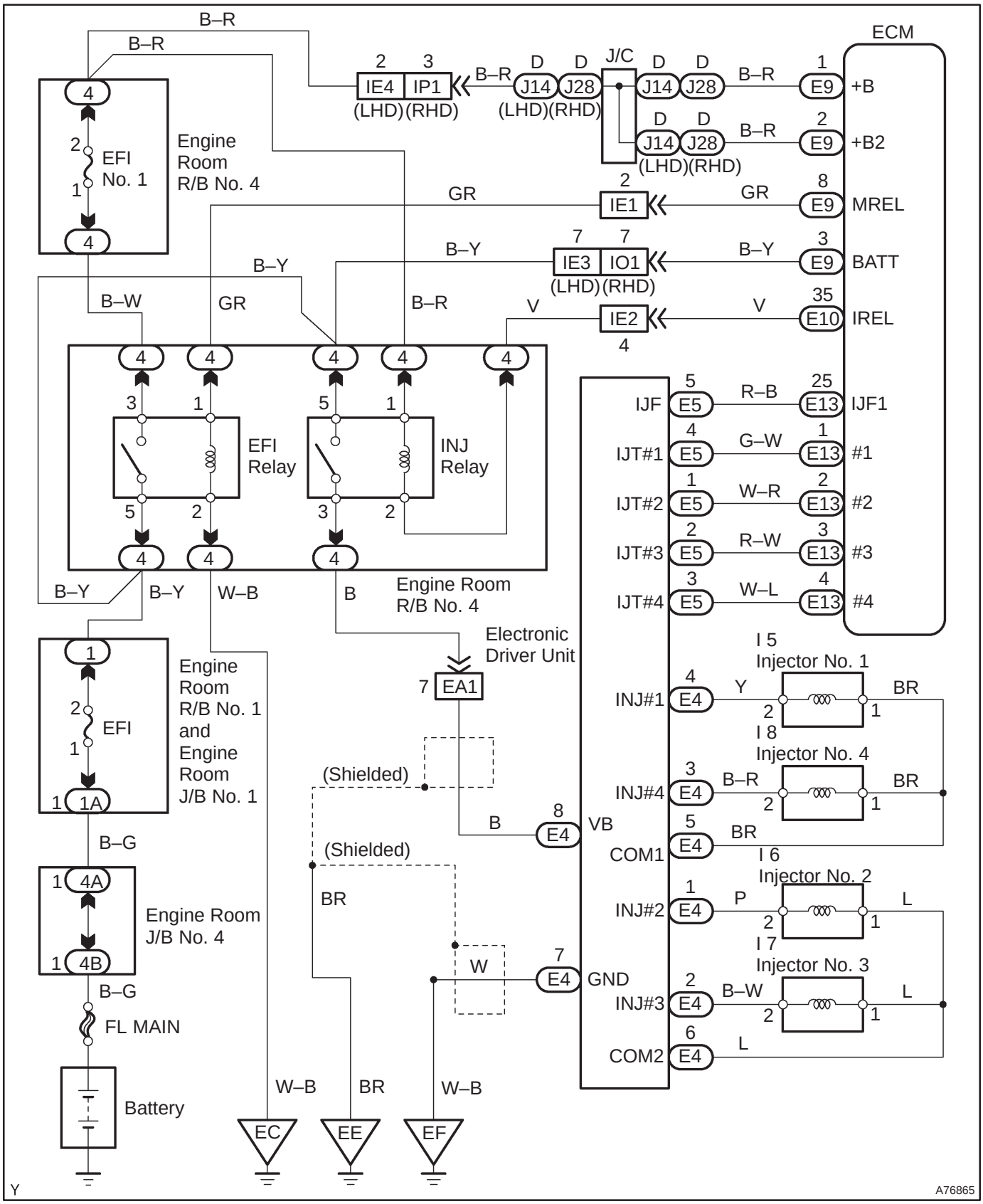

INSPECTION PROCEDURE

HINT:

Read freeze frame data using the hand–held tester. Freeze frame data records the engine conditions when a malfunction is detected. When troubleshooting, it is useful for determining whether the vehicle was running or stopped, the engine was warmed up or not, the air–fuel ratio was lean or rich, etc. at the time of the malfunction.

1 CHECK INJECTOR DRIVER(POWER SOURCE OF EDU)

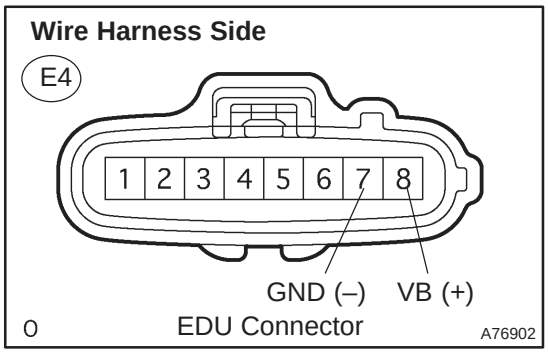

(a) Disconnect the E4 EDU connector.
(b) Turn the ignition switch ON.
(c) Measure the voltage between the specified terminals of the EDU connector.

Symbols (Terminal No.)	Specified condition
VB (E4–8) – GND (E4–7)	9 to 14 V

NG → CHECK EDU POWER SOURCE CIRCUIT

OK

2 CHECK HARNESS AND CONNECTOR(EDU – FUEL INJECTOR)

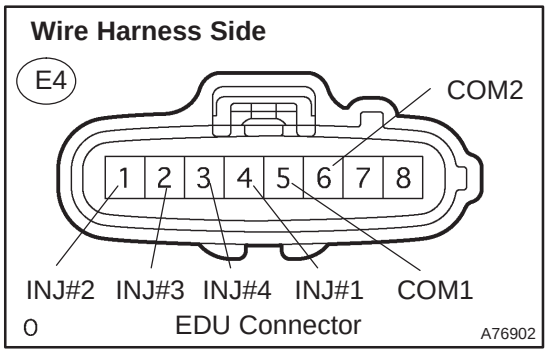

(a) Disconnect the E4 EDU connector.
(b) Measure the resistance between the specified terminals of the EDU connector.

Standard:

Symbols (Terminal No.)	Specified condition
INJ#1 (E4–4) – COM1 (E4–5)	2.55 to 2.85 Ω at 20 °C (68 °F)
INJ#2 (E4–1) – COM2 (E4–6)	
INJ#3 (E4–2) – COM2 (E4–6)	
INJ#4 (E4–3) – COM1 (E4–5)	

NG → Go to step 6

OK

3 CHECK HARNESS AND CONNECTOR(ECM – EDU)

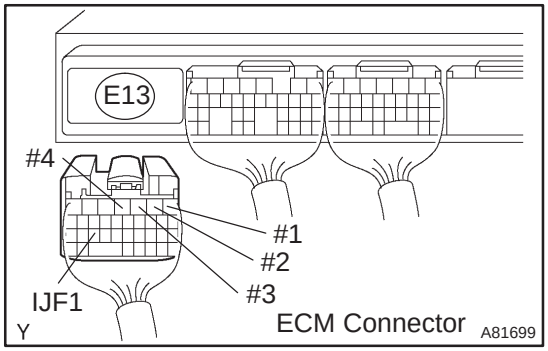

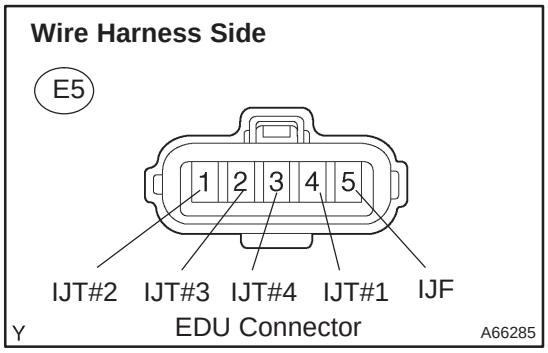

(a) Disconnect the E13 ECM connector.
(b) Disconnect the E5 EDU connector.
(c) Check for continuity between the wire harness side connectors.

Standard (Check for open):

Symbols (Terminal No.)	Specified condition
IJF1 (E13–25) – IJF (E5–5)	Continuity
#1 (E13–1) – IJT#1 (E5–4)	
#2 (E13–2) – IJT#2 (E5–1)	
#3 (E13–3) – IJT#3 (E5–2)	
#4 (E13–4) – IJT#4 (E5–3)	

Standard (Check for short):

Symbols (Terminal No.)	Specified condition
IJF1 (E13–25) or IJF (E5–5) – Body ground	No continuity
#1 (E13–1) or IJT#1 (E5–4) – Body ground	
#2 (E13–2) or IJT#2 (E5–1) – Body ground	
#3 (E13–3) or IJT#3 (E5–2) – Body ground	
#4 (E13–4) or IJT#4 (E5–3) – Body ground	

NG → **REPAIR OR REPLACE HARNESS OR CONNECTOR**

OK

4 CHECK ECM(#1, #2, #3 AND #4 VOLTAGE)

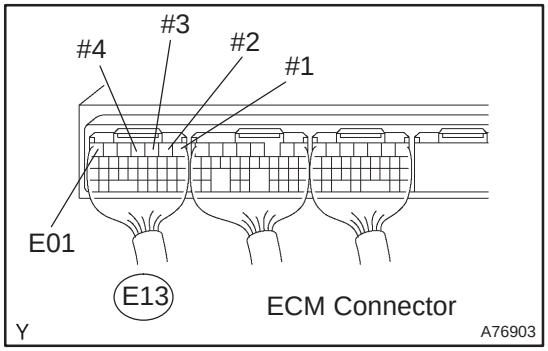

(a) Connect an oscilloscope to terminals #1 – #4 and E01 of the E13 ECM harness side connector.

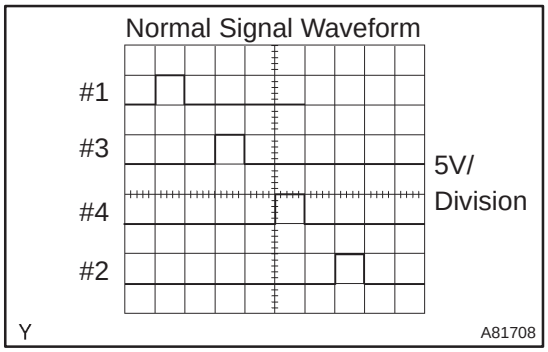

(b) With the engine cranking or idling, check the signal waveform.

Standard:

Signal waveform appears as shown in the illustration.

HINT:

Check the waveform before the ECM detects the DTC(s) and enters the fail–safe mode, because the ECM will no more indicate the voltage output once it enters the fail–safe mode.

NG → **CHECK AND REPLACE ECM (See page 01–32)**

OK

5	CHECK ECM(IJF1 VOLTAGE)

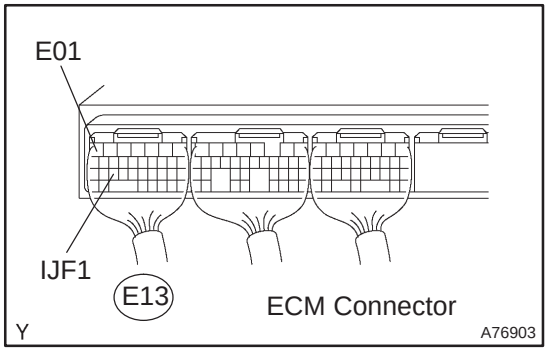

(a) Connect an oscilloscope to terminals IJF1 and E01 of the E13 ECM harness side connector.

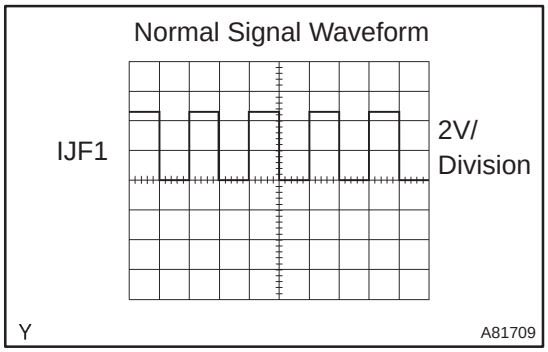

(b) With the engine cranking or idling, check the signal waveform.

Standard:

Signal waveform appears as shown in the illustration.

HINT:

Check the waveform before the ECM detects the DTC(s) and enters the fail–safe mode, because the EDU will no more indicate the voltage output once the ECM enters the fail–safe mode.

NG → **REPLACE INJECTOR DRIVER**

OK

CHECK FOR INTERMITTENT PROBLEMS

6	INSPECT FUEL INJECTOR ASSY (See page 11–36)

NG → **REPLACE FUEL INJECTOR ASSY**

OK

REPAIR OR REPLACE HARNESS OR CONNECTOR

DTC	P0300	RANDOM/MULTIPLE CYLINDER MISFIRE DETECTED

DTC	P0301	CYLINDER 1 MISFIRE DETECTED

DTC	P0302	CYLINDER 2 MISFIRE DETECTED

DTC	P0303	CYLINDER 3 MISFIRE DETECTED

DTC	P0304	CYLINDER 4 MISFIRE DETECTED

CIRCUIT DESCRIPTION

Misfire: The ECM uses the crankshaft position sensor and camshaft position sensor to monitor changes in the crankshaft rotation for each cylinder.

The ECM counts the number of times the engine speed change rate indicates that misfire has occurred. And when the misfire rate equals to or exceeds the count of indicating that the engine condition has deteriorated, the CHK ENG is illuminated.

If the misfire rate is high enough and the driving conditions will cause the catalyst to overheat, the CHK ENG blinks when misfiring occurs.

HINT:

- For any particular 200 revolutions of the engine, misfiring which would result in overheating of catalyst is detected. This cause CHK ENG to blink (1 trip detection logic).
- For any particular 1,000 revolutions of engine, misfiring which would result in a deterioration of emissions. This illuminates CHK ENG (2 trip detection logic).

DTC No.	DTC Detection Condition	Trouble Area
P0300	Misfiring of random cylinders is detected	• Open or short in engine wire • Connector connection • Vacuum hose connection • Ignition system • Injector • Fuel pressure • Mass air flow meter • Engine coolant temperature sensor • Compression pressure • Valve clearance • Valve timing • PCV hose connection • PCV hose • ECM
P0301 P0302 P0303 P0304	Misfiring of each cylinder is detected	

HINT:

When codes for a misfiring cylinder are recorded repeatedly but no random misfire code is recorded, it indicates that the misfires have been detected and recorded at different times.

WIRING DIAGRAM

Refer to DTC P0200 on page 05–415 for the wiring diagram of the injector system.
Refer to DTC P0351 on page 05–439 for the wiring diagram of the ignition system.

CONFIRMATION DRIVING PATTERN

(a) Connect the hand–held tester to the DLC3.
(b) Record the DTC and freeze frame data.
(c) Use the hand–held tester to set to the check (test) mode (See page 05–294).
(d) Read the value on the misfire counter for each cylinder when idling. If the value is displayed on the misfire counter, skip the following procedure of confirmation driving.
(e) Drive the vehicle several times with the engine speed, load and its surrounding range shown with ENGINE SPD, CALC LOAD in the freeze frame data or MISFIRE RPM, MISFIRE LOAD in the DATA LIST.

If you have no hand–held tester, turn the ignition switch OFF after the symptom is simulated once. Then repeat the simulation process again.
HINT:
In order to memorize the DTC of misfire, it is necessary to drive around MISFIRE RPM, MISFIRE LOAD for the following period of time in the DATA LIST. Take care not to turn the ignition switch OFF. Turning the ignition switch OFF switches the diagnosis system from check (test) mode to normal mode. So all DTCs, etc., will be erased.

Engine Speed	Time
Idling	3 minutes and 30 seconds or more
1,000 rpm	3 minutes or more
2,000 rpm	1 minutes and 30 seconds or more
3,000 rpm	1 minute or more

(f) Check whether there is misfire or not by monitoring the DTC and the freeze frame data, and then, record them.
(g) Turn the ignition switch OFF and wait at least for 5 seconds.

INSPECTION PROCEDURE

HINT:

- If DTCs besides misfire are memorized simultaneously, first perform the troubleshooting for them.
- Read freeze frame data using the hand–held tester. Freeze frame data records the engine conditions when a malfunction is detected. When troubleshooting, it is useful for determining whether the vehicle was running or stopped, the engine was warmed up or not, the air–fuel ratio was lean or rich, etc. at the time of the malfunction.
- If the misfire does not occur when the vehicle is brought to the workshop, misfire can be confirmed by reproducing the condition of the freeze frame data. Also, after finishing the repair, confirm that there is no misfire (See confirmation driving pattern).
- When either of SHORT FT #1, LONG FT #1, SHORT FT #2 or LONG FT #2 in the freeze frame data is over the range of ±20 %, there is a possibility that the air–fuel ratio is inclining either to ”RICH” (–20 % or less) or ”LEAN” (+20 % or more).
- When COOLANT TEMP in the freeze frame data is less than 80˚C (176˚F), there is a possibility of misfire only during warming up the engine.
- If the misfire cannot be reproduced, the reason may be because of the driving the vehicle with lack of fuel, the use of improper fuel, a stain on the ignition plug, etc.
- Be sure to check the value on the misfire counter after the repair.

1	CHECK OTHER DTC OUTPUT(IN ADDITION TO MISFIRE DTCS)

(a) Read the DTC using the hand–held tester.
Result :

Display	Proceed to
DTC "P0300, P0301, P0302, P0303 and/or P0304" are output.	A
DTC "P0300, P0301, P0302, P0303 or P0304" and other codes are output.	B

HINT:
If any other codes besides "P0300, P0301, P0302, P0303 and/or P0304" are output, perform the trouble-shooting for those DTCs first.

B → **GO TO RELEVANT DTC CHART (See page 05–309)**

A

2	CHECK WIRE HARNESS, CONNECTOR AND VACUUM HOSE IN ENGINE ROOM

(a) Check the connection conditions of the wire harness and connector.
(b) Check the disconnection, piping and break of the vacuum hose.

NG → **REPAIR OR REPLACE, THEN CONFIRM THAT THERE IS NO MISFIRE**

OK

3	CHECK CONNECTION OF PCV HOSE

NG → **REPAIR OR REPLACE PCV HOSE**

OK

4	READ VALUE OF HAND–HELD TESTER(NUMBER OF MISFIRE)

(a) Connect the hand–held tester to the DLC3.
(b) Turn the ignition switch ON and push the hand–held tester main switch ON.
(c) Start the engine.
(d) Select the item "DIAGNOSIS / OBD/MOBD / DATA LIST / ALL / CYL#1 – CYL#4".
(e) Read the number of misfire on the hand–held tester.
HINT:
When a misfire is not reproduced, be sure to branch below based on the stored DTC.
Result:

High Misfire Rate Cylinder	Proceed to
1 or 2 cylinders	A
More than 3 cylinders	B

B → **Go to step 12**

A

5	CHECK SPARK PLUG AND SPARK OF MISFIRING CYLINDER

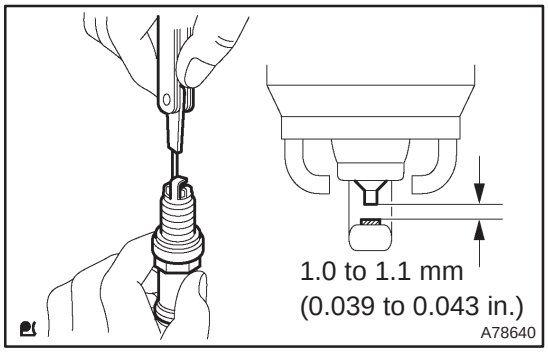

(a) Remove the ignition coil with igniter assy.
(b) Remove the spark plug.
(c) Check the spark plug type.
Recommended spark plug:

DENSO made	SK20BR11

(d) Check the spark plug electrode gap.
Electrode gap: 1.0 to 1.1 mm (0.039 to 0.043 in.)
Maximum electrode gap: 1.3 mm (0.051 in.)

NOTICE:
If adjusting the gap of a new spark plug, bend only the base the ground electrode. Do not touch the tip. Never attempt to adjust the gap on a used plug.

(e) Check the electrode for carbon deposits.
(f) Perform a spark test.

CAUTION:
Each injector connector must be disconnected.
NOTICE:
Do not crank the engine for more than 2 seconds.

(1) Install the spark plug to the ignition coil with igniter, and connect the ignition coil with igniter connector.
(2) Disconnect the injector connectors.
(3) Ground the spark plug.
(4) Check if spark occurs while the engine is being cranked.

Standard: Spark jumps across electrode gap.

NG → **Go to step 19**

OK

6	CHECK CYLINDER COMPRESSION PRESSURE OF MISFIRING CYLINDER (See page 14–181)

NG → **REPAIR OR REPLACE**

OK

7	CHECK VALVE CLEARANCE OF MISFIRING CYLINDER (See page 14–186)

NG → **ADJUST VALVE CLEARANCE (See page 14–186)**

OK

8	REPLACE FUEL INJECTOR OF MISFIRING CYLINDER

(a) Read the DTC and check which of the cylinders causes the misfiring DTC (See page 05–294).
(b) Remove the injector of the misfiring cylinder and other normal injector (See page 11–42).
(c) Swap the injector of misfiring cylinder for the normal injector.

GO

9	PERFORM CONFIRMATION DRIVING PATTERN

HINT:
Clear all DTCs prior to performing the confirmation driving pattern.

GO

10	READ OUTPUT DTC(MISFIRE DTCS ARE OUTPUT AGAIN)

(a) Read the DTC using the hand–held tester.
Result:

Display (DTC output)	Proceed to
The same DTC is output again	A
The other DTC is output	B

B → REPLACE FUEL INJECTOR ASSY

A

11	SWITCH STEP BY NUMBER OF MISFIRE CYLINDER(REFER RESULT OF STEP 4)

- If the result of step 4 is ”1 or 2 cylinders”, proceed to A.
- If the result of step 4 is ”more than 3 cylinders”, proceed to B.

B → CHECK FOR INTERMITTENT PROBLEMS

A

12	CHECK VALVE TIMING(CHECK FOR LOOSE AND JUMPING TEETH)

NG → ADJUST VALVE TIMING

OK

13	CHECK FUEL PRESSURE(LOW PRESSURE) (See page 11–33)

NG → CHECK AND REPLACE FUEL PUMP, PRESSURE REGULATOR, FUEL PIPE LINE AND FILTER

OK

14	CHECK FUEL PRESSURE(HIGH PRESSURE) (See page 11–33)

NG → CHECK AND REPLACE FUEL PUMP, FUEL PRESSURE SENSOR, WIRING AND FUEL LEAKAGE

OK

15	READ VALUE OF HAND–HELD TESTER(INTAKE AIR TEMPERATURE AND MASS AIR FLOW RATE)

(a) Connect the hand–held tester to the DLC3.
(b) Turn the ignition switch ON.
(c) Check the intake air temperature.
  (1) Select the item ”DIAGNOSIS / OBD/MOBD / DATA LIST / ALL / INTAKE AIR” and read its value displayed on the hand–held tester.

  Temperature: Equivalent to ambient temperature
(d) Check the air flow rate.
  (1) Select the item ”DIAGNOSIS / OBD/MOBD / DATA LIST / ALL / MAF” and read its value displayed on the hand–held tester.

  Standard:

Condition	Air flow rate (gm/s)
Ignition switch ON (do not start engine)	0
Idling	4 to 6
Running without load (2,500 rpm)	13 to 20
Idling – Running	Air flow rate fluctuates

NG → REPLACE MASS AIR FLOW METER

OK

16	INSPECT ENGINE COOLANT TEMPERATURE SENSOR

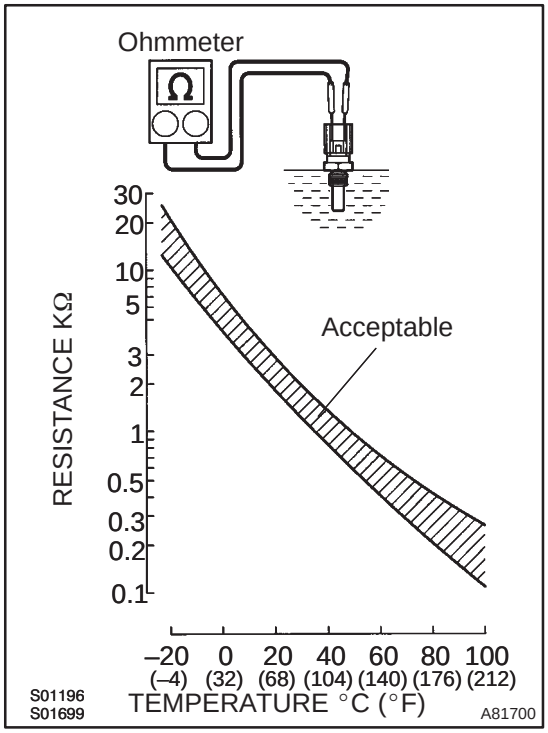

(a) Remove the engine coolant temperature sensor.
(b) Measure the resistance between the terminals.
Resistance:
2.32 to 2.59 kΩ at 20°C (68°F)
0.310 to 0.326 kΩ at 80°C (176°F)

NOTICE:
In case of checking the engine coolant temperature sensor in the water, be careful not to allow water to go into the terminals. After checking, dry the sensor.

HINT:
Alternate procedure: Connect an ohmmeter to the installed engine coolant temperature sensor and read the resistance. Use an infrared thermometer to measure the engine temperature in the immediate vicinity of the sensor. Compare these values to the resistance/temperature graph. Change the engine temperature (warm up or allow to cool down) and repeat the test.

NG → **REPLACE ENGINE COOLANT TEMPERATURE SENSOR**

OK

17	INSPECT MANIFOLD ABSOLUTE PRESSURE SENSOR (See page 05–342)

NG → **REPLACE MANIFOLD ABSOLUTE PRESSURE SENSOR**

OK

18	SWITCH STEP BY NUMBER OF MISFIRE CYLINDER(REFER RESULT OF STEP 4)

- If the result of step 4 is ”1 or 2 cylinders”, proceed to A.
- If the result of step 4 is ”more than 3 cylinders”, proceed to B.

B → **AGAIN GO TO STEP 5**

A

CHECK FOR INTERMITTENT PROBLEMS

19	INSPECT CHANGE NORMAL SPARK PLUG AND CHECK SPARK OF MISFIRING CYLINDER

(a) Change to the normal spark plug.
(b) Perform a spark test.

CAUTION:
Each injector connector must be disconnected.
NOTICE:
Do not crank the engine for more than 2 seconds.

(1) Install the spark plug to the ignition coil, and connect the ignition coil connector.
(2) Disconnect the injector connectors.
(3) Ground the spark plug.
(4) Check if spark occurs while the engine is being cranked.

Standard: Spark jumps across electrode gap.

NG → **Go to step 20**

OK

REPLACE SPARK PLUG

20	CHECK HARNESS AND CONNECTOR OF MISFIRING CYLINDER(IGNITION COIL ASSY – ECM)

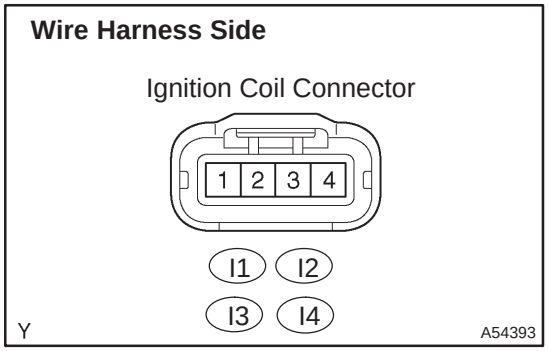

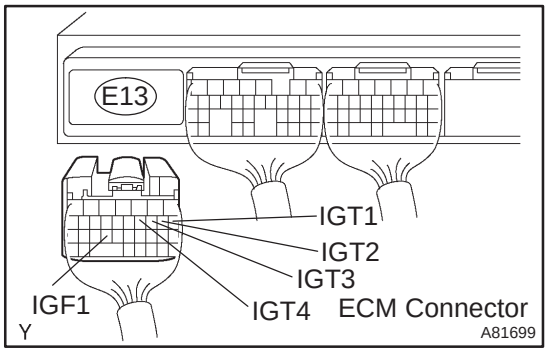

(a) Check the harness and connector between the ignition coil and ECM (IGF terminal) connectors
(1) Disconnect the I1, I2, I3 or I4 ignition coil connector.
(2) Disconnect the E13 ECM connector.
(3) Check for continuity between the wire harness side connectors.

Standard (Check for open):

Symbols (Terminal No.)	Specified condition
Ignition coil (I1–2) – IGF1 (E13–24)	Continuity
Ignition coil (I2–2) – IGF1 (E13–24)	
Ignition coil (I3–2) – IGF1 (E13–24)	
Ignition coil (I4–2) – IGF1 (E13–24)	

Standard (Check for short):

Symbols (Terminal No.)	Specified condition
Ignition coil (I1–2) or IGF1 (E13–24) – Body ground	No continuity
Ignition coil (I2–2) or IGF1 (E13–24) – Body ground	
Ignition coil (I3–2) or IGF1 (E13–24) – Body ground	
Ignition coil (I4–2) or IGF1 (E13–24) – Body ground	

(b) Check the harness and connector between the ignition coil and ECM (IGT terminal) connectors
(1) Disconnect the I1, I2, I3 or I4 ignition coil connector.
(2) Disconnect the E13 ECM connector.
(3) Check for continuity between the wire harness side connectors.

Standard (Check for open):

Symbols (Terminal No.)	Specified condition
Ignition coil (I1–3) – IGT1 (E13–8)	Continuity
Ignition coil (I2–3) – IGT2 (E13–9)	
Ignition coil (I3–3) – IGT3 (E13–10)	
Ignition coil (I4–3) – IGT4 (E13–11)	

Standard (Check for short):

Symbols (Terminal No.)	Specified condition
Ignition coil (I1–3) or IGT1 (E13–8) – Body ground	No continuity
Ignition coil (I2–3) or IGT2 (E13–9) – Body ground	
Ignition coil (I3–3) or IGT3 (E13–10) – Body ground	
Ignition coil (I4–3) or IGT4 (E13–11) – Body ground	

NG → **REPAIR OR REPLACE HARNESS OR CONNECTOR**

OK

REPLACE IGNITION COIL ASSY (THEN CONFIRM THAT THERE IS NO MISFIRE)

DTC	P0325	KNOCK SENSOR 1 CIRCUIT (BANK 1 OR SINGLE SENSOR)

DTC	P0327	KNOCK SENSOR 1 CIRCUIT LOW INPUT (BANK 1 OR SINGLE SENSOR)

DTC	P0328	KNOCK SENSOR 1 CIRCUIT HIGH INPUT (BANK 1 OR SINGLE SENSOR)

CIRCUIT DESCRIPTION

A flat type knock sensor (non–resonant type) has a structure that can detect vibrations in a wide frequency range, from about 6 kHz to 15 kHz, and has the following features.
Knock sensor is fitted on the cylinder block to detect the engine knocking.
The knock sensor contains a piezoelectric element which generates a voltage when it becomes deformed. This occurs when the cylinder block vibrates due to knocking. If engine knocking occurs, the ignition timing is retarded to suppress it.

DTC No.	DTC Detection Condition	Trouble Area
P0325	Output voltage of the knock sensor decreases beyond a threshold. (Threshold varies according to an engine speed.)	• Knock sensor • Knock sensor (under–torqued or loose) • ECM
P0327	Output voltage of the knock sensor is 0.5 V or less.	• Short in knock sensor circuit • Knock sensor • ECM
P0328	Output voltage of the knock sensor is 4.5 V or more.	• Open in knock sensor circuit • Knock sensor • ECM

HINT:
If the ECM detects above diagnosis conditions, it operates the fail safe function in which the corrective retard angle value is set to the maximum value.

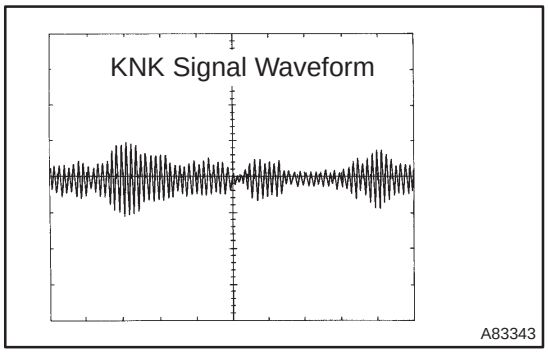

Reference:
The correct waveform is shown in the diagram on the left.

Item	Details
Terminal	KNK1 – EKNK
Equipment Settings	0.01 to 10 V/ Division, 0.01 to 10 msec./ Division
Condition	After warming up the engine, keep the engine speed at 4,000 rpm.

WIRING DIAGRAM

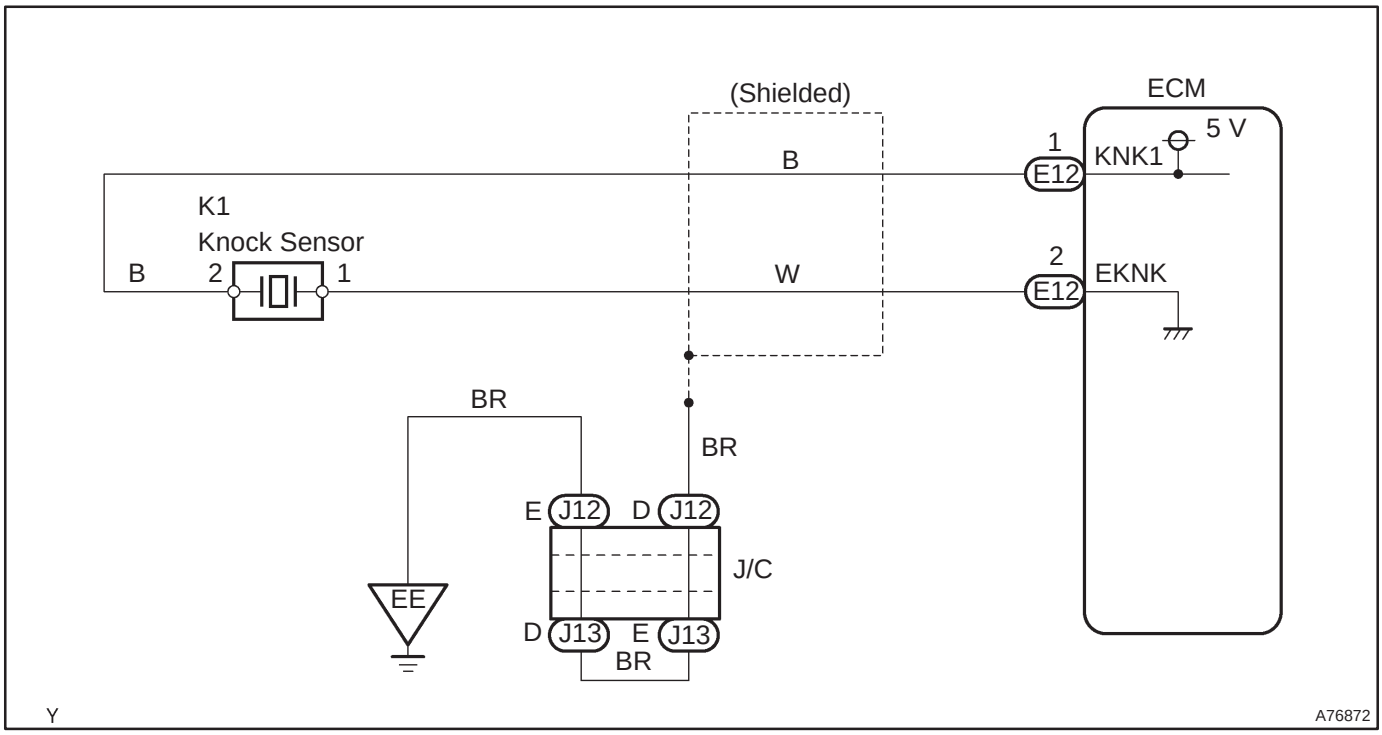

INSPECTION PROCEDURE

HINT:

Read freeze frame data using the hand–held tester. Freeze frame data records the engine conditions when a malfunction is detected. When troubleshooting, it is useful for determining whether the vehicle was running or stopped, the engine was warmed up or not, the air–fuel ratio was lean or rich, etc. at the time of the malfunction.

1	READ OUTPUT DTC

(a) Clear the DTC (See page 05–294).
(b) Warm up the engine.
(c) Run the engine at 3,000 rpm for 10 seconds or more.
(d) Read the DTC (See page 05–294).

Result :

Display (DTC output)	Proceed to
Only ”P0325” is output again	A
”P0325, P0327 and/or P0328” are output again	B
”P0325, P0327 and/or P0328” are not output again	C

B	Go to step 3

C	CHECK FOR INTERMITTENT PROBLEMS

A

2 CHECK KNOCK SENSOR

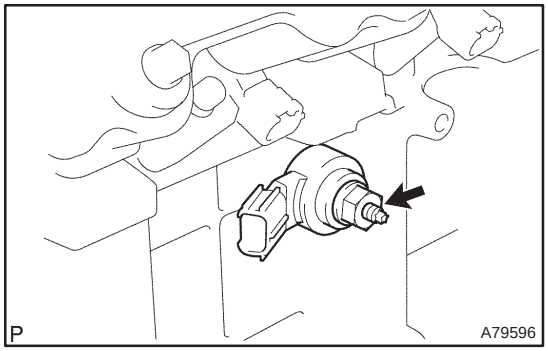

(a) Check the knock sensor installation.
Torque: 20 N·m (204 kgf·cm, 15 ft·lbf)

NG → **TIGHTEN SENSOR**

OK

REPLACE KNOCK SENSOR

3 CHECK HARNESS AND CONNECTOR(ECM – KNOCK SENSOR)

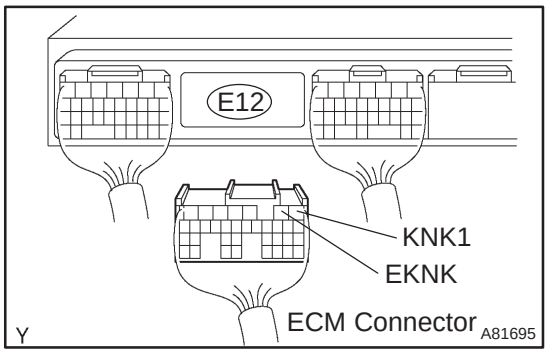

(a) Disconnect the E12 ECM connector.
(b) Measure the resistance between terminals KNK1 (E12–1) and EKNK (E12–2) of the ECM connector.
Resistance: 120 to 280 kΩ at 20°C (68°F)

NG → **Go to step 5**

OK

4 INSPECT ECM(KNK1 VOLTAGE)

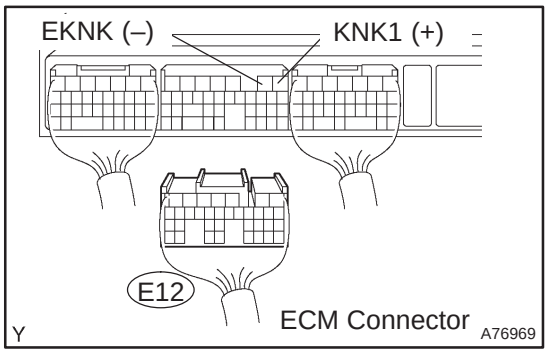

(a) Disconnect the E12 ECM connector.
(b) Turn the ignition switch ON.
(c) Measure the voltage between terminals KNK1 (E12–1) and EKNK (E12–2) of the ECM terminals.
Voltage: 4.5 to 5.5 V

NG → **REPLACE ECM (See page 10–65)**

OK

CHECK FOR INTERMITTENT PROBLEMS

NOTICE:
Fault may be intermittent. Check harness and connectors carefully and result.

5	INSPECT KNOCK SENSOR

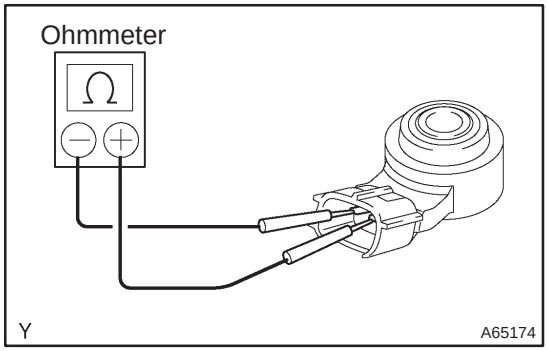

(a) Remove the knock sensor.
(b) Measure the resistance between the terminals.
Resistance: 120 to 280 kΩ at 20°C (68°F)

NG → **REPLACE KNOCK SENSOR**

OK

REPAIR OR REPLACE HARNESS OR CONNECTOR

DTC	P0335	CRANKSHAFT POSITION SENSOR ”A” CIRCUIT

DTC	P0339	CRANKSHAFT POSITION SENSOR ”A” CIRCUIT INTERMITTENT

CIRCUIT DESCRIPTION

The crankshaft position sensor (NE signal) consists of a magnet, iron core and pick up coil.
The NE signal plate (crankshaft position sensor plate No. 1) has 34 teeth and is installed on the crankshaft. The NE signal sensor generates 34 signals at every engine revolution. The ECM detects the crankshaft angle and the engine revolution based on the NE signal, and the cylinder and the angle of the VVT based on the combination of the G2 and NE signal.

DTC No.	DTC Detection Condition	Trouble Area
P0335	No crankshaft position sensor (NE) signal to ECM during cranking for 3 sec. or more (2 trip detection logic).	• Open or short in crankshaft position sensor circuit • Crankshaft position sensor • Signal plate (crankshaft position sensor plate No. 1) • ECM
	No crankshaft position sensor (NE) signal to ECM with engine speed 600 rpm or more (2 trip detection logic).	
P0339	In condition (a), (b) and (c), when no crankshaft position sensor (NE) signal is input for 0.05 sec. or more (1 trip detection logic): (a) Engine revolution 1,000 rpm or more (b) STA signal is OFF (c) 3 sec. or more has been lapsed after STA signal is switched from ON to OFF.	

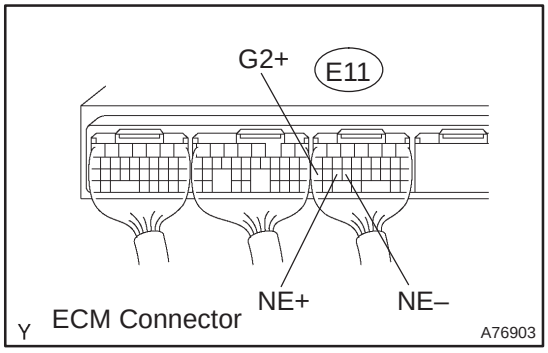

Reference: Inspection using the oscilloscope.

(1) During cranking or idling, check the waveform between the terminals of the ECM connector.

Item	Details
Terminal	CH1: G2+ – NE– CH2: NE+ – NE–
Equipment Setting	5 V/Division, 20 ms/Division
Condition	During Cranking or idling

HINT:
The correct waveforms are as shown in the left.

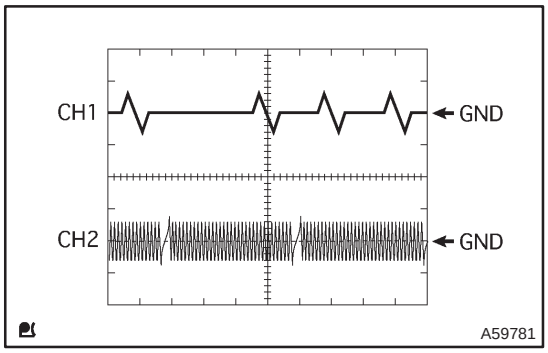

WIRING DIAGRAM

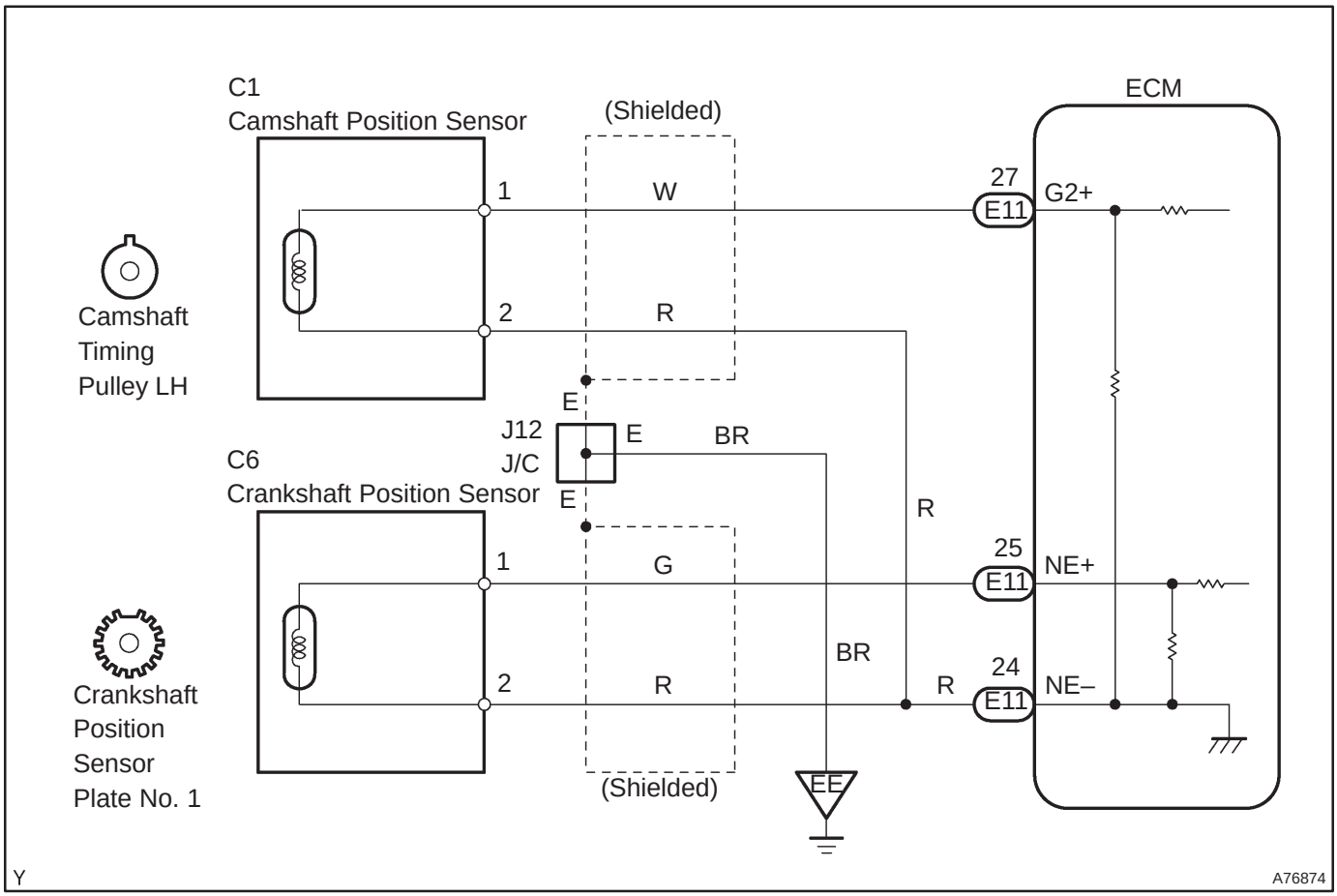

INSPECTION PROCEDURE

HINT:

- Perform troubleshooting of DTC P0335 first. If no trouble is found, troubleshoot the engine mechanical system.
- Read freeze frame data using the hand–held tester. Freeze frame data records the engine conditions when a malfunction is detected. When troubleshooting, it is useful for determining whether the vehicle was running or stopped, the engine was warmed up or not, the air–fuel ratio was lean or rich, etc. at the time of the malfunction.

1	INSPECT CRANKSHAFT POSITION SENSOR(RESISTANCE)

Component Side

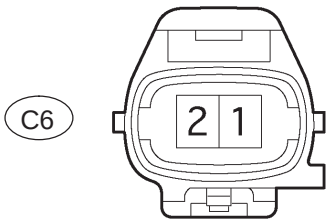

Crankshaft Position Sensor

A64984

(a) Disconnect the C6 crankshaft position sensor connector.
(b) Measure the resistance between the terminals of the crankshaft position sensor.

Resistance:
985 to 1,600 Ω at cold
1,265 to 1,890 Ω at hot

NOTICE:
"Cold" and "Hot" shown above mean the temperature of the coils themselves. "Cold" is from –10°C (14°F) to 50°C (122°F) and "Hot" is from 50°C (122°F) to 100°C (212°F).

NG → **REPLACE CRANKSHAFT POSITION SENSOR**

OK

2 CHECK HARNESS AND CONNECTOR(ECM – CRANKSHAFT POSITION SENSOR)

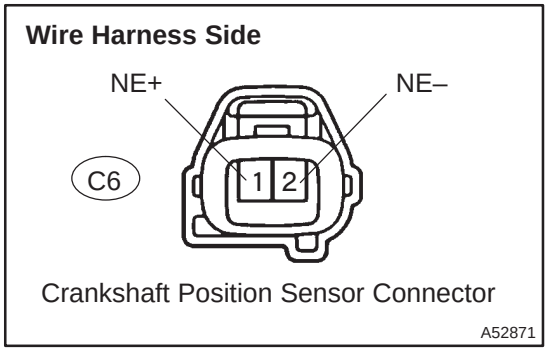

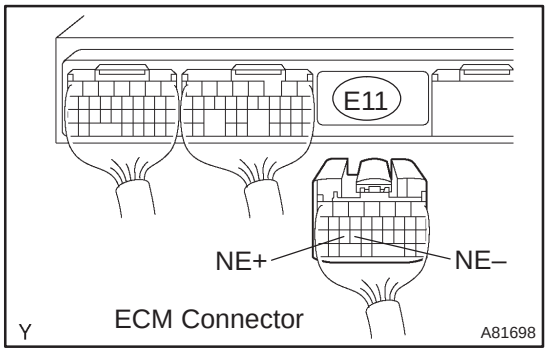

(a) Disconnect the C6 crankshaft position sensor connector.
(b) Disconnect the E11 ECM connector.
(c) Check for continuity between the wire harness side connectors.

Standard (Check for open):

Symbols (Terminal No.)	Specified condition
Crankshaft position sensor (C6–1) – NE+ (E11–25)	Continuity
Crankshaft position sensor (C6–2) – NE– (E11–24)	

Standard (Check for short):

Symbols (Terminal No.)	Specified condition
Crankshaft position sensor (C6–1) or NE+ (E11–25) – Body ground	No continuity
Crankshaft position sensor (C6–2) or NE– (E11–24) – Body ground	

NG → **REPAIR OR REPLACE HARNESS OR CONNECTOR**

OK

3 CHECK SENSOR INSTALLATION(CRANKSHAFT POSITION SENSOR)

(a) Check the crankshaft position sensor installation.

NG → **TIGHTEN SENSOR**

OK

4 INSPECT CRANKSHAFT POSITION SENSOR PLATE NO.1(TEETH OF SIGNAL PLATE)

(a) Remove the crankshaft position sensor plate No. 1 (See page 14–222).
(b) Check the teeth of the signal plate.

NG → **REPLACE CRANKSHAFT POSITION SENSOR PLATE NO.1**

OK

CHECK AND REPLACE ECM (See page 01–32)

DTC	P0340	CAMSHAFT POSITION SENSOR ”A” CIRCUIT (BANK 1 OR SINGLE SENSOR)

DTC	P0341	CAMSHAFT POSITION SENSOR ”A” CIRCUIT RANGE/PERFORMANCE (BANK 1 SINGLE SENSOR)

CIRCUIT DESCRIPTION

The camshaft position sensor (G2 signal) consists of a magnet, iron core and pickup coil.
The G2 signal rotor has 3 teeth on the outside and is mounted on the intake camshaft.
When the camshafts rotate, the protrusion on the signal plate and the air gap on the pickup coil changes, causing fluctuations in the magnetic field and generating an electromotive force in the pickup coil.
The NE signal plate (crankshaft position sensor plate No. 1) has 34 teeth and is installed on the crankshaft. The NE signal sensor generates 34 signals at every engine revolution. The ECM detects the crankshaft angle and the engine revolution based on the NE signal, and the cylinder and the angle of the VVT based on the combination of the G2 and NE signal.

DTC No.	DTC Detection Condition	Trouble Area
P0340	No camshaft position sensor (G2) signal to ECM during cranking for 4 sec. or more (2 trip detection logic).	• Open or short in camshaft position sensor circuit • Camshaft position sensor • Camshaft timing gear • Timing chain has jumped a tooth • ECM
	No camshaft position sensor (G2) signal to ECM with engine speed 600 rpm or more for 5 sec. or more (1 trip detection logic).	
P0341	While crankshaft rotates twice, camshaft position sensor (G2) signal will be input to ECM 12 times or more (1 trip detection logic).	

HINT:

- DTC P0340 indicate a malfunction related to the camshaft position sensor (+) circuit. (Wire harness (ECM – camshaft position sensor) and camshaft position sensor)
- DTC P0341 indicate a malfunction related to the camshaft position sensor (–) circuit. (Wire harness (ECM – camshaft position sensor) and camshaft position sensor)

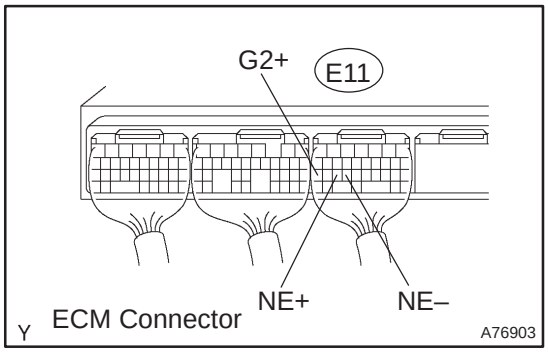

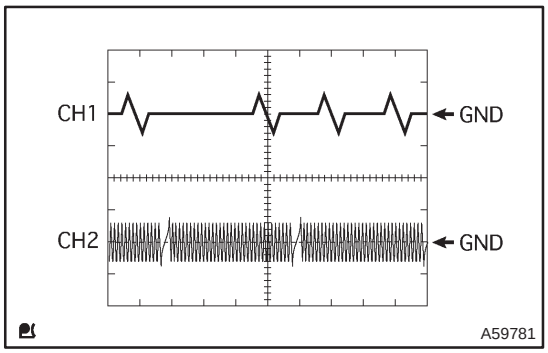

Reference: Inspection using the oscilloscope.

(1) During cranking or idling, check the waveform between the terminals of the ECM connector.

Item	Details
Terminal	CH1: G2+ – NE– CH2: NE+ – NE–
Equipment Setting	5 V/Division, 20 ms/Division
Condition	During Cranking or idling

HINT:

The correct waveforms are as shown in the left.

WIRING DIAGRAM

Refer to DTC P0335 on page 05–433.

INSPECTION PROCEDURE

HINT:

Read freeze frame data using the hand–held tester. Freeze frame data records the engine conditions when a malfunction is detected. When troubleshooting, it is useful for determining whether the vehicle was running or stopped, the engine was warmed up or not, the air–fuel ratio was lean or rich, etc. at the time of the malfunction.

1	INSPECT CAMSHAFT POSITION SENSOR(RESISTANCE)

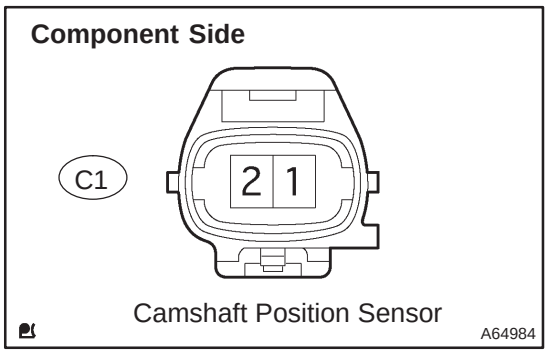

(a) Disconnect the C1 camshaft position sensor connector.

(b) Measure the resistance between the terminals of the camshaft position sensor.

Resistance:

835 to 1,400 Ω at cold

1,060 to 1,645 Ω at hot

NOTICE:

"Cold" and "Hot" shown above mean the temperature of the coils themselves. "Cold" is from –10°C (14°F) to 50°C (122°F) and "Hot" is from 50°C (122°F) to 100°C (212°F).

NG → **REPLACE CAMSHAFT POSITION SENSOR**

OK

2 CHECK HARNESS AND CONNECTOR(ECM – CAMSHAFT POSITION SENSOR)

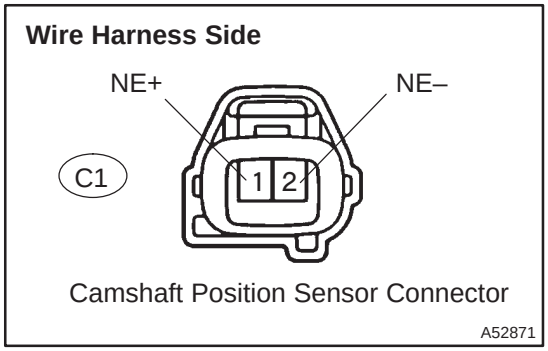

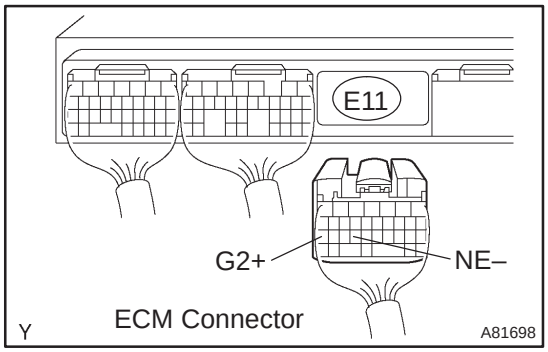

(a) Disconnect the C1 camshaft position sensor connector.
(b) Disconnect the E11 ECM connector.
(c) Check for continuity between the wire harness side connectors.

Standard (Check for open):

Symbols (Terminal No.)	Specified condition
Camshaft position sensor (C1–1) – G2+ (E11–27)	Continuity
Camshaft position sensor (C1–2) – NE– (E11–24)	

Standard (Check for short):

Symbols (Terminal No.)	Specified condition
Camshaft position sensor (C1–1) or G2+ (E11–27) – Body ground	No continuity
Camshaft position sensor (C1–2) or NE– (E11–24) – Body ground	

NG → **REPAIR OR REPLACE HARNESS OR CONNECTOR**

OK

3 CHECK SENSOR INSTALLATION(CAMSHAFT POSITION SENSOR)

(a) Inspect the camshaft position sensor installation.

NG → **TIGHTEN SENSOR**

OK

4 INSPECT CAMSHAFT

(a) Remove the camshafts (See page 14–240).
(b) Check the camshaft lobes.

NG → **REPLACE CAMSHAFT**

OK

CHECK AND REPLACE ECM (See page 01–32)

DTC	P0351	IGNITION COIL ”A” PRIMARY/SECONDARY CIRCUIT

DTC	P0352	IGNITION COIL ”B” PRIMARY/SECONDARY CIRCUIT

DTC	P0353	IGNITION COIL ”C” PRIMARY/SECONDARY CIRCUIT

DTC	P0354	IGNITION COIL ”D” PRIMARY/SECONDARY CIRCUIT

HINT:

- These DTCs indicate a malfunction related to primary circuit.
- If DTC P0351 is displayed, check No. 1 ignition coil with igniter circuit.
- If DTC P0352 is displayed, check No. 2 ignition coil with igniter circuit.
- If DTC P0353 is displayed, check No. 3 ignition coil with igniter circuit.
- If DTC P0354 is displayed, check No. 4 ignition coil with igniter circuit.

CIRCUIT DESCRIPTION

A Direct Ignition System (DIS) has been adopted. The DIS improves the ignition timing accuracy, reduces high–voltage loss, and enhances the overall reliability of the ignition system by eliminating the distributor. The DIS is a 1–cylinder ignition system which ignites one cylinder with one ignition coil. In the 1–cylinder ignition system, the one spark plug is connected to the end of the secondary winding. High voltage generated in the secondary winding is applied directly to the spark plug. The spark of the spark plug passes from the center electrode to the ground electrode.

The ECM determines the ignition timing and outputs the ignition signals (IGT) for each cylinder. Based on the IGT signals, the power transistors in the igniter cut off the current to the primary coil in the ignition coil is supplied to the spark plug that is connected to the end of the secondary coil. At the same time, the igniter also sends an ignition confirmation signal (IGF) as a fail–safe measure to the ECM.

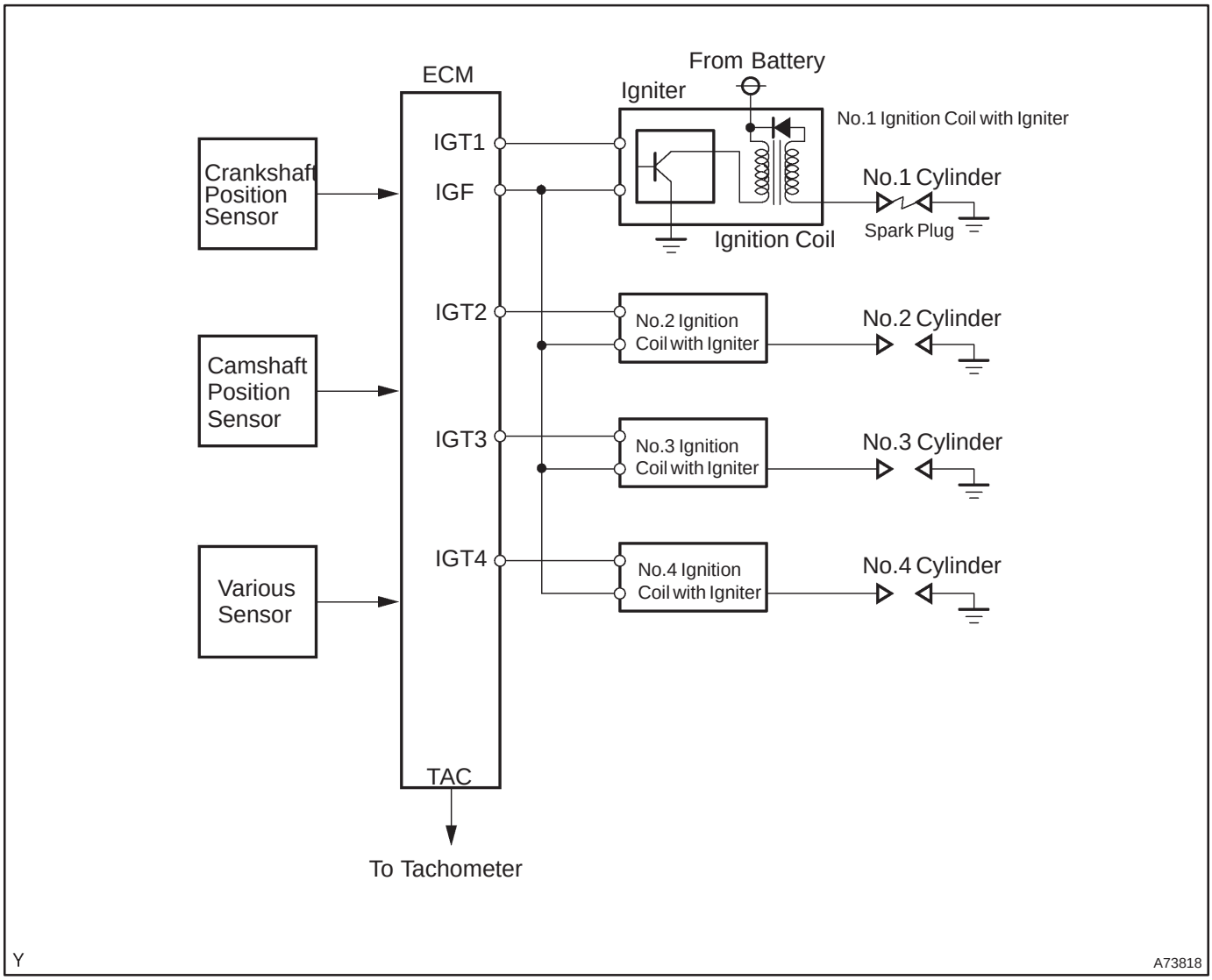

DTC No.	DTC Detection Condition	Trouble Area
P0351 P0352 P0353 P0354	No IGF signal to ECM while engine is running	• Ignition system • Open or short in IGF and IGT circuit from ignition coil with igniter to ECM (ignition coil circuit 1 through 4) • Ignition coil with igniter (ignition coil 1 through 4) • IG2 relay • ECM

WIRING DIAGRAM

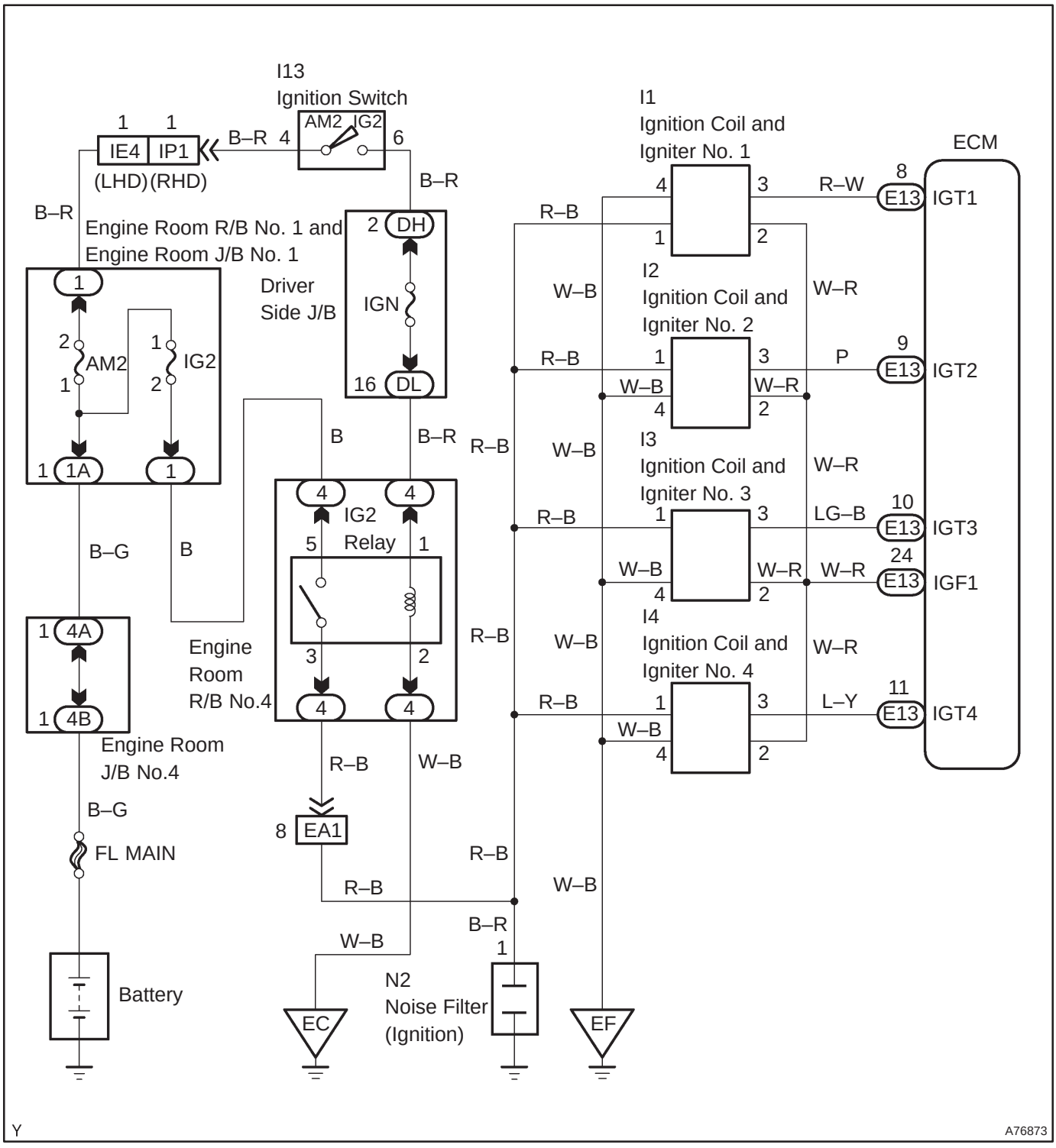

INSPECTION PROCEDURE

HINT:

Read freeze frame data using the hand–held tester. Freeze frame data records the engine conditions when a malfunction is detected. When troubleshooting, it is useful for determining whether the vehicle was running or stopped, the engine was warmed up or not, the air–fuel ratio was lean or rich, etc. at the time of the malfunction.

1	PERFORM SIMULATION TEST(CHECK DTC)

(a) Read the DTC and check which of the cylinders causes the DTC (See page 05–294).
(b) Clear the DTC (See page 05–294).
(c) Swap the ignition coil with igniter of the cylinder that is referred by the DTC for the others.

NOTICE:

Do not swap the ignition coil with igniter connector for the others.

(d) Start the engine.
(e) Read the DTC (See page 05–294).

Result:

Display (DTC output)	Proceed to
The same DTC is output again	A
The other DTC is output	B

B → REPLACE IGNITION COIL ASSY

A

2	INSPECT ECM(IGT1, IGT2, IGT3 OR IGT4 VOLTAGE)

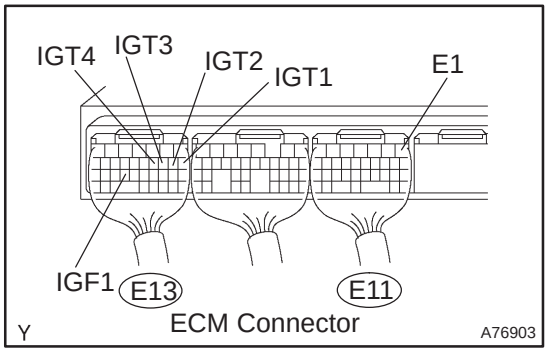

(a) During cranking or idling, check the waveform between terminals IGT1 to IGT4 and E1, and IGF1 and E1 of the ECM connector.

Item	Details
Terminal	CH1: IGT1, IGT2, IGT3, IGT4 – E1 CH2: IGF1 – E1
Equipment Settings	2 V/Division, 20 ms/Division
Condition	While the engine is cranking or idling

HINT:

Correct waveform appears as shown, with rectangle waves.

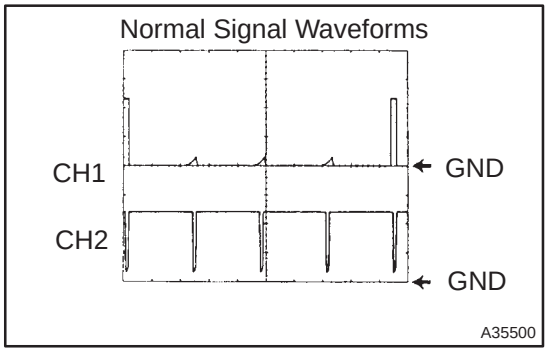

OK → CHECK AND REPLACE ECM (See page 01–32)

NG

3 CHECK IGNITION COIL ASSY(POWER SOURSE)

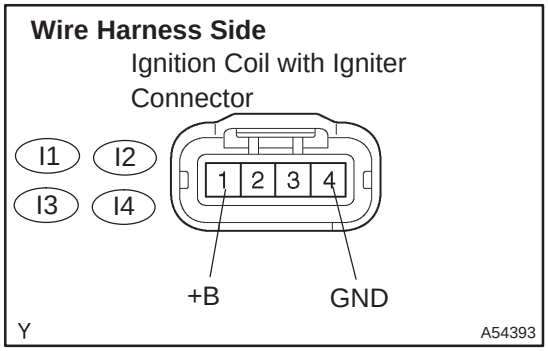

(a) Disconnect the I1, I2, I3 or I4 ignition coil with igniter connector.

(b) Check for open between terminal GND of the ignition coil with igniter connector and body ground.

Resistance: 1 Ω or less

(c) Turn the ignition switch ON.

(d) Measure the voltage between terminals +B and GND of the ignition coil with igniter connector.

Voltage: 9 to 14 V

NG → **Go to step 5**

OK

4 CHECK HARNESS AND CONNECTOR(ECM – IGNITION COIL)

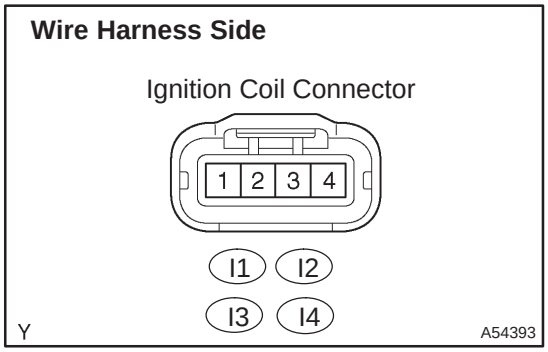

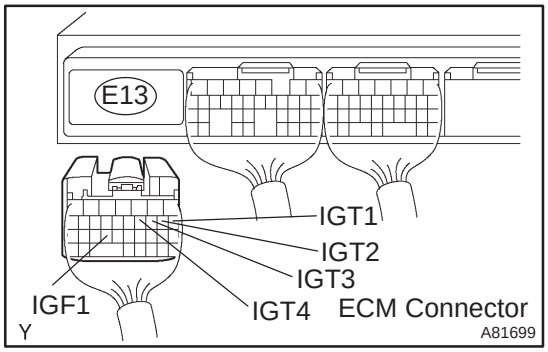

(a) Check the harness and connector between the ignition coil and ECM (IGF terminal) connectors

(1) Disconnect the I1, I2, I3 or I4 ignition coil connector.

(2) Disconnect the E13 ECM connector.

(3) Check for continuity between the wire harness side connectors.

Standard (Check for open):

Symbols (Terminal No.)	Specified condition
Ignition coil (I1–2) – IGF1 (E13–24)	Continuity
Ignition coil (I2–2) – IGF1 (E13–24)	
Ignition coil (I3–2) – IGF1 (E13–24)	
Ignition coil (I4–2) – IGF1 (E13–24)	

Standard (Check for short):

Symbols (Terminal No.)	Specified condition
Ignition coil (I1–2) or IGF1 (E13–24) – Body ground	No continuity
Ignition coil (I2–2) or IGF1 (E13–24) – Body ground	
Ignition coil (I3–2) or IGF1 (E13–24) – Body ground	
Ignition coil (I4–2) or IGF1 (E13–24) – Body ground	

(b) Check the harness and connector between the ignition coil and ECM (IGT terminal) connectors

(1) Disconnect the I1, I2, I3 or I4 ignition coil connector.

(2) Disconnect the E13 ECM connector.

(3) Check for continuity between the wire harness side connectors.

Standard (Check for open):

Symbols (Terminal No.)	Specified condition
Ignition coil (I1–3) – IGT1 (E13–8)	Continuity
Ignition coil (I2–3) – IGT2 (E13–9)	
Ignition coil (I3–3) – IGT3 (E13–10)	
Ignition coil (I4–3) – IGT4 (E13–11)	

Standard (Check for short):

Symbols (Terminal No.)	Specified condition
Ignition coil (I1–3) or IGT1 (E13–8) – Body ground	No continuity
Ignition coil (I2–3) or IGT2 (E13–9) – Body ground	
Ignition coil (I3–3) or IGT3 (E13–10) – Body ground	
Ignition coil (I4–3) or IGT4 (E13–11) – Body ground	

NG → **REPAIR OR REPLACE HARNESS OR CONNECTOR**

OK

REPLACE IGNITION COIL ASSY

5 INSPECT IG2 RELAY

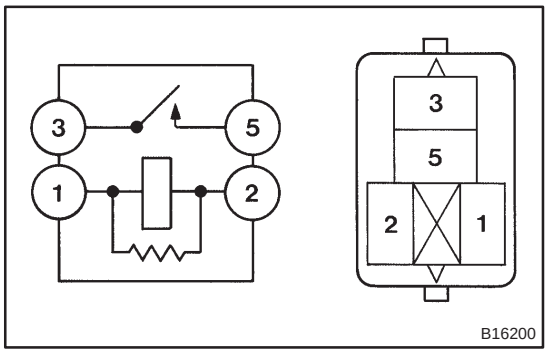

(a) Remove the IG2 relay from the engine room R/B No. 4.
(b) Inspect the IG2 relay.

Standard:

Terminal No.	Specified condition
1 – 2	Continuity
3 – 5	No Continuity
	Continuity (Apply battery voltage terminals 1 and 2)

NG → **REPLACE IG2 RELAY**

OK

6 CHECK HARNESS AND CONNECTOR(IG2 RELAY – IGNITION COIL)

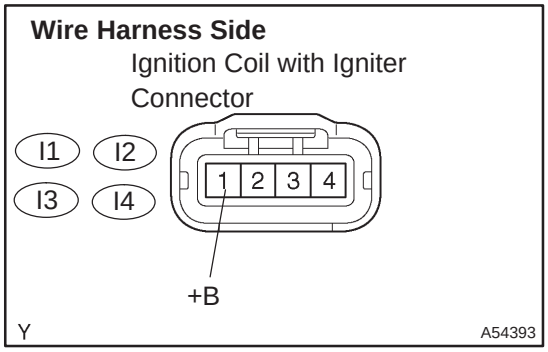

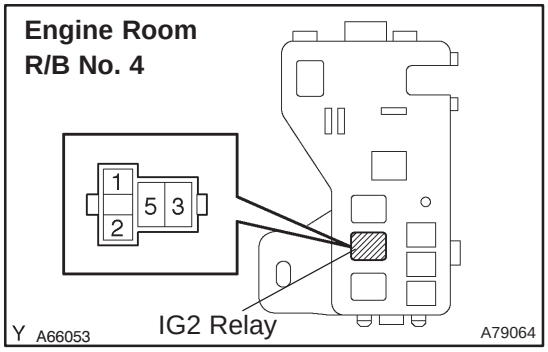

(a) Disconnect the I1, I2, I3 or I4 ignition coil with igniter connector.
(b) Remove the IG2 relay from the engine room R/B No. 4.
(c) Check for continuity between the wire harness side connectors.

Standard (Check for open):

Symbols (Terminal No.)	Specified condition
Ignition coil (I1–1) – IG2 relay (3)	Continuity
Ignition coil (I2–1) – IG2 relay (3)	
Ignition coil (I3–1) – IG2 relay (3)	
Ignition coil (I4–1) – IG2 relay (3)	

Standard (Check for short):

Symbols (Terminal No.)	Specified condition
Ignition coil (I1–1) or IG2 relay (3) – Body ground	No continuity
Ignition coil (I2–1) or IG2 relay (3) – Body ground	
Ignition coil (I3–1) or IG2 relay (3) – Body ground	
Ignition coil (I4–1) or IG2 relay (3) – Body ground	

NG → REPAIR OR REPLACE HARNESS OR CONNECTOR

OK

CHECK FOR FUEL PUMP CONTROL CIRCUIT (See page 05–507)

DTC	P0420	CATALYST SYSTEM EFFICIENCY BELOW THRESHOLD (BANK 1)

DTC	P0430	CATALYST SYSTEM EFFICIENCY BELOW THRESHOLD (BANK 2)

CIRCUIT DESCRIPTION

The ECM compares the waveform of the heated oxygen sensor located before the catalyst with the waveform of the heated oxygen sensor located after the catalyst to determine whether or not the catalyst performance has deteriorated.

The air–fuel ratio feedback compensation keeps the waveform of the heated oxygen sensor before the catalyst repeatedly changing back and forth from rich to lean.

If the catalyst is functioning normally, the waveform of the heated oxygen sensor after the catalyst switches back and forth between rich and lean much more slowly than the waveform of the heated oxygen sensor before the catalyst.

But when both waveforms change at a similar rate, it indicates that the catalyst performance has deteriorated.

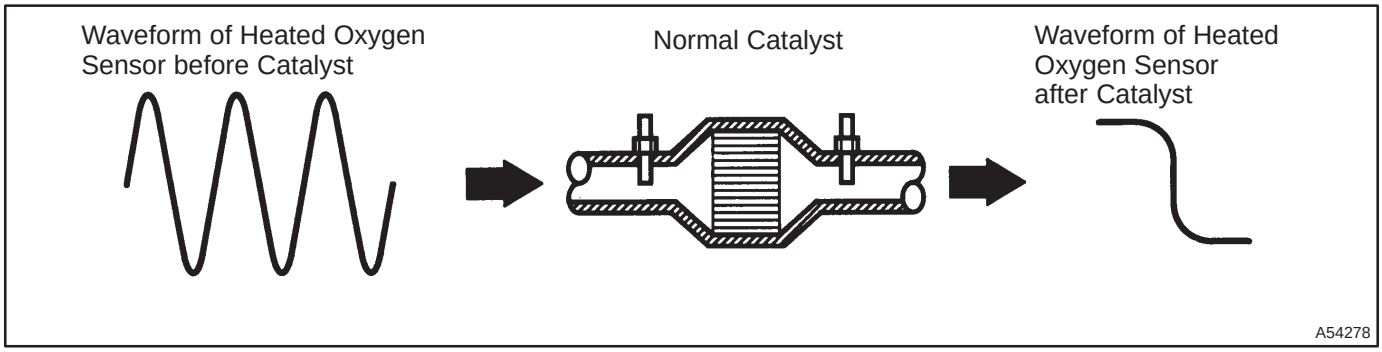

DTC No.	DTC Detection Condition	Trouble Area
P0420 P0430	After engine and catalyst are warmed up, and while vehicle is driven within set value and engine speed range, waveforms of heated oxygen sensors have the same amplitude (2 trip detection logic)	• Gas leakage in exhaust system • Heated oxygen sensor • Three–way catalytic converter (inside exhaust manifold)

HINT:

- Bank 1 refers to the No. 1 and No. 4 cylinders.
- Bank 2 refers to the No. 2 and No. 3 cylinders.
- Sensor 1 refers to the sensor closest to the engine assembly.
- Sensor 2 refers to the sensor farthest away from the engine assembly.

CONFIRMATION ENGINE RACING PATTERN

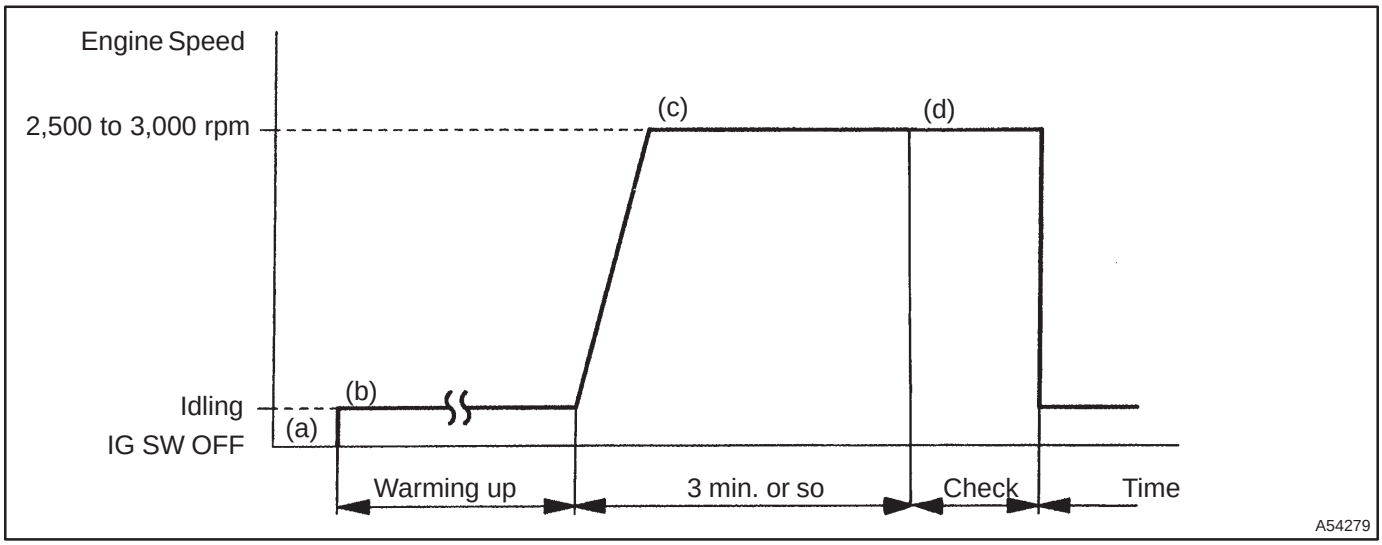

(a) Connect the hand–held tester to the DLC3, or connect the probe of the oscilloscope between terminals OX1A, OX2A, OX1B or OX2B and E2 of the ECM connectors.
(b) Start the engine and warm it up with all the accessories switched OFF until the engine coolant temperature is stable.
(c) Run the engine at 2,500 to 3,000 rpm for about 3 minutes.
(d) After confirming that the waveforms of the heated oxygen sensor (bank 1, 2 sensor 1 (OX1A, OX2A)) which oscillates around 0.5 V during feedback to the ECM, check the waveform of the heated oxygen sensor (bank 1, 2 sensor 2 (OX1B, OX2B)).

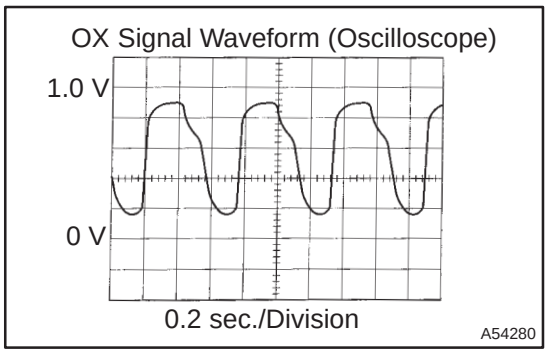

HINT:
If there is a malfunction in the system, the waveform of the heated oxygen sensor (bank 1, 2 sensor 2 (OX1B, OX2B)) is almost the same as that of the heated oxygen sensor (bank 1, 2 sensor 1 (OX1A, OX2A)) on the left.
There are some cases where, even though a malfunction exists, the CHK ENG may either light up or not light up.

INSPECTION PROCEDURE

HINT:
Read freeze frame data using the hand – held tester. Freeze frame data records the engine conditions when a malfunction is detected. When troubleshooting, it is useful for determining whether the vehicle was running or stopped, the engine was warmed up or not, the air–fuel ratio was lean or rich, etc. at the time of the malfunction.

1	CHECK OTHER DTC OUTPUT(IN ADDITION TO P0420 AND/OR P0430)

(a) Read the DTC using the hand–held tester.
Result:

Display (DTC output)	Proceed to
Only ”P0420 and/or P0430” are output	A
”P0420 or P0430” and other DTCs are output	B

HINT:
If any other codes besides ”P0420 and/or P0430” are output, perform the troubleshooting for those DTCs first.

B → **GO TO RELEVANT DTC CHART (See page 05–309)**

A

2	CHECK FOR EXHAUST GAS LEAKS

NG → **REPAIR OR REPLACE EXHAUST GAS LEAKAGE POINT**

OK

3	CHECK HEATED OXYGEN SENSOR(BANK 1, 2 SENSOR 1) (See page 05–363)

NG → **REPLACE HEATED OXYGEN SENSOR**

OK

4	CHECK HEATED OXYGEN SENSOR(BANK 1, 2 SENSOR 2) (See page 05–388)

NG → **REPLACE HEATED OXYGEN SENSOR**

OK

REPLACE THREE–WAY CATALYTIC CONVERTER (EXHAUST MANIFOLD)

DTC	P0443	EVAPORATIVE EMISSION CONTROL SYSTEM PURGE CONTROL VALVE CIRCUIT

CIRCUIT DESCRIPTION

To reduce HC emissions, evaporated fuel from the fuel tank is routed through the charcoal canister to the intake manifold for combustion in the cylinders.

The ECM changes the duty signal to the VSV for the EVAP so that the intake quantity of HC emissions is appropriate for the driving conditions (engine load, engine speed, vehicle speed, etc.) after the engine is warmed up.

DTC No.	DTC Detection Condition	Trouble Area
P0443	Proper response to ECM command does not occur	• Open of short in VSV circuit for EVAP • VSV for EVAP • ECM

WIRING DIAGRAM

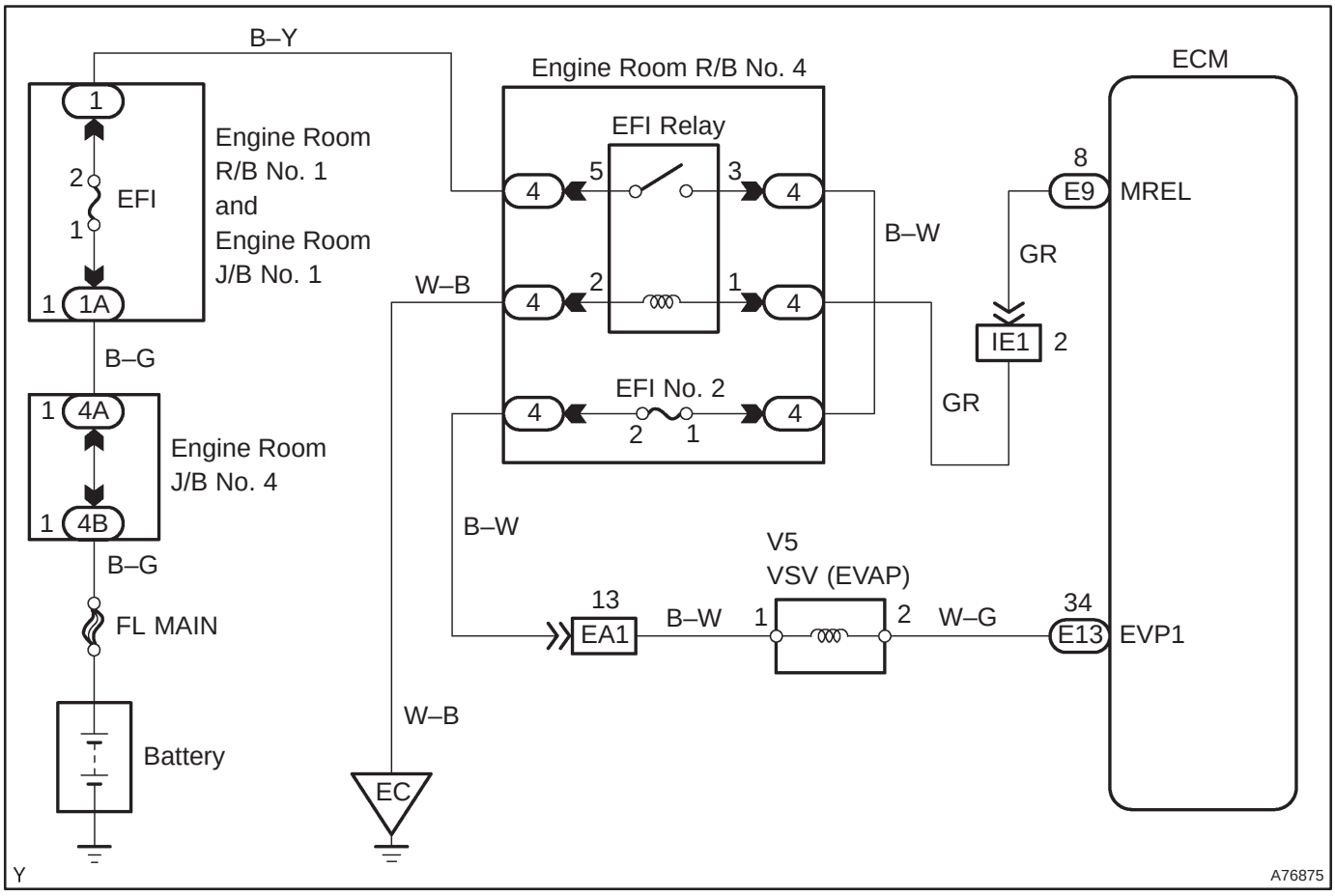

INSPECTION PROCEDURE

HINT:

Read freeze frame data using the hand–held tester. Freeze frame data records the engine conditions when a malfunction is detected. When troubleshooting, it is useful for determining whether the vehicle was running or stopped, the engine was warmed up or not, the air–fuel ratio was lean or rich, etc. at the time of the malfunction.

1	PERFORM ACTIVE TEST BY HAND–HELD TESTER(VSV FOR EVAP)

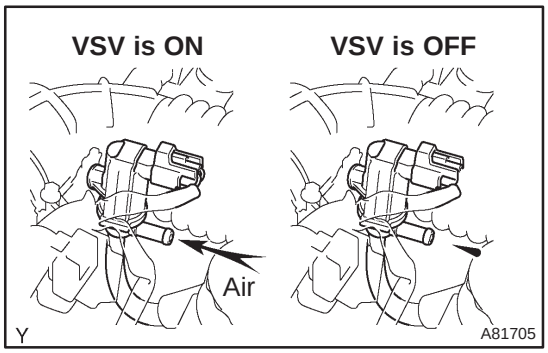

(a) Disconnect the vacuum hose from the VSV for EVAP.
(b) Start the engine.
(c) Select the item ”DIAGNOSIS / OBD/MOBD / ACTIVE TEST / EVAP VSV” (press the right or left button).
(d) When the VSV for EVAP is operated by the hand–held tester, check whether the disconnected hose applies suction to your finger.

Standard:

Tester operation	Specified condition
VSV is ON	Disconnected hose applies suction to your finger
VSV is OFF	Disconnected hose applies no suction to your finger

OK → **CHECK FOR INTERMITTENT PROBLEMS**

NG

2	INSPECT VACUUM SWITCHING VALVE ASSY NO.1(VSV FOR EVAP) (See page 12–13)

NG → **REPLACE VACUUM SWITCHING VALVE ASSY NO.1 (VSV FOR EVAP)**

OK

3	INSPECT ECM(EVP1 VOLTAGE)

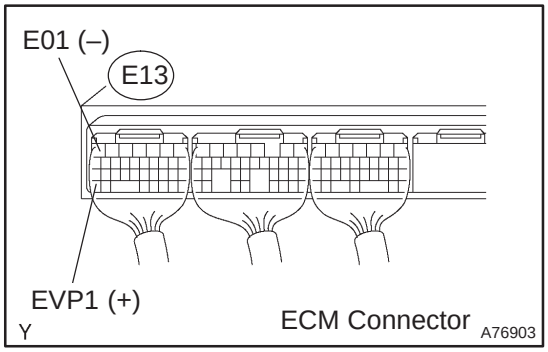

(a) Turn the ignition switch ON.
(b) Measure the voltage between the specified terminals of the E13 ECM connector.

Standard:

Symbols (Terminal No.)	Specified condition
EVP1 (E13–34) – E01 (E13–7)	9 to 14 V

OK → **CHECK AND REPLACE ECM (See page 01–32)**

NG

4 CHECK HARNESS AND CONNECTOR(ECM – VSV FOR EVAP)

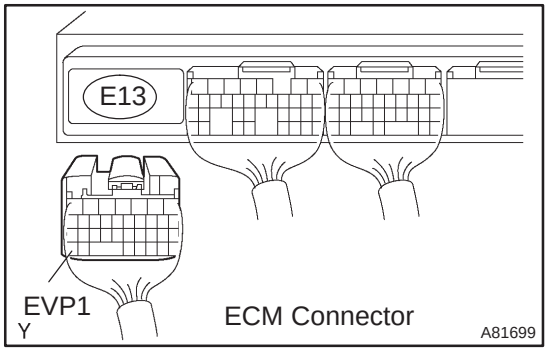

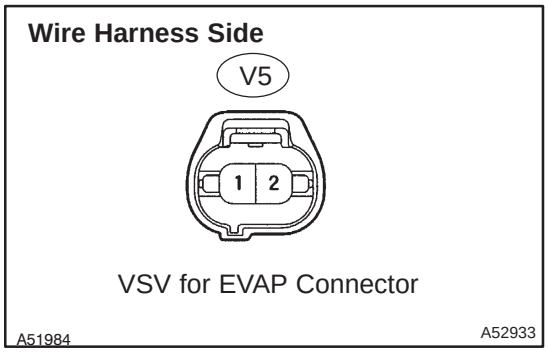

(a) Disconnect the E13 ECM connector.
(b) Disconnect the V5 VSV for EVAP connector.
(c) Check for continuity between the wire harness side connector.

Standard (Check for open):

Symbols (Terminal No.)	Specified condition
VSV for EVAP (V5–2) – EVP1 (E13–34)	Continuity

Standard (Check for short):

Symbols (Terminal No.)	Specified condition
VSV for EVAP (V5–2) or EVP1 (E13–34) – Body ground	No continuity

NG → **REPAIR OR REPLACE HARNESS OR CONNECTOR**

OK

5	CHECK HARNESS AND CONNECTOR(EFI RELAY – VSV FOR EVAP)

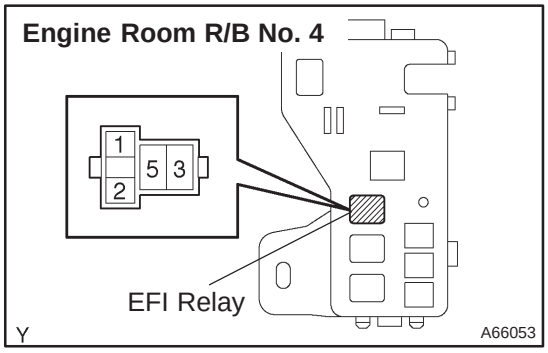

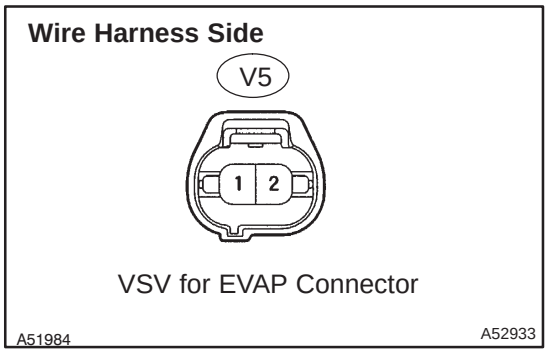

(a) Inspect the EFI No. 2 fuse.
  (1) Remove the EFI No. 2 fuse from the engine room R/B No. 4.
  (2) Check for continuity in the EFI No. 2 fuse.

Standard: Continuity

(b) Remove the EFI relay from the engine room R/B No. 4.

(c) Disconnect the V5 VSV for EVAP connector.

(d) Check for continuity between the wire harness side connector.

Standard (Check for open):

Symbols (Terminal No.)	Specified condition
EFI relay (3) – VSV for EVAP (V5–1)	Continuity

Standard (Check for short):

Symbols (Terminal No.)	Specified condition
EFI relay (3) or VSV for EVAP (V5–1) – Body ground	No continuity

NG → **REPAIR OR REPLACE HARNESS OR CONNECTOR**

OK

CHECK FOR ECM POWER SOURCE CIRCUIT (See page 05–502)

DTC	P0500	VEHICLE SPEED SENSOR ”A”

CIRCUIT DESCRIPTION

The speed sensor for skid control ECU detects the wheel speed and sends the appropriate signals to the skid control ECU.

The skid control ECU converts these signals into a 4–pulse signal and outputs it to the combination meter. After this signal is converted into a more precise rectangular waveform by the waveform shaping circuit inside the combination meter,it is then transmitted to the ECM. The ECM determines the vehicle speed based on the frequency of these pulse signals.

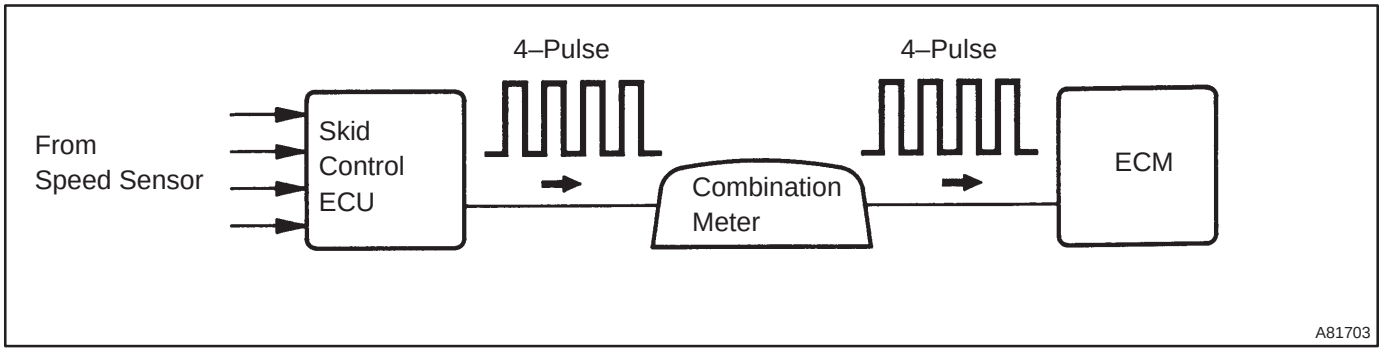

DTC No.	DTC Detection Condition	Trouble Area
P0500	No vehicle speed sensor signal to ECM under the following condition (1 trip (A/T) or 2 trip (M/T) detection logic): (a) Vehicle is being driven	• Combination meter • Open or short in speed sensor circuit • Vehicle speed sensor • ECM • Skid control ECU • Clutch or brake slips or gear is broken

WIRING DIAGRAM

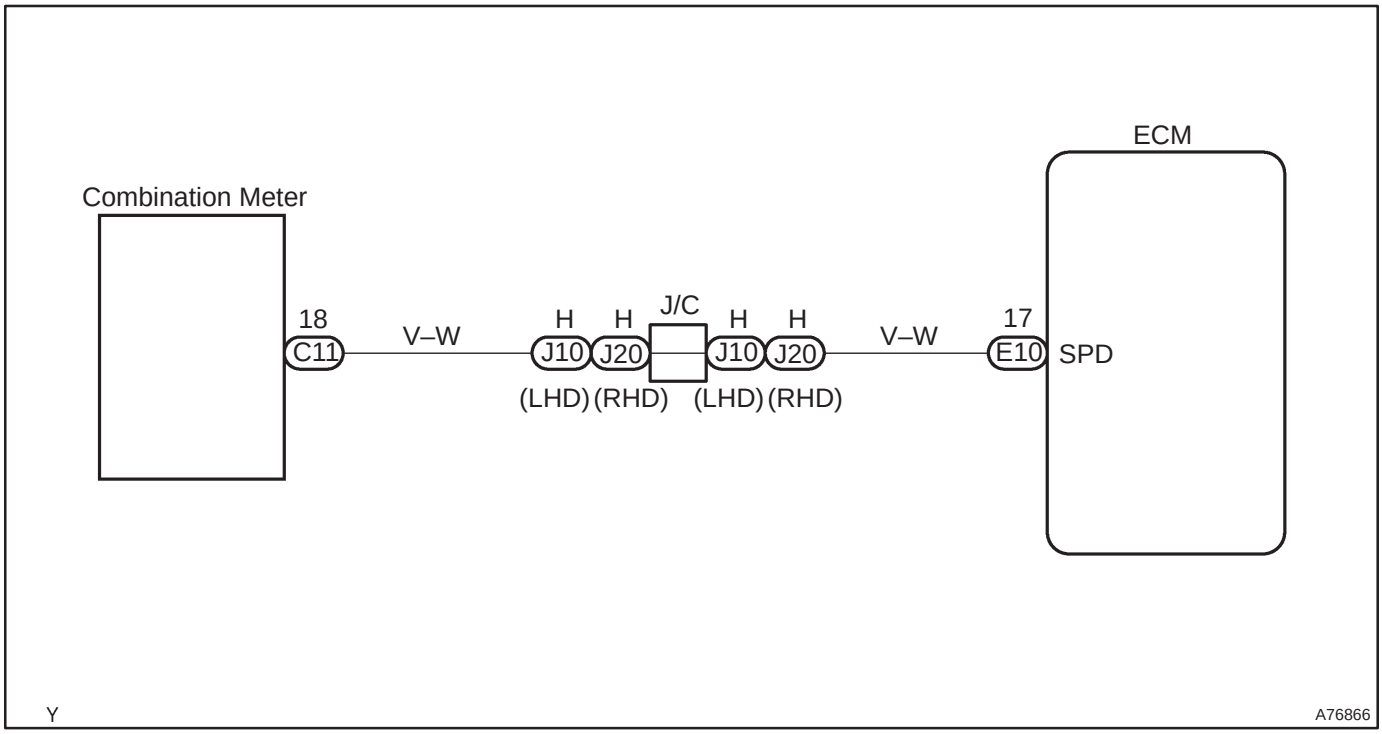

INSPECTION PROCEDURE

HINT:
Read freeze frame data using the hand–held tester. Freeze frame data records the engine conditions when a malfunction is detected. When troubleshooting, it is useful for determining whether the vehicle was running or stopped, the engine was warmed up or not, the air–fuel ratio was lean or rich, etc. at the time of the malfunction.

1	CHECK OPERATION OF SPEEDOMETER

(a) Drive the vehicle and check if the operation of the speedometer in the combination meter is normal.
HINT:
The vehicle speed sensor is operating normally if the speedometer display is normal.

NG → **CHECK SPEEDOMETER CIRCUIT (See page 05–1510)**

OK

2	INSPECT ECM(SPD VOLTAGE)

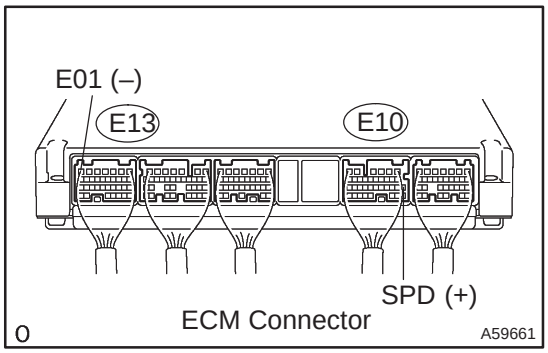

(a) Shift the lever to the neutral position.
(b) Jack up the vehicle.
(c) Turn the ignition switch ON.
(d) Measure the voltage between the specified terminals of the E10 and E13 ECM connectors as the wheel is turned slowly.

Standard:

Symbols (Terminal No.)	Specified condition
SPD (E10–17) – E01 (E13–7)	Generated intermittently

HINT:
The output voltage should fluctuate ups and downs similarly to the diagram on the left as the wheel is turned slowly.

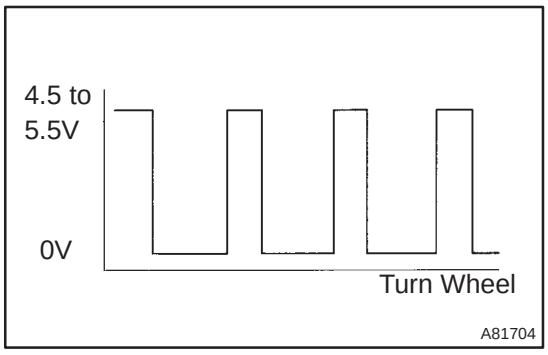

NG → **REPAIR OR REPLACE HARNESS OR CONNECTOR**

OK

CHECK AND REPLACE ECM (See page 01–32)

DTC P0504 BRAKE SWITCH "A"/"B" CORRELATION

CIRCUIT DESCRIPTION

In this system, the signal of the stop light switch is used to judge whether the acceleration system is abnormal or not.

The stop light switch has a duplex system (signals STP and ST1–) to memorize the abnormality when the signals of depressing and releasing the brake pedal are detected simultaneously.

HINT:

Normal condition is as shown in the table.

Signal	Brake pedal released	In transition	Brake pedal depressed
STP	OFF	ON	ON
ST1–	ON	ON	OFF

DTC No.	DTC Detection Condition	Trouble Area
P0504	Condition (a), (b) and (c) continue for 0.5 sec. or more: (a) Ignition switch ON (b) Brake pedal released (c) STP signal is OFF when the ST1– signal is OFF	• Short in stop light switch signal circuit • Stop light switch • ECM

WIRING DIAGRAM

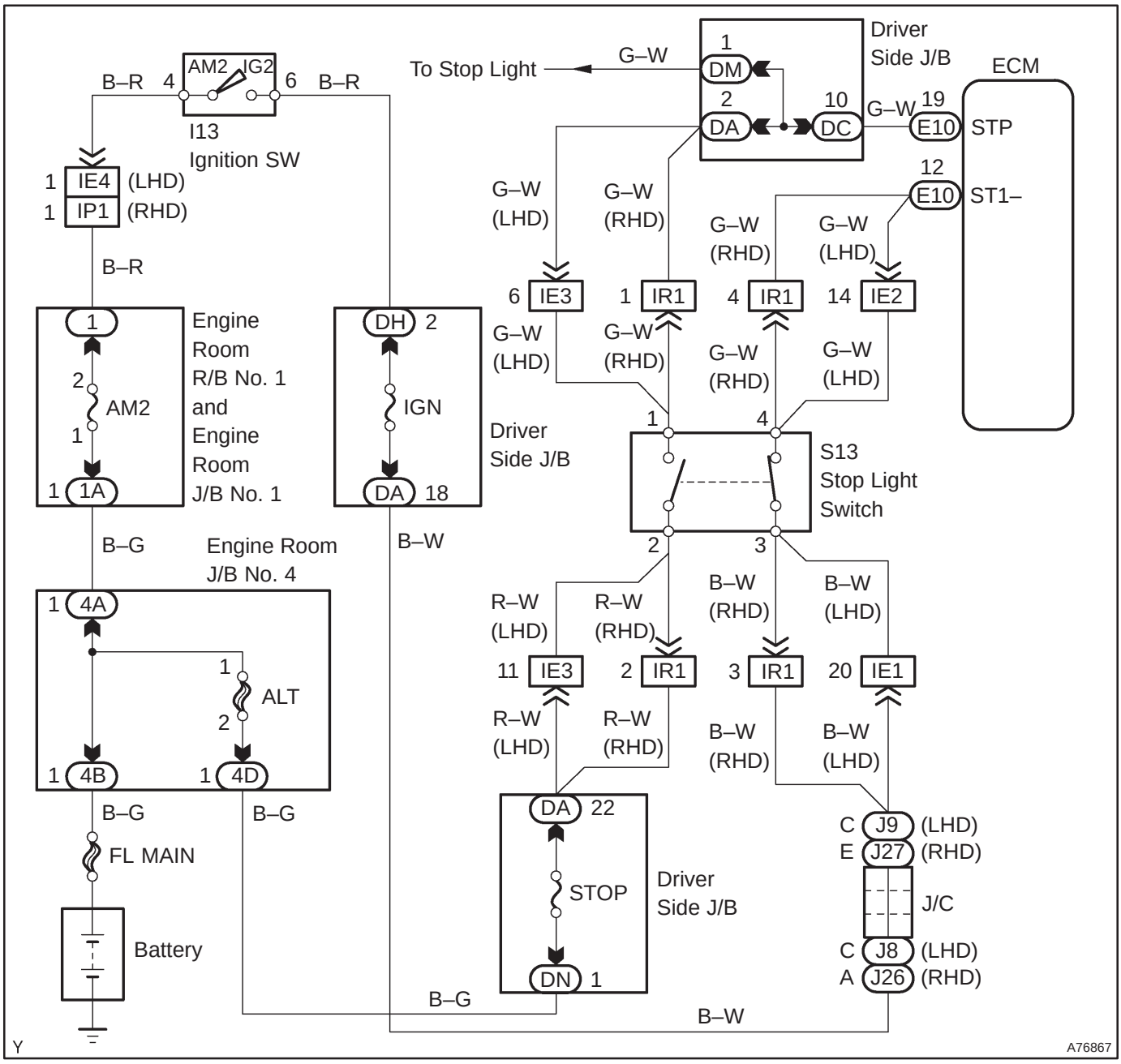

INSPECTION PROCEDURE

HINT:

Read freeze frame data using the hand–held tester. Freeze frame data records the engine conditions when a malfunction is detected. When troubleshooting, it is useful for determining whether the vehicle was running or stopped, the engine was warmed up or not, the air–fuel ratio was lean or rich, etc. at the time of the malfunction.

1	CHECK OPERATION OF STOP LIGHT

(a) Check if the stop lights go on and off normally when the brake pedal is depressed and released.

NG → **REPAIR OR REPLACE STOP LAMP SWITCH CIRCUIT**

OK

2	INSPECT STOP LIGHT SWITCH ASSY

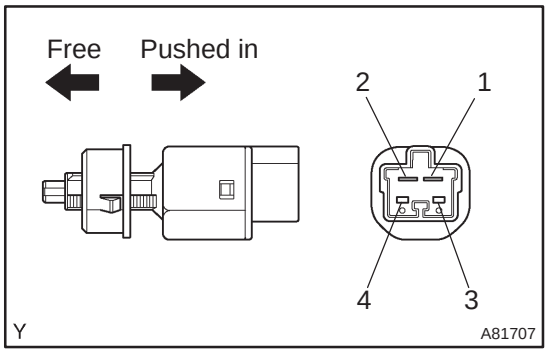

(a) Check for continuity between each pair of the terminals.
Standard:

Switch position	Terminal No.	Specified condition
Switch pin free	1 – 2	Continuity
	3 – 4	No continuity
Switch pin pushed in	1 – 2	No continuity
	3 – 4	Continuity

NG → **REPLACE STOP LIGHT SWITCH ASSY**

OK

3	READ VALUE OF HAND–HELD TESTER(STP SIGNAL AND ST1– VOLTAGE)

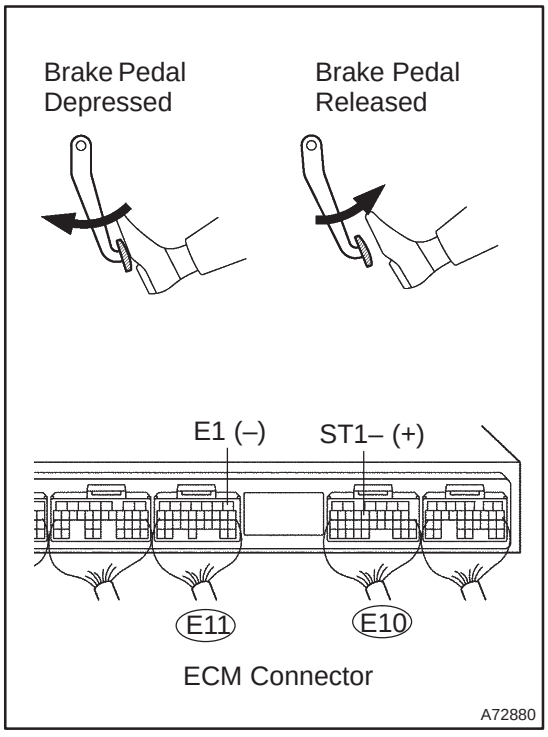

(a) Turn the ignition switch ON.
(b) Select the item "DIAGNOSIS / OBD/MOBD / DATA LIST / ALL / STOP LIGHT SW" and read its value displayed on the hand–held tester.
Standard:

Brake Pedal	Specified condition
Depressed	STP Signal ON
Released	STP Signal OFF

(c) Measure the voltage between the specified terminals of the E10 and E11 ECM connectors.
Standard:

Symbols (Terminal No.)	Brake pedal	Specified condition
ST1– (E10–12) – E1 (E11–1)	Depressed	Below 1.5 V
	Released	7.5 to 14 V

NG → **Go to step 4**

OK

CHECK FOR INTERMITTENT PROBLEMS

4 CHECK HARNESS AND CONNECTOR(ECM – STOP LIGHT SWITCH)

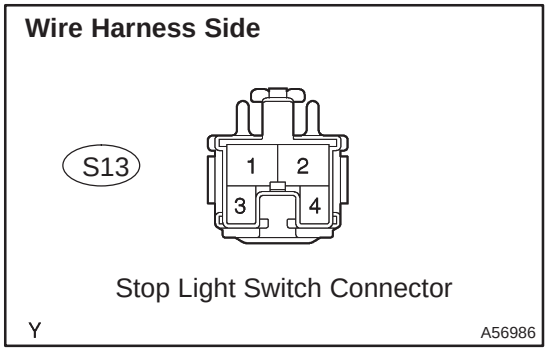

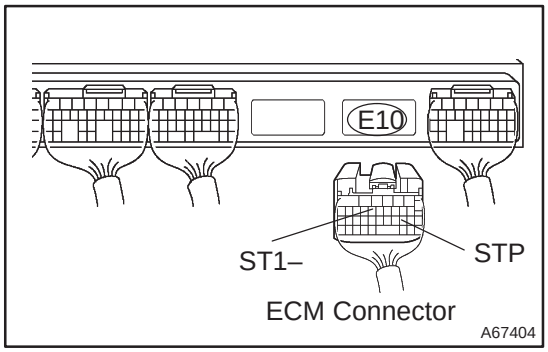

(a) Disconnect the S13 stop light switch connector.
(b) Disconnect the E10 ECM connector.
(c) Check for continuity between the wire harness side connectors.

Standard (Check for open):

Symbols (Terminal No.)	Specified condition
Stop light switch (S13–1) – STP (E10–19)	Continuity
Stop light switch (S13–4) – ST1– (E10–12)	

Standard (Check for short):

Symbols (Terminal No.)	Specified condition
Stop light switch (S13–1) or STP (E10–19) – Body ground	No continuity
Stop light switch (S13–4) or ST1– (E10–12) – Body ground	

NG → **REPAIR OR REPLACE HARNESS OR CONNECTOR**

OK

CHECK AND REPLACE ECM (See page 01–32)

DTC	P0555	BRAKE BOOSTER PRESSURE SENSOR CIRCUIT

DTC	P0557	BRAKE BOOSTER PRESSURE SENSOR CIRCUIT LOW INPUT

DTC	P0558	BRAKE BOOSTER PRESSURE SENSOR CIRCUIT HIGH INPUT

CIRCUIT DESCRIPTION

The brake booster pressure sensor detects internal pressure of the brake booster as voltage. A structure of the sensor and its connection to the ECM are the same as ones for the intake air pressure sensor. (Refer to DTC P0105 on page 05–342).

In order to purify emission gas when starting a cold engine, drastically retard the ignition timing to quickly activate tha catalyst. Upon this, the throttle valve is opened larger than the throttle opening angle with a warm engine, therefore the intake manifold pressure will be closer to atmospheric pressure. If the negative pressure (vacuum) applied inside the brake booster drops, the ECM cancels the drastic retarding timing and introduces the negative pressure (vacuum) into the intake manifold, and the ECM then resumes the drastic retarding timing after the brake booster negative pressure (vacuum) is ensured at required level.

DTC No.	DTC Detection Condition	Trouble Area
P0555	Open or short in brake booster pressure sensor circuit for 5 sec. or more	• Open or short in brake booster pressure sensor circuit • Brake booster pressure sensor • Vacuum hose • ECM
P0557	Open in brake booster pressure sensor circuit for 5 sec. or more	
P0558	Short in brake booster pressure sensor circuit for 5 sec. or more	

WIRING DIAGRAM

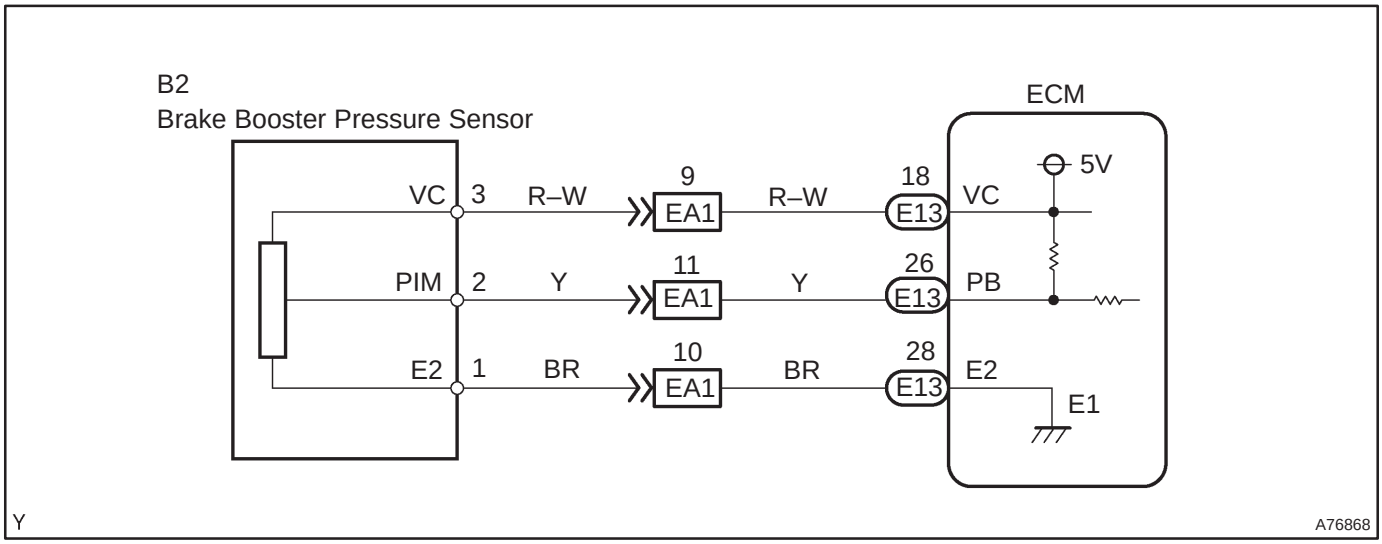

INSPECTION PROCEDURE

HINT:

- If different DTCs related to different systems that have terminal E2 as the ground terminal are output simultaneously, terminal E2 may be open.
- Read freeze frame data using the hand–held tester. Freeze frame data records the engine conditions when a malfunction is detected. When troubleshooting, it is useful for determining whether the vehicle was running or stopped, the engine was warmed up or not, the air–fuel ratio was lean or rich, etc. at the time of the malfunction.

1	CHECK VACUUM HOSE(BRAKE BOOSTER PRESSURE SENSOR – BRAKE BOOSTER, INTAKE MANIFOLD – BRAKE BOOSTER)

(a) Check that the vacuum hoses are connected correctly.
(b) Check that the vacuum hoses are not loose or disconnected.
(c) Check the vacuum hoses and tubes for clogs, cracks, holes, damage, or blockage.

NG → **REPAIR OR REPLACE VACUUM HOSE**

OK

2	INSPECT ECM(VC VOLTAGE)

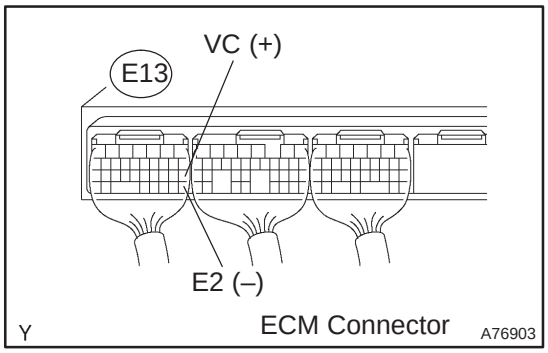

(a) Turn the ignition switch ON.
(b) Measure the voltage between the specified terminals of the E13 ECM connector.

Standard:

Symbols (Terminal No.)	Specified condition
VC (E13–18) – E2 (E13–28)	4.5 to 5.5 V

NG → **CHECK AND REPLACE ECM (See page 01–32)**

OK

3	INSPECT ECM(PB VOLTAGE)

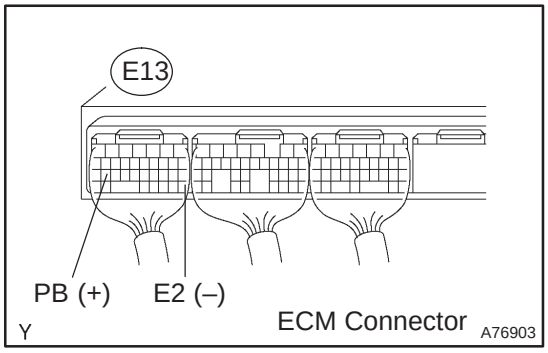

(a) Measure the voltage between the specified terminals of the E13 ECM connector.

Standard:

Symbols (Terminal No.)	Condition	Specified condition
PB (E13–26) – E2 (E13–28)	Ignition switch ON (do not start engine)	0.5 to 4.5 V
	Idling	

NG → **Go to step 4**

OK

CHECK FOR INTERMITTENT PROBLEMS

4	CHECK HARNESS AND CONNECTOR(ECM – BRAKE BOOSTER PRESSURE SENSOR)

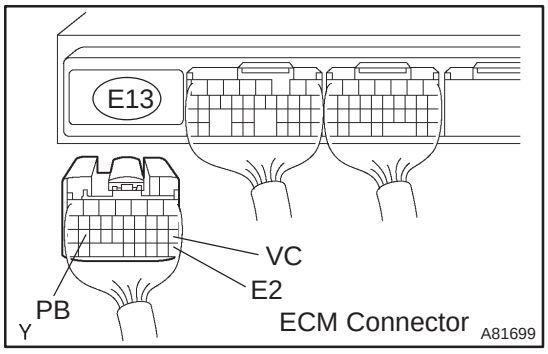

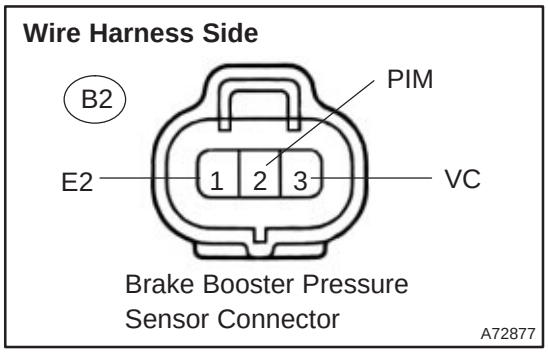

(a) Disconnect the E13 ECM connector.
(b) Disconnect the B2 brake booster pressure sensor connector.
(c) Check for continuity between the wire harness side connectors.

Standard (Check for open):

Symbols (Terminal No.)	Specified condition
VC (E13–18) – VC (B2–3)	Continuity
PB (E13–26) – PIM (B2–2)	
E2 (E13–28) – E2 (B2–1)	

Standard (Check for short):

Symbols (Terminal No.)	Specified condition
VC (E13–18) or VC (B2–3) – Body ground	No continuity
PB (E13–26) or PIM (B2–2) – Body ground	

NG → **REPAIR OR REPLACE HARNESS OR CONNECTOR**

OK

REPLACE BRAKE BOOSTER PRESSURE SENSOR

DTC	P0556	BRAKE BOOSTER PRESSURE SENSOR CIRCUIT RANGE/PERFORMANCE

CIRCUIT DESCRIPTION

Refer to DTC P0555 on page 05–459.

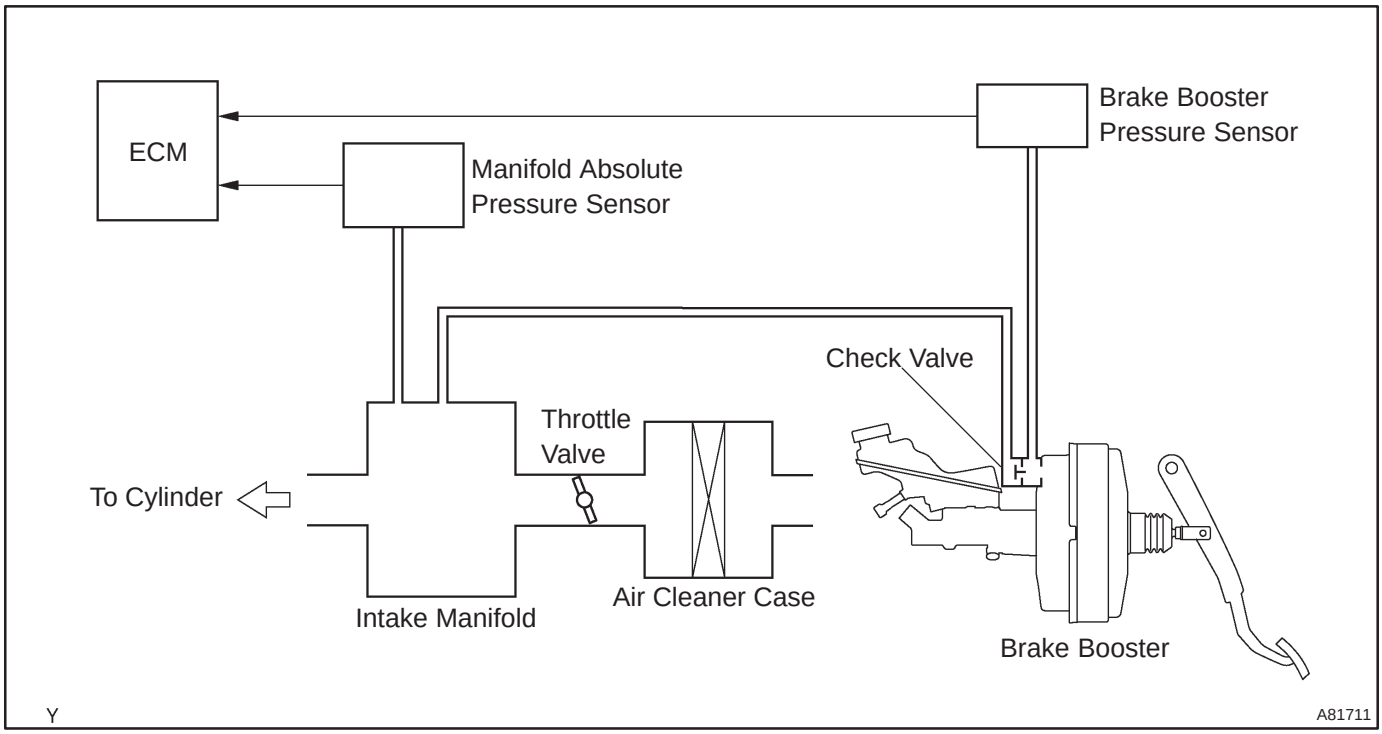

DTC No.	DTC Detection Condition	Trouble Area
P0556	When either one of the following conditions (a), (b), (c) or (d) is satisfied (1 trip detection logic): (a) If pressure inside the intake manifold is low, the brake booster internal pressure is 38 kPa (285 mmHg, 11.2 in.Hg) or more higher than the intake manifold internal pressure and this condition remains for more than 10 sec. (Pressure leaks caused by hose disconnection, etc). (b) Pressure inside the brake booster stays low or at fixed level, despite the vehicle has driven and stopped 10 times (Vacuum stuck caused by hose clogged, etc). (c) While the brake pedal is released, the pressure inside the brake booster is 32 kPa (240 mmHg, 9.4 in.Hg) or more higher than the intake manifold internal pressure and this condition remains for more than 1 sec. (Pressure leaks). (d) After running the engine for more than 100 sec. with the brake pedal released and the negative pressure (vacuum) has accumulated in the brake booster, the following two conditions are satisfied despite depressing the brake pedal for more than 1 sec. (Vacuum stuck): • Internal pressure of the brake booster does not increase • Internal pressure of the brake booster is 32 kPa (240 mmHg, 9.4 in.Hg) or more lower than the internal pressure of the intake manifold	• Vacuum hose (between the brake booster and intake manifold, the brake booster and brake booster pressure sensor, and the intake manifold and manifold absolute pressure sensor) • Open or short in brake booster pressure sensor circuit • Brake booster pressure sensor • Manifold absolute pressure sensor • Brake booster • Open or short in stop light switch circuit • Stop light switch • ECM

WIRING DIAGRAM

Refer to DTC P0555 on page 05–459.

INSPECTION PROCEDURE

HINT:

Read freeze frame data using the hand – held tester. Freeze frame data records the engine conditions when a malfunction is detected. When troubleshooting, it is useful for determining whether the vehicle was running or stopped, the engine was warmed up or not, the air–fuel ratio was lean or rich, etc. at the time of the malfunction.

1	CHECK OTHER DTC OUTPUT(IN ADDITION TO P0556)

(a) Read the DTC using the hand–held tester.

Result :

Display	Proceed to
Only ”P0556” is output.	A
”P0556” and other DTCs are output.	B

HINT:

If any other codes besides ”P0556” are output, perform the troubleshooting for those DTCs first.

B → **GO TO RELEVANT DTC CHART (See page 05–309)**

A

2	READ VALUE OF HAND–HELD TESTER(INTAKE MANIFOLD ABSOLUTE PRESSURE)

(a) Connect the hand–held tester to the DLC3.
(b) Warm up the engine.
(c) Push the hand–held tester main switch ON.
(d) Select the item ”DIAGNOSIS / OBD/MOBD / DATA LIST / ALL / MAP” and read its value displayed on the hand–held tester with the shift lever is the ”N” position.

Standard :

Condition	Intake Manifold Absolute Pressure
Ignition switch ON (do not start engine)	70 to 110 kPa (525 to 825 mmHg, 20.7 to 32.5 in.Hg)
Running without load (2,500 rpm)	20 to 35 kPa (150 to 263 mmHg, 5.9 to 10.4 in.Hg)

NG → **Go to step 7**

OK

3	READ VALUE OF HAND–HELD TESTER(STOP LIGHT SWITCH)

(a) Connect the hand–held tester to the DLC3.
(b) Turn the ignition switch ON and push the hand–held tester main switch ON.
(c) Select the item ”DIAGNOSIS / OBD/MOBD / DATA LIST / ALL / STOP LIGHT SW” and read its value displayed on the hand–held tester.

Result :

Brake Pedal	STP Signal
Depressed	ON
Released	OFF

NG → CHECK AND REPAIR STOP LIGHT SWITCH CIRCUIT

OK

4	CHECK VACUUM HOSE(BRAKE BOOSTER PRESSURE SENSOR – BRAKE BOOSTER, INTAKE MANIFOLD – BRAKE BOOSTER)

(a) Check that the vacuum hoses are connected correctly.
(b) Check that the vacuum hoses are not loose or disconnected.
(c) Check the vacuum hoses and tubes for clogs, cracks, holes, damage, or blockage.

NG → REPAIR OR REPLACE VACUUM HOSE

OK

5	INSPECT ECM(PB VOLTAGE)

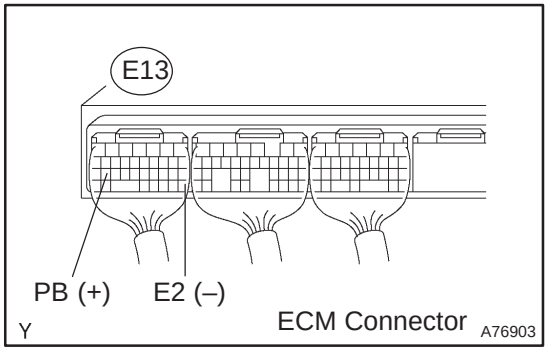

(a) Disconnect the vacuum hose from the brake booster pressure sensor.
(b) Turn the ignition switch ON.
(c) Using the MITYVAC (Hand–Held Vacuum Pump), apply a vacuum to the brake booster pressure sensor, measure the voltage between the specified terminals of the E13 ECM connector.

Standard:

Symbols (Terminal No.)	Vacuum pump operation	Specified condition
PB (E13–26) – E2 (E13–28)	0 kPa (0 mmHg, 0 in.Hg)	3.3 to 3.9 V
	40 kPa (300 mmHg, 11.8 in.Hg)	2.1 to 2.7 V
	80 kPa (600 mmHg, 23.6 in.Hg)	0.9 to 1.5 V

NG → Go to step 6

OK

CHECK FUNCTION OF BRAKE BOOSTER (See page 32–17, 32–21)

6	CHECK HARNESS AND CONNECTOR(ECM – BRAKE BOOSTER PRESSURE SENSOR)

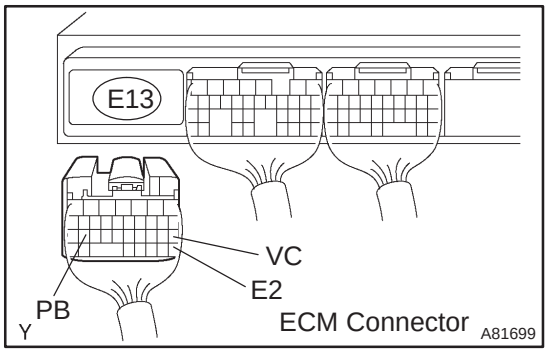

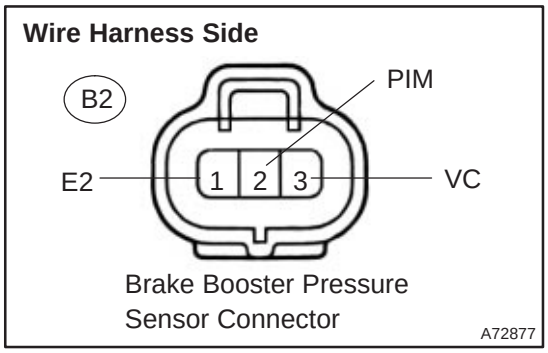

(a) Disconnect the E13 ECM connector.
(b) Disconnect the B2 brake booster pressure sensor connector.
(c) Check for continuity between the wire harness side connectors.

Standard (Check for open):

Symbols (Terminal No.)	Specified condition
VC (E13–18) – VC (B2–3)	Continuity
PB (E13–26) – PIM (B2–2)	
E2 (E13–28) – E2 (B2–1)	

Standard (Check for short):

Symbols (Terminal No.)	Specified condition
VC (E13–18) or VC (B2–3) – Body ground	No continuity
PB (E13–26) or PIM (B2–2) – Body ground	

NG → **REPAIR OR REPLACE HARNESS OR CONNECTOR**

OK

REPLACE BRAKE BOOSTER PRESSURE SENSOR

7	CHECK VACUUM HOSE(MANIFOLD ABSOLUTE PRESSURE SENSOR – INTAKE MANIFOLD)

(a) Check that the vacuum hose is connected correctly.
(b) Check that the vacuum hose is not loose or disconnected.
(c) Check the vacuum hose for clogs, cracks, holes, damage, or blockage.

NG → **REPAIR OR REPLACE VACUUM HOSE**

OK

8	CHECK HARNESS AND CONNECTOR(ECM – MANIFOLD ABSOLUTE PRESSURE SENSOR)

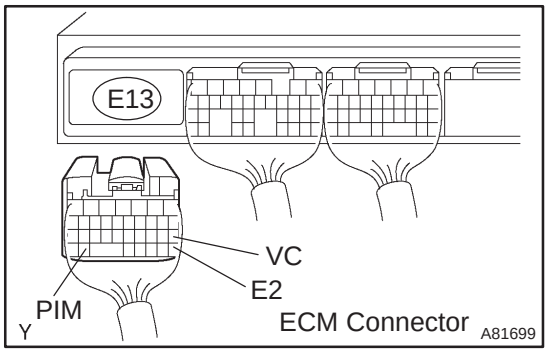

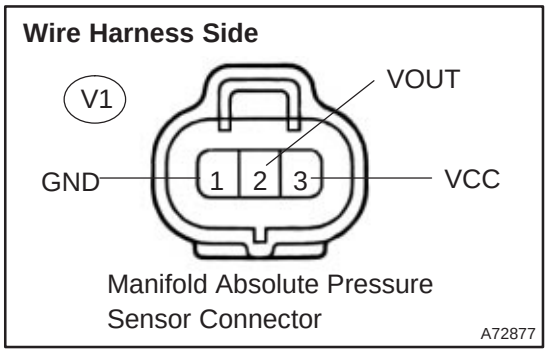

(a) Disconnect the E13 ECM connector.
(b) Disconnect the V1 manifold absolute pressure sensor connector.
(c) Check for continuity between the wire harness side connectors.

Standard (Check for open):

Symbols (Terminal No.)	Specified condition
VC (E13–18) – VCC (V1–3)	Continuity
PIM (E13–33) – VOUT (V1–2)	
E2 (E13–28) – GND (V1–1)	

Standard (Check for short):

Symbols (Terminal No.)	Specified condition
VC (E13–18) or VCC (V1–3) – Body ground	No continuity
PIM (E13–33) or VOUT (V1–2) – Body ground	

NG → **REPAIR OR REPLACE HARNESS OR CONNECTOR**

OK

REPLACE MANIFOLD ABSOLUTE PRESSURE SENSOR

DTC	P0560	SYSTEM VOLTAGE

CIRCUIT DESCRIPTION

While the ignition switch is OFF, the battery positive voltage is supplied to terminal BATT of the ECM for the DTCs memory and air–fuel ratio adaptive control value memory, etc.

DTC No.	DTC Detection Condition	Trouble Area
P0560	Open in back–up power source circuit	• Open in back–up power source circuit • ECM

HINT:

If DTC P0560 is present, the ECM is unable to store other DTCs.

WIRING DIAGRAM

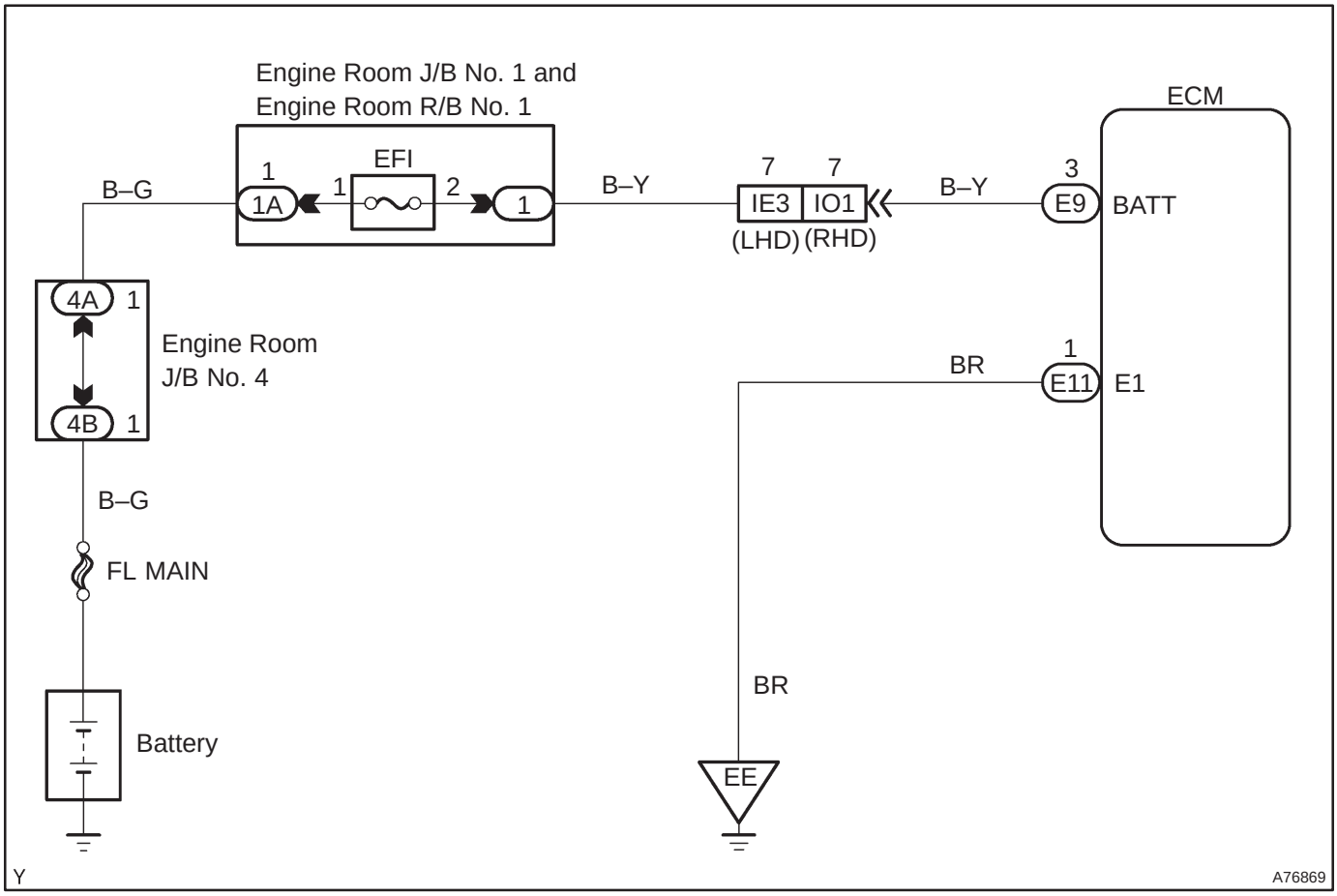

INSPECTION PROCEDURE

HINT:

Read freeze frame data using the hand–held tester. Freeze frame data records the engine conditions when a malfunction is detected. When troubleshooting, it is useful for determining whether the vehicle was running or stopped, the engine was warmed up or not, the air–fuel ratio was lean or rich, etc. at the time of the malfunction.

1 CHECK FUSE(EFI FUSE)

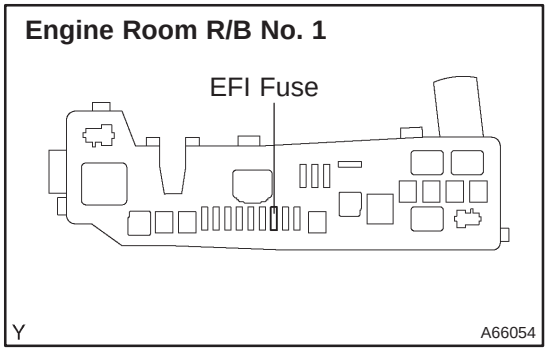

(a) Remove the EFI fuse from the engine room R/B No. 1.
(b) Check for continuity in the EFI fuse.
Standard: Continuity

NG → **CHECK FOR SHORT IN ALL HARNESS AND COMPONENTS CONNECTED EFI FUSE**

OK

2 INSPECT ECM(BATT VOLTAGE)

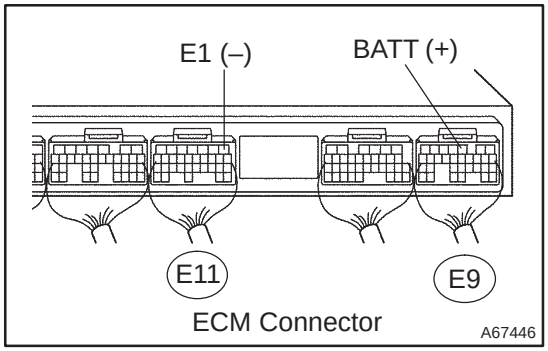

(a) Measure the voltage between the specified terminals of the E9 and E11 ECM connectors.
Standard:

Symbols (Terminal No.)	Specified condition
BATT (E9–3) – E1 (E11–1)	9 to 14 V

NG → **Go to step 3**

OK

CHECK AND REPLACE ECM (See page 01–32)

3 CHECK HARNESS AND CONNECTOR(ECM – EFI FUSE, EFI FUSE – BATTERY)

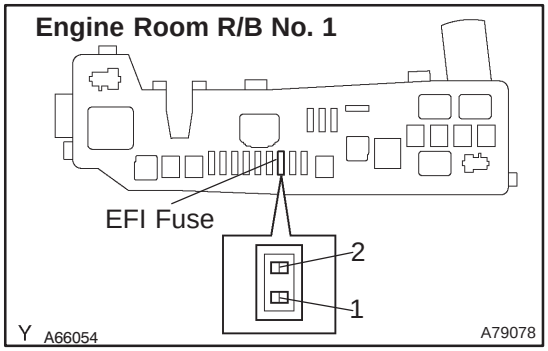

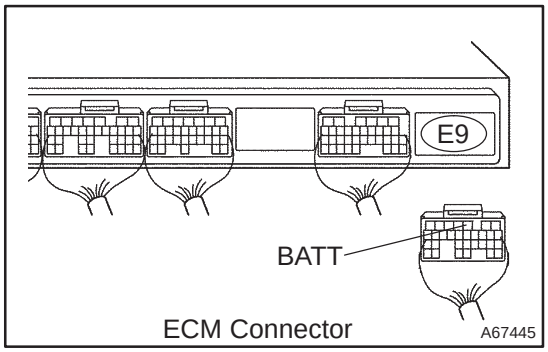

(a) Check the harness and connector between the EFI fuse and ECM.
  (1) Remove the EFI fuse from the engine room R/B No.1.
  (2) Disconnect the E9 ECM connector.
  (3) Check for continuity between the wire harness side connectors.

Standard (Check for open):

Symbols (Terminal No.)	Specified condition
EFI fuse (2) – BATT (E9–3)	Continuity

Standard (Check for short):

Symbols (Terminal No.)	Specified condition
EFI fuse (2) or BATT (E9–3) – Body ground	No continuity

(b) Check the harness and connector between the EFI fuse and battery.
  (1) Remove the EFI fuse from the engine room R/B No.1.
  (2) Disconnect the battery positive terminal.
  (3) Check for continuity between the wire harness side connectors.

Standard (Check for open):

Symbols (Terminal No.)	Specified condition
Battery positive terminal – EFI fuse (1)	Continuity

Standard (Check for short):

Symbols (Terminal No.)	Specified condition
Battery positive terminal or EFI fuse (1) – Body ground	No continuity

NG → **REPAIR OR REPLACE HARNESS OR CONNECTOR**

OK

CHECK AND REPLACE ENGINE ROOM RELAY BLOCK

DTC	P0604	INTERNAL CONTROL MODULE RANDOM ACCESS MEMORY (RAM) ERROR

DTC	P0606	ECM/PCM PROCESSOR

DTC	P0607	CONTROL MODULE PERFORMANCE

DTC	P0657	ACTUATOR SUPPLY VOLTAGE CIRCUIT/OPEN

CIRCUIT DESCRIPTION

DTC No.	DTC Detection Condition	Trouble Area
P0604 P0606 P0607 P0657	ECM inside error	• ECM

INSPECTION PROCEDURE

HINT:

Read freeze frame data using the hand–held tester. Freeze frame data records the engine conditions when a malfunction is detected, when troubleshooting it is useful for determining whether the vehicle was running or stopped, the engine warmed up or not, the air–fuel ratio lean or rich, etc. at the time of the malfunction.

REPAIR OR REPLACE ECM (See page 01–32)

DTC	P0617	STARTER RELAY CIRCUIT HIGH

CIRCUIT DESCRIPTION

While the engine is being cranked, the battery positive voltage is applied to terminal STA of the ECM.

DTC No.	DTC Detection Condition	Trouble Area
P0617	When all conditions (a), (b) and (c) are satisfied with battery (+B) voltage 10.5 V or more for 20 sec. (a) Vehicle speed greater than 20 km/h (b) Engine revolution greater than 1,000 rpm (c) STA signal ON	• Short in park/neutral position switch (A/T) • Park/neutral position switch (A/T) • Ignition switch • ECM

WIRING DIAGRAM

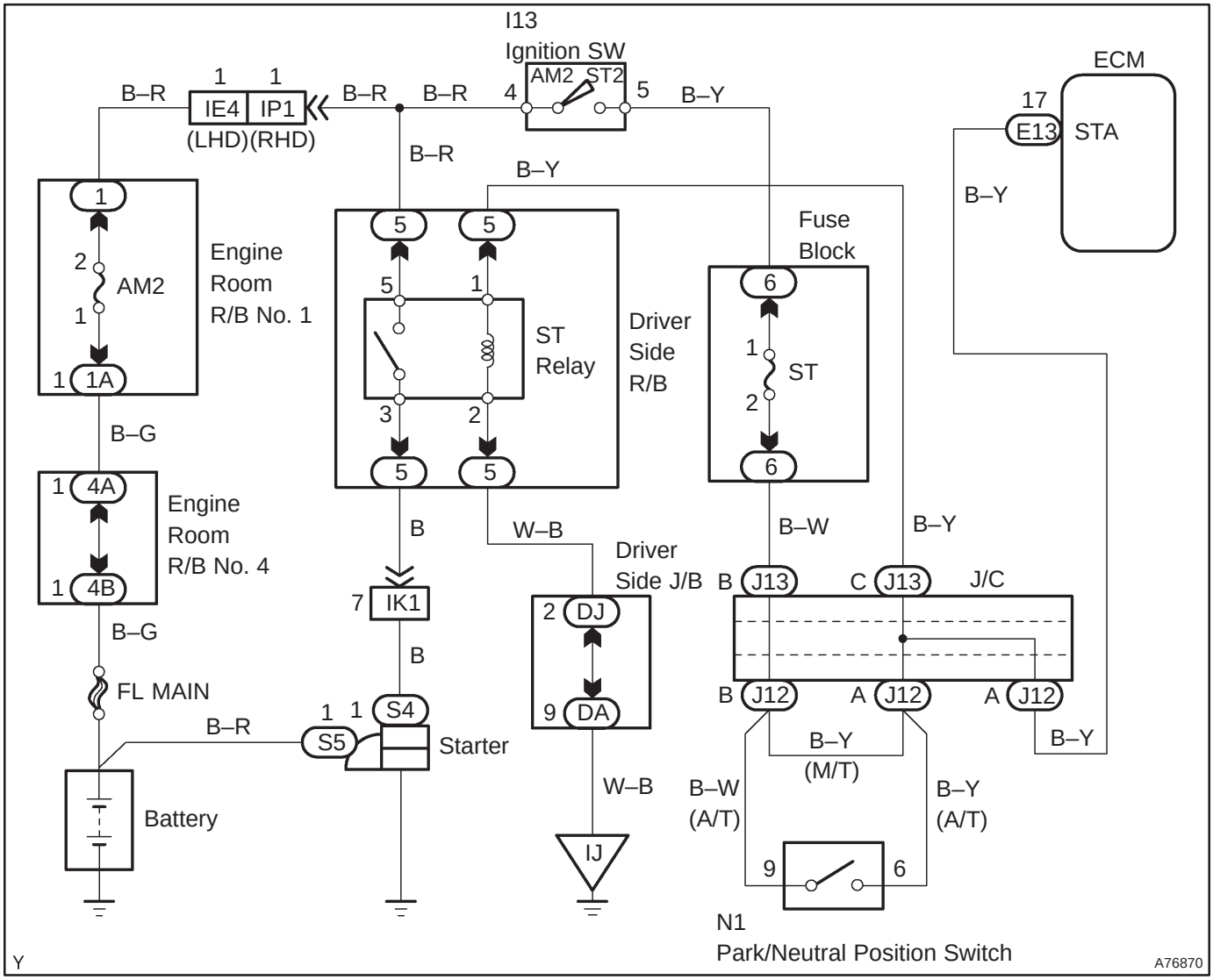

INSPECTION PROCEDURE

HINT:

Read freeze frame data using the hand–held tester. Freeze frame data records the engine conditions when a malfunction is detected. When troubleshooting, it is useful for determining whether the vehicle was running or stopped, the engine was warmed up or not, the air–fuel ratio was lean or rich, etc. at the time of the malfunction.

1	READ VALUE OF HAND–HELD TESTER(STARTER SIGNAL)

(a) Connect the hand–held tester to the DLC3.
(b) Turn the ignition switch ON and push the hand–held tester main switch ON.
(c) Select the item "DIAGNOSIS / OBD/MOBD / DATA LIST / ALL / STARTER SIG" and read its value displayed on the hand–held tester.

Result:

Ignition Switch Position	ON	START
STA Signal	OFF	ON

OK → **CHECK AND REPLACE ECM (See page 01–32)**

NG

2	INSPECT PARK/NEUTRAL POSITION SWITCH ASSY

(a) Inspect the park/neutral position switch (A/T) (See page 05–938).

NG → **REPLACE PARK/NEUTRAL POSITION SWITCH ASSY (See page 40–8) (GO TO NEXT STEP 3 AFTER THE REPLACEMENT)**

OK

3	READ VALUE OF HAND–HELD TESTER(STARTER SIGNAL)

(a) Connect the hand–held tester to the DLC3.
(b) Turn the ignition switch ON and push the hand–held tester main switch ON.
(c) Select the item "DIAGNOSIS / OBD/MOBD / DATA LIST / ALL / STARTER SIG" and read its value displayed on the hand–held tester.

Result:

Ignition Switch Position	ON	START
STA Signal	OFF	ON

OK → **SYSTEM OK**

NG

4	INSPECT IGNITION OR STARTER SWITCH ASSY (See page 80–2)

NG → **REPLACE IGNITION OR STARTER SWITCH ASSY (GO TO NEXT STEP 5 AFTER THE REPLACEMENT)**

OK

5	READ VALUE OF HAND–HELD TESTER(STARTER SIGNAL)

(a) Connect the hand–held tester to the DLC3.
(b) Turn the ignition switch ON and push the hand–held tester main switch ON.
(c) Select the item "DIAGNOSIS / OBD/MOBD / DATA LIST / ALL / STARTER SIG" and read its value displayed on the hand–held tester.

Result:

Ignition Switch Position	ON	START
STA Signal	OFF	ON

OK → **SYSTEM OK**

NG

REPAIR OR REPLACE HARNESS OR CONNECTOR

DTC	P0705	TRANSMISSION RANGE SENSOR CIRCUIT MALFUNCTION (PRNDL INPUT)

CIRCUIT DESCRIPTION

The park/neutral position switch goes on when the shift lever is in the N or P shift position. If the shift lever is moved from the N position to the D position, this signal is used for air–fuel ratio correction and for idle speed control (estimated control), etc.

DTC No.	DTC Detection Condition	Trouble Area
P0705	2 or more switches are ON simultaneously for N, P, D and R positions (2 trip detection logic)	• Short in park/neutral position switch circuit • Park/neutral position switch • ECM

HINT:

After confirming DTC P0705, use the hand–held tester to confirm the park/neutral position switch signal from the ”DIAGNOSIS / OBD/MOBD / DATA LIST / ALL”.

WIRING DIAGRAM

Refer to DTC P0705 on page 05–938.

INSPECTION PROCEDURE

Refer to DTC P0705 on page 05–938.

DTC	P0724	BRAKE SWITCH ”B” CIRCUIT HIGH

CIRCUIT DESCRIPTION

This STP signal is used to detect that the brakes have been applied. The STP signal voltage is the same as the one supplied to the stop lights.
The STP signal is used mainly to control the fuel cut–off engine speed (The fuel cut–off engine speed is reduced slightly when the vehicle is braking).

DTC No.	DTC Detection Condition	Trouble Area
P0724	The stop light switch does not turn off even the vehicle is driven. (2 trip detection logic)	• Short in stop light switch signal circuit • Stop light switch • ECM

WIRING DIAGRAM

Refer to DTC P0504 on page 05–455.

INSPECTION PROCEDURE

HINT:
Read freeze frame data using the hand–held tester. Freeze frame data records the engine conditions when a malfunction is detected. When troubleshooting, it is useful for determining whether the vehicle was running or stopped, the engine was warmed up or not, the air–fuel ratio was lean or rich, etc. at the time of the malfunction.

1	CHECK OPERATION OF STOP LIGHT

(a) Check if the stop lights go on and off normally when the brake pedal is operated and released.

NG → **REPAIR OR REPLACE STOP LAMP SWITCH CIRCUIT**

OK

2	READ VALUE OF HAND–HELD TESTER(STOP LIGHT SWITCH)

(a) Connect the hand–held tester to the DLC3.
(b) Turn the ignition switch ON and push the hand–held tester main switch ON.
(c) Select the item ”DIAGNOSIS / OBD/MOBD / DATA LIST / ALL / STOP LIGHT SW” and read its value displayed on the hand–held tester.

Result:

Brake Pedal	STP Signal
Depressed	ON
Released	OFF

OK → **CHECK FOR INTERMITTENT PROBLEMS**

NG

3 CHECK HARNESS AND CONNECTOR(ECM – STOP LIGHT SWITCH)

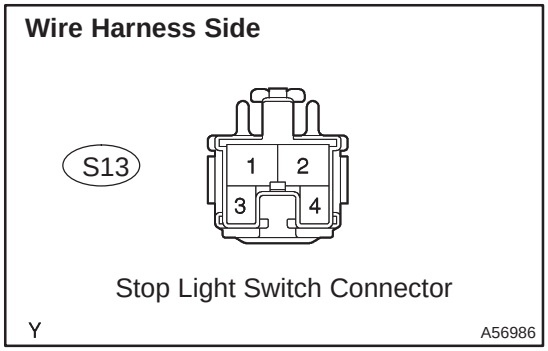

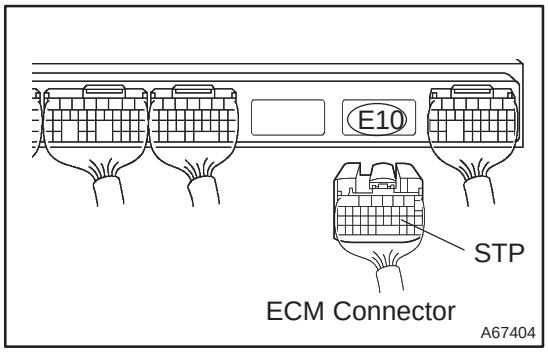

(a) Disconnect the S13 stop light switch connector.
(b) Disconnect the E10 ECM connector.
(c) Check for continuity between the wire harness side connectors.

Standard (Check for open):

Symbols (Terminal No.)	Specified condition
Stop light switch (S13–1) – STP (E10–19)	Continuity

Standard (Check for short):

Symbols (Terminal No.)	Specified condition
Stop light switch (S13–1) or STP (E10–19) – Body ground	No continuity

NG → **REPAIR OR REPLACE HARNESS OR CONNECTOR**

OK

CHECK AND REPLACE ECM (See page 01–32)

DTC	P1235	HIGH PRESSURE FUEL PUMP CIRCUIT

CIRCUIT DESCRIPTION

The fuel pump (high pressure) is an electronically controlled plunger type fuel pump (high pressure) which is driven by the cam provided on the intake cam shaft rear end on the cylinder head.
The fuel pump (high pressure) increases the pressure of the fuel fed from the fuel pump (low pressure) in the fuel tank at 8 to 13 MPa (81.6 to 132.6 kgf/cm^2, 1,160 to 1,885 psi) according to the operating condition, and it feeds the fuel to the fuel delivery pipe.

DTC No.	DTC Detection condition	Trouble Area
P1235	Open or short in fuel pump (high pressure) circuit for 1sec. or more	• Open or short in fuel pump (high pressure) • Fuel pump (high pressure) • ECM

WIRING DIAGRAM

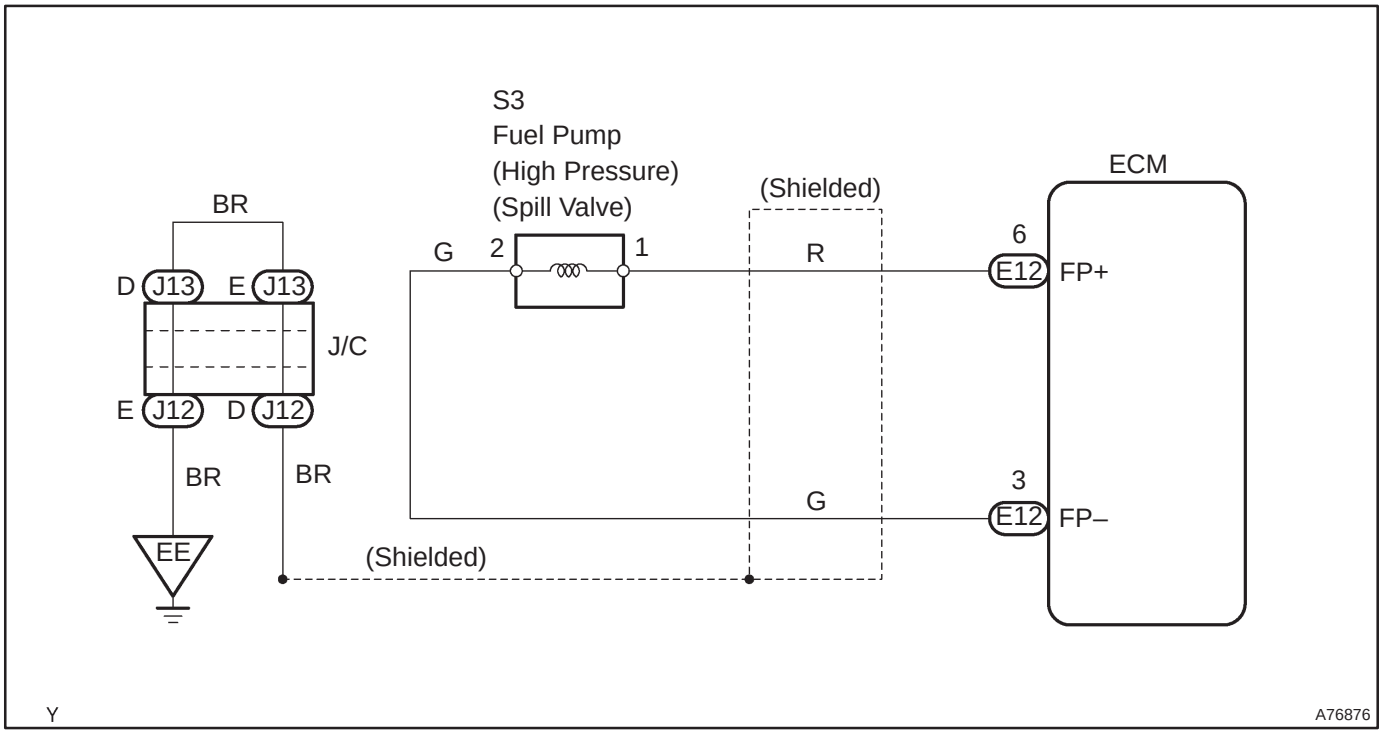

INSPECTION PROCEDURE

HINT:
Read freeze frame data using hand–held tester. Freeze frame data records the engine conditions when the malfunction is detected. When troubleshooting, it is useful for determining whether the vehicle was running or stopped, the engine was warmed up or not, the air–fuel ratio was lean or rich, etc. at the time of the malfunction.

1 CHECK OPERATION OF FUEL PUMP(HIGH PRESSURE)

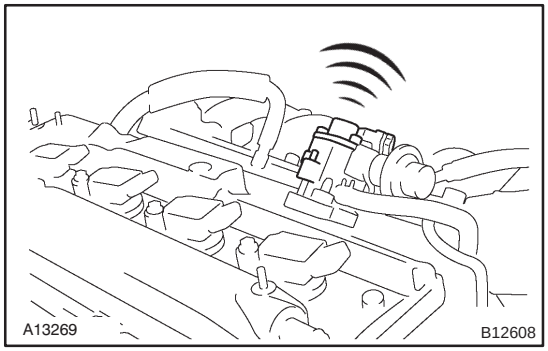

(a) With the engine running or cranking, use a sound scope to check that there is the normal operating sounds of the fuel pump (high–pressure) when it is operated.

Standard:

There is the operating sounds of the fuel pump (high–pressure).

NG → **REPLACE FUEL PUMP (HIGH PRESSURE)**

OK

2 INSPECT ECM(FP+ AND FP– VOLTAGE)

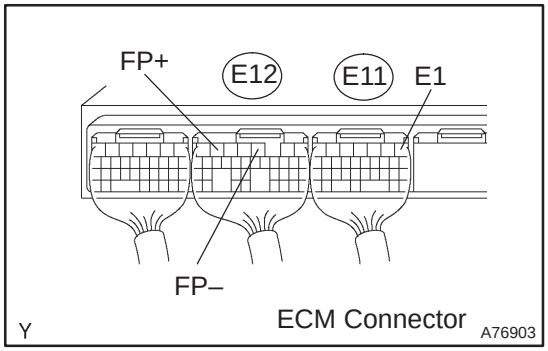

(a) Turn the ignition switch ON, and check the waveforms between terminals FP+ and E1, and FP– and E1 of the E11 and E12 ECM connectors.

HINT:

The correct waveform is as shown in the illustration.

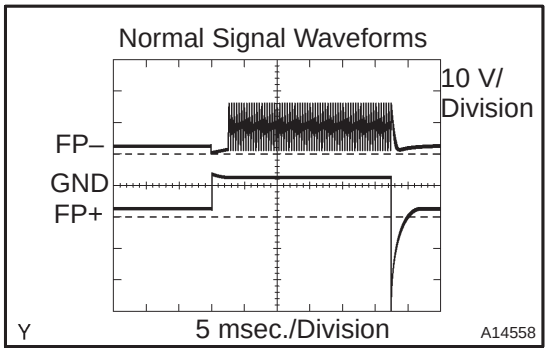

NG → **CHECK AND REPLACE ECM (See page 01–32)**

OK

3 CHECK FUEL PUMP(HIGH PRESSURE) (See page 11–33)

NG → **REPLACE FUEL PUMP(HIGH PRESSURE)**

OK

4 CHECK HARNESS AND CONNECTOR(FUEL PUMP (HIGH PRESSURE) – ECM)

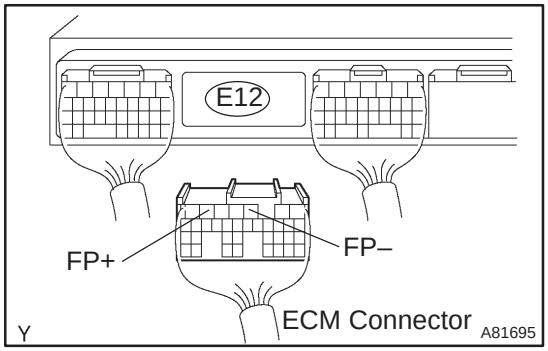

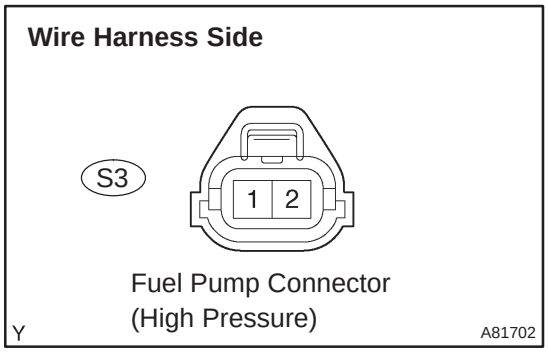

(a) Disconnect the E12 ECM connector.
(b) Disconnect the S3 fuel pump (high pressure) connector.
(c) Check for continuity between the wire harness side connectors.

Standard (Check for open):

Symbols (Terminal No.)	Specified condition
FP+ (E12–6) – Fuel pump (S3–1)	Continuity
FP– (E12–3) – Fuel pump (S3–2)	

Standard (Check for short):

Symbols (Terminal No.)	Specified condition
FP+ (E12–6) or Fuel pump (S3–1) – Body ground	No continuity
FP– (E12–3) or Fuel pump (S3–2) – Body ground	

NG → **REPAIR OR REPLACE HARNESS OR CONNECTOR**

OK →

CHECK FOR INTERMITTENT PROBLEMS

DTC	P2008	INTAKE MANIFOLD RUNNER CONTROL CIRCUIT / OPEN (BANK 1)

CIRCUIT DESCRIPTION

The Intake Air Control valve (IACV) is opened and shut by the actuator with intake manifold vacuum. It stabilizes the engine combustion. The IACV operation generates swirl air flow in the cylinder.

DTC No.	DTC Detection Condition	Trouble Area
P2008	Open or short in VSV for IACV circuit 0.5 sec. or more (2 trip detection logic)	• Open of short in VSV for IACV circuit • VSV for IACV • ECM

WIRING DIAGRAM

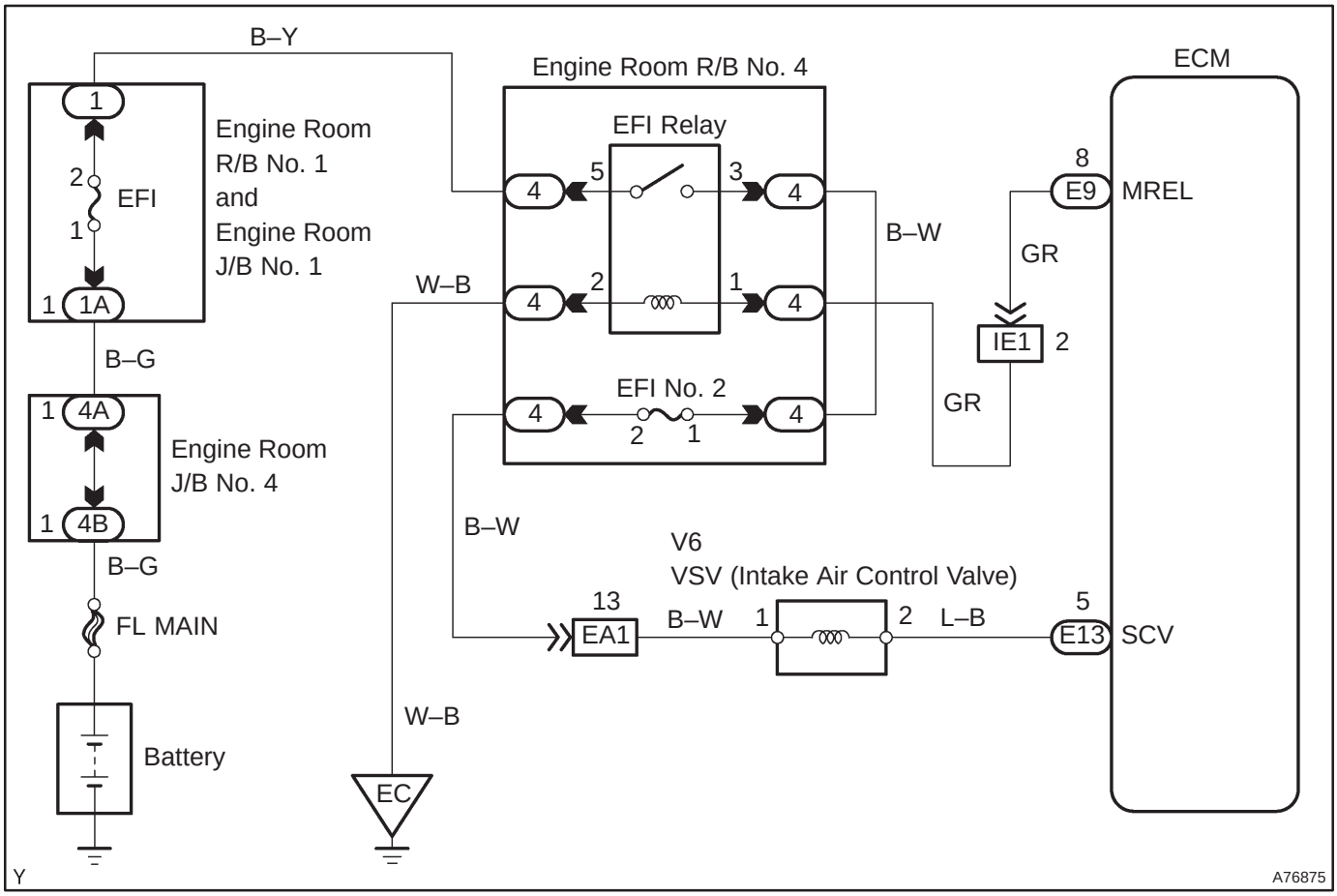

INSPECTION PROCEDURE

HINT:

Read freeze frame data using the hand–held tester. Freeze frame data records the engine conditions when a malfunction is detected. When troubleshooting, it is useful for determining whether the vehicle was running or stopped, the engine was warmed up or not, the air–fuel ratio was lean or rich, etc. at the time of the malfunction.

1	PERFORM ACTIVE TEST BY HAND–HELD TESTER(VSV FOR IACV)

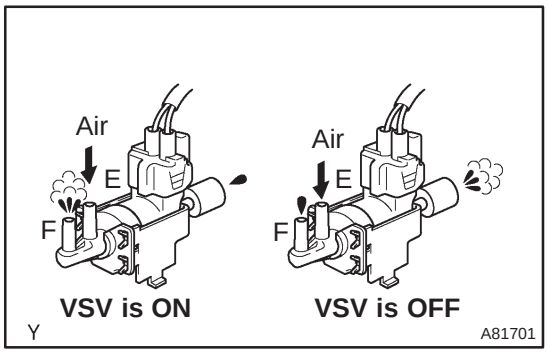

(a) Disconnect the vacuum hose from the VSV for IACV.
(b) Turn the ignition switch ON.
(c) Select the item "DIAGNOSIS / OBD/MOBD / ACTIVE TEST / SCV VSV" (press the right or left button).
(d) Check the VSV for IACV operation when it is operated by the hand–held tester.

Standard:

Tester operation	Specified condition
VSV is ON	Air from port E flows out through port F.
VSV is OFF	Air does not flow from port E to port F.

NG → **Go to step 2**

OK

CHECK FOR INTERMITTENT PROBLEMS

2	INSPECT VACUUM SWITCHING VALVE ASSY NO.1(VSV FOR IACV) (See page 13–2)

NG → **REPLACE VACUUM SWITCHING VALVE ASSY NO.1 (VSV FOR IACV)**

OK

3	INSPECT ECM(SCV VOLTAGE)

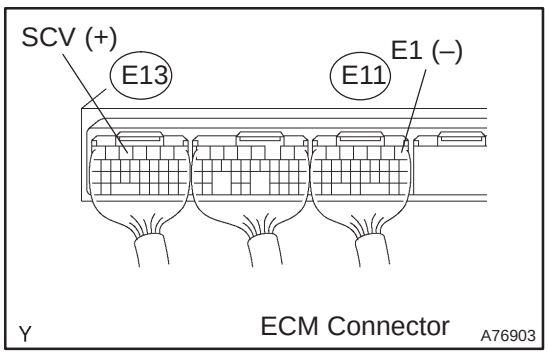

(a) Turn the ignition switch ON.
(b) Measure the voltage between the specified terminals of the E11 and E13 ECM connectors.

Standard:

Symbols (Terminal No.)	Specified condition
SCV (E13–5) – E1 (E11–1)	9 to 14 V

NG → **Go to step 4**

OK

CHECK AND REPLACE ECM (See page 01–32)

4 CHECK HARNESS AND CONNECTOR(ECM – VSV FOR IACV)

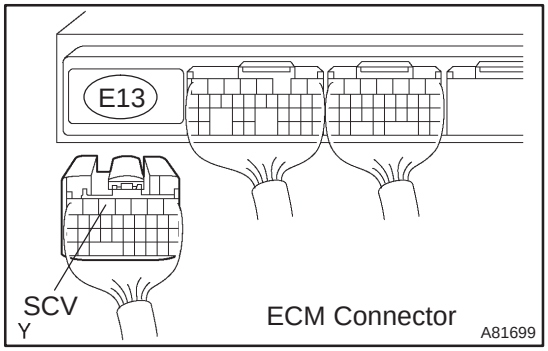

(a) Disconnect the V6 VSV for IACV connector.
(b) Disconnect the E13 ECM connector.
(c) Check for continuity between the wire harness side connectors.

Standard (Check for open):

Symbols (Terminal No.)	Specified condition
VSV for IACV (V6–2) – SCV (E13–5)	Continuity

Standard (Check for short):

Symbols (Terminal No.)	Specified condition
VSV for IACV (V6–2) or SCV (E13–5) – Body ground	No continuity

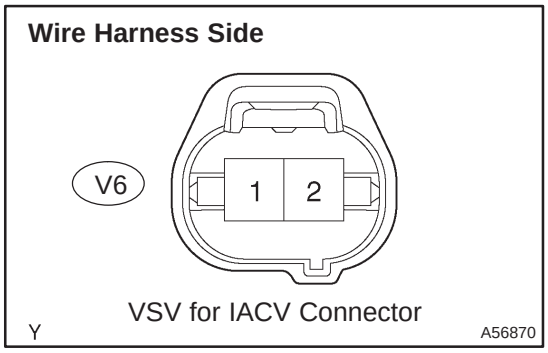

NG → **REPAIR OR REPLACE HARNESS OR CONNECTOR**

OK

5 CHECK HARNESS AND CONNECTOR(EFI RELAY – VSV FOR IACV)

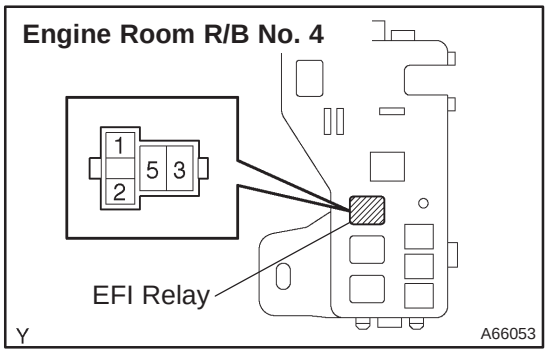

(a) Inspect the EFI No. 2 fuse.
  (1) Remove the EFI No. 2 fuse from the engine room R/B No. 4.
  (2) Check the continuity of the EFI No. 2 fuse.

Standard: Continuity

(b) Remove the EFI relay from the engine room R/B No. 4.
(c) Disconnect the V6 VSV for IACV connector.
(d) Check for continuity between the wire harness side connector.

Standard (Check for open):

Symbols (Terminal No.)	Specified condition
VSV for IACV (V6–1) – EFI relay (3)	Continuity

Standard (Check for short):

Symbols (Terminal No.)	Specified condition
VSV for IACV (V6–1) or EFI relay (3) – Body ground	No continuity

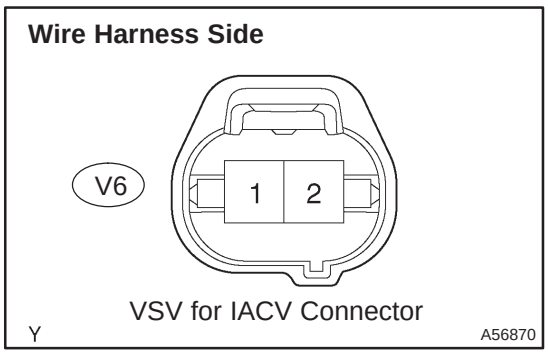

NG → **REPAIR OR REPLACE HARNESS OR CONNECTOR**

OK

CHECK FOR ECM POWER SOURCE CIRCUIT (See page 05–502)

DTC	P2102	THROTTLE ACTUATOR CONTROL MOTOR CIRCUIT LOW

DTC	P2103	THROTTLE ACTUATOR CONTROL MOTOR CIRCUIT HIGH

CIRCUIT DESCRIPTION

The throttle motor is operated by the ECM and it opens and closes the throttle valve.
The opening angle of the throttle valve is detected by the throttle position sensor which is mounted on the throttle body. It provides feedback to the ECM to control the throttle motor in order to regulate the throttle valve opening angle properly in response to the driving condition.
If this malfunction is detected, the ECM shuts down the power for the throttle motor, and the throttle valve is closed by the return spring. And the throttle valve is locked at a certain opening angle. Also, the whole electronically controlled throttle operation is cancelled until the system returns to normal and the ignition switch is turned OFF.
HINT:
This electrical throttle system does not use the throttle cable.

DTC No.	DTC Detection Condition	Trouble Area
P2102	Conditions (a) and (b) continue for 2.0 seconds: (a) Throttle control motor output duty greater than 80 % (b) Throttle control motor current less than 0.5 A	• Open in throttle control motor circuit • Throttle control motor • ECM
P2103	Throttle control motor current greater than 10 A	• Short in throttle control motor circuit • Throttle control motor • ECM
	Condition (a) continues for 0.6 seconds: (a) Throttle control motor current greater than 7 A	

WIRING DIAGRAM

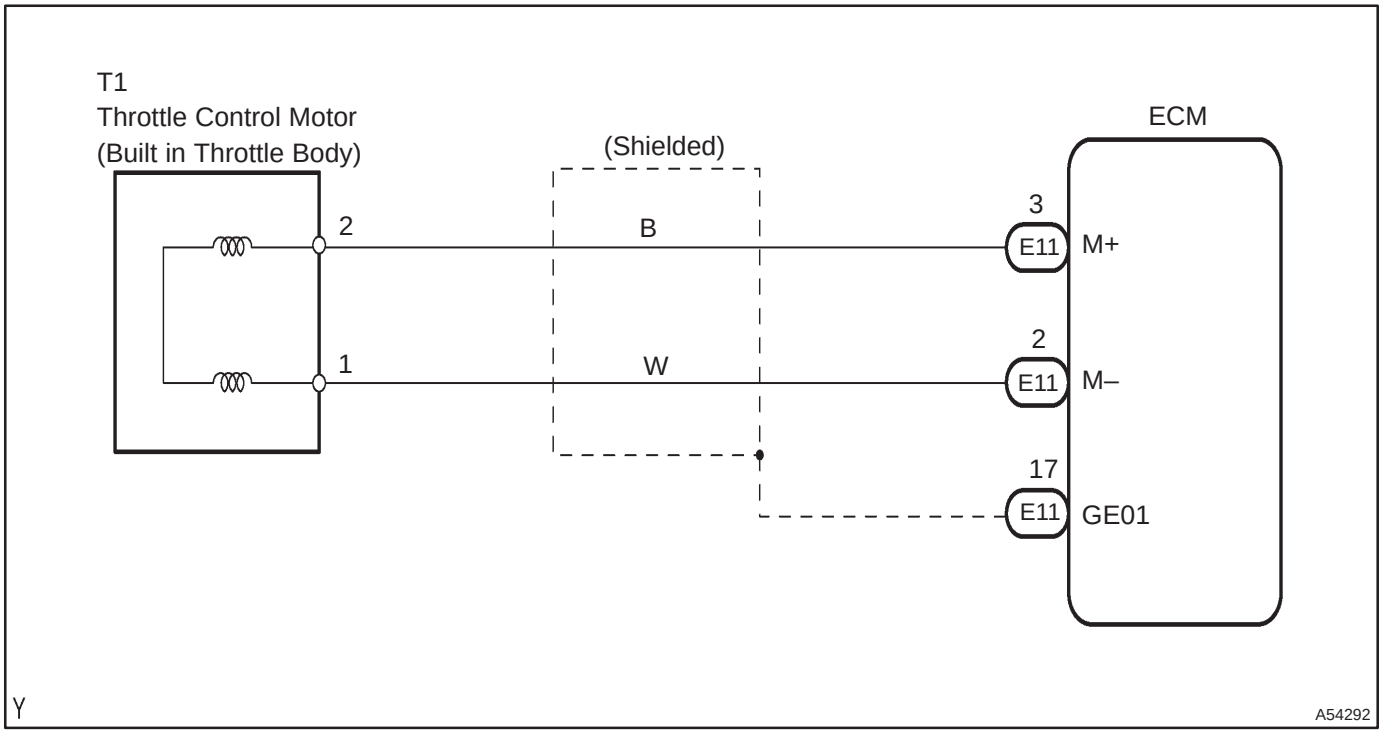

INSPECTION PROCEDURE

HINT:

Read freeze frame data using the hand–held tester. Freeze frame data records the engine conditions when a malfunction is detected. When troubleshooting, it is useful for determining whether the vehicle was running or stopped, the engine was warmed up or not, the air–fuel ratio was lean or rich, etc. at the time of the malfunction.

1	INSPECT THROTTLE BODY ASSY(RESISTANCE OF THROTTLE CONTROL MOTOR)

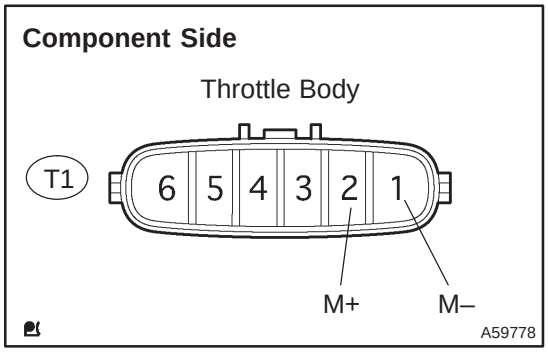

(a) Disconnect the T1 throttle body connector.
(b) Measure the motor resistance between terminals M+ and M–.
Motor resistance: 0.3 to 100 Ω at 20°C (68°F)

NG → **REPLACE THROTTLE BODY ASSY (See page 10–44)**

OK

2	CHECK HARNESS AND CONNECTOR(THROTTLE CONTROL MOTOR – ECM)

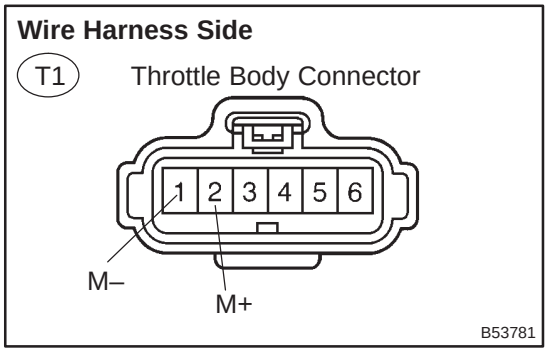

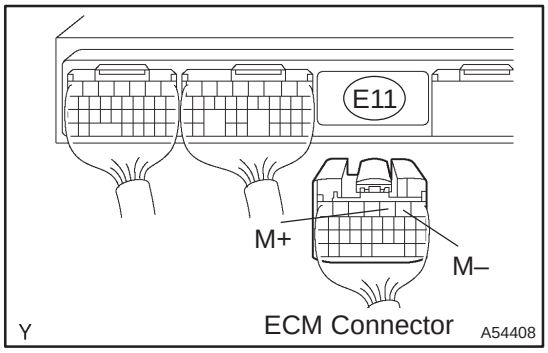

(a) Disconnect the T1 throttle body connector.
(b) Disconnect the E11 ECM connector.
(c) Check for continuity between the wire harness side connectors.

Standard (Check for open):

Symbols (Terminal No.)	Specified condition
M+ (T1–2) – M+ (E11–3)	Continuity
M– (T1–1) – M– (E11–2)	

Standard (Check for short):

Symbols (Terminal No.)	Specified condition
M+ (T1–2) or M+ (E11–3) – Body ground	No continuity
M– (T1–1) or M– (E11–2) – Body ground	

NG → **REPAIR OR REPLACE HARNESS OR CONNECTOR**

OK

CHECK AND REPLACE ECM (See page 01–32)

DTC	P2111	THROTTLE ACTUATOR CONTROL SYSTEM – STUCK OPEN

DTC	P2112	THROTTLE ACTUATOR CONTROL SYSTEM – STUCK CLOSED

CIRCUIT DESCRIPTION

The throttle motor is operated by the ECM and it opens and closes the throttle valve using gears. The opening angle of the throttle valve is detected by the throttle position sensor which is mounted on the throttle body. And, it provides feedback to the ECM to control the throttle motor in order to make the throttle valve opening angle properly in response to the driving condition. If this malfunction is detected, the ECM shuts down the power for the throttle motor, and the throttle valve is closed by the return spring. And the throttle valve is locked at a certain opening angle. Also, the whole electronically controlled throttle operation is cancelled until the system returns to normal and the ignition switch is turned OFF.

HINT:

This electrical throttle system is no used throttle cable.

DTC No.	DTC Detection Condition	Trouble Area
P2111	The throttle motor locked during control by the ECM (Stuck open)	• Throttle control motor circuit • Throttle control motor • Throttle body • Throttle valve
P2112	The throttle motor locked during control by the ECM (Stuck closed)	

WIRING DIAGRAM

Refer to DTC P2102 on page 05–483.

INSPECTION PROCEDURE

HINT:

Read freeze frame data using the hand–held tester. Freeze frame data records the engine conditions when a malfunction is detected. When troubleshooting, it is useful for determining whether the vehicle was running or stopped, the engine was warmed up or not, the air–fuel ratio was lean or rich, etc. at the time of the malfunction.

1	INSPECT THROTTLE BODY ASSY(VISUALLY CHECK THROTTLE VALVE)

(a) Check it a foreign object has been caught between the throttle valve and the housing.

NG → REMOVE FOREIGN OBJECT AND CLEAN THROTTLE BODY

OK

2 INSPECT THROTTLE BODY ASSY(RESISTANCE OF THROTTLE CONTROL MOTOR)

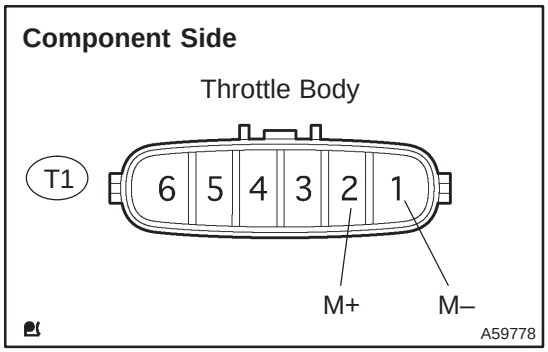

(a) Disconnect the T1 throttle body connector.
(b) Measure the motor resistance between terminals M+ and M–.
Motor resistance: 0.3 to 100 Ω at 20°C (68°F)

NG → **REPLACE THROTTLE BODY ASSY**

OK

3 CHECK HARNESS AND CONNECTOR(THROTTLE CONTROL MOTOR – ECM)

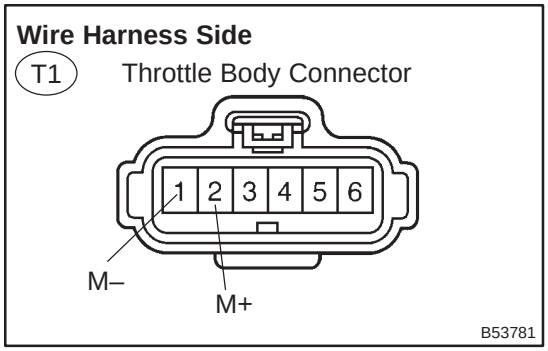

(a) Disconnect the T1 throttle body connector.
(b) Disconnect the E11 ECM connector.
(c) Check for continuity between the wire harness side connectors.

Standard (Check for open):

Symbols (Terminal No.)	Specified condition
M+ (T1–2) – M+ (E11–3)	Continuity
M– (T1–1) – M– (E11–2)	

Standard (Check for short):

Symbols (Terminal No.)	Specified condition
M+ (T1–2) or M+ (E11–3) – Body ground	No continuity
M– (T1–1) or M– (E11–2) – Body ground	

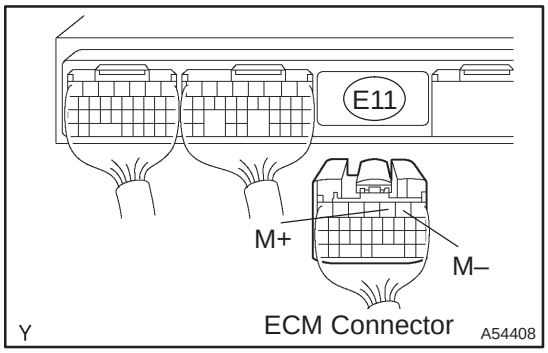

NG → **REPAIR OR REPLACE HARNESS OR CONNECTOR**

OK

CHECK FOR INTERMITTENT PROBLEMS

DTC	P2118	THROTTLE ACTUATOR CONTROL MOTOR CURRENT RANGE/PERFORMANCE

CIRCUIT DESCRIPTION

If this DTC is detected, the ECM shuts down the power for the throttle motor, and the throttle valve is closed by the return spring. And the throttle valve is locked at a certain opening angle. Also, the whole electronically controlled throttle operation is cancelled until the system returns to normal and the ignition switch is turned OFF.

HINT:

This electrical throttle control system (ETCS) does not use the throttle cable.

DTC No.	DTC Detection Condition	Trouble Area
P2118	Open in ETCS power source circuit	• Open in ETCS power source circuit • ECM

WIRING DIAGRAM

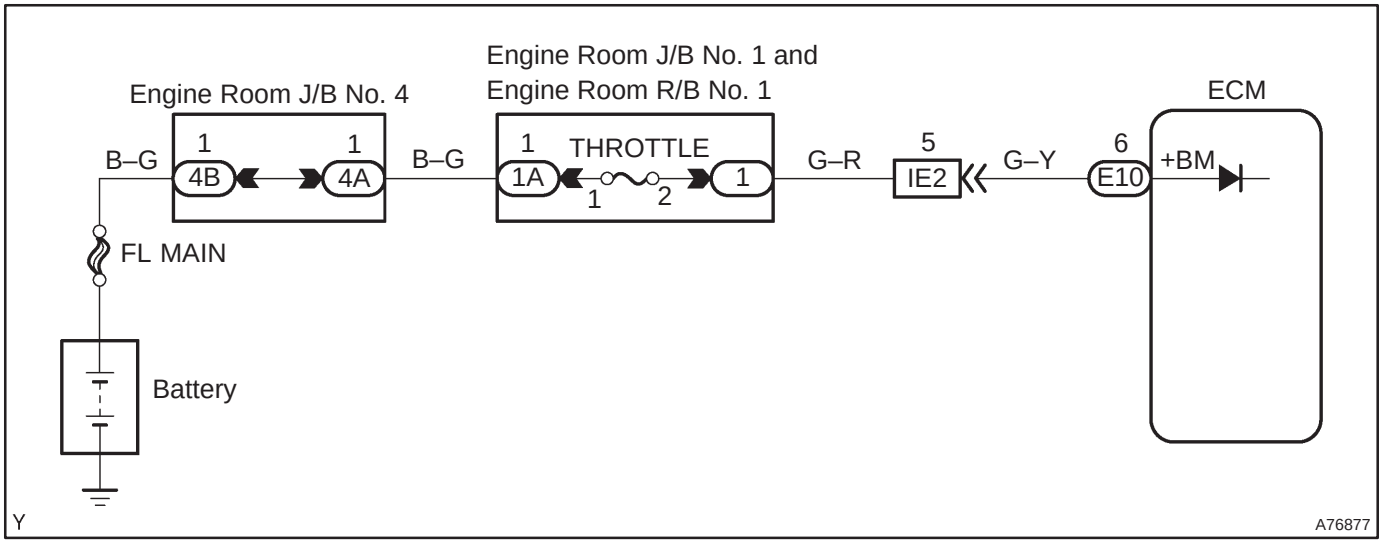

INSPECTION PROCEDURE

HINT:

Read freeze frame data using the hand–held tester. Freeze frame data records the engine conditions when a malfunction is detected. When troubleshooting, it is useful for determining whether the vehicle was running or stopped, the engine was warmed up or not, the air–fuel ratio was lean or rich, etc. at the time of the malfunction.

1 CHECK FUSE(THROTTLE FUSE)

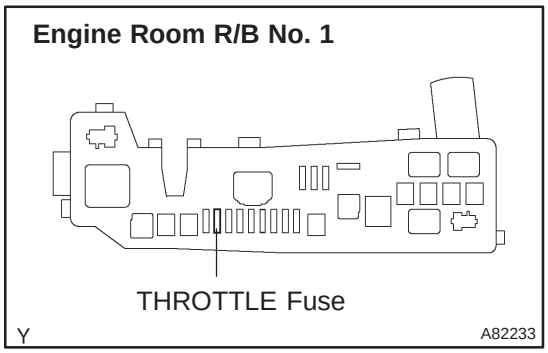

(a) Remove the THROTTLE fuse from the engine room R/B No. 1.

(b) Check for continuity in the THROTTLE fuse.

Standard: Continuity

NG → **CHECK FOR SHORT IN ALL HARNESSES AND COMPONENTS CONNECTED FUSE**

OK

2 INSPECT ECM(+BM VOLTAGE)

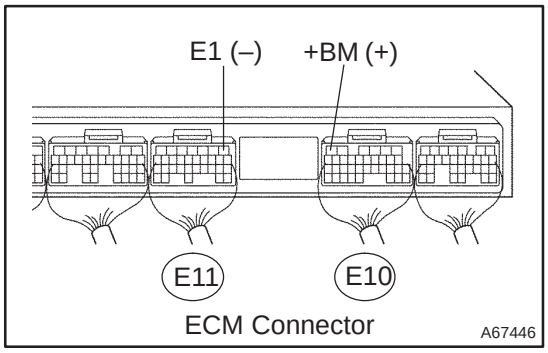

(a) Check the voltage between the specified terminals of the E10 and E11 ECM connectors.

Standard:

Symbols (Terminal No.)	Specified condition
+BM (E10–6) – E1 (E11–1)	9 to 14 V

OK → **CHECK AND REPLACE ECM (See page 01–32)**

NG

3	CHECK HARNESS AND CONNECTOR(ECM – THROTTLE FUSE, THROTTLE FUSE – BATTERY)

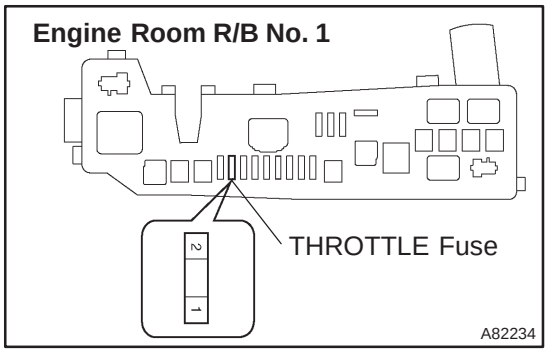

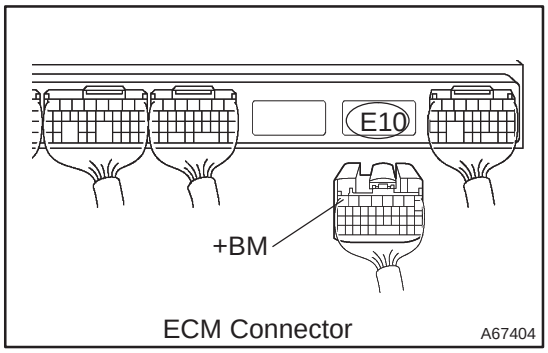

(a) Check the harness and the connector between the THROTTLE fuse and the ECM.
  (1) Remove the THROTTLE fuse from the engine room R/B No. 1.
  (2) Disconnect the E10 ECM connector.
  (3) Check for continuity between the wire harness side connectors.

Standard (Check for open):

Symbols (Terminal No.)	Specified condition
THROTTLE fuse (2) – +BM (E10–6)	Continuity

Standard (Check for short):

Symbols (Terminal No.)	Specified condition
THROTTLE fuse (2) or +BM (E10–6) – Body ground	No continuity

(b) Check the harness and the connector between the THROTTLE fuse and the battery.
  (1) Remove the THROTTLE fuse from the engine room R/B No. 1.
  (2) Disconnect the battery positive terminal.
  (3) Check for continuity between the wire harness side connectors.

Standard (Check for open):

Symbols (Terminal No.)	Specified condition
Battery positive terminal – THROTTLE fuse (1)	Continuity

Standard (Check for short):

Symbols (Terminal No.)	Specified condition
Battery positive terminal or THROTTLE fuse (1) – Body ground	No continuity

NG → **REPAIR OR REPLACE HARNESS OR CONNECTOR**

OK

CHECK AND REPLACE ENGINE ROOM RELAY BLOCK

DTC	P2119	THROTTLE ACTUATOR CONTROL THROTTLE BODY RANGE/PERFORMANCE

CIRCUIT DESCRIPTION

The Electric Throttle Control System (ETCS) is composed of the throttle motor that operates the throttle valve, the throttle position sensor that detects the opening angle of the throttle valve, the accelerator pedal position sensor that detects the accelerator pedal position, the ECM that controls the ETCS, and the one valve type throttle body.
The ECM controls the throttle motor to provide the proper throttle valve opening angle in response to the driving condition.
The throttle position sensor which is mounted on the throttle body detects the opening angle of the throttle valve, and it provides feedback to the ECM to control the throttle motor.
If the ETCS has a malfunction, the ECM shuts down the power for the throttle motor, and the throttle valve is closed by the return spring. And the throttle valve is locked at a certain opening angle. Also, the whole electronically controlled throttle operation is cancelled until the system returns to normal and the ignition switch is turned OFF.

DTC No.	DTC Detection Condition	Trouble Area
P2119	Throttle opening angle continues to vary greatly from target throttle opening angle	• Electric throttle control system • ECM

WIRING DIAGRAM

Refer to DTC P2102 on page 05–483.

INSPECTION PROCEDURE

HINT:
Read freeze frame data using the hand–held tester. Freeze frame data records the engine conditions when a malfunction is detected. When troubleshooting, it is useful for determining whether the vehicle was running or stopped, the engine was warmed up or not, the air–fuel ratio was lean or rich, etc. at the time of the malfunction.

1	CHECK OTHER DTC OUTPUT(IN ADDITION TO DTC P2119)

(a) Read the DTC using hand–held tester.
Result:

Display (DTC output)	Proceed to
Only P2119 is output	A
P2119 and other DTCs are output	B

HINT:
If any other codes besides P2119 are output, perform the troubleshooting for those DTCs first.

B → **GO TO RELEVANT DTC CHART (See page 05–309)**

A

2 INSPECT THROTTLE BODY ASSY

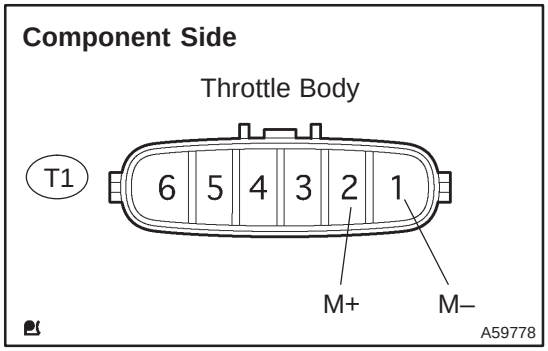

(a) Disconnect the T1 throttle body connector.
(b) Measure the motor resistance between terminals M+ and M–.
Motor resistance: 0.3 to 100 Ω at 20°C (68°F)

NG → **REPLACE THROTTLE BODY ASSY**

OK

3 REPLACE ECM AND CLEAR DTC(CHECK IF DTC OUTPUTS REOCCUR)

(a) Replace the ECM.
(b) Clear the DTC (See page 05–294).
(c) Start and warm up the engine.
(d) Run the engine at idle for 15 sec. or more.
(e) Read the DTC (See page 05–294).
Standard: No DTC output.

OK → **NORMAL**

NG

REPLACE THROTTLE BODY ASSY

DTC	P2120	THROTTLE/PEDAL POSITION SENSOR/SWITCH ”D” CIRCUIT

DTC	P2122	THROTTLE/PEDAL POSITION SENSOR/SWITCH ”D” CIRCUIT LOW INPUT

DTC	P2123	THROTTLE/PEDAL POSITION SENSOR/SWITCH ”D” CIRCUIT HIGH INPUT

DTC	P2125	THROTTLE/PEDAL POSITION SENSOR/SWITCH ”E” CIRCUIT

DTC	P2127	THROTTLE/PEDAL POSITION SENSOR/SWITCH ”E” CIRCUIT LOW INPUT

DTC	P2128	THROTTLE/PEDAL POSITION SENSOR/SWITCH ”E” CIRCUIT HIGH INPUT

DTC	P2138	THROTTLE/PEDAL POSITION SENSOR/SWITCH ”D”/”E” VOLTAGE CORRELATION

HINT:
This is procedure of accelerator pedal position sensor.

CIRCUIT DESCRIPTION

HINT:

This electrical throttle system is no used throttle cable.

The accelerator pedal position sensor is mounted on the accelerator pedal bracket and it have the 2 sensors to detect the accelerator position and a malfunction of the accelerator position sensor.

In the accelerator pedal position sensor, the voltage applied to VPA1 and VPA2 of the ECM changes between 0 V and 5 V in proportion to the opening angle of the accelerator pedal. The VPA1 is a signal to indicate the actual accelerator pedal opening angle which is used for the engine control, and the VPA2 is a signal to indicate the information about VPA1 which is used for detecting a malfunction in VPA1.

The ECM monitors the current opening angle of the accelerator pedal from these signals input from VPA1 and VPA2, and controls the throttle motor based on these signals.

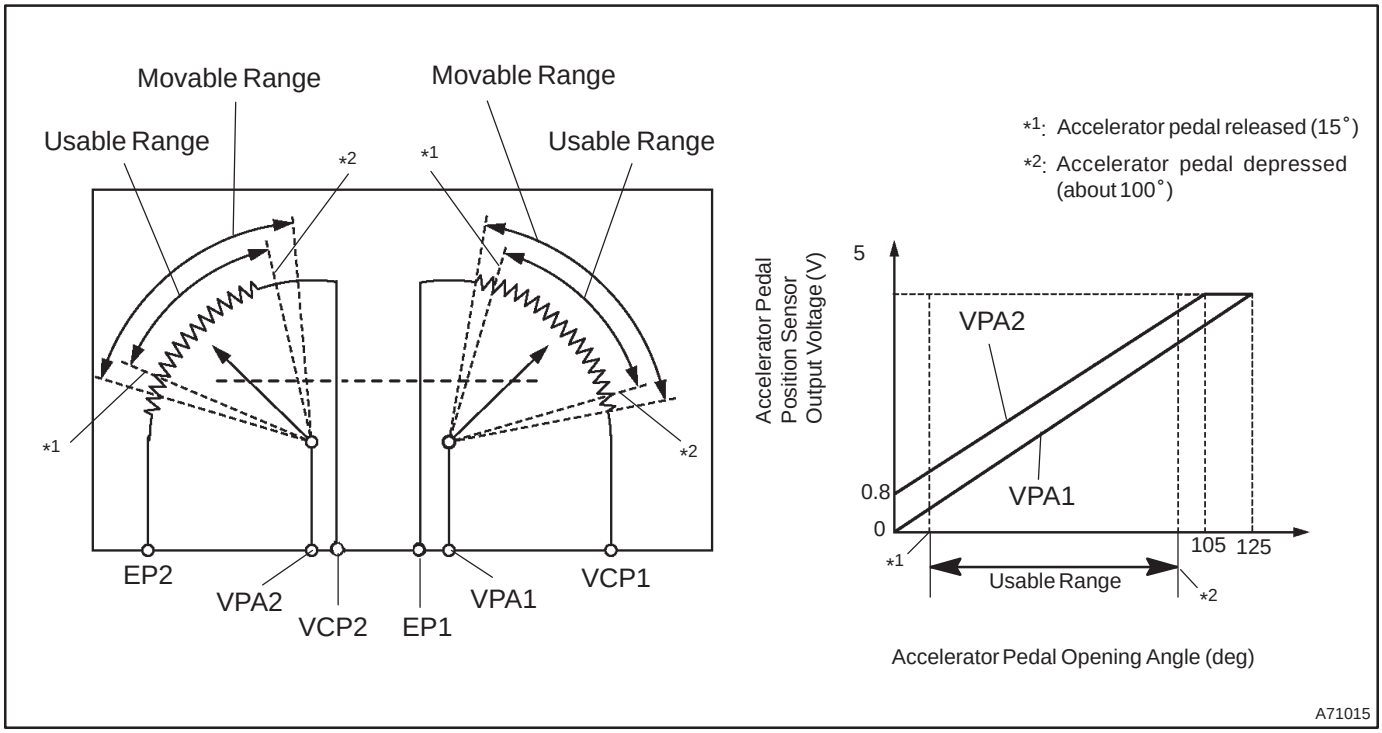

DTC No.	DTC Detection Condition	Trouble Area
P2120	Condition (a) continues for 0.5 sec. or more: (a) VPA less than 0.2 V and VPA2 greater than 0.97 deg, or VPA greater than 4.8 V	• Open or short in accelerator pedal position sensor circuit • Accelerator pedal position sensor • ECM
P2122	Conditions (a) and (b) continue for 0.5 sec. or more: (a) VPA less than 0.2 V (b) VPA2 greater than 0.97 deg	
P2123	Condition (a) continues for 2.0 sec. or more: (a) VPA greater than 4.8 V	
P2125	Condition (a) continues for 0.5 sec. or more: (a) VPA2 less than 0.5 V and VPA greater than 0.97 deg, or VPA2 greater than 4.8 V and VPA greater than 0.2 V but less than 3.45 V	
P2127	Conditions (a) and (b) continue for 0.5 sec. or more: (a) VPA2 less than 0.5 V (b) VPA greater than 0.97 deg	
P2128	Conditions (a) and (b) continue for 2.0 sec. or more: (a) VPA2 greater than 4.8 V (b) VPA greater than 0.2 V but less than 3.45 V	
P2138	Condition (a) or (b) continues for 2.0 sec. or more: (a) Difference between VPA and VPA2 less than 0.02 V (b) VPA less than 0.2 V and VPA2 less than 0.5 V	

HINT:

After confirming ”DTC P2120, P2122, P2123, P2125, P2127, P2128 and P2138”, use the hand–held tester to confirm the accelerator pedal position sensor output voltage.

Trouble area	Accelerator pedal position expressed as voltage output			
	Accelerator pedal released		Accelerator pedal depressed	
	ACCEL POS #1	ACCEL POS #2	ACCEL POS #1	ACCEL POS #2
VCP circuit open	0 V	0 V	0 V	0 V
VPA circuit open or ground short	0 V	1.5 to 2.9 V	0 V	3.5 to 5.5 V
VPA2 circuit open or ground short	0.5 to 1.1 V	0 V	2.5 to 4.6 V	0 V
EP circuit open	5 V	5 V	5 V	5 V

WIRING DIAGRAM

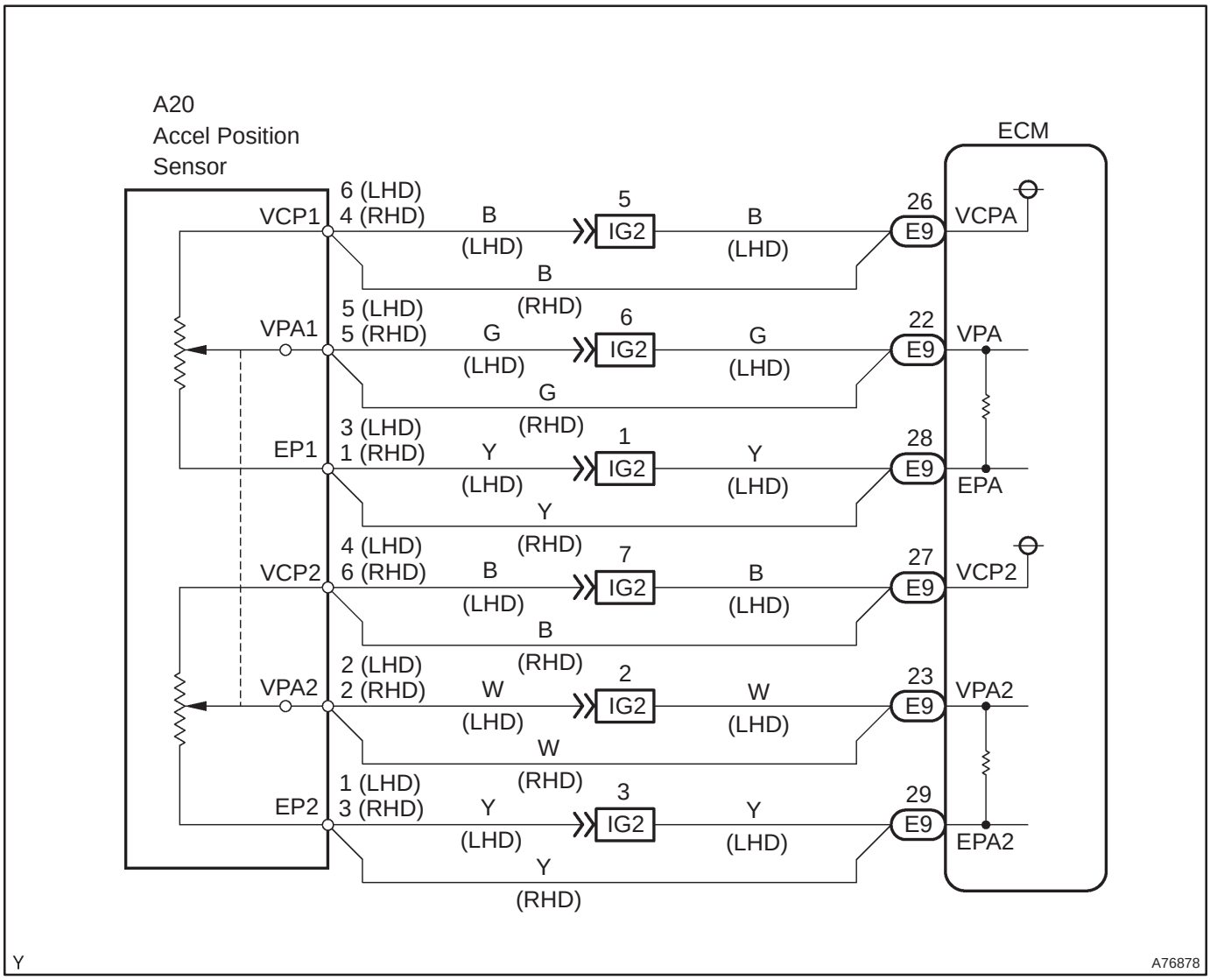

INSPECTION PROCEDURE

HINT:

Read freeze frame data using the hand–held tester. Freeze frame data records the engine conditions when a malfunction is detected. When troubleshooting, it is useful for determining whether the vehicle was running or stopped, the engine was warmed up or not, the air–fuel ratio was lean or rich, etc. at the time of the malfunction.

1 READ VALUE OF HAND–HELD TESTER(ACCEL POS #1 AND ACCEL POS #2)

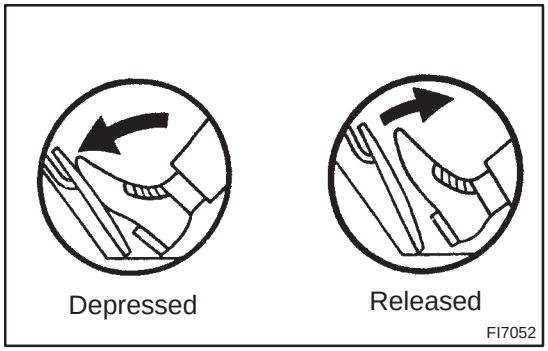

(a) Connect the hand–held tester to the DLC3.
(b) Turn the ignition switch ON.
(c) Select the item ”DIAGNOSIS / OBD/MOBD / DATA LIST / ETCS / ACCEL POS #1 and ACCEL POS #2” and read its value displayed on the hand–held tester.

Standard:

Accelerator pedal	ACCEL POS #1	ACCEL POS #2
Released	0.5 to 1.1 V	1.5 to 2.9 V
Depressed	2.5 to 4.6 V	3.5 to 5.5 V

OK → **CHECK AND REPLACE ECM (See page 01–32)**

NG

2 INSPECT ACCELERATOR PEDAL ASSY(ACCELERATOR PEDAL POSITION SENSOR)

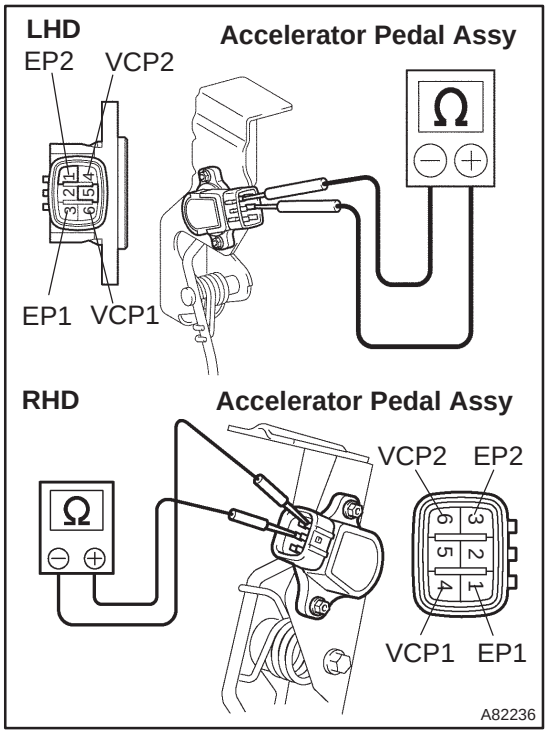

(a) Disconnect the A20 accelerator pedal position sensor connector.
(b) Measure the resistance between each terminal.

Standard (LHD):

Symbols (Terminal No.)	Resistance
EP1 (3) – VCP1 (6)	2.25 to 4.75 kΩ at 20°C (68°F)
EP2 (1) – VCP2 (4)	

Standard (RHD):

Symbols (Terminal No.)	Resistance
EP1 (1) – VCP1 (4)	2.25 to 4.75 kΩ at 20°C (68°F)
EP2 (3) – VCP2 (6)	

NG → **REPLACE ACCELERATOR PEDAL ASSY**

OK

3 INSPECT ECM(VCPA AND VCP2 VOLTAGE)

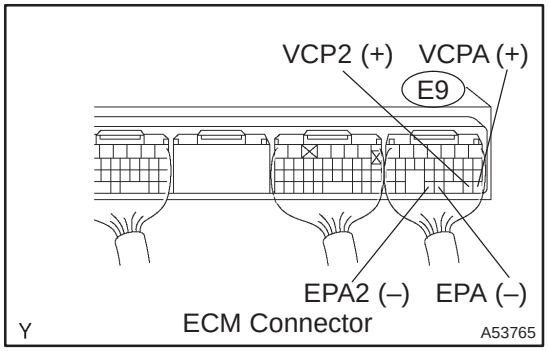

(a) Turn the ignition switch ON.
(b) Measure the voltage between the specified terminals of the E9 ECM connector.

Standard:

Symbols (Terminal No.)	Specified condition
VCPA (E9–26) – EPA (E9–28)	4.5 to 5.5 V
VCP2 (E9–27) – EPA2 (E9–29)	

NG → **CHECK AND REPLACE ECM (See page 01–32)**

OK

4 INSPECT ECM(VPA AND VPA2 VOLTAGE)

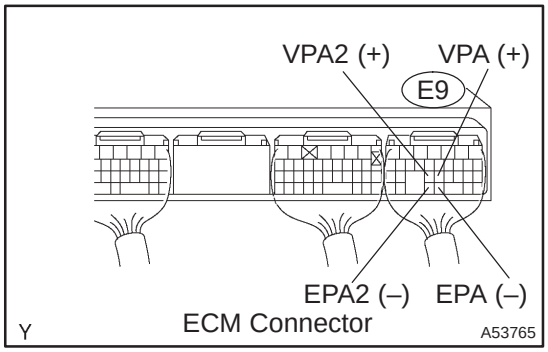

(a) Turn the ignition switch ON.
(b) Measure the voltage between the specified terminals of the E9 ECM connector.

Accelerator pedal position	Symbols (Terminal No.) VPA (E9–22) – EPA (E9–28)	Symbols (Terminal No.) VPA2 (E9–23) – EPA2 (E9–29)
Released	0.5 to 1.1 V	1.5 to 2.9 V
Depressed	2.5 to 4.6 V	3.5 to 5.5 V

OK → **CHECK AND REPLACE ECM (See page 01–32)**

NG

5 CHECK HARNESS AND CONNECTOR(ACCELERATOR PEDAL POSITION SENSOR – ECM)

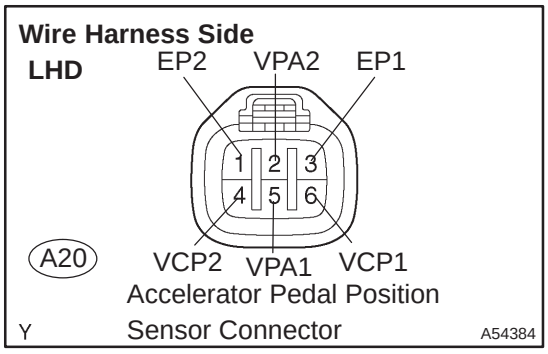

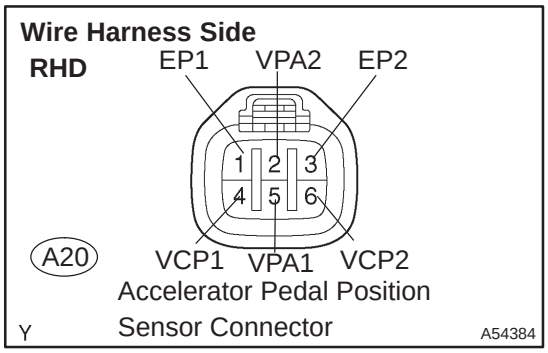

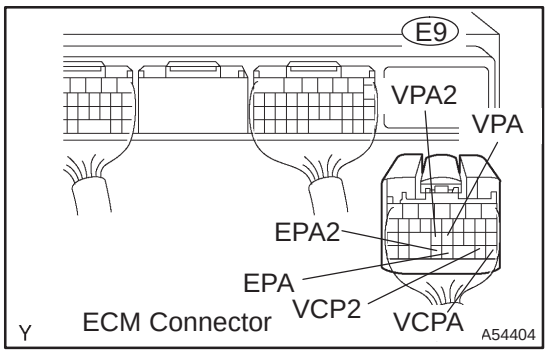

(a) Disconnect the A20 accelerator pedal position sensor connector.

(b) Disconnect the E9 ECM connector.

(c) Check for continuity between the wire harness side connectors.

Standard (LHD):

(Check for open)

Symbols (Terminal No.)	Specified condition
VPA1 (A20–5) – VPA (E9–22)	Continuity
EP1 (A20–3) – EPA (E9–28)	
VCP1 (A20–6) – VCPA (E9–26)	
VPA2 (A20–2) – VPA2 (E9–23)	
EP2 (A20–1) – EPA2 (E9–29)	
VCP2 (A20–4) – VCP2 (E9–27)	

(Check for Short)

Symbols (Terminal No.)	Specified condition
VPA1 (A20–5) or VPA (E9–22) – Body ground	No continuity
EP1 (A20–3) or EPA (E9–28) – Body ground	
VCP1 (A20–6) or VCPA (E9–26) – Body ground	
VPA2 (A20–2) or VPA2 (E9–23) – Body ground	
EP2 (A20–1) or EPA2 (E9–29) – Body ground	
VCP2 (A20–4) or VCP2 (E9–27) – Body ground	

Standard (RHD):

(Check for open)

Symbols (Terminal No.)	Specified condition
VPA1 (A20–5) – VPA (E9–22)	Continuity
EP1 (A20–1) – EPA (E9–28)	
VCP1 (A20–4) – VCPA (E9–26)	
VPA2 (A20–2) – VPA2 (E9–23)	
EP2 (A20–3) – EPA2 (E9–29)	
VCP2 (A20–6) – VCP2 (E9–27)	

(Check for Short)

Symbols (Terminal No.)	Specified condition
VPA1 (A20–5) or VPA (E9–22) – Body ground	No continuity
EP1 (A20–1) or EPA (E9–28) – Body ground	
VCP1 (A20–4) or VCPA (E9–26) – Body ground	
VPA2 (A20–2) or VPA2 (E9–23) – Body ground	
EP2 (A20–3) or EPA2 (E9–29) – Body ground	
VCP2 (A20–6) or VCP2 (E9–27) – Body ground	

NG → **REPAIR OR REPLACE HARNESS OR CONNECTOR**

OK

CHECK AND REPLACE ECM (See page 01–32)

DTC	P2121	THROTTLE/PEDAL POSITION SENSOR/SWITCH ”D” CIRCUIT RANGE/PERFORMANCE

CIRCUIT DESCRIPTION

Refer to DTC P2120 on page 05–492.

DTC No.	DTC Detection Condition	Trouble Area
P2121	Conditions (a) and (b) continue for 0.5 seconds: (a) Difference between VPA and VPA2 exceeds the threshold (b) IDL is OFF	• Open or short in accelerator pedal position sensor circuit • Accelerator pedal position sensor • ECM

WIRING DIAGRAM

Refer to DTC P2120 on page 05–492.

INSPECTION PROCEDURE

HINT:

Read freeze frame data using the hand–held tester. Freeze frame data records the engine conditions when a malfunction is detected. When troubleshooting, it is useful for determining whether the vehicle was running or stopped, the engine was warmed up or not, the air–fuel ratio was lean or rich, etc. at the time of the malfunction.

1	INSPECT ACCELERATOR PEDAL ASSY(ACCELERATOR PEDAL POSITION SENSOR)

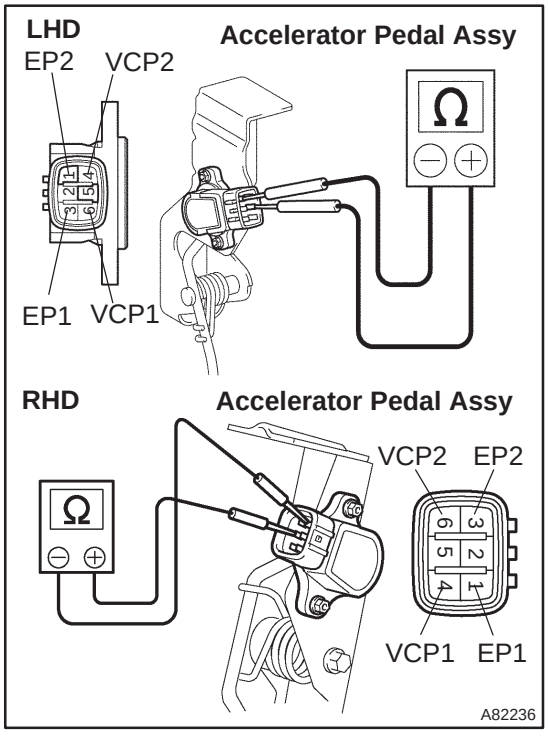

(a) Disconnect the A20 accelerator pedal position sensor connector.

(b) Measure the resistance between each terminal.

Standard (LHD):

Symbols (Terminal No.)	Resistance
EP1 (3) – VCP1 (6)	2.25 to 4.75 kΩ at 20°C (68°F)
EP2 (1) – VCP2 (4)	

Standard (RHD):

Symbols (Terminal No.)	Resistance
EP1 (1) – VCP1 (4)	2.25 to 4.75 kΩ at 20°C (68°F)
EP2 (3) – VCP2 (6)	

NG → **REPLACE ACCELERATOR PEDAL ASSY**

OK

2 INSPECT ECM(VPA AND VPA2 VOLTAGE)

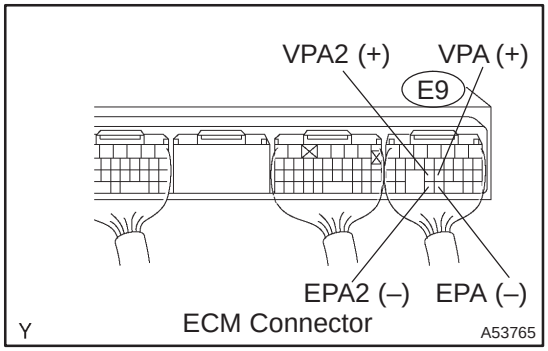

(a) Turn the ignition switch ON.
(b) Measure the voltage between the specified terminals of the E9 ECM connector.

Accelerator pedal position	Symbols (Terminal No.)	Symbols (Terminal No.)
	VPA (E9–22) – EPA (E9–28)	VPA2 (E9–23) – EPA2 (E9–29)
Released	0.5 to 1.1 V	1.5 to 2.9 V
Depressed	2.5 to 4.6 V	3.5 to 5.5 V

OK → **CHECK AND REPLACE ECM (See page 01–32)**

NG

3 CHECK HARNESS AND CONNECTOR(ACCELERATOR PEDAL POSITION SENSOR – ECM)

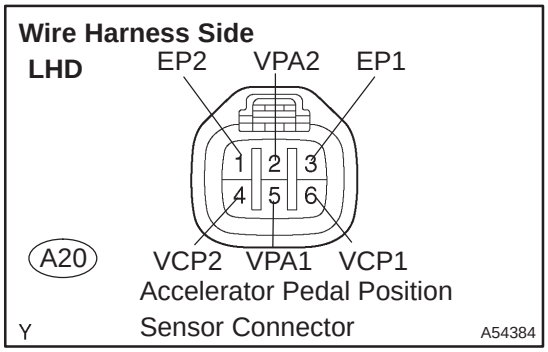

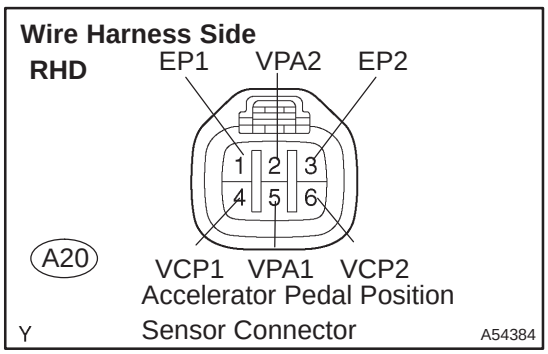

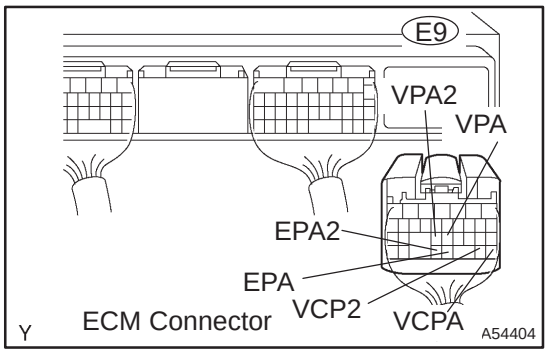

(a) Disconnect the accelerator pedal position sensor connector.
(b) Disconnect the E9 ECM connector.
(c) Check for continuity between the wire harness side connectors.

Standard (LHD):
(Check for open)

Symbols (Terminal No.)	Specified condition
VPA1 (A20–5) – VPA (E9–22)	Continuity
EP1 (A20–3) – EPA (E9–28)	
VCP1 (A20–6) – VCPA (E9–26)	
VPA2 (A20–2) – VPA2 (E9–23)	
EP2 (A20–1) – EPA2 (E9–29)	
VCP2 (A20–4) – VCP2 (E9–27)	

(Check for Short)

Symbols (Terminal No.)	Specified condition
VPA1 (A20–5) or VPA (E9–22) – Body ground	No continuity
EP1 (A20–3) or EPA (E9–28) – Body ground	
VCP1 (A20–6) or VCPA (E9–26) – Body ground	
VPA2 (A20–2) or VPA2 (E9–23) – Body ground	
EP2 (A20–1) or EPA2 (E9–29) – Body ground	
VCP2 (A20–4) or VCP2 (E9–27) – Body ground	

Standard (RHD):
(Check for open)

Symbols (Terminal No.)	Specified condition
VPA1 (A20–5) – VPA (E9–22)	Continuity
EP1 (A20–1) – EPA (E9–28)	
VCP1 (A20–4) – VCPA (E9–26)	
VPA2 (A20–2) – VPA2 (E9–23)	
EP2 (A20–3) – EPA2 (E9–29)	
VCP2 (A20–6) – VCP2 (E9–27)	

(Check for Short)

Symbols (Terminal No.)	Specified condition
VPA1 (A20–5) or VPA (E9–22) – Body ground	No continuity
EP1 (A20–1) or EPA (E9–28) – Body ground	
VCP1 (A20–4) or VCPA (E9–26) – Body ground	
VPA2 (A20–2) or VPA2 (E9–23) – Body ground	
EP2 (A20–3) or EPA2 (E9–29) – Body ground	
VCP2 (A20–6) or VCP2 (E9–27) – Body ground	

NG → **REPAIR OR REPLACE HARNESS OR CONNECTOR**

OK

REPLACE ACCELERATOR PEDAL ASSY (See page 10–66)

ECM POWER SOURCE CIRCUIT

CIRCUIT DESCRIPTION

When the ignition switch is turned ON, battery positive voltage is applied to terminal IGSW of the ECM and the EFI relay (Marking: EFI) control circuit in the ECM sends a signal to terminal MREL of the ECM switching on the EFI relay.

This signal causes current to flow to the coil, closing the contacts of the EFI relay and supplying power to terminals +B and +B2 of the ECM.

If the ignition switch is turned off, the ECM continues to switch on the EFI relay for maximum 2 seconds for the initial setting of the throttle valve.

WIRING DIAGRAM

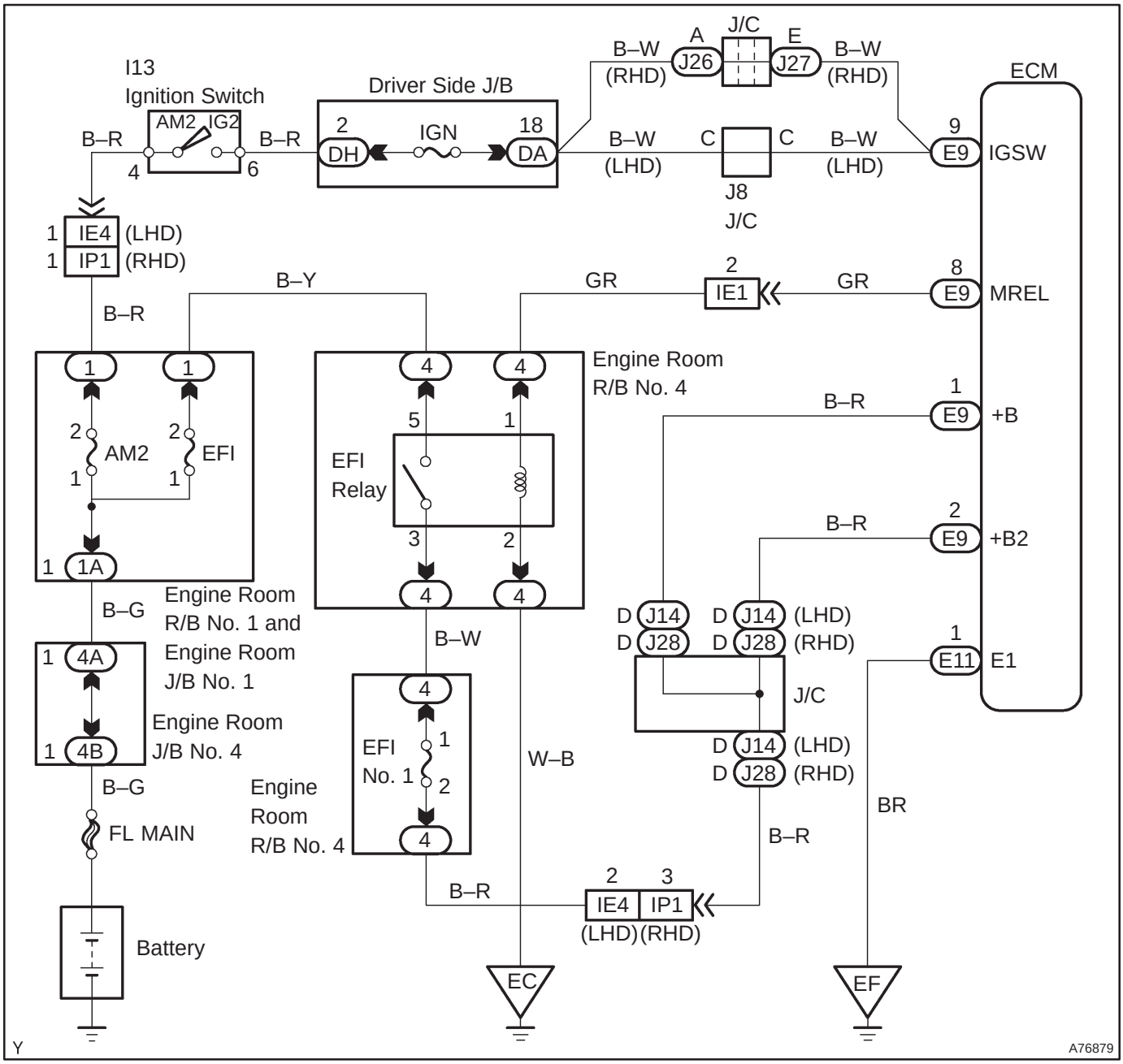

INSPECTION PROCEDURE

1 INSPECT ECM(+B VOLTAGE)

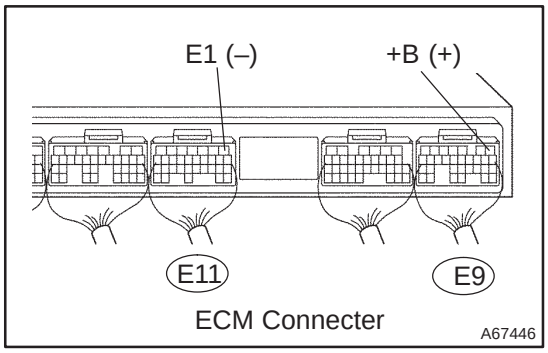

(a) Turn the ignition switch ON.
(b) Measure the voltage between the specified terminals of the E9 and E11 ECM connectors.

Standard:

Symbols (Terminal No.)	Specified condition
+B (E9–1) – E1 (E11–1)	9 to 14 V

OK → **PROCEED TO NEXT CIRCUIT INSPECTION SHOWN ON PROBLEM SYMPTOMS TABLE (See page 05–320)**

NG

2 CHECK HARNESS AND CONNECTOR(ECM – BODY GROUND)

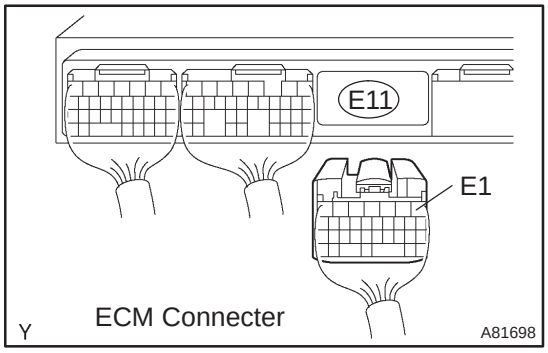

(a) Disconnect the battery negative (–) terminal.
(b) Disconnect the E11 ECM connector.
(c) Check for continuity between the wire harness side connector.

Standard (Check for open):

Symbols (Terminal No.)	Specified condition
E1 (E11–1) – Body ground	Continuity

NG → **REPAIR OR REPLACE HARNESS OR CONNECTOR**

OK

3 INSPECT ECM(IGSW VOLTAGE)

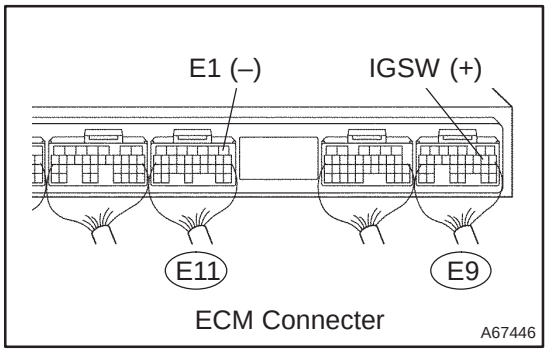

(a) Turn the ignition switch ON.
(b) Measure the voltage between the specified terminals of the E9 and E11 ECM connectors.

Standard:

Symbols (Terminal No.)	Specified condition
IGSW (E9–9) – E1 (E11–1)	9 to 14 V

OK → **Go to step 6**

NG

4 CHECK FUSE(IGN FUSE)

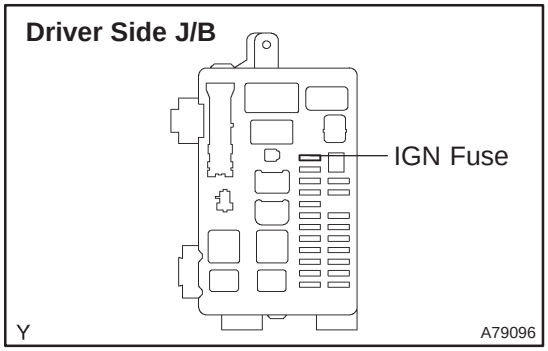

(a) Remove the IGN fuse from the driver side J/B.
(b) Check for continuity in the IGN fuse.
Standard: Continuity

NG → **CHECK FOR SHORT IN ALL HARNESSES AND COMPONENTS CONNECTED FUSE**

OK

5 INSPECT IGNITION OR STARTER SWITCH ASSY

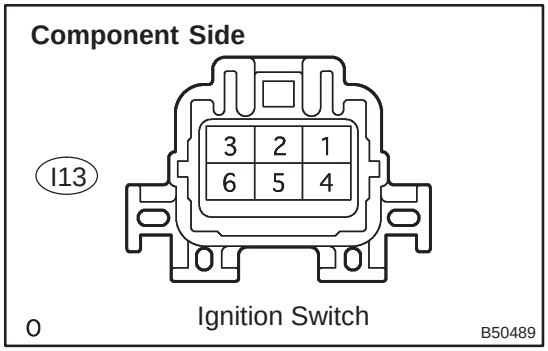

(a) Measure the resistance between the connector terminals shown in the chart below.

Switch	Terminal No.	Resistance
LOCK	All Terminals	1 MΩ or more
ACC	1–3	1 Ω or less
ON	1–2, 1–3, 2–3, 5–6	1 Ω or less
START	4–5, 4–6, 5–6, 1–2	1 Ω or less

NG → **REPLACE IGNITION OR STARTER SWITCH ASSY**

OK

CHECK AND REPAIR HARNESS AND CONNECTOR(BATTERY – IGNITION SWITCH, IGNITION SWITCH – ECM)

6 INSPECT ECM(MREL VOLTAGE)

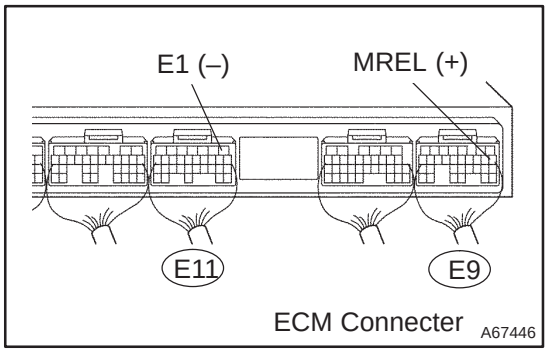

(a) Turn the ignition switch ON.
(b) Measure the voltage between the specified terminals of the E9 and E11 ECM connectors.
Standard:

Symbols (Terminal No.)	Specified condition
MREL (E9–8) – E1 (E11–1)	9 to 14 V

NG → **CHECK AND REPLACE ECM (See page 01–32)**

OK

7 CHECK FUSE(EFI FUSE)

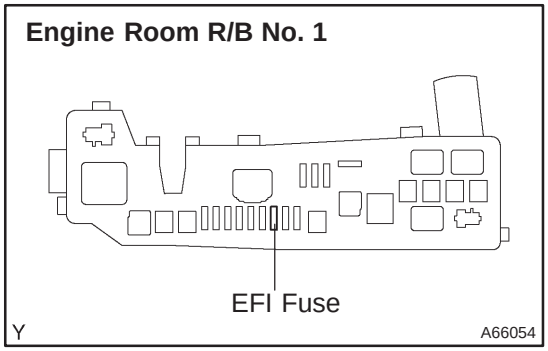

(a) Remove the EFI fuse from the engine room R/B No. 1.
(b) Check for continuity in the EFI fuse.
Standard: Continuity

NG → **CHECK FOR SHORT IN ALL HARNESSES AND COMPONENTS CONNECTED FUSE**

OK

8 INSPECT EFI RELAY

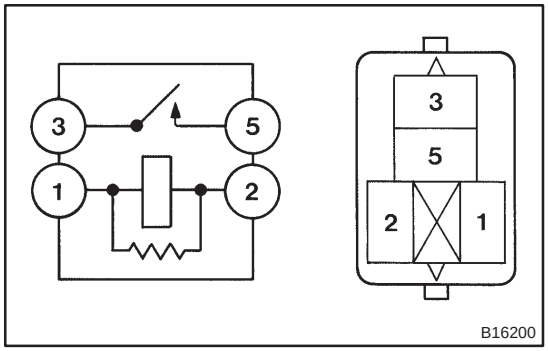

(a) Remove the EFI relay from the engine room R/B No. 4.
(b) Inspect the EFI relay.
Standard:

Terminal No.	Specified condition
1 – 2	Continuity
3 – 5	No Continuity
	Continuity (Apply battery voltage terminals 1 and 2)

NG → **REPLACE EFI RELAY**

OK

9 CHECK FUSE(EFI NO.1 FUSE)

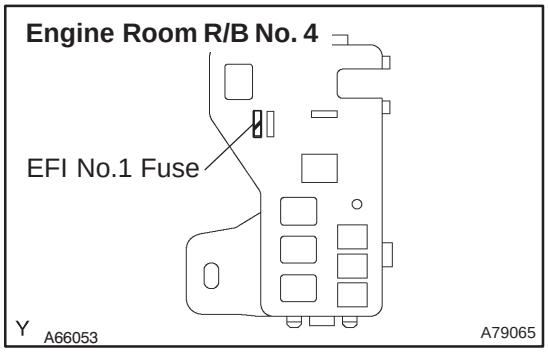

(a) Remove the EFI No. 1 fuse from the engine room R/B No. 4.
(b) Check for continuity in the EFI No. 1 fuse.
Standard: Continuity

NG → **CHECK FOR SHORT IN ALL HARNESSES AND COMPONENTS CONNECTED FUSE**

OK

10	CHECK HARNESS AND CONNECTOR(EFI RELAY – ECM, EFI RELAY – BODY GROUND)

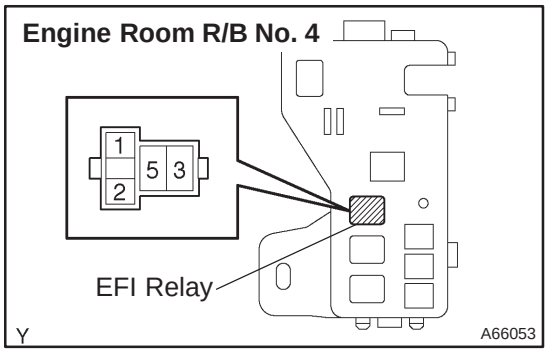

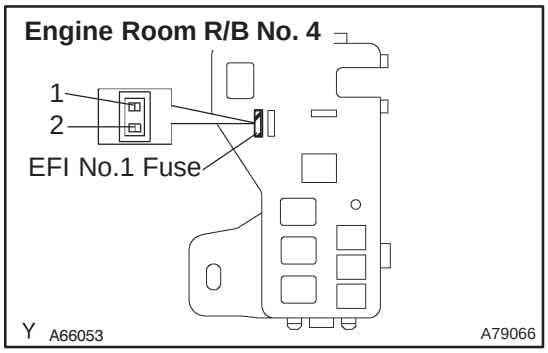

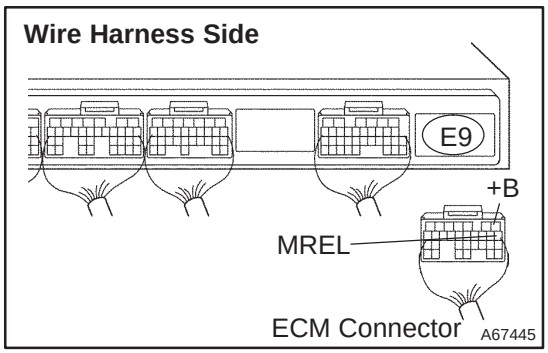

(a) Check harness and connector between the EFI relay and the ECM connector.

(1) Remove the EFI relay from the engine room R/B No. 4.

(2) Remove the EFI No.1 fuse from the engine room R/B No. 4.

(3) Disconnect the E9 ECM connector.

(4) Check for continuity between the wire harness side connectors.

Standard (Check for open):

Symbols (Terminal No.)	Specified condition
EFI relay (1) – MREL (E9–8)	Continuity
EFI relay (3) – EFI No. 1 fuse (1)	
EFI No. 1 fuse (2) – +B (E9–1)	

Standard (Check for short):

Symbols (Terminal No.)	Specified condition
EFI relay (1) or MREL (E9–8) – Body ground	No continuity
EFI relay (3) or EFI No. 1 fuse (1) – Body ground	
EFI No. 1 fuse (2) or +B (E9–1) – Body ground	

(b) Check harness and connector between the EFI relay and the body ground.

(1) Remove the EFI relay from the engine room R/B No. 4.

(2) Check for continuity between the wire harness side connector and the body ground.

Standard (Check for open):

Symbols (Terminal No.)	Specified condition
EFI relay (2) – Body ground	Continuity

OK → **REPAIR OR REPLACE HARNESS OR CONNECTOR**

NG

CHECK AND REPAIR HARNESS AND CONNECTOR(TERMINAL +B OF ECM – BATTERY POSITIVE TERMINAL)

FUEL PUMP CONTROL CIRCUIT

CIRCUIT DESCRIPTION

In the diagram below, when the engine is cranked, current flows from terminal ST2 of the ignition switch to the starter relay coil and also current flows to terminal STA of ECM (STA signal).
When the STA signal and NE signal are input to the ECM, Tr is turned ON, current flows to the coil of the circuit opening relay, the relay switches on, power is supplied to the fuel pump and the fuel pump operates. While the NE signal is generated (engine running), the ECM keeps Tr ON (circuit opening relay ON) and the fuel pump also keeps operating.

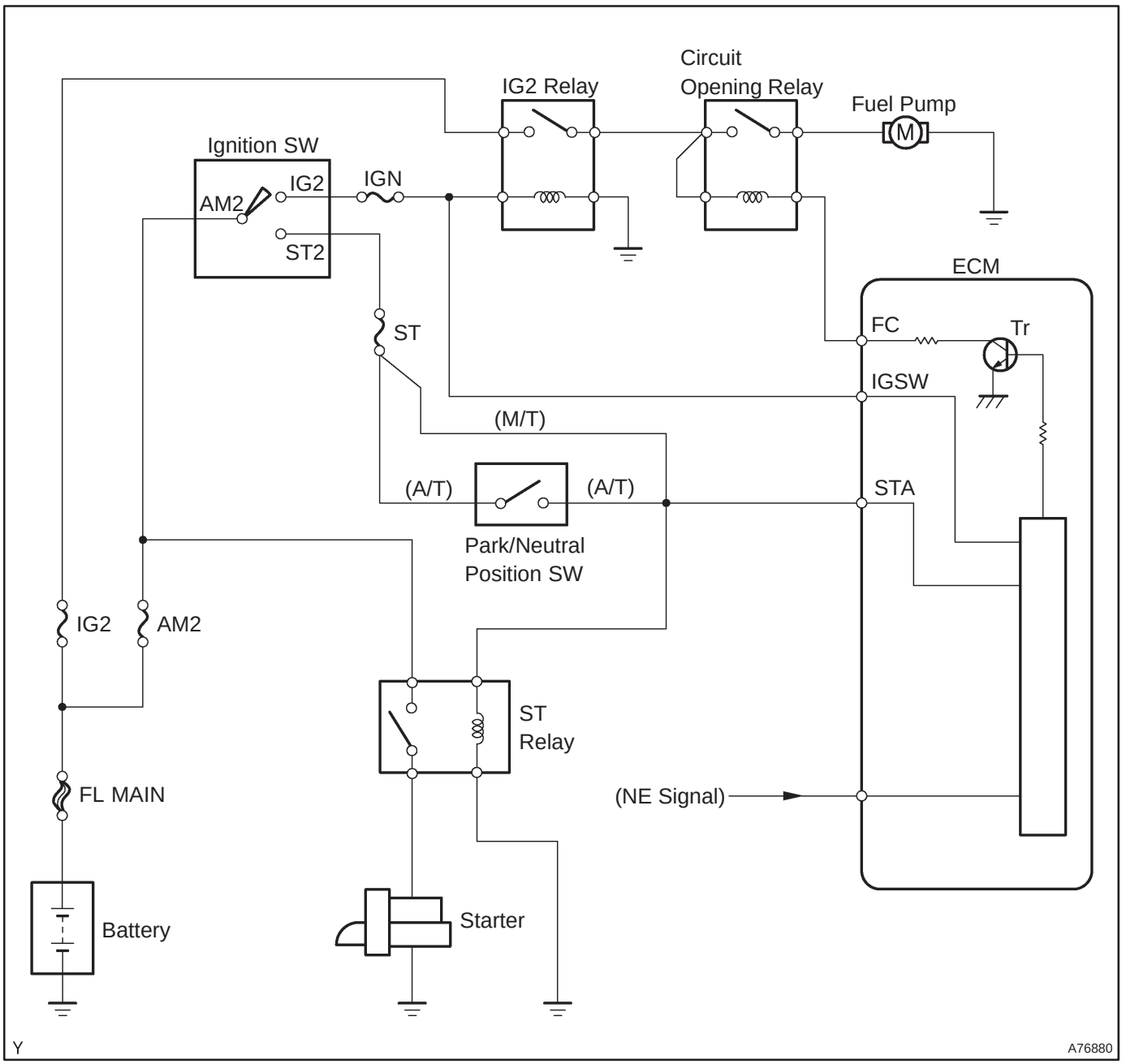

WIRING DIAGRAM

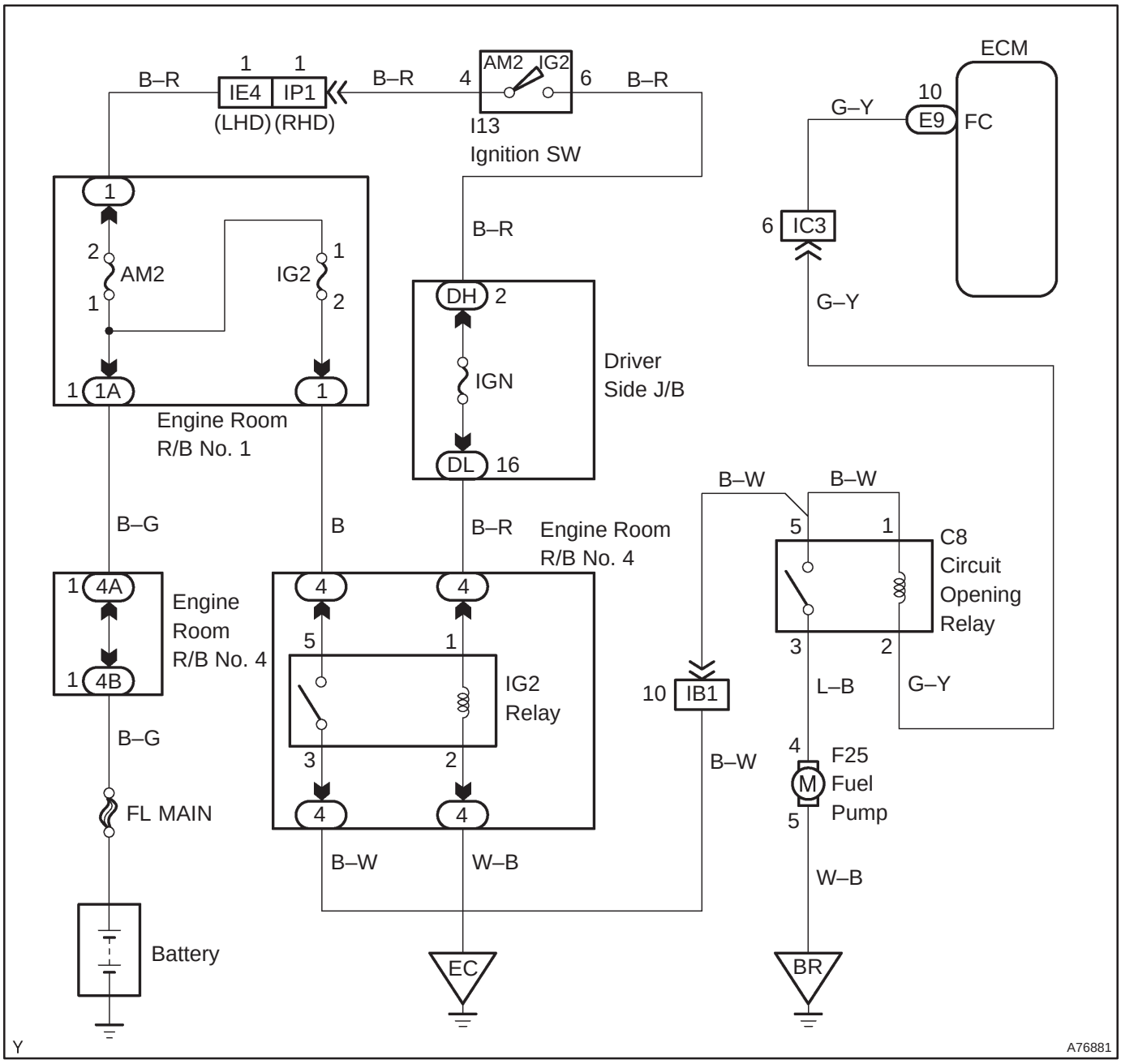

INSPECTION PROCEDURE

1	PERFORM ACTIVE TEST BY HAND–HELD TESTER(OPERATION OF CIRCUIT OPENING RELAY)

(a) Turn the ignition switch ON.
(b) Select the item ”DIAGNOSIS / OBD/MOBD / ACTIVE TEST / FUEL PUMP/SPD”.
(c) Perform the ACTIVE TEST with the engine stopped.
Result: The circuit opening relay operates.

NG → **Go to step 2**

OK

PROCEED TO NEXT CIRCUIT INSPECTION SHOWN ON PROBLEM SYMPTOMS TABLE (See page 05–320)

2	INSPECT CIRCUIT OPENING RELAY

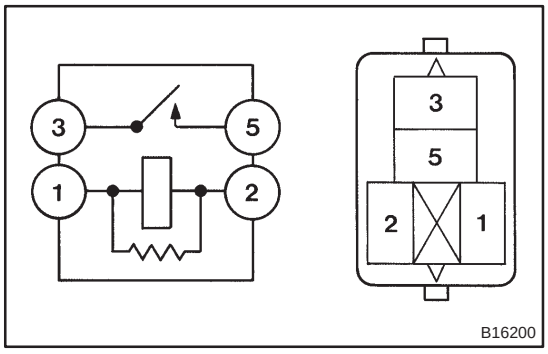

(a) Remove the circuit opening relay.
(b) Inspect the circuit opening relay.
Standard:

Terminal No.	Specified condition
1 – 2	Continuity
3 – 5	No Continuity
	Continuity (Apply battery voltage terminals 1 and 2)

NG → **REPLACE CIRCUIT OPENING RELAY**

OK

3	INSPECT ECM(FC VOLTAGE)

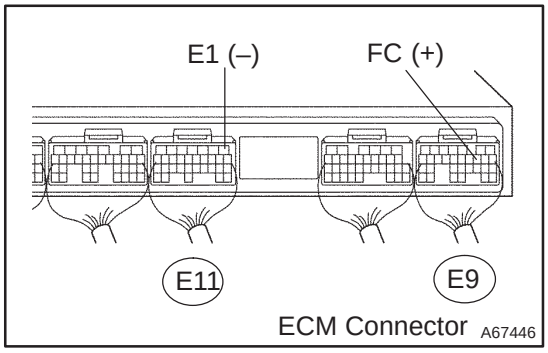

(a) Turn the ignition switch ON.
(b) Measure the voltage between the specified terminals of the E9 and E11 ECM connectors.
Standard:

Symbols (Terminal No.)	Specified condition
FC (E9–10) – E1 (E11–1)	9 to 14 V

NG → **Go to step 6**

OK

4	INSPECT FUEL PUMP ASSY (See page 11–36)

NG → **REPLACE FUEL PUMP ASSY**

OK

5	CHECK HARNESS AND CONNECTOR(CIRCUIT OPENING RELAY – FUEL PUMP, FUEL PUMP – BODY GROUND)

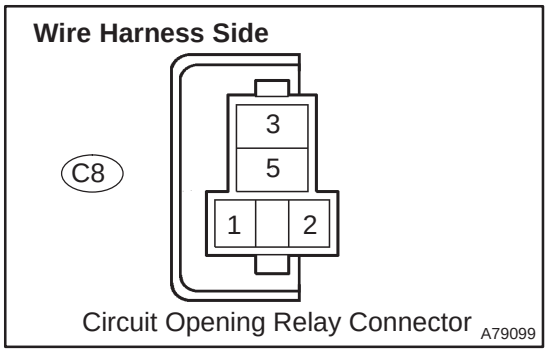

(a) Remove the circuit opening relay.
(b) Disconnect the F25 fuel pump connector.
(c) Check for continuity between the wire harness side connectors.

Standard (Check for open):

Symbols (Terminal No.)	Specified condition
Circuit opening relay (C8–3) – Fuel pump (F25–4)	Continuity
Fuel pump (F25–5) – Body ground	

Standard (Check for short):

Symbols (Terminal No.)	Specified condition
Circuit opening relay (C8–3) or Fuel pump (F25–4) – Body ground	No continuity

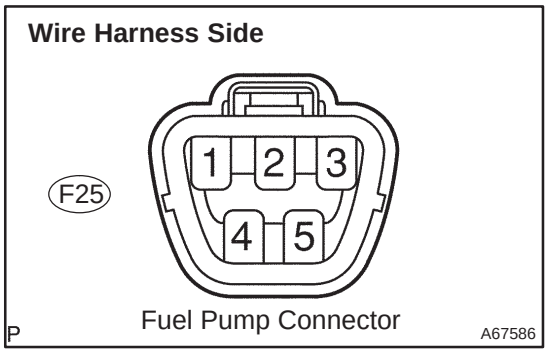

NG → **REPAIR OR REPLACE HARNESS OR CONNECTOR**

OK

CHECK AND REPLACE ECM (See page 01–32)

6	INSPECT IG2 RELAY

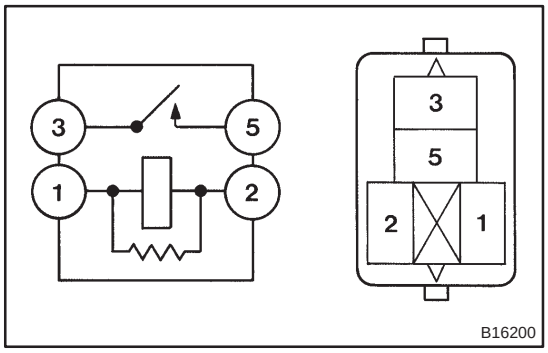

(a) Remove the IG2 relay from the engine room R/B No. 4.
(b) Inspect the IG2 relay.

Standard:

Terminal No.	Specified condition
1 – 2	Continuity
3 – 5	No Continuity
	Continuity (Apply battery voltage terminals 1 and 2)

NG → **REPLACE IG2 RELAY**

OK

7 CHECK HARNESS AND CONNECTOR(IGNITION SWITCH – IG2 RELAY, IG2 FUSE – IG2 RELAY)

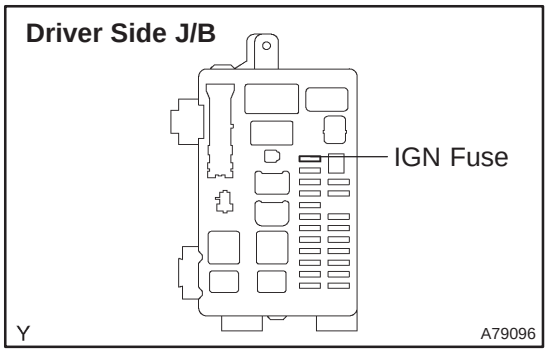

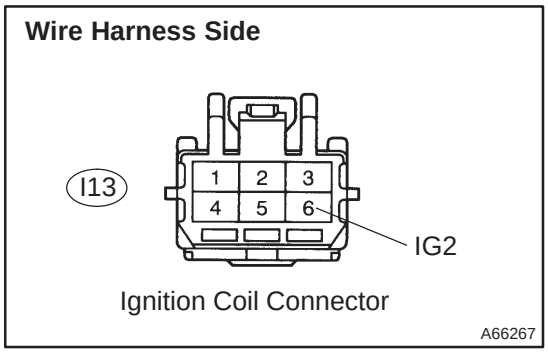

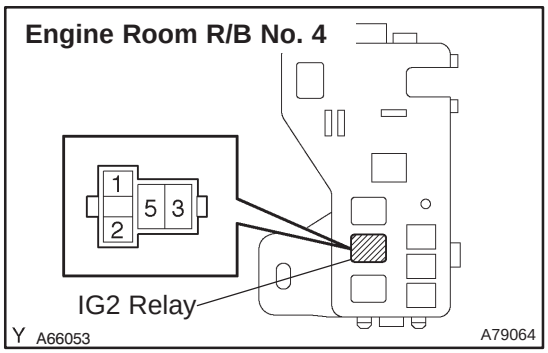

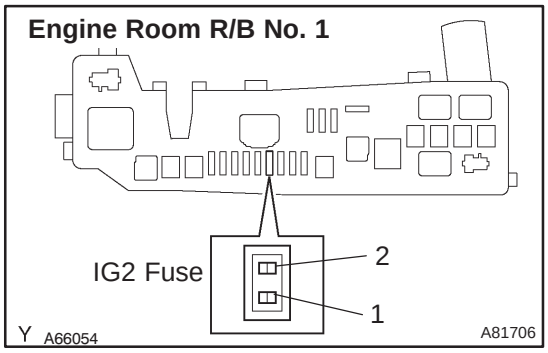

(a) Check harness and connector between the IG2 relay and ignition switch.

(1) Inspect the IGN fuse.

- Remove the IGN fuse from the driver side J/B.
- Check for continuity in the IGN fuse.

Standard: Continuity

- Reinstall the IGN fuse.

(2) Disconnect the I13 ignition switch connector.

(3) Remove the IG2 relay.

(4) Check for continuity between the wire harness side connectors.

Standard (Check for open):

Symbols (Terminal No.)	Specified condition
IG2 (I13–6) – IG2 relay (1)	Continuity

Standard (Check for short):

Symbols (Terminal No.)	Specified condition
IG2 (I13–6) or IG2 relay (1) – Body ground	No continuity

(b) Check harness and connector between the IG2 relay and the IG2 fuse.

(1) Inspect the IG2 fuse.

- Remove the IG2 fuse from the engine room R/B No. 1.
- Check for continuity in the IG2 fuse.

Standard: Continuity

(2) Remove the IG2 relay from the engine room R/B No. 4.

(3) Check for continuity between the wire harness side connectors.

Standard (Check for open):

Symbols (Terminal No.)	Specified condition
IG2 fuse (2) – IG2 relay (5)	Continuity

Standard (Check for short):

Symbols (Terminal No.)	Specified condition
IG2 fuse (2) or IG2 relay (5) – Body ground	No continuity

NG → **REPAIR OR REPLACE HARNESS OR CONNECTOR**

OK

8	CHECK HARNESS AND CONNECTOR(IG2 RELAY – CIRCUIT OPENING RELAY, CIRCUIT OPENING RELAY – ECM)

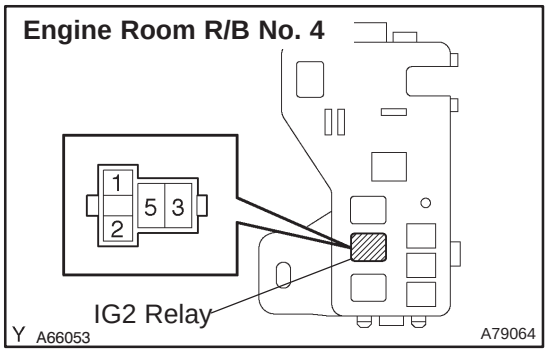

(a) Remove the IG2 relay from the engine room R/B No. 4.
(b) Remove the circuit opening relay.
(c) Disconnect the E9 ECM connector.
(d) Check for continuity between the wire harness side connectors.

Standard (Check for open):

Symbols (Terminal No.)	Specified condition
IG2 relay (3) – Circuit opening relay (C8–1)	Continuity
Circuit opening relay (C8–2) – FC (E9–10)	
IG2 relay (2) – Body ground	

Standard (Check for short):

Symbols (Terminal No.)	Specified condition
IG2 relay (3) or Circuit opening relay (C8–1) – Body ground	No continuity
Circuit opening relay (C8–2) or FC (E9–10) – Body ground	

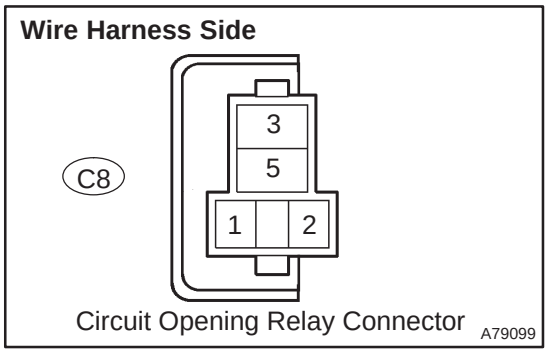

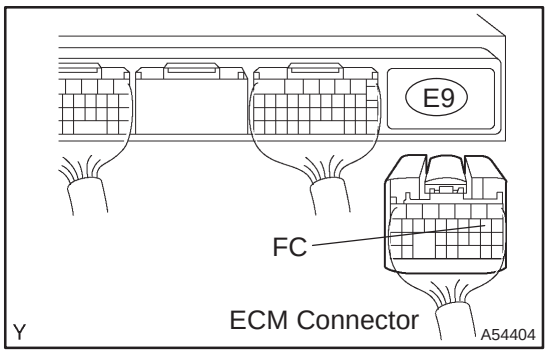

NG → **REPAIR OR REPLACE HARNESS OR CONNECTOR**

OK →

CHECK AND REPLACE ECM (See page 01–32)

STARTER SIGNAL CIRCUIT

CIRCUIT DESCRIPTION

When the engine is cranked, the intake air flow is slow, so fuel vaporization is poor. A rich mixture is therefore necessary in order to achieve good startability. While the engine is being cranked, the battery voltage is applied to terminal STA of the ECM. The starter signal is mainly used to increase the fuel injection volume for the starting injection control and after–start injection control.

WIRING DIAGRAM

Refer to DTC P0617 on page 05–471.

INSPECTION PROCEDURE

HINT:

This diagnostic troubleshooting procedure is on the premise that the engine is being cranked under normal conditions. If the engine does not crank, proceed to the problem symptoms table on page 05–320.

1	READ VALUE OF HAND–HELD TESTER(STARTER SIGNAL)

(a) Connect the hand–held tester to the DLC3.
(b) Turn the ignition switch ON and push the hand–held tester main switch ON.
(c) Select the item ”DIAGNOSIS / OBD/MOBD / DATA LIST / ALL / STARTER SIG” and read its value displayed on the hand–held tester.

Result:

Ignition Switch Position	ON	START
STA Signal	OFF	ON

OK → **PROCEED TO NEXT CIRCUIT INSPECTION SHOWN ON PROBLEM SYMPTOMS TABLE (See page 05–320)**

NG

2 CHECK HARNESS AND CONNECTOR(ECM – STARTER RELAY)

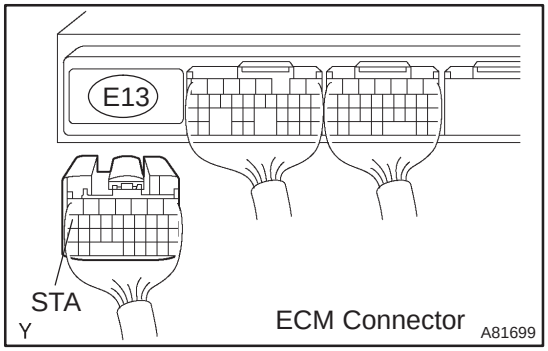

(a) Disconnect the E13 ECM connector.
(b) Remove the ST relay from the driver side R/B.
(c) Check for continuity between the wire harness side connectors.

Standard (Check for open):

Symbols (Terminal No.)	Specified condition
STA (E13–17) – ST relay (1)	Continuity

Standard (Check for short):

Symbols (Terminal No.)	Specified condition
STA (E13–17) or ST relay (1) – Body ground	No continuity

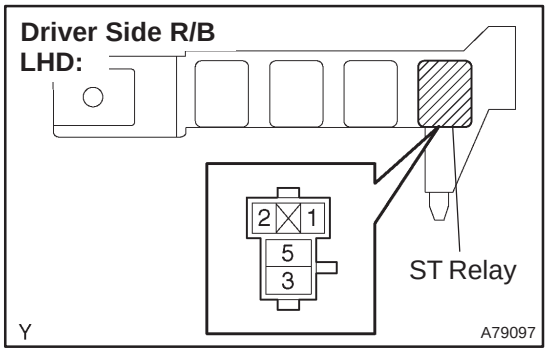

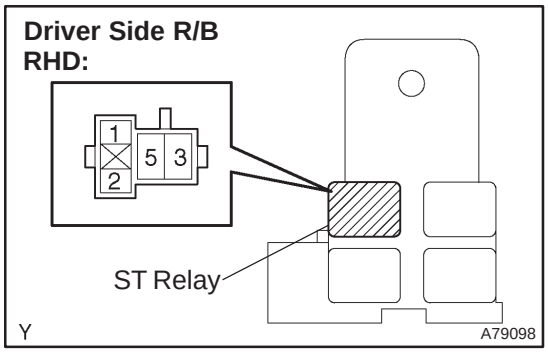

NG → **REPAIR OR REPLACE HARNESS OR CONNECTOR**

OK

CHECK AND REPLACE ECM (See page 01–32)

CHECK ENGINE WARNING LIGHT CIRCUIT

CIRCUIT DESCRIPTION

If the ECM detects a trouble, it illuminates CHK ENG. At this time, the ECM sets a DTC in the memory.

WIRING DIAGRAM

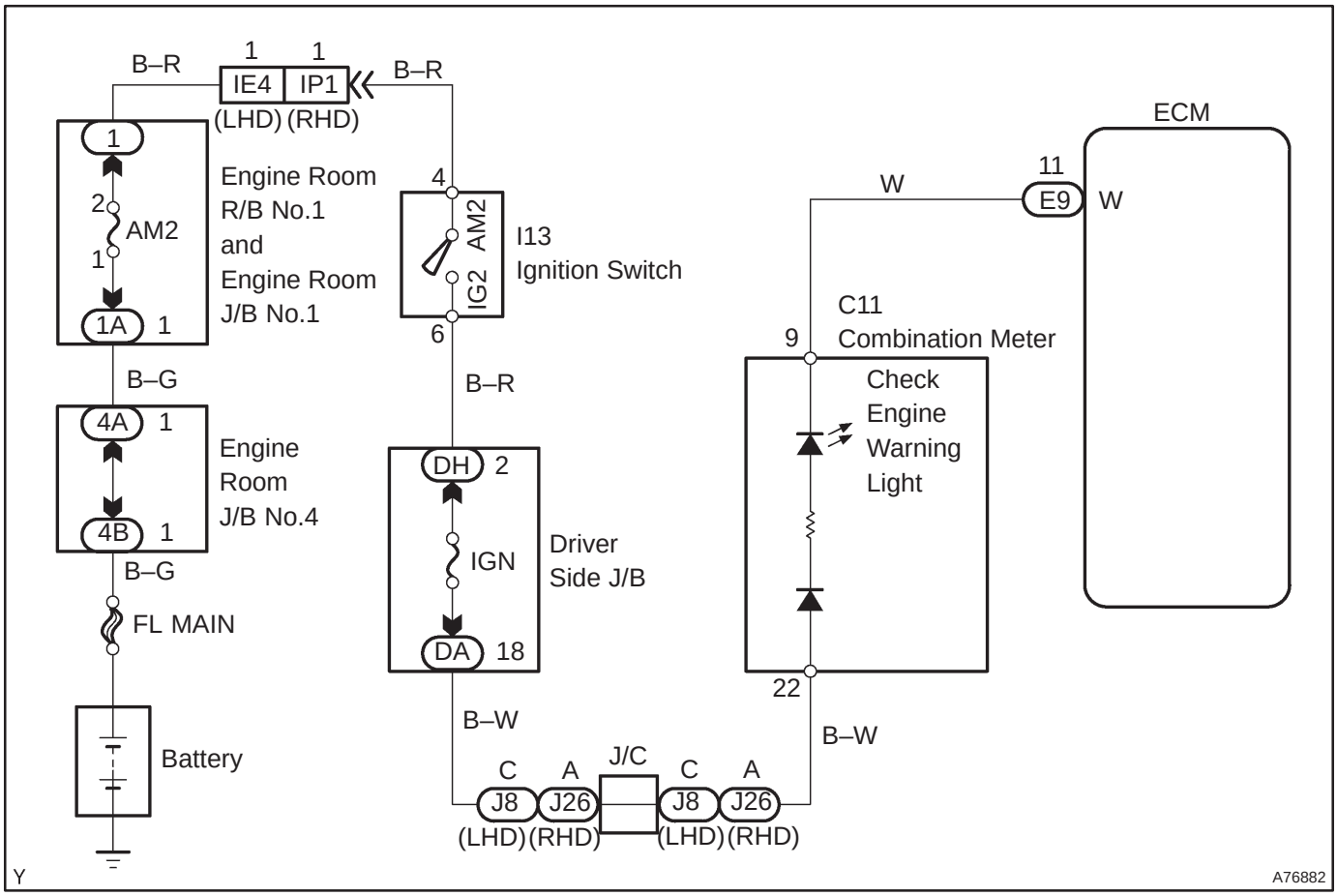

INSPECTION PROCEDURE

HINT:

Troubleshoot each trouble symptom in accordance with the chart below .

CHK ENG remains on	Start inspection from step 1
CHK ENG is not illuminated	Start inspection from step 3

1 CLEAR DTC

(a) Connect the hand–held tester to the DLC 3.
(b) Turn the ignition switch ON and push the hand–held tester main switch ON.
(c) Read the DTC (See page 05–294).
(d) Clear the DTC (See page 05–294).
(e) Check that the CHK ENG is not illuminated.
Standard: CHK ENG is not illuminated

OK → **REPAIR CIRCUIT INDICATED BY OUTPUT CODE (See page 05–309)**

NG

2	CHECK HARNESS AND CONNECTOR(CHECK FOR SHORT IN WIRE HARNESS)

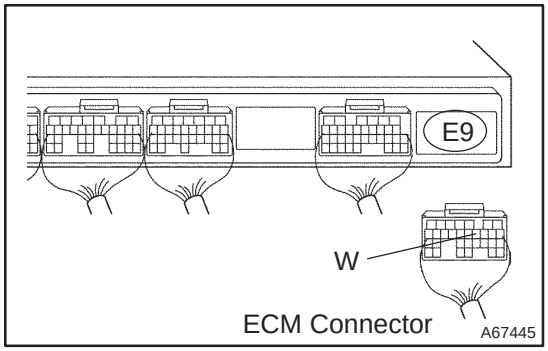

(a) Disconnect the E9 ECM connector.
(b) Turn the ignition switch ON.
(c) Check that the CHK ENG is not illuminated.
Standard: CHK ENG is not illuminated

NG → **CHECK AND REPAIR HARNESS AND CONNECTOR**

OK

CHECK AND REPLACE ECM (See page 01–32)

3	CHECK CHK ENG CONDITION

(a) Check that the CHK ENG is illuminated when turning the ignition switch ON.
Standard: CHK ENG is illuminated

OK → **SYSTEM OK**

NG

4	INSPECT COMBINATION METER ASSY(CHK ENG CIRCUIT)

(a) See the combination meter troubleshooting on page 05–1509.

NG → **REPAIR OR REPLACE BULB OR COMBINATION METER ASSEMBLY**

OK

CHECK AND REPAIR HARNESS AND CONNECTOR (COMBINATION METER – ECM)

ECD SYSTEM (1CD–FTV)

05CP9–01

DESCRIPTION

1. COMMON RAIL SYSTEM

The common rail system stores high–pressure fuel supplied from the supply pump in the common rail and injects it using the injector. Fuel injection timing and fuel injection volume are regulated by the ECM; it provides an electric current to the solenoid valve of the injector with the EDU to regulate them.

By storing high–pressure fuel produced in the supply pump in the common rail, this system can always offer stable fuel injection pressure regardless of the engine speed and engine load, even if a driving speed is low. In addition, this system uses the injector that opens and closes its fuel passage with the Two–Way–Valve (TWV) therefore both the fuel injection time and volume are precisely regulated by the ECM.

The ECM monitors internal fuel pressure of the common rail with the fuel pressure sensor and commands the supply pump to supply fuel to obtain a target internal pressure (approximately 30 to 180 MPa (306 to 1,835 kgf/cm^2, 4,351 to 26,106 psi)). The ECM opens and closed the pressure discharge valve to improve controllability for the common rail internal fuel pressure.

This system has two divisional fuel injections. It performs ”pilot–injection” as subsidiary fuel injection prior to the main fuel injection to make combustion soft, and this helps to reduce engine vibration and noise.

Common Rail System Diagram (1CD–FTV Fuel System)

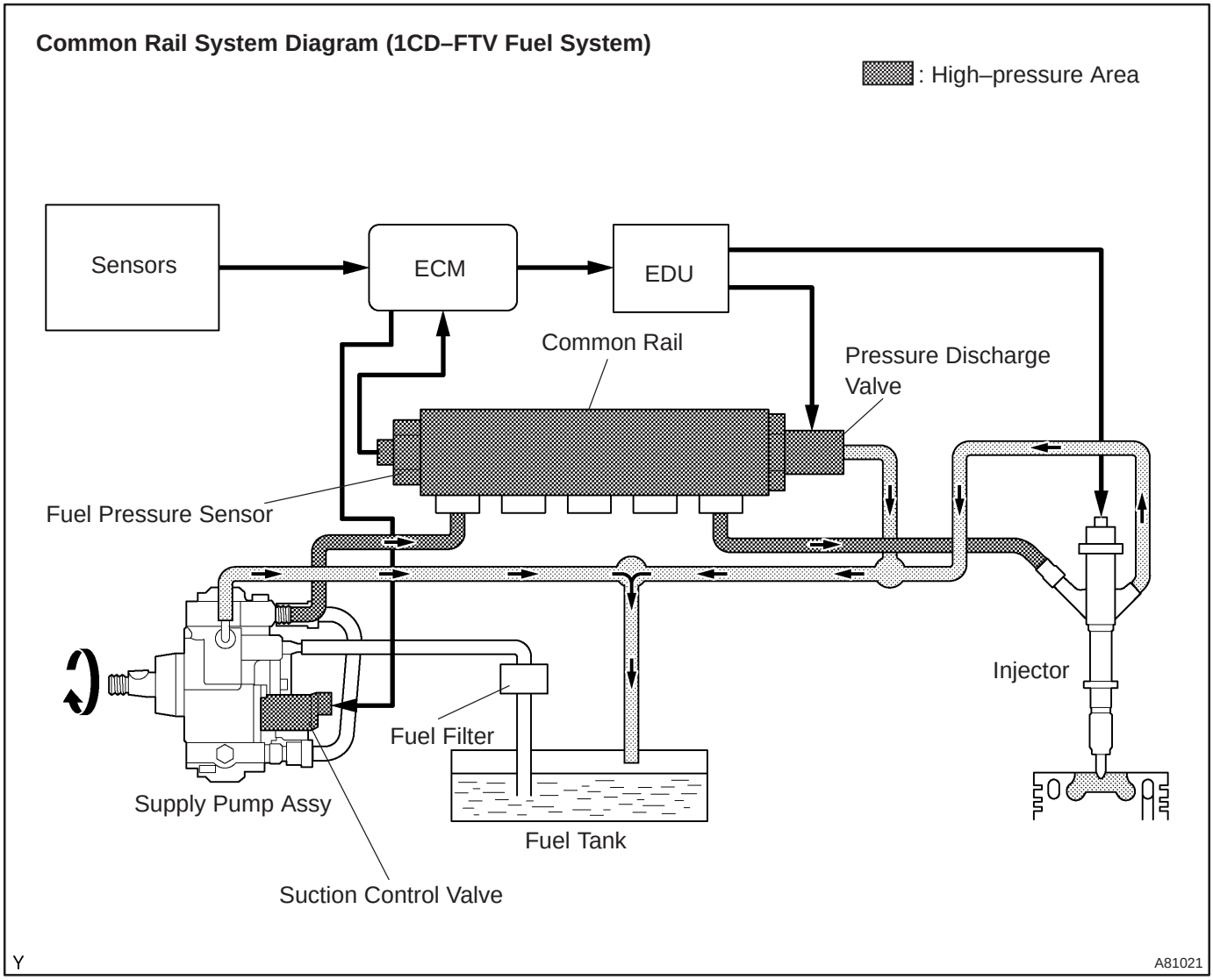

COMMON RAIL SYSTEM COMPONENTS:

Component	Description
Common rail	Store high–pressure fuel produced by the supply pump
Supply pump	Operated by the crankshaft, and supply high–pressure fuel to the common rail
Injector	Inject fuel to the combustion room based on signals from the ECM
Fuel pressure sensor	Monitor internal fuel pressure of the common rail and send signals to the ECM
Pressure discharge valve	Based on signals from the ECM, open the valve when sudden deceleration is occurred, or when the ignition switch is OFF to prevent the fuel pressure from being too high
Suction control valve	Based on signals from the ECM, adjust fuel volume supplied to the common rail and regulate the internal fuel pressure

2. ENGINE CONTROL SYSTEM

Engine Control System Diagram

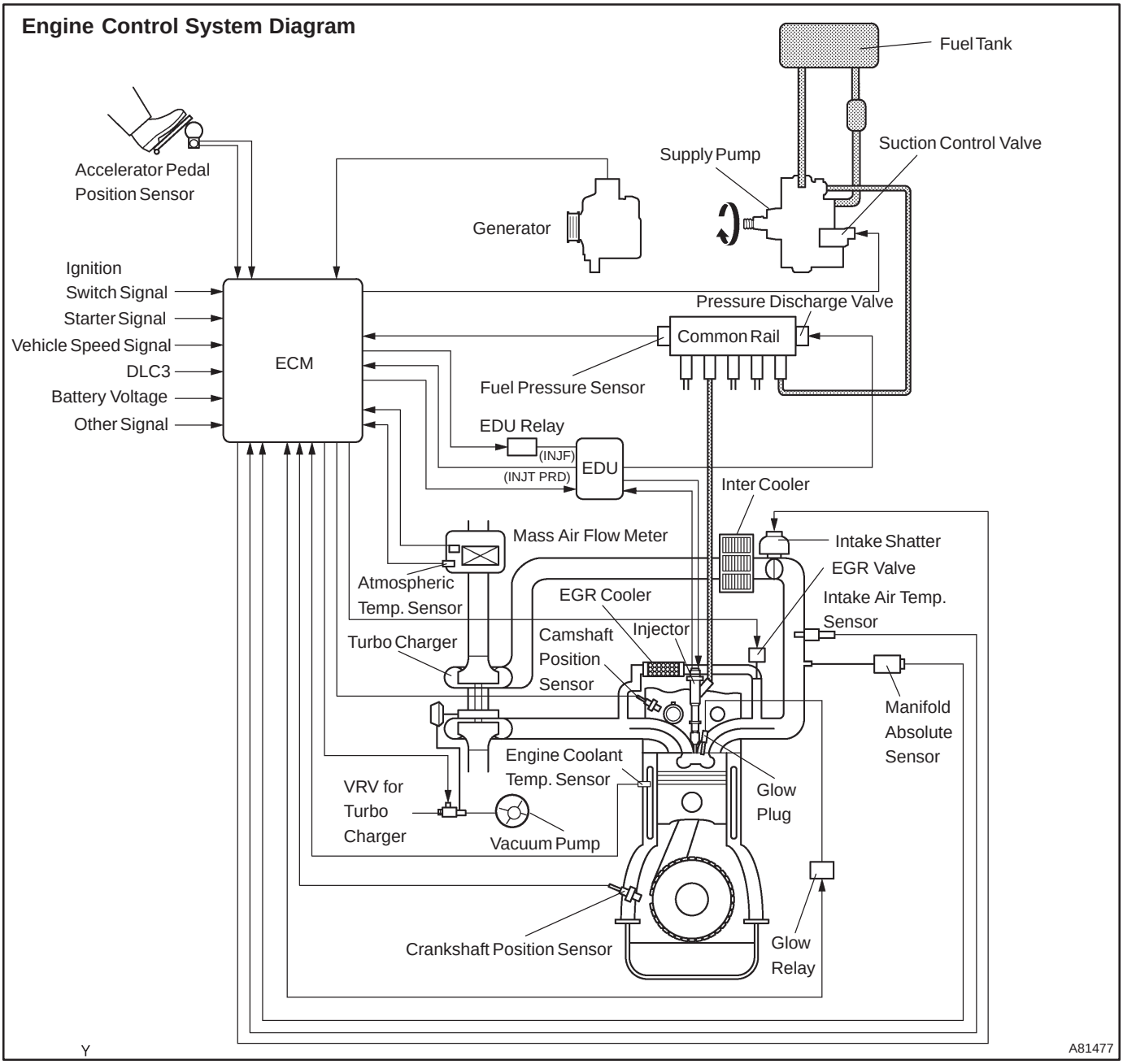

3. INJECTION CONTROL SYSTEM

The ECM controls the fuel injection system using the injector and the supply pump. The ECM determines the fuel injection volume and injection timing by controlling duration and timing of the energizing to the solenoid valve of the injector, and determines injection pressure by controlling the Suction Control Valve located on the supply pump.

The feed pump is used to pump fuel from the fuel tank into the supply pump.

Injection Control Diagram

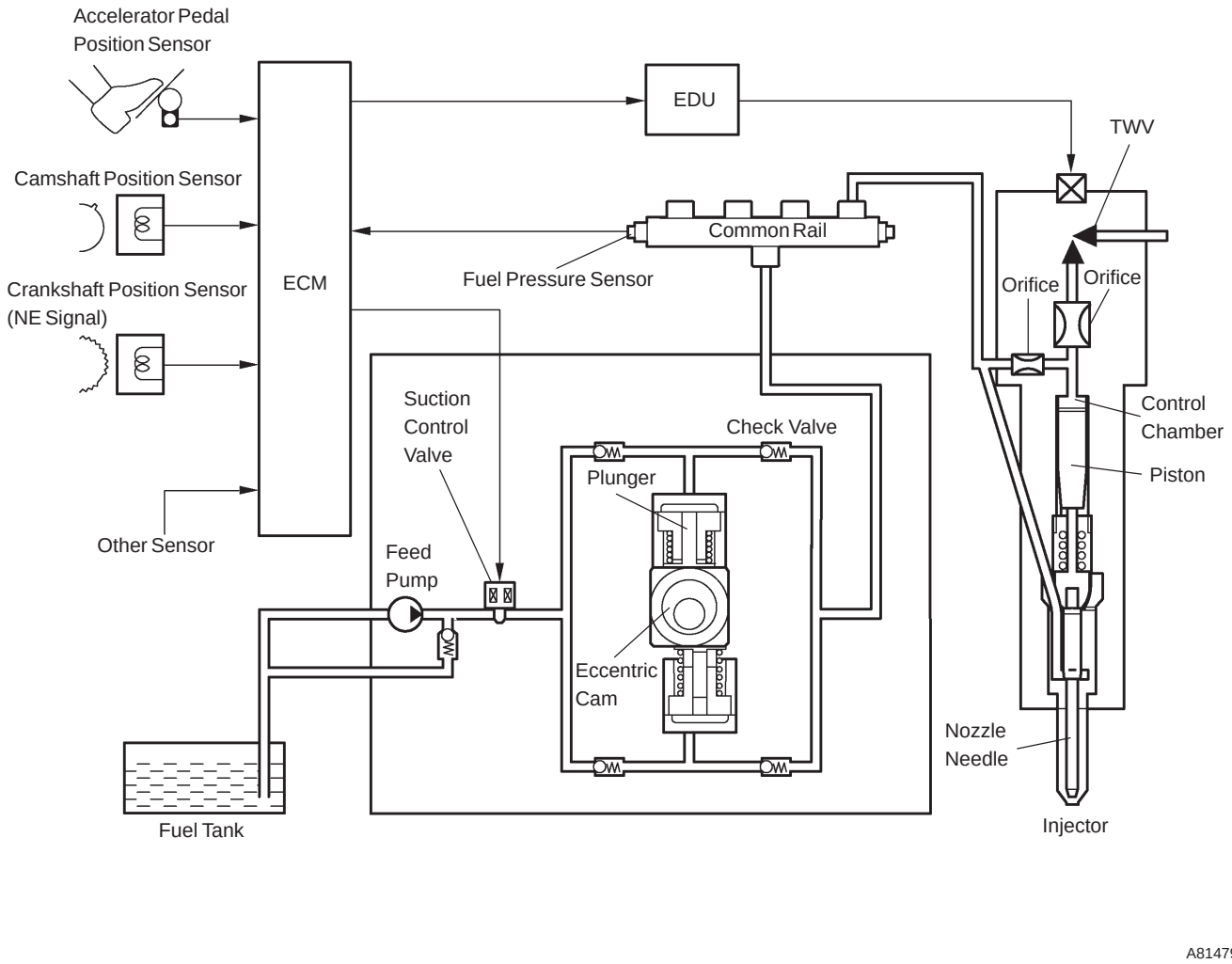

4. SUPPLY PUMP OPERATION SYSTEM

The rotation of the eccentric cam causes the ring cam pushes plunger A upward as illustrated below. The spring force pulls plunger B (which is located on opposite of plunger A) upward. As a result, plunger B draws fuel in, and plunger A pumps fuel at the same time.

Supply Pump Operation Diagram

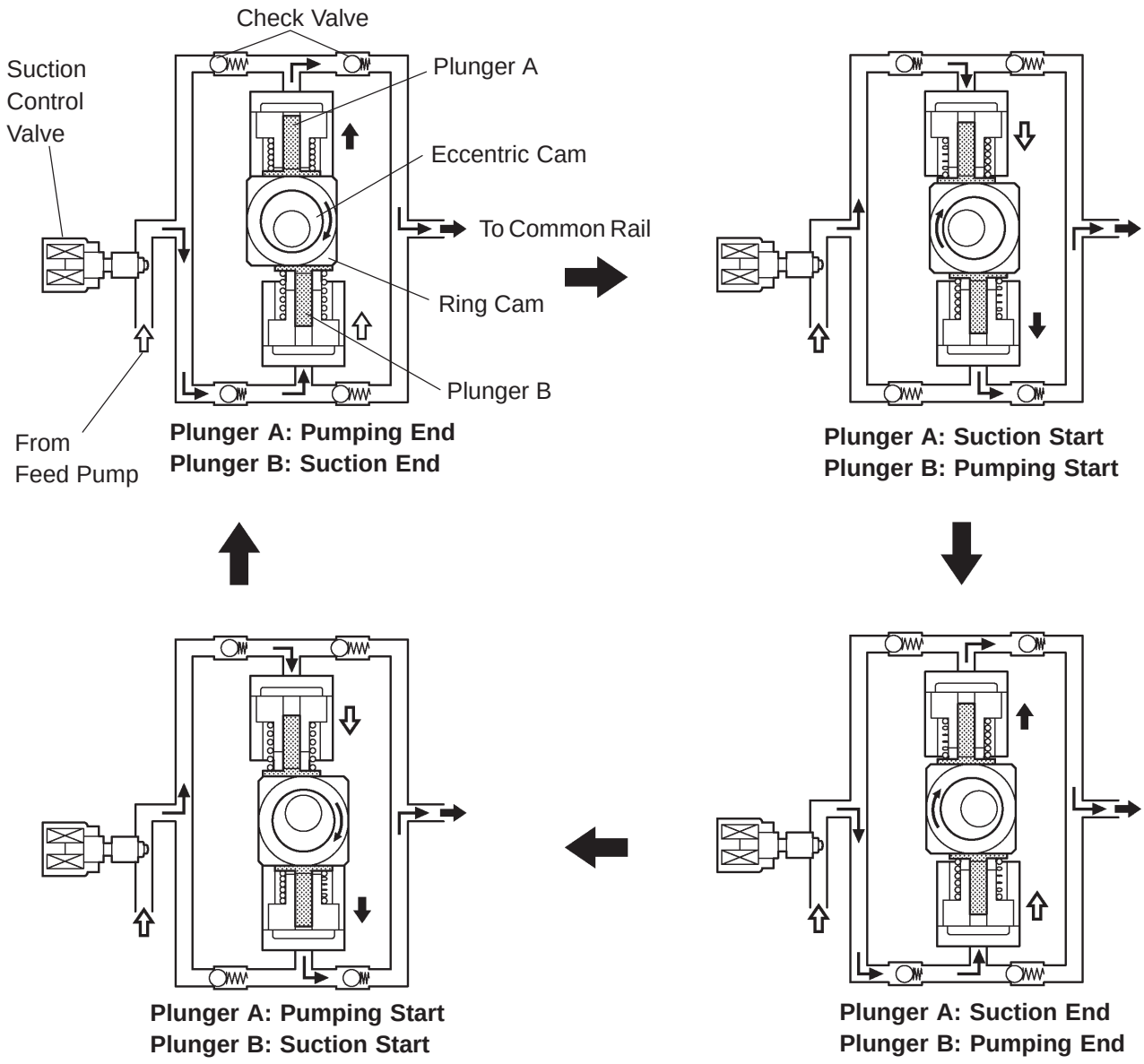

5. SUCTION CONTROL VALVE OPERATION SYSTEM

HINT:

The ECM controls the suction control valve operation to regulate the fuel volume that is pumped by the supply pump to the common rail. Consequently, the fuel pressure in the common rail is controlled to the target injection pressure.

(a) Suction control valve opening small:

(1) When the opening of the suction control valve is small, the fuel suction area is kept small, therefore the transferble fuel volume is decreased.

(2) The suction volume becomes small due to the small suction area, despite the plunger stroke is full. Therefore, the difference of the volume between the geometry volume and the suction volume is in vacuum condition.

(3) Pumping will start at the time when the fuel pressure has become higher than the common rail pressure.

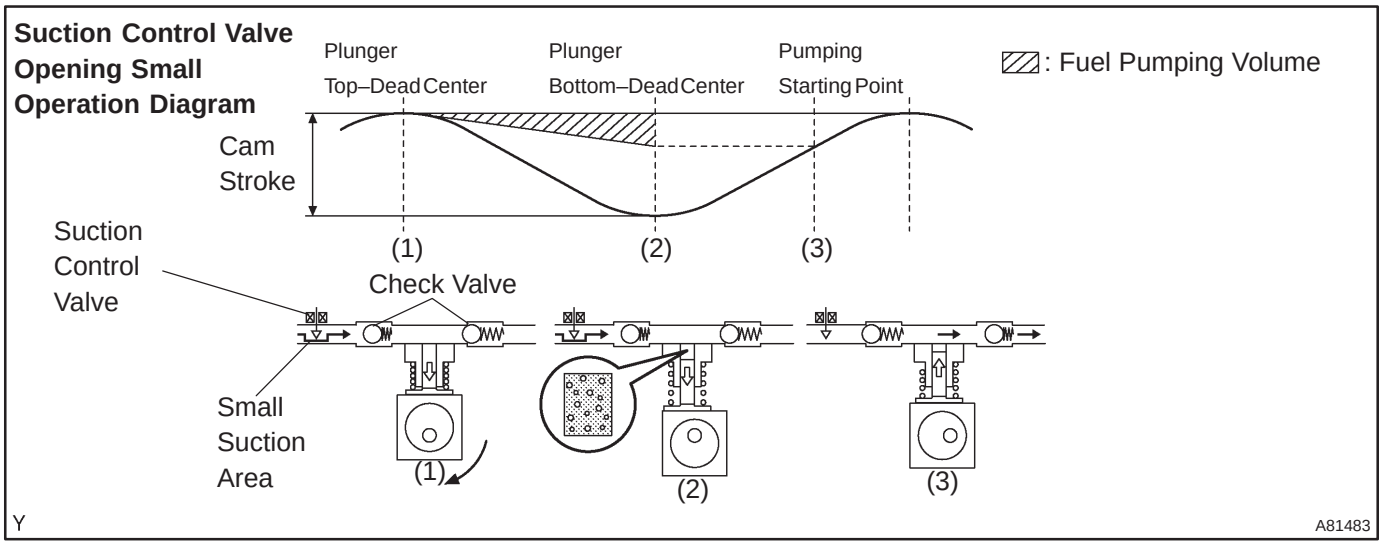

(b) Suction control valve opening large:

(1) When the opening of the suction control valve is large, the fuel suction area is kept large, therefore the transferble fuel volume is increased.

(2) If the plunger strokes fully, the suction volume will increase because the suction area is large.

(3) Pumping will start at the time when the fuel pressure has become higher than the common rail pressure.

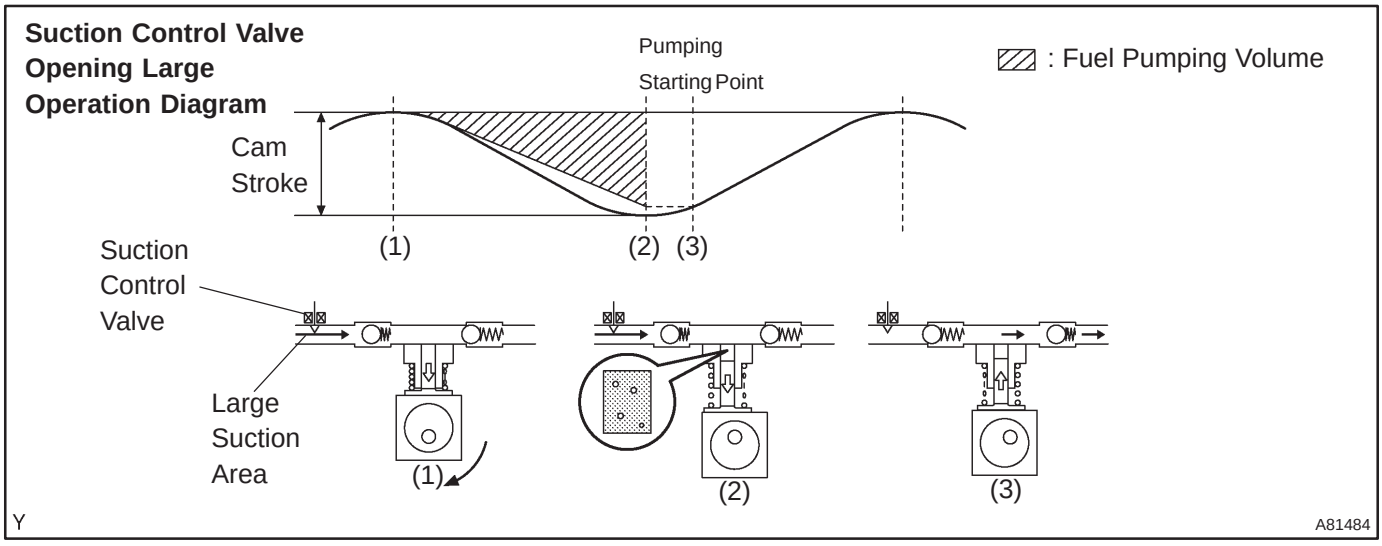

6. DIAGNOSTICS TROUBLE CODE MATRIX FOR FUEL SYSTEM

HINT:

This matrix indicates typical DTC codes combinations for each malfunction occurrence.

( ): Potential DTC codes

DTC No.	A	B	C	D	E	F	G	H	I	J	K	L
P0087 (See page 05–557)				●								
P0088 (See page 05–563)					(●)		(●)	(●)	(●)			
P0093 (See page 05–570)	(●)	●			(●)	●					(●)	●
P0190 (See page 05–557)				●								
P0191 (See page 05–603)				●								
P0192 (See page 05–557)				●								
P0193 (See page 05–557)				●								
P0200 (See page 05–604)	●										(●)	
P0627 (See page 05–655)								●				
P1229 (See page 05–563)					(●)			●	●			
P1238 (See page 05–658)	●	●	●								(●)	
P1271 (See page 05–663)					●						(●)	
P1272 (See page 05–663)					●		●				(●)	

Trouble area	Malfunction	Refer to
Injector	Open or short in injector circuit	A
	Stuck open	B
	Stuck close	C
Fuel pressure sensor	Open or short in fuel pressure sensor circuit or pressure sensor output fixed	D
Pressure discharge valve	Open or short in pressure discharge valve circuit	E
	Stuck open	F
	Stuck close	G
Suction control valve	Open or short in suction control valve circuit	H
	Stuck open	I
	Stuck close	J
EDU	Faulty EDU	K
Common rail system (Fuel system)	Fuel leaks in high–pressure area	L

7. DIAGNOSTICS TROUBLE CODE DESCRIPTION

DTC No.	Description
P0087	Fuel pressure sensor output status at fixed value
P0088	Internal fuel pressure too high (200 MPa (2,039 kgf/cm^2, 29,007 psi) or more)
P0093	Fuel leaks in high–pressure area
P0190	Open or short in fuel pressure sensor circuit (Low or high output)
P0191	Fuel pressure sensor out of range (Low output)
P0192	Open or short in fuel pressure sensor circuit (High output)
P0193	Open or short in fuel pressure sensor circuit (Sensor 1 and/or 2 relation)
P0200	Open or short in EDU or injector circuit
P0627	Open or short in suction control valve circuit
P1229	Fuel over fed
P1238	Injection malfunction, exclude open or short in injector circuit
P1271	Open or short in pressure discharge valve circuit
P1272	Closed malfunction of the pressure discharge valve

054JB–04

HOW TO PROCEED WITH TROUBLESHOOTING

1	VEHICLE BROUGHT TO WORKSHOP

2	CUSTOMER PROBLEM ANALYSIS (See page 05–527)

3	CONNECT THE HAND–HELD TESTER TO DLC3

HINT:
If the display indicates a communication fault in the tool, inspect DLC3.

4	CHECK DTC AND FREEZE FRAME DATA (See page 05–528)

HINT:
Record or print DTC and freeze frame data, if needed.

5	CLEAR DTC AND FREEZE FRAME DATA (See page 05–528)

6	VISUAL INSPECTION

7	SETTING THE CHECK (TEST) MODE DIAGNOSIS (See page 05–528)

8	PROBLEM SYMPTOM CONFIRMATION

HINT:
If the engine does not start, perform steps 10 and 12 first.

A	Malfunction does not occur
B	Malfunction occurs

B	GO TO STEP 10

A

9	SYMPTOM SIMULATION

10	DTC CHECK (See page 05–528)

A	Malfunction code
B	No code

B → GO TO STEP 12

A

11	DTC CHART (See page 05–544)

GO TO STEP 14

12	BASIC INSPECTION (See page 05–528)

A	Wrong parts not confirmed
B	Wrong parts confirmed

B → GO TO STEP 17

A

13	PROBLEM SYMPTOMS TABLE (See page 05–551)

A	Wrong circuit confirmed
B	Wrong parts confirmed

B → GO TO STEP 17

A

14	CHECK ECM POWER SOURCE CIRCUIT (See page 05–686)

15	CIRCUIT INSPECTION

A	Malfunction not confirmed
B	Malfunction confirmed

B → GO TO STEP 18

A

16	CHECK FOR INTERMITTENT PROBLEMS (See page 05–528)

GO TO STEP 18

17	PARTS INSPECTION

18	IDENTIFICATION OF PROBLEM

19	ADJUSTMENT, REPAIR

20	CONFIRMATION TEST

END

05CPA–01

PRECAUTION

1. **Since each injector has a characteristic fuel injecting behavior, the ECM compensates such behavior by adjusting an injection time for each injector to optimize the fuel injection volume. Compensating data for the optimum injection volume, which has converted into a 30–digit–alphanumeric value, has been imprinted on a head potion of the injector as the injection compensation code.**
2. **The injection compensation code will be required to register to the ECM when replacing the injectors or the ECM.**
3. **If an incorrect injection compensation value was registered to the ECM, the engine assembly may rattle or the engine idling may be rough. In addition, it may be a cause of the engine failure or short–life.**

054JC–04

CUSTOMER PROBLEM ANALYSIS CHECK

ENGINE CONTROL SYSTEM Check Sheet

Inspector's Name

Customer's Name		VIN	
Driver's Name		Production Date	
Date Vehicle Brought in		Licence No.	
License No.		Odometer Reading	km miles

Problem Symptoms	☐ Engine does not Start	☐ Engine does not crank ☐ No initial combustion ☐ No complete combustion
	☐ Difficult to Start	☐ Engine cranks slowly ☐ Other _____
	☐ Poor Idling	☐ Incorrect first idle ☐ Idling rpm is abnormal ☐ High (rpm) ☐ Low (rpm) ☐ Rough idling ☐ Other _____
	☐ Poor Driveability	☐ Hesitation ☐ Back fire ☐ Muffler explosion (after–fire) ☐ Surging ☐ Knocking ☐ Other _____
	☐ Engine Stall	☐ Soon after starting ☐ After accelerator pedal depressed ☐ After accelerator pedal released ☐ During A/C operation ☐ Shifting from N to D ☐ Other _____
	☐ Others	

Data Problem Occurred		
Problem Frequency		☐ Constant ☐ Sometimes (times per day/month) ☐ Once only ☐ Other _____
Condition When Problem Occurs	Weather	☐ Fine ☐ Cloudy ☐ Rainy ☐ Snowy ☐ Various/Other _____
	Outdoor Temperature	☐ Hot ☐ Warm ☐ Cool ☐ Cold (approx.____ °C/____ °F)
	Place	☐ Highway ☐ Suburbs ☐ Inner City ☐ Uphill ☐ Downhill ☐ Rough road ☐ Other _____
	Engine Temp.	☐ Cold ☐ Warming up ☐ After Warming up ☐ Any temp. ☐ Other _____
	Engine Operation	☐ Starting ☐ Just after starting (min.) ☐ Idling ☐ Racing ☐ Driving ☐ Constant speed ☐ Acceleration ☐ Deceleration ☐ A/C switch ON/OFF ☐ Other _____

Condition of check engine warning light (CHK ENG)		☐ Remains on	☐ Sometimes lights up ☐ Does not light up
DTC Inspection	Normal mode (Pre–check)	☐ Normal	☐ Malfunction code(s) (code) ☐ Freeze frame data ( )
	Check Mode	☐ Normal	☐ Malfunction code(s) (code) ☐ Freeze frame data ( )

05CPB–01

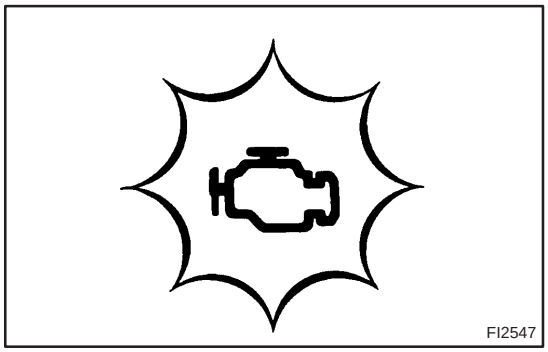
FI2547

PRE–CHECK

1. DIAGNOSIS SYSTEM

(a) Description for Euro–OBD

- When troubleshooting Euro–OBD vehicles, the only difference from the usual troubleshooting procedure is that you connect an OBD scan tool complying with ISO 15031–4 or a hand–held tester to the vehicle, and read the various data output from the vehicle's ECM.
- Euro–OBD regulations require that the vehicle's on–board computer illuminates the check engine warning light (CHK ENG) on the instrument panel when the computer detects a malfunction in the emission control system / components or in the power train control components which affect vehicle emissions, or a malfunction in the computer. In addition to an illumination of the CHK ENG when a malfunction is detected, the applicable Diagnostic Trouble Codes (DTCs) prescribed by ISO 15031–4 are recorded in the ECM memory (See page 05–544). If the malfunction does not reoccur in 3 consecutive trips, the CHK ENG goes off automatically but the DTCs remain recorded in the ECM memory.

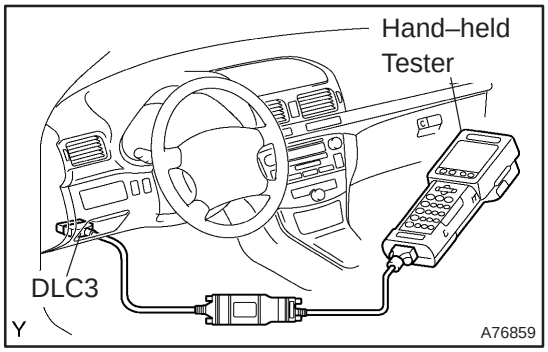

- To check the DTCs, connect the OBD scan tool or hand–held tester to Data Link Connector 3 (DLC3) on the vehicle. The OBD scan tool or hand–held tester also enables you to erase the DTCs and check the freeze frame data and various forms of engine data. (For operating instructions, see the OBD scan tool's instruction book.)
- DTCs include ISO controlled codes and manufacturer controlled codes. ISO controlled codes must be set as prescribed by the ISO, while manufacturer controlled codes can be set freely by the manufacturer within the prescribed limits (See DTC chart on page 05–544).
- The diagnosis system operates in the normal mode during normal vehicle use. It also has a check (test) mode for technicians to simulate malfunction symptoms and troubleshoot. Most DTCs use 2 trip detection logic* to prevent erroneous detection, and to ensure a thorough malfunction detection. By switching the ECM to the check mode using hand–held tester when troubleshooting, a technician can cause the CHK ENG to illuminate for a malfunction that is only detected once or momentarily (Hand–held tester only) (See step 3).

- * 2 trip detection logic
  When a logic malfunction is first detected, the pending fault code is stored in the ECM memory (1st trip). If the same malfunction is detected again during the second drive test, this second detection causes the CHK ENG to illuminate (2nd trip) (However, the ignition switch must be turned OFF between the 1st trip and 2nd trip).
- Freeze frame data:
  The freeze frame data records the engine conditions (fuel system, calculator load, engine coolant temperature, engine speed, vehicle speed, etc.) when the malfunction is detected. When troubleshooting, it is useful for determining whether the vehicle was running or stopped, the engine was warmed up or not, etc. at the time of the malfunction.
- Priorities for troubleshooting:
  If troubleshooting priorities for multiple DTCs are given in the applicable DTC chart, these should be followed.

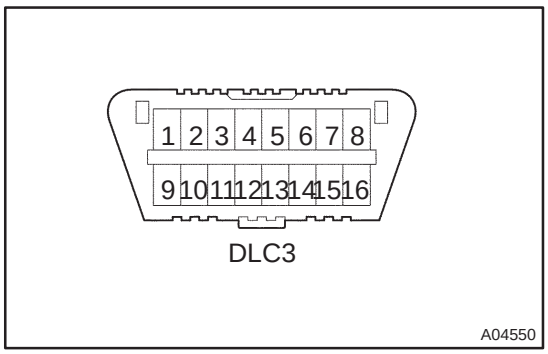

(b) Check the DLC3.
The vehicle's ECM uses the ISO 9141–2(Euro–OBD) communication protocol. The terminal arrangement of the DLC3 complies with ISO 15031–03 and matches the ISO 9141–2 format.

Terminal No.	Connection / Voltage or Residence	Condition
7	Bus + Line / Pulse generation+	During transmission
4	Chassis Ground – Body Ground / 1 Ω or less	Always
16	Battery Positive – Body Ground / 9 to 14 V	Always

HINT:
If the display shows "UNABLE TO CONNECT TO VEHICLE" when you have connected the cable of the hand–held tester to the DLC3, turned the ignition switch ON and operated the hand–held tester, there is a problem on the vehicle side or tool side.

- If communication is normal when the tool is connected to another vehicle, inspect the DLC3 on the original vehicle.
- If communication is still impossible when the tool is connected to another vehicle, the problem is probably in the tool itself, so consult the Service Deparment listed in the tool's instruction manual.

(c) Inspect the battery voltage.
Battery voltage: 11 to 14 V

If voltage is below 11V, recharge the battery before proceeding.

(d) Check the CHK ENG.
(1) The CHK ENG lamp comes on when the ignition switch is turned ON and the engine is not running.

HINT:
If the CHK ENG is not illuminate, troubleshoot the combination meter.

(2) When the engine is started, the CHK ENG should go off. If the lamp remains on, it means that the diagnosis system has detected a malfunction or abnormality in the system.

2. DTC CHECK (Normal Mode):

NOTICE:

Hand–held tester only:

When the diagnosis system is switched from the normal mode to the check mode, it erases all DTCs and freeze frame data recorded in the normal mode. So before switching modes, always check the DTCs and freeze frame data, and then write them down.

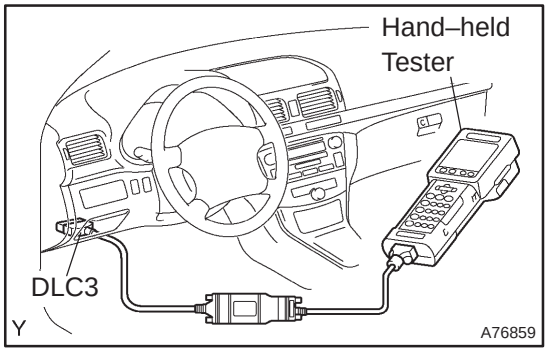

(a) Checking DTCs using the hand–held tester.
(1) Connect the hand–held tester to the DLC3.
(2) Turn the ignition switch ON and switch the hand–held tester main switch ON.
(3) Use the hand–held tester to check the DTCs and freeze frame data and then write them down. If you need help with the hand–held tester, refer to the hand–held tester's instruction book).
(4) See page 05–544 to confirm the details of the DTCs.

(b) Clearing the DTCs using the hand–held tester:
(1) Connect the hand–held tester to the DLC3.
(2) Turn the ignition switch ON.
(3) When operating the hand–held tester to erase the codes, the DTCs and freeze frame data will be erased. (See the hand–held tester's instruction book for operating instructions.)

(c) Clearing the DTCs not using the hand–held tester:
(1) Disconnect the battery terminal or remove the EFI and ETCS fuses from the engine room R/B for more than 60 seconds.

3. DTC CHECK (Check Mode):

HINT:

Hand–held tester only:

Compared to the normal mode, the check mode has more sensing ability to detect malfunctions. Furthermore, the same diagnostic items which are detected in the normal mode can also be detected in the check mode.

(a) Procedure for Check Mode using the hand–held tester.

(1) Check the initial conditions.
- Battery positive voltage 11V or more.
- Throttle valve fully closed.
- Transmission in the ”N” position.
- A/C switched OFF.

(2) Turn the ignition switch OFF.

(3) Connect the hand–held tester to the DLC3.

(4) Turn the ignition switch ON and switch the hand–held tester main switch ON.

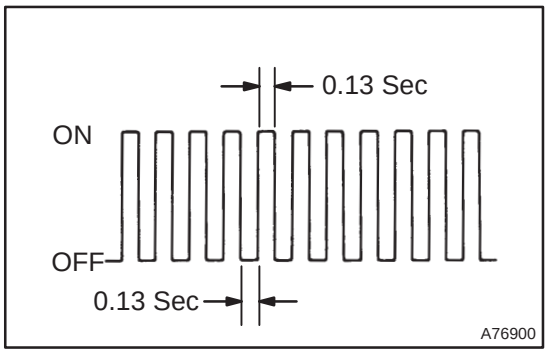

(5) Switch the hand–held tester from the normal mode to the check mode. The CHK ENG blinks in 0.13 sec intervals as shown in the illustration.

NOTICE:

If the hand–held tester switches the ECM from the normal mode to the check mode or vice–versa, or if the ignition switch is turned from ON to ACC or OFF during the check mode, the DTC and freeze frame data will be erased.

(6) Start the engine. (The CHK ENG goes off after the engine start.)

(7) Simulate the conditions of the malfunction described by the customer.

NOTICE:

Leave the ignition switch ON until you have checked the DTC, etc.

(8) After simulating the malfunction conditions, use the hand–held tester diagnosis selector to check the DTCs and freeze frame data, etc.

HINT:

Be sure not to turn the ignition switch OFF, because the diagnosis system is changed from the check mode to the normal mode and will result in all of the DTCs and freeze frame data being erased.

(9) After checking the DTC, inspect the applicable circuit.

(b) Clearing the DTCs using the hand–held tester:

(1) Connect the hand–held tester to the DLC3.

(2) Turn the ignition switch ON.

(3) When operating the hand–held tester to erase the codes, the DTCs and freeze frame data will be erased. (See the hand–held tester’s instruction book for operating instructions.)

(c) Clearing the DTCs not using the hand–held tester:
(1) Disconnect the battery terminal or remove the EFI and ETCS fuses from the engine room R/B for more than 60 seconds.

4. FAIL–SAFE CHART

If any of the following codes are recorded, the ECM enters the fail–safe mode.

DTC No.	Fail–Safe Operation	Fail–Safe Deactivation Conditions
P0087	VTA is fixed at 10 %	Ignition switch OFF
P0088	VTA is fixed at 10 %	Ignition switch OFF
P0093	After fail safe driving control is performed for 1 minute, engine stalls	Ignition switch OFF
P0095 P0097 P0098	Intake air temp. is fixed at 145°C (293°F)	Return to normal condition
P0105 P0107 P0108	Turbo pressure is set at fixed value	Return to normal condition
P0115 P0117 P0118	When fuel temp. sensor operates normal and intake air temp. is less than 15°C (59°F), value of fuel temp. sensor is substituted When fuel temp. sensor operates normal and intake air temp. is more than 20°C (68°F), value is fixed at 120°C (248°F) When the fuel temp. sensor is abnormal, value is fixed at 40°C (104°F)	Return to normal condition
P0168	Output limit	Return to normal condition
P0180 P0182 P0183	Fuel temp. is fixed at 40°C (104°F)	Return to normal condition
P0190 P0191 P0192 P0193	VTA is fixed at 10 %	Ignition switch OFF
P0200	VTA is fixed at 25 %	Ignition switch OFF
P0335	Output limit	Return to normal condition
P0488	VTA is fixed at 25 %	Ignition switch OFF
P0500	Vehicle speed is fixed at 0 km/h (0 mph)	Vehicle speed less than 10 km/h (6 mph)
P1229	VTA is fixed at 10 %	Ignition switch OFF
P1271	VTA is fixed at 25 %	Ignition switch OFF
P1272	VTA is fixed at 25 %	Ignition switch OFF
P2120 P2122 P2123 P2125 P2127 P2128 P2138	Output limit	Ignition switch OFF

5. CHECK FOR INTERMITTENT PROBLEMS

Hand–held tester only:

By putting the vehicle's ECM in the check mode, the 1 trip detection logic is possible instead of the 2 trip detection logic, and the sensitivity to detect faults is increased. This makes it easier to detect intermittent problems.

(a) Clear the DTCs (See step 2).
(b) Set the check mode (See step 3).

(c) Perform a simulation test (See page 01–22).
(d) Check the connector and terminal (See page 01–32).
(e) Wiggle the harness and connector (See page 01–32).

6. DATA LIST

HINT:
Using the DATA LIST displayed by the hand–held tester, you can read the value of the switches, sensors, actuators and so on without parts removal. Reading the DATA LIST as a first step of troubleshooting is one method to shorten diagnostic time.

NOTICE:
The values given below for "Normal Condition" are representative values. A vehicle may still be normal even if its value differs from those listed here. Do not solely depend on the "Normal Condition" here when deciding whether a part is faulty or not.

(a) Warm up the engine.
(b) Turn the ignition switch OFF.
(c) Connect the hand–held tester to the DLC3.
(d) Turn the ignition switch ON.
(e) Push the "ON" button of the hand–held tester.
(f) Select the item "DIAGNOSIS / OBD/MOBD / DATA LIST".
(g) According to the display on tester, read the "DATA LIST".

Hand–held Tester Display	MeasurementItem/Range (Display)	Normal Condition *	Diagnostic Note
INJ VOLUME	Injection volume/ Min.: 0 mm^3, Max.: 1279.98 mm^3	Idling: 3 to 10 mm^3	—
INJ TIMING	Injection timing/ Min.: 0°CA, Max.: 51°CA	Idling: –1 to 5°CA	—
ENGINE SPD	Engine speed/ Min.: 0 rpm, Max.: 16383.75 rpm	Idling: 750 to 850 rpm	—
MAF	Air flow rate from MAF sensor status/ Min.: 0 gm/s, Max.: 655.35 gm/s	• Idling: 3.2 to 4.7 gm/s • Running without load (2,500 rpm): 13.1 to 18.9 gm/s	If the value is Approximately 0.0 gm/s: • Mass air flow meter power source circuit open • VG circuit open or short If the valve is 160 gm/s or more: • E2G circuit open
PIM	Absolute pressure inside intake manifold/ Min.: 0 kPa, Max.: 255 kPa	Idling: 85 to 110 kPa	—
COOLANT TEMP	Coolant temperature/ Min.: –40 °C, Max.: 215 °C	After warming up: 80 to 95°C (176 to 203°F)	If the value is "–40 °C" or "140 °C", sensor circuit is open or shorted.
INTAKE AIR	Intake air temperature/ Min.: –40 °C, Max.: 215 °C	Equivalent to Ambient Temp.	
FUEL TEMP	Fuel temperature status/ Min.: –40 °C, Max.: 215 °C	Actual fuel temp.	
ACCEL POSITION	Accel position status/ Min.: 0 %, Max.: 100 %	• Accelerator pedal released: 10 to 22 % • Accelerator pedal depressed: 52 to 90 %	Read the value with ignition switch ON (Do not start engine).
VEHICLE SPD	Vehicle speed/ Min.: 0 km/h, Max.: 255 km/h	Actual vehicle speed	Speed indicated on speedometer
THROTTLE POS	Throttle step position status/ Min.: 1 step, Max.: 255 step	• Throttle fully closed: 1 step • Throttle fully open: 255 step	Read the value with ignition switch ON (Do not start engine).
COMN RAIL PRESS	Common rail pressure status/ Min.: 0 MPa, Max.: 255 MPa	Idling: 30 to 40 MPa	—

Hand–held Tester Display	MeasurementItem/Range (Display)	Normal Condition *	Diagnostic Note
AMBI TEMP SENS	Ambient temperature sensor status/ Min.: –40 °C, Max.: 215 °C	Actual atmosphere	If the value is ”–40 °C” or ”140 °C”, sensor circuit is open or shorted.
INJ VOL FB #1	Revised injection volume of the cylinder 1/ Min.: –10 mm^3, Max.: 40 mm^3	Idling: –3.0 to 3.0 mm^3	—
INJ VOL FB #2	Revised injection volume of the cylinder 2/ Min.: –10 mm^3, Max.: 40 mm^3	Idling: –3.0 to 3.0 mm^3	—
INJ VOL FB #3	Revised injection volume of the cylinder 3/ Min.: –10 mm^3, Max.: 40 mm^3	Idling: –3.0 to 3.0 mm^3	—
INJ VOL FB #4	Revised injection volume of the cylinder 4/ Min.: –10 mm^3, Max.: 40 mm^3	Idling: –3.0 to 3.0 mm^3	—
PUMP VCM ANGLE	Pump vacuum angle status/ Min.: 0 °CA, Max.: 255 °CA	Idling: 70 to 90˚CA	—
M–INJ/PILOT ON	M–INJ/PILOT ON/ Min.: 0 us, Max.: 65,535 us	Idling: 600 to 1,200 us	—
M–INJ/PILOT OFF	M–INJ/PILOT OFF/ Min.: 0 us, Max.: 65,535 us	Idling: 0 us	—
PILOT–INJ	Pilot–Injection/ Min.: 0 us, Max.: 65,535 us	Idling: 400 to 700 us	—
INJ FB VALUE	Injection volume feedback learning value/ Min.: –10 mm^3, Max.: 9,092 mm^3	Idling: –4.0 to 4.0 mm^3	—
STOP LIGHT SW	Stop light switch/ ON or OFF	• Brake pedal depressed: ON • Brake pedal released: OFF	—
STARTER SIG	Starter signal/ ON or OFF	Cranking: ON	—
A/C CUT SIG	A/C cut signal/ ON or OFF	A/C ON: OFF	—
EGR SYSTEM	EGR system status/ ON or OFF	Idling: ON	—
ACCEL OPEN SW	Accel open switch/ ON or OFF	Accelerator pedal fully opened: ON	—
CHECK MODE	Check mode/ ON or OFF	Check mode ON: ON	—
EGR STEP POS	EGR step position status/ Min: 0 step, Max: 125 step	Idling: 0 to 125 step	—

*: If no conditions are specifically stated for ”ldling”, it means the A/C switch is OFF and all accessory switches are OFF.

7. ACTIVE TEST

HINT:

Performing the ACTIVE TEST using the hand–held tester allows the relay, VSV, actuator and so on to operate without parts removal. Performing the ACTIVE TEST as a first step of troubleshooting is one of the methods to shorten diagnostic time.

It is possible to display the DATA LIST during the ACTIVE TEST.

(a) Warm up the engine.
(b) Turn the ignition switch OFF.
(c) Connect the hand–held tester to the DLC3.
(d) Turn the ignition switch ON.
(e) Push the ”ON” button of the hand–held tester.
(f) Select the item ”DIAGNOSIS / OBD/MOBD / ACTIVE TEST”

(g) According to the display on tester, perform the ”ACTIVE TEST”.

Hand–held Tester Display	Test Details	Diagnostic Note
EGR STEP POS	[Test Details] Change step of EGR motor Min: 0 step, Max: 125 step	—
TC/TE1	[Test Details] Connect the TC and TE1 ON or OFF	—
FUEL LEAK TEST	[Test Details] Fuel leak test ON or OFF	—
INJECTOR CUT #1	[Test Details] Injector cut #1 ON or OFF	—
INJECTOR CUT #2	[Test Details] Injector cut #2 ON or OFF	—
INJECTOR CUT #3	[Test Details] Injector cut #3 ON or OFF	—
INJECTOR CUT #4	[Test Details] Injector cut #4 ON or OFF	—

8. READ INJECTOR COMPENSATION CODE

HINT:

This operation is useful when confirming the compensation code of each injector or when DTC P1601 is present.

Reading flowchart:

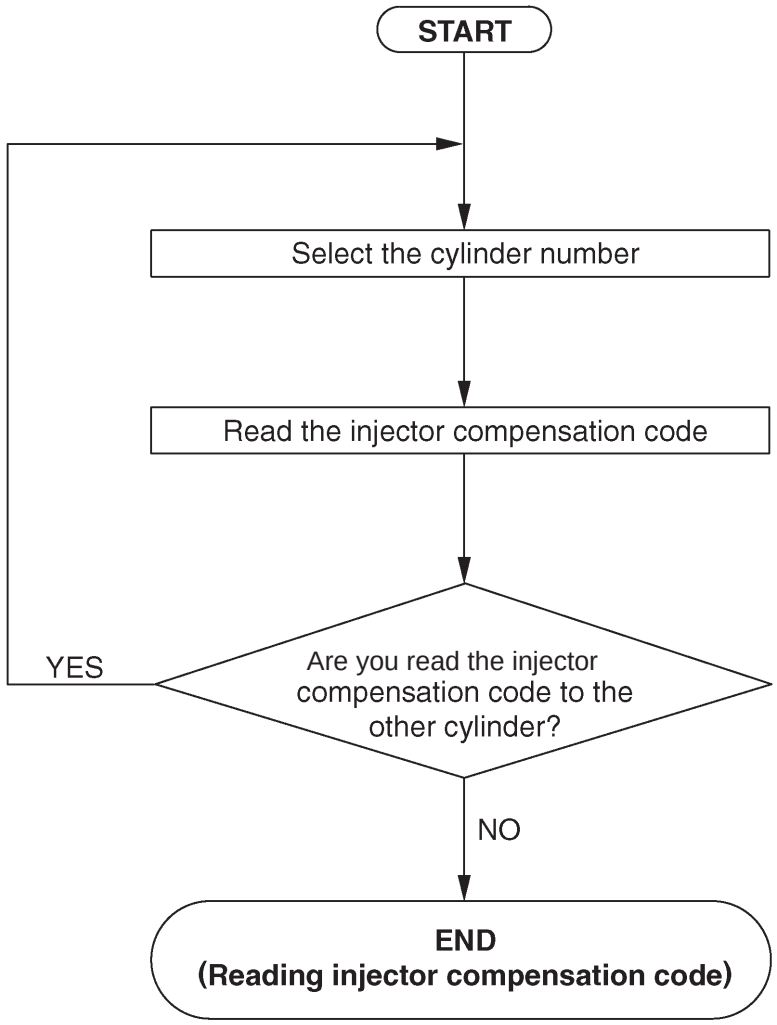

Y A81230

(a) Connect the hand–held tester to the DLC 3.
(b) Turn the ignition switch ON.
(c) Turn the main switch of the hand–held tester ON.

NOTICE:

Do not start the engine in this operation.

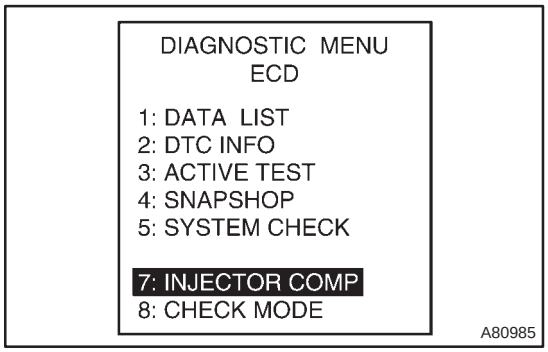

(d) Enter ”DIAGNOSIS / OBD/MOBD / DIAGNOSTIC MENU ECD” and select the item ”INJECTOR COMP.”

(e) Press the ”ENTER” button on the hand–held tester.

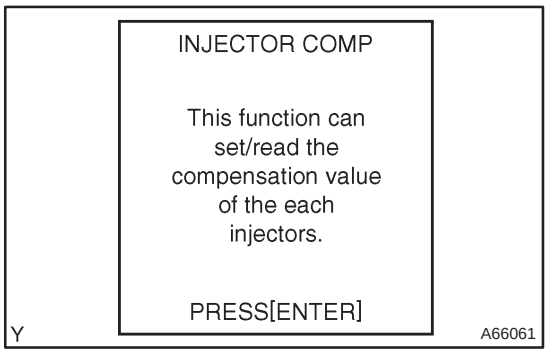

(f) Press the ”ENTER” button again.

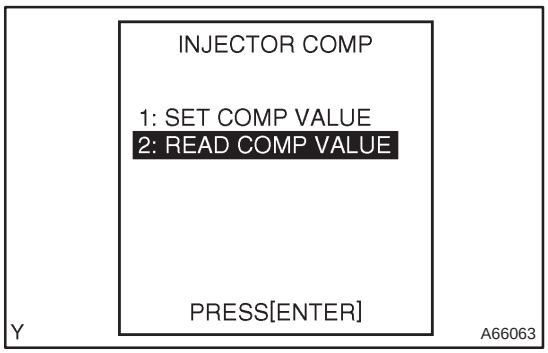

(g) Select ”READ COMP VALUE” and press the ”ENTER” button.

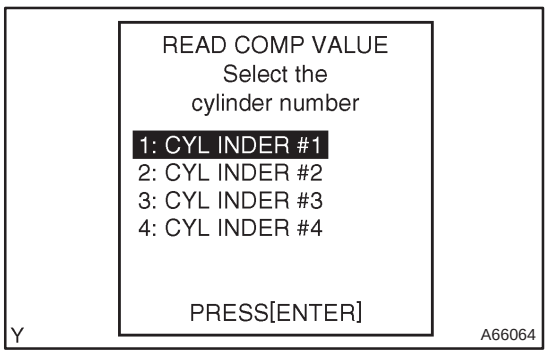

(h) Select a cylinder number which you want to read the compensation code.

(i) Press the ”ENTER” button.

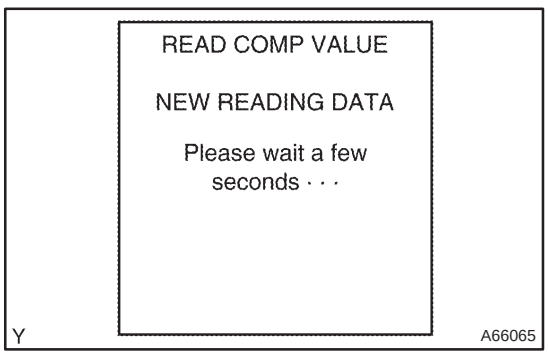

(j) Wait until the next screen comes up.

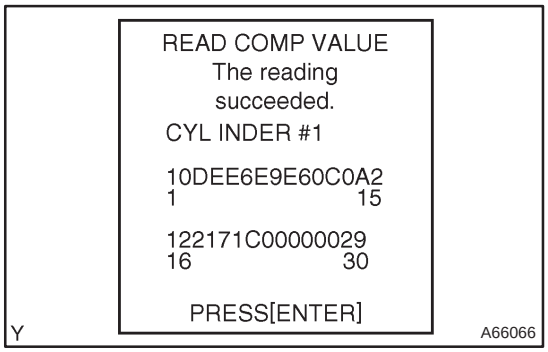

(k) Confirm the 30–digit–alphanumeric code which is displayed on the hand–held tester. This is the injection compensation code for the cylinder.

HINT:

The code shown in the illustration is an example.

(l) Press the ”ENTER” button to exit this screen.

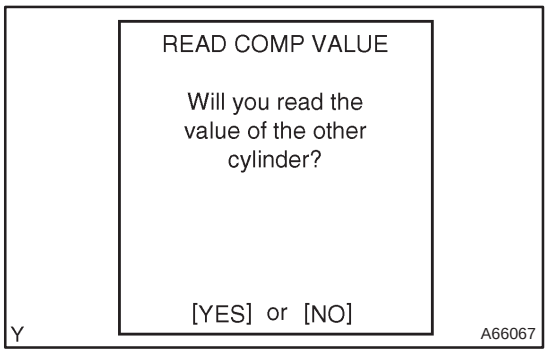

(m) Press the ”NO” button to complete the confirmation.

HINT:

- If you want to read other compensation codes for other cylinders, press the ”YES” button instead of ”NO.”
- By pressing the ”NO” button, the hand–held tester returns to the ”DIAGNOSTIC MENU ECD” screen.

9. SET INJECTOR COMPENSATION CODE

HINT:
This operation must be done when replacing the ECM or the injectors.

Setting flowchart:

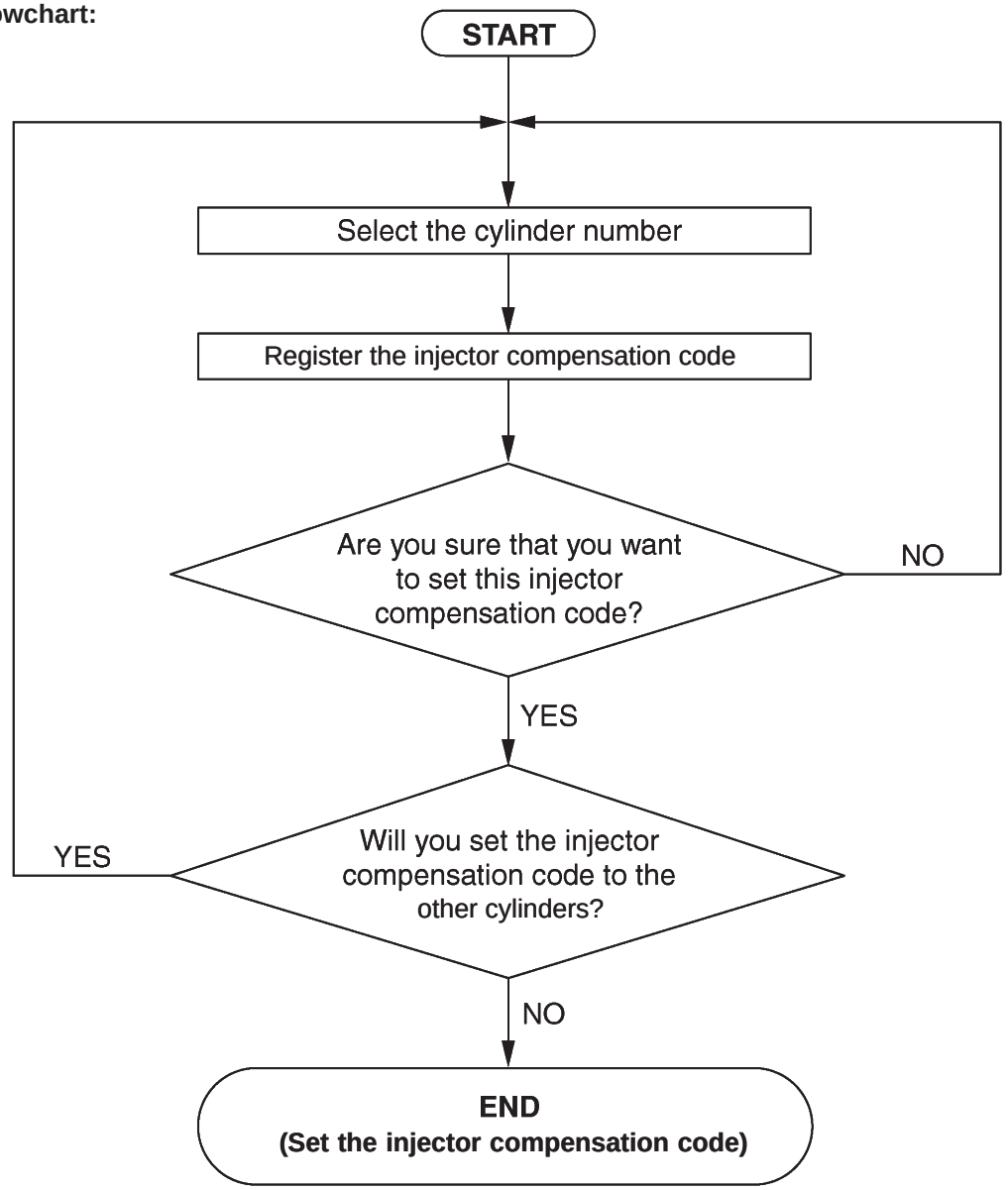

Y A81231

(a) Connect the hand–held tester to the DLC 3.
(b) Turn the ignition switch ON.
(c) Turn the main switch of the hand–held tester ON.

NOTICE:
Do not start the engine in this operation.

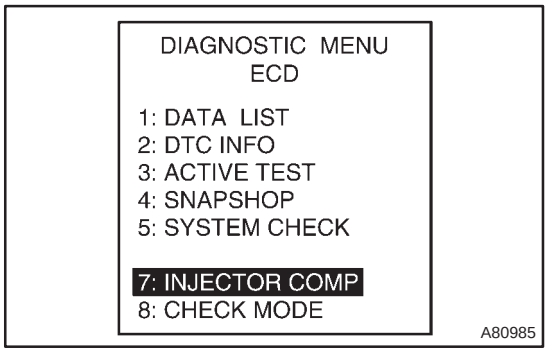

(d) Enter ”DIAGNOSIS / OBD/MOBD / DIAGNOSTIC MENU ECD” and select the item ”INJECTOR COMP.”

(e) Press the ”ENTER” button on the hand–held tester.

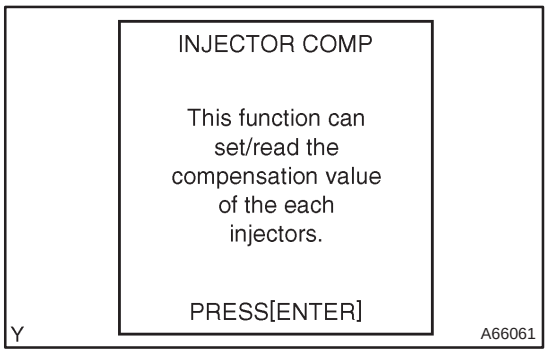

(f) Press the ”Enter” button again.

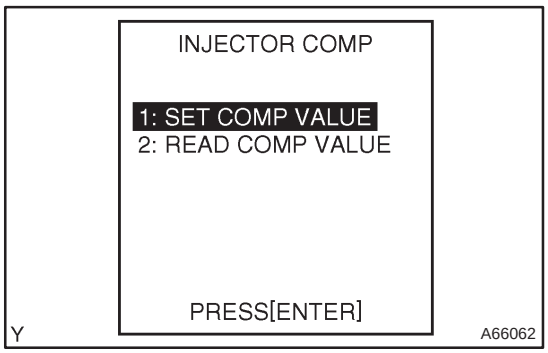

(g) Select ”SET COMP VALUE” and press the ”ENTER” button.

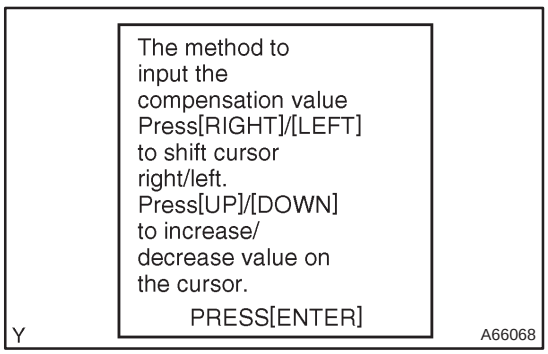

(h) Press the ”ENTER” button.

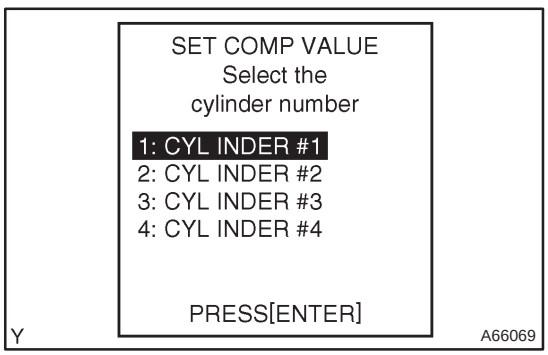

(i) Select a cylinder number which you want to register the compensation code.

(j) Press the ”ENTER” button.

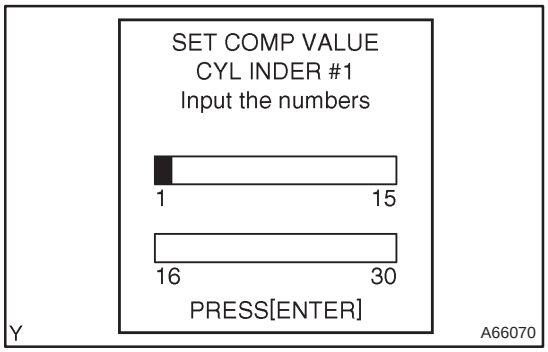

(k) Input the 30–digit–alphanumeric code with the hand–held tester to register the compensation code to the ECM.

NOTICE:

Be careful not to register a wrong compensation code to the ECM. The compensation code which stored in the ECM must be consistent with the compensation code of the injector assembly. If a wrong code was set to the ECM, rough idling or engine rattling may result. In addition, it may be a cause of the engine failure or short–life.

(l) After inputting, press the ”ENTER” button.

(m) Press the ”ENTER” button again.

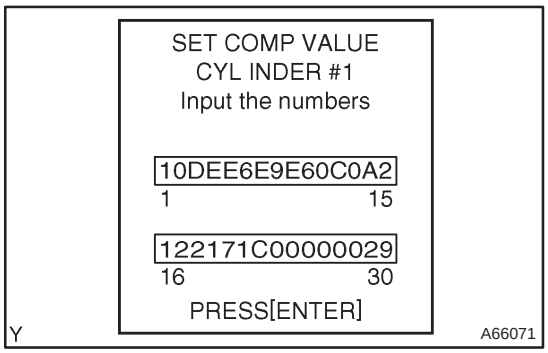

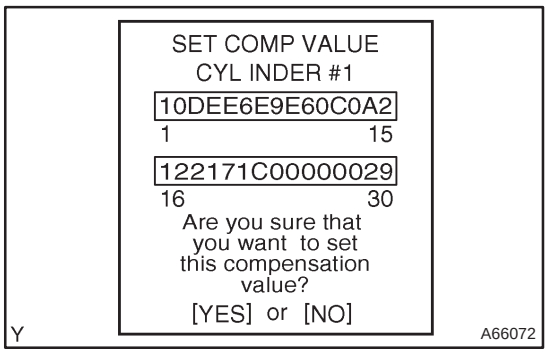

(n) Confirm the injection compensation code which is displayed on the hand–held tester.

HINT:

The code shown in the illustration is an example.

NOTICE:

- **Make sure the correct compensation code is entered on the hand–held tester before pressing YES button.**
- **If a wrong compensation code was entered on the hand–held tester, select the ”NO” button to correct the error (Back to step (g)).**

(o) Press the ”YES” button to set the code to the ECM.

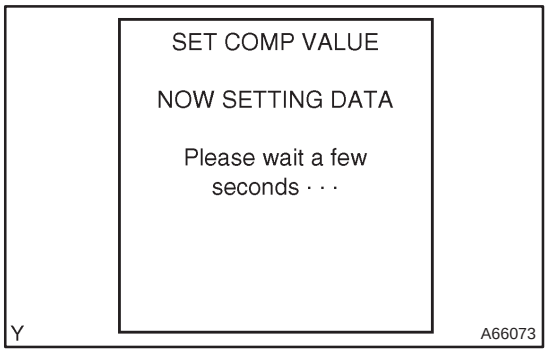

(p) Wait until the next screen comes up.

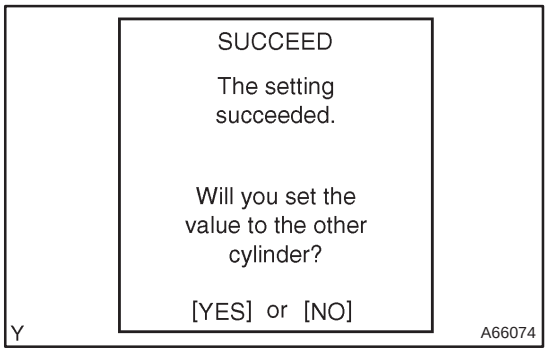

(q) Press the ”NO” button to complete the registration.

HINT:

- If you want to register other compensation code for other cylinders, press the ”YES” button instead of ”NO.”
- By pressing the ”NO” button, the hand–held tester returns to the ”DIAGNOSTIC MENU ECD” screen.

BASIC INSPECTION

When the malfunction is not confirmed in the DTC check, troubleshooting should be carried out in all the possible circuits considered as causes of the problem. In many cases, by carrying out the basic engine check shown in the following flow chart, the location causing the problem can be found quickly and efficiently. Therefore, using this check is essential in the engine troubleshooting.

1	CHECK BATTERY VOLTAGE

NOTICE:

Carry out this check with the engine stopped and ignition switch OFF.

	OK	NG
Voltage	11 V or more	Less than 11 V

NG → **CHARGE OR REPLACE BATTERY**

OK

2	CHECK IF ENGINE WILL CRANK

NG → **PROCEED TO PROBLEM SYMPTOMS TABLE ON PAGE 05–551**

OK

3	CHECK AIR FILTER

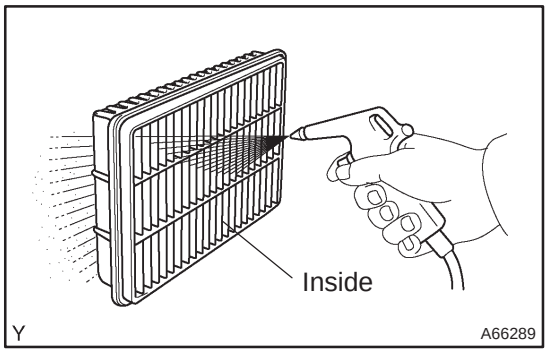

(a) Visually check that the air filter is not excessively dirty or oily.

NOTICE:

If necessary, clean the filter with compressed air. First blow from the inside thoroughly, then blow from the outside of the filter.

NG → **CLEAN OR REPLACE**

OK

4	CHECK FUEL QUALITY

(a) Check that only diesel fuel is used
(b) Check that the fuel does not contain any impurity.

NG → REPLACE FUEL

OK

5	CHECK ENGINE OIL (See page 17–20)

NG → ADD OR REPLACE

OK

6	CHECK ENGINE COOLANT (See page 16–37)

NG → REPLACE ENGINE COOLANT (See page 16–44)

OK

7	CHECK IDLE SPEED AND MAXIMUM SPEED (See page 14–266)

NG → REPAIR OR REPLACE INJECTION PUMP (See page 11–69)

OK

8	CHECK DIAGNOSTIC CIRCUIT

NG → REPAIR OR REPLACE

OK

9	CHECK VACUUM PUMP

NG → REPAIR OR REPLACE VACUUM PUMP

OK

PROCEED TO PROBLEM SYMPTOMS TABLE ON PAGE (See page 05–551)

054JD–04

DIAGNOSTIC TROUBLE CODE CHART

HINT:

Parameters listed in the chart may not be exactly the same as your readings due to the type of instrument or other factors.

If a malfunction code is displayed during the DTC check in the check mode, check the circuit for the codes listed in the table below. For details of each code, refer to the ''See page '' under the respective ''DTC No.'' in the DTC chart.

DTC No. (See Page)	Detection Item	Trouble Area	*1 CHK ENG	Memory
P0045 (05–554)	Turbo/Super Charger Boost Control Solenoid Circuit / Open	• VRV • Open or short in VRV circuit • ECM	○	○
P0087 (05–557)	Fuel Rail/System Pressure – Too Low	• Open or short in fuel pressure sensor circuit • Fuel pressure sensor • ECM	○	○
P0088 (05–563)	Fuel Rail/System Pressure – Too High	• Supply pump • Pressure discharge valve • Short in Supply pump (suction control valve)circuit • Open pressure discharge valve circuit • ECM	○	○
P0093 (05–570)	Fuel System Leak Detected – Large Leak	• Fuel line between supply pump and common rail • Fuel line between common rail and injector • Supply pump • Common rail • Injector (P1238 is set simultaneously) • Pressure discharge valve • Open or short in EDU circuit (P0200 is set simultaneously) • Open or short in injector circuit (P0200 and P1238 are set simultaneously) • EDU (P0200 is set simultaneously) • ECM	○	○
P0095 (05–573)	Intake Air Temperature Sensor 2 Circuit	• Open or short in diesel turbo inlet air temp. sensor circuit • Diesel turbo inlet air temperature sensor • ECM	○	○
P0097 (05–573)	Intake Air Temperature Sensor 2 Circuit Low		○	○
P0098 (05–573)	Intake Air Temperature Sensor 2 Circuit High		○	○
P0100 (05–577)	Mass or Volume Air Flow Circuit	• Open or short in mass air flow meter circuit • Mass air flow meter • ECM	○	○
P0101 (05–583)	Mass or Volume Air Flow Circuit Range/PerformanceProblem	• Mass air flow meter	○	○
P0102 (05–577)	Mass or Volume Air Flow Meter Circuit Low Input	• Open or short in mass air flow meter circuit • Mass air flow meter • ECM	○	○
P0103 (05–577)	Mass or Volume Air Flow Meter Circuit High Input		○	○
P0105 (05–584)	Manifold Absolute Pressure/ Barometric Pressure Circuit	• Open or short in manifold absolute pressure sensor circuit • Manifold absolute pressure sensor • Turbocharger assy • EGR valve assy • ECM	○	○
P0106 (05–588)	Manifold Absolute Pressure/ Barometric Pressure Circuit Range/PerformanceProblem	• Manifold absolute pressure sensor	○	○

P0107 (05–584)	Manifold Absolute Pressure/ Barometric Pressure Circuit Low Input	• Open or short in manifold absolute pressure sensor circuit • Manifold absolute pressure sensor • Turbocharger assy • EGR valve assy • ECM	○	○
P0108 (05–584)	Manifold Absolute Pressure/ Barometric Pressure Circuit High Input		○	○
P0110 (05–589)	Intake Air Temperature Circuit	• Open or short in intake air temperature sensor circuit • Intake air temperature sensor (built in mass air flow meter) • ECM	○	○
P0112 (05–589)	Intake Air Temperature Circuit Low Input		○	○
P0113 (05–589)	Intake Air Temperature Circuit High Input		○	○
P0115 (05–593)	Engine Coolant Temperature Circuit	• Open or short in engine coolant temp. sensor circuit • Engine coolant temp. sensor • ECM	○	○
P0116 (05–597)	Engine Coolant Temperature Circuit Range/Performance Problem	• Cooling system • Engine coolant temperature sensor • Thermostat	○	○
P0117 (05–593)	Engine Coolant Temp. Circuit Low Input	• Open or short in engine coolant temp. sensor circuit • Engine coolant temp. sensor • ECM	○	○
P0118 (05–593)	Engine Coolant Temp. Circuit High Input		○	○
P0168 (05–598)	Fuel Temperature Too High	• Fuel temperature sensor	○	○
P0180 (05–599)	Fuel Temperature Sensor "A" Circuit	• Open or short in fuel temp. sensor circuit • Fuel temperature sensor • ECM	○	○
P0182 (05–599)	Fuel Temperature Sensor "A" Circuit Low Input		○	○
P0183 (05–599)	Fuel Temperature Sensor "A" Circuit High Input		○	○
P0190 (05–557)	Fuel Rail Pressure Sensor Circuit	• Open or short in fuel pressure sensor circuit • Fuel pressure sensor • ECM	○	○
P0191 (05–603)	Fuel Rail Pressure Sensor CircuitRange/Performance	• Fuel pressure sensor	○	○
P0192 (05–557)	Fuel Rail Pressure Sensor Circuit Low Input	• Open or short in fuel pressure sensor • Fuel pressure sensor • ECM	○	○
P0193 (05–557)	Fuel Rail Pressure Sensor Circuit High Input		○	○
P0200 (05–604)	Injector Circuit / Open	• Open or short in EDU circuit • Injector • EDU • ECM	○	○
P0234 (05–612)	Turbo/Super Charger Overboost Condition	• VRV • Open or short in VRV circuit • Turbocharger • EGR valve • Vacuum hose • ECM	○	○
P0299 (05–612)	Turbo/Super Charger Underboost		○	○
P0335 (05–616)	Crankshaft Position Sensor "A" Circuit	• Open or short in crankshaft position sensor circuit • Crankshaft position sensor • Signal plate (crankshaft timing pulley) • ECM	○	○
P0339 (05–616)	Crankshaft Position Sensor "A" CircuitIntermittent		—	○
P0340 (05–620)	Camshaft Position Sensor "A" Circuit (Bank 1 or Single Sensor)	• Open or short in camshaft position sensor circuit • Camshaft position sensor • Camshaft timing pulley • ECM	○	○

P0380 (05–622)	Glow Plug/Heater Circuit "A"	• Open or short in glow plug circuit • Glow fuse • Glow relay • Glow plug • ECM	○	○
P0400 (05–629)	Exhaust Gas Recirculation Flow	• EGR valve assy • EGR passage • Open or short in EGR circuit • ECM	○	○
P0403 (05–629)	Exhaust Gas Recirculation Control Circuit		○	○
P0488 (05–633)	Exhaust Gas Recirculation Throttle Position Control Range/ Performance	• Open or short in intake shutter circuit • Open or short in fully opened switch circuit • Intake shutter • ECM	○	○
P0500 (05–640)	Vehicle Speed Sensor "A"	• Open or short in speed sensor circuit • Speed sensor • Combinationmeter • ECM • Skid control ECU	○	○
P0504 (05–643)	Brake Switch "A"/"B" Correlation	• Short in stop lamp switch signal circuit • Stop lamp switch • ECM	—	○
P0560 (05–647)	System Voltage	• Open in back–up power source circuit • ECM	○	○
P0606 (05–650)	ECM/PCM Processor	• ECM	—	—
P0607 (05–650)	Control Module Performance		○	○
P0622 (05–651)	Generator Field "F" Terminal Circuit	• Open in generator circuit • Generator • Drive belt • ECM	○	○
P0627 (05–655)	Fuel Pump Control Circuit / Open	• Open or shot in suction control valve circuit • Suction control valve • ECM	○	○
P1229 (05–563)	Fuel Pump System	• Short in supply pump (suction control valve) circuit • Suction control valve • ECM	○	○
P1238 (05–658)	Injector Malfunction	• Injector • EDU (P0200 is set simultaneously) • Open or short in engine wire (P0200 is set simultaneously) • Connector connection (P0200 is set simultaneously) • Compression pressure • Valve clearance • Valve timing • ECM	○	○
P1251 (05–612)	Turbo/Super Charger Overboost Condition (Too High)	• VRV • Open or short in VRV circuit • Turbocharger • EGR valve • Vacuum hose • ECM	○	○
P1271 (05–663)	Fuel Regulator Circuit Malfunction (EDU Drive)	• Open or short in pressure discharge valve circuit • Open or short in pressure discharge valve it self • EDU • ECM	○	○
P1272 (05–663)	Fuel Pressure Regulator Malfunction	• Open or short in pressure discharge valve circuit (P1271 is set simultaneously) • Pressure discharge valve • Supply pump • ECM	○	○

P1601 (05–673)	Injector Correction Circuit Malfunction (EEPROM)	• Injector compensation code • ECM	○	○
P1611 (05–650)	IC Circuit Malfunction	• ECM	○	○
P2120 (05–674)	Throttle/Pedal Position Sensor/ Switch "D" Circuit	• Open or short in accelerator pedal position sensor circuit • Accelerator pedal position sensor • ECM	○	○
P2121 (05–681)	Throttle/Pedal Position Sensor/ Switch "D" Circuit Range/Performance	• Accelerator pedal position sensor circuit • Accelerator pedal position sensor • ECM	○	○
P2122 (05–674)	Throttle/Pedal Position Sensor/ Switch "D" Circuit Low Input	• Open or short in accelerator pedal position sensor circuit • Accelerator pedal position sensor • ECM	○	○
P2123 (05–674)	Throttle/Pedal Position Sensor/ Switch "D" Circuit High Input		○	○
P2125 (05–674)	Throttle/Pedal Position Sensor/ Switch "E" Circuit		○	○
P2127 (05–674)	Throttle/Pedal Position Sensor/ Switch "E" Circuit Low Input		○	○
P2128 (05–674)	Throttle/Pedal Position Sensor/ Switch "E" Circuit High Input		○	○
P2138 (05–674)	Throttle/Pedal Position Sensor/ Switch "D"/"E" Voltage Correlation		○	○
P2226 (05–684)	Barometric Pressure Circuit	• ECM	○	○
P2227 (05–685)	Barometric Pressure Circuit Range/Performance		○	○
P2228 (05–685)	Barometric Pressure Circuit Low Input		○	○
P2229 (05–685)	Barometric Pressure Circuit High Input		○	○
B2799 (05–1625)	Engine Immobiliser System Malfunction	• Immobiliser system	—	○

*1: Check engine warning light (CHK ENG) is illuminated

054JE–04

LOCATION

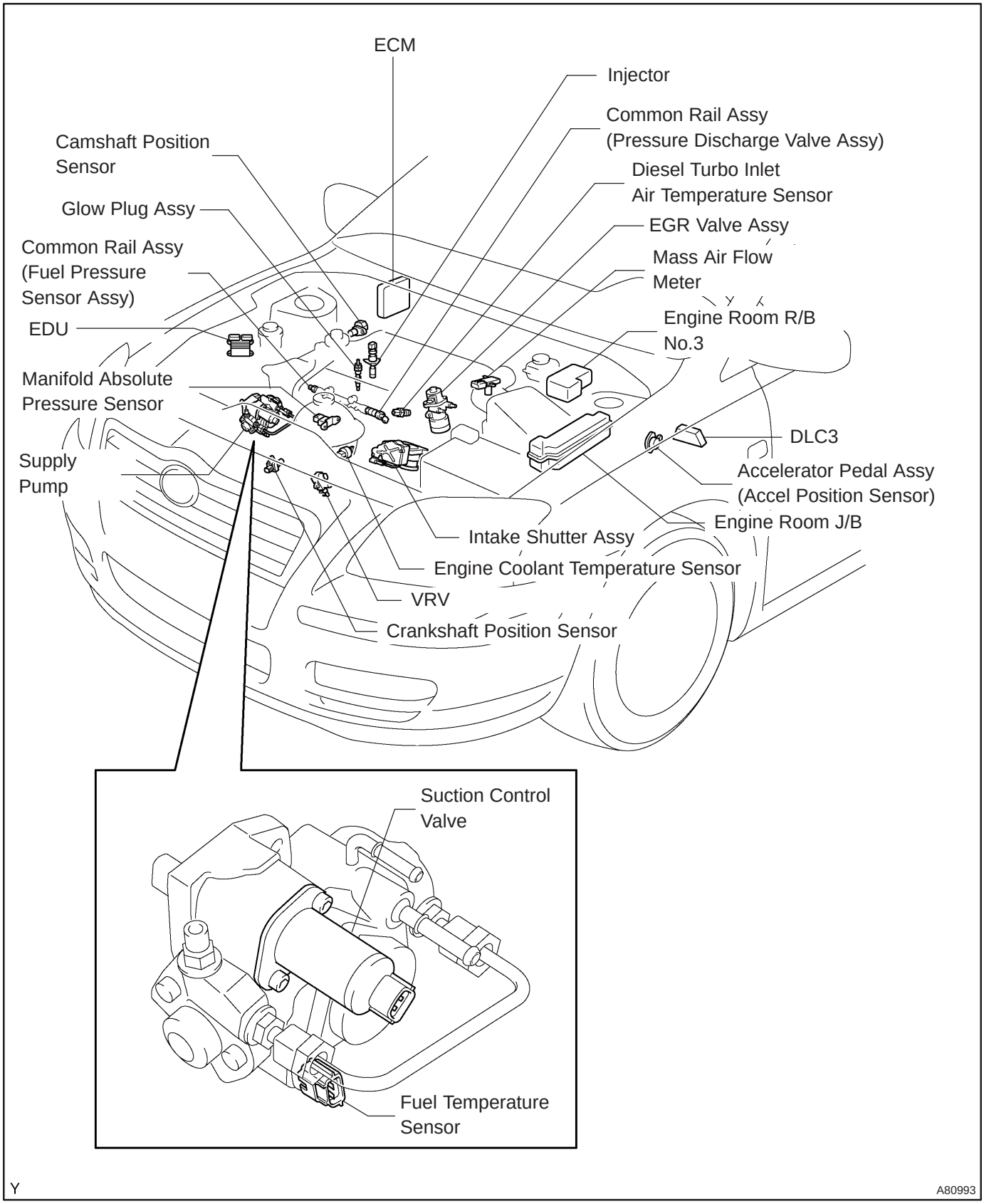

Y

A80993

054KK–04

TERMINALS OF ECM

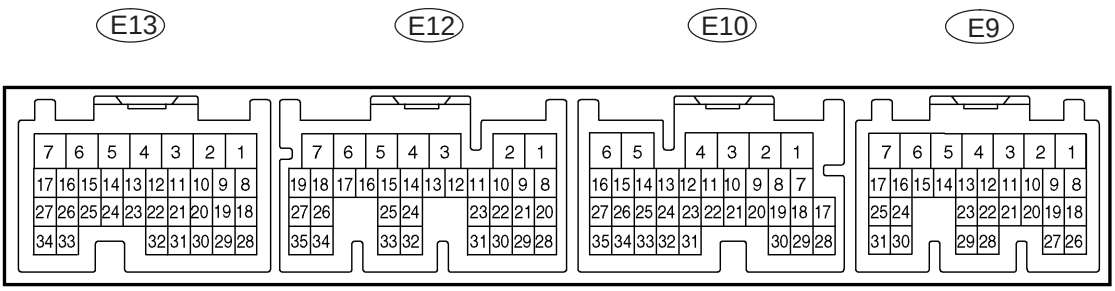

Y

A66714

Symbols (Terminal No.)	Wiring Color	Condition	STD Voltage (V)
BATT (E10–2) – E1 (E12–7)	B–Y – BR	Always	9 to 14
IGSW (E9–9) – E1 (E12–7)	B–W – BR	IG switch ON	9 to 14
+B (E9–1) – E1 (E12–7)	B–W – BR	IG switch ON	9 to 14
MREL (E9–8) – E1 (E12–7)	GR – BR	IG switch ON	9 to 14
		IG switch OFF	0 to 1.5
VC (E13–18) – E1 (E12–7)	R–W – BR	IG switch ON	4.5 to 5.5
VPA (E9–22) – EPA (E9–28)	G – Y	IG switch ON, accelerator pedal fully released	0.5 to 1.1
		IG switch ON, accelerator pedal fully depressed	3.0 to 4.6
VPA2 (E9–23) – EPA2 (E9–29)	W – Y	IG switch ON, accelerator pedal fully released	0.9 to 2.3
		IG switch ON, accelerator pedal fully depressed	3.4 to 5.0
VCPA (E9–26) – EPA (E9–28)	B – Y	IG switch ON	4.5 to 5.5
VCP2 (E9–27) – EPA2 (E9–29)	B – Y	IG switch ON	4.5 to 5.5
VG (E12–24) – EVG (E12–32)	G – L–Y	Idling	0.5 to 3.4
THA (E13–31) – E2 (E13–28)	G–R – BR	Idling, intake air temp. at 20 °C (68 °F)	0.5 to 3.4
THW (E13–19) – E2 (E13–28)	B–W – BR	Idling, engine coolant temp. at 80°C (176°F)	0.2 to 1.0
STA (E9–7) – E1 (E12–7)	B–Y – BR	Cranking	6.0 or more
#1 (E13–24) – E1 (E12–7) #2 (E13–23) – E1 (E12–7) #3 (E13–22) – E1 (E12–7) #4 (E13–21) – E1 (E12–7)	G–W – BR W–R – BR R–W – BR W–L – BR	Idling	Pulse generation (See page 05–604)
G1 (E12–23) – G– (E12–31)	P – L	Idling	Pulse generation (See page 05–616)
NE+ (E13–27) – NE– (E13–34)	G – R	Idling	Pulse generation (See page 05–616)
STP (E10–19) – E1 (E12–7)	G–W – BR	IG switch on, brake pedal is depressed	7.5 to 14
		IG switch on, brake pedal is released	0 to 1.5
ST1– (E10–12) – E1 (E12–7)	G–W – BR	Brake pedal is depressed	0 to 1.5
		Brake pedal is released	7.5 to 14
TC (E9–11) – E1 (E12–7)	W–L – BR	IG switch ON	9 to 14
W (E9–12) – E1 (E12–7)	W – BR	Idling	9 to 14
		IG switch ON	0 to 3
SP1 (E10–17) – E1 (E12–7)	V–W – BR	IG switch ON, rotate driving wheel slowly	Pulse generation (See page 05–640)
SIL (E9–18) – E1 (E12–7)	W–G – BR	Connect the hand–held tester to the DLC3	Pulse generation

PIM (E12–28) – E2 (E13–28)	W–R – BR	Applied negative pressure of 40 kPa (300 mmHg, 11.8 in. hg)	0.2 to 0.8
		Same as atmosphere	1.3 to 1.9
		Applied positive pressure of 69kPa (0.7 kg/cm^{3}, 10.0 psi)	3.2 to 3.8
IREL (E9–10) – E1 (E12–7)	Y – BR	IG switch OFF	9 to 14
		Idling	0 to 1.5
TACH (E9–5) – E1 (E12–7)	GR–R – BR	Idling	Pulse generation
VCS (E12–2) – E1 (E12–7)	R–W – BR	IG switch ON	4.5 to 5.5
GREL (E9–14) – E1 (E12–7)	R – BR	Cranking	9 to 14
		Idling	0 to 1.5
FAN (E9–3) – E1 (E12–7)	W – BR	Fan OFF	9 to 14
		Fan ON	0 to 1.5
THIA (E13–20) – E2 (E13–28)	GR – BR	Idling, intake air temp. at 80 °C (176 °F)	0.5 to 3.4
THF (E13–29) – E2 (E13–28)	L – BR	IG switch ON	0.5 to 3.4
PCR1 (E13–26) – E2 (E13–28)	P – BR	Idling	1.8 to 2.1
PCR2 (E13–33) – E2 (E13–28)	P–B – BR	Idling	1.2 to 1.5
ALT (E13–8) – E1 (E12–7)	B–L – BR	Idling	Pulse generation
RL (E12–9) – E1 (E12–7)	Y – BR	Idling	9 to 14
		IG switch ON	0 to 3
PCV+ (E13–2) – PCV– (E13–1)	LG–R – LG	Idling	Pulse generation (See page 05–563)
PRD (E13–32) – E1 (E12–7)	R–L – BR	IG switch OFF	4 to 6.5
INJF (E13–25) – E1 (E12–7)	R–B – BR	Idling	Pulse generation (See page 05–604)
EG+A (E12–6) – E1 (E12–7) EG–A (E12–5) – E1 (E12–7) EG+B (E12–4) – E1 (E12–7) EG–B (E12–3) – E1 (E12–7)	G – BR Y–G – BR R–L – BR G–B – BR	Idling	Pulse generation (See page 05–629)
LU+A (E13–15) – E1 (E12–7) LU–A (E13–14) – E1 (E12–7) LU+B (E13–13) – E1 (E12–7) LU–B (E13–12) – E1 (E12–7)	B – BR G – BR Y – BR L – BR	Racing	Pulse generation (See page 05–633)
THOP (E13–11) – E1 (E12–7)	P–L – BR	Idling	9 to 14
		IG switch ON	0 to 3
VN (E13–10) – E1 (E12–7)	W – BR	IG switch ON	Pulse generation (See page 05–554)

054JF–04

PROBLEM SYMPTOMS TABLE

When the malfunction code is not confirmed the DTC check and the problem still can not be confirmed in the basic inspection, then proceed to this step and perform troubleshooting according to the numbered order given in the table below.

Symptom	Suspect Area	See page
Does not crank (Difficult to start)	2. Starter 3. Starter relay 4. Engine coolant temperature sensor	19–22 19–22 10–56
Difficult to start with a cold engine	1. STA signal circuit 2. Injector 3. Fuel filter 4. Compression 5. ECM 6. Supply pump 7. Fuel pressure sensor 8. Diesel throttle 9. Glow plug system	05–691 11–56 11–82 14–266 10–56 10–56 10–56 10–56 10–56
Difficult to start with a warm engine	1. STA signal circuit 2. Injector 3. Fuel filter 4. Compression 5. ECM 6. Supply pump 7. Fuel pressure sensor 8. Diesel throttle	05–691 11–56 11–82 14–266 10–56 10–56 10–56 10–56
Engine stalls soon after starting	1. Fuel filter 2. Injector 3. ECM power source circuit 4. ECM 5. Supply pump 6. Fuel pressure sensor 7. Diesel throttle	11–82 11–56 05–686 10–56 10–56 10–56 10–56
Engine stalls (Other than conditions listed abobe)	1. ECM power source circuit 2. Injector 3. ECM 4. Supply pump 5. Fuel pressure sensor 6. Diesel throttle	05–686 11–56 10–56 10–56 10–56 10–56
Incorrect first idle (Poor idling)	1. Fuel filter 2. Injector 3. ECM 4. Supply pump 5. Fuel pressure sensor	11–82 11–56 10–56 10–56 10–56
High engine idle speed (Poor idling)	1. A/C signal circuit 2. Injector 3. STA signal circuit 4. ECM 5. Supply pump 6. Fuel pressure sensor	55–3 11–56 05–691 10–56 10–56 10–56

Lower engine idle speed (Poor idling)	1. A/C signal circuit 2. Injector 3. EGR system 4. Compression 5. Valve clearance 6. Fuel line (Air bleed) 7. ECM 8. Supply pump 9. Fuel pressure sensor 10. Diesel throttle	55–3 11–56 12–16 14–266 14–270 – 10–56 10–56 10–56 10–56
Rough idling (Poor idling)	1. Injector 2. Fuel line (Air bleed) 3. EGR system 4. Compression 5. Valve clearance 6. ECM 7. Supply pump 8. Fuel pressure sensor 9. Diesel throttle	11–56 – 12–16 14–266 14–270 10–56 10–56 10–56 10–56
Hunting at hot engine (Poor idling)	1. Injector 2. ECM power source circuit 3. Compression 4. Fuel line (Air bleed) 5. Valve clearance 6. ECM 7. Supply pump 8. Fuel pressure sensor 9. Diesel throttle	11–56 05–686 14–266 – 14–270 10–56 10–56 10–56 10–56
Hunting at cold engine (Poor idling)	1. Injector 2. ECM power source circuit 3. Compression 4. Fuel line (Air bleed) 5. Valve clearance 6. ECM 7. Supply pump 8. Fuel pressure sensor 9. Diesel throttle	11–56 05–686 14–266 – 14–270 10–56 10–56 10–56 10–56
Hesitation/ Poor acceleration (Poor driveability)	1. Injector 2. Fuel filter 3. EGR system 4. Compression 5. ECM 6. Supply pump 7. Fuel pressure sensor 8. Diesel throttle	11–56 11–82 12–16 14–266 10–56 10–56 10–56 10–56
Knocking (Poor driveability)	1. Injector 2. EGR system 3. ECM 4. Supply pump 5. Fuel pressure sensor	11–56 12–16 10–56 10–56 10–56
Black smoke (Poor driveability)	1. Injector 2. EGR system 3. ECM 4. Supply pump 5. Fuel pressure sensor 6. Diesel throttle	11–56 12–16 10–56 10–56 10–56 10–56

White smoke (Poor driveability)	1. EGR system 2. Injector 3. Fuel filter 4. ECM 5. Supply pump 6. Fuel pressure sensor 7. Diesel throttle	12–16 11–56 11–82 10–56 10–56 10–56 10–56
Surging/ Hunting (Poor driveability)	1. Injector 2. ECM 3. Supply pump 4. Fuel pressure sensor	11–56 10–56 10–56 10–56

DTC	P0045	TURBO/SUPER CHARGER BOOST CONTROL SOLENOID CIRCUIT / OPEN

CIRCUIT DESCRIPTION

DTC No.	DTC Detection Condition	Trouble Area
P0045	Open or short in VRV circuit for 0.5 sec. or more (1 trip detection logic)	• VRV • Open or short in VRV circuit • ECM

WIRING DIAGRAM

Refer to DTC P0234 on page 05–612.

INSPECTION PROCEDURE

HINT:

Read freeze frame data using the hand–held tester. Freeze frame data records the engine conditions when a malfunction is detected. When troubleshooting, it is useful for determining whether the vehicle was running or stopped, the engine was warmed up or not, etc. at the time of the malfunction.

1	INSPECT VACUUM REGULATING VALVE ASSY (See page 12–16)

NG → REPLACE VACUUM REGULATING VALVE ASSY

OK

2	INSPECT ECM(VN VOLTAGE)

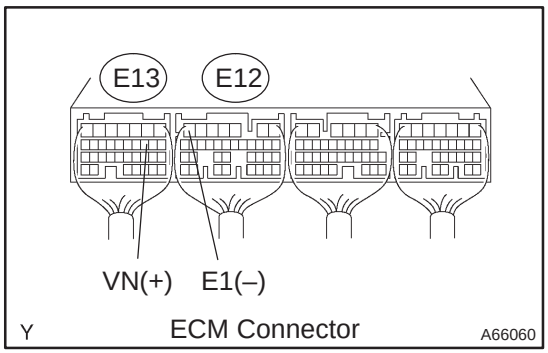

(a) Inspect using the oscilloscope.

(b) During idling, check the waveform between terminals E12 and E13 of the ECM connectors.

Standard:

Symbols (Terminal No.)	Specified condition
VN (E13–10) – E1 (E12–7)	Correct waveform is as shown

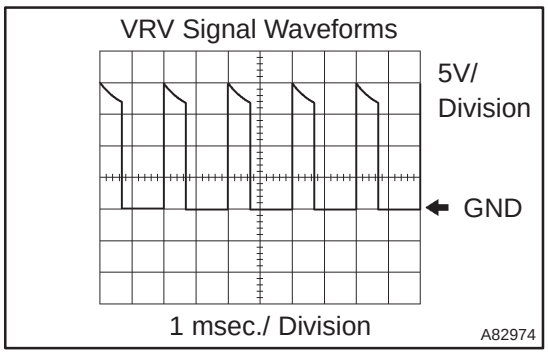

NG → REPLACE ECM (See page 10–65)

OK

3 CHECK HARNESS AND CONNECTOR(VRV – ECM)

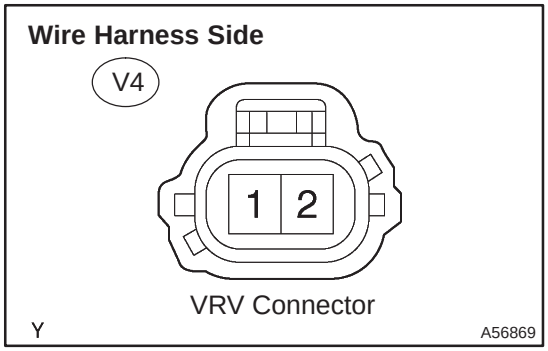

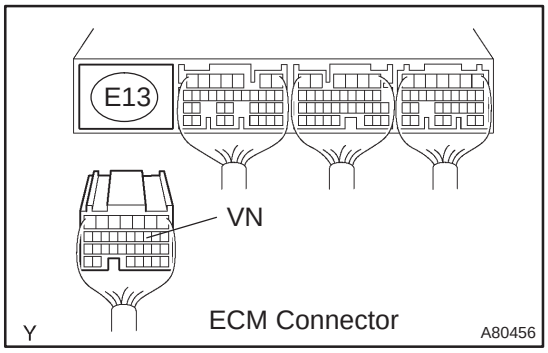

(a) Disconnect the V4 VRV connector.
(b) Disconnect the E13 ECM connector.
(c) Check for continuity between the wire harness side connector.

Standard (Check for open):

Symbols (Terminal No.)	Specified condition
VN (E13–10) – (V4–2)	Continuity

Standard (Check for short):

Symbols (Terminal No.)	Specified condition
VN (E13–10) or (V4–2) – Body ground	No continuity

NG → **REPAIR OR REPLACE HARNESS OR CONNECTOR**

OK

4 CHECK HARNESS AND CONNECTOR(VRV – EFI MAIN RELAY)

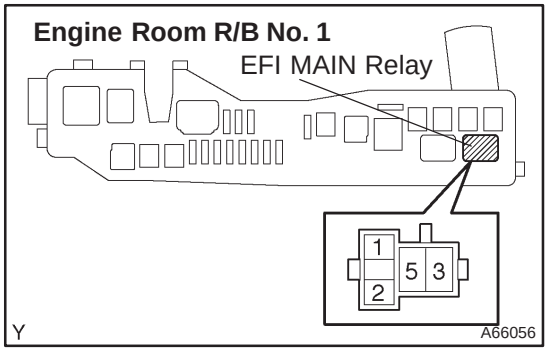

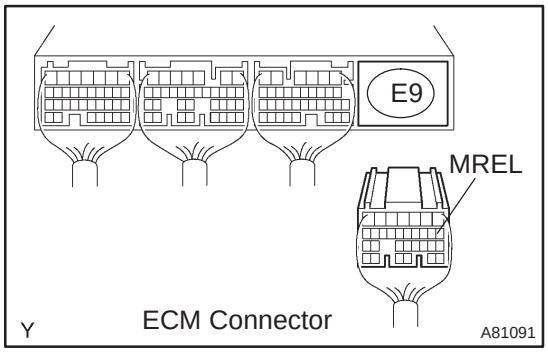

(a) Check the harness and connector between the EFI main relay and ECM connector.

(1) Remove the EFI MAIN relay from the engine room R/B No. 1.

(2) Disconnect the E9 ECM connector.

(3) Check for continuity between the wire harness side connectors.

Standard (Check for open):

Symbols (Terminal No.)	Specified condition
EFI main relay (1) – MREL (E9–8)	Continuity

Standard (Check for short):

Symbols (Terminal No.)	Specified condition
EFI main relay (1) or MREL (E9–8) – Body ground	No continuity

NG → **REPAIR OR REPLACE HARNESS OR CONNECTOR**

OK

REPLACE ECM (See page 10–65)

DTC	P0087	FUEL RAIL/SYSTEM PRESSURE – TOO LOW

DTC	P0190	FUEL RAIL PRESSURE SENSOR CIRCUIT

DTC	P0192	FUEL RAIL PRESSURE SENSOR CIRCUIT LOW INPUT

DTC	P0193	FUEL RAIL PRESSURE SENSOR CIRCUIT HIGH INPUT

HINT:

- For more information on the fuel pressure sensor and the common rail system, see page 05–517.
- If P0087, P0190, P0192 and/or P0193 are present, use the diagnostic trouble code matrix for fuel system, see page 05–517.

CIRCUIT DESCRIPTION

The ECM monitors internal fuel pressure of common rail using the fuel pressure sensor and controls the suction control valve to regulate the internal pressure to the target pressure(approx. 30 to 180 MPa (306 to 1,835 kgf/cm^2, 4.351 to 26,106 psi)).
The pressure sensor is a semiconductor pressure sensor that varies electric resistance when applying pressure to its silicon. This sensor outputs voltage in proportion to the internal fuel pressure. The sensor has been designed as a duplicate circuit, and its main (PR) circuit is used under normal condition. Even if either sensor is failed, another normal sensor will be used to monitor the internal fuel pressure.

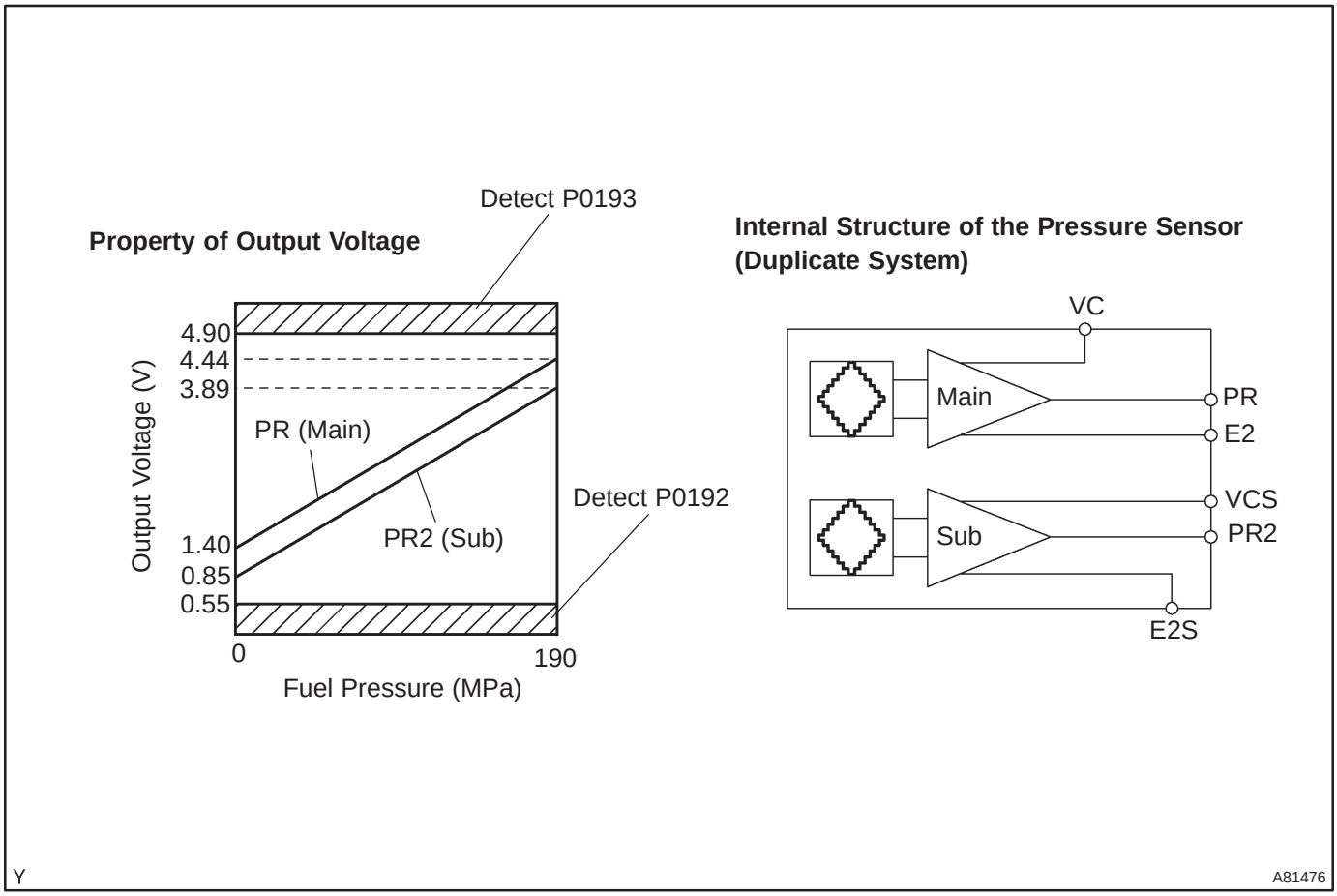

DTC No.	DTC Detection Condition	Trouble Area
P0087	Fuel pressure sensor output stays at fixed value.	• Open or short in fuel pressure sensor circuit • Fuel pressure sensor • ECM
P0190	Condition (a) continues for 0.5 sec.: (c) Fuel pressure sensor output voltage is "0.55 V or less" or "4.9 V or more".	
P0192	Condition (a) continues for 0.5 sec.: (a) Fuel pressure sensor output voltage is 0.55 V or less.	
P0193	Condition (a) continues for 0.5 sec.: (a) Fuel pressure sensor output voltage is 4.9 V or more.	

HINT:
After confirming DTC "P0087, P0190, P0192 and P0193", use the hand–held tester to confirm internal the fuel pressure of the common rail from the "DIAGNOSIS / OBD/MOBD / DATA LIST / ALL / COMN RAIL PRESS".

Engine Speed	Fuel Pressure (MPa)
Idling	Approx. 30 to 40
Running the engine at 2,500 rpm (No engine load)	Approx. 50 to 100

MONITOR DESCRIPTION

P0087 (Fuel pressure sensor output stays at fixed value):

Under normal condition, internal fuel pressure of the common rail usually fluctuates 1 to 2 MPa (10 to 20 kgf/cm^2, 145 to 290 psi) even if the driving condition is constant. The internal fuel pressure is approximately 30 to 40 MPa (306 to 408 kgf/cm^2, 4,351 to 5,801 psi) at idling, and it increases to approx. 50 to 100 MPa (510 to 1,020 kgf/cm^2, 7,251 to 14,503 psi) when running the engine at 2,500 rpm. This DTC code is set if there is no fluctuation at the internal fuel pressure.

If this DTC is present, the ECM enters fail–safe mode and limits the engine power. The fail–safe mode will continue until the ignition switch is turned OFF.

P0190, P0192 and P0193 (Open or short in fuel pressure sensor circuit):

These DTCs are set if the fuel pressure sensor output voltage is out of the standard range. The DTCs stand for open or short malfunction of the sensor circuit.

If these DTCs are present, the ECM enters fail–safe mode and limits the engine power. The fail–safe mode will continue until the ignition switch is turned OFF.

P0087 Malfunction Detection

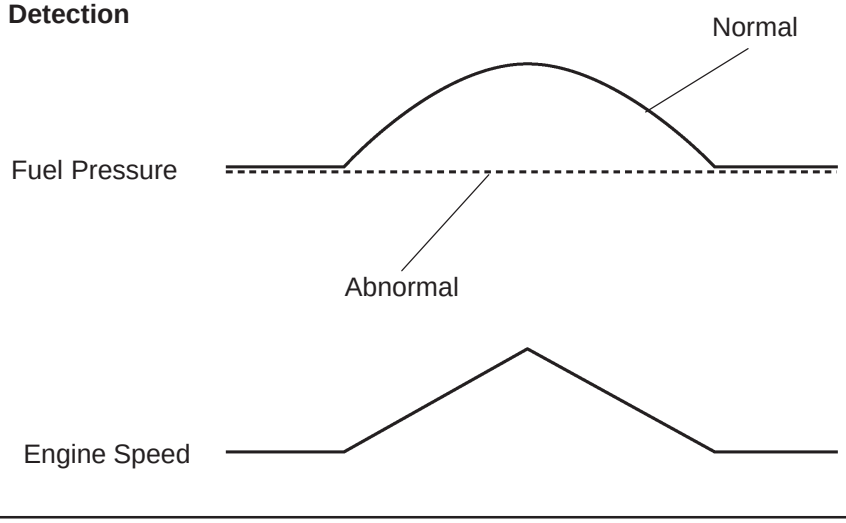

MONITOR STRATEGY

P0087:

Required sensors	Fuel pressure sensor
Frequency of operation	Continuous
Duration	1 sec.
CHK ENG operation	1 driving cycle

P0190:

Required sensors	Fuel pressure sensor
Frequency of operation	Continuous
Duration	0.5 sec.
CHK ENG operation	1 driving cycle

P0192:

Required sensors	Fuel pressure sensor
Frequency of operation	Continuous
Duration	0.5 sec.
CHK ENG operation	1 driving cycle

P0193:

Required sensors	Fuel pressure sensor
Frequency of operation	Continuous
Duration	0.5 sec.
CHK ENG operation	1 driving cycle

TYPICAL ENABLING CONDITIONS

P0087:

Item	Specification	
	Minimum	Maximum
Engine speed	500 rpm	–
Battery voltage	8 V	–
Fuel quantify	5 mm^3/st	–
The monitor will not run if the fuel pressure sensor circuit (P0190, P0192 and P0193) is malfunction		

TYPICAL MALFUNCTION THRESHOLDS

P0087:

Detection Criteria	Threshold
Changing value of fuel pressure	Virtually no fluctuation

P0190:

Detection Criteria	Threshold
Fuel pressure sensor output voltage	Less than 0.55 V or more than 4.9 V

P0192:

Detection Criteria	Threshold
Fuel pressure sensor output voltage	Less than 0.55 V

P0193:

Detection Criteria	Threshold
Fuel pressure sensor output voltage	More than 4.9 V

WIRING DIAGRAM

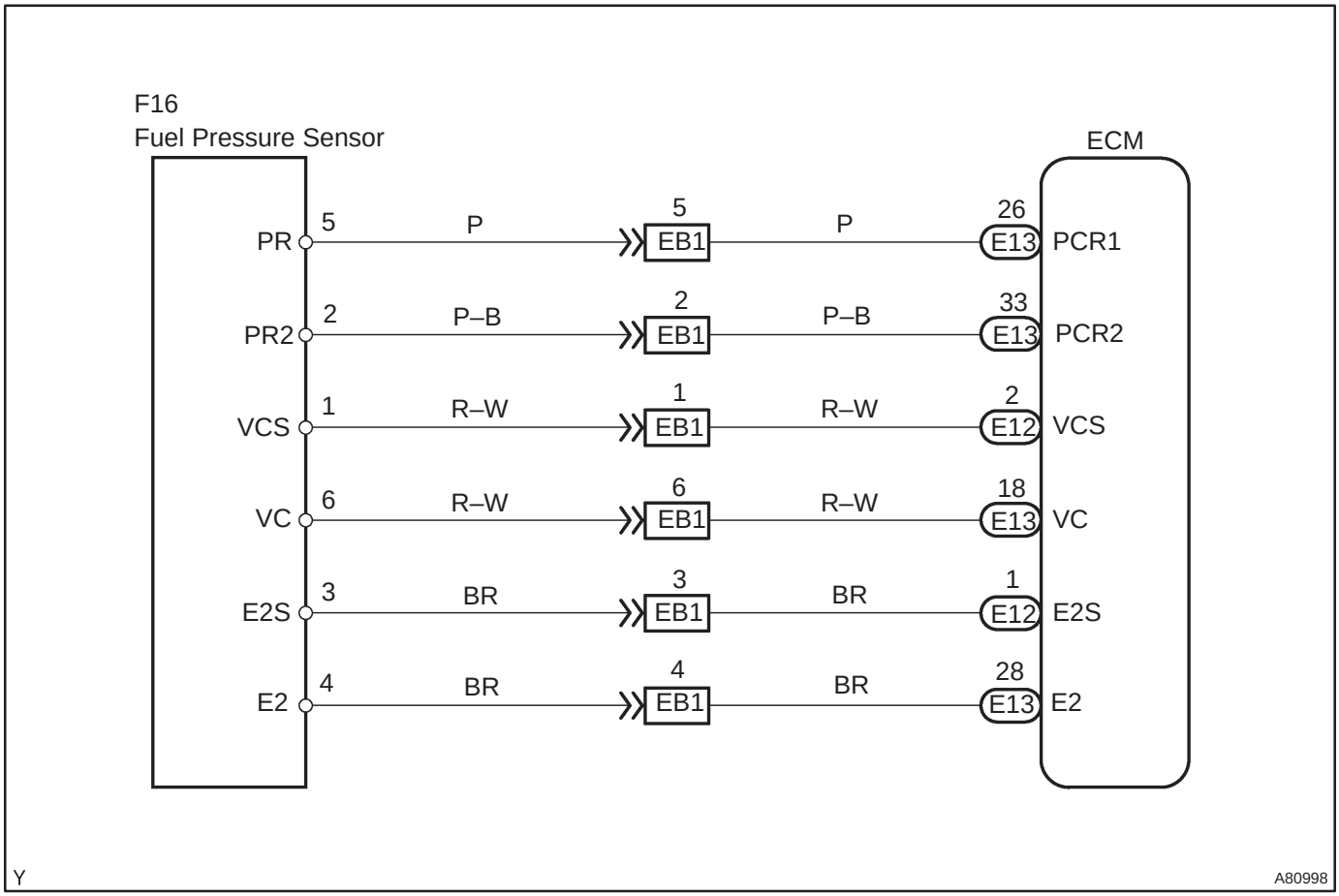

INSPECTION PROCEDURE

HINT:

- After completing repair, confirm P0087 is not set again.
- If different DTCs related to different systems that have terminal E2 as the ground terminal are output simultaneously, terminal E2 may be open.
- Read freeze frame data using the hand–held tester. Freeze frame data records the engine conditions when a malfunction is detected. When troubleshooting, it is useful for determining whether the vehicle was running or stopped, the engine was warmed up or not, etc. at the time of the malfunction.

1	READ VALUE OF HAND–HELD TESTER(FUEL PRESSURE)

(a) Connect the hand–held tester to the DLC3.
(b) Turn the ignition switch ON and push the hand–held tester main switch ON.
(c) Start the engine.
(d) Select the item ”DIAGNOSIS / OBD/MOBD / DATA LIST / ALL / COMN RAIL PRESS”.
(e) Check that internal fuel pressure of the common rail is within specification below.
Reference:

Engine Speed	Fuel Pressure (MPa)
Idling	Approx. 30 to 40
Running the engine at 2,500 rpm (No engine load)	Approx. 50 to 100

NG → **Go to step 3**

OK

2 READ OUTPUT DTC(FUEL PRESSURE SENSOR DTCS ARE OUTPUT AGAIN)

(a) Connect the hand–held tester to the DLC3.
(b) Turn the ignition switch ON and push the hand–held tester main switch ON.
(c) Select the item ”DIAGNOSIS / OBD/MOBD / DTC INFO / CLEAR CODES”.
(d) Clear the DTCs.
(e) Let the engine idle for 60 seconds and perform quick acceleration to 2,500 rpm for 30 seconds.
(f) Select the item ”DIAGNOSIS / OBD/MOBD / DTC INFO / CURRENT CODES”.
(g) Read the DTCs.

Result:

Display (DTC output)	Proceed to
DTC ”P0087, P0190, P0192 and/or P0193” are output.	A
DTC ”P0087, P0190, P0192 and/or P0193” are not output.	B

B → **CHECK FOR INTERMITTENT PROBLEMS (See page 05–528)**

A

REPLACE ECM (See page 10–65)

3 CHECK HARNESS AND CONNECTOR(FUEL PRESSURE SENSOR – ECM)

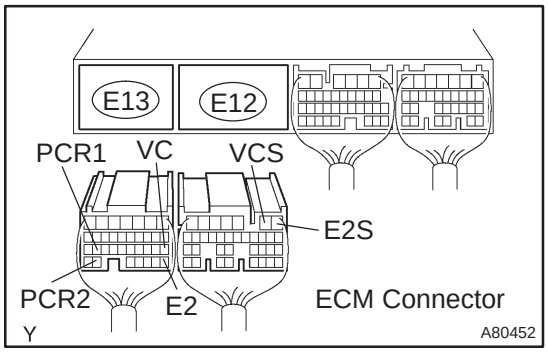

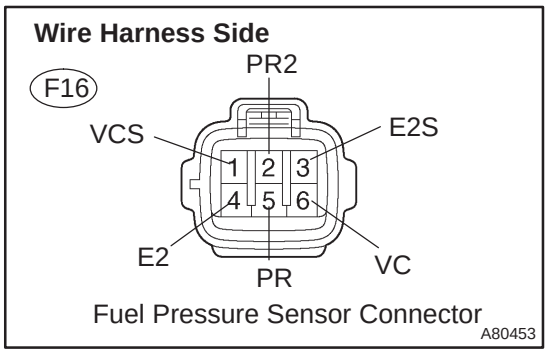

(a) Disconnect the F16 fuel pressure sensor connector.
(b) Disconnect the E12 and E13 ECM connectors.
(c) Check for continuity between the wire harness side connector.

Standard (Check for open):

Symbols (Terminal No.)	Specified condition
PCR1 (E13–26) – PR (F16–5)	Continuity
PCR2 (E13–33) – PR2 (F16–2)	
VCS (E12–2) – VCS (F16–1)	
VC (E13–18) – VC (F16–6)	
E2 (E13–28) – E2 (F16–4)	
E2S (E12–1) – E2S (F16–3)	

Standard (Check for short):

Symbols (Terminal No.)	Specified condition
PCR1 (E13–26) or PR (F16–5) – Body ground	No continuity
PCR2 (E13–33) or PR2 (F16–2) – Body ground	
VCS (E12–2) or VCS (F16–1) – Body ground	
VC (E13–18) or VC (F16–6) – Body ground	
E2 (E13–28) or E2 (F16–4) – Body ground	
E2S (E12–1) or E2S (F16–3) – Body ground	

NG → **REPAIR OR REPLACE HARNESS OR CONNECTOR**

OK

REPLACE COMMON RAIL ASSY (FUEL PRESSURE SENSOR) (See page 11–78)

DTC	P0088	FUEL RAIL/SYSTEM PRESSURE – TOO HIGH

DTC	P1229	FUEL PUMP SYSTEM

HINT:

- For more information on the supply pump (suction control valve) and the common rail system, see page 05–517.
- If P0088 and/or P1229 are present, use the diagnostic trouble code matrix for fuel system, see page 05–517.

CIRCUIT DESCRIPTION

Refer to description on page 05–517.

DTC No.	DTC Detection Condition	Trouble Area
P0088	Internal fuel pressure of the common rail is too high. The fuel pressure exceeds 200 MPa (2,039 kgf/cm^2, 29,007 psi).	• Supply pump (Suction control valve) • Pressure discharge valve • Short in supply pump (Suction control valve) circuit • Open in pressure discharge valve circuit • ECM
P1229	Fuel over fed. Internal fuel pressure is beyond the target fuel pressure despite the ECM closing the suction control valve.	• Short in supply pump (Suction control valve) circuit • Supply pump (Suction control valve) • ECM

HINT:

After confirming DTC ”P0088 and P1229”, use the hand–held tester to confirm the fuel rail pressure from the ”DIAGNOSIS / OBD/MOBD / DATA LIST / ALL / COMN RAIL PRESS”.

Engine Speed	Fuel Pressure (MPa)
Idling	Approx. 30 to 40
Running the engine at 2,500 rpm (No engine load)	Approx. 50 to 100

MONITOR DESCRIPTION

P0088 (Internal fuel pressure too high):

The ECM will set this DTC if the fuel pressure inside the common rail is beyond 200 MPa (2,039 kgf/cm^2, 29,007 psi). This DTC indicates that the suction control valve may be stuck open, or there may be short in its circuit, and the pressure discharge valve may be stuck close, or there may be open in its circuit.

If this DTC is present, the ECM enters fail–safe mode and limits the engine power. The fail–safe mode will continue until the ignition switch is turned OFF.

P1229 (Fuel over fed):

The ECM will set this DTC if the actual fuel pressure inside the common rail stays higher than the target fuel pressure, despite the ECM closing the suction control valve. This DTC code represents that the suction control valve may be stuck open, or there may be short in its circuit. Under this condition, the pressure discharge valve will operate quite often.

If this DTC is present, the ECM enters fail–safe mode and limits the engine power. The fail–safe mode will continue until the ignition switch is turned OFF.

MONITOR STRATEGY

P0088:

Required sensors	Fuel pressure sensor
Frequency of operation	Continuous
Duration	1 sec.
CHK ENG operation	1 driving cycle

P1229:

Required sensors	Fuel pressure sensor
Frequency of operation	Continuous
Duration	1 min.
CHK ENG operation	1 driving cycle

TYPICAL ENABLING CONDITIONS

P0088:

Specification
The monitor will not run if the fuel pressure sensor, or suction control valve circuit, or pressure discharge valve is malfunctioning

P1229:

Item	Specification
Target fuel pressure variation is small	–
The monitor will not run if the fuel pressure sensor, or suction control valve circuit, or pressure discharge valve is malfunctioning	

TYPICAL MALFUNCTION THRESHOLDS

P0088:

Detection Criteria	Threshold
Fuel pressure sensor	200 MPa (2,039 kgf/cm^2, 29,007 psi) or more

P1229:

Threshold
Internal fuel pressure of the common rail stays higher than the target fuel pressure, despite the ECM closing the suction control valve, and also the pressure discharge valve is frequently operating

WIRING DIAGRAM

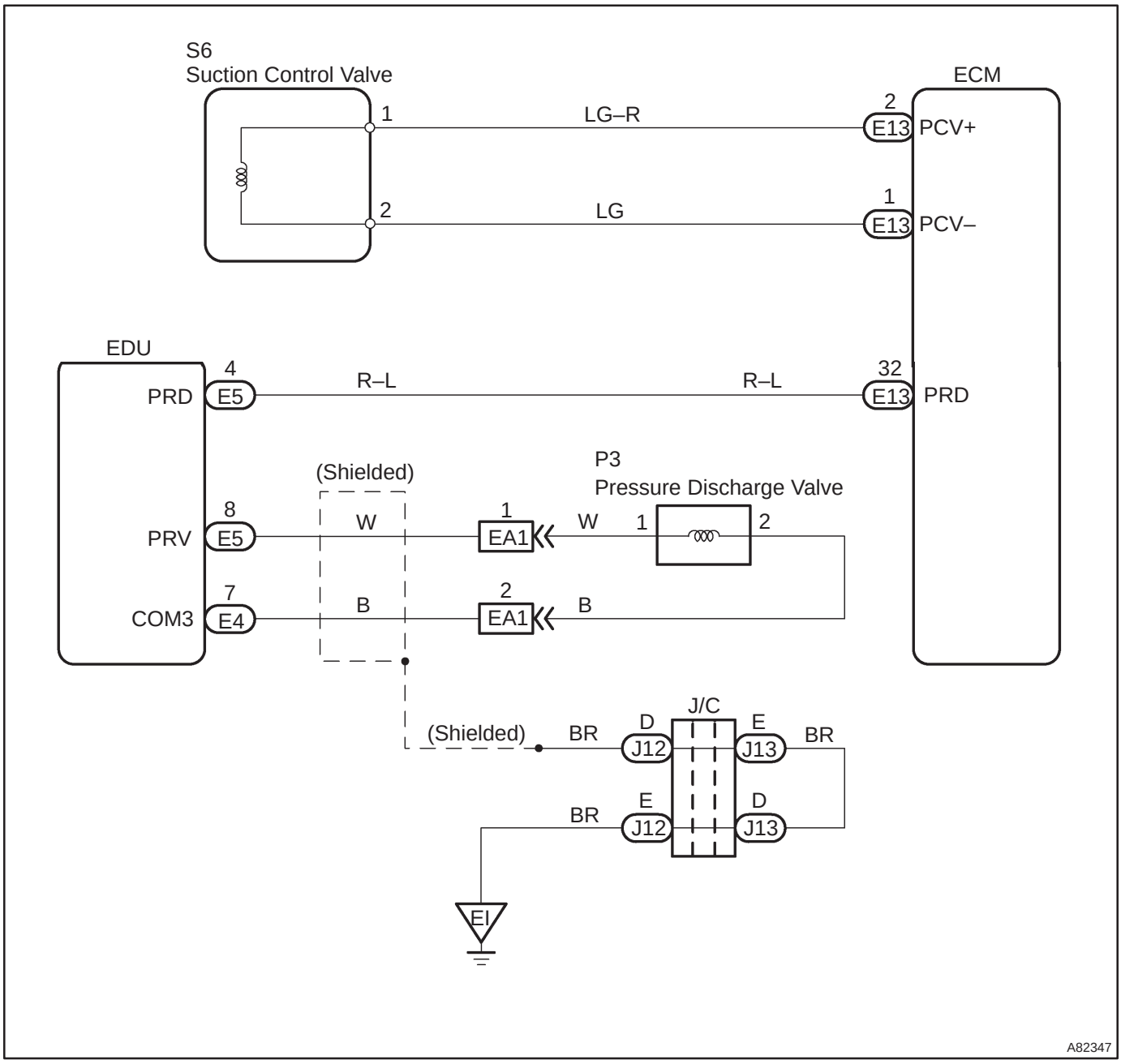

INSPECTION PROCEDURE

HINT:

Read freeze frame data using the hand–held tester. Freeze frame data records the engine conditions when a malfunction is detected. When troubleshooting, it is useful for determining whether the vehicle was running or stopped, the engine was warmed up or not, etc. at the time of the malfunction.

1	CHECK OTHER DTC OUTPUT(BESIDS DTC P0088 AND/OR P1229)

(a) Connect the hand–held tester to the DLC3.
(b) Turn the ignition switch ON and push the hand–held tester main switch ON.
(c) Select the item ”DIAGNOSIS / OBD/MOBD / DTC INFO / CURRENT CODES”.
(d) Read the DTCs.

Result:

Display (DTC output)	Proceed to
”Only DTC P0088” or ”DTC P0088 and P1229” are output	A
Only DTC P1229 is output	B
DTC ”P0190, P0191, P0192, P0193 and/or P1271” are output	C
Only DTC P1272 is output	D

B → **Go to step 4**

C → **GO TO RELEVANT DTC CHART** (See page 05–544)

D → **Go to step 3**

A

2	READ OUTPUT DTC(DTC P1272 OUTPUT)

(a) Connect the hand–held tester to the DLC3.
(b) Turn the ignition switch ON and push the hand–held tester main switch ON.
(c) Select the item ”DIAGNOSIS / OBD/MOBD / DTC INFO / CLEAR CODES”.
(d) Clear the DTCs.
(e) Start the engine and turn the ignition switch OFF. Wait for 10 seconds and then restart the engine and turn the ignition switch OFF again.
(f) Select the item ”DIAGNOSIS / OBD/MOBD / DTC INFO / CURRENT CODES”.
(g) Read the DTCs.

Result:

Display (DTC output)	Proceed to
DTC P1272 is output	A
DTC P1272 is not output	B

B → **Go to step 4**

A

3	READ VALUE OF HAND–HELD TESTER(FUEL PRESSURE)

(a) Connect the hand–held tester to the DLC3.
(b) Turn the ignition switch ON and push the hand–held tester main switch ON.
(c) Start the engine.
(d) Select the item "DIAGNOSIS / OBD/MOBD / DATA LIST / ALL / COMN RAIL PRESS" and read its value displayed on the hand–held tester.
(e) Check that the internal fuel pressure of the common rail drops below approximately 5 MPa within approximately 1 second as the ignition switch is turned OFF at the engine in an idle.

Result:

Pressure Displayed (MPa)	Proceed to
Approx. 5 or less	A
Approx. 5 or more	B

B → **REPLACE COMMON RAIL ASSY (PRESSURE DISCHARGE VALVE) (See page 14–286)**
PROCEED TO STEP 4 AFTER REPLACEMENT

A

4	CHECK INJECTION OR SUPPLY PUMP ASSY(SUCTION CONTROL VALVE)

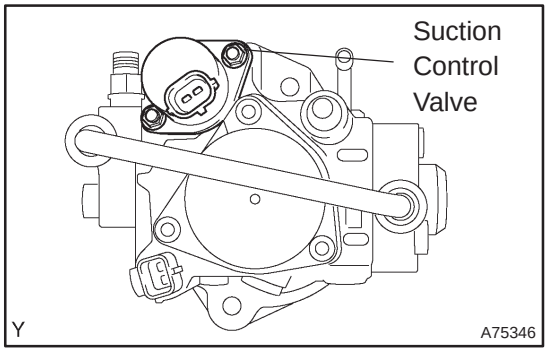

(a) Check the suction control valve for resistance.
(1) Measure the resistance between the terminals.
Resistance: 1.9 to 2.3 Ω at 20°C (68°F)

NG → **REPLACE INJECTION OR SUPPLY PUMP ASSY (SUCTION CONTROL VALVE) (See page 11–69)**

OK

5 READ OUTPUT DTC(DTC P1229 OUTPUT)

(a) Disconnect the suction control valve connector and then start the engine. Wait for 1 minute.
HINT:
If the engine does not start, the suction control valve is normal. Therefore proceed to step 6.
(b) Connect the hand–held tester to the DLC3.
(c) Turn the ignition switch ON and push the hand–held tester main switch ON.
(d) Select the item "DIAGNOSIS / OBD/MOBD / DTC INFO / CLEAR CODES".
(e) Clear the DTCs.
(f) Select the item "DIAGNOSIS / OBD/MOBD / DTC INFO / CURRENT CODES".
(g) Read the DTCs.

Result:

Display (DTC output)	Proceed to
DTC P1229 is not output	A
DTC P1229 is output	B

B → **REPLACE INJECTION OR SUPPLY PUMP ASSY (SUCTION CONTROL VALVE) (See page 11–69)**

A

6 CHECK HARNESS AND CONNECTOR(SUCTION CONTROL VALVE – ECM)

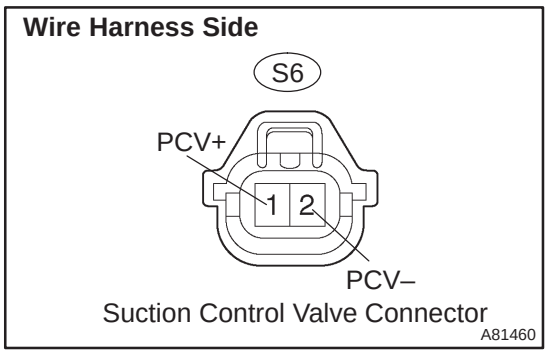

(a) Disconnect the S6 suction control valve connector.
(b) Disconnect the E13 ECM connector.
(c) Check for continuity between the wire harness side connector.

Standard (Check for open):

Symbols (Terminal No.)	Specified condition
PCV+ (S6–1) – PCV+ (E13–2)	Continuity
PCV– (S6–2) – PCV– (E13–1)	

Standard (Check for short):

Symbols (Terminal No.)	Specified condition
PCV+ (S6–1) or PCV+ (E13–2) – Body ground	No continuity
PCV– (S6–2) or PCV– (E13–1) – Body ground	

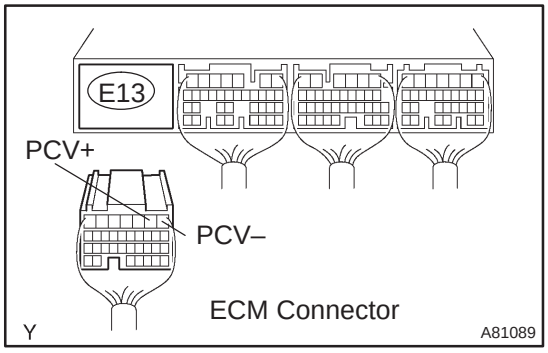

NG → **REPAIR OR REPLACE HARNESS AND CONNECTOR**

OK

7 INSPECT ECM(PCV VOLTAGE)

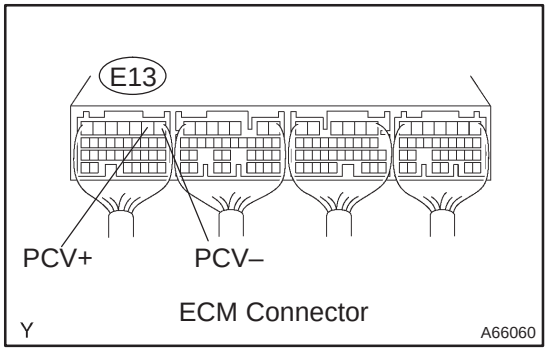

(a) Inspect using the oscilloscope.
(b) During cranking or idling, check the waveform between the specified terminals of the E13 ECM connector.

Standard :

Symbols (Terminal No.)	Specified condition
PCV+ (E13–2) – PCV– (E13–1)	Correct waveform is as shown

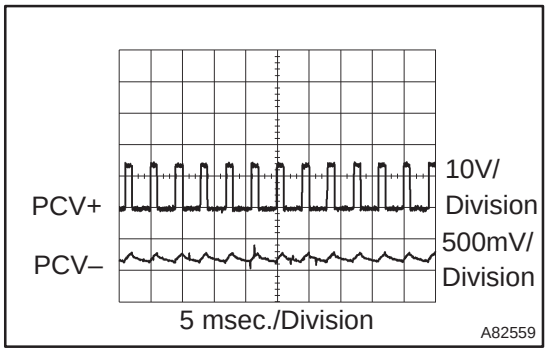

NG → **REPLACE ECM (See page 10–65)**

OK

CHECK DTC OUTPUT RECUR (DTC P0088 AND/OR P1229 OUTPUT AGAIN)

HINT:
After clearing the DTC, drive the vehicle at 50 km/h (31 mph) for 5 minutes, and then confirm P0088 and/or P1229 is not set again.

DTC	P0093	FUEL SYSTEM LEAK DETECTED – LARGE LEAK

HINT:
- For more information on the common rail system, see page 05–517.
- If P0093 is present, use the diagnostic trouble code matrix for fuel system, see page 05–517.

CIRCUIT DESCRIPTION

Refer to description on page 05–517.

DTC No.	DTC Detection Condition	Trouble Area
P0093	Fuel leaks in high–pressure area.	• Fuel line between supply pump and common rail • Fuel line between common rail and injector • Supply pump • Common rail • Injector (P1238 is set simultaneously) • Pressure discharge valve • Open or short in EDU circuit (P0200 is set simultaneously) • Open or short in injector circuit (P0200 and P1238 are set simultaneously) • EDU (P0200 is set simultaneously) • ECM

HINT:
After confirming DTC P0093, use the hand–held tester to confirm the fuel rail pressure from the ”DIAGNOSIS / OBD/MOBD / DATA LIST / ALL / COMN RAIL PRESS”.

Engine Speed	Fuel Pressure (MPa)
Idling	Approx. 30 to 40
Running the engine at 2,500 rpm (No engine load)	Approx. 50 to 100

MONITOR DESCRIPTION

P0093 (Fuel leaks in high–pressure area):

This DTC stands for fuel leaks is existing in high–pressure area in the common rail system. The ECM constantly monitors the internal fuel pressure of the common rail after the engine is started, and the ECM then will set this DTC if the decreasing rate of the internal fuel pressure is large when injecting the fuel.
In the common rail system, high–pressure fuel (approx. 30 to 180 MPa (306 to 1,835 kgf/cm^2, 4.351 to 26,106 psi)) is always applied to the high–pressure area including the supply pump, common rail, injector and piping. The ECM adjusts the suction control valve opening angle to obtain the target internal fuel pressure.
If this DTC is present, the ECM enters fail–safe mode and permits driving the vehicle for extra 1 minute before stopping both the fuel injection and supply pump operation, then stops the engine. The fail–safe mode will continue until the ignition switch is turned OFF.

MONITOR STRATEGY

Required sensors	Fuel pressure sensor
Frequency of operation	Continuous
Duration	1 sec.
CHK ENG operation	1 driving cycle

TYPICAL ENABLING CONDITIONS

Item	Specification	
	Minimum	Maximum
Engine speed	600 rpm	–
The monitor will not run if the fuel pressure sensor, or suction control valve circuit, or pressure discharge valve is malfunctioning		

TYPICAL MALFUNCTION THRESHOLDS

Threshold
Drop rate in the internal fuel pressure is large when injecting fuel

INSPECTION PROCEDURE

HINT:

Read freeze frame data using the hand – held tester. Freeze frame data records the engine conditions when a malfunction is detected. When troubleshooting, it is useful for determining whether the vehicle was running or stopped, the engine was warmed up or not, etc. at the time of the malfunction.

1	CHECK OTHER DTC OUTPUT(BESIDES DTC P0093)

(a) Connect the hand–held tester to the DLC3.
(b) Turn the ignition switch ON and push the hand–held tester main switch ON.
(c) Select the item ”DIAGNOSIS / OBD/MOBD / DTC INFO / CURRENT CODES”.
(d) Read the DTCs.

Result:

Display (DTC output besides DTC P0093)	Proceed to
Only DTC P0093 is output	A
DTC P1238 is output	B
DTC ”P0200 and/or P1271” are output	C

HINT:

If any other codes besides ”P0093” are output, perform the troubleshooting for those DTCs first.

B → **Go to step 3**

C → **GO TO RELEVANT DTC CHART (See page 05–544)**

A

2	CHECK FUEL LEAKAGE(INSPECT HIGH–PRESSURE FUEL PARTS AND AREA FOR FUEL LEAKS)

(a) Visually check the supply pump, injector and fuel line located between the supply pump and the common rail for fuel leaks or fuel pressure leaks. Also, perform the same on the fuel line between the common rail and the injector (See page 11–69, 11–60).

HINT:

Fuel leaks inside the components (Supply pump, etc) may result.

NG → **REPAIR OR REPLACE**

OK

3	READ VALUE OF HAND–HELD TESTER(COMPENSATION OF INJECTION QUANTIFY BETWEEN CYLINDERS)

(a) Connect the hand–held tester to the DLC3.
(b) Turn the ignition switch ON and push the hand–held tester main switch ON.
(c) Start the engine.
(d) Select the item ”DIAGNOSIS / OBD/MOBD / DATA LIST / ALL / INJ VOLUME FB” and read its value displayed on the hand–held tester.
Result:
STD – 3 to 3 mm^3/st
Maximum – 4.9 to 4.9 mm^3/st

NG → **REPLACE INJECTOR ASSY (See page 11–60)**

OK

4	PERFORM ACTIVE TEST USING HAND–HELD TESTER(FUEL LEAK TEST)

(a) Connect the hand–held tester to the DLC3.
(b) Start the engine.
(c) Turn the ignition switch ON and push the hand–held tester main switch ON.
(d) Select the item ”DIAGNOSIS / OBD/MOBD / ACTIVE TEST / FUEL LEAK TEST”.
(e) Check for fuel leaks in high–pressure area.

GO

CHECK DTC OUTPUT RECUR (DTC P0093 OUTPUT AGAIN)

HINT:
- After clearing the DTC, let the engine idle for 1 minute and then run it at 2,500 rpm for 30 seconds.
- At the same time, use the hand–held tester to confirm the fuel pressure inside the common rail from the ”DIAGNOSIS / OBD/MOBD / DATA LIST / ALL / COMN RAIL PRESS”.
  Internal fuel pressure of the common rail must be stable under each driving condition.

Engine Speed	Fuel Pressure (MPa)
Idling	Approx. 30 to 40
Running the engine at 2,500 rpm (No engine load)	Approx. 50 to 100

DTC	P0095	INTAKE AIR TEMPERATURE SENSOR 2 CIRCUIT

DTC	P0097	INTAKE AIR TEMPERATURE SENSOR 2 CIRCUIT LOW

DTC	P0098	INTAKE AIR TEMPERATURE SENSOR 2 CIRCUIT HIGH

CIRCUIT DESCRIPTION

(Fig. 1)

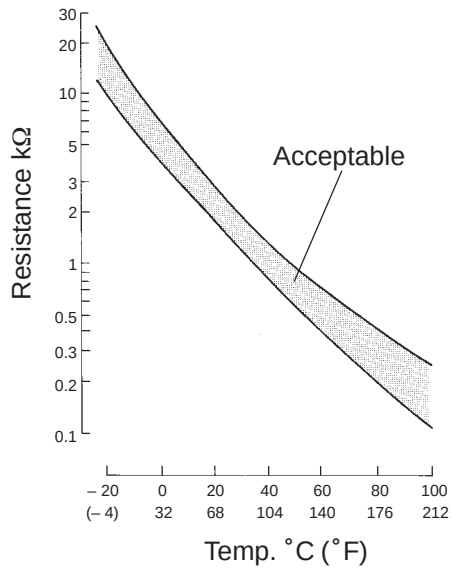

The inlet air temperature sensor is built into the intake air connector and senses the inlet air temperature. A thermistor built in the sensor changes the resistance value according to the inlet air temperature. The lower the inlet air temperature, the greater the thermistor resistance value, and the higher the inlet air temperature, the lower the thermistor resistance value (See Fig. 1).

The inlet air temperature sensor is connected to the ECM. The 5 V power source voltage in the ECM is applied to the inlet air temperature sensor from terminal THIA via a resistor R. That is the resistor R and the inlet air temperature sensor are connected in series. When the resistance value of the inlet air temperature sensor changes in accordance with changes in the inlet air temperature, the potential at the terminal THIA also changes. Based on this signal, the ECM increases the fuel injection volume to improve the driveability with a cold engine.

DTC No.	Proceed to	DTC Detection Condition	Trouble Area
P0095	Step 1	Open or short in diesel turbo inlet air temp. sensor circuit for 0.5 sec. (1 trip detection logic)	• Open or short in diesel turbo inlet air temp. sensor circuit • Diesel turbo inlet air temperature sensor • ECM
P0097	Step 4	Short in diesel turbo inlet air temp. sensor circuit for 0.5 sec. (1 trip detection logic)	
P0098	Step 2	Open in diesel turbo inlet air temp. sensor circuit for 0.5 sec. (1 trip detection logic)	

HINT:

After confirming DTC ”P0095, P0097 or P0098”, use the hand–held tester to confirm the intake air temperature from the ”DIAGNOSIS / OBD/MOBD / DATA LIST / ALL / AMBI TEMP SENS”.

Temperature Displayed	Malfunction
–40˚C (–40˚F)	Open circuit
140˚C (284˚F) or more	Short circuit

WIRING DIAGRAM

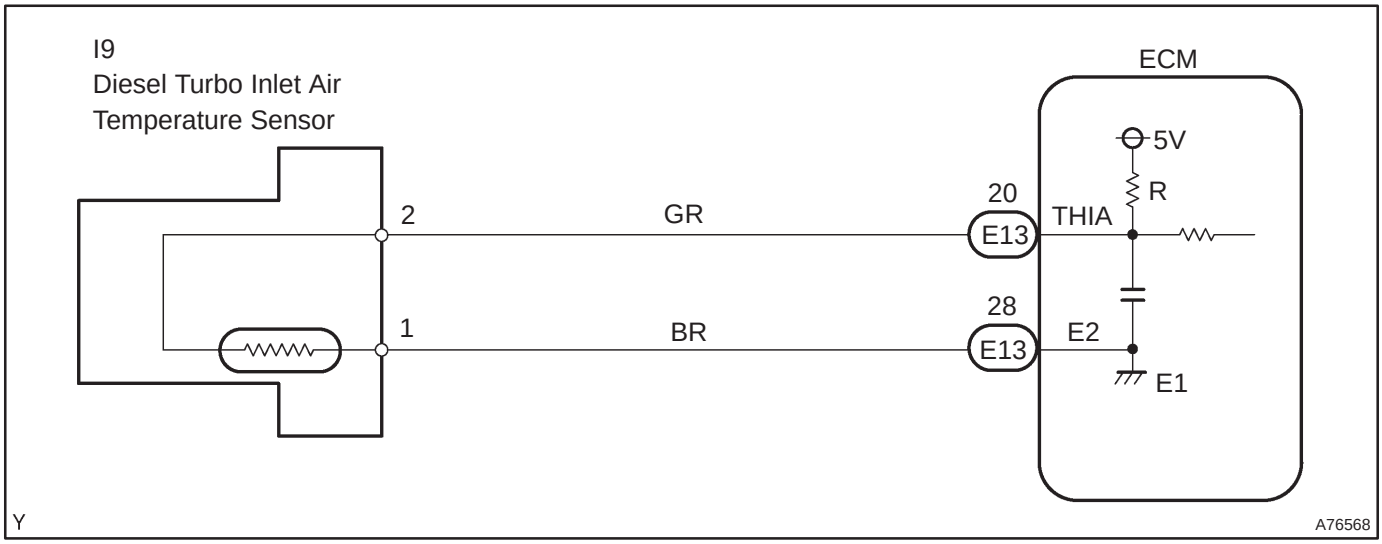

INSPECTION PROCEDURE

HINT:

- If different DTCs related to different systems that have terminal E2 as the ground terminal are output simultaneously, terminal E2 may be open.
- Read freeze frame data using the hand–held tester. Freeze frame data records the engine conditions when a malfunction is detected. When troubleshooting, it is useful for determining whether the vehicle was running or stopped, the engine was warmed up or not, etc. at the time of the malfunction.

1	READ VALUE OF HAND–HELD TESTER(INLET AIR TEMPERATURE)

(a) Connect the hand–held tester to the DLC3.
(b) Turn the ignition switch ON and push the hand–held tester main switch ON.
(c) Select the item ”DIAGNOSIS / OBD/MOBD / DATA LIST / ALL / AMBI TEMP SENS” and read its value displayed on the hand–held tester.
Temperature: Same value as the actual diesel turbo inlet air temperature.
Result:

Temperature Displayed	Proceed to
–40˚C (–40˚F)	A
140˚C (284˚F) or more	B
OK (Same as present temperature)	C

HINT:

- If there is an open circuit, the hand–held tester indicates –40˚C (–40˚F).
- If there is a short circuit, the hand–held tester indicates 140˚C (284˚F) or more.

B → **Go to step 4**

C → **CHECK FOR INTERMITTENT PROBLEMS (See page 05–528)**

A

2 READ VALUE OF HAND–HELD TESTER(CHECK FOR OPEN IN WIRE HARNESS)

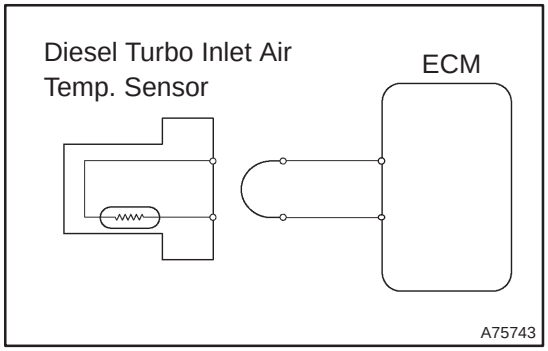

(a) Disconnect the I9 diesel turbo inlet air temperature sensor connector.
(b) Connect terminals THIA and E2 of the diesel turbo inlet air temperature sensor wire harness side connector.
(c) Turn the ignition switch ON.
(d) Select the item ”DIAGNOSIS / OBD/MOBD / DATA LIST / ALL / AMBI TEMP SENS” and read its value displayed on the hand–held tester.
Temperature: 140°C (284°F) or more

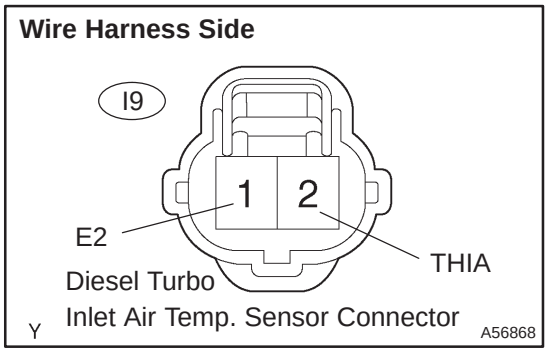

OK → **CONFIRM GOOD CONNECTION AT SENSOR. IF OK, REPLACE DIESEL TURBO INLET AIR TEMPERATURE SENSOR**

NG

3 READ VALUE OF HAND–HELD TESTER(CHECK FOR OPEN IN ECM)

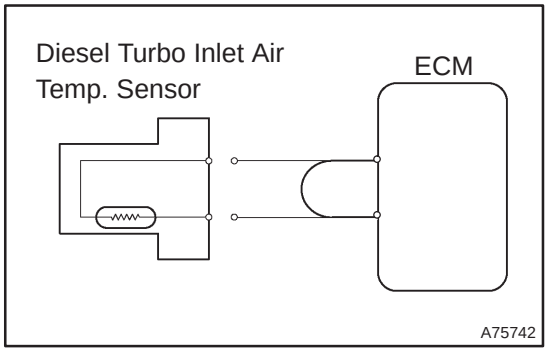

(a) Disconnect the I9 diesel turbo inlet air temperature sensor connector.
(b) Connect terminals THIA and E2 of the E13 ECM connector.

HINT:
Before checking, do a visual and contact pressure check for the ECM connector.

(c) Turn the ignition switch ON.
(d) Select the item ”DIAGNOSIS / OBD/MOBD / DATA LIST / ALL / AMBI TEMP SENS” and read its value displayed on the hand–held tester.
Temperature: 140°C (284°F) or more

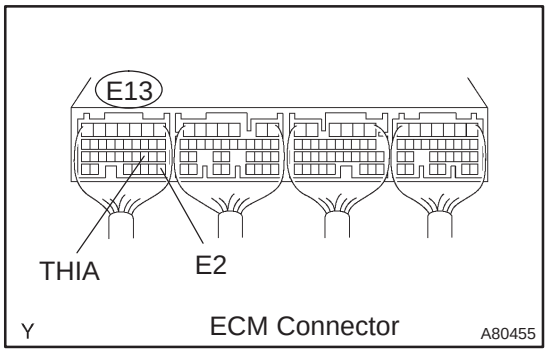

OK → **REPAIR OR REPLACE HARNESS OR CONNECTOR**

NG

CONFIRM GOOD CONNECTION AT ECM. IF OK, REPLACE ECM (See page 10–65)

4 READ VALUE OF HAND–HELD TESTER(CHECK FOR SHORT IN WIRE HARNESS)

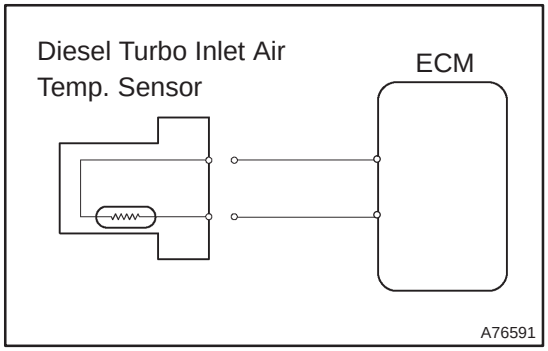

(a) Disconnect the I9 diesel turbo inlet air temperature sensor connector.
(b) Turn the ignition switch ON.
(c) Select the item ”DIAGNOSIS / OBD/MOBD / DATA LIST / ALL / AMBI TEMP SENS” and read its value displayed on the hand–held tester.
Temperature: –40°C (–40°F)

OK	**REPLACE DIESEL TURBO INLET AIR TENPERATURE SENSOR**

NG

5 READ VALUE OF HAND–HELD TESTER(CHECK FOR SHORT IN ECM)

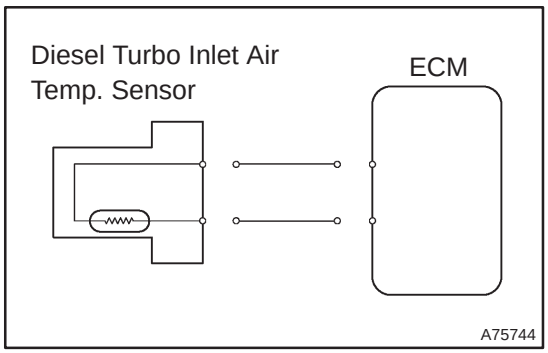

(a) Disconnect the E13 ECM connector.
(b) Turn the ignition switch ON.
(c) Select the item ”DIAGNOSIS / OBD/MOBD / DATA LIST / ALL / AMBI TEMP SENS” and read its value displayed on the hand–held tester.
Temperature: –40°C (–40°F)

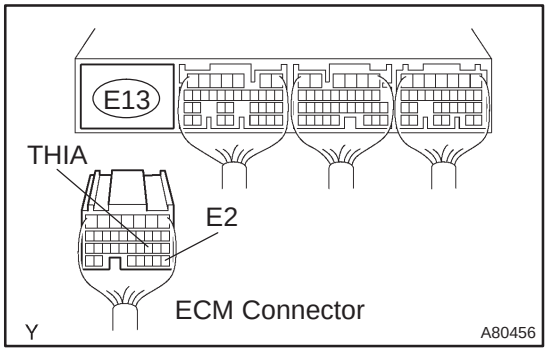

OK	**REPAIR OR REPLACE HARNESS OR CONNECTOR**

NG

REPLACE ECM (See page 10–65)

DTC	P0100	MASS OR VOLUME AIR FLOW CIRCUIT

DTC	P0102	MASS OR VOLUME AIR FLOW CIRCUIT LOW INPUT

DTC	P0103	MASS OR VOLUME AIR FLOW CIRCUIT HIGH INPUT

CIRCUIT DESCRIPTION

The mass air flow meter uses a platinum hot wire. The hot wire mass air flow meter consists of a platinum hot wire, a temperature sensor and a control circuit installed in a plastic housing. The hot wire mass air flow meter works on the principle that the hot wire and temperature sensor located in the intake air bypass of the housing detect any changes in the intake air temperature.

The hot wire is maintained at the set temperature by controlling the current flow through the hot wire. This current flow is then measured as the output voltage of the mass air flow meter.

The circuit is constructed so that the platinum hot wire and temperature sensor provide a bridge circuit, with the power transistor controlled so that the potential of A and B remains equal to maintain the set temperature.

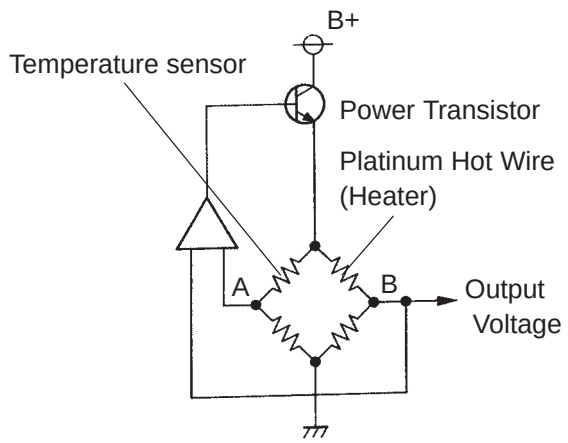

FI6929
A09074

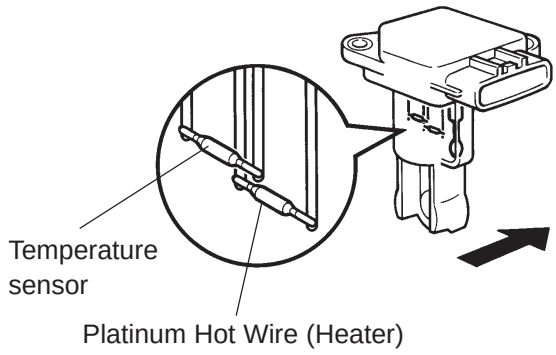

A53295

DTC No.	DTC Detection Condition	Trouble Area
P0100	Open or short in mass air flow meter circuit for more than 3 sec. with engine speed 4,000 rpm or less (1 trip detection logic)	• Open or short in mass air flow meter circuit • Mass air flow meter • ECM
P0102	Open in mass air flow meter circuit for more than 3 sec. with engine speed 4,000 rpm or less (1 trip detection logic)	
P0103	Short in mass air flow meter circuit for more than 3 sec. with engine speed 4,000 rpm or less (1 trip detection logic)	

HINT:

After confirming DTC ”P0100, P0102 or P0103”, use the hand–held tester to confirm the mass air flow ratio from the ”DIAGNOSIS / OBD/MOBD / DATA LIST / ALL / MAF”.

Air Flow Value (gm/s)	Malfunction
Approx. 0.0	• Mass air flow meter power source circuit open • VG circuit open or short
174.0 or more	• EVG circuit open

WIRING DIAGRAM

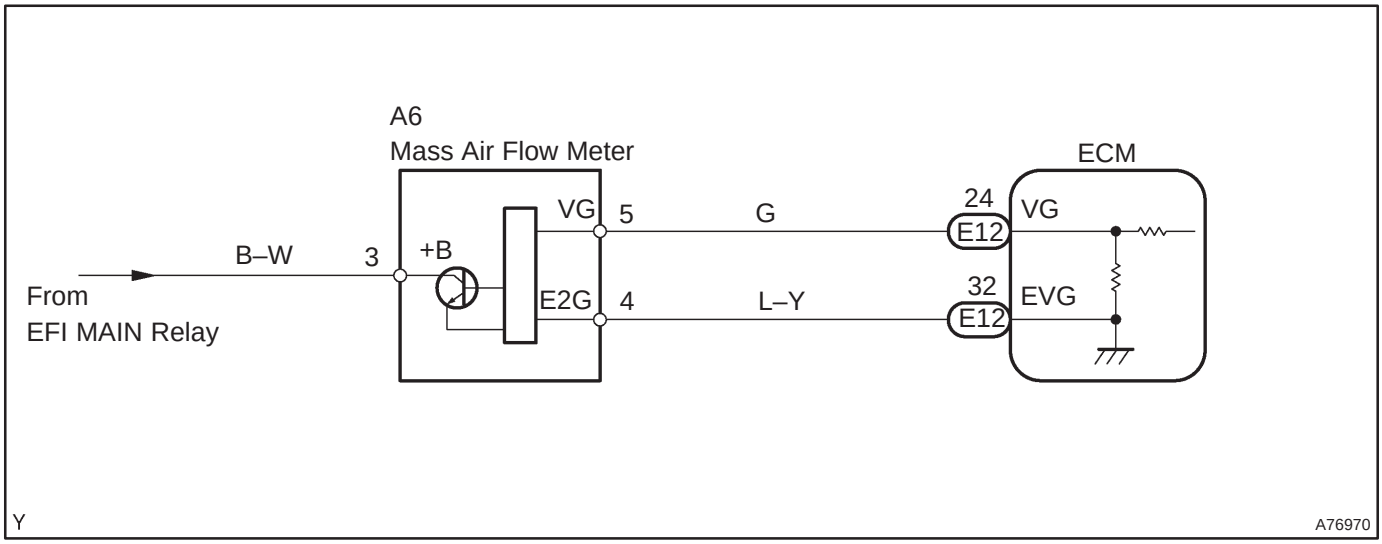

INSPECTION PROCEDURE

HINT:

Read freeze frame data using the hand – held tester. Freeze frame data records the engine conditions when a malfunction is detected. When troubleshooting, it is useful for determining whether the vehicle was running or stopped, the engine was warmed up or not, etc. at the time of the malfunction.

1	READ VALUE OF HAND–HELD TESTER(MASS AIR FLOW RATE)

(a) Connect the hand–held tester to the DLC3.
(b) Start the engine.
(c) Push the hand–held tester main switch ON.
(d) Select the item ”DIAGNOSIS / OBD/MOBD / DATA LIST / ALL / MAF” and read its value displayed on the hand–held tester.

Result:

Air flow rate (gm/s)	Proceed to
0.0	A
174.0 or more	B
1 ≦ Mass Air Flow Rate ≦ 173.0 or more (*1)	C

*1: The value must be changed when the throttle valve is opened or closed.

B	**Go to step 6**
C	**CHECK FOR INTERMITTENT PROBLEMS (See page 05–528)**

A

2 INSPECT MASS AIR FLOW METER(POWER SOURCE)

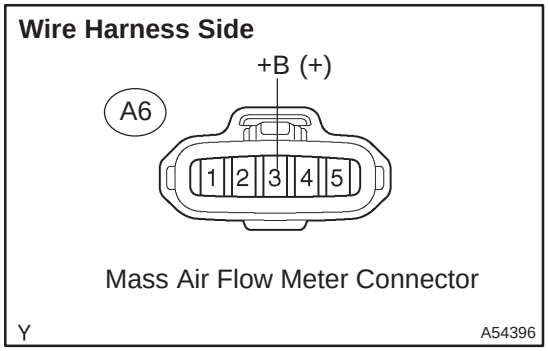

(a) Turn the ignition switch ON.
(b) Disconnect the A6 mass air flow meter connector.
(c) Measure the voltage between the terminal of the wire harness side connector and the body ground.

Standard:

Symbols (Terminal No.)	Specified condition
+B (A6–3) – Body ground	9 to 14 V

NG → **Go to step 5**

OK

3 INSPECT ECM(VG VOLTAGE)

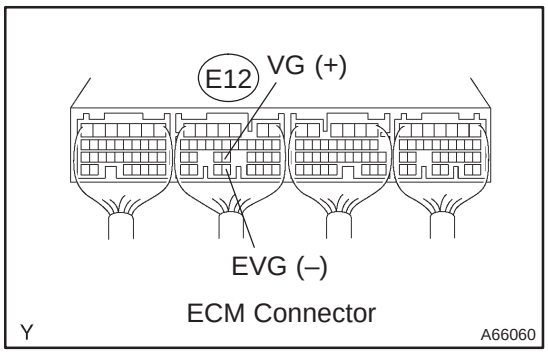

(a) Start the engine.
(b) Measure the voltage between the specified terminals of the E12 ECM connector.

HINT:
The A/C switch should be turned OFF.

Standard:

Symbols (Terminal No.)	Condition	Specified condition
VG (E12–24) – EVG (E12–32)	Engine is idling	0.5 to 3.4 V

OK → **REPLACE ECM (See page 10–65)**

NG

4 CHECK HARNESS AND CONNECTOR(MASS AIR FLOW METER – ECM)

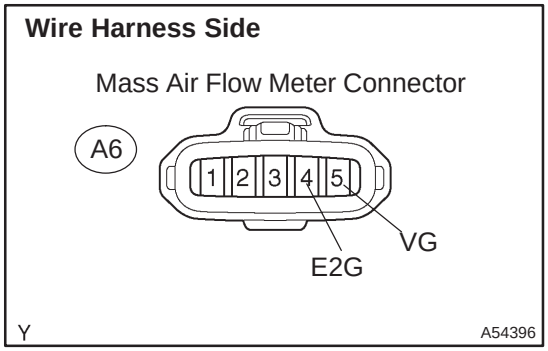

(a) Disconnect the A6 mass air flow meter connector.
(b) Disconnect the E12 ECM connector.
(c) Check for continuity between the wire harness side connectors.

Standard (Check for open):

Symbols (Terminal No.)	Specified condition
VG (A6–5) – VG (E12–24)	Continuity
E2G (A6–4) – EVG (E12–32)	

Standard (Check for short):

Symbols (Terminal No.)	Specified condition
VG (A6–5) or VG (E12–24) – Body ground	No continuity

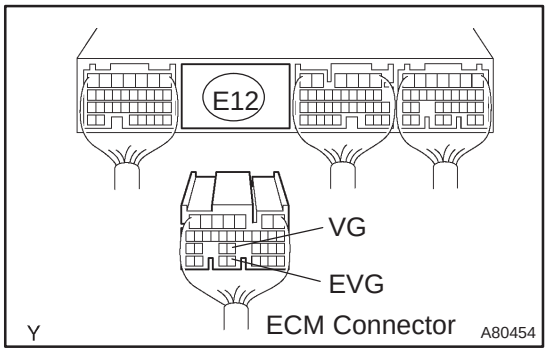

NG → **REPAIR OR REPLACE HARNESS OR CONNECTOR**

OK

REPLACE MASS AIR FLOW METER

5 CHECK HARNESS AND CONNECTOR(MASS AIR FLOW METER – EFI MAIN RELAY)

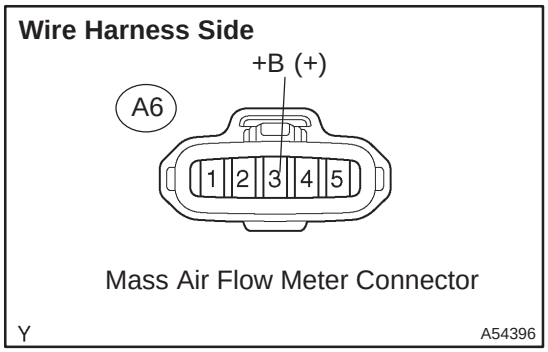

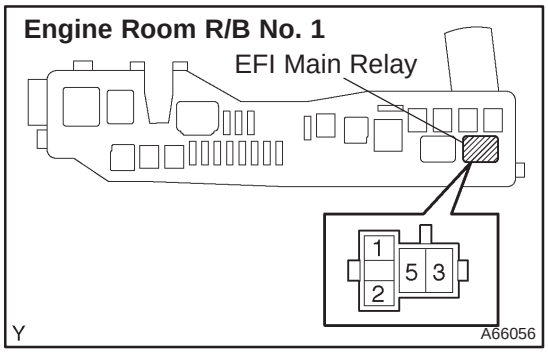

(a) Disconnect the A6 mass air flow meter connector.
(b) Remove the EFI main relay from the engine room R/B No. 1.
(c) Check for continuity between the wire harness side connectors.

Standard (Check for open):

Symbols (Terminal No.)	Specified condition
+B (A6–3) – EFI main relay (3)	Continuity

Standard (Check for short):

Symbols (Terminal No.)	Specified condition
+B (A6–3) or EFI main relay (3) – Body ground	No continuity

NG → **REPAIR OR REPLACE HARNESS OR CONNECTOR**

OK

CHECK FOR ECM POWER SOURCE CIRCUIT (See page 05–686)

6 INSPECT ECM(SENSOR GROUND)

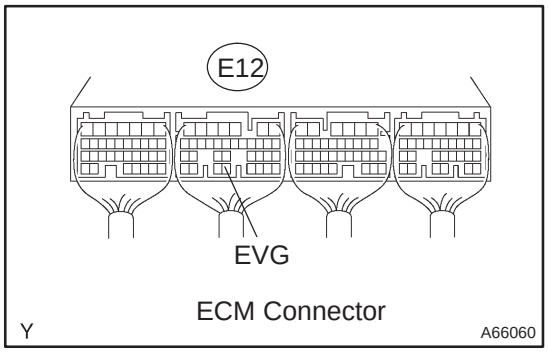

(a) Check for continuity between the terminal of the E12 ECM connector and body ground.

Standard:

Symbols (Terminal No.)	Specified condition
EVG (E12–32) – Body ground	Continuity

NG → **REPLACE ECM (See page 10–65)**

OK

7 CHECK HARNESS AND CONNECTOR(MASS AIR FLOW METER – ECM)

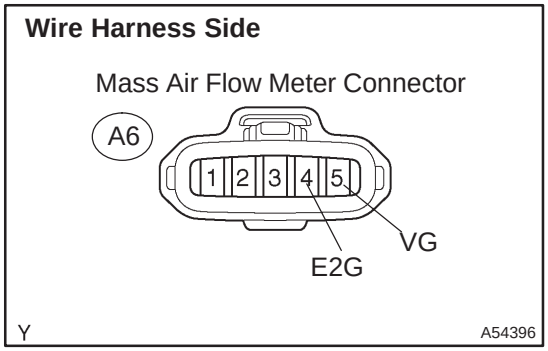

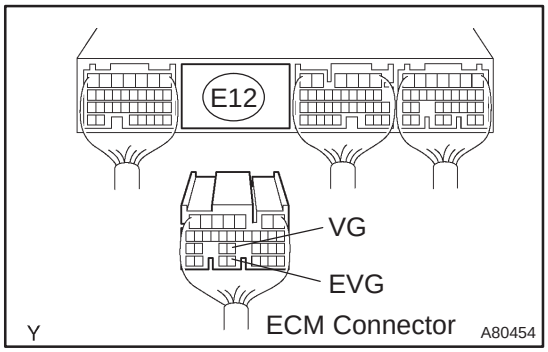

(a) Disconnect the A6 mass air flow meter connector.
(b) Disconnect the E12 ECM connector.
(c) Check for continuity between the wire harness side connectors.

Standard (Check for open):

Symbols (Terminal No.)	Specified condition
VG (A6–5) – VG (E12–24)	Continuity
E2G (A6–4) – EVG (E12–32)	

Standard (Check for short):

Symbols (Terminal No.)	Specified condition
VG (A6–5) or VG (E12–24) – Body ground	No continuity

NG → **REPAIR OR REPLACE HARNESS OR CONNECTOR**

OK

REPLACE MASS AIR FLOW METER

DTC	P0101	MASS OR VOLUME AIR FLOW CIRCUIT RANGE/PERFORMANCE PROBLEM

CIRCUIT DESCRIPTION

Refer to DTC P0100 on page 05–577.

DTC No.	DTC Detection Condition	Trouble Area
P0101	After engine is warmed up, condition (a) continues for more than 10 sec. at idling: (2 trip detection logic) (a) Mass air flow meter output greater than 2.2 V	• Mass air flow meter
	Conditions (a) and (b) continue for more than 6 sec. with engine speed 2000 rpm or more: (2 trip detection logic) (a) VTA greater than 0.1 V (b) Mass air flow meter output less than 0.25 V	

INSPECTION PROCEDURE

HINT:

Read freeze frame data using the hand–held tester. Freeze frame data records the engine conditions when a malfunction is detected. When troubleshooting, it is useful for determining whether the vehicle was running or stopped, the engine was warmed up or not, etc. at the time of the malfunction.

1	CHECK OTHER DTC OUTPUT(BESIDES DTC P0101)

(a) Read the DTC using the hand–held tester.

Result:

Display (DTC output)	Proceed to
P0101 and other DTCs are output	A
Only P0101 is output	B

HINT:

If any other codes besides P0101 are output, perform the troubleshoot for those DTCs first.

B → REPLACE MASS AIR FLOW METER

A

GO TO RELEVANT DTC CHART (See page 05–544)

DTC	P0105	MANIFOLD ABSOLUTE PRESSURE/BAROMETRIC PRESSURE CIRCUIT

DTC	P0107	MANIFOLD ABSOLUTE PRESSURE/BAROMETRIC PRESSURE CIRCUIT LOW INPUT

DTC	P0108	MANIFOLD ABSOLUTE PRESSURE/BAROMETRIC PRESSURE CIRCUIT HIGH INPUT

CIRCUIT DESCRIPTION

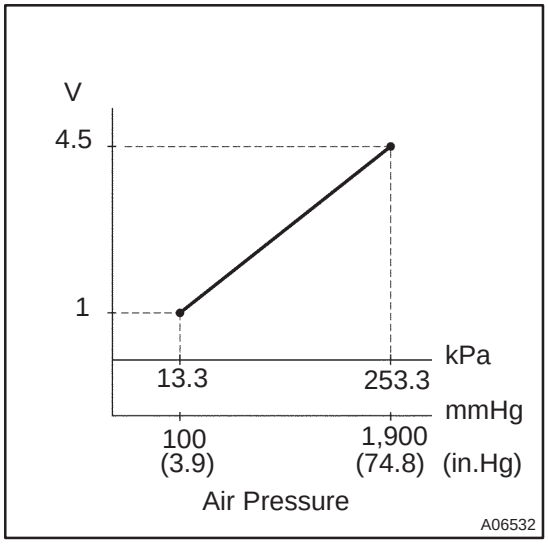

By a built–in sensor unit, the manifold absolute pressure sensor detects the intake manifold pressure as a voltage. The ECM then determines the basic injection duration and basic ignition advance angle based on this voltage.
Since the manifold absolute pressure sensor does not use the atmospheric pressure as a criterion, but senses the absolute pressure inside the intake manifold (the pressure in proportion to the preset absolute vacuum 0), it is not influenced by fluctuations in the atmospheric pressure due to high altitude and other factors. This permits it to control the air fuel ratio at the proper level under all conditions.

DTC No.	DTC Detection Condition	Trouble Area
P0105 P0107 P0108	Open or short in manifold absolute pressure sensor circuit for 0.5 sec. or more (1 trip detection logic)	• Open or short in manifold absolute pressure sensor circuit • Manifold absolute pressure sensor • Turbocharger assy • EGR valve assy • ECM

HINT:
After confirming DTC ”P0105, P0107 or P0108”, use the hand–held tester to confirm the intake air temperature from the ”DIAGNOSIS / OBD/MOBD / DATA LIST / ALL / PIM”.

Intake Manifold Pressure (kPa)	Malfunction
Approx. 0	• PIM circuit short
250 or more	• VC circuit open or short • PIM circuit open • E2 circuit open

WIRING DIAGRAM

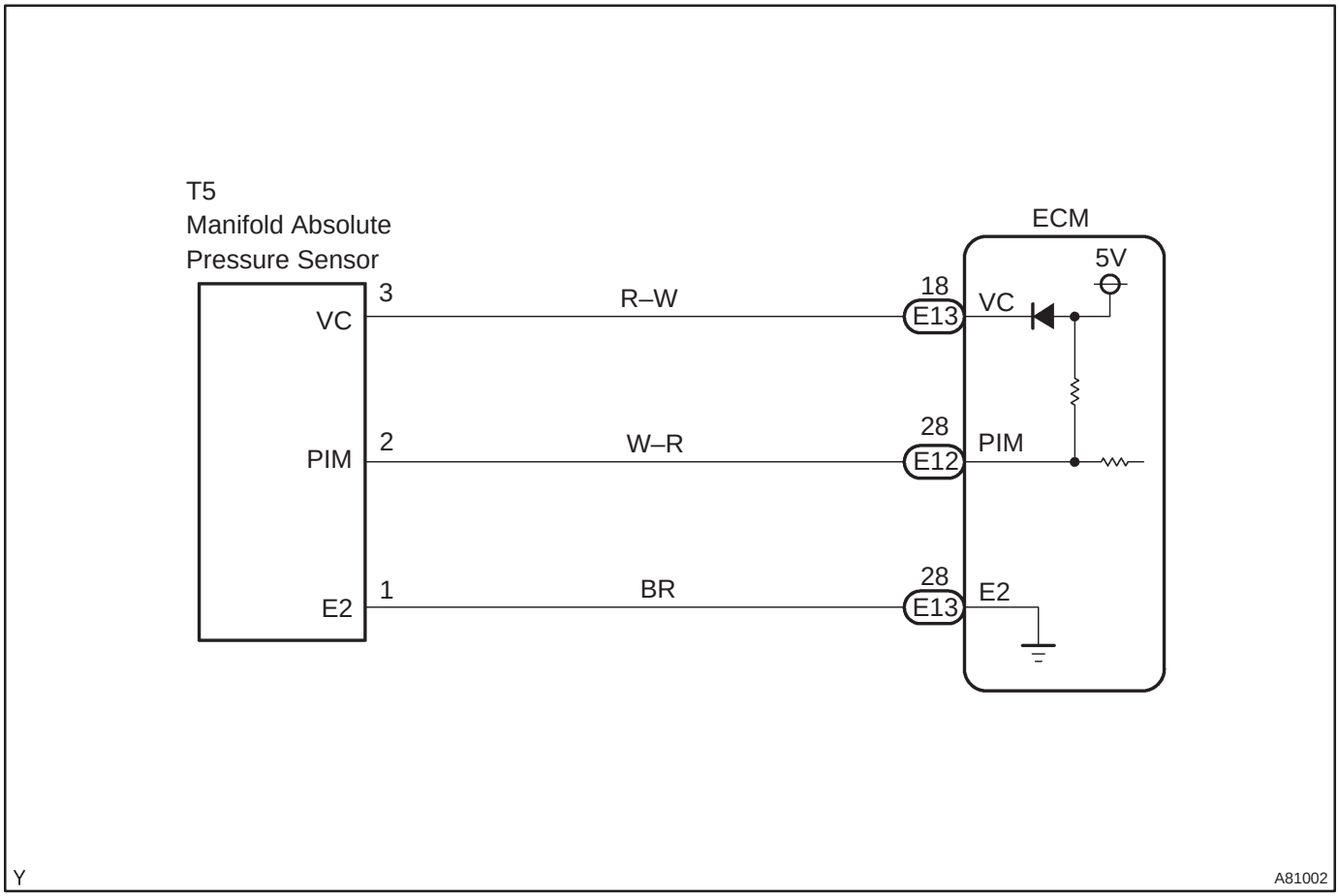

INSPECTION PROCEDURE

HINT:

- If different DTCs related to different systems that have terminal E2 as the ground terminal are output simultaneously, terminal E2 may be open.
- Read freeze frame data using the hand–held tester. Freeze frame data records the engine conditions when a malfunction is detected. When troubleshooting, it is useful for determining whether the vehicle was running or stopped, the engine was warmed up or not, etc. at the time of the malfunction.

1	READ VALUE OF HAND–HELD TESTER(MANIFOLD ABSOLUTE PRESSURE)

(a) Connect the hand–held tester to the DLC3.
(b) Turn the ignition switch ON and push the hand–held tester main switch ON.
(c) Select the item ”DIAGNOSIS / OBD/MOBD / DATA LIST / ALL / PIM” and read its value displayed on the hand–held tester.
Pressure: Same value as the actual atmospheric pressure.

NG → **CHECK FOR INTERMITTENT PROBLEMS (See page 05–528)**

OK

2 INSPECT ECM(VC VOLTAGE)

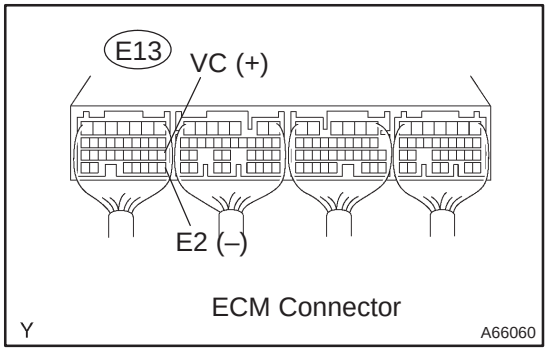

(a) Turn the ignition switch ON.
(b) Measure the voltage between the specified terminals of the E13 ECM connector.
Voltage:

Symbols (Terminal No.)	Specified condition
VC (E13–18) – E2 (E13–28)	4.5 to 5.5 V

NG → **REPLACE ECM (See page 10–65)**

OK

3 INSPECT ECM(PIM VOLTAGE)

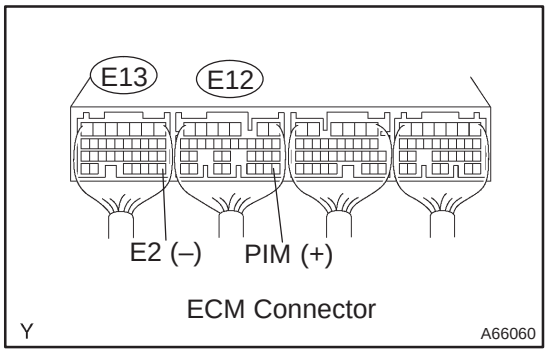

(a) Turn the ignition switch ON.
(b) Measure the voltage between the terminals of the E12 and E13 ECM connectors.
Voltage:

Symbols (Terminal No.)	Condition	Specified condition
PIM (E12–28) – E2 (E13–28)	Applied negative pressure of 40kPa (300 mmHg, 11.8 in.Hg)	0.2 to 0.8 V
PIM (E12 – 28) – E2 (E13–28)	Same as atmosphere	1.3 to 1.9 V
PIM (E12 – 28) – E2 (E13–28)	Applied positive pressure of 69kPa (0.7 kg/cm^{3}, 10.0 psi	3.2 to 3.8 V

NG → **REPLACE ECM (See page 10–65)**

OK

4	CHECK HARNESS AND CONNECTOR(MANIFOLD ABSOLUTE PRESSURE SENSOR – ECM)

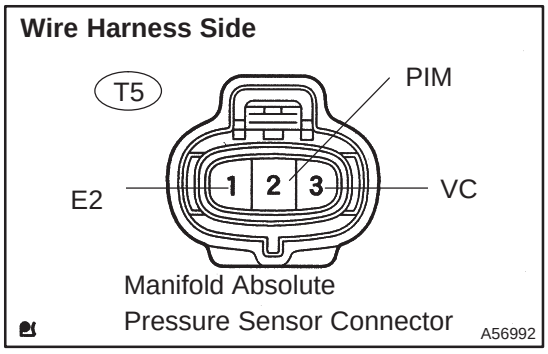

(a) Disconnect the T5 manifold absolute pressure sensor connector.
(b) Disconnect the E12 and E13 ECM connectors.
(c) Check for continuity between the wire harness side connector.

Standard (Check for open):

Symbols (Terminal No.)	Specified condition
PIM (T5–2) – PIM (E12–28)	Continuity
VC (T5–3) – VC (E13–18)	
E2 (T5–1) – E2 (E13–28)	

Standard (Check for short):

Symbols (Terminal No.)	Specified condition
PIM (T5–2) or PIM (E12–28) – Body ground	No continuity
VC (T5–3) or VC (E13–18) – Body ground	
E2 (T5–1) or E2 (E13–28) – Body ground	

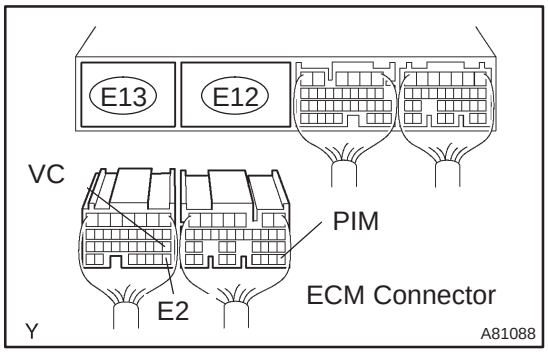

NG → **REPAIR OR REPLACE HARNESS OR CONNECTOR**

OK

5	CHECK TURBOCHARGER SUB–ASSY (See page 13–7)

NG → **REPLACE TURBOCHARGER SUB–ASSY (See page 13–11)**

OK

6	CHECK EGR VALVE ASSY (See page 12–18)

NG → **REPLACE EGR VALVE ASSY (See page 14–286)**

OK

REPLACE MANIFOLD ABSOLUTE PRESSURE SENSOR

DTC	P0106	MANIFOLD ABSOLUTE PRESSURE/ BAROMETRIC PRESSURE CIRCUIT RANGE/ PERFORMANCE PROBLEM

CIRCUIT DESCRIPTION

Refer to DTC P0105 on page 05–584.

DTC No.	DTC Detection Condition	Trouble Area
P0106	Voltage output of the manifold absolute pressure sensor is out of the standard range. (2 trip detection logic)	• Manifold absolute pressure sensor

INSPECTION PROCEDURE

HINT:

- If DTCs ”P0105, P0107, and P0108” are output simultaneously, manifold absolute pressure sensor circuit may be open or short. Perform the troubleshooting of DTC ”P0105, P0107 or P0108” first.
- Read freeze frame data using the hand–held tester. Freeze frame data records the engine conditions when a malfunction is detected. When troubleshooting, it is useful for determining whether the vehicle was running or stopped, the engine was warmed up or not, etc. at the time of the malfunction.

1	CHECK OTHER DTC OUTPUT(BESIDES DTC P0106)

(a) Read the DTC using the hand–held tester.
Result:

Display (DTC output)	Proceed to
Only P0106 are output	A
P0106 and other DTCs are output	B

HINT:

If any other codes besides ”P0106” are output, perform the troubleshooting for those DTCs first.

B → **GO TO RELEVANT DTC CHART (See page 05–544)**

A

REPLACE MANIFOLD ABSOLUTE PRESSURE SENSOR

DTC	P0110	INTAKE AIR TEMPERATURE CIRCUIT

DTC	P0112	INTAKE AIR TEMPERATURE CIRCUIT LOW INPUT

DTC	P0113	INTAKE AIR TEMPERATURE CIRCUIT HIGH INPUT

CIRCUIT DESCRIPTION

(Fig.1)

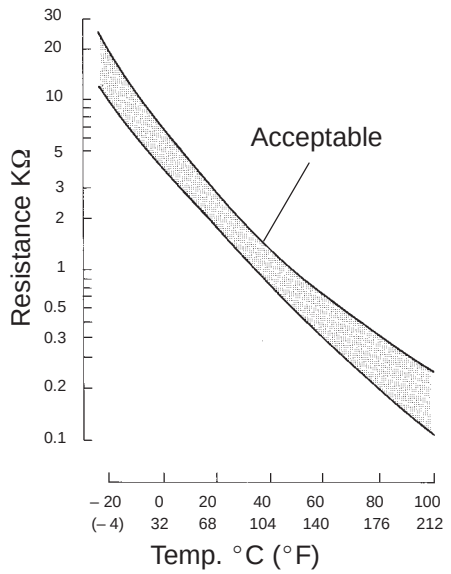

The intake air temperature sensor is built in the mass air flow meter and senses the intake air temperature.
A thermistor built in the sensor changes the resistance value according to the intake air temperature.
The lower the intake air temperature is, the greater the thermistor resistance value becomes, and the higher the intake air temperature is, the lower the thermistor resistance value becomes (See Fig. 1).
The intake air temperature sensor is connected to the ECM (See below). The 5 V power source voltage in the ECM is applied to the intake air temperature sensor from terminal THA (THAR) via resistor R.
The resistor R and the intake air temperature sensor are connected in series. When the resistance value of the intake air temperature sensor changes in accordance with changes in the intake air temperature, the potential at terminal THA (THAR) also changes. Based on this signal, the ECM increases the fuel injection volume to improve the driveability with a cold engine.

DTC No.	Proceed to	DTC Detection Condition	Trouble Area
P0110	Step 1	Open or short in intake air temp. sensor circuit for 0.5 sec. (1 trip detection logic)	• Open or short in intake air temperature sensor circuit • Intake air temperature sensor (built in mass air flow meter) • ECM
P0112	Step 4	Short in intake air temp. sensor circuit for 0.5 sec. (1 trip detection logic)	
P0113	Step 2	Open in intake air temp. sensor circuit for 0.5 sec. (1 trip detection logic)	

HINT:
After confirming DTC ”P0110, P0112 or P0113, use the hand–held tester to confirm the intake air temperature from the ”DIAGNOSIS / OBD/MOBD / DATA LIST / ALL”.

Temperature Displayed	Malfunction
–40˚C (–40˚F)	Open circuit
140˚C (284˚F) or more	Short circuit

WIRING DIAGRAM

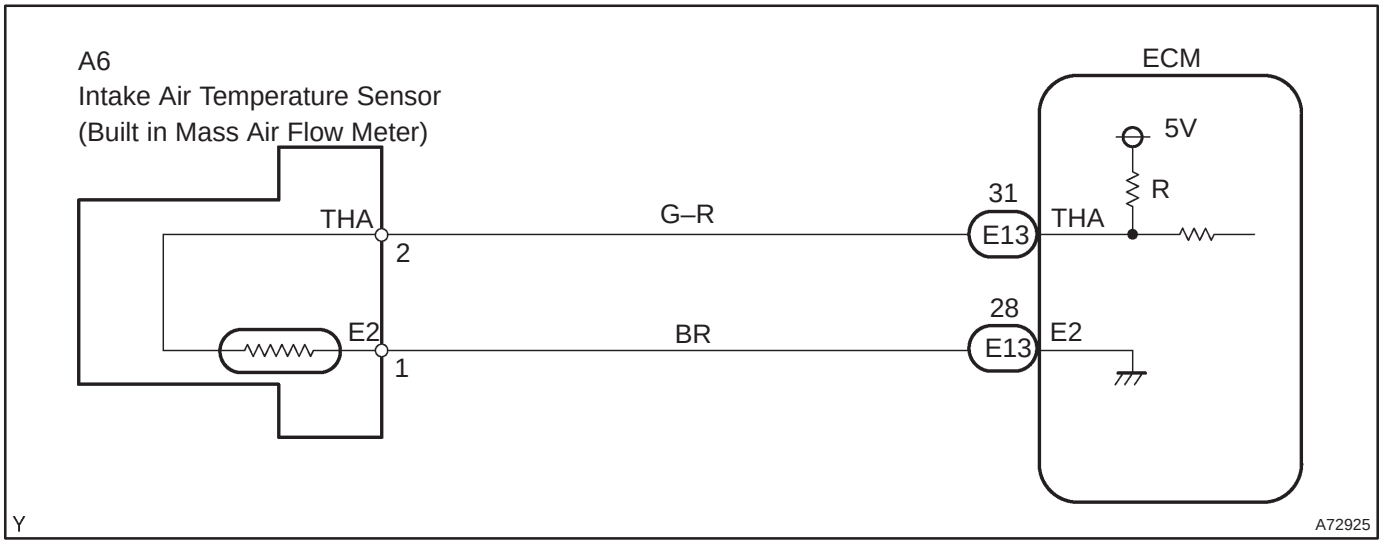

INSPECTION PROCEDURE

HINT:

- If different DTCs related to different systems that have terminal E2 as the ground terminal are output simultaneously, terminal E2 may be open.
- Read freeze frame data using the hand–held tester. Freeze frame data records the engine conditions when a malfunction is detected. When troubleshooting, it is useful for determining whether the vehicle was running or stopped, the engine was warmed up or not, etc. at the time of the malfunction.

1	READ VALUE OF HAND–HELD TESTER(INTAKE AIR TEMPERATURE)

(a) Connect the hand–held tester to the DLC3.
(b) Turn the ignition switch ON and push the hand–held tester main switch ON.
(c) Select the item ”DIAGNOSIS / OBD/MOBD / DATA LIST / ALL / INTAKE AIR” and read its value displayed on the hand–held tester.
Temperature: Same value as the actual intake air temperature.
Result:

Temperature Displayed	Proceed to
–40˚C (–40˚F)	A
140˚C (284˚F) or more	B
OK (Same as present temperature)	C

HINT:

- If there is an open circuit, the hand–held tester indicates –40˚C (–40˚F).
- If there is a short circuit, the hand–held tester indicates 140˚C (284˚F) or more.

B	**Go to step 4**
C	**CHECK FOR INTERMITTENT PROBLEMS (See page 05–528)**

A

2 READ VALUE OF HAND–HELD TESTER(CHECK FOR OPEN IN WIRE HARNESS)

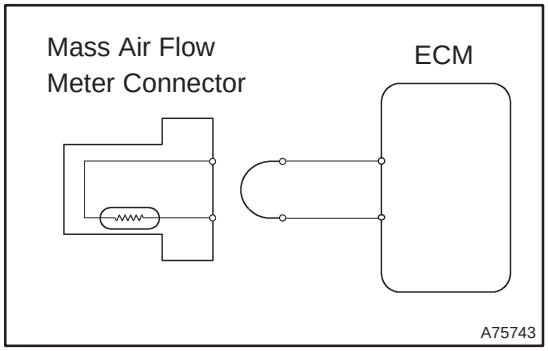

(a) Disconnect the A6 mass air flow meter connector.
(b) Connect terminals THA and E2 of the mass air flow meter wire harness side connector.
(c) Turn the ignition switch ON.
(d) Select the item ”DIAGNOSIS / OBD/MOBD / DATA LIST / ALL / INTAKE AIR” and read its value displayed on the hand–held tester.
Temperature: 140°C (284°F) or more

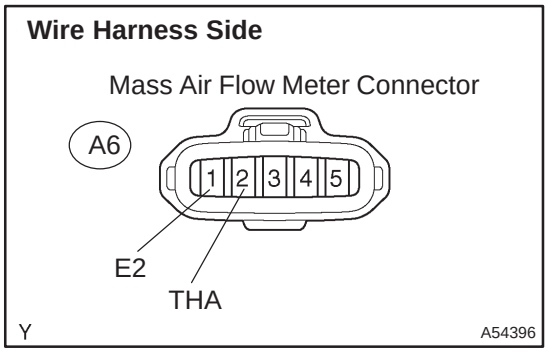

OK → **CONFIRM GOOD CONNECTION AT SENSOR. IF OK, REPLACE MASS AIR FLOW METER**

NG

3 READ VALUE OF HAND–HELD TESTER(CHECK FOR OPEN IN ECM)

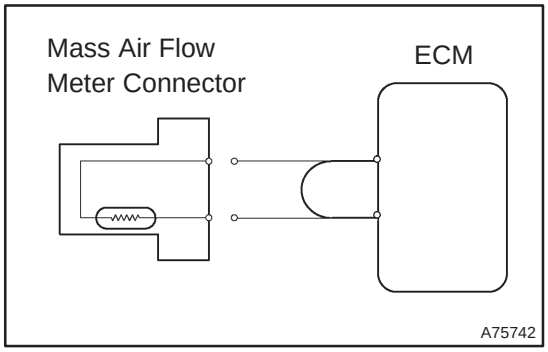

(a) Disconnect the A6 mass air flow meter connector.
(b) Connect terminals THA and E2 of the E13 ECM connector.

HINT:
Before checking, do a visual and contact pressure check for the ECM connector.

(c) Turn the ignition switch ON.
(d) Select the item ”DIAGNOSIS / OBD/MOBD / DATA LIST / ALL / INTAKE AIR” and read its value displayed on the hand–held tester.
Temperature: 140°C (284°F) or more

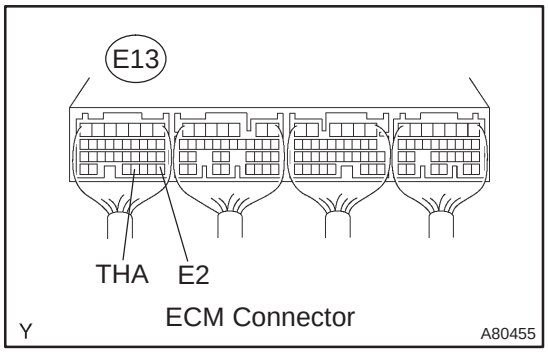

OK → **REPAIR OR REPLACE HARNESS OR CONNECTOR**

NG

CONFIRM GOOD CONNECTION AT ECM. IF OK, REPLACE ECM (See page 10–65)

4	READ VALUE OF HAND–HELD TESTER(CHECK FOR SHORT IN WIRE HARNESS)

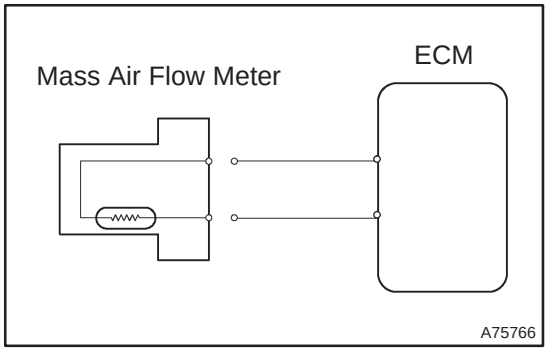

(a) Disconnect the A6 mass air flow meter connector.
(b) Turn the ignition switch ON.
(c) Select the item "DIAGNOSIS / OBD/MOBD / DATA LIST / ALL / INTAKE AIR" and read its value displayed on the hand–held tester.
Temperature: –40°C (–40°F)

OK	REPLACE MASS AIR FLOW METER

NG

5	READ VALUE OF HAND–HELD TESTER(CHECK FOR SHORT IN ECM)

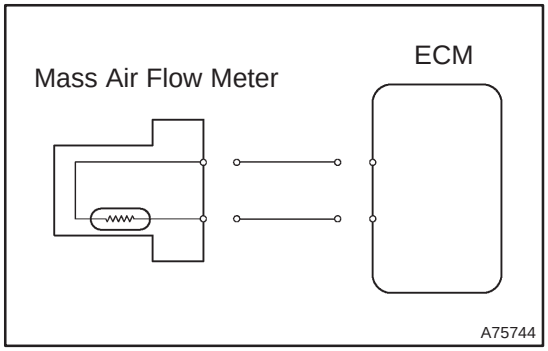

(a) Disconnect the E13 ECM connector.
(b) Turn the ignition switch ON.
(c) Select the item "DIAGNOSIS / OBD/MOBD / DATA LIST / ALL / INTAKE AIR" and read its value displayed on the hand–held tester.
Temperature: –40°C (–40°F)

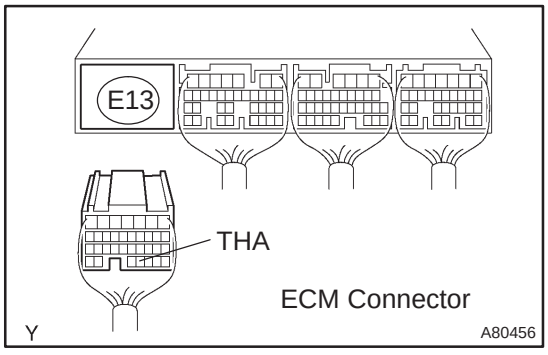

OK	REPAIR OR REPLACE HARNESS OR CONNECTOR

NG

REPLACE ECM (See page 10–65)

DTC	P0115	ENGINE COOLANT TEMPERATURE CIRCUIT

DTC	P0117	ENGINE COOLANT TEMPERATURE CIRCUIT LOW INPUT

DTC	P0118	ENGINE COOLANT TEMPERATURE CIRCUIT HIGH INPUT

CIRCUIT DESCRIPTION

A thermistor is built in the engine coolant temperature sensor and changes the resistance value according to the engine coolant temperature.
The structure of the sensor and connection to the ECM is the same as those of the intake air temperature sensor.
HINT:
If the ECM detects DTC ”P0115, P0117 or P0118” it enters the fail–safe mode in which the engine coolant temperature is assumed to be 80 °C (176 °F).

DTC No.	Proceed to	DTC Detection Condition	Trouble Area
P0115	Step 1	Open or short in engine coolant temp. sensor circuit for 0.5 sec. (1 trip detection logic)	• Open or short in engine coolant temp. sensor circuit • Engine coolant temp. sensor • ECM
P0117	Step 4	Short in engine coolant temp. sensor circuit for 0.5 sec. (1 trip detection logic)	
P0118	Step 2	Open in engine coolant temp. sensor circuit for 0.5 sec. (1 trip detection logic)	

HINT:
After confirming DTC ”P0115, P0117 or P0118”, use the hand–held tester to confirm the engine coolant temperature from the ”DIAGNOSIS / OBD/MOBD / DATA LIST / ALL”.

Temperature Displayed	Malfunction
–40˚C (–40˚F)	Open circuit
140˚C (284˚F) or more	Short circuit

WIRING DIAGRAM

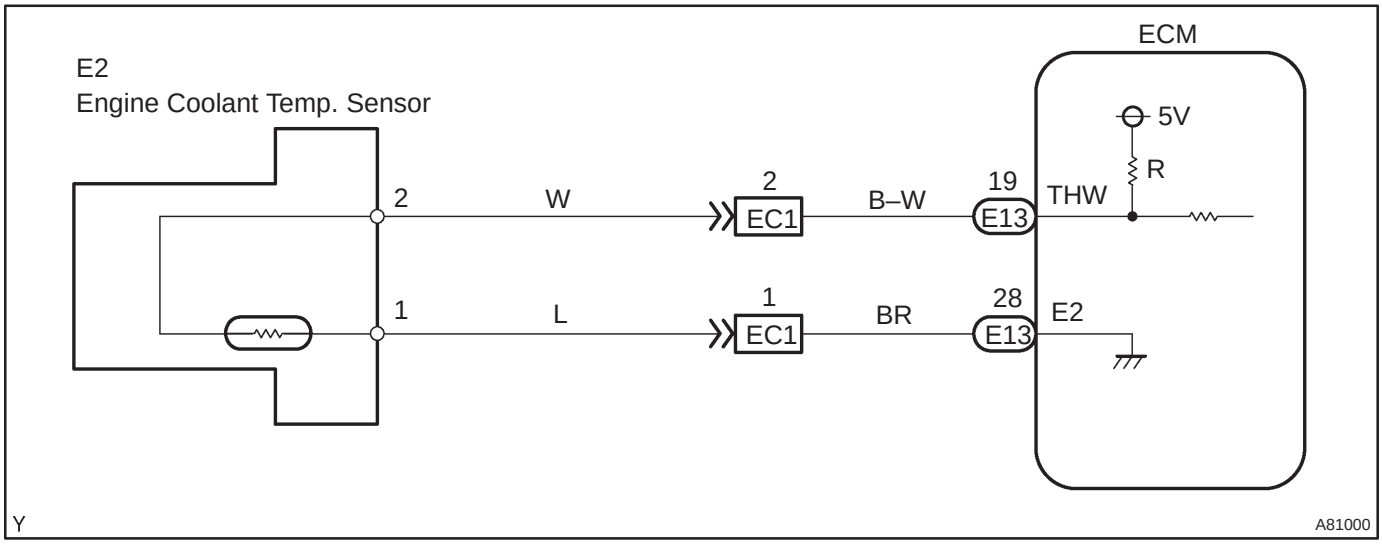

INSPECTION PROCEDURE

HINT:

- If different DTCs related to different systems that have terminal E2 as the ground terminal are output simultaneously, terminal E2 may be open.
- Read freeze frame data using the hand–held tester. Freeze frame data records the engine conditions when a malfunction is detected. When troubleshooting, it is useful for determining whether the vehicle was running or stopped, the engine was warmed up or not, etc. at the time of the malfunction.

1	READ VALUE OF HAND–HELD TESTER(ENGINE COOLANT TEMPERATURE)

(a) Connect the hand–held tester to the DLC3.
(b) Turn the ignition switch ON and push the hand–held tester main switch ON.
(c) Select the item ”DIAGNOSIS / OBD/MOBD / DATA LIST / ALL / COOLANT TEMP” and read its value displayed on the hand–held tester.
Temperature: Same value as the actual intake air temperature.
Result:

Temperature Displayed	Proceed to
–40˚C (–40˚F)	A
140˚C (284˚F) or more	B
OK (Same as present temperature)	C

HINT:

- If there is an open circuit, the hand–held tester indicates –40˚C (–40˚F).
- If there is a short circuit, the hand–held tester indicates 140˚C (284˚F) or more.

B	**Go to step 4**
C	**CHECK FOR INTERMITTENT PROBLEMS (See page 05–528)**

A

2 READ VALUE OF HAND–HELD TESTER(CHECK FOR OPEN IN WIRE HARNESS)

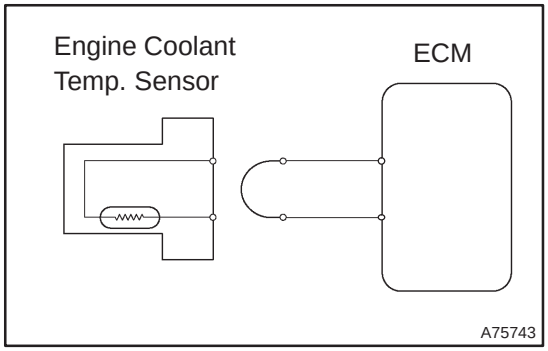

(a) Disconnect the E2 engine coolant temperature sensor connector.
(b) Connect terminals 1 and 2 of the engine coolant temperature sensor wire harness side connector.
(c) Turn the ignition switch ON.
(d) Select the item ”DIAGNOSIS / OBD/MOBD / DATA LIST / ALL / COOLANT TEMP” and read its value displayed on the hand–held tester.
Temperature: 140°C (284°F) or more

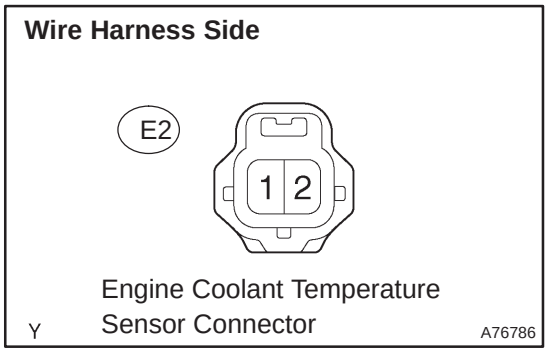

OK → **CONFIRM GOOD CONNECTION AT SENSOR. IF OK, REPLACE ENGINE COOLANT TEMP. SENSOR**

NG

3 READ VALUE OF HAND–HELD TESTER(CHECK FOR OPEN IN ECM)

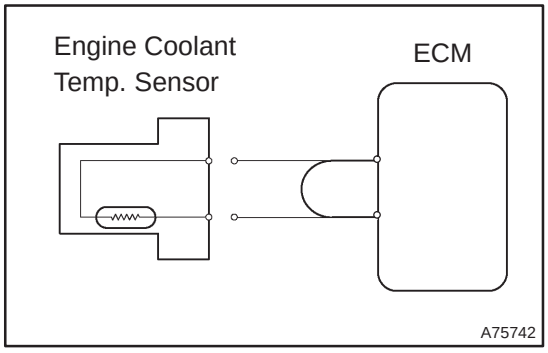

(a) Disconnect the E2 engine coolant temperature sensor connector.
(b) Connect terminals THW and E2 of the E13 ECM connector.

HINT:
Before checking, do a visual and contact pressure check for the ECM connector.

(c) Turn the ignition switch ON.
(d) Select the item ”DIAGNOSIS / OBD/MOBD / DATA LIST / ALL / COOLANT TEMP” and read its value displayed on the hand–held tester.
Temperature: 140°C (284°F) or more

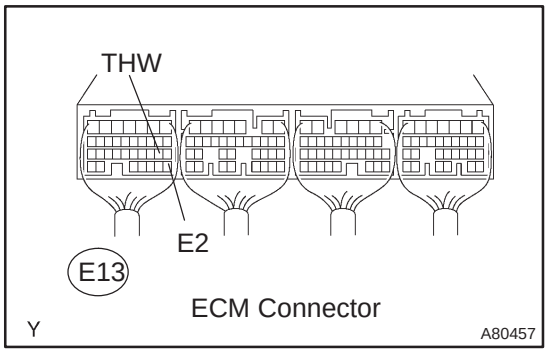

OK → **REPAIR OR REPLACE HARNESS OR CONNECTOR**

NG

CONFIRM GOOD CONNECTION AT ECM. IF OK, REPLACE ECM (See page 10–65)

4	READ VALUE OF HAND–HELD TESTER(CHECK FOR SHORT IN WIRE HARNESS)

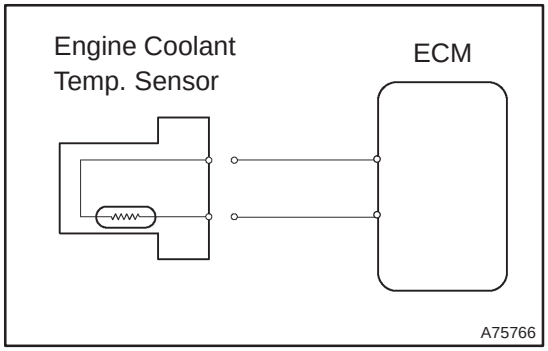

(a) Disconnect the E2 engine coolant temperature sensor connector.
(b) Turn the ignition switch ON.
(c) Select the item ”DIAGNOSIS / OBD/MOBD / DATA LIST / ALL / COOLANT TEMP” and read its value displayed on the hand–held tester.
Temperature: –40°C (–40°F)

OK → **REPLACE ENGINE COOLANT TEMPERATURE SENSOR**

NG

5	READ VALUE OF HAND–HELD TESTER(CHECK FOR SHORT IN ECM)

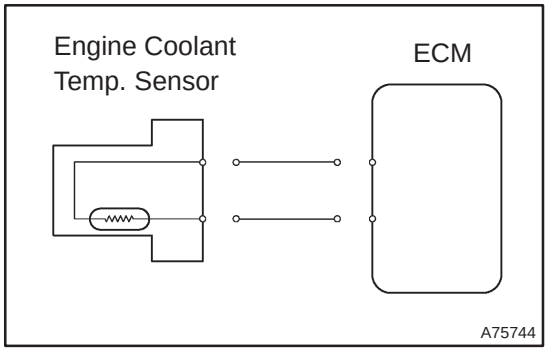

(a) Disconnect the E13 ECM connector.
(b) Turn the ignition switch ON.
(c) Select the item ”DIAGNOSIS / OBD/MOBD / DATA LIST / ALL / COOLANT TEMP” and read its value displayed on the hand–held tester.
Temperature: –40°C (–40°F)

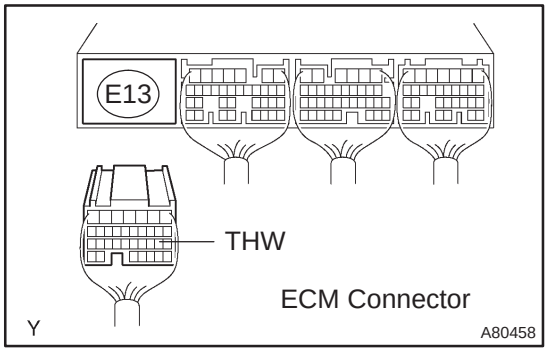

OK → **REPAIR OR REPLACE HARNESS OR CONNECTOR**

NG

REPLACE ECM (See page 10–65)

DTC	P0116	ENGINE COOLANT TEMPERATURE CIRCUIT RANGE/PERFORMANCE PROBLEM

CIRCUIT DESCRIPTION

Refer to DTC P0115 on page 05–593.

DTC No.	DTC Detection Condition	Trouble Area
P0116	When THW greater than –40°C (–40°F) and less than 60°C (140°F), and THA greater than –6.7°C (20°F), and when starting engine, conditions (a) and (b) continue (2 trip detection logic): (a) Vehicle speed is changing (Not stable) (b) THW change is lower than 3°C (5.4°F) after engine was started.	• Cooling system • Engine coolant temperature sensor • Thermostat
	In case that reading value of engine coolant temp. sensor will not change more than 1°C (1.8°F) even after repeating 6 trips (detection logic) of adjusting speed pattern with THW more than 90°C (194°F) after engine was started.	

INSPECTION PROCEDURE

HINT:

- If DTCs ”P0115, P0116, P0117 and P0118” are output simultaneously, engine coolant temperature sensor circuit may be open or short. Perform the troubleshooting of DTC ”P0115, P0117 or P0118” first.
- Read freeze frame data using the hand–held tester. Freeze frame data records the engine conditions when a malfunction is detected. When troubleshooting, it is useful for determining whether the vehicle was running or stopped, the engine was warmed up or not, the air–fuel ratio was lean or rich, etc. at the time of the malfunction.

1 CHECK OTHER DTC OUTPUT(BESIDES DTC P0116)

(a) Read the DTC using the hand–held tester.

Result:

Display (DTC output)	Proceed to
Only P0116 are output	A
P0116 and other DTCs are output	B

HINT:

If any other codes besides ”P0116” are output, perform the troubleshooting for those DTCs first.

B → **GO TO RELEVANT DTC CHART (See page 05–544)**

A

2 INSPECT THERMOSTAT (See page 16–39)

NG → **REPLACE THERMOSTAT (See page 16–50)**

OK

REPLACE ENGINE COOLANT TEMPERATURE SENSOR

DTC P0168 FUEL TEMPERATURE TOO HIGH

CIRCUIT DESCRIPTION

Refer to DTC P0180 on page 05–599.

DTC No.	DTC Detection Condition	Trouble Area
P0168	When THF greater than 35˚C (95˚F) and less than 60˚C (140˚F), and THF ≧ –6.7˚C (20˚F), and when starting engine, conditions (a) and (b) continue (1 trip detection logic): (a) Vehicle speed is changing (Not stable) (b) THF change is lower than 3˚C (5.4˚F) after the engine was started.	• Fuel temperature sensor
	In case that reading value of fuel temp. sensor will not change more than 1˚C (1.8˚F) even after repeating 6 trips (detection logic) of adjusting speed pattern with THF more than 60˚C (140˚F) after the engine was started.	

INSPECTION PROCEDURE

HINT:

- If DTCs ”P0180, P0182 and P0183” are output simultaneously, fuel temperature sensor circuit may be open or short. Perform the troubleshooting of DTC ”P0180, P0182 or P0183” first.
- Read freeze frame data using the hand–held tester. Freeze frame data records the engine conditions when a malfunction is detected. When troubleshooting, it is useful for determining whether the vehicle was running or stopped, the engine was warmed up or not, etc. at the time of the malfunction.

1 CHECK OTHER DTC OUTPUT(BESIDES DTC P0168)

(a) Read the DTC using the hand–held tester.
Result:

Display (DTC output)	Proceed to
Only P0168 are output	A
P0168 and other DTCs are output	B

HINT:

If any other codes besides ”P0168” are output, perform the troubleshooting for those DTCs first.

B → **GO TO RELEVANT DTC CHART (See page 05–544)**

A

REPLACE FUEL TEMPERATURE SENSOR

DTC	P0180	FUEL TEMPERATURE SENSOR ”A” CIRCUIT

DTC	P0182	FUEL TEMPERATURE SENSOR ”A” CIRCUIT LOW INPUT

DTC	P0183	FUEL TEMPERATURE SENSOR ”A” CIRCUIT HIGH INPUT

CIRCUIT DESCRIPTION

(Fig.1)

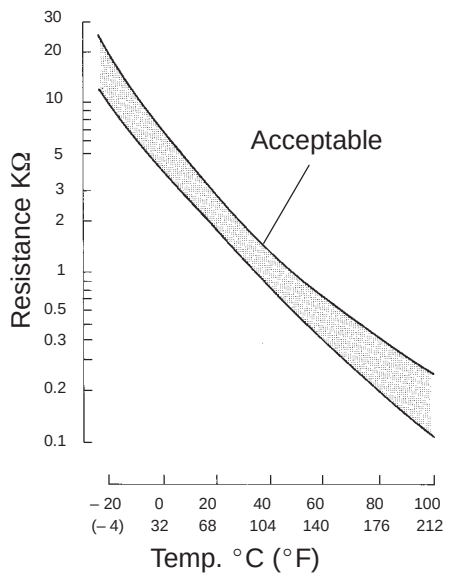

The fuel temperature sensor senses the fuel temperature. A thermistor built into the sensor changes the resistance value according to the fuel temperature. The lower the fuel temperature is, the greater the thermistor resistance becames, and the higher the fuel temperature is, the lower the thermistor resistance becomes (See Fig. 1).

The fuel temperature sensor is connected to the ECM (See below). The 5 V power source voltage in the ECM is applied to the fuel temperature sensor from terminal THF via a resistor R. The resistor R and the fuel temperature sensor are connected in series. When the resistance value of the fuel temperature sensor changes in accordance with changes in the fuel temperature, the potential at terminal THF also changes. Based on this signal, the ECM performs the pressure control compensation of the supply pump and error detection compensation of the highly pressurized fuel system.

DTC No.	Proceed to	DTC Detection Condition	Trouble Area
P0180	Step 1	Open or short in fuel temp. sensor circuit for 0.5 sec. (1 trip detection logic)	• Open or short in fuel temp. sensor circuit • Fuel temperature sensor • ECM
P0182	Step 4	Short in fuel temp. sensor circuit for 0.5 sec. (1 trip detection logic)	
P0183	Step 2	Open in fuel temp. sensor circuit for 0.5 sec. (1 trip detection logic)	

HINT:

After confirming DTC ”P0180, P0182 or P0183”, use the hand–held tester to confirm the fuel temperature from the ”DIAGNOSIS / OBD/MOBD / DATA LIST / ALL / FUEL TEMP”.

Temperature Displayed	Malfunction
–40˚C (–40˚F)	Open circuit
140˚C (284˚F) or more	Short circuit

WIRING DIAGRAM

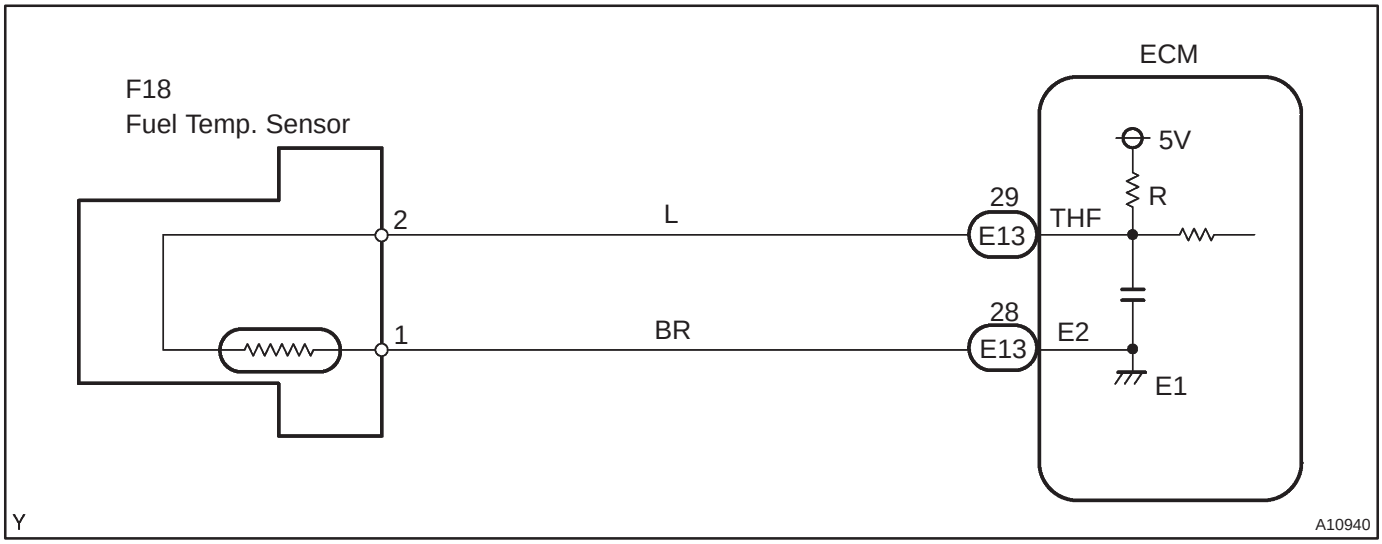

INSPECTION PROCEDURE

HINT:

- If different DTCs related to different systems that have terminal E2 as the ground terminal are output simultaneously, terminal E2 may be open.
- Read freeze frame data using the hand–held tester. Freeze frame data records the engine conditions when a malfunction is detected. When troubleshooting, it is useful for determining whether the vehicle was running or stopped, the engine was warmed up or not, etc. at the time of the malfunction.

1	READ VALUE OF HAND–HELD TESTER(FUEL TEMPARATURE)

(a) Connect the hand–held tester to the DLC3.
(b) Turn the ignition switch ON and push the hand–held tester main switch ON.
(c) Select the item ”DIAGNOSIS / OBD/MOBD / DATA LIST / ALL / FUEL TEMP” and read its value displayed on the hand–held tester.
Temperature: Same value as the actual fuel temperature.
Result:

Temperature Displayed	Proceed to
–40˚C (–40˚F)	A
140˚C (284˚F) or more	B
OK (Same as present temperature)	C

HINT:

- If there is an open circuit, the hand–held tester indicates –40˚C (–40˚F).
- If there is a short circuit, the hand–held tester indicates 140˚C (284˚F) or more.

B	Go to step 4

C	CHECK FOR INTERMITTENT PROBLEMS (See page 05–528)

A

2 READ VALUE OF HAND–HELD TESTER(CHECK FOR OPEN IN WIRE HARNESS)

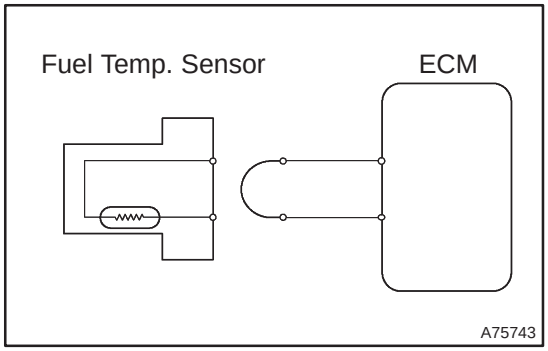

(a) Disconnect the F18 fuel temperature sensor connector.
(b) Connect terminals 1 and 2 of the fuel temperature sensor wire harness side connector.
(c) Turn the ignition switch ON.
(d) Select the item ”DIAGNOSIS / OBD/MOBD / DATA LIST / ALL / FUEL TEMP” and read its value displayed on the hand–held tester.
Temperature: 140°C (284°F) or more

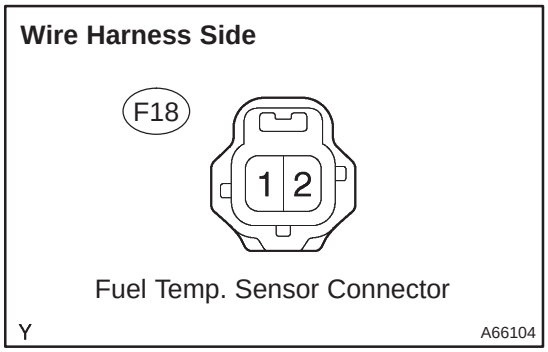

OK → **CONFIRM GOOD CONNECTION AT SENSOR. IF OK, REPLACE FUEL TEMPERATURE SENSOR**

NG

3 READ VALUE OF HAND–HELD TESTER(CHECK FOR OPEN IN ECM)

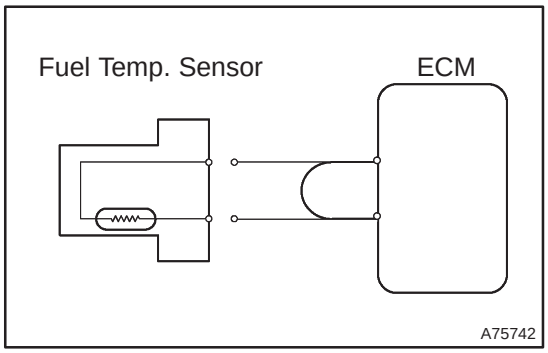

(a) Disconnect the F18 fuel temperature sensor connector.
(b) Connect terminals THF and E2 of the E13 ECM connector.

HINT:
Before checking, do a visual and contact pressure check for the ECM connector.

(c) Turn the ignition switch ON.
(d) Select the item ”DIAGNOSIS / OBD/MOBD / DATA LIST / ALL / FUEL TEMP” and read its value displayed on the hand–held tester.
Temperature: 140°C (284°F) or more

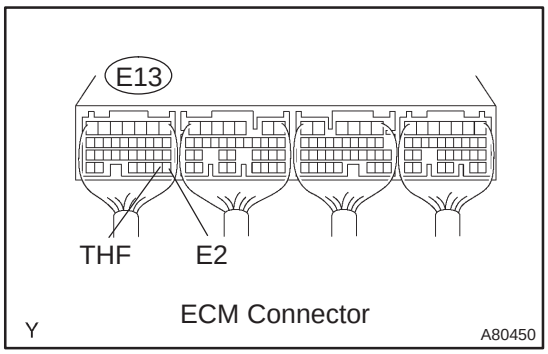

OK → **REPAIR OR REPLACE HARNESS OR CONNECTOR**

NG

CONFIRM GOOD CONNECTION AT ECM. IF OK, CHECK AND REPLACE ECM
(See page 10–65)

4 READ VALUE OF HAND–HELD TESTER(CHECK FOR SHORT IN WIRE HARNESS)

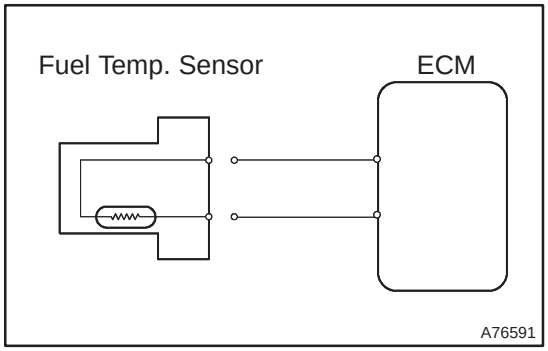

(a) Disconnect the F18 fuel temperature sensor connector.
(b) Turn the ignition switch ON.
(c) Select the item "DIAGNOSIS / OBD/MOBD / DATA LIST / ALL / FUEL TEMP" and read its value displayed on the hand–held tester.
Temperature: –40°C (–40°F)

OK → **REPLACE FUEL TEMPERATURE SENSOR**

NG

5 READ VALUE OF HAND–HELD TESTER(CHECK FOR SHORT IN ECM)

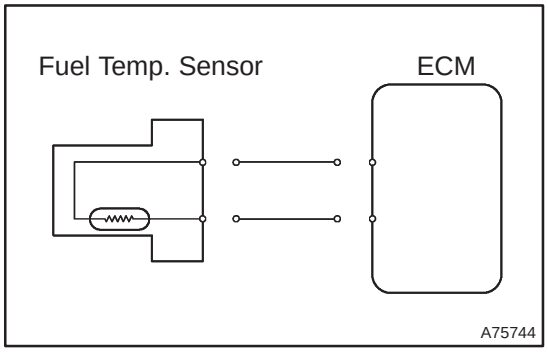

(a) Disconnect the E13 ECM connector.
(b) Turn the ignition switch ON.
(c) Select the item "DIAGNOSIS / OBD/MOBD / DATA LIST / ALL / FUEL TEMP" and read its value displayed on the hand–held tester.
Temperature: –40°C (–40°F)

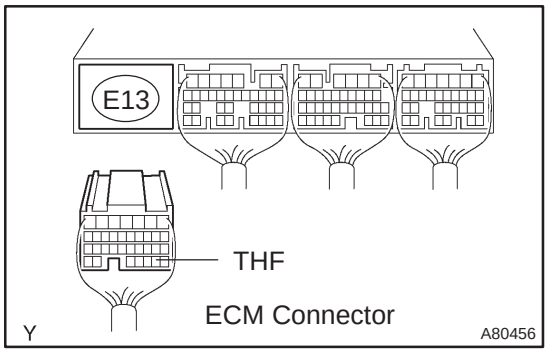

OK → **REPAIR OR REPLACE HARNESS OR CONNECTOR**

NG

REPLACE ECM (See page 10–65)

DTC	P0191	FUEL RAIL PRESSURE SENSOR CIRCUIT RANGE/PERFORMANCE

CIRCUIT DESCRIPTION

Refer to DTCs P0087 on page 05–557.

INSPECTION PROCEDURE

HINT:

- If DTCs ”P0087, P0190, P0192, and P0193” are output simultaneously, manifold absolute pressure sensor circuit may be open or short. Perform the troubleshooting of DTC ”P0087, P0190, P0192, and P0193” first.
- Read freeze frame data using the hand–held tester. Freeze frame data records the engine conditions when a malfunction is detected. When troubleshooting, it is useful for determining whether the vehicle was running or stopped, the engine was warmed up or not, etc. at the time of the malfunction.

DTC No.	DTC Detection Condition	Trouble Area
P0191	Voltage output of the fuel pressure sensor for the common rail is out of the standard range. (1 trip detection logic)	• Fuel pressure sensor

1	CHECK OTHER DTC OUTPUT(BESIDS DTC P0191)

(a) Read the DTC using the hand–held tester.
Result:

Display (DTC output)	Proceed to
Only P0191 is output	A
P0191 and other DTCs are output	B

HINT:
If any other codes besides P0191 are output, perform the troubleshoot for those DTCs first.

B → **GO TO RELEVANT DTC CHART (See page 05–544)**

A

REPLACE COMMON RAIL ASSY (FUEL PRESSURE SENSOR) (See page 11–78)

DTC	P0200	INJECTOR CIRCUIT / OPEN

HINT:

- For more information on the EDU, see page 05–517.
- If P0200 are present, Use the diagnostic trouble code matrix for fuel system, see page 05–517.

CIRCUIT DESCRIPTION

The EDU has been adopted to drive the injector at high speeds. The EDU has realized high–speed driving under high fuel pressure conditions using the DC/DC converter that provides a high–voltage, quick–charging system.

Soon after the EDU receives an injection command signal (IJT) from the ECM, the EDU responds to the command with injector injection confirmation signal (IJF) when the current is applied to the injector.

EDU Wiring Diagram

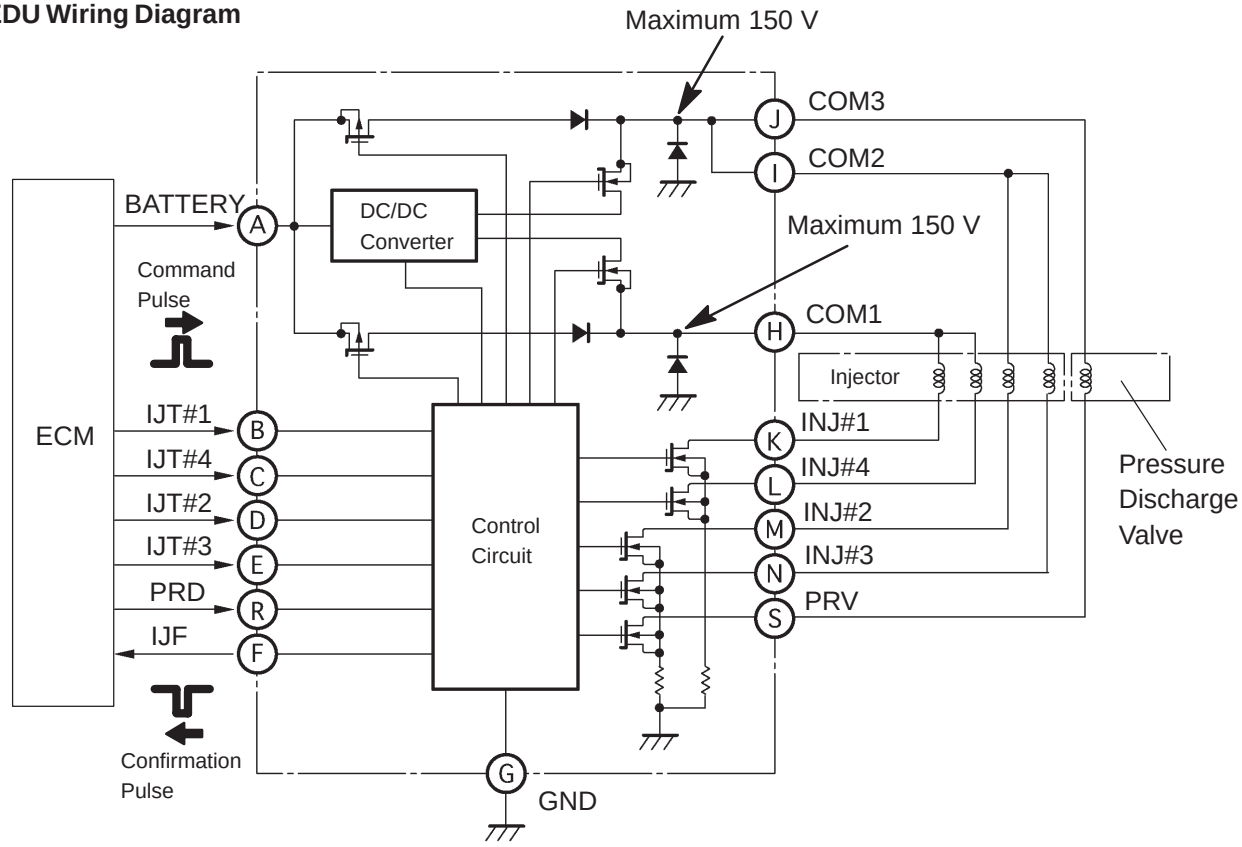

EDU Connector

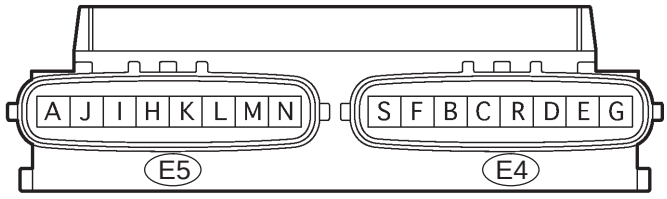

Warning: Terminal J, I, H, K, L, M, N and S are high voltage

Y A81481

DTC No.	DTC Detection Condition	Trouble Area
P0200	Open or short in EDU or injector circuit. After engine is started, there is no injection confirmation signal (IJF) from EDU to ECM, despite the ECM sending injection command signal (IJT) to the EDU.	• Open or short in EDU circuit • Injector • EDU • ECM

MONITOR DESCRIPTION

P0200 (Open or short in EDU or injector circuit):

The ECM always monitors both the injection command signal (IJT) and injection confirmation signal (IJF). This DTC will be set if the ECM judged that the number of IJT signals and IJF signals are inconsistent.

The EDU monitors a drive current supplied to the injector and interprets the IJF signal as low if the current exceeds the specified level, and then it indicates that there is the current in the injector.

P0200 refers to malfunction of injector drive circuit or injector circuit.

If this DTC is present, the ECM enters fail–safe mode and limits the engine power. The fail–safe mode will continue until the ignition switch is turned OFF.

Malfunction Detection

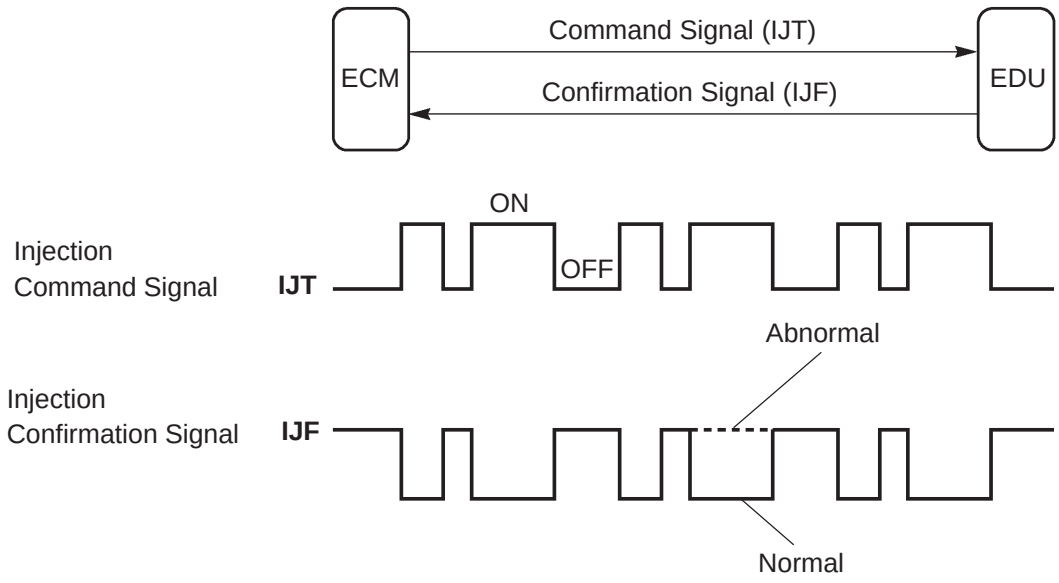

MONITOR STRATEGY

Required sensors	IJF signal from EDU
Frequency of operation	Continuous
Duration	10 sec.
CHK ENG operation	1 driving cycle

TYPICAL ENABLING CONDITIONS

Item	Specification	
	Minimum	Maximum
Engine speed	500 rpm	–
Battery voltage	11 V	–
Ignition switch	ON	

TYPICAL MALFUNCTION THRESHOLDS

Threshold
If injection missing counter* is accumulated a specified number of times successively, or if injection missing counter for either one of the cylinders is accumulated a specified number of times successively (Approximately 1 second or more). *: Injection missing counter increments when no IJF signal from the EDU despite the ECM sending the IJT signal.

WIRING DIAGRAM

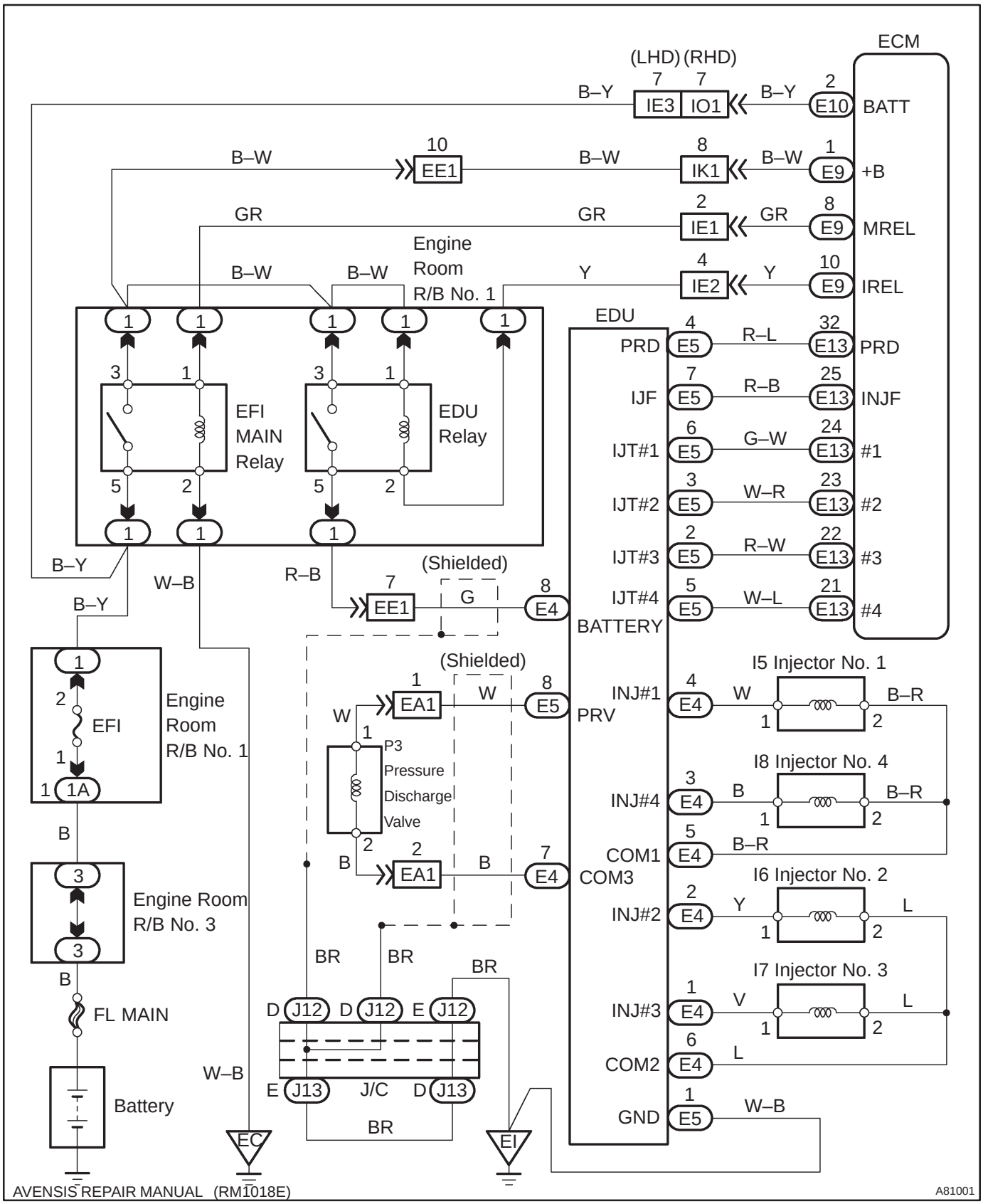

PULSE GENERATION INSPECTION

HINT:

Problem area can be identified by inspecting waveform at the following inspection points.

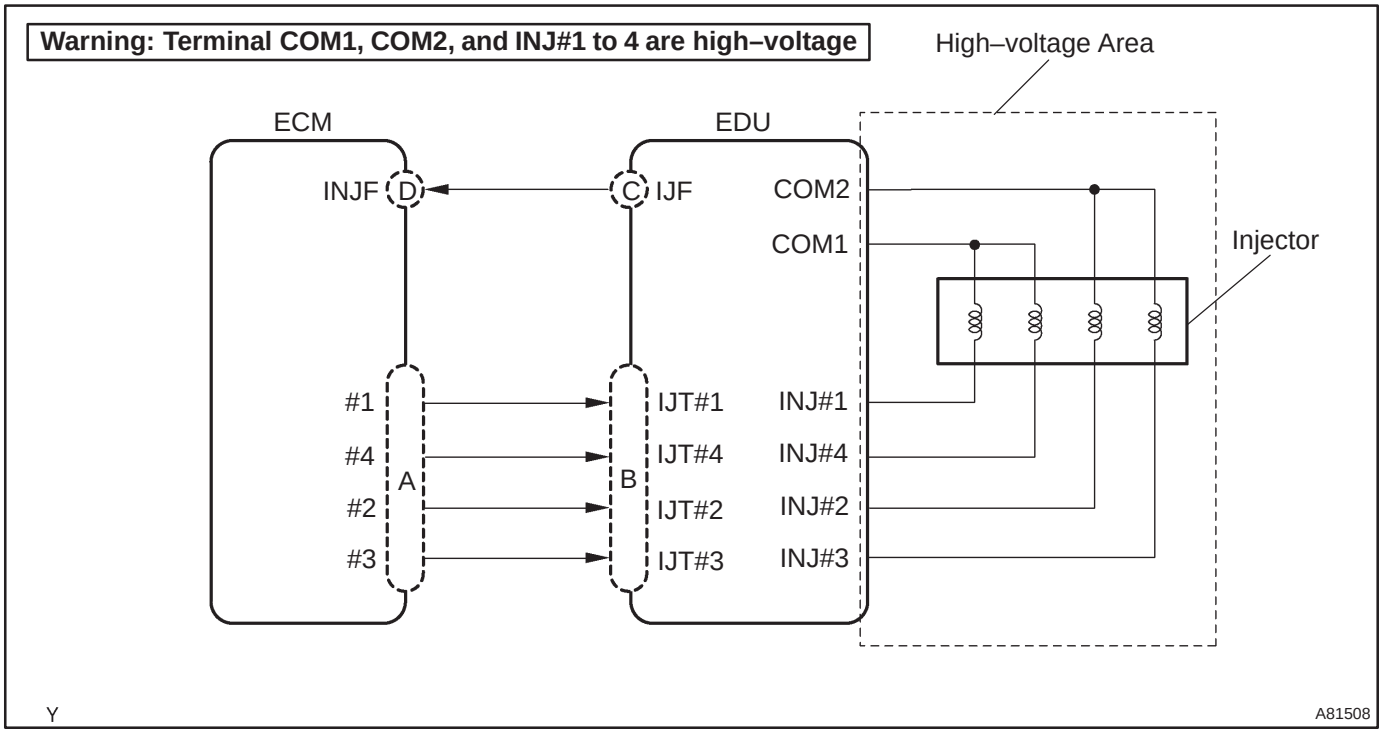

HINT:

Inspect the following inspection points ”A and D” or ” B and C” at the same time.

Malfunction point	Trouble area
A	• ECM
B (if A is normal)	• Open or short in ”#1 to #4 (ECM)” – ”IJT#1 to #4 (EDU)” harness or connector.
C (if A and B are normal)	• Open or short in ”INJ#1 to #4 (EDU)” – ”COM1 and/or COM2” (EDU) circuit. • Injector • EDU
D (if A, B and C are normal)	• Open or short in ”IJF (EDU)” – ”INJF (ECM)” circuit. (P1271 is set simultaneously)

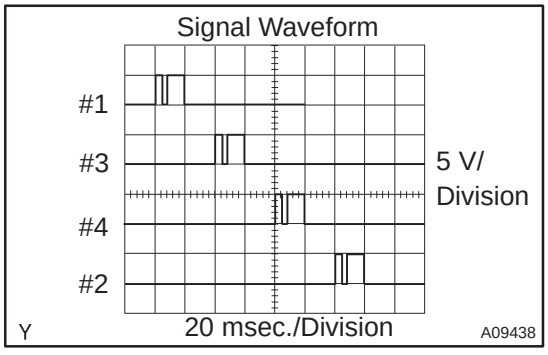

(a) Reference: Inspect using the oscilloscope.
The correct waveform is as shown in the diagram on the left.

Inspection Points	Specified Condition
A and B	Correct waveform is as shown

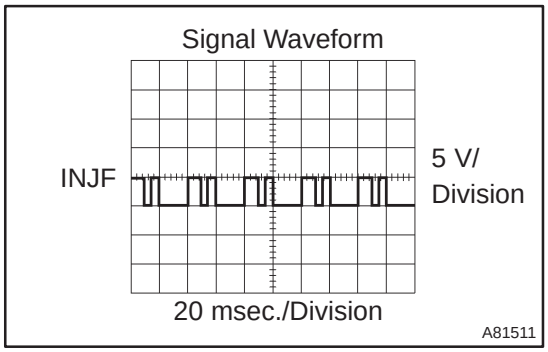

(b) Reference: Inspect using the oscilloscope.
The correct waveform is as shown in the diagram on the left.

Inspection Points	Specified Condition
C and D	Correct waveform is as shown

INSPECTION PROCEDURE

HINT:

- If P0200 and P1271 are present simultaneously, there is open in the INJF wire harness between the EDU and ECM, or there is open in the wire harness for both of the injector the pressure discharge valve.
- Read freeze frame data using the hand – held tester. Freeze frame data records the engine conditions when a malfunction is detected. When troubleshooting, it is useful for determining whether the vehicle was running or stopped, the engine was warmed up or not, etc. at the time of the malfunction.

1	CHECK OTHER DTC OUTPUT(BESIDES DTC P0200)

(a) Connect the hand–held tester to the DLC3.
(b) Turn the ignition switch ON and push the hand–held tester main switch ON.
(c) Select the item ”DIAGNOSIS / OBD/MOBD / DTC INFO / CURRENT CODES”.
(d) Read the DTCs.
Result:

Display (DTC output)	Proceed to
DTC P0200 and P1238 are output	A
Only DTC P0200 is output	B

B → **Go to step 3**

A

2	READ VALUE OF HAND–HELD TESTER(COMPENSATION OF INJECTION QUANTIFY BETWEEN CYLINDERS)

(a) Connect the hand–held tester to the DLC3.
(b) Turn the ignition switch ON and push the hand–held tester main switch ON.
(c) Start the engine.
(d) Select the item ”DIAGNOSIS / OBD/MOBD / DATA LIST / ALL / INJ VOLUME FB” and read its value displayed on the hand–held tester.
Result:
STD – 3 to 3 mm^3/st
Maximum – 4.9 to 4.9 mm^3/st
(e) The cylinder that has a misspecification compensation value is a faulty cylinder, use the following flow-chart to inspect and repair the cylinder.

GO

3 INSPECT INJECTOR ASSY

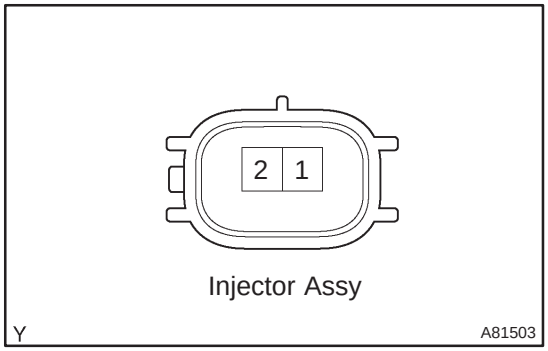

(a) Check the injector for resistance.
(1) Measure the resistance between the terminals.
Resistance: 0.85 to 1.05 Ω at 20°C (68°F)

NG → **REPLACE INJECTOR ASSY (See page 11–60)**

OK

4 CHECK HARNESS AND CONNECTOR(EDU – INJECTOR ASSY)

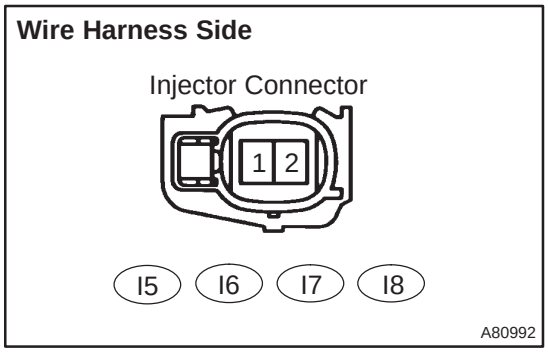

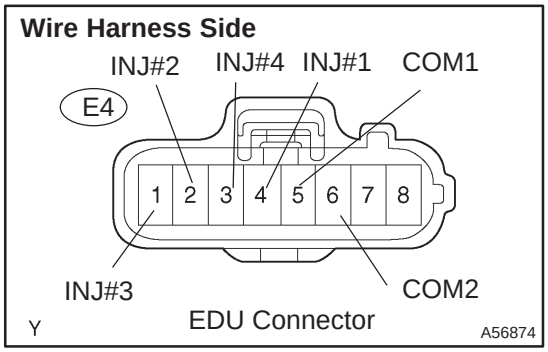

(a) Check the harness and connector between the injector and EDU (INJ# terminal).
(1) Disconnect the I5, I6, I7, or I8 injector connector.
(2) Disconnect the E4 EDU connector.
(3) Check for continuity between the wire harness side connectors.

Standard (Check for open):

Symbols (Terminal No.)	Specified condition
Injector (I5–1) – INJ#1 (E4–4)	Continuity
Injector (I6–1) – INJ#2 (E4–2)	
Injector (I7–1) – INJ#3 (E4–1)	
Injector (I8–1) – INJ#4 (E4–3)	
Injector (I5–2) – COM1 (E4–5)	
Injector (I6–2) – COM2 (E4–6)	
Injector (I7–2) – COM2 (E4–6)	
Injector (I8–2) – COM1 (E4–5)	

Standard (Check for short):

Symbols (Terminal No.)	Specified condition
Injector (I5–1) or INJ#1 (E4–4) – Body ground	No continuity
Injector (I6–1) or INJ#2 (E4–2) – Body ground	
Injector (I7–1) or INJ#3 (E4–1) – Body ground	
Injector (I8–1) or INJ#4 (E4–3) – Body ground	
Injector (I5–2) or COM1 (E4–5) – Body ground	
Injector (I6–2) or COM2 (E4–6) – Body ground	
Injector (I7–2) or COM2 (E4–6) – Body ground	
Injector (I8–2) or COM1 (E4–5) – Body ground	

NG → **REPAIR OR REPLACE HARNESS OR CONNECTOR**

OK

5 CHECK HARNESS AND CONNECTOR(EDU – ECM)

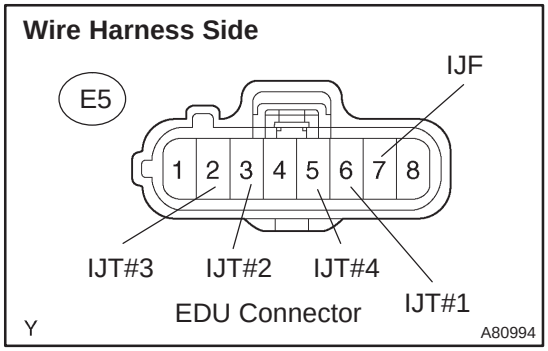

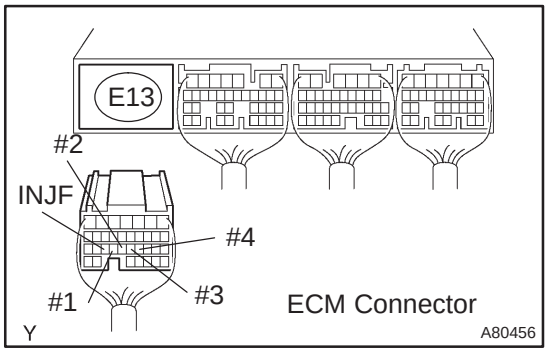

(a) Disconnect the E5 EDU connector.
(b) Disconnect the E13 ECM connector.
(c) Check for continuity between the terminals of the wire harness side connector.

Standard (Check for open):

Symbols (Terminal No.)	Specified condition
IJT#1 (E5–6) – #1 (E13–24)	Continuity
IJT#2 (E5–3) – #2 (E13–23)	
IJT#3 (E5–2) – #3 (E13–22)	
IJT#4 (E5–5) – #4 (E13–21)	
IJF (E5–7) – INJF (E13–25)	

Standard (Check for short):

Symbols (Terminal No.)	Specified condition
#1 (E13–24) or IJT#1 (E5–6) – Body ground	No continuity
#2 (E13–23) or IJT#2 (E5–3) – Body ground	
#3 (E13–22) or IJT#3 (E5–2) – Body ground	
#4 (E13–21) or IJT#4 (E5–5) – Body ground	
INJF (E13–25) or IJF (E5–7) – Body ground	

NG → **REPAIR OR REPLACE HARNESS OR CONNECTOR**

OK

6 INSPECT INJECTOR DRIVER(BATTERY VOLTAGE)

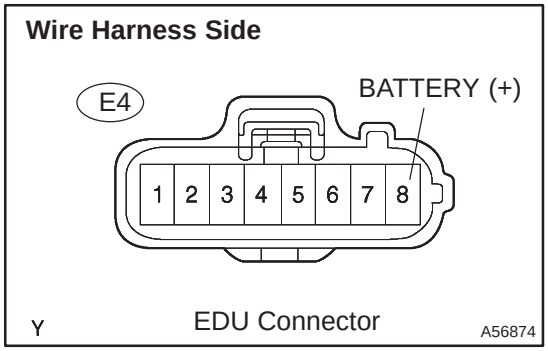

(a) Disconnect the E4 and E5 EDU connectors.
(b) Turn the ignition switch ON.
(c) Measure the voltage between the specified terminals of the EDU connector.

Voltage:

Symbols (Terminal No.)	Specified condition
BATTERY (E4–8) – GND (E5–1)	9 to 14 V

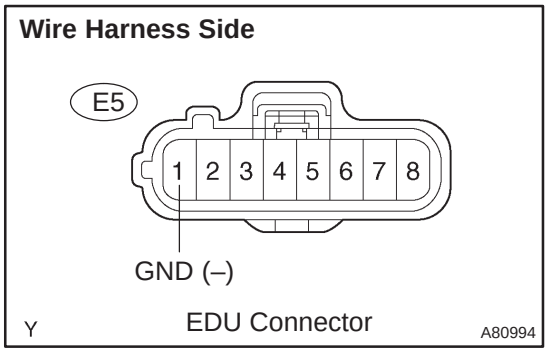

NG → **CHECK INJECTOR DRIVER POWER SOURCE CIRCUIT (BATTERY – EDU)**

OK

7 INSPECT ECM(INJECTOR VOLTAGE)

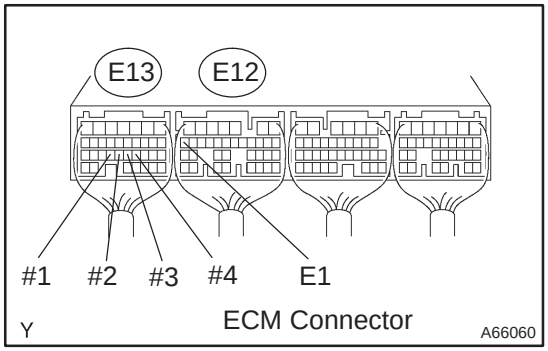

(a) Inspect using the oscilloscope.
(b) During idling, check the waveform between the specified terminals of the E12 and E13 ECM connectors.
Standard:

Symbols (Terminal No.)	Specified condition
#1 (E13–24) – E1 (E12–7)	Correct waveform is as shown
#2 (E13–23) – E1 (E12–7)	
#3 (E13–22) – E1 (E12–7)	
#4 (E13–21) – E1 (E12–7)	

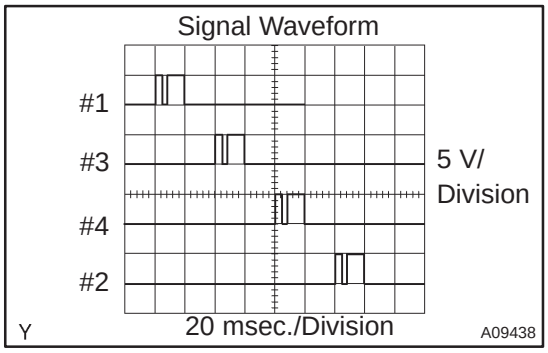

NG → **REPLACE ECM(See page 10–65)**

OK

8 REPLACE INJECTOR DRIVER

GO

CHECK DTC OUTPUT RECUR (DTC P0200 OUTPUT AGAIN)

HINT:
After clearing the DTC, start the engine and let it idle for 30 seconds, and then confirm P0200 is not set again.

DTC	P0234	TURBO/SUPER CHARGER OVERBOOST CONDITION

DTC	P0299	TURBO/SUPER CHARGER UNDERBOOST

DTC	P1251	TURBO/SUPER CHARGER OVERBOOST CONDITION (TOO HIGH)

CIRCUIT DESCRIPTION

DTC No.	DTC Detection Condition	Trouble Area
P0234 P0299 P1251	When the condition that the turbocharger pressure exceeds the standard value for 0.5 sec. or more. (1 trip detection logic)	• VRV • Open or short in VRV circuit • Turbocharger • Vacuum hose • EGR valve • ECM
	Actual turbocharger pressure is deviated 20 kPa (0.2 kgf/cm^2, 2.9 psi) or more from the simulated target pressure based on the engine speed and fue injection volume for 60 seconds.	

WIRING DIAGRAM

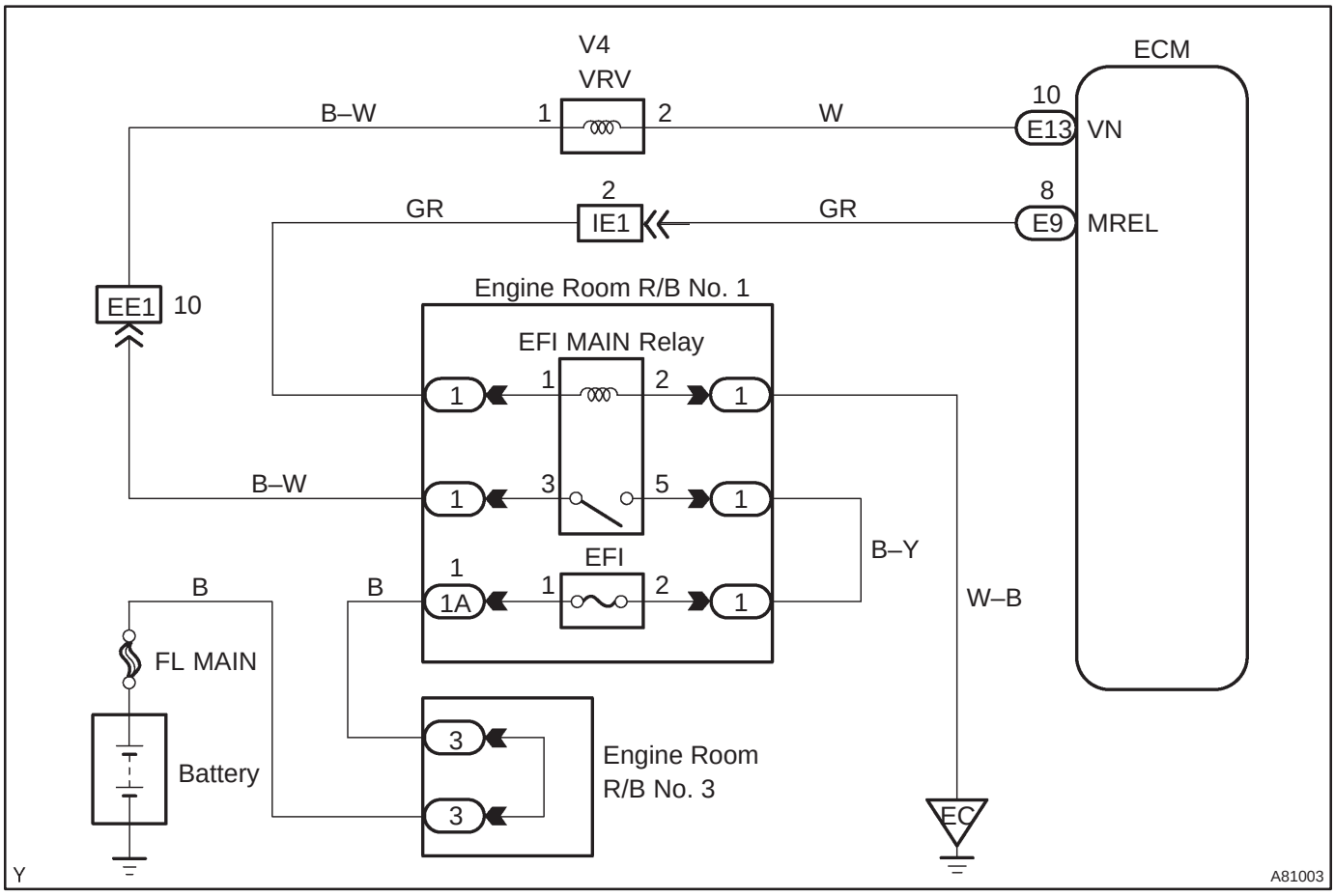

INSPECTION PROCEDURE

HINT:

Read freeze frame data using the hand – held tester. Freeze frame data records the engine conditions when a malfunction is detected. When troubleshooting, it is useful for determining whether the vehicle was running or stopped, the engine was warmed up or not, etc. at the time of the malfunction.

1	CHECK OTHER DTC OUTPUT(BESIDES DTC P0234, P0299 AND/OR P1251)

(a) Read the DTC using the hand–held tester.

Result:

Display (DTC output)	Proceed to
”P0234, P0299 and/or P1251” are output	A
”P0234, P0299 and/or P1251 and other DTCs are output	B

B → **GO TO RELEVANT DTC CHART (See page 05–544)**

A

2	CHECK CONNECTION OF VACUUM HOSE

NG → **REPAIR OR REPLACE VACUUM HOSE**

OK

3	CHECK VACUUM HOSE(CHECK VACUUM BETWEEN TURBOCHARGER – VRV FOR INTAKE PRESURE CHANGE AT 900 RPM)

(a) Using a 3–way connector, connect a vacuum gauge to the hose between the E–VRV and turbocharger.

(b) Warm up the engine to above 80˚C (176˚F).

(c) Check the vacuum at 900 rpm.

Result:

Proceed to	Vacuum
A	0 kPa (0 mmHg, 0 in.Hg) to 50 kPa (375 mmHg, 14.8 in.Hg)
B	Above 50 kPa (375 mmHg, 14.8 in.Hg)

B → **Go to step 8**

A

4 INSPECT ECM(VN VOLTAGE)

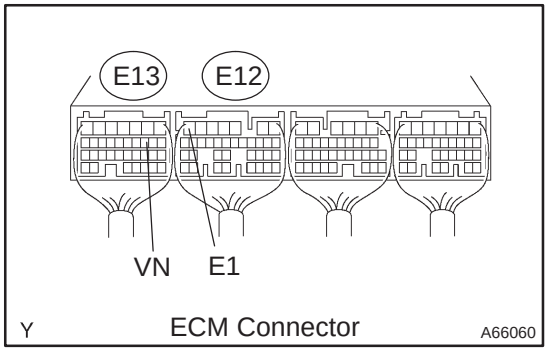

(a) Inspect using the oscilloscope.
(b) During idling, check the waveform between the specified terminals of the E12 and E13 ECM connectors.
Standard:

Symbols (Terminal No.)	Specified condition
VN (E13–10) – E1 (E12–7)	Correct waveform is as shown

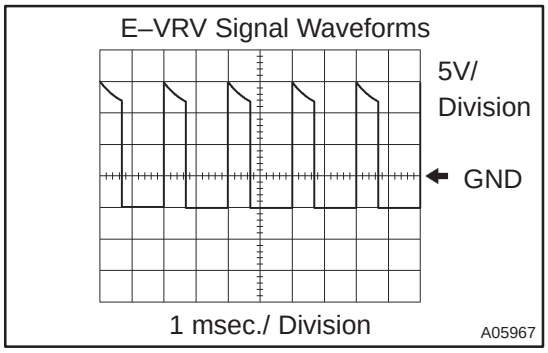

NG → **REPLACE ECM (See page 10–65)**

OK

5 INSPECT VACUUM REGULATING VALVE ASSY(OPERATION)

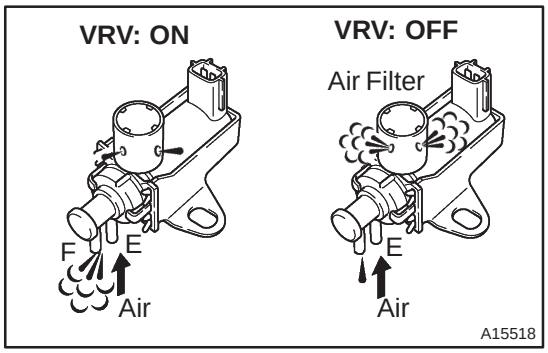

(a) Disconnect the vacuum hoses from the VRV.
(b) Turn the ignition switch ON.
(c) Check for operation of the E–VRV when it is operated by the hand–held tester.
VRV ON:
Air from port E flows out through port F.
VRV OFF:
Air from port E flows out through air filter.

NG → **REPLACE VACUUM REGULATING VALVE ASSY**

OK

6 INSPECT VACUUM REGULATING VALVE ASSY(RESISTANCE) (See page 12–16)

NG → **REPLACE VACUUM REGULATING VALVE ASSY**

OK

7	CHECK HARNESS AND CONNECTOR(VRV – ECM)

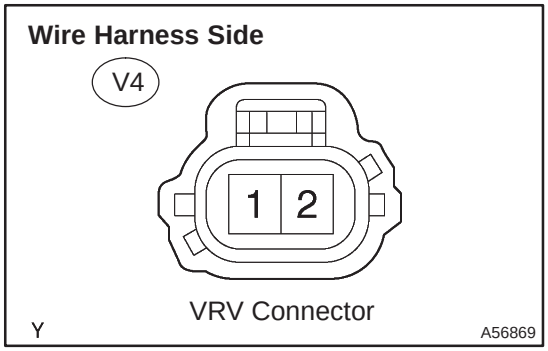

(a) Disconnect the V4 VRV connector.
(b) Disconnect the E13 ECM connector.
(c) Check the continuity between the wire harness side connector.

Standard (Check for open):

Symbols (Terminal No.)	Specified condition
VN (E13–10) – (V4–2)	Continuity
E2 (E13–28) – (V4–1)	

Standard (Check for short):

Symbols (Terminal No.)	Specified condition
VN (E13–10) or (V4–2) – Body ground	No continuity
E2 (E13–28) or (V4–1) – Body ground	

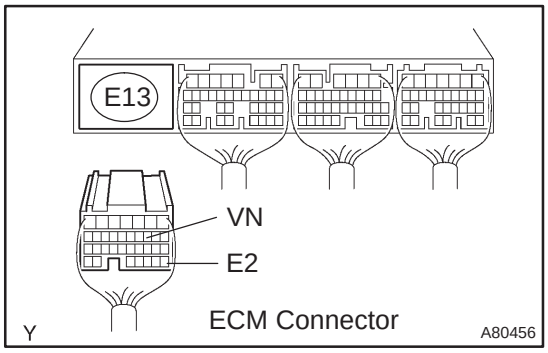

NG → **REPAIR OR REPLACE HARNESS AND CONNECTOR**

OK

8	INSPECT TURBOCHARGER SUB–ASSY (See page 13–7)

NG → **REPLACE TURBOCHARGER SUB–ASSY (See page 13–11)**

OK

9	INSPECT EGR VALVE ASSY (See page 12–18)

NG → **REPLACE EGR VALVE ASSY (See page 14–286)**

OK

REPLACE ECM (See page 10–65)

DTC	P0335	CRANKSHAFT POSITION SENSOR ”A” CIRCUIT

DTC	P0339	CRANKSHAFT POSITION SENSOR ”A” CIRCUIT INTERMITTENT

CIRCUIT DESCRIPTION

Crankshaft position sensor (NE signal) consists of a magnet, iron core and pickup coil.
The NE signal plate has 34 teeth and is installed the crankshaft timing pulley. The NE signal sensor generates 34 signals of every engine revolution. The ECM detects the standard crankshaft angle based on the G signal, and the actual crankshaft angle and the engine speed by the NE signal.

DTC No.	DTC Detection Condition	Trouble Area
P0335	No crankshaft position sensor signal to ECM during cranking (2 trip detection logic)	• Open or short in crankshaft position sensor circuit • Crankshaft position sensor • Signal plate (crankshaft timing pulley) • ECM
	No crankshaft position sensor signal to ECM with engine speed 650 rpm or more (2 trip detection logic)	
P0339	In conditions (a), (b) and (c), when no crankshaft position sensor (NE) signal is input for 0.05 sec. or more. (1 trip detection logic) (a) Engine revolution 1,000 rpm or more (b) STA signal is OFF (c) 3 sec. or more has lapsed after STA signal is switched from ON to OFF.	

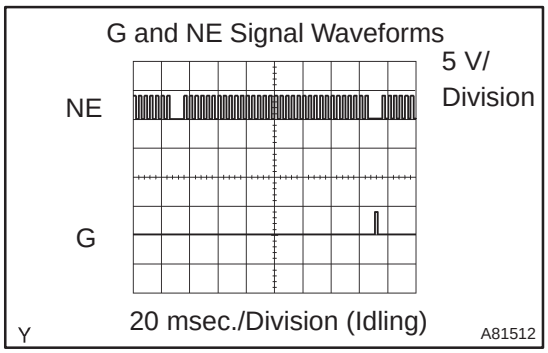

Reference: Inspection using the oscilloscope.
The correct waveform is as shown in the diagram on the left.

Symbols (Terminal No.)	Specified condition
NE+ (E13–27) – NE– (E13–34)	Correct waveform is as shown

WIRING DIAGRAM

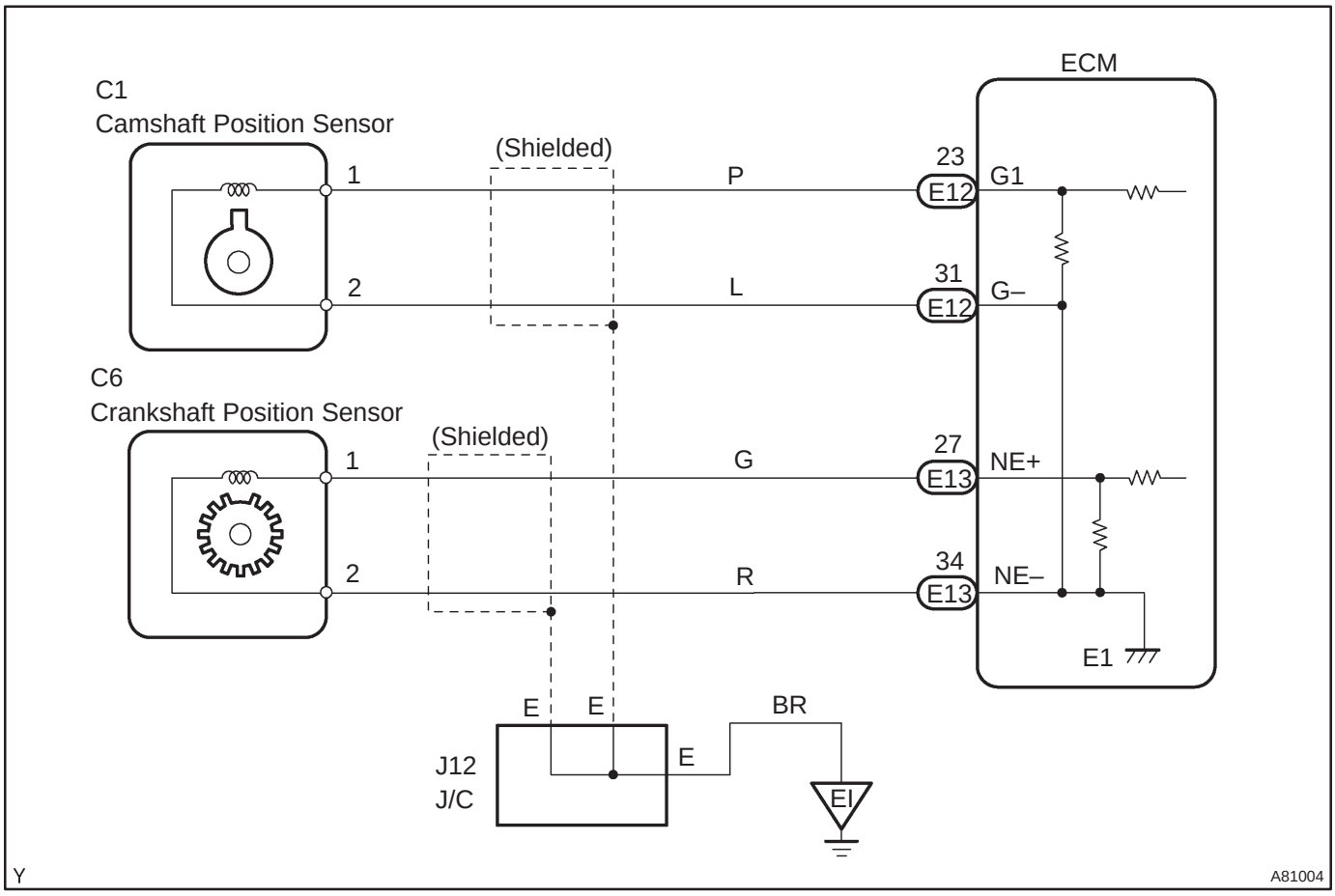

INSPECTION PROCEDURE

HINT:

- Perform troubleshooting of DTC P0335 first. If no trouble is found, troubleshoot the engine mechanical systems.
- Read freeze frame data using the hand–held tester. Freeze frame data records the engine conditions when a malfunction is detected. When troubleshooting, it is useful for determining whether the vehicle was running or stopped, the engine was warmed up or not, etc. at the time of the malfunction.

1 INSPECT CRANKSHAFT POSITION SENSOR(RESISTANCE)

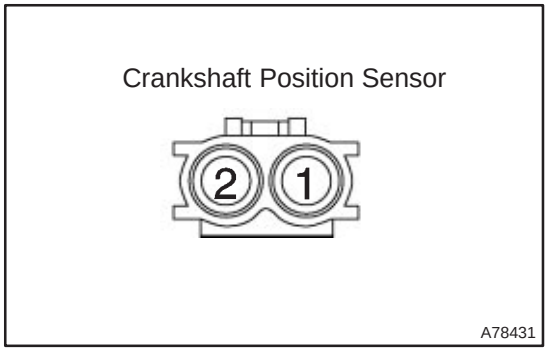

(a) Measure the resistance between terminals 1 and 2.
Resistance:
1,630 to 2,740 Ω at cold
2,065 to 3,225 Ω at hot

NOTICE:
"Cold" and "Hot" shown above mean the temperature of the coils themselves. "Cold" is from –10°C (14°F) to 50 °C (122 °F) and "Hot" is from 50 °C (122 °F) to 100 °C (212 °F).

NG → **REPLACE CRANKSHAFT POSITION SENSOR (See page 10–64)**

OK

2 CHECK HARNESS AND CONNECTOR(CRANKSHAFT POSITION SENSOR – ECM)

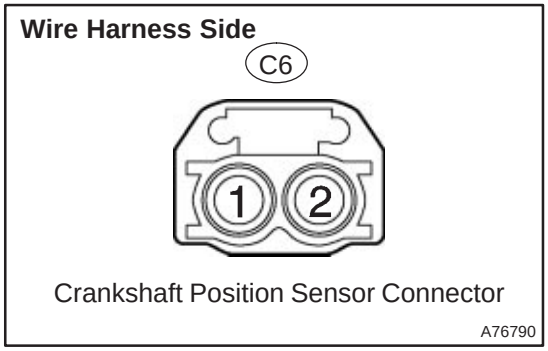

(a) Disconnect the C6 crankshaft position sensor connector.
(b) Disconnect the E13 ECM connector.
(c) Check for continuity between the wire harness side connectors.

Standard (Check for open):

Symbols (Terminal No.)	Specified condition
Crankshaft position sensor (C6–1) – NE+ (E13–27)	Continuity
Crankshaft position sensor (C6–2) – NE– (E13–34)	

Standard (Check for short):

Symbols (Terminal No.)	Specified condition
Crankshaft position sensor (C6–1) or NE+ (E13–27) – Body ground	No continuity
Crankshaft position sensor (C6–2) or NE– (E13–34) – Body ground	

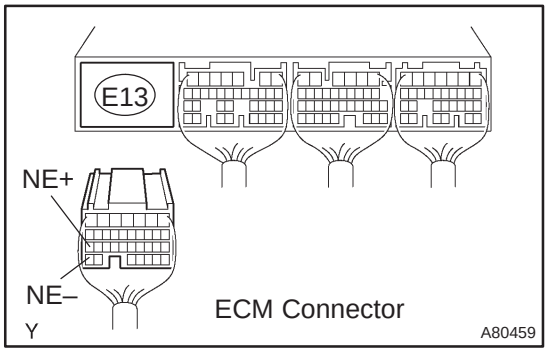

NG → **REPAIR OR REPLACE HARNESS OR CONNECTOR**

OK

3 CHECK SENSOR INSTALLATION(CRANKSHAFT POSITION SENSOR)

NG → **TIGHTEN SENSOR**

OK

4	CHECK CRANKSHAFT POSITION SENSOR PLATE(TEETH OF SENSOR PLATE(CRANKSHAFT TIMING PULLEY))

(a) Check the teeth of the sensor plate.

NG → REPLACE CRANKSHAFT POSITION SENSOR PLATE (CAMSHAFT TIMING PULLEY)

OK

REPLACE ECM (See page 10–65)

DTC	P0340	CAMSHAFT POSITION SENSOR ”A” CIRCUIT (BANK 1 OR SINGLE SENSOR)

CIRCUIT DESCRIPTION

Camshaft position sensor (G signal) consists of a magnet, iron core and pickup coil.
The G signal plate has one tooth on its outer circumference and is installed on the camshaft timing pulley. When the camshafts rotate, the protrusion on the signal plate and the air gap on the pickup coil change, causing fluctuations in the magnetic field and generating an electromotive force in the pickup coil.
The NE signal plate has 34 teeth and is mounted on the crankshaft timing pulley. The NE signal sensor generates 34 signals at every engine revolution. The ECM detects the standard crankshaft angle based on the G signal and the actual crankshaft angle and the engine speed by the NE signal.

DTC No.	DTC Detection Condition	Trouble Area
P0340	• No camshaft position sensor signal to ECM during cranking (2 trip detection logic) • No camshaft position sensor signal to ECM with engine speed 650 rpm or more (1 trip detection logic)	• Open or short in camshaft position sensor circuit • Camshaft position sensor • Camshaft timing pulley • ECM

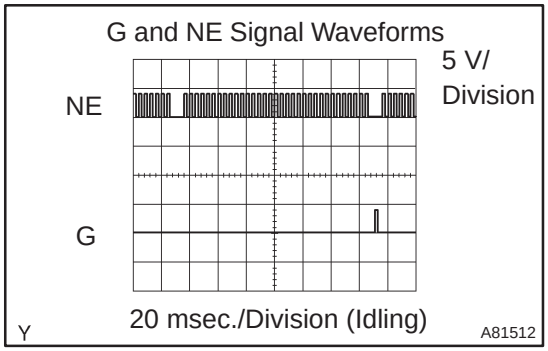

Reference: Inspection using the oscilloscope.
The correct waveform is as shown in the diagram on the left.

Symbols (Terminal No.)	Specified condition
G1 (E12–23) – G– (E12–31)	Correct waveform is as shown

WIRING DIAGRAM

Refer to DTC P0335 on page 05–616.

INSPECTION PROCEDURE

HINT:
Read freeze frame data using the hand–held tester. Freeze frame data records the engine conditions when a malfunction is detected. When troubleshooting, it is useful for determining whether the vehicle was running or stopped, the engine was warmed up or not, etc. at the time of the malfunction.

1	INSPECT CAMSHAFT POSITION SENSOR

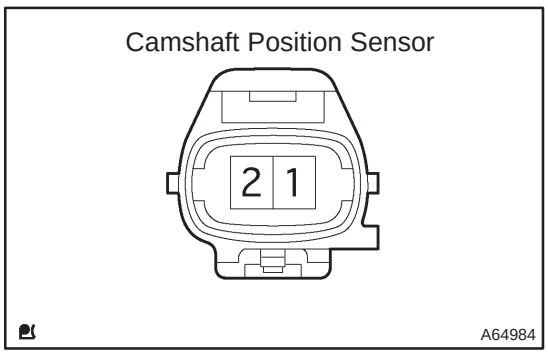

(a) Measure the resistance between terminals 1 and 2.
Resistance:
1,630 to 2,740 Ω at cold
2,065 to 3,225 Ω at hot

NOTICE:
”Cold” and ”Hot” shown above mean the temperature of the coils themselves. ”Cold” is from –10°C (14°F) to 50 °C (122 °F) and ”Hot” is from 50 °C (122 °F) to 100 °C (212 °F).

NG → **REPLACE CAMSHAFT POSITION SENSOR (See page 10–63)**

OK

2 CHECK HARNESS AND CONNECTOR(CAMSHAFT POSITION SENSOR – ECM)

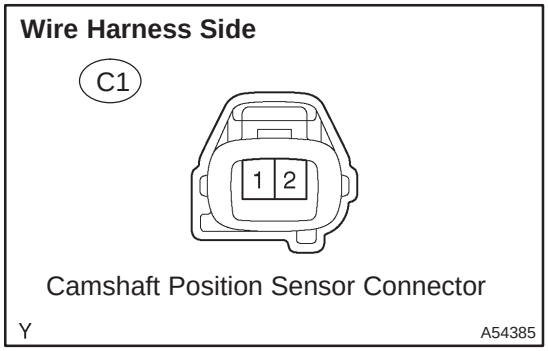

(a) Disconnect the C1 camshaft position sensor connector.
(b) Disconnect the E12 ECM connector.
(c) Check for continuity between the wire harness side connectors.

Standard (Check for open):

Symbols (Terminal No.)	Specified condition
Camshaft position sensor (C1–1) – G1 (E12–23)	Continuity
Camshaft position sensor (C1–2) – G– (E12–31)	

Standard (Check for short):

Symbols (Terminal No.)	Specified condition
Camshaft position sensor (C1–1) or G1 (E12–23) – Body ground	No continuity
Camshaft position sensor (C1–2) or G– (E12–31) – Body ground	

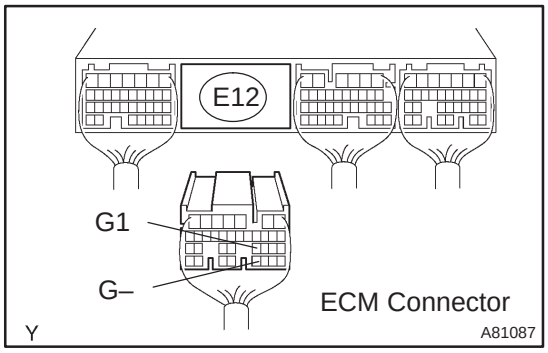

NG → **REPAIR OR REPLACE HARNESS OR CONNECTOR**

OK

3 CHECK SENSOR INSTALLATION(CAMSHAFT POSITION SENSOR)

NG → **TIGHTEN SENSOR**

OK

4 CHECK CAMSHAFT TIMING PULLEY(TEETH OF PLATE)

(a) Check the teeth of the signal plate.

NG → **REPLACE CAMSHAFT TIMING PULLEY**

OK

REPLACE ECM (See page 10–65)

DTC	P0380	GLOW PLUG/HEATER CIRCUIT ”A”

CIRCUIT DESCRIPTION

The glow plug is mounted inside the engine combustion room. To ensure efficient engine starting with a cold engine, the ECM calculates time the current needs to flow into the glow plug depending on the engine coolant temperature after the ignition switch is turned ON. The ECM then turns on the glow relay and permits the current to flow into the glow plug. The glow plug is then heated and enhances fuel combustion with the cold engine.

This DTC will be set if there is open in glow plug itself or its circuit.

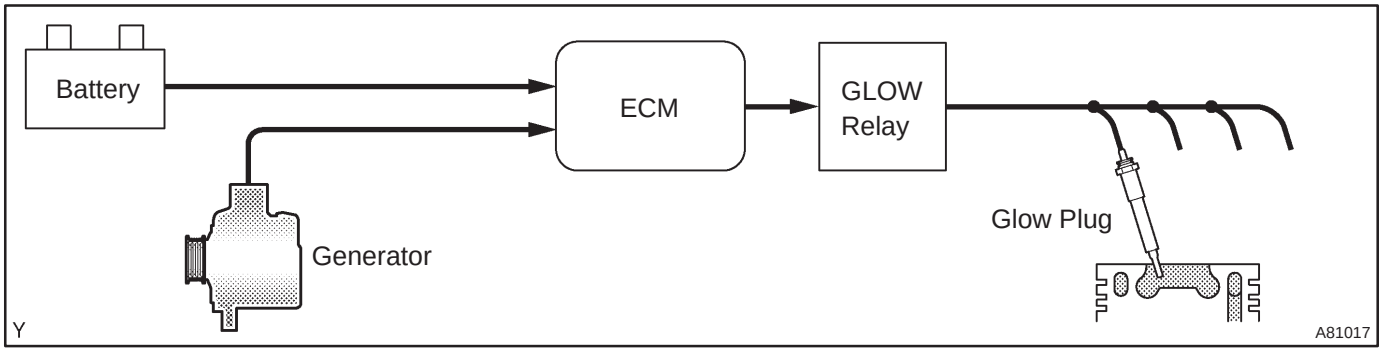

The ECM performs the after glow for a certain period of time depending on the engine coolant temperature after the engine has been started. After glow reduces a diesel engine knocking, a white smoke, and etc with a cold engine.

After Glow System

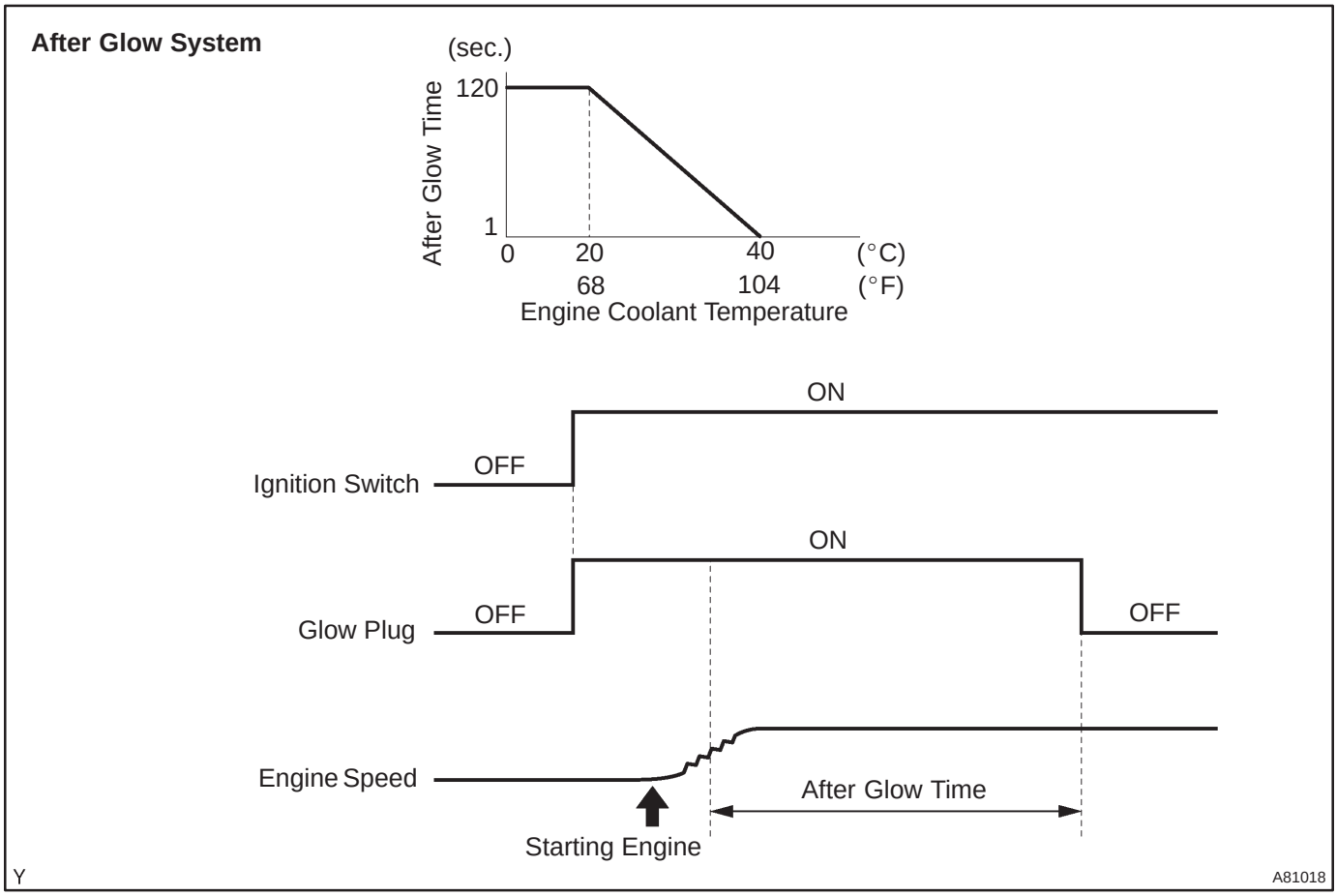

DTC No.	DTC Detection Condition	Trouble Area
P0380	When the glow plug is turned from ON to OFF, or vice–versa, conditions (a) and (b) are satisfied: (a) Battery voltage dos not change (b) Duty signal from terminal M of the generator does not change	• Open or short in glow plug circuit • Glow fuse • Glow relay • Glow plug • ECM

MONITOR DESCRIPTION

When starting a cold engine, the ECM supplies the current to the glow plug for a certain period of time. As the supplying current to the glow plug is terminated, the large current is suddenly cut off, therefore the battery voltage then varies and also terminal M output (duty ratio) of the generator varies. If these variations are not occurred when the glow plug is turned from ON to OFF, or vice–versa, the ECM realizes that the current has not been supplied to the glow plug, and interprets this as open malfunction of the glow plug or glow plug circuit.

MONITOR STRATEGY

Required sensors	Glow plug circuit
Frequency of operation	Twice per driving cycle
Duration	3 min.
CHK ENG operation	2 driving cycles

TYPICAL ENABLING CONDITIONS

Item	Specification	
	Minimum	Maximum
Battery voltage	11 V	–
Engine speed	700 rpm	2,000 rpm
Engine coolant temperature	–	40°C (104°F)
Engine speed is stable	–	
Time after engine start	8 sec.	–
Any switches that vary electrical load have not been being operated	–	
The monitor will not run if the generator circuit is malfunctioning		

TYPICAL MALFUNCTION THRESHOLDS

Threshold
When the battery voltage, or terminal M output (duty ratio) of the generator does not change, despite turning the glow plug from ON to OFF, or vice–versa

WIRING DIAGRAM

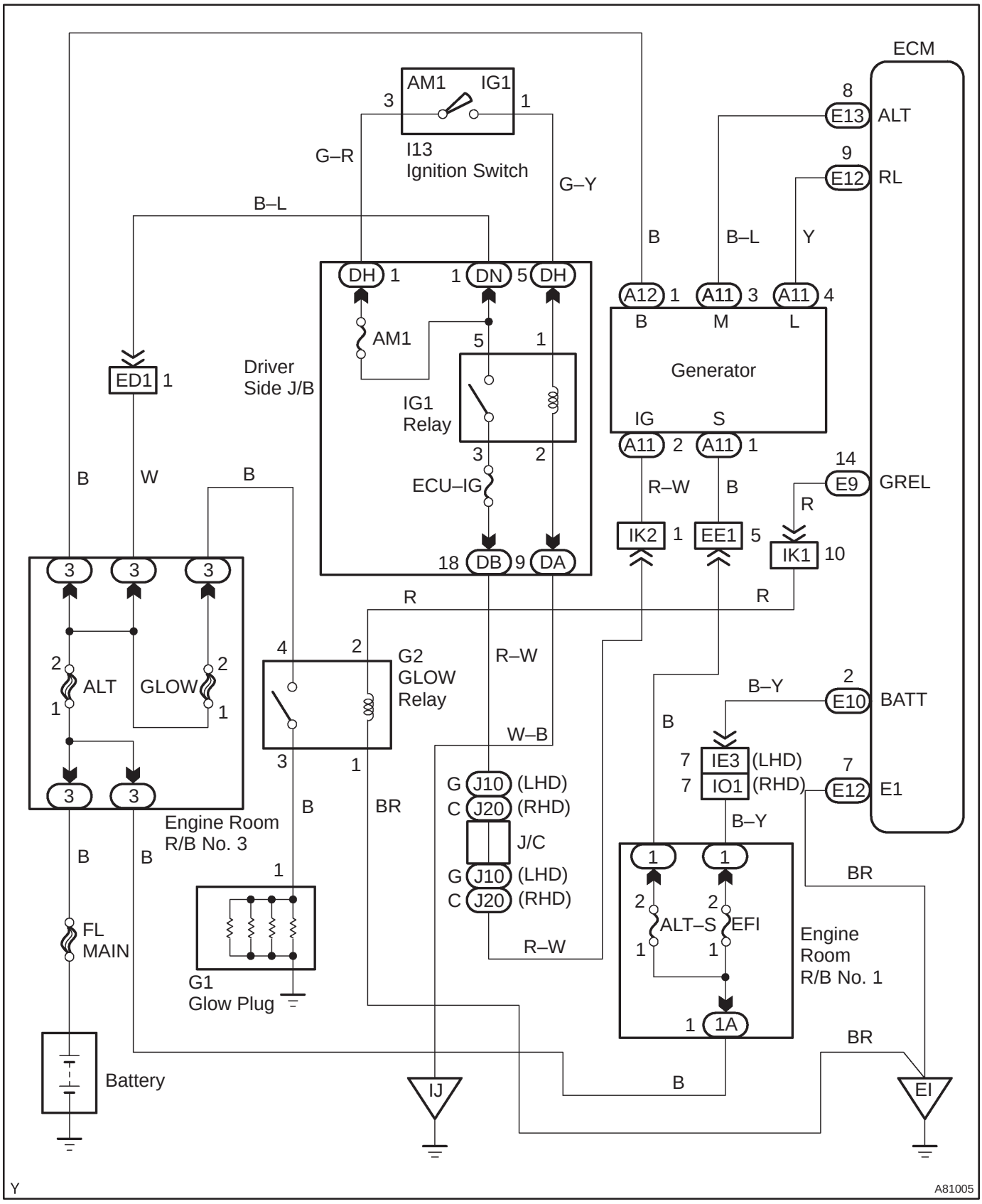

INSPECTION PROCEDURE

HINT:

- After completing repair, confirm P0380 is not set again.
- Read freeze frame data using the hand–held tester. Freeze frame data records the engine conditions when a malfunction is detected. When troubleshooting, it is useful for determining whether the vehicle was running or stopped, the engine was warmed up or not, etc. at the time of the malfunction.

Glow System Wiring Diagram

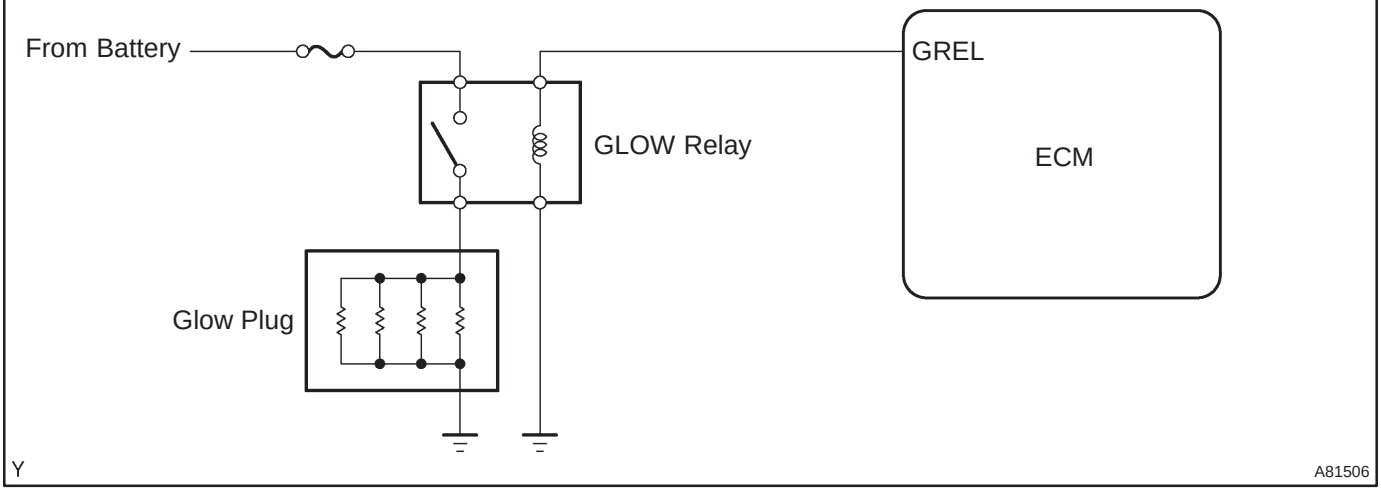

1	CHECK OTHER DTC OUTPUT(BESIDS DTC P0380)

(a) Connect the hand–held tester to the DLC3.
(b) Turn the ignition switch ON and push the hand–held tester main switch ON.
(c) Select the item ”DIAGNOSIS / OBD/MOBD / DTC INFO / CURRENT CODES”.
(d) Read the DTCs.

Result:

Display (DTC output)	Proceed to
Only P0380 are output	A
P0380 and P0622 are output	B

B → **GO TO RELEVANT DTC CHART (See page 05–544)**

A

2 CHECK GLOW PLUG RELAY ASSY

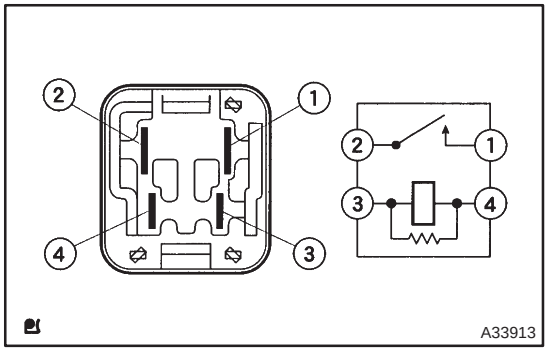

(a) Check the glow plug relay for continuity.
(1) Check that there is continuity between and terminal.
Specified condition:

Between terminal	Specified condition
1 – 2	No continuity
	Continuity (Apply battery voltage terminals 3 and 4)
3 – 4	Continuity

NG → **REPLACE GLOW PLUG RELAY ASSY**

OK

3 CHECK FUSE(GLOW FUSE)

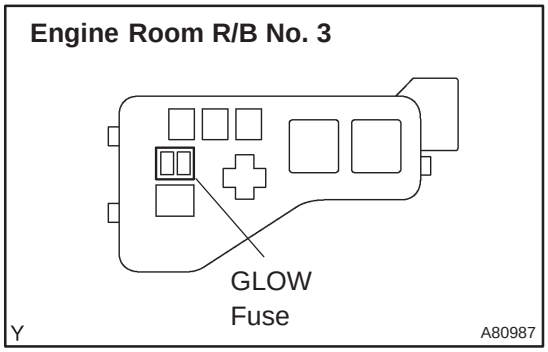

(a) Remove the GLOW fuse from the engine room R/B No. 3.
(b) Check for continuity in the GLOW fuse.
Result: Continuity

NG → **CHECK FOR SHORT IN ALL HARNESS AND COMPONENTS CONNECTED FUSE**

OK

4 INSPECT GLOW PLUG ASSY

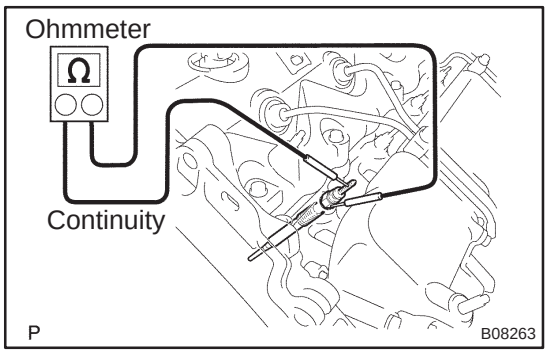

(a) Check the glow plug for resistance.
(1) Check that there is resistance between the glow plug terminal and ground.
Standard resistance: Approx. 1.1 Ω at 20°C (68°F)

NOTICE:

- **Be careful not to damage the glow plug pipes as it could cause an open circuit or shorten life of the glow plugs.**
- **Avoid getting oil and fuel on the glow plug when cleaning.**
- **During inspection, be sure to wipe off any oil of the terminal and bakelite washer with a dry cloth.**
- **Do not apply more than 11 V to the glow plug as it could cause an open circuit.**

NG → **REPLACE GLOW PLUG ASSY** **(See page 19–33)**

OK

5	INSPECT GLOW PLUG ASSY(INSTALLATION)

NG → TIGHTEN GLOW PLUG

OK

6	CHECK HARNESS AND CONNECTOR(GLOW PLUG RELAY – ECM, AND GLOW PLUG RELAY – BODY GROUND)

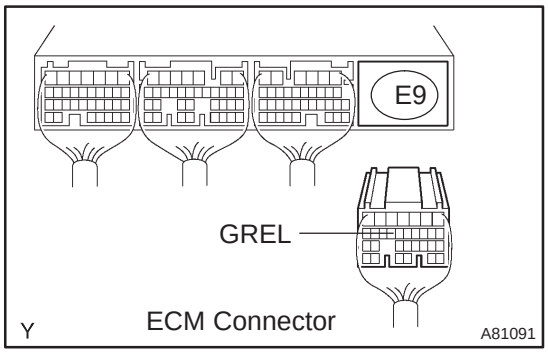

(a) Disconnect the E9 ECM connector.
(b) Remove the glow plug relay.
(c) Check for continuity between the wire harness side connector.

Standard (Check for open):

Symbols (Terminal No.)	Specified condition
+S (Glow plug relay terminal 3) – GREL (E9–14)	Continuity
–S (Glow plug relay terminal 4) – Body ground	

Standard (Check for short):

Symbols (Terminal No.)	Specified condition
GREL (E9–14) – Body ground	No Continuity

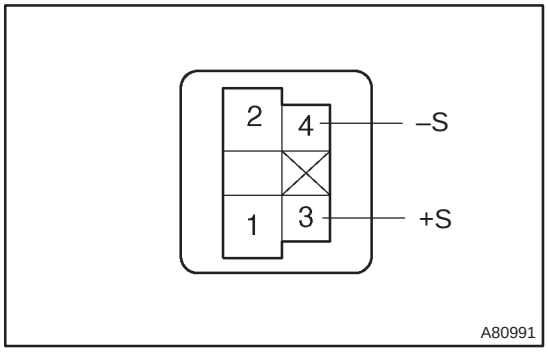

NG → REPAIR OR REPLACE HARNESS OR CONNECTOR

OK

7	CHECK HARNESS AND CONNECTOR(GLOW PLUG RELAY – GLOW PLUG, AND GLOW PLUG RELAY – BATTERY)

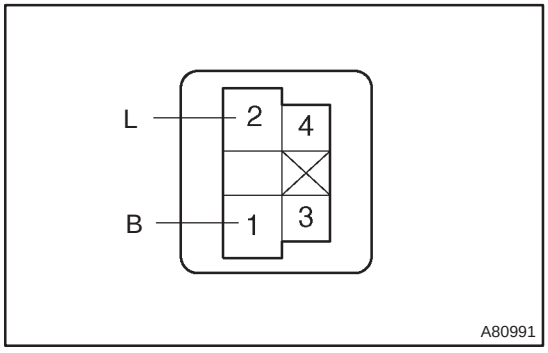

(a) Remove the glow plug relay.
(b) Disconnect the glow plug wire.
(c) Check for continuity between the wire harness.

Standard (Check for open):

Symbols (Terminal No.)	Specified condition
L (Glow plug relay terminal 2) – Glow plug wire	Continuity
B (Glow plug relay terminal 1) – Positive terminal of the battery	

NG → REPAIR OR REPLACE HARNESS OR CONNECTOR

OK

8 INSPECT ECM(GREL VOLTAGE)

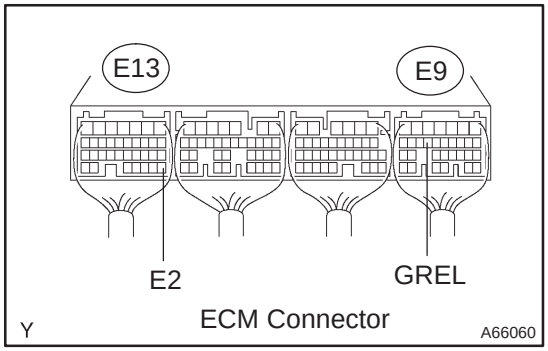

(a) Turn the ignition switch START.
(b) Measure the voltage between the specified terminals of the E9 and E13 ECM connectors.
Voltage:

Symbols (Terminal No.)	Condition	Specified Condition
GREL (E9–14) – E2 (E13–28)	Engine coolant temp. is 40°C (104°F) or less	9 to 14 V

NG → **REPLACE ECM (See page 10–65)**

OK

9 INSPECT ECM(BATT VOLTAGE)

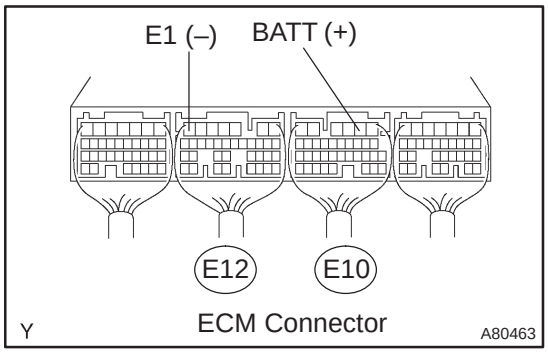

(a) Measure the voltage between the specified terminals of the E10 and E12 ECM connectors.
Standard:

Symbols (Terminal No.)	Specified Condition
BATT (E10–2) – E1 (E12–7)	9 to 14 V

NG → **REPAIR OR REPLACE HARNESS OR CONNECTOR (BATTERY – ECM)**

OK

CHECK FOR INTERMITTENT PROBLEMS (See page 05–528)

DTC	P0400	EXHAUST GAS RECIRCULATION FLOW

DTC	P0403	EXHAUST GAS RECIRCULATION CONTROL CIRCUIT

CIRCUIT DESCRIPTION

DTC No.	DTC Detection Condition	Trouble Area
P0400	Mass air flow rate is not changed when turning on EGR valve	• EGR valve assy • Open or short in EGR circuit • EGR passage • ECM
P0403	EGR valve assy motor malfunction	

WIRING DIAGRAM

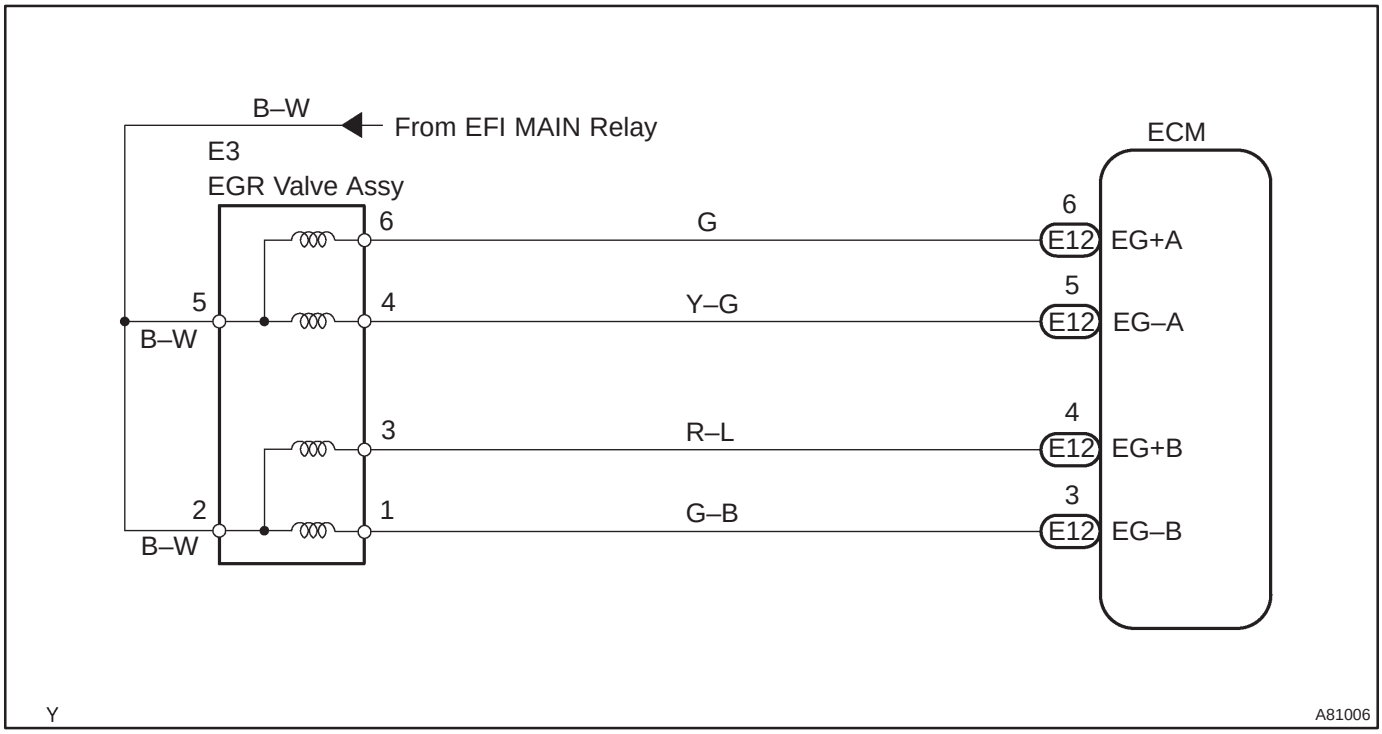

INSPECTION PROCEDURE

HINT:

Read freeze frame data using the hand–held tester. Freeze frame data records the engine conditions when a malfunction is detected. When troubleshooting, it is useful for determining whether the vehicle was running or stopped, the engine was warmed up or not, etc. at the time of the malfunction.

1	CHECK OTHER DTC OUTPUT(BESIDES P0400 AND/OR P0403)

(a) Read the DTC using the hand–held tester.

Result:

Display (DTC output)	Proceed
P0400 and/or P0403 are output	A
P0400 and/or P0403 and other DTCs are output	B

HINT:

If any other codes besides P0400 and/or P0403 are output, perform the troubleshooting for those DTCs first.

B → **GO TO RELEVANT DTC CHART (See page 05–544)**

A

2	READ VALUE OF HAND–HELD TESTER(MASS AIR FLOW RATE)

(a) Connect the hand–held tester to the DLC3.
(b) Turn the ignition switch ON and push the hand–held tester main switch ON.
(c) Start the engine.
(d) Warm up the engine, the engine coolant temperature should be above 75°C (167°F) and bellow 90°C (194°F).
(e) Select the item ”DIAGNOSIS / OBD/MOBD / DATA LIST / ALL / MAF”.
(f) Check that the MAF reading during idling.
Result: MAF greater than 4 g/s but less than 16 g/s
(g) Force the EGR valve to operate with a hand–held tester, make the valve opening 0, and check that the AFM reading during idling.
Result: MAF greater than 10 g/s but less than 16 g/s

NG → **REPLACE EGR VALVE ASSY (See page 14–286)**

OK

3	INSPECT EGR VALVE ASSY

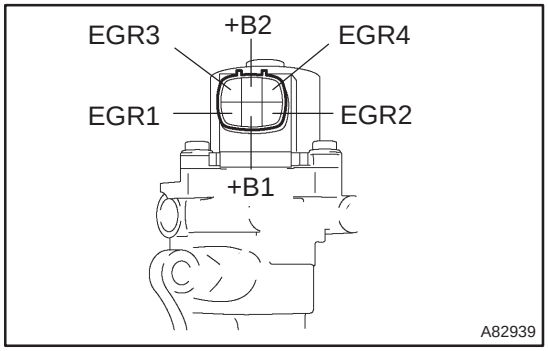

(a) Check the EGR valve for resistance.
(1) Measure the resistance between the specified terminals.

Resistance:

Terminal No.	Specified condition
+B1 – EGR1	19.6 ± 1.4 Ω
+B1 – EGR2	19.6 ± 1.4 Ω
+B2 – EGR3	19.6 ± 1.4 Ω
+B2 – EGR4	19.6 ± 1.4 Ω

NG → **REPLACE EGR VALVE ASSY (See page 14–286)**

OK

4 CHECK HARNESS AND CONNECTOR(EGR VALVE ASSY – ECM)

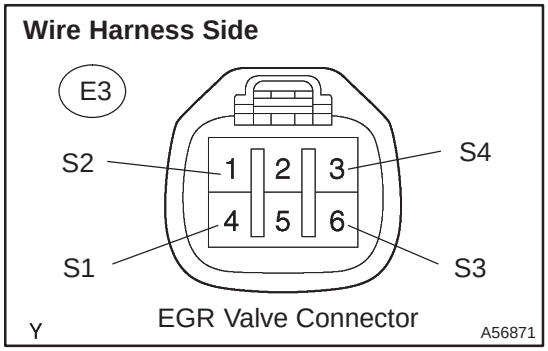

(a) Disconnect the E2 EGR valve connector.
(b) Disconnect the E12 ECM connector.
(c) Check for continuity between the wire harness side connectors.

Standard (Check for open):

Symbols (Terminal No.)	Specified condition
EG+A (E12–6) – S3 (E3–6)	Continuity
EG–A (E12–5) – S1 (E3–4)	
EG+B (E12–4) – S4 (E3–3)	
EG–B (E12–3) – S2 (E3–1)	

Standard (Check for short):

Symbols (Terminal No.)	Specified condition
EG+A (E12–6) or S3 (E3–6) – Body ground	No continuity
EG–A (E12–5) or S1 (E3–4) – Body ground	
EG+B (E12–4) or S4 (E3–3) – Body ground	
EG–B (E12–3) or S2 (E3–1) – Body ground	

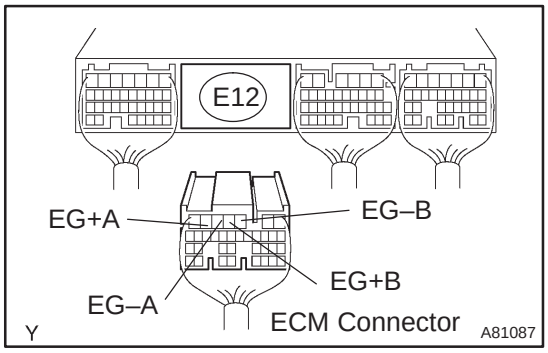

NG → **REPAIR OR REPLACE HARNESS OR CONNECTOR**

OK

5 INSPECT ECM(EGR VALVE ASSY VOLTAGE)

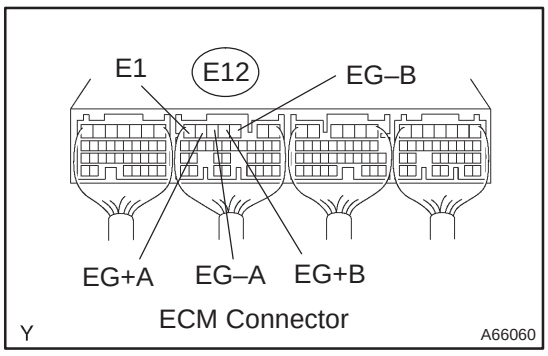

(a) Inspect using the oscilloscope.
(b) During idling, check the waveform between the specified terminals of the E12 ECM connector.

Standard:

Symbols (Terminal No.)	Specified condition
EG+A (E12–6) – E1 (E12–7)	Correct waveform is as shown
EG–A (E12–5) – E1 (E12–7)	
EG+B (E12–4) – E1 (E12–7)	
EG–B (E12–3) – E1 (E12–7)	

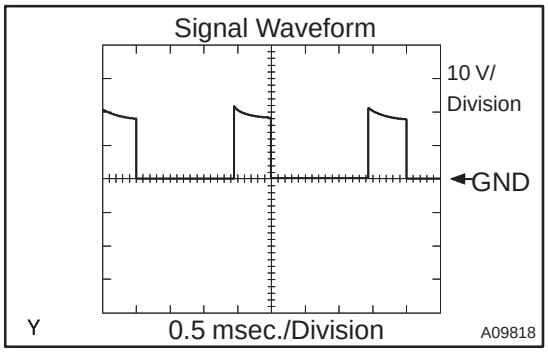

NG → **REPLACE ECM (See page 10–65)**

OK

6	CHECK DEPOSIT(EGR VALVE ASSY)

NG → REMOVE FOREIGN OBJECT AND CLEAN EGR VALVE

OK

7	CHECK DEPOSIT(EGR PASSAGE)

NG → REPAIR OR REPLACE

OK

8	CHECK FOR EXHAUST GAS LEAKS

NG → REPAIR EXHAUST GAS LEAKAGE POINT

OK

REPLACE ECM (See page 10–65)

DTC	P0488	EXHAUST GAS RECIRCULATION THROTTLE POSITION CONTROL RANGE/PERFORMANCE

CIRCUIT DESCRIPTION

The ECM opens and closes the intake shutter valve using the step motor. Upon opening and closing the valve, the exhaust gas recirculation volume is properly controlled. Also, the engine vibration and noise will be reduced by closing the valve when the engine is stopped.

The ECM detects fully opened of the intake shutter valve with the intake shutter valve fully opened switch

Intake Shutter Internal Structure

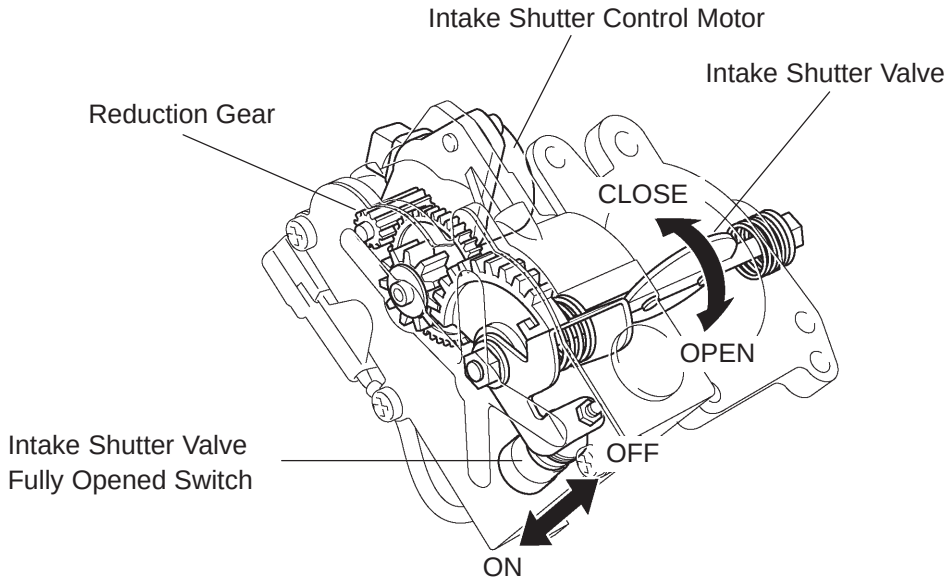

A81482

DTC No.	DTC Detection Condition	Trouble Area
P0488	Intake shutter valve fully opened switch is not turned on, despite forcing the intake shutter valve to fully open.	• Open or short in intake shutter circuit • Open or short in fully opened switch circuit • Intake shutter • ECM

MONITOR DESCRIPTION

This DTC will be set if the actual opening angle of the intake shutter valve varies from the target opening angle. The ECM forces the valve to fully open within 2 to 3 seconds as the ignition switch is turned ON, and then checks if the intake shutter valve fully opened switch is turned on. In addition, the ECM also forces the valve to fully open when accelerating the engine (high engine load) and checks if the switch is turned ON. When starting and/or accelerating the engine, the ECM sets this DTC if the switch is not turned on.
If the DTC is present, the ECM enters fail–safe mode and limits the engine power. The fail–safe mode will continue until the ignition switch is turned OFF.

Malfunction Detection

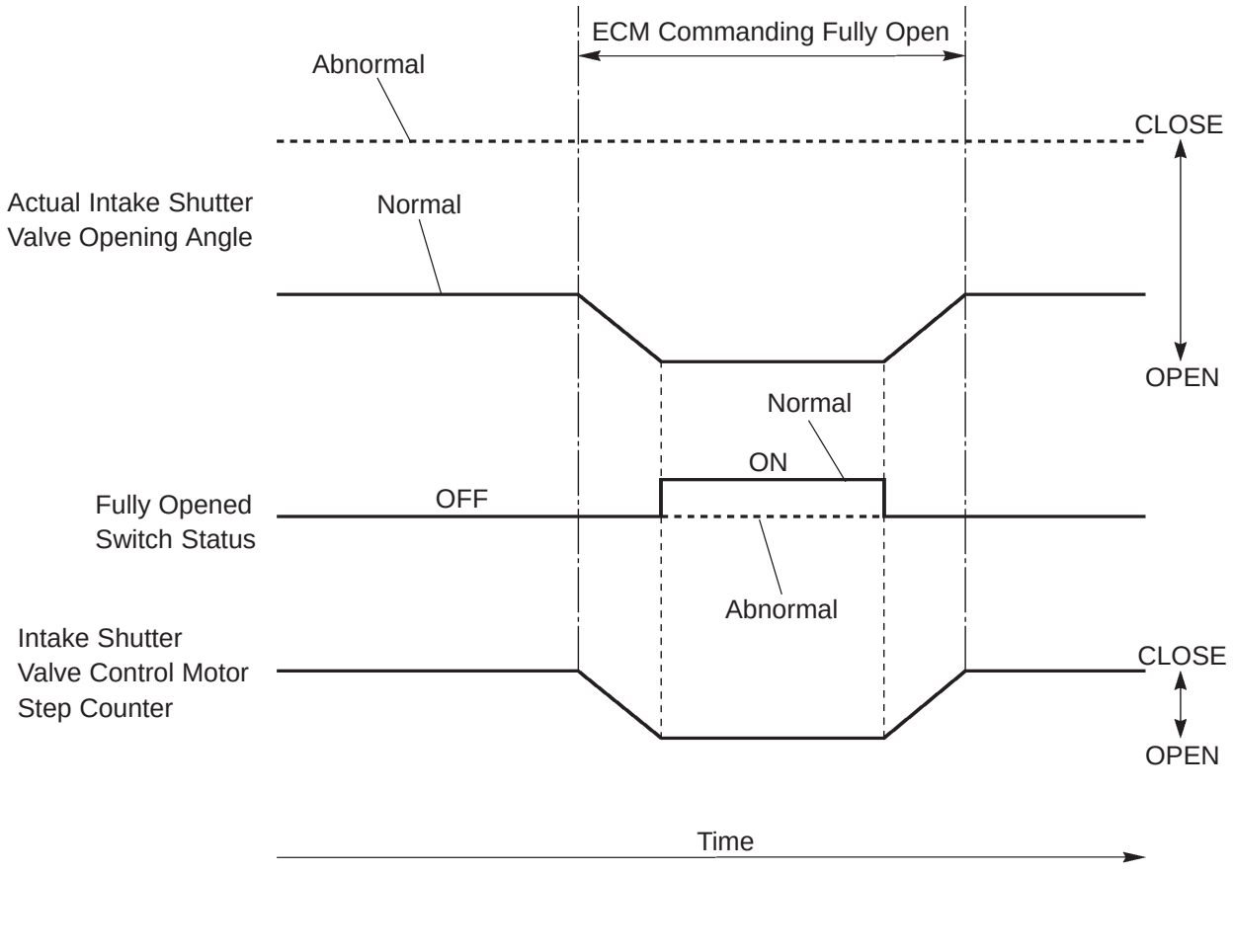

MONITOR STRATEGY

Required sensors	Intake shutter valve fully opened switch
Frequency of operation	Continuous
Duration	3 sec.
CHK ENG operation	1 driving cycle

TYPICAL ENABLING CONDITIONS

Specification
Start the engine and let it idle for 30 seconds and accelerate the vehicle speed to 60 km/h (37 mph) with the accelerator pedal opened more than the half angle

TYPICAL MALFUNCTION THRESHOLDS

Threshold
Intake shutter valve fully opened switch is not turned ON, despite the ECM commanding the intake shutter valve to open fully

WIRING DIAGRAM

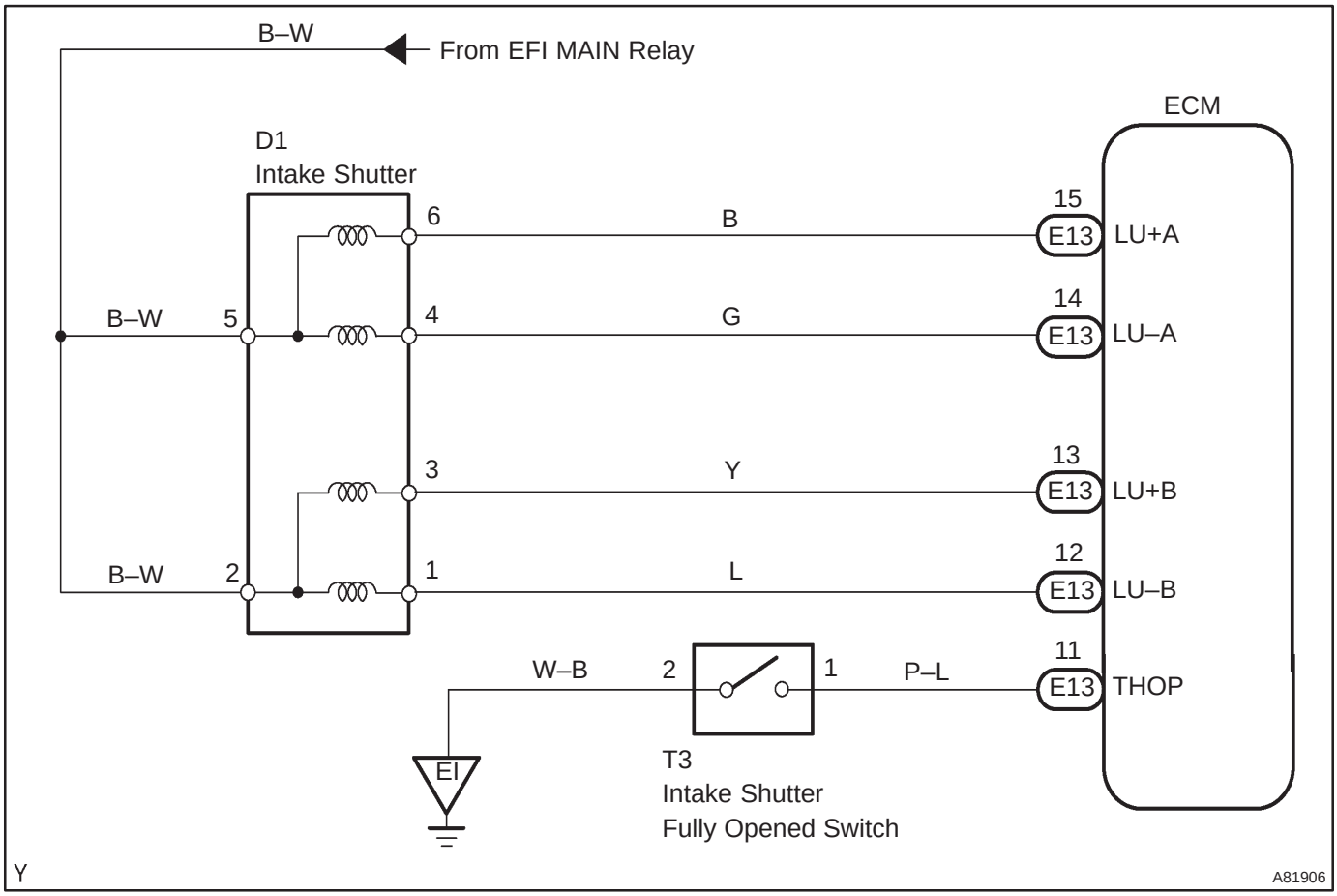

INSPECTION PROCEDURE

HINT:

Read freeze frame data using the hand–held tester. Freeze frame data records the engine conditions when a malfunction is detected. When troubleshooting, it is useful for determining whether the vehicle was running or stopped, the engine was warmed up or not, etc. at the time of the malfunction.

1	CHECK INTAKE SHUTTER ASSY

(a) Visually check that the intake shutter valve moves within approximately 2 to 3 seconds after the ignition switch is turned ON.

Intake shutter	Proceed to
Does not move	A
Smoothly move to full–open position	B

B → **Go to step 6**

A

2 CHECK INTAKE SHUTTER ASSY

(a) Check if the intake shutter valve moves as the lever is rotated by hand.

Intake shutter	Proceed to
Smoothly moved	A
Difficult to move smoothly	B

B → **REPLACE INTAKE SHUTTER ASSY (See page 10–61)**

A

3 INSPECT INTAKE SHUTTER ASSY

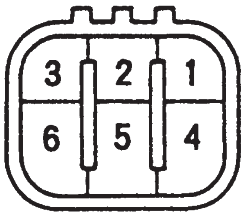

Intake Shutter Assy
A31135

(a) Check the intake shutter for resistance.
(1) Measure the resistance between the terminals.

RHD Resistance:

Terminals	Temperature	Resistance
1 – 2	at 20°C (68°F)	18 to 22 Ω
1 – 3		
4 – 5		
4 – 6		

LHD Resistance:

Terminals	Temperature	Resistance
1 – 3	at 20°C (68°F)	18 to 22 Ω
2 – 3		
4 – 6		
5 – 6		

NG → **REPLACE INTAKE SHUTTER ASSY (See page 10–61)**

OK

4 INSPECT ECM(LU VOLTAGE)

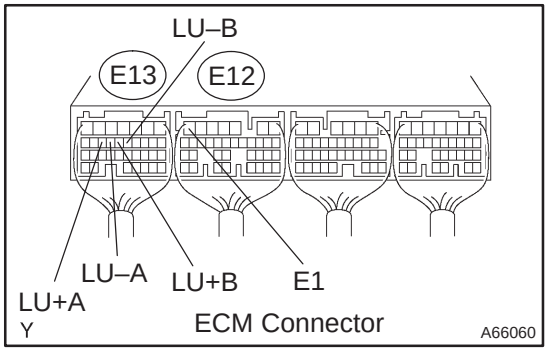

(a) Inspect using the oscilloscope.
(b) During idling, check the waveform between the specified terminals of the E12 and E13 ECM connectors.

Standard:

Symbols (Terminal No.)	Specified condition
LU+A (E13–15) – E1 (E12–7)	Correct waveform is as shown
LU–A (E13–14) – E1 (E12–7)	
LU+B (E13–13) – E1 (E12–7)	
LU–B (E13–12) – E1 (E12–7)	

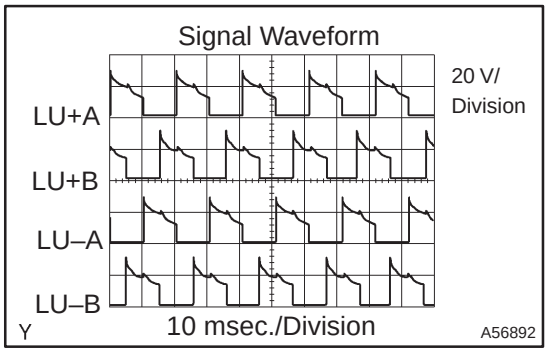

NG → **REPLACE ECM (See page 10–65)**

OK

5 CHECK HARNESS AND CONNECTOR(INTAKE SHUTTER ASSY – ECM)

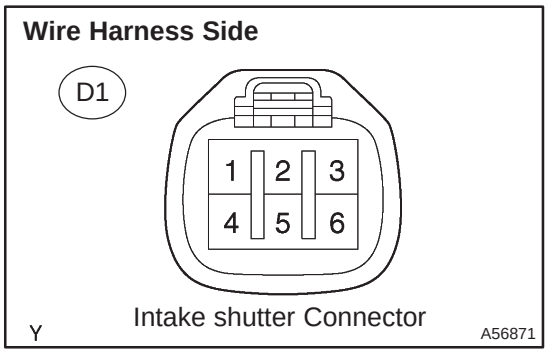

(a) Disconnect the D1 intake shutter connector.
(b) Disconnect the E13 ECM connector.
(c) Check for continuity between the wire harness side connectors.

Standard (Check for open):

Symbols (Terminal No.)	Specified condition
LU+A (E13–15) – Intake shutter (D1–6)	Continuity
LU–A (E13–14) – Intake shutter (D1–4)	
LU+B (E13–13) – Intake shutter (D1–3)	
LU–B (E13–12) – Intake shutter (D1–1)	

Standard (Check for short):

Symbols (Terminal No.)	Specified condition
LU+A (E13–15) or Intake shutter (D1–6) – Body ground	No continuity
LU–A (E13–14) or Intake shutter (D1–4) – Body ground	
LU+B (E13–13) or Intake shutter (D1–3) – Body ground	
LU–B (E13–12) or Intake shutter (D1–1) – Body ground	

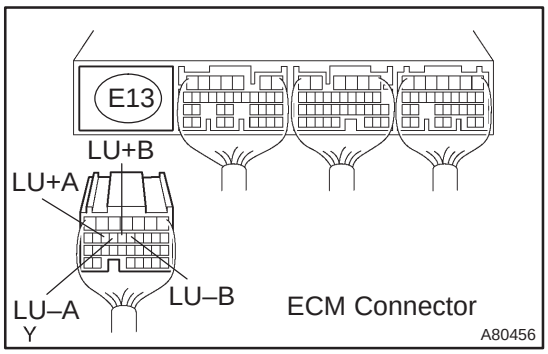

NG → **REPAIR OR REPLACE HARNESS OR CONNECTOR**

OK

6 READ VALUE OF HAND–HELD TESTER

(a) Connect the hand–held tester to the DLC3.
(b) Turn the ignition switch ON and push the hand–held tester main switch ON.
(c) Fully open the intake shutter valve by hand.
(d) Select the item ”DIAGNOSIS / OBD/MOBD / DATA LIST / ALL / ACCEL OPEN SW” and read its value displayed on the hand–held tester.

Result:

Switch Condition Displayed	Proceed to
OFF	A
ON	B

B → **CHECK DTC OUTPUT RECUR (DTC P0488 OUTPUT AGAIN)**

HINT:
After clearing the DTC, start the engine and let it idle for 30 seconds and accelerate the vehicle speed to 60 km/h (37 mph) with the accelerator pedal opened more than the half angle, then confirm P0488 is not set again.

A

7 CHECK HARNESS AND CONNECTOR(FULLY OPENED SWITCH – ECM)

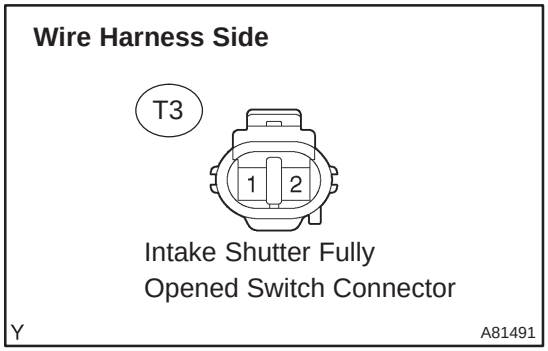

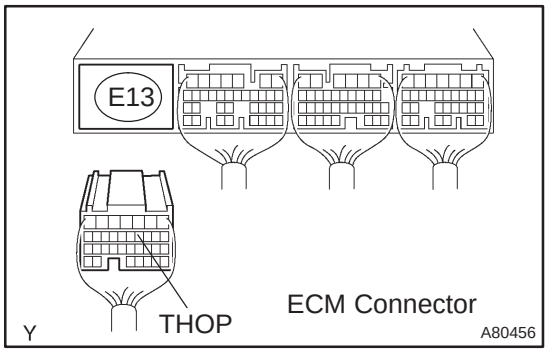

(a) Disconnect T3 the intake shutter fully opened switch connector.
(b) Disconnect the E13 ECM connector.
(c) Check for continuity between the wire harness side connectors.

Standard (Check for open):

Symbols (Terminal No.)	Specified condition
THOP (E13–11) – Intake shutter (T3–1)	Continuity

Standard (Check for short):

Symbols (Terminal No.)	Specified condition
THOP (E13–11) or Intake shutter (T3–1) – Body ground	No continuity

NG → **REPAIR OR REPLACE HARNESS OR CONNECTOR**

OK

CHECK DTC OUTPUT RECUR (DTC P0488 OUTPUT AGAIN)

HINT:
After clearing the DTC, start the engine and let it idle for 30 seconds and accelerate the vehicle speed to 60 km/h (37 mph) with the accelerator pedal opened more than the half angle, then confirm P0488 is not set again.

DTC	P0500	VEHICLE SPEED SENSOR ”A”

CIRCUIT DESCRIPTION

The speed sensor for skid control ECU detects the wheel speed and sends the appropriate signals to the skid control ECU.

The skid control ECU converts these signals into a 4–pulse signal and outputs it to the combination meter. After this signal is converted into a more precise rectangular waveform by the waveform shaping circuit inside the combination meter, it is then transmitted to the ECM. The ECM determines the vehicle speed based on the frequency of these pulse signals.

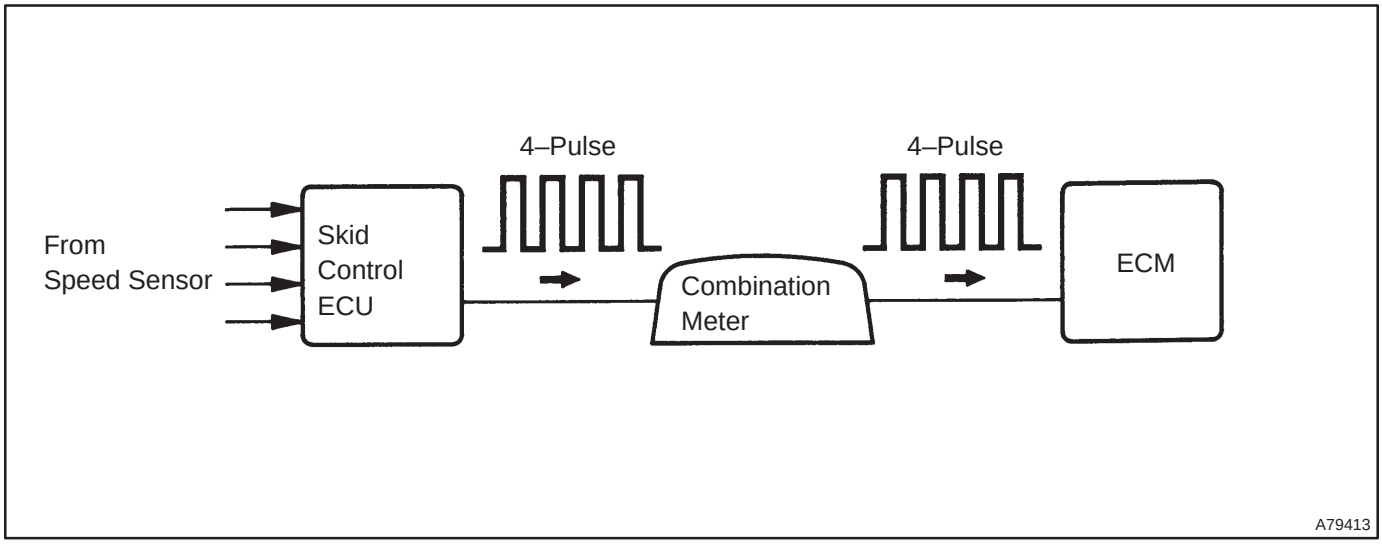

DTC No.	DTC Detection Condition	Trouble Area
P0500	Conditions (a) and (b) continue for 7 sec. or more (2 trip detection logic): (a) THW less than 70°C (158°F) (b) Engine speed is greater than 2,000 rpm but less than 3,500 rpm	• Open or short in speed sensor circuit • Speed sensor • Combination meter • ECM • Skid control ECU

WIRING DIAGRAM

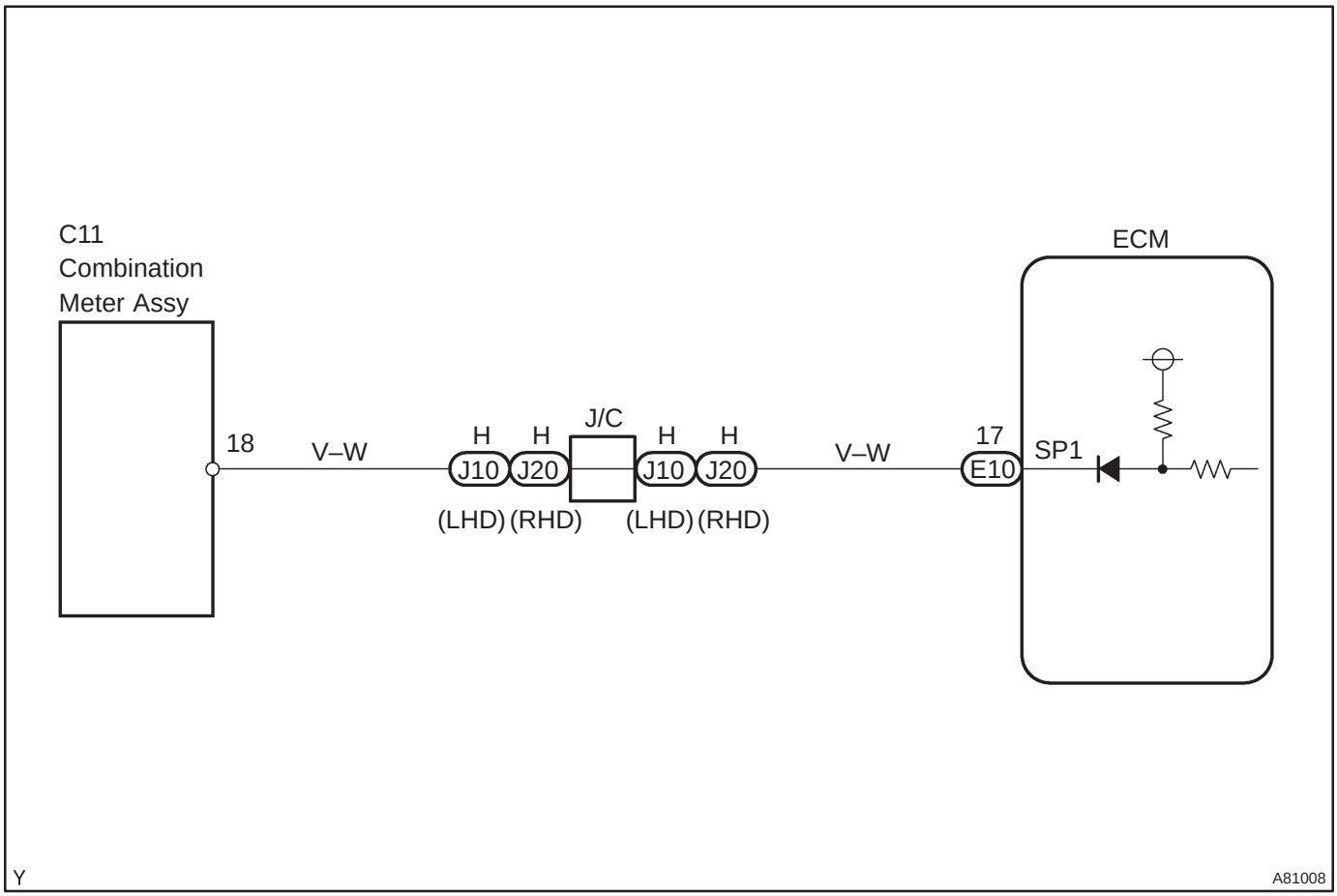

INSPECTION PROCEDURE

HINT:

Read freeze frame data using the hand–held tester. Freeze frame data records the engine conditions when a malfunction is detected. When troubleshooting, it is useful for determining whether the vehicle was running or stopped, the engine was warmed up or not, etc. at the time of the malfunction.

1	CHECK OPERATION OF SPEEDOMETER

(a) Drive the vehicle and check if the operation of the speedometer in the combination meter is normal.

HINT:

The vehicle speed sensor is operating normally if the speedometer display is normal.

NG → **CHECK SPEEDOMETER CIRCUIT** (See page 05–1510)

OK

2 INSPECT ECM(SP1 VOLTAGE)

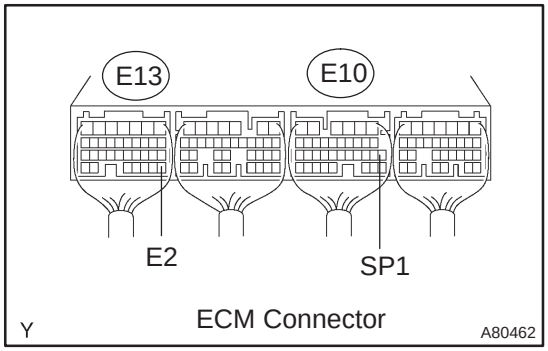

(a) Shift the transmission to the neutral position.
(b) Jack up the vehicle.
(c) Turn the ignition switch ON.
(d) Measure the voltage between the specified terminals of the E10 and E13 ECM connectors as the wheel is turned slowly.

Standard:

Symbols (Terminal No.)	Specified condition
SP1 (E10–17) – E2 (E13–28)	Generated intermittently

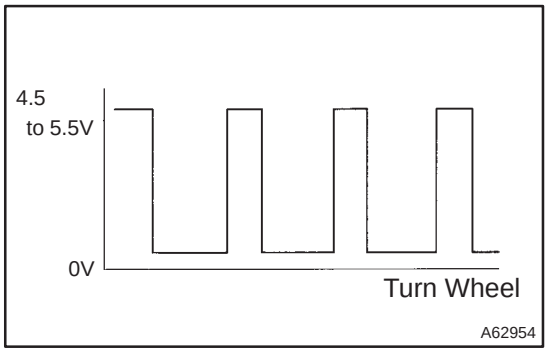

HINT:
The output voltage should fluctuate ups and downs similarly to the diagram on the left when the wheel is turned slowly.

NG → **REPAIR OR REPLACE HARNESS OR CONNECTOR**

OK

REPLACE ECM (See page 10–65)

DTC P0504 BRAKE SWITCH ”A”/”B” CORRELATION

CIRCUIT DESCRIPTION

In this system, the signal of the stop lamp switch is used to judge whether the acceleration system is abnormal or not.

The stop lamp switch has a duplex system (signals STP and ST1–) to memorize the abnormality when the signals of depressing and releasing the brake pedal are detected simultaneously.

HINT:

Normal condition is as shown in the table.

Signal	Brake pedal released	In transition	Brake pedal depressed
STP	OFF	ON	ON
ST1–	ON	ON	OFF

DTC No.	DTC Detection Condition	Trouble Area
P0504	Conditions (a), (b) and (c) continue for 0.5 sec. or more (1 trip detection logic): (a) Ignition switch ON (b) Brake pedal released (c) STP signal is OFF when the ST1– signal is OFF	• Short in stop lamp switch signal circuit • Stop lamp switch • ECM

WIRING DIAGRAM

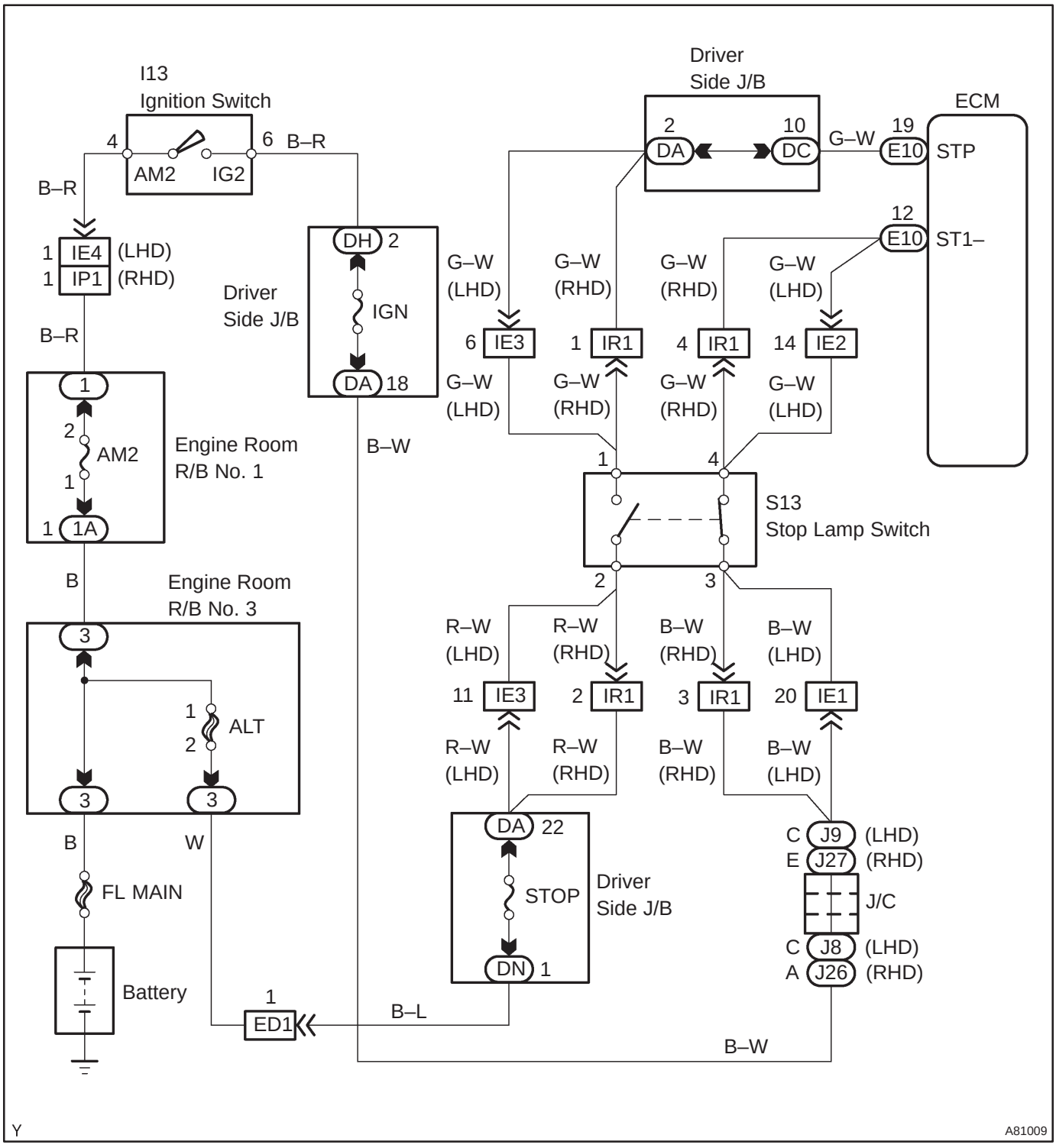

INSPECTION PROCEDURE

HINT:

Read freeze frame data using the hand–held tester. Freeze frame data records the engine conditions when a malfunction is detected. When troubleshooting, it is useful for determining whether the vehicle was running or stopped, the engine was warmed up or not, etc. at the time of the malfunction.

1 CHECK OPERATION OF STOP LIGHT

(a) Check if the stop lights go on and off normally when the brake pedal is depressed and released.

NG → **REPAIR OR REPLACE STOP LAMP SWITCH CIRCUIT**

OK

2 INSPECT STOP LAMP SWITCH ASSY

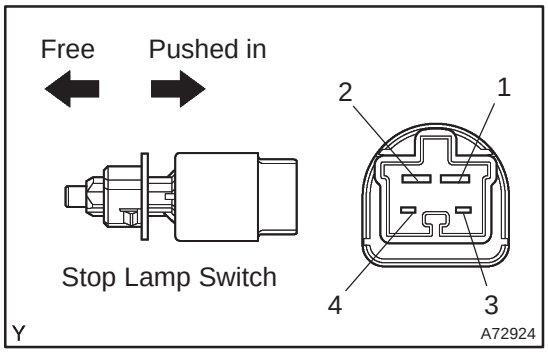

(a) Check for continuity between each pair of the terminals.
Standard:

Switch position	Terminals No.	Specified condition
Switch pin free	1 – 2	Continuity
	3 – 4	No continuity
Switch pin pushed in	1 – 2	No continuity
	3 – 4	Continuity

NG → **REPLACE STOP LAMP SWITCH ASSY**

OK

3 READ VALUE OF HAND–HELD TESTER(STP SIGNAL AND ST1– VOLTAGE)

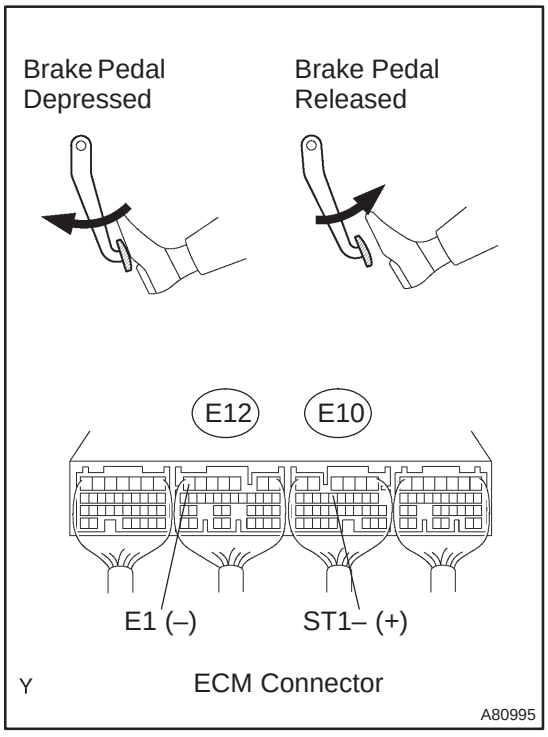

(a) Turn the ignition switch ON.
(b) Select the item ”DIAGNOSIS / OBD/MOBD / DATA LIST / ALL / STOP LIGHT SW” and read its value displayed on the hand–held tester.
Standard:

Brake Pedal	Specified condition
Depressed	STP Signal ON
Released	STP Signal OFF

(c) Measure the voltage between the specified terminals of the E10 and E12 ECM connectors.
Standard:

Symbols (Terminal No.)	Brake pedal	Specified condition
ST1– (E10–12) – E1 (E12–7)	Depressed	Below 1.5 V
	Released	7.5 to 14 V

OK → **CHECK FOR INTERMITTENT PROBLEMS (See page 05–528)**

NG

4 CHECK HARNESS AND CONNECTOR(STOP LAMP SWITCH – ECM)

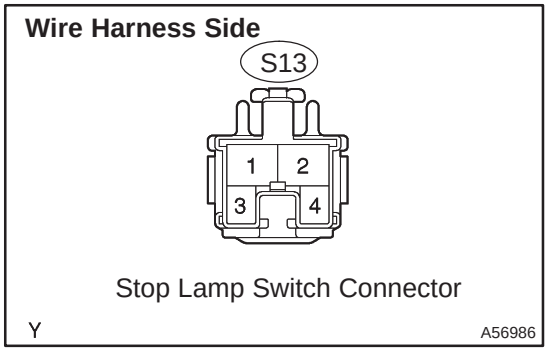

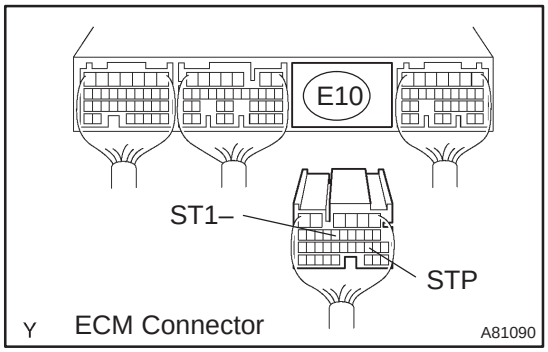

(a) Disconnect the S13 stop lamp switch connector.
(b) Disconnect the E10 ECM connector.
(c) Check for continuity between the wire harness side connectors.

Standard (Check for open):

Symbols (Terminal No.)	Specified condition
Stop lamp switch (S13–1) – STP (E10–19)	Continuity
Stop lamp switch (S13–4) – ST1– (E10–12)	

Standard (Check for short):

Symbols (Terminal No.)	Specified condition
Stop lamp switch (S13–1) or STP (E10–19) – Body ground	No continuity
Stop lamp switch (S13–4) or ST1– (E10–12) – Body ground	

NG → **REPAIR OR REPLACE HARNESS OR CONNECTOR**

OK

REPLACE ECM(See page 10–65)

DTC	P0560	SYSTEM VOLTAGE

CIRCUIT DESCRIPTION

While the ignition switch is OFF, the battery positive voltage is supplied to terminal BATT of the ECM for the DTCs memory and air–fuel ratio adaptive control value memory, etc.

DTC No.	DTC Detection Condition	Trouble Area
P0560	Open in back–up power source circuit (1 trip detection logic).	• Open in back–up power source circuit • ECM

HINT:

If DTC P0560 appears, the ECM does not store other DTC.

WIRING DIAGRAM

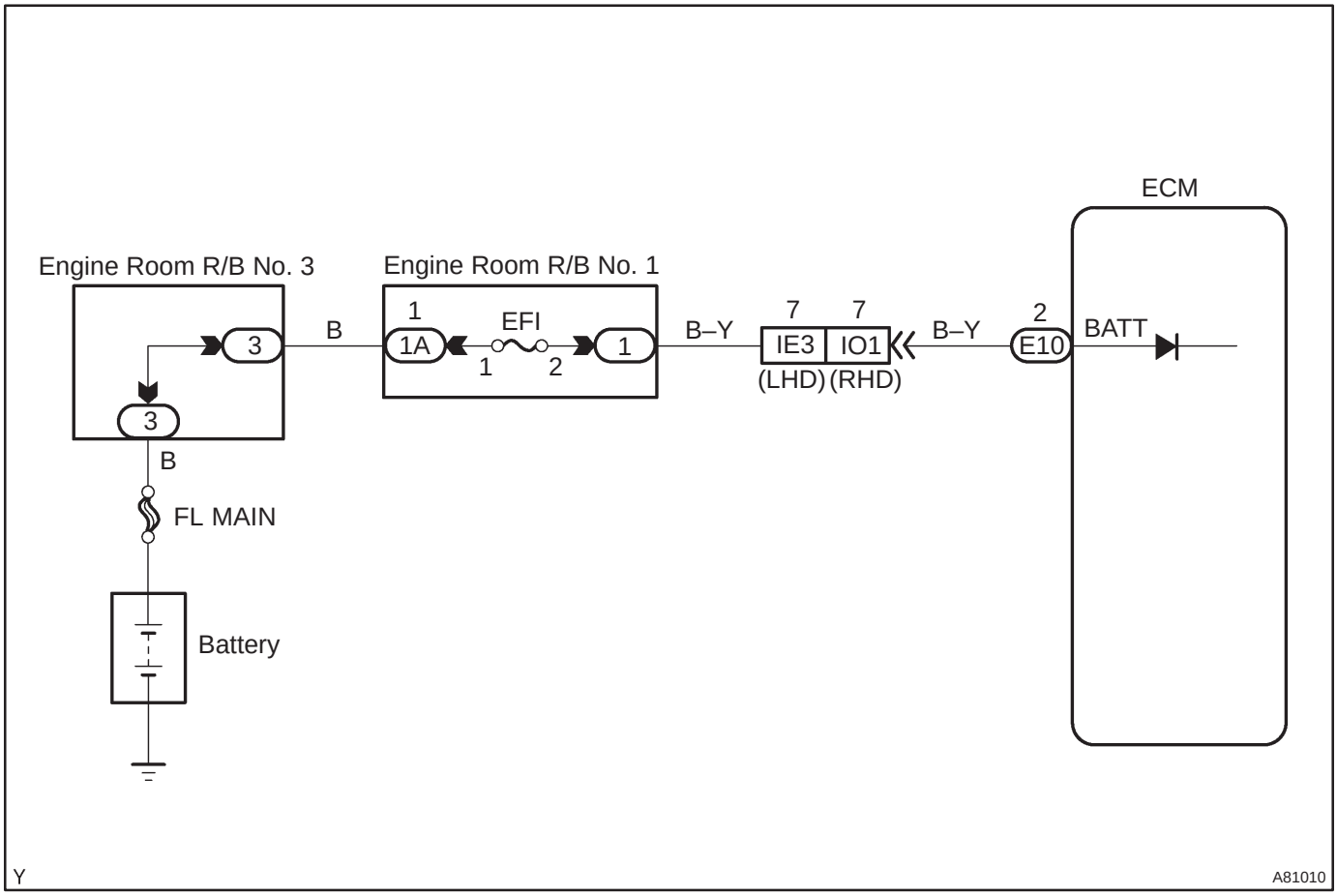

INSPECTION PROCEDURE

HINT:

Read freeze frame data using the hand–held tester. Freeze frame data records the engine conditions when a malfunction is detected. When troubleshooting, it is useful for determining whether the vehicle was running or stopped, the engine was warmed up or not, etc. at the time of the malfunction.

1 CHECK FUSE(EFI FUSE)

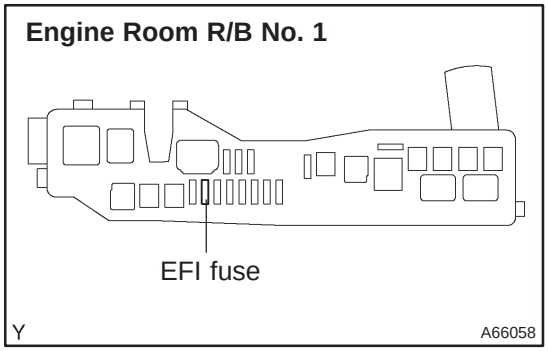

(a) Remove the EFI fuse from the engine room R/B No. 1.
(b) Check for continuity in the EFI fuse.
Standard: Continuity

NG → **CHECK FOR SHORT IN ALL HARNESSES AND COMPONENTS CONNECTED FUSE**

OK

2 INSPECT ECM(BATT VOLTAGE)

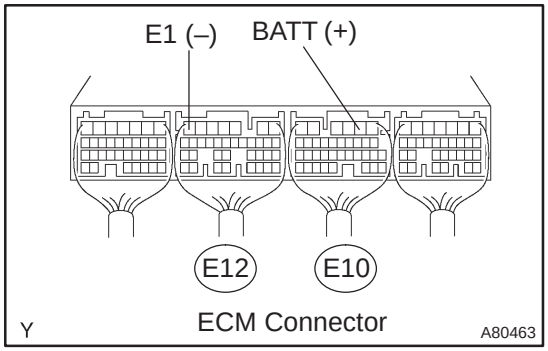

(a) Measure the voltage between the specified terminals of the E10 and E12 ECM connectors.
Standard:

Symbols (Terminal No.)	Specified condition
BATT (E10–2) – E1 (E12–7)	9 to 14 V

OK → **REPLACE ECM (See page 10–65)**

NG

3 CHECK HARNESS AND CONNECTOR(EFI FUSE – ECM, EFI FUSE – BATTERY)

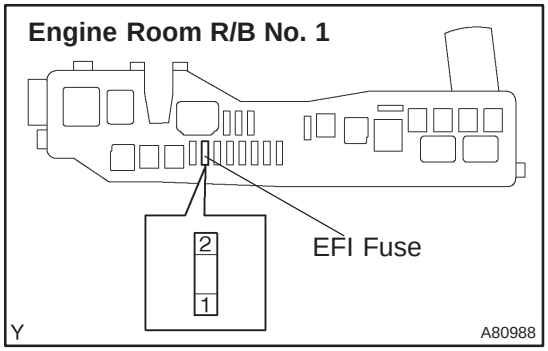

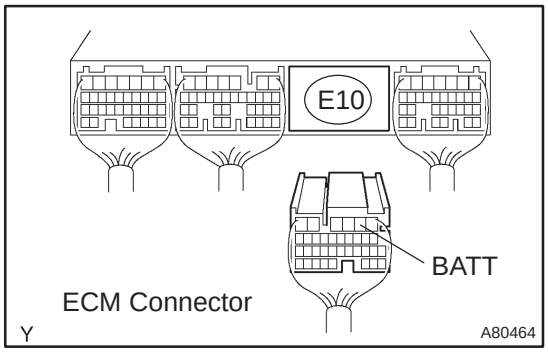

(a) Check the harness and connector between the EFI fuse and ECM.

(1) Remove the EFI fuse from the engine room R/B No. 1.

(2) Disconnect the E10 ECM connector.

(3) Check for continuity between the wire harness side connectors.

Standard (Check for open):

Symbols (Terminal No.)	Specified condition
EFI fuse (2) – BATT (E10–2)	Continuity

Standard (Check for short):

Symbols (Terminal No.)	Specified condition
EFI fuse (2) or BATT (E10–2) – Body ground	No continuity

(b) Check the harness and connector between the EFI fuse and battery.

(1) Remove the EFI fuse from the engine room R/B No. 1.

(2) Disconnect the battery positive terminal.

(3) Check for continuity between the wire harness side connectors.

Standard (Check for open):

Symbols (Terminal No.)	Specified condition
Battery positive terminal – EFI fuse (1)	Continuity

Standard (Check for short):

Symbols (Terminal No.)	Specified condition
Battery positive terminal or EFI fuse (1) – Body ground	No continuity

NG → **REPAIR OR REPLACE HARNESS OR CONNECTOR**

OK

REPLACE JUNCTION BLOCK

DTC	P0606	ECM/PCM PROCESSOR

DTC	P0607	CONTROL MODULE PERFORMANCE

DTC	P1611	IC CIRCUIT MALFUNCTION

CIRCUIT DESCRIPTION

DTC No.	DTC Detection Condition	Trouble Area
P0606 P0607 P1611	ECM inside error (1 trip detection logic)	• ECM

INSPECTION PROCEDURE

HINT:

Read freeze frame data using the hand–held tester,. Freeze frame data records the engine conditions when a malfunction is detected. When troubleshooting, it is useful for determining whether the vehicle was running or stopped, the engine was warmed up or not, etc. at the time of the malfunction.

REPLACE ECM (See page 10–65)

DTC P0622 GENERATOR FIELD "F" TERMINAL CIRCUIT

CIRCUIT DESCRIPTION

While the generator is generating the current, the duty signal is sent from terminal M of the generator to the ECM terminal ALT. The duty signal is used for detecting the open malfunction of the generator circuit and DTC P0380.

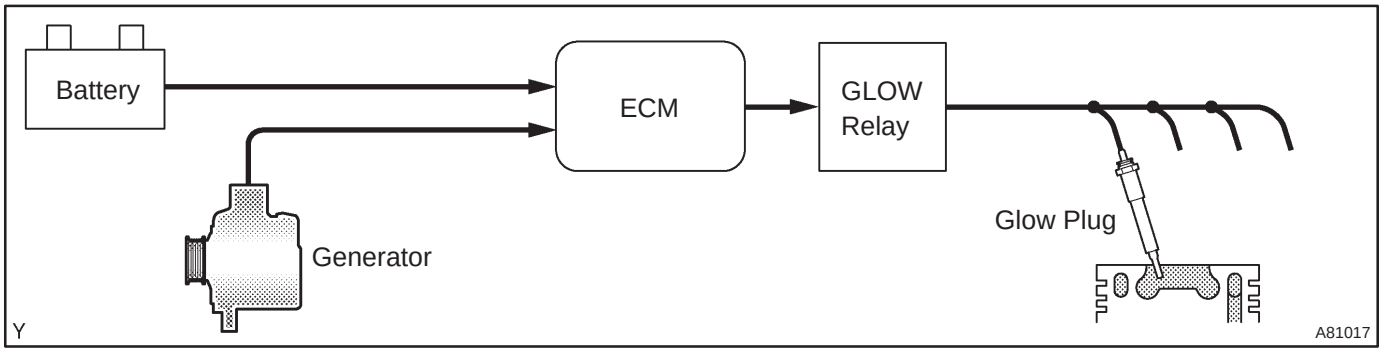

DTC No.	DTC Detection Condition	Trouble Area
P0622	Generator terminal M duty signal is not output while engine is running.	• Open in generator circuit • Generator • Driver belt • ECM

MONITOR DESCRIPTION

The ECM will detect a generator failure or an open malfunction of the circuit, if the duty signal is not output from terminal M of the generator despite the engine running.

MONITOR STRATEGY

Required sensors	Generator circuit
Frequency of operation	Continuous
Duration	10 sec.
CHK ENG operation	1 driving cycle

TYPICAL ENABLING CONDITIONS

Item	Specification	
	Minimum	Maximum
Battery voltage	11 V	–
Engine speed	700 rpm	2,000 rpm

TYPICAL MALFUNCTION THRESHOLDS

Threshold
There is no signal output from terminal M of the generator

WIRING DIAGRAM

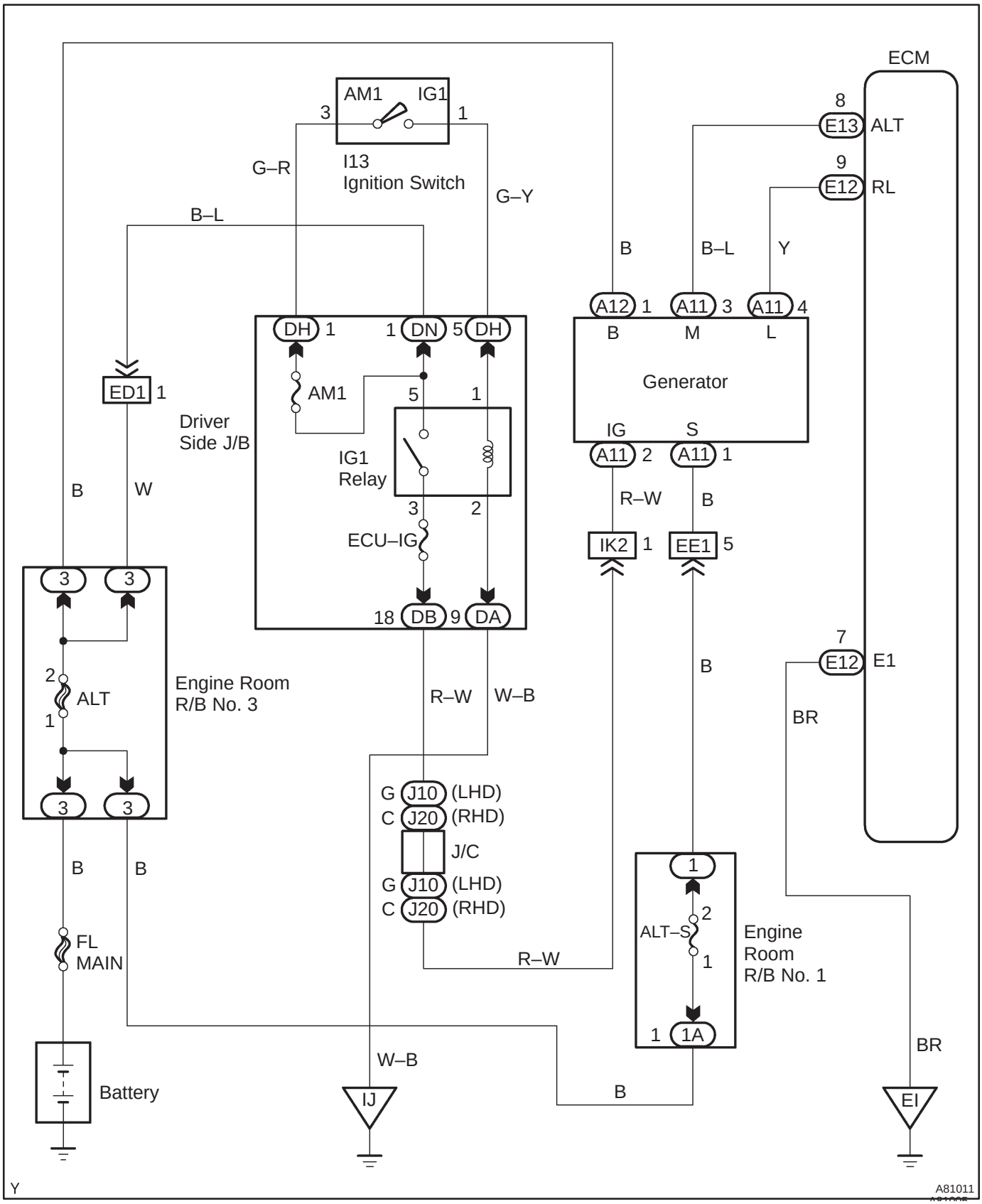

INSPECTION PROCEDURE

HINT:

- If different DTCs related to different systems that have terminal E2 as the ground terminal are output simultaneously, terminal E2 may be open.
- Read freeze frame data using the hand–held tester. Freeze frame data records the engine conditions when a malfunction is detected. When troubleshooting, it is useful for determining whether the vehicle was running or stopped, the engine was warmed up or not, etc. at the time of the malfunction.

1	CHECK IF CHARGE LAMP IS ILLUMINATED

HINT:

Run the engine at 2,000 rpm, and check if the charge lamp located in the combination meter is OFF.

YES → **Go to step 3**

NO

2	CHECK HARNESS AND CONNECTOR(GENERATOR – ECM)

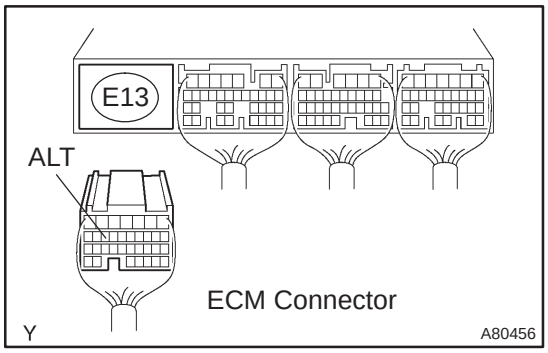

(a) Disconnect the E13 ECM connector.
(b) Disconnect the A11 generator connector.
(c) Check for continuity between the wire harness side connector.

Standard (Check for open):

Symbols (Terminal No.)	Specified condition
ALT (E13–8) – M (A11–3)	Continuity

Standard (Check for short):

Symbols (Terminal No.)	Specified condition
ALT (E13–8) or M (A11–3) – Body ground	No continuity

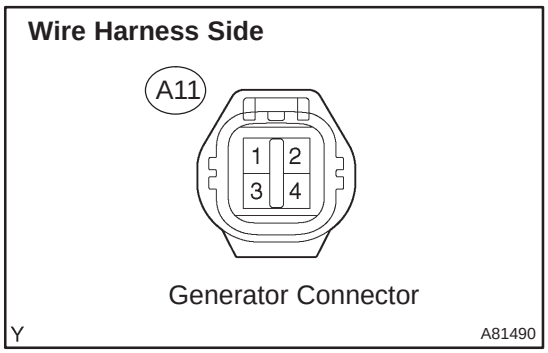

NG → **REPAIR OR REPLACE HARNESS OR CONNECTOR**

OK

3	INSPECT DRIVE BELT (See page 14–266)

NG → **REPAIR OR REPLACE DRIVE BELT (See page 14–269)**

OK

4	**INSPECT CHARGING SYSTEM (See page 19–26)**

GO

CHECK DTC OUTPUT RECUR (DTC P0622 OUTPUT AGAIN)

HINT:
After clearing the DTC, start the engine and let it idle for 10 seconds, and then confirm P0622 is not set again.

DTC	P0627	FUEL PUMP CONTROL CIRCUIT / OPEN

CIRCUIT DESCRIPTION

DTC No.	DTC Detection Condition	Trouble Area
P0627	Open or short in suction control valve circuit for more than 0.5 sec. (1 trip detection logic).	• Open or short in suction control valve circuit • Suction control valve • ECM

WIRING DIAGRAM

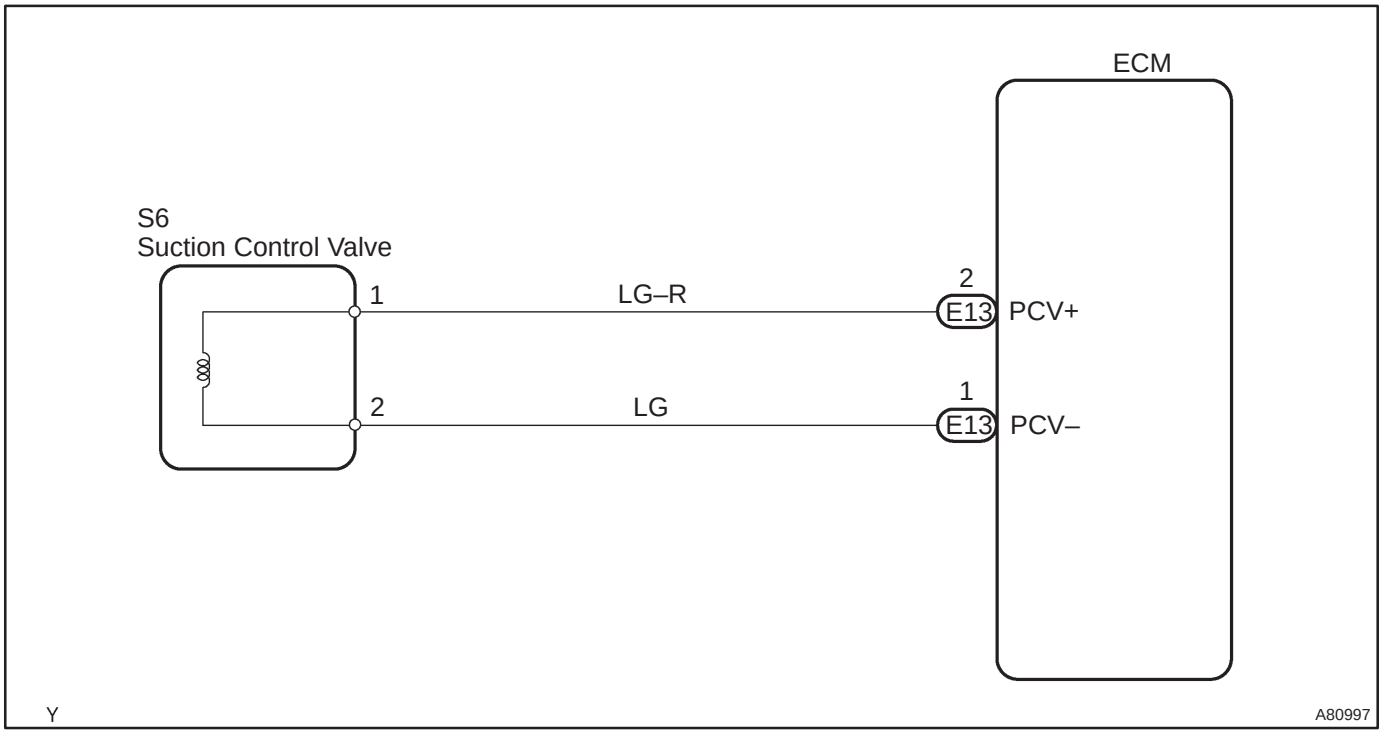

INSPECTION PROCEDURE

HINT:

Read freeze frame data using the hand – held tester. Freeze frame data records the engine conditions when a malfunction is detected. When troubleshooting, it is useful for determining whether the vehicle was running or stopped, the engine was warmed up or not, etc. at the time of the malfunction.

1 CHECK INJECTION OR SUPPLY PUMP ASSY

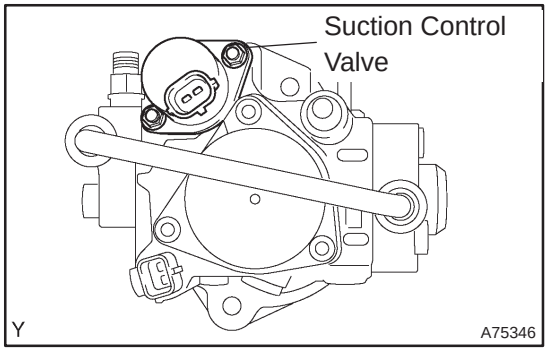

(a) Check the suction control valve for resistance.
(1) Measure the resistance between the terminals.
Resistance: 1.9 to 2.3 Ω at 20°C (68°F)

NG → **REPLACE INJECTION OR SUPPLY PUMP ASSY (SUCTION CONTROL VALVE) (See page 11–69)**

OK

2 CHECK HARNESS AND CONNECTOR(SUCTION CONTROL VALVE – ECM)

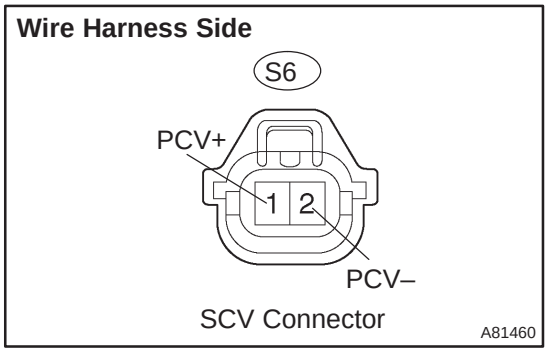

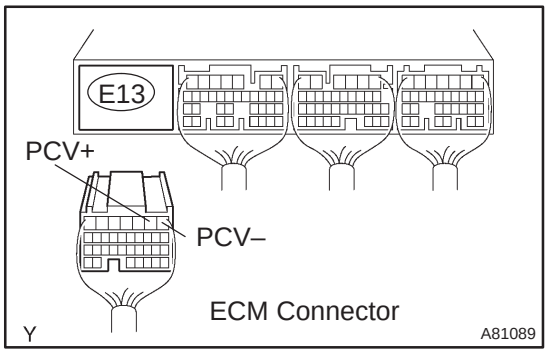

(a) Disconnect the S6 suction control valve connector.
(b) Disconnect the E13 ECM connector.
(c) Check for continuity between the wire harness side connector.

Standard (Check for open):

Symbols (Terminal No.)	Specified condition
PCV+ (S6–1) – PCV+ (E13–2)	Continuity
PCV– (S6–2) – PCV– (E13–1)	

Standard (Check for short):

Symbols (Terminal No.)	Specified condition
PCV+ (S6–1) or PCV+ (E13–2) – Body ground	No continuity
PCV– (S6–2) or PCV– (E13–1) – Body ground	

NG → **REPAIR OR REPLACE HARNESS AND CONNECTOR**

OK

3 INSPECT ECM(PCV VOLTAGE)

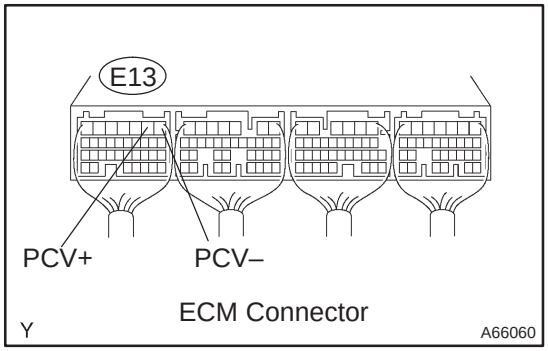

(a) Inspect using the oscilloscope.
(b) During cranking or idling, check the waveform between the specified terminals of the E13 ECM connector.

Standard :

Symbols (Terminal No.)	Specified condition
PCV+ (E13–2) – PCV– (E13–1)	Correct waveform is as shown

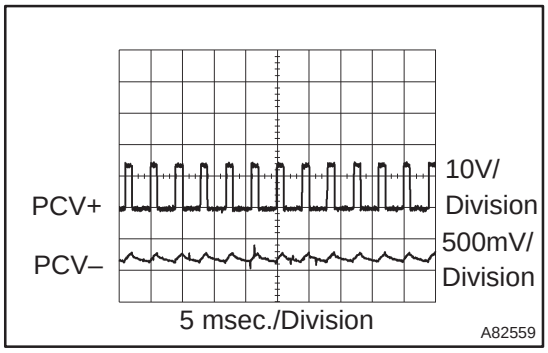

NG → **REPLACE ECM (See page 10–65)**

OK

CHECK FOR INTERMITTENT PROBLEMS (See page 05–528)

DTC	P1238	INJECTOR MALFUNCTION

HINT:
- For more information on the injector and the common rail system, see page 05–517.
- If P1238 is present, use the diagnostic trouble code matrix for fuel system, see page 05–517.

CIRCUIT DESCRIPTION

The ECM detects combustion deterioration for specific cylinder.
HINT:
- The cylinder that has compensation learned value for INJ VOL varies from other cylinders may be malfunctioning.
- If DTC P0093 (Fuel leaks in high–pressure area) is present simultaneously, leakage malfunction of the cylinder probably be occurred.
- If DTC P0200 (Open or short in EDU or injector circuit) is present simultaneously, there probably be faulty circuit located between the ECM and the injector including the EDU.
- If only DTC P1238 (Injector malfunction) is present, probably the injector is mechanical malfunction or insufficient compression (valve clearance, etc) has occurred, not an open or short malfunction of the ECM, EDU and injector circuit.
- Solenoid valve of the injector is the same type of the pressure discharge valve.

Injector Cross Section Diagram

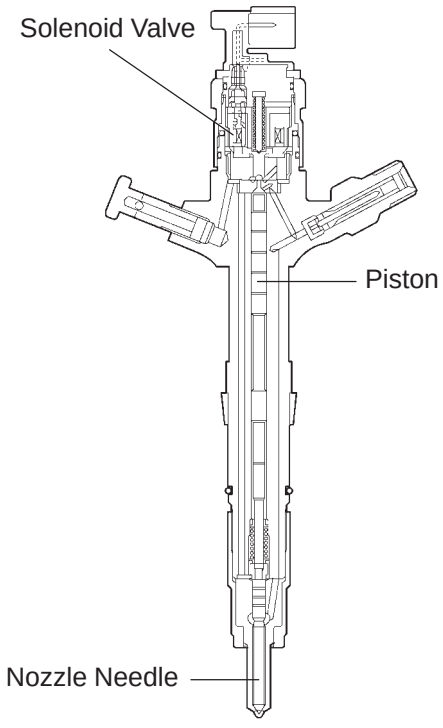

DTC No.	DTC Detection Condition	Main Trouble Area	Related Trouble Area
P1238	Engine speed variation is large when idling.	• Injector • EDU (P0200 is set simultaneously) • Open or short in engine wire (P0200 is set simultaneously) • Connector connection (P0200 is set simultaneously) • Compression pressure • Valve clearance	• Valve timing • ECM

HINT:
After confirming DTC P1238, use the hand–held tester to confirm the fuel pressure inside the common rail in the ”DIAGNOSIS / OBD/MOBD / DATA LIST / ALL / COMN RAIL PRESS”.

Engine Speed	Fuel Pressure (MPa)
Idling	Approx. 30 to 40
Running the engine at 2,500 rpm (No engine load)	Approx. 50 to 100

MONITOR DESCRIPTION

P1238 (Injection malfunction, exclude open or short in injector circuit):
This DTC will be set if the engine speed variations between each cylinder is large. The ECM monitors changes in the crankshaft rotation speed using the crankshaft position sensor for detecting poor combustion. Also, it identifies faulty cylinder using the camshaft position sensor. The fluctuation counter increments when irregular crankshaft rotation speed variation exceeds the threshold at idling. Therefore, either one of the cylinders has very poor combustion (Rough idle), the ECM sets this DTC.

MONITOR STRATEGY

Required sensors	Crankshaft position sensor
Frequency of operation	Continuous
Duration	10 min.
CHK ENG operation	2 driving cycles

TYPICAL ENABLING CONDITIONS

Item	Specification	
	Minimum	Maximum
Engine	At idling	
Engine speed	500 rpm	–
Engine coolant temperature	20°C (68°F)	

TYPICAL MALFUNCTION THRESHOLDS

Threshold
The number of irregular changes in the crankshaft rotation speed

HINT:
The number of irregular changes in the crankshaft rotation speed indicates the insufficient combustion cylinder.

WIRING DIAGRAM

Refer to DTC P0200 on page 05–604.

INSPECTION PROCEDURE

HINT:

- If DTCs other than P1238 are present simultaneously, first perform the troubleshooting for them.
- Read freeze frame data using the hand−held tester. Freeze frame data records the engine conditions when a malfunction is detected. When troubleshooting, it is useful for determining whether the vehicle was running or stopped, the engine was warmed up or not, etc. at the time of the malfunction.

1	CHECK OTHER DTC OUTPUT(BESIDES DTC P1238)

(a) Connect the hand–held tester to the DLC3.
(b) Turn the ignition switch ON and push the hand–held tester main switch ON.
(c) Select the item ”DIAGNOSIS / OBD/MOBD / DTC INFO / CURRENT CODES”.
(d) Read the DTCs.

Result:

Display (DTC output)	Proceed to
Only P1238 is output	A
P1238 and other DTCs are output	B

HINT:
If any other codes besides P1238 are output, perform the troubleshooting for those DTCs first.

B → **GO TO RELEVANT DTC CHART (See page 05–544)**

A

2	CHECK WIRE HARNESS AND CONNECTOR IN ENGINE ROOM

HINT:
Check the wire harness and connector connections.

NG → **REPAIR OR REPLACE**

OK

3	READ VALUE OF HAND–HELD TESTER(COMPENSATION OF INJECTION QUANTIFY BETWEEN CYLINDERS FOR MALFUNCTION CYLINDER)

(a) Connect the hand–held tester to the DLC3.
(b) Turn the ignition switch ON and push the hand–held tester main switch ON.
(c) Select the item "DIAGNOSIS / OBD/MOBD / DATA LIST / ALL / INJ VOLUME FB" and read its value displayed on the hand–held tester.
Result:
STD – 3 to 3 mm^3/st
Maximum – 4.9 to 4.9 mm^3/st
(d) Cylinders that have a compensation value which is outside of the specification range are considered to be faulty cylinders. Use the following flowchart to inspect and repair the cylinder.
Result:

Result	Proceed to
Faulty cylinder can not identified	A
Faulty cylinder can be identified	B

B → **Go to step 5**

A

4	PERFORM ACTIVE TEST USING HAND–HELD TESTER(INJECTION CUT FOR MALFUNCTION CYLINDER)

(a) Connect the hand–held tester to the DLC3.
(b) Start the engine.
(c) Push the hand–held tester main switch ON.
(d) Select the item "DIAGNOSIS / OBD/MOBD / ACTIVE TEST / INJECTOR CUT #1, #2, #3 and #4".
(e) Check for the 4 cylinders in the sequence and then performs the power balance inspection to identify faulty cylinder (If there is no changes in the engine speed even though the fuel injection is cut off during idling, the cylinder is malfunctioning).

GO

5	CHECK CYLINDER COMPRESSION PRESSURE OF MALFUNCTION CYLINDER (See page 14–266)

NG → **REPAIR OR REPLACE**

OK

6	CHECK VALVE CLEARANCE OF MALFUNCTION CYLINDER (See page 14–266)

NG → **ADJUST VALVE CLEARANCE (See page 14–270)**

OK

7	READ OUTPUT DTC (DTC P1238 OUTPUT AGAIN)

HINT:
After clearing the DTC, let the engine idle for 10 minutes after it was warmed up, and confirm P1238 is not set again.

OK → CHECK FOR INTERMITTENT PROBLEMS (See page 05–528)

NG

8	REPLACE INJECTOR ASSY (See page 11–60)

GO

CHECK DTC OUTPUT RECUR (DTC P1238 OUTPUT AGAIN)

HINT:
After clearing the DTC, let the engine idle for 10 minutes after it was warmed up, and confirm P1238 is not set again.

DTC	P1271	FUEL REGULATOR CIRCUIT MALFUNCTION (EDU DRIVE)

DTC	P1272	FUEL PRESSURE REGULATOR MALFUNCTION

HINT:

- For more information on the pressure discharge valve and the common rail system, see page 05–517.
- For more information on the EDU, see page 05–604.
- If P1271 and/or P1272 are present, use the diagnostic trouble code matrix for fuel system, see page 05–517.

CIRCUIT DESCRIPTION

The ECM controls the internal fuel pressure of the common rail by opening and closing the pressure discharge valve. When sudden deceleration is occurred, the internal fuel pressure will temporarily become higher than usual and combustion noise may result, therefore the ECM will open the valve temporarily to discharge the pressure inside the common rail. Also, the pressure discharge valve opens when the ignition switch is turned OFF, and the internal pressure is then promptly discharged.

Pressure Discharge Valve Operation Under Sudden Deceleration

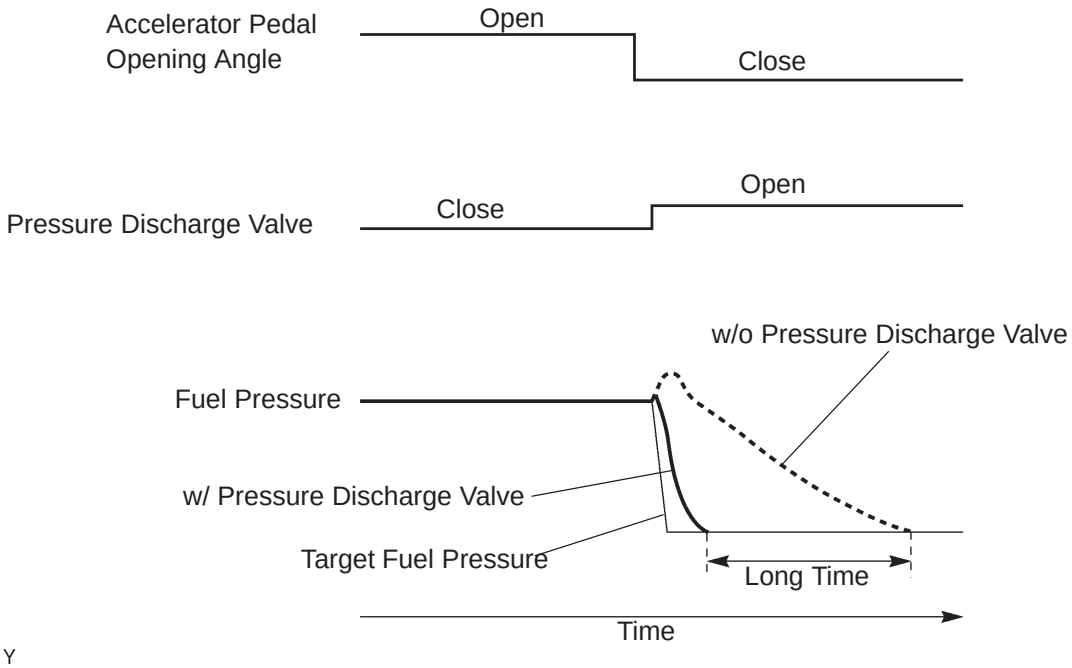

HINT:
The solenoid valve of the pressure discharge valve is the same type of the injector solenoid valve.

Pressure Discharge Valve Cross Section Diagram

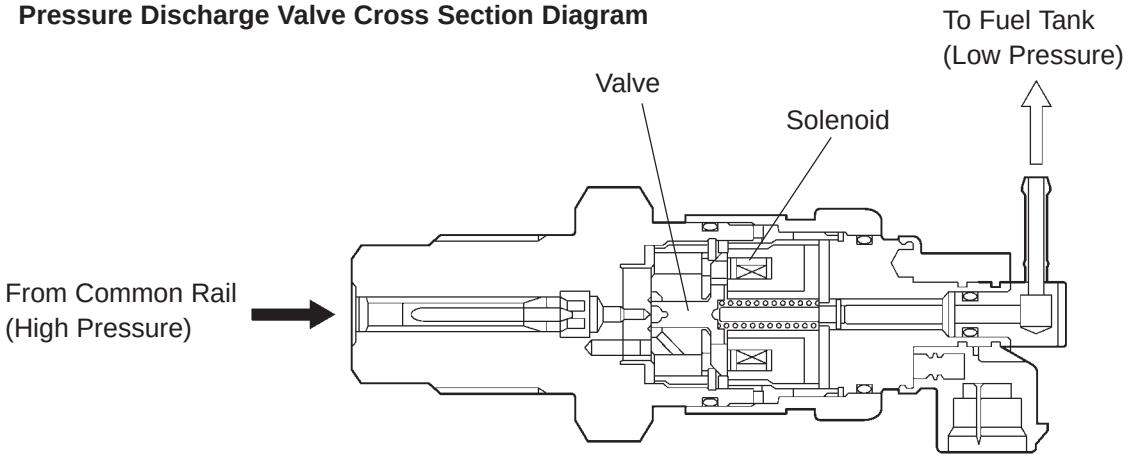

DTC No.	DTC Detection condition	Trouble Area
P1271	Open or short in pressure discharge valve circuit. There is no valve opening confirmation signal (IJF) from EDU to ECM, despite the ECM sending valve opening command signal (PRD) after the engine has been started (1 trip detection).	• Open or short in pressure discharge valve circuit • Open or short in pressure discharge valve itself • EDU • ECM
P1272	Pressure discharge valve closed malfunction. Actual pressure decreasing rate deviates from the simulated pressure drop rate by the ECM after the ignition switch is turned OFF (2 trip detection).	• Open or short in pressure discharge valve circuit (P1271 is set simultaneously) • Pressure discharge valve • Supply pump • ECM

HINT:
After confirming DTC ”P1271 and/or P1272”, use the hand–held tester to confirm the fuel pressure inside common rail in the ”DIAGNOSIS / OBD/MOBD / DATA LIST / ALL / COMN RAIL PRESS”.

Engine Speed	Fuel Pressure (MPa)
Idling	Approx. 30 to 40
Running the engine at 2,500 rpm (No engine load)	Approx. 50 to 100

MONITOR DESCRIPTION

P1271 (Open or short in pressure discharge valve circuit):

This DTC will be set if there is no valve opening confirmation signal (IJF) from the EDU to the ECM, despite the ECM commanding the pressure discharge valve to open with the EDU. This DTC refers to open or short malfunction of the pressure discharge valve circuit, therefore the malfunction that the valve is stuck open or closed can be excluded.

The EDU monitors the current supplied to the pressure discharge valve, and the EDU interprets the IJF signal is low if the current exceeds the specified level, and the EDU indicates that there is the current in the pressure discharge valve.

If this DTC is present, the ECM enters fail–safe mode and limits the engine power. The fail–safe mode will continue until the ignition switch is turned OFF.

P1271 Malfunction Detection

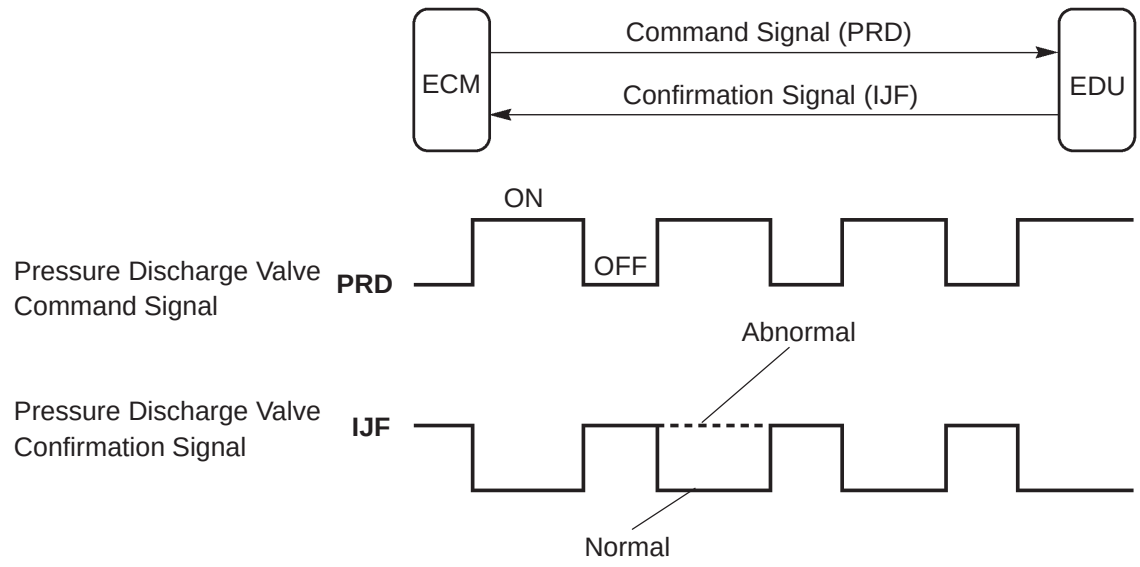

P1272 (Closed malfunction of the pressure discharge valve):

The pressure discharge valve will open and discharge the internal fuel pressure of the common rail to the fuel tank when the ignition switch is turned OFF. In this event, the ECM compares the actual dropping rate of the internal fuel pressure and the simulated dropping rate. If the ECM judges the actual dropping rate is smaller than the simulation, the ECM then interprets this as the valve has stuck closed and set this DTC. This DTC detection will be activated if the internal fuel pressure does not drop below the specified level after the ignition switch has been turned OFF.

If this DTC is present, the ECM enters fail–safe mode and limits the engine power. The fail–safe mode will continue until the ignition switch is turned OFF.

MONITOR STRATEGY

P1271:

Required sensors	EDU
Frequency of operation	Continuous
Duration	3 sec.
CHK ENG operation	1 driving cycles

P1272:

Required sensors	Fuel pressure sensor
Frequency of operation	Once per driving cycle
Duration	1 sec.
CHK ENG operation	2 driving cycles

TYPICAL ENABLING CONDITIONS

P1271:

Specification
Drive the vehicle at 50 km/h with the 3 rd transmission gear and then decelerate it by completly releasing the accelerator pedal

P1272:

Item	Specification	
	Minimum	Maximum
Fuel pressure	30 MPa (306 kgf/cm^2, 4,351 psi)	–
Fuel temperature	0°C	–
Battery voltage	11 V	–
The monitor will not run if the fuel pressure sensor, or pressure discharge valve circuit, or fuel temp. sensor is malfunctioning		

TYPICAL MALFUNCTION THRESHOLDS

P1271:

Threshold
If the confirmation signals from the EDU is not present, despite the ECM sending the command signals regularly during decelerating

P1272:

Threshold
If the internal pressure stays beyond the specified level after the ignition switch was turned OFF

WIRING DIAGRAM

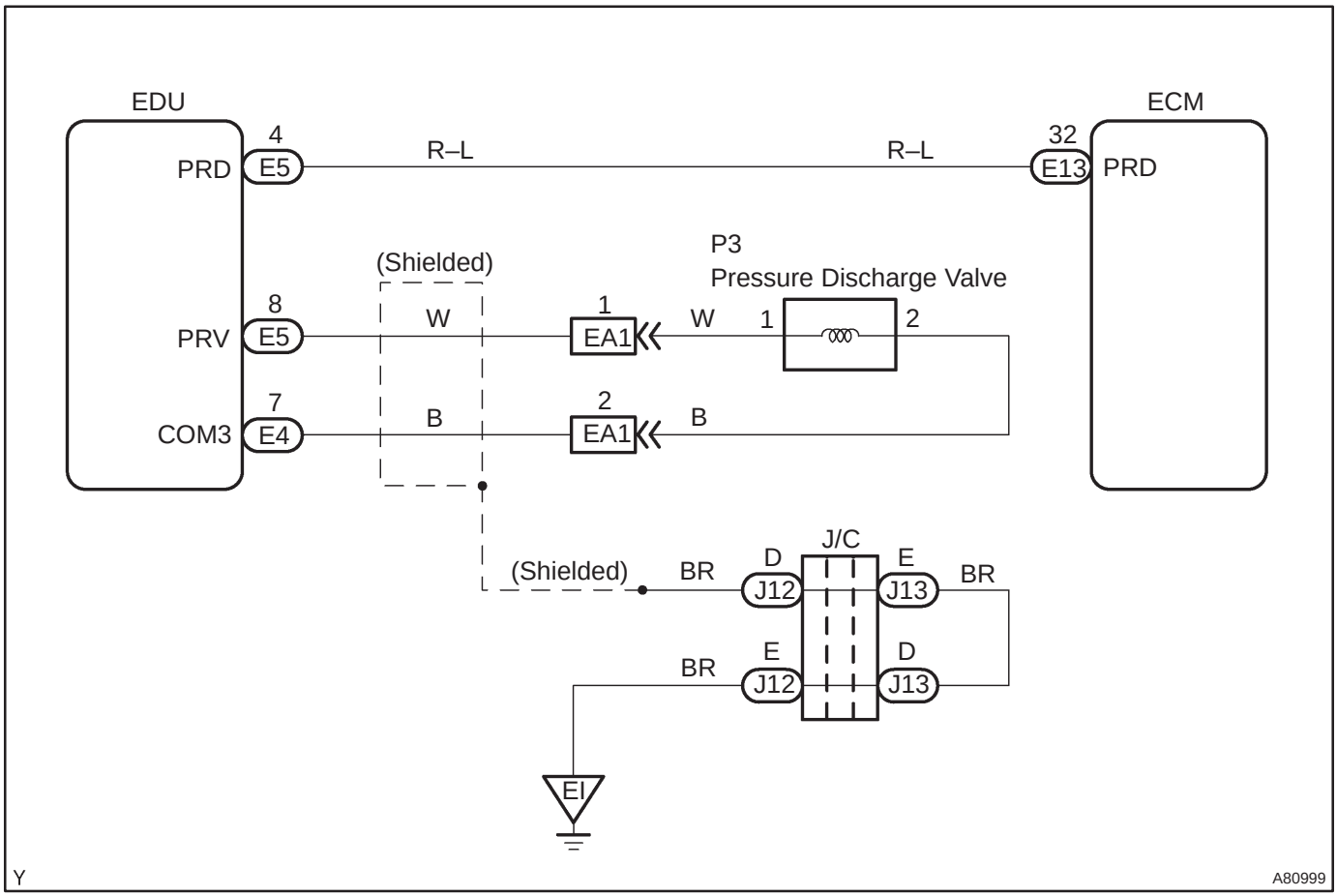

PULSE GENERATION INSPECTION

HINT:

Problem area can be identified by inspecting waveform at the following inspection points.

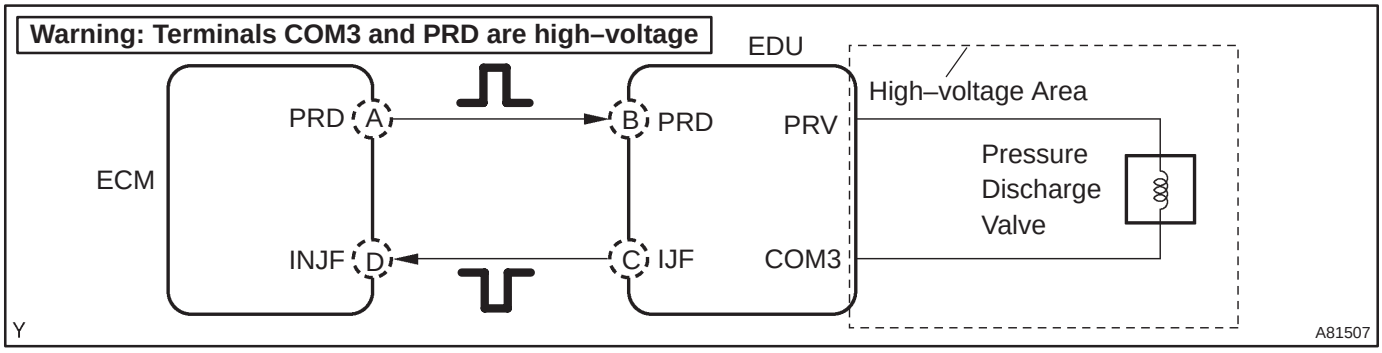

HINT:

Inspect the following inspection points ”A and D” or ”B and C” at the same time.

Malfunction point	Trouble area
A	• ECM
B (If A is normal)	• Open or short in ”PRD (ECM)” – ”PRD (EDU)” circuit.
C (If A and B are normal)	• Open or short in ”PRV (EDU)” – ”COM3 (EDU)” circuit. • Pressure discharge valve • EDU
D (If A, B and C are normal)	• Open or short in ”IJF (EDU)” – ”INJF (ECM)” circuit. (P0200 is set simultaneously)

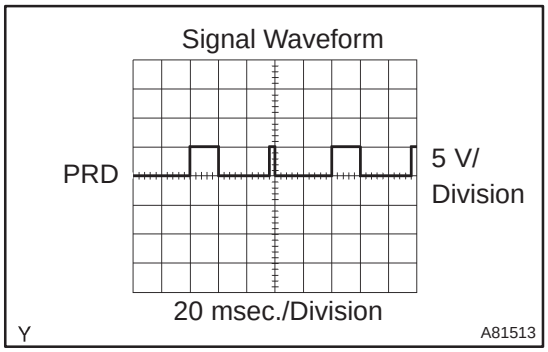

(a) Reference: Inspect using the oscilloscope.
The correct waveform is as shown in the diagram on the left.

Inspection point	Specified condition
A and B	Correct waveform is as shown

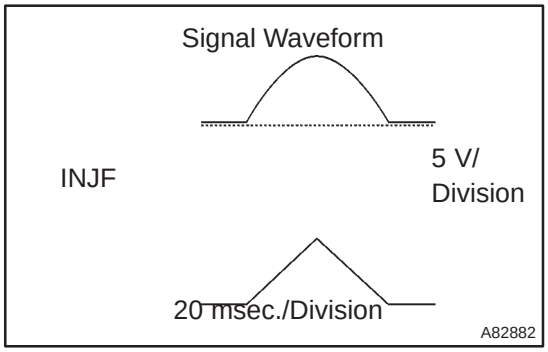

(b) Reference: Inspect using the oscilloscope.
The correct waveform is as shown in the diagram on the left.

Inspection point	Specified condition
C and D	Correct waveform is as shown

INSPECTION PROCEDURE

HINT:

- After completing repair, confirm P1271 and/or P1272 is not set again.
- If P0200 and P1271 are present simultaneously, there is open in the INJF wire harness between the EDU and ECM, or there is open in the wire harness for both of the injector the pressure discharge valve.
- Read freeze frame data using the hand–held tester. Freeze frame data records the engine conditions when a malfunction is detected. When troubleshooting, it is useful for determining whether the vehicle was running or stopped, the engine was warmed up or not, etc. at the time of the malfunction.

1	READ OUTPUT DTC(DTC P1271 AND/OR P1272)

(a) Connect the hand–held tester to the DLC3.
(b) Turn the ignition switch ON and push the hand–held tester main switch ON.
(c) Select the item ”DIAGNOSIS / OBD/MOBD / DTC INFO / CURRENT CODES”.
(d) Read the DTCs.

Result:

Display (DTC output)	Proceed to
”Only DTC P1271” or ”P1271 and P1272” are output	A
Only DTC P1272 is output	B

B → **Go to step 8**

A

2 INSPECT COMMON RAIL ASSY (PRESSURE DISCHARGE VALVE)

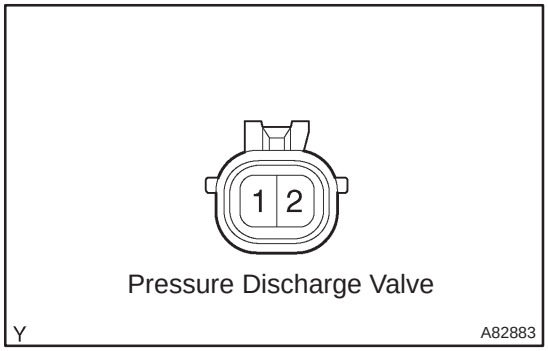

(a) Check the pressure discharge valve for resistance.
(1) Measure the resistance between the terminals.
Resistance: 0.85 to 1.05 Ω at 20°C (68°F)

NG → **REPLACE COMMON RAIL ASSY (PRESSURE DISCHARGE VALVE) (See page 14–286)**

OK

3 CHECK HARNESS AND CONNECTOR(PRESSURE DISCHARGE VALVE – EDU)

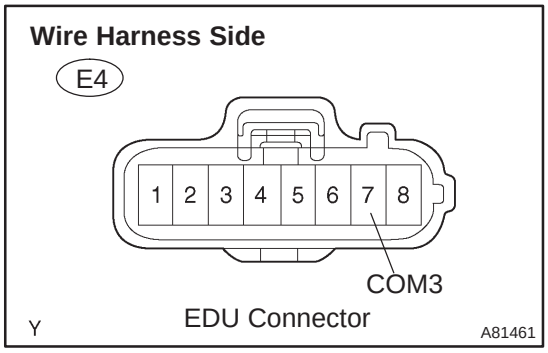

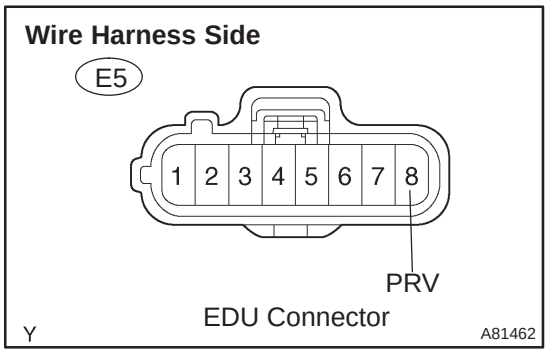

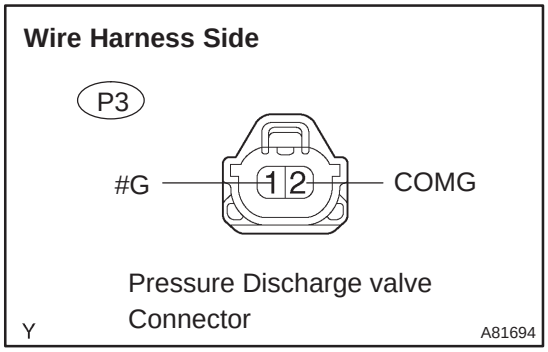

(a) Disconnect the E4 and E5 EDU connectors.
(b) Disconnect the P3 pressure discharge valve connector.
(c) Check for continuity between the wire harness side connector.

Standard (Check for open):

Symbols (Terminal No.)	Specified condition
COM3 (E4–7) – COMG (P3–2)	Continuity
PRV (E5–8) – #G (P3–1)	

Standard (Check for short):

Symbols (Terminal No.)	Specified condition
COM3 (E4–7) or COMG (P3–2) – Body ground	No continuity
PRV (E5–8) or #G (P3–1) – Body ground	

NG → **REPAIR OR REPLACE HARNESS OR CONNECTOR**

OK

4 CHECK HARNESS AND CONNECTOR(EDU – ECM)

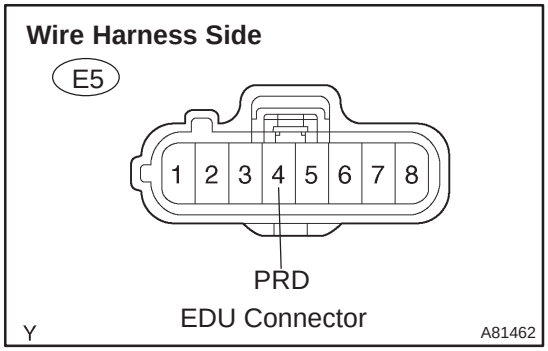

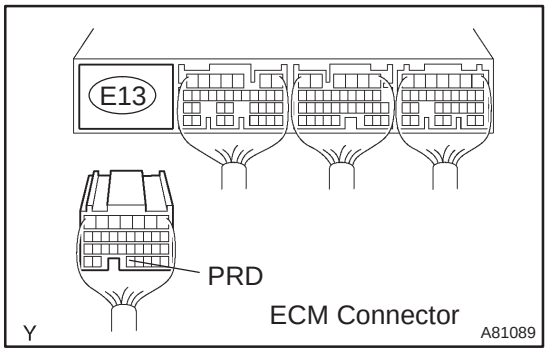

(a) Disconnect the E5 EDU connector.
(b) Disconnect the E13 ECM connector.
(c) Check for continuity between the wire harness side connector.

Standard (Check for open):

Symbols (Terminal No.)	Specified condition
PRD (E5–4) – PRD–(E13–32)	Continuity

Standard (Check for short):

Symbols (Terminal No.)	Specified condition
PRD (E5–4) or PRD (E13–32) – Body ground	No continuity

NG → **REPAIR OR REPLACE HARNESS OR CONNECTOR**

OK

5 INSPECT INJECTOR DRIVER(BATTERY VOLTAGE)

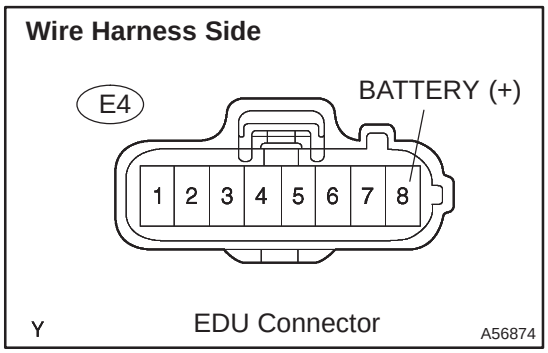

(a) Disconnect the E4 and E5 EDU connectors.
(b) Turn the ignition switch ON.
(c) Measure the voltage between the specified terminals of the EDU connector.

Voltage:

Symbols (Terminal No.)	Specified condition
BATTERY (E4–8) – GND (E5–1)	9 to 14 V

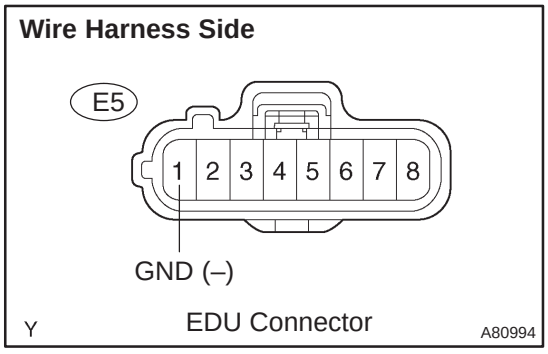

NG → **CHECK INJECTOR DRIVER POWER SOURCE CIRCUIT (EDU – BATTERY)**

OK

6 INSPECT ECM(PRD VOLTAGE)

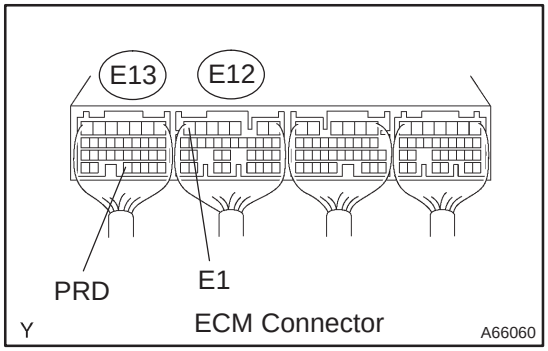

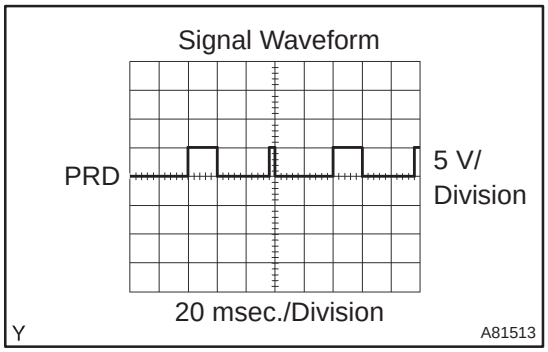

(a) Inspect using the oscilloscope.
(b) Drive the vehicle at 50 km/h (31 mph) with the 3rd transmission gear and then decelerate by releasing the accelerator pedal, and check the waveform between the specified terminals of the E12 and E13 ECM connectors.

Standard:

Symbols (Terminal No.)	Specified condition
PRD (E13–4) – E1 (E12–7)	Correct waveform is as shown

HINT:
It may be that the following method is the alternative inspection: Run the engine at 2,500 rpm for 10 seconds and then decrease to idle speed with accelerator pedal completely released.

NG → **REPLACE ECM (See page 10–65)**

OK

7 REPLACE INJECTOR DRIVER

GO

CHECK DTC OUTPUT RECUR (DTC P1271 AND/OR P1272)

HINT:
P1271:
After clearing the DTC, drive the vehicle at 50 km/h (31 mph) with the 3rd transmission gear and then decelerate by releasing the accelerator pedal, then confirm P1271 is not set again.
P1272:
After clearing the DTC, turn the ignition switch OFF after the engine was started, and restart the engine and then turn the ignition switch OFF, and then confirm P1272 is not set again.

8	READ VALUE OF HAND–HELD TESTER

(a) Connect the hand–held tester to the DLC3.
(b) Turn the ignition switch ON and push the hand–held tester main switch ON.
(c) Start the engine.
(d) Select the item "DIAGNOSIS / OBD/MOBD / DATA LIST / ALL / COMN RAIL PRESS" and read its value displayed on the hand–held tester.
(e) Check if the internal fuel pressure of the common rail drops below approximately 5 MPa within approximately 1 second after the ignition switch is turned OFF at idling.

Result:

Pressure Displayed	Proceed to
5 MPa or more	A
5 MPa or less	B

B → **CHECK DTC OUTPUT RECUR (DTC P1271 AND/OR P1272)**

HINT:
P1271:
After clearing the DTC, drive the vehicle at 50 km/h (31 mph) with the 3rd transmission gear and then decelerate by releasing the accelerator pedal, then confirm P1271 is not set again.
P1272:
After clearing the DTC, turn the ignition switch OFF after the engine was started, and restart the engine and then turn the ignition switch OFF, and then confirm P1272 is not set again.

A

9	REPLACE COMMON RAIL ASSY(PRESSURE DISCHARGE VALVE) (See page 11–78)

GO

CHECK DTC OUTPUT RECUR (DTC P1271 AND/OR P1272)

HINT:
P1271:
After clearing the DTC, drive the vehicle at 50 km/h (31 mph) with the 3rd transmission gear and then decelerate by releasing the accelerator pedal, then confirm P1271 is not set again.
P1272:
After clearing the DTC, turn the ignition switch OFF after the engine was started, and restart the engine and then turn the ignition switch OFF, and then confirm P1272 is not set again.

DTC	P1601	INJECTOR CORRECTION CIRCUIT MALFUNCTION (EEPROM)

CIRCUIT DESCRIPTION

DTC No.	DTC Detection Condition	Trouble Area
P1601	• Injector compensation value is not registered (1 trip detection logic) • Wrong injector compensation value is registered (1 trip detection logic)	• Injector compensation code • ECM

INSPECTION PROCEDURE

HINT:

Read freeze frame data using the hand–held tester. Freeze frame data records the engine conditions when a malfunction is detected. When troubleshooting, it is useful for determining whether the vehicle was running or stopped, the engine was warmed up or not, etc. at the time of the malfunction.

1	CHECK INJECTOR COMPENSATION CODE (See page 05–528)

NG → SET INJECTOR COMPENSATION CODE (See page 05–528)

OK

REPLACE ECM (See page 10–65)

DTC	**P2120**	**THROTTLE/PEDAL POSITION SENSOR/SWITCH ”D” CIRCUIT**

DTC	**P2122**	**THROTTLE/PEDAL POSITION SENSOR/SWITCH ”D” CIRCUIT LOW INPUT**

DTC	**P2123**	**THROTTLE/PEDAL POSITION SENSOR/SWITCH ”D” CIRCUIT HIGH INPUT**

DTC	**P2125**	**THROTTLE/PEDAL POSITION SENSOR/SWITCH ”E” CIRCUIT**

DTC	**P2127**	**THROTTLE/PEDAL POSITION SENSOR/SWITCH ”E” CIRCUIT LOW INPUT**

DTC	**P2128**	**THROTTLE/PEDAL POSITION SENSOR/SWITCH ”E” CIRCUIT HIGH INPUT**

DTC	**P2138**	**THROTTLE/PEDAL POSITION SENSOR/SWITCH ”D”/”E” VOLTAGE CORRELATION**

HINT:
This is procedure of accelerator pedal position sensor.

CIRCUIT DESCRIPTION

HINT:

This electrical throttle system does not use a throttle cable.

The accelerator pedal position sensor is mounted on the accelerator pedal bracket and it has the 2 sensors to detect the accelerator position and a malfunction of the accelerator position sensor.

In the accelerator pedal position sensor, the voltage applied to pedal terminals VPA1 and VPA2 of the ECM changes between 0 V and 5 V in proportion to the opening angle of the accelerator pedal. The VPA1 is a signal to indicate the actual accelerator pedal opening angle which is used for the engine control, and the VPA2 is a signal to indicate the information about the opening angle which is used for detecting a malfunction.

The ECM judges the current accelerator pedal opening angle with the signals from terminals VPA1 and VPA2, and the ECM controls the throttle motor based on these signals.

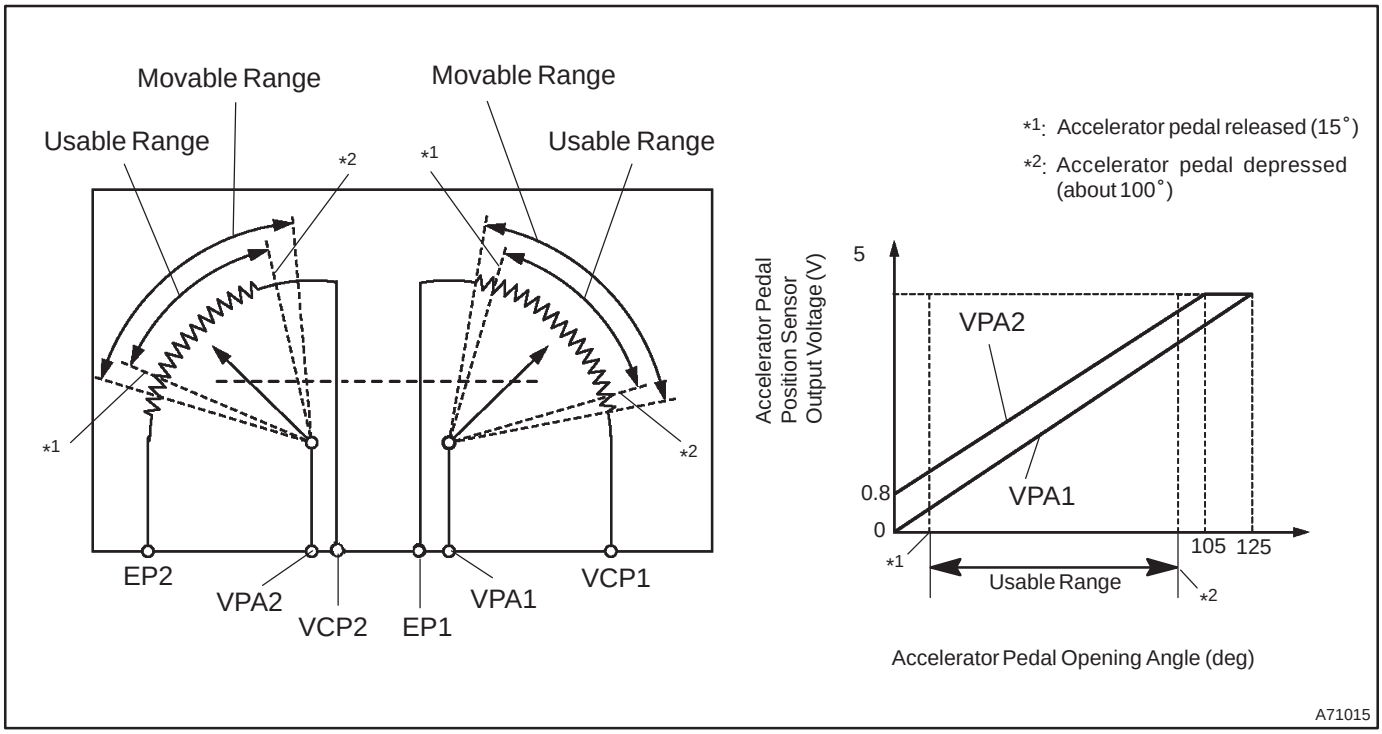

DTC No.	DTC Detecting Condition	Trouble Area
P2120	Condition (a) continues for 0.5 sec. or more: (a) VPA less than 0.2 V and VPA2 greater than 0.97 deg, or VPA greater than 4.8 V	• Open or short in accelerator pedal position sensor circuit • Accelerator pedal position sensor • ECM
P2122	Conditions (a) and (b) continue for 0.5 sec. or more: (a) VPA less than 0.2 V (b) VPA2 greater than 0.97 deg	
P2123	Condition (a) continues for 2.0 sec. or more: (a) VPA greater than 4.8 V	
P2125	Condition (a) continues for 0.5 sec. or more: (a) VPA2 less than 0.5 V and VPA greater than 0.97 deg, or VPA2 greater than 4.8 V and VPA greater than 0.2 V but les than 3.45 V	
P2127	Conditions (a) and (b) continue for 0.5 sec. or more: (a) VPA2 less than 0.5 V (b) VPA greater than 0.97 deg	
P2128	Conditions (a) and (b) continue for 2.0 sec. or more: (a) VPA2 greater than 4.8 V (b) VPA greater than 0.2 V but less than 3.45 V	
P2138	Condition (a) or (b) continues for 2.0 sec. or more: (a) Difference between VPA and VPA2 less than 0.02 V (b) VPA less than 0.2 V and VPA2 less than 0.5 V	

HINT:

After confirming ”DTC P2120, P2122, P2123, P2125, P2127, P2128 and P2138”, use the hand–held tester to confirm the accelerator pedal position sensor output voltage.

Trouble area	Accelerator pedal position expressed as voltage output			
	Accelerator pedal released		Accelerator pedal depressed	
	ACCEL POS #1	ACCEL POS #2	ACCEL POS #1	ACCEL POS #2
VC circuit open	0 V	0 V	0 V	0 V
VPA circuit open or ground short	0 V	1.5 to 2.9 V	0 V	3.5 to 5.5 V
VPA2 circuit open or ground short	0.5 to 1.1 V	0 V	2.5 to 4.6 V	0 V
EP circuit open	5 V	5 V	5 V	5 V

WIRING DIAGRAM

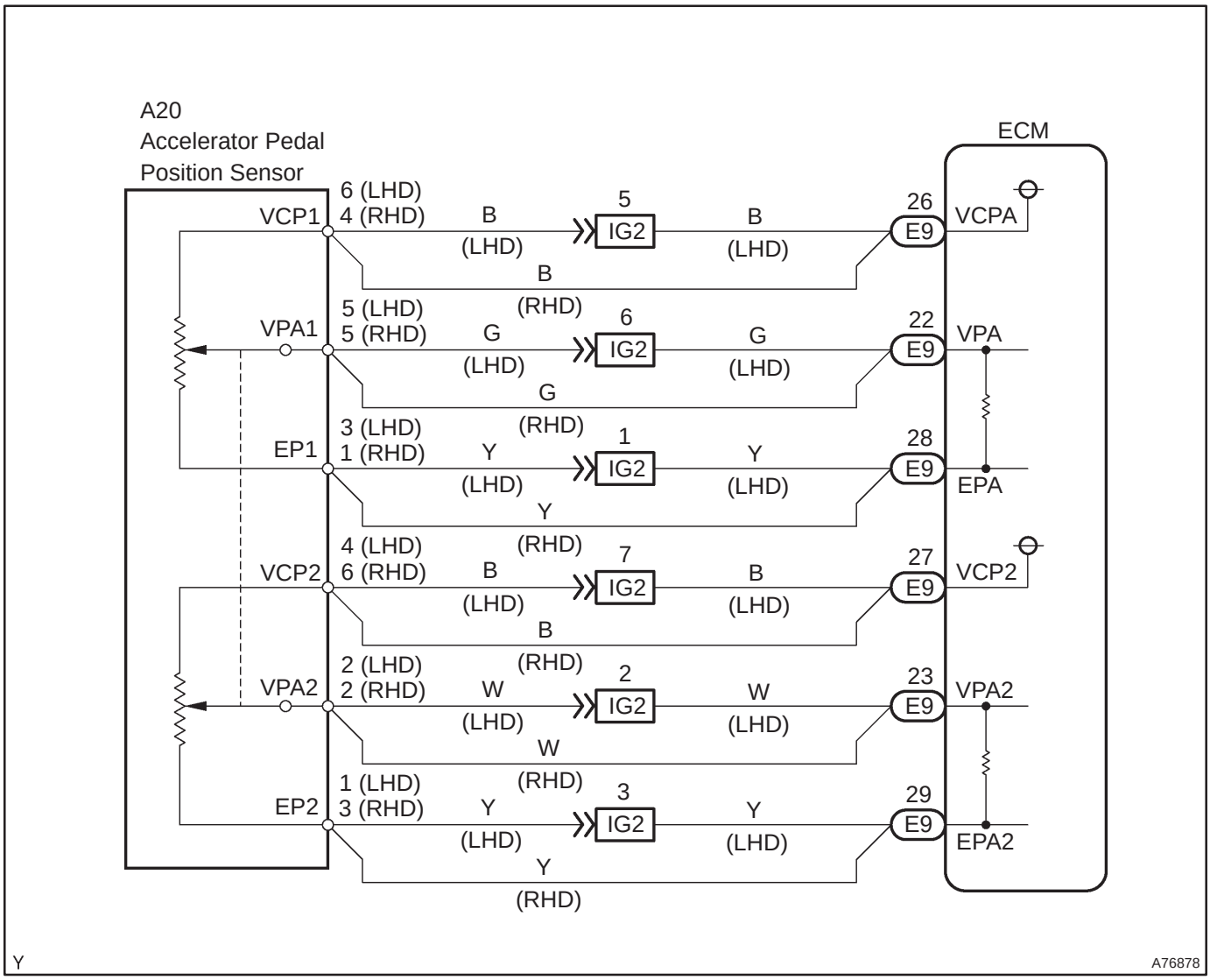

INSPECTION PROCEDURE

HINT:

Read freeze frame data using the hand–held tester. Freeze frame data records the engine conditions when a malfunction is detected. When troubleshooting, it is useful for determining whether the vehicle was running or stopped, the engine was warmed up or not, etc. at the time of the malfunction.

1 READ VALUE OF HAND–HELD TESTER(ACCEL POS #1 AND ACCEL POS #2)

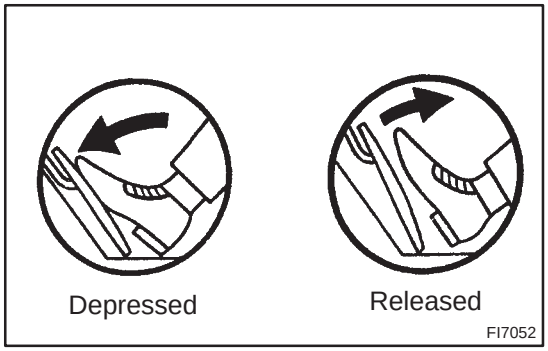

(a) Connect the hand–held tester to the DLC3.
(b) Turn the ignition switch ON.
(c) Select the item "DIAGNOSIS / OBD/MOBD / DATA LIST / ETCS / ACCEL POS #1 and ACCEL POS #2" and read its value displayed on the hand–held tester.

Standard:

Accelerator pedal	ACCEL POS #1	ACCEL POS #2
Released	0.5 to 1.1 V	1.5 to 2.9 V
Depressed	2.5 to 4.6 V	3.5 to 5.5 V

OK → **REPLACE ECM (See page 10–65)**

NG

2 INSPECT ACCELERATOR PEDAL ASSY(ACCELERATOR PEDAL POSITION SENSOR)

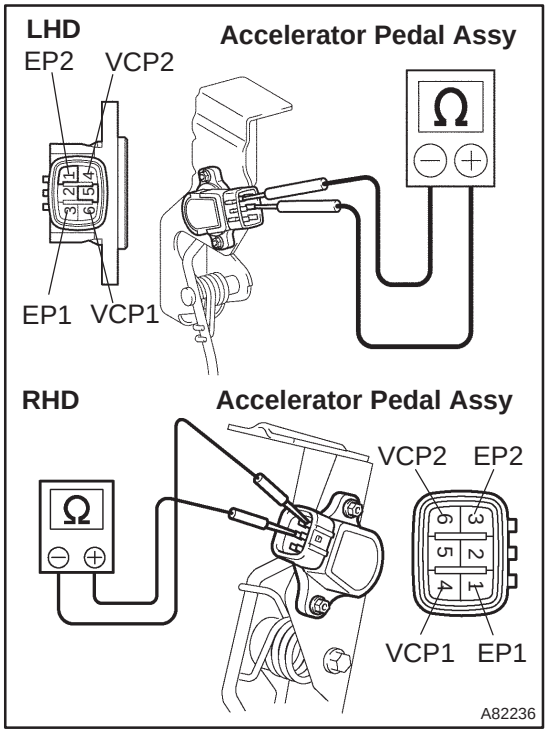

(a) Disconnect the accelerator pedal position sensor connector.
(b) Measure the resistance between each terminal.

Standard (LHD):

Symbols (Terminal No.)	Resistance
EP1 (3) – VCP1 (6)	2.25 to 4.75 kΩ at 20°C (68°F)
EP2 (1) – VCP2 (4)	

Standard (RHD):

Symbols (Terminal No.)	Resistance
EP1 (1) – VCP1 (4)	2.25 to 4.75 kΩ at 20°C (68°F)
EP2 (3) – VCP2 (6)	

NG → **REPLACE ACCELERATOR PEDAL ASSY (See page 10–66)**

OK

3 INSPECT ECM(VCPA AND VCP2 VOLTAGE)

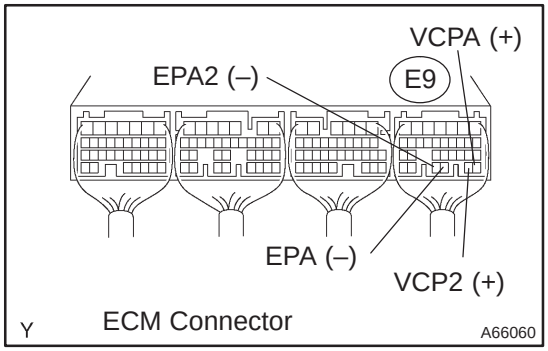

(a) Turn the ignition switch ON.
(b) Measure the voltage between the specified terminals of the E9 ECM connector.

Standard:

Symbols (Terminal No.)	Specified condition
VCPA (E9–26) – EPA (E9–28)	4.5 to 5.5 V
VCP2 (E9–27) – EPA2 (E9–29)	

NG → **REPLACE ECM (See page 10–65)**

OK

4 INSPECT ECM(VPA AND VPA2 VOLTAGE)

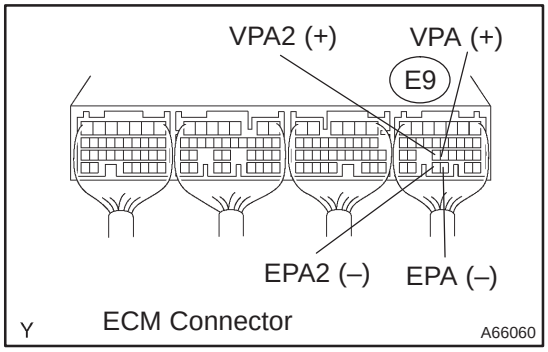

(a) Turn the ignition switch ON.
(b) Measure the voltage between the specified terminals of the E9 ECM connector.

Accelerator pedal position	Symbols (Terminal No.) VPA (E9–22) – EPA (E9–28)	Symbols (Terminal No.) VPA2 (E9–23) – EPA2 (E9–29)
Released	0.5 to 1.1 V	1.5 to 2.9 V
Depressed	2.5 to 4.6 V	3.5 to 5.5 V

OK → **REPLACE ECM (See page 10–65)**

NG

5	CHECK HARNESS AND CONNECTOR(ACCELERATOR PEDAL POSITION SENSOR – ECM)

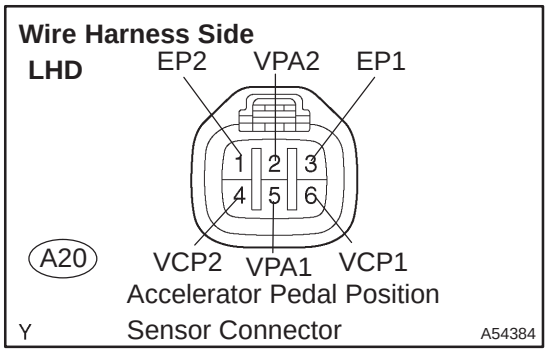

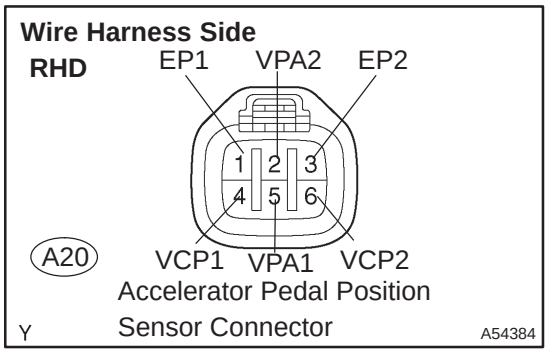

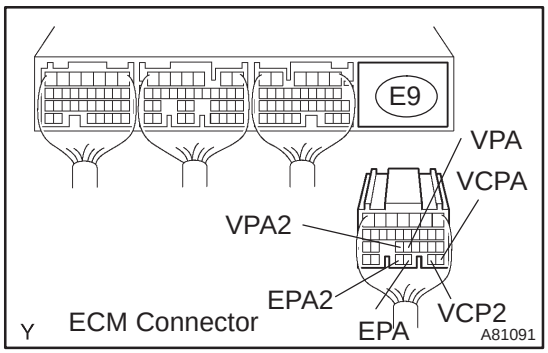

(a) Disconnect the A20 accelerator pedal position sensor connector.

(b) Disconnect E9 the ECM connector.

(c) Check for continuity between the wire harness side connectors.

Standard (LHD):

(Check for open)

Symbols (Terminal No.)	Specified condition
VPA1 (A20–5) – VPA (E9–22)	Continuity
EP1 (A20–3) – EPA (E9–28)	
VCP1 (A20–6) – VCPA (E9–26)	
VPA2 (A20–2) – VPA2 (E9–23)	
EP2 (A20–1) – EPA2 (E9–29)	
VCP2 (A20–4) – VCP2 (E9–27)	

(Check for Short)

Symbols (Terminal No.)	Specified condition
VPA1 (A20–5) or VPA (E9–22) – Body ground	No continuity
EP1 (A20–3) or EPA (E9–28) – Body ground	
VCP1 (A20–6) or VCPA (E9–26) – Body ground	
VPA2 (A20–2) or VPA2 (E9–23) – Body ground	
EP2 (A20–1) or EPA2 (E9–29) – Body ground	
VCP2 (A20–4) or VCP2 (E9–27) – Body ground	

Standard (RHD):

(Check for open)

Symbols (Terminal No.)	Specified condition
VPA1 (A20–5) – VPA (E9–22)	Continuity
EP1 (A20–1) – EPA (E9–28)	
VCP1 (A20–4) – VCPA (E9–26)	
VPA2 (A20–2) – VPA2 (E9–23)	
EP2 (A20–3) – EPA2 (E9–29)	
VCP2 (A20–6) – VCP2 (E9–27)	

(Check for Short)

Symbols (Terminal No.)	Specified condition
VPA1 (A20–5) or VPA (E9–22) – Body ground	No continuity
EP1 (A20–1) or EPA (E9–28) – Body ground	
VCP1 (A20–4) or VCPA (E9–26) – Body ground	
VPA2 (A20–2) or VPA2 (E9–23) – Body ground	
EP2 (A20–3) or EPA2 (E9–29) – Body ground	
VCP2 (A20–6) or VCP2 (E9–27) – Body ground	

NG → **REPAIR OR REPLACE HARNESS OR CONNECTOR**

OK

REPLACE ECM (See page 10–65)

DTC	P2121	THROTTLE/PEDAL POSITION SENSOR/SWITCH ”D” CIRCUIT RANGE/PERFORMANCE

CIRCUIT DESCRIPTION

Refer to DTC P2120 on page 05–492.

DTC No.	DTC Detection Condition	Trouble Area
P2121	Conditions (a) and (B) continue for 0.5 sec.: (a) Difference between VPA and VPA2 exceeds the threshold (b) IDL is OFF	• Accelerator pedal position sensor circuit • Accelerator pedal position sensor • ECM

WIRING DIAGRAM

Refer to DTC P2120 on page 05–492.

INSPECTION PROCEDURE

HINT:

Read freeze frame data using the hand–held tester. Freeze frame data records the engine conditions when a malfunction is detected. When troubleshooting, it is useful for determining whether the vehicle was running or stopped, the engine was warmed up or not, the air–fuel ratio was lean or rich, etc. at the time of the malfunction.

1	INSPECT ACCELERATOR PEDAL ASSY(ACCELERATOR PEDAL POSITION SENSOR)

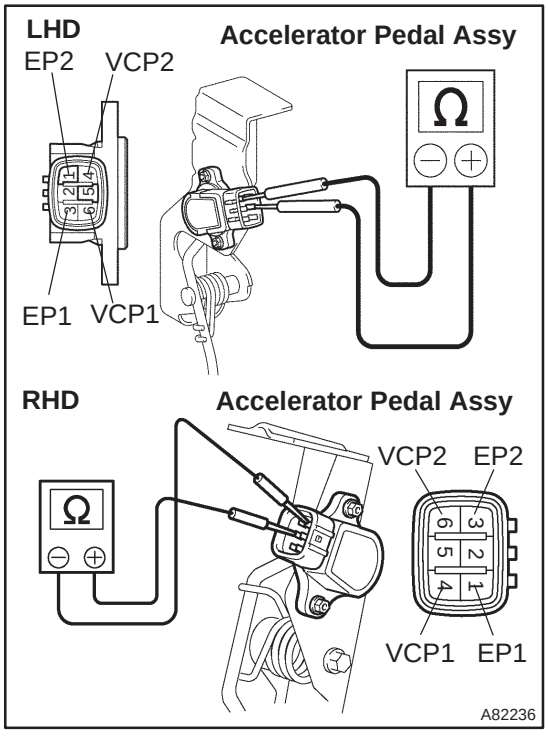

(a) Disconnect the A20 accelerator pedal position sensor connector.

(b) Measure the resistance between each terminal.

Standard (LHD):

Symbols (Terminal No.)	Resistance
EP1 (3) – VCP1 (6)	2.25 to 4.75 kΩ at 20°C (68°F)
EP2 (1) – VCP2 (4)	

Standard (RHD):

Symbols (Terminal No.)	Resistance
EP1 (1) – VCP1 (4)	2.25 to 4.75 kΩ at 20°C (68°F)
EP2 (3) – VCP2 (6)	

NG → **REPLACE ACCELERATOR PEDAL ASSY (See page 10–66)**

OK

2 INSPECT ECM(VPA AND VPA2 VOLTAGE)

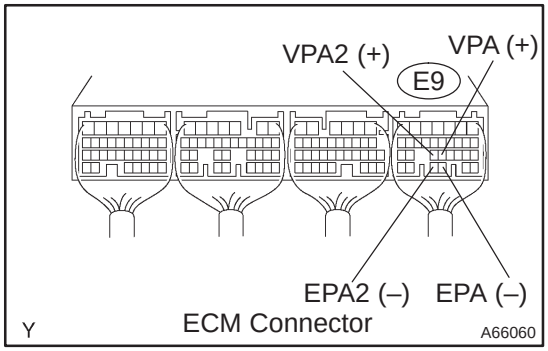

(a) Turn the ignition switch ON.
(b) Measure the voltage between the specified terminals of the E9 ECM connector.

Accelerator pedal position	Symbols (Terminal No.)	Symbols (Terminal No.)
	VPA (E9–22) – EPA (E9–28)	VPA2 (E9–23) – EPA2 (E9–29)
Released	0.5 to 1.1 V	1.5 to 2.9 V
Depressed	2.5 to 4.6 V	3.5 to 5.5 V

OK → **REPLACE ECM (See page 10–65)**

NG

3 CHECK HARNESS AND CONNECTOR(ACCELERATOR PEDAL POSITION SENSOR – ECM)

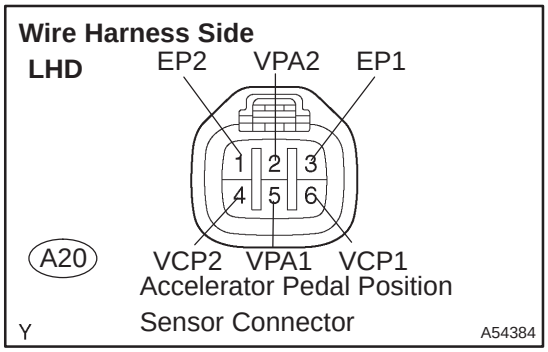

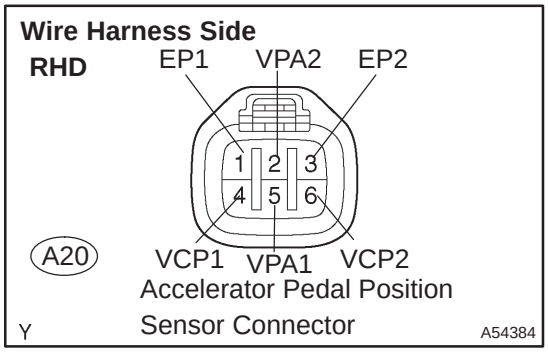

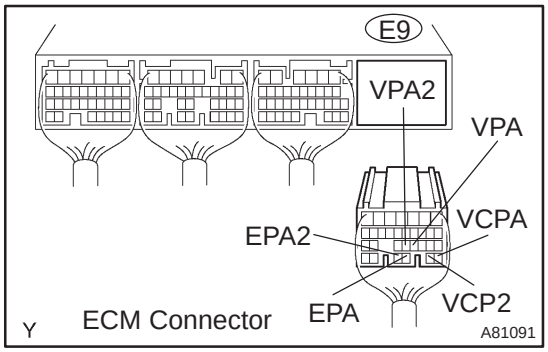

(a) Disconnect the A20 accelerator pedal position sensor connector.
(b) Disconnect the E9 ECM connector.
(c) Check for continuity between the wire harness side connectors.

Standard (LHD):
(Check for open)

Symbols (Terminal No.)	Specified condition
VPA1 (A20–5) – VPA (E9–22)	Continuity
EP1 (A20–3) – EPA (E9–28)	
VCP1 (A20–6) – VCPA (E9–26)	
VPA2 (A20–2) – VPA2 (E9–23)	
EP2 (A20–1) – EPA2 (E9–29)	
VCP2 (A20–4) – VCP2 (E9–27)	

(Check for Short)

Symbols (Terminal No.)	Specified condition
VPA1 (A20–5) or VPA (E9–22) – Body ground	No continuity
EP1 (A20–3) or EPA (E9–28) – Body ground	
VCP1 (A20–6) or VCPA (E9–26) – Body ground	
VPA2 (A20–2) or VPA2 (E9–23) – Body ground	
EP2 (A20–1) or EPA2 (E9–29) – Body ground	
VCP2 (A20–4) or VCP2 (E9–27) – Body ground	

Standard (RHD):
(Check for open)

Symbols (Terminal No.)	Specified condition
VPA1 (A20–5) – VPA (E9–22)	Continuity
EP1 (A20–1) – EPA (E9–28)	
VCP1 (A20–4) – VCPA (E9–26)	
VPA2 (A20–2) – VPA2 (E9–23)	
EP2 (A20–3) – EPA2 (E9–29)	
VCP2 (A20–6) – VCP2 (E9–27)	

(Check for Short)

Symbols (Terminal No.)	Specified condition
VPA1 (A20–5) or VPA (E9–22) – Body ground	No continuity
EP1 (A20–1) or EPA (E9–28) – Body ground	
VCP1 (A20–4) or VCPA (E9–26) – Body ground	
VPA2 (A20–2) or VPA2 (E9–23) – Body ground	
EP2 (A20–3) or EPA2 (E9–29) – Body ground	
VCP2 (A20–6) or VCP2 (E9–27) – Body ground	

NG → **REPAIR OR REPLACE HARNESS OR CONNECTOR**

OK

REPLACE ACCELERATOR PEDAL ASSY (See page 10–66)

DTC	P2226	BAROMETRIC PRESSURE CIRCUIT

DTC	P2228	BAROMETRIC PRESSURE CIRCUIT LOW INPUT

DTC	P2229	BAROMETRIC PRESSURE CIRCUIT HIGH INPUT

CIRCUIT DESCRIPTION

Detect the atmospheric pressure using the atmospheric pressure sensor. Followed by the atmospheric pressure, correct the injection timing, the injection volume and the amount of common rail internal fuel pressure and then they create optimum combustion.

DTC No.	DTC Detection Condition	Trouble Area
P2226 P2228 P2229	ECM malfunction (1 trip detection logic)	• ECM

INSPECTION PROCEDURE

HINT:

Read freeze frame data using the hand–held tester. Freeze frame data records the engine conditions when a malfunction is detected. When troubleshooting, it is useful for determining whether the vehicle was running or stopped, the engine was warmed up or not, etc. at the time of the malfunction.

REPLACE ECM (See page 10–65)

DTC	P2227	BAROMETRIC PRESSURE CIRCUIT RANGE/PERFORMANCE

CIRCUIT DESCRIPTION

Detect the atmospheric pressure using the atmospheric pressure sensor. Followed by the atmospheric pressure, correct the injection timing, the injection volume and the amount of common rail internal fuel pressure and then they create optimum combustion.

DTC No.	DTC Detection Condition	Trouble Area
P2227	Atmospheric pressure sensor malfunction (2 trip detection logic)	• ECM

INSPECTION PROCEDURE

HINT:

Read freeze frame data using the hand – held tester. Freeze frame data records the engine conditions when a malfunction is detected. When troubleshooting, it is useful for determining whether the vehicle was running or stopped, the engine was warmed up or not, etc. at the time of the malfunction.

1	CHECK OTHER DTC OUTPUT(BESIDES DTC P2227)

(a) Read the DTC using the hand–held tester.

Result:

Display (DTC output)	Proceed to
P2227 and other DTCs are output	A
Only P2227 is output	B

HINT:

If any other codes besides P2227 are output, perform the troubleshooting for those DTCs first.

B → **REPLACE ECM (See page 10–65)**

A

GO TO RELEVANT DTC CHART (See page 05–544)

ECM POWER SOURCE CIRCUIT

CIRCUIT DESCRIPTION

When the ignition switch is turned ON, battery positive voltage is applied to terminal IGSW of the ECM and the EFI MAIN relay (Marked: EFI MAIN) control circuit in the ECM sends a signal to terminal MREL of the ECM switching on the EFI MAIN relay.

This signal causes current to flow to the coil, closing the contacts of the EFI MAIN relay and supplying power to terminal +B of the ECM.

If the ignition switch is turned off, the ECM continues to switch on the EFI MAIN relay for a maximum of 2 seconds for the initial setting of the throttle valve.

WIRING DIAGRAM

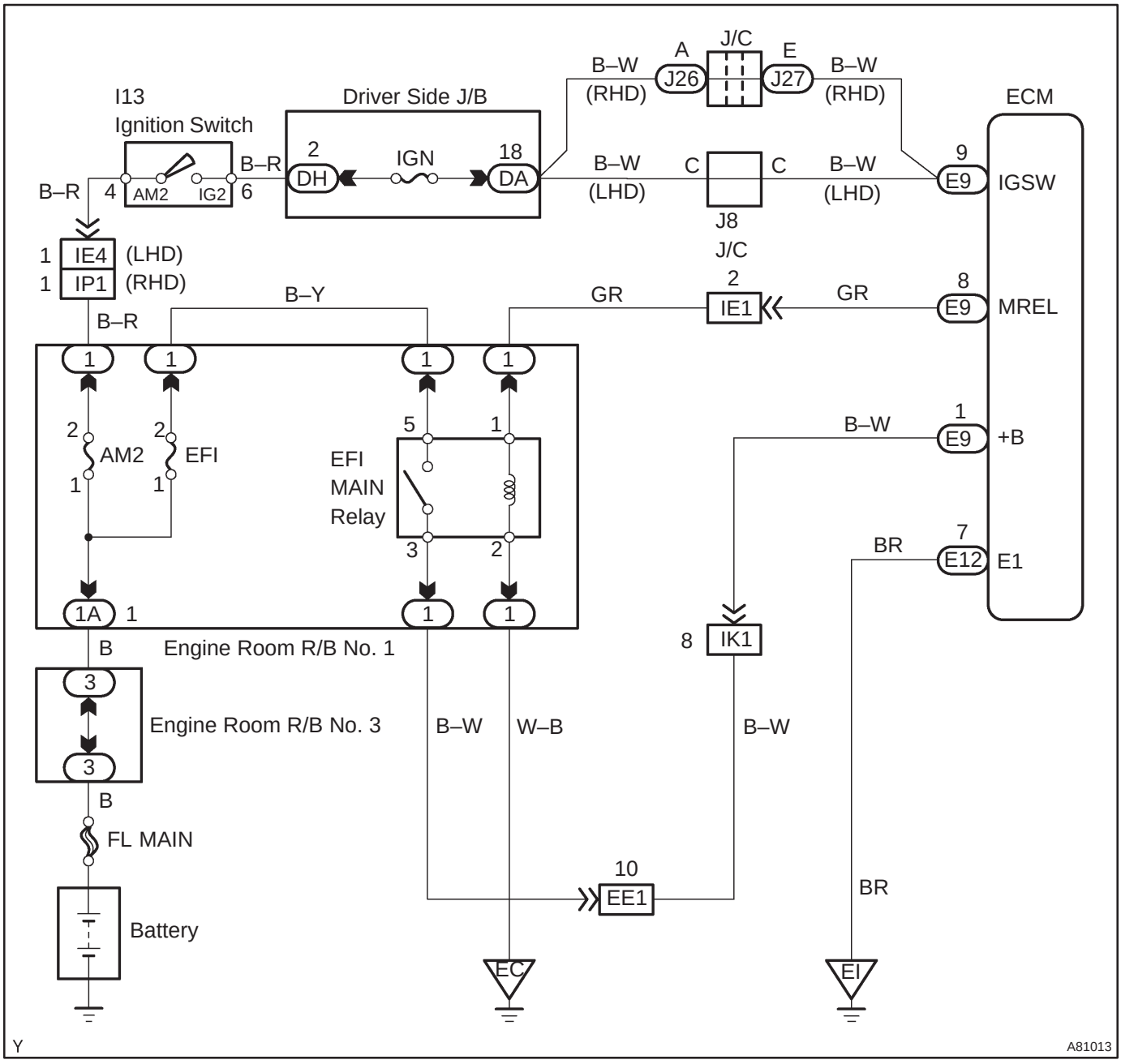

INSPECTION PROCEDURE

1 INSPECT ECM(+B VOLTAGE)

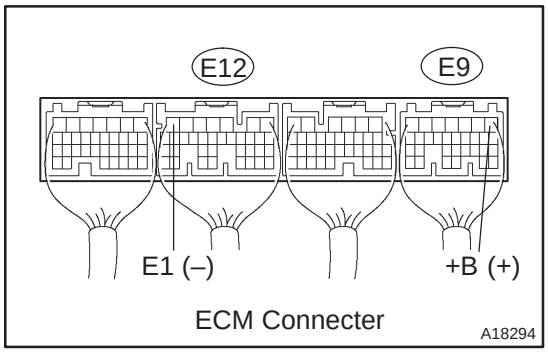

(a) Turn the ignition switch ON.
(b) Measure the voltage between the specified terminals of the E9 and E12 ECM connectors.

Standard:

Symbols (Terminal No.)	Specified condition
+B (E9–1) – E1 (E12–7)	9 to 14 V

OK → **PROCEED TO NEXT CIRCUIT INSPECTION SHOWN ON PROBLEM SYMPTOMS TABLE (See page 05–551)**

NG

2 CHECK HARNESS AND CONNECTOR(ECM – BODY GROUND)

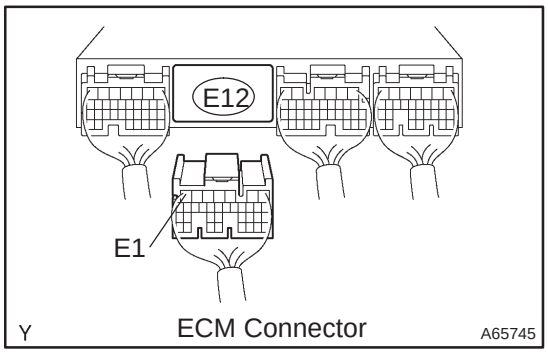

(a) Disconnect the E12 ECM connector.
(b) Check for continuity between the wire harness side connectors.

Standard (Check for open):

Symbols (Terminal No.)	Specified condition
E1 (E12–7) – Body ground	Continuity

NG → **REPAIR OR REPLACE HARNESS OR CONNECTOR**

OK

3 INSPECT ECM(IGSW VOLTAGE)

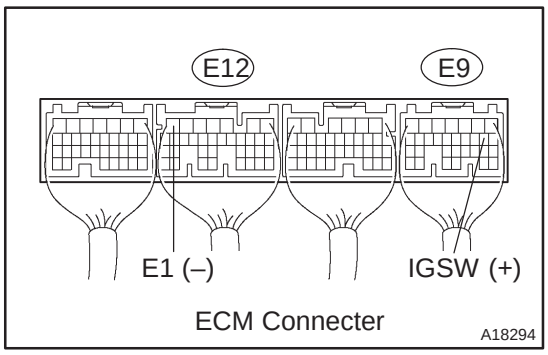

(a) Turn the ignition switch ON.
(b) Measure the voltage between the specified terminals of the E9 and E12 ECM connectors.

Standard:

Symbols (Terminal No.)	Specified condition
IGSW (E9–9) – E1 (E12–7)	9 to 14 V

OK → **Go to step 6**

NG

4 CHECK FUSE(IGN FUSE)

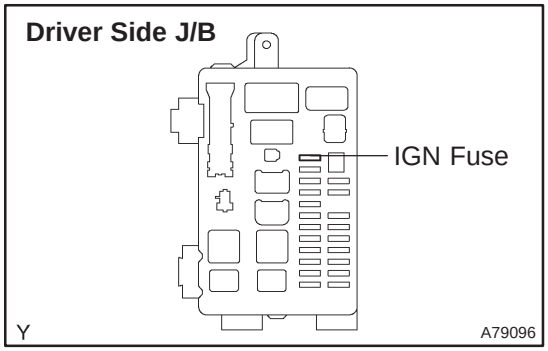

(a) Remove the IGN fuse from the driver side J/B.
(b) Check for continuity in the IGN fuse.
Standard: Continuity

NG → **CHECK FOR SHORT IN ALL HARNESSES AND COMPONENTS CONNECTED FUSE**

OK

5 INSPECT IGNITION OR STARTER SWITCH ASSY

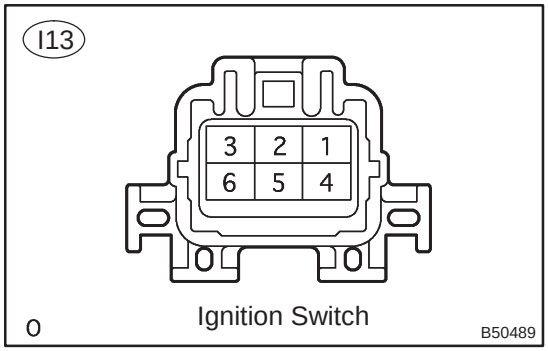

(a) Measure the for continuity between the connector terminals shown in the chart below.

Switch	Terminal No.	Resisitance
LOCK	All Terminals	No continuity
ACC	1–3	Continuity
ON	1–2, 1–3, 2–3, 5–6	Continuity
START	4–5, 4–6, 5–6, 1–2	Continuity

NG → **REPLACE IGNITION OR STARTER SWITCH ASSY**

OK

CHECK AND REPAIR HARNESS AND CONNECTOR (BATTERY – IGNITION SWITCH, IGNITION SWITCH – ECM)

6 INSPECT ECM(MREL VOLTAGE)

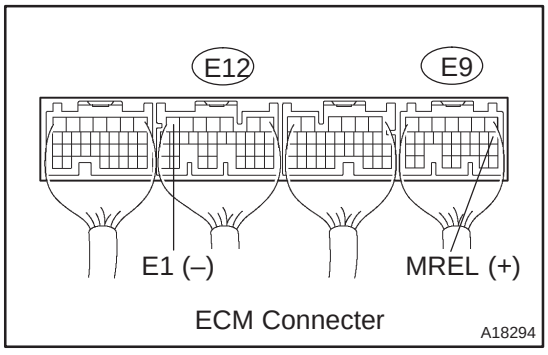

(a) Turn the ignition switch ON.
(b) Measure the voltage between the specified terminals of the E9 and E12 ECM connectors.
Standard:

Symbols (Terminal No.)	Specified condition
MREL (E9–8) – E1 (E12–7)	9 to 14 V

NG → **REPLACE ECM (See page 10–65)**

OK

7 CHECK FUSE(EFI FUSE)

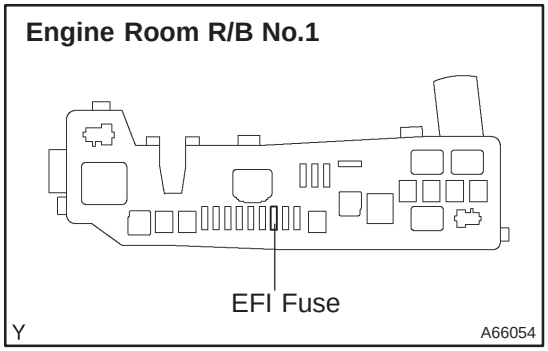

(a) Remove the EFI fuse from the engine room R/B No.1.
(b) Check for continuity in the EFI fuse.
Standard: Continuity

NG → **CHECK FOR SHORT IN ALL HARNESSES AND COMPONENTS CONNECTED FUSE**

OK

8 INSPECT EFI MAIN RELAY

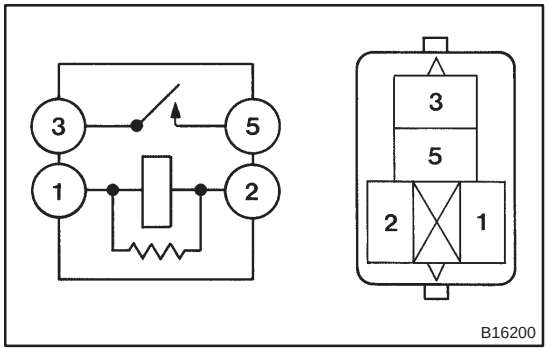

(a) Remove the EFI MAIN relay from the engine room R/B No.1.
(b) Inspect the EFI MAIN relay.
Standard:

Terminal No.	Condition	Specified condition
1 – 2	Constant	Continuity
3 – 5	Usually	No Continuity
	Apply B+ between Terminals 1 and 2	Continuity

Terminal No.	Specified condition
1 – 2	Continuity
3 – 5	No Continuity
	Continuity (Apply battery voltage terminals 1 and 2)

NG → **REPLACE EFI MAIN RELAY**

OK

9	CHECK HARNESS AND CONNECTOR(EFI MAIN RELAY – ECM, EFI MAIN RELAY – BODY GROUND)

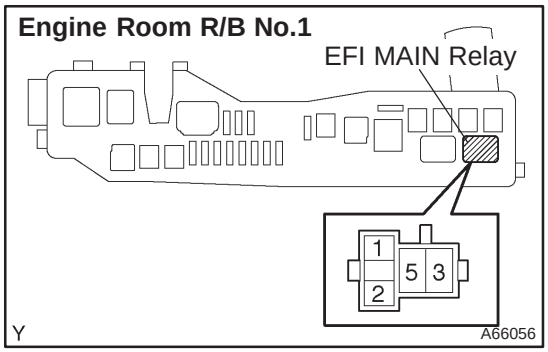

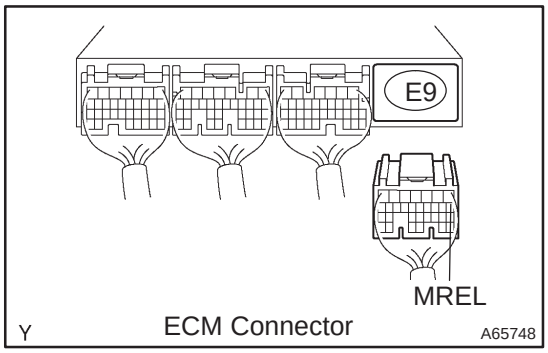

(a) Check the harness and connector between the EFI MAIN relay and ECM connector.
  (1) Remove the EFI MAIN relay from the engine room R/B No.1.
  (2) Disconnect the E9 ECM connector.
  (3) Check for continuity between the wire harness side connectors.

Standard (Check for open):

Symbols (Terminal No.)	Specified condition
EFI MAIN relay (1) – MREL (E9–8)	Continuity

Standard (Check for short):

Symbols (Terminal No.)	Specified condition
EFI MAIN relay (1) or MREL (E9–8) – Body ground	No continuity

(b) Check the harness and connector between the EFI MAIN relay and body ground.
  (1) Remove the EFI MAIN relay from the engine room R/B No.1.
  (2) Check for continuity between the wire harness side connector and body ground.

Standard (Check for open):

Symbols (Terminal No.)	Specified condition
EFI MAIN relay (2) – Body ground	Continuity

OK	REPAIR OR REPLACE HARNESS OR CONNECTOR

NG

CHECK AND REPAIR HARNESS AND CONNECTOR (TERMINAL +B OF ECM – BATTERY POSITIVE TERMINAL)

STARTER SIGNAL CIRCUIT

CIRCUIT DESCRIPTION

HINT:

While the engine is being cranked, current flows from terminal ST2 of the ignition switch to the ST relay coil and also current flows to terminal STA of the ECM (STA signal).

WIRING DIAGRAM

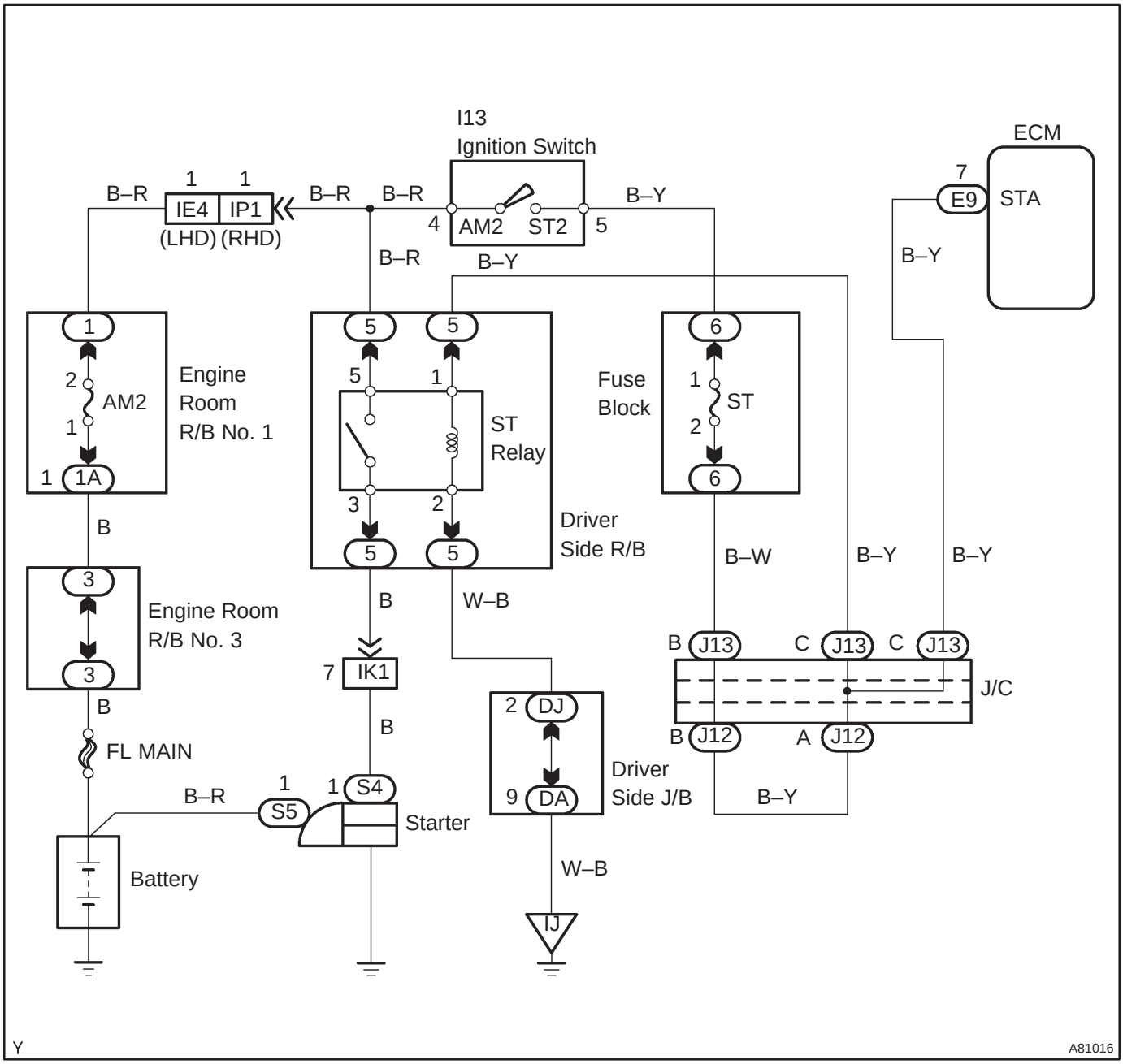

INSPECTION PROCEDURE

HINT:

This chart is on the premise that the engine is cranked normally. If the engine is not cranked, proceed to the problem symptoms table on page 05–551.

1	READ VALUE OF HAND–HELD TESTER(STA SIGNAL)

(a) Connect the hand–held tester to the DLC3.
(b) Turn the ignition switch ON and push the hand–held tester main switch ON.
(c) Select the item ”DIAGNOSIS / OBD/MOBD / DATA LIST / ALL / STARTER SIG” and read its value displayed on the hand–held tester.

Standard:

Ignition Switch Position	ON	START
STARTER SIG	OFF	ON

OK → **PROCEED TO NEXT CIRCUIT INSPECTION SHOWN ON PROBLEM SYMPTOMS TABLE (See page 05–551)**

NG

2 INSPECT HARNESS AND CONNECTOR(ECM – ST RELAY)

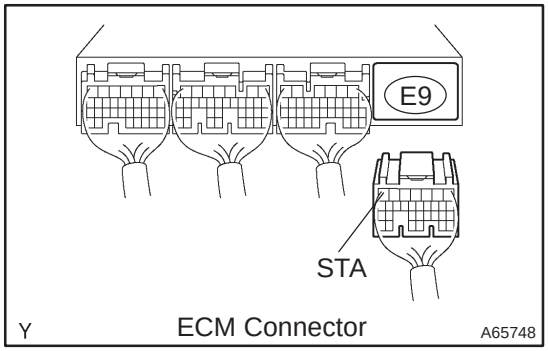

(a) Disconnect the E9 ECM connector.
(b) Remove the ST relay from the driver side R/B.
(c) Check for continuity between the wire harness side connectors.

Standard (Check for open):

Symbols (Terminal No.)	Specified condition
ST relay (1) – STA (E9–7)	Continuity

Standard (Check for short):

Symbols (Terminal No.)	Specified condition
ST relay (1) or STA (E9–7) – Body ground	No continuity

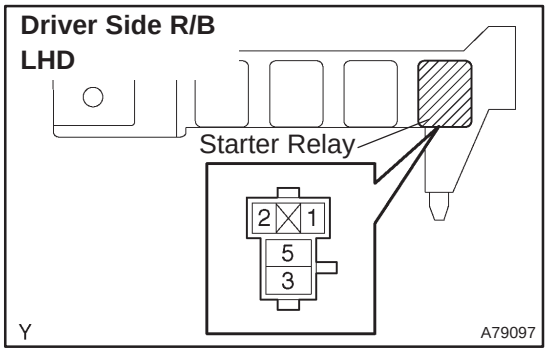

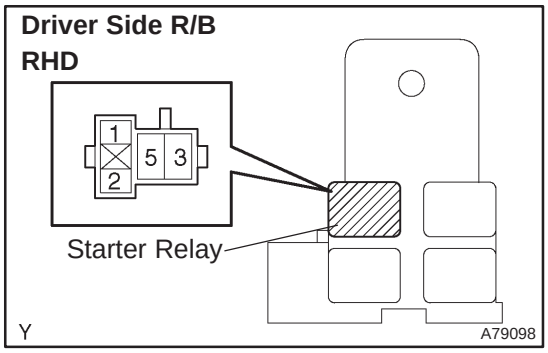

NG → **REPAIR OR REPLACE HARNESS OR CONNECTOR**

OK →

REPLACE ECM (See page 10–65)

CHECK ENGINE WARNING LIGHT CIRCUIT

CIRCUIT DESCRIPTION

If the ECM detects a trouble, the CHK ENG is illuminated. At this time, the ECM records the DTC in its memory.

WIRING DIAGRAM

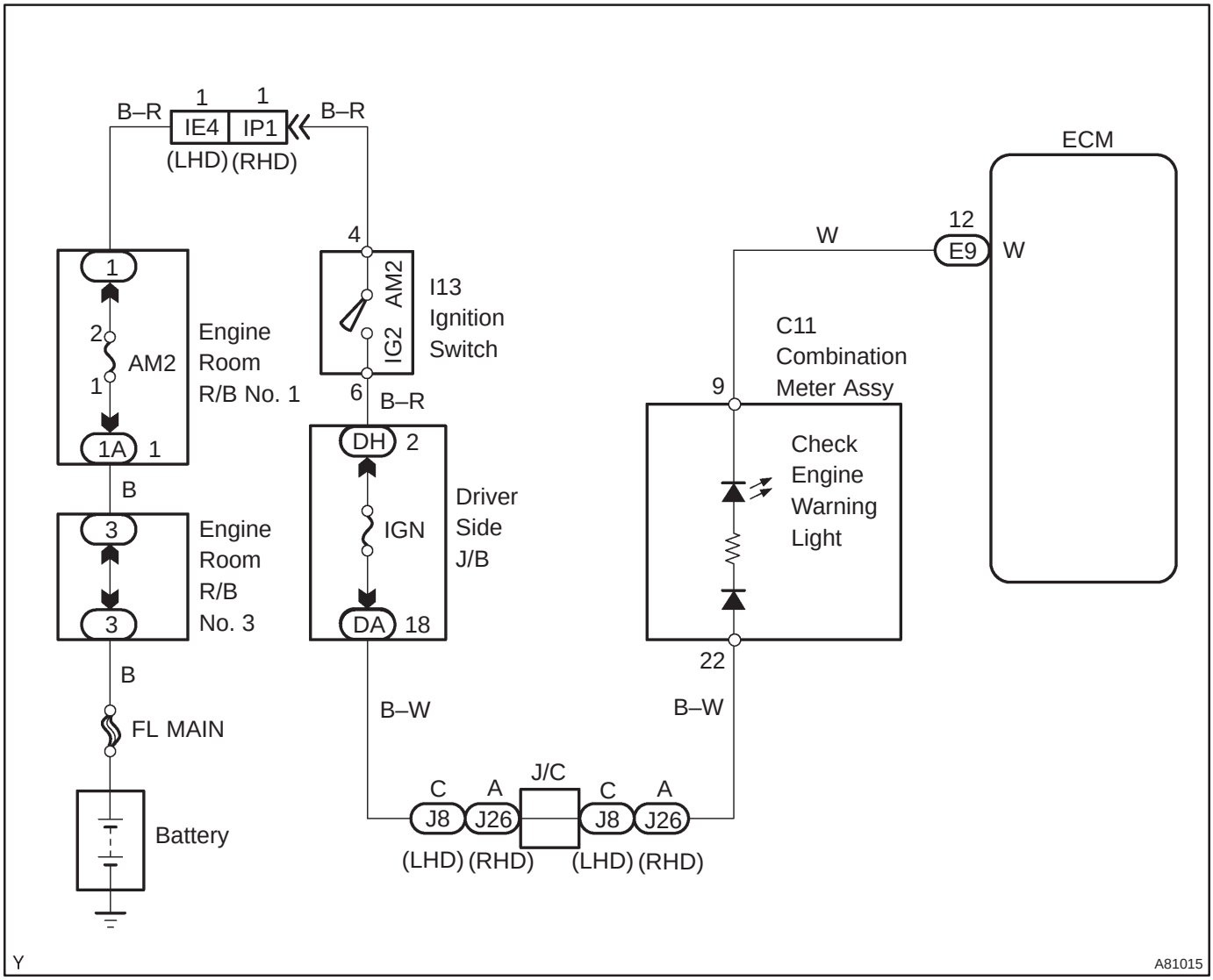

INSPECTION PROCEDURE

HINT:

Troubleshoot each trouble symptom in accordance with the chart below .

CHK ENG remains on	Start inspection from step 1
CHK ENG is not illuminated	Start inspection from step 3

1	CLEAR DTC

(a) Connect the hand–held tester to the DLC 3.
(b) Turn the ignition switch ON and push the hand–held tester main switch ON.
(c) Read the DTC (See page 05–528).
(d) Clear the DTC (See page 05–528).
(e) Check that the CHK ENG is not illuminated.
Standard: CHK ENG is not illuminated

OK → **REPAIR CIRCUIT INDICATED BY OUTPUT CODE (See page 05–544)**

NG

2	CHECK HARNESS AND CONNECTOR(CHECK FOR SHORT IN WIRE HARNESS)

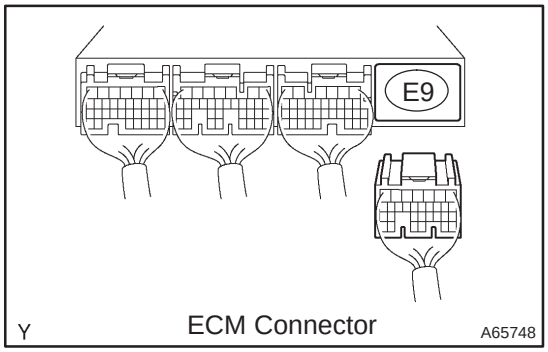

(a) Disconnect the E9 ECM connector.
(b) Turn the ignition switch ON.
(c) Check that the CHK ENG is not illuminated.
Standard: CHK ENG is not illuminated

OK → **REPLACE ECM (See page 10–65)**

NG

CHECK AND REPAIR HARNESS AND CONNECTOR

3	CHECK ENGINE WARNING LIGHT CONDITION

(a) Check that the CHK ENG is illuminated when the ignition switch is turned ON.
Standard: CHK ENG is illuminated

OK → **SYSTEM OK**

NG

4	INSPECT COMBINATION METER ASSY(CHECK ENGINE WARNING LIGHT CIRCUIT)

(a) See the combination meter troubleshooting on page 05–1509.

NG → **REPAIR OR REPLACE BULB OR COMBINATION METER ASSEMBLY**

OK

CHECK AND REPAIR HARNESS AND CONNECTOR (COMBINATION METER – ECM)

ABS WITH EBD SYSTEM

HOW TO PROCEED WITH TROUBLESHOOTING

050YD–14

1	Vehicle Brought to Workshop

2	Customer Problem Analysis (See page 05–698)

3	Check and Clear DTCs and Freeze Frame Data (See page 05–699)

4	Problem Symptom Confirmation

- Symptom does not occur: Go to step 5
- Symptom occurs: Go to step 6

5	Symptom Simulation (See page 01–32)

6	DTC Check (See page 05–699)

- There is no output: Go to step 7
- There is output: Go to step 8

7	Problem Symptoms Table (See page 05–708)

- Check for fluid leakage and Go to step 10

8	DTC Chart (See page 05–704)

9	Circuit Inspection (See page 05–709 – 05–750)

HINT:
When 2 or more DTCs are detected, perform circuit inspection one by one until the problem is identified.

10	Identification of Problem

11	Repair

12	Confirmation Test

End

HINT:
Step 3, 6, 9, 12:
Diagnostic steps permitting the use of the hand–held tester.
Fail safe function:
When a failure occurs in the ABS system, the ABS warning light comes on and the ABS operation is prohibited. In addition to this, when the failure which disables the EBD operation occurs, the brake warning light comes on as well and the EBD operation is prohibited.

050X4–14

CUSTOMER PROBLEM ANALYSIS CHECK

ABS Check Sheet

Inspector's Name :

Customer's Name		**VIN**	
		Production Date	/ /
		Licence No.	
Date Vehicle Brought In	/ /	**Odometer Reading**	km miles

Date Problem First Occurred	/ /
Frequency the Problem Occurs	☐ Continuously ☐ Intermittently (times a day)

Symptoms	☐ ABS does not operate.	
	☐ ABS does not operate efficiently.	
	ABS Warning Light	☐ Remains ON ☐ Does not Light Up
	Brake Warning Light	☐ Remains ON ☐ Does not Light Up

DTC Check	**1st Time**	☐ Normal Code ☐ Malfunction Code (Code)
	2nd Time	☐ Normal Code ☐ Malfunction Code (Code)

Freeze Frame Data	STOP LIGHT SW	☐ ON ☐ OFF
	SYSTEM	☐ NO SYS ☐ ABS ☐ FAIL SF
	#IG ON	
	VEHICLE SPD	km/h MPH

0577T–04

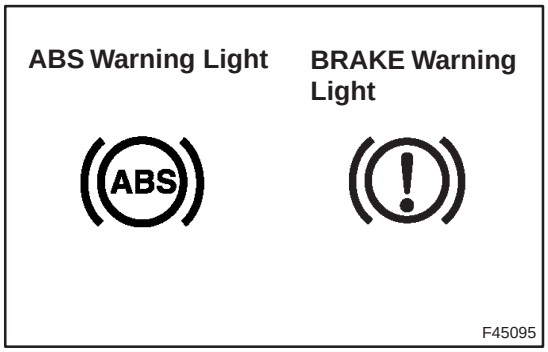

PRE–CHECK

1. DIAGNOSIS SYSTEM

(a) Release the parking brake lever.

(b) Check the warning lights.

When the ignition switch is turned ON, check that the ABS warning light and brake warning light come on for 3 sec.

HINT:

- When the parking brake is applied or the level of the brake fluid is low, the brake warning light comes on.
- If the indicator check result is not normal, proceed to troubleshooting for the ABS warning light circuit (See page 05–737 or 05–741) or brake warning light circuit (See page 05–744).

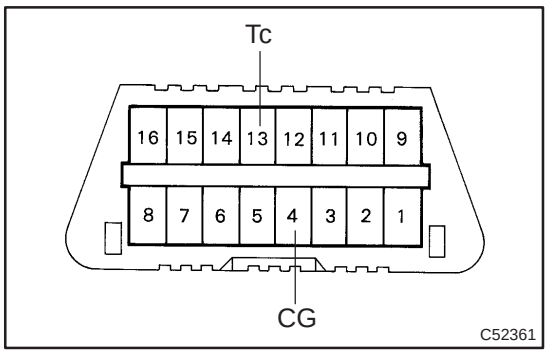

(c) Without using hand–held tester:

Check the DTC.

(1) Using SST, connect terminal Tc and CG of the DLC3.

SST 09843–18040

(2) Turn the ignition switch ON.

(3) Read the DTC from the ABS warning light on the combination meter.

HINT:

- If no code appears, inspect the diagnostic circuit or ABS warning light circuit (See page 05–737 or 05–744).
- As an example, the blinking patterns for normal code and codes 11 and 21 are shown on the left.

(4) Codes are explained in the code table on page 05–704.

If 2 or more DTCs are detected at the same time, the lowest numbered DTC is displayed 1st.

(5) After completing the check, remove the SST from the DLC3.

SST 09843–18040

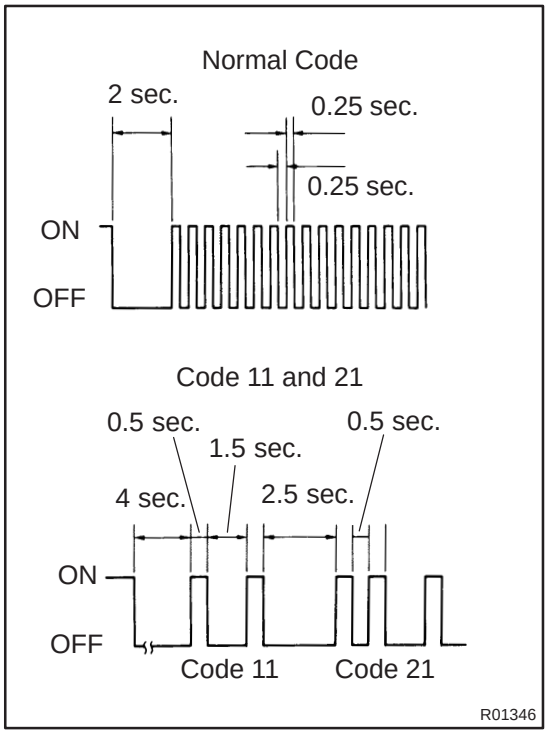

(d) With using hand–held tester:

Check the DTC.

(1) Read the DTC by following the prompts on the tester screen.

HINT:

Please refer to the hand–held tester operator's manual for further details.

(e) Without using hand–held tester:

Clear the DTCs.

(1) Using SST, connect the terminal Tc and CG of the DLC3.

SST 09843–18040

(2) Turn the ignition switch ON.

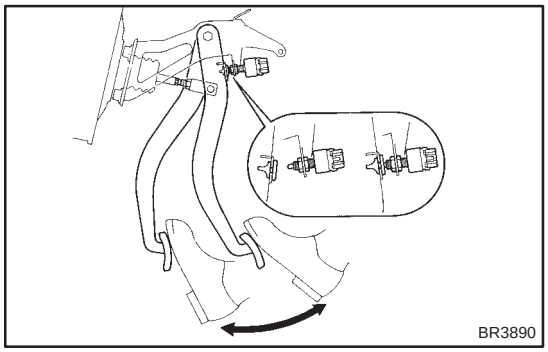

(3) Clear the DTCs stored in ECU by depressing the brake pedal 8 or more times within 5 sec.
(4) Check that the ABS warning light indicates the normal code blinking pattern.
(5) Remove the SST from the DLC3.
SST 09843–18040

HINT:
Disconnecting the battery cable during repairs will not erase the DTCs in the ECU.

(f) With using hand–held tester:
Clear the DTCs.
(1) Turn the ignition switch ON.
(2) Operate the hand–held tester to erase the codes.

HINT:
Please refer to the hand–held tester operator's manual for further details.

2. DATA LIST

HINT:
According to the DATA LIST displayed on the Hand–held tester, you can read the value and status of the switch, sensor, actuator and so on without parts removal. Reading the DATA LIST as a first step of troubleshooting is one of the methods to shorten the labor time.

(a) Connect the Hand–held tester to the DLC3.
(b) Turn the ignition switch ON.
(c) From the display on the tester, read the "DATA LIST".

Item	Measurement Item / Range (Display)	Normal Condition	Diagnostic Note
ABS MOT RELAY	ABS motor relay / ON or OFF	ON : Motor relay ON	–
SOL RELAY	Solenoid relay / ON or OFF	ON : Solenoid relay ON	–
STOP LIGHT SW	Stop light switch / ON or OFF	ON : Brake pedal depressed OFF : Brake pedal released	–
PKB SW	Parking brake switch / ON or OFF	ON : Parking brake applied OFF : Parking brake released	–
ABS OPERT FR	ABS operation (FR) / BEFORE or OPERATE	BEFORE : No ABS operation (FR) OPERATE : During ABS operation (FR)	–
ABS OPERT FL	ABS operation (FL) / BEFORE or OPERATE	BEFORE : No ABS operation (FL) OPERATE : During ABS operation (FL)	–
ABS OPERT RR	ABS operation (RR) / BEFORE or OPERATE	BEFORE : No ABS operation (RR) OPERATE : During ABS operation (RR)	Speed indicated on speedometer
ABS OPERT RL	ABS operation (RL) / BEFORE or OPERATE	BEFORE : No ABS operation (RL) OPERATE : During ABS operation (RL)	Speed indicated on speedometer

Item	Measurement Item / Range (Display)	Normal Condition	Diagnostic Note
WHEEL SPD FR	Wheel speed sensor (FR) reading / min.: 0 km/h (0 MPH, max.: 326 km/h (202 MPH)	Actual wheel speed	Speed indicated on speedometer
WHEEL SPD FL	Wheel speed sensor (FL) reading / min.: 0 km/h (0 MPH, max.: 326 km/h (202 MPH)	Actual wheel speed	Speed indicated on speedometer
WHEEL SPD RR	Wheel speed sensor (RR) reading / min.: 0 km/h (0 MPH, max.: 326 km/h (202 MPH)	Actual wheel speed	–
WHEEL SPD RL	Wheel speed sensor (RL) reading / min.: 0 km/h (0 MPH, max.: 326 km/h (202 MPH)	Actual wheel speed	–
IG VOLTAGE	ECU power supply voltage / NORMAL or TOO LOW	NORMAL : 9.8 V or over TOO LOW : Below 9.8 V	–
SFRR	ABS solenoid (SFRR) ON / OFF	Operate: ON	–
SFRH	ABS solenoid (SFRH) ON / OFF	Operate: ON	–
SFLR	ABS solenoid (SFLR) ON / OFF	Operate: ON	–
SFLH	ABS solenoid (SFLH) ON / OFF	Operate: ON	–
SRRR (SRR)	ABS solenoid (SRRR (SRR)) ON / OFF	Operate: ON	–
SRRH (SRH)	ABS solenoid (SRRH (SRH)) ON / OFF	Operate: ON	–
SRLR	ABS solenoid (SRLR) ON / OFF	Operate: ON	–
SRLH	ABS solenoid (SRLH) ON / OFF	Operate: ON	–
AIR BLD SUPPORT	Air bleed support / SUPPORT or NOT SUP	Not supported	–
TEST MODE	Test mode / NORMAL or TEST	NORMAL : Normal mode TEST : During test mode	–
#CODES	Number of DTC recorded / min.: 0, max.: 255	Min.: 0, max.: 19	–

3. ACTIVE TEST

HINT:

Performing the ACTIVE TEST using the Hand–held tester allows the relay, actuator and so on to operate without parts removal. Performing the ACTIVE TEST as a first step of troubleshooting is one of the methods to shorten the labor time.

It is possible to display the DATA LIST during the ACTIVE TEST.

(a) Connect the Hand–held tester to the DLC3.

(b) Turn the ignition switch ON.

(c) From the display on the tester, select the ”ACTIVE TEST”.

Item	Vehicle Condition / Test Details	Diagnostic Note
SFRR	Turns ABS solenoid (SFRR) ON / OFF	Operation of solenoid (clicking sound) can be heard
SFRH	Turns ABS solenoid (SFRH) ON / OFF	Operation of solenoid (clicking sound) can be heard
SFLR	Turns ABS solenoid (SFLR) ON / OFF	Operation of solenoid (clicking sound) can be heard
SFLH	Turns ABS solenoid (SFLH) ON / OFF	Operation of solenoid (clicking sound) can be heard
SRRR	Turns ABS solenoid (SRRR) ON / OFF	Operation of solenoid (clicking sound) can be heard
SRRH	Turns ABS solenoid (SRRH) ON / OFF	Operation of solenoid (clicking sound) can be heard
SRLR	Turns ABS solenoid (SRLR) ON / OFF	Operation of solenoid (clicking sound) can be heard
SRLH	Turns ABS solenoid (SRLH) ON / OFF	Operation of solenoid (clicking sound) can be heard
SFRR & SFRH	Turns ABS solenoid SFRR & SFRH ON / OFF	Operation of solenoid (clicking sound) can be heard
SFLR & SFLH	Turns ABS solenoid SFLR & SFLH ON / OFF	Operation of solenoid (clicking sound) can be heard
SRRR & SRRH	Turns ABS solenoid SRRR & SRRH ON / OFF	Operation of solenoid (clicking sound) can be heard
SRLR & SRLH	Turns ABS solenoid SRLR & SRLH ON / OFF	Operation of solenoid (clicking sound) can be heard
SFRH & SFLH	Turns ABS solenoid SFRH & SFLH ON / OFF	Operation of solenoid (clicking sound) can be heard
ABS MOT RELAY	Turns ABS motor relay ON / OFF	Operation of motor can be heard
ABS WARN LIGHT	Turns ABS warning light ON / OFF	Observe combination meter
BRAKE WRN LIGHT	Turns BRAKE warning light ON / OFF	Observe combination meter

4. FREEZE FRAME DATA

(a) The vehicle (sensor) status memorized during ABS operation or at the time of error code detection can be displayed using the hand–held tester.

(b) Only one record of the freeze frame data is stored and the freeze frame data generated during ABS operation are constantly updated. Also, the number of the operations of the ignition switch ”ON” after the freeze frame data is stored can be memorized up to 31 and it can be displayed.

HINT:

If the ignition switch ”ON” operation exceeds 31 times, ”31” appears on the display.

(c) If the diagnosis code malfunction occurs, the freeze frame data at the occurrence of the malfunction is stored but the ABS actuation data is not stored.

Hand–held tester display	Measurement Item	Reference Value*
VEHICLE SPD	Vehicle speed	Speed indication of a meter
STOP LIGHT SW	Stop light switch signal	Stop light switch ON: ON, OFF: OFF
# IG ON	Numbers of operations of ignition switch ON after memorizing freeze frame data	0 to 31
SYSTEM	Operate system	ABS operate: ABS

*: If no conditions are specifically stated for ”Idling”, it means the shift lever is at N or P position, the A/C switch is OFF and all accessory switches are OFF.

5. SPEED SENSOR SIGNAL CHECK

HINT:
If the ignition switch is turned from ON to ACC or LOCK during the test mode, the DTCs of the sensor check function will be erased.

(a) Check the sensor signal.
  (1) Start the engine.
  (2) Connect the hand–held tester to the DLC3.
  (3) Select the TEST MODE.

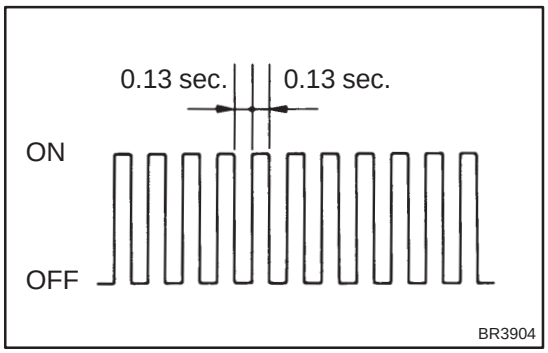

  (4) Check that the ABS warning light blinks.

HINT:
If the ABS warning light does not blink, inspect the ABS warning light circuit (See page 05–737).

  (5) Drive the vehicle straight forward.

HINT:
- Drive the vehicle faster than 45 km/h (28 mph) for several sec.
- There is a case that the sensor check is not completed if the vehicle has its wheels spun or its steering wheel steered during this check.

  (6) Stop the vehicle.
  (7) Using SST, connect the terminals Tc and CG of the DLC3.

(b) Read the DTC from the hand–held tester screen.

HINT:
- See the list of DTCs shown on the 05–704.
- Please refer to the hand–held tester operator’s manual for further details.

050XB–14

DIAGNOSTIC TROUBLE CODE CHART

HINT:

- Using SST 09843–18040, connect the terminal Tc and CG of the DLC3.
- If malfunction is not found when inspecting parts, inspect the ECU and ground points for poor contact.
- If a malfunction code is displayed during the DTC check, check the circuit listed for that code. For details of each code, refer to the "See page" for respective "DTC No." in the DTC chart.
- When 2 or more DTCs are detected, perform circuit inspection one by one until the problem is identified.

DTC No. (See Page)	Detection Item	Trouble Area
C0200/31 (05–709)	Right front wheel speed sensor signal malfunction	• Right front speed sensor • Right front speed sensor rotor
C0205/32 (05–709)	Left front wheel speed sensor signal malfunction	• Left front speed sensor • Left front speed sensor rotor
C0210/33 (05–713)	Right rear wheel speed sensor signal malfunction	• Right rear speed sensor • Right rear speed sensor rotor
C0215/34 (05–713)	Left rear wheel speed sensor signal malfunction	• Left rear speed sensor • Left rear speed sensor rotor
C0226/21 (05–717)	Open or short circuit in ABS actuator solenoid (SFR) circuit	• SFRR or SFRH circuit
C0236/22 (05–717)	Open or short circuit in ABS actuator solenoid (SFL) circuit	• SFLR or SFLH circuit
C0246/23 (05–717)	Open or short circuit in ABS actuator solenoid (SRR) circuit	• SRRR or SRRH circuit
C0256/24 (05–717)	Open or short circuit in ABS actuator solenoid (SRL) circuit	• SRLR or SRLH circuit
C0273/13 (05–719)	Open or short circuit in ABS motor relay circuit	• ABS motor relay • ABS motor relay circuit
C0278/11 (05–722)	Open or short circuit in ABS solenoid relay circuit	• ABS solenoid relay • ABS solenoid relay circuit
C1237/37 (05–725)	Speed sensor rotor is wrong number of teeth on one of the 4 wheels	• Speed sensor • Sensor rotor • Speed sensor circuit
C1241/41 (05–726)	Low battery voltage or abnormally high battery voltage	• Battery • Charging system • Power source circuit
C1249/58 (05–730)	Open circuit in stop light switch circuit	• Stop light switch • Stop light switch circuit
C1300/62 (05–733)	Malfunction in skid control ECU	• Battery • Skid control ECU
C1330/35 (05–709)	Open circuit in right front speed sensor	• Right front speed sensor • Right front speed sensor circuit
C1331/36 (05–709)	Open circuit in left front speed sensor	• Left front speed sensor • Left front speed sensor circuit
C1332/38 (05–713)	Open circuit in right rear speed sensor	• Right rear speed sensor • Right rear speed sensor circuit
C1333/39 (05–713)	Open circuit in left rear speed sensor	• Left rear speed sensor • Left rear speed sensor circuit
C1350 / 51 (05–735)	Pump motor is locked Open circuit in pump motor ground	• Brake actuator pump motor
Always ON (05–737)	Malfunction in ECU	• Battery • Charging system • ABS warning light circuit • Power source circuit • Skid control ECU

DTC of speed sensor check function:

Code No.	Diagnosis	Trouble Area
C1271/71	Low output voltage of right front speed sensor	• Right front speed sensor • Sensor installation • Sensor rotor
C1272/72	Low output voltage of left front speed sensor	• Left front speed sensor • Sensor installation • Sensor rotor
C1273/73	Low output voltage of right rear speed sensor	• Right rear speed sensor • Sensor installation • Sensor rotor
C1274/74	Low output voltage of left rear speed sensor	• Left rear speed sensor • Sensor installation • Sensor rotor
C1275/75	Abnormal change in output voltage of right front speed sensor	Right front speed sensor rotor
C1276/76	Abnormal change in output voltage of left front speed sensor	Left front speed sensor rotor
C1277/77	Abnormal change in output voltage of right rear speed sensor	Right rear speed sensor rotor
C1278/78	Abnormal change in output voltage of left rear speed sensor	Left rear speed sensor rotor

050XD–10

LOCATION

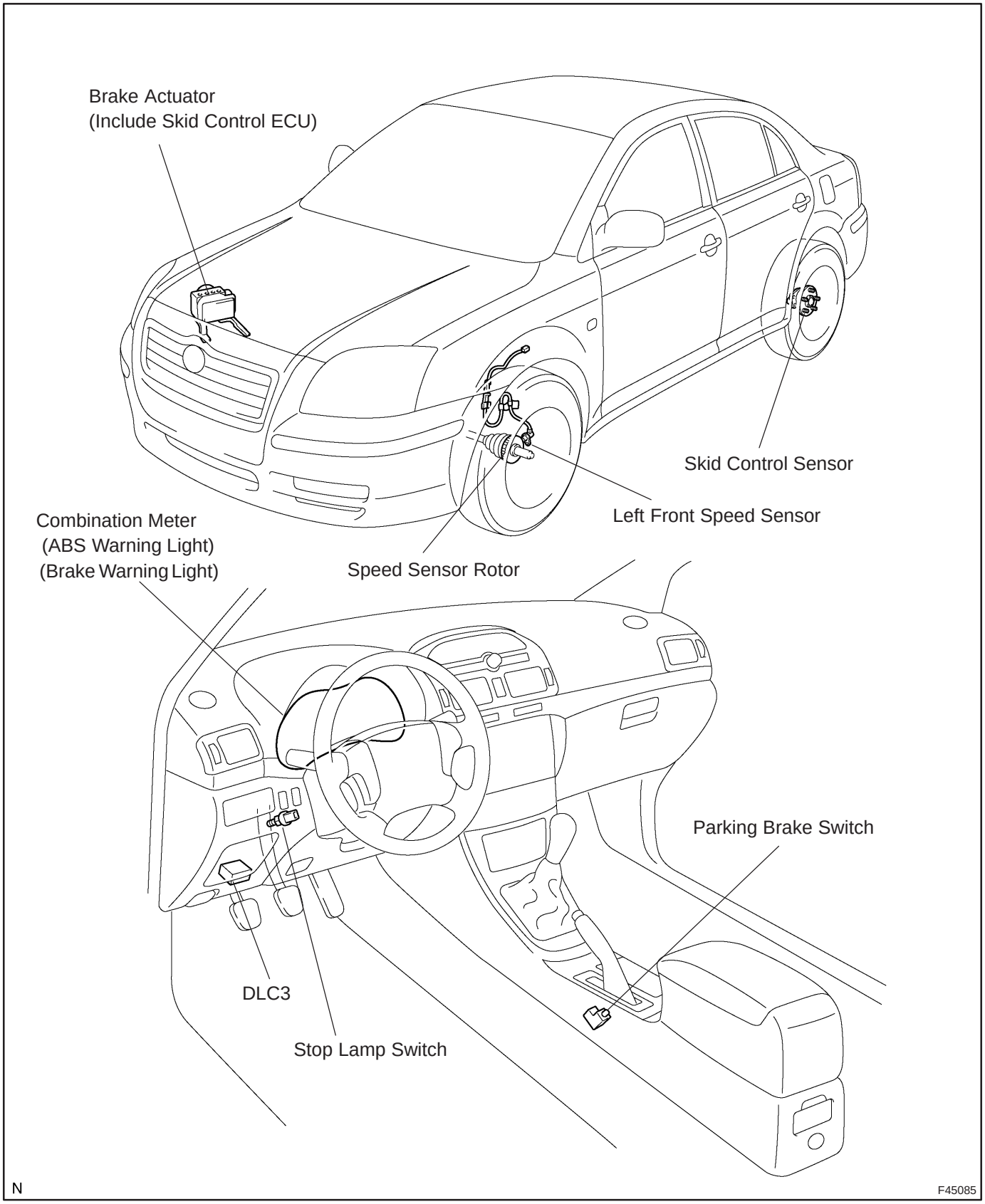

050XF–14

TERMINALS OF ECU

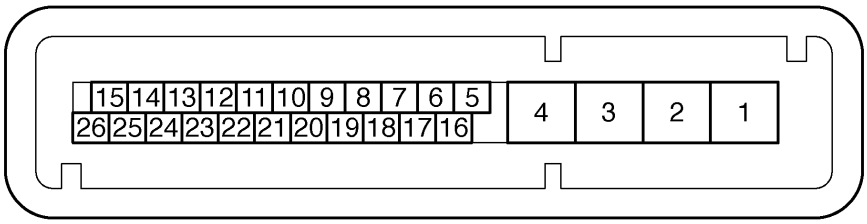

N

F45089

Symbols (Terminals No.)	Wiring Color	Condition	STD Voltage (V)
+BM (2) – GND (1, 4)	L – W–B	Always	10 to 14
+BS (3) – GND (1, 4)	R – W–B	Always	10 to 14
FL+ (5) – FL– (6)	L–Y – R–L	IG switch ON Slowly turn left front wheel	AC generation
RL+ (7) – RL– (17)	R – G	IG switch ON Slowly turn left rear wheel	AC generation
FR+ (10) – FR– (9)	W – B	IG switch ON Slowly turn right front wheel	AC generation
D/G (11) – GND (1, 4)	W–G – W–B	IG switch ON, ABS warning light OFF	8 to 12
EBDW (12) – GND (1, 4)	P – W–B	IG switch ON, BRAKE warning light ON	5 to 9
		IG switch ON, BRAKE warning light OFF	Below 2.0
PKB (14) – GND (1, 4)	B–W – W–B	IG switch ON, parking brake switch ON	Below 2.0
		IG switch ON, parking brake switch OFF	10 to 14
IG1 (18) – GND (1, 4)	R–W – W–B	IG switch ON	10 to 14
RR+ (19) – RR– (8)	P – V	IG switch ON Slowly turn right rear wheel	AC generation
STP (20) – GND (1, 4)	G–W – W–B	Stop light switch ON	8 to 14
		Stop light switch OFF	Below 4.0
WA (22) – GND (1, 4)	R–Y – W–B	IG switch ON, ABS warning light ON	5 to 9
		IG switch ON, ABS warning light OFF	Below 2.0
SP1 (23) – GND (1, 4)	L–W – W–B	Vehicle drive at about 20 km/h (12mph)	Pulse generation
Tc (25) – GND (1, 4)	W–L – W–B	IG switch ON	10 to 14

050XH–14

PROBLEM SYMPTOMS TABLE

If a normal code is displayed during the DTC check but the problem still occurs, check the circuits for each problem symptom in the order given in the table below and proceed to the relevant troubleshooting page.

NOTICE:

When replacing Skid Control ECU, sensor or etc., turn the ignition switch to OFF.

Symptom	Suspect Area	See page
ABS does not operate	1. Check the DTC reconfirming that the normal code is output. 2. IG power source circuit 3. Speed sensor circuit 4. Check the brake actuator with a hand–held tester. If there is malfunction, check the hydraulic circuit for leakage. 5. When the above areas (1. to 4.) are all normal but the problem still occurs, replace the skid control ECU.	05–699 05–709 05–713 32–53
ABS does not operate properly	1. Check the DTC reconfirming that the normal code is output. 2. Speed sensor circuit 3. Stop light switch circuit 4. Check the brake actuator with a hand–held tester. If there is malfunction, check the hydraulic circuit for leakage. 5. When the above areas (1. to 4.) are all normal but the problem still occurs, replace the skid control ECU.	05–699 05–709 05–713 32–53
ABS warning light malfunction	1. ABS warning light circuit 2. Skid control ECU	05–737 –
DTC check cannot be performed	1. ABS warning light circuit 2. Tc terminal circuit 3. When the above areas (1. and 2.) are all normal but the problem still occurs, replace the skid control ECU.	05–737 05–748
Speed sensor signal check cannot be performed	1. D/G terminal circuit 2. Skid control ECU	– –

DTC	C0200/31	RIGHT FRONT SPEED SENSOR

DTC	C0205/32	LEFT FRONT SPEED SENSOR

DTC	C1330/35	RIGHT FRONT SPEED SENSOR CIRCUIT

DTC	C1331/36	LEFT FRONT SPEED SENSOR CIRCUIT

CIRCUIT DESCRIPTION

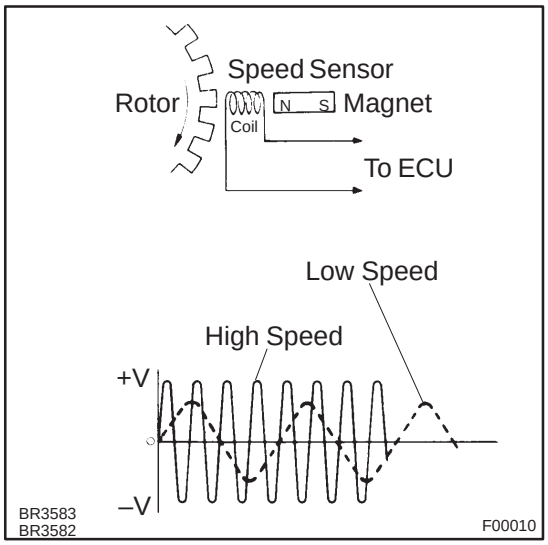

The speed sensor detects wheel speed and transmits the appropriate signals to the ECU. These signals are used for control of the ABS control system. Each of the front and rear rotors has 48 serrations.

When the rotors rotate, the magnetic field generated by the permanent magnet in the speed sensor induces an AC voltage. Since the frequency of this AC voltage changes in direct proportion to the speed of the rotor, the frequency is used by the ECU to detect the speed of each wheel.

DTC No.	DTC Detecting Condition	Trouble Area
C0200/31 C0205/32	When any of the following 1. to 3. is detected : 1. Non–plausible high frequent signal, high wheel acceleration or high gradient for 20 sec. with the brake pedal applied or for 5 sec. when the brake pedal is not applied. 2. After the initial start or restart and when the vehicle speed has reached 12 km/h (7 mph), the wheel speed of 0 km/h (0 mph) is detected. 3. Deviation of 2 wheel speed.	• Right front and left front speed sensor • Speed sensor rotor
C1330/35 C1331/36	Detecting abnormality in the resistance value of each speed sensor.	• Right front and left front speed sensor • Speed sensor circuit

HINT:
DTC No. C0200/31 and C1330/35 are for the right front speed sensor.
DTC No. C0205/32 and C1331/36 are for the left front speed sensor.

WIRING DIAGRAM

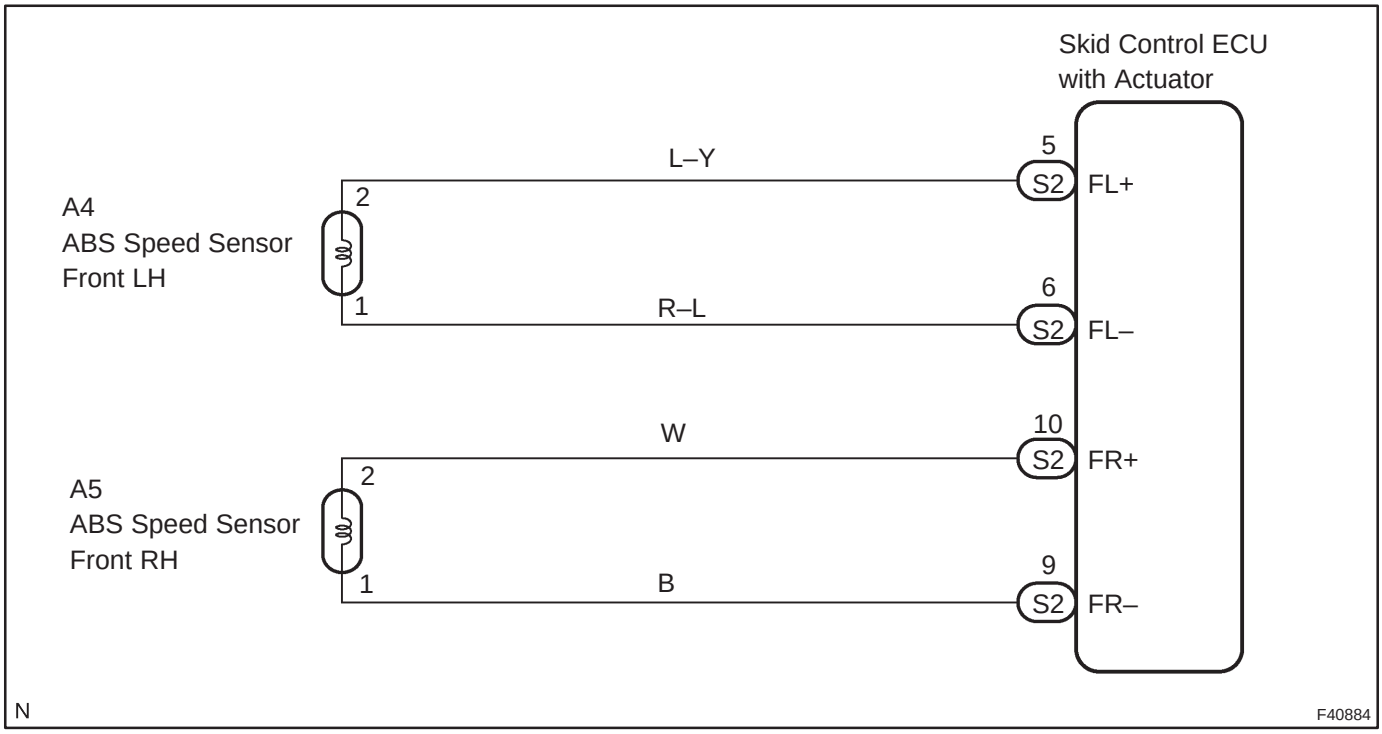

INSPECTION PROCEDURE

HINT:

Start the inspection from step 1 if you are using the hand–held tester and start from step 2 if you are not using the hand–held tester.

1	READ VALUE OF HAND–HELD TESTER(FRONT SPEED SENSOR)

(a) Select the item "WHEEL SPEED FL (FR)" in the DATA LIST and read the value displayed on the hand–held tester.

(b) Check that there is no difference between the speed value output from the speed sensor displayed on the hand–held tester and the speed value displayed on the speedometer when driving the vehicle.

OK:

There is almost no difference in the displayed speed value.

HINT:

There is tolerance of ±10 % in the speedometer indication.

OK	Go to step 5

NG

2 INSPECT FRONT SPEED SENSOR

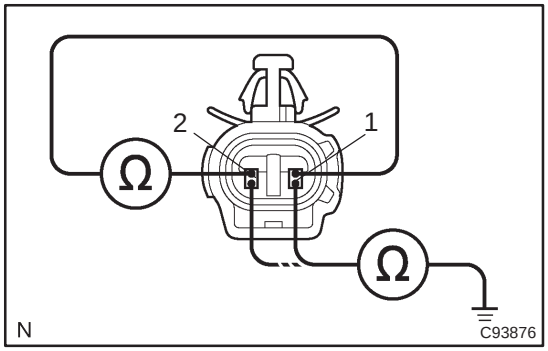

(a) Remove the fender liner.
(b) Disconnect the speed sensor connector.
(c) Measure resistance between terminals 1 and 2 of the speed sensor connector.
OK:
Resistance: 1.2 to 1.6 kΩ at 20°C (68°F)
(d) Measure resistance between each of terminals 1 and 2 of the speed sensor connector and body ground.
OK:
Resistance: 1 MΩ or higher

NG → **REPLACE SPEED SENSOR FRONT RH**

NG → **REPLACE SPEED SENSOR FRONT LH**

NOTICE:
Check the speed sensor signal last (See page 05–699).

OK

3 CHECK HARNESS AND CONNECTOR(FRONT SPEED SENSOR – SKID CONTROL ECU)

(a) Check for an open or short circuit in harness and connector between each front speed sensor and the skid control ECU (See page 01–32).

NG → **REPAIR OR REPLACE HARNESS OR CONNECTOR**

OK

4 INSPECT SPEED SENSOR AND SENSOR ROTOR SERRATIONS

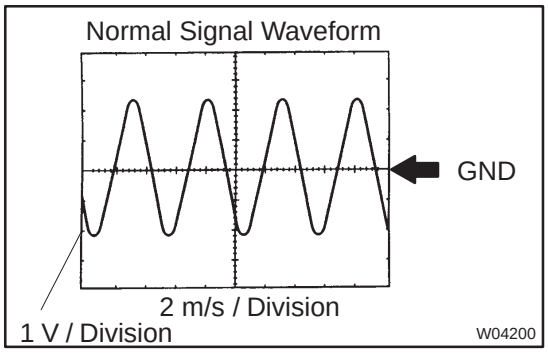

(REFERENCE) INSPECTION USING OSCILLOSCOPE
(a) Connect the oscilloscope to the terminal FR+ – FR– and FL+ – FL– of the skid control ECU.
(b) Drive the vehicle at about 30 km/h (19 mph), and check the signal waveform.

HINT:
- As the vehicle speed (wheel revolution speed) increases, a cycle of the waveform becomes shorter and the fluctuation in the output voltage becomes greater.
- When noise is identified in the waveform on the oscilloscope, error signals are generated due to the speed sensor rotor's scratches, looseness or foreign matter deposited on it.

OK → **REPLACE BRAKE ACTUATOR ASSY (See page 32–54)**

NG

5 INSPECT FRONT SPEED SENSOR INSTALLATION

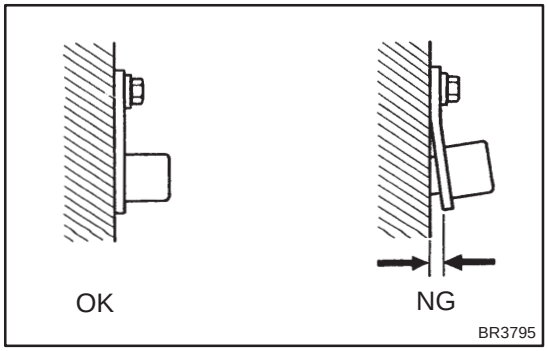

(a) Check the speed sensor installation.
OK:
The installation bolt is tightened properly and there is no clearance between the sensor and front steering knuckle.
Torque: 8.0 N·m (82 kgf·cm, 71 in.·lbf)

NG → **REPLACE SPEED SENSOR FRONT RH**

NG → **REPLACE SPEED SENSOR FRONT LH**

NOTICE:
Check the speed sensor signal last (See page 05–699).

OK

6 INSPECT SPEED SENSOR TIP

(a) Remove the front speed sensor (See page 32–59).
(b) Check the sensor tip.
OK:
No scratches or foreign objects on the sensor tip.

NG → **CLEAN OR REPAIR SPEED SENSOR**

NOTICE:
Check the speed sensor signal last (See page 05–699).

OK

7 INSPECT SPEED SENSOR ROTOR

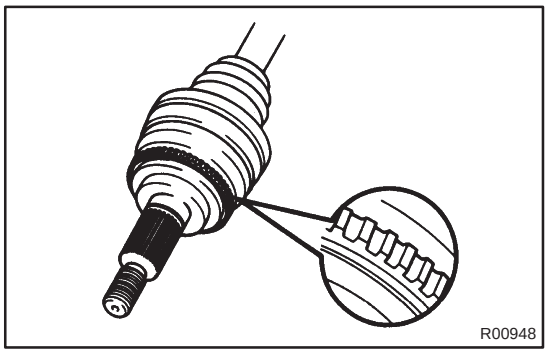

(a) Remove the front speed sensor rotor (See page 30–6).
(b) Check the sensor rotor serrations.
OK:
No scratches, missing teeth or foreign objects.

HINT:
If a foreign object is attached, remove it and after reassembling, check the output waveform.

NG → **CLEAN OR REPAIR SPEED SENSOR ROTOR**

NOTICE:
Check the speed sensor signal last (See page 05–699).

OK

REPLACE BRAKE ACTUATOR ASSY(See page 32–54)

DTC	C0210/33	RIGHT REAR SPEED SENSOR

DTC	C0215/34	LEFT REAR SPEED SENSOR

DTC	C1332/38	RIGHT REAR SPEED SENSOR CIRCUIT

DTC	C1333/39	LEFT REAR SPEED SENSOR CIRCUIT

CIRCUIT DESCRIPTION

Refer to DTC C0200/31, C0205/32, C1330/35, C1331/36 on page 05–709.

DTC No.	DTC Detecting Condition	Trouble Area
C0210/33 C0215/34	When any of the following 1 to 3 is detected : 1. Non–plausible high frequent signal, high wheel acceleration or high gradient for 20 sec. with the brake pedal applied or for 5 sec. when the brake pedal is not applied. 2. After the initial start or restart and when the vehicle speed has reached 12 km/h (7 mph), the wheel speed of 0 km/h (0 mph) is detected. 3. Deviation of 2 wheel speed.	• Right rear and left rear speed sensor • Speed sensor rotor
C1332/38 C1333/39	Detecting abnormality in the resistance value of each speed sensor.	• Right rear and left rear speed sensor • Speed sensor circuit

HINT:
DTC No. C0210/33, C1332/38 are for the right rear speed sensor.
DTC No. C0215/34, C1333/39 are for the left rear speed sensor.

WIRING DIAGRAM

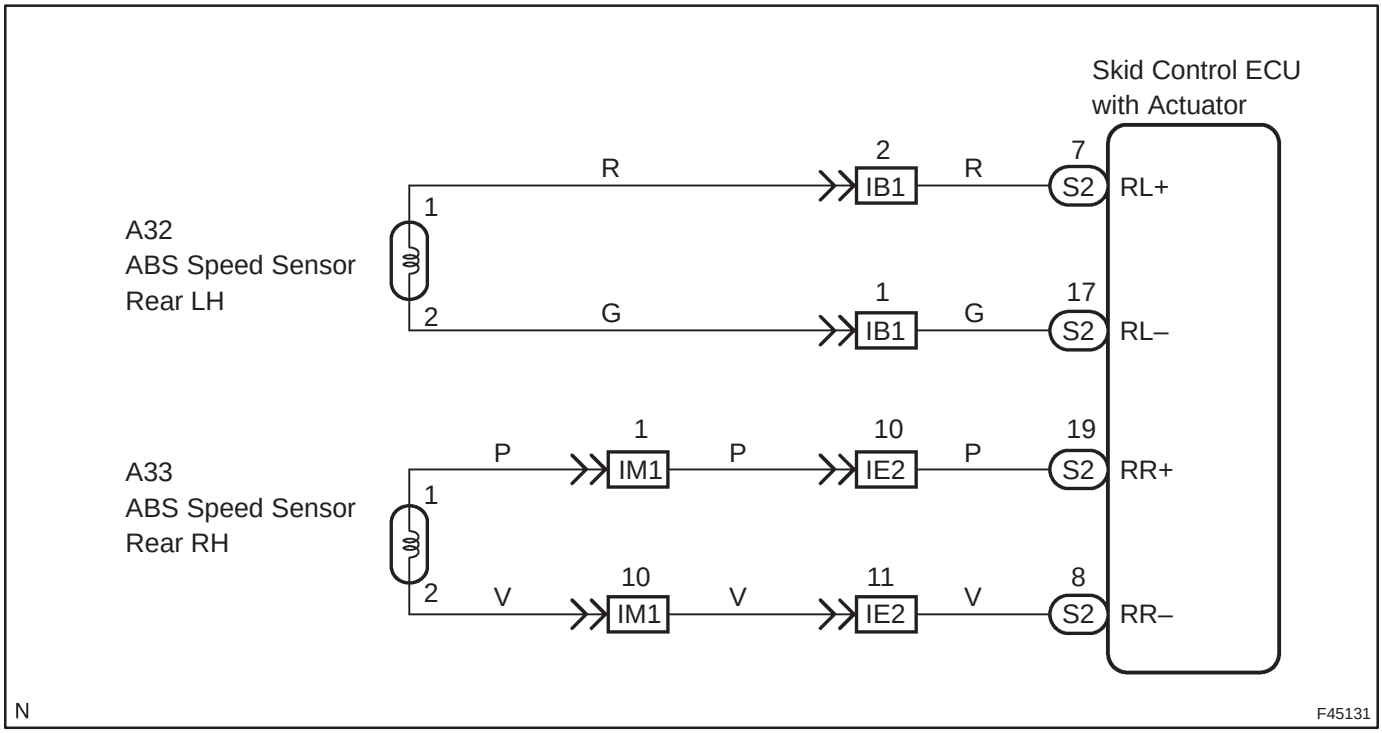

INSPECTION PROCEDURE

HINT:

Start the inspection from step 1 if you are using the hand–held tester and start from step 2 if you are not using the hand–held tester.

1	READ VALUE OF HAND–HELD TESTER(REAR SPEED SENSOR)

(a) Select the item "WHEEL SPEED RL (RR)" in the DATA LIST and read the value displayed on the hand–held tester.

(b) Check that there is no difference between the speed value output from the speed sensor displayed on the hand–held tester and the speed value displayed on the speedometer when driving the vehicle.
OK: There is almost no difference in the displayed speed value.

HINT:

There is tolerance of ± 10 % in the speedometer indication.

OK	Go to step 5

NG

2	INSPECT REAR SPEED SENSOR

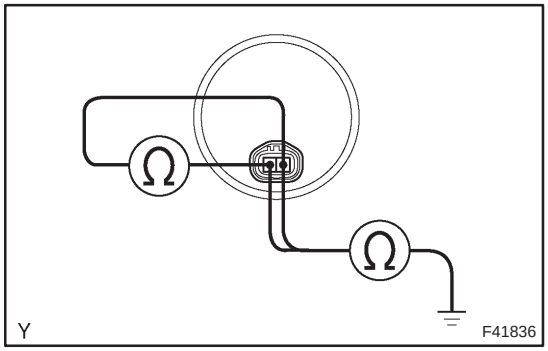

(a) Disconnect the skid control sensor connector.

(b) Measure resistance between terminals 1 and 2 of the skid control sensor connector.
OK: Resistance: 2.2 kΩ or less

(c) Measure resistance between each of terminals 1 and 2 of the skid control sensor connector and body ground.
OK: Resistance: 1 MΩ or higher

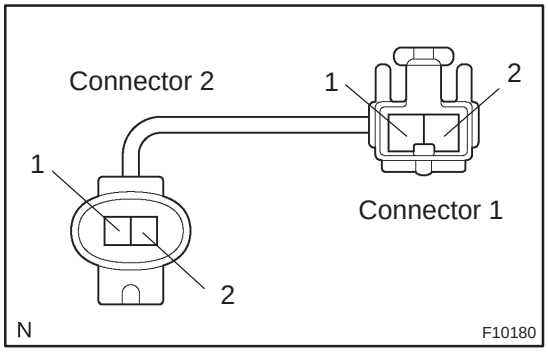

Skid control Sensor Sub–Wire Harness:

(a) Disconnect the sub–wire harness connector from floor wire harness.

(b) Make sure that there is no looseness at the connector lock part and connecting part of the connector.

(c) Measure resistance between terminal 1 of the connector 1 and terminal 2 of the connector 2.
OK: 1 Ω or lower

(d) Measure resistance between terminal 2 of the connector 1 and terminal 1 of the connector 2.
OK: 1 Ω or lower

(e) Measure resistance between terminals 1 and 2 of the speed sensor connector 1 and body ground.
OK: 10 MΩ or higher

NOTICE:

Check the speed sensor signal last (See page 05–699).

NG	REPLACE SKID CONTROL SENSOR OR SUB–WIRE HARNESS

OK

3	CHECK HARNESS AND CONNECTOR(SKID CONTROL SENSOR – SKID CONTROL ECU)

(a) Check for on open or short circuit in harness and connector between each skid control sensor and the skid control ECU (See page 01–32).

NG → REPAIR OR REPLACE HARNESS OR CONNECTOR

OK

4	INSPECT SENSOR AND SENSOR ROTOR SERRATIONS

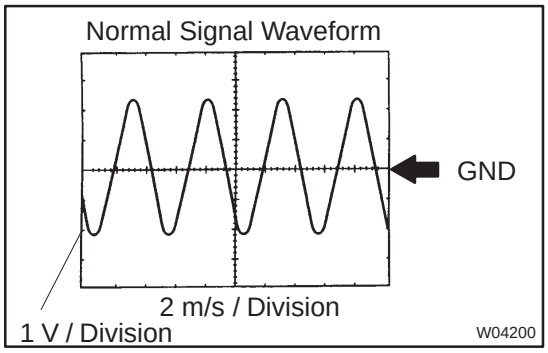

(REFERENCE) INSPECTION USING OSCILLOSCOPE

(a) Connect the oscilloscope to the terminals RR+ – RR– and RL+ – RL– of the skid control ECU.

(b) Drive the vehicle at about 30 km/h (19 mph), and check the signal waveform.

HINT:

- As the vehicle speed (wheel revolution speed) increases, a cycle of the waveform becomes shorter and the fluctuation in the output voltage becomes greater.
- When noise is identified in the waveform on the oscilloscope, error signals are generated due to the speed sensor rotor's scratches, looseness or foreign matter deposited on it.

OK → REPLACE BRAKE ACTUATOR ASSY (See page 32–54)

NG

5	INSPECT SENSOR INSTALLATION

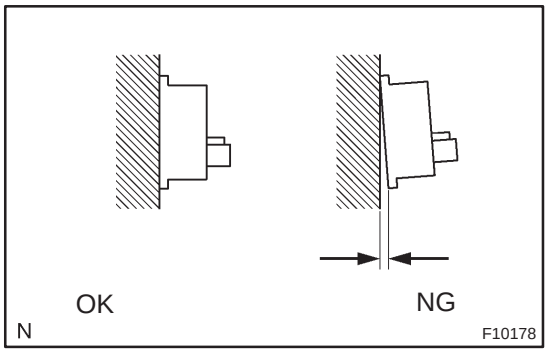

(a) Check the sensor installation.

OK:

There is no clearance between the sensor and rear axle carrier.

NOTICE:

Check the speed sensor signal last (See page 05–699).

NG → REPLACE SKID CONTROL SENSOR OR SUB–WIRE HARNESS

OK

6	INSPECT SPEED SENSOR TIP

(a) Remove the skid control sensor (See page 32–61).
(b) Check the sensor tip.
OK:
No scratches or foreign objects on the sensor tip.

NOTICE:
Check the speed sensor signal last (See page 05–699).

NG → **CLEAN OR REPAIR SKID CONTORL SENSOR**

OK

7	INSPECT SENSOR ROTOR

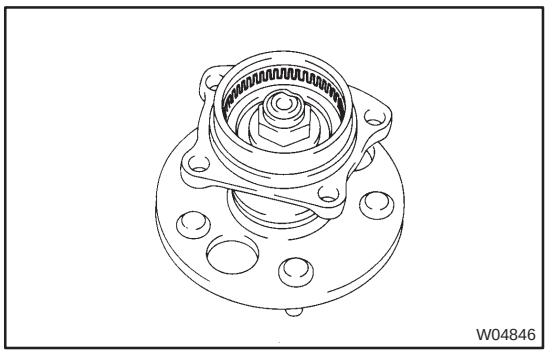

(a) Check the sensor rotor serrations.
OK:
No scratches, missing teeth or foreign objects.

NOTICE:
Check the speed sensor signal last (See page 05–699).

NG → **REPLACE REAR AXLE HUB & BEARING ASSY RH**

NG → **REPLACE REAR AXLE HUB & BEARING ASSY LH**

OK

REPLACE BRAKE ACTUATOR ASSY(See page 32–54)

DTC	C0226/21	SFR SOLENOID CIRCUIT

DTC	C0236/22	SFL SOLENOID CIRCUIT

DTC	C0246/23	SRR SOLENOID CIRCUIT

DTC	C0256/24	SRL SOLENOID CIRCUIT

CIRCUIT DESCRIPTION

This solenoid goes on when receiving signals from the ECU and controls the pressure acting on the wheel cylinders to control the braking force.

DTC No.	DTC Detecting Condition	Trouble Area
C0226/21 C0236/22 C0246/23 C0256/24	Solenoid valve signal does not match to the check result.	• Each solenoid circuit

WIRING DIAGRAM

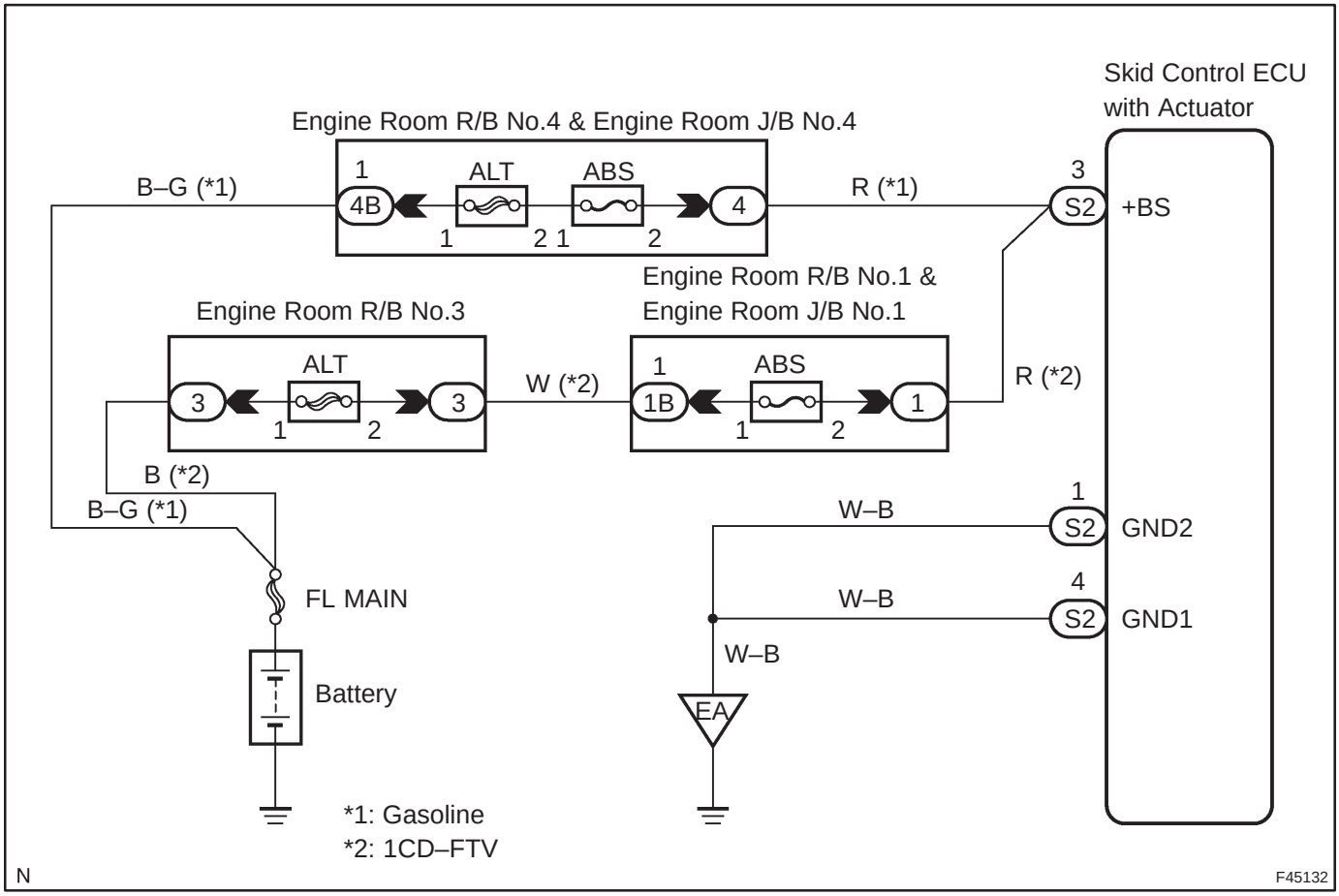

INSPECTION PROCEDURE

1	RECONFIRM DTC

(a) Check if other DTCs are detected (See page 05–699).

YES → REPAIR CIRCUIT INDICATED BY OUTPUT CODE

NO

REPLACE BRAKE ACTUATOR ASSY(See page 32–54)

DTC	C0273/13	OPEN OR SHORT CIRCUIT IN ABS MOTOR RELAY CIRCUIT

CIRCUIT DESCRIPTION

The ABS motor relay supplies power to the ABS pump motor. While the ABS is activated, the ECU switches the motor relay ON and operates the ABS pump motor.

DTC No.	DTC Detecting Condition	Trouble Area
C0273/13	Detection of any conditions from 1 to 3: 1. Pump motor voltage is 2.0 V or more for 1 sec. or more at motor relay OFF. 2. Pump motor voltage is (IG – 4.0 V) or less for 0.1 sec. or more at motor relay ON. 3. After the end of the actuation of the motor relay slow down condition of motor does not meet the specification.	• ABS motor relay • ABS motor relay circuit

WIRING DIAGRAM

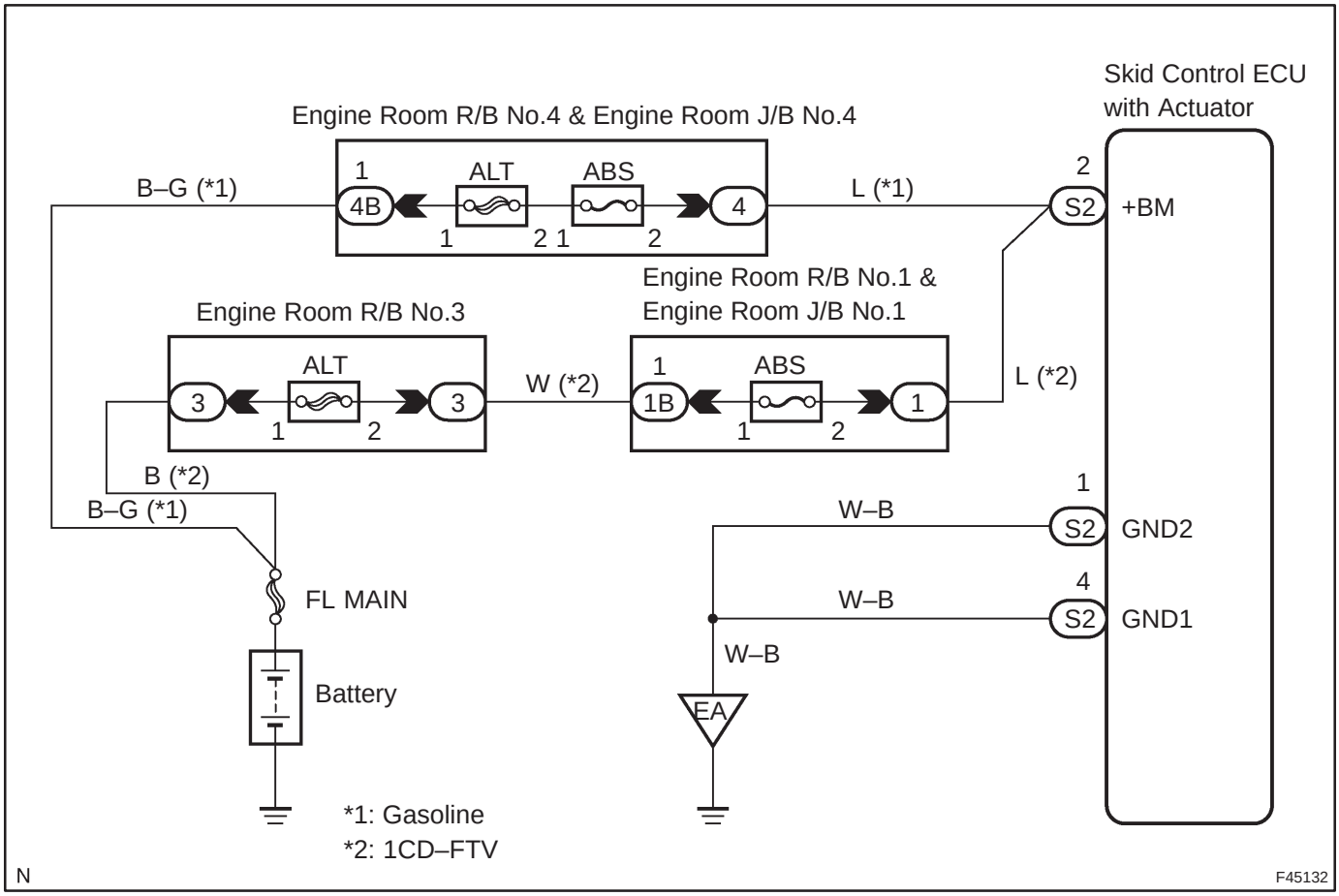

INSPECTION PROCEDURE

HINT:

Start the inspection from step 1 if you are using the hand–held tester and start from step 2 if you are not using the hand–held tester.

1	PERFORM ACTIVE TEST BY HAND–HELD TESTER(ABS MOTOR RELAY)

(a) Check the operation sound of the ABS motor individually when operating it with the hand–held tester.
OK:
The operation sound of the ABS motor is heard.

OK → **IF THE SAME CODE IS STILL OUTPUT AFTER THE DTC IS DELETED, CHECK THE CONTACT CONDITION OF EACH CONNECTION**

NG

2	INSPECT SKID CONTROL ECU CONNECTOR(+BM TERMINAL VOLTAGE)

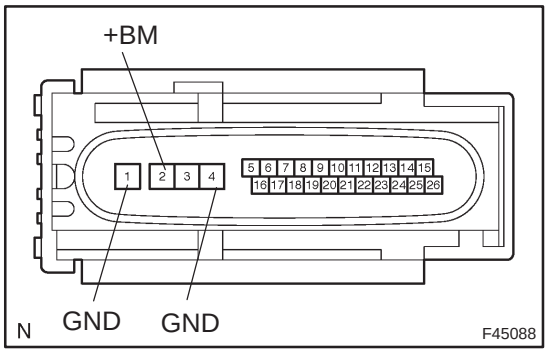

(a) Disconnect the skid control ECU connector.
(b) Measure the voltage between terminals +BM and GND of the skid control ECU harness side connector.
OK:
Voltage: 10 to 14 V

OK → **IF THE SAME CODE IS STILL OUTPUT AFTER THE DTC IS DELETED, CHECK THE CONTACT CONDITION OF EACH CONNECTION**

NG

3 INSPECT FUSE(ABS FUSE)

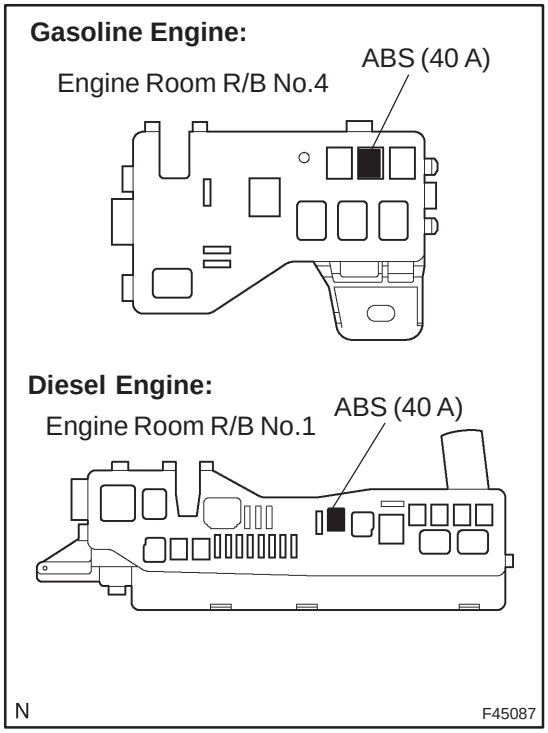

(a) Remove the ABS (40 A) fuse from the engine room R/B No.4 (Gasoline engine) or engine room R/B No.1 (Diesel engine).

(b) Check continuity of the ABS fuse.

OK:

Continuity

NG → **CHECK FOR SHORT IN ALL HARNESS AND COMPONENTS CONNECTED FUSE**

OK

4 INSPECT SKID CONTROL ECU CONNECTOR(GND TERMINAL CONTINUITY)

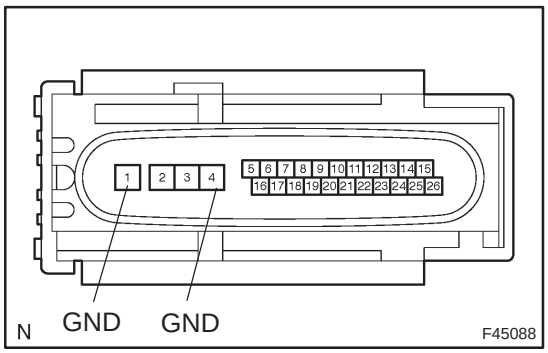

(a) Measure resistance between terminal GND of the skid control ECU harness side connector and body ground.

OK:

Resistance: 1 Ω or less

NG → **CHECK AND REPAIR HARNESS AND CONNECTOR(GND TERMINAL – BODY GROUND)(See page 01–32)**

OK

CHECK AND REPLACE HARNESS AND CONNECTOR(BATTERY – +BM TERMINAL) (See page 01–32)

DTC	C0278/11	OPEN OR SHORT CIRCUIT IN ABS SOLENOID RELAY

CIRCUIT DESCRIPTION

This relay supplies power to each ABS solenoid. After the ignition switch is turned ON, if the initial check is OK, the relay goes on.

DTC No.	DTC Detecting Condition	Trouble Area
C0278/11	Detection of any conditions from 1 to 3: 1. Internal circuit malfunction in ECU. 2. Valve relay voltage is 0.8 x IG or less for 0.5 sec. 3. Valve relay voltage is high level at valve relay OFF.	• ABS solenoid relay • ABS solenoid relay circuit

WIRING DIAGRAM

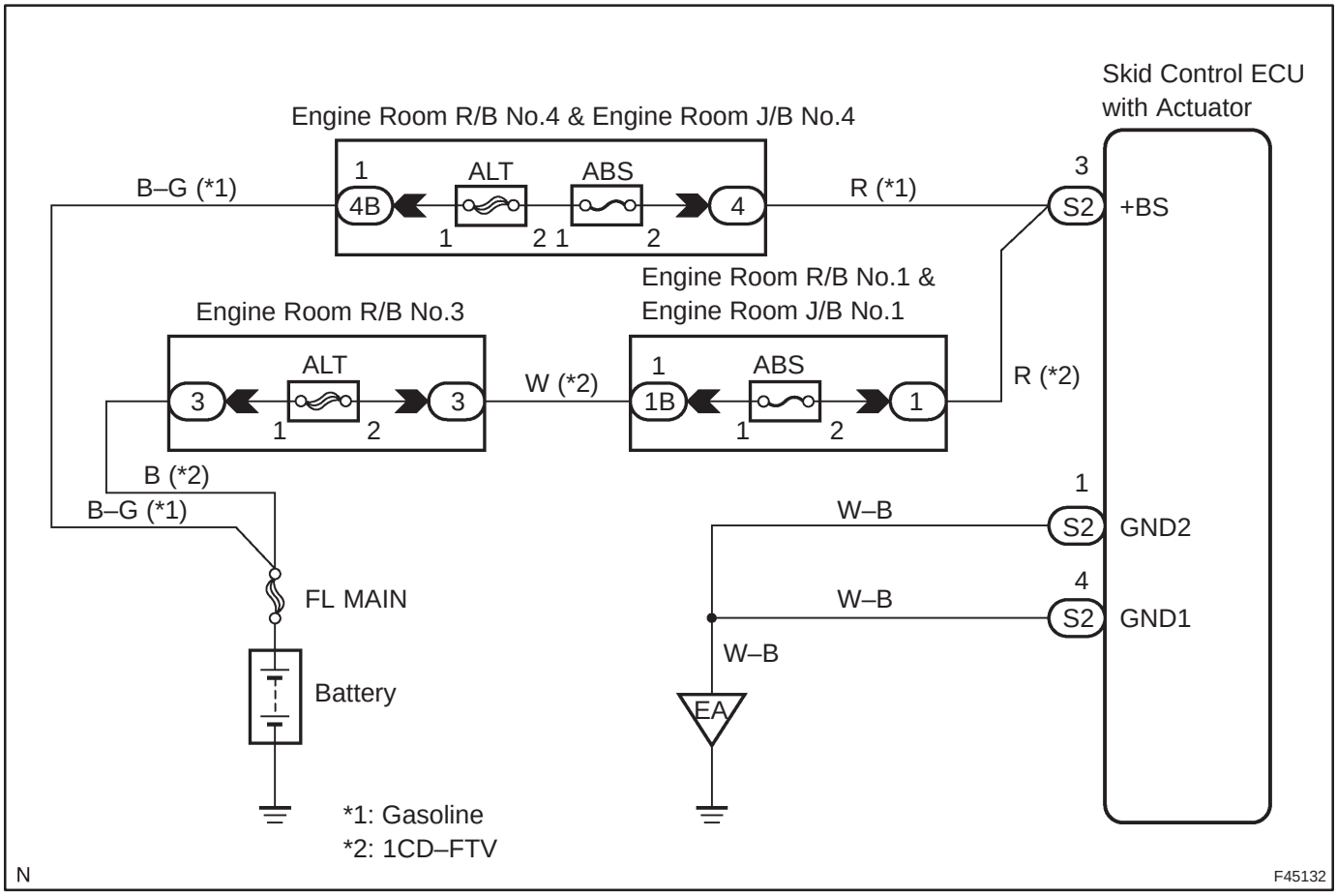

INSPECTION PROCEDURE

1 INSPECT SKID CONTROL ECU CONNECTOR(+BS TERMINAL VOLTAGE)

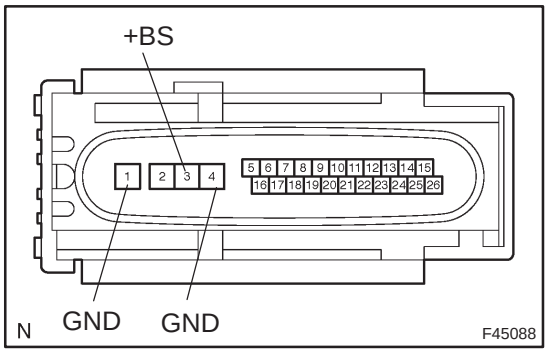

(a) Disconnect the skid control ECU connector.
(b) Measure the voltage between terminals +BS and GND of the skid control ECU harness side connector.
OK:
Voltage: 10 to 14 V

OK → **IF THE SAME CODE IS STILL OUTPUT AFTER THE DTC IS DELETED, CHECK THE CONTACT CONDITION OF EACH CONNECTION**

NG

2 INSPECT FUSE(ABS FUSE)

Gasoline Engine:

Engine Room R/B No.4

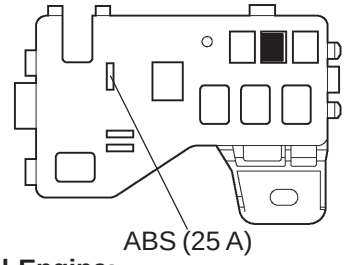

Diesel Engine:

Engine Room R/B No.1

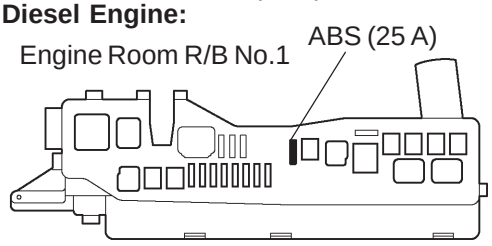

N F45087

(a) Remove the ABS (25 A) fuse from the engine room R/B No.4 (Gasoline engine) or engine room R/B No.1 (Diesel engine).
(b) Check continuity of the ABS fuse.
OK:
Continuity

NG → **CHECK FOR SHORT IN ALL HARNESS AND COMPONENTS CONNECTED FUSE**

OK

3	INSPECT SKID CONTROL ECU CONNECTOR(GND TERMINAL CONTINUITY)

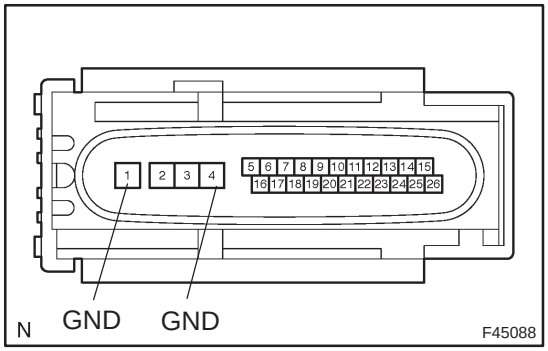

(a) Measure resistance between terminal GND of the skid control ECU harness side connector and body ground.

OK:

Resistance: 1 Ω or less

NG → **CHECK AND REPAIR HARNESS AND CONNECTOR(GND TERMINAL – BODY GROUND) (See page 01–32)**

OK

CHECK AND REPAIR HARNESS AND CONNECTOR(BATTERY – +BS TERMINAL) (See page 01–32)

DTC C1237/37 SPEED SENSOR ROTOR FAULTY

CIRCUIT DESCRIPTION

DTC No.	DTC Detecting Condition	Trouble Area
C1237/37	Detection of any of conditions from 1 through 4: 1. Wheel speed deviation of unspecified wheel. 2. Wheel sensor signal failure suspicion. 3. Continuous ABS control for 60 sec. or more.	• Speed sensor • Sensor rotor

INSPECTION PROCEDURE

1 INSPECT TIRE SIZE

NG → **REPLACE TIRES SO THAT ALL 4 TIRES ARE SAME IN SIZE**

OK

2 INSPECT SPEED SENSOR ROTOR

NG → **REPLACE SENSOR ROTOR**

OK

3 INSPECT SPEED SENSOR

NG → **REPLACE SPEED SENSOR**

OK

4 CHECK HARNESS AND CONNECTOR(SPEED SENSOR – SKID CONTROL ECU)

(a) Check for an open or short circuit in harness and connector between each terminal of speed sensor and the skid control ECU (See page 01–32).

NG → **REPAIR OR REPLACE HARNESS OR CONNECTOR**

OK

REPLACE BRAKE ACTUATOR ASSY(See page 32–54)

DTC	C1241/41	LOW BATTERY POSITIVE VOLTAGE OR ABNORMALLY HIGH BATTERY POSITIVE VOLTAGE

CIRCUIT DESCRIPTION

This is the power source of the ECU, hence the actuators.

DTC No.	DTC Detecting Condition	Trouble Area
C1241/41	With vehicle speed to about 6 km/h (4 mph), battery voltage is less than 9.4 V at the time of non–operation of ABS control or less than 9.2 V at the time of operation of ABS control, or battery voltage is more than 16.9 V.	• Battery • Charging system • Power source circuit

WIRING DIAGRAM

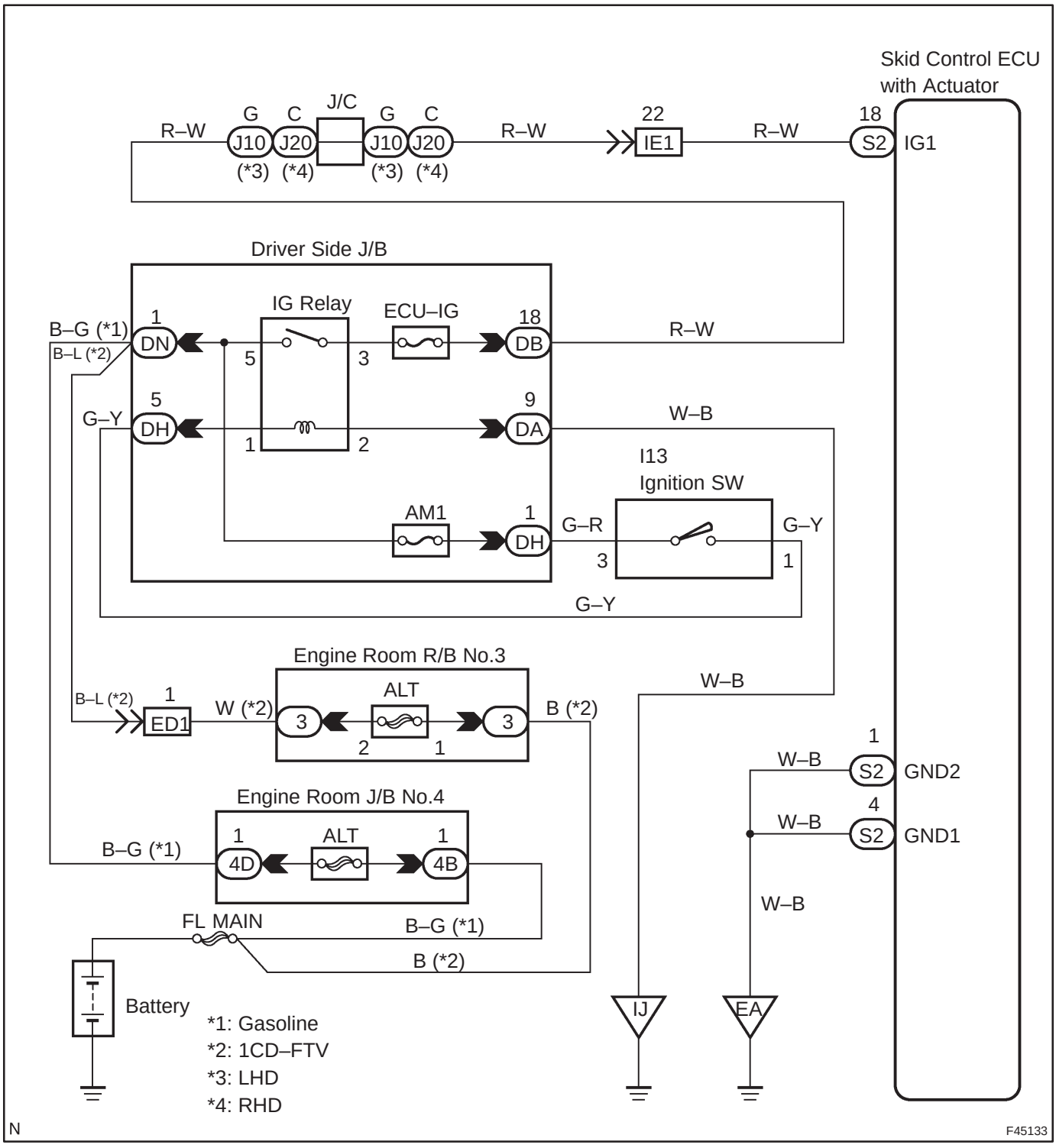

INSPECTION PROCEDURE

1	INSPECT FUSE(ECU–IG FUSE)

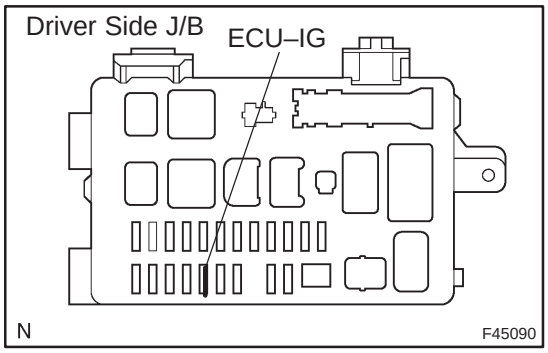

(a) Remove the ECU–IG fuse from the driver side J/B.
(b) Check continuity of the ECU–IG fuse.
OK:
Continuity

NG → **INSPECT FOR SHORT CIRCUIT IN ALL HARNESS AND COMPONENTS CONNECTED TO ECU–IG FUSE**

OK

2	INSPECT BATTERY

OK:
Voltage: 10 to 14 V

NG → **INSPECT CHARGING SYSTEM**

OK

3	INSPECT SKID CONTROL ECU CONNECTOR(IG1 TERMINAL VOLTAGE)

IN CASE OF USING HAND–HELD TESTER:

(a) Check the voltage condition, which is output from the ECU and displayed on the hand–held tester.
OK:
"Normal" is displayed.

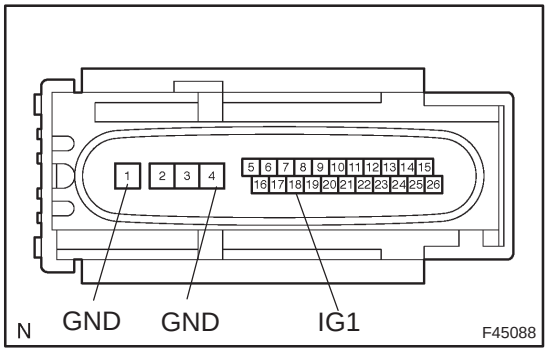

IN CASE OF NOT USING HAND–HELD TESTER:

(a) Disconnect the skid control ECU connector.
(b) Turn the ignition switch ON.
(c) Measure the voltage between terminals IG1and GND of the skid control ECU harness side connector.
OK:
Voltage: 10 to 14 V

OK → **REPLACE BRAKE ACTUATOR ASSY (See page 32–54)**

NG

4	INSPECT SKID CONTROL ECU CONNECTOR(GND TERMINAL CONTINUITY)

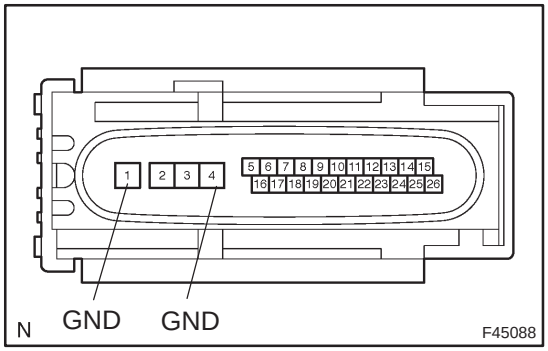

(a) Measure resistance between terminal GND of the skid control ECU harness side connector and body ground.

(b)

OK:

Resistance: 1 Ω or less

NG → **REPAIR OR REPLACE HARNESS OR CONNECTOR(GND TERMINAL – BODY GROUND) (See page 01–32)**

OK

CHECK AND REPAIR HARNESS AND CONNECTOR(BATTERY – IG1 TERMINAL) (See page 01–32)

DTC C1249/58 STOP LIGHT SWITCH CIRCUIT

CIRCUIT DESCRIPTION

DTC No.	DTC Detecting Condition	Trouble Area
C1249/58	Stop light switch circuit is open, and stop light switch voltage is in the level between 40 % and 70 % of the battery voltage.	• Stop light switch • Stop light switch circuit

WIRING DIAGRAM

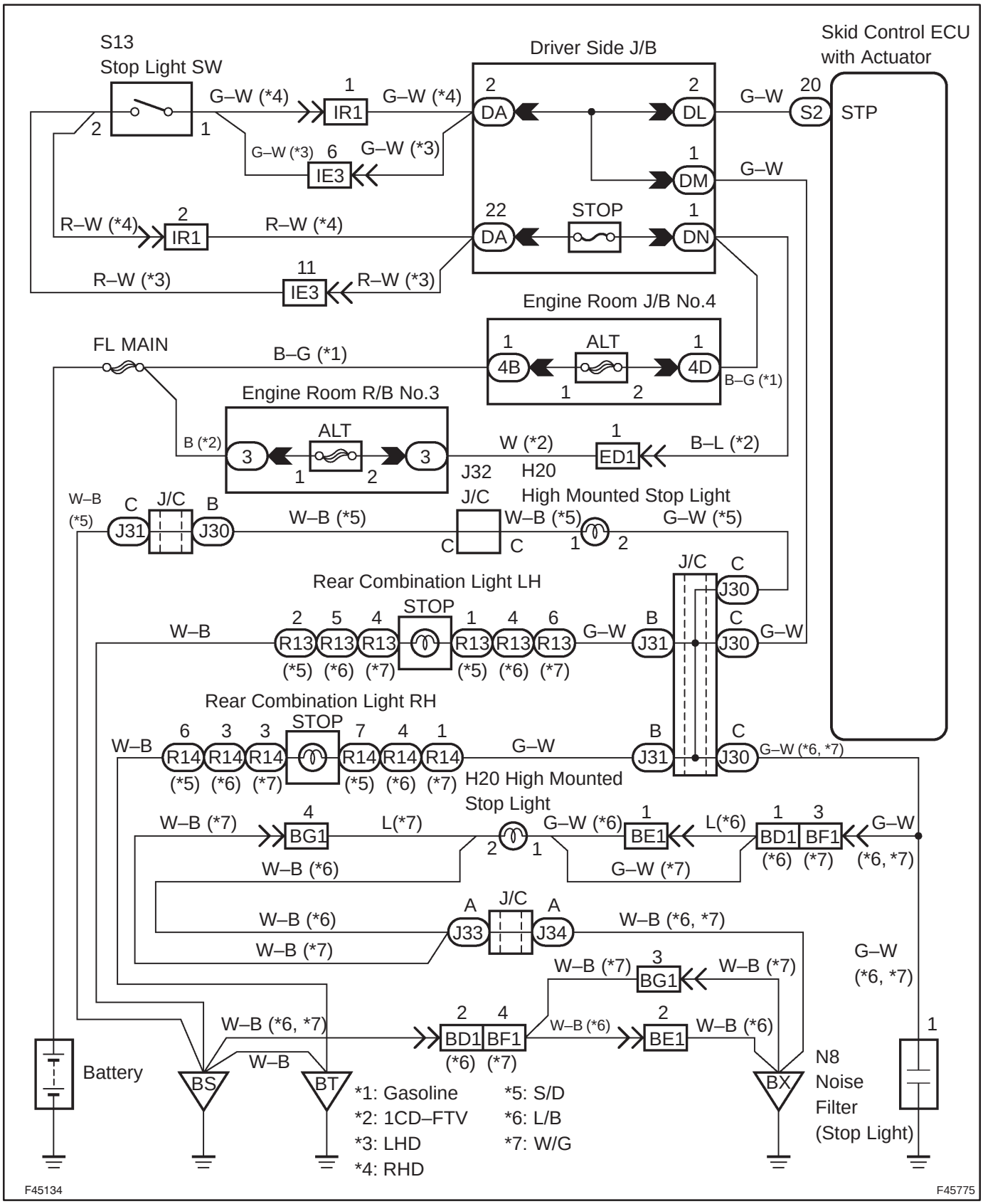

INSPECTION PROCEDURE

1	INSPECT STOP LAMP SWITCH ASSY

(a) Check that the stop light comes on when the brake pedal is depressed and goes off when the brake pedal is released.

NG → **Go to step 4**

OK

2	INSPECT SKID CONTROL ECU TERMINAL VOLTAGE(STP TERMINAL)

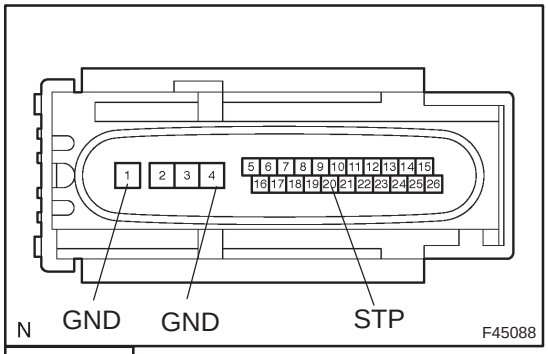

(a) Disconnect skid control ECU connector.
(b) Measure the voltage between terminal STP and GND of the skid control ECU harness side connector when the brake pedal is depressed.
OK:
Voltage: 10 to 14 V

OK → **REPLACE BRAKE ACTUATOR ASSY (See page 32–54)**

NG

3	CHECK HARNESS AND CONNECTOR(STOP LIGHT SWITCH – SKID CONTROL ECU)

(a) Check for an open or short circuit in harness and connector between the stop light switch and skid control ECU (See page 01–32).

NG → **REPAIR OR REPLACE HARNESS OR CONNECTOR**

OK

PROCEED TO NEXT CIRCUIT INSPECTION SHOWN ON PROBLEM SYMPTOMS TABLE (See page 05–708)

4	CHECK HARNESS AND CONNECTOR(STOP LIGHT CIRCUIT)

(a) Check for an open or short circuit in harness and connector of the stop light circuit (See page 01–32).

OK → **REPLACE STOP LAMP SWITCH ASSY**

NG

REPAIR OR REPLACE HARNESS OR CONNECTOR

DTC C1300/62 SKID CONTROL ECU MALFUNCTION

CIRCUIT DESCRIPTION

DTC No.	DTC Detecting Condition	Trouble Area
C1300/62	Internal control unit of skid control ECU failure.	• ECU

INSPECTION PROCEDURE

1	RECONFIRM DTC

A	DTC C1300/62
B	Except DTC C1300/62

B → **REPAIR CIRCUIT INDICATED BY OUTPUT CODE**

A

2	INSPECT SKID CONTROL ECU CONNECTOR(IG1 TERMINAL VOLTAGE)

IN CASE OF USING HAND–HELD TESTER:

(a) Check the voltage condition, which is output from the ECU and displayed on the hand–held tester.
OK:
"Normal" is displayed.

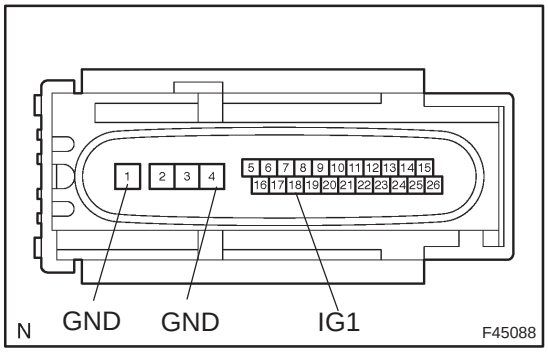

IN CASE OF NOT USING HAND–HELD TESTER:

(a) Disconnect the skid control ECU connector.
(b) Turn the ignition switch ON.
(c) Measure the voltage between terminals IG1 and GND of the skid control ECU harness side connector.
OK:
Voltage: 10 to 14 V

OK → **REPLACE BRAKE ACTUATOR ASSY (See page 32–54)**

NG

3	INSPECT SKID CONTROL ECU CONNECTOR(GND TERMINAL CONTINUITY)

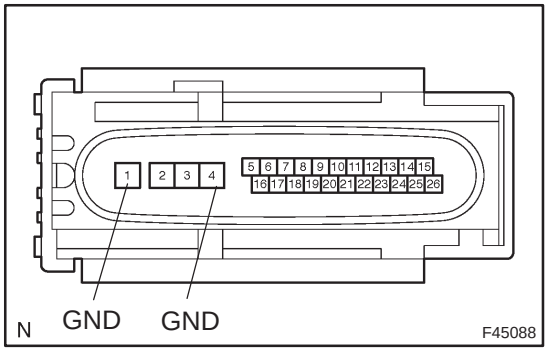

(a) Measure resistance between terminal GND of the skid control ECU harness side connector and body ground.

OK:

Resistance: 1 Ω or less

NG → **CHECK AND REPAIR HARNESS AND CONNECTOR(GND TERMINAL – BODY GROUND)(See page 01–32)**

OK

CHECK AND REPAIR HARNESS AND CONNECTOR(BATTERY – IG1 TERMINAL) (See page 01–32)

DTC	C1350/51	PUMP MOTOR IS LOCKED/OPEN CIRCUIT IN PUMP MOTOR GROUND

CIRCUIT DESCRIPTION

DTC No.	DTC Detecting Condition	Trouble Area
C1350/51	When any of the following 1 through 3 is detected. 1. No motor voltage supply after skid control ECU starts the motor relay. 2. A high level of motor voltage when skid control ECU does not start the motor relay. 3. The pump motor voltage is high level for a certain time after the motor relay has elapsed.	Brake actuator pump motor

WIRING DIAGRAM

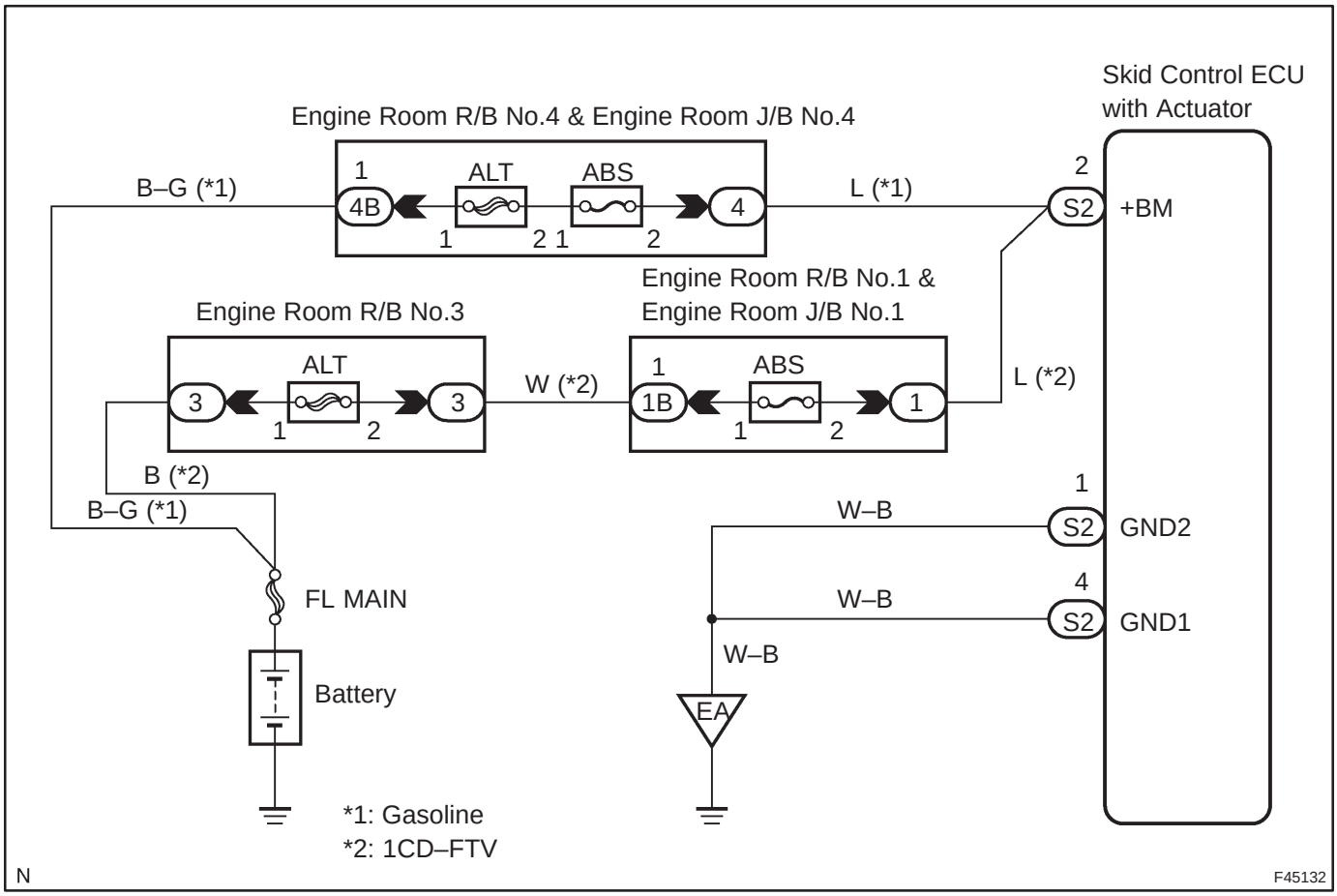

INSPECTION PROCEDURE

1	RECONFIRM DTC

(a) Check if other DTCs are detected (See page 05–699).

YES → REPAIR CIRCUIT INDICATED BY OUTPUT CODE

NO

REPLACE BRAKE ACTUATOR ASSY(See page 32–54)

DTC	AlwaysON	MALFUNCTION IN ABS ECU

CIRCUIT DESCRIPTION

DTC No.	DTC Detecting Condition	Trouble Area
Always ON	Either of the following 1 or 2 is detected: 1. The ECU connectors are disconnected from the ECU. 2. There is a malfunction in the ECU internal circuit.	• Battery • Charging system • Power source circuit • ABS warning light circuit • Skid control ECU

HINT:

There is a case that hand–held tester cannot be used when there is a malfunction in the ECU.

WIRING DIAGRAM

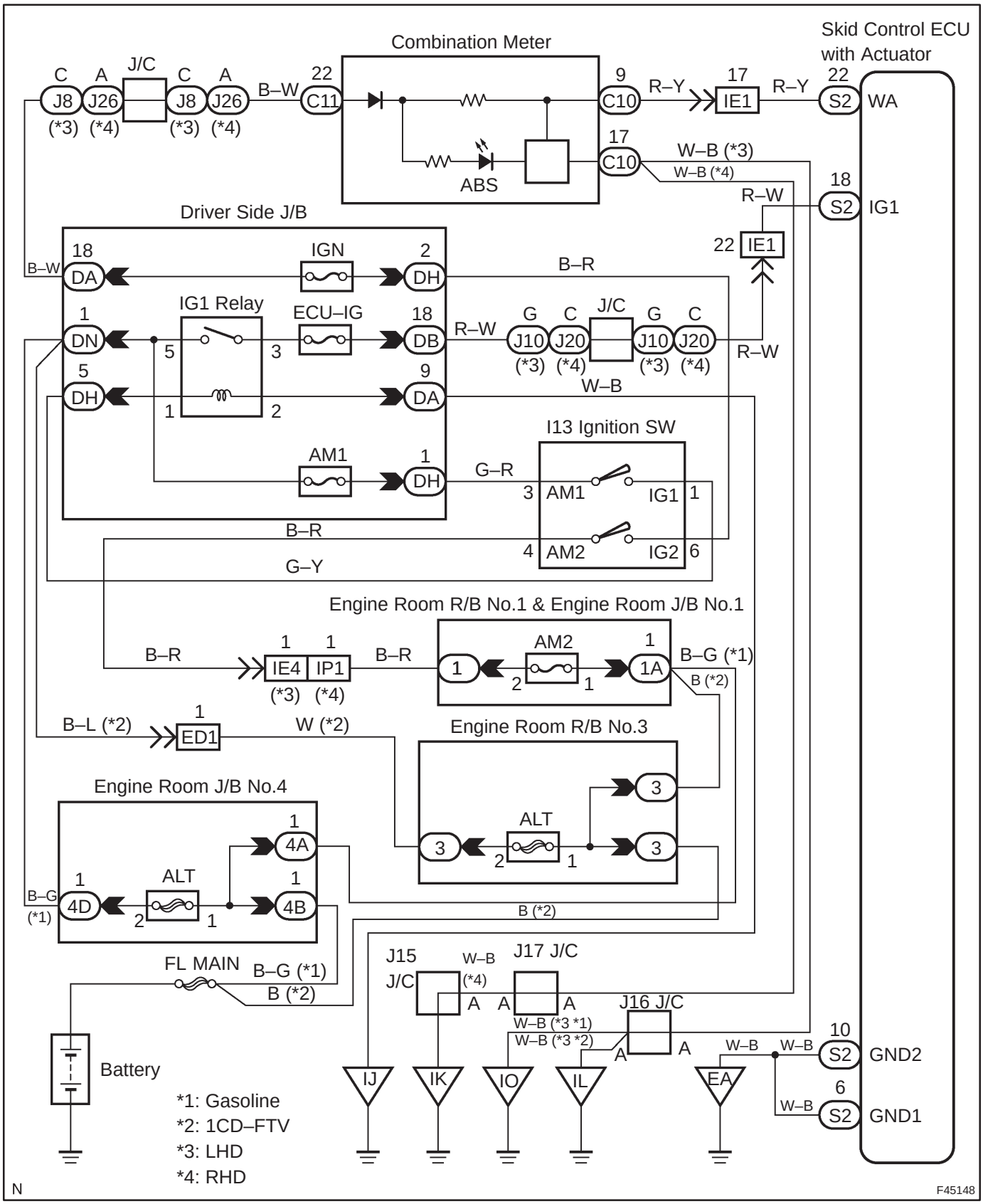

INSPECTION PROCEDURE

1	RECONFIRM DTC

(a) Check the DTCs are output (See page 05–699).

YES → **REPAIR CIRCUIT INDICATED BY OUTPUT CODE**

NO

2	INSPECT SKID CONTROL ECU CONNECTOR SECURELY CONNECTED

NO → **CONNECT CONNECTOR TO ECU**

YES

3	INSPECT SKID CONTROL ECU CONNECTOR(IG1 TERMINAL VOLTAGE)

IN CASE OF USING HAND–HELD TESTER:

(a) Check the voltage condition, which is output from the ECU and displayed on the hand–held tester.
OK:
"Normal" is displayed.

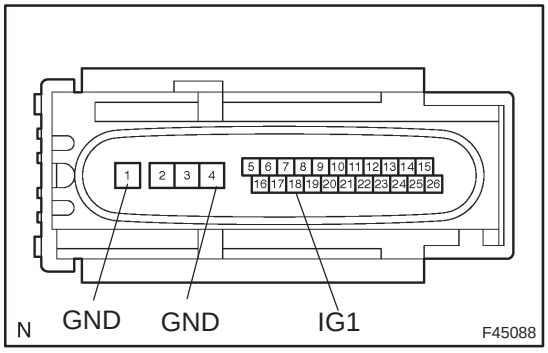

IN CASE OF NOT USING HAND–HELD TESTER:

(a) Disconnect the skid control ECU connector.
(b) Turn the ignition switch ON.
(c) Measure the voltage between terminals IG1 and GND of the skid control ECU harness side connector.
Voltage: 10 to 14 V

OK → **Go to step 5**

NG

4 INSPECT SKID CONTROL ECU CONNECTOR(GND TERMINAL CONTINUITY)

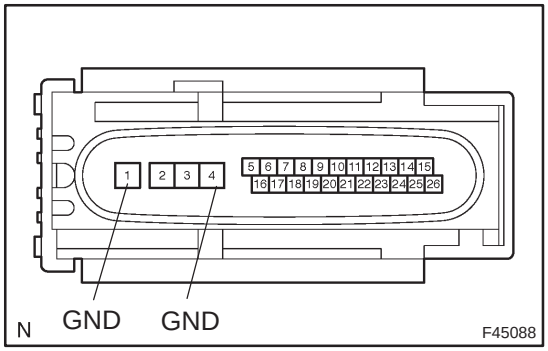

(a) Measure resistance between terminal GND of the skid control ECU harness side connector and body ground.
Resistance: 1 Ω or less

NG → **REPAIR OR REPLACE HARNESS OR CONNECTOR(GND TERMINAL – BODY GROUND)(See page 01–32)**

OK

CHECK AND REPAIR HARNESS AND CONNECTOR(BATTERY – IG1 TERMINAL) (See page 01–32)

5 INSPECT COMBINATION METER(ABS WARNING LIGHT)

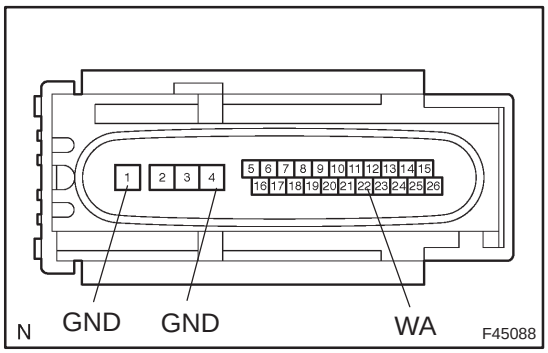

(a) Disconnect the skid control ECU connector.
(b) Using service wire, connect terminals WA and GND of the skid control ECU harness side connector.
(c) Turn the ignition switch ON.
OK:
ABS warning light goes off.

NG → **REPAIR OR REPLACE COMBINATION METER**

OK

REPLACE BRAKE ACTUATOR ASSY(See page 32–54)

ABS WARNING LIGHT CIRCUIT (DOES NOT LIGHT UP)

CIRCUIT DESCRIPTION

If the ECU detects trouble, it will prohibit ABS control, turn on ABS warning light, and store the DTC. Connect terminals Tc and CG of the DLC3 to make the ABS warning light blink and output the DTC.

WIRING DIAGRAM

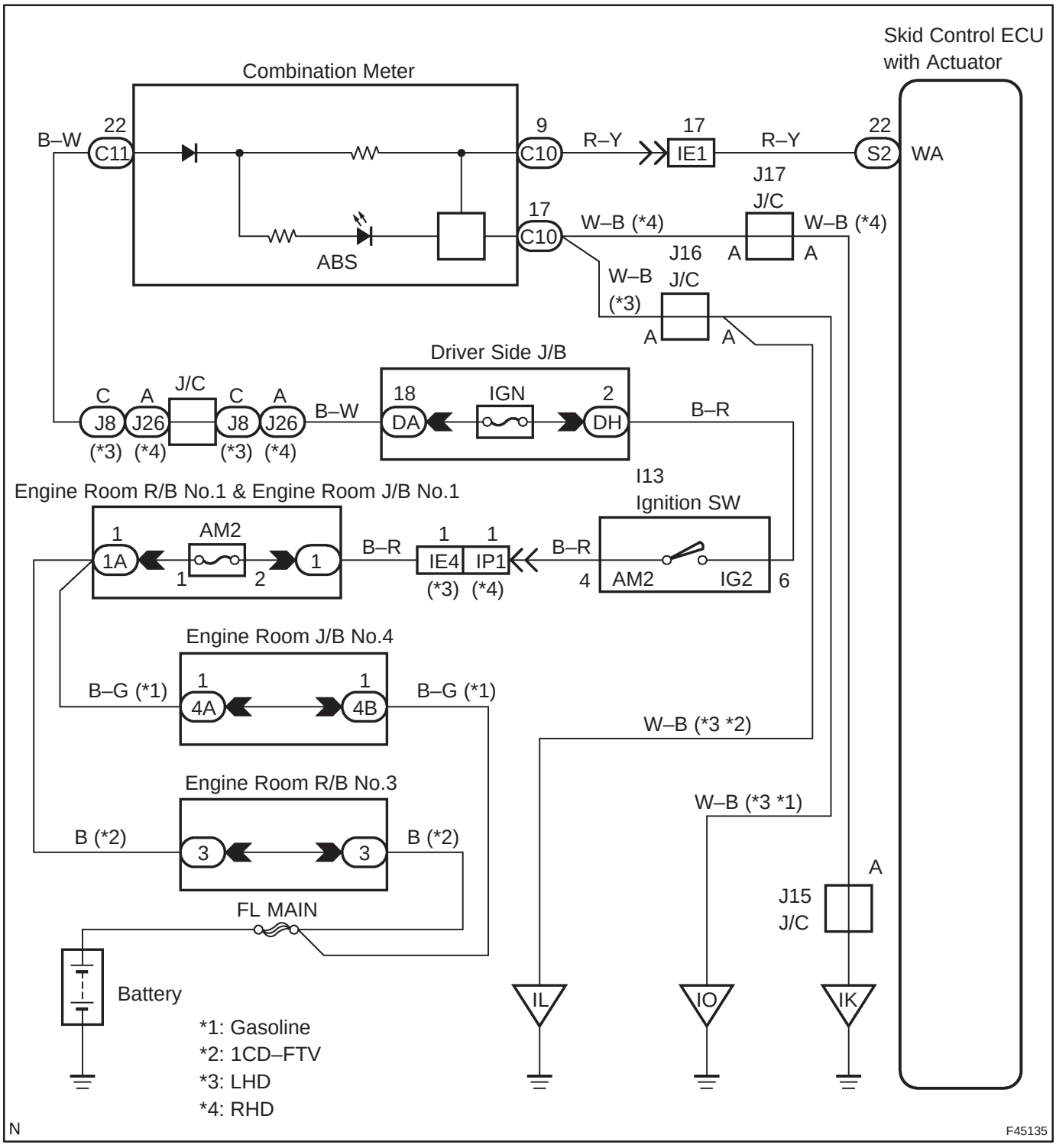

INSPECTION PROCEDURE

HINT:

Start the inspection from step 1 if you are using the hand–held tester and start from step 2 if you are not using the hand–held tester.

1	PERFORM ACTIVE TEST BY HAND–HELD TESTER(ABS WARNING LIGHT)

(a) Check that ”ON” and ”OFF” of the ABS warning light is shown on the combination meter by the hand–held tester.

OK → **REPLACE BRAKE ACTUATOR ASSY (See page 32–54)**

NG

2	INSPECT COMBINATION METER ASSY(ABS WARNING LIGHT) (See page 71–1)

(a) Disconnect the connector from the skid control ECU.
(b) Turn the ignition switch ON.
(c) Check the ABS warning light.

OK:

ABS warning light comes on

NG → **REPAIR OR REPLACE COMBINATION METER ASSY**

OK

3	CHECK HARNESS AND CONNECTOR(WA CIRCUIT)

(a) Check for a short circuit in harness and connector between terminal WA of the skid control ECU and combination meter (See page 01–32).

NG → **REPAIR OR REPLACE HARNESS OR CONNECTOR**

OK

REPLACE BRAKE ACTUATOR ASSY(See page 32–54)

BRAKE WARNING LIGHT CIRCUIT

CIRCUIT DESCRIPTION

The Brake warning light comes on when the brake fluid is insufficient, the parking brake is applied or the EBD is defective.

WIRING DIAGRAM

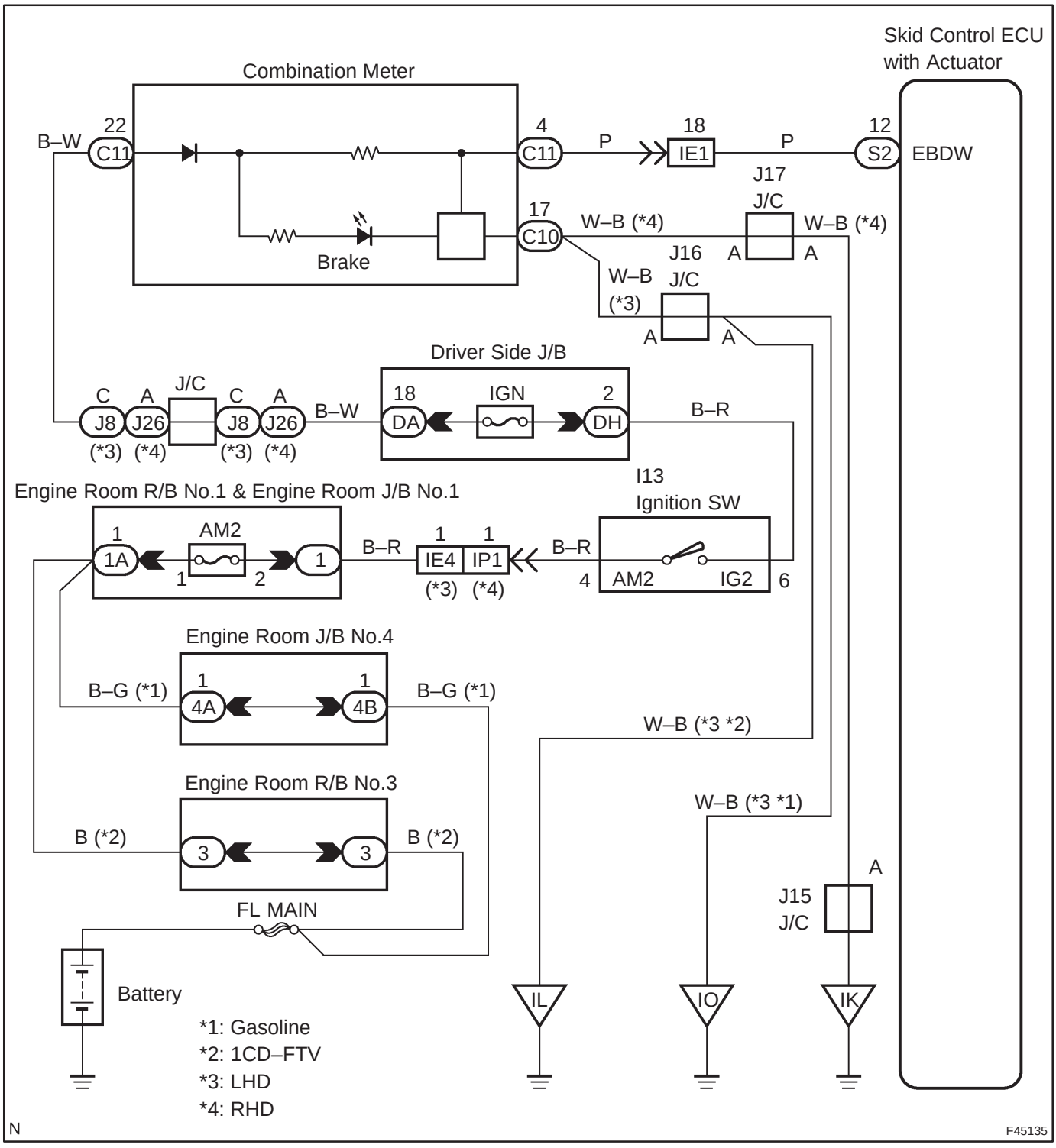

INSPECTION PROCEDURE

1	RECONFIRM DTC

(a) Check the DTC (See page 05–699).
OK:
Normal code

NG → **REPAIR CIRCUIT INDICATED BY OUTPUT CODE**

OK

2	INSPECT PARKING BRAKE SWITCH CIRCUIT

(a) Check for an open or short circuit in the parking brake switch circuit (See page 01–32).

NG → **REPAIR OR REPLACE PARKING BRAKE SWITCH CIRCUIT**

OK

3	INSPECT BRAKE FLUID LEVEL WARNING SWITCH CIRCUIT

(a) Check the brake fluid level in reservoir.
(b) Check for an open or shot circuit in brake fluid level warning switch circuit (See page 01–32).

NG → **REPAIR OR REPLACE BRAKE FLUID LEVEL WARNING SWITCH CIRCUIT**

OK

4	INSPECT VACUUM WARNING SWITCH CIRCUIT

(a) Check for an open or short circuit in harness and connector between the vacuum warning switch and skid control ECU (See page 01–32).

NG → **REPAIR OR REPLACE HARNESS OR CONNECTOR**

OK

5	INSPECT COMBINATION METER ASSEMBLY(BRAKE WARNING LIGHT CIRCUIT)

(a) Check for an open or short circuit in the combination meter (See page 01–32).

NG → **REPAIR OR REPLACE COMBINATION METER ASSEMBLY**

OK

6	CHECK HARNESS AND CONNECTOR(BRAKE ACTUATOR – COMBINATION METER)

(a) Check for an open or short circuit in harness and connector between the brake actuator and combination meter (See page 01–32).

NG → REPAIR OR REPLACE HARNESS OR CONNECTOR

OK

REPLACE BRAKE ACTUATOR ASSY(See page 32–54)

TC TERMINAL CIRCUIT

CIRCUIT DESCRIPTION

Connecting terminals Tc and CG of the DLC3 causes the ECU to display the DTC by flashing the ABS warning light.

WIRING DIAGRAM

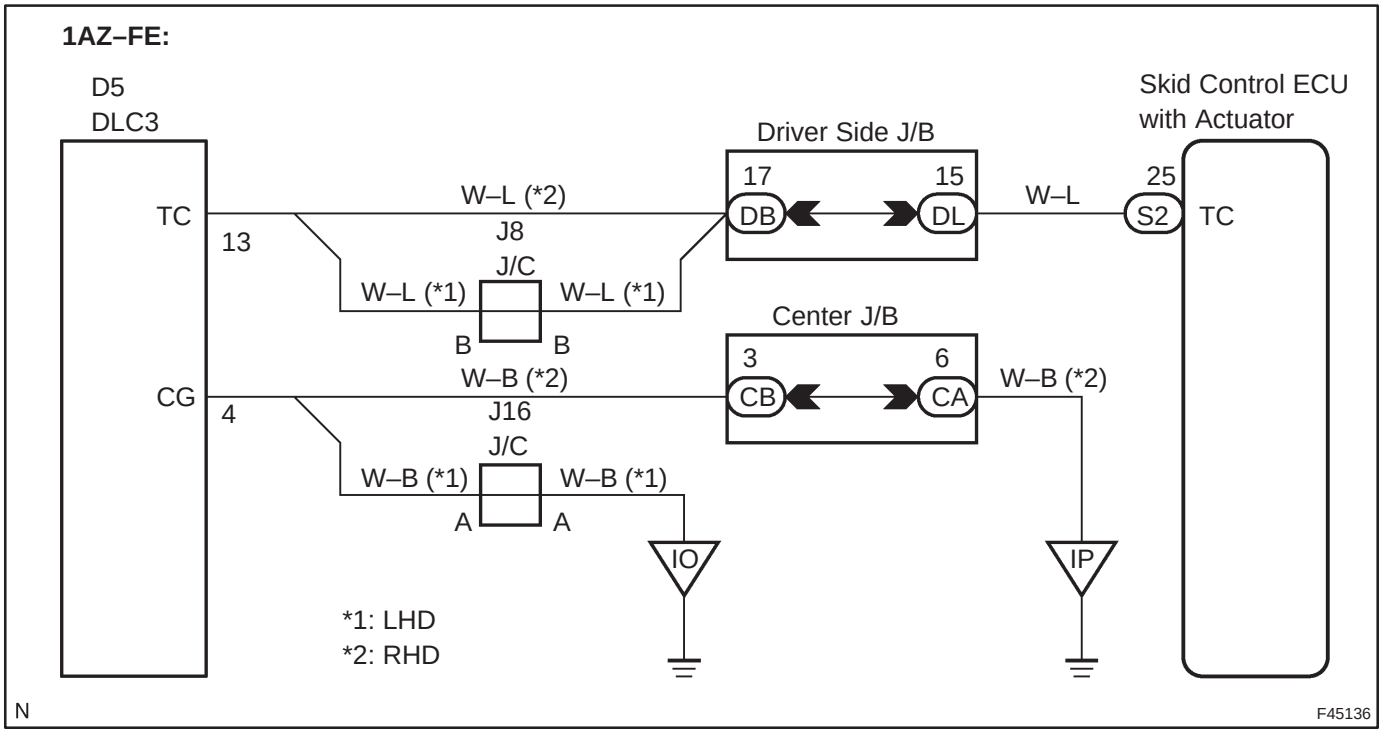

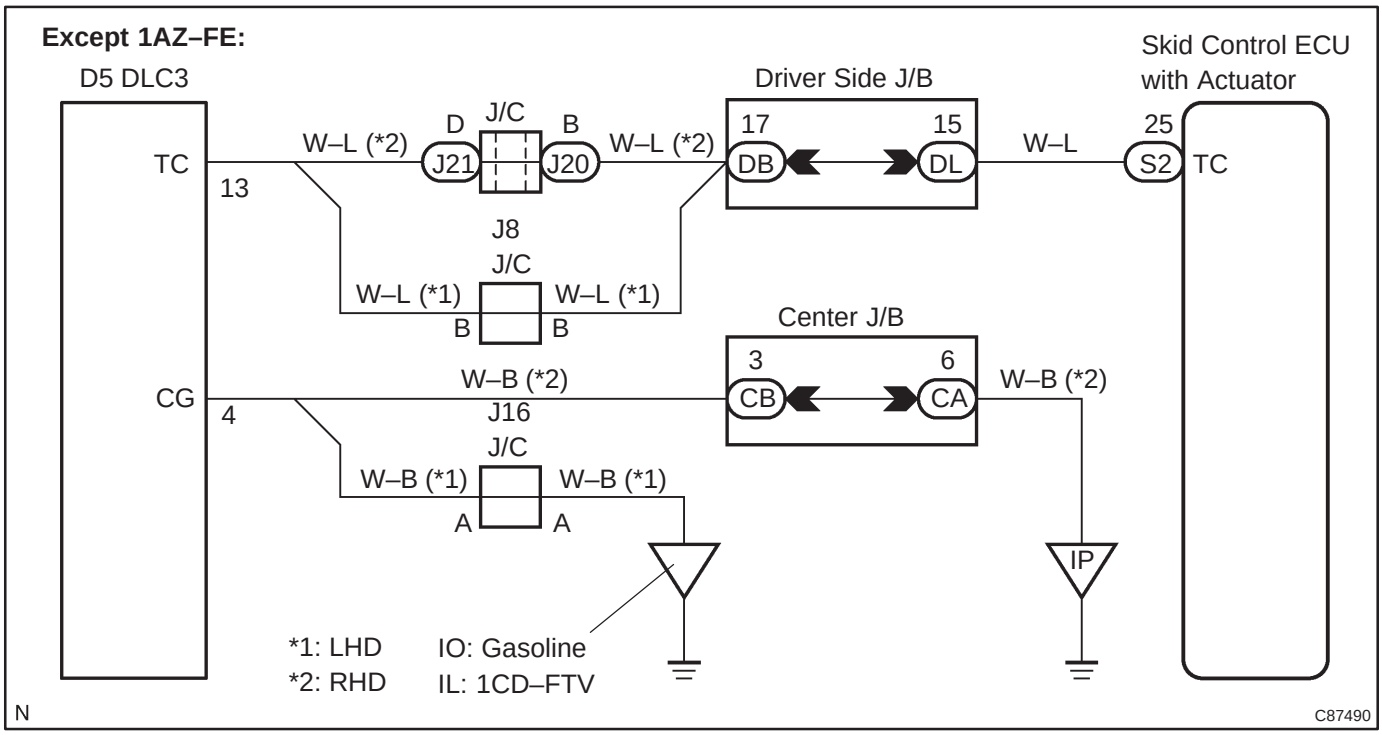

INSPECTION PROCEDURE

1	INSPECT DLC3 TERMINAL VOLTAGE(Tc TERMINAL)

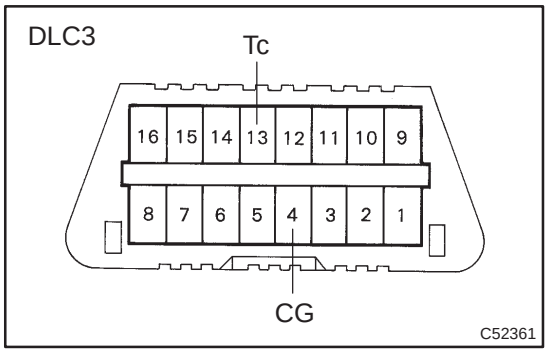

(a) Turn the ignition switch ON.
(b) Measure the voltage between terminals Tc and CG of the DLC3.
OK:
Voltage: 10 to 14 V

OK	Go to step 3

NG

2	CHECK HARNESS AND CONNECTOR(DLC3 – BODY GROUND)

(a) Check for an open or short circuit in harness and connector between terminal CG of the DLC3 and body ground (See page 01–32).

NG	REPAIR OR REPLACE HARNESS OR CONNECTOR

OK

3	CHECK HARNESS AND CONNECTOR(SKID CONTROL ECU – DLC3)

(a) Check for an open or short circuit in harness and connector between terminal Tc of the skid control ECU and the DLC3 (See page 01–32).

NG	REPAIR OR REPLACE HARNESS OR CONNECTOR

OK

REPLACE BRAKE ACTUATOR ASSY(See page 32–54)

TS TERMINAL CIRCUIT

CIRCUIT DESCRIPTION

The sensor check circuit detects troubles in the sensor signal which cannot be detected by the DTC check. Connecting terminals Ts and CG of the DLC3 starts the check.

WIRING DIAGRAM

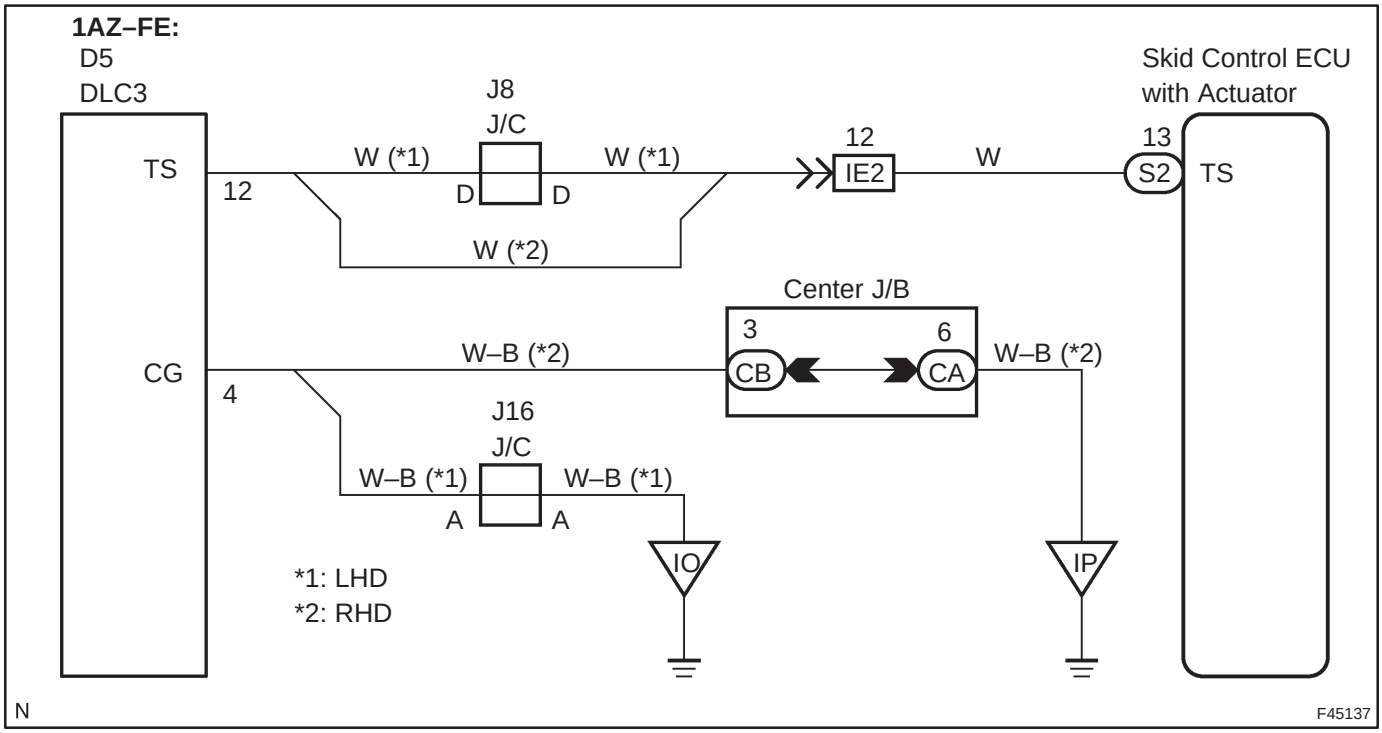

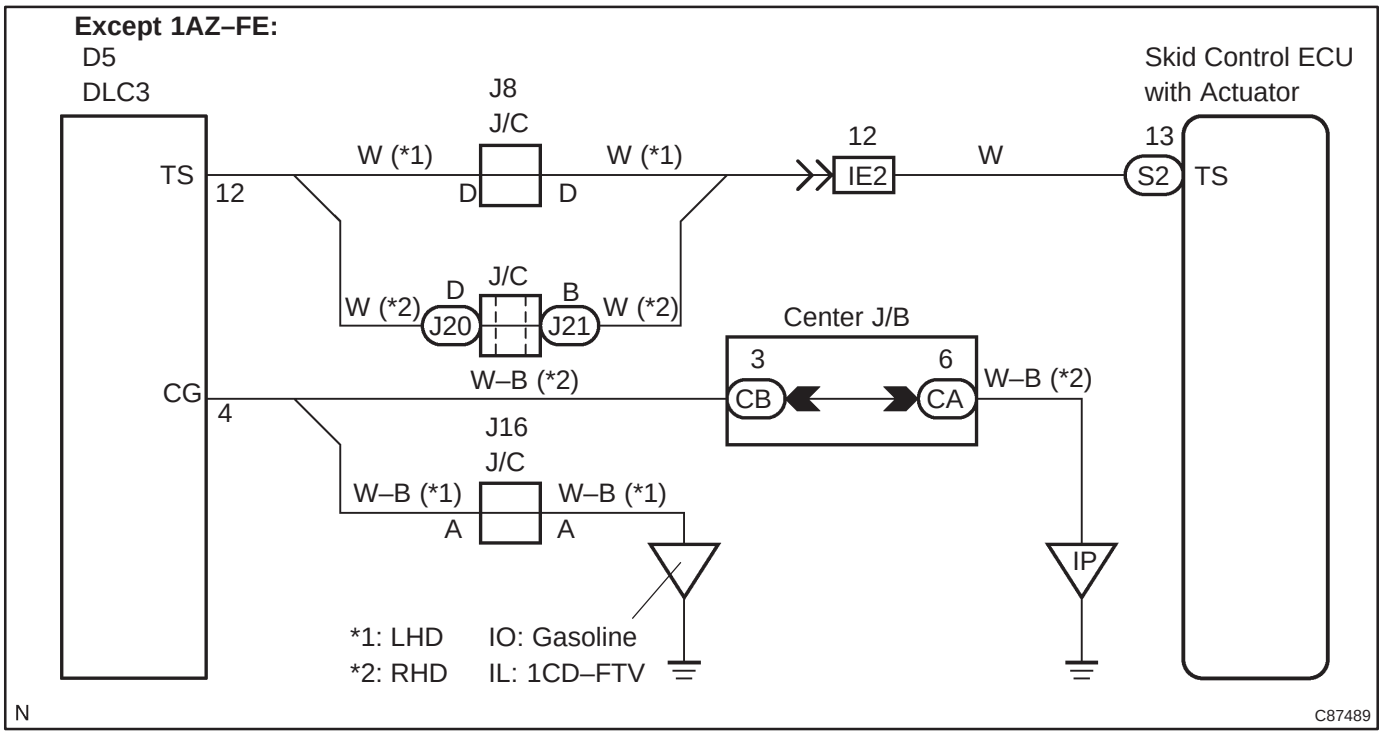

INSPECTION PROCEDURE

1	INSPECT DLC3 TERMINAL VOLTAGE(Ts TERMINAL)

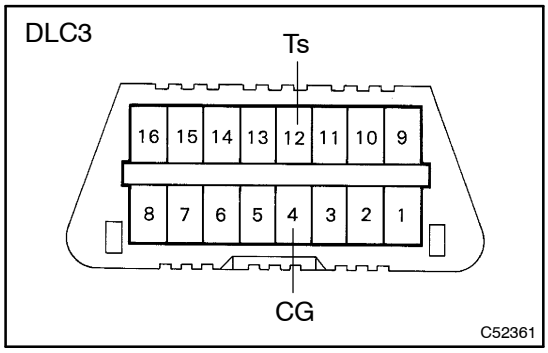

(a) Turn the ignition switch ON.
(b) Measure the voltage between terminals Ts and CG of the DLC3.
OK:
Voltage: 10 to 14 V

OK	Go to step 3

NG

2	CHECK HARNESS AND CONNECTOR(DLC3 – BODY GROUND)

(a) Check for an open or short circuit in harness and connector between terminal Ts of the DLC3 and the skid control ECU (See page 01–32).

NG	REPAIR OR REPLACE HARNESS OR CONNECTOR

OK

3	CHECK AND REPAIR HARNESS AND CONNECTOR(SKID CONTROL ECU – DLC3)

(a) Check for an open or short circuit in harness and connector between terminal CG of the DLC3 and body ground (See page 01–32).

NG	REPAIR OR REPLACE HARNESS OR CONNECTOR

OK

REPLACE BRAKE ACTUATOR ASSY(See page 32–54)

ABS WITH EBD & BA & TRC & VSC SYSTEM

HOW TO PROCEED WITH TROUBLESHOOTING

0542N–04

1	Vehicle Brought to Workshop

2	Customer Problem Analysis (See page 05–754)

3	Check and Clear DTCs and Freeze Frame Data (See page 05–756)

4	Problem Symptom Confirmation

- Symptom does not occur: Go to step 5
- Symptom occurs: Go to step 6

5	Symptom Simulation (See page 01–32)

6	DTC Check (See page 05–756)

- There is no output: Go to step 7
- There is output: Go to step 8

7	Problem Symptoms Table (See page 05–772)

- Check for fluid leakage and Go to step 10

8	DTC Chart (See page 05–766)

9	Circuit Inspection (See page 05–774 – 05–854)

HINT:
When 2 or more DTCs are detected, perform circuit inspection one by one until the problem is identified.

10	Identification of Problem

11	Repair

12	Confirmation Test

End

HINT:
Step 3, 6, 9, 12:
Diagnostic steps permitting the use of the hand–held tester.
Fail safe function:
When a failure occurs in the ABS & BA & TRC & VSC systems, the ABS warning light, the VSC warning light and the TRC OFF indicator light come on and the ABS & BA & TRC & VSC operations are prohibited. In addition to this, when the failure that disables the EBD operation occurs, the brake warning light comes on as well and the EBD operation is prohibited.

0542O–04

CUSTOMER PROBLEM ANALYSIS CHECK

ABS & EBD & BA Check Sheet

Inspector's Name :

Customer's Name		**VIN**	
		Production Date	/ /
		Licence No.	
Date Vehicle Brought In	/ /	**Odometer Reading**	km miles

Date Problem First Occurred	/ /
Frequency Problem Occurs	☐ Continuous ☐ Intermittent (times a day)

Symptoms	☐ ABS does not operate.	
	☐ ABS does not operate efficiently.	
	☐ BA does not operate.	
	☐ EBD does not operate.	
	ABS Warning Light	☐ Remains ON ☐ Does not Light Up
	Brake Warning Light (PKB released)	☐ Remains ON ☐ Does not Light Up

DTC Check	**1st Time**	☐ Normal Code ☐ Malfunction Code (Code)
	2nd Time	☐ Normal Code ☐ Malfunction Code (Code)

Freeze Frame Data	STOP LIGHT SW	☐ ON ☐ OFF
	SYSTEM	☐ NO SYS ☐ ABS ☐ BA ☐ FAIL SF
	#IG ON	
	VEHICLE SPD	km/h MPH

TRC & VSC Check Sheet

Inspector's Name :

Customer's Name		**VIN**	
		Production Date	/ /
		Licence No.	
Date Vehicle Brought In	/ /	**Odometer Reading**	km miles

Date Problem First Occurred	/ /
Frequency Problem Occurs	☐ Continuous ☐ Intermittent (times a day)

Symptoms	☐ TRAC does not operate. (Wheels spin when starting rapidly.)	
	☐ VSC does not operate. (Wheels sideslip at the time of sharp turning.)	
	TRC OFF Indicator Light	☐ Remains ON ☐ Does not Light Up
	VSC Warning Indicator	☐ Displays ☐ Does not Display
	SLIP Indicator Light	☐ Remains ON ☐ Does not Light Up
	Skid Control Buzzer	☐ Sounds ☐ Does not Sound

Check Item	**ABS Warning Light**	☐ Normal ☐ Malfunction Code (Code)
	Malfunction Indicator Light	☐ Normal ☐ Malfunction Code (Code)

DTC Check	**1st Time**	☐ Normal Code ☐ Malfunction Code (Code)
	2nd Time	☐ Normal Code ☐ Malfunction Code (Code)

Freeze Frame Data	VSC/TRC OFF SW	☐ ON ☐ OFF
	SYSTEM	☐ VSC/TRC
	SHIFT POSITION	☐ P,N ☐ 2 ☐ R ☐ 3 ☐ D ☐ 4 ☐ L ☐ FAIL
	STEERING ANG	deg
	YAW RAT	deg/s
	MAS CYL PRESS	V
	THROTTLE	deg
	MAS PRESS GRADE	MPa/s
	G (RIGHT&LEFT)	G
	G (BACK&FORTH)	G

0577Y–02

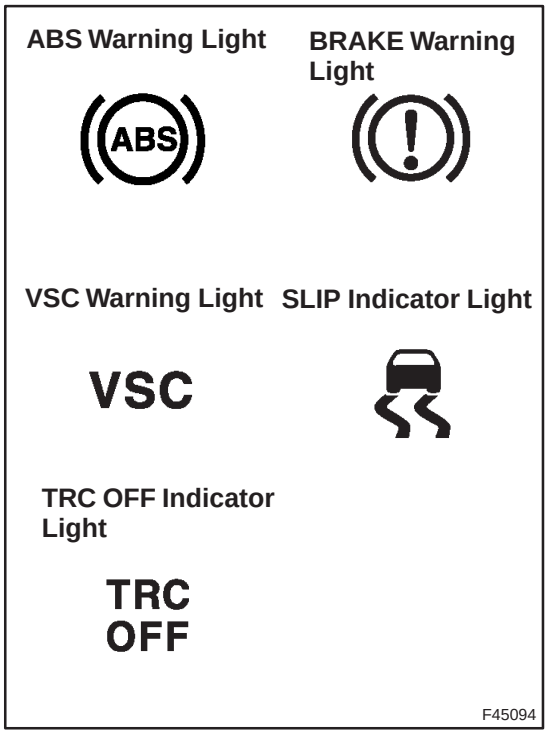

PRE–CHECK

1. DIAGNOSIS SYSTEM

(a) Check the warning lights.

(1) Release the parking brake lever.

(2) When the ignition switch is turned ON, check that the ABS warning light, Brake warning light, VSC warning light, TRC OFF indicator light and SLIP indicator light come on for approx. 3 seconds.

HINT:

- When the parking brake is applied or brake fluid level is low, the Brake warning light comes on.
- If the ECU stores DTC, the ABS warning light , VSC warning light and TRC OFF indicator light come on.
- If the indicator check result is not normal, proceed to troubleshooting for the light circuit.

Trouble Area	See page
ABS warning light circuit	05–827
Brake warning light circuit	05–840
VSC warning light circuit	05–831
TRC OFF indicator light circuit	05–844
SLIP indicator light circuit	05–848

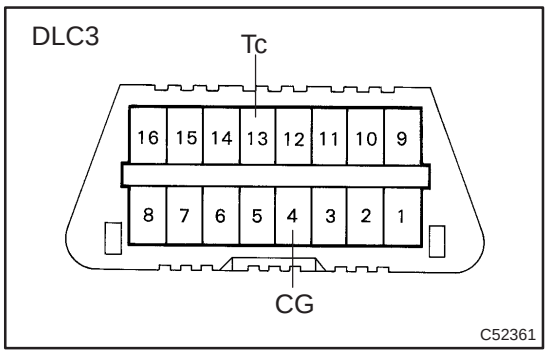

(b) Without using hand–held tester:
Check the DTC.

(1) Using SST, connect terminal Tc and CG of the DLC3.

SST 09843–18040

(2) Turn the ignition switch ON.

(3) Read the DTC from the ABS warning light or VSC warning light on the combination meter.

HINT:

- If no code appears, inspect the diagnostic circuit, ABS warning light circuit or VSC warning light circuit.

Trouble Area	See page
Tc terminal circuit	05–852
ABS warning light circuit	05–827
VSC warning light circuit	05–831

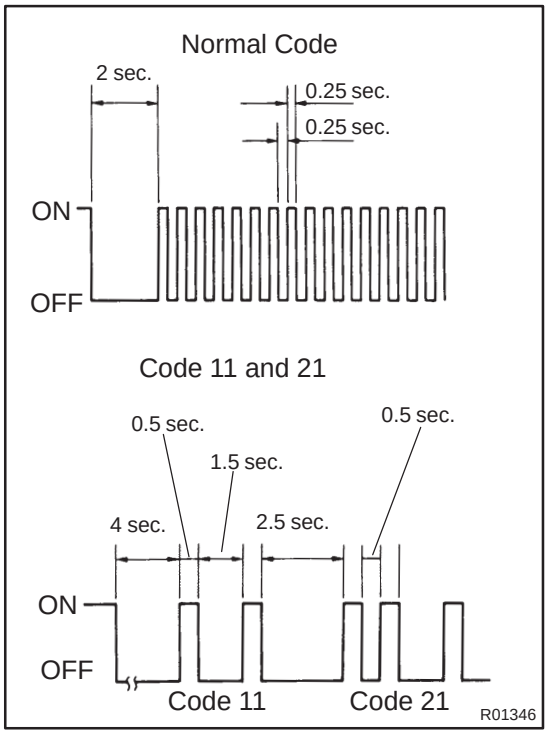

- As an example, the blinking patterns for the normal code and codes 11 and 21 are shown on the left.

(4) Codes are explained in the code table on page 05–766.

(5) After completing the check, disconnect terminal Tc and CG of the DLC3, and turn off the display.

If 2 or more DTCs are detected at the same time, the lowest numbered DTC is displayed first.

(c) With using the hand–held tester:

Check the DTC.

(1) Hook up the hand–held tester to the DLC3.

(2) Turn the ignition switch ON.

(3) Read the DTC by following the prompts on the tester screen.

HINT:

Please refer to the hand–held tester operator's manual for further details.

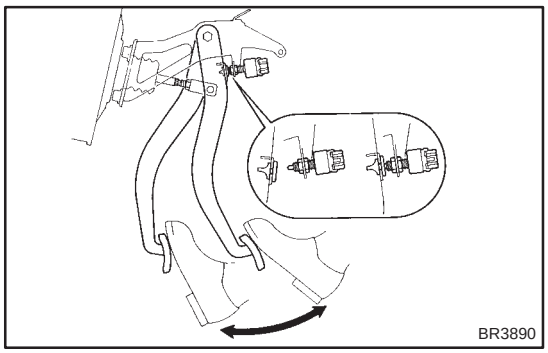

(d) Without using hand–held tester:

Clear the DTCs.

(1) Using SST, connect the terminal Tc and CG of the DLC3.

SST 09843–18040

(2) Turn the ignition switch ON.

(3) Clear the DTCs stored in the ECU by depressing the brake pedal 8 or more times within 5 seconds.

(4) Check that the ABS warning light and VSC warning light indicates the normal code blinking pattern.

(5) Remove the SST from the DLC3.

SST 09843–18040

HINT:

Disconnecting the battery cable during repairs will not erase the DTCs in the ECU.

(e) With using hand–held tester:

Clear the DTCs.

(1) Turn the ignition switch ON.

(2) Operate the hand–held tester to erase the codes.

HINT:

Please refer to the hand–held tester operator's manual for further details.

2. DATA LIST

HINT:

According to the DATA LIST displayed on the Hand–held tester, you can read the value and status of the switch, sensor, actuator and so on without parts removal. Reading the DATA LIST as a first step of trouble-shooting is one of the methods to shorten the labor time.

(a) Connect the Hand–held tester to the DLC3.
(b) Turn the ignition switch ON.
(c) From the display on the tester, read the ”DATA LIST”.

Item	Measurement Item / Range (Display)	Normal Condition	Diagnostic Note
ABS MOT RELAY	ABS motor relay / ON or OFF	ON : Motor relay ON	–
SOL RELAY	Solenoid relay / ON or OFF	ON : Solenoid relay ON	–
VSC / TRC OFF SW	VSC / TRC OFF switch / ON or OFF	ON : Switch ON OFF : Switch OFF	–
STOP LIGHT SW	Stop light switch / ON or OFF	ON : Brake pedal de-pressed OFF : Brake pedal re-leased	–
PKB SW	Parking brake switch / ON or OFF	ON : Parking brake applied OFF : Parking brake re-leased	–
WHEEL SPD FR	Wheel speed sensor (FR) reading / min.: 0 km/h (0 MPH, max.: 326 km/h (202 MPH)	Actual wheel speed	Speed indicated on speedometer
WHEEL SPD FL	Wheel speed sensor (FL) reading / min.: 0 km/h (0 MPH, max.: 326 km/h (202 MPH)	Actual wheel speed	Speed indicated on speedometer
WHEEL SPD RR	Wheel speed sensor (RR) reading / min.: 0 km/h (0 MPH, max.: 326 km/h (202 MPH)	Actual wheel speed	Speed indicated on speedometer
WHEEL SPD RL	Wheel speed sensor (RL) reading / min.: 0 km/h (0 MPH, max.: 326 km/h (202 MPH)	Actual wheel speed	Speed indicated on speedometer
DECELERAT SENS1	Lateral acceleration sensor 1 reading / min.: –1.869 G, max.: 1.869 G	Approximately 0 ± 0.1G at still condition	Reading changes when vehicle is bounced
IG VOLTAGE	ECU power supply voltage / NORMAL or TOO LOW	NORMAL : 9.8 V or over TOO LOW : Below 9.8 V	–
SFRR	ABS solenoid SFRR / ON or OFF	ON : Operate	–
SFRH	ABS solenoid SFRH / ON or OFF	ON : Operate	–
SFLR	ABS solenoid SFLR / ON or OFF	ON : Operate	–
SFLH	ABS solenoid SFLH / ON or OFF	ON : Operate	–
SRRR (SRR)	ABS solenoid SRRR (SRR) / ON or OFF	ON : Operate	–
SRRH (SRH)	ABS solenoid SRRH (SRH) / ON or OFF	ON : Operate	–

Item	Measurement Item / Range (Display)	Normal Condition	Diagnostic Note
SRLR	ABS solenoid SRLR / ON or OFF	ON : Operate	–
SRLH	ABS solenoid SRLH / ON or OFF	ON : Operate	–
SRCF(SA1)	TRC solenoid SRCF(SA1) / ON or OFF	ON : Operate	–
SRCR(SA2)	TRC solenoid SRCR(SA2) / ON or OFF	ON : Operate	–
SRMF(SMCF,SA3)	TRC solenoid SRMF(SMCF,SA3)1 / ON or OFF	ON : Operate	–
SRMR(SMCR,STR)	TRC solenoid SRMR(SMCR,STR) / ON or OFF	ON : Operate	–
ENGINE SPD	Engine Speed/ Min.: 0 rpm, Max.: 6000 rpm	Actual engine speed	–
VEHICLE SPD	Maximum wheel speed sensor reading / min.: 0 km/h (0 MPH), max.: 326 km/h (202 MPH)	Actual vehicle speed	Speed indicated on speedometer
YAW RATE	Yaw rate sensor/ Min.: –128 deg/s, Max.: 128 deg/s		–
YAW ZERO VALUE	Memorized zero value/ Min.: –128 deg/s, Max.: 128 deg/s		–
STEERING ANG	Steering sensor/ Min.: –1152 deg, Max.: 1150.875 deg		–
MAS CYL PRS1	Master cylinder pressure sensor 1 reading / min.: 0 V, max.: 5 V	When brake pedal is released : 0.3 – 0.9 V	Reading increases when brake pedal is depressed
TEST MODE	Test mode / NORMAL or TEST	NORMAL : Normal mode TEST : During test mode	
#CODES	Number of DTC recorded / min.: 0, max.: 255	Min.: 0, max.: 26	

3. ACTIVE TEST

HINT:

Performing the ACTIVE TEST using the Hand–held tester allows the relay, solenoid, actuator and so on to operate without parts removal. Performing the ACTIVE TEST as a first step of troubleshooting is one of the methods to shorten the labor time.

It is possible to display the DATA LIST during the ACTIVE TEST.

(a) Connect the Hand–held tester to the DLC3.

(b) Turn the ignition switch ON.

(c) From the display on tester, select the ”ACTIVE TEST”.

HINT:

IG must be turned ON to proceed Active Test using a hand–held tester.

*1: For VSC equipped vehicles only

Item	Vehicle Condition / Test Details	Diagnostic Note
SFRR	Turns ABS solenoid SFRR ON / OFF	Operation of solenoid (clicking sound) can be heard
SFRH	Turns ABS solenoid SFRH ON / OFF	Operation of solenoid (clicking sound) can be heard
SFLR	Turns ABS solenoid SFLR ON / OFF	Operation of solenoid (clicking sound) can be heard
SFLH	Turns ABS solenoid SFLH ON / OFF	Operation of solenoid (clicking sound) can be heard
SRRR(SRR)	Turns ABS solenoid SRRR(SRR) ON / OFF	Operation of solenoid (clicking sound) can be heard
SRRH(SRH)	Turns ABS solenoid SRRH(SRH) ON / OFF	Operation of solenoid (clicking sound) can be heard
SRLR	Turns ABS solenoid SRLR ON / OFF	Operation of solenoid (clicking sound) can be heard
SRLH	Turns ABS solenoid SRLH ON / OFF	Operation of solenoid (clicking sound) can be heard
SRCF(SA1)	Turns TRAC solenoid SRCF (SA1) ON / OFF	Operation of solenoid (clicking sound) can be heard
SRCR(SA2)	Turns TRAC solenoid SRCR (SA2) ON / OFF	Operation of solenoid (clicking sound) can be heard
SRMF(SMCF,SA3)	Turns TRC solenoid SRMF (SMCF,SA3) ON / OFF	Operation of solenoid (clicking sound) can be heard
SRMR(SMCR,STR)	Turns TRC solenoid SRMR(SMCR,STR) ON / OFF	Operation of solenoid (clicking sound) can be heard
SFRR & SFRH	Turns ABS solenoid SFRR & SFRH ON / OFF	Operation of solenoid (clicking sound) can be heard
SFLR & SFLH	Turns ABS solenoid SFLR & SFLH ON / OFF	Operation of solenoid (clicking sound) can be heard

Item	Vehicle Condition / Test Details	Diagnostic Note
SRH & SRR	Turns ABS solenoid SRH & SRR ON / OFF	Operation of solenoid (clicking sound) can be heard
SRLR & SRLH	Turns ABS solenoid SRLR & SRLH ON / OFF	Operation of solenoid (clicking sound) can be heard
SFRH & SFLH	Turns ABS solenoid SFRH & SFLH ON / OFF	Operation of solenoid (clicking sound) can be heard
SRCF & SRCR	Turns ABS solenoid SRCF & SRCR ON / OFF	Operation of solenoid (clicking sound) can be heard
SRMF & SRMR	Turns ABS solenoid SRMF & SRMR ON / OFF	Operation of solenoid (clicking sound) can be heard
SOL RELAY	Turns ABS solenoid relay ON / OFF	Operation of solenoid (clicking sound) can be heard
ABS MOT RELAY	Turns ABS motor relay ON / OFF	Operation of motor can be heard
ABS WARN LIGHT	Turns ABS warning light ON / OFF	Observe combination meter
VSC WARN LIGHT	Turns VSC warning light ON / OFF	Observe combination meter
VSC / TRC OFF IND	Turns VSC / TRC OFF indicator ON / OFF	Observe combination meter
SLIP INDI LIGHT	Turns SLIP indicator light ON / OFF	Observe combination meter
BRAKE WRN LIGHT	Turns BRAKE warning light ON / OFF	Observe combination meter
VSC WARN BUZ	Turns VSC warning buzzer ON / OFF	Buzzer can be heard

4. FREEZE FRAME DATA

(a) The vehicle (sensor) status memorized during ABS and/or VSC operation or at the time of error code detection can be displayed using the hand–held tester.

(b) Only one record of the freeze frame data is stored and the freeze frame data generated during ABS and/or VSC operation are constantly updated. Also, the number of the operations of the ignition switch ”ON” after the freeze frame data is stored can be memorized up to 31 and it can be displayed.

HINT:

If the ignition switch ”ON” operation exceeds 31 times, ”31” appears on the display.

(c) If the diagnosis code malfunction occurs, the freeze frame data at the occurrence of the malfunction is stored but the ABS actuation data is deleted.

Hand–held tester display	Measurement Item	Reference Value*
VEHICLE SPD	Vehicle speed	Speed indication of a meter
STOP LIGHT SW	Stop light switch signal	Stop light switch ON: ON, OFF: OFF
# IG ON	Numbers of operations of ignition switch ON after memorizing freeze frame data	0 to 31
MAS CYL PRESS	Master cylinder pressure sensor output voltage	Release brake pedal: 0.3 to 0.9 V Depress brake pedal: 1.5 to 4.5 V
MASS PRESS GRADE	Master cylinder pressure sensor changing gradient	–30 to 200 MPa/s
SYSTEM	Operate system	ABS operate: ABS BA operate: BA VSC (TRC) operate: VSC (TRC)
YAW RATE	Yaw rate angle sensor output value	–70 to 70
STEERING ANG	Steering sensor output value	Left turn: Increase Right turn: Drop
THROTTLE	Throttle position sensor output value	Release accelerator pedal: Approx. 0 deg Depress accelerator pedal: Approx. 90 deg
G (RIGHT & LEFT)	Right and left G	–1.869 to 1.869 G
VSC (TRC) OFF SW	TRC OFF switch signal	TRC OFF SW ON: ON OFF: OFF
SHIFT POSITION	Shift lever position	P: P R: R N: N D: D 2: 2 L: L

*: If no conditions are specifically stated for ”Idling”, it means the shift lever is at N or P position, the A/C switch is OFF and all accessory switches are OFF.

5. Without using hand–held tester:
ABS SENSOR SIGNAL CHECK (TEST MODE)

NOTICE:
After replacing the steering angle sensor and/or ECU, perform zero point calibration of the steering angle sensor or system decision (When replacing the ECU) (See step 7.).

HINT:
If the ignition switch is turned from ON to ACC or LOCK during test mode, the DTCs will be erased.

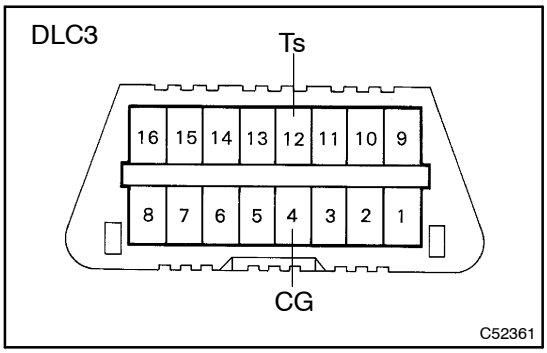

(a) Procedures for test mode:
(1) Turn the ignition switch OFF.
(2) Using SST, connect terminal Ts and CG of the DLC3.
SST 09843–18040
(3) Check that the steering wheel is in the straight–ahead position and shift the shift lever to P range.
(4) Turn the ignition switch ON.
(5) Check that the ABS warning light blinks.

HINT:
If the ABS warning light does not blink, inspect the ABS warning light circuit or Ts terminal circuit.

Trouble area	See Page
Ts terminal circuit	05–854
ABS warning light circuit	05–827

(b) Check the speed sensor signal.
(1) Drive the vehicle straight forward at the speed of 45 km/h (28 mph) or over for several seconds and check that the ABS warning light goes off.

HINT:
The sensor check may not be completed if the wheels spin or the steering wheels are steered during this check.

(c) Stop the vehicle.

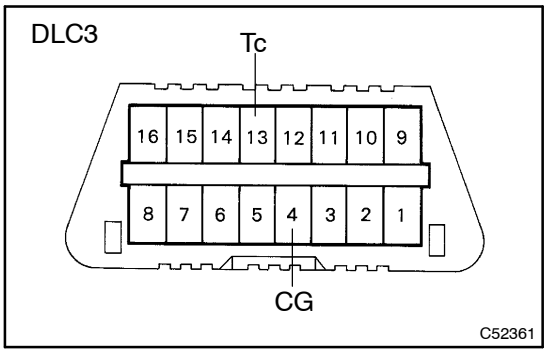

(d) Using SST, connect terminal Tc and CG of the DLC3.
SST 09843–18040

(e) Read the number of blinks of the ABS warning light.

HINT:
- See the list of DTCs on page 05–766.
- If every sensor is normal, the normal code is output (A cycle of 0.25 second ON and 0.25 second OFF is repeated).

- If 2 or more DTCs are detected at the same time, the lowest numbered code is displayed first.

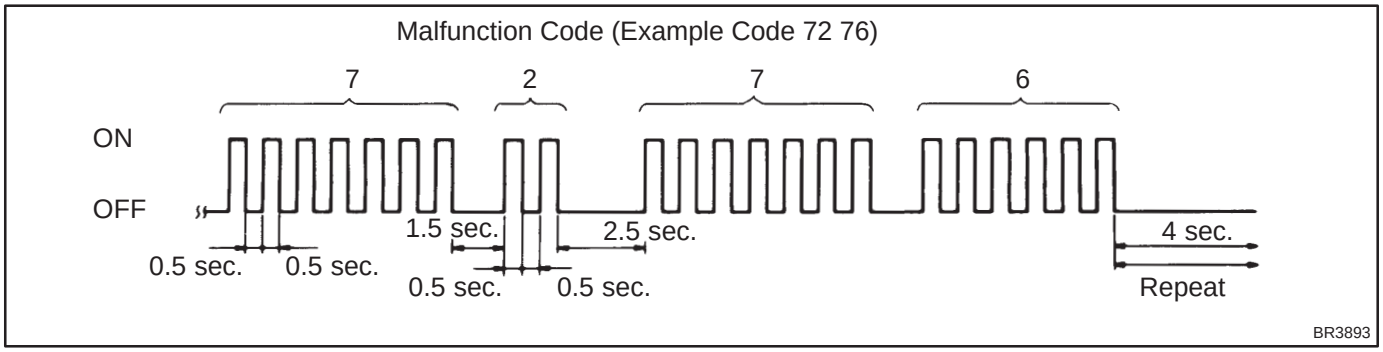

(f) After the check, disconnect the SST from terminal Ts and CG, Tc and CG of DLC3 and turn the ignition switch to OFF.
SST 09843–19040

6. With using hand–held tester:
ABS SENSOR SIGNAL CHECK (TEST MODE)

NOTICE:

After replacing the steering angle sensor and/or ECU, perform zero point calibration of the steering angle sensor or system decision (When replacing the ECU) (See step 7.).

HINT:

If the ignition switch is turned from ON to ACC or LOCK during test mode, the DTCs will be erased.

(a) Hook up the hand–held tester to the DLC3.
(b) Perform step 5. (c) to (d) on the previous page.
(c) Read the DTC by following the prompts on the tester screen.

HINT:

Please refer to the hand–held tester operator's manual for further details.

7. STEERING ANGLE SENSOR ZERO POINT CALIBRATION

NOTICE:

When replacing the steering angle sensor with column assembly or ECU, Engine and ECT ECU (A/T), Engine ECU (M/T) or when adjusting the front wheel alignment or steering wheel center point in accordance with the removing or installing or replacing the suspension, axle or steering parts, make sure to perform steering angle sensor zero point calibration.

(a) Using SST, connect terminals Ts and CG of the DLC3.
SST 09843–18040
(b) Turn the ignition switch ON and keep the shift lever at P range.
(c) Make sure the steering off center angle is less than ±3° when assembling the steering wheels (Smaller value is desirable).
(d) Press the TRC OFF switch and hold it.
(e) Check that the following conditions are satisfied.

HINT:

- Engine warning light comes on.
- ABS warning light is blinking.

(f) Depress the brake pedal 3 times or more within 2 seconds.

(g) Check that the skid control buzzer sounds for 3 seconds.

HINT:

- Press and hold the TRC OFF switch until the skid control buzzer sounds. When it starts sounding, turn off the switch.
- When the skid control buzzer starts sounding, turn off the TRC OFF switch.
- If the skid control buzzer sounds, the sensor calibration is in normal completion.
- If the skid control buzzer does not sound, perform the sensor calibration again.
- If the skid control buzzer still will not sound, there is malfunction in the steering angle sensor, so check the DTC.

0542Q–04

DIAGNOSTIC TROUBLE CODE CHART

HINT:

- Using SST 09843–18040, connect the terminal Tc and CG of the DLC3.
- If malfunction is not found when inspecting parts, inspect the ECU and ground points for poor contact.
- If a malfunction code is displayed during the DTC check, check the circuit listed for that code. For details of each code, refer to the "See page" for respective "DTC No." in the DTC chart.
- When 2 or more DTCs are detected, perform circuit inspection one by one until the problem is identified.

DTC chart of ABS system:

DTC No. (See Page)	Detection Item	Trouble Area
C0200 / 31 (05–774)	Right front wheel speed sensor signal malfunction	• Right front speed sensor • Right front speed sensor circuit • Right front speed sensor rotor
C0205 / 32 (05–774)	Left front wheel speed sensor signal malfunction	• Left front speed sensor • Left front speed sensor circuit • Left front speed sensor rotor
C0210 / 33 (05–778)	Right rear wheel speed sensor signal malfunction	• Right rear speed sensor • Right rear speed sensor circuit • Right rear speed sensor rotor
C0215 / 34 (05–778)	Left rear wheel speed sensor signal malfunction	• Left rear speed sensor • Left rear speed sensor circuit • Left rear speed sensor rotor
C0226 / 21 (05–782)	Open or short circuit in brake actuator	• Brake actuator • SFRR or SFRH circuit
C0236 / 22 (05–782)	Open or short circuit in brake actuator	• Brake actuator • SFLR or SFLH circuit
C0246 / 23 (05–782)	Open or short circuit in brake actuator	• Brake actuator • SRRR or SRRH circuit
C0256 / 24 (05–782)	Open or short circuit in brake actuator	• Brake actuator • SRLR or SRLH circuit
C0273 / 13 (05–784)	Open or short circuit in ABS motor relay circuit	• ABS motor relay • ABS motor relay circuit
C0278 / 11 (05–787)	Open or short circuit in ABS solenoid relay circuit	• ABS solenoid relay • ABS solenoid relay circuit
C1237 / 37 (05–807)	Wrong tire size	• Tire size • Speed sensor rotor
C1241 / 41 (05–808)	Low battery positive voltage or abnormally high battery positive voltage	• Battery • Charging system • Power source circuit
C1249 / 58 (05–815)	Open circuit in stop light switch circuit	• Stop lamp switch • Stop lamp switch circuit
C1300 / 62 (05–819)	Malfunction in skid control ECU	• Battery • Skid control ECU
C1330 / 35 (05–774)	Open circuit in right front speed sensor circuit	• Right front speed sensor • Right front speed sensor circuit
C1331 / 36 (05–774)	Open circuit in left front speed sensor circuit	• Left front speed sensor • Left front speed sensor circuit
C1332 / 38 (05–778)	Open circuit in right rear speed sensor circuit	• Right rear speed sensor • Right rear speed sensor circuit

C1333 / 39 (05–778)	Open circuit in left rear speed sensor circuit	• Left rear speed sensor • Left rear speed sensor circuit
Always ON (05–827)	Malfunction in skid control ECU Open circuit in ABS warning light circuit	• Battery • Charging system • Power source circuit • Skid control ECU

DTC chart of VSC system:

DTC No. (See Page)	Detection Item	Trouble Area
C0365 / 43 (05–790)	Malfunction in lateral acceleration sensor (combined in yaw rate sensor)	• Yaw rate sensor • Yaw rate sensor circuit
C0371 / 55 (05–793)	Malfunction in yaw rate sensor circuit	• Yaw rate sensor • Yaw rate sensor circuit
C1224 / 44 (05–797)	Open or short circuit in NE signal circuit	• NEO circuit • ECM • Skid control ECU
C1201/45 (05–796)	VSC shut down due to ECM failure	• ECM
C1203 / 59 (05–799)	ECM communication circuit malfunction	• TRC+ or TRC– circuit • ENG+ or ENG– circuit • ECM
C1208 / 54 (05–801)	Malfunction in steering angle sensor	• Steering angle sensor • Steering angle sensor circuit
C1225 / 25 (05–805)	Open or short circuit in brake actuator solenoid circuit (SMC1 circuit)	• Brake actuator • SMC1 circuit
C1226 / 26 (05–805)	Open or short circuit in brake actuator solenoid circuit (SMC2 circuit)	• Brake actuator • SMC2 circuit
C1227 / 27 (05–805)	Open or short circuit in brake actuator solenoid circuit (SRC1 circuit)	• Brake actuator • SRC1 circuit
C1228 / 28 (05–805)	Open or short circuit in brake actuator solenoid circuit (SRC2 circuit)	• Brake actuator • SRC2 circuit
C1246 / 53 (05–812)	Malfunction in master cylinder pressure sensor	• Master cylinder pressure sensor • Master cylinder pressure sensor circuit
C1288 / 88 (05–818)	Malfunction in ECM version	• Steering angle sensor zero point calibration
C1301 / 42 (05–821)	Malfunction in CAN communication circuit (steering angle sensor circuit, yaw rate sensor circuit)	• Steering angle sensor circuit • Yaw rate sensor circuit
C1350 / 51 (05–825)	Pump motor is locked Open circuit in pump motor ground	• Brake actuator pump motor
Always ON (05–831)	Malfunction in skid control ECU Open circuit in VSC warning light circuit	• Battery • Charging system • Power source circuit • Skid control ECU

DTC of sensor check function :

Code No.	Diagnosis	Trouble Area
C1271/71	Low output voltage of right front speed sensor	• Right front speed sensor • Sensor installation • Sensor rotor
C1272/72	Low output voltage of left front speed sensor	• Left front speed sensor • Sensor installation • Sensor rotor
C1273/73	Low output voltage of right rear speed sensor	• Right rear speed sensor • Sensor installation • Sensor rotor
C1274/74	Low output voltage of left rear speed sensor	• Left rear speed sensor • Sensor installation • Sensor rotor
C1275/75	Change in output voltage of right front speed sensor	Right front sensor rotor
C1276/76	Change in output voltage of left front speed sensor	Left front speed sensor rotor
C1277/77	Change in output voltage of right rear speed sensor	Right rear sensor rotor
C1278/78	Change in output voltage of left rear speed sensor	Left rear speed sensor rotor

056T1–03

LOCATION

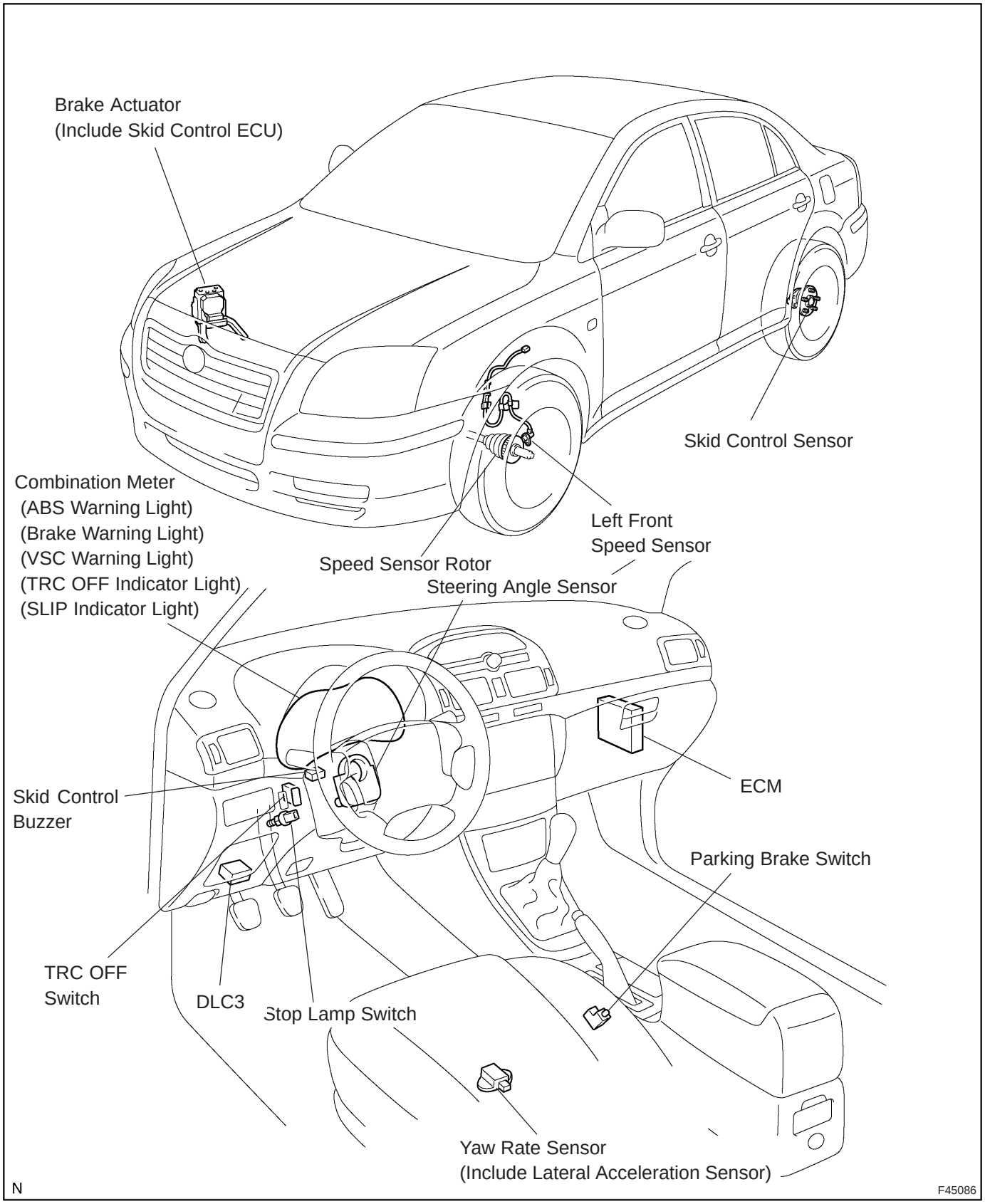

0542S–04

TERMINALS OF ECU

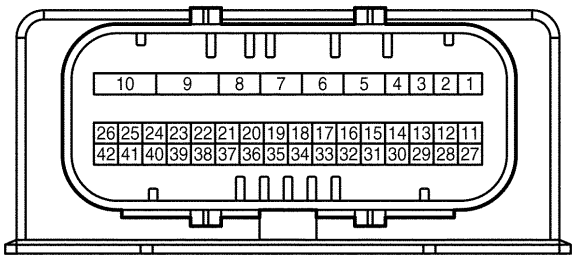

P C94401

Symbols (Terminals No.)	Wiring Color	Condition	STD Voltage (V)
WT (2) – GND (6, 10)	LG–B – W–B	IG Switch ON, TRAC OFF Light ON	Below 2.0
		IG Switch ON, TRAC OFF Light OFF	10 to 14
IND (4) – GND (6, 10)	LG – W–B	IG Switch ON, SLIP indicator light ON	Below 2.0
		IG Switch ON, SLIP indicator light OFF	10 to 14
+BS (5) – GND (6, 10)	R – W–B	Always	10 to 14
ENG+ (8) – ENG– (7)	Y – B	IG switch ON	Pulse generation
+BM (9) – GND (6, 10)	L – W–B	Always	10 to 14
PMC (11) – E2 (12)	GR – Y–R	IG switch ON, stop light switch OFF	0.3 to 0.9
SS1 (13) – SS2 (29)	W – B	Engine idling, slowly tun steering wheel	Pulse generation
IG1 (14) – GND (6, 10)	R–W – W–B	IG switch ON	10 to 14
BZ (15) – GND (6, 10)	B–Y – W–B	IG switch ON, VSC buzzer is sounded	Below 1.0 ↔ 10 to 14
		IG switch ON, VSC buzzer is not sounded	10 to 14
Tc (17) – GND (6, 10)	W–L – W–B	IG Switch ON	10 to 14
TRC+ (18) – TRC– (19)	G – L	IG switch ON	Pulse generation
EBDW (20) – GND (6, 10)	P – W–B	IG Switch ON, Brake warning light ON	5 to 9
		IG Switch ON, Brake warning light OFF	Below 2.0
FR+ (21) – FR– (22)	W – B	IG switch ON, slowly turn right front wheel	AC generation
RL+ (23) – RL– (40)	R – G	IG switch ON, slowly turn left rear wheel	AC generation
D/G (26) – GND (6, 10)	W–G – W–B	IG switch ON	8 to 12
VCM (27) – GND (6, 10)	Y–G – W–B	IG switch ON	4.5 to 5.5
Ts (28) – GND (6, 10)	W – W–B	IG switch ON	10 to 14
YIGA (30) – YGND (16)	W–L – W–G	IG Switch ON	10 to 14
PKB (31) – GND (6, 10)	B–W – W–B	IG switch ON, parking brake switch ON	Below 1.5
		IG switch ON, parking brake switch OFF	10 to 14
NEO (32) – GND (6, 10)	Y–B – W–B	Engine idling	Pulse generation
VSCW (34) – GND (6, 10)	W–R – W–B	IG Switch ON, VSC warning light ON	5 to 9
		IG Switch ON, VSC warning light OFF	Below 2.0
SP1 (35) – GND (6, 10)	L–W – W–B	Vehicle drives at about 20 km/h (12 mph)	Pulse generation
WA (36) – GND (6, 10)	R–Y – W–B	IG Switch ON, ABS warning light ON	Below 2.0
		IG Switch ON, ABS warning light OFF	10 to 14
STP (37) – GND (6, 10)	G–W – W–B	Stop light switch OFF	Below 1.5
		Stop light switch ON	8 to 14
RR+ (38) – RR– (39)	P – V	IG switch ON, slowly turn right rear wheel	AC generation
FL+ (41) – FL– (24)	L–Y – R–L	IG switch ON, slowly turn left front wheel	AC generation

CSW (42) – GND (6, 10)	G–Y – W–B	IG switch ON, TRC OFF switch pressed	Below 1.5
		IG switch ON, TRC OFF switch released	8 to 14

0542T–04

PROBLEM SYMPTOMS TABLE

If a normal code is displayed during the DTC check but the problem still occurs, check the circuits for each problem symptom in the order given in the table below and proceed to the relevant troubleshooting page.

NOTICE:

When replacing the ABS & TRACTION actuator, sensor or etc., turn the ignition switch to OFF.

Symptom	Suspect Area	See page
ABS does not operate BA does not operate EBD does not operate	If the symptoms still occur even after the following circuits in suspect areas are inspected and proved to be normal, replace the ABS & TRACTION actuator. 1. Check the DTC again and make sure that the normal code is output. 2. IG power source circuit 3. Speed sensor circuit 4. Check the brake master cylinder with a ABS actuator checker or hand–held tester. If there is malfunction, check the hydraulic circuit for leakage.	 05–756 05–808 05–774 05–778 32–56
ABS does not operate properly BA does not operate properly EBD does not operate properly	If the symptoms still occur even after the following circuits in suspect areas are inspected and proved to be normal, replace the ABS & TRACTION actuator. 1. Check the DTC again and make sure that the normal code is output. 2. Speed sensor circuit 3. Stop light switch circuit 4. Check the brake master cylinder with a ABS actuator checker or hand–held tester. If there is malfunction, check the hydraulic circuit for leakage.	 05–756 05–774 05–778 05–815 32–56
ABS warning light malfunction	1. ABS warning light circuit 2. ABS & TRACTION actuator	05–827 –
DTC of ABS check cannot be performed	If the symptoms still occur even after the following circuits in suspect areas are inspected and proved to be normal, replace the ABS & TRACTION actuator. 1. Check the DTC again and make sure that the normal code is output. 2. Tc terminal circuit	 05–756 05–852
Sensor signal check cannot be performed	1. Ts terminal circuit 2. ABS & TRACTION actuator	05–854 –
TRC does not operate	If the symptoms still occur even after the following circuits in suspect areas are inspected and proved to be normal, replace the ABS & TRACTION actuator. 1. Check the DTC again and make sure that the normal code is output. 2. IG power source circuit 3. Check the hydraulic circuit for leakage. 4. Speed sensor circuit	 05–756 05–808 – 05–774 05–778

Symptom	Suspect Area	See page
VSC does not operate	If the symptoms still occur even after the following circuits in suspect areas are inspected and proved to be normal, replace the ABS & TRACTION actuator. 1. Check the DTC again and make sure that the normal code is output. 2. IG power source circuit 3. Check the hydraulic circuit for leakage. 4. Speed sensor circuit 5. Yaw rate sensor and deceleration sensor circuit 6. Steering angle sensor circuit	 05–756 05–808 – 05–774 05–778 05–790 05–793 05–801
SLIP indicator light malfunction	1. SLIP indicator light circuit 2. ABS & TRACTION actuator	05–848 –
TRC OFF indicator malfunction	If the symptoms still occur even after the following circuits in suspect areas are inspected and proved to be normal, replace the ABS & TRACTION actuator. 1. Check the DTC again and make sure that the normal code is output. 2. TRC OFF switch circuit	 05–756 05–844
DTC of VSC check cannot be performed	If the symptoms still occur even after the following circuits in suspect areas are inspected and proved to be normal, replace the ABS & TRACTION actuator. 1. Check the DTC again and make sure that the normal code is output. 2. Tc terminal circuit	 05–756 05–852
VSC warning light malfunction	If the symptoms still occur even after the following circuits in suspect areas are inspected and proved to be normal, replace the ABS & TRACTION actuator. 1. Check the DTC again and make sure that the normal code is output. 2. VSC warning circuit	 05–756 05–831

DTC	C0200/31	RIGHT FRONT SPEED SENSOR

DTC	C0205/32	LEFT FRONT SPEED SENSOR

DTC	C1330/35	RIGHT FRONT SPEED SENSOR CIRCUIT

DTC	C1331/36	LEFT FRONT SPEED SENSOR CIRCUIT

CIRCUIT DESCRIPTION

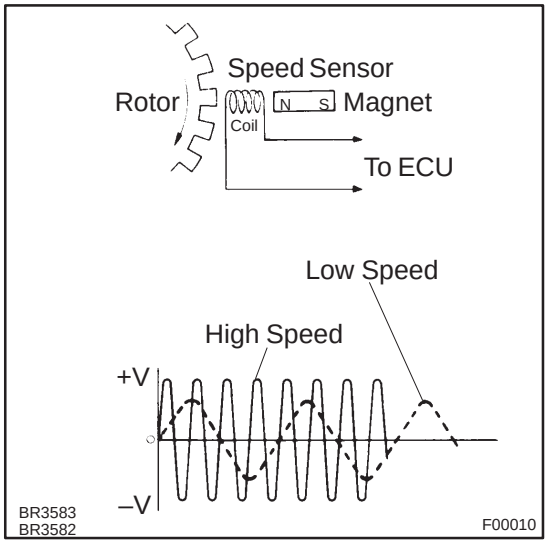

The speed sensor detects wheel speed and transmits the appropriate signals to the ECU. These signals are used for control of the ABS and VSC control systems. Each of the front and rear rotors has 48 serrations.
When the rotors rotate, the magnetic field generated by the permanent magnet in the speed sensor induces an AC voltage. Since the frequency of this AC voltage changes in direct proportion to the speed of the rotor, the frequency is used by the ECU to detect the speed of each wheel.

DTC No.	DTC Detecting Condition	Trouble Area
C0200/31 C0205/32	When any of the following 1 to 3 is detected : 1. Vehicle speed is more than 40 km/h (25 mph), pulses are not input for 0.01 second. 2. After the initial start or restart and when the vehicle speed has reached 12 km/h (7 mph), the wheel speed of 0 km/h (0 mph) is detected. 3. After the initial start or restart and when the vehicle speed has reached 18 km/h (11 mph), the front wheel speed of 0 km/h (0 mph) is detected.	• Right front and left front speed sensor • Speed sensor rotor
C1330/35 C1331/36	Detecting abnormality in the resistance value of each speed sensor.	• Right front and left front speed sensor • Speed sensor circuit

HINT:
DTC No. C0200/31 and C1330/35 are for the right front speed sensor.
DTC No. C0205/32 and C1331/36 are for the left front speed sensor.

WIRING DIAGRAM

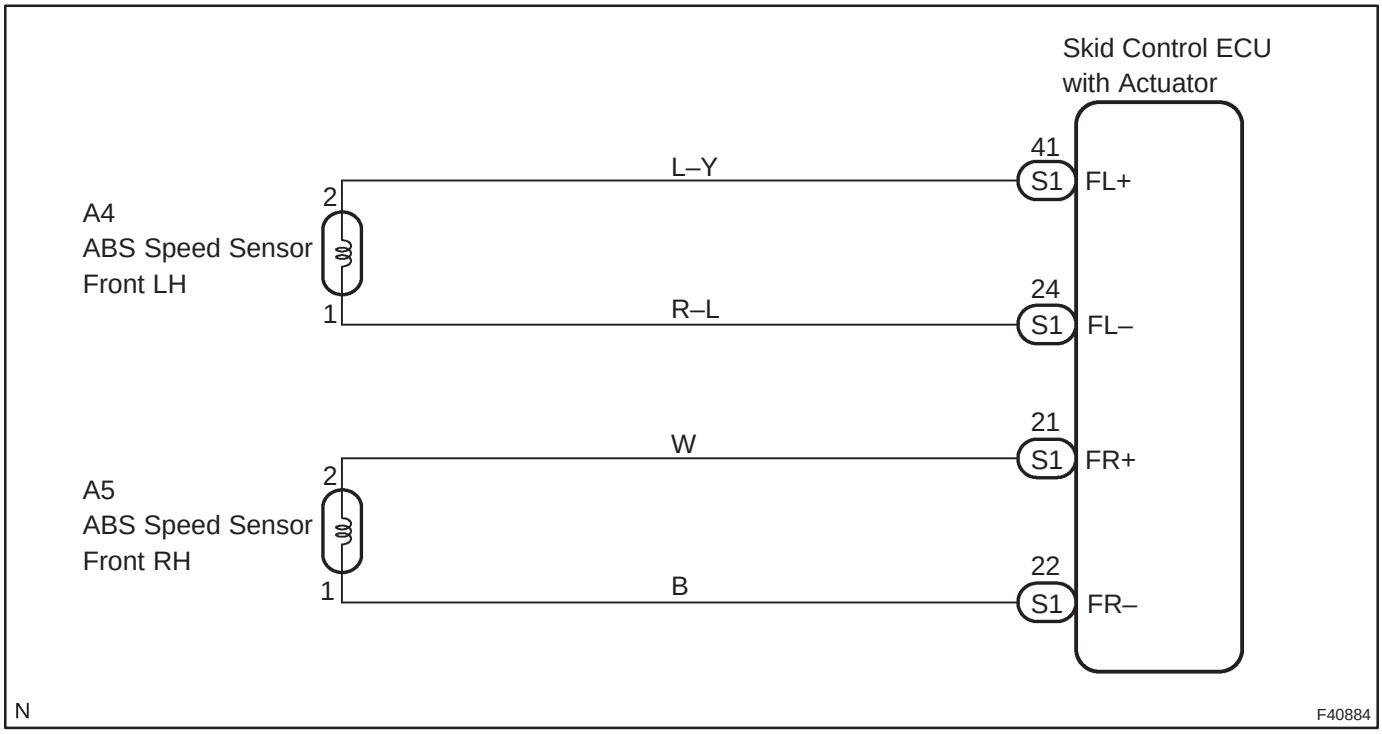

INSPECTION PROCEDURE

HINT:
Start the inspection from step 1 if you are using the hand–held tester and start from step 2 if you are not using the hand–held tester.

1	READ VALUE OF HAND–HELD TESTER(FRONT SPEED SENSOR)

(a) Select the item "WHEEL SPEED FL (FR)" in the DATA LIST and read the value displayed on the hand–held tester.
(b) Check that there is no difference between the speed value output from the speed sensor displayed on the hand–held tester and the speed value displayed on the speedometer when driving the vehicle.
OK:
There is almost no difference in the displayed speed value.

HINT:
There is tolerance of ±10 % in the speedometer indication.

OK → **Go to step 5**

NG

2 INSPECT FRONT SPEED SENSOR

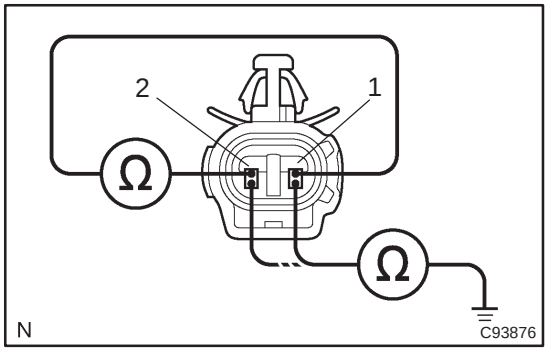

(a) Remove the fender liner.
(b) Disconnect the speed sensor connector.
(c) Measure resistance between terminals 1 and 2 of the speed sensor connector.
OK:
Resistance: 1.2 to 1.6 kΩ at 20°C (68°F)
(d) Measure resistance between each of terminals 1 and 2 of the speed sensor connector and body ground.
OK:
Resistance: 1 MΩ or higher

NG → **REPLACE SPEED SENSOR FRONT RH**

NG → **REPLACE SPEED SENSOR FRONT LH**

NOTICE:
Check the speed sensor signal last (See page 05–756).

OK

3 CHECK HARNESS AND CONNECTOR(FRONT SPEED SENSOR–SKID CONTROL ECU)

(a) Check for an open and short circuit in harness and connector between each front speed sensor and the skid control ECU connector (See page 01–32).

NG → **REPAIR OR REPLACE HARNESS OR CONNECTOR**

OK

4 INSPECT SPEED SENSOR AND SENSOR ROTOR SERRATIONS

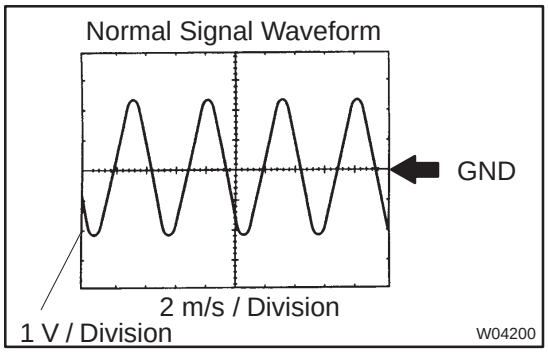

(REFERENCE) INSPECTION USING OSCILLOSCOPE
(a) Connect the oscilloscope to the terminals FR+ – FR– and FL+ – FL– of the skid control ECU.
(b) Drive the vehicle at about 30 km/h (19 mph), and check the signal waveform.

HINT:
- As the vehicle speed (wheel revolution speed) increases, a cycle of the waveform becomes shorter and the fluctuation in the output voltage becomes greater.
- When noise is identified in the waveform on the oscilloscope, error signals are generated due to the speed sensor rotor's scratches, looseness or foreign matter deposited on it.

OK → **REPLACE ABS & TRACTION ACTUATOR ASSY (See page 32–57)**

NG

5 INSPECT FRONT SPEED SENSOR INSTALLATION

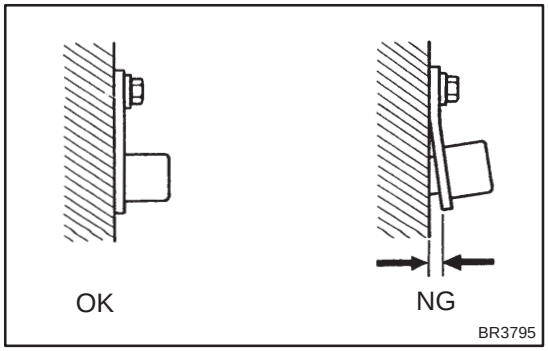

(a) Check the speed sensor installation.
OK:
The installation bolt is tightened properly and there is no clearance between the sensor and front steering knuckle.
Torque: 8.0 N·m (82 kgf·cm, 71 in.·lbf)

NG → **REPLACE SPEED SENSOR FRONT RH**

NG → **REPLACE SPEED SENSOR FRONT LH**

NOTICE:
Check the speed sensor signal last (See page 05–756).

OK

6 INSPECT SPEED SENSOR TIP

(a) Remove the front speed sensor (See page 32–59).
(b) Check the sensor tip.
OK:
No scratches or foreign objects on the sensor tip.

NG → **CLEAN OR REPAIR SPEED SENSOR**

NOTICE:
Check the speed sensor signal last (See page 05–756).

OK

7 INSPECT SPEED SENSOR ROTOR

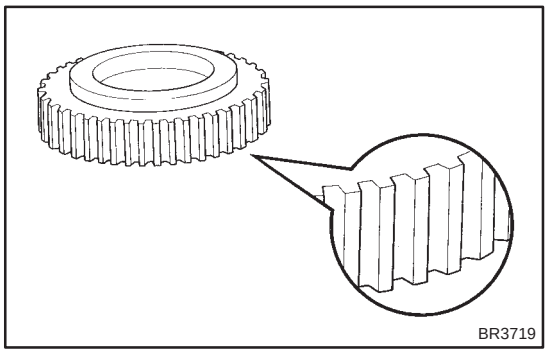

(a) Remove the front speed sensor rotor (See page 30–6).
(b) Check the sensor rotor serrations.
OK:
No scratches, missing teeth or foreign objects.

HINT:
If a foreign object is attached, remove it and after reassembling, check the output waveform.

NG → **CLEAN OR REPAIR SPEED SENSOR ROTOR**

NOTICE:
Check the speed sensor signal last (See page 05–756).

OK

REPLACE ABS & TRACTION ACTUATOR ASSY(See page 32–57)

DTC	C0210/33	RIGHT REAR SPEED SENSOR

DTC	C0215/34	LEFT REAR SPEED SENSOR

DTC	C1332/38	RIGHT REAR SPEED SENSOR CIRCUIT

DTC	C1333/39	LEFT REAR SPEED SENSOR CIRCUIT

CIRCUIT DESCRIPTION

Refer to DTC C0200/31, C0205/32, C1330/35, C1331/36 on page 05–774.

DTC No.	DTC Detecting Condition	Trouble Area
C0210/33 C0215/34	When any of the following 1 to 3 is detected : 1. Vehicle speed is more than 40 km/h (25 mph), pulses are not input for 0.01 second. 2. After the initial start or restart and when the vehicle speed has reached 12 km/h (7 mph), the wheel speed of 0 km/h (0 mph) is detected. 3. After the initial start or restart and when the vehicle speed has reached 18 km/h (11 mph), the front wheel speed of 0 km/h (0 mph) is detected.	• Right rear and left rear speed sensor • Speed sensor rotor
C1332/38 C1333/39	Detecting abnormality in the resistance value of each speed sensor.	• Right rear and left rear speed sensor • Speed sensor circuit

HINT:
DTC No. C0210/33, C1332/38 are for the right rear speed sensor.
DTC No. C0215/34, C1333/39 are for the left rear speed sensor.

WIRING DIAGRAM

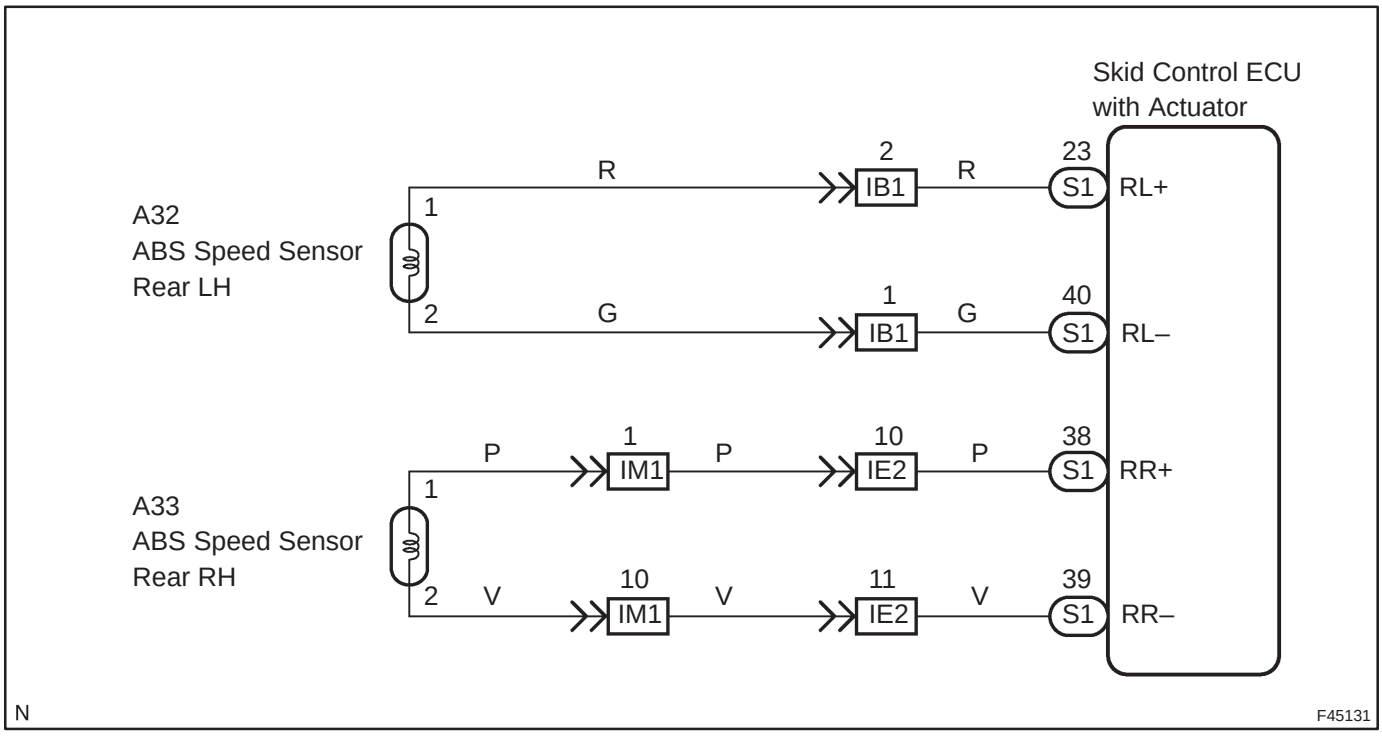

INSPECTION PROCEDURE

HINT:

Start the inspection from step 1 if you are using the hand–held tester and start from step 2 if you are not using the hand–held tester.

1	READ VALUE OF HAND–HELD TESTER(REAR SPEED SENSOR)

(a) Select the item "WHEEL SPEED RL (RR)" in the DATA LIST and read the value displayed on the hand–held tester.

(b) Check that there is no difference between the speed value output from the speed sensor displayed on the hand–held tester and the speed value displayed on the speedometer when driving the vehicle.

OK:

There is almost no difference in the displayed speed value.

HINT:

There is tolerance of ± 10 % in the speedometer indication.

OK	Go to step 5

NG

2	INSPECT SKID CONTROL SENSOR

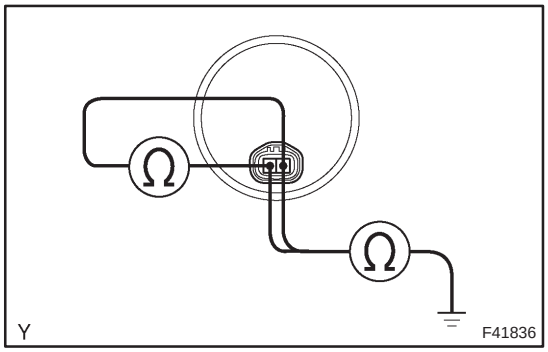

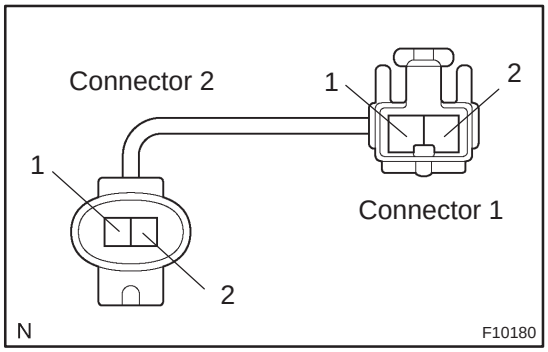

(a) Disconnect the skid control sensor connector.

(b) Measure resistance between terminals 1 and 2 of the speed sensor connector.

OK:

Resistance: 2.2 kΩ or less

(c) Measure resistance between each of terminals 1 and 2 of the skid control sensor connector and body ground.

OK:

Resistance: 1 MΩ or higher

Skid control Sensor Sub–Wire Harness:

(a) Disconnect the sub–wire harness connector from the floor wire harness

(b) Make sure that there is no looseness at the connector lock part and connecting part of the connector.

(c) Measure resistance between terminal 1 of the connector 1 and terminal 2 of the connector 2.

OK: 1 Ω or lower

(d) Measure resistance between terminal 2 of the connector 1 and terminal 1 of the connector 2.

OK: 1 Ω or lower

(e) Measure resistance between terminals 1 and 2 of the speed sensor connector 1 and body ground.

OK: 10 MΩ or higher

NG	REPLACE SKID CONTROL SENSOR

NOTICE:

Check the speed sensor signal last (See page 05–756).

OK

3	CHECK HARNESS AND CONNECTOR(REAR SPEED SENSOR – SKID CONTROL ECU)

(a) Check for an open or short circuit in harness and connector between each skid control sensor and the skid control ECU (See page 01–32).

NG → **REPAIR OR REPLACE HARNESS OR CONNECTOR**

OK

4	INSPECT SPEED SENSOR AND SENSOR ROTOR SERRATIONS

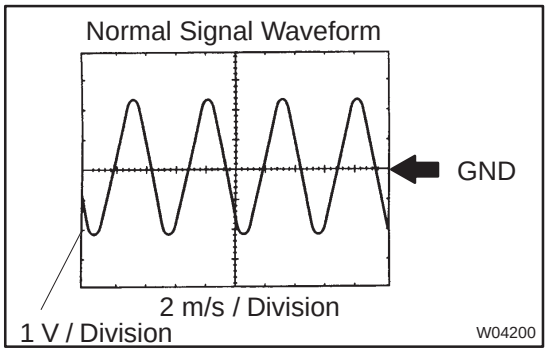

(REFERENCE) INSPECTION USING OSCILLOSCOPE

(a) Connect the oscilloscope to the terminals RR+ – RR– and RL+ – RL– of the skid control ECU.

(b) Drive the vehicle at about 30 km/h (19 mph), and check the signal waveform.

HINT:

- As the vehicle speed (wheel revolution speed) increases, a cycle of the waveform becomes shorter and the fluctuation in the output voltage becomes greater.
- When noise is identified in the waveform on the oscilloscope, error signals are generated due to the speed sensor rotor's scratches, looseness or foreign matter deposited on it.

OK → **REPLACE ABS & TRACTION ACTUATOR ASSY (See page 32–57)**

NG

5	INSPECT SKID CONTROL SENSOR INSTALLATION

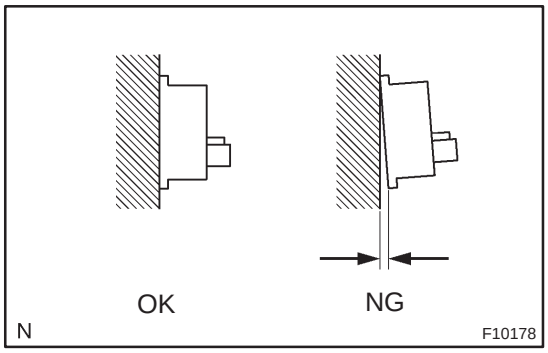

(a) Check the sensor installation.

OK:

There is no clearance between the sensor and rear axle carrier.

NG → **REPLACE SKID CONTROL SENSOR**

NOTICE:

Check the speed sensor signal last (See page 05–756).

OK

6	INSPECT SKID CONTROL SENSOR TIP

(a) Remove the skid control sensor (See page 32–61).
(b) Check the sensor tip.
OK:
No scratches or foreign objects on the sensor tip.

NG → **CLEAN OR REPAIR SKID CONTORL SENSOR**

NOTICE:
Check the speed sensor signal last (See page 05–756).

OK

7	INSPECT SENSOR ROTOR

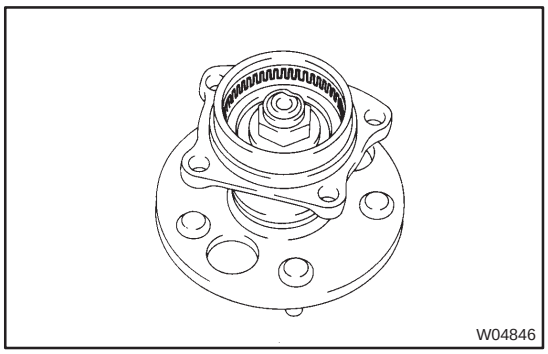

(a) Check the sensor rotor serrations.
OK:
No scratches, missing teeth or foreign objects.

NG → **REPLACE REAR AXLE HUB & BEARING ASSY RH**

NG → **REPLACE REAR AXLE HUB & BEARING ASSY LH**

NOTICE:
Check the speed sensor signal last (See page 05–756).

OK

REPLACE ABS & TRACTION ACTUATOR ASSY(See page 32–57)

NOTICE:
Do not reuse the skid control sensor.

DTC	C0226/21	SFR SOLENOID CIRCUIT

DTC	C0236/22	SFL SOLENOID CIRCUIT

DTC	C0246/23	SRR SOLENOID CIRCUIT

DTC	C0256/24	SRL SOLENOID CIRCUIT

CIRCUIT DESCRIPTION

The solenoid goes on when receiving signals from the ECU and controls the pressure action on the wheel cylinders to control the braking force.

DTC No.	DTC Detecting Condition	Trouble Area
C0226/21 C0236/22 C0246/23 C0256/24	Solenoid valve signal does not match to the check result.	• Each solenoid valve

WIRING DIAGRAM

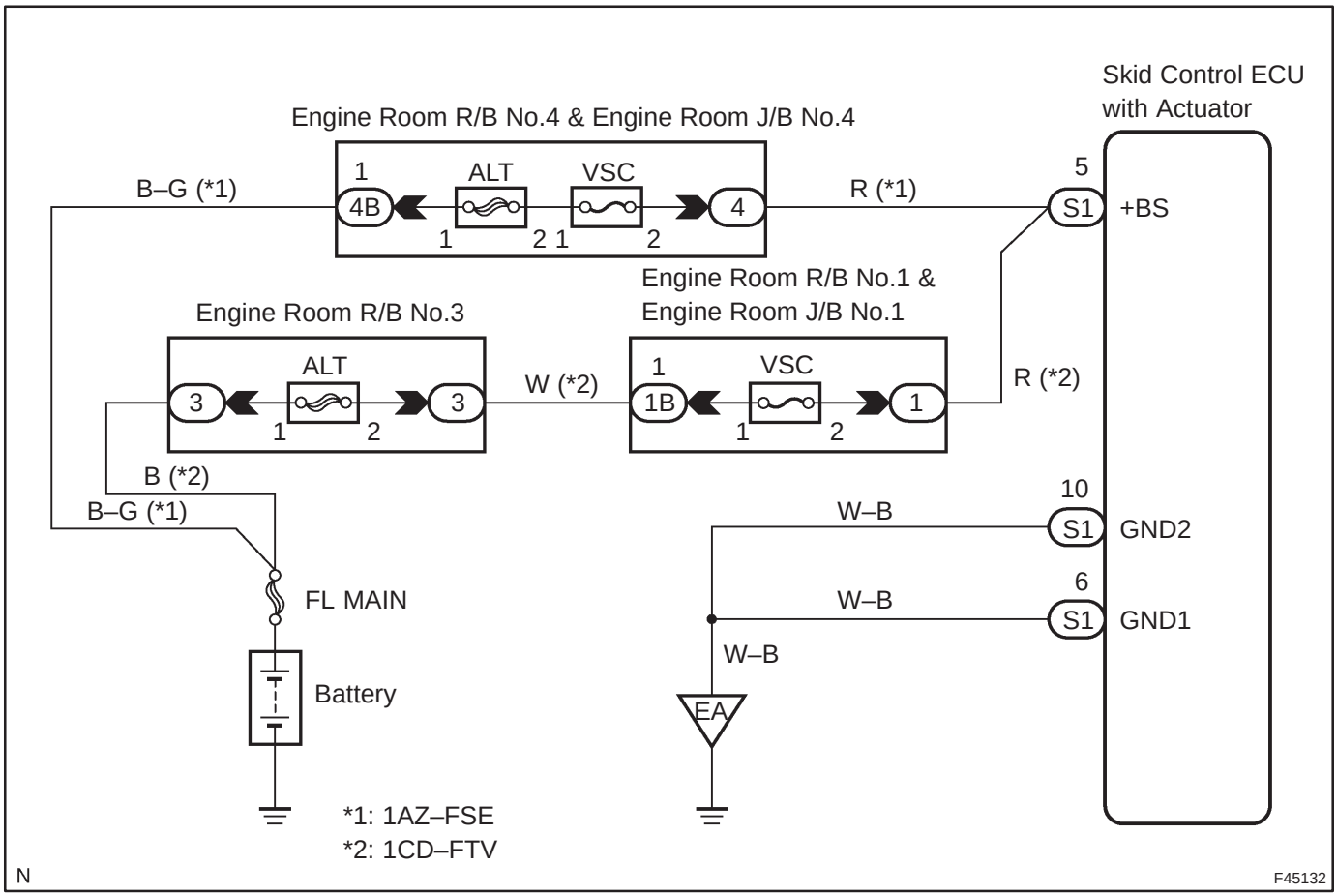

INSPECTION PROCEDURE

1	RECONFIRM DTC

(a) Check if other DTCs are detected (See page 05–756).

YES → **REPAIR CIRCUIT INDICATED BY OUTPUT CODE**

NO

REPLACE ABS & TRACTION ACTUATOR ASSY(See page 32–57)

DTC	C0273/13	OPEN OR SHORT CIRCUIT IN ABS MOTOR RELAY CIRCUIT

CIRCUIT DESCRIPTION

The ABS motor relay supplies power to the ABS pump motor. While the ABS & BA & TRC & VSC are activated, the ECU switches the motor relay ON and operates the ABS pump motor.

DTC No.	DTC Detecting Condition	Trouble Area
C0273/13	Detection of any conditions from 1 to 3: 1. After actuation of the motor relay, pump motor voltage is not supplied within 0.08 second. 2. Pump motor voltage is at high level for 2.5 seconds or more although motor relay does not actuate . 3. Pump motor voltage keeps low level for longer than 0.04 second and the pump repeats activating for 0.7 seconds 3 times maximum. At the last time of activation, the pump motor goes dead because of short circuit.	• ABS motor relay • ABS motor relay circuit

WIRING DIAGRAM

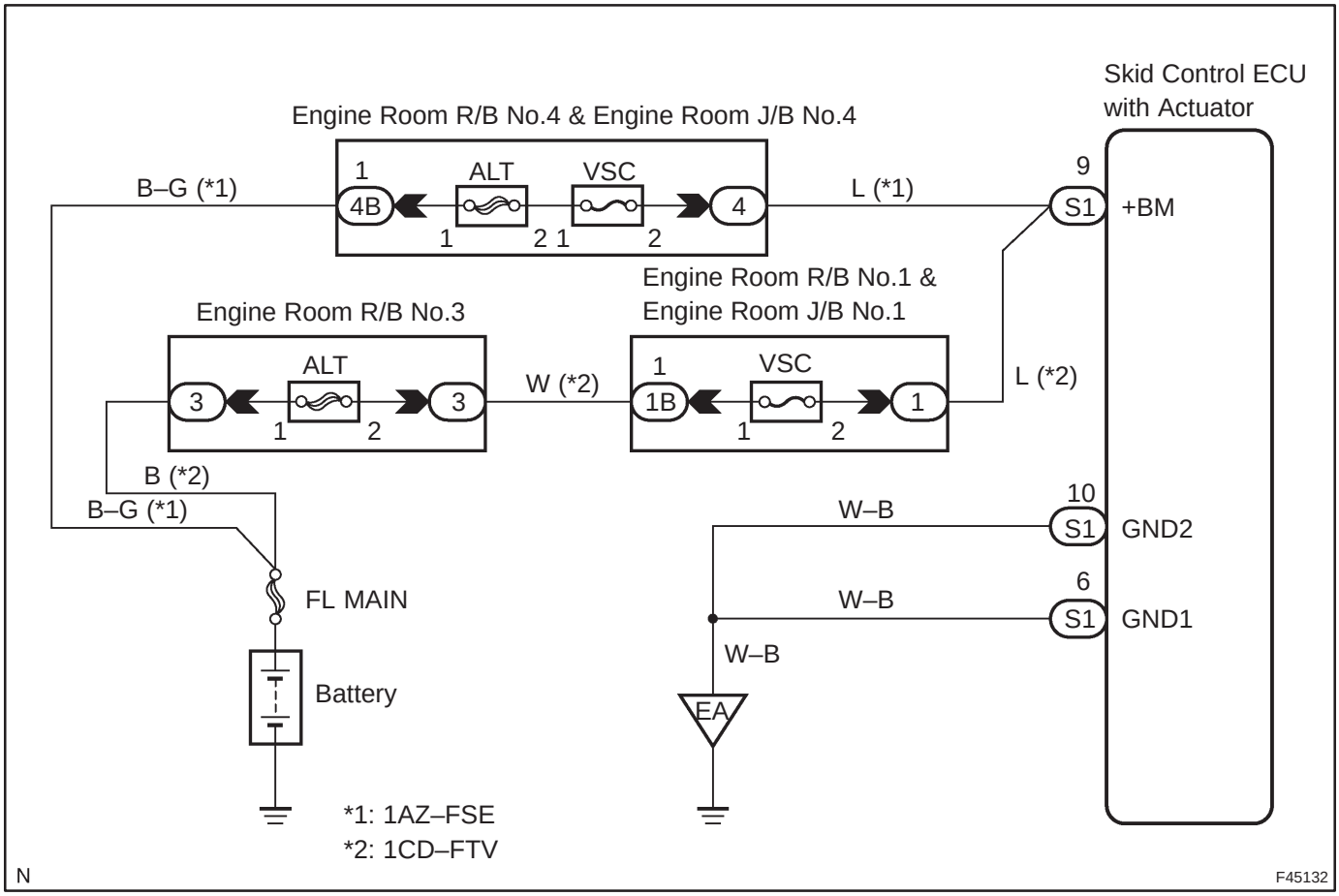

INSPECTION PROCEDURE

HINT:

Start the inspection from step 1 if you are using the hand–held tester and start from step 2 if you are not using the hand–held tester.

1	PERFORM ACTIVE TEST BY HAND–HELD TESTER(ABS MOTOR RELAY)

(a) Check the operation sound of the ABS motor individually when operating it with the hand–held tester.
OK:
The operation sound of the ABS motor is heard.

OK → **IF THE SAME CODE IS STILL OUTPUT AFTER THE DTC IS DELETED, CHECK THE CONTACT CONDITION OF EACH CONNECTION**

NG

2	INSPECT SKID CONTROL ECU CONNECTOR(+BM TERMINAL VOLTAGE)

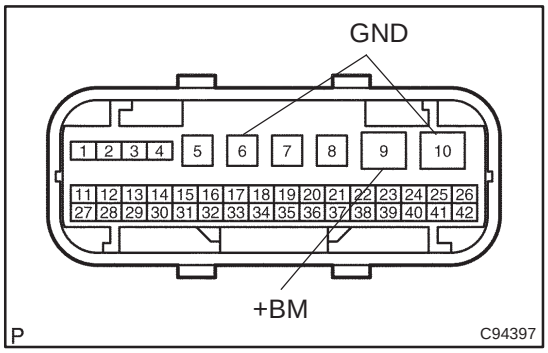

(a) Disconnect the skid control ECU connector.
(b) Measure the voltage between terminals +BM and GND of the skid control ECU harness side connector.
OK:
Voltage: 10 to 14 V

OK → **IF THE SAME CODE IS STILL OUTPUT AFTER THE DTC IS DELETED, CHECK THE CONTACT CONDITION OF EACH CONNECTION**

NG

3 INSPECT FUSE(VSC FUSE)

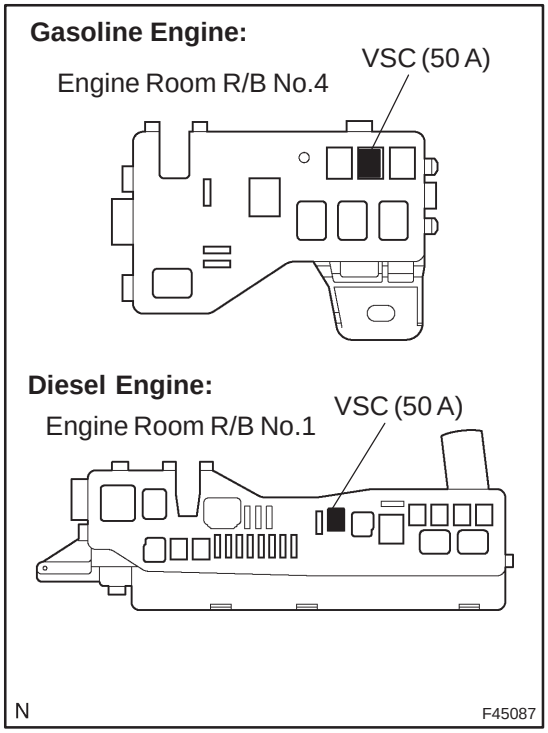

(a) Remove the VSC (50 A) fuse from the engine room R/B No.4 (Gasoline engine) or engine room R/B No.1 (Diesel engine).

(b) Check continuity of the VSC fuse.

OK:

Continuity

NG → **CHECK FOR SHORT IN ALL HARNESS AND COMPONENTS CONNECTED FUSE**

OK

4 INSPECT SKID CONTROL ECU CONNECTOR(GND TERMINAL CONTINUITY)

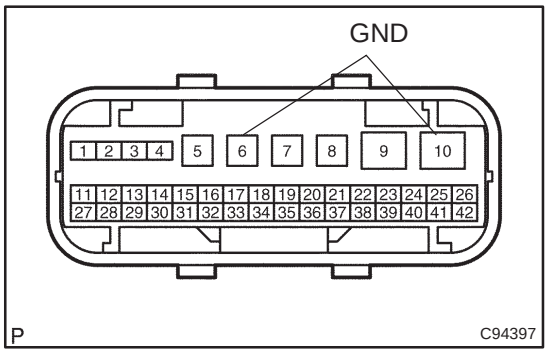

(a) Measure resistance between terminal GND of the skid control ECU harness side connector and body ground.

OK:

Resistance: 1 Ω or less

NG → **CHECK AND REPAIR HARNESS AND CONNECTOR(GND TERMINAL – BODY GROUND)(See page 01–32)**

OK

CHECK AND REPAIR HARNESS AND CONNECTOR(BATTERY – +BM TERMINAL) (See page 01–32)

DTC	C0278/11	OPEN OR SHORT CIRCUIT IN ABS SOLENOID RELAY

CIRCUIT DESCRIPTION

This relay supplies power to each ABS solenoid. After the ignition switch is turned ON, if the initial check is OK, the relay goes on.

DTC No.	DTC Detecting Condition	Trouble Area
C0278/11	Detection of any conditions from 1 to 3: 1. 3 or more solenoid valves are shown faulty in response and simultaneously valve supply voltage is detected faulty. 2. Solenoid valve relay is not turned OFF.	• ABS solenoid relay • ABS solenoid relay circuit

WIRING DIAGRAM

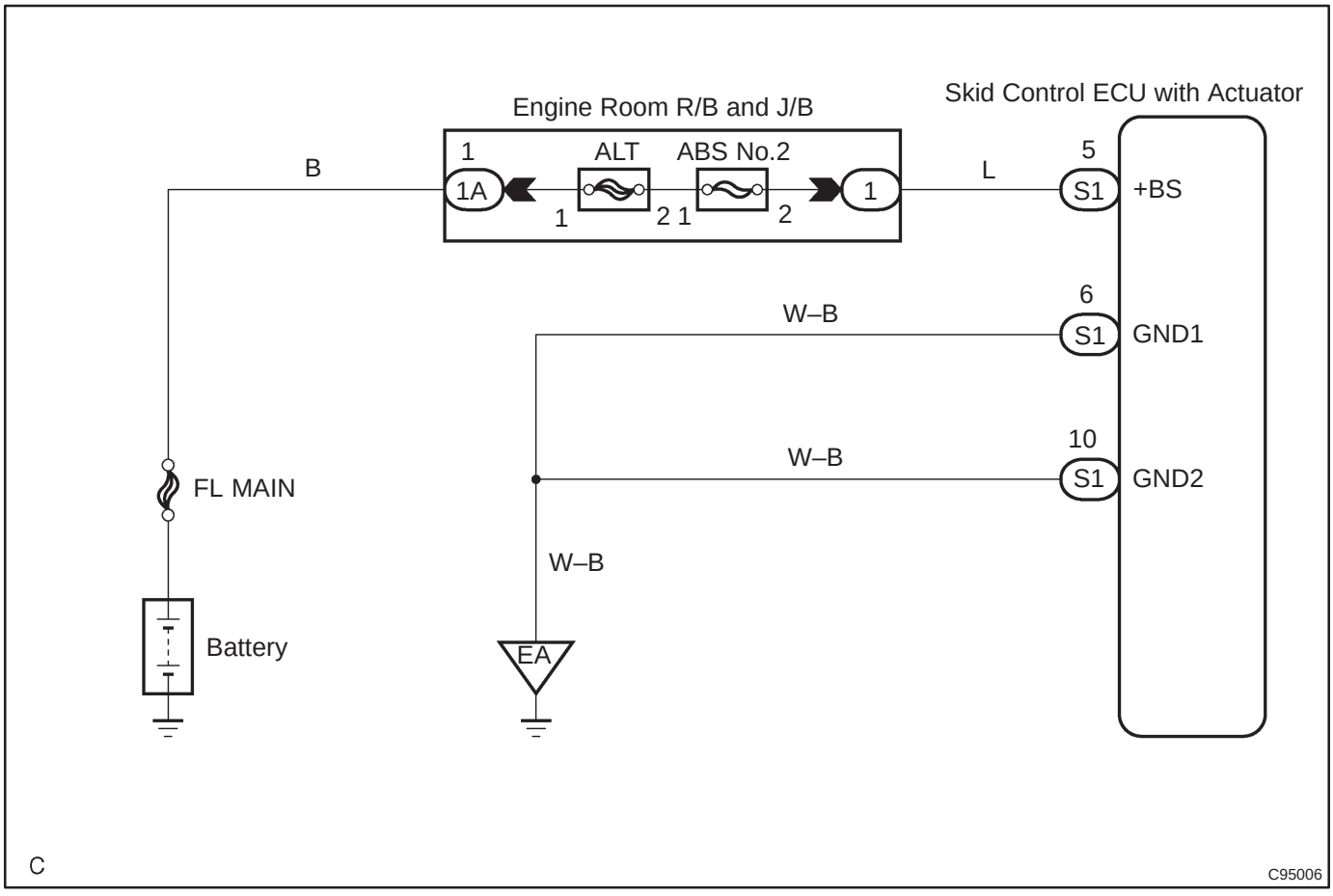

INSPECTION PROCEDURE

1 INSPECT SKID CONTROL ECU CONNECTOR(+BS TERMINAL VOLTAGE)

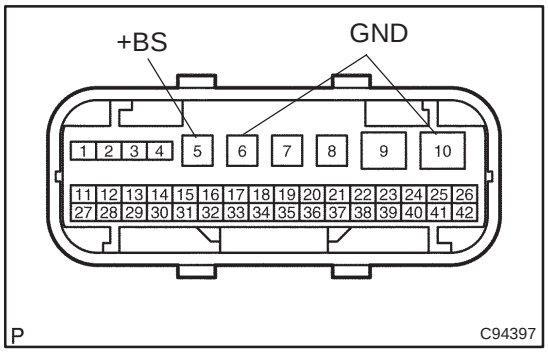

(a) Disconnect the skid control ECU connector.
(b) Measure the voltage between terminals +BS and GND of the skid control ECU harness side connector.
OK:
Voltage: 10 to 14 V

OK → **IF THE SAME CODE IS STILL OUTPUT AFTER THE DTC IS DELETED, CHECK THE CONTACT CONDITION OF EACH CONNECTION**

NG

2 INSPECT FUSE(VSC FUSE)

Gasoline Engine:

Engine Room R/B No.4

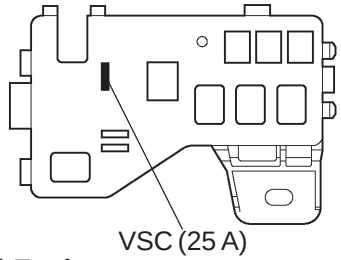

Diesel Engine:

Engine Room R/B No.1

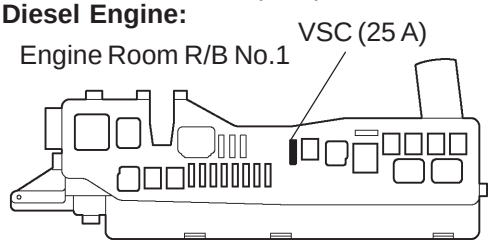

N F45087

(a) Remove the VSC (25 A) fuse from the engine room R/B No.4 (Gasoline engine) or engine room R/B No.1 (Diesel engine).
(b) Check continuity of the VSC fuse.
OK:
Continuity

NG → **CHECK FOR SHORT IN ALL HARNESS AND COMPONENTS CONNECTED FUSE**

OK

3	INSPECT SKID CONTROL ECU CONNECTOR(GND TERMINAL CONTINUITY)

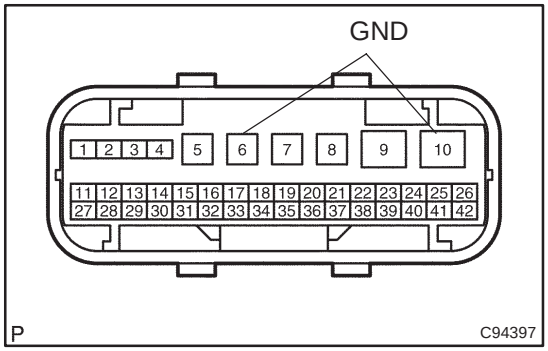

(a) Measure resistance between terminal GND of the skid control ECU harness side connector and body ground.

OK:

Resistance: 1 Ω or less

NG → **CHECK AND REPAIR HARNESS AND CONNECTOR(GND TERMINAL – BODY GROUND)(See page 01–32)**

OK

CHECK AND REPLACE HARNESS AND CONNECTOR(BATTERY – +BS TERMINAL) (See page 01–32)

DTC C0365/43 MALFUNCTION IN DECELERATION SENSOR

CIRCUIT DESCRIPTION

The lateral acceleration sensor is combined with the yaw rate sensor.

DTC No.	DTC Detecting Condition	Trouble Area
C0365/43	Detection of any of conditions from 1 through 2: 1. Lateral acceleration difference between sensor signal and reference value is large. 2. Offset value of sensor signal is higher than the standard value. 3. Sensor signal is out of range	• Yaw rate sensor • Yaw rate sensor circuit

WIRING DIAGRAM

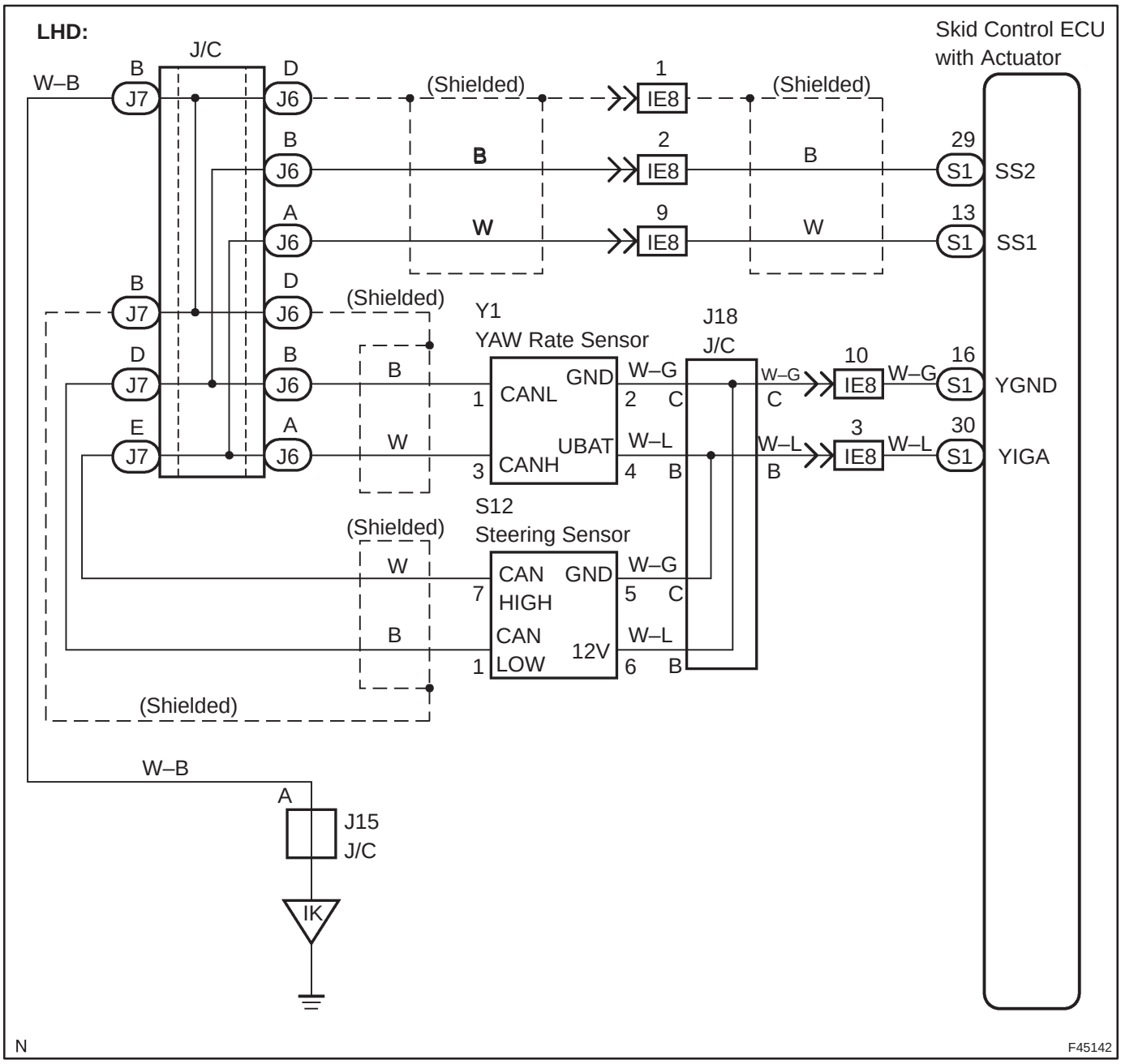

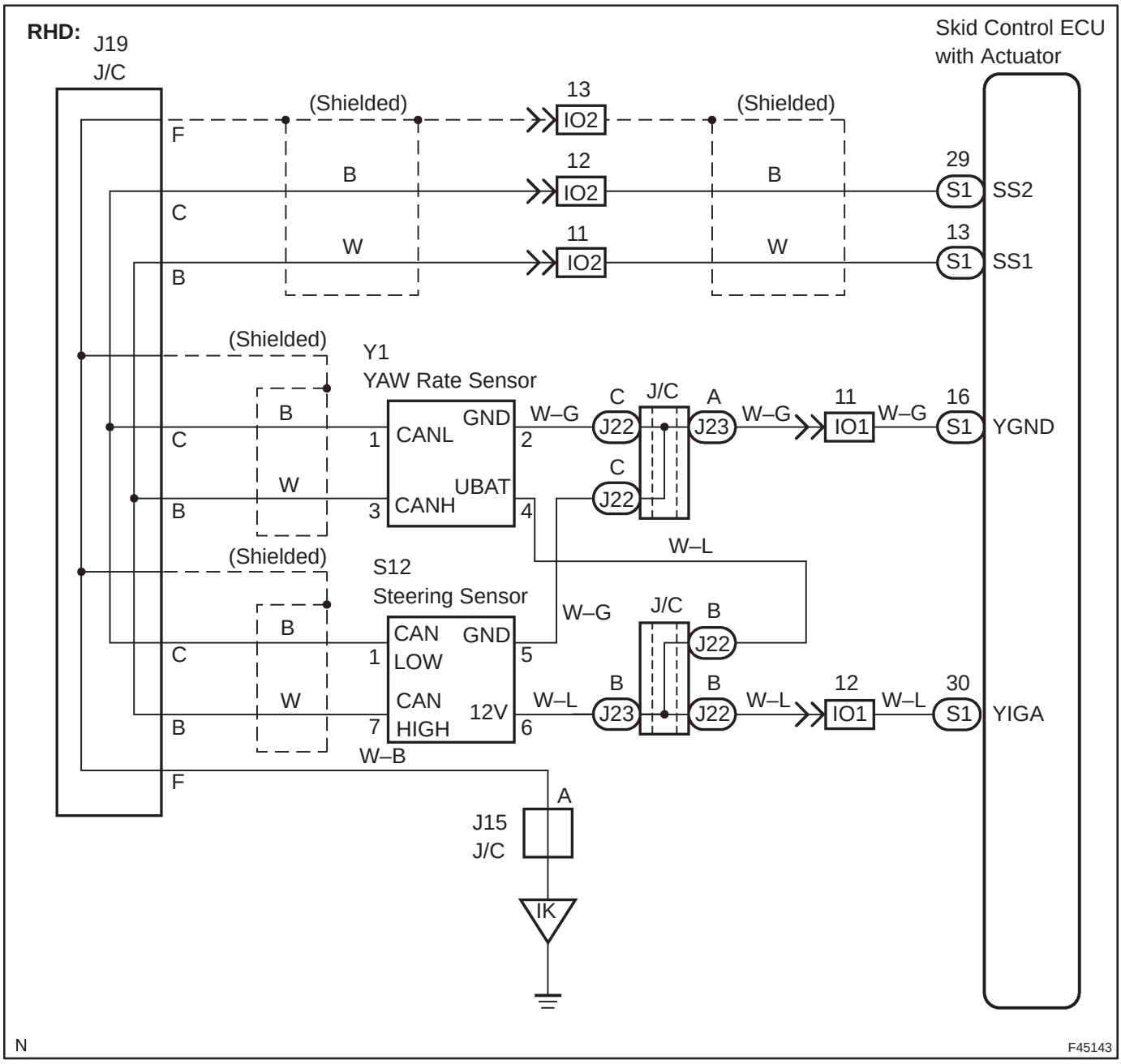
RHD:
J19
J/C
Skid Control ECU
with Actuator
(Shielded)
13
IO2
(Shielded)
F
B
12
IO2
B
29
S1
SS2
C
W
11
IO2
W
13
S1
SS1
B
(Shielded)
Y1
YAW Rate Sensor
B
C
1
CANL
GND
2
W–G
C
J/C
A
11
16
C
J22
J23
W–G
IO1
W–G
S1
YGND
W
B
3
CANH
UBAT
4
C
J22
W–L
(Shielded)
S12
Steering Sensor
B
C
1
CAN
LOW
GND
5
W–G
J/C
B
J22
W
B
7
CAN
HIGH
12V
6
W–L
B
J23
B
J22
W–L
12
IO1
W–L
30
S1
YIGA
W–B
F
A
J15
J/C
IK
N
F45143

INSPECTION PROCEDURE

HINT:

Start the inspection from step 1 if you are using the hand–held tester and start from step 2 if you are not using the hand–held tester.

1	READ VALUE OF YAWRATE SENSOR(INCLUDE LATERAL ACCELERATION SENSOR)

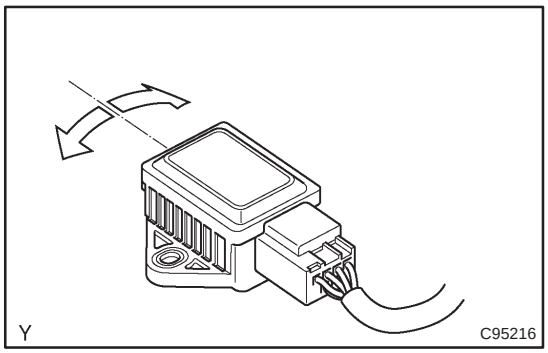

(a) Remove the 2 bolts and lateral acceleration sensor with connector still connected.
(b) Connect the hand–held tester to the DLC3
(c) Turn the ignition switch and hand–held tester main switch ON.
(d) Select the DATALIST mode on the hand–held tester.
(e) Check the lateral acceleration value 0 ± 0.23 G.
(f) Check that the acceleration value displayed on the hand–held tester is changing: Place the yaw rate sensor vertically to the ground and turn the sensor pivoted on its center.

OK:

Lateral acceleration value is changing.

OK	REPLACE ABS & TRACTION ACTUATOR ASSY (See page 32–57)

NG

2	CHECK HARNESS AND CONNECTOR(YAW RATE SENSOR – SKID CONTROL ECU)

(a) Check for an open or short circuit in harness and connector between each terminal SS1, SS2, YIGA and YGND of the yaw rate sensor and skid control ECU (See page 01–32).

NG	REPAIR OR REPLACE HARNESS OR CONNECTOR

OK

REPLACE ABS & TRACTION ACTUATOR ASSY(See page 32–57)

DTC	C0371/55	OPEN OR SHORT CIRCUIT IN YAW RATE SENSOR CIRCUIT

CIRCUIT DESCRIPTION

DTC No.	DTC Detecting Condition	Trouble Area
C0371/55	Detection of any of conditions from 1 through 4: 1. The voltage of sensor signal is out of range. 2. The offset value of sensor signal is outside the plausible range. 3. Sensor signal changes rapidly under normal driving. 4. Yaw rate sensor value is considerably different from the reference value of yaw rate during cornering.	• Yaw rate sensor • Yaw rate sensor circuit

WIRING DIAGRAM

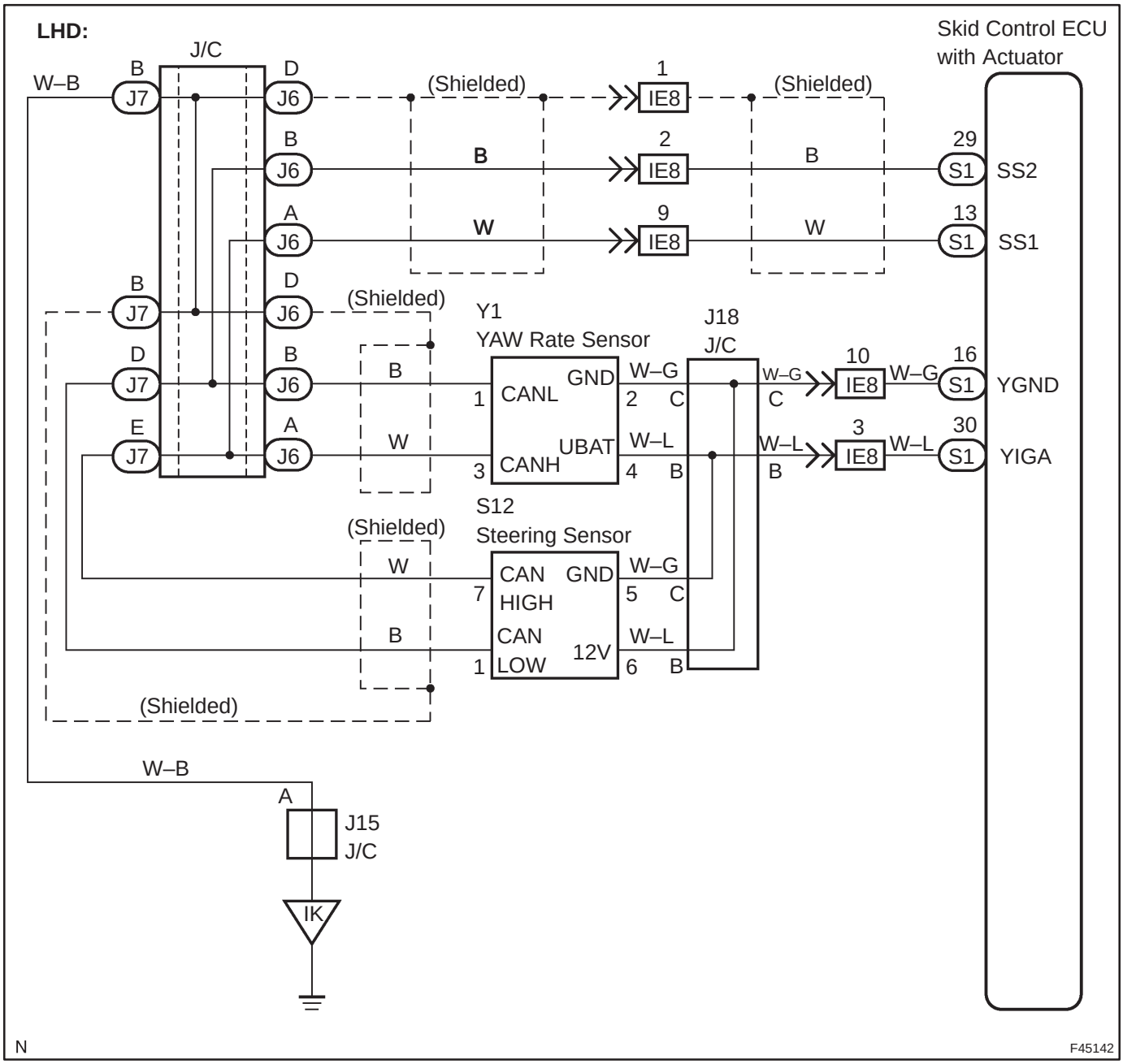

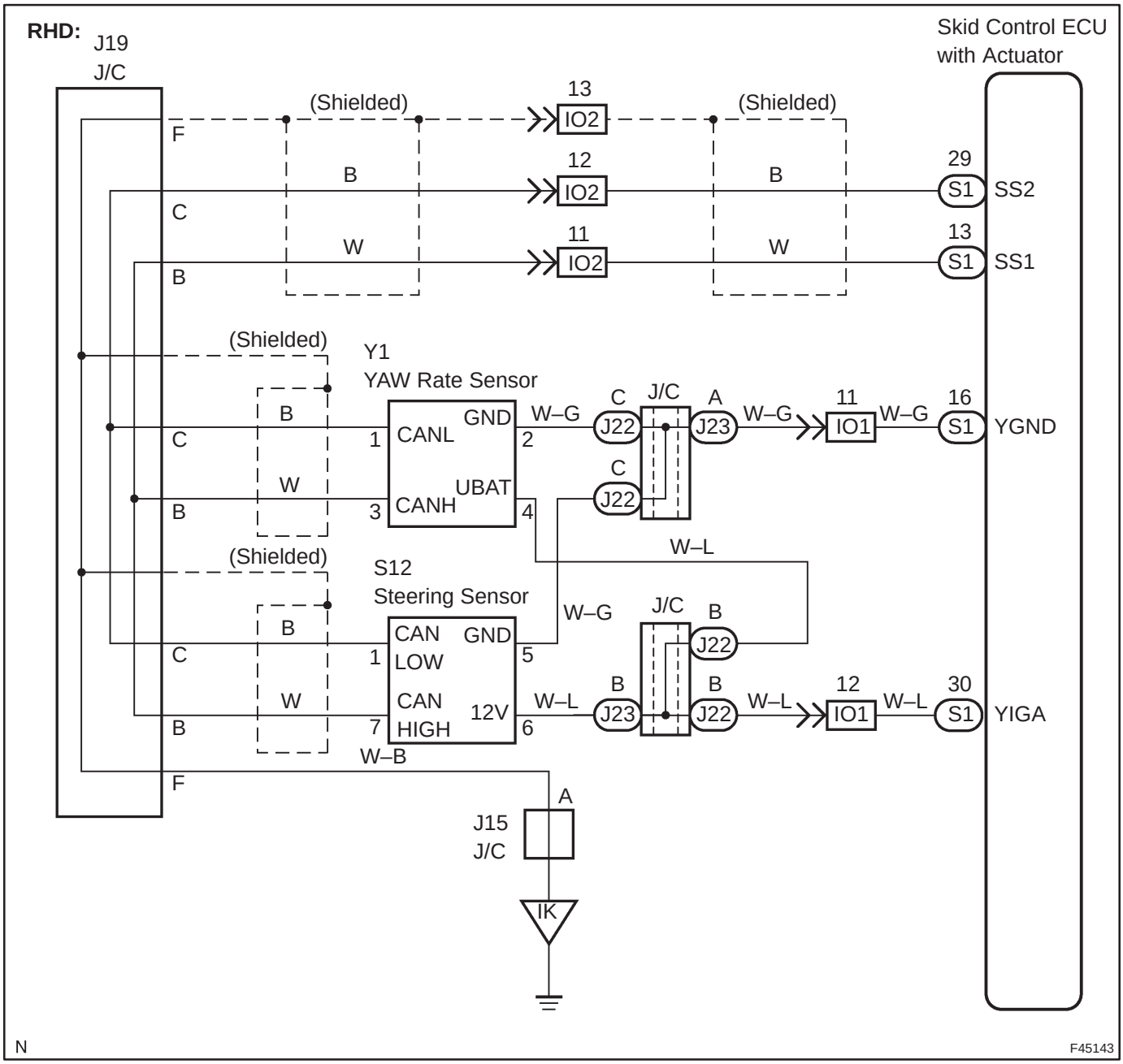
RHD:
J19
J/C
Skid Control ECU
with Actuator
(Shielded)
13
IO2
(Shielded)
F
B
12
IO2
B
29
S1
SS2
C
W
11
IO2
W
13
S1
SS1
B
(Shielded)
Y1
YAW Rate Sensor
B
C
1
CANL
GND
2
W–G
C
J/C
A
W–G
11
W–G
16
S1
YGND
J22
J23
IO1
W
B
3
CANH
UBAT
4
C
J22
W–L
(Shielded)
S12
Steering Sensor
B
C
1
CAN
LOW
GND
5
W–G
J/C
B
J22
W
B
7
CAN
HIGH
12V
6
W–L
B
J23
B
J22
W–L
12
IO1
W–L
30
S1
YIGA
W–B
F
A
J15
J/C
IK
N
F45143

INSPECTION PROCEDURE

HINT:

Start the inspection from step 1 if you are using the hand–held tester and start from step 2 if you are not using the hand–held tester.

1	READ VALUE OF YAWRATE SENSOR

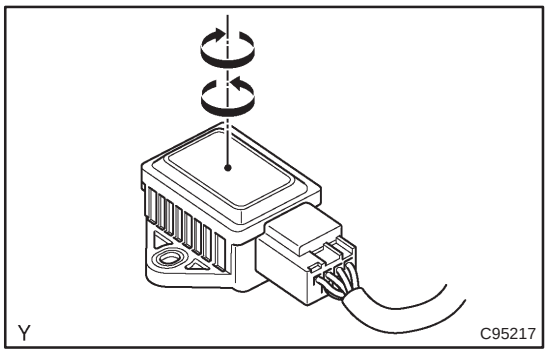

(a) Remove the 2 bolts and yaw rate sensor with connector still connected.
(b) Connect the hand–held tester to the DLC3.
(c) Turn the ignition switch and hand–held tester main switch ON.
(d) Select the DATALIST mode on the hand–held tester.
(e) Check the yaw rate value 0 ± 5 deg/s.
(f) Check that the yaw rate value of the yaw rate sensor displayed on the hand–held tester is changing: Place the yaw rate sensor vertically to the ground and turn the sensor pivoted on its center.

OK:

Yaw rate value is changing.

OK → **REPLACE ABS & TRACTION ACTUATOR ASSY (See page 32–57)**

NG

2	CHECK HARNESS AND CONNECTOR(YAW RATE SENSOR – SKID CONTROL ECU)

(a) Check for an open or short circuit in harness and connector between each terminal SS1, SS2, YIGA and YGND of the yaw rate sensor and skid control ECU (See page 01–32).

NG → **REPAIR OR REPLACE HARNESS OR CONNECTOR**

OK

REPLACE ABS & TRACTION ACTUATOR ASSY(See page 32–57)

DTC C1201/45 ENGINE CONTROL SYSTEM MALFUNCTION

CIRCUIT DESCRIPTION

DTC No.	DTC Detecting Condition	Trouble Area
C1201/45	A trouble signal in the engine control system is input.	Engine control system

HINT:
If trouble occurs in the engine control system, the ECU prohibits TRC and VSC control.

INSPECTION PROCEDURE

1	CHECK DTC FOR ENGINE

A	Normal Code
B	Malfunction Code

B → REPAIR ENGINE CONTROL SYSTEM ACCORDING TO CODE OUTPUT

A →

REPLACE ECM

DTC C1204/44 NE SIGNAL CIRCUIT

CIRCUIT DESCRIPTION

The skid control ECU receives engine revolution speed signals (NE signals) from the ECM.

DTC No.	DTC Detecting Condition	Trouble Area
C1202/44	At vehicle speed of 30 km/h (19 mph) or more, when data received from the ECM is in normal condition, engine revolution signal > 0 rpm continues for 5 seconds or more.	• NEO circuit • ECM • Skid control ECU

WIRING DIAGRAM

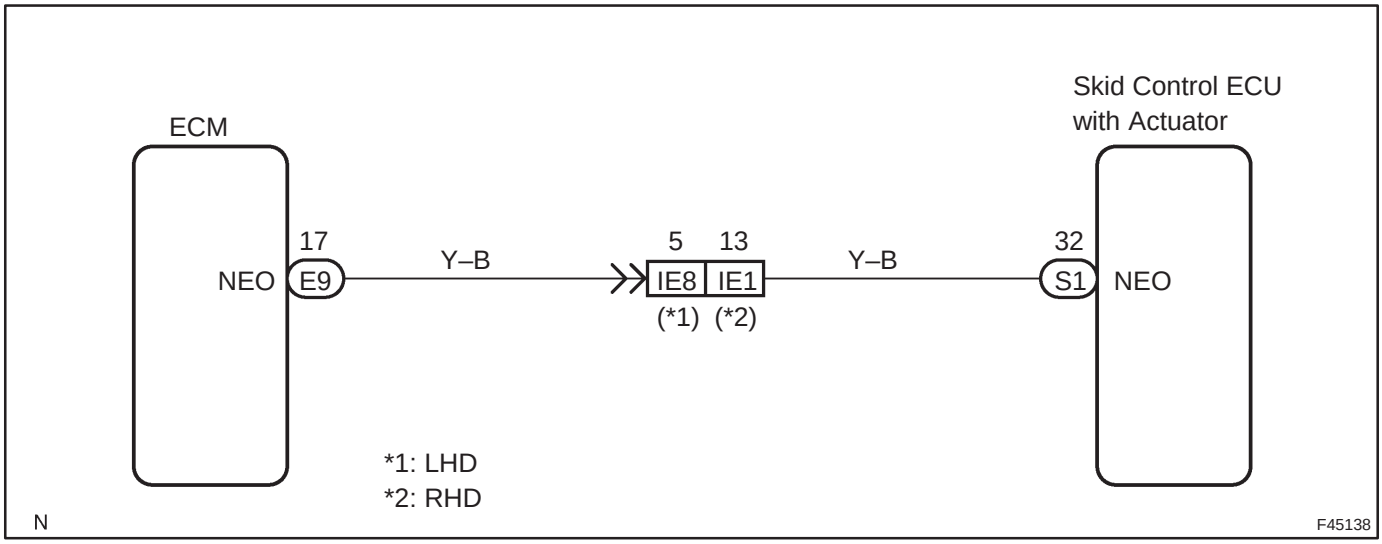

INSPECTION PROCEDURE

1	CHECK HARNESS AND CONNECTOR(SKID CONTROL ECU – ECM)

(a) Check for an open or short circuit in harness and connector between terminal NEO of the skid control ECU and ECM (See page 01–32).

NG → **REPAIR OR REPLACE HARNESS OR CONNECTOR**

OK

2 INSPECT ECM TERMINAL VOLTAGE(NEO TERMINAL)

Gasoline engine:

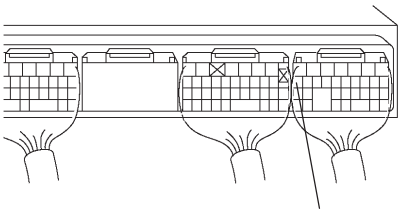

Diesel engine:

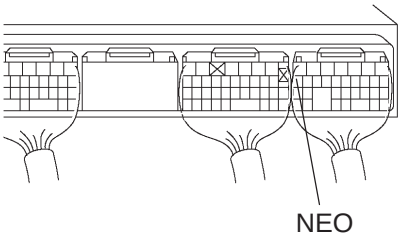

F45092

(a) Remove the ECM with connector still connected.
(b) Turn the ignition switch ON.
(c) Measure the voltage between terminal NEO of the ECM and body ground under the engine conditions below.
OK:

Engine condition	Voltage
OFF (IG ON)	3 to 6 V or below 1 V
ON (Idling)	3 to 6 V ⇔ below 1 V (Pulse)

(Reference)

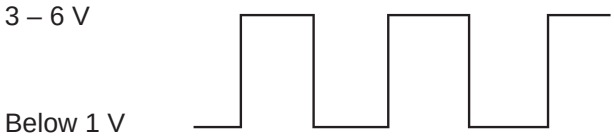

F03007

NG → **REPLACE ECM**

OK

IF THE SAME CODE IS STILL OUTPUT AFTER THE DTC IS DELETED, CHECK THE CONTACT CONDITION OF EACH CONNECTION

DTC	C1203/59	ECM COMMUNICATOIN CIRCUIT MALFUNCTION

CIRCUIT DESCRIPTION

This circuit is used to transmit TRC & VSC control information from the skid control ECU to the ECM (TRC+, TRC–), and engine control information from the ECM to the skid control ECU (ENG+, ENG–).

DTC No.	DTC Detecting Condition	Trouble Area
C1203/59	When any of the following 1 through 3 is detected : 1. IG1 voltage is 8.5 V or more, and the condition that data can not be sent to ECM continues for 1.2 seconds or more. 2. IG1 voltage is 8.5 V or more, engine speed is 500 r.p.m or more, vehicle speed is 60 km/h (38 mph) or more, and the condition that data can not be received from ECM continues for 1.2 seconds or more. 3. The condition that data can not be transmitted between the skid control ECU and ECM occurs at least once within 5 seconds continues 10 consecutive times within 60 sec.	• TRC+ or TRC– circuit • ENG+ or ENG– circuit • ECM

WIRING DIAGRAM

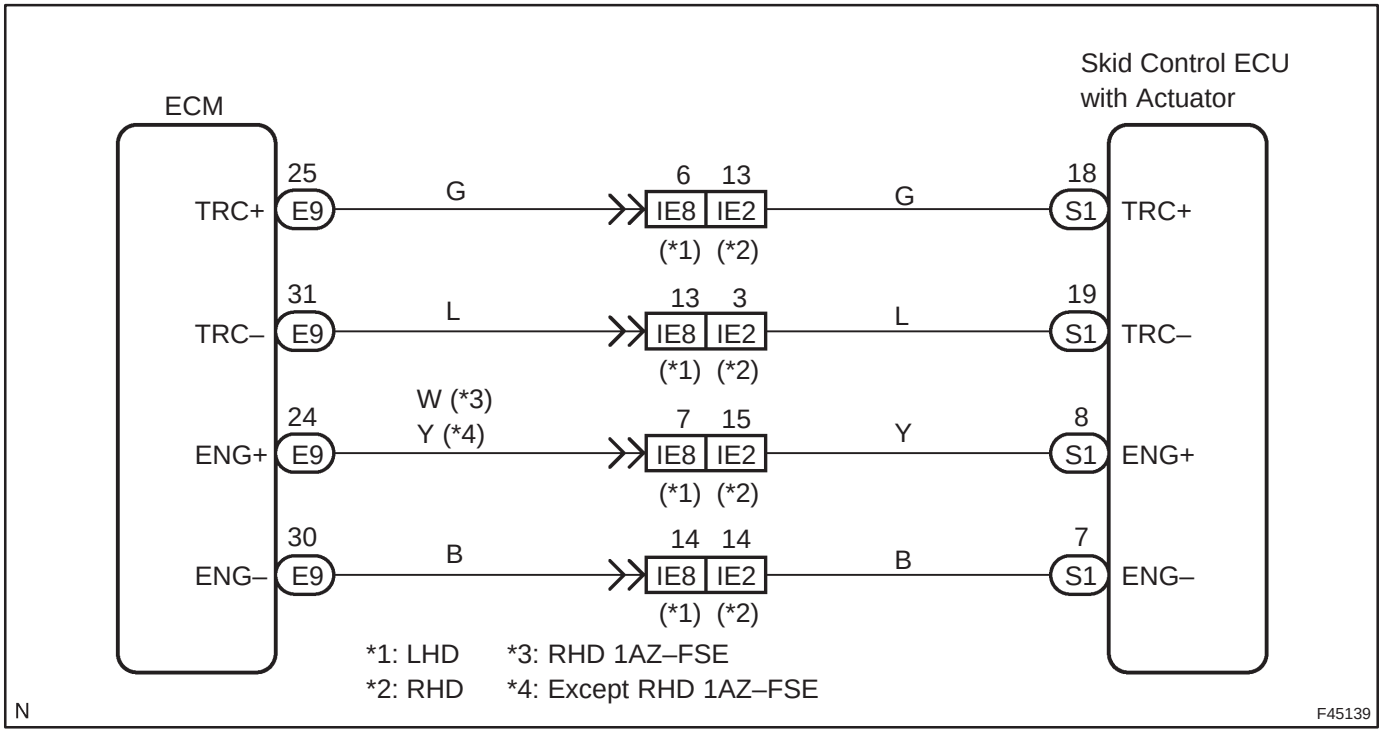

INSPECTION PROCEDURE

1	CHECK HARNESS AND CONNECTOR(ECM – SKID CONTROL ECU)

(a) Check for an open or short circuit in harness and connector between each of terminals ENG+, ENG–, TRC+, TRC– of the skid control ECU and the same one of the ECM (See page 01–32).

NG → REPAIR OR REPLACE HARNESS OR CONNECTOR

OK

2	CHECK OPERATION OF MALFUNCTION INDICATOR

(a) Check the MIL.
(1) The MIL comes on when the ignition switch is turned ON and the engine is not running.

NG → CHECK AND REPLACE ECM

OK

CHECK AND REPLACE ABS & TRACTION ACTUATOR ASSY(See page 32–57)

DTC	C1208/54	MALFUNCTION IN STEERING ANGLE SENSOR CIRCUIT

CIRCUIT DESCRIPTION

DTC No.	DTC Detecting Condition	Trouble Area
C1231/31	Detection of any of conditions 1 through 7: 1. When the condition that ECU terminal IG1 voltage is 9.8 V or more, and does not receive data from steering angle sensor continues. 2. Sensor internal failure. 3. The offset value is out of range. 4. Sensor signal changes too rapidly. 5. Steering angle value difference between measured and reference is out of range. 6. Steering sensor is not centered. 7. Steering sensor signal is out of range. 8. Steering sensor is not calibrated.	• Steering angle sensor • Steering angle sensor circuit

WIRING DIAGRAM

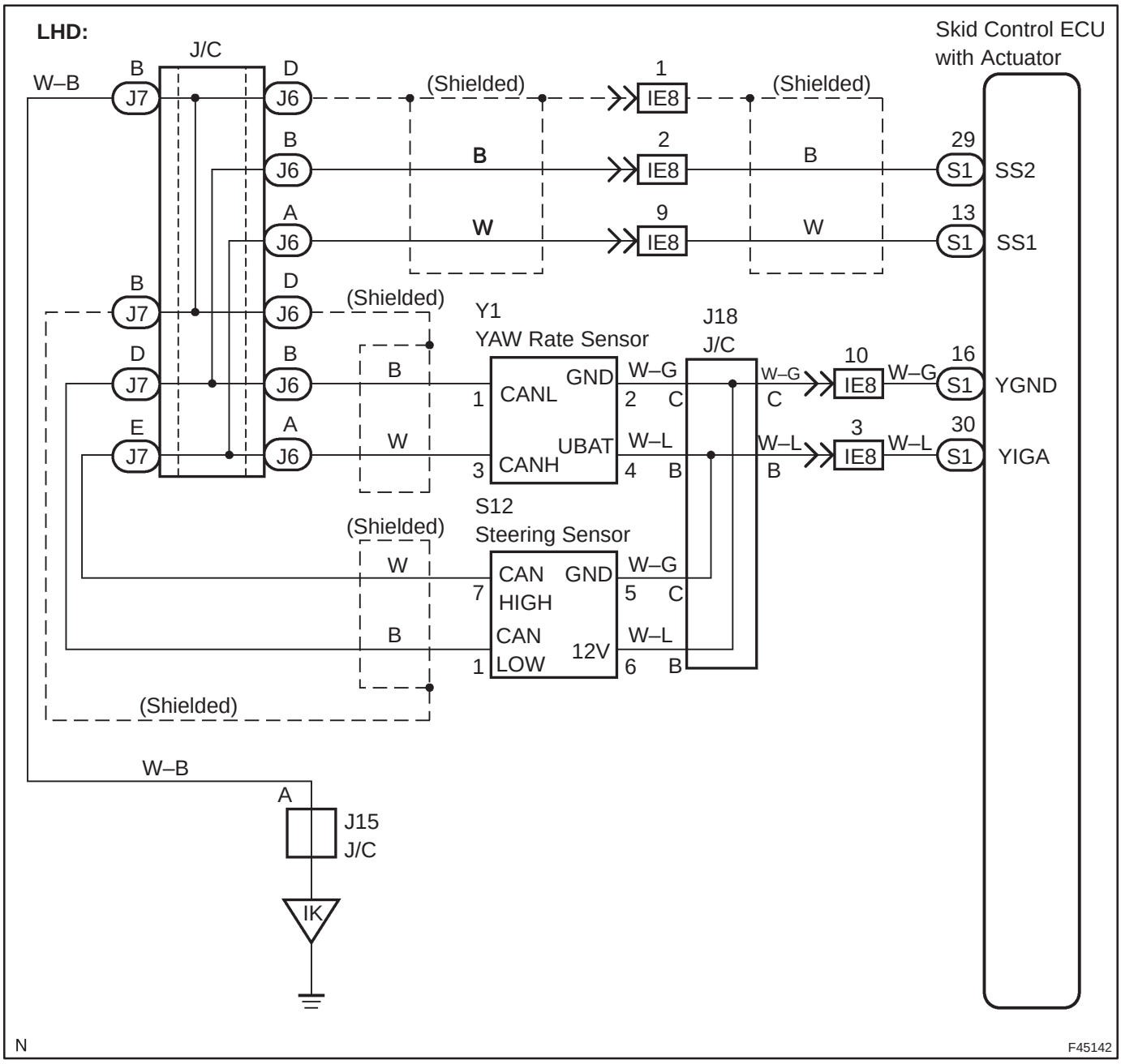

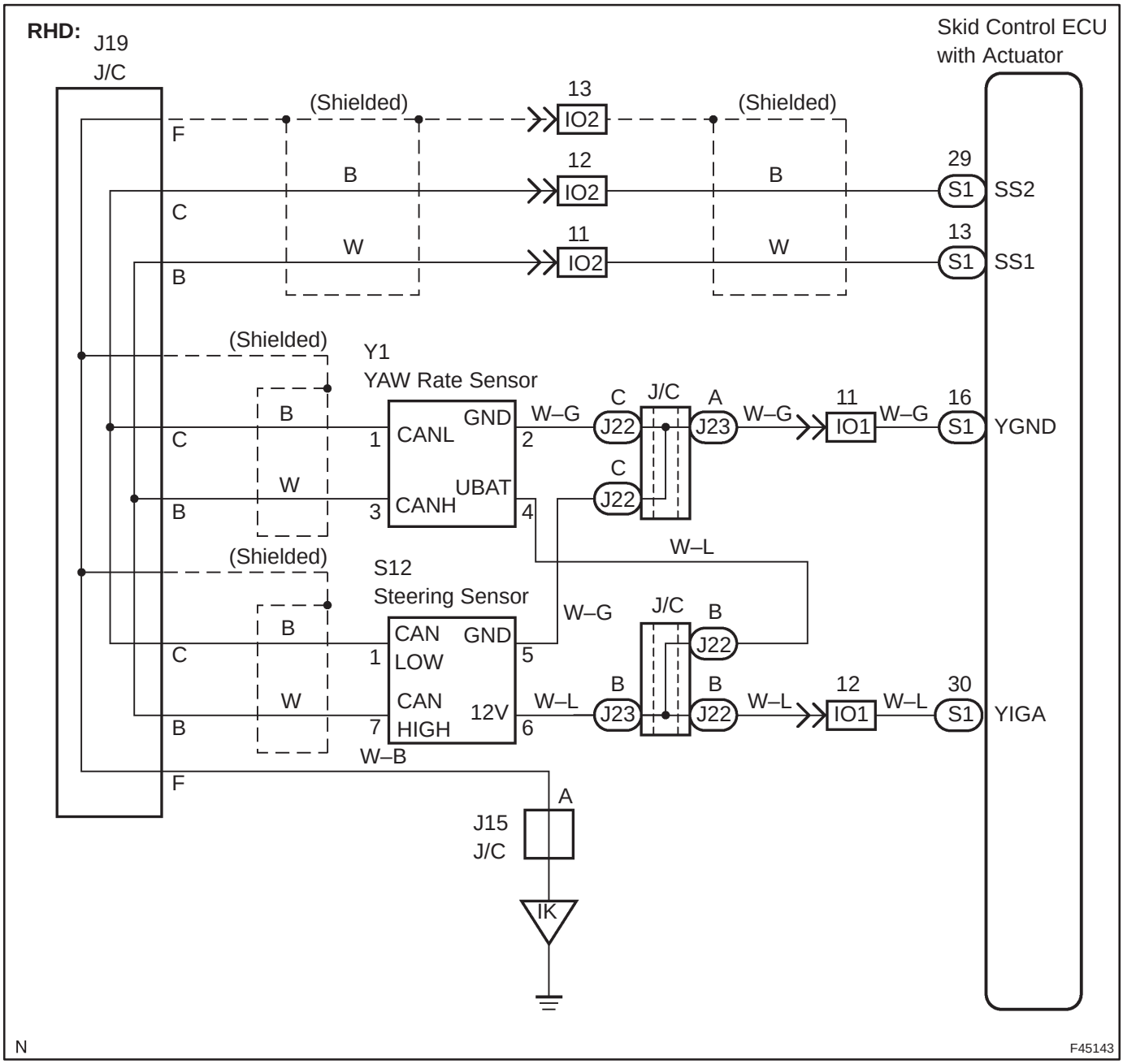
RHD:
J19
J/C
Skid Control ECU
with Actuator
(Shielded)
13
IO2
(Shielded)
F
B
12
IO2
B
29
S1
SS2
C
W
11
IO2
W
13
S1
SS1
B
(Shielded)
Y1
YAW Rate Sensor
B
C
1
CANL
GND
2
W–G
C
J/C
A
W–G
11
W–G
16
S1
YGND
J22
J23
IO1
W
B
3
CANH
UBAT
4
C
J22
W–L
(Shielded)
S12
Steering Sensor
B
C
1
CAN
LOW
GND
5
W–G
J/C
B
J22
W
B
7
CAN
HIGH
12V
6
W–L
B
J23
B
J22
W–L
12
IO1
W–L
30
S1
YIGA
W–B
F
A
J15
J/C
IK
N
F45143

INSPECTION PROCEDURE

HINT:

Start the inspection from step 1 if you are using the hand–held tester and start from step 2 if you are not using the hand–held tester.

1	READ VALUE OF STEERING SENSOR

(a) Select the DATALIST mode on the hand–held tester.

(b) Check that the steering wheel turning angle value of the steering angle position sensor displayed on the hand–held tester is changing when turning the steering wheel.

OK:

Steering wheel turning angle value is changing.

OK → **Go to step 4**

NG

2	CHECK INSTALLATION CONDITION OF STEERING ANGLE SENSOR

NG → **REPLACE STEERING SENSOR(See page 32–65)**

OK

3	CHECK HARNESS AND CONNECTOR(STEERING SENSOR CIRCUIT – SKID CONTROL ECU)

(a) Check for an open or short circuit in harness and connector between each terminal SS1, SS2, YIGA and YGND of the skid control ECU and steering angle sensor (See page 01–32).

NG → **REPAIR OR REPLACE HARNESS OR CONNECTOR**

OK

4	CALIBRATE STEERING ANGLE SENSOR(See page 05–756)

NG → **REPLACE STEERING SENSOR**

OK

REPLACE ABS & TRACTION ACTUATOR ASSY(See page 32–57)

DTC	C1225/25	SMC SOLENOID CIRCUIT

DTC	C1226/26	SMC SOLENOID CIRCUIT

DTC	C1227/27	SRC SOLENOID CIRCUIT

DTC	C1228/28	SRC SOLENOID CIRCUIT

CIRCUIT DESCRIPTION

The solenoid goes on when receiving signals from the ECU and controls the pressure action on the wheel cylinders to control the braking force.

DTC No.	DTC Detecting Condition	Trouble Area
C1225/25	Open or short in SMC1 circuit.	• Brake actuator • SMC1 circuit
C1226/26	Open or short in SMC2 circuit.	• Brake actuator • SMC2 circuit
C1227/27	Open or short in SRC1 circuit.	• Brake actuator • SRC1 circuit
C1228/28	Open or short in SRC2 circuit.	• Brake actuator • SRC2 circuit

WIRING DIAGRAM

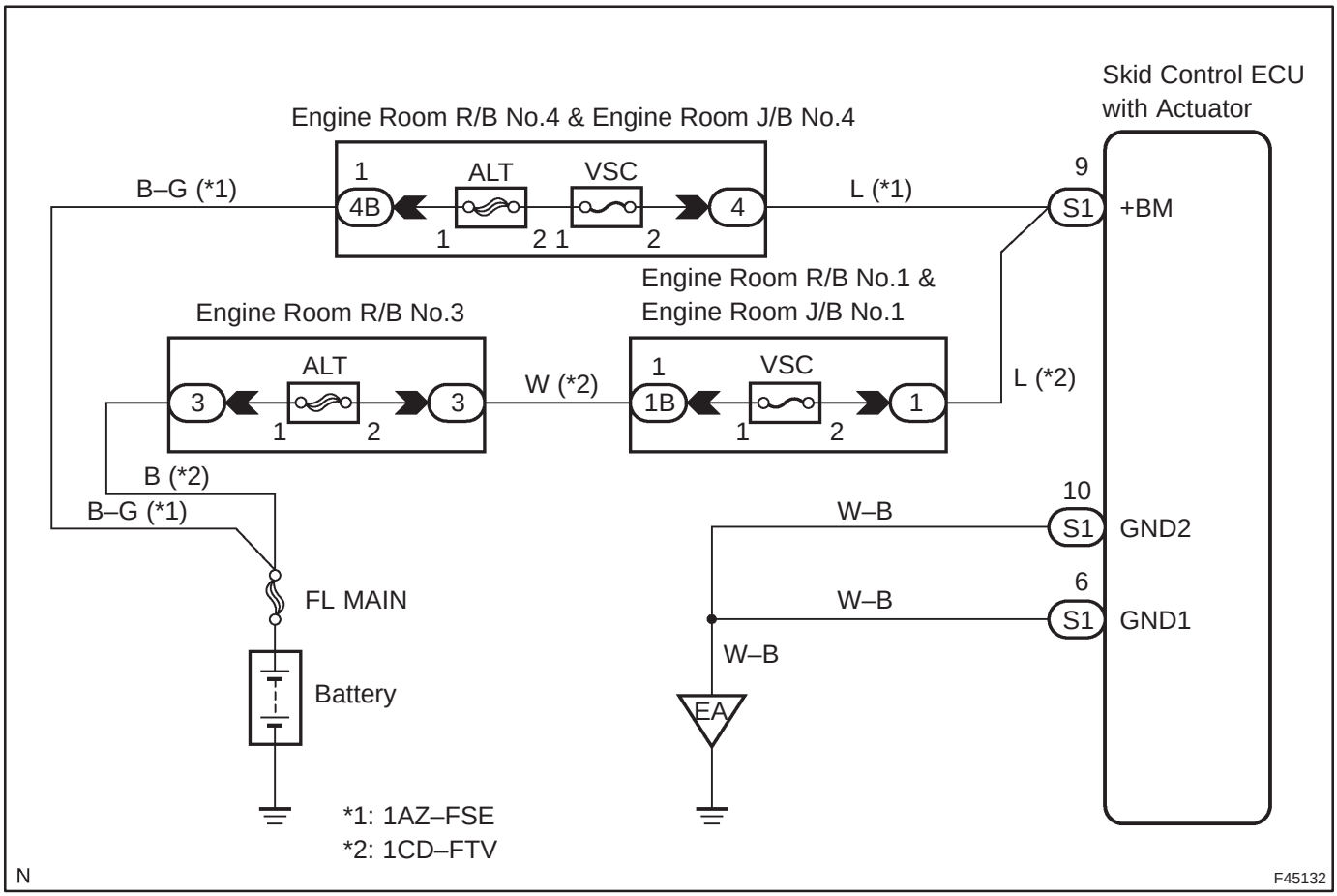

INSPECTION PROCEDURE

1	RECONFIRM DTC

(a) Check if other DTCs are detected (See page 05–756).

YES → **REPAIR CIRCUIT INDICATED BY OUTPUT CODE**

NO

REPLACE ABS & TRACTION ACTUATOR ASSY(See page 32–57)

DTC C1237/37 TIRES OF DIFFERENT SIZE

CIRCUIT DESCRIPTION

DTC No.	DTC Detecting Condition	Trouble Area
C1237/37	Detection of any of conditions from 1 through 4: 1. When the ignition switch is ON, the speed difference between max. and min. wheel speed is 5 % or more for 20 sec. at vehicle speed 20 km/h (12 mph)or more. 2. When the ignition switch is ON, the slip difference be wheels at either side of vehicle 6 % or more (vehicle speed: 100 km/h (62 mph) or more). 3. Continuous ABS control for 60 seconds or more. 4. Interference on 1 or more wheels for 20 seconds with the brake pedal depressed, or for 5 seconds when the brake pedal is not depressed.	• Speed sensor • Sensor rotor

INSPECTION PROCEDURE

1 INSPECT TIRE SIZE

NG → **REPLACE TIRES SO THAT ALL 4 TIRES ARE SAME IN SIZE**

OK

2 INSPECT SPEED SENSOR ROTOR

(a) Check the speed sensor rotors (See page 05–774 or 05–778).

NG → **REPLACE SENSOR ROTOR**

OK

3 INSPECT SPEED SENSOR

(a) Check the speed sensors (See page 05–774 or 05–778).

NG → **REPLACE SPEED SENSOR**

OK

4 CHECK HARNESS AND CONNECTOR(SPEED SENSOR – SKID CONTROL ECU)

(a) Check for an open or short circuit in harness and connector between each terminal of the speed sensor and skid control ECU (See page 01–32).

NG → **REPAIR OR REPLACE HARNESS OR CONNECTOR**

OK

REPLACE ABS & TRACTION ACTUATOR ASSY(See page 32–57)

DTC	C1241/41	LOW BATTERY POSITIVE VOLTAGE OR ABNORMALLY HIGH BATTERY POSITIVE VOLTAGE

CIRCUIT DESCRIPTION

DTC No.	DTC Detecting Condition	Trouble Area
C1241/41	Low battery voltage is less than 9.8 V at the time of non–operation of ABS control or less than 9.4 V at the time of operation of ABS control, or battery voltage is more than 17.4 V.	• Battery • IC regulator • Power source circuit

WIRING DIAGRAM

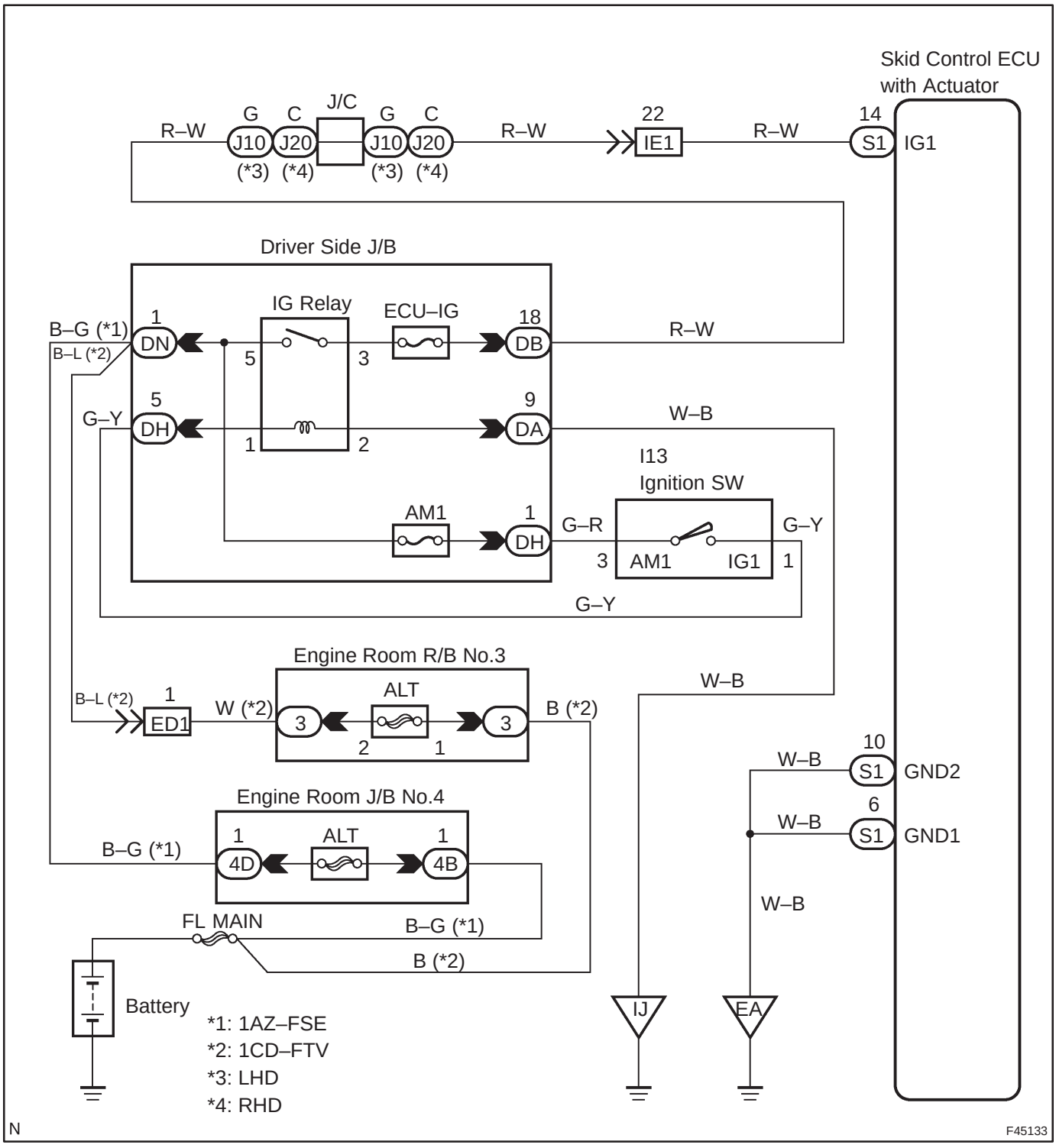

INSPECTION PROCEDURE

1 INSPECT FUSE(ECU–IG FUSE)

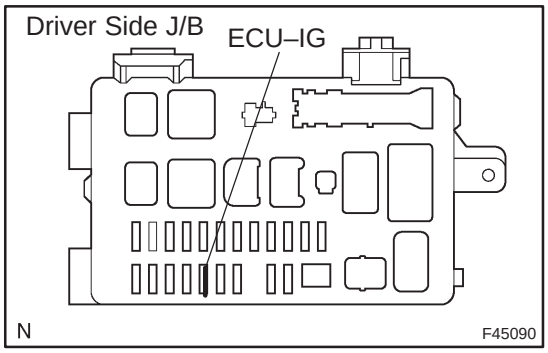

(a) Remove the ECU–IG fuse from the driver side J/B.
(b) Check continuity of the ECU–IG fuse.
OK:
Continuity

NG → **INSPECT FOR SHORT CIRCUIT IN ALL HARNESS AND COMPONENTS CONNECTED TO ECU–IG FUSE**

OK

2 INSPECT BATTERY

OK:
Voltage: 10 to 14 V

NG → **INSPECT CHARGING SYSTEM**

OK

3 INSPECT SKID CONTROL ECU TERMINAL VOLTAGE(IG1 TERMINAL)

IN CASE OF USING HAND–HELD TESTER:

(a) Check the voltage condition, which is output from the ECU and displayed on the hand–held tester.
OK:
"Normal" is displayed.

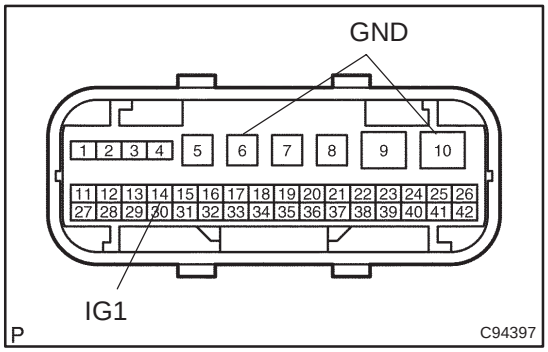

IN CASE OF NOT USING HAND–HELD TESTER:

(a) Disconnect the skid control connector.
(b) Turn the ignition switch ON.
(c) Measure the voltage between terminals IG1 and GND of the skid control ECU harness side connector.
OK:
Voltage: 10 to 14 V

OK → **REPLACE ABS & TRACTION ACTUATOR ASSY (See page 32–57)**

NG

4 INSPECT SKID CONTROL ECU CONNECTOR(GND TERMINAL CONTINUITY)

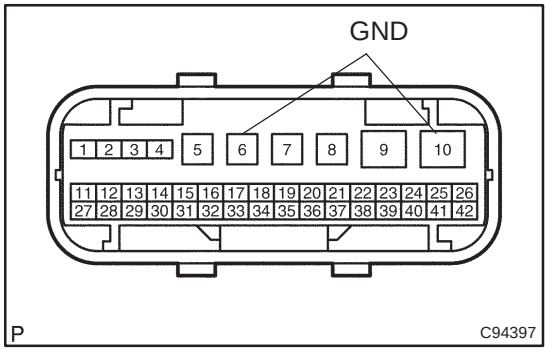

(a) Disconnect the skid control ECU connector.
(b) Measure resistance between terminal GND of the skid control ECU harness side connector and body ground.
OK:
Resistance: 1 Ω or less

NG → **REPAIR OR REPLACE HARNESS OR CONNECTOR(GND TERMINAL – BODY GROUND)(See page 01–32)**

OK

CHECK AND REPAIR HARNESS AND CONNECTOR(BATTERY – IG1 TERMINAL) (See page 01–32)

DTC	C1246/53	MALFUNCTION IN MASTER CYLINDER PRESSURE SENSOR

CIRCUIT DESCRIPTION

DTC No.	DTC Detecting Condition	Trouble Area
C1246/53	When any of the following 1 through 3 is detected: 1. The voltage of sensor signal is out of range (less than 0.3 V, more than 4.7 V). 2. The sensor supply voltage is out of range (above 5.6 V, below 4.4 V). 3. The sensor signal offset value is out of range. 4. Gradient of sensor signal is not within allowed range.	• Master cylinder pressure sensor • Master cylinder pressure sensor circuit

WIRING DIAGRAM

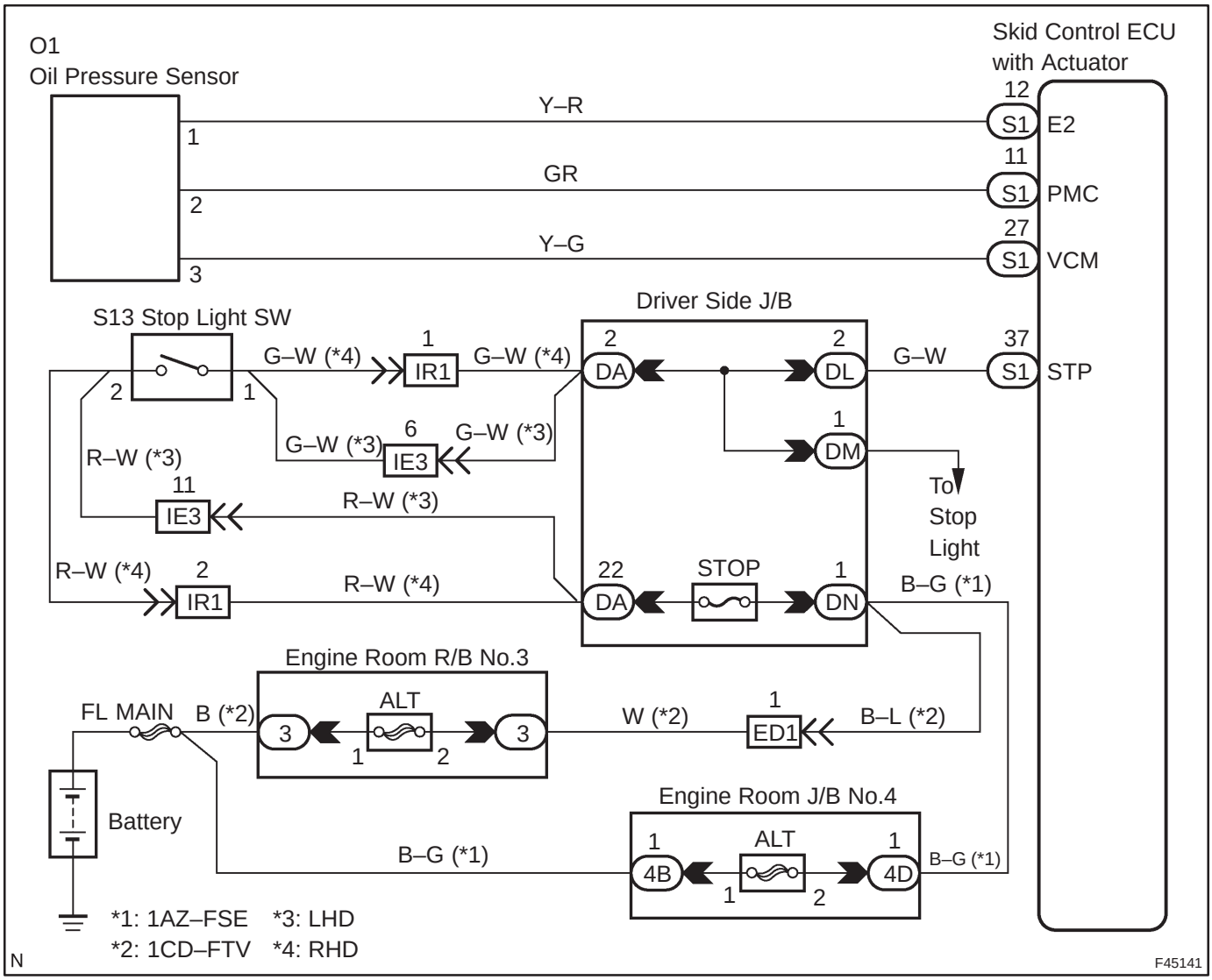

INSPECTION PROCEDURE

HINT:

Start the inspection from step 1 if you are using the hand–held tester and start from step 2 if you are not using the hand–held tester.

1	READ VALUE OF MASTER CYLINDER PRESSURE SENSOR

(a) Select the DATALIST mode on the hand–held tester.

(b) Check that the brake fluid pressure value of the No.1 master cylinder pressure sensor and No.2 master cylinder pressure sensor displayed on the hand–held tester changes when depressing the brake pedal.

OK:

Brake fluid pressure value is changing.

OK	Go to step 4

NG

2	INSPECT STOP LAMP SWITCH ASSY

(a) Check that the stop light comes on when the brake pedal is depressed and goes off when the brake pedal is released.

NG	REPAIR OR REPLACE HARNESS OR CONNECTOR

OK

3	CHECK HARNESS AND CONNECTOR(MASTER CYLINDER PRESSUR SENSOR – SKID CONTROL ECU)

(a) Check for an open or short circuit in harness and connector between terminal of the master cylinder pressure sensor and skid control ECU (See page 01–32).

NG	REPAIR OR REPLACE HARNESS OR CONNECTOR

OK

4	INSPECT SKID CONTROL ECU TERMINAL VOLTAGE(STP TERMINAL)

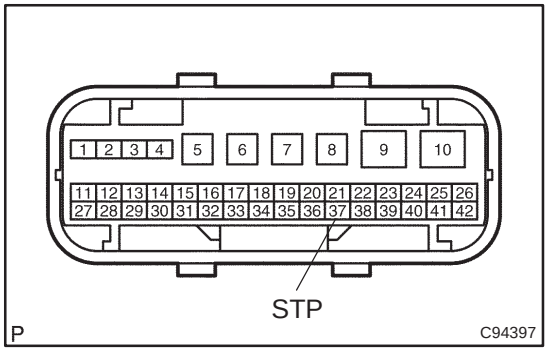

(a) Disconnect the skid control ECU connector.
(b) Measure the voltage between terminal STP of the skid control ECU harness side connector and body ground when the brake pedal is depressed.
OK:
Voltage: 8 to 14 V

NG → **REPAIR OR REPLACE HARNESS OR CONNECTOR**

OK

REPLACE ABS & TRACTION ACTUATOR ASSY(See page 32–57)

DTC C1249/58 STOP LIGHT SWITCH CIRCUIT

CIRCUIT DESCRIPTION

DTC No.	DTC Detecting Condition	Trouble Area
C1249/58	After the ignition switch is turned ON, the condition that the STP terminal voltage of ECU is 40 % to 67 % of supplied voltage, continues for 1 second or more.	Stop light switch circuit

WIRING DIAGRAM

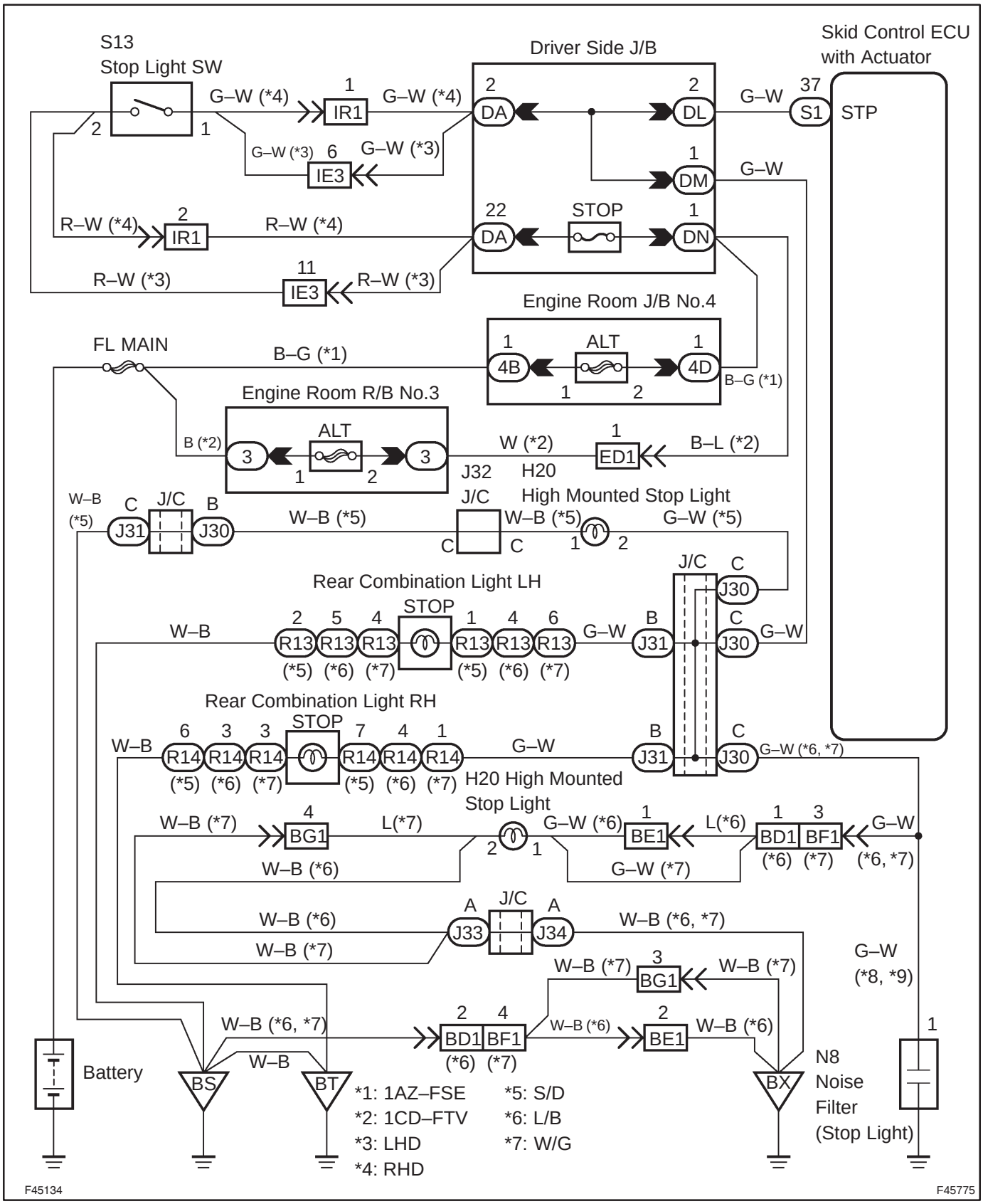

INSPECTION PROCEDURE

1	INSPECT STOP LAMP SWITCH ASSY

(a) Check that the stop light comes on when the brake pedal is depressed and goes off when the brake pedal is released.

NG → **Go to step 4**

OK

2	INSPECT SKID CONTROL ECU TERMINAL VOLTAGE(STP TERMINAL)

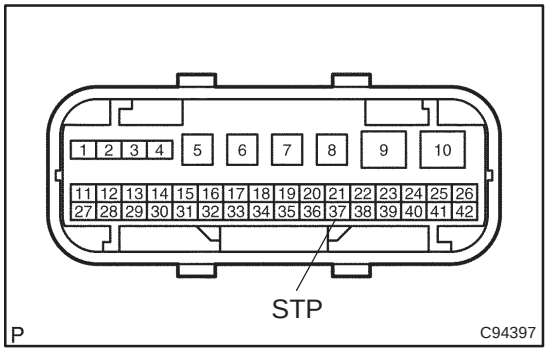

(a) Disconnect the skid control ECU connector.
(b) Measure the voltage between terminal STP of the skid control ECU harness side connector and body ground when the brake pedal is depressed.
OK:
Voltage: 8 to 14 V

OK → **REPLACE ABS & TRACTION ACTUATOR ASSY (See page 32–57)**

NG

3	CHECK HARNESS AND CONNECTOR(STOP LIGHT SWITCH – SKID CONTROL ECU)

(a) Check for an open or short circuit in harness and connector between the stop light switch and skid control ECU (See page 01–32).

NG → **REPAIR OR REPLACE HARNESS OR CONNECTOR**

OK

PROCEED TO NEXT CIRCUIT INSPECTION SHOWN ON PROBLEM SYMPTOMS TABLE

4	CHECK HARNESS AND CONNECTOR(STOP LIGHT CIRCUIT)

(a) Check for an open or short circuit in harness and connector of the stop light circuit (See page 01–32).

OK → **REPLACE STOP LAMP SWITCH ASSY**

NG

REPAIR OR REPLACE HARNESS OR CONNECTOR

DTC C1288/88 ECU VERSION MISS MATCHI

CIRCUIT DESCRIPTION

DTC No.	DTC Detecting Condition	Trouble Area
C1288/88	When either of the following 1 or 2 is detected: 1. ECM does not match. 2. Steering angle sensor is not calibrated.	• ECM • Steering angle sensor calibration.

INSPECTION PROCEDURE

1 PERFORM STEERING ANGLE SENSOR ZERO POINT CALIBRATION

(a) Perform the steering angle sensor zero point calibration (See page 05–756).

2 RECONFIRM DTC

(a) Check if the same DTC is stored in the memory.

NO → **END**

YES

3 CHECK HARNESS AND CONNECTOR(STEERING ANGLE SENSOR – SKID CONTROL ECU)

(a) Check for an open or short circuit in harness and connector between the steering angle sensor and skid control ECU (See page 01–32).

NG → **REPAIR OR REPLACE HARNESS OR CONNECTOR**

OK

REPLACE ABS & TRACTION ACTUATOR ASSY(See page 32–57)

DTC C1300/62 SKID CONTROL ECU MALFUNCTION

CIRCUIT DESCRIPTION

DTC No.	DTC Detecting Condition	Trouble Area
C1300/62	1. Skid control ECU continuously detects the continuous operation of ABS at all 4 wheels for max. 1.28 sec. 2. Continuos VSC operation for 10 sec. or more. 3. Internal malfunction in ECU.	• ECU

INSPECTION PROCEDURE

1 RECONFIRM DTC

A	DTC C1300/62
B	Except DTC C1300/62

B → **REPAIR CIRCUIT INDICATED BY OUTPUT CODE**

A

2 INSPECT SKID CONTROL ECU CONNECTOR(IG1 TERMINAL VOLTAGE)

WITH USING HAND–HELD TESTER:

(a) Check the voltage condition, which is output from the ECU and displayed on the hand–held tester.
OK:
"Normal" is displayed.

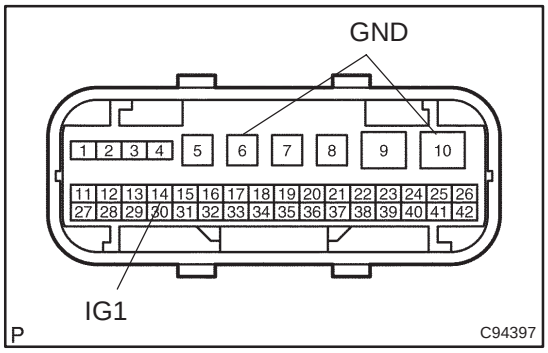

WITHOUT USING HAND–HELD TESTER:

(a) Disconnect the skid control connector.
(b) Turn the ignition switch ON.
(c) Measure the voltage between terminals IG1 and GND of the skid control ECU harness side connector.
OK:
Voltage: 10 to 14 V

OK → **REPLACE ABS & TRACTION ACTUATOR ASSY (See page 32–57)**

NG

3	INSPECT SKID CONTROL ECU CONNECTOR(GND TERMINAL CONTINUITY)

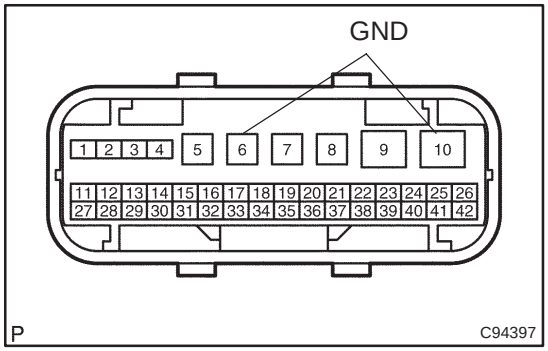

(a) Disconnect the skid control ECU connector.
(b) Measure resistance between terminal GND of the skid control ECU harness side connector and body ground.
OK:
Resistance: 1 Ω or less

NG → **REPAIR OR REPLACE HARNESS OR CONNECTOR**

OK

CHECK AND REPAIR HARNESS AND CONNECTOR

DTC	C1301/42	CAN COMMUNICATION SYSTEM MALFUNCTION

CIRCUIT DESCRIPTION

This circuit is used to send TRC & VSC control information from the yaw rate sensor and steering angle sensor information to the skid control ECU

DTC No.	DTC Detecting Condition	Trouble Area
C1301/42	IG1 voltage is 9.5 V or more, and the condition that data from steering angle sensor or yaw rate sensor can not be received continues for 0.1 seconds or more.	• Yaw rate sensor • Steering angle sensor • Yaw rate sensor circuit • Steering angle sensor circuit

WIRING DIAGRAM

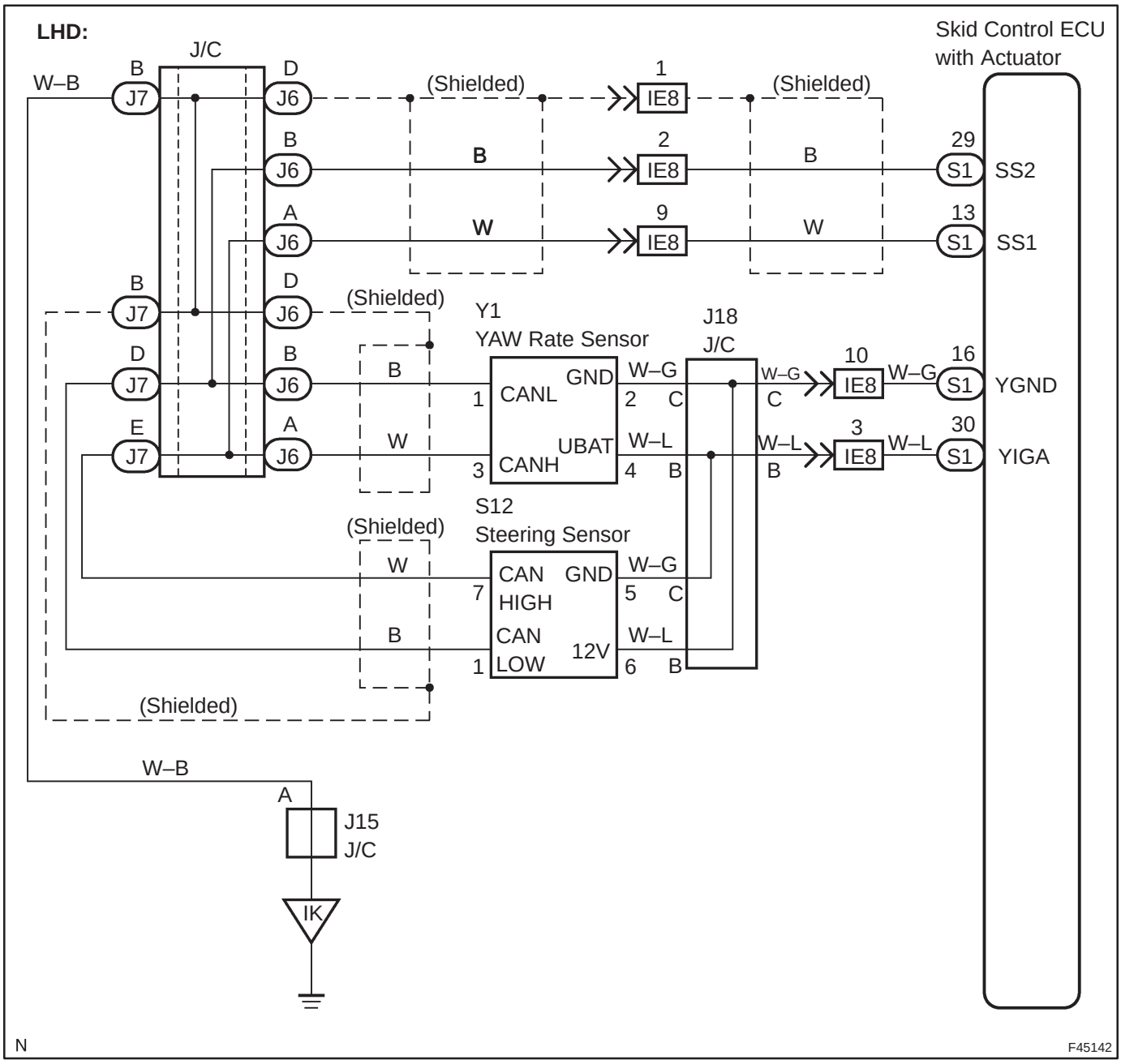

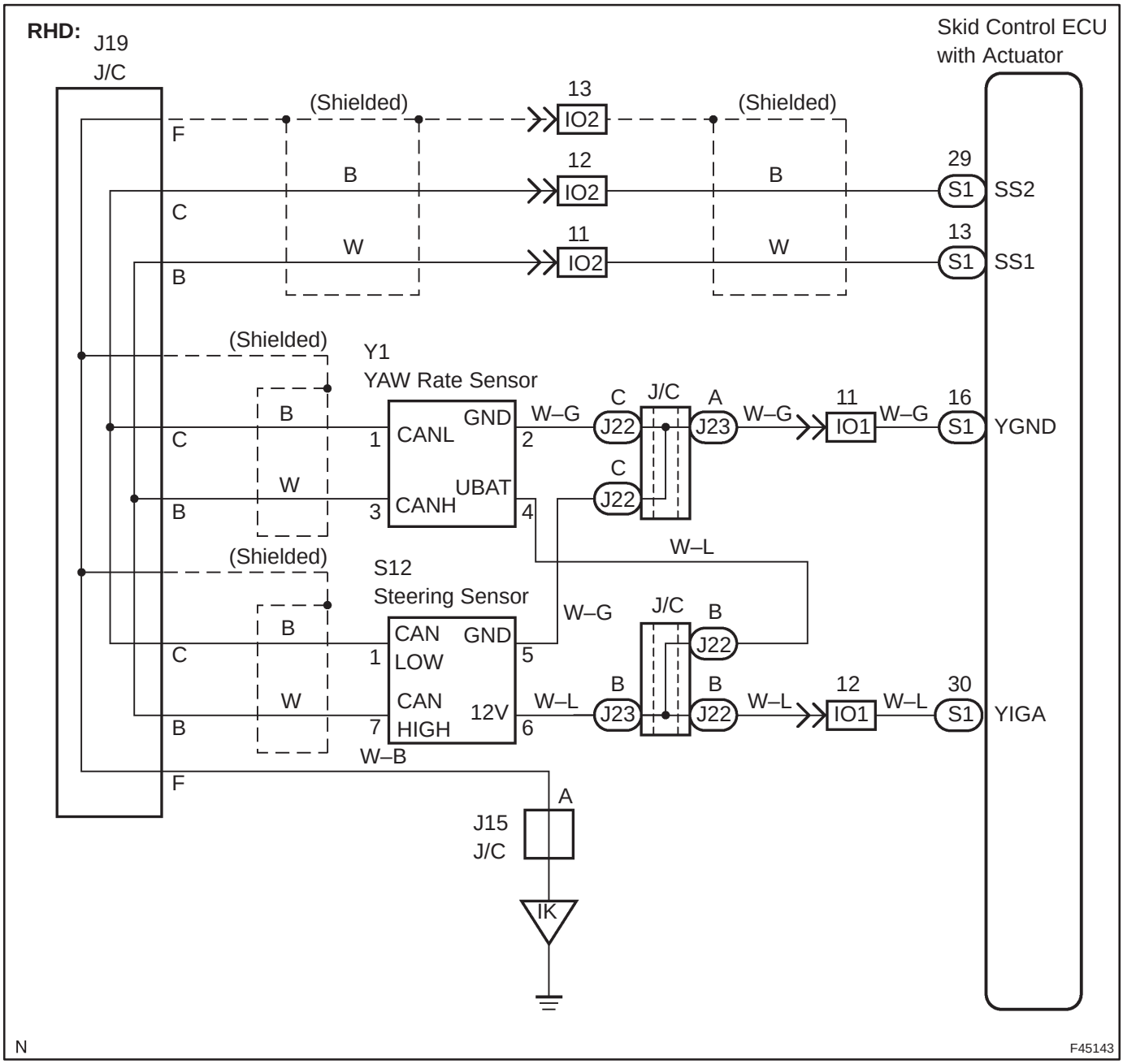
RHD:
J19
J/C
Skid Control ECU
with Actuator
(Shielded)
13
IO2
(Shielded)
F
B
12
IO2
B
29
S1
SS2
C
W
11
IO2
W
13
S1
SS1
B
(Shielded)
Y1
YAW Rate Sensor
B
C
1
CANL
GND
2
W–G
C
J/C
A
W–G
11
W–G
16
S1
YGND
J22
J23
IO1
W
B
3
CANH
UBAT
4
C
J22
W–L
(Shielded)
S12
Steering Sensor
B
C
1
CAN
LOW
GND
5
W–G
J/C
B
J22
W
B
7
CAN
HIGH
12V
6
W–L
B
J23
B
J22
W–L
12
IO1
W–L
30
S1
YIGA
W–B
F
A
J15
J/C
IK
N
F45143

INSPECTION PROCEDURE

1	CHECK HARNESS AND CONNECTOR(YAW RATE SENSOR – SKID CONTROL ECU)

(a) Check for an open or short circuit in harness and connector between the yaw rate sensor and skid control ECU (See page 01–32).

NG → REPAIR OR REPLACE HARNESS OR CONNECTOR

OK

2	CHECK HARNESS AND CONNECTOR(STEERING ANGLE SENSOR – SKID CONTROL ECU)

(a) Check for an open or short circuit in harness and connector between the steering angle sensor and skid control ECU (See page 01–32).

NG → REPAIR OR REPLACE HARNESS OR CONNECTOR

OK

REPLACE ABS & TRACTION ACTUATOR ASSY(See page 32–57)

DTC	C1350/51	PUMP MOTOR IS LOCKED/OPEN CIRCUIT IN PUMP MOTOR GROUND

CIRCUIT DESCRIPTION

DTC No.	DTC Detecting Condition	Trouble Area
C1350/51	When any of the following 1 through 3 is detected. 1. No motor voltage supply within 0.08 sec. after actuation starts the motor relay. 2. A high level of motor voltage when actuation does not starts the motor relay for more than 2.5 sec. 3. The pump motor voltage is high level for a certain time after the motor relay has elapsed.	• Brake actuator pump motor • ABS motor relay circuit

WIRING DIAGRAM

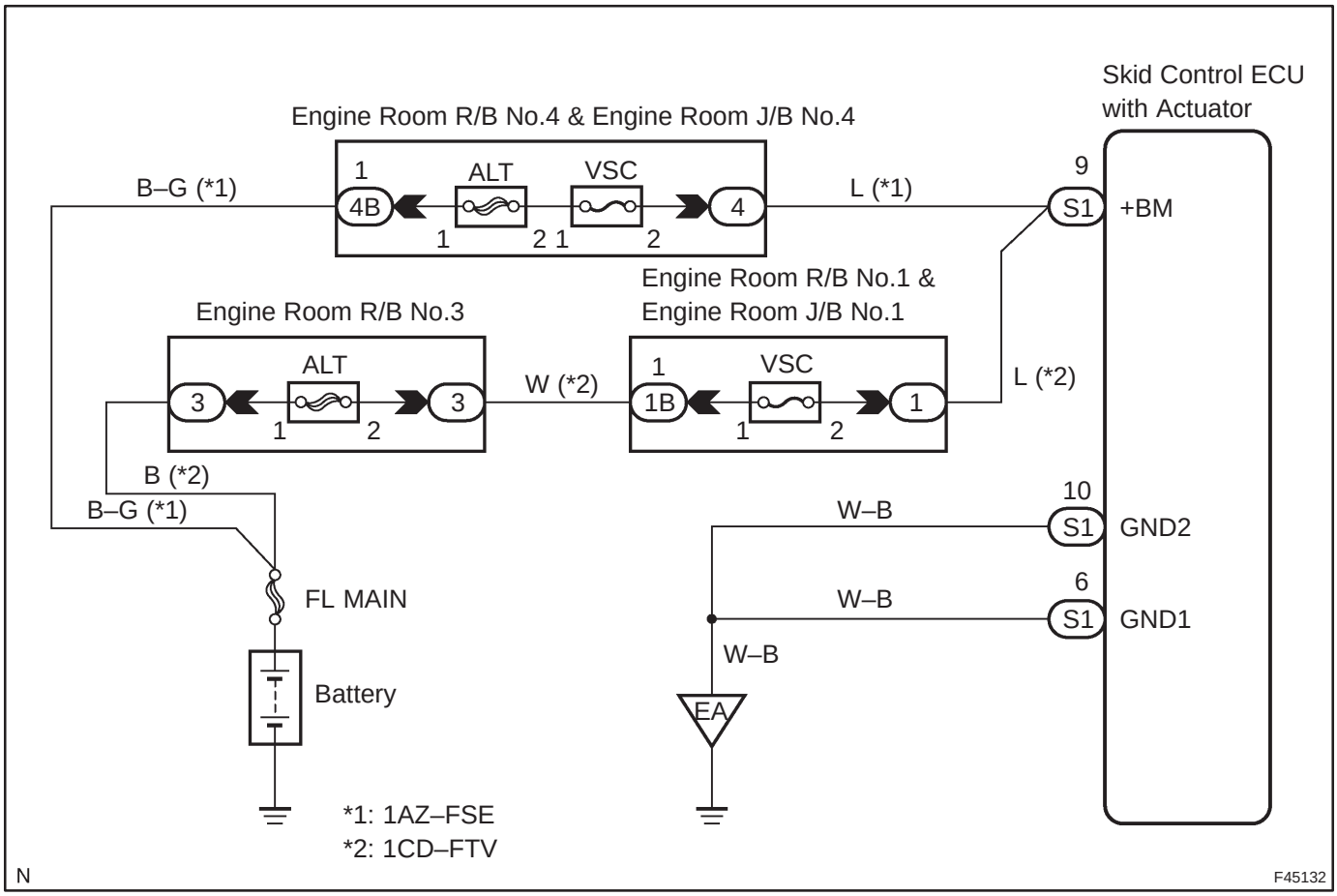

INSPECTION PROCEDURE

1	RECONFIRM DTC

(a) Check if other DTCs are detected (See page 05–756).

YES → REPAIR CIRCUIT INDICATED BY OUTPUT CODE

NO

REPLACE ABS & TRACTION ACTUATOR ASSY(See page 32–57)

DTC	AlwaysON	MALFUNCTION IN ABS ECU

CIRCUIT DESCRIPTION

DTC No.	DTC Detecting Condition	Trouble Area
Always ON	Either of the following 1 or 2 is detected: 1. The ECU connectors are disconnected from the ECU. 2. There is a malfunction in the ECU internal circuit. 3. Malfunction in the circuit of meter or ABS warning light circuit.	• Battery • IC regulator • ABS warning light circuit • Power source circuit • Skid control ECU

HINT:
There is a case that hand–held tester cannot be used when ECU is abnormal.

WIRING DIAGRAM

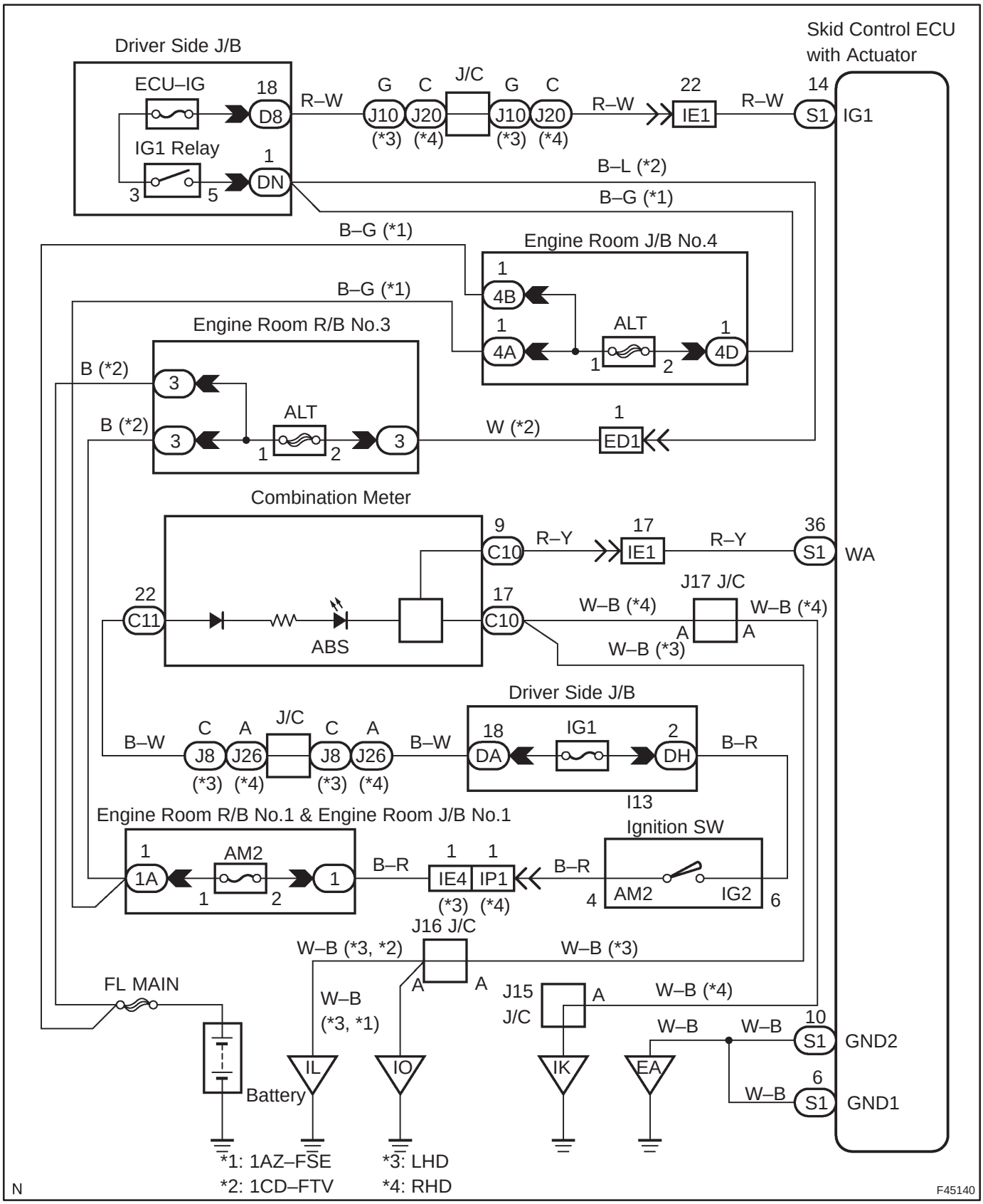

INSPECTION PROCEDURE

1	CHECK DTC FOR ABS

(a) Check the DTCs are output (See page 05–756).

YES → REPAIR CIRCUIT INDICATED BY OUTPUT CODE

NO

2	INSPECT SKID CONTROL ECU CONNECTOR SECURELY CONNECTED

NO → CONNECT CONNECTOR TO ECU

YES

3	INSPECT SKID CONTROL ECU TERMINAL VOLTAGE(IG1 TERMINAL)

WITH USING HAND–HELD TESTER:

(a) Check the voltage condition, which is output from the ECU and displayed on the hand–held tester.
OK:
"Normal" is displayed.

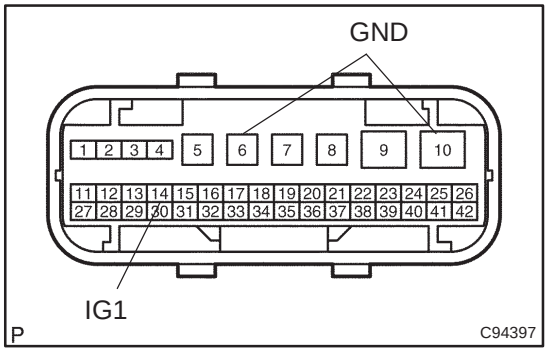

WITHOUT USING HAND–HELD TESTER:

(a) Disconnect the skid control connector.
(b) Turn the ignition switch ON.
(c) Measure the voltage between terminals IG1 and GND of the skid control ECU harness side connector.
OK:
Voltage: 10 to 14 V

OK → REPLACE ABS & TRACTION ACTUATOR ASSY (See page 32–57)

NG

4	INSPECT BATTERY

OK:
Voltage: 10 to 14 V

NG → INSPECT CHARGING SYSTEM

OK

5	CHECK HARNESS AND CONNECTOR(DLC3 – SKID CONTROL ECU)

(a) Check for a short circuit in harness and connector between terminal Tc of the DLC3 and skid control ECU (See page 01–32).

NG → REPAIR OR REPLACE HARNESS OR CONNECTOR

OK

6	INSPECT ABS WARNING LIGHT

(a) See combination meter troubleshooting on page 71–1.

NG → REPAIR OR REPLACE COMBINATION METER ASSEMBLY

OK

7	CHECK HARNESS AND CONNECTOR(SKID CONTROL ECU – COMBINATION METER)

(a) Check for an open or short circuit in harness and connector between the skid control ECU and combination meter (See page 01–32).

NG → REPAIR OR REPLACE HARNESS OR CONNECTOR

OK

REPLACE ABS & TRACTION ACTUATOR ASSY(See page 32–57)

DTC	AlwaysON	MALFUNCTION IN ECU(VSC WARNING LIGHT)

CIRCUIT DESCRIPTION

When the ECU stores DTC, the VSC warning light illuminates on the combination meter.

DTC No.	DTC Detecting Condition	Trouble Area
Always ON	Malfunction in skid control ECU	• Battery • IC regulator • Power source circuit • Skid control ECU

WIRING DIAGRAM

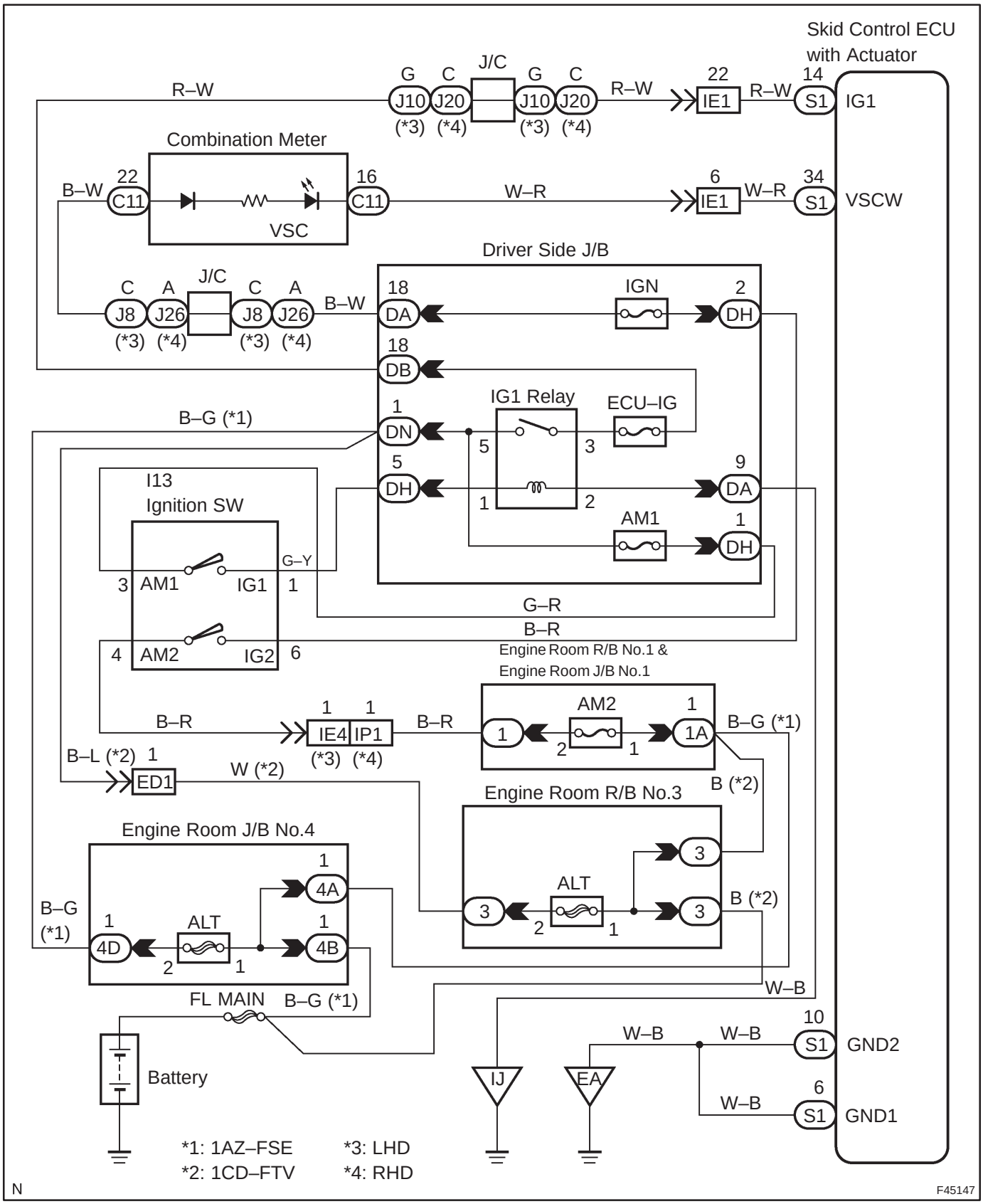

INSPECTION PROCEDURE

1	CHECK DTC FOR VSC

(a) Check the DTCs are output (See page 05–756).

YES → REPAIR CIRCUIT INDICATED BY OUTPUT CODE

NO

2	INSPECT SKID CONTROL ECU CONNECTOR SECURELY CONNECTED

NO → CONNECT CONNECTOR TO ECU

YES

3	INSPECT SKID CONTROL ECU TERMINAL VOLTAGE(IG1 TERMINAL)

WITH USING HAND–HELD TESTER:

(a) Check the voltage condition, which is output from the ECU and displayed on the hand–held tester.

OK:

"Normal" is displayed.

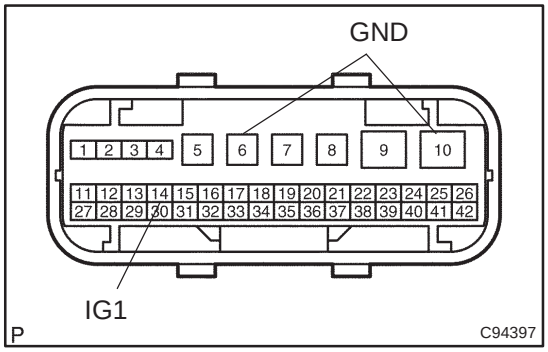

WITHOUT USING HAND–HELD TESTER:

(a) Disconnect the skid control connector.

(b) Turn the ignition switch ON.

(c) Measure the voltage between terminals IG1 and GND of the skid control ECU harness side connector.

OK:

Voltage: 10 to 14 V

OK → REPLACE ABS & TRACTION ACTUATOR ASSY (See page 32–57)

NG

4	INSPECT BATTERY

OK:

Voltage: 10 to 14 V

NG → INSPECT CHARGING SYSTEM

OK

5	CHECK HARNESS AND CONNECTOR(DLC3 – SKID CONTROL ECU)

(a) Check for a short circuit in harness and connector between terminal Tc of the DLC3 and skid control ECU (See page 01–32).

NG → REPAIR OR REPLACE HARNESS OR CONNECTOR

OK

6	CHECK VSC WARNING LIGHT

(a) See combination meter troubleshooting on page 71–1.

NG → REPAIR OR REPLACE COMBINATION METER ASSEMBLY

OK

7	CHECK HARNESS AND CONNECTOR(SKID CONTROL ECU – COMBINATION METER)

(a) Check for an open or short circuit in harness and connector between the skid control ECU and combination meter (See page 01–32).

NG → REPAIR OR REPLACE HARNESS OR CONNECTOR

OK

REPLACE ABS & TRACTION ACTUATOR ASSY(See page 32–57)

ABS WARNING LIGHT CIRCUIT (DOES NOT LIGHT UP)

CIRCUIT DESCRIPTION

If the ECU detects trouble, it will prohibit ABS control, turn on the ABS warning light, and store the DTC. Connect terminals Tc and CG of the DLC3 to make the ABS warning light blink and output the DTC.

WIRING DIAGRAM

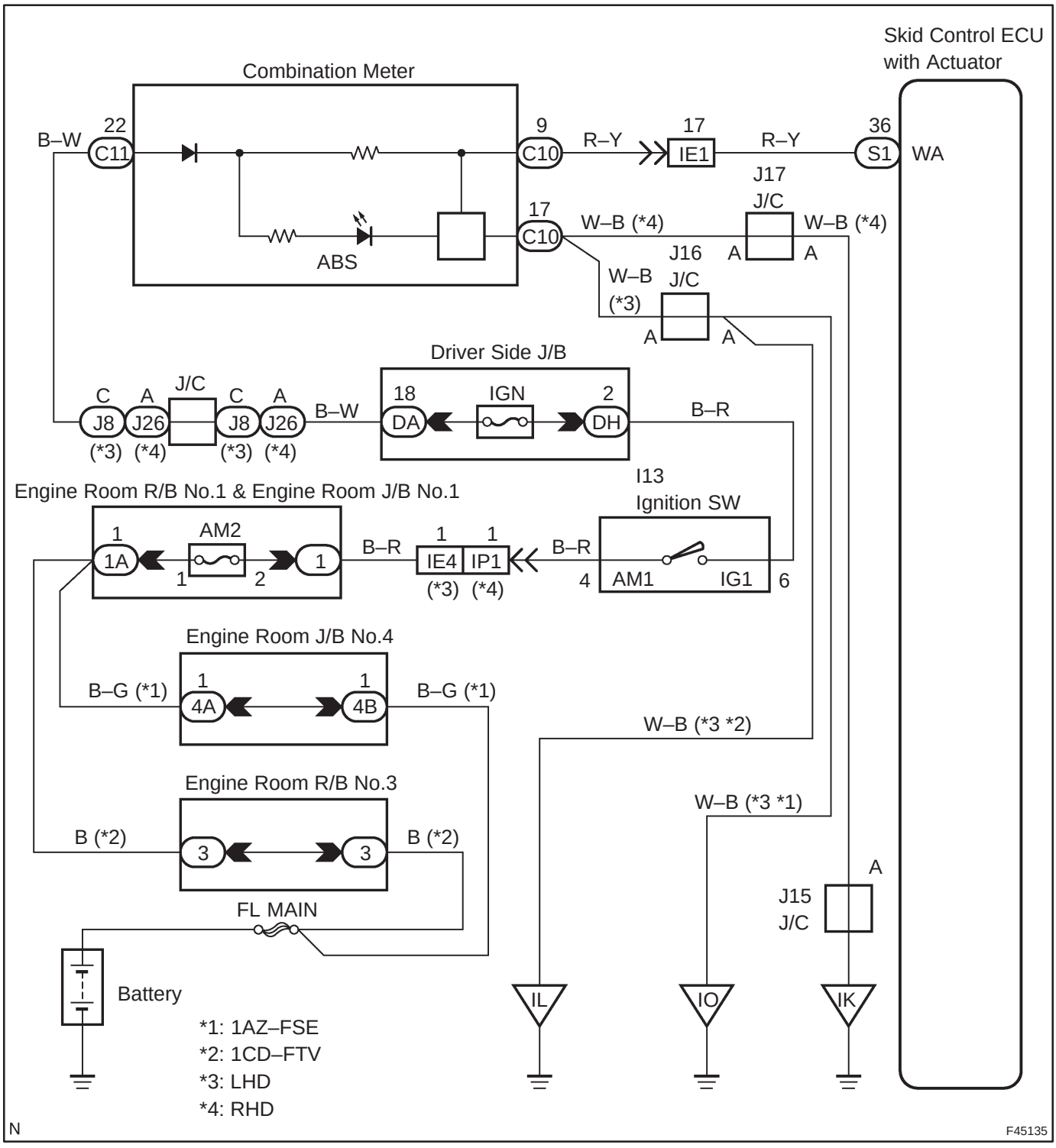

INSPECTION PROCEDURE

HINT:

Start the inspection from step 1 if you are using the hand–held tester and start from step 2 if you are not using the hand–held tester.

1	PERFORM ACTIVE TEST BY HAND–HELD TESTER(ABS WARNING LIGHT)

(a) Check that ”ON” and ”OFF” of the ABS warning light is shown on the combination meter by the hand–held tester.

OK → REPLACE ABS & TRACTION ACTUATOR ASSY (See page 32–57)

NG

2	INSPECT ABS WARNING LIGHT

(a) See combination meter troubleshooting on page 71–1.

NG → REPAIR OR REPLACE COMBINATION METER ASSEMBLY

OK

3	CHECK HARNESS AND CONNECTOR(SKID CONTORL ECU – CMBINATION METER)

(a) Check for an open or short circuit in harness and connector between the skid control ECU and combination meter (See page 01–32).

NG → REPAIR OR REPLACE HARNESS OR CONNECTOR

OK

REPLACE ABS & TRACTION ACTUATOR ASSY(See page 32–57)

VSC WARNING LIGHT CIRCUIT (DOES NOT LIGHT UP)

CIRCUIT DESCRIPTION

When the ECU stores DTC, the VSC warning light illuminates on the combination meter.

WIRING DIAGRAM

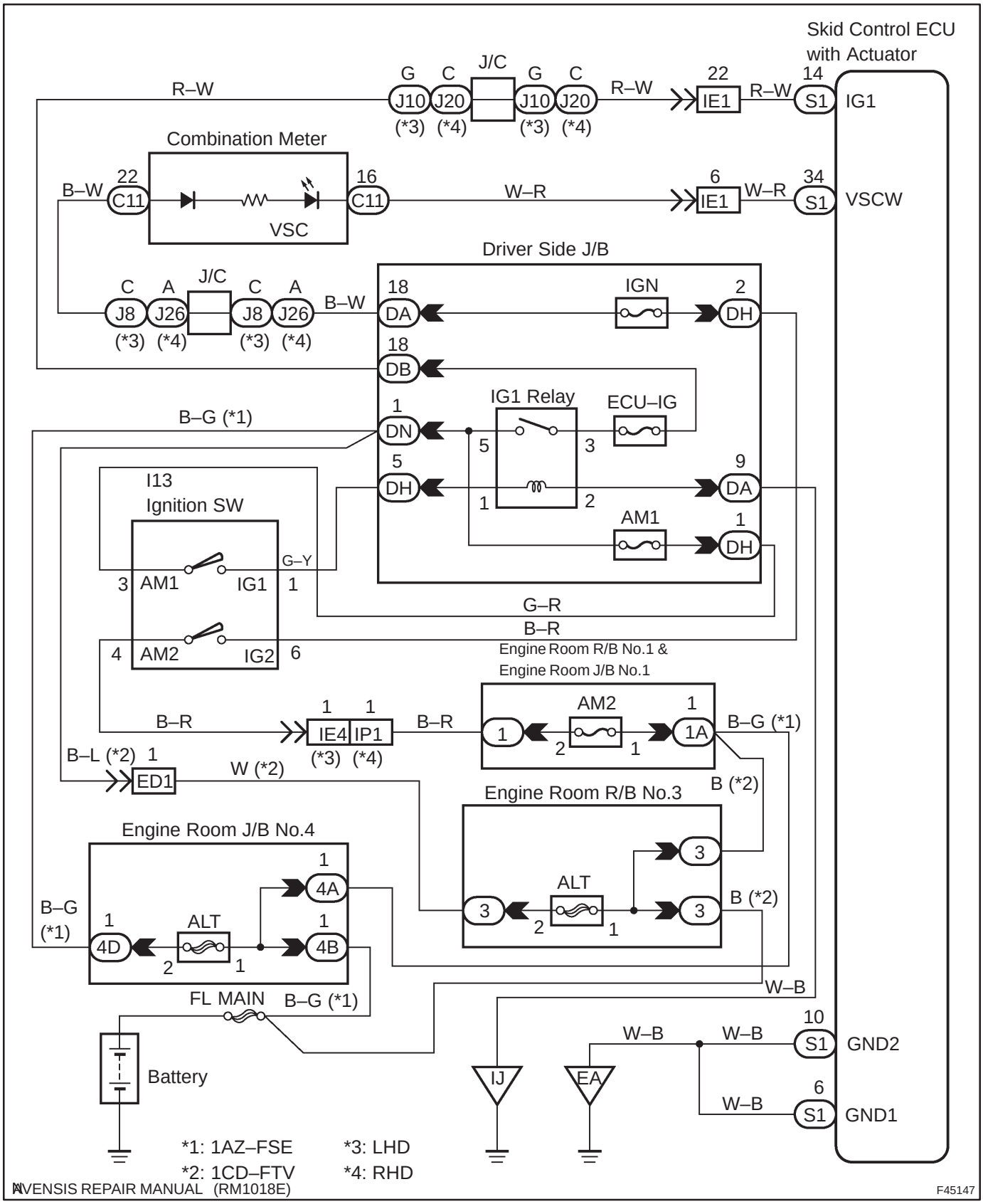

F45147

INSPECTION PROCEDURE

HINT:

Start the inspection from step 1 if you are using the hand–held tester and start from step 2 if you are not using the hand–held tester.

1	PERFORM ACTIVE TEST BY HAND–HELD TESTER(VSC WARNING LIGHT)

(a) Check that ”ON” and ”OFF” of the VSC warning light is shown on the combination meter by the hand–held tester.

OK → REPLACE ABS & TRACTION ACTUATOR ASSY (See page 32–57)

NG

2	INSPECT VSC WARNING LIGHT

(a) See combination meter troubleshooting on page 71–1.

NG → REPAIR OR REPLACE COMBINATION METER ASSEMBLY

OK

3	CHECK HARNESS AND CONNECTOR(COMBINATION METER – SKID CONTROL ECU)

(a) Check for an open or short circuit in harness and connector between the skid control ECU and combination meter (See page 01–32).

NG → REPAIR OR REPLACE HARNESS OR CONNECTOR

OK

REPLACE ABS & TRACTION ACTUATOR ASSY(See page 32–57)

BRAKE WARNING LIGHT CIRCUIT

CIRCUIT DESCRIPTION

The Brake warning light comes on when the brake fluid is insufficient, the parking brake is applied or the EBD is defective.

WIRING DIAGRAM

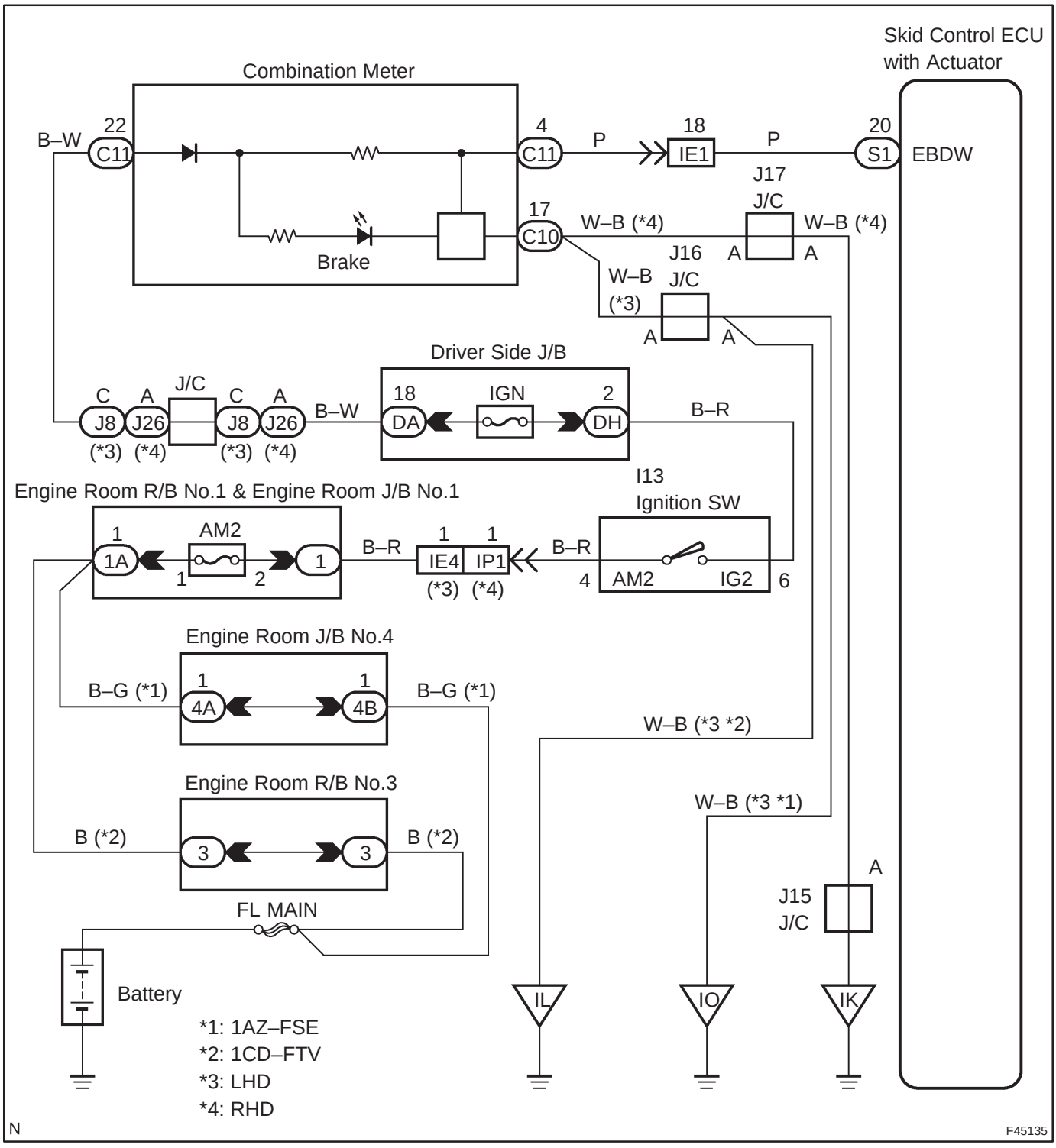

INSPECTION PROCEDURE

HINT:

Start the inspection from step 1 if you are using the hand–held tester and start from step 2 if you are not using the hand–held tester.

1	PERFORM ACTIVE TEST BY HAND–HELD TESTER(BRAKE WARNING LIGHT)

(a) Check that ”ON” and ”OFF” of the Brake warning light is shown on the combination meter by the hand–held tester.

OK → Go to step 4

NG

2	CHECK DTC FOR ABS

(a) Check the DTC on page 05–756.

YES → REPAIR CIRCUIT INDICATED BY OUTPUT CODE

NO

3	INSPECT BRAKE WARNING LIGHT

(a) See combination meter troubleshooting on page 71–1.

NG → REPAIR OR REPLACE COMBINATION METER ASSEMBLY

OK

4	INSPECT PARKING BRAKE SWITCH ASSY(See page 71–3)

NG → REPLACE PARKING BRAKE SWITCH ASSY

OK

5	INSPECT BRAKE FLUID LEVEL WARNING SWITCH(See page 71–3)

NG → REPLACE BRAKE MASTER CYLINDER RESERVOIR SUB–ASSY

OK

6	CHECK HARNESS AND CONNECTOR(SKID CONTROL ECU – PARKING BRAKE SWITCH)

(a) Check for an open or short circuit in harness and connector between terminal PKB of the skid control ECU and parking brake switch (See page 01–32).

NG → REPAIR OR REPLACE HARNESS OR CONNECTOR

OK

7	CHECK HARNESS AND CONNECTOR(SKID CONTROL ECU – BRAKE FLUID LEVEL WARNING SWITCH)

(a) Check for an open or short circuit in harness and connector between terminal EBDW of the skid control ECU and brake fluid level warning switch (See page 01–32).

NG → REPAIR OR REPLACE HARNESS OR CONNECTOR

OK

8	CHECK HARNESS AND CONNECTOR(SKID CONTROL ECU – COMBINATION MERTER)

(a) Check for an open or short circuit in harness and connector between the skid control ECU and combination meter (See page 01–32).

NG → REPAIR OR REPLACE HARNESS OR CONNECTOR

OK

REPLACE ABS & TRACTION ACTUATOR ASSY(See page 32–57)

TRC OFF INDICATOR, TRC CUT SWITCH CIRCUIT

CIRCUIT DESCRIPTION

This is the TRC control main switch. When the TRC OFF switch is pressed, TRC control goes off and the TRC OFF indicator illuminates. Also, turn the TRC OFF indicator light to ”ON” when the VSC system is at the fail safe control. If the ignition switch is turned off, TRC control surely comes on the next time the ignition switch is turned ON.

WIRING DIAGRAM

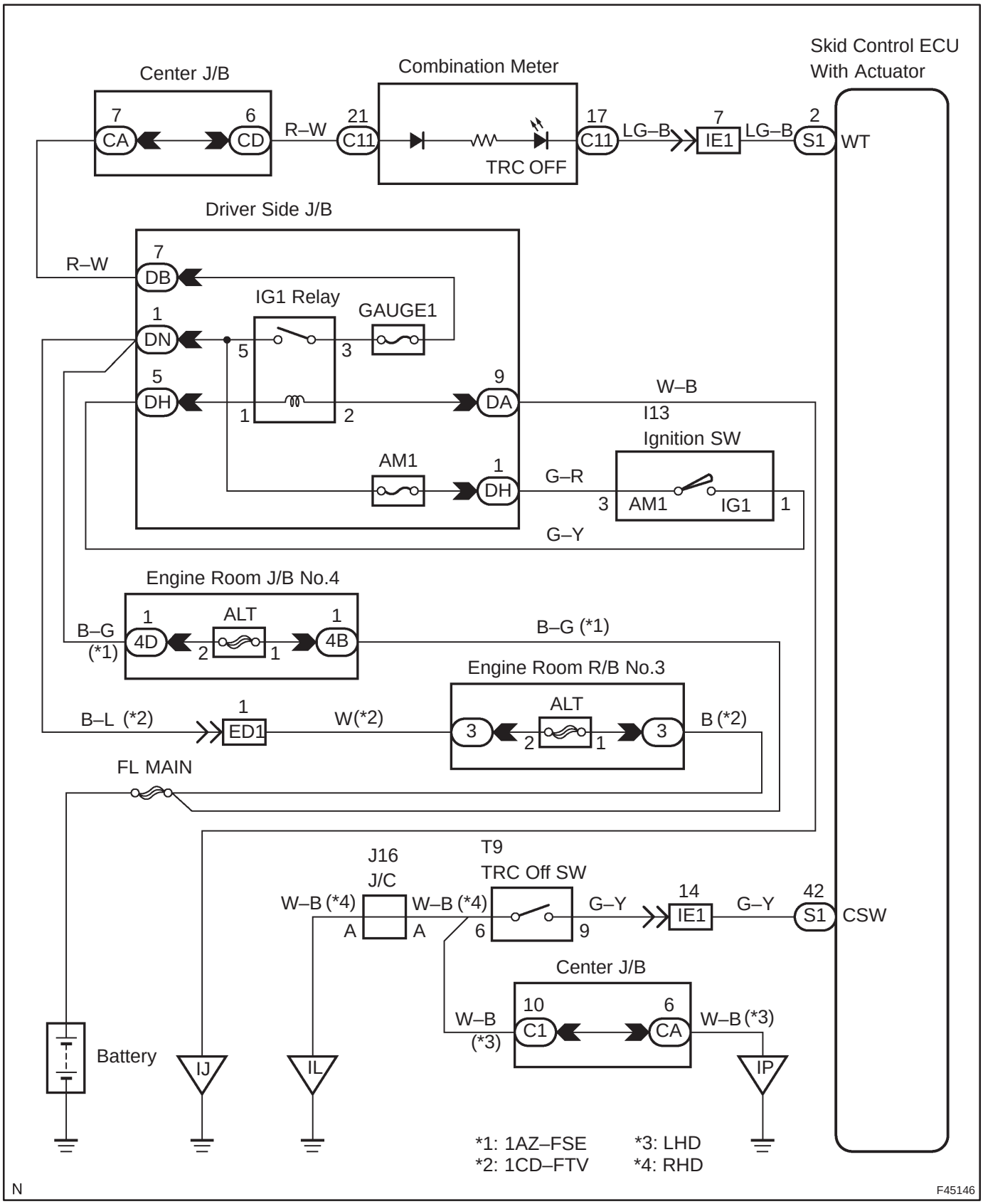

INSPECTION PROCEDURE

HINT:

Start the inspection from step 1 if you are using the hand–held tester and start from step 2 if you are not using the hand–held tester.

1	PERFORM ACTIVE TEST BY HAND–HELD TESTER(TRC OFF INDICATOR LIGHT)

(a) Check that ”ON” and ”OFF” of the TRC OFF indicator light is shown on the combination meter by the hand–held tester.

OK → **REPLACE ABS & TRACTION ACTUATOR ASSY (See page 32–57)**

NG

2	INSPECT TRC OFF INDICATOR LIGHT

(a) See combination meter troubleshooting on page 71–1.

NG → **REPAIR OR REPLACE COMBINATION METER ASSEMBLY**

OK

3	INSPECT TRACTION CONTROL SWITCH

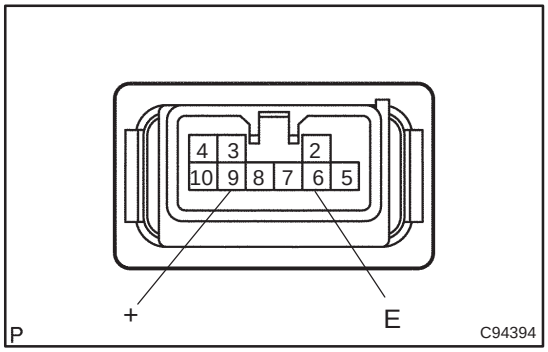

(a) Remove the TRC OFF switch.
(b) Disconnect the TRC OFF switch connector.
(c) Measure resistance between terminals + and E of the TRC OFF switch when the TRC OFF switch is ON and OFF.

OK:

TRC OFF switch	Resistance
Pushed in	Continuity
Released	1MΩ or higher

NG → **REPLACE TRACTION CONTROL SWITCH**

OK

4	CHECK HARNESS AND CONNECTOR(SKID CONTROL ECU – TRC OFF SWITCH)

(a) Check for an open or short circuit in harness and connector between terminal CSW of the skid control ECU and TRC OFF switch (See page 01–32).

NG → **REPAIR OR REPLACE HARNESS OR CONNECTOR**

OK

5	CHECK HARNESS AND CONNECTOR(SKID CONTROL ECU – COMBINATION METER)

(a) Check for an open or short circuit in harness and connector between the skid control ECU and combination meter (See page 01–32).

NG → REPAIR OR REPLACE HARNESS OR CONNECTOR

OK

REPLACE ABS & TRACTION ACTUATOR ASSY(See page 32–57)

SLIP INDICATOR LIGHT CIRCUIT

CIRCUIT DESCRIPTION

The SLIP indicator blinks during TRC & VSC operation.

WIRING DIAGRAM

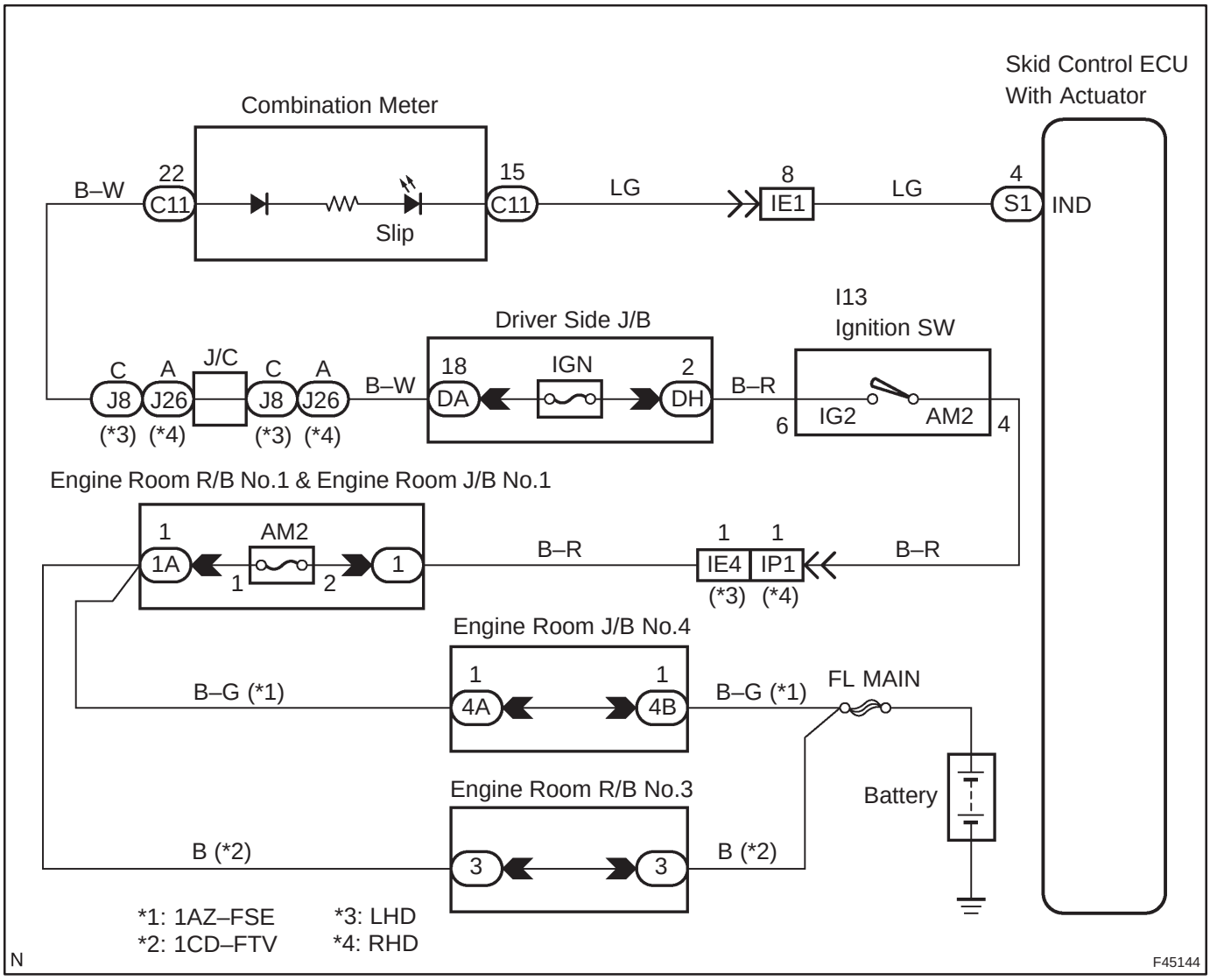

INSPECTION PROCEDURE

HINT:

Start the inspection from step 1 if you are using the hand–held tester and start from step 2 if you are not using the hand–held tester.

1	PERFORM ACTIVE TEST BY HAND–HELD TESTER(SLIP INDICATOR LIGHT)

(a) Check that ”ON” and ”OFF” of the SLIP indicator light is shown on the combination meter by the hand–held tester.

OK → **REPLACE ABS & TRACTION ACTUATOR ASSY (See page 32–57)**

NG

2	INSPECT SLIP INDICATOR LIGHT

(a) See combination meter troubleshooting on page 71–1.

NG → **REPAIR OR REPLACE COMBINATION METER ASSEMBLY**

OK

3	CHECK HARNESS AND CONNECTOR(SKID CONTROL ECU – COMBINATION METER)

(a) Check for an open or short circuit in harness and connector between terminal IND of the skid control ECU and combination meter (See page 01–32).

NG → **REPAIR OR REPLACE HARNESS OR CONNECTOR**

OK

REPLACE ABS & TRACTION ACTUATOR ASSY(See page 32–57)

SKID CONTROL BUZZER CIRCUIT

CIRCUIT DESCRIPTION

The skid control buzzer sounds during VSC operation.

WIRING DIAGRAM

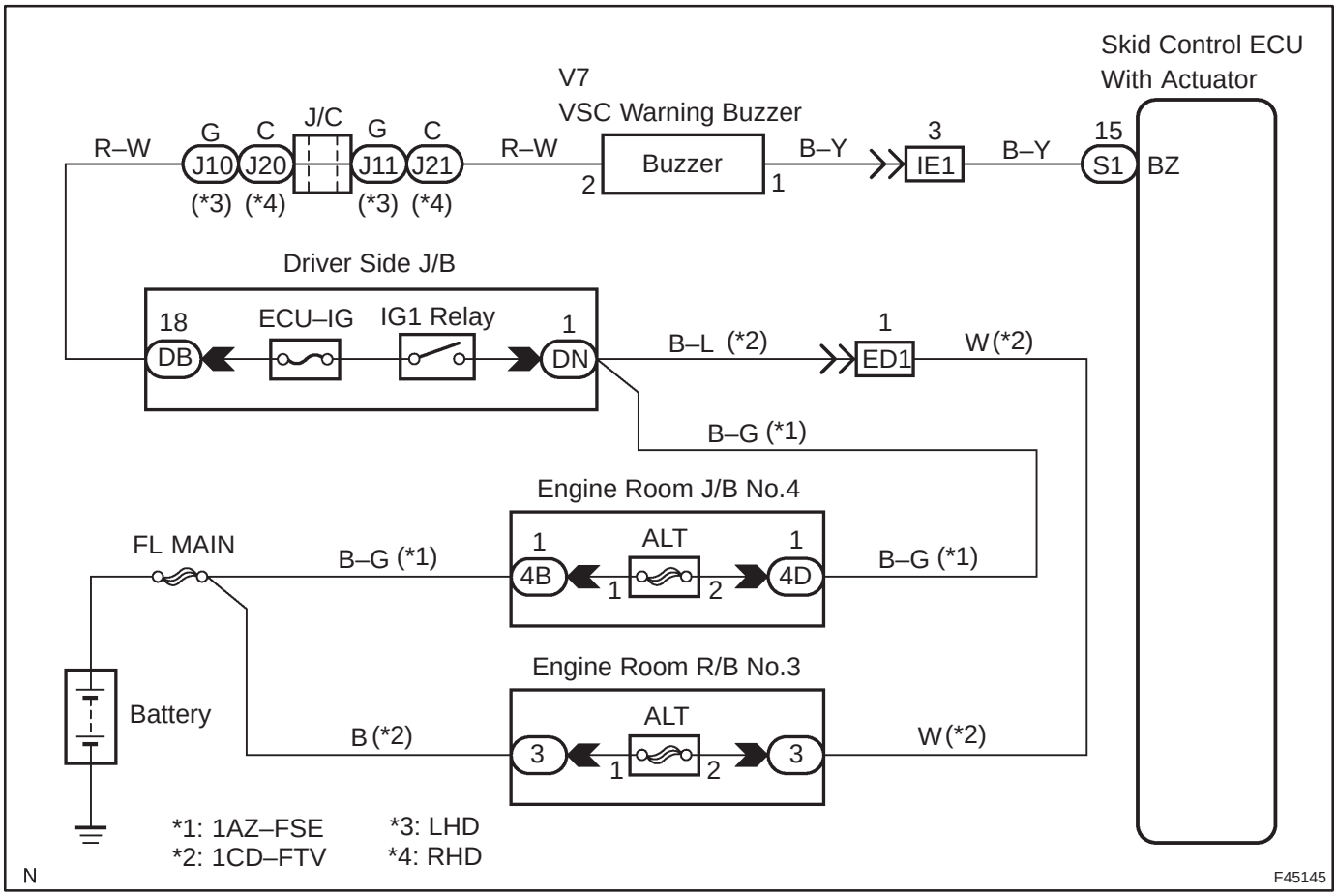

INSPECTION PROCEDURE

HINT:

Start the inspection from step 1 if you are using the hand–held tester and start from step 2 if you are not using the hand–held tester.

1	PERFORM ACTIVE TEST BY HAND–HELD TESTER(SKID CONTROL BUZZER)

(a) Check that skid control buzzer sounds ”ON” and ”OFF” with the hand–held tester.

OK → REPLACE ABS & TRACTION ACTUATOR ASSY (See page 32–57)

NG

2	INSPECT SKID CONTROL BUZZER ASSY

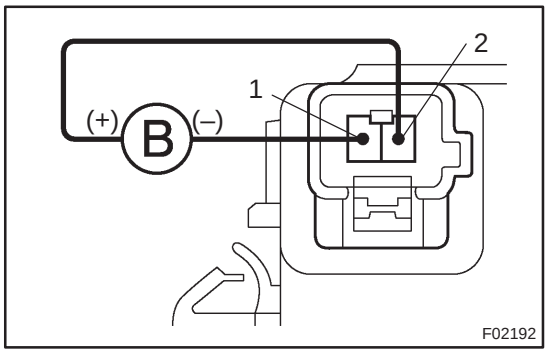

(a) Disconnect the skid control buzzer connector.

(b) Apply battery positive voltage to the terminals 1 and 2 of the skid control buzzer connector, check that the buzzer sounds.

NG → REPLACE SKID CONTROL BUZZER ASSY

OK

3	CHECK HARNESS AND CONNECTOR(SKID CONTROL BUZZER – SKID CONTROL ECU)

(a) Check for an open or short circuit in harness and connector between terminal BZ of the skid control ECU and skid control buzzer (See page 01–32).

NG → REPAIR OR REPLACE HARNESS OR CONNECTOR

OK

REPLACE ABS & TRACTION ACTUATOR ASSY(See page 32–57)

TC TERMINAL CIRCUIT

CIRCUIT DESCRIPTION

Connecting terminals Tc and CG of the DLC3 causes the ECU to display the DTC by flashing the ABS warning light.

WIRING DIAGRAM

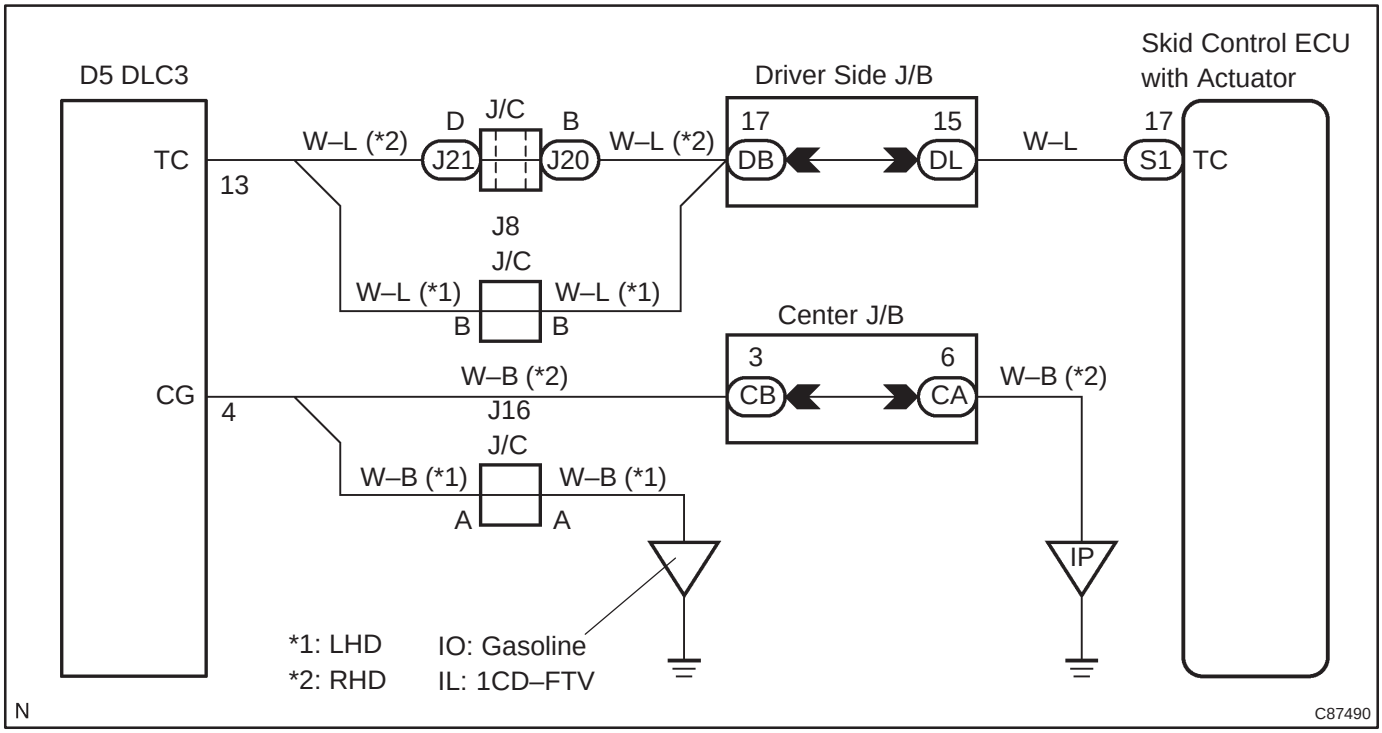

INSPECTION PROCEDURE

1	INSPECT DLC3 TERMINAL VOLTAGE(Tc TERMINAL)

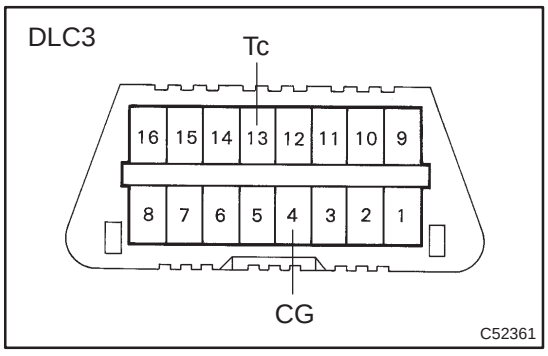

(a) Turn the ignition switch ON.
(b) Measure the voltage between terminals Tc and CG of the DLC3.
OK:
Voltage: 10 to 14 V

OK	Go to step 3

NG

2	CHECK HARNESS AND CONNECTOR(DLC3 – BODY GROUND)

(a) Check for an open or short circuit in harness and connector between terminal CG of the DLC3 and body ground (See page 01–32).

NG → REPAIR OR REPLACE HARNESS OR CONNECTOR

OK

3	CHECK HARNESS AND CONNECTOR(SKID CONTROL ECU – DLC3)

(a) Check for an open or short circuit in harness and connector between terminal Tc of the skid control ECU and DLC3 (See page 01–32).

NG → REPAIR OR REPLACE HARNESS OR CONNECTOR

OK

REPLACE ABS & TRACTION ACTUATOR ASSY(See page 32–57)

TS TERMINAL CIRCUIT

CIRCUIT DESCRIPTION

The sensor check circuit detects troubles in the sensor signal which cannot be detected by the DTC check. Connecting terminals Ts and CG of the DLC3 starts the check.

WIRING DIAGRAM

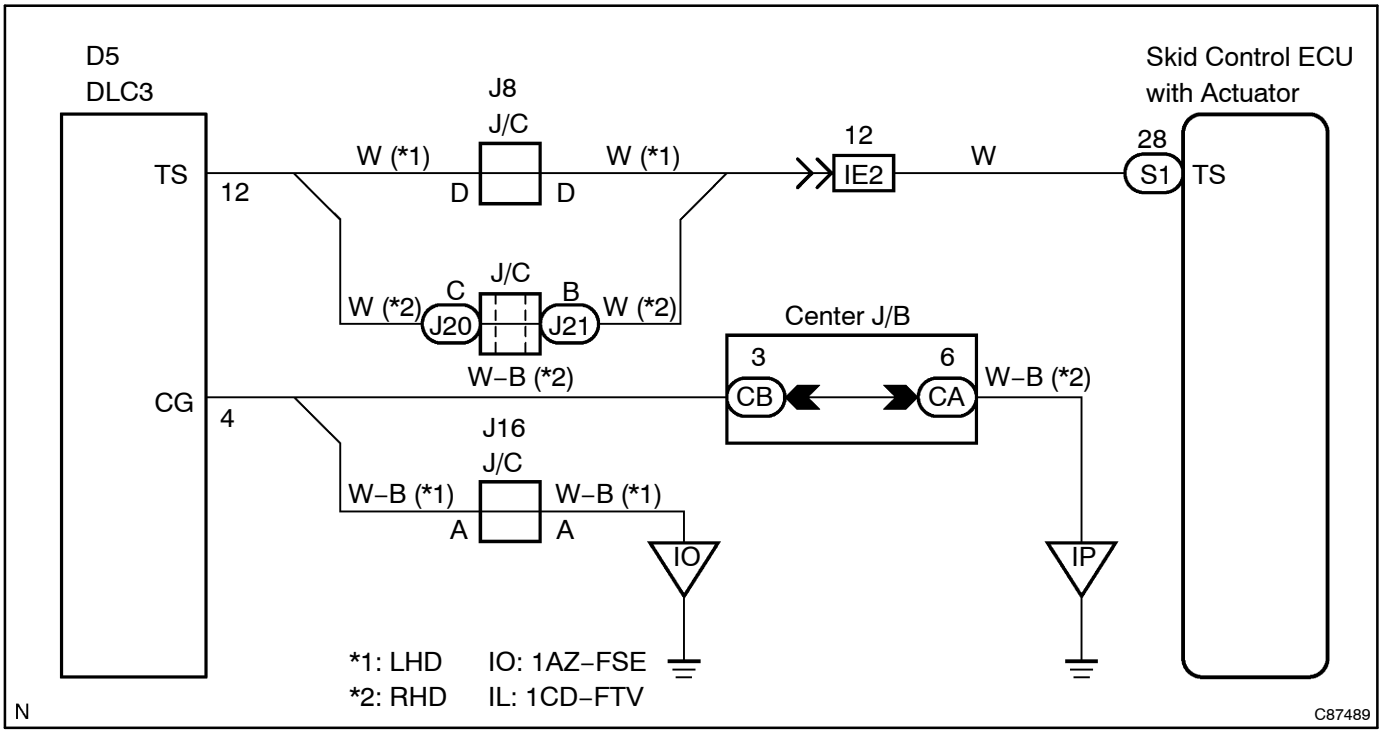

INSPECTION PROCEDURE

1	INSPECT DLC3 TERMINAL VOLTAGE(Ts TERMINAL)

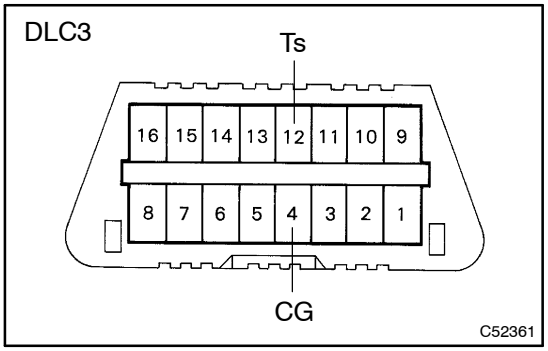

(a) Turn the ignition switch ON.
(b) Measure the voltage between terminals Ts and CG of the DLC3.
OK:
Voltage: 10 to 14 V

OK	Go to step 3

NG

2	CHECK HARNESS AND CONNECTOR(DLC3 – BODY GROUND)

(a) Check for an open or short circuit in harness and connector between terminal Ts of the DLC3 and skid control ECU (See page 01–32).

NG → REPAIR OR REPLACE HARNESS OR CONNECTOR

OK

3	CHECK AND REPAIR HARNESS AND CONNECTOR(SKID CONTROL ECU – DLC3)

(a) Check for an open or short circuit in harness and connector between terminal CG of the DLC3 and body ground (See page 01–32).

NG → REPAIR OR REPLACE HARNESS OR CONNECTOR

OK

REPLACE ABS & TRACTION ACTUATOR ASSY(See page 32–57)

ELECTRONIC CONTROLLED AUTOMATIC TRANSAXLE [ECT] (U241E(1AZ–FE))

0567N–11

HOW TO PROCEED WITH TROUBLESHOOTING

HINT:

The ECM of this system is connected to the multiplex communication system. Therefore, before starting troubleshooting, make sure to check that there is no trouble in the multiplex communication system.

When using hand–held tester, troubleshoot in accordance with the procedure on the following pages.

1	Vehicle Brought to Workshop

2	Customer Problem Analysis (See page 05–862)

3	Connect the hand–held tester to DLC3

4	Check and Clear DTC and Freeze Frame Data (See page 05–863)

5	Visual Inspection

6	Setting the Check Mode Diagnosis (See page 05–863)

7	Problem Symptom Confirmation

- Symptom does not occur: Go to step 8
- Symptom occur: Go to step 9

8	Symptom Simulation (See page 01–22)

9	DTC Check (See page 05–863)

DTC is not output: Go to step 10

DTC is output: Go to step 17

10	Basic Inspection (See page 40–2, 40–8 and 40–69)

NG: Go to step 19

OK

11	Mechanical System Test (See page 05–863)

NG: Go to step 16

OK

12	Manual Shifting Test (See page 05–863)

NG: Go to step 14

OK

13	Problem Symptoms Table Chapter 1 (See page 05–879)

NG: Go to step 18

OK

14	Problem Symptoms Table Chapter 2 (See page 05–879)

NG: Go to step 16

OK

15	Problem Symptoms Table Chapter 3 (See page 05–879)

NG

16	Part Inspection

Go to step 19

17	DTC Chart (See page 05–876)

18	Circuit Inspection (See page 05–882)

19	Identification of Problem

20	Repair

21	Confirmation Test

End

When not using hand–held tester, troubleshoot in accordance with the procedure on the following pages.

1	Vehicle Brought to Workshop

2	Customer Problem Analysis (See page 05–862)

3	Check and Clear DTCs (See page 05–863)

4	Problem Symptom Confirmation

Symptom does not occur: Go to step 5

Symptom occur: Go to step 6

5	Symptom Simulation (See page 01–22)

6	DTC Check (See page 05–863)

DTC is not output: Go to step 7

DTC is output: Go to step 14

7	Basic Inspection (See page 40–2, 40–8 and 40–69)

NG → Go to step 16

OK

8	Mechanical System Test (See page 05–863)

NG → Go to step 13

OK

9	Manual Shifting Test (See page 05–863)

NG → Go to step 11

OK

10	Problem Symptoms Table Chapter 1 (See page 05–879)

NG → Go to step 15

OK

11	Problem Symptoms Table Chapter 2 (See page 05–879)

NG → Go to step 13

OK

12	Problem Symptoms Table Chapter 3 (See page 05–879)

NG

13	Part Inspection

Go to step 16

14	DTC Chart (See page 05–876)

15	Circuit Inspection (See page 05–882)

16	Identification of Problem

17	Repair

18	Confirmation Test

End

05CBX–01

PRECAUTION

CAUTION:

Perform the RESET MEMORY (AT initialization) when replacing the automatic transaxle assy, engine assy or ECM.

HINT:

Initialization can not be completed by only removing the battery.

0567O–10

CUSTOMER PROBLEM ANALYSIS CHECK

Transmission Control System Check Sheet	Inspector's Name :

Customer's Name		Registration No.	
		Registration Year	/ /
		Frame No.	
Date Vehicle Brought In	/ /	Odometer Reading	km mile

Date Problem Occurred	/ /
How Often Does Problem Occur?	☐ Continuous ☐ Intermittent (times a day)

Symptoms	☐ Vehicle does not move (☐ Any range ☐ Particular range)
	☐ No up–shift (☐ 1st → 2nd ☐ 2nd → 3rd ☐ 3rd → O/D)
	☐ No down–shift (☐ O/D → 3rd ☐ 3rd → 2nd ☐ 2nd → 1st)
	☐ No up–shift (S range)
	☐ No down–shift (S range)
	☐ Lock–up malfunction
	☐ Shift point too high or too low
	☐ Harsh engagement (☐ N → D ☐ Lock–up ☐ Any drive range)
	☐ Slip or shudder
	☐ No kick–down
	☐ Others ( )

Check Item	MIL	☐ Normal ☐ Remains ON

DTC Check	1st Time	☐ Normal code ☐ Malfunction code (DTC)
	2nd Time	☐ Normal code ☐ Malfunction code (DTC)

05C8R–02

PRE–CHECK

1. DIAGNOSIS SYSTEM

(a) Description for Euro–OBD

(1) When troubleshooting Euro–OBD vehicles, the only difference from the usual troubleshooting procedure is that you connect the vehicle to the OBD scan tool complying with ISO 15031–4 or hand–held tester, and read off various data output from the vehicle's ECM.

(2) Euro–OBD regulations require that the vehicle's on–board computer illuminates the Check Engine Warning Light (Malfunction Indicator Lamp)/CHK ENG (MIL) on the instrument panel when the computer detects a malfunction in the emission control system/components or in the driving system components which affect vehicle emissions, or a malfunction in the computer. In addition to CHK ENG (MIL) illuminating when a malfunction is detected, the applicable Diagnostic Trouble Codes (DTCs) prescribed by ISO15031–6 are recorded in the ECM memory.

If the malfunction does not occur in 3–trip, the CHK ENG (MIL) goes off but the DTCs remain recorded in the ECM memory.

(3) To check the DTCs, connect the OBD scan tool or hand–held tester to the Data Link Connector 3 (DLC3) on the vehicle. The OBD scan tool or hand–held tester also enables you to erase the DTCs and check freezed frame data and various forms of engine data (For operating instructions, see the OBD scan tool's instruction book.).

(4) DTCs include ISO controlled codes and manufacturer controlled codes. ISO controlled codes must be set as prescribed by the ISO, while manufacturer controlled codes can be set freely by the manufacturer within the prescribed limits (See DTC chart on page 05–876).

(5) The diagnosis system operates in normal mode during normal vehicle use. It also has a check mode for technicians to simulate malfunction symptoms and troubleshoot. Most DTCs use 2 trip detection logic (*) to prevent erroneous detection, and ensure thorough malfunction detection. By switching the ECM to check mode when troubleshooting, technicians can cause the CHK ENG (MIL) to light up for a malfunction that is only detected once or momentarily (Hand–held tester only) (See step 2).

(6) *2 trip detection logic:
When a malfunction is first detected, the malfunction code is temporarily stored in the ECM memory (1st trip). If the same malfunction is detected again during the second drive test, this second detection causes the CHK ENG (MIL) to illumenate (2nd trip) (However, the ignition switch must be turned OFF between the 1st trip and the 2nd trip.).

(b) Description M–OBD

(1) When troubleshooting Multiplex (M–OBD) vehicles, the only difference from the usual troubleshooting procedure is that you connect the hand–held tester to the vehicle, and read off various data output from the vehicle's ECM.

(2) The vehicle's on–board computer illuminates the MIL on the instrument panel when the computer detects a malfunction in the computer itself or in driving system components. In addition to the MIL illuminating when a malfunction is detected, the applicable DTCs are recorded in the ECM memory.

If the malfunction does not occur in 3–trip, the CHK ENG (MIL) goes off but the DTCs remain recorded in the ECM memory.

(3) To check the DTCs, connect the hand–held tester to DLC3 on the vehicle or read the number of blinks of the MIL when TC and CG terminals on the DLC3 are connected. The hand–held tester also enables you to erase the DTCs and activate the several actuators and check freeze frame data and various forms of engine data (For instruction book).

(4) The diagnosis system operates in normal mode during normal vehicle use, and also has a check (test) mode for technicians to simulate malfunction symptoms and perform troubleshooting. Most DTCs use 2–trip detection logic (*) to prevent erroneous detection and ensure thorough malfunction detection. By switching the ECM to check (test) mode using the hand–held tester when troubleshooting, the technician can cause the MIL to illuminate for a malfunction that is only detected once or momentarily.

*2–trip detection logic:
When a logic malfunction is first detected, the malfunction is temporarily stored in the ECM memory. If the same malfunction is detected again during the 2nd test drive, this 2nd detection causes the MIL to illuminate.

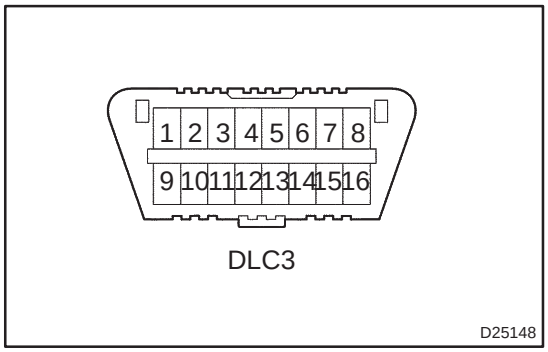

(c) Inspect the DLC3.

(1) The vehicle's ECM uses the ISO 9141–2 (Euro–OBD)/ISO 14230 (M–OBD) communication protocol. The terminal arrangement of DLC3 complies with ISO 15031–3 and matches the ISO 9141–2/ISO 14230 format.

Terminal No.	Connection	Voltage or Resistance	Condition
7	Bus ⊕ Line	Pulse generation	During communication
4	Chassis Ground	↔ Body Ground / 1 Ω or less	Always
16	Battery Positive	↔ Body Ground / 9 – 14 V	Always

HINT:

If your display shows "UNABLE TO CONNECT TO VEHICLE" when you have connected the cable of hand–held tester to DLC3, turned the ignition switch ON and operated the hand–held tester, there is a problem on the vehicle side or tool side.

- If communication is normal when the tool is connected to another vehicle, inspect DLC3 on the original vehicle.
- If communication is still not possible when the tool is connected to another vehicle, the problem is probably in the tool itself, so consult the Service Department listed in the tool's instruction manual.

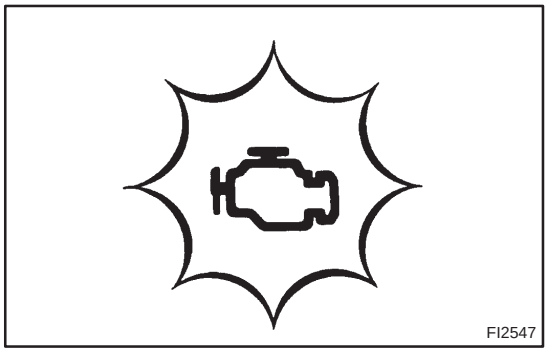

2. INSPECT DIAGNOSIS (NORMAL MODE)

(a) Check the MIL.

(1) The MIL comes on when the ignition switch is turned ON and the engine is not running.

HINT:

If the MIL does not come on, troubleshoot the combination meter.

(2) When the engine is started, the MIL should go off. If the light remains on, the diagnosis system has detected a malfunction or abnormality in the system.

(b) Check the DTC, using the hand–held tester.

NOTICE:

Hand–held tester only:

When the diagnostic system is switched from normal mode to check (test) mode, it erases all DTCs and freeze frame data recorded in normal mode. So before switching modes, always check the DTCs and freeze frame data, and note them down.

(1) Use the hand–held tester to check the DTCs and instructions, see the hand–held tester instruction book.

(2) See page 05–876 to confirm the details of the DTCs.

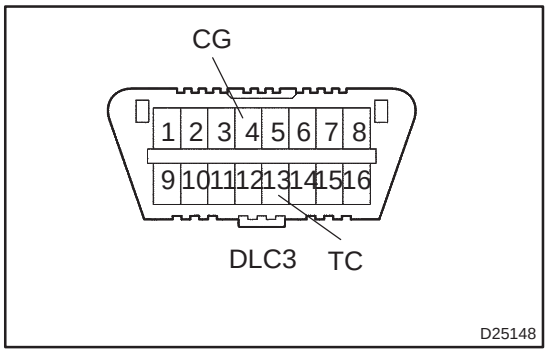

(c) Check the DTC (Not using the hand–held tester).

(1) Turn the ignition switch ON, but do not start the engine.

(2) Using SST, connect terminals 13 (TC) and 4 (CG) of DLC3.

SST 09843–18040

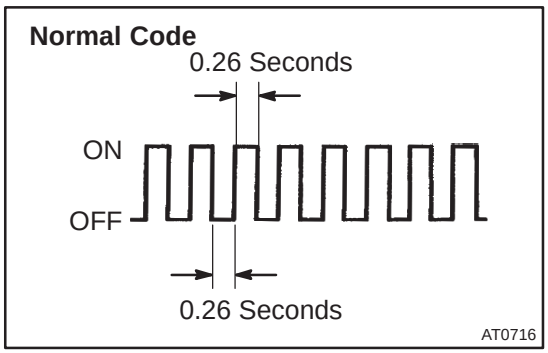

(3) Read the DTC indicated by the number of times of the MIL blinks.

HINT:
If the system is operating normally, the light will blink 2 times per second.

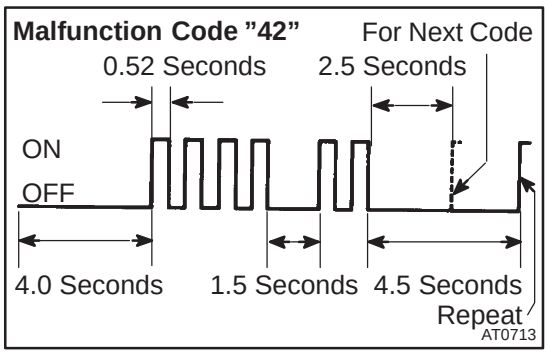

(4) The malfunction code is indicated, as shown in the chart on the left (DTC ”42” is shown as an example).

HINT:
When 2 or more malfunction codes are stored in memory, the lower–numbered code is displayed first.

3. INSPECT DIAGNOSIS (CHECK MODE)

HINT:

Hand–held tester only:

Compared to the normal mode, the check mode has high sensing ability to detect malfunctions.

Furthermore, the same diagnostic items which are detected in Normal mode can also be detected in Check mode.

(a) Check the DTC.

(1) Check the initial conditions.

- Battery voltage 11 V or more
- Throttle valve fully closed
- Shift lever in P range
- Air conditioning switched OFF

(2) Turn the ignition switch OFF.

(3) Prepare the hand–held tester.

(4) Connect the hand–held tester to DLC3.

(5) Turn the ignition switch ON and switch the hand–held tester ON.

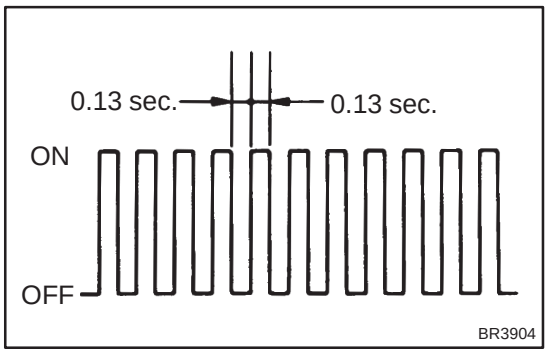

(6) Switch the hand–held tester from Normal mode to Check mode (Check that the MIL flashes).

(7) Start the engine (MIL goes out after the engine starts).

(8) Simulate the conditions of the malfunction described by the customer.

NOTICE:

Leave the ignition switch ON until you have checked the DTCs, etc.

(9) After simulating the malfunction conditions, use the hand–held tester diagnosis selector to check the DTCs and freeze frame data, etc.

HINT:

Take care not to turn the ignition switch OFF, as turning it off switches the diagnosis system from Check mode to Normal mode, which all DTCs etc. are erased.

(10) After checking the DTC, inspect the applicable circuit.

(b) Clear the DTC.

(1) When using hand–held tester:

The following operation will erase the DTC and freeze frame data. Operate a hand–held tester to erase the codes.

(2) When not using the hand–held tester:

Remove the EFI fuse from engine room J/B for 10 seconds or more.

4. DATA LIST

HINT:

According to the DATA LIST displayed by the hand–held tester, you can read the value of the switch, sensor, actuator and so on without parts removal. Reading the DATA LIST as the first step of troubleshooting is one of the methods to shorten the work time.

(a) Warm up the engine.
(b) Turn the ignition switch OFF.
(c) Connect the hand–held tester to the DLC3.
(d) Turn the ignition switch ON.
(e) According to the display on tester, read the ”DATA LIST”.

Item	Measurement Item/ Display (Range)	Normal Condition	Diagnostic Note
STOP LIGHT SW	Stop light SW Status/ ON or OFF	• Brake Pedal is depressed: ON • Brake Pedal is released: OFF	←
SHIFT	Actual Gear Position/ 1st, 2nd, 3rd, 4th (O/D)	Shift lever Range is; • D: 1st, 2nd, 3rd or 4th (O/D)	←
SPD (NC)	Counter Gear Speed display: 50 r/min	D Range is warmed up,4th (O/D); Same as input shaft speed	←
LOCK UP SOL	Lock Up Solenoid Status/ ON or OFF	• Lock Up: ON • Except Lock Up: OFF	←
KICKDOWN SW	Kick down SW Status/ ON or OFF	• Accelerator Pedal is depressed: ON • Accelerator Pedal is released: OFF	←
PNP SW [NSW]	PNP SW Status/ ON or OFF	Shift lever range is; P or N: ON Except P or N: OFF	The shift lever range and these values are different, there are failures of the PNP switch or shift cable adjustment.
REVERSE	PNP SW Status/ ON or OFF	Shift lever range is; R: ON Except R: OFF	
DRIVE	PNP SW Status/ ON or OFF	Shift lever range is; D and 3: ON Except D and 3: OFF	
SOLENOID (SLT)	Shift Solenoid SLT Status/ ON or OFF	IG SW ON: ON	←
AT FLUID TEMP	ATF Temp. Sensor Value/ min.: –40°C (–40°F) max.: 215°C (419°F)	80°C (176°F) (After Stall Test)	If the value is ”–40°C (–40°F)” or ”215°C (419°F)”, ATF temp. sensor circuit is opened or shorted.

5. ACTIVE TEST

HINT:

Performing the ACTIVE TEST using the hand–held tester allows the relay, VSV, actuator and so on to operate without parts removal. Performing the ACTIVE TEST as the first step of troubleshooting is one of the method to shorten the labor time.

It is possible to display the DATA LIST during the ACTIVE TEST.

(a) Warm up the engine.
(b) Turn the ignition switch OFF.
(c) Connect the hand–held tester to the DLC3.
(d) Turn the ignition switch ON.
(e) According to the display on tester, perform the ”ACTIVE TEST”.

Item	Test Details	Diagnostic Note
LINE PRESS UP	[Test Details] Operate the shift solenoid SLT and raise the line pressure. [Vehicle Condition] • Vehicle Stopped. • IDL: ON [Others] ON: Line pressure up. OFF: No action (normal operation)	–
LOCK UP	[Test Details] Control the shift solenoid DSL to set the ATM to the lock–up condition. [Vehicle Condition] Vehicle Speed: 60 km/h (37 mph) or more	Possible to check the DSL operation.
SHIFT	[Test Details] Operate the shift solenoid valve and set the each shift range by yourself. [Vehicle Condition] Less than 50 km/h (31 mph) [Others] • Press → button: Shift up • Press ← button: Shift down	Possible to check the operation of the shift solenoid values.

6. PROBLEM SYMPTOM CONFIRMATION

(a) Taking into consideration the results of the customer problem analysis, try to reproduce the symptoms of the trouble. If the problem is that the transaxle does not shift up, shift down, or the shift point is too high or too low, conduct the following road test referring to the automatic shift schedule and simulate the problem symptoms.

7. ROAD TEST

NOTICE:

Conduct the test at normal operating ATF temperature 50 to 80˚C (122 to 176˚F).

(a) D range test

Shift into the D range and fully depress the accelerator pedal and check the following points:

(1) Check up–shift operation.

Check to see that 1 → 2, 2 → 3 and 3 → O/D up–shift take place, and that the shift points conform to the automatic shift schedule (See page 03–45).

HINT:

- O/D Gear Up–shift Prohibition Control (1. Water temp. is 60˚C (140˚F) or less. 2. If there is a 10 km/h (6 mph) difference between the set cruise control speed and vehicle speed.)
- O/D Gear Lock–up Prohibition Control (1. Brake pedal is depressed. 2. Water temp. is 60˚C (140˚F) or lower)

(2) Check for shift shock and slip.
Check for shock and slip at the 1 → 2, 2 → 3 and 3 → O/D up–shift.

(3) Check for abnormal noise and vibration.
Run in D range lock–up or O/D gear and check for abnormal noise and vibration.

HINT:
The check for the cause of abnormal noise and vibration must be done very thoroughly as it could also be sure to loss of balance in the differential, torque converter, etc.

(4) Check kick–down operation.
While running in the D range, 2nd, 3rd and O/D gears, check to see that the possible kick–down vehicle speed limits for 2 → 1, 3 → 2 and O/D → 3 kick–downs conform to those indicated in the automatic shift schedule (See page 03–45).

(5) Check for abnormal shock and slip at kick–down.

(6) Check the lock–up mechanism.
- Drive in D range O/D gear, at a steady speed (lock–up ON) of about 60 km/h (37 mph).
- Lightly depress the accelerator pedal and check that the engine speed does not change abruptly.

If there is a big jump in engine speed, there is no lock–up.

(b) S range test
Shift to the S range, depress the accelerator pedal and check the following points:
Shift operations.
- Shifting the shift lever to ”+” or ”–” changes the shift range on the combination meter.

HINT:
Manual shift prohibition control is performed when:
- Down–shifting causes engine overrun.
- Down–shifting is required continuously, down–shifting to 1st gear may not be performed.

(c) R range test
Shift into the R range and fully depress the accelerator pedal and check for slipping.

CAUTION:
Before conducting this test, ensure that the test area is free from people and obstruction.

(d) P range test
Stop the vehicle on a grade (more than 5°) and after shifting into the P range, release the parking brake. Then, check to see that the parking lock pawl holds the vehicle in place.

8. MECHANICAL SYSTEM TESTS

(a) Measure the stall speed.

The object of this test is to check the overall performance of the transaxle and engine by measuring the stall speeds in the D and R ranges.

NOTICE:

- **Do the test at normal operating ATF temperature 50 to 80˚C (122 to 176˚F).**
- **Do not continuously run this test for longer than 5 seconds.**
- **To ensure safety, do this test in a wide, clear level area which provides good traction.**
- **The stall test should always be carried out in pairs. One technician should observe the conditions of wheels or wheel stoppers outside the vehicle while the other is doing the test.**

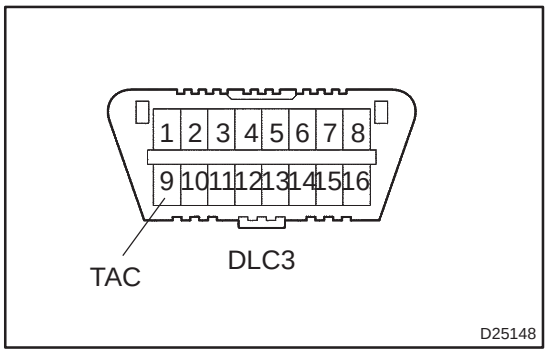

(1) Chock the 4 wheels.

(2) Connect the hand–held tester to DLC3 or tachometer to terminal TAC of DLC3 with SST.

SST 09843–18030

(3) Fully apply the parking brake.

(4) Keep your left foot pressing firmly on the brake pedal.

(5) Start the engine.

(6) Shift into the D range. Press all the way down on the accelerator pedal with your right foot.

(7) Quickly read the stall speed at this time.

Stall speed: 2,550 ± 150 rpm

(8) Do the same test in the R range.

Stall speed: 2,550 ± 150 rpm

Evaluation:

Problem	Possible cause
(a) Stall speed low in D and R ranges	• Engine output may be insufficient • Stator one–way clutch not operating properly HINT: If more than 600 rpm below the specified value, the torque converter could be faulty.
(b) Stall speed high in D range	• Line pressure too low • Forward clutch slipping • No. 2 one–way clutch not operating properly • U/D clutch slipping
(c) Stall speed high in R range	• Line pressure too low • Direct clutch slipping • 1st & reverse brake slipping • U/D clutch slipping
(d) Stall speed high in D and R ranges	• Line pressure too low • Improper fluid level • U/D one–way clutch not operating properly

(b) Measure the time lag.

(1) When the shift lever is shifted while the engine is idling, there will be a certain time lapse or lag before the shock can be felt. This is used for checking the condition of the direct clutch, forward clutch, and 1st and reverse brake.

NOTICE:

- **Do the test at normal operating ATF temperature 50 to 80˚C (122 to 176˚F).**
- **Be sure to allow 1 minute interval between tests.**
- **Take 3 measurements and take the average value.**

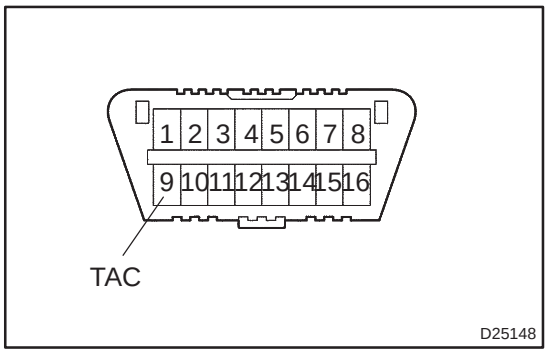

(2) Chock the 4 wheels.

(3) Connect the hand–held tester to DLC3 or tachometer to terminal TAC of DLC3 with SST.

SST 09843–18030

(4) Start engine and check idle speed.

Idle speed: 650 ± 50 rpm (In N range and A/C OFF)

(5) Shift the lever from N to D range. Using a stop watch, measure the time from when the lever is shifted until the shock is felt.

Time lag: N → D less than 1.2 seconds

(6) In the same way, measure the time lag for N → R.

Time lag: N → R less than 1.5 seconds

Evaluation (If N → D or N → R time lag is longer than the specified):

Problem	Possible cause
N → D time lag is longer	• Line pressure too low • Forward clutch worn • U/D one–way clutch not operating properly
N → R time lag is longer	• Line pressure too low • Direct clutch worn • 1st and reverse brake worn • U/D one–way clutch not operating properly

9. HYDRAULIC TEST

(a) Measure the line pressure.

NOTICE:

- **Do the test at normal operation ATF temperature 50 to 80˚C (122 to 176˚F).**
- **The line pressure test should always be carried out in pairs. One technician should observe the conditions of wheels or wheel stopper outside the vehicle while the other is doing the test.**
- **Be careful to prevent SST's hose from interfering with the exhaust pipe.**

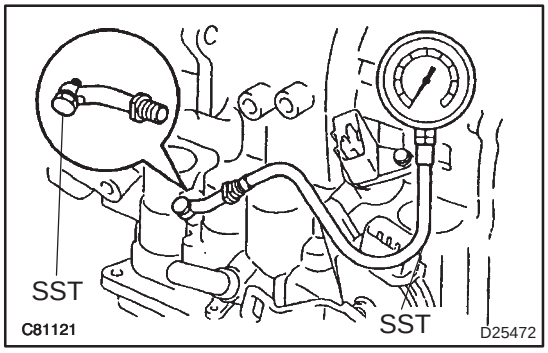

(1) Warm up the ATF.
(2) Remove the test plug on the rear side of the transaxle case and connect SST.
SST 09992–00095 (09992– 00231, 09992–00271)
(3) Fully apply the parking brake and chock the 4 wheels.
(4) Connect the hand–held tester to DLC3.
(5) Start the engine and check idling speed.
(6) Keep your left foot pressing firmly on the brake pedal and shift into D range.
(7) Measure the line pressure when the engine is idling.
(8) Depress the accelerator pedal all the way down. Quickly read the highest line pressure when engine speed reaches stall speed.
(9) In the same way, do the test in R range.

Specified line pressure:

Condition	D range kPa (kgf / cm^2, psi)	R range kPa (kgf / cm^2, psi)
Idling	372 to 412 (3.8 to 4.2, 54 to 60)	672 to 742 (6.9 to 7.6, 98 to 108)
Stall	931 to 1,031 (9.5 to 10.5, 135 to 150)	1,768 to 1,968 (18.0 to 20.1, 256 to 285)

Evaluation:

Problem	Possible cause
If the measured values at all ranges are higher	• Line pressure control solenoid (SLT) defective • Regulator valve detective
If the measured values at all ranges are lower	• Line pressure control solenoid (SLT) defective • Regulator valve detective • Oil pump defective
If pressure is low in the D range only	• D range circuit fluid leak • Forward clutch defective
If pressure is low in the R range only	• R range circuit fluid leak • Direct clutch defective • 1st & reverse brake defective

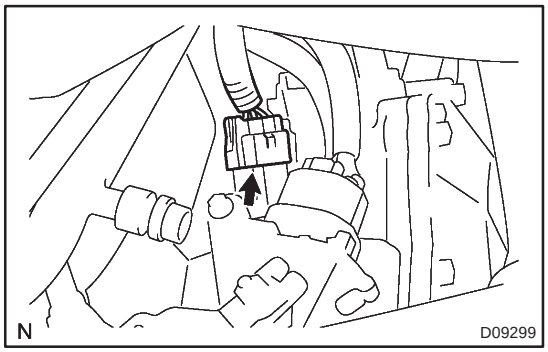

10. MANUAL SHIFTING TEST

HINT:

By this test, it can be determined whether the trouble is within the electrical circuit or is a mechanical problem in the transaxle.

(a) Disconnect the solenoid wire.

(b) Inspect the manual driving operation.

Check that the shift and gear ranges correspond to the table below.

While driving, shift through the D range.

Check that the gear change corresponds to the shift range.

Shift range	Gear position
D	3rd
R	Reverse
P	Pawl Lock

HINT:

If the gear positions of the D are difficult to distinguish, do the above road test.

If any abnormality is found in the above test, the problem is in the transaxle itself.

(c) Connect the solenoid wire.

(d) Cancel out the DTC.

11. RESET MEMORY

CAUTION:

Perform the RESET MEMORY (AT initialization) when replacing the automatic transaxle assy, engine assy or ECM.

NOTICE:

Hand–held tester only

(a) Turn the ignition switch to OFF.

(b) Connect the hand–held tester to the DLC3.

(c) Turn the ignition switch to ON.

(d) Perform the reset memory procedure from the ENGINE menu.

CAUTION:

After performing the RESET MEMORY, be sure to perform the ROAD TEST described earlier.

Tester menu flow:

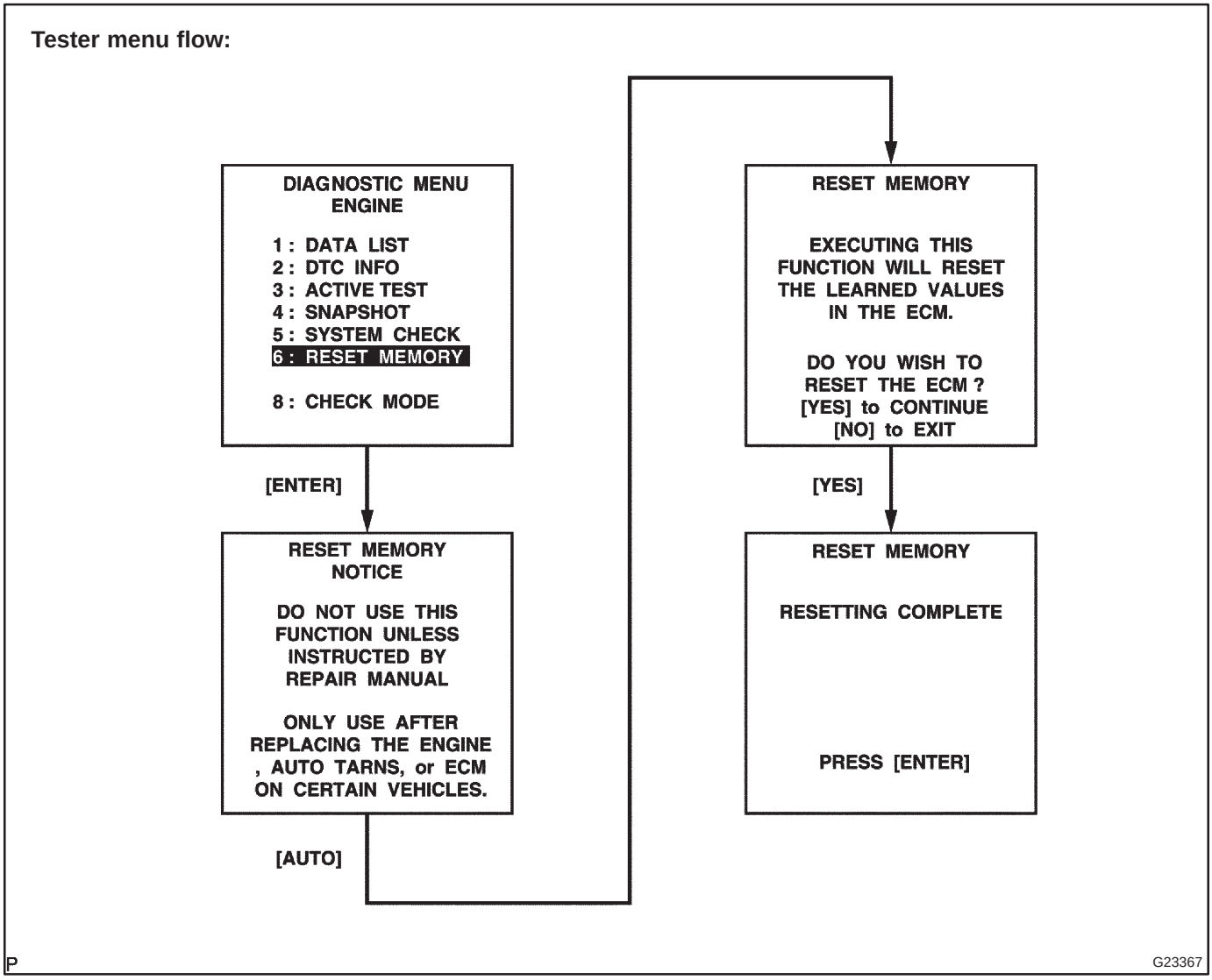

0567Q–08

DIAGNOSTIC TROUBLE CODE CHART

If a DTC is displayed during the DTC check, check the circuit listed in the table below and proceed to the page given.

*1 : – ... MIL does not light /● ... MIL light up

DTC No. (See Page)	Detection Item	Trouble Area	MIL *	Memory
P0500/42 (05–240)	Vehicle Speed Sensor ”A”	• Combination meter • Open or short in vehicle speed sensor circuit • Vehicle speed sensor • ECM	●	○
P0710/38 (05–882)	Transmission Fluid Temperature Sensor ”A” Circuit	• Open or short in ATF temperature sensor circuit • ATF temperature sensor • ECM	●	○
P0712/38 (05–882)	Transmission Fluid Temperature Sensor ”A” Circuit Low Input		●	○
P0713/38 (05–882)	Transmission Fluid Temperature Sensor ”A” Circuit High Input		●	○
P0717/37 (05–884)	Turbine Speed Sensor Circuit No Signal	• Open or short in speed sensor (NT) circuit • Speed sensor (NT) • ECM • Automatic transaxle assembly	●	○
P0748/62 (05–886)	Pressure Control Solenoid ”A” Electrical (Shift Solenoid Valve SL1)	• Open or short in shift solenoid valve SL1 circuit • Shift solenoid valve SL1 • ECM	●	○
P0778/63 (05–886)	Pressure Control Solenoid ”B” Electrical (Shift Solenoid Valve SL2)	• Open or short in shift solenoid valve SL2 circuit • Shift solenoid valve SL2 • ECM	●	○
P0793/67 (05–892)	Intermediate Shaft Speed Sensor ”A”	• Open or short in speed sensor (NC) circuit • Speed sensor (NC) • ECM	●	○
P0982/65 (05–886)	Shift Solenoid ”D” Control Circuit Low (Shift Solenoid Valve S4)	• Open or short in shift solenoid valve S4 circuit • Shift solenoid valve S4 • ECM	●	○
P0983/65 (05–886)	Shift Solenoid ”D” Control Circuit High (Shift Solenoid Valve S4)		●	○
P2716/77 (05–894)	Pressure Contorl Solenoid ”D” Electrical (Shift Solenoid Valve SLT)	• Open or short in shift solenoid valve SLT circuit • Shift solenoid valve SLT • ECM	–	○
P2769/64 (05–897)	Torque Converter Clutch Solenoid Circuit Low (Shift Solenoid Valve DSL)	• Open or short in shift solenoid valve DSL circuit • Shift solenoid valve DSL • ECM	–	○
P2770/64 (05–897)	Torque Converter Clutch Solenoid Circuit High (Shift Solenoid Valve DSL)		–	○

0567R–11

LOCATION

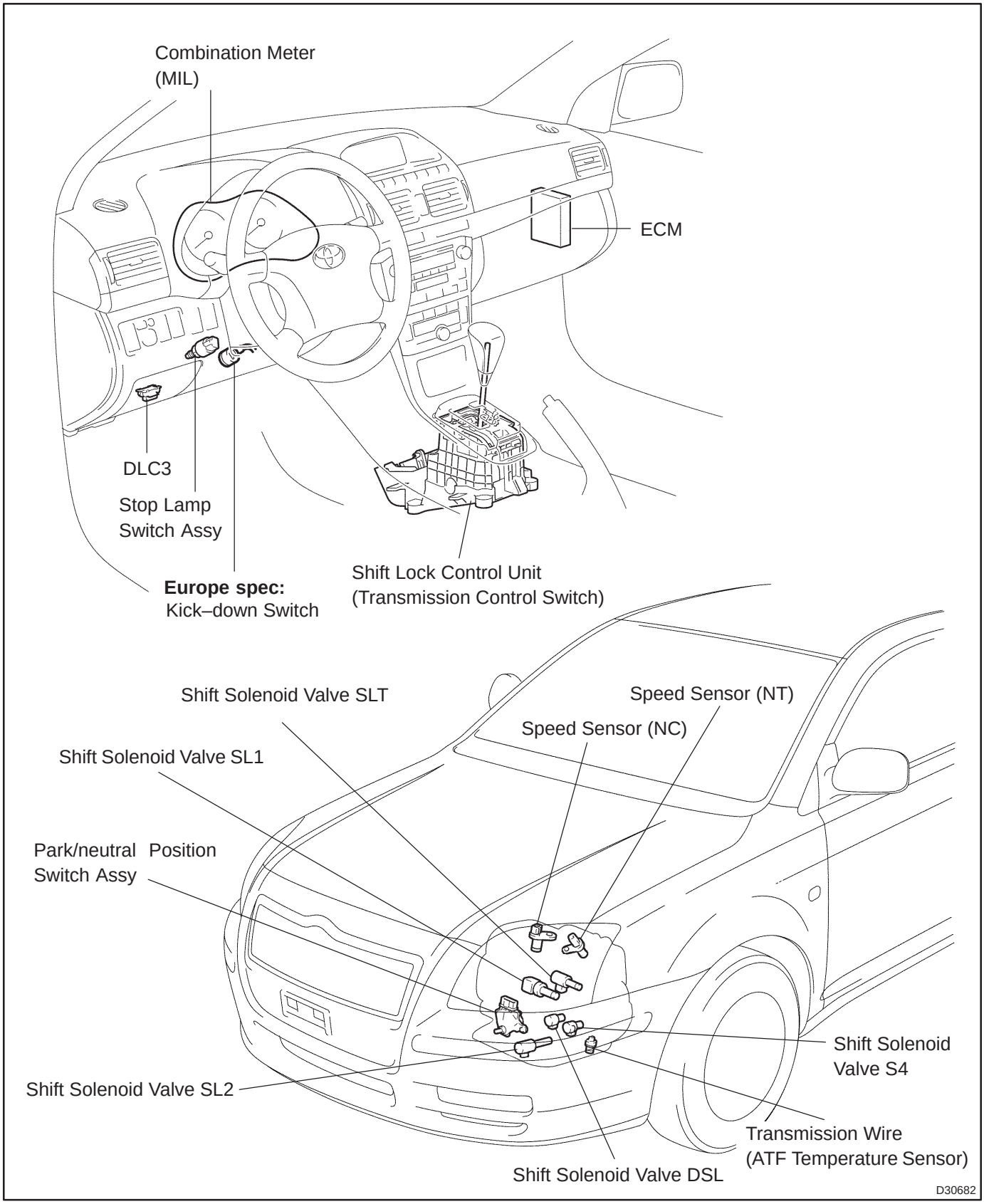

05C8S–01

TERMINALS OF ECM

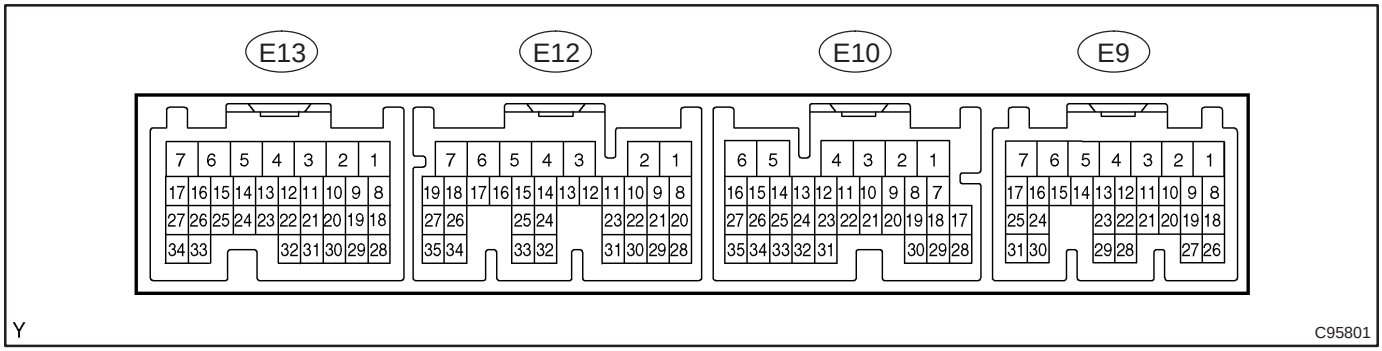

Symbols (Terminal No.)	Wiring Color	Condition	STD Voltage (V)
SLT+ (E13–17) – SLT– (E13–16)	P–L – P	IG switch ON	10 to 14
THO (E13–30) – E2 (E13–28)	V – BR	IG switch ON and ATF temperature 110°C (230°F)	Below 1
DSL (E12–11) – E1 (E12–7)	L–B – BR	IG switch ON	Below 1
		Vehicle driving under lock–up range	10 to 14
S4 (E12–13) – E1 (E12–7)	L – BR	IG switch ON	Below 1
		O/D gear	10 to 14
		Except O/D gear	Below 1
SL2+ (E12–17) – SL2– (E12–16)	R – R–B	IG switch ON	Below 1
		1st or 2nd gear	10 to 14
		3rd or O/D gear	Below 1
SL1+ (E12–19) – SL1– (E12–18)	Y – Y–B	IG switch ON	10 to 14
		1st gear	10 to 14
		Except 1st gear	Below 1
NC+ (E12–26) – NC– (E12–34)	LG – LG–B	Engine is running	Below 1 and 4 to 5
NT+ (E12–27) – NT– (E12–35)	B–O – B	Engine is running	Below 1 and 4 to 5
D (E10–10) – E1 (E12–7)	LG–B – BR	IG switch ON Shift lever D range	10 to 14
		IG switch ON Shift lever other than D range	Below 1
R (E10–11) – E1 (E12–7)	R–Y – BR	IG switch ON Shift lever R range	10 to 14
		IG switch ON Shift lever other than R range	Below 1
SPD (E10–17) – E1 (E12–7)	V–W – BR	IG switch ON	4.5 to 5.5
SPT1 (E10–20) – E1 (E12–7)	L – BR	IG switch ON and shift lever S position	7.5 to 14
		IG switch ON and shift lever except for S position	Below 1
SFTD (E9–21) – E1 (E12–7)	B – BR	IG switch ON and shift lever S position	7.5 to 14
		IG switch ON and shift lever "–" position (Down shift)	Below 1.5
SFTU (E9–22) – E1 (E12–7)	R – BR	IG switch ON and shift lever S position	7.5 to 14
		IG switch ON and shift lever "+" position (Up shift)	Below 1.5
KD*1 (E9–27) – E1 (E12–7)	W – BR	IG switch ON and kick–down switch ON	Below 1
		IG switch ON and kick–down switch OFF	10 to 14

*1: Europe

0567W–11

PROBLEM SYMPTOMS TABLE

HINT:

If a normal code is displayed during the DTC check but the trouble still occurs, check the circuits for each symptom in the order given in the charts on the following pages and proceed to the page given for trouble-shooting.

The Matrix Chart is divided into 3 chapters.

- If the instruction ”Proceed to next circuit inspection shown on matrix chart” is given in the flow chart for each circuit, proceed to the circuit with the next highest number in the table to continue the check.
- If the trouble still occurs even though there are no abnormalities in any of the other circuits, then check and replace the ECM.

CHAPTER 1: ELECTRONIC CIRCUIT MATRIX CHART

Symptom	Suspect Area	See page
No up–shift (A particular gear, from 1st to O/D gear, is not up–shifted)	ECM	01–32
No down–shift (A particular gear, from O/D to 1st gear, is not down–shifted)	ECM	01–32
No lock–up or No lock–up off	4. Stop light switch circuit 5. Engine coolant temp. sensor circuit 6. Throttle position sensor circuit 7. ECM	05–905 05–161 05–161 01–32
Shift point too high or too low	ECM	01–32
No gear change by shifting into ”+” or ”–” while the shift lever is in the Sposition	1. Transmission control switch circuit 2. ECM	05–910 01–32
Up–shift to O/D from 3rd while engine is cold	1. Engine coolant temp. sensor circuit 2. ATF temp. sensor circuit 3. ECM	05–161 05–882 01–32
Harsh engagement (N → D)	ECM	01–32
Harsh engagement (Lock–up)	ECM	01–32
Harsh engagement (Any driving range)	ECM	01–32
Poor acceleration	ECM	01–32
Engine stalls when starting off or stopping	ECM	01–32
No kick–down	1. Kick–down switch circuit 2. ECM	05–908 01–32

Chapter 2: On–vehicle Repair
(★: U241E AUTOMATIC TRANSAXLE Repair Manual Pub. No. RM840U)

Symptom	Suspect Area	See page
Vehicle does not move in any forward range or reverse range	1. Manual valve 2. Primary regulator valve 3. Off–vehicle repair matrix chart	★ ★ –
Vehicle does not move in R range	Off–vehicle repair matrix chart	–
No up–shift (1st → 2nd)	1. Valve body assy 2. Off–vehicle repair matrix chart	★ –
No up–shift (2nd → 3rd)	1. Valve body assy 2. Off–vehicle repair matrix chart	★ –
No up–shift (3rd → O/D)	1. Valve body assy 2. Off–vehicle repair matrix chart	★ –
No down–shift (O/D → 3rd)	Valve body assy	★
No down–shift (3rd → 2nd)	Valve body assy	★
No down–shift (2nd → 1st)	Valve body assy	★
No lock–up or No lock–up off	1. Valve body assy 2. Off–vehicle repair matrix chart	★ –
Harsh engagement (N → D)	1. C_1 accumulator 2. Off–vehicle repair matrix chart 3. Valve body assy	★ – ★
Harsh engagement (N → R)	1. Valve body assy 2. Off–vehicle repair matrix chart	★ –
Harsh engagement (Lock–up)	1. Valve body assy 2. Off–vehicle repair matrix chart	★ –
Harsh engagement (2nd → 3rd)	Valve body assy	★
Harsh engagement (3rd → O/D)	Valve body assy	★
Harsh engagement (O/D → 3rd)	Valve body assy	★
Slip or shudder (Forward and reverse)	1. Oil strainer 2. Off–vehicle repair matrix chart	40–47 –
No kick–down	Valve body assy	★

Chapter 3: Off–vehicle Repair
(★: U241E AUTOMATIC TRANSAXLE Repair Manual Pub. No. RM840U)

Symptom	Suspect Area	See page
Vehicle does not move in any forward range or reverse range	1. Front and rear planetary gear 2. U/D planetary gear 3. U/D one–way clutch (F_2) 4. Forward clutch (C_1) 5. U/D brake (B_3)	★ ★ ★ ★ ★
Vehicle does not move in R range	1. Front and rear planetary gear unit 2. U/D planetary gear 3. Direct clutch (C_2) 4. U/D brake (C_3) 5. 1st & reverse brake (B_2)	★ ★ ★ ★ ★
No up–shift (1st → 2nd)	1. No.1 one–way clutch (F_1) 2. 2nd brake (B_1)	★ ★
No up–shift (2nd → 3rd)	Direct clutch (C_2)	★
No up–shift (3rd → O/D)	U/D clutch (C_3)	★
No lock–up or No lock–up off	Torque converter clutch	40–37
Harsh engagement (N → D)	1. Forward clutch (C_1) 2. U/D one–way clutch (F_2) 3. No.1 one–way clutch (F_1)	★ ★ ★
Harsh engagement (N → R)	1. Direct clutch (C_2) 2. 1st & reverse brake (B_2)	★ ★
Harsh engagement (Lock–up)	Torque converter clutch	40–37
Slip or shudder (Forward position: After warm–up)	1. Torque converter clutch 2. Forward clutch (C_1) 3. Direct clutch (C_2) 4. U/D brake (C_3) 5. No.1 one–way clutch (F_1) 6. U/D one–way clutch (F_2)	40–37 ★ ★ ★ ★ ★
Slip or shudder (R range)	1. Direct clutch (C_2) 2. 1st & reverse brake (B_2)	★ ★
Slip or shudder (1st)	No.1 one–way clutch (F_1)	★
Slip or shudder (2nd)	1. U/D one–way clutch (F_2) 2. 2nd brake (B_1)	★ ★
Slip or shudder (3rd)	Direct clutch (C_2)	★
Slip or shudder (O/D)	U/D clutch (C_3)	★
No engine braking (1st – 3rd: D range)	U/D brake (B_3)	★
Poor acceleration (All range)	1. Torque converter clutch 2. U/D planetary gear	40–37 ★
Poor acceleration (O/D)	1. U/D clutch (C_3) 2. U/D planetary gear	★ ★
Large shift shock or engine stalls when starting off or stopping	Torque converter clutch	40–37

DTC	P0710/38	TRANSMISSION FLUID TEMPERATURE SENSOR ”A” CIRCUIT

DTC	P0712/38	TRANSMISSION FLUID TEMPERATURE SENSOR ”A” CIRCUIT LOW INPUT

DTC	P0713/38	TRANSMISSION FLUID TEMPERATURE SENSOR ”A” CIRCUIT HIGH INPUT

CIRCUIT DESCRIPTION

The ATF temperature sensor converts the fluid temperature into a resistance value which is input into the ECM.

DTC No.	DTC Detection Condition	Trouble Area
P0710/38	(a) and (b) is detected momentary within 0.5 sec. when neither P0712 or P0713 is not detected (1–trip detection logic) (a) ATF temperature sensor resistance is less than 79 Ω. (b) ATF temperature sensor resistance is more than 156 kΩ. HINT: Wthin 0.5 sec. the malfunction switches from (a) to (b) or from (b) to (a)	• Open or short in ATF temperature sensor circuit • ATF temperature sensor • ECM
P0712/38	ATF temperature sensor resistance is less than 79 Ω. for 0.5 sec. or more (1–trip detection logic)	
P0713/38	DTC is detected for 0.5 sec. or more (1–trip detection logic) ATF temperature sensor resistance is more than 156 kΩ. after started engine for 15 minutes or more	

WIRING DIAGRAM

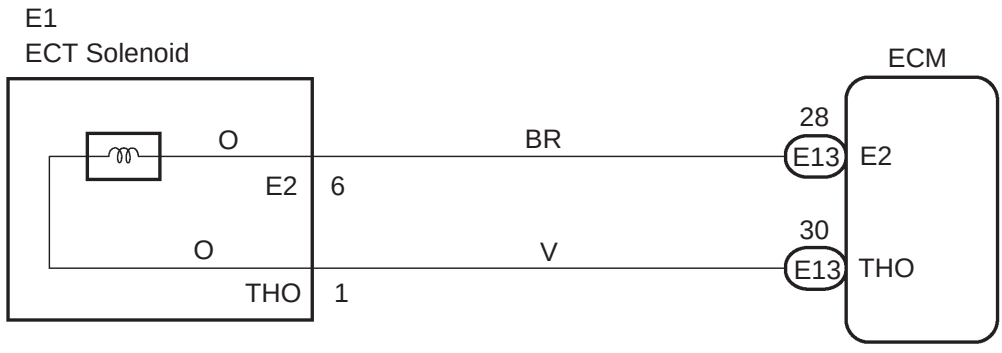

D26545

INSPECTION PROCEDURE

1 INSPECT TRANSMISSION WIRE(ATF TEMPERATURE SENSOR)

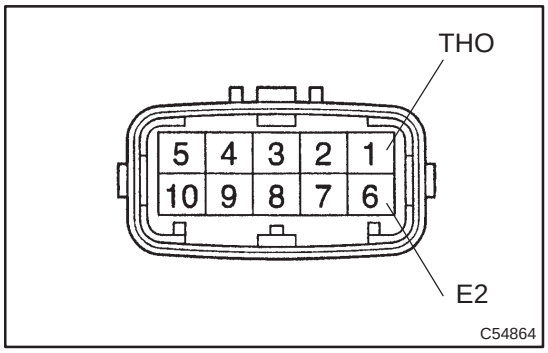

(a) Disconnect the transmission wire connector from the transaxle.
(b) Measure the resistance between terminals THO and E2.
OK:
Resistance: 79 Ω to 156 kΩ
(c) Check the continuity between the wire harness side connectors.
OK:
Standard (Check for a short):

Symbols	Specified condition
THO – Body ground	No continuity
E2 – Body ground	

NG → **REPAIR OR REPLACE TRANSMISSION WIRE**

OK

2 CHECK HARNESS AND CONNECTOR(TRANSMISSION WIRE – ECM)

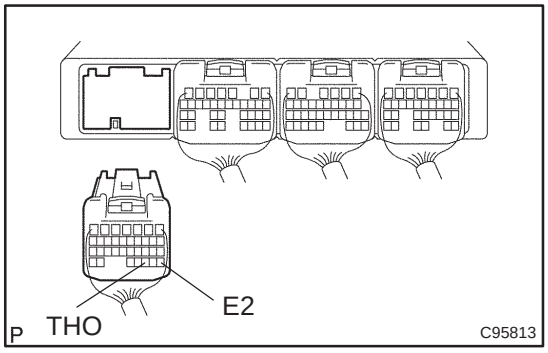

(a) Connect the transmission wire connector to the transaxle.
(b) Disconnect the ECM connector.
(c) Measure the resistance between terminals THO and E2.
OK:
Resistance: 79 Ω to 156 kΩ
(d) Check the continuity between the wire harness side connectors.
OK:
Standard (Check for a short):

Symbols	Specified condition
THO – Body ground	No continuity
E2 – Body ground	

NG → **REPAIR OR REPLACE HARNESS OR CONNECTOR**

OK

CHECK AND REPLACE ECM

DTC	P0717/37	TURBINE SPEED SENSOR CIRCUIT NO SIGNAL

CIRCUIT DESCRIPTION

This sensor detects the rotation speed of the input turbine. By comparing the input turbine speed signal (NT) with the counter gear speed sensor signal (NC), the ECM detects the shift timing of the gears and appropriately controls the engine torque and hydraulic pressure according to various conditions. Thus smooth gear shifting is performed.

DTC No.	DTC Detection Condition	Trouble Area
P0717/37	ECM detects conditions (a), (b), (c) and (d) continuity for 5 sec. or more: (2 trip detection logic) (a) Vehicle speed: 50 km/h (20 mph) or more (b) 2nd, 3rd or O/D gear (c) Solenoid valves and park/neutral position switch are normal (d) NT < 300 rpm	• Open or short in speed sensor (NT) circuit • Speed sensor (NT) • ECM

WIRING DIAGRAM

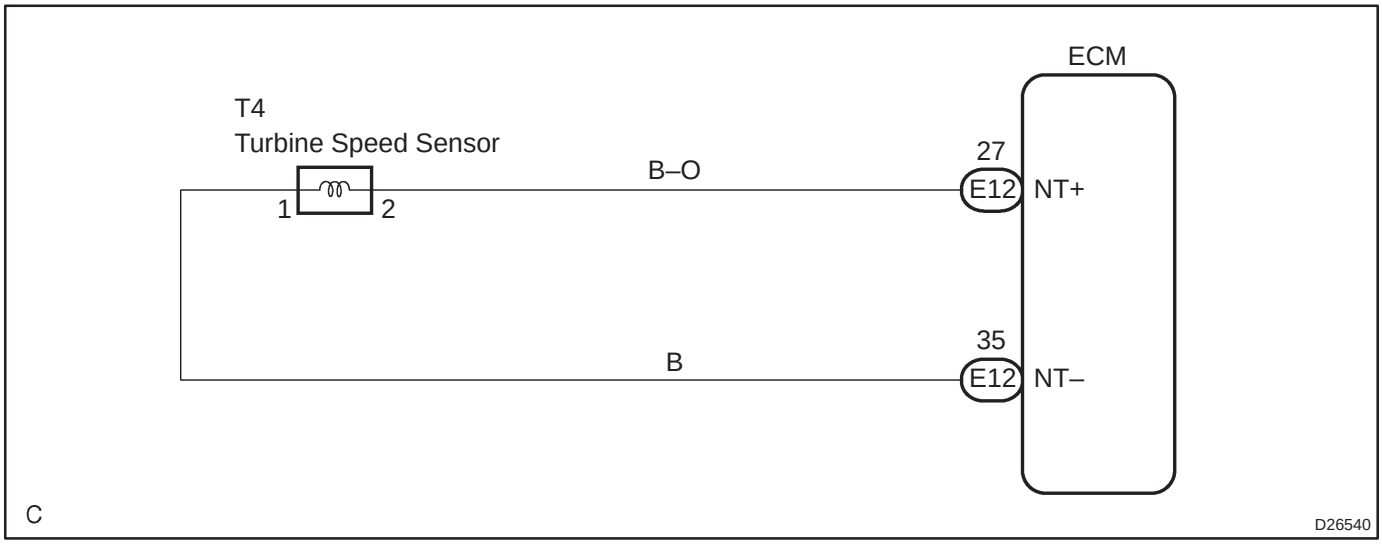

INSPECTION PROCEDURE

1	INSPECT SPEED SENSOR(NT)

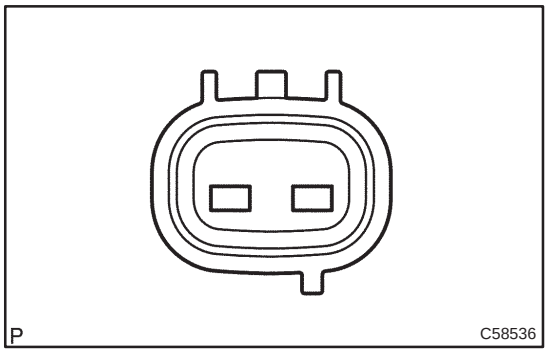

(a) Disconnect the speed sensor connector from the transaxle.
(b) Measure the resistance between terminals of speed sensor.
OK:
Resistance:
TOYOTA made: 500 to 620 Ω at 20°C (68°F)
AISIN made: 560 to 680 Ω at 20°C (68°F)

NG → **REPLACE SPEED SENSOR(NT)**

OK

2	CHECK HARNESS AND CONNECTOR(SPEED SENSOR – ECM)

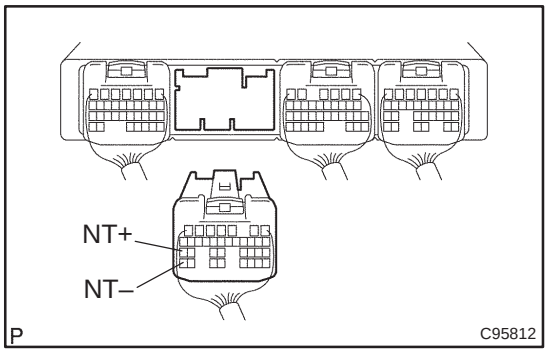

(a) Connect the speed sensor connector.
(b) Disconnect the ECM connector.
(c) Measure the resistance between terminals NT+ and NT–.
OK:
Resistance:
TOYOTA made: 500 to 620 Ω at 20°C (68°F)
AISIN made: 560 to 680 Ω at 20°C (68°F)
(d) Measure the resistance between body ground and that NT+ as well as NT– of the ECM connector.
OK:
Resistance: 1MΩ or higher

NG → **REPAIR OR REPLACE HARNESS OR CONNECTOR**

OK

CHECK AND REPLACE ECM

DTC	P0748/62	PRESSURE CONTROL SOLENOID ”A” ELECTRICAL (SHIFT SOLENOID VALVE SL1)

DTC	P0778/63	PRESSURE CONTROL SOLENOID ”B” ELECTRICAL (SHIFT SOLENOID VALVE SL2)

DTC	P0982/65	SHIFT SOLENOID ”D” CONTROL CIRCUIT LOW (SHIFT SOLENOID VALVE S4)

DTC	P0983/65	SHIFT SOLENOID ”D” CONTROL CIRCUIT HIGH (SHIFT SOLENOID VALVE S4)

CIRCUIT DESCRIPTION

Shifting from 1st to O/D is performed in combination with ON and OFF operation of the shift solenoid valves SL1 and SL2 which are controlled by the ECM. If an open or short circuit occurs in either of the shift solenoid valves, the ECM controls the remaining normal shift solenoid valve to allow the vehicle to be operated smoothly (Fail safe function).

DTC No.	DTC Detection Condition	Trouble Area
P0748/62	ECM checks for an open or short circuit in shift solenoid valves SL1 (1–trip detection logic) (a) When solenoid is energized, duty ratio exceeds 75% (b) When solenoid is not energized, duty ratio is less than 3%	• Open or short in shift solenoid valve SL1 circuit • Shift solenoid valve SL1 • ECM
P0778/63	ECM checks for an open or short circuit in shift solenoid valves SL2 (1–trip detection logic) (a) When solenoid is energized, duty ratio exceeds 75% (b) When solenoid is not energized, duty ratio is less than 3%	• Open or short in shift solenoid valve SL2 circuit • Shift solenoid valve SL2 • ECM
P0982/65	ECM detects short in solenoid valve S4 circuit 4 times when solenoid valve S4 is operated (1–trip detection logic)	• Short in shift solenoid valve S4 circuit • Shift solenoid valve S4 • ECM
P0983/65	ECM detects open in solenoid valve S4 circuit 4 times when solenoid valve S4 is not operated (1–trip detection logic)	• Open in shift solenoid valve S4 circuit • Shift solenoid valve S4 • ECM

HINT:

Check the shift solenoid valve SL1 when DTC P0748/62 is output, check the shift solenoid valve SL2 when DTC P0778/63 is output and check the shift solenoid valve S4 when DTC P0982/65 and P0983/65 is output.

Fail safe function:
If either of the shift solenoid valve circuits develops an open or short, the ECM turns the other shift solenoid ON and OFF in order to shift into the gear positions shown in the table below. The ECM also turns the shift solenoid valve SL OFF at the same time. If both solenoids malfunction, hydraulic control cannot be performed electronically, and so it must be done manually.
Manual shifting as shown in the following table must be done (In case of a short circuit, the ECM stops sending the current to the short circuit solenoid).

NORMAL				SHIFT SOLENOID SL1 MALFUNCTIONING				SHIFT SOLENOID SL2 MALFUNCTIONING				SHIFT SOLENOID S4 MALFUNCTIONING			
Solenoid Valve			Gear	Solenoid Valve			Gear	Solenoid Valve			Gear	Solenoid Valve			Gear
SL1	SL2	S4		SL1	SL2	S4		SL1	SL2	S4		SL1	SL2	S4	
ON	ON	OFF	1st	X	ON	OFF	2nd	ON ↓ OFF	X	OFF	3rd	ON	ON	X	1st
OFF	ON	OFF	2nd	X	ON	OFF	2nd	OFF	X	OFF	3rd	OFF	ON	X	2nd
OFF	OFF	OFF	3rd	X	OFF ↓ ON	OFF ↓ ON	3rd	OFF	X	OFF	3rd	OFF	OFF	X	3rd
OFF	OFF	ON	O/D	X	OFF ↓ ON	ON	3rd	OFF	X	ON	O/D	OFF	OFF	X	3rd

SHIFT SOLENOID SL1 AND SL2 MALFUNCTIONING				SHIFT SOLENOID SL1 AND S4 MALFUNCTIONING				SHIFT SOLENOID SL2 AND S4 MALFUNCTIONING				SHIFT SOLENOID SL1, SL2 AND S4 MALFUNCTIONING			
Solenoid Valve			Gear	Solenoid Valve			Gear	Solenoid Valve			Gear	Solenoid Valve			Gear
SL1	SL2	S4		SL1	SL2	S4		SL1	SL2	S4		SL1	SL2	S4	
X	X	OFF	3rd	X	ON	X	2nd	ON ↓ OFF	X	X	3rd	X	X	X	3rd
X	X	OFF	3rd	X	ON	X	2nd	OFF	X	X	3rd	X	X	X	3rd
X	X	OFF	3rd	X	OFF ↓ ON	X	2nd	OFF	X	X	3rd	X	X	X	3rd
X	X	ON	O/D	X	OFF ↓ ON	X	2nd	OFF	X	X	3rd	X	X	X	3rd

WIRING DIAGRAM

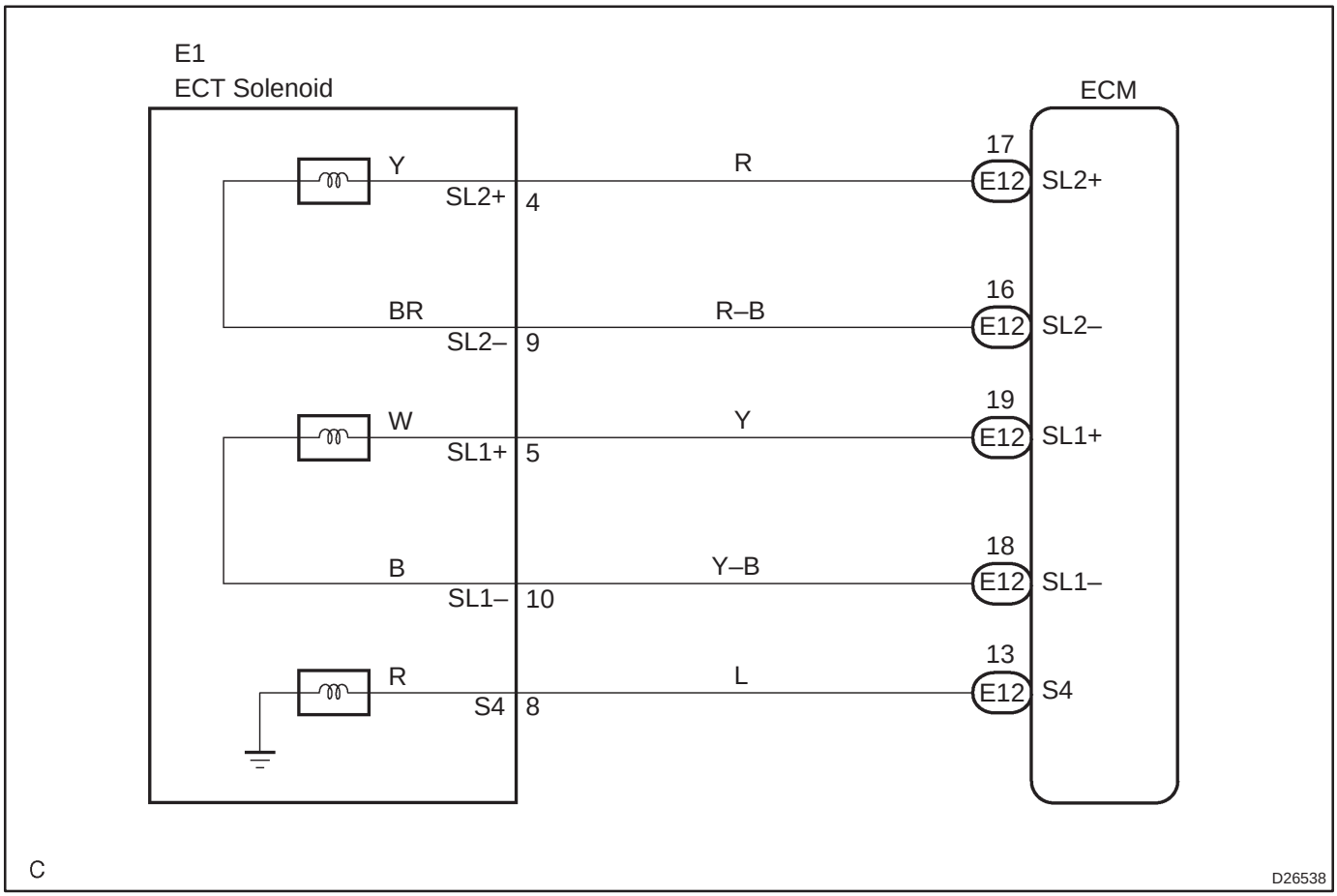

INSPECTION PROCEDURE

1	INSPECT TRANSMISSION WIRE(SL1/SL2/S4)

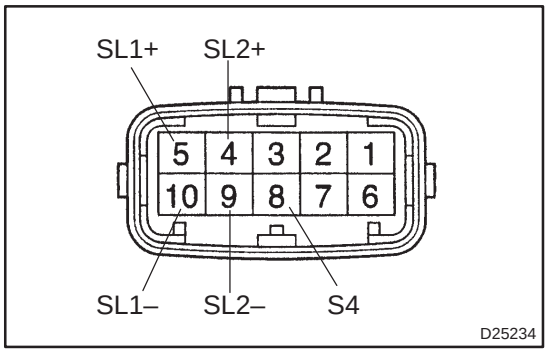

(a) Disconnect the transmission wire connector from the transaxle.

(b) Measure the resistance between terminals SLT1+ and SL1– of the transmission wire connector.

OK:

Resistance: 5.0 to 5.6 Ω at 20°C (68°F)

(c) Measure the resistance between body ground and that SL1+ as well as SL1– of the transmission wire connector.

OK:

Resistance: 1MΩ or higher

NG	Go to step 3

(d) Measure the resistance between terminals SL2+ and SL2–.

OK:

Resistance: 5.1 to 5.5 Ω at 20°C (68°F)

(e) Measure the resistance between body ground and that SL2+ as well as SL2– of the transmission wire connector.

OK:

Resistance: 1MΩ or higher

NG	Go to step 4

(f) Measure the resistance between terminal S4 of the transmission wire connector and body ground.

OK:

Resistance: 11 to 15 Ω at 20°C (68°F)

NG	Go to step 5

OK

2 CHECK HARNESS AND CONNECTOR(TRANSMISSION WIRE – ECM)

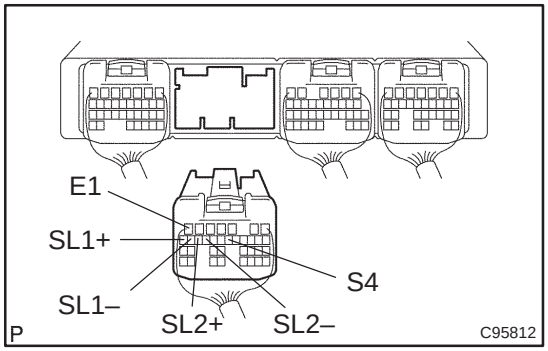

(a) Connect the transmission wire connector to the transaxle.
(b) Disconnect the connector from the ECM.
(c) Measure the resistance between terminals.
OK:
Resistance:
SL1+ – SL1–: 5.0 to 5.6 Ω at 20°C (68°F)
SL2+ – SL2–: 5.1 to 5.5 Ω at 20°C (68°F)
S4 – E1: 11 to 15 Ω at 20°C (68°F)
(d) Measure the resistance between terminals SL1+, SL1–, SL2+ and SL2– of the ECM connector and body ground.
OK:
Resistance: 1MΩ or higher

NG	REPAIR OR REPLACE HARNESS OR CONNECTOR

OK

CHECK AND REPLACE ECM

3 INSPECT SHIFT SOLENOID VALVE(SL1)

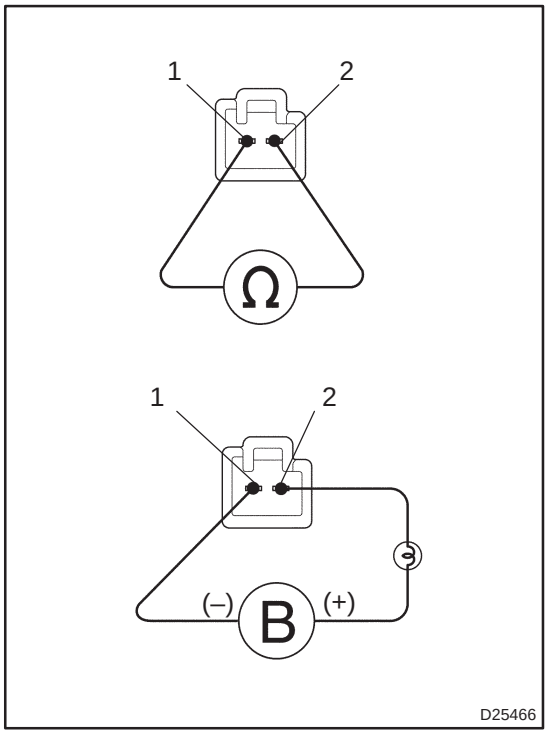

(a) Remove the shift solenoid valve SL1.
(b) Measure the resistance between terminals of the shift solenoid valve SL1.
OK:
Resistance: 5.0 to 5.6 Ω at 20˚C (68˚F)
(c) Connect the positive (+) lead with a 21 W bulb to terminal 2 and the negative (–) lead to terminal 1 of the solenoid valve connector, then check the movement of the solenoid valve.
OK:
The solenoid valve makes an operating noise.

NG	REPLACE SHIFT SOLENOID VALVE(SL1)

OK

REPAIR OR REPLACE TRANSMISSION WIRE

4 INSPECT SHIFT SOLENOID VALVE(SL2)

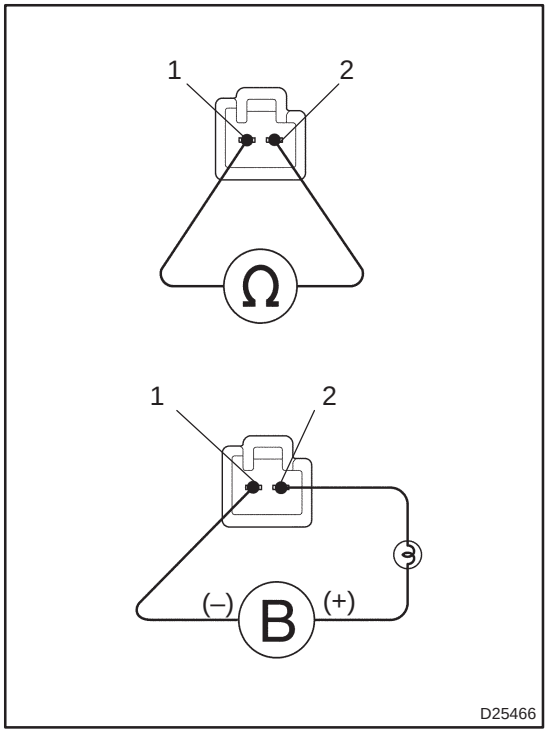

(a) Remove the shift solenoid valve SL2.
(b) Measure the resistance between terminals of the shift solenoid valve SL2.
OK:
Resistance: 5.1 to 5.5 Ω at 20˚C (68˚F)
(c) Connect the positive (+) lead with a 21 W bulb to terminal 2 and the negative (–) lead to terminal 1 of the solenoid valve connector, then check the movement of the solenoid valve.
OK:
The solenoid valve makes an operating noise.

NG → **REPLACE SHIFT SOLENOID VALVE(SL2)**

OK

REPAIR OR REPLACE TRANSMISSION WIRE

5 INSPECT SHIFT SOLENOID VALVE(S4)

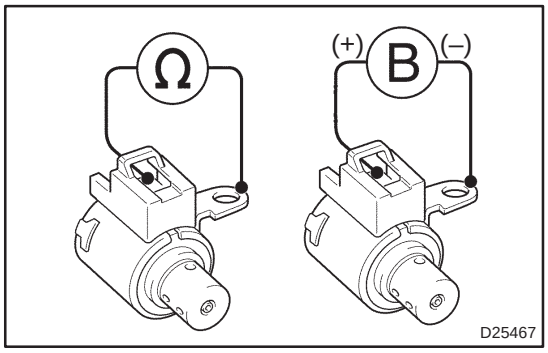

(a) Remove the shift solenoid valve S4.
(b) Measure the resistance between the solenoid connector and the solenoid body.
OK:
Resistance: 11 to 15 Ω at 20˚C (68˚F)
(c) Connect the positive (+) lead to the terminal of solenoid connector and the negative (–) lead to the solenoid body.
OK:
The solenoid valve makes an operating noise.

NG → **REPLACE SHIFT SOLENOID VALVE(S4)**

OK

REPAIR OR REPLACE TRANSMISSION WIRE

DTC	P0793/67	INTERMEDIATE SHAFT SPEED SENSOR ”A”

CIRCUIT DESCRIPTION

This sensor detects the rotation speed of the counter gear. By comparing the counter gear speed signal (NC) with the direct clutch speed sensor signal (NT), the ECM detects the shift timing of the gears and appropriately controls the engine torque and hydraulic pressure according to various conditions. Thus smooth gear shifting is performed.

DTC No.	DTC Detection Condition	Trouble Area
P0793/67	ECM detects conditions (a), (b), (c) and (d) continuity for 5 sec. or more: (2 trip detection logic) (a) Vehicle speed: 50 km/h (20 mph) or more (b) 2nd, 3rd or O/D gear (c) Solenoid valves and park/neutral position switch are normal (d) NC < 300 rpm	• Open or short in speed sensor (NC) circuit • Speed sensor (NC) • ECM

WIRING DIAGRAM

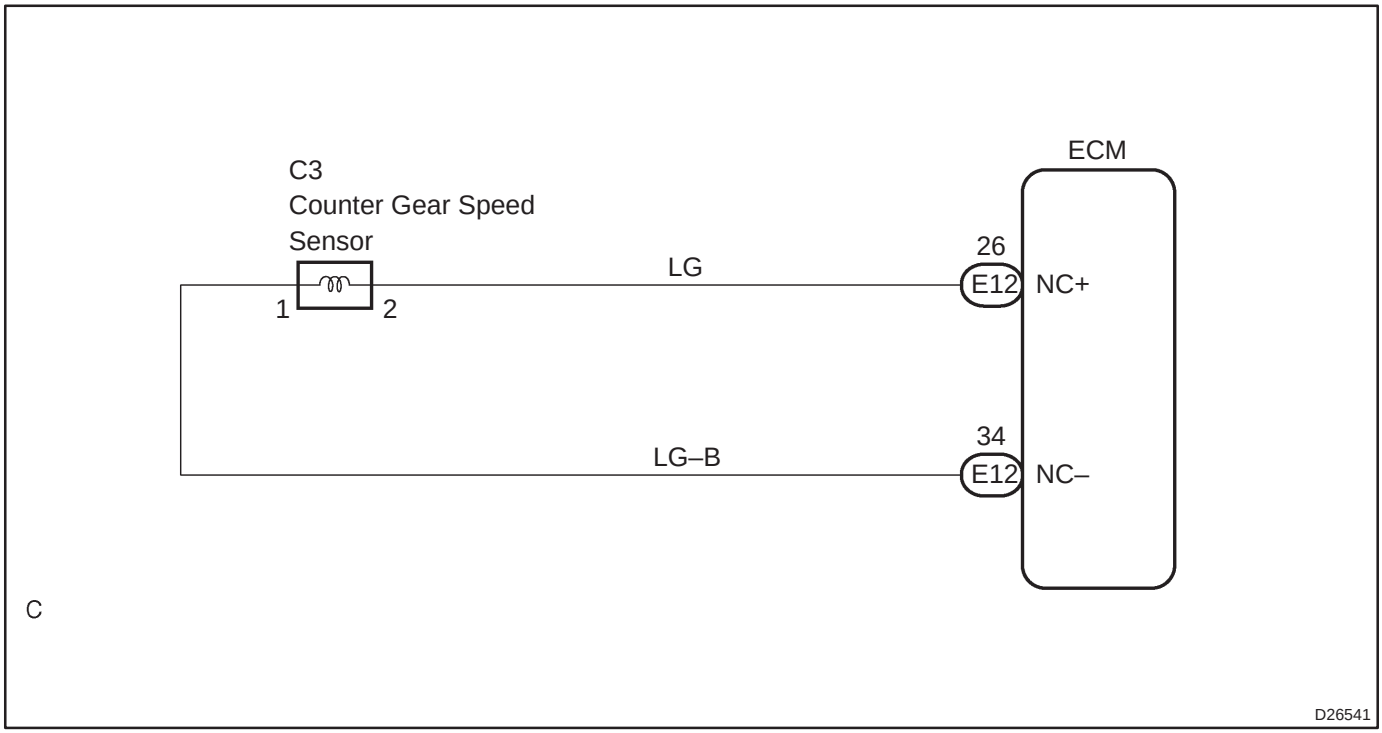

INSPECTION PROCEDURE

1	INSPECT SPEED SENSOR(NC)

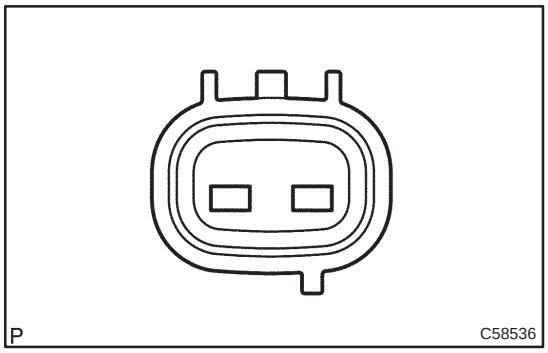

(a) Disconnect the speed sensor (NC) connector from the transaxle.
(b) Measure the resistance between terminals of speed sensor.
OK:
Resistance:
TOYOTA made: 500 to 620 Ω at 20°C (68°F)
AISIN made: 560 to 680 Ω at 20°C (68°F)

NG → **REPLACE SPEED SENSOR(NC)**

OK

2	CHECK HARNESS AND CONNECTOR(SPEED SENSOR – ECM)

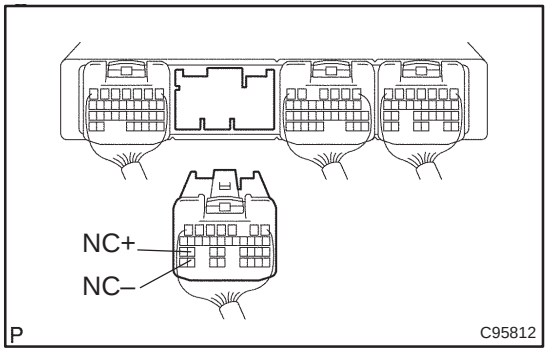

(a) Connect the speed sensor (NC) connector.
(b) Disconnect the ECM connector.
(c) Measure the resistance between terminals NC+ and NC– of the ECM connector.
OK:
Resistance:
TOYOTA made: 500 to 620 Ω at 20°C (68°F)
AISIN made: 560 to 680 Ω at 20°C (68°F)
(d) Measure the resistance between body ground and that NC+ as well as NC– of the ECM connector.
OK:
Resistance: 1MΩ or higher

NG → **REPAIR OR REPLACE HARNESS OR CONNECTOR**

OK

CHECK AND REPLACE ECM

DTC	P2716/77	PRESSURE CONTROL SOLENOID ”D” ELECTRICAL (SHIFT SOLENOID SLT)

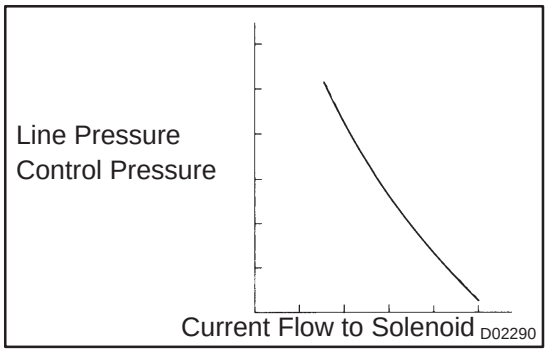

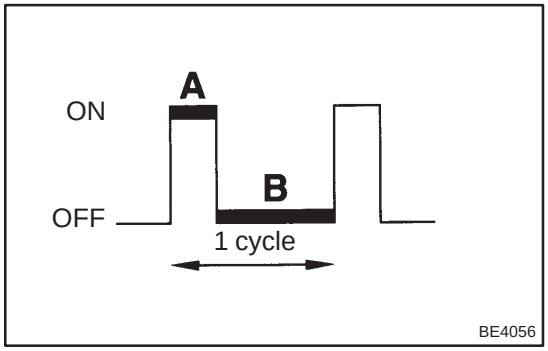

CIRCUIT DESCRIPTION

The throttle pressure that is applied to the primary regulator valve (which modulates the line pressure) causes the solenoid valve SLT, under electronic control, to precisely and minutely modulate and generate the line pressure according to the extent of the accelerator pedal depressed or the output of engine power.

This controls the line pressure and provides smooth shifting.

Upon receiving a signal of the throttle valve opening angle, the ECM controls the line pressure by sending a predetermined (*) duty ratio to the solenoid valve, modulating the line pressure and generating throttle pressure.

(*): Duty Ratio

The duty ratio is the ratio of the period of continuity in one cycle. For example, if A is the period of continuity in one cycle, and B is the period of non–continuity, then

Duty Ratio=A/(A+B) x 100 (%)

DTC No.	DTC Detection Condition	Trouble Area
P2716/77	Condition (a) or (b) below is detected 1 sec. or more: (1 trip detection logic) (a) SLT– terminal: 0V (b) SLT– terminal: 12V	• Open or short in shift solenoid valve SLT circuit • Shift solenoid valve SLT • ECM

WIRING DIAGRAM

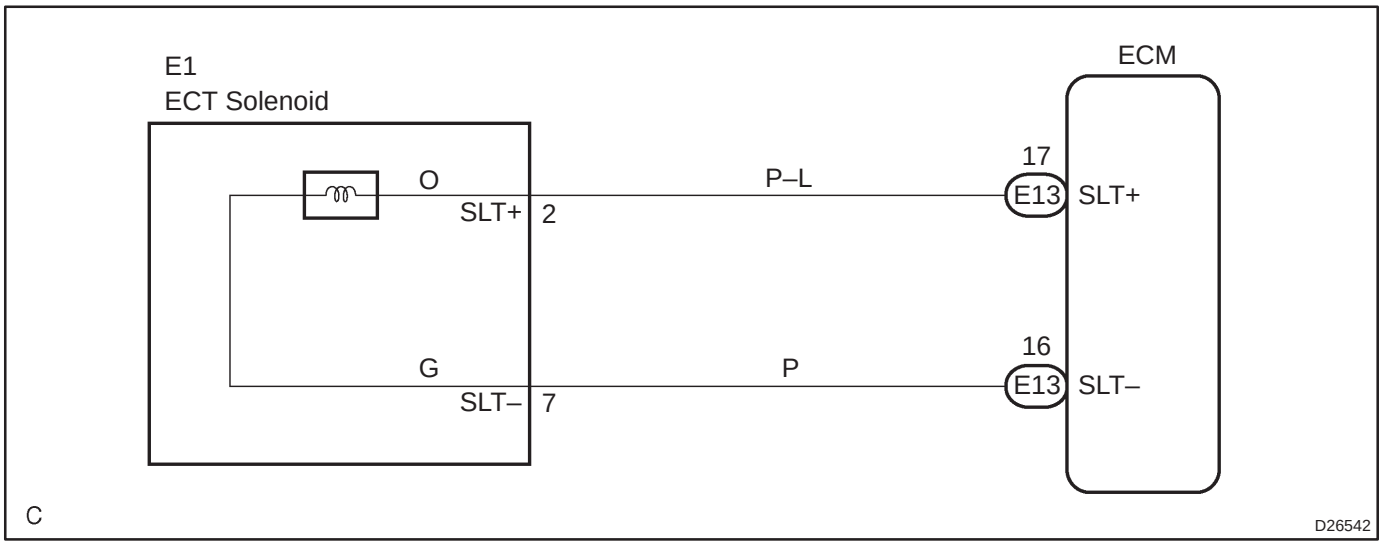

INSPECTION PROCEDURE

1	INSPECT TRANSMISSION WIRE(SLT)

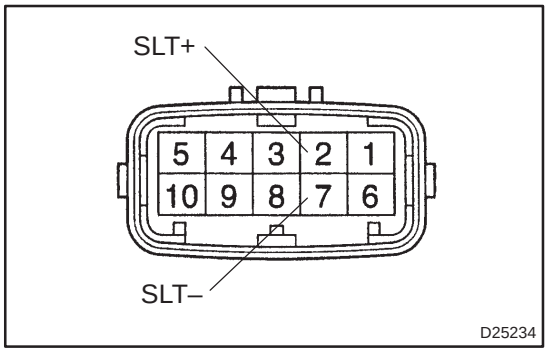

(a) Disconnect the transmission wire connector from the transaxle.

(b) Measure the resistance between terminals SLT+ and SLT– of the transmission wire connector.
OK:
Resistance: 5.0 to 5.6 Ω at 20˚C (68˚F)

(c) Measure the resistance between body ground and that SLT+ as well as SLT– of the transmission wire connector.
OK:
Resistance: 1MΩ or higher

NG → **Go to step 3**

OK

2 CHECK HARNESS AND CONNECTOR(TRANSMISSION WIRE – ECM)

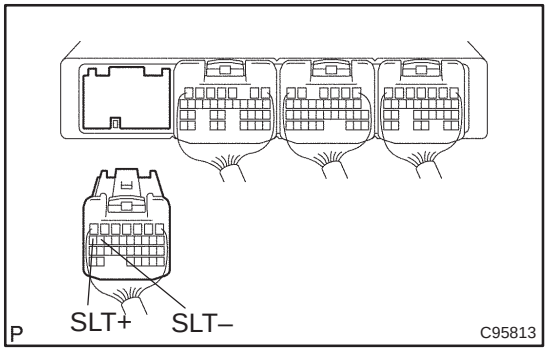

(a) Connect the transmission wire connector to the transaxle.
(b) Disconnect the ECM connector.
(c) Measure the resistance between terminals SLT+ and SLT– of the ECM connector.
OK:
Resistance: 5.0 to 5.6 Ω at 20˚C (68˚F)
(d) Measure the resistance between body ground and that SLT+ as well as SLT– of the ECM connector.
OK:
Resistance: 1MΩ or higher

NG → **REPAIR OR REPLACE HARNESS OR CONNECTOR**

OK

CHECK AND REPLACE ECM

3 INSPECT SHIFT SOLENOID VALVE(SLT)

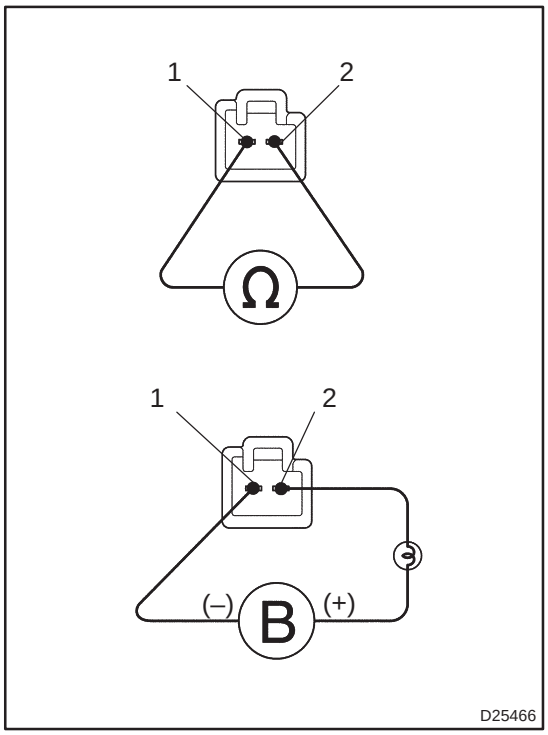

(a) Remove the shift solenoid valve SLT.
(b) Measure the resistance between terminals of the shift solenoid valve SLT.
OK:
Resistance: 5.0 to 5.6 Ω at 20˚C (68˚F)
(c) Connect the positive (+) lead with a 21 W bulb to terminal 2 and the negative (–) lead to terminal 1 of the solenoid valve connector, then check the movement of the solenoid valve.
OK:
The solenoid valve makes an operating noise.

NG → **REPLACE SHIFT SOLENOID VALVE(SLT)**

OK

REPAIR OR REPLACE TRANSMISSION WIRE

DTC	P2769/64	TORQUE CONVERTER CLUTCH SOLENOID CIRCUIT LOW (SHIFT SOLENOID VALVE DSL)

DTC	P2770/64	TORQUE CONVERTER CLUTCH SOLENOID CIRCUIT HIGH (SHIFT SOLENOID VALVE DSL)

CIRCUIT DESCRIPTION

The shift solenoid valve DSL is turned ON and OFF by signals from the ECM in order to control the hydraulic pressure operation the lock–up relay valve, which then the controls operation of the lock–up clutch.

DTC No.	DTC Detection Condition	Trouble Area
P2769/64	ECM detects short in solenoid valve DSL circuit 4 times when solenoid valve DSL is operated (2 trip detection logic)	• Short in shift solenoid valve DSL circuit • Shift solenoid valve DSL • ECM
P2770/64	ECM detects open in solenoid valve DSL circuit 4 times when solenoid valve DSL is not operated (2 trip detection logic)	• Open in shift solenoid valve DSL circuit • Shift solenoid valve DSL • ECM

Fail safe function:

If the ECM detects a malfunction, it turns the shift solenoid valve DSL OFF.

WIRING DIAGRAM

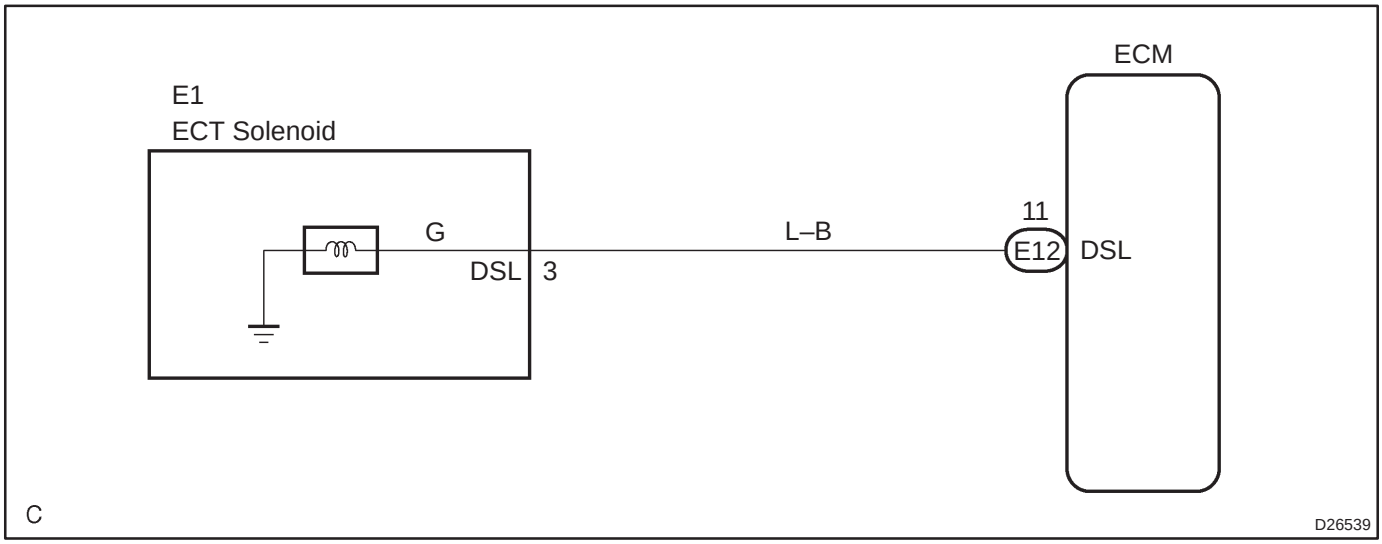

1	INSPECT TRANSMISSION WIRE(DSL)

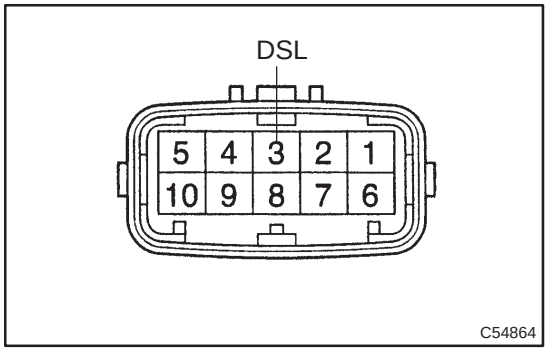

(a) Disconnect the transmission wire connector from the transaxle.
(b) Measure the resistance between terminal DSL of the transmission wire connector and body ground.
OK:
Resistance: 11 to 13 Ω at 20°C (68°F)

NG → **Go to step 3**

OK

2	CHECK HARNESS AND CONNECTOR(TRANSMISSION WIRE – ECM)

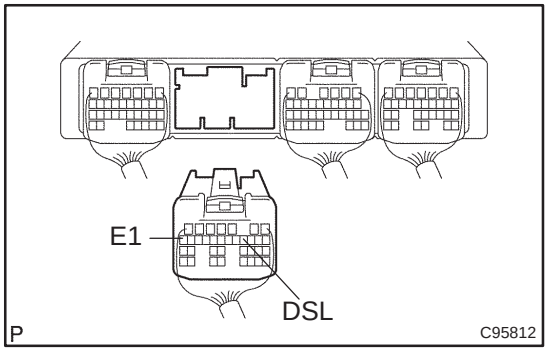

(a) Connect the transmission wire connector to the transaxle.
(b) Disconnect the ECM connector.
(c) Measure the resistance between terminals DSL and E1 of the ECM connector.
OK:
Resistance: 11 to 13 Ω at 20°C (68°F)

NG → **REPAIR OR REPLACE HARNESS OR CONNECTOR**

OK

CHECK AND REPLACE ECM

3 INSPECT SHIFT SOLENOID VALVE(DSL)

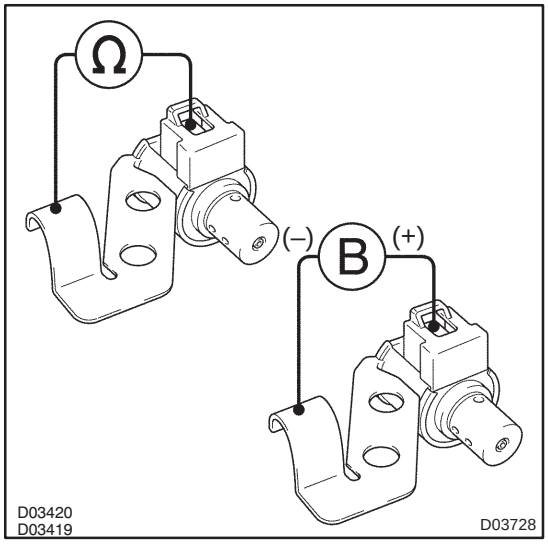

(a) Remove the shift solenoid valve DSL.

(b) Measure the resistance between terminal DSL of shift solenoid valve DSL and the solenoid body.

OK:

Resistance: 11 to 13 Ω at 20°C (68°F)

(c) Connect the positive (+) lead to the terminal of solenoid connector and the negative (–) lead to the solenoid body.

OK:

The solenoid valve makes an operating noise.

NG → **REPLACE SHIFT SOLENOID VALVE(DSL)**

OK

REPAIR OR REPLACE TRANSMISSION WIRE

TRANSMISSION FLUID TEMPERATURE SENSOR NO.2 CIRCUIT

CIRCUIT DESCRIPTION

The ATF temperature sensor converts the fluid temperature into a resistance value which is input into the ECM.

WIRING DIAGRAM

See page 05–882.

INSPECTION PROCEDURE

1	INSPECT TRANSMISSION WIRE(ATF TEMPERATURE SENSOR)

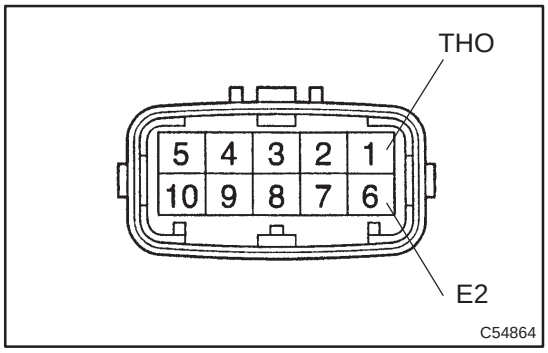

(a) Disconnect the transmission wire connector from the transaxle.

(b) Measure the resistance between terminals THO and E2.

OK:

Temperature: °C (°F)	Resistance: kΩ
10 (50)	6.4
110 (230)	0.2

(c) Check the continuity between the wire harness side connectors.

OK:

Standard (Check for a short):

Symbols	Specified condition
THO – Body ground	No continuity
E2 – Body ground	

NG → **REPAIR OR REPLACE TRANSMISSION WIRE**

OK

2	CHECK HARNESS AND CONNECTOR(TRANSMISSION WIRE – ECM)

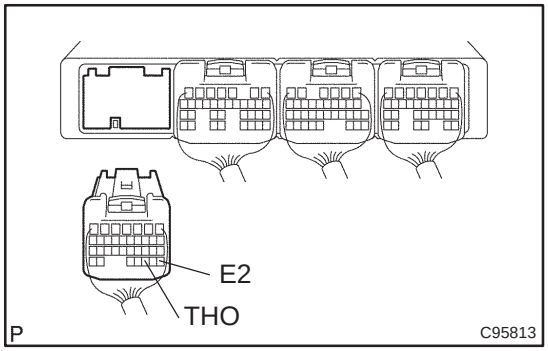

(a) Connect the transmission wire connector to the transaxle.
(b) Disconnect the ECM connector.
(c) Measure the resistance between terminals THO and E2.
OK:

Temperature: °C (°F)	Resistance: kΩ
10 (50)	6.4
110 (230)	0.2

(d) Check the continuity between the wire harness side connectors.
OK:
Standard (Check for a short):

Symbols	Specified condition
THO – Body ground	No continuity
E2 – Body ground	

NG → **REPAIR OR REPLACE HARNESS OR CONNECTOR**

OK

CHECK AND REPLACE ECM

PARK/NEUTRAL POSITION SWITCH CIRCUIT

CIRCUIT DESCRIPTION

The park/neutral position switch detects the shift lever position and sends signals to the ECM.
The ECM receives signals (REVERSE and DRIVE) from the park/neutral position switch.

WIRING DIAGRAM

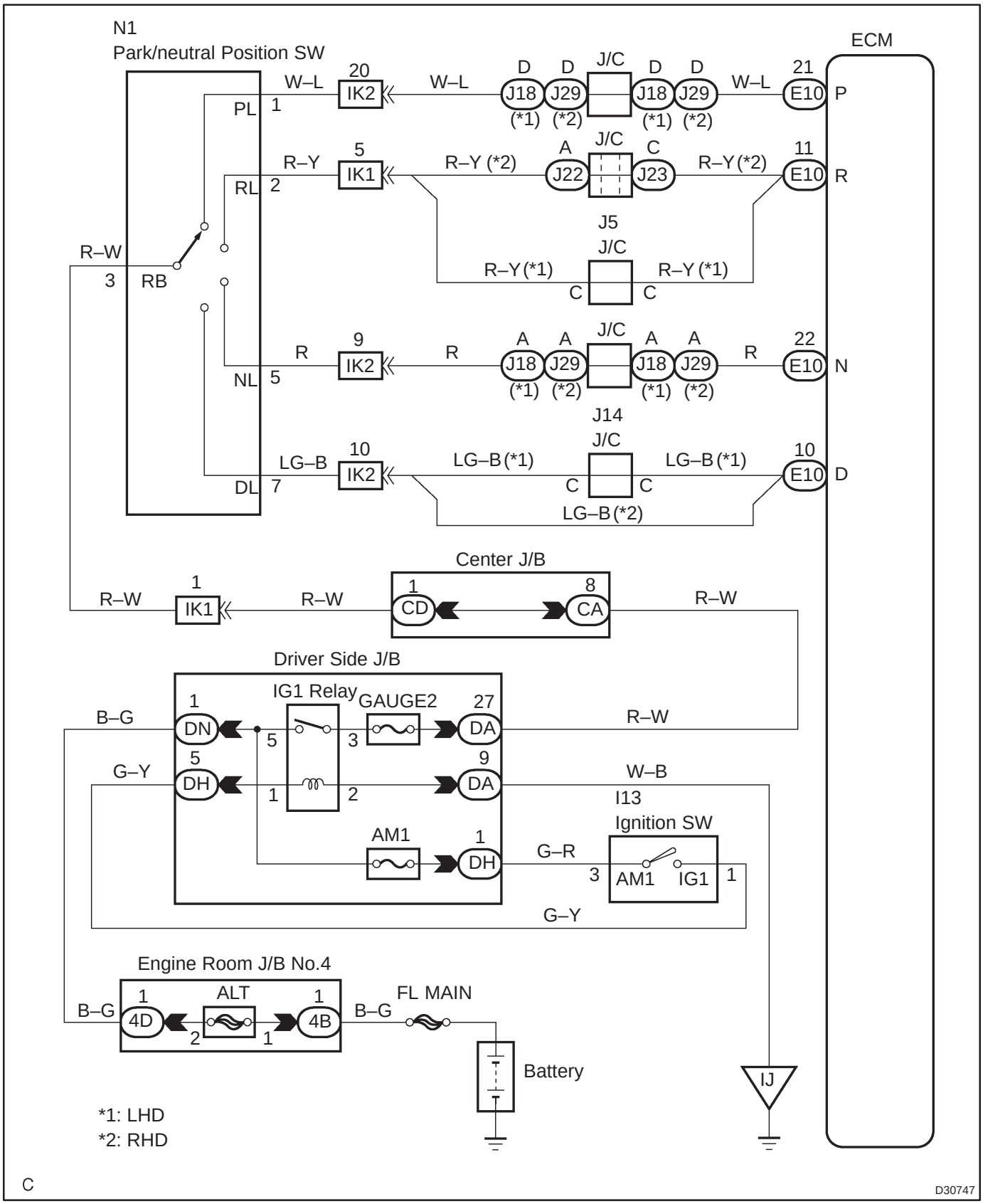

INSPECTION PROCEDURE

1 INSPECT PARK/NEUTRAL POSITION SWITCH ASSY

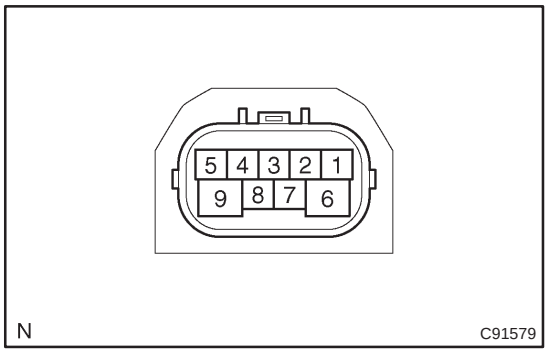

(a) Disconnect the park/neutral position switch connector.
(b) Check the continuity between each terminal shown below when the shift lever is moved to each position.

Shift Position	Terminal No. to continuity	
P	1 – 3	6 – 9
R	2 – 3	–
N	3 – 5	6 – 9
D	3 – 7	–

OK:
There is continuity.

NG → **REPLACE PARK/NEUTRAL POSITION SWITCH ASSY**

OK

2 CHECK HARNESS AND CONNECTOR(PARK/NEUTRAL POSITION SWITCH – ECM)

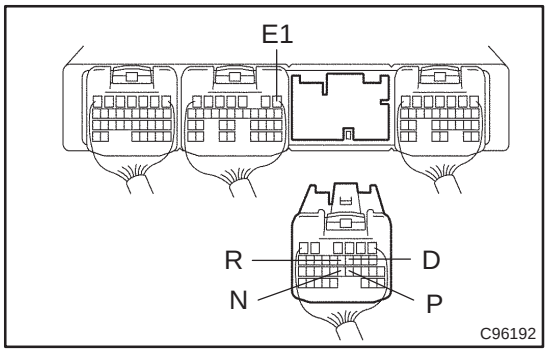

(a) Connect the park/neutral position switch connector.
(b) Disconnect the ECM connector.
(c) Turn the ignition switch to ON.
(d) Measure the voltage between terminals E1 and that P, R, N as well as D of the ECM connector when the shift lever is shifted to the following position.

OK:

Shift range	Terminal	Voltage (V)
P	P – E1	7.5 to 14
R	R – E1	7.5 to 14
N	N – E1	7.5 to 14
D	D – E1	7.5 to 14

NG → **REPAIR OR REPLACE HARNESS OR CONNECTOR**

OK

CHECK AND REPLACE ECM

STOP LIGHT SWITCH SIGNAL CIRCUIT

CIRCUIT DESCRIPTION

The purpose of this circuit is to prevent the engine from stalling while driving in lock–up condition, when brakes are suddenly applied.

When the brake pedal is depressed, this switch sends a signals to the ECM. Then the ECM cancels the operation of the lock–up clutch while braking is in progress.

WIRING DIAGRAM

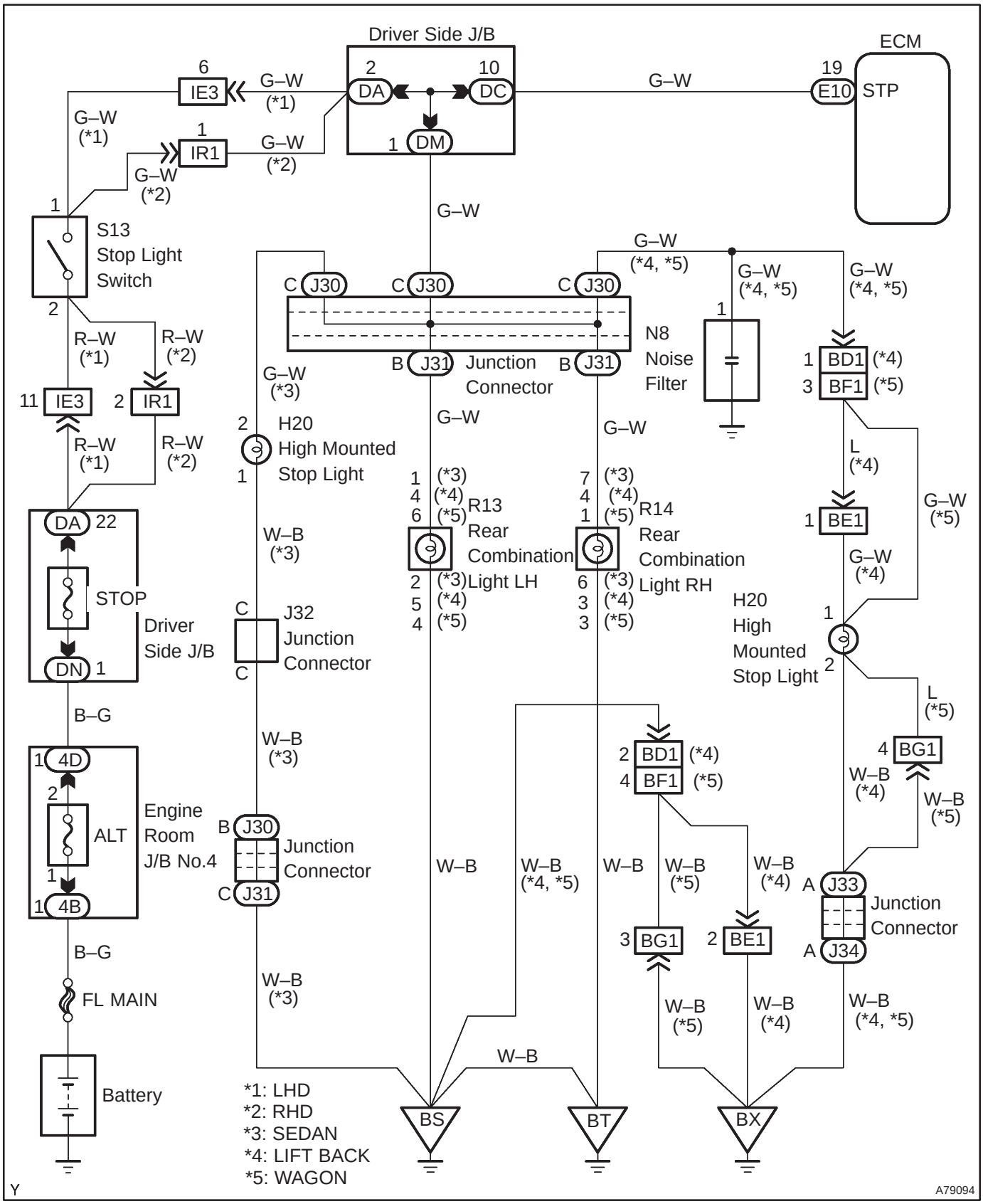

INSPECTION PROCEDURE

1	INSPECT STOP LAMP SWITCH ASSY

NG → REPLACE STOP LAMP SWITCH ASSY

OK

2	CHECK HARNESS AND CONNECTOR(STOP LAMP SWITCH ASSY – ECM)

NG → REPAIR OR REPLACE HARNESS OR CONNECTOR

OK

REPAIR OR REPLACE ECM

KICK DOWN SWITCH CIRCUIT

CIRCUIT DESCRIPTION

The kick–down switch is turned ON when the accelerator pedal is depressed to the full throttle and sends signals to ECM.
When the kick–down switch is turned ON, the ECM controls gear shifting according to the programmed shift diagrams.
If a short circuit develops in the kick–down switch, the ECM disregards the kick–down signals and controls shifting at the normal shift points.

WIRING DIAGRAM

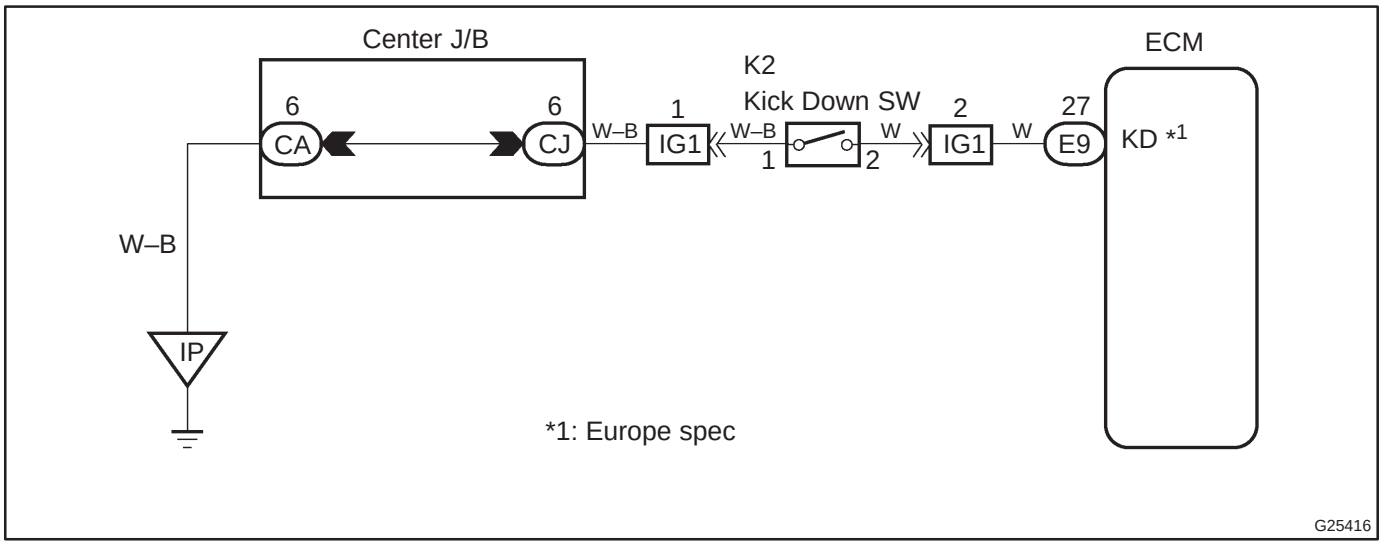

INSPECTION PROCEDURE

1 INSPECT TERMINAL VOLTAGE

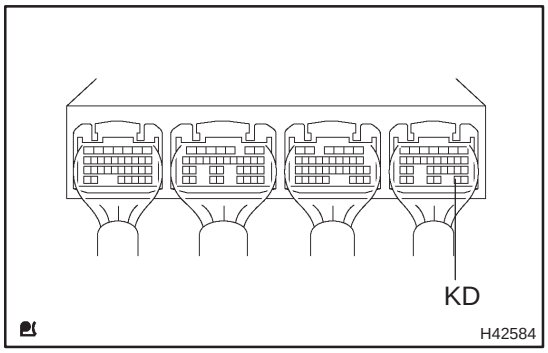

(a) Turn the ignition switch to ON.
(b) Measure the voltage between terminal KD of ECM and body ground when accelerator pedal is fully depressed or not.

OK:

Accelerator pedal	Voltage
Fully depressed (Kick–down switch is ON)	Below 1 V
Released (Kick–down switch is OFF)	10 to 14 V

OK → **PROCEED TO NEXT CIRCUIT INSPECTION SHOWN ON PROBLEM SYMPTOMS TABLE**

NG

2 INSPECT KICK DOWN SWITCH

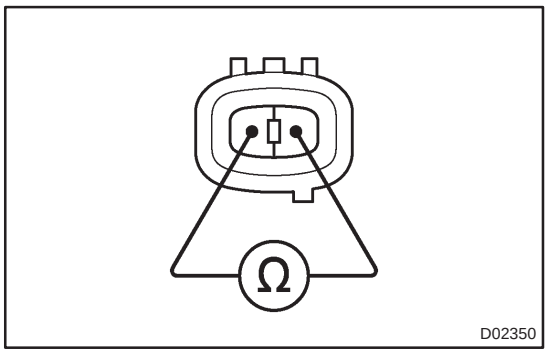

(a) Disconnect the kick–down switch connector.
(b) Measure the continuity between terminals of the kick–down switch connector when kick–down switch is ON and OFF.

OK:

Kick–down switch	Continuity
ON	Continuity
OFF	No continuity

NG → **REPLACE KICK DOWN SWITCH**

OK

3 CHECK HARNESS AND CONNECTOR

NG → **REPAIR OR REPLACE HARNESS AND CONNECTOR**

OK

CHECK AND REPLACE ECM

TRANSMISSION CONTROL SWITCH CIRCUIT

CIRCUIT DESCRIPTION

When shifting the shift lever into S range using the transmission control switch, it is possible to shift in 1 to 4 positions.

Shifting ”+” once changes up 1 shift range position, ”–” once changes down 1 shift range position respectively.

WIRING DIAGRAM

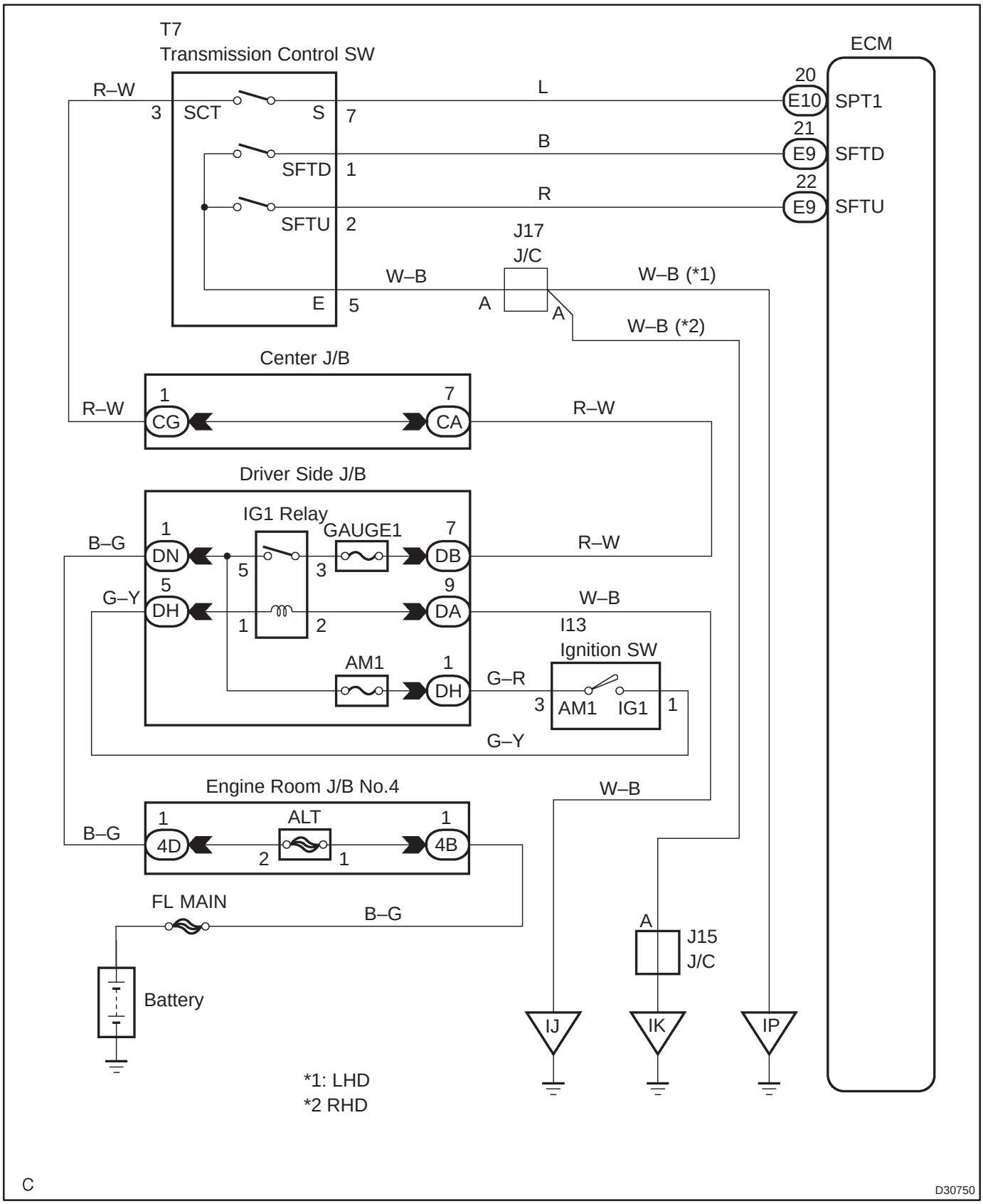

INSPECTION PROCEDURE

1 CHECK ECM

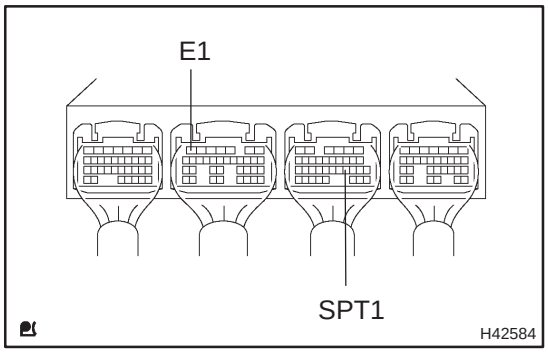

(a) Turn the ignition switch to ON.
(b) Measure the voltage between terminals SPT1 and E1 of the ECM.
OK:

Shift position	Specified condition
Except S position	Below 1 V
S position	7.5 to 14 V

NG → **Go to step 6**

OK

2 CHECK ECM

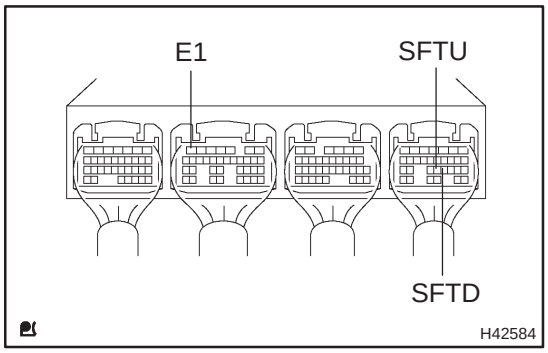

(a) Measure the voltage between terminals E1 and that SFTU as well as SFTD of the ECM.
OK:

Shift position	Tester connection	Specified condition
Shift to "+" (Up shift)	SFTU – E1	Below 1.5 V
S position	SFTU – E1	7.5 to 14 V
Shift to "–" (Down shift)	SFTD – E1	Below 1.5 V
S position	SFTD – E1	7.5 to 14 V

OK → **NORMAL**

NG

3 INSPECT SHIFT LOCK CONTROL UNIT ASSY(TRANSMISSION CONTROL SWITCH)

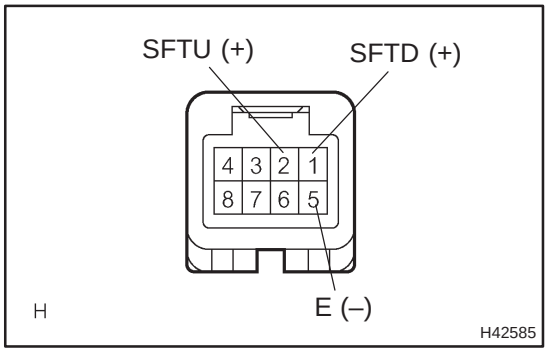

(a) Turn the ignition switch to LOCK.
(b) Disconnect the transmission control switch connector.
(c) Check the continuity between terminals E and that SFTU as well as SFTD of the transmission control switch connector.
OK:

Shift position	Tester connection	Specified condition
Shift to "+" (Up shift)	SFTU – E	Continuity
S position	SFTU – E	No continuity
Shift to "–" (Down shift)	SFTD – E	Continuity
S position	SFTD – E	No continuity

NG → **REPLACE SHIFT LOCK CONTROL UNIT ASSY**

OK

4	CHECK HARNESS AND CONNECTOR(ECM – TRANSMISSION CONTROL SWITCH)

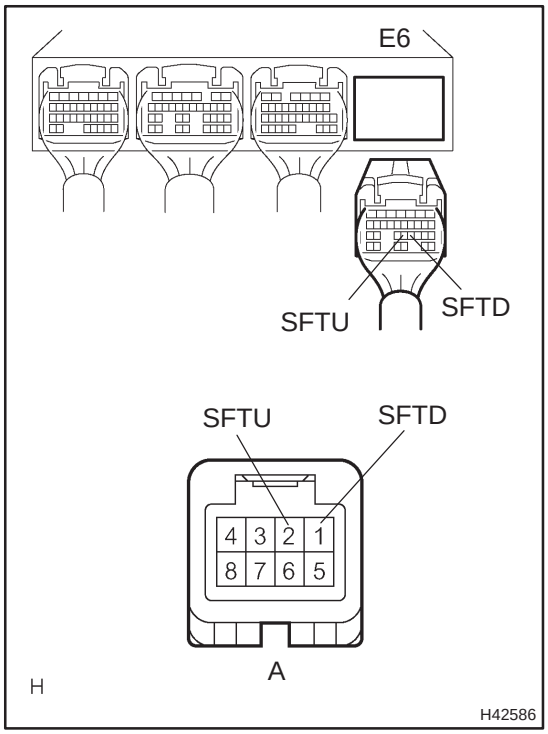

(a) Disconnect the ECM connector.
(b) Check the continuity between ECM and transmission control switch.
OK:

Tester connection	Specified condition
SFTU (E6–22) – SFTU (A–2)	Continuity
SFTD (E6–28) – SFTD (A–1)	Continuity

NG → **REPAIR OR REPLACE HARNESS AND CONNECTOR**

OK

5	CHECK HARNESS AND CONNECTOR(TRANSMISSION COTROL SWITCH – BODY GROUND)

(a) Check the continuity between body ground and E of the transmission control switch connector (wire harness side).
OK:
Continuity

NG → **REPAIR OR REPLACE HARNESS AND CONNECTOR**

OK

CHECK AND REPLACE ECM

6 INSPECT SHIFT LOCK CONTROL UNIT ASSY(TRANSMISSION CONTROL SWITCH)

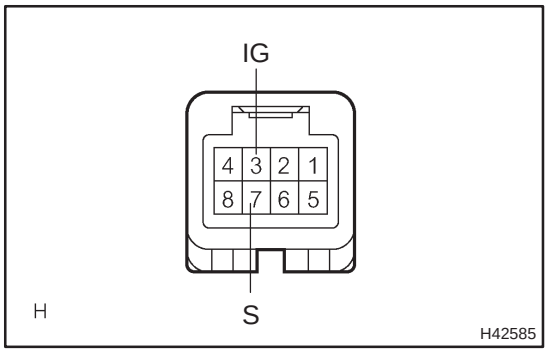

(a) Turn the ignition switch to LOCK.
(b) Disconnect the transmission control switch connector.
(c) Check the continuity between terminal IG and S of the transmission control switch.

OK:

Shift position	Tester connection	Specified condition
Except S position	IG – S	No continuity
S position	IG – S	Continuity

NG → **REPLACE SHIFT LOCK CONTROL UNIT ASSY**

OK

7 CHECK HARNESS AND CONNECTOR

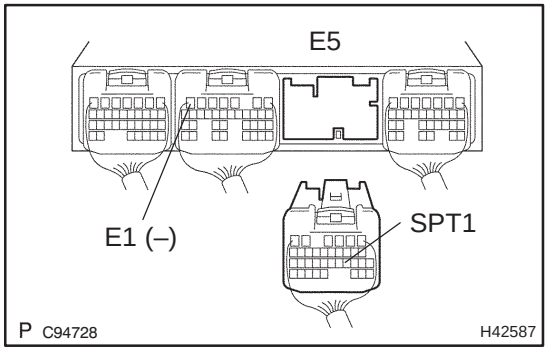

(a) Connect the transmission control switch connector.
(b) Disconnect the ECM connector.
(c) Turn the ignition switch to ON.
(d) Measure the voltage between terminal SPT1 and E1 of the ECM connector.

OK:

Shift position	Tester connection	Specified condition
Except S position	SPT1 – E1	Below 1 V
S position	SPT1 – E1	7.5 to 14 V

NG → **REPAIR OR REPLACE HARNESS AND CONNECTOR**

OK

CHECK AND REPLACE ECM

ELECTRONIC CONTROLLED AUTOMATIC TRANSAXLE [ECT] (U241E(1AZ–FSE))

0567N–12

HOW TO PROCEED WITH TROUBLESHOOTING

HINT:

The ECM of this system is connected to the multiplex communication system. Therefore, before starting troubleshooting, make sure to check that there is no trouble in the multiplex communication system.

1	Vehicle Brought to Workshop

2	Customer Problem Analysis (See page 05–919)

3	Connect the hand–held tester to DLC3

4	Check and Clear DTC and Freeze Frame Data (See page 05–920)

5	Visual Inspection

6	Setting the Check Mode Diagnosis (See page 05–920)

7	Problem Symptom Confirmation

- Symptom does not occur: Go to step 8
- Symptom occur: Go to step 9

8	Symptom Simulation (See page 01–22)

9	DTC Check (See page 05–920)

- DTC is not output: Go to step 10
- DTC is output: Go to step 17

10	Basic Inspection (See page 40–2, 40–8 and 40–69)

NG → Go to step 19

OK

11	Mechanical System Test (See page 05–920)

NG → Go to step 16

OK

12	Manual Shifting Test (See page 05–920)

NG → Go to step 14

OK

13	Problem Symptoms Table Chapter 1 (See page 05–935)

NG → Go to step 18

OK

14	Problem Symptoms Table Chapter 2 (See page 05–935)

NG → Go to step 16

OK

15	Problem Symptoms Table Chapter 3 (See page 05–935)

NG

16	Part Inspection

→ Go to step 19

17	DTC Chart (See page 05–931)

18	Circuit Inspection (See page 05–938)

19	Identification of Problem

20	Repair

21	Confirmation Test

End

05CBY–01

PRECAUTION

CAUTION:

Perform the RESET MEMORY (AT initialization) when replacing the automatic transaxle assy, engine assy or ECM.

HINT:

Initialization can not be completed by only removing the battery.

0567O–11

CUSTOMER PROBLEM ANALYSIS CHECK

Transmission Control System Check Sheet	Inspector's Name :

Customer's Name		Registration No.	
		Registration Year	/ /
		Frame No.	
Date Vehicle Brought In	/ /	Odometer Reading	km mile

Date Problem Occurred	/ /
How Often Does Problem Occur?	☐ Continuous ☐ Intermittent (times a day)

Symptoms	☐ Vehicle does not move (☐ Any range ☐ Particular range)
	☐ No up–shift (☐ 1st → 2nd ☐ 2nd → 3rd ☐ 3rd → O/D)
	☐ No down–shift (☐ O/D → 3rd ☐ 3rd → 2nd ☐ 2nd → 1st)
	☐ No up–shift (S range)
	☐ No down–shift (S range)
	☐ Lock–up malfunction
	☐ Shift point too high or too low
	☐ Harsh engagement (☐ N → D ☐ Lock–up ☐ Any drive range)
	☐ Slip or shudder
	☐ No kick–down
	☐ Others ( )

Check Item	MIL	☐ Normal ☐ Remains ON

DTC Check	1st Time	☐ Normal code ☐ Malfunction code (DTC)
	2nd Time	☐ Normal code ☐ Malfunction code (DTC)

05C94–02

PRE–CHECK

1. DIAGNOSIS SYSTEM

(a) Description

(1) When troubleshooting Euro–OBD vehicles, the only difference from the usual troubleshooting procedure is that you connect the vehicle to the OBD scan tool complying with ISO 15031–4 or hand–held tester, and read off various data output from the vehicle's ECM.

(2) Euro–OBD regulations require that the vehicle's on–board computer illuminates the Check Engine Warning Light (Malfunction Indicator Lamp)/CHK ENG (MIL) on the instrument panel when the computer detects a malfunction in the emission control system/components or in the driving system components which affect vehicle emissions, or a malfunction in the computer. In addition to CHK ENG (MIL) illuminating when a malfunction is detected, the applicable Diagnostic Trouble Codes (DTCs) prescribed by ISO15031–6 are recorded in the ECM memory.

If the malfunction does not occur in 3–trip, the CHK ENG (MIL) goes off but the DTCs remain recorded in the ECM memory.

(3) To check the DTCs, connect the OBD scan tool or hand–held tester to the Data Link Connector 3 (DLC3) on the vehicle. The OBD scan tool or hand–held tester also enables you to erase the DTCs and check freezed frame data and various forms of engine data (For operating instructions, see the OBD scan tool's instruction book.).

(4) DTCs include ISO controlled codes and manufacturer controlled codes. ISO controlled codes must be set as prescribed by the ISO, while manufacturer controlled codes can be set freely by the manufacturer within the prescribed limits (See DTC chart on page 05–931).

(5) The diagnosis system operates in normal mode during normal vehicle use. It also has a check mode for technicians to simulate malfunction symptoms and troubleshoot. Most DTCs use 2 trip detection logic (*) to prevent erroneous detection, and ensure thorough malfunction detection. By switching the ECM to check mode when troubleshooting, technicians can cause the CHK ENG (MIL) to illuminate for a malfunction that is only detected once or momentarily (Hand–held tester only) (See step 2).

(6) *2 trip detection logic:
When a malfunction is first detected, the malfunction code is temporarily stored in the ECM memory (1st trip). If the same malfunction is detected again during the second drive test, this second detection causes the CHK ENG (MIL) to illumenate (2nd trip) (However, the ignition switch must be turned OFF between the 1st trip and the 2nd trip.).

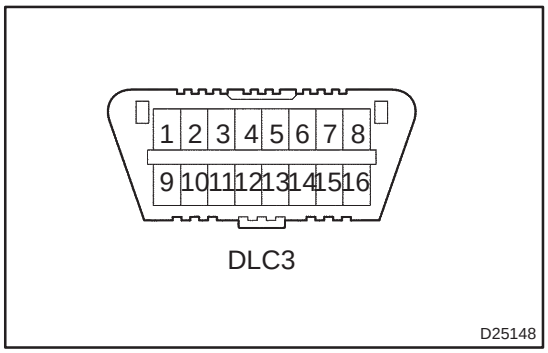

(b) Inspect the DLC3.
(1) The vehicle's ECM uses ISO 9141–2 (Euro–OBD) communication protocol. The terminal arrangement of DLC3 complies with ISO 15031–3 and matches the ISO 9141–2 format.

Terminal No.	Connection	Voltage or Resistance	Condition
7	Bus ⊕ Line	Pulse generation	During communication
4	Chassis Ground	↔ Body Ground / 1 Ω or less	Always
16	Battery Positive	↔ Body Ground / 9 to 14 V	Always

HINT:
If your display shows "UNABLE TO CONNECT TO VEHICLE" when you have connected the cable of hand–held tester to DLC3, turned the ignition switch ON and operated the hand–held tester, there is a problem on the vehicle side or tool side.
- If communication is normal when the tool is connected to another vehicle, inspect DLC3 on the original vehicle.
- If communication is still not possible when the tool is connected to another vehicle, the problem is probably in the tool itself, so consult the Service Department listed in the tool's instruction manual.

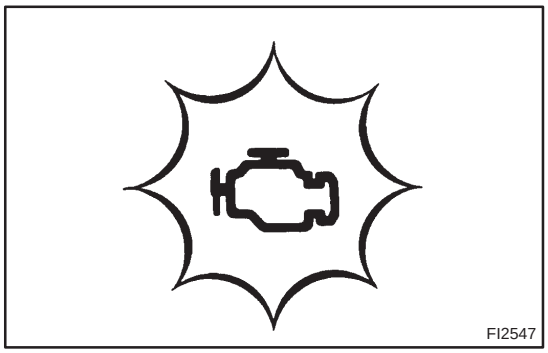

2. INSPECT DIAGNOSIS (NORMAL MODE)

(a) Check the MIL.
(1) The MIL comes on when the ignition switch is turned ON and the engine is not running.

HINT:
If the MIL does not come on, troubleshoot the combination meter.

(2) When the engine is started, the MIL should go off. If the light remains on, the diagnosis system has detected a malfunction or abnormality in the system.

(b) Check the DTC, using the hand–held tester.

NOTICE:

Hand–held tester only:

When the diagnostic system is switched from normal mode to check (test) mode, it erases all DTCs and freeze frame data recorded in normal mode. So before switching modes, always check the DTCs and freeze frame data, and note them down.

(1) Use the hand–held tester to check the DTCs and instructions, see the hand–held tester instruction book.

(2) See page 05–931 to confirm the details of the DTCs.

(c) Clear the DTC.

(1) When using the hand–held tester:
The following operation will erase the DTC and freeze frame data. Operate the hand–held tester to erase the codes.

(2) When not using the hand–held tester:
Remove the EFI fuse from engine room J/B for 60 seconds or more.

3. INSPECT DIAGNOSIS (CHECK MODE)

HINT:

Hand–held tester only:

Compared to the normal mode, the check mode has high sensing ability to detect malfunctions.

Furthermore, the same diagnostic items which are detected in Normal mode can also be detected in Check mode.

(a) Check the DTC.

(1) Check the initial conditions.

- Battery voltage 11 V or more
- Throttle valve fully closed
- Shift lever in P range
- Air conditioning switched OFF

(2) Turn the ignition switch OFF.

(3) Prepare the hand–held tester.

(4) Connect the hand–held tester to DLC3.

(5) Turn the ignition switch ON and switch the hand–held tester ON.

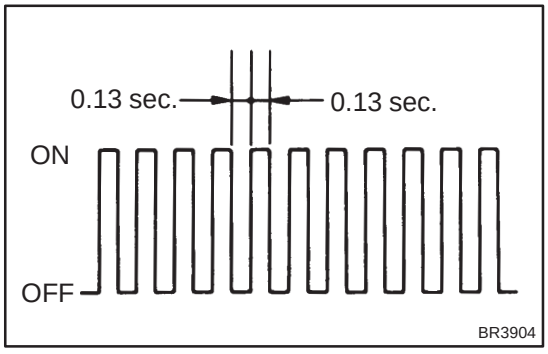

(6) Switch the hand–held tester from Normal mode to Check mode (Check that the MIL flashes).

NOTICE:

If the hand–held tester switches the ECM from the normal mode to the check mode or vice–versa, or if the ignition switch is turned from ON to ACC or OFF during the check mode, the DTC and freeze frame data will be erased.

(7) Start the engine (MIL goes out after the engine starts).

(8) Simulate the conditions of the malfunction described by the customer.

NOTICE:

Leave the ignition switch ON until you have checked the DTCs, etc.

(9) After simulating the malfunction conditions, use the hand–held tester diagnosis selector to check the DTCs and freeze frame data, etc.

HINT:

Take care not to turn the ignition switch OFF, as turning it off switches the diagnosis system from Check mode to Normal mode, which all DTCs etc. are erased.

(10) After checking the DTC, inspect the applicable circuit.

(b) Clear the DTC.

When using the hand–held tester:

The following operation will erase the DTC and freeze frame data. Operate the hand–held tester to erase the codes.

(c) Clear the DTC.

When not using the hand–held tester:

Remove the EFI fuse from engine room J/B for 10 seconds or more.

4. DATA LIST

HINT:

According to the DATA LIST displayed by the hand–held tester, you can read the value of the switch, sensor, actuator and so on without parts removal. Reading the DATA LIST as the first step of troubleshooting is one of the methods to shorten the work time.

(a) Warm up the engine.

(b) Turn the ignition switch OFF.

(c) Connect the hand–held tester to the DLC3.

(d) Turn the ignition switch ON.

(e) According to the display on tester, read the ”DATA LIST”.

Item	Measurement Item/ Display (Range)	Normal Condition	Diagnostic Note
STOP LIGHT SW	Stop light SW Status/ ON or OFF	• Brake Pedal is depressed: ON • Brake Pedal is released: OFF	←
SHIFT	Actual Gear Position/ 1st, 2nd, 3rd, 4th (O/D)	Shift lever Range is; • D: 1st, 2nd, 3rd or 4th (O/D)	←
SPD (NC)	Counter Gear Speed display: 50 r/min	D Range is warmed up,4th (O/D); Same as input shaft speed	←
LOCK UP SOL	Lock Up Solenoid Status/ ON or OFF	• Lock Up: ON • Except Lock Up: OFF	←
KICKDOWN SW	Kick down SW Status/ ON or OFF	• Accelerator Pedal is depressed: ON • Accelerator Pedal is released: OFF	←

Item	Measurement Item/ Display (Range)	Normal Condition	Diagnostic Note
PNP SW [NSW]	PNP SW Status/ ON or OFF	Shift lever range is; P or N: ON Except P or N: OFF	The shift lever range and these values are different, there are failures of the PNP switch or shift cable adjustment.
REVERSE	PNP SW Status/ ON or OFF	Shift lever range is; R: ON Except R: OFF	
DRIVE	PNP SW Status/ ON or OFF	Shift lever range is; D and 3: ON Except D and 3: OFF	
SOLENOID (SLT)	Shift Solenoid SLT Status/ ON or OFF	IG SW ON: ON	←
AT FLUID TEMP	ATF Temp. Sensor Value/ min.: –40°C (–40°F) max.: 215°C (419°F)	80°C (176°F) (After Stall Test)	If the value is "–40°C (–40°F)" or "215°C (419°F)", ATF temp. sensor circuit is opened or shorted.

5. ACTIVE TEST

HINT:

Performing the ACTIVE TEST using the hand–held tester allows the relay, VSV, actuator and so on to operate without parts removal. Performing the ACTIVE TEST as the first step of troubleshooting is one of the methods to shorten the work time.

It is possible to display the DATA LIST during the ACTIVE TEST.

(a) Warm up the engine.
(b) Turn the ignition switch OFF.
(c) Connect the hand–held tester to the DLC3.
(d) Turn the ignition switch ON.
(e) According to the display on tester, perform the "ACTIVE TEST".

Item	Test Details	Diagnostic Note
LINE PRESS UP	[Test Details] Operate the shift solenoid SLT and raise the line pressure. [Vehicle Condition] • Vehicle Stopped. • IDL: ON [Others] ON: Line pressure up. OFF: No action (normal operation)	–
LOCK UP	[Test Details] Control the shift solenoid DSL to set the ATM to the lock–up condition. [Vehicle Condition] Vehicle Speed: 60 km/h (37 mph) or more	Possible to check the DSL operation.
SHIFT	[Test Details] Operate the shift solenoid valve and set the each shift range by yourself. [Vehicle Condition] Less than 50 km/h (31 mph) [Others] • Press → button: Shift up • Press ← button: Shift down	Possible to check the operation of the shift solenoid values.

6. PROBLEM SYMPTOM CONFIRMATION

(a) Taking into consideration the results of the customer problem analysis, try to reproduce the symptoms of the trouble. If the problem is that the transaxle does not shift up, shift down, or the shift point is too high or too low, conduct the following road test referring to the automatic shift schedule and simulate the problem symptoms.

7. ROAD TEST

NOTICE:

Conduct the test at normal operating ATF temperature 50 to 80˚C (122 to 176˚F).

(a) D range test

Shift into the D range and fully depress the accelerator pedal and check the following points:

(1) Check up–shift operation.

Check to see that 1 → 2, 2 → 3 and 3 → O/D up–shift take place, and that the shift points conform to the automatic shift schedule (See page 03–45).

HINT:

- O/D Gear Up–shift Prohibition Control (1. Water temp. is 60˚C (140˚F) or less. 2. If there is a 10 km/h (6 mph) difference between the set cruise control speed and vehicle speed.)
- O/D Gear Lock–up Prohibition Control (1. Brake pedal is depressed. 2. Water temp. is 60˚C (140˚F) or lower)

(2) Check for shift shock and slip.

Check for shock and slip at the 1 → 2, 2 → 3 and 3 → O/D up–shift.

(3) Check for abnormal noise and vibration.

Run in D range lock–up or O/D gear and check for abnormal noise and vibration.

HINT:

The check for the cause of abnormal noise and vibration must be done very thoroughly as it could also be sure to loss of balance in the differential, torque converter, etc.

(4) Check kick–down operation.

While running in the D range, 2nd, 3rd and O/D gears, check to see that the possible kick–down vehicle speed limits for 2 → 1, 3 → 2 and O/D → 3 kick–downs conform to those indicated in the automatic shift schedule (See page 03–45).

(5) Check for abnormal shock and slip at kick–down.

(6) Check the lock–up mechanism.

- Drive in D range O/D gear, at a steady speed (lock–up ON) of about 60 km/h (37 mph).
- Lightly depress the accelerator pedal and check that the engine speed does not change abruptly.

If there is a big jump in engine speed, there is no lock–up.

(b) S range test

Shift to the S range, depress the accelerator pedal and check the following points:

Shift operations.

- Shifting the shift lever to ”+” or ”–” changes the shift range on the combination meter.

HINT:

Manual shift prohibition control is performed when:

- The ATF temperature is low.
- Down–shifting causes engine overrun.
- Down–shifting is required continuously. (Down–shifting to 1st gear may not be performed.)

(c) R range test

Shift into the R range and fully depress the accelerator pedal and check for slipping.

CAUTION:

Before conducting this test, ensure that the test area is free from people and obstruction.

(d) P range test

Stop the vehicle on a grade (more than 5˚) and after shifting into the P range, release the parking brake. Then, check to see that the parking lock pawl holds the vehicle in place.

8. MECHANICAL SYSTEM TESTS

(a) Measure the stall speed.

The object of this test is to check the overall performance of the transaxle and engine by measuring the stall speeds in the D and R ranges.

NOTICE:

- **Do the test at normal operating ATF temperature 50 to 80˚C (122 to 176˚F).**
- **Do not continuously run this test for longer than 5 seconds.**
- **To ensure safety, do this test in a wide, clear level area which provides good traction.**
- **The stall test should always be carried out in pairs. One technician should observe the conditions of wheels or wheel stoppers outside the vehicle while the other is doing the test.**

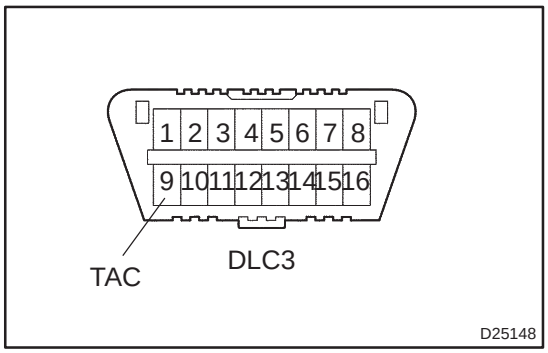

(1) Chock the 4 wheels.

(2) Connect the hand–held tester to DLC3 or tachometer to terminal TAC of DLC3 with SST.

SST 09843–18030

(3) Fully apply the parking brake.

(4) Keep your left foot pressing firmly on the brake pedal.

(5) Start the engine.

(6) Shift into the D range. Press all the way down on the accelerator pedal with your right foot.

(7) Quickly read the stall speed at this time.

Stall speed: 2,550 ± 150 rpm

(8) Do the same test in the R range.

Stall speed: 2,550 ± 150 rpm

Evaluation:

Problem	Possible cause
(a) Stall speed low in D and R ranges	• Engine output may be insufficient • Stator one–way clutch not operating properly HINT: If more than 600 rpm below the specified value, the torque converter could be faulty.
(b) Stall speed high in D range	• Line pressure too low • Forward clutch slipping • No. 2 one–way clutch not operating properly • U/D clutch slipping
(c) Stall speed high in R range	• Line pressure too low • Direct clutch slipping • 1st and reverse brake slipping • U/D clutch slipping
(d) Stall speed high in D and R ranges	• Line pressure too low • Improper fluid level • U/D one–way clutch not operating properly

(b) Measure the time lag.

(1) When the shift lever is shifted while the engine is idling, there will be a certain time lapse or lag before the shock can be felt. This is used for checking the condition of the direct clutch, forward clutch, and 1st and reverse brake.

NOTICE:

- **Do the test at normal operating ATF temperature 50 to 80˚C (122 to 176˚F).**
- **Be sure to allow 1 minute interval between tests.**
- **Take 3 measurements and take the average value.**

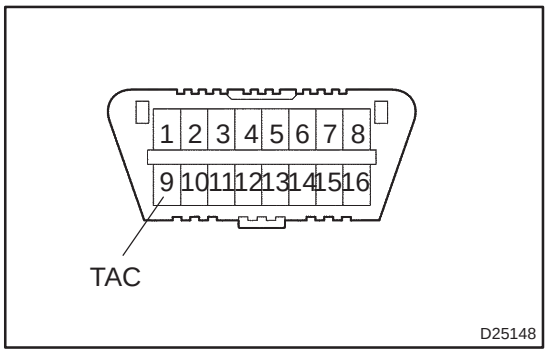

(2) Chock the 4 wheels.

(3) Connect the hand–held tester to DLC3 or tachometer to terminal TAC of DLC3 with SST.

SST 09843–18030

(4) Start engine and check idle speed.

Idle speed: 650 ± 50 rpm (In N range and A/C OFF)

(5) Shift the lever from N to D range. Using a stop watch, measure the time from when the lever is shifted until the shock is felt.

Time lag: N → D less than 1.2 seconds

(6) In the same way, measure the time lag for N → R.

Time lag: N → R less than 1.5 seconds

Evaluation (If N → D or N → R time lag is longer than the specified):

Problem	Possible cause
N → D time lag is longer	• Line pressure too low • Forward clutch worn • U/D one–way clutch not operating properly
N → R time lag is longer	• Line pressure too low • Direct clutch worn • 1st and reverse brake worn • U/D one–way clutch not operating properly

9. HYDRAULIC TEST

(a) Measure the line pressure.

NOTICE:

- **Do the test at normal operation ATF temperature 50 to 80˚C (122 to 176˚F).**
- **The line pressure test should always be carried out in pairs. One technician should observe the conditions of wheels or wheel stopper outside the vehicle while the other is doing the test.**
- **Be careful to prevent SST's hose from interfering with the exhaust pipe.**

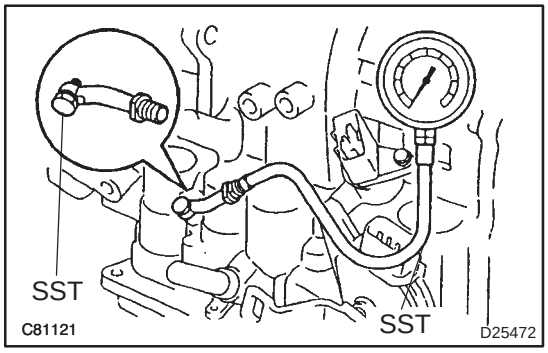

(1) Warm up the ATF.
(2) Remove the test plug on the rear side of the transaxle case and connect SST.
SST 09992–00095 (09992– 00231, 09992–00271)
(3) Fully apply the parking brake and chock the 4 wheels.
(4) Connect the hand–held tester to DLC3.
(5) Start the engine and check idling speed.
(6) Keep your left foot pressing firmly on the brake pedal and shift into D range.
(7) Measure the line pressure when the engine is idling.
(8) Depress the accelerator pedal all the way down. Quickly read the highest line pressure when engine speed reaches stall speed.
(9) In the same way, do the test in R range.

Specified line pressure:

Condition	D range kPa (kgf / cm^2, psi)	R range kPa (kgf / cm^2, psi)
Idling	372 to 412 (3.8 to 4.2, 54 to 60)	672 to 742 (6.9 to 7.6, 98 to 108)
Stall	931 to 1,031 (9.5 to 10.5, 135 to 150)	1,768 to 1,968 (18.0 to 20.1, 256 to 285)

Evaluation:

Problem	Possible cause
If the measured values at all ranges are higher	• Shift solenoid valve SLT defective • Regulator valve detective
If the measured values at all ranges are lower	• Shift solenoid valve SLT defective • Regulator valve detective • Oil pump defective
If pressure is low in the D range only	• D range circuit fluid leak • Forward clutch defective
If pressure is low in the R range only	• R range circuit fluid leak • Direct clutch defective • 1st and reverse brake defective

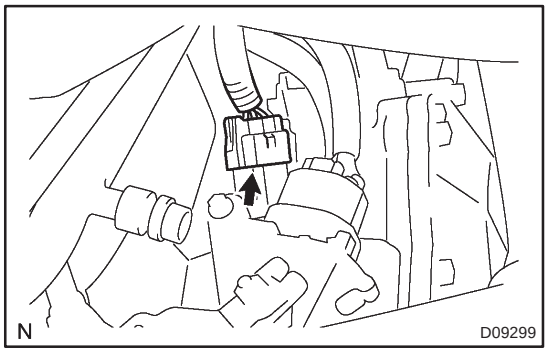

10. MANUAL SHIFTING TEST

HINT:

By this test, it can be determined whether the trouble is within the electrical circuit or is a mechanical problem in the transaxle.

(a) Disconnect the transmission wire.

(b) Inspect the manual driving operation.

Check that the shift and gear ranges correspond to the table below.

While driving, shift through the D range.

Check that the gear change corresponds to the shift range.

Shift range	Gear position
D	3rd
R	Reverse
P	Pawl Lock

HINT:

If the gear positions of the D are difficult to distinguish, do the above road test.

If any abnormality is found in the above test, the problem is in the transaxle itself.

(c) Connect the transmission wire.

(d) Cancel out the DTC.

11. RESET MEMORY

CAUTION:

Perform the RESET MEMORY (AT initialization) when replacing the automatic transaxle assy, engine assy or ECM.

NOTICE:

Hand–held tester only

(a) Turn the ignition switch to OFF.

(b) Connect the hand–held tester to the DLC3.

(c) Turn the ignition switch to ON.

(d) Perform the reset memory procedure from the ENGINE menu.

CAUTION:

After performing the RESET MEMORY, be sure to perform the ROAD TEST described earlier.

Tester menu flow:

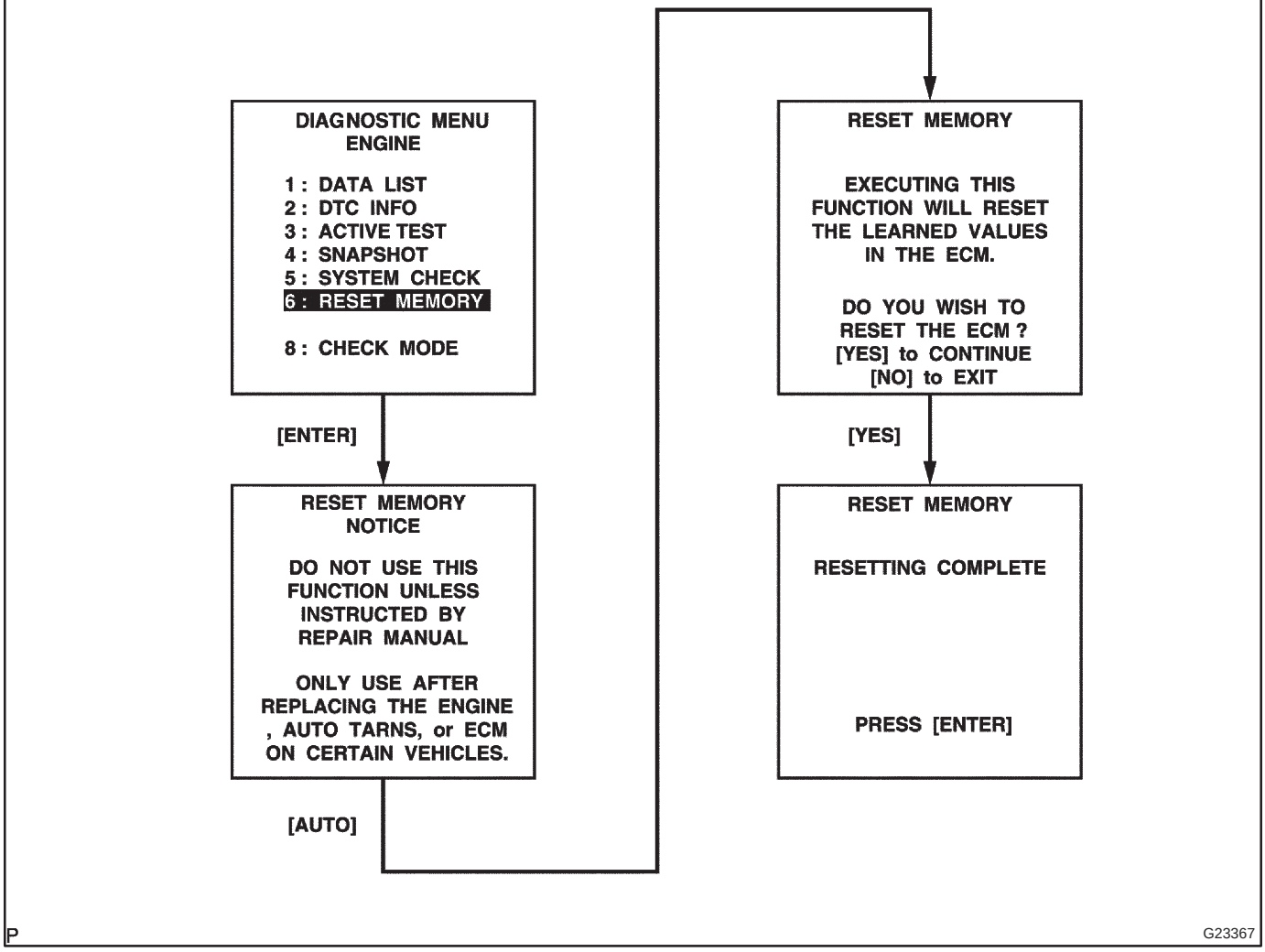

0567Q–09

DIAGNOSTIC TROUBLE CODE CHART

If a DTC is displayed during the DTC check, check the circuit listed in the table below and proceed to the page given.

*1 : – ... MIL does not light /● ... MIL light up

DTC No. (See Page)	Detection Item	Trouble Area	MIL *	Memory
P0500 (05–453)	Vehicle Speed Sensor "A"	• Combination meter • Open or short in vehicle speed sensor circuit • Vehicle speed sensor • ECM	●	○
P0705 (05–938)	Transmission Range Sensor Circuit Malfunction (PRNDL Input)	• Short in park/neutral position switch circuit • Park/neutral position switch • ECM	●	○
P0710 (05–941)	Transmission Fluid Temperature Sensor "A" Circuit	• Open or short in ATF temperature sensor circuit • ATF temperature sensor • ECM	●	○
P0711 (05–943)	Transmission Fluid Temperature Sensor "A" Performance		●	○
P0712 (05–941)	Transmission Fluid Temperature Sensor "A" Circuit Low Input		●	○
P0713 (05–941)	Transmission Fluid Temperature Sensor "A" Circuit High Input		●	○
P0717 (05–945)	Turbine Speed Sensor Circuit No Signal	• Open or short in speed sensor (NT) circuit • Speed sensor (NT) • ECM • Automatic transaxle assembly	●	○
P0724 (05–947)	Brake Switch "B" Circuit High	• Short in stop light switch circuit • Stop light switch • ECM	●	○
P0741 (05–948)	Torque Converter Clutch Solenoid Perfomance (Shift Solenoid Valve DSL)	• Shift solenoid valve DSL is stuck open or closed • Valve body is blocked up or stuck • Shift solenoid valve DSL • ECM	●	○
P0743 (05–951)	Torque Converter Clutch Circuit Electrical (Shift Solenoid Valve DSL)	• Open or short in shift solenoid valve DSL circuit • Shift solenoid valve DSL • ECM	●	○
P0746 (05–954)	Pressure Control Solenoid "A" Performance (Shift Solenoid Valve SL1)	• Shift solenoid valve SL1 is stuck open or closed • Valve body is blocked up or stuck • Shift solenoid valve SL1 • ECM	●	○
P0748 (05–956)	Pressure Control Solenoid "A" Electrical (Shift Solenoid Valve SL1)	• Open or short in shift solenoid valve SL1 circuit • Shift solenoid valve SL1 • ECM	●	○
P0766 (05–962)	Shift Solenoid "D" Performance (Shift Solenoid Valve S4)	• Shift solenoid valve S4 is stuck open or closed • Valve body is blocked up or stuck • Shift solenoid valve S4 • ECM	●	○
P0776 (05–963)	Pressure Control Solenoid "B" Performance (Shift Solenoid Valve SL2)	• Shift solenoid valve SL2 is stuck open or closed • Valve body is blocked up or stuck • Shift solenoid valve SL2 • ECM	●	○

P0778 (05–956)	Pressure Control Solenoid ”B” Electrical (Shift Solenoid Valve SL2)	• Open or short in shift solenoid valve SL2 circuit • Shift solenoid valve SL2 • ECM	●	○
P0793 (05–965)	Intermediate Shaft Speed Sensor ”A”	• Open or short in speed sensor (NC) circuit • Speed sensor (NC) • ECM	●	○
P0982 (05–956)	Shift Solenoid ”B” Control Circuit Low (Shift Solenoid Valve S4)	• Open or short in shift solenoid valve S4 circuit • Shift solenoid valve S4 • ECM	●	○
P0983 (05–956)	Shift Solenoid ”B” Control Circuit High (Shift Solenoid Valve S4)		●	○
P2716 (05–967)	Pressure Contorl Solenoid ”D” Electrical (Shift Solenoid Valve SLT)	• Open or short in shift solenoid valve SLT circuit • Shift solenoid valve SLT • ECM	●	○

0567R–12

LOCATION

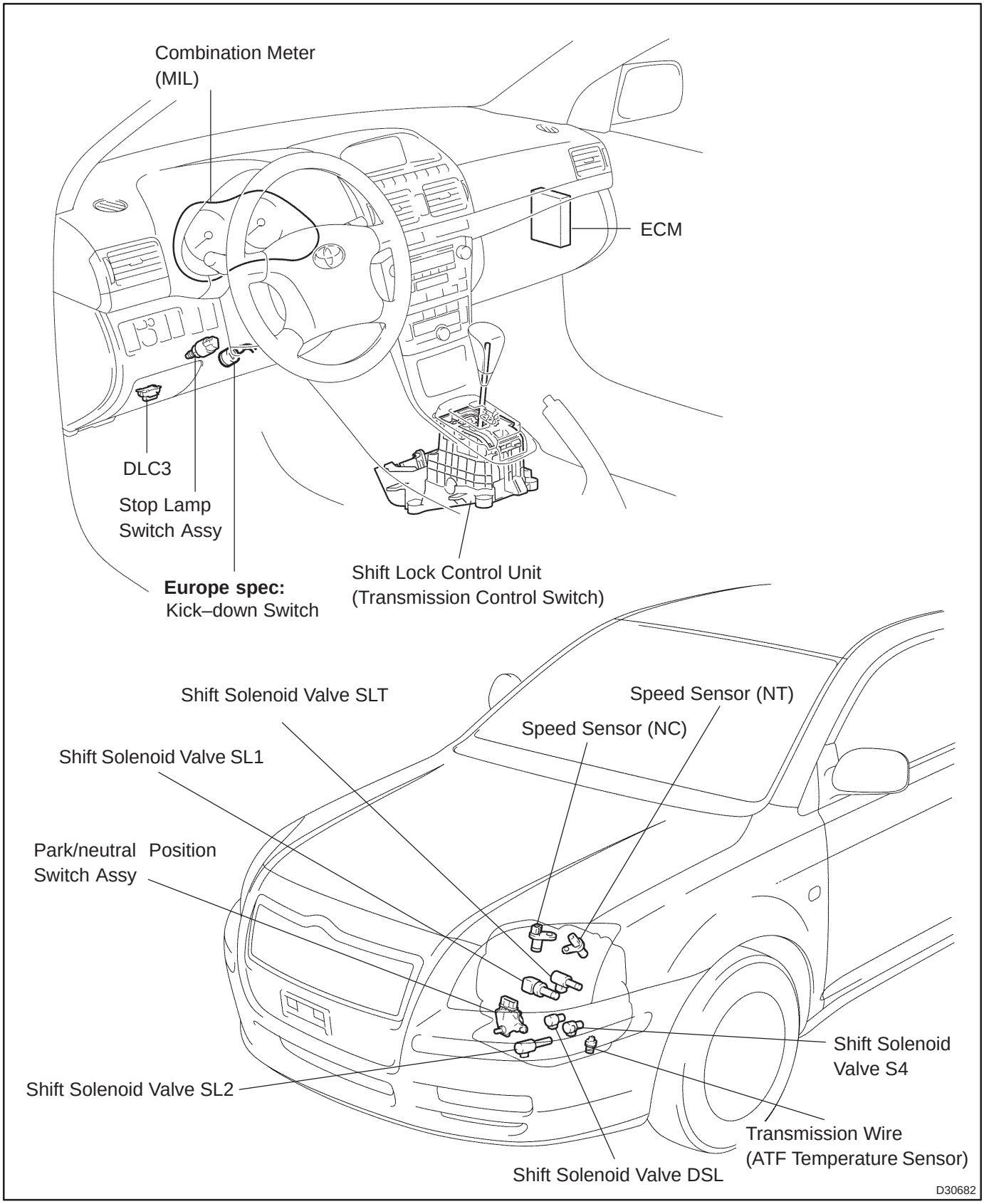

05C95–01

TERMINALS OF ECM

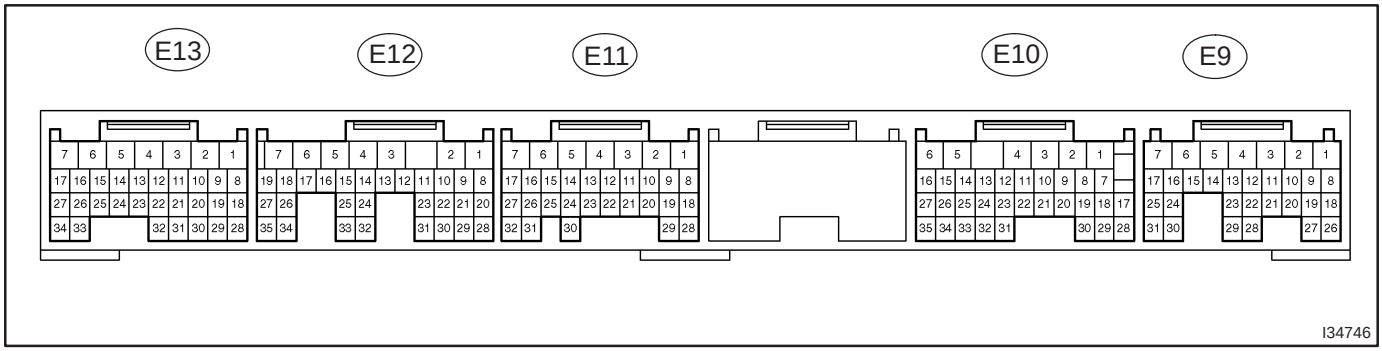

Symbols (Terminal No.)	Wiring Color	Condition	STD Voltage (V)
S4 (E12–10) – E1 (E11–1)	L – BR	IG switch ON	Below 1
		O/D gear	10 – 14
		Except O/D gear	Below 1
DSL (E12–11) – E1 (E11–1)	L–B – BR	IG switch ON	Below 1
		Vehicle driving under lock–up range	10 – 14
SLT+ (E12–13) – SLT– (E12–12)	P–L – P	IG switch ON	10 – 14
SL2+ (E12–17) – SL2– (E12–16)	R – R–B	IG switch ON	Below 1
		1st or 2nd gear	10 – 14
		3rd or O/D gear	Below 1
SL1+ (E12–19) – SL1– (E12–18)	Y – Y–B	IG switch ON	10 – 14
		1st gear	10 – 14
		Except 1st gear	Below 1
NC+ (E12–26) – NC– (E12–34)	LG – LG–B	Engine is running	Below 1 and 4 – 5
NT+ (E12–27) – NT– (E12–35)	B–O – B	Engine is running	Below 1 and 4 – 5
THO (E12–32) – E2 (E13–28)	V – BR	ATF temperature: 115 °C (239 °F) or more	Below 1.5
D (E10–10) – E1 (E11–1)	LG–B – BR	IG switch ON and Shift lever D range	10 – 14
		IG switch ON and Shift lever other than D range	Below 1
R (E10–11) – E1 (E11–1)	R–Y – BR	IG switch ON and Shift lever R range	10 – 14
		IG switch ON and Shift lever other than R range	Below 1
SPD (E10–17) – E1 (E11–1)	V–W – BR	IG switch ON	4.5 – 5.5
SPT1 (E10–20) – E1 (E11–1)	L – BR	IG switch ON and Shift lever S position	7.5 – 14
		IG switch ON and Shift lever except for S position	Below 1
SFTD (E10–21) – E1 (E11–1)	B – BR	IG switch ON and Shift lever S position	7.5 – 14
		IG switch ON and Shift lever "–" position (Down shift)	Below 1.5
SFTU (E10–22) – E1 (E11–1)	R – BR	IG switch ON and Shift lever S position	7.5 – 14
		IG switch ON and Shift lever "+" position (Up shift)	Below 1.5
KD*1 (E10–30) – E1 (E11–1)	W*1 ⇔ BR	IG switch ON and kick–down switch ON	Below 1
		IG switch ON and kick–down switch OFF	10 – 14

*1: LHD

0567W–12

PROBLEM SYMPTOMS TABLE

HINT:

If a normal code is displayed during the DTC check but the trouble still occurs, check the circuits for each symptom in the order given in the charts on the following pages and proceed to the page given for trouble-shooting.

The Matrix Chart is divided into 3 chapters.

- If the instruction ”Proceed to next circuit inspection shown on matrix chart” is given in the flow chart for each circuit, proceed to the circuit with the next highest number in the table to continue the check.
- If the trouble still occurs even though there are no abnormalities in any of the other circuits, then check and replace the ECM.

CHAPTER 1: ELECTRONIC CIRCUIT MATRIX CHART

Symptom	Suspect Area	See page
No up–shift (A particular gear, from 1st to O/D gear, is not up–shifted)	ECM	01–32
No down–shift (A particular gear, from O/D to 1st gear, is not down–shifted)	ECM	01–32
No lock–up or No lock–up off	1. Stop light switch circuit 2. Engine coolant temp. sensor circuit 3. Throttle position sensor circuit 4. ECM	05–947 05–309 05–309 01–32
Shift point too high or too low	ECM	01–32
No gear change by shifting into ”+” or ”–” while the shift lever is in the Sposition	1. Transmission control switch circuit 2. ECM	05–972 01–32
Up–shift to O/D from 3rd while engine is cold	1. Engine coolant temp. sensor circuit 2. ATF temp. sensor circuit 3. ECM	05–309 05–941 05–943 01–32
Harsh engagement (N → D)	ECM	01–32
Harsh engagement (Lock–up)	ECM	01–32
Harsh engagement (Any driving range)	ECM	01–32
Poor acceleration	ECM	01–32
Engine stalls when starting off or stopping	ECM	01–32
No kick–down	1. Kick–down switch circuit 2. ECM	05–970 01–32

Chapter 2: On–vehicle Repair
(★: U241E AUTOMATIC TRANSAXLE Repair Manual Pub. No. RM840U)

Symptom	Suspect Area	See page
Vehicle does not move in any forward range or reverse range	1. Manual valve 2. Primary regulator valve 3. Off–vehicle repair matrix chart	★ ★ –
Vehicle does not move in R range	Off–vehicle repair matrix chart	–
No up–shift (1st → 2nd)	1. Valve body assy 2. Off–vehicle repair matrix chart	★ –
No up–shift (2nd → 3rd)	1. Valve body assy 2. Off–vehicle repair matrix chart	★ –
No up–shift (3rd → O/D)	1. Valve body assy 2. Off–vehicle repair matrix chart	★ –
No down–shift (O/D → 3rd)	Valve body assy	★
No down–shift (3rd → 2nd)	Valve body assy	★
No down–shift (2nd → 1st)	Valve body assy	★
No lock–up or No lock–up off	1. Lock–up relay valve 2. Off–vehicle repair matrix chart	★ –
Harsh engagement (N → D)	1. C_1 accumulator 2. Off–vehicle repair matrix chart 3. Valve body assy	★ – ★
Harsh engagement (N → R)	1. Valve body assy 2. Off–vehicle repair matrix chart	★ –
Harsh engagement (Lock–up)	1. Valve body assy 2. Off–vehicle repair matrix chart	★ –
Harsh engagement (2nd → 3rd)	Valve body assy	★
Harsh engagement (3rd → O/D)	Valve body assy	★
Harsh engagement (O/D → 3rd)	Valve body assy	★
Slip or shudder (Forward and reverse)	1. Oil strainer 2. Off–vehicle repair matrix chart	40–47 –
No kick–down	Valve body assy	★

Chapter 3: Off–vehicle Repair
(★: U241E AUTOMATIC TRANSAXLE Repair Manual Pub. No. RM840U)

Symptom	Suspect Area	See page
Vehicle does not move in any forward range or reverse range	1. Front and rear planetary gear 2. U/D planetary gear 3. U/D one–way clutch (F_2) 4. Forward clutch (C_1) 5. U/D brake (B_3)	★ ★ ★ ★ ★
Vehicle does not move in R range	1. Front and rear planetary gear unit 2. U/D planetary gear 3. Direct clutch (C_2) 4. U/D brake (C_3) 5. 1st and reverse brake (B_2)	★ ★ ★ ★ ★
No up–shift (1st → 2nd)	1. No.1 one–way clutch (F_1) 2. 2nd brake (B_1)	★ ★
No up–shift (2nd → 3rd)	Direct clutch (C_2)	★
No up–shift (3rd → O/D)	U/D clutch (C_3)	★
No lock–up or No lock–up off	Torque converter clutch	40–37
Harsh engagement (N → D)	1. Forward clutch (C_1) 2. U/D one–way clutch (F_2) 3. No.1 one–way clutch (F_1)	★ ★ ★
Harsh engagement (N → R)	1. Direct clutch (C_2) 2. 1st and reverse brake (B_2)	★ ★
Harsh engagement (Lock–up)	Torque converter clutch	40–37
Slip or shudder (Forward position: After warm–up)	1. Torque converter clutch 2. Forward clutch (C_1) 3. Direct clutch (C_2) 4. U/D brake (C_3) 5. No.1 one–way clutch (F_1) 6. U/D one–way clutch (F_2)	40–37 ★ ★ ★ ★ ★
Slip or shudder (R range)	1. Direct clutch (C_2) 2. 1st and reverse brake (B_2)	★ ★
Slip or shudder (1st)	No.1 one–way clutch (F_1)	★
Slip or shudder (2nd)	1. U/D one–way clutch (F_2) 2. 2nd brake (B_1)	★ ★
Slip or shudder (3rd)	Direct clutch (C_2)	★
Slip or shudder (O/D)	U/D clutch (C_3)	★
No engine braking (1st – 3rd: D range)	U/D brake (B_3)	★
No engine braking (1st: L range)	1st and reverse brake (B_2)	★
No engine braking (2nd: 2 range)	2nd brake (B_1)	★
Poor acceleration (All range)	1. Torque converter clutch 2. U/D planetary gear	40–37 ★
Poor acceleration (O/D)	1. U/D clutch (C_3) 2. U/D planetary gear	★ ★
Large shift shock or engine stalls when starting off or stopping	Torque converter clutch	40–37

DTC	P0705	TRANSMISSION RANGE SENSOR CIRCUIT MALFUNCTION (PRNDL INPUT)

CIRCUIT DESCRIPTION

The park/neutral position switch detects the shift lever position and sends signals to the ECM.

DTC No.	DTC Detecting Condition	Trouble Area
P0705	DTC is detected for 500 msec. or more (2–trip detection logic). • 2 or more switches are ON simultaneously for P, R, N and D position.	• Short in park/neutral position switch circuit • Park/neutral position switch assy • ECM
	When any of following conditions for 500 msec. or more in the S position (2–trip detection logic). (a) P position input signal is ON. (b) N position input signal is ON. (c) R position input signal is ON.	

WIRING DIAGRAM

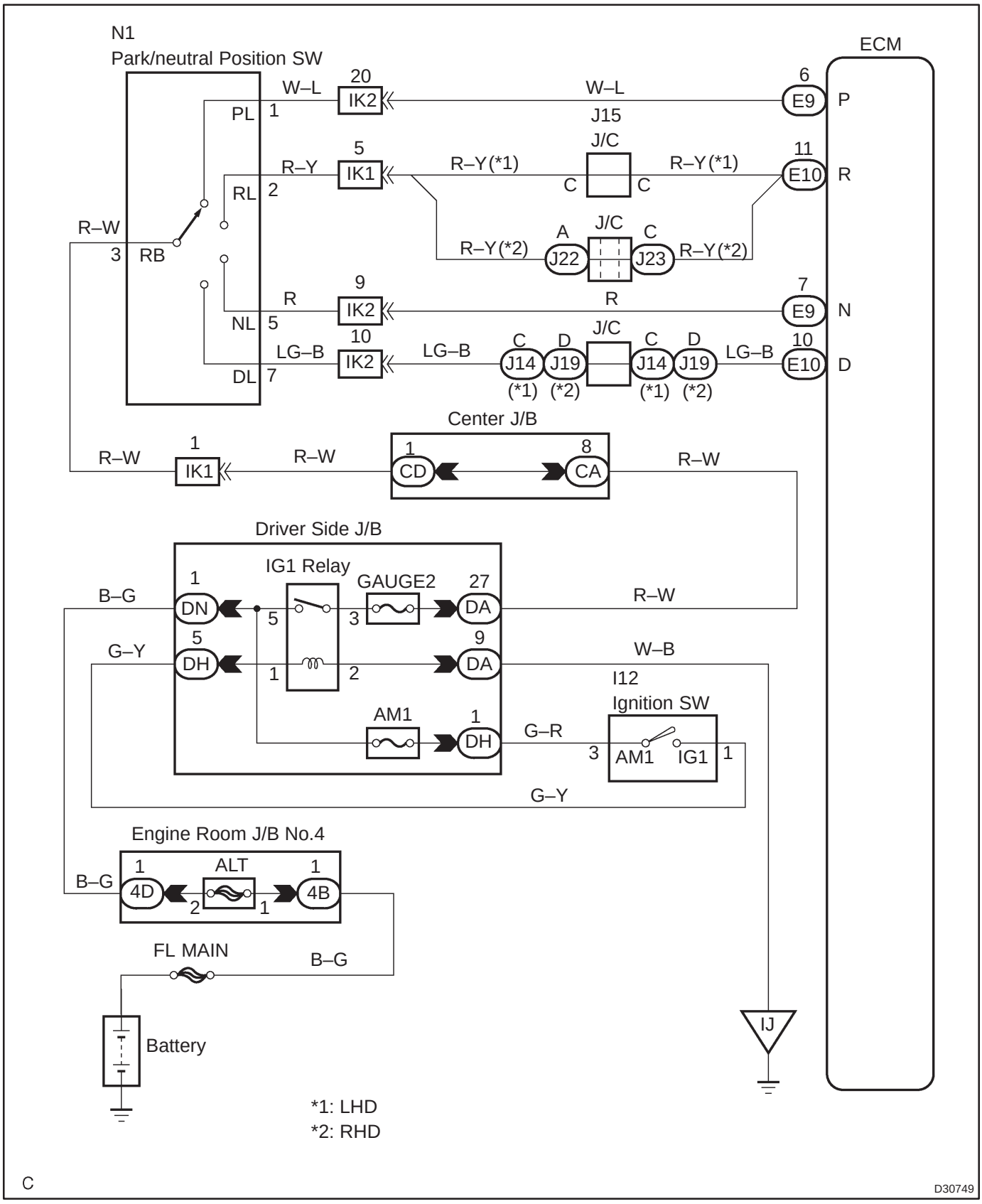

INSPECTION PROCEDURE

1 INSPECT PARK/NEUTRAL POSITION SWITCH ASSY

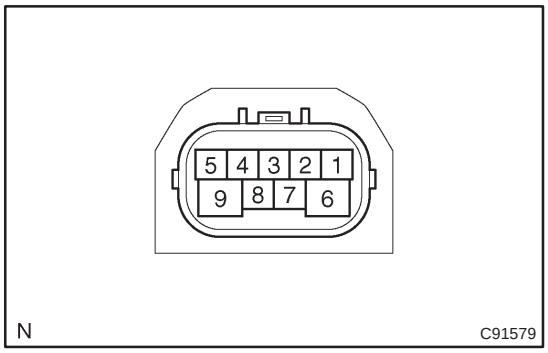

(a) Disconnect the park/neutral position switch connector.
(b) Check the continuity between each terminal shown below when the shift lever is moved to each position.

Shift Position	Terminal No. to continuity	
P	1 – 3	6 – 9
R	2 – 3	–
N	3 – 5	6 – 9
D	3 – 7	–

OK:
There is continuity.

NG → **REPLACE PARK/NEUTRAL POSITION SWITCH ASSY**

OK

2 CHECK HARNESS AND CONNECTOR(PARK/NEUTRAL POSITION SWITCH – ECM)

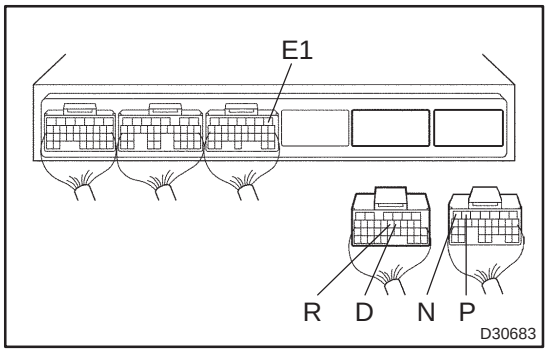

(a) Connect the park/neutral position switch connector.
(b) Disconnect the ECM connector.
(c) Turn the ignition switch to ON.
(d) Measure the voltage between terminals E1 and that P, R, N as well as D of the ECM connector when the shift lever is shifted to the following range.

OK:

Shift range	Terminal	Voltage (V)
P	P – E1	7.5 to 14
R	R – E1	7.5 to 14
N	N – E1	7.5 to 14
D	D – E1	7.5 to 14

NG → **REPAIR OR REPLACE HARNESS OR CONNECTOR**

OK

CHECK AND REPLACE ECM

DTC	P0710	TRANSMISSION FLUID TEMPERATURE SENSOR ”A” CIRCUIT

DTC	P0712	TRANSMISSION FLUID TEMPERATURE SENSOR ”A” CIRCUIT LOW INPUT

DTC	P0713	TRANSMISSION FLUID TEMPERATURE SENSOR ”A” CIRCUIT HIGH INPUT

CIRCUIT DESCRIPTION

The ATF temperature sensor converts the fluid temperature into a resistance value which is input into the ECM.

DTC No.	DTC Detection Condition	Trouble Area
P0710	(a) and (b) is detected momentary within 0.5 sec. when neither P0712 or P0713 is not detected (1–trip detection logic) (a) ATF temperature sensor resistance is less than 79 Ω. (b) ATF temperature sensor resistance is more than 156 kΩ. HINT: Wthin 0.5 sec. the malfunction switches from (a) to (b) or from (b) to (a)	• Open or short in ATF temperature sensor circuit • ATF temperature sensor • ECM
P0712	ATF temperature sensor resistance is less than 79 Ω. for 0.5 sec. or more (1–trip detection logic)	
P0713	DTC is detected for 0.5 sec. or more (1–trip detection logic) ATF temperature sensor resistance is more than 156 kΩ. after started engine for 15 minutes or more	

WIRING DIAGRAM

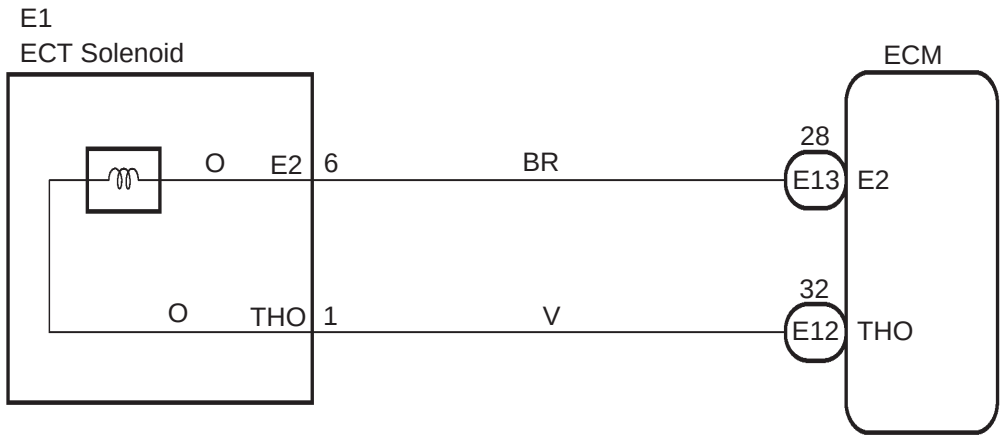

INSPECTION PROCEDURE

1 INSPECT TRANSMISSION WIRE(ATF TEMPERATURE SENSOR)

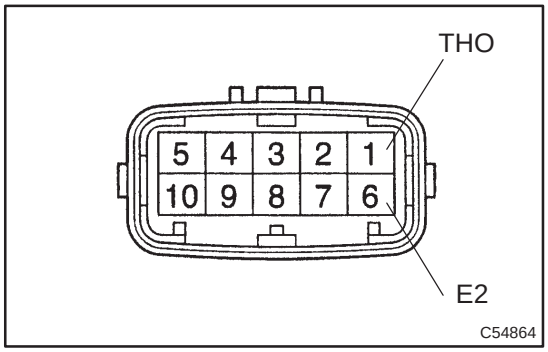

(a) Disconnect the transmission wire connector from the transaxle.

(b) Measure the resistance between terminals THO and E2.

OK:

Resistance: 79 Ω to 156 kΩ

(c) Check the continuity between the wire harness side connectors.

OK:

Standard (Check for a short):

Symbols	Specified condition
THO – Body ground	No continuity
E2 – Body ground	

NG → **REPAIR OR REPLACE TRANSMISSION WIRE**

OK

2 CHECK HARNESS AND CONNECTOR(TRANSMISSION WIRE – ECM)

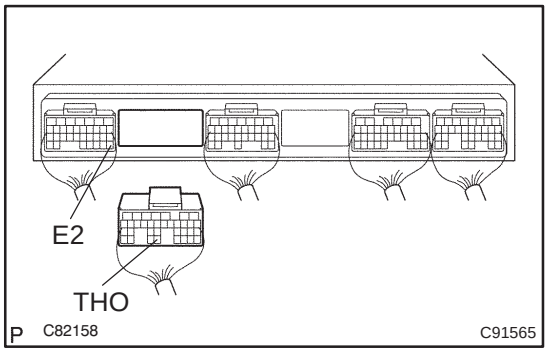

(a) Connect the transmission wire connector from the transaxle.

(b) Disconnect the ECM connector.

(c) Measure the resistance between terminals THO and E2.

OK:

Resistance: 79 Ω to 156 kΩ

(d) Check the continuity between the wire harness side connectors.

OK:

Standard (Check for a short):

Symbols	Specified condition
THO – Body ground	No continuity
E2 – Body ground	

NG → **REPAIR OR REPLACE HARNESS OR CONNECTOR**

OK

CHECK AND REPLACE ECM

DTC	P0711	TRANSMISSION FLUID TEMPERATURE SENSOR ”A” PERFORMANCE

CIRCUIT DESCRIPTION

The ATF temperature sensor converts the fluid temperature into a resistance value which is input into the ECM.

DTC No.	DTC Detection Condition	Trouble Area
P0711	Both (a) and (b) are detected: (2–trip detection logic) (a) After 12 sec. of engine start, temp. of atmosphere and that of engine coolant is more than –10˚C (b) After normal driving for over 20 min. and 10 km, ATF temp. is less than 10˚C	• Open or short in ATF temperature sensor circuit • ATF temperature sensor • ECM

WIRING DIAGRAM

See page 05–941.

INSPECTION PROCEDURE

1	INSPECT TRANSMISSION WIRE(ATF TEMPERATURE SENSOR)

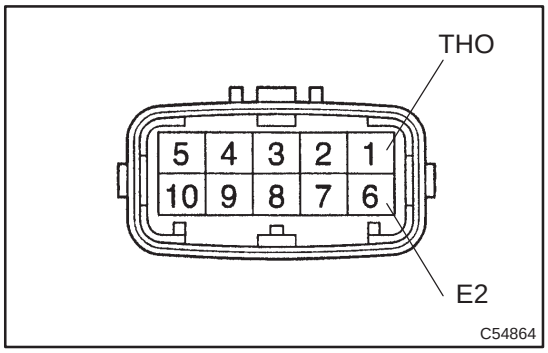

(a) Disconnect the transmission wire connector from the transaxle.

(b) Measure the resistance between terminals THO and E2.

OK:

Temperature: °C (°F)	Resistance: kΩ
10 (50)	6.4
110 (230)	0.2

(c) Measure the resistance between body ground and that THO as well as E2 of the transmission wire connector.

OK:

Resistance: 1MΩ or higher

NG → **REPAIR OR REPLACE TRANSMISSION WIRE**

OK

2 CHECK HARNESS AND CONNECTOR(TRANSMISSION WIRE – ECM)

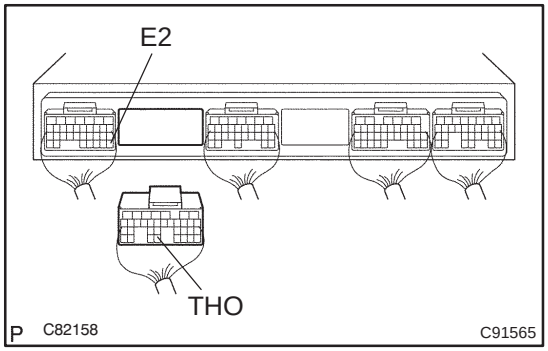

(a) Connect the transmission wire connector to the transaxle.
(b) Disconnect the ECM connector.
(c) Measure the resistance between terminals THO and E2.
OK:

Temperature: °C (°F)	Resistance: kΩ
10 (50)	6.4
110 (230)	0.2

(d) Measure the resistance between body ground and that THO as well as E2 of the ECM connector.
OK:
Resistance: 1MΩ or higher

NG → **REPAIR OR REPLACE HARNESS OR CONNECTOR**

OK

CHECK AND REPLACE ECM

DTC	P0717	TURBINE SPEED SENSOR CIRCUIT NO SIGNAL

CIRCUIT DESCRIPTION

This sensor detects the rotation speed of the input turbine. By comparing the input turbine speed signal (NT) with the counter gear speed sensor signal (NC), the ECM detects the shift timing of the gears and appropriately controls the engine torque and hydraulic pressure according to various conditions. Thus smooth gear shifting is performed.

DTC No.	DTC Detection Condition	Trouble Area
P0717	ECM detects conditions (a), (b), (c) and (d) continuity for 5 sec. or more: (1 trip detection logic) (a) Vehicle speed: 50 km/h (20 mph) or more (b) 2nd, 3rd or O/D gear (c) Solenoid valves and park/neutral position switch are normal (d) NT < 300 rpm	• Open or short in speed sensor (NT) circuit • Speed sensor (NT) • ECM

WIRING DIAGRAM

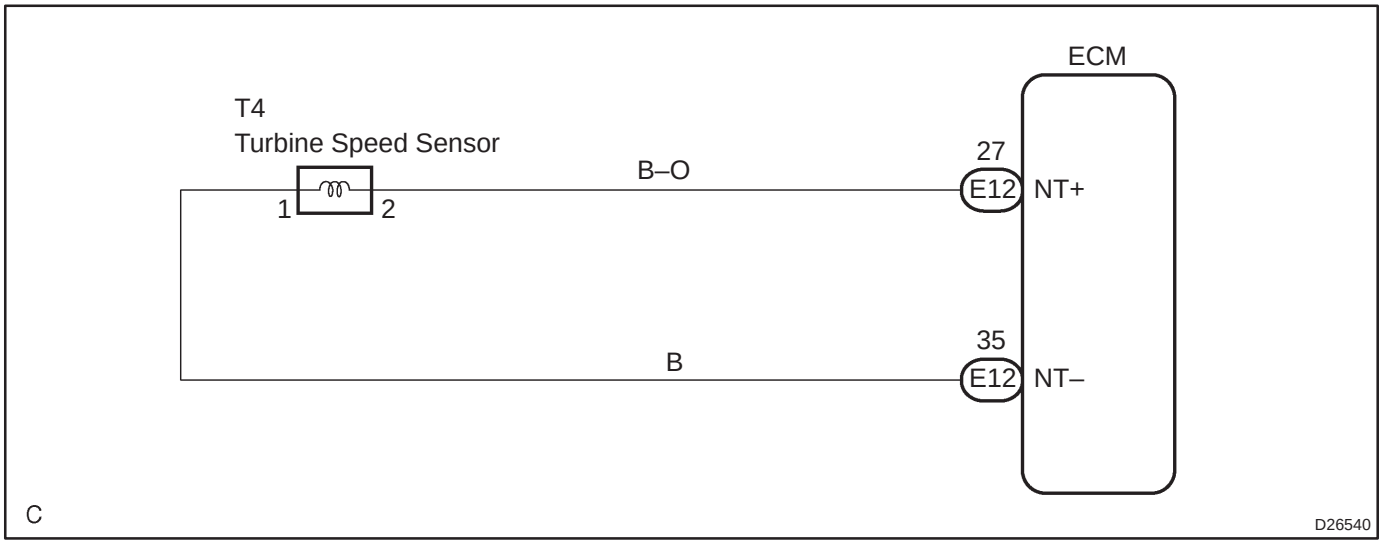

INSPECTION PROCEDURE

1	INSPECT SPEED SENSOR(NT)

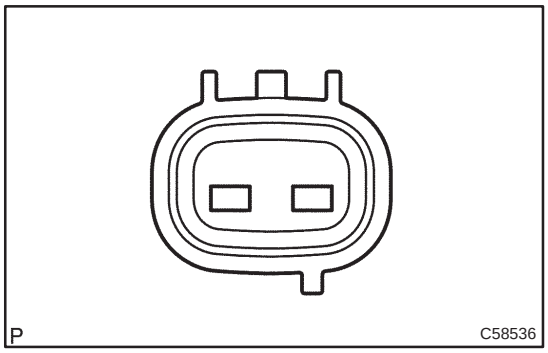

(a) Disconnect the speed sensor connector from the transaxle.
(b) Measure the resistance between terminals of speed sensor.
OK:
Resistance:
TOYOTA made: 500 to 620 Ω at 20°C (68°F)
AISIN made: 560 to 680 Ω at 20°C (68°F)

NG → **REPLACE SPEED SENSOR(NT)**

OK

2	CHECK HARNESS AND CONNECTOR(SPEED SENSOR – ECM)

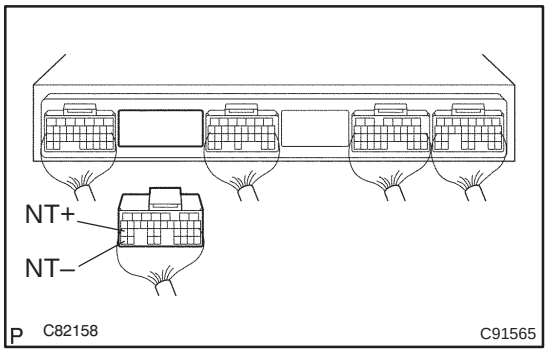

(a) Connect the speed sensor connector.
(b) Disconnect the ECM connector.
(c) Measure the resistance between terminals NT+ and NT–.
OK:
Resistance:
TOYOTA made: 500 to 620 Ω at 20°C (68°F)
AISIN made: 560 to 680 Ω at 20°C (68°F)
(d) Measure the resistance between body ground and that NT+ as well as NT– of the ECM connector.
OK:
Resistance: 1MΩ or higher

NG → **REPAIR OR REPLACE HARNESS OR CONNECTOR**

OK

CHECK AND REPLACE ECM

DTC	P0724	BRAKE SWITCH ”B” CIRCUIT HIGH

CIRCUIT DESCRIPTION

The purpose of this circuit is to prevent the engine from stalling while driving in lock–up condition, when brakes are suddenly applied.
When the brake pedal is depressed, this switch sends signals to the ECM. Then the ECM cancels the operation of the lock–up clutch while braking is in progress.

DTC No.	DTC Detecting Condition	Trouble Area
P0724	The stop light switch does not turn off even once the vehicle is driven (2–trip detection logic).	• Short in stop light switch signal circuit • Stop light switch • ECM

WIRING DIAGRAM

See page 05–475.

INSPECTION PROCEDURE

1	INSPECT STOP LAMP SWITCH ASSY

NG → REPLACE STOP LAMP SWITCH ASSY

OK

2	CHECK HARNESS AND CONNECTOR(STOP LAMP SWITCH ASSY – ECM)

NG → REPAIR OR REPLACE HARNESS OR CONNECTOR

OK

REPAIR OR REPLACE ECM

DTC	P0741	TORQUE CONVERTER CLUTCH SOLENOID PERFORMANCE (SHIFT SOLENOID VALVE SL)

SYSTEM DESCRIPTION

The ECM uses the signals from the throttle position sensor, Air–flow meter and crankshaft position sensor to monitor the engagement condition of the lock–up clutch.
Then the ECM compares the engagement condition of the lock–up clutch with the lock–up schedule in the ECM memory to detect a mechanical trouble of the shift solenoid valve DSL, valve body and torque converter clutch.

DTC No.	DTC Detection Condition	Trouble Area
P0741	Lock–up does not occur when driving in lock–up range (normal driving at 80 km/h [50 mph]), or lock–up remains ON in lock–up OFF range (2 trip detection logic)	• Shift solenoid valve DSL is stuck open or closed • Valve body blocked or stuck • Shift solenoid valve DSL • Lock–up clutch

INSPECTION PROCEDURE

1 INSPECT TRANSMISSION WIRE(DSL)

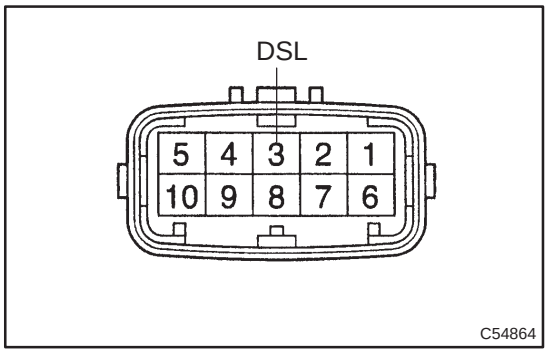

(a) Disconnect the transmission wire connector connector from the transaxle.
(b) Measure the resistance between the terminal 3 and the body ground.
OK:
Resistance: 11 to 13 Ω at 20°C (68°F)

NG → **Go to step 3**

OK

2 CHECK HARNESS AND CONNECTOR(TRANSMISSIONWIRE – ECM)

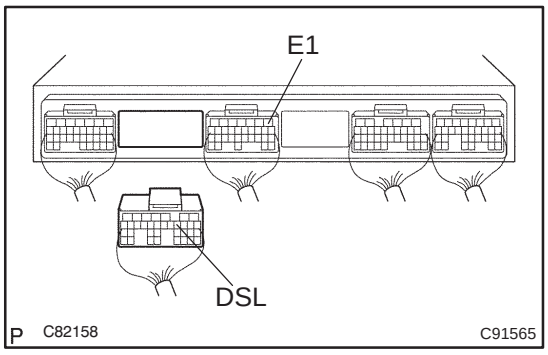

(a) Connect the transmission wire connector to the transaxle.
(b) Disconnect the ECM connector.
(c) Measure the resistance between terminals DSL and E1.
OK:
Resistance: 11 to 13 Ω at 20°C (68°F)

OK → **Go to step 3**

NG

REPAIR OR REPLACE HARNESS OR CONNECTOR

3 INSPECT SHIFT SOLENOID VALVE(DSL)

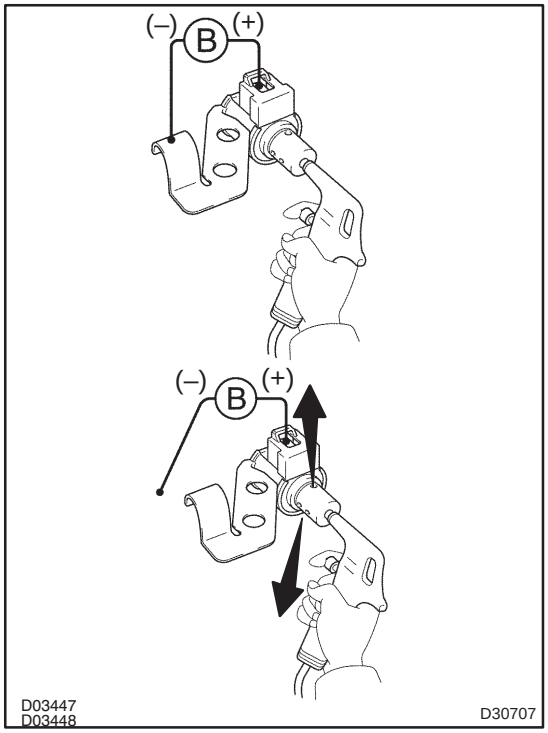

(a) Remove the shift solenoid valve DSL.

(b) Applying 490 kPa (5 kgf/cm^2, 71 psi) of compressed air, check that the solenoid valve does not leak the air.

OK:

Solenoid valve does not leak air.

(c) When battery voltage is supplied to the shift solenoid valve, check that the valve opens.

OK:

Solenoid valve opens.

(d) Measure the resistance between the terminal DSL of shift solenoid valve DSL and the solenoid body.

OK:

Resistance: 11 to 13 Ω at 20°C (68°F)

(e) Connect the positive (+) lead to the terminal of solenoid connector and the negative (–) lead to the solenoid body.

OK:

The solenoid valve makes operation noise.

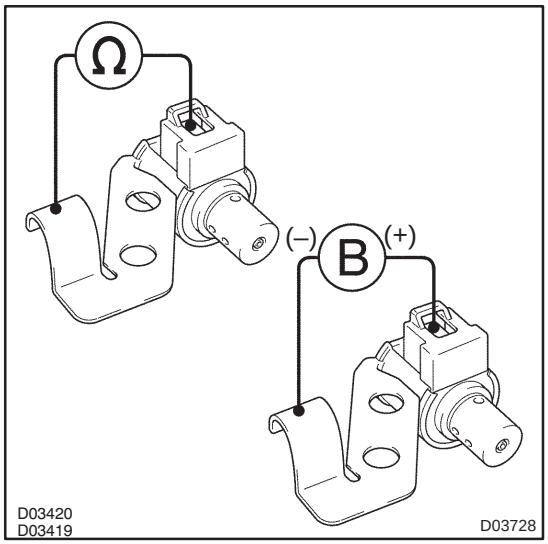

NG → **REPLACE SHIFT SOLENOID VALVE(DSL)**

OK

4 CHECK TRANSMISSION WIRE

NG → **REPAIR OR REPLACE TRANSMISSION WIRE**

OK

5	INSPECT TRANSMISSION VALVE BODY ASSY

NG → REPAIR OR REPLACE TRANSMISSION VALVE BODY ASSY

OK

6	INSPECT TORQUE CONVERTER CLUTCH ASSY

NG → REPLACE TORQUE CONVERTER CLUTCH ASSY

OK

REPAIR AUTOMATIC TRANSAXLE ASSY

DTC	P0743	TORQUE CONVERTER CLUTCH CIRCUIT ELECTRICAL (SHIFT SOLENOID VALVE DSL)

CIRCUIT DESCRIPTION

The shift solenoid valve DSL is turned ON and OFF by signals from the ECM in order to control the hydraulic pressure operation the lock–up relay valve, which then the controls operation of the lock–up clutch.

DTC No.	DTC Detection Condition	Trouble Area
P0743	Either (a) or (b) is detected at 1 time: (2 trip detection logic) (a) Solenoid resistance is 8 Ω or less short circuit when solenoid is energized (b) Solenoid resistance is 100 kΩ or more open circuit when solenoid is not energized	• Open or short in shift solenoid valve DSL circuit • Shift solenoid valve DSL • ECM

Fail safe function:
If the ECM detects a malfunction, it turns the shift solenoid valve DSL OFF.

WIRING DIAGRAM

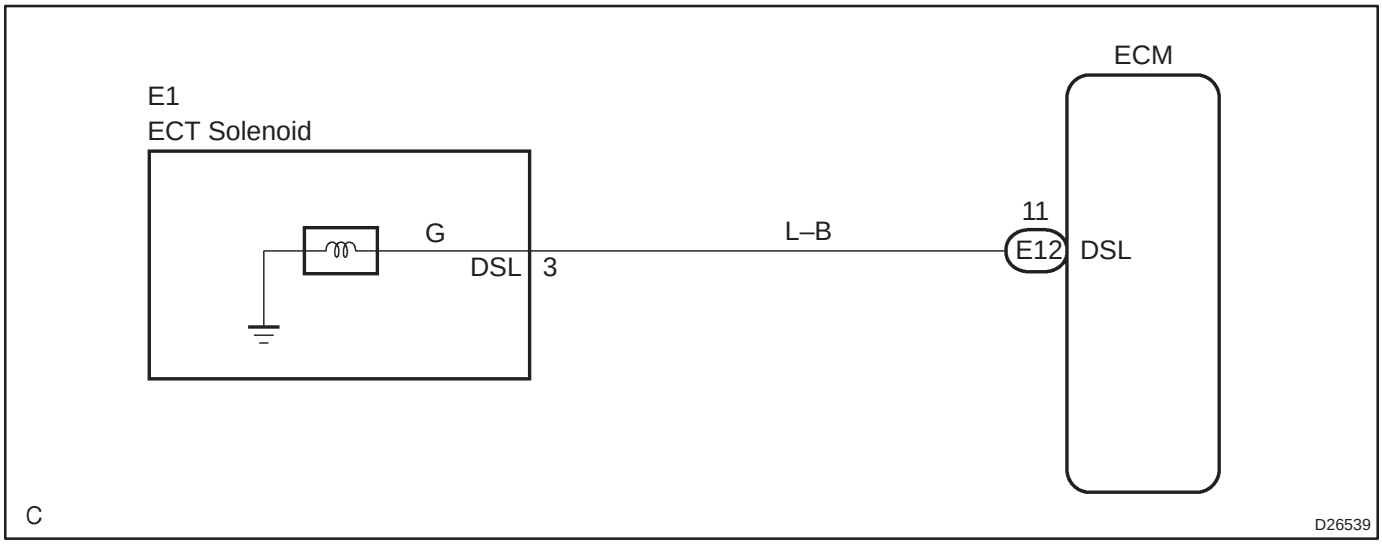

INSPECTION PROCEDURE

1	INSPECT TRANSMISSION WIRE(DSL)

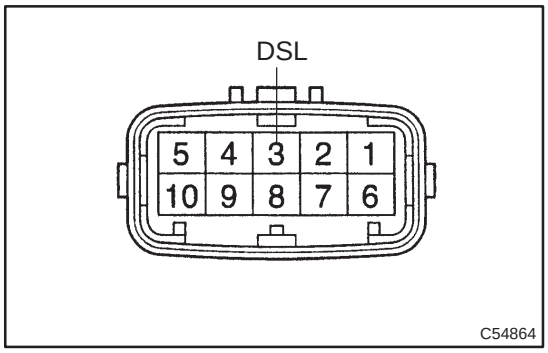

(a) Disconnect the solenoid connector from the transaxle.
(b) Measure the resistance between the terminal 3 and the body ground.
OK:
Resistance: 11 to 13 Ω at 20°C (68°F)

NG → **Go to step 3**

OK

2	CHECK HARNESS AND CONNECTOR(TRANSMISSION WIRE – ECM)

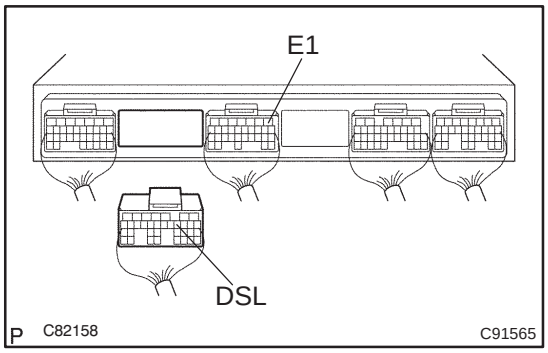

(a) Connect the transmission wire connector.
(b) Disconnect the ECM connector.
(c) Measure the resistance between terminal DSL and E1.
OK:
Resistance: 11 to 13 Ω at 20°C (68°F)

NG → **REPAIR OR REPLACE HARNESS OR CONNECTOR**

OK

CHECK AND REPLACE ECM

3 INSPECT SHIFT SOLENOID VALVE(DSL)

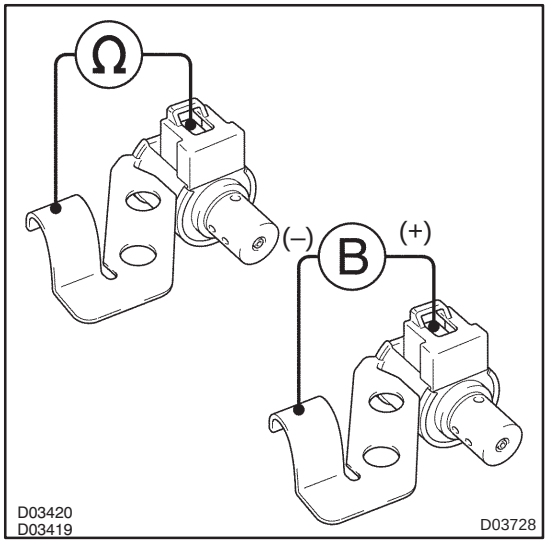

(a) Remove the shift solenoid valve DSL.

(b) Measure the resistance between the terminals DSL of shift solenoid valve and the solenoid valve body.

OK:

Resistance: 11 to 13 Ω at 20°C (68°F)

(c) Connect the positive (+) lead to the terminal of solenoid connector and the negative (–) lead to the solenoid valve body.

OK:

The solenoid valve makes operation noise.

NG → **REPLACE SHIFT SOLENOID VALVE(DSL)**

OK

REPAIR OR REPLACE TRANSMISSION WIRE

DTC	P0746	PRESSURE CONTROL SOLENOID ”A” PERFORMANCE (SHIFT SOLENOID VALVE SL1)

SYSTEM DESCRIPTION

The ECM uses signals from the vehicle speed sensor to detect the actual gear position (1st, 2nd, 3rd or O/D gear).
Then the ECM compares the actual gear with the shift schedule in the ECM memory to detect mechanical troubles of the shift solenoid valves and valve body.

DTC No.	DTC Detecting Condition	Trouble Area
P0746	The gear required by the ECM does not match the actual gear when driving (2–trip detection logic)	• Shift solenoid valve SL1 is stuck open or closed • Valve body is blocked up or stuck • Automatic transaxle (clutch, brake or gear etc.)

INSPECTION PROCEDURE

1	INSPECT SHIFT SOLENOID VALVE(SL1)

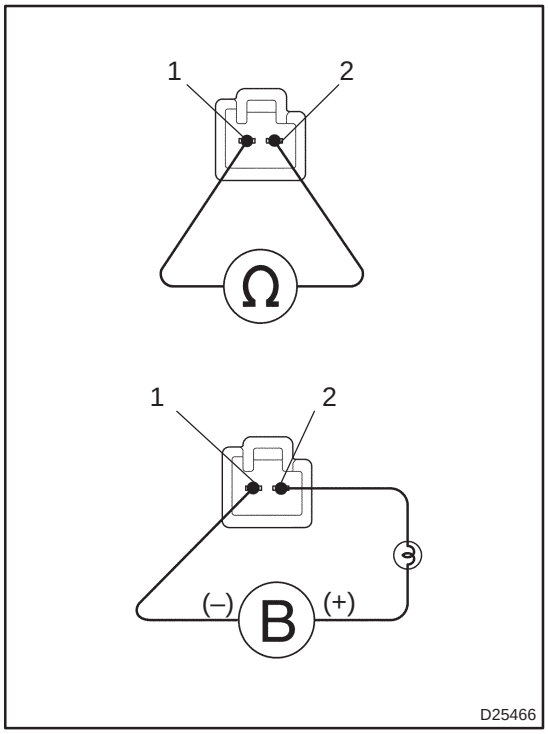

(a) Remove the shift solenoid valve SL1.
(b) Measure the resistance between terminals of the shift solenoid valve SL1.
OK:
Resistance: 5.0 to 5.6 Ω at 20°C (68°F)
(c) Connect the positive (+) lead with a 21 W bulb to terminal 2 and the negative (–) lead to terminal 1 of the solenoid valve connector, then check the movement of the solenoid valve.
OK:
The solenoid valve makes an operating noise.

NG → **REPLACE SHIFT SOLENOID VALVE(SL1)**

OK

2	INSPECT TRANSMISSION VALVE BODY ASSY

NG → **REPAIR OR REPLACE TRANSMISSION VALVE BODY ASSY**

OK

3	INSPECT TORQUE CONVERTER CLUTCH ASSY

NG → REPLACE TORQUE CONVERTER CLUTCH ASSY

OK

REPAIR OR REPLACE AUTOMATIC TRANSAXLE ASSY

DTC	P0748	PRESSURE CONTROL SOLENOID ”A” ELECTRICAL (SHIFT SOLENOID VALVE SL1)

DTC	P0778	PRESSURE CONTROL SOLENOID ”B” ELECTRICAL (SHIFT SOLENOID VALVE SL2)

DTC	P0982	SHIFT SOLENOID ”D” CONTROL CIRCUIT LOW (SHIFT SOLENOID VALVE S4)

DTC	P0983	SHIFT SOLENOID ”D” CONTROL CIRCUIT HIGH (SHIFT SOLENOID VALVE S4)

CIRCUIT DESCRIPTION

Shifting from 1st to O/D is performed in combination with ON and OFF operation of the shift solenoid valves SL1 and SL2 which are controlled by the ECM. If an open or short circuit occurs in either of the shift solenoid valves, the ECM controls the remaining normal shift solenoid valve to allow the vehicle to be operated smoothly (Fail safe function).

DTC No.	DTC Detection Condition	Trouble Area
P0748	ECM checks for an open or short circuit in shift solenoid valves SL1 (1–trip detection logic) (a) When solenoid is energized, duty ratio exceeds 75% (b) When solenoid is not energized, duty ratio is less than 3%	• Open or short in shift solenoid valve SL1 circuit • Shift solenoid valve SL1 • ECM
P0778	ECM checks for an open or short circuit in shift solenoid valves SL2 (1–trip detection logic) (a) When solenoid is energized, duty ratio exceeds 75% (b) When solenoid is not energized, duty ratio is less than 3%	• Open or short in shift solenoid valve SL2 circuit • Shift solenoid valve SL2 • ECM
P0982	ECM detects short in solenoid valve No. 4 circuit 4 times when solenoid valve No. 4 is operated (1–trip detection logic)	• Short in shift solenoid valve S4 circuit • Shift solenoid valve S4 • ECM
P0983	ECM detects open in solenoid valve No. 4 circuit 4 times when solenoid valve No. 4 is not operated (1–trip detection logic)	• Open in shift solenoid valve S4 circuit • Shift solenoid valve S4 • ECM

HINT:

Check the shift solenoid valve SL1 when DTC P0748 is output, check the shift solenoid valve SL2 when DTC P0778 is output and check the shift solenoid valve S4 when DTC P0982 and P0983 is output.

Fail safe function:
If either of the shift solenoid valve circuits develops an open or short, the ECM turns the other shift solenoid ON and OFF in order to shift into the gear positions shown in the table below. The ECM also turns the shift solenoid valve SL OFF at the same time. If both solenoids malfunction, hydraulic control cannot be performed electronically, and so it must be done manually.
Manual shifting as shown in the following table must be done (In case of a short circuit, the ECM stops sending the current to the short circuit solenoid).

NORMAL				SHIFT SOLENOID SL1 MALFUNCTIONING				SHIFT SOLENOID SL2 MALFUNCTIONING				SHIFT SOLENOID S4 MALFUNCTIONING			
Solenoid Valve			Gear	Solenoid Valve			Gear	Solenoid Valve			Gear	Solenoid Valve			Gear
SL1	SL2	S4		SL1	SL2	S4		SL1	SL2	S4		SL1	SL2	S4	
ON	ON	OFF	1st	X	ON	OFF	2nd	ON ↓ OFF	X	OFF	3rd	ON	ON	X	1st
OFF	ON	OFF	2nd	X	ON	OFF	2nd	OFF	X	OFF	3rd	OFF	ON	X	2nd
OFF	OFF	OFF	3rd	X	OFF ↓ ON	OFF ↓ ON	3rd	OFF	X	OFF	3rd	OFF	OFF	X	3rd
OFF	OFF	ON	O/D	X	OFF ↓ ON	ON	3rd	OFF	X	ON	O/D	OFF	OFF	X	3rd

SHIFT SOLENOID SL1 AND SL2 MALFUNCTIONING				SHIFT SOLENOID SL1 AND S4 MALFUNCTIONING				SHIFT SOLENOID SL2 AND S4 MALFUNCTIONING				SHIFT SOLENOID SL1, SL2 AND S4 MALFUNCTIONING			
Solenoid Valve			Gear	Solenoid Valve			Gear	Solenoid Valve			Gear	Solenoid Valve			Gear
SL1	SL2	S4		SL1	SL2	S4		SL1	SL2	S4		SL1	SL2	S4	
X	X	OFF	3rd	X	ON	X	2nd	ON ↓ OFF	X	X	3rd	X	X	X	3rd
X	X	OFF	3rd	X	ON	X	2nd	OFF	X	X	3rd	X	X	X	3rd
X	X	OFF	3rd	X	OFF ↓ ON	X	2nd	OFF	X	X	3rd	X	X	X	3rd
X	X	ON	O/D	X	OFF ↓ ON	X	2nd	OFF	X	X	3rd	X	X	X	3rd

WIRING DIAGRAM

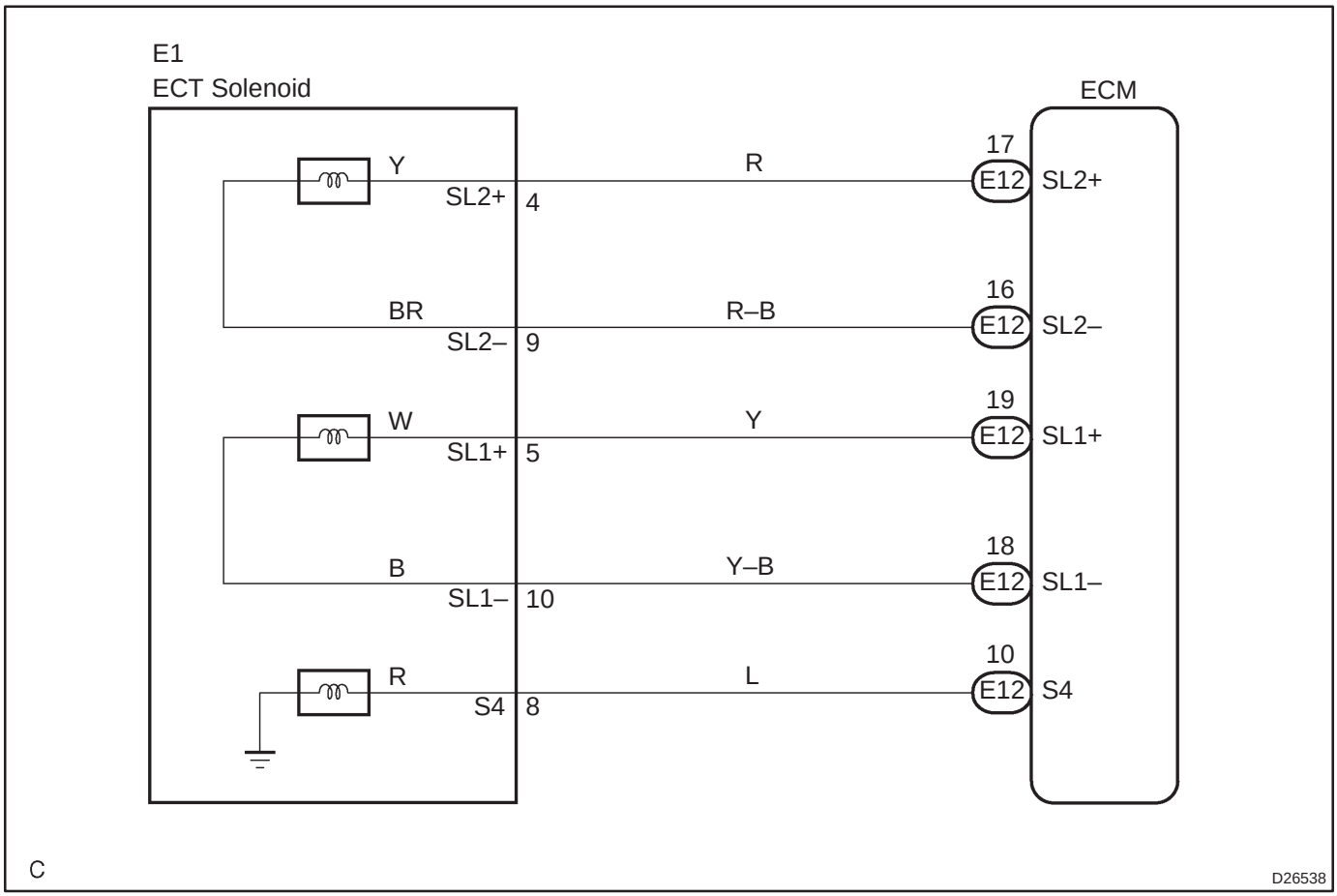

INSPECTION PROCEDURE

1	INSPECT TRANSMISSION WIRE(SL1/SL2/S4)

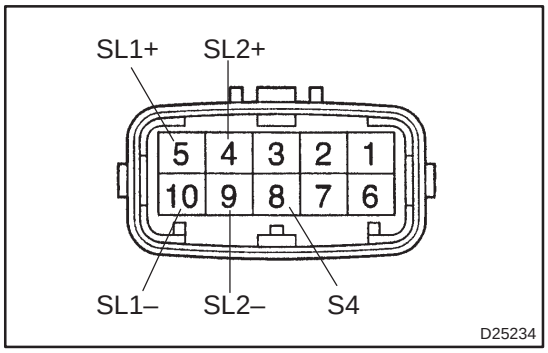

(a) Disconnect the transmission wire connector from the transaxle.

(b) Measure the resistance between terminals 5 and 10.
OK:
Resistance: 5.0 to 5.6 Ω at 20°C (68°F)

(c) Measure the resistance between terminals 5 and 10 of the transmission wire connector and body ground.
OK:
Resistance: 1MΩ or higher

NG → **Go to step 3**

(d) Measure the resistance between terminals 4 and 9.
OK:
Resistance: 5.1 to 5.5 Ω at 20°C (68°F)

(e) Measure the resistance between terminals 4 and 9 of the transmission wire connector and body ground.
OK:
Resistance: 1MΩ or higher

NG → **Go to step 4**

(f) Measure the resistance between terminal 8 and body ground.
OK:
Resistance: 11 to 15 Ω at 20°C (68°F)

NG → **Go to step 5**

OK

2 CHECK HARNESS AND CONNECTOR(TRANSMISSION WIRE – ECM)

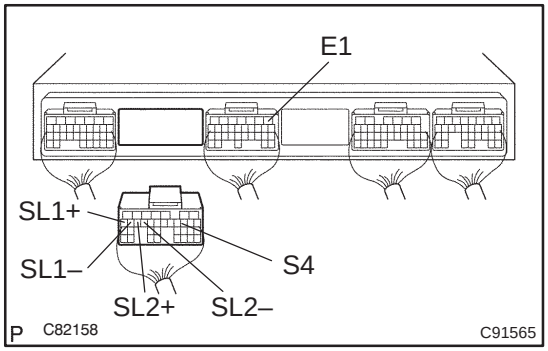

(a) Connect the transmission wire connector to the transaxle.
(b) Disconnect the connector from the ECM.
(c) Measure the resistance between terminals of the ECM connector.
OK:
Resistance:
SL1+ – SL1–: 5.0 to 5.6 Ω at 20°C (68°F)
SL2+ – SL2–: 5.1 to 5.5 Ω at 20°C (68°F)
S4 – E1: 11 to 15 Ω at 20°C (68°F)
(d) Measure the resistance between terminals SL1+, SL1–, SL2+ and SL2– of the ECM connector and body ground.
OK:
Resistance: 1MΩ or higher

NG → **REPAIR OR REPLACE HARNESS OR CONNECTOR**

OK

CHECK AND REPLACE ECM

3 INSPECT SHIFT SOLENOID VALVE(SL1)

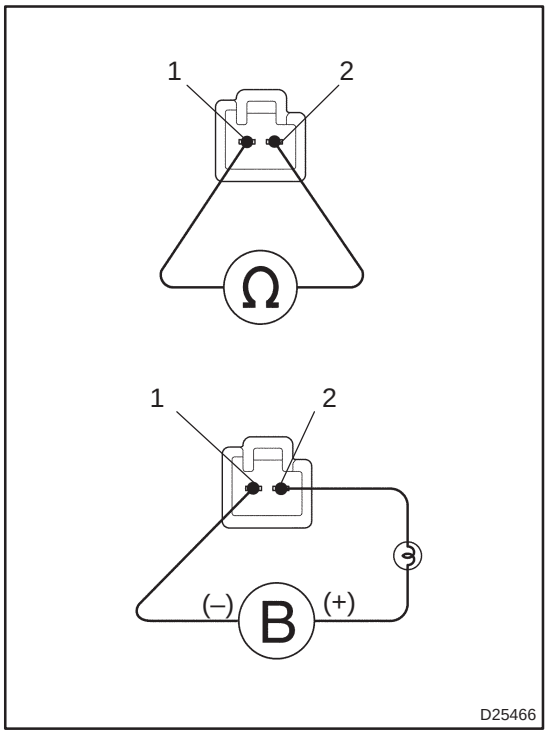

(a) Remove the shift solenoid valve SL1.
(b) Measure the resistance between terminals of the shift solenoid valve SL1.
OK:
Resistance: 5.0 to 5.6 Ω at 20˚C (68˚F)
(c) Connect the positive (+) lead with a 21 W bulb to terminal 2 and the negative (–) lead to terminal 1 of the solenoid valve connector, then check the movement of the solenoid valve.
OK:
The solenoid valve makes an operating noise.

NG → **REPLACE SHIFT SOLENOID VALVE(SL1)**

OK

REPAIR OR REPLACE TRANSMISSION WIRE

4 INSPECT SHIFT SOLENOID VALVE(SL2)

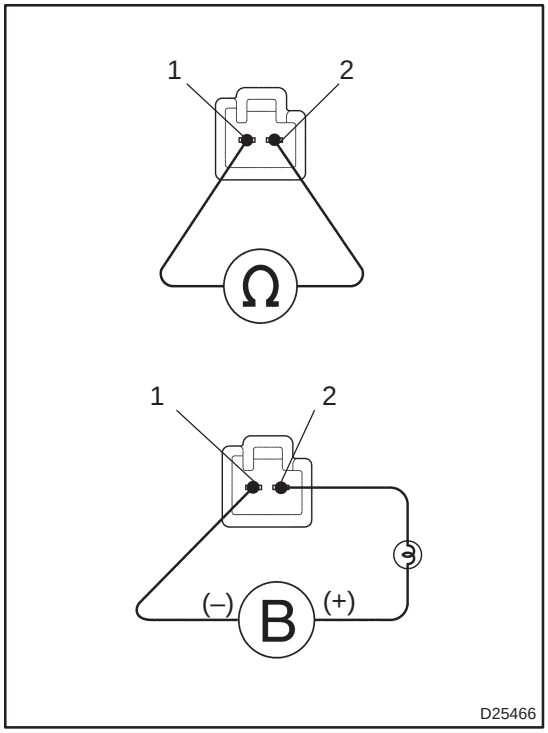

(a) Remove the shift solenoid valve SL2.
(b) Measure the resistance between terminals of the shift solenoid valve SL2.
OK:
Resistance: 5.1 to 5.5 Ω at 20˚C (68˚F)
(c) Connect the positive (+) lead with a 21 W bulb to terminal 2 and the negative (–) lead to terminal 1 of the solenoid valve connector, then check the movement of the solenoid valve.
OK:
The solenoid valve makes an operating noise.

NG → **REPLACE SHIFT SOLENOID VALVE(SL2)**

OK

REPAIR OR REPLACE TRANSMISSION WIRE

5 INSPECT SHIFT SOLENOID VALVE(S4)

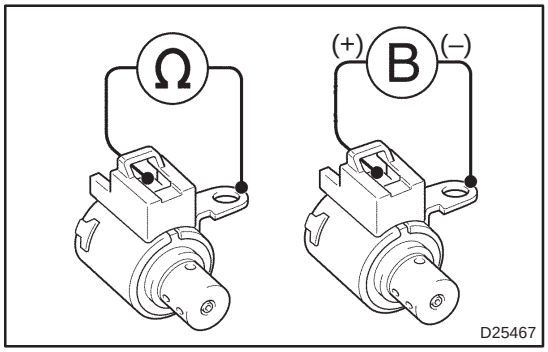

(a) Remove the shift solenoid valve S4.
(b) Measure the resistance between the solenoid connector and the solenoid valve body.
OK:
Resistance: 11 to 15 Ω at 20˚C (68˚F)
(c) Connect the positive (+) lead to the terminal of solenoid connector and the negative (–) lead to the solenoid valve body.
OK:
The solenoid valve makes an operating noise.

NG → **REPLACE SHIFT SOLENOID VALVE(S4)**

OK

REPAIR OR REPLACE TRANSMISSION WIRE

DTC	P0766	SHIFT SOLENOID ”D” PERFORMANCE (SHIFT SOLENOID VALVE S4)

SYSTEM DESCRIPTION

The ECM uses signals from the vehicle speed sensor to detect the actual gear position (1st, 2nd, 3rd or O/D gear).

Then the ECM compares the actual gear with the shift schedule in the ECM memory to detect mechanical troubles of the shift solenoid valves and valve body.

DTC No.	DTC Detecting Condition	Trouble Area
P0766	The gear required by the ECM does not match the actual gear when driving (2–trip detection logic)	• Shift solenoid valve S4 is stuck open or closed • Valve body is blocked up or stuck • Automatic transaxle (clutch, brake or gear etc.)

INSPECTION PROCEDURE

1 INSPECT SHIFT SOLENOID VALVE(S4)

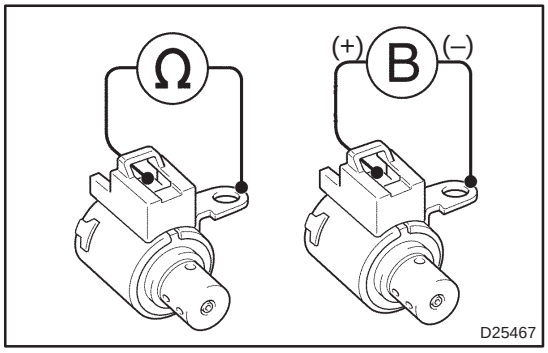

(a) Remove the shift solenoid valve S4.

(b) Measure the resistance between the solenoid connector and the solenoid body.

OK:

Resistance: 11 to 15 Ω at 20°C (68°F)

(c) Connect the positive (+) lead to the terminal of solenoid connector and the negative (–) lead to the solenoid body.

OK:

The solenoid makes an operating noise.

NG → **REPLACE SHIFT SOLENOID VALVE(S4)**

OK

2 INSPECT TRANSMISSION VALVE BODY ASSY

NG → **REPAIR OR REPLACE TRANSMISSION VALVE BODY ASSY**

OK

3 INSPECT TORQUE CONVERTER CLUTCH ASSY

NG → **REPLACE TORQUE CONVERTER CLUTCH ASSY**

OK

REPAIR OR REPLACE AUTOMATIC TRANSAXLE ASSY

DTC	P0776	PRESSURE CONTROL SOLENOID ”B” PERFORMANCE (SHIFT SOLENOID VALVE SL2)

SYSTEM DESCRIPTION

The ECM uses signals from the vehicle speed sensor to detect the actual gear position (1st, 2nd, 3rd or O/D gear).
Then the ECM compares the actual gear with the shift schedule in the ECM memory to detect mechanical troubles of the shift solenoid valves and valve body.

DTC No.	DTC Detecting Condition	Trouble Area
P0776	The gear required by the ECM does not match the actual gear when driving (2–trip detection logic)	• Shift solenoid valve SL2 is stuck open or closed • Valve body is blocked up or stuck • Automatic transaxle (clutch, brake or gear etc.)

INSPECTION PROCEDURE

1	INSPECT SHIFT SOLENOID VALVE(SL2)

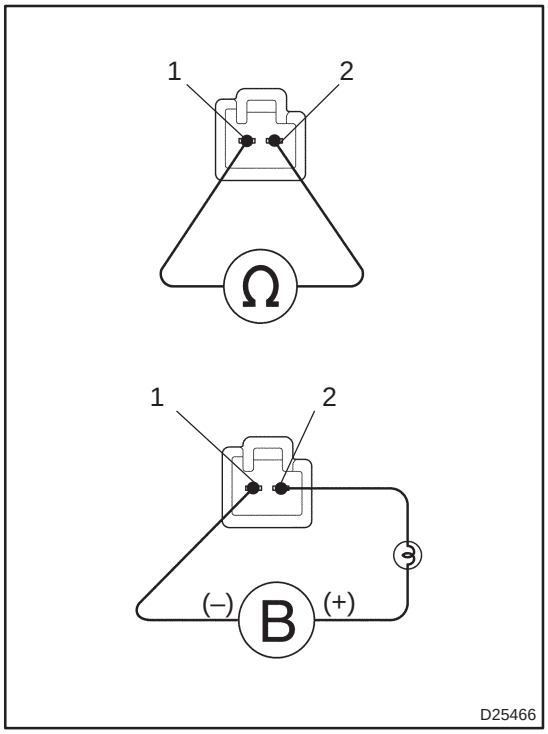

(a) Remove the shift solenoid valve SL2.
(b) Measure the resistance between terminals.
OK:
Resistance: 5.1 to 5.5 Ω at 20°C (68°F)
(c) Connect the positive (+) lead with a 21 W bulb to terminal 2 and the negative (–) lead to terminal 1 of the solenoid valve connector, then check the movement of the solenoid valve.
OK:
The solenoid valve makes an operating noise.

NG → **REPLACE SHIFT SOLENOID VALVE(SL2)**

OK

2	INSPECT TRANSMISSION VALVE BODY ASSY

NG → **REPAIR OR REPLACE TRANSMISSION VALVE BODY ASSY**

OK

3	INSPECT TORQUE CONVERTER CLUTCH ASSY

NG → REPLACE TORQUE CONVERTER CLUTCH ASSY

OK

REPAIR OR REPLACE AUTOMATIC TRANSAXLE ASSY

DTC	P0793	INTERMEDIATE SHAFT SPEED SENSOR ”A”

CIRCUIT DESCRIPTION

This sensor detects the rotation speed of the counter gear. By comparing the counter gear speed signal (NC) with the direct clutch speed sensor signal (NT), the ECM detects the shift timing of the gears and appropriately controls the engine torque and hydraulic pressure according to various conditions. Thus smooth gear shifting is performed.

DTC No.	DTC Detection Condition	Trouble Area
P0793	ECM detects conditions (a), (b), (c) and (d) continuity for 5 sec. or more: (1 trip detection logic) (a) Vehicle speed: 50 km/h (20 mph) or more (b) 2nd, 3rd or O/D gear (c) Solenoid valves and park/neutral position switch are normal (d) NC < 300 rpm	• Open or short in speed sensor (NC) circuit • Speed sensor (NC) • ECM

WIRING DIAGRAM

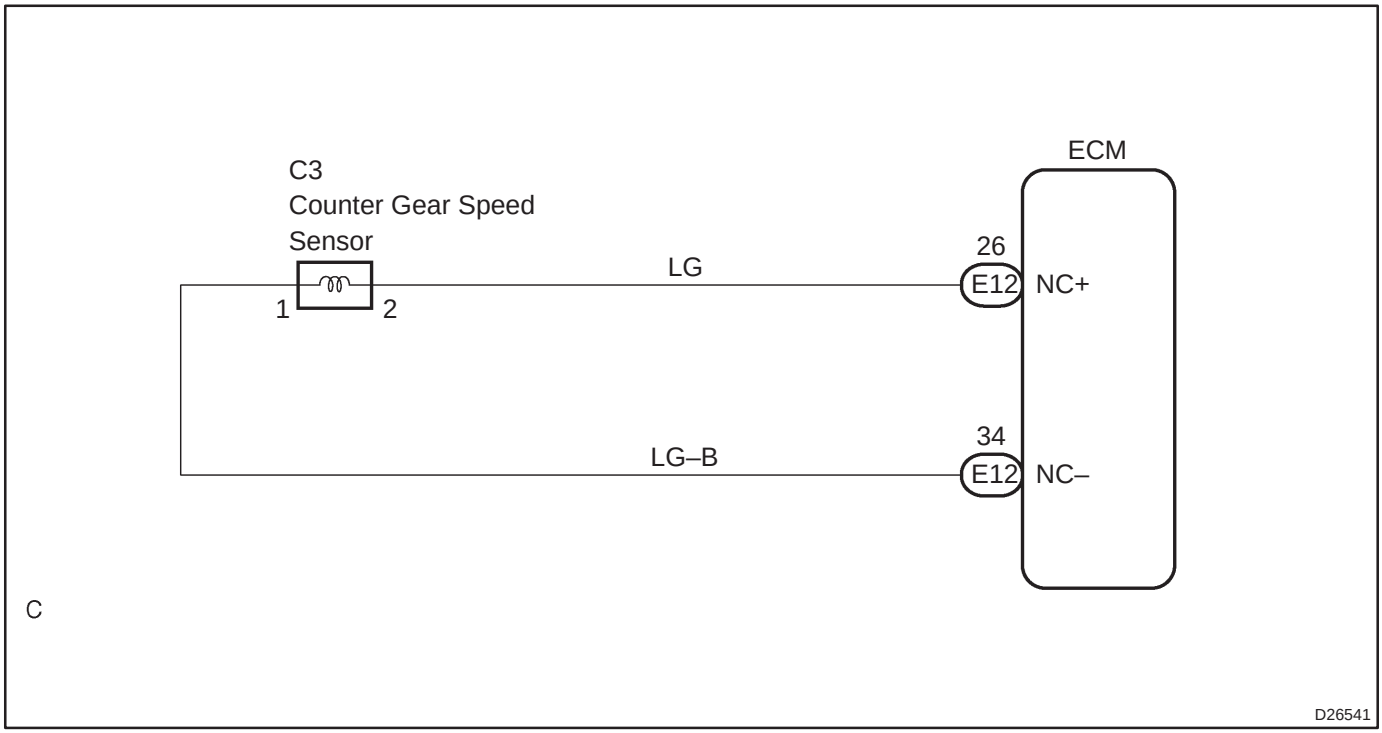

INSPECTION PROCEDURE

1	INSPECT SPEED SENSOR(NC)

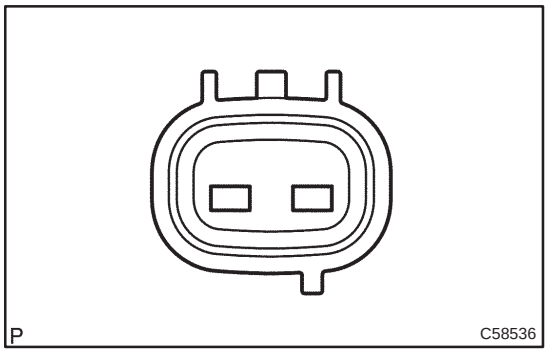

(a) Disconnect the speed sensor (NC) connector from the transaxle.
(b) Measure the resistance between terminals of the speed sensor.
OK:
Resistance:
TOYOTA made: 500 to 620 Ω at 20°C (68°F)
AISIN made: 560 to 680 Ω at 20°C (68°F)

NG → **REPLACE SPEED SENSOR(NC)**

OK

2	CHECK HARNESS AND CONNECTOR(SPEED SENSOR – ECM)

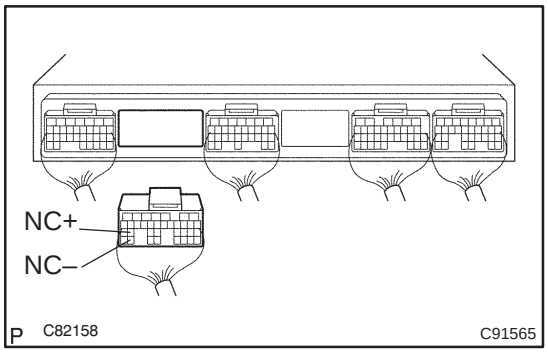

(a) Connect the speed sensor (NC) connector.
(b) Disconnect the ECM connector.
(c) Measure the resistance between terminals NC+ and NC–.
OK:
Resistance:
TOYOTA made: 500 to 620 Ω at 20°C (68°F)
AISIN made: 560 to 680 Ω at 20°C (68°F)
(d) Measure the resistance between terminals NC+ and NC– of the ECM connector and body ground.
OK:
Resistance: 1MΩ or higher

NG → **REPAIR OR REPLACE HARNESS OR CONNECTOR**

OK

CHECK AND REPLACE ECM

DTC	P2716	PRESSURE CONTROL SOLENOID ”D” ELECTRICAL (SHIFT SOLENOID SLT)

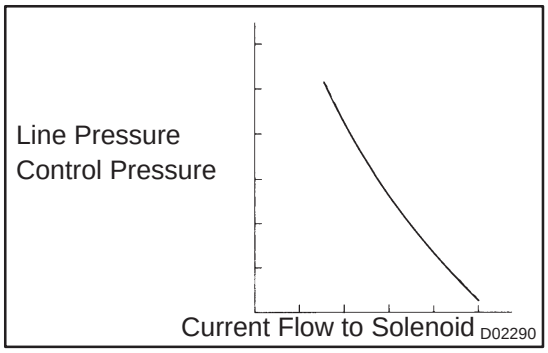

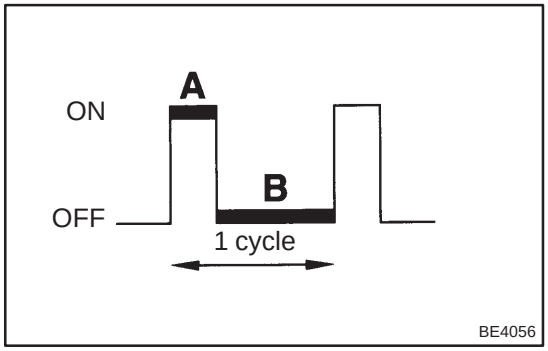

CIRCUIT DESCRIPTION

The throttle pressure that is applied to the primary regulator valve (which modulates the line pressure) causes the solenoid valve SLT, under electronic control, to precisely and minutely modulate and generate the line pressure according to the extent of the accelerator pedal depressed or the output of engine power.

This controls the line pressure and provides smooth shifting.

Upon receiving a signal of the throttle valve opening angle, the ECM controls the line pressure by sending a predetermined (*) duty ratio to the solenoid valve, modulating the line pressure and generating throttle pressure.

(*): Duty Ratio

The duty ratio is the ratio of the period of continuity in one cycle. For example, if A is the period of continuity in one cycle, and B is the period of non–continuity, then

Duty Ratio=A/(A+B) x 100 (%)

DTC No.	DTC Detection Condition	Trouble Area
P2716	Condition (a) or (b) below is detected 1 sec. or more: (1–trip detection logic) (a) SLT– terminal: 0V (b) SLT– terminal: 12V	• Open or short in shift solenoid valve SLT circuit • Shift solenoid valve SLT • ECM

WIRING DIAGRAM

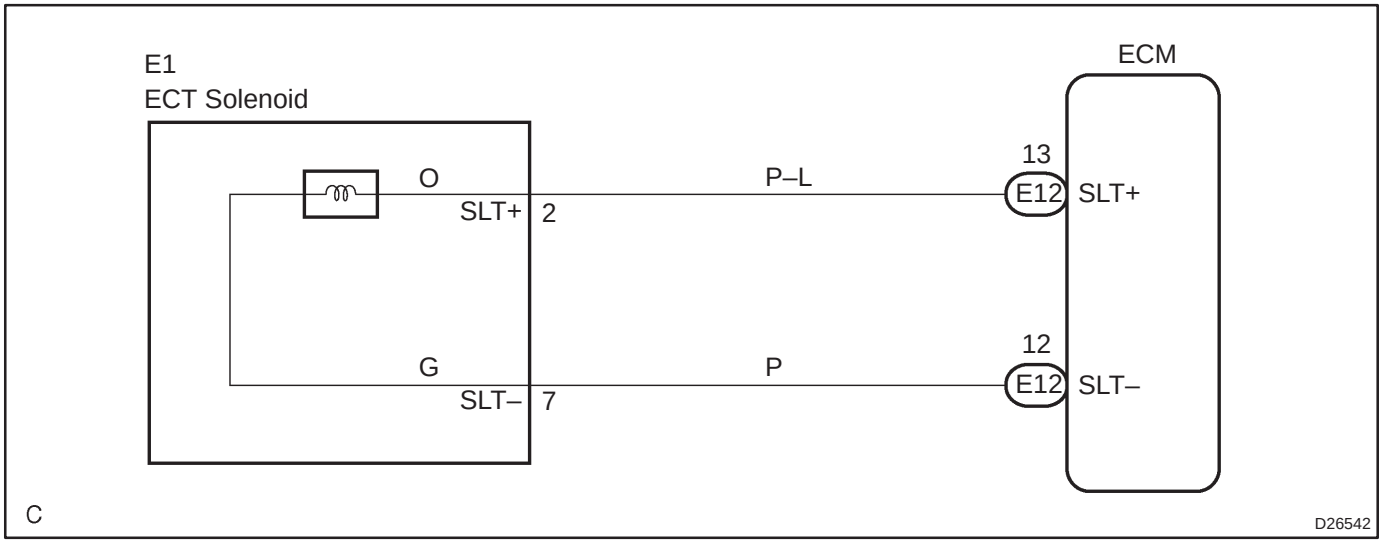

INSPECTION PROCEDURE

1	INSPECT TRANSMISSION WIRE(SLT)

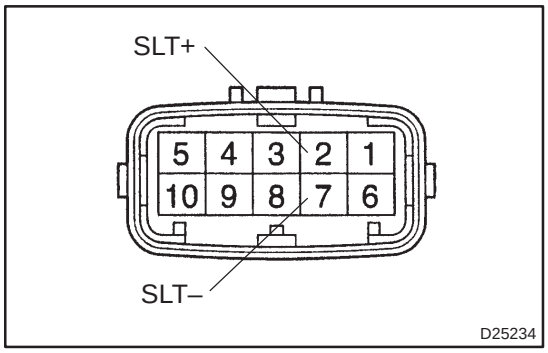

(a) Disconnect the transmission wire connector from the transaxle.
(b) Measure the resistance between terminals SLT+ and SLT–.
OK:
Resistance: 5.0 to 5.6 Ω at 20˚C (68˚F)
(c) Measure the resistance between terminals SLT+ and SLT– of the transmission wire connector and body ground.
OK:
Resistance: 1MΩ or higher

NG → **Go to step 3**

OK

2	CHECK HARNESS AND CONNECTOR(TRANSMISSION WIRE – ECM)

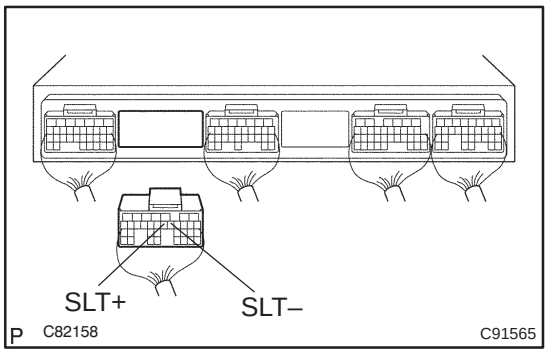

(a) Connect the transmission wire connector to the transaxle.
(b) Disconnect the ECM connector.
(c) Measure the resistance between terminals SLT+ and SLT– of ECM connector.
OK:
Resistance: 5.0 to 5.6 Ω at 20˚C (68˚F)
(d) Measure the resistance between terminals SLT+ and SLT– of the ECM connector and body ground.
OK:
Resistance: 1MΩ or higher

NG → **REPAIR OR REPLACE HARNESS OR CONNECTOR**

OK

CHECK AND REPLACE ECM

3 INSPECT SHIFT SOLENOID VALVE(SLT)

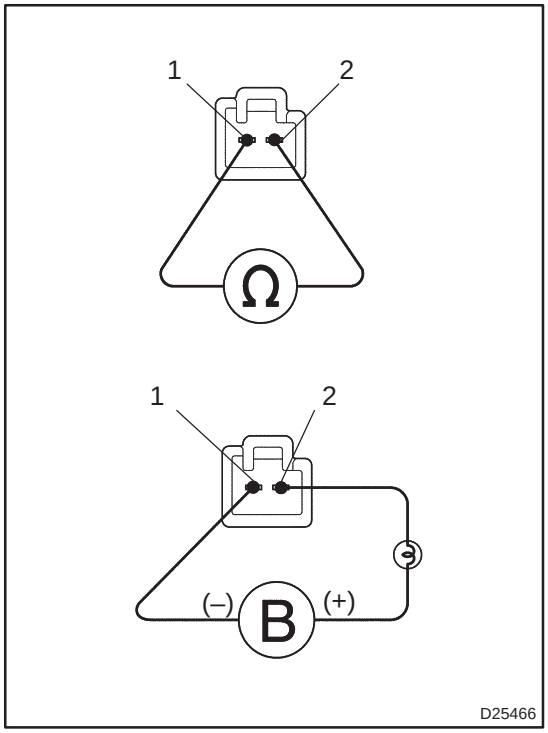

(a) Remove the shift solenoid valve SLT.

(b) Measure the resistance between terminals of the shift solenoid valve SLT.

OK:

Resistance: 5.0 to 5.6 Ω at 20˚C (68˚F)

(c) Connect the positive (+) lead with a 21 W bulb to terminal 2 and the negative (–) lead to terminal 1 of the solenoid valve connector, then check the movement of the solenoid valve.

OK:

The solenoid valve makes an operating noise.

NG → **REPLACE SHIFT SOLENOID VALVE(SLT)**

OK

REPAIR OR REPLACE TRANSMISSION WIRE

KICK DOWN SWITCH CIRCUIT

CIRCUIT DESCRIPTION

The kick–down switch is turned ON when the accelerator pedal is depressed to the full throttle and sends signals to ECM.

When the kick–down switch is turned ON, the ECM controls gear shifting according to the programmed shift diagrams.

If a short circuit develops in the kick–down switch, the ECM disregards the kick–down signals and controls shifting at the normal shift points.

WIRING DIAGRAM

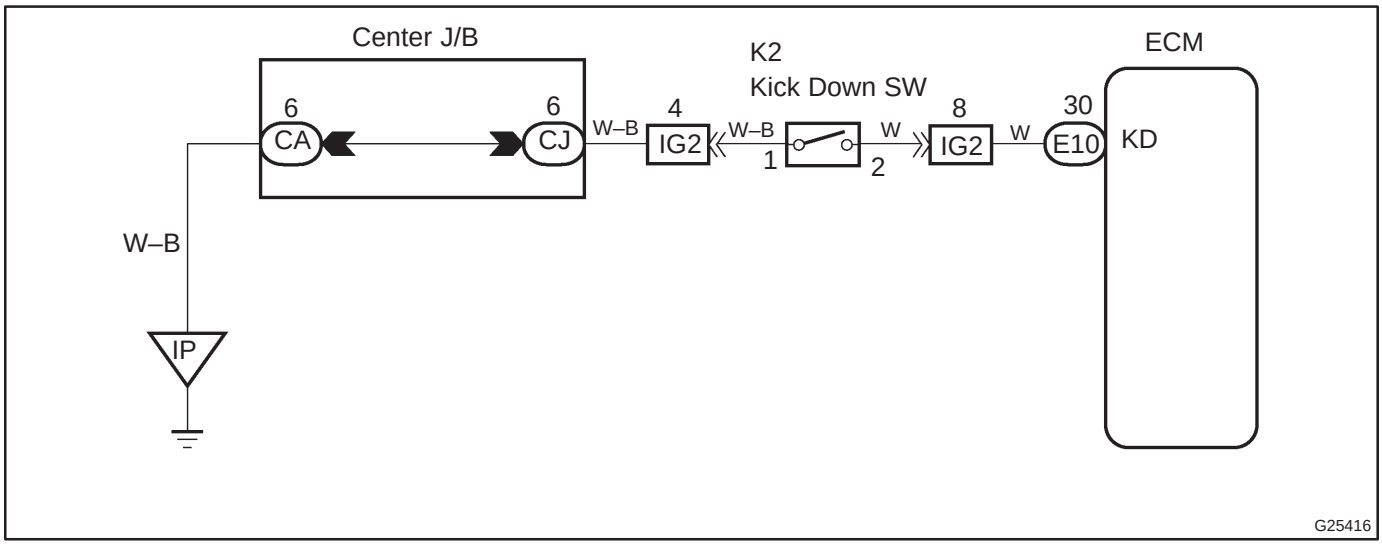

INSPECTION PROCEDURE

1 INSPECT TERMINAL VOLTAGE

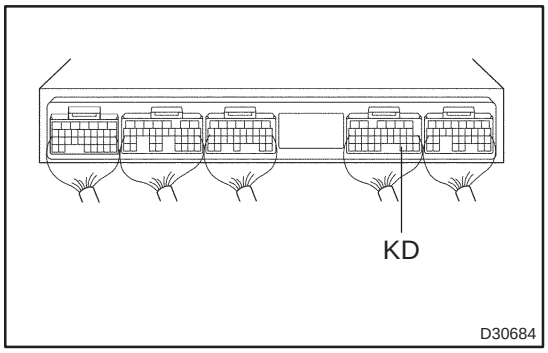

(a) Turn the ignition switch to ON.
(b) Measure the voltage between terminal KD of ECM and body ground when accelerator pedal is fully depressed or not.

OK:

Accelerator pedal	Voltage
Fully depressed (Kick–down switch is ON)	Below 1 V
Released (Kick–down switch is OFF)	10 to 14 V

OK → **PROCEED TO NEXT CIRCUIT INSPECTION SHOWN ON PROBLEM SYMPTOMS TABLE**

NG

2 INSPECT KICK DOWN SWITCH

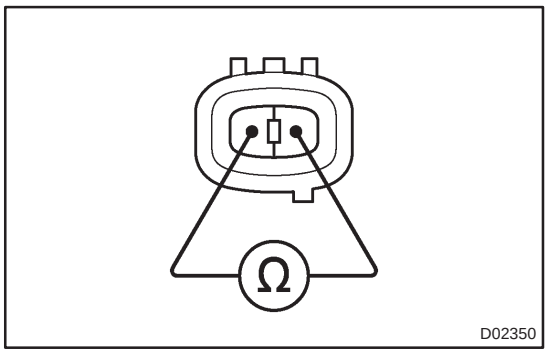

(a) Disconnect the kick–down switch connector.
(b) Check the continuity between terminals 1 and 2 of the kick–down switch when kick–down switch is ON and OFF.

OK:

Kick–down switch	Continuity
ON	Continuity
OFF	No continuity

NG → **REPLACE KICK DOWN SWITCH**

OK

3 CHECK HARNESS AND CONNECTOR

NG → **REPAIR OR REPLACE HARNESS AND CONNECTOR**

OK

CHECK AND REPLACE ECM

TRANSMISSION CONTROL SWITCH CIRCUIT

CIRCUIT DESCRIPTION

When shifting the shift lever into S position using the transmission control switch, it is possible to shift in 1 to 4 positions.
Shifting ”+” once changes up 1 shift range position, ”–” once changes down 1 shift range position respectively.

WIRING DIAGRAM

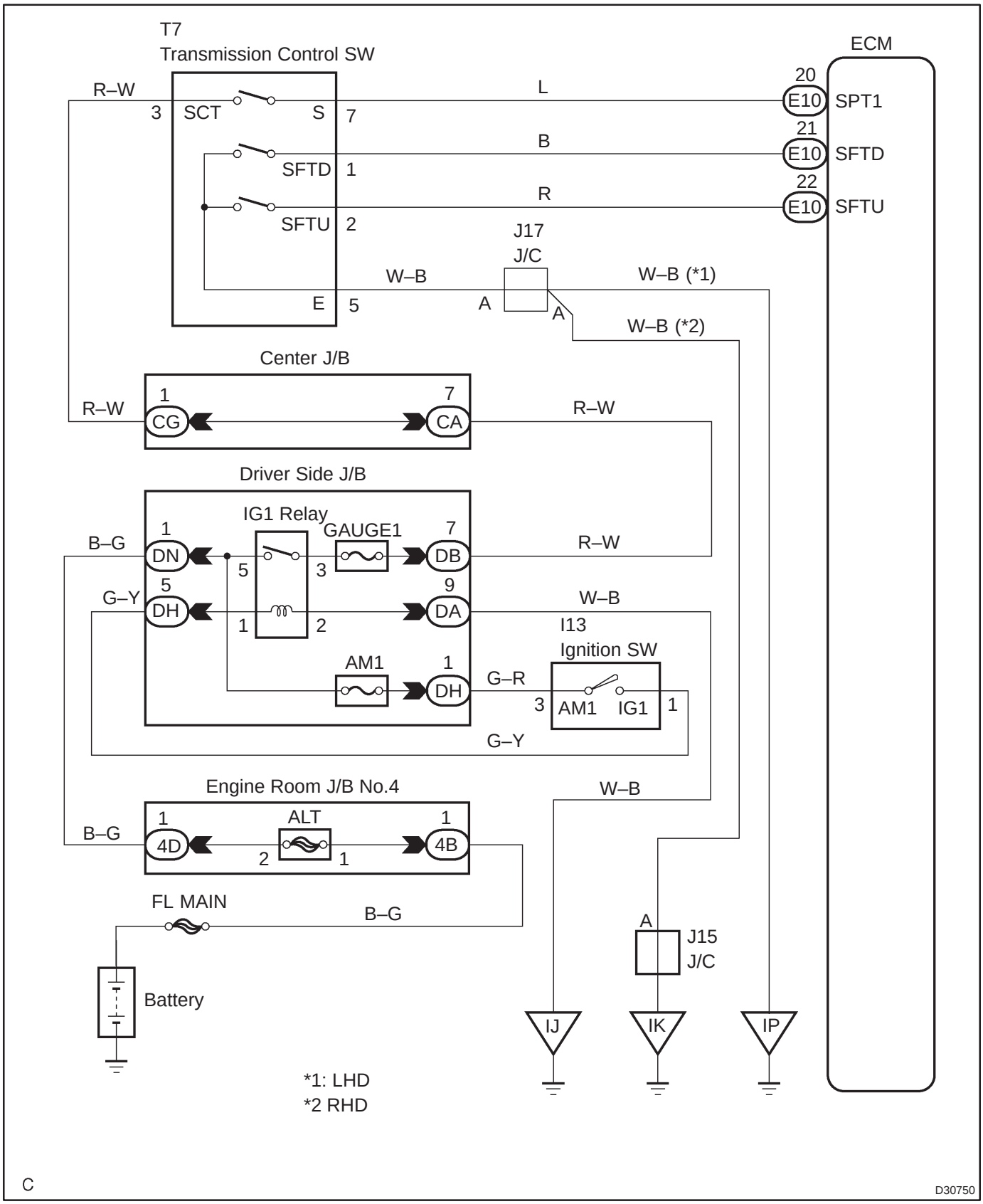

INSPECTION PROCEDURE

1 CHECK ECM

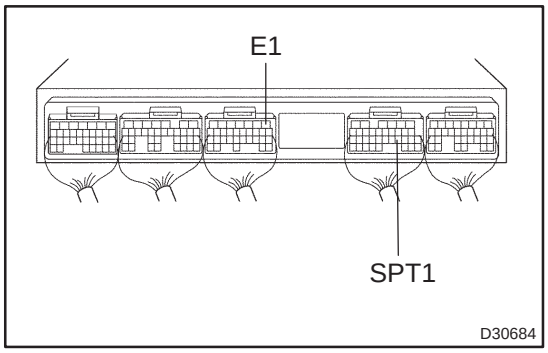

(a) Turn the ignition switch to ON.
(b) Measure the voltage between terminals SPT1 and E1 of the ECM.
OK:

Shift range	Specified condition
Except S position	Below 1 V
S position	7.5 to 14 V

NG → **Go to step 6**

OK

2 CHECK ECM

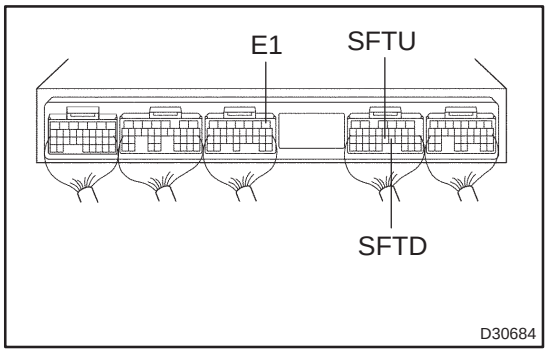

(a) Measure the voltage between terminals E1 and that SFTU as well as SFTD of the ECM.
OK:

Shift range	Tester connection	Specified condition
Shift to "+" (Up shift)	SFTU – E1	Below 1.5 V
S position	SFTU – E1	7.5 to 14 V
Shift to "–" (Down shift)	SFTD – E1	Below 1.5 V
S position	SFTD – E1	7.5 to 14 V

OK → **NORMAL**

NG

3 INSPECT SHIFT LOCK CONTROL UNIT ASSY(TRANSMISSION CONTROL SWITCH)

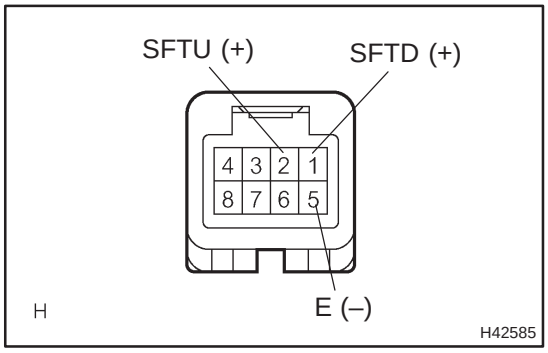

(a) Turn the ignition switch to OFF.
(b) Disconnect the transmission control switch connector.
(c) Measure the resistance between terminals E and SFTU as well as SFTD of the transmission control switch connector.
OK:

Shift range	Tester connection	Specified condition
Shift to "+" (Up shift)	SFTU – E	Continuity
S position	SFTU – E	No continuity
Shift to "–" (Down shift)	SFTD – E	Continuity
S position	SFTD – E	No continuity

NG → **REPLACE SHIFT LOCK CONTROL UNIT ASSY**

OK

4	CHECK HARNESS AND CONNECTOR(ECM – TRANSMISSION CONTROL SWITCH)

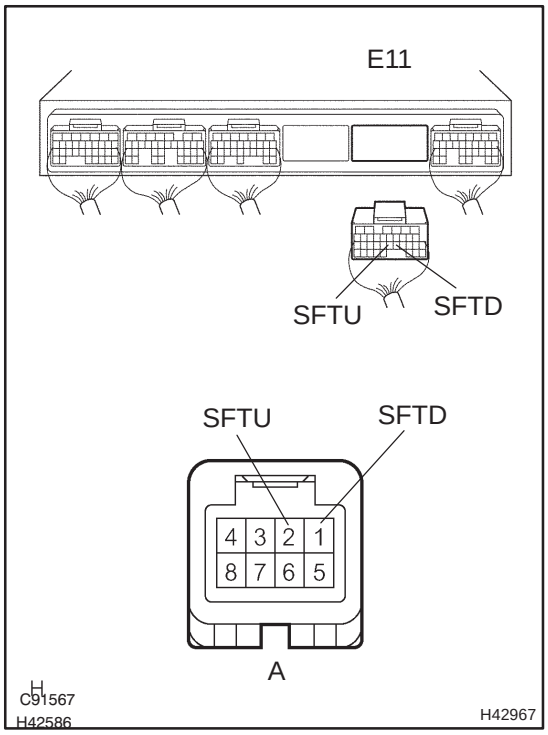

(a) Disconnect the ECM connector.

(b) Check the continuity between ECM and transmission control switch.

OK:

Tester connection	Specified condition
SFTU (E11–22) – SFTU (A–2)	Continuity
SFTD (E11–21) – SFTD (A–1)	Continuity

NG → **REPAIR OR REPLACE HARNESS AND CONNECTOR**

OK

5	CHECK HARNESS AND CONNECTOR(TRANSMISSION COTROL SWITCH – BODY GROUND)

(a) Check the continuity between body ground and E of the transmission control switch connector (wire harness side).

OK:

Continuity

NG → **REPAIR OR REPLACE HARNESS AND CONNECTOR**

OK

CHECK AND REPLACE ECM

6 INSPECT SHIFT LOCK CONTROL UNIT ASSY(TRANSMISSION CONTROL SWITCH)

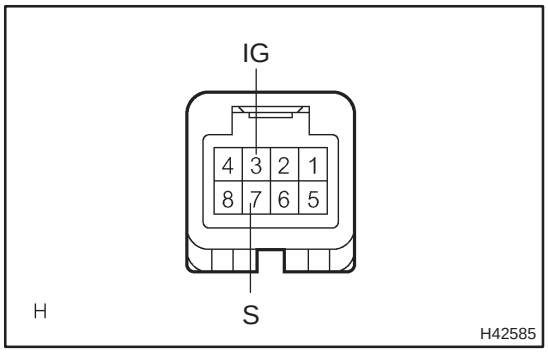

(a) Turn the ignition switch to OFF.
(b) Disconnect the transmission control switch connector.
(c) Check the continuity between terminal IG and S of the transmission control switch.

OK:

Shift range	Tester connection	Specified condition
Except S position	IG – S	No continuity
S position	IG – S	Continuity

NG → **REPLACE SHIFT LOCK CONTROL UNIT ASSY**

OK

7 CHECK HARNESS AND CONNECTOR

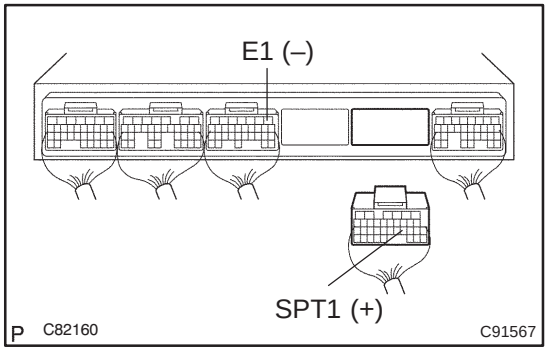

(a) Connect the transmission control switch connector.
(b) Disconnect the ECM connector.
(c) Turn the ignition switch to ON.
(d) Measure the voltage between terminal SPT1 and E1 of the ECM connector.

OK:

Shift range	Tester connection	Specified condition
Except S position	SPT1 – E1	Below 1 V
S position	SPT1 – E1	7.5 to 14 V

NG → **REPAIR OR REPLACE HARNESS AND CONNECTOR**

OK

CHECK AND REPLACE ECM

PATTERN SELECT SWITCH CIRCUIT

CIRCUIT DESCRIPTION

ECT SNOW is the system that operates the throttle motor to control engine output to reduce skidding of the driving wheels, guarantee takeoff acceleration, driving straightness and turning stability.

WIRING DIAGRAM

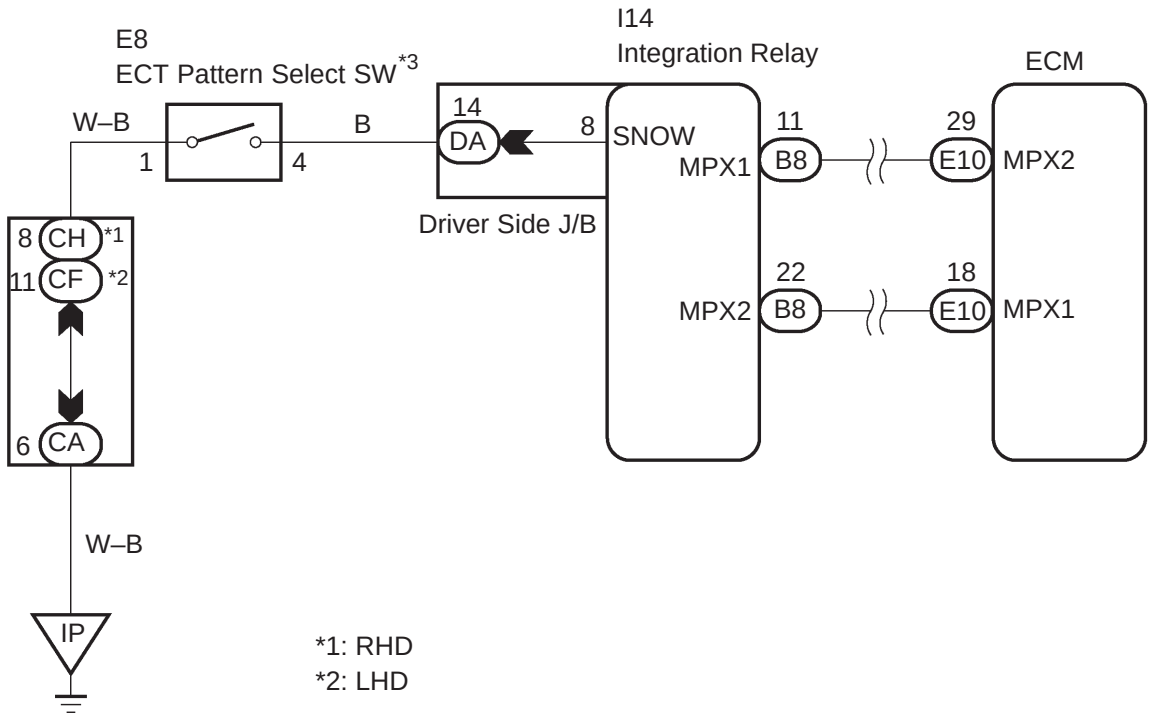

(*3) Pattern Select Switch (ECT SNOW Switch)
When the ECT SNOW switch is pushed, the switch contact is made and the ECT SNOW mode is selected. To cancel the ECT SNOW mode, push the ECT SNOW switch once again. The ECT SNOW mode is automatically cancelledout when the ignition switch is turned ”OFF”.

C

D30688

INSPECTION PROCEDURE

1	DRIVING TEST

(a) Start the engine.
(b) Turn the ECT SNOW switch ”OFF”.
(c) Confirm vehicle response by driving from a parked position to fully depressing the accelerator pedal.
(d) Turn the ECT SNOW switch on and perform the same check as (c).
Confirm that there is a difference between ECT SNOW switch ”ON” and ”OFF”.

HINT:
- Driving test should be done on a paved road (a nonskid road).
- Make sure not to use the TRAC system when testing a vehicle equipped with one.

Standard:
There is a difference in acceleration between ”ON” and ”OFF”.

NG → **Go to step 2**

OK

PROCEED TO NEXT CIRCUIT INSPECTION SHOWN ON PROBLEM SYMPTOMS TABLE (See page xx–xxx)

2	CHECK HARNESS AND CONNECTOR(PATTERN SELECT SWITCH ASSY – BODY GROUND)

Wire Harness Side:

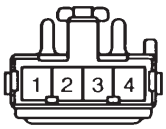

B59192

(a) Disconnect the connector of pattern select switch (ECT SNOW switch).
(b) Measure the resistance between 4 of the wire harness connector and body ground.
Standard:

Tester connection	Specified condition
4 – Body ground	Below 1 Ω

NG → **REPAIR OR REPLACE HARNESS AND CONNECTOR**

OK

3	INSPECT PATTERN SELECT SWITCH ASSY

Switch Side:

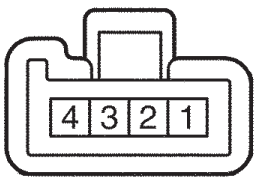

D30685

(a) Measure the resistance between terminals 1 and 4 of pattern select switch (ECT SNOW switch).
Standard:

Switch condition	Tester connection	Specified condition
Press continuously Pattern select switch	1 – 4	Continuity
Release Pattern select switch	1 – 4	No continuity

NG → **REPLACE PATTERN SELECT SWITCH ASSY**

OK

4	CHECK HARNESS AND CONNECTOR(PATTERN SELECT SWITCH ASSY – INTEGRATION RELAY)

Instrument Panel J/B Assy

Vehicle Front Side:

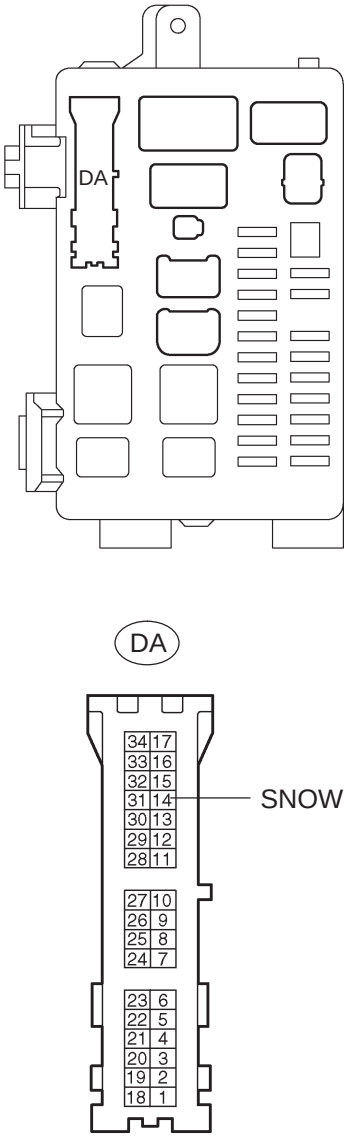

(a) Connect the connector of pattern select switch (ECT SNOW switch).

(b) Disconnect the instrument panel J/B assy (integration relay) connector.

(c) Measure the resistance between terminal SNOW of instrument panel J/B assy (integration relay) and body ground.

Standard:

Switch condition	Tester connection	Specified condition
Press continuously Pattern select switch	DA–14 (SNOW) – Body ground	Below 1 Ω
Release Pattern select switch	DA–14 (SNOW) – Body ground	10 kΩ or higher

NG → **REPAIR OR REPLACE HARNESS AND CONNECTOR**

OK

PROCEED TO NEXT CIRCUIT INSPECTION SHOWN ON PROBLEM SYMPTOMS TABLE (See page xx–xxx)

ELECTRONIC CONTROLLED AUTOMATIC TRANSAXLE [ECT] (U341E)

0567N–10

HOW TO PROCEED WITH TROUBLESHOOTING

HINT:

The ECM of this system is connected to the multiplex communication system. Therefore, before starting troubleshooting, make sure to check that there is no trouble in the multiplex communication system.

1	Vehicle Brought to Workshop

2	Customer Problem Analysis (See page 05–984)

3	Connect the hand–held tester to DLC3

4	Check and Clear DTC and Freeze Frame Data (See page 05–985)

5	Visual Inspection

6	Setting the Check Mode Diagnosis (See page 05–985)

7	Problem Symptom Confirmation

- Symptom does not occur: Go to step 8
- Symptom occur: Go to step 9

8	Symptom Simulation (See page 01–22)

9	DTC Check (See page 05–996)

- DTC is not output: Go to step 10
- DTC is output: Go to step 17

10	Basic Inspection (See page 40–2, 40–8 and 40–69)

NG → Go to step 19

OK

11	Mechanical System Test (See page 05–985)

NG → Go to step 16

OK

12	Manual Shifting Test (See page 05–985)

NG → Go to step 14

OK

13	Problem Symptoms Table Chapter 1 (See page 05–1000)

NG → Go to step 18

OK

14	Problem Symptoms Table Chapter 2 (See page 05–1000)

NG → Go to step 16

OK

15	Problem Symptoms Table Chapter 3 (See page 05–1000)

NG

16	Part Inspection

→ Go to step 19

17	DTC Chart (See page 05–996)

18	Circuit Inspection (See page 05–1003)

19	Identification of Problem

20	Repair

21	Confirmation Test

End

05CBZ–01

PRECAUTION

CAUTION:

Perform the RESET MEMORY (AT initialization) when replacing the automatic transaxle assy, engine assy or ECM.

HINT:

Initialization can not be completed by only removing the battery.

0567O–09

CUSTOMER PROBLEM ANALYSIS CHECK

Transmission Control System Check Sheet	Inspector's Name :

Customer's Name		Registration No.	
		Registration Year	/ /
		Frame No.	
Date Vehicle Brought In	/ /	Odometer Reading	km mile

Date Problem Occurred	/ /
How Often Does Problem Occur?	☐ Continuous ☐ Intermittent (times a day)

Symptoms	☐ Vehicle does not move (☐ Any range ☐ Particular range)
	☐ No up–shift (☐ 1st → 2nd ☐ 2nd → 3rd ☐ 3rd → O/D)
	☐ No down–shift (☐ O/D → 3rd ☐ 3rd → 2nd ☐ 2nd → 1st)
	☐ No up–shift (S range)
	☐ No down–shift (S range)
	☐ Lock–up malfunction
	☐ Shift point too high or too low
	☐ Harsh engagement (☐ N → D ☐ Lock–up ☐ Any drive range)
	☐ Slip or shudder
	☐ No kick–down
	☐ Others ( )

Check Item	MIL	☐ Normal ☐ Remains ON

DTC Check	1st Time	☐ Normal code ☐ Malfunction code (DTC)
	2nd Time	☐ Normal code ☐ Malfunction code (DTC)

05C8E–01

PRE–CHECK

1. DIAGNOSIS SYSTEM

(a) Description

(1) When troubleshooting Euro–OBD vehicles, the only difference from the usual troubleshooting procedure is that you connect the vehicle to the OBD scan tool complying with ISO 15031–4 or hand–held tester, and read off various data output from the vehicle's ECM.

(2) Euro–OBD regulations require that the vehicle's on–board computer illuminates the Check Engine Warning Light (Malfunction Indicator Lamp)/CHK ENG (MIL) on the instrument panel when the computer detects a malfunction in the emission control system/components or in the driving system components which affect vehicle emissions, or a malfunction in the computer. In addition to CHK ENG (MIL) illuminating when a malfunction is detected, the applicable Diagnostic Trouble Codes (DTCs) prescribed by ISO15031–6 are recorded in the ECM memory.

If the malfunction does not occur in 3–trip, the CHK ENG (MIL) goes off but the DTCs remain recorded in the ECM memory.

(3) To check the DTCs, connect the OBD scan tool or hand–held tester to the Data Link Connector 3 (DLC3) on the vehicle. The OBD scan tool or hand–held tester also enables you to erase the DTCs and check freezed frame data and various forms of engine data (For operating instructions, see the OBD scan tool's instruction book.).

(4) DTCs include ISO controlled codes and manufacturer controlled codes. ISO controlled codes must be set as prescribed by the ISO, while manufacturer controlled codes can be set freely by the manufacturer within the prescribed limits (See DTC chart on page 05–996).

(5) The diagnosis system operates in normal mode during normal vehicle use. It also has a check mode for technicians to simulate malfunction symptoms and troubleshoot. Most DTCs use 2 trip detection logic (*) to prevent erroneous detection, and ensure thorough malfunction detection. By switching the ECM to check mode when troubleshooting, technicians can cause the CHK ENG (MIL) to illuminate for a malfunction that is only detected once or momentarily (Hand–held tester only) (See step 2).

(6) *2 trip detection logic:
When a malfunction is first detected, the malfunction code is temporarily stored in the ECM memory (1st trip). If the same malfunction is detected again during the second drive test, this second detection causes the CHK ENG (MIL) to illumenate (2nd trip) (However, the ignition switch must be turned OFF between the 1st trip and the 2nd trip.).

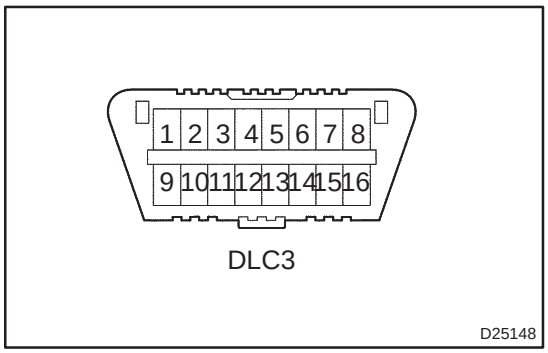

(b) Inspect the DLC3.
(1) The vehicle's ECM uses ISO 9141–2 (Euro–OBD) communication protocol. The terminal arrangement of DLC3 complies with ISO 15031–3 and matches the ISO 9141–2 format.

Terminal No.	Connection	Voltage or Resistance	Condition
7	Bus ⊕ Line	Pulse generation	During communication
4	Chassis Ground	↔ Body Ground / 1 Ω or less	Always
16	Battery Positive	↔ Body Ground / 9 to 14 V	Always

HINT:
If your display shows "UNABLE TO CONNECT TO VEHICLE" when you have connected the cable of hand–held tester to DLC3, turned the ignition switch ON and operated the hand–held tester, there is a problem on the vehicle side or tool side.
- If communication is normal when the tool is connected to another vehicle, inspect DLC3 on the original vehicle.
- If communication is still not possible when the tool is connected to another vehicle, the problem is probably in the tool itself, so consult the Service Department listed in the tool's instruction manual.

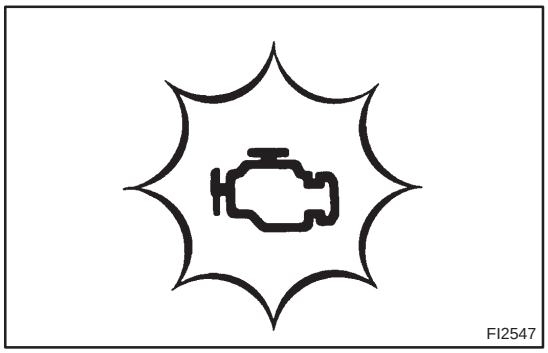

2. INSPECT DIAGNOSIS (NORMAL MODE)

(a) Check the MIL.
(1) The MIL comes on when the ignition switch is turned ON and the engine is not running.

HINT:
If the MIL does not come on, troubleshoot the combination meter.

(2) When the engine is started, the MIL should go off. If the light remains on, the diagnosis system has detected a malfunction or abnormality in the system.

(b) Check the DTC, Using the hand–held tester.

NOTICE:

Hand–held tester only:

When the diagnostic system is switched from normal mode to check (test) mode, it erases all DTCs and freeze frame data recorded in normal mode. So before switching modes, always check the DTCs and freeze frame data, and note them down.

(1) Use the hand–held tester to check the DTCs and instructions, see the hand–held tester instruction book.

(2) See page 05–996 to confirm the details of the DTCs.

(c) Clear the DTC.

(1) When using the hand–held tester:
The following operation will erase the DTC and freeze frame data. Operate the hand–held tester to erase the codes.

(2) When not using the hand–held tester:
Remove the EFI fuse from engine room J/B for 60 seconds or more.

3. INSPECT DIAGNOSIS (CHECK MODE)

HINT:

Hand–held tester only:

Compared to the normal mode, the check mode has high sensing ability to detect malfunctions.

Furthermore, the same diagnostic items which are detected in Normal mode can also be detected in Check mode.

(a) Check the DTC.

(1) Check the initial conditions.

- Battery voltage 11 V or more
- Throttle valve fully closed
- Shift lever in P or N range
- Air conditioning switched OFF

(2) Turn the ignition switch OFF.

(3) Prepare the hand–held tester.

(4) Connect the hand–held tester to DLC3.

(5) Turn the ignition switch ON and switch the hand–held tester ON.

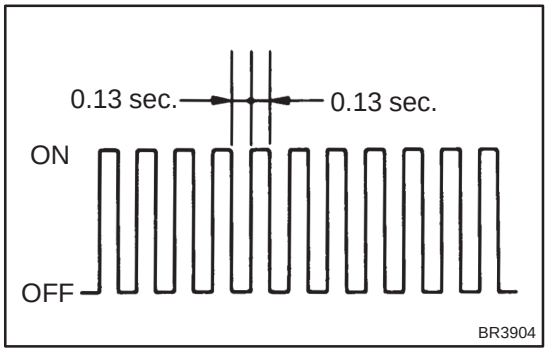

(6) Switch the hand–held tester from Normal mode to Check mode (Check that the MIL flashes).

NOTICE:

If the hand–held tester switches the ECM from the normal mode to the check mode or vice–versa, or if the ignition switch is turned from ON to ACC or OFF during the check mode, the DTC and freeze frame data will be erased.

(7) Start the engine (MIL goes off after the engine starts).

(8) Simulate the conditions of the malfunction described by the customer.

NOTICE:

Leave the ignition switch ON until you have checked the DTCs, etc.

(9) After simulating the malfunction conditions, use the hand–held tester diagnosis selector to check the DTCs and freeze frame data, etc.

HINT:

Take care not to turn the ignition switch OFF, as turning it off switches the diagnosis system from Check mode to Normal mode, which all DTCs etc. are erased.

(10) After checking the DTC, inspect the applicable circuit.

(b) Clear the DTC.

(1) When using the hand–held tester:
The following operation will erase the DTC and freeze frame data. Operate the hand–held tester to erase the codes.

(2) When not using the hand–held tester:
Remove the EFI fuse from engine room J/B for 60 seconds or more.

4. DATA LIST

HINT:

According to the DATA LIST displayed by the hand–held tester, you can read the value of the switch, sensor, actuator and so on without parts removal. Reading the DATA LIST as the first step of troubleshooting is one of the methods to shorten the work time.

(a) Warm up the engine.
(b) Turn the ignition switch OFF.
(c) Connect the hand–held tester to the DLC3.
(d) Turn the ignition switch ON.
(e) According to the display on tester, read the ”DATA LIST”.

Item	Measurement Item/ Display (Range)	Normal Condition	Diagnostic Note
STOP LIGHT SW	Stop light SW Status/ ON or OFF	• Brake Pedal is depressed: ON • Brake Pedal is released: OFF	←
SHIFT	Actual Gear Position/ 1st, 2nd, 3rd, 4th (O/D)	Shift lever Range is; • D: 1st, 2nd, 3rd or 4th (O/D)	←
LOCK UP SOL	Lock Up Solenoid Status/ ON or OFF	• Lock Up: ON • Except Lock Up: OFF	←
KICKDOWN SW	Kick down SW Status/ ON or OFF	• Accelerator Pedal is depressed all the way down: ON • Accelerator Pedal is released: OFF	←
SNOW SW	Pattern SW (2nd) Status/ ON or OFF	• IG SW ON: OFF ↓ • Pattern SW (2nd) Push: ON ↓ • Pattern SW (2nd) Push: OFF	←

Item	Measurement Item/ Display (Range)	Normal Condition	Diagnostic Note
PNP SW [NSW]	PNP SW Status/ ON or OFF	Shift lever range is; P or N: ON Except P or N: OFF	The shift lever range and these values are different, there are failures of the PNP switch or shift cable adjustment.
REVERSE	PNP SW Status/ ON or OFF	Shift lever range is; R: ON Except R: OFF	
DRIVE	PNP SW Status/ ON or OFF	Shift lever range is; D and S: ON Except D and S: OFF	
SOLENOID (SLT)	Shift Solenoid SLT Status/ ON or OFF	IG SW ON: ON	←
AT FLUID TEMP	ATF Temp. Sensor Value/ min.: –40°C (–40°F) max.: 215°C (419°F)	80°C (176°F) (After Stall Test)	If the value is "–40°C (–40°F)" or "215°C (419°F)", ATF temp. sensor circuit is opened or shorted.

5. ACTIVE TEST

HINT:

Performing the ACTIVE TEST using the hand–held tester allows the relay, VSV, actuator and so on to operate without parts removal. Performing the ACTIVE TEST as the first step of troubleshooting is one of the method to shorten the work time.

It is possible to display the DATA LIST during the ACTIVE TEST.

(a) Warm up the engine.
(b) Turn the ignition switch OFF.
(c) Connect the hand–held tester to the DLC3.
(d) Turn the ignition switch ON.
(e) According to the display on tester, perform the "ACTIVE TEST".

Item	Test Details	Diagnostic Note
LINE PRESS UP	[Test Details] Operate the shift solenoid SLT and raise the line pressure. [Vehicle Condition] • Vehicle Stopped. • IDL: ON [Others] ON: Line pressure up. OFF: No action (normal operation)	–
LOCK UP	[Test Details] Control the shift solenoid SL to set the ATM to the lock–up condition. [Vehicle Condition] Vehicle Speed: 60 km/h (37 mph) or more	Possible to check the SL operation.
SHIFT	[Test Details] Operate the shift solenoid valve and set the each shift range by yourself. [Vehicle Condition] Less than 50 km/h (31 mph) [Others] • Press → button: Shift up • Press ← button: Shift down	Possible to check the operation of the shift solenoid values.

6. PROBLEM SYMPTOM CONFIRMATION

(a) Taking into consideration the results of the customer problem analysis, try to reproduce the symptoms of the trouble. If the problem is that the transaxle does not shift up, shift down, or the shift point is too high or too low, conduct the following road test referring to the automatic shift schedule and simulate the problem symptoms.

7. ROAD TEST

NOTICE:

Conduct the test at normal operating ATF temperature 50 to 80˚C (122 to 176˚F).

(a) D range test

Shift into the D range and fully depress the accelerator pedal and check the following points:

(1) Check up–shift operation.

Check that 1 → 2, 2 → 3 and 3 → O/D up–shift take place, and that the shift points conform to the automatic shift schedule (See page 03–45).

HINT:

O/D Gear Up–shift Prohibition Control

- Coolant temp. is 60˚C (140˚F) or less and vehicle speed is 70 km/h (43 mph) or less.
- ATF temp. is 10˚C (50˚F) or less.

O/D and 3rd Gear Lock–up Prohibition Control

- Brake pedal is depressed.
- Accelerator pedal is released.
- ATF temp. is 10˚C (50˚F) or less.
- Coolant temp. is 60˚C (140˚F) or less.

When the 2nd start switch is on, there is no 1 → 2 up–shift and 2 → 1 down–shift.

(2) Check for shift shock and slip.

Check for shock and slip at the 1 → 2, 2 → 3 and 3 → O/D up–shift.

(3) Check for abnormal noises and vibration.

Run in D range lock–up or O/D gear and check for abnormal noise and vibration.

HINT:

The check for the cause of abnormal noise and vibration must be done very thoroughly as it could also be sure to loss of balance in the differential, torque converter, etc.

(4) Check kick–down operation.

While running in the D range, 2nd, 3rd and O/D gears, check to see that the possible kick–down vehicle speed limits for 2 → 1, 3 → 2 and O/D → 3 kick–downs conform to those indicated in the automatic shift schedule (See page 03–45).

(5) Check for abnormal shock and slip at kick–down.

(6) Check the lock–up mechanism.

- Drive in D range O/D gear, at a steady speed (lock–up ON) of about 70 km/h (43 mph).
- Lightly depress the accelerator pedal and check that the engine speed does not change abruptly.

If there is a big jump in engine speed, there is no lock–up.

(b) S range test

Shift to the S range, depress the accelerator pedal and check the following points:

Shift operations.

- Shifting the shift lever to ”+” or ”–” changes the shift range on the combination meter.

HINT:

Manual shift prohibition control is performed when:

- Down–shifting causes engine overrun.
- Down–shifting is required continuously. (Down–shifting to 1st gear may not be performed.)

(c) R range test

Shift into the R range and fully depress the accelerator pedal and check for slipping.

CAUTION:

Before conducting this test, ensure that the test area is free from people and obstruction.

(d) P range test

Stop the vehicle on a grade (more than 5˚) and after shifting into the P range, release the parking brake. Then, check to see that the parking lock pawl holds the vehicle in place.

8. MECHANICAL SYSTEM TESTS

(a) Measure the stall speed.

The object of this test is to check the overall performance of the transaxle and engine by measuring the stall speeds in the D and R ranges.

NOTICE:

- **Do the test at normal operating ATF temperature 50 to 80˚C (122 to 176˚F).**
- **Do not continuously run this test for longer than 5 seconds.**
- **To ensure safety, do this test in a wide, clear level area which provides good traction.**
- **The stall test should always be carried out in pairs. One technician should observe the conditions of wheels or wheel stoppers outside the vehicle while the other is doing the test.**

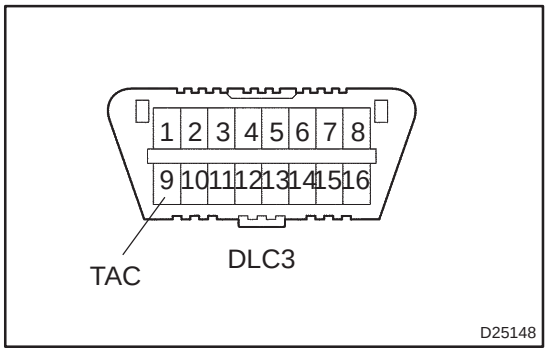

(1) Chock the 4 wheels.
(2) Connect the hand–held tester to DLC3 or tachometer to terminal TAC of DLC3 with SST.

SST 09843–18030

(3) Fully apply the parking brake.
(4) Keep your left foot pressing firmly on the brake pedal.
(5) Start the engine.
(6) Shift into the D range. Press all the way down on the accelerator pedal with your right foot.
(7) Quickly read the stall speed at this time.

Stall speed: 2,400 ± 150 rpm

(8) Do the same test in the R range.

Stall speed: 2,400 ± 150 rpm

Evaluation:

Problem	Possible cause
(a) Stall speed low in D and R ranges	• Engine output may be insufficient • Stator one–way clutch not operating properly HINT: If the value is larger or smaller than the specified value by 600 rpm or more, the torque converter could be faulty.
(b) Stall speed high in D range	• Line pressure too low • Forward clutch slipping • One–way clutch No.2 not operating properly
(c) Stall speed high in R range	• Line pressure too low • Reverse clutch slipping • 1st and reverse brake slipping
(d) Stall speed high in D and R ranges	• Line pressure too low • Improper fluid level

(b) Measure the time lag.

(1) When the shift lever is shifted while the engine is idling, there will be a certain time lapse or lag before the shock can be felt. This is used for checking the condition of the reverse clutch, forward clutch, and 1st and reverse brake.

NOTICE:

- **Do the test at normal operating ATF temperature 50 to 80˚C (122 to 176˚F).**
- **Be sure to allow 1 minute interval between tests.**
- **Take 3 measurements and take the average value.**

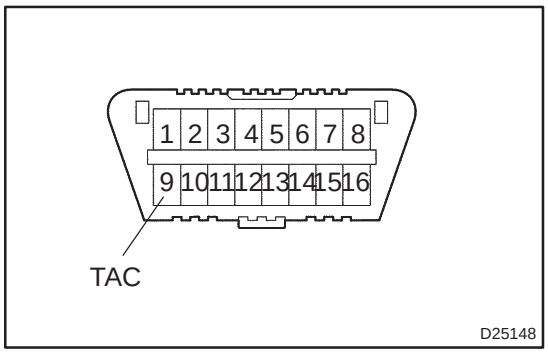

(2) Chock the 4 wheels.

(3) Connect the hand–held tester to DLC3 or tachometer to terminal TAC of DLC3 with SST.

SST 09843–18030

(4) Start engine and check idle speed.

Idle speed: 650 ± 50 rpm (In N range and A/C OFF)

(5) Shift the lever from N to D range. Using a stop watch, measure the time from when the lever is shifted until the shock is felt.

Time lag: N → D less than 1.2 seconds

(6) In the same way, measure the time lag for N → R.

Time lag: N → R less than 1.5 seconds

Evaluation (If N → D or N → R time lag is longer than the specified):

Problem	Possible cause
N → D time lag is longer	• Line pressure too low • Forward clutch worn • One–way clutch No.2 not operating properly
N → R time lag is longer	• Line pressure too low • Reverse clutch worn • 1st and reverse brake worn

9. HYDRAULIC TEST

(a) Measure the line pressure.

NOTICE:

- **Do the test at normal operation ATF temperature 50 to 80˚C (122 to 176˚F).**
- **The line pressure test should always be carried out in pairs. One technician should observe the conditions of wheels or wheel stopper outside the vehicle while the other is doing the test.**
- **Be careful to prevent SST's hose from interfering with the exhaust pipe.**

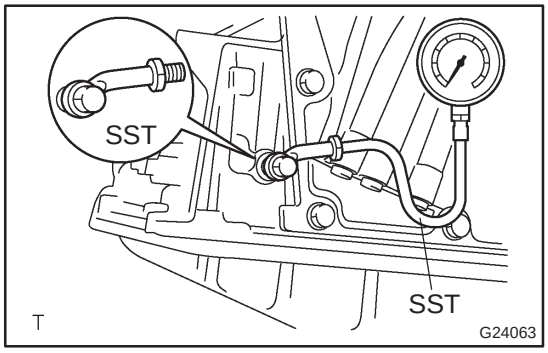

(1) Warm up the ATF.
(2) Remove the test plug on the left side of the transaxle case and connect SST.

SST 09992–00095 (09992– 00231, 09992–00271)

(3) Fully apply the parking brake and chock the 4 wheels.
(4) Connect the hand–held tester to DLC3.
(5) Start the engine and check idling speed.
(6) Keep your left foot pressing firmly on the brake pedal and shift into D range.
(7) Measure the line pressure when the engine is idling.
(8) Depress the accelerator pedal all the way down. Quickly read the highest line pressure when engine speed reaches stall speed.
(9) In the same way, do the test in R range.

Specified line pressure:

Condition	D range kPa (kgf / cm^2, psi)	R range kPa (kgf / cm^2, psi)
Idling	370 to 410 (3.8 to 4.2, 54 to 60)	540 to 640 (5.5 to 6.5, 78 to 92)
Stall	1,110 to 1,230 (11.3 to 12.5, 161 to 178)	1,700 to 1,810 (17.3 to 18.5, 246 to 263)

Evaluation:

Problem	Possible cause
If the measured values at all ranges are higher	• Shift solenoid valve SLT defective • Regulator valve detective
If the measured values at all ranges are lower	• Shift solenoid valve SLT defective • Regulator valve detective • Oil pump defective
If pressure is low in the D range only	• D range circuit fluid leak • Forward clutch defective
If pressure is low in the R range only	• R range circuit fluid leak • Reverse clutch defective • 1st and reverse brake defective

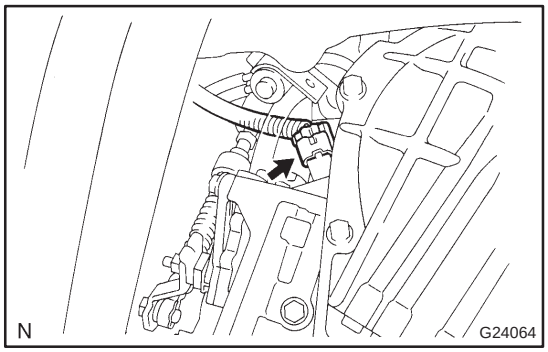

10. MANUAL SHIFTING TEST

HINT:

By this test, it can be determined whether the trouble is within the electrical circuit or is a mechanical problem in the transaxle.

(a) Disconnect the transmission wire connector.

(b) Inspect the manual driving operation.

Check that the shift and gear ranges correspond to the table below.

While driving, shift through the D range.

Check that the gear change corresponds to the shift range.

Shift range	Gear position
D	3rd
R	Reverse
P	Pawl Lock

HINT:

If the gear positions of the D are difficult to distinguish, do the above road test.

If any abnormality is found in the above test, the problem is in the transaxle itself.

(c) Connect the transmission wire connector.

(d) Clear the DTC.

11. RESET MEMORY

CAUTION:

Perform the RESET MEMORY (AT initialization) when replacing the automatic transaxle assy, engine assy or ECM.

NOTICE:

Hand–held tester only

(a) Turn the ignition switch to OFF.

(b) Connect the hand–held tester to the DLC3.

(c) Turn the ignition switch to ON.

(d) Perform the reset memory procedure from the ENGINE menu.

CAUTION:

After performing the RESET MEMORY, be sure to perform the ROAD TEST described earlier.

Tester menu flow:

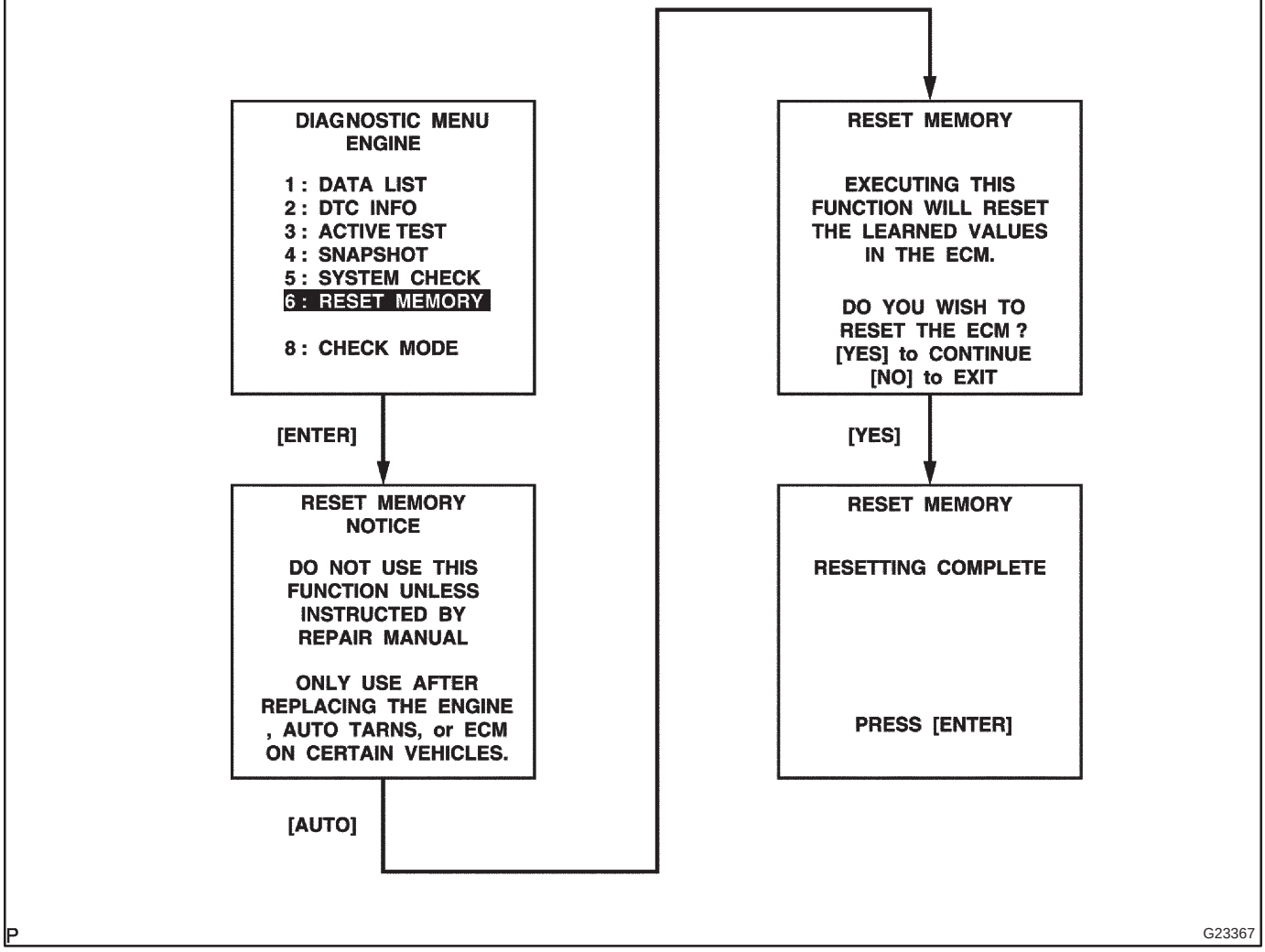

0567Q–07

DIAGNOSTIC TROUBLE CODE CHART

If a DTC is displayed during the DTC check, check the circuit listed in the table below and proceed to the page given.

*1 : ● ... MIL light up

DTC No. (See Page)	Detection Item	Trouble Area	MIL *1	Memory
P0500 (05–98)	Vehicle Speed Sensor Malfunction	• Combination meter • Open or short in speed sensor circuit • Speed sensor • ECM	●	○
P0710 (05–1003)	Transmission Fluid Temperature Sensor Circuit Malfunction (ATF Temperature Sensor)	• Open or short in ATF temp. sensor circuit • Transmission wire (ATF temperature sensor) • ECM	●	○
P0711 (05–1005)	Transmission Fluid Temperature Sensor Circuit Range/Performance (ATF Temperature Sensor)		●	○
P0750 (05–1007)	Shift Solenoid "A" Malfunction (Shift Solenoid Valve S1)	• Shift solenoid valve S1 is stuck open or closed • Valve body is blocked up or stuck • Automatic transaxle (clutch, brake or gear etc.)	●	○
P0753 (05–1010)	Shift Solenoid "A" Electrical (Shift Solenoid Valve S1)	• Open or short in shift solenoid valve S1 circuit • Shift solenoid valve S1 • ECM	●	○
P0755 (05–1007)	Shift Solenoid "B" Malfunction (Shift Solenoid Valve S2)	• Shift solenoid valve S2 is stuck open or closed • Valve body is blocked up or stuck • Automatic transaxle (clutch, brake or gear etc.)	●	○
P0758 (05–1010)	Shift Solenoid "B" Electrical (Shift Solenoid Valve S2)	• Open or short in shift solenoid valve S2 circuit • Shift solenoid valve S2 • ECM	●	○
P0770 (05–1013)	Shift Solenoid "E" Malfunction (Shift Solenoid Valve SL)	• Shift solenoid valve SL is stuck open or closed • Valve body blocked or stuck • Shift solenoid valve SL • Torque converter clutch • Automatic transaxle (clutch, brake or gear etc.)	●	○
P0773 (05–1015)	Shift Solenoid "E" Electrical (Shift Solenoid Valve SL)	• Open or short in shift solenoid valve SL circuit • Shift solenoid valve SL • ECM	●	○
P1520 (05–1018)	Stop Light Switch Circuit	• Open or short in stop light switch circuit • Stop lamp switch assy • ECM	●	○
P1725 (05–1019)	NT Revolution Sensor Circuit Malfunction (Input Turbine Speed Sensor)	• Open or short in speed sensor (NT) circuit • Speed sensor (NT) • ECM	●	○
P1760 (05–1021)	Linear Solenoid for Line Pressure Control Circuit Malfunction (Shift Solenoid Valve SLT)	• Open or short in shift solenoid valve SLT circuit • Shift solenoid valve SLT • ECM	●	○
P1780 (05–1024)	Park/Neutral Position Switch Malfunction	• Short in park/neutral position switch circuit • Park/Neutral position switch assy • ECM	●	○
P1790 (05–1027)	ST Solenoid Circuit Malfunction (Shift Solenoid Valve ST)	• Open or short in shift solenoid valve ST circuit • Shift solenoid valve ST • ECM	●	○
P1798 (05–1030)	SB Solenoid Circuit Malfunction (Shift Solenoid Valve SB)	• Open or short in shift solenoid valve SB circuit • Shift solenoid valve SB • ECM	●	○

HINT:
This DTC may be output when the clutch, brake and gear components, etc. inside the automatic transmission are damaged.

0567R–10

LOCATION

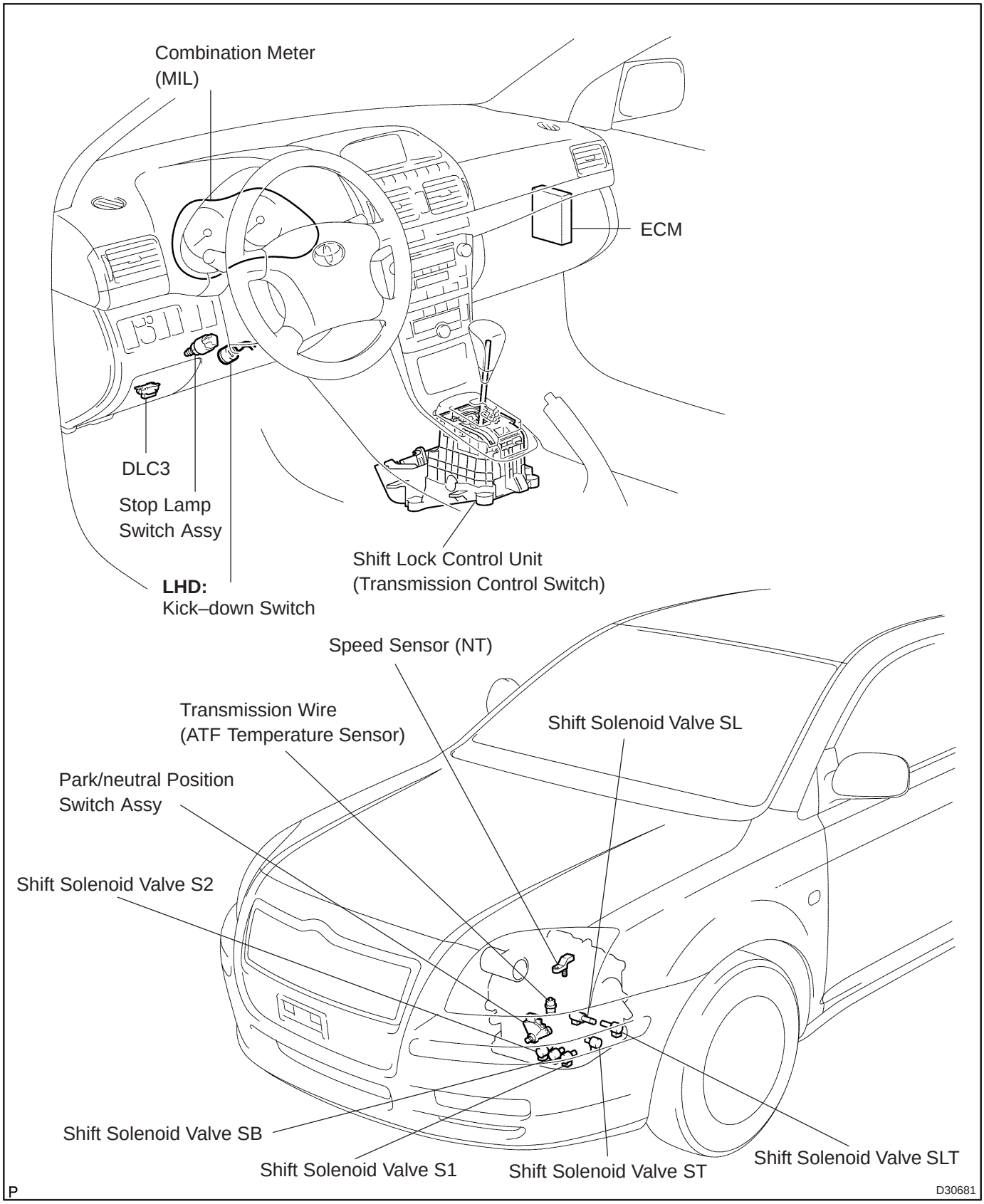

05C8F–01

TERMINALS OF ECM

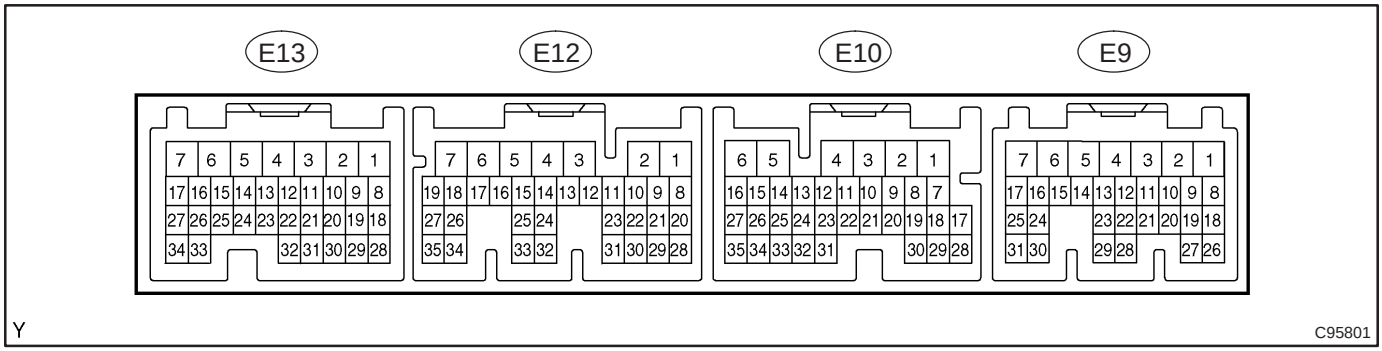

Symbols (Terminals No.)	Wiring Color	Condition	STD Voltage (V)
SLT^{+} (E13–17) – SLT^{-} (E13–16)	P–L – P	IG switch ON	10 to 14
THO (E13–30) – E2 (E13–28)	V – BR	IG switch ON and ATF temperature 110 ˚C (230 ˚F)	Below 1
ST (E12–12) – E1 (E12–7)	R–B – BR	IG switch ON	Below 1
		IG switch ON and R gear	10 to 14
SL (E12–13) – E1 (E12 – 7)	R – BR	IG switch ON	Below 1
		Vehicle driving under lock–up position	10 to 14
S2 (E12–14) – E1 (E12–7)	P – BR	IG switch ON	Below 1
		1st or O/D gear	10 to 14
		2nd or 3rd gear	Below 1
S1 (E12–15) – E1 (E12–7)	P–L – BR	IG switch ON	10 to 14
		1st or 2nd gear	10 to 14
		3rd or O/D gear	Below 1
SB (E12–19) – E1 (E12–7)	L – BR	IG switch ON	Below 1
NT^{+} (E12–27) – NT^{-} (E12–35)	B–O – B	Engine is running	Pulse signal is output Below 1 ↔ 4 to 5
SPT (E10–8) – E1 (E12–7)	L – BR	IG switch ON and Shift lever S position	7.5 to 14
		IG switch ON and Shift lever except for S position	Below 1
D (E10–10) – E1 (E12–7)	LG–B – BR	IG switch ON and Shift lever D position	10 to 14
		IG switch ON and Shift lever other than D position	Below 1
R (E10–11) – E1 (E12–7)	R–Y – BR	IG switch ON and Shift lever R position	10 to 14
		IG switch ON and Shift lever other than R position	Below 1
KD*1 (E10–12) – E1 (E12–7)	W*1 – BR	IG switch ON and Kick–down switch ON	Below 1
		IG switch ON and Kick–down switch OFF	10 to 14
SPD (E10–17) – E1 (E12–7)	V–W – BR	IG switch ON and rotate driving wheel slowly	Pulse signal is output
SFTU (E10–23) – E1 (E12–7)	R – BR	IG switch ON and Shift lever S position	7.5 to 14
		IG switch ON and Shift lever "+" position (Up shift)	Below 1.5
SFTD (E10–30) – E1 (E12–7)	B – BR	IG switch ON and Shift lever S position	7.5 to 14
		IG switch ON and Shift lever "–" position (Down shift)	Below 1.5

*1: LHD

0567W–10

PROBLEM SYMPTOMS TABLE

HINT:

If a normal code is displayed during the DTC check but the trouble still occurs, check the circuits for each symptom in the order given in the charts on the following pages and proceed to the page given for trouble-shooting.

The Matrix Chart is divided into 3 chapters.

- If the instruction ”Proceed to next circuit inspection shown on matrix chart” is given in the flow chart for each circuit, proceed to the circuit with the next highest number in the table to continue the check.
- If the trouble still occurs even though there are no abnormalities in any of the other circuits, then check and replace the ECM.

CHAPTER 1: ELECTRONIC CIRCUIT MATRIX CHART

Symptom	Suspect Area	See page
No up–shift (A particular gear, from 1st to O/D gear, is not up–shifted)	ECM	01–32
No down–shift (A particular gear, from O/D to 1st gear, is not down–shifted)	ECM	01–32
No lock–up or No lock–up off	3. Stop light switch circuit 4. Engine coolant temp. sensor circuit 5. Throttle position sensor circuit 6. ECM	05–1018 05–16 05–16 01–32
Shift point too high or too low	1. Engine coolant temp. sensor circuit 2. Throttle position sensor circuit 3. ECM	05–16 05–16 01–32
No gear change by shifting into ”+” or ”–” while the shift lever is in the Sposition	1. Transmission control switch circuit 2. ECM	05–1035 01–32
Up–shift to O/D from 3rd while engine is cold	1. Engine coolant temp. sensor circuit 2. ATF temp. sensor circuit 3. ECM	05–16 05–1003 05–1005 01–32
Harsh engagement (N → D)	ECM	01–32
Harsh engagement (Lock–up)	ECM	01–32
Harsh engagement (Any driving range)	ECM	01–32
Poor acceleration	1. Pattern select switch circuit (ECT SNOW switch) 2. Instrument panel J/B assy (Integration relay) 3. ECM	05–1040 01–32
Engine stalls when starting off or stopping	ECM	01–32
No kick–down	1. Kick–down switch circuit 2. ECM	05–1033 01–32
No 2nd start	1. Pattern select switch circuit (ECT SNOW switch) 2. Transmission control switch circuit 3. Park/neutral position switch circuit 4. Instrument panel J/B assy (Integration relay) 5. ECM	05–1040 05–1035 05–1024 05–1040 01–32

Chapter 2: On–vehicle Repair
(★: U340E, U341E AUTOMATIC TRANSAXLE Repair Manual Pub. No. RM824E)

Symptom	Suspect Area	See page
Vehicle does not move in any forward range and reverse range	1. Manual valve 2. Primary regulator valve 3. Secondary regulator valve 4. Off–vehicle repair matrix chart	★ ★ ★ –
Vehicle does not move in R range	1. Manual valve 2. Off–vehicle repair matrix chart	★ –
No up–shift (1st → 2nd)	1. Valve body assy 2. Off–vehicle repair matrix chart	★ –
No up–shift (2nd → 3rd)	1. Valve body assy 2. Off–vehicle repair matrix chart	★ –
No up–shift (3rd → O/D)	1. Valve body assy 2. Off–vehicle repair matrix chart	★ –
No down–shift (O/D → 3rd)	Valve body assy	★
No down–shift (3rd → 2nd)	Valve body assy	★
No down–shift (2nd → 1st)	Valve body assy	★
No lock–up or No lock–up off	1. Lock–up relay valve 2. Solenoid relay valve 3. Solenoid modulator valve 4. Off–vehicle repair matrix chart	★ ★ ★ –
Harsh engagement (N → D)	1. C_1 accumulator 2. Accumulator control valve 3. Off–vehicle repair matrix chart	★ ★ –
Harsh engagement (N → R)	1. C_3 accumulator 2. Accumulator control valve 3. Reverse control valve 4. Off–vehicle repair matrix chart	★ ★ ★ –
Harsh engagement (Lock–up)	1. Lock–up relay valve 2. Accumulator control valve 3. Off–vehicle repair matrix chart	★ ★ –
Harsh engagement (1st → 2nd)	1. B_2 accumulator 2. Accumulator control valve	★ ★
Harsh engagement (2nd → 3rd)	1. C_2 accumulator 2. Accumulator control valve	★ ★
Harsh engagement (3rd → O/D)	1. B_1 accumulator 2. Accumulator control valve 3. 3–4 shift timing valve	★ ★ ★
Harsh engagement (O/D → 3rd)	Valve body assy	★
Harsh engagement (D, 2, L)	Coat relay valve	★
Slip or shudder (Forward and reverse)	1. Oil strainer 2. Off–vehicle repair matrix chart	40–42 –
No kick–down	Valve body assy	★
Poor acceleration	SLT damper	★

Chapter 3: Off–vehicle Repair
(★: U340E, U341E AUTOMATIC TRANSAXLE Repair Manual Pub. No. RM824E)

Symptom	Suspect Area	See page
Vehicle does not move in any forward range and reverse range	1. Planetary gear unit 2. Forward clutch 3. One–way clutch No.2 4. Reverse Clutch 5. 1st and reverse brake	★ ★ ★ ★ ★
Vehicle does not move in R range	1. Planetary gear unit 2. Reverse Clutch 3. 1st and reverse brake	★ ★ ★
No up–shift (1st → 2nd)	1. 2nd brake 2. One–way clutch No.1	★ ★
No up–shift (2nd → 3rd)	Direct clutch	★
No up–shift (3rd → O/D)	O/D and 2nd brake	★
No lock–up or No lock–up off	Torque converter clutch	40–37
Harsh engagement (N → D)	1. Forward clutch 2. One–way clutch No.2	★ ★
Harsh engagement (N → R)	1. Reverse clutch 2. 1st and reverse brake	★ ★
Harsh engagement (Lock–up)	Torque converter clutch	40–37
Harsh engagement (1st → 2nd)	1. 2nd brake 2. One–way clutch No.1	★ ★
Harsh engagement (2nd → 3rd)	Direct clutch	★
Harsh engagement (3rd → O/D)	O/D and 2nd brake	★
Slip or shudder (Forward range)	1. Torque converter clutch 2. Forward clutch 3. Direct clutch 4. O/D and 2nd brake 5. 2nd brake 6. One–way clutch No.1 7. One–way clutch No.2	40–37 ★ ★ ★ ★ ★ ★
Slip or shudder (Reverse range)	1. Reverse clutch 2. 1st and reverse brake	★ ★
Slip or shudder (1st)	One–way clutch No.2	★
Slip or shudder (2nd)	1. 2nd brake 2. One–way clutch No.1	★ ★
Slip or shudder (3rd)	Direct clutch	★
Slip or shudder (O/D)	O/D and 2nd brake	★
No engine braking (1st)	1st and reverse brake	★
No engine braking (2nd)	O/D and 2nd brake	★
Poor acceleration (All range)	Torque converter clutch	40–37
Large shift shock or engine stalls when starting off or stopping	Torque converter clutch	40–37

DTC	P0710	TRANSMISSION FLUID TEMPERATURE SENSOR CIRCUIT MALFUNCTION

CIRCUIT DESCRIPTION

The ATF temperature sensor converts the fluid temperature into a resistance value which is input into the ECM.

DTC No.	DTC Detection Condition	Trouble Area
P0710	Either (a) or (b) is detected for 0.5 sec. or more: (1 trip detection logic) (c) Temp. sensor resistance is less than 79 Ω (d) After engine has been operating for 15 min. or more, resistance at temp. sensor is more than 156 kΩ	• Open or short in ATF temp. sensor circuit • Transmission wire (ATF temperature sensor) • ECM

WIRING DIAGRAM

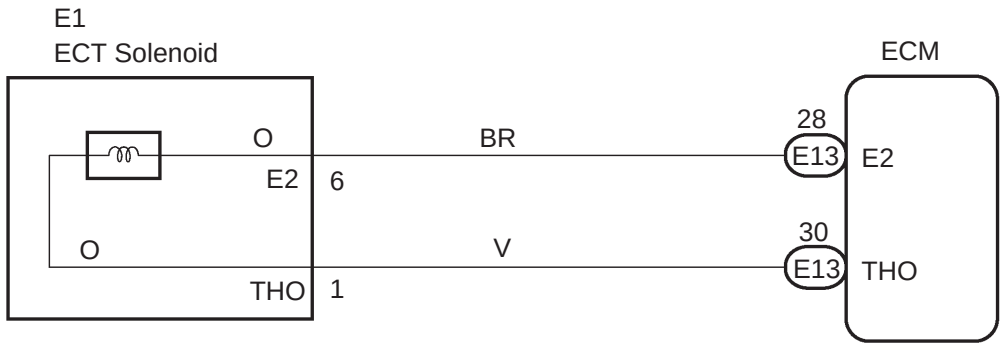

INSPECTION PROCEDURE

1 INSPECT TRANSMISSION WIRE(ATF TEMPERATURE SENSOR)

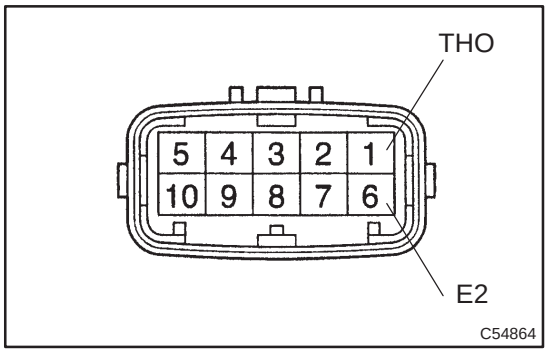

(a) Disconnect the transmission wire connector from the transaxle.
(b) Measure the resistance between terminals THO and E2.
OK:
Resistance: 79 Ω to 156 kΩ
(c) Check the continuity between the wire harness side connectors.
OK:
Standard (Check for a short):

Symbols	Specified condition
THO – Body ground	No continuity
E2 – Body ground	

NG → **REPAIR OR REPLACE TRANSMISSION WIRE**

OK

2 CHECK HARNESS AND CONNECTOR(TRANSMISSION WIRE – ECM)

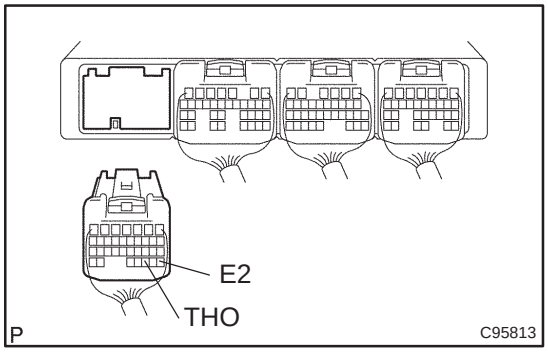

(a) Connect the transmission wire connector to the transaxle.
(b) Disconnect the ECM connector.
(c) Measure the resistance between terminals THO and E2.
OK:
Resistance: 79 Ω to 156 kΩ
(d) Check the continuity between the wire harness side connectors.
OK:
Standard (Check for a short):

Symbols	Specified condition
THO – Body ground	No continuity
E2 – Body ground	

NG → **REPAIR OR REPLACE HARNESS OR CONNECTOR**

OK

CHECK AND REPLACE ECM

DTC	P0711	TRANSMISSION FLUID TEMPERATURE SENSOR CIRCUIT RANGE/PERFORMANCE

CIRCUIT DESCRIPTION

The ATF temperature sensor converts the fluid temperature into a resistance value which is input into the ECM.

DTC No.	DTC Detection Condition	Trouble Area
P0711	Both (a) and (b) are detected: (2–trip detection logic) (a) After 12 sec. of engine start, temp. of atmosphere and that of engine coolant is more than –10°C (b) After normal driving for over 20 min. and 10 km, ATF temp. is less than 10°C	• Open or short in ATF temp. sensor circuit • Transmission wire (ATF temperature sensor) • ECM

WIRING DIAGRAM

See page 05–1003.

INSPECTION PROCEDURE

1	INSPECT TRANSMISSION WIRE(ATF TEMPERATURE SENSOR)

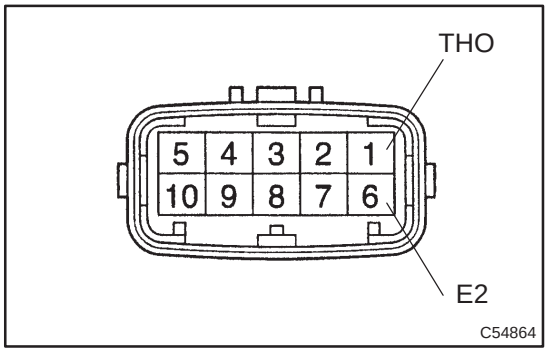

(a) Disconnect the transmission wire connector from the transaxle.

(b) Measure the resistance between terminals THO and E2.

OK:

Temperature: °C (°F)	Resistance: kΩ
10 (50)	6.4
110 (230)	0.2

(c) Check the continuity between the wire harness side connectors.

OK:

Standard (Check for a short):

Symbols	Specified condition
THO – Body ground	No continuity
E2 – Body ground	

NG → **REPAIR OR REPLACE TRANSMISSION WIRE**

OK

2	CHECK HARNESS AND CONNECTOR(TRANSMISSION WIRE – ECM)

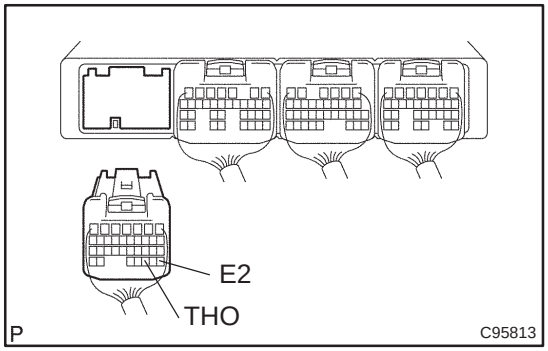

(a) Connect the transmission wire connector to the transaxle.
(b) Disconnect the ECM connector.
(c) Measure the resistance between terminals THO and E2.
OK:

Temperature: °C (°F)	Resistance: kΩ
10 (50)	6.4
110 (230)	0.2

(d) Check the continuity between the wire harness side connectors.
OK:
Standard (Check for a short):

Symbols	Specified condition
THO – Body ground	No continuity
E2 – Body ground	

NG → **REPAIR OR REPLACE HARNESS OR CONNECTOR**

OK

CHECK AND REPLACE ECM

DTC	P0750	SHIFT SOLENOID ”A” MALFUNCTION (SHIFT SOLENOID VALVE S1)

DTC	P0755	SHIFT SOLENOID ”B” MALFUNCTION (SHIFT SOLENOID VALVE S2)

SYSTEM DESCRIPTION

The ECM uses signals from the vehicle speed sensor and speed sensor NT to detect the actual gear position (1st, 2nd, 3rd or O/D gear).

Then the ECM compares the actual gear with the shift schedule in the ECM memory to detect the mechanical trouble of the shift solenoid valves, the valve body or automatic transaxle (clutch, brake or gear etc.).

DTC No.	DTC Detecting Condition	Trouble Area
P0750	The gear required by the ECM does not match the actual gear when driving (2–trip detection logic)	• Shift solenoid valve S1 is stuck open or closed • Valve body is blocked up or stuck • Automatic transaxle (clutch, brake or gear etc.)
P0755		• Shift solenoid valve S2 is stuck open or closed • Valve body is blocked up or stuck • Automatic transaxle (clutch, brake or gear etc.)

INSPECTION PROCEDURE

1	INSPECT SHIFT SOLENOID VALVE(S1/S2)

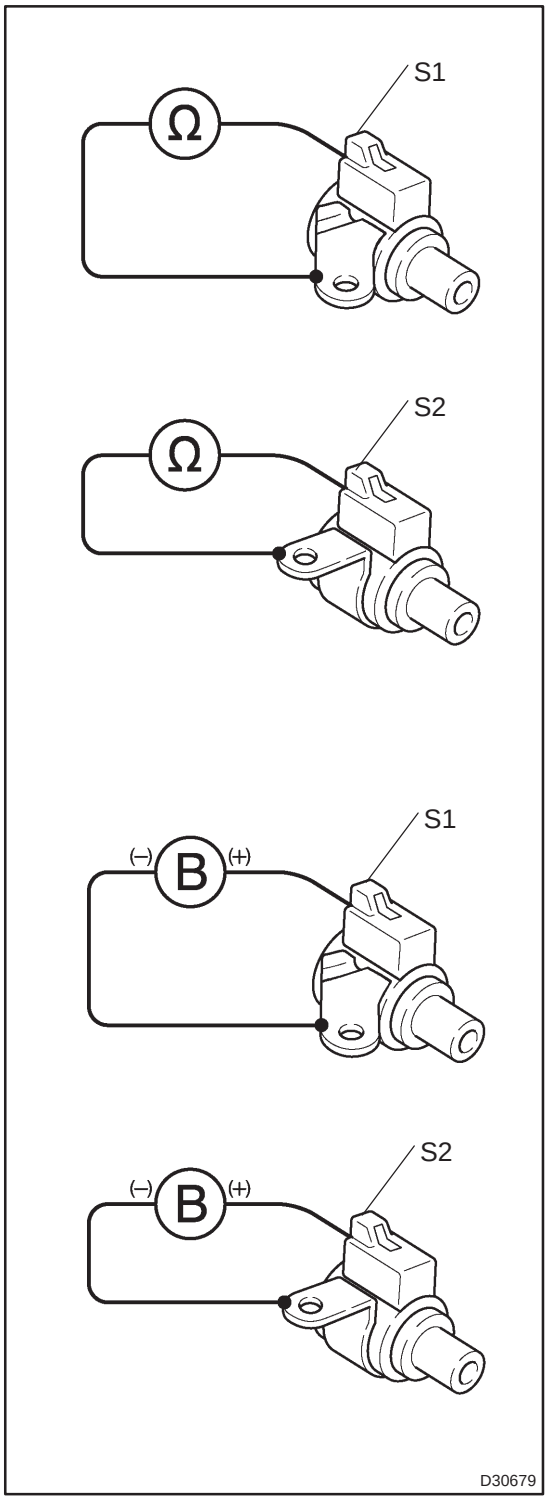

(a) Remove the shift solenoid valve S1/S2.

(b) Measure the resistance between the solenoid connector and the solenoid valve body.

OK:

Resistance: 11 to 15 Ω at 20˚C (68˚F)

(c) Connect the positive (+) lead to the terminal of solenoid valve connector and the negative (–) lead to the solenoid valve body.

OK:

The solenoid valve makes an operating noise.

NG → **REPLACE SHIFT SOLENOID VALVE(S1/S2)**

OK

2	**INSPECT TRANSMISSION VALVE BODY ASSY(See chapter 2 in the problem symptoms table)**

NG → **REPAIR OR REPLACE TRANSMISSION VALVE BODY ASSY**

OK

REPAIR OR REPLACE AUTOMATIC TRANSAXLE ASSY

DTC	P0753	SHIFT SOLENOID ”A” ELECTRICAL (SHIFT SOLENOID VALVE S1)

DTC	P0758	SHIFT SOLENOID ”B” ELECTRICAL (SHIFT SOLENOID VALVE S2)

CIRCUIT DESCRIPTION

Shifting from 1st to O/D is performed in combination with ON and OFF operation of the shift solenoid valves S1 and S2 controlled by ECM. If an open or short circuit occurs in either of the solenoid valves, the ECM controls the remaining normal solenoid valve to allow the vehicle to be operated smoothly (Fail safe function).

Fail safe function:

If either of the solenoid valve circuits develops an open or short, the ECM turns the other solenoid valve ON and OFF to shift to the gear positions shown in the table below. The ECM also turns the shift solenoid valve ST OFF at the same time. If both solenoids malfunction, hydraulic control cannot be performed electronically and must be done manually.

Manual shifting as shown in the above table must be done (In the case of a short circuit, the ECM stops sending current to the short circuited solenoid).

Range	NORMAL			SHIFT SOLENOID VALVE S1 MALFUNCTIONING			SHIFT SOLENOID VALVE S2 MALFUNCTIONING			BOTH SHIFT SOLENOID VALVES MALFUNCTIONING
	Solenoid valve		Gear	Solenoid valve		Gear	Solenoid valve		Gear	Gear when shift selector is manually operated
	S1	S2		S1	S2		S1	S2		
D	ON	ON	1st	X	OFF	3rd	ON	X	2nd	3rd
	ON	OFF	2nd	X	OFF	3rd	ON	X	2nd	3rd
	OFF	OFF	3rd	X	OFF	3rd	OFF	X	3rd	3rd
	OFF	ON	O/D	X	ON	O/D	OFF	X	3rd	3rd
2 (S range)	ON	ON	1st	X	OFF	3rd	ON	X	2nd	3rd
	ON	OFF	2nd	X	OFF	3rd	ON	X	2nd	3rd
	OFF	OFF	3rd	X	OFF	3rd	OFF	X	3rd	3rd
1 (S range)	ON	ON	1st	X	OFF	O/D	ON	X	2nd	3rd
	ON	OFF	2nd	X	OFF	3rd	ON	X	2nd	3rd

X: Malfunctions

DTC No.	DTC Detection Condition	Trouble Area
P0753 P0758	ECM checks for an open or short circuit in shift solenoid valve S1 or S2 circuit when it changes ECM records DTC P0753 or P0758 if condition (a) or (b) is detected: (a) When solenoid is energized, solenoid resistance is 8 Ω or less and it is counted (b) When solenoid is not energized, solenoid resistance is 100 kΩ or more and it is counted	• Open or short in shift solenoid valve S1/S2 circuit • Shift solenoid valve S1/S2 • ECM

HINT:

Check the shift solenoid valve S1 when DTC P0753 is output and check the shift solenoid valve S2 when DTC P0758 is output.

WIRING DIAGRAM

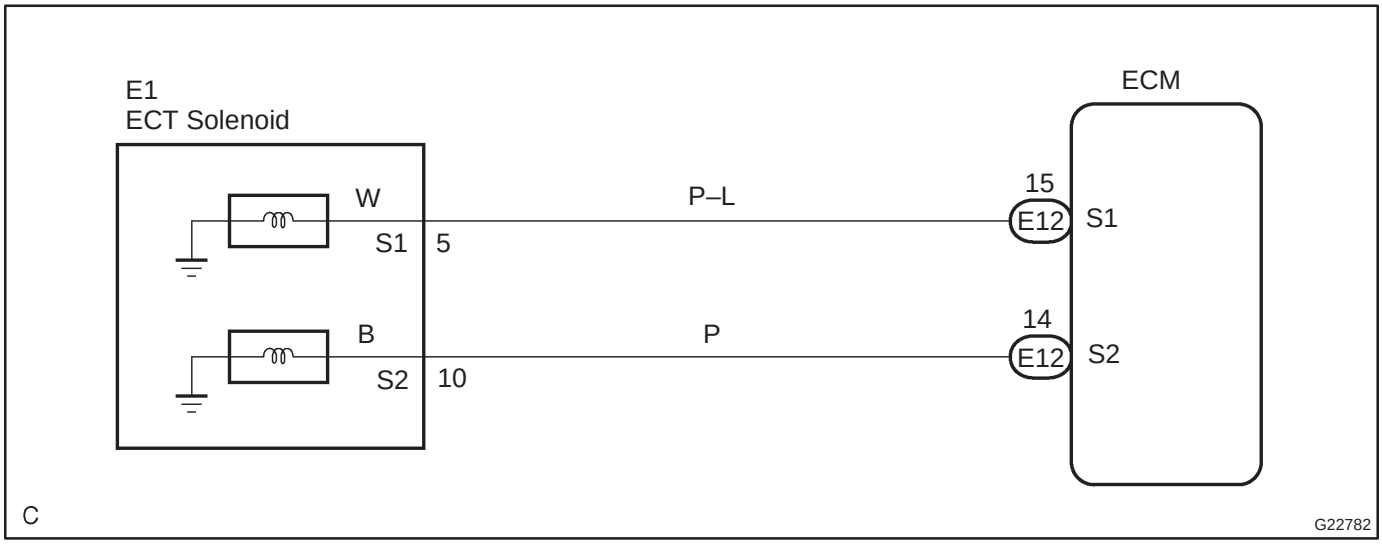

INSPECTION PROCEDURE

1	INSPECT TRANSMISSION WIRE(S1/S2)

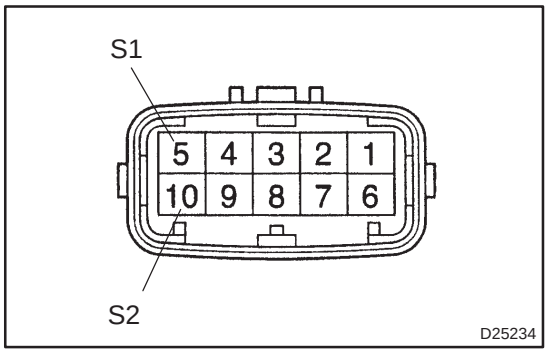

(a) Disconnect the transmission wire connector from the transaxle.

(b) Measure the resistance between terminal S1/S2 of transmission wire connector and body ground.

OK:

Resistance: 11 to 15 Ω at 20˚C (68˚F)

NG → **Go to step 3**

OK

2	CHECK HARNESS AND CONNECTOR(TRANSMISSION WIRE – ECM)

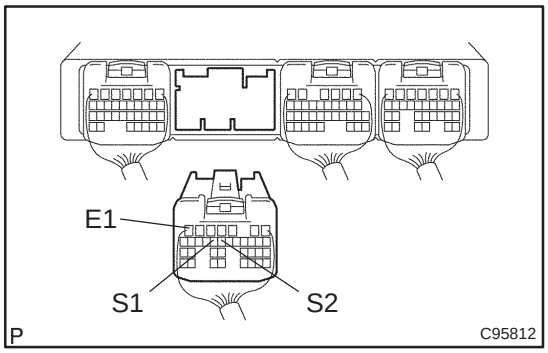

(a) Connect the transmission wire connector to the transaxle.

(b) Disconnect the ECM connector.

(c) Measure the resistance between terminals.

OK:

Resistance:

S1 – E1: 11 to 15 Ω at 20˚C (68˚F)

S2 – E1: 11 to 15 Ω at 20˚C (68˚F)

NG → **REPAIR OR REPLACE HARNESS OR CONNECTOR**

OK

CHECK AND REPLACE ECM

3 INSPECT SHIFT SOLENOID VALVE(S1/S2)

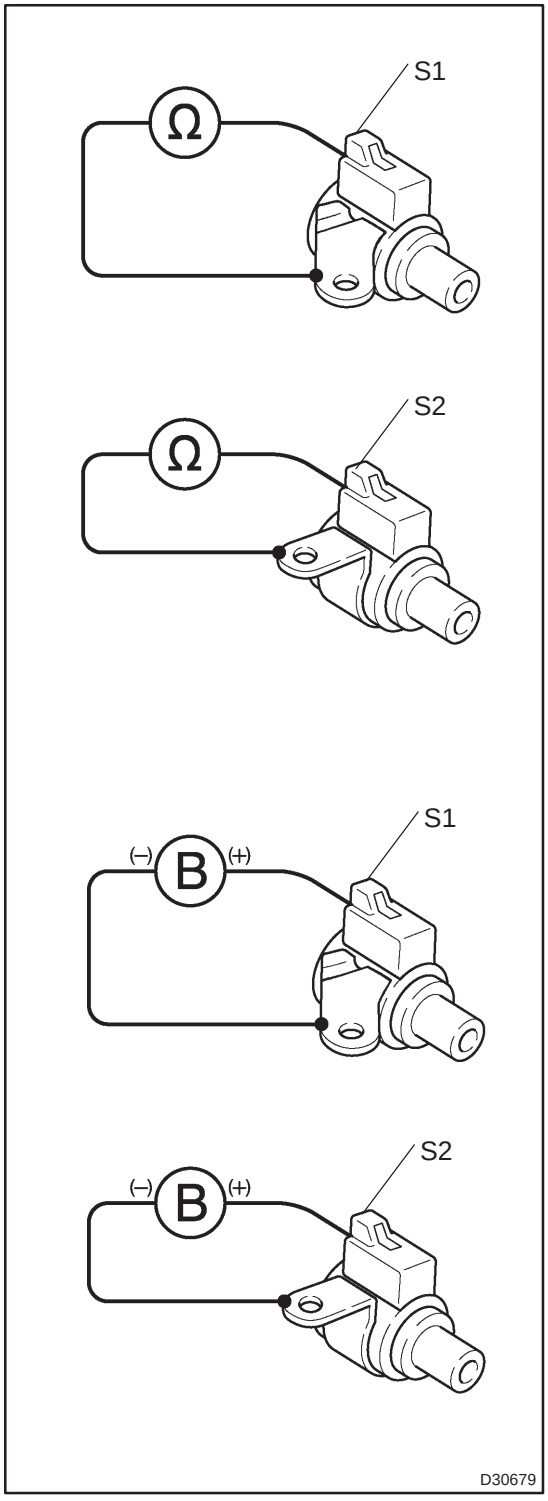

(a) Remove the shift solenoid valve S1/S2.

(b) Measure the resistance between the solenoid valve connector and the solenoid valve body.

OK:

Resistance: 11 to 15 Ω at 20˚C (68˚F)

(c) Connect the positive (+) lead to the terminal of solenoid valve connector and the negative (–) lead to the solenoid valve body.

OK:

The solenoid valve makes an operating noise.

NG → **REPLACE SHIFT SOLENOID VALVE(S1/S2)**

OK

REPAIR OR REPLACE TRANSMISSION WIRE

DTC	P0770	SHIFT SOLENOID ”E” MALFUNCTION (SHIFT SOLENOID VALVE SL)

SYSTEM DESCRIPTION

The ECM uses the signals from the throttle position sensor, air–flow meter and crankshaft position sensor to monitor the engagement condition of the lock–up clutch.

Then the ECM compares the engagement condition of the lock–up clutch with the lock–up schedule in the ECM memory to detect mechanical trouble of the shift solenoid valve SL, valve body and torque converter clutch or automatic transaxle (clutch, brake or gear etc.).

DTC No.	DTC Detecting Condition	Trouble Area
P0770	• Lock–up does not occur when driving in the lock–up range (normal driving at 80 km/h [50 mph]), or lock–up remains ON in the lock–up OFF range. (2–trip detection logic) • When lock–up is ON, clutch or brake slips or gear is broken. (2–trip detection logic)	• Shift solenoid valve SL is stuck open or closed • Valve body blocked or stuck • Shift solenoid valve SL • Torque converter clutch • Automatic transaxle (clutch, brake or gear etc.)

INSPECTION PROCEDURE

1	INSPECT SHIFT SOLENOID VALVE(SL)

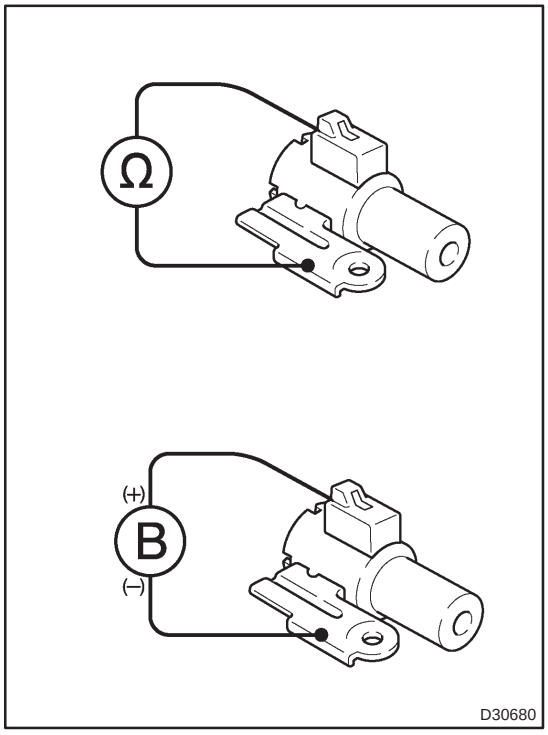

(a) Remove the shift solenoid valve SL.

(b) Measure the resistance between terminal SL of shift solenoid valve and the solenoid valve body.

OK:

Resistance: 11 to 15 Ω at 20°C (68°F)

(c) Connect the positive (+) lead to the terminal of solenoid valve connector and the negative (–) lead to the solenoid valve body.

OK:

The solenoid valve makes an operating noise.

NG → **REPLACE SHIFT SOLENOID VALVE(SL)**

OK

2	INSPECT TRANSMISSION VALVE BODY ASSY(See chapter 2 in the problem symptoms table)

NG → **REPAIR OR REPLACE TRANSMISSION VALVE BODY ASSY**

OK

3	INSPECT TORQUE CONVERTER CLUTCH ASSY

NG → REPLACE TORQUE CONVERTER CLUTCH ASSY

OK

REPAIR AUTOMATIC TRANSAXLE ASSY

DTC	P0773	SHIFT SOLENOID ”E” ELECTRICAL (SHIFT SOLENOID VALVE SL)

CIRCUIT DESCRIPTION

The shift solenoid valve SL is turned ON and OFF by signals from the ECM to control the hydraulic pressure acting on the lock–up relay valve, which then controls operation of the lock–up clutch.
Fail safe function:
If the ECM detects a malfunction, it turns the shift solenoid valve SL OFF.

DTC No.	DTC Detecting Condition	Trouble Area
P0773	Either (a) or (b) is detected for 1 time. (2–trip detection logic) (a) Solenoid resistance is 8 Ω or less when solenoid is energized. (b) Solenoid resistance is 100 kΩ or more when solenoid is not energized.	• Open or short in shift solenoid valve SL circuit • Shift solenoid valve SL • ECM

WIRING DIAGRAM

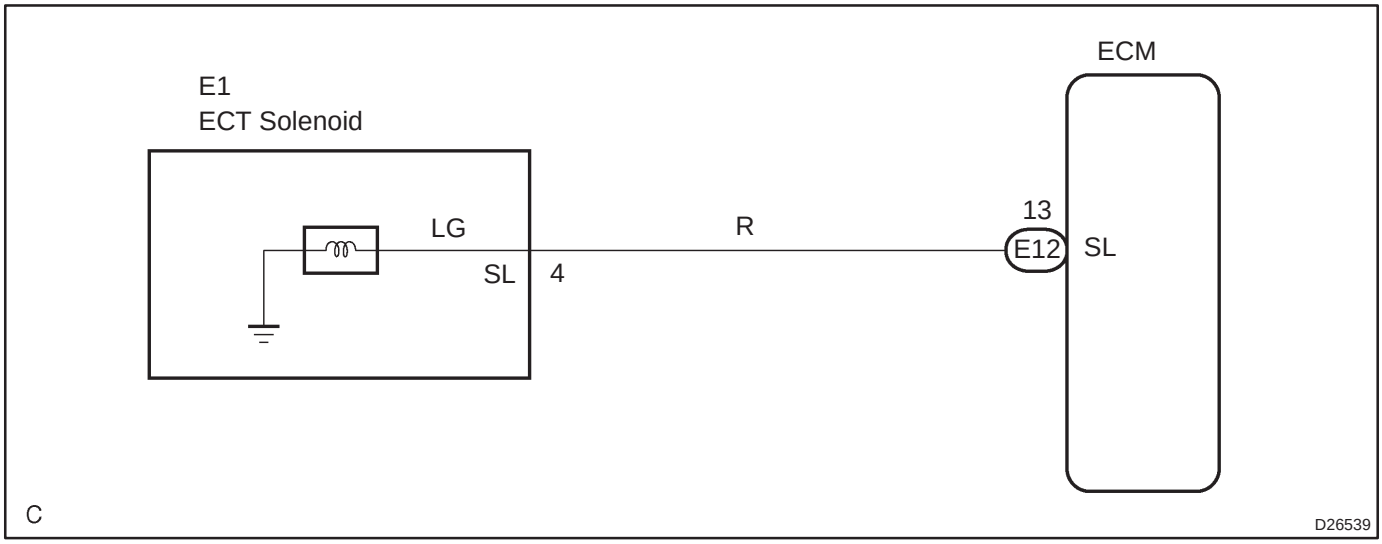

INSPECTION PROCEDURE

1	INSPECT TRANSMISSION WIRE(SL)

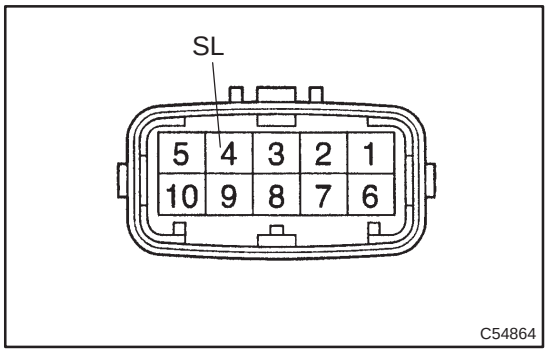

(a) Disconnect the transmission wire connector from the transaxle.
(b) Measure the resistance between terminal SL and the body ground.
OK:
Resistance: 11 to 15 Ω at 20°C (68°F)

NG → **Go to step 3**

OK

2	CHECK HARNESS AND CONNECTOR(TRANSMISSION WIRE–ECM)

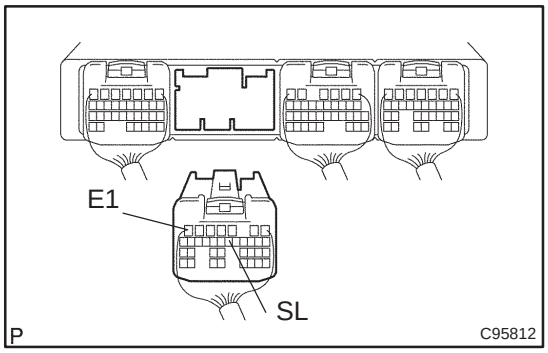

(a) Connect the transmission wire connector to the transaxle.
(b) Disconnect the ECM connector.
(c) Measure the resistance between terminals SL and E1.
OK:
Resistance: 11 to 15 Ω at 20°C (68°F)

NG → **REPAIR OR REPLACE HARNESS OR CONNECTOR**

OK

CHECK AND REPLACE ECM

3	INSPECT SHIFT SOLENOID VALVE(SL)

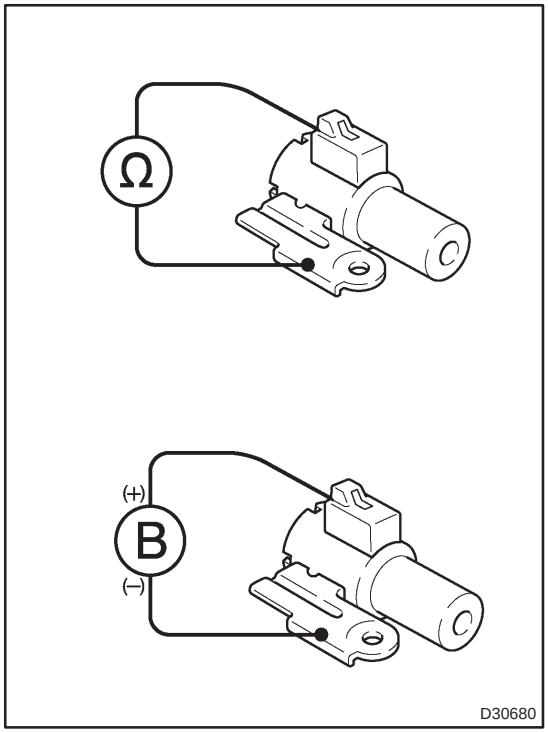

(a) Remove the shift solenoid valve SL.

(b) Measure the resistance between terminal SL of shift solenoid valve and the solenoid valve body.

OK:

Resistance: 11 to 15 Ω at 20°C (68°F)

(c) Connect the positive (+) lead to the terminal of solenoid valve connector and the negative (–) lead to the solenoid valve body.

OK:

The solenoid valve makes an operating noise.

OK → **REPAIR OR REPLACE TRANSMISSION WIRE**

NG

REPLACE SHIFT SOLENOID VALVE(SL)

DTC	P1520	STOP LIGHT SWITCH CIRCUIT MALFUNCTION

CIRCUIT DESCRIPTION

The purpose of this circuit is to prevent the engine from stalling while driving in lock–up condition, when brakes are suddenly applied.
When the brake pedal is depressed, this switch sends signals to the ECM. Then the ECM cancels the operation of the lock–up clutch while braking is in progress.

DTC No.	DTC Detection Condition	Trouble Area
P1520	Stop light switch remains ON while vehicle running (1–trip detection logic)	• Short in stop lamp switch signal circuit • Stop lamp switch • ECM

WIRING DIAGRAM

See page 05–115.

INSPECTION PROCEDURE

1	INSPECT STOP LAMP SWITCH ASSY

NG → REPLACE STOP LAMP SWITCH ASSY

OK

2	CHECK HARNESS AND CONNECTOR(STOP LAMP SWITCH ASSY – ECM)

NG → REPAIR OR REPLACE HARNESS OR CONNECTOR

OK

CHECK AND REPLACE ECM

DTC	P1725	NT REVOLUTION SENSOR CIRCUIT MALFUNCTION

CIRCUIT DESCRIPTION

This sensor detects the rotation speed of the input turbine. By comparing the input turbine speed signal (NT) with the vehicle speed sensor signal, the ECM detects the shift timing of the gears and appropriately controls the engine torque and hydraulic pressure according to various conditions. Thus smooth gear shifting is performed.

DTC No.	DTC Detection Condition	Trouble Area
P1725	ECM detects conditions (a), (b), (c) and (d) continuity for 5 sec. or more: (1 – trip detection logic) (a) Vehicle speed: 50 km/h (20 mph) or more (b) 2nd, 3rd or O/D gear (c) Solenoid valves and Park/neutral position switch are normal (d) NT < 300 rpm	• Open or short in speed sensor (NT) circuit • Speed sensor (NT) • ECM

WIRING DIAGRAM

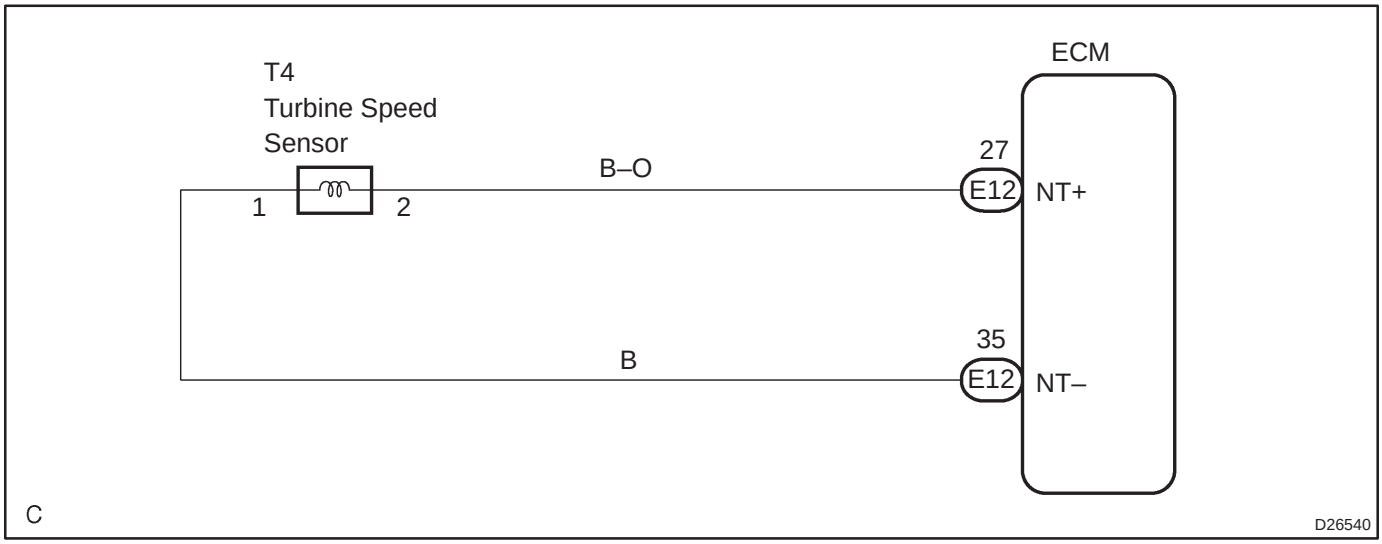

INSPECTION PROCEDURE

1	INSPECT SPEED SENSOR(NT)

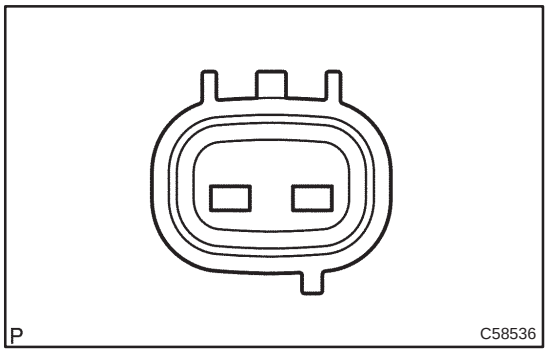

(a) Disconnect the sensor connector from the transaxle.
(b) Measure the resistance between terminals of speed sensor (NT).
OK:
Resistance: 560 to 680 Ω at 20°C (68°F)

NG → **REPLACE SPEED SENSOR(NT)**

OK

2	CHECK HARNESS AND CONNECTOR(SPEED SENSOR–ECM)

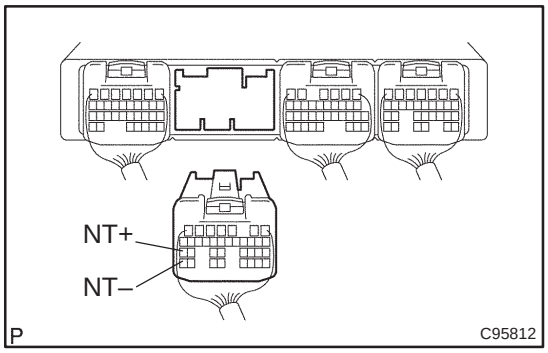

(a) Connect the speed sensor (NT) connector.
(b) Disconnect the ECM connector.
(c) Measure the resistance between terminals NT+ and NT–.
OK:
Resistance: 560 to 680 Ω at 20°C (68°F)
(d) Check the continuity between the wire harness side connectors.
OK:
Standard (Check for short):

Symbols	Specified condition
NT+ – Body ground	No continuity
NT– – Body ground	

NG → **REPAIR OR REPLACE HARNESS OR CONNECTOR**

OK

CHECK AND REPLACE ECM

DTC	P1760	LINEAR SOLENOID FOR LINE PRESSURE CONTROL CIRCUIT MALFUNCTION

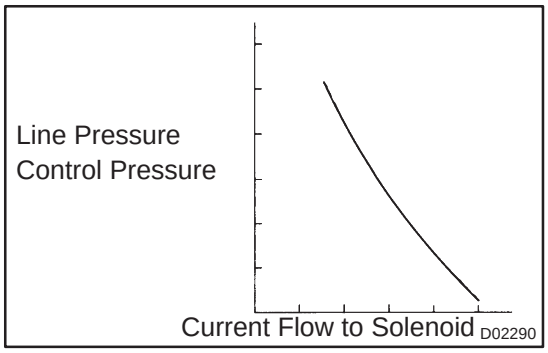

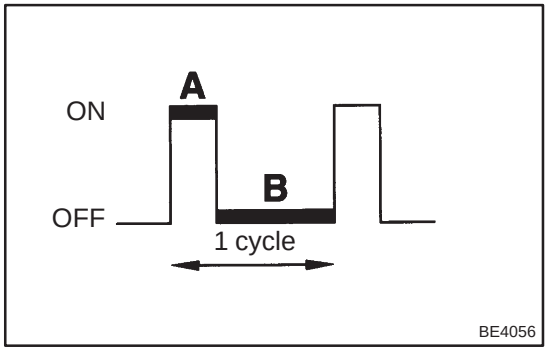

CIRCUIT DESCRIPTION

The throttle pressure that is applied to the primary regulator valve (which modulates the line pressure) causes the solenoid valve SLT, under electronic control, to precisely and minutely modulate and generate the line pressure according the extent of the accelerator pedal depressed or the output of engine power.

This reduces the function of the line pressure and provides smooth shifting.

Upon receiving a signal of the throttle valve opening angle, the ECM controls the line pressure by sending a predetermined (*) duty ratio to the solenoid valve, modulating the line pressure and generating throttle pressure.

(*): Duty Ratio

The duty ratio is the ratio of the period of continuity in one cycle. For example, if A is the period of continuity in one cycle, and B is the period of non–continuity, then

Duty Ratio=A/(A+B) x 100 (%)

DTC No.	DTC Detection Condition	Trouble Area
P1760	Condition (a) or (b) below is detected 1 sec. or more: (a) SLT– terminal: 0 V (b) SLT– terminal: 12 V	• Open or short in shift solenoid valve SLT circuit • Shift solenoid valve SLT • ECM

WIRING DIAGRAM

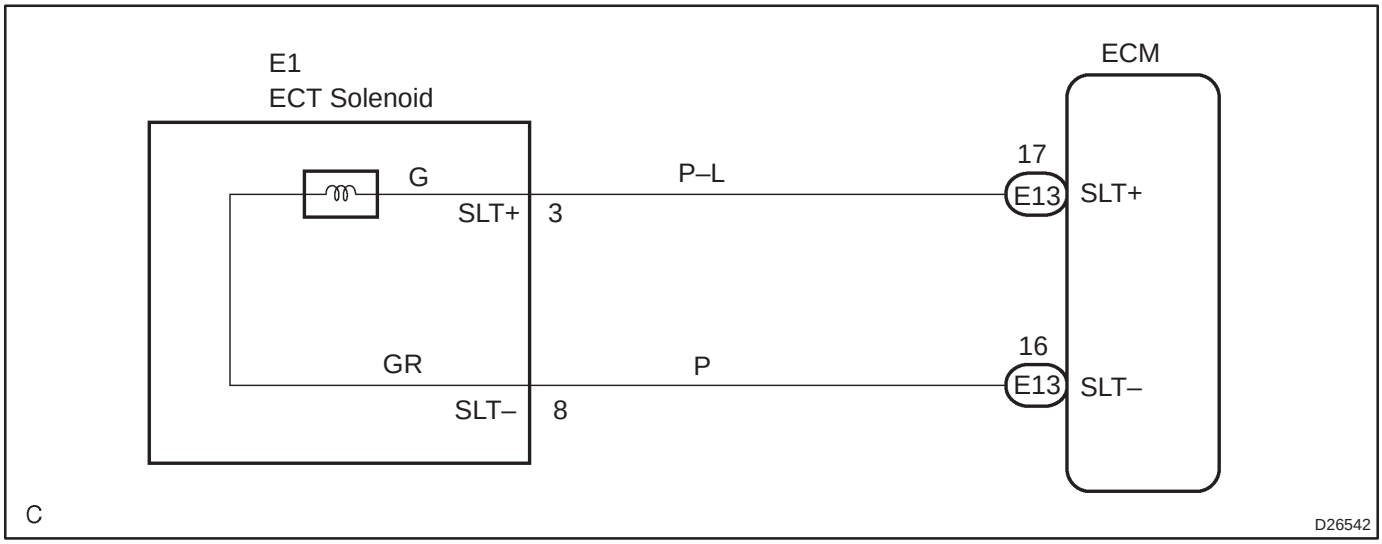

INSPECTION PROCEDURE

1	INSPECT TRANSMISSION WIRE(SLT)

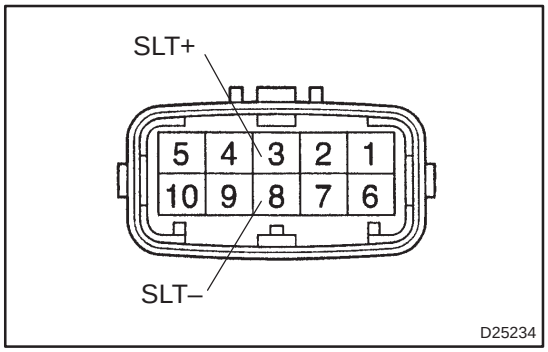

(a) Disconnect the transmission wire connector from the transaxle.

(b) Measure resistance between terminals SLT+ and SLT–.
OK:
Resistance: 5.0 to 5.6 Ω at 20˚C (68˚F)

(c) Check continuity between the wire harness side connectors.
OK:
Standard (Check for short):

Symbols	Specified condition
SLT+ – Body ground	No continuity
SLT– – Body ground	

NG → **Go to step 3**

OK

2 CHECK HARNESS AND CONNECTOR(TRANSMISSION WIRE–ECM)

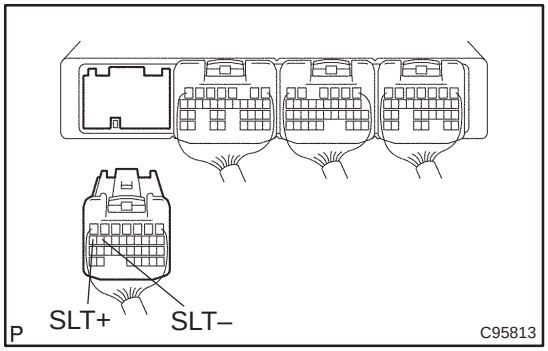

(a) Connect the transmission wire connector to the transaxle.
(b) Disconnect the ECM connector.
(c) Measure the resistance between terminals SLT+ and SLT– of ECM connector.
OK:
Resistance: 5.0 to 5.6 Ω at 20˚C (68˚F)
(d) Check the continuity between the wire harness side connectors.
OK:
Standard (Check for short):

Symbols	Specified condition
SLT+ – Body ground	No continuity
SLT– – Body ground	

NG → **REPAIR OR REPLACE HARNESS OR CONNECTOR**

OK

CHECK AND REPLACE ECM

3 INSPECT SHIFT SOLENOID VALVE(SLT)

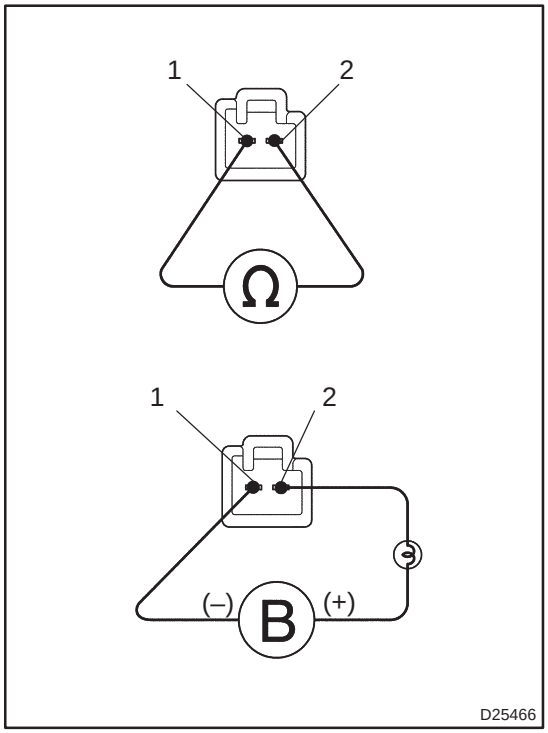

(a) Remove the shift solenoid valve SLT.
(b) Measure the resistance between terminals.
OK:
Resistance: 5.0 to 5.6 Ω at 20˚C (68˚F)
(c) Connect the positive (+) lead with a 21 W bulb to terminal 2 and the negative (–) lead to terminal 1 of the solenoid valve connector, then check the movement of the solenoid valve.
OK:
The solenoid valve makes an operating noise.

NG → **REPLACE SHIFT SOLENOID VALVE(SLT)**

OK

REPAIR OR REPLACE TRANSMISSION WIRE

DTC	P1780	PARK/NEUTRAL POSITION SWITCH MALFUNCTION

CIRCUIT DESCRIPTION

The park/neutral position switch detects the shift lever position and sends the signals to the ECM.

DTC No.	DTC Detecting Condition	Trouble Area
P1780	DTC is detected for 500 msec. or more (2–trip detection logic). • 2 or more switches are ON simultaneously for P, R, N and D position.	• Short in park/neutral position switch circuit • Park/neutral position switch assy • ECM
	When any of following conditions for 500 msec. or more in the S position (2–trip detection logic). (a) P position input signal is ON. (b) N position input signal is ON. (c) R position input signal is ON.	

WIRING DIAGRAM

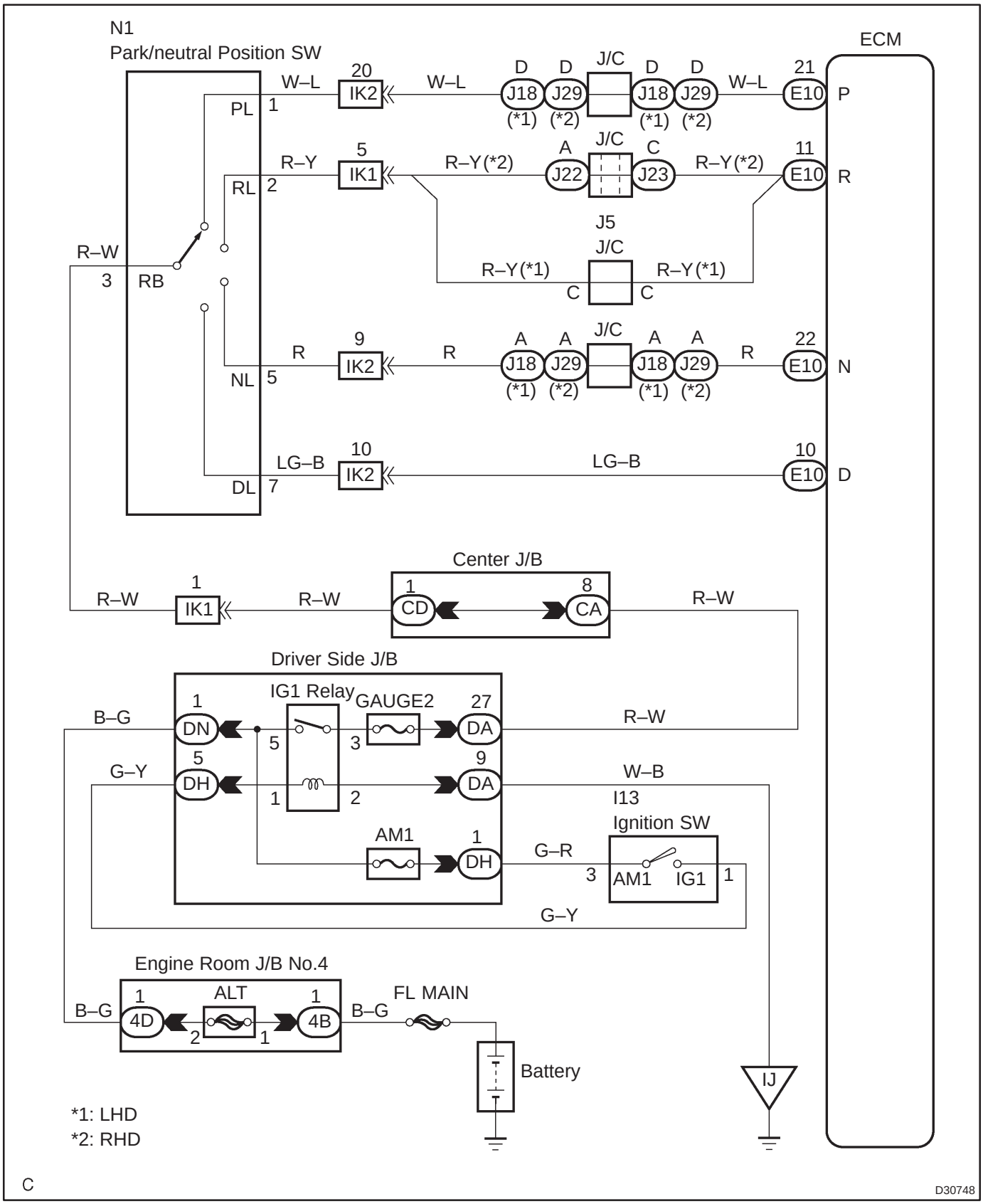

INSPECTION PROCEDURE

1 INSPECT PARK/NEUTRAL POSITION SWITCH ASSY

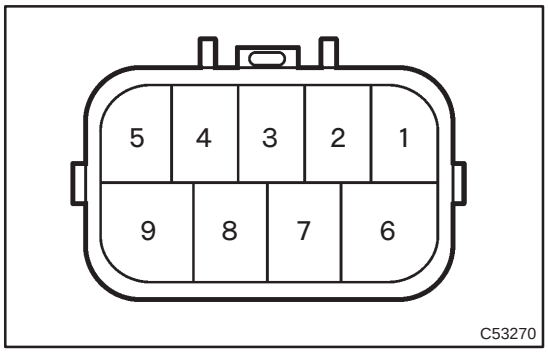

(a) Disconnect the park/neutral position switch connector.
(b) Check the continuity between each terminals shown below when the shift lever is moved to each range.

Shift Range	Terminal No. to continuity	
P	1 – 3	6 – 9
R	2 – 3	–
N	3 – 5	6 – 9
D	3 – 7	–

OK:
There is continuity.

NG → **REPLACE PARK/NEUTRAL POSITION SWITCH ASSY**

OK

2 CHECK HARNESS AND CONNECTOR(PARK/NEUTRAL POSITION SWITCH – ECM)

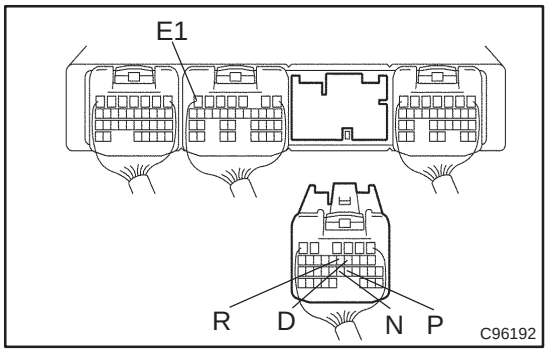

(a) Connect the park/neutral position switch connector.
(b) Disconnect the ECM connector.
(c) Turn the ignition switch to ON.
(d) Measure the voltage between terminals E1 and that R as well as D, P and N of the ECM when the shift lever is shifted to the following range.

OK:

Shift Range	Terminal	Voltage (V)
P	P – E1	10 to 14
R	R – E1	10 to 14
N	N – E1	10 to 14
D	D – E1	10 to 14

NG → **REPAIR OR REPLACE HARNESS OR CONNECTOR**

OK

CHECK AND REPLACE ECM

DTC P1790 ST SOLENOID CIRCUIT MALFUNCTION

CIRCUIT DESCRIPTION

Shift solenoid valve ST is switched ON–OFF by a signal from ECM so that let in or out timing of O/D and 2nd brake is adjusted by operating orifice control valve. Therefore, shift solenoid valve ST operates when letting in or out reverse clutch.
If it is broken, the shift shock becomes big.

DTC No.	DTC Detection Condition	Trouble Area
P1790	ECM memorizes DTC P1790 if (a) or (b) condition below is detected once or more. (a) Solenoid resistance is 30 Ω or lower (short circuit) when solenoid is energized. (b) Solenoid resistance is 100 kΩ or higher (open circuit) when solenoid is not energized.	• Open or short in shift solenoid valve ST circuit • Shift solenoid valve ST • ECM

WIRING DIAGRAM

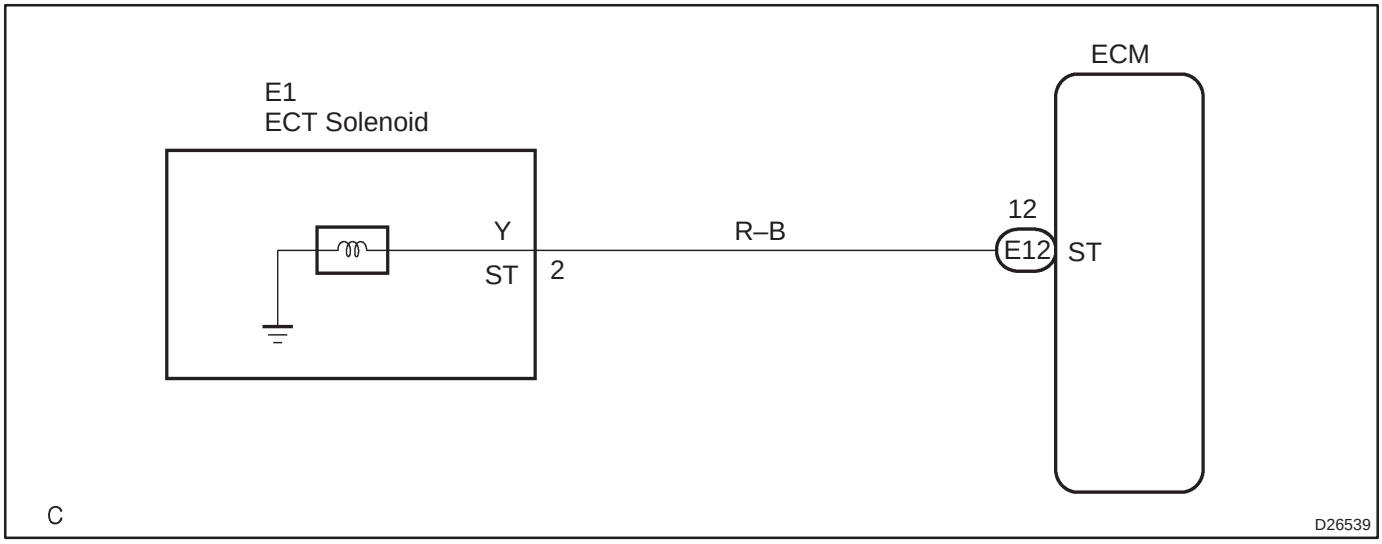

INSPECTION PROCEDURE

1	INSPECT TRANSMISSION WIRE(ST)

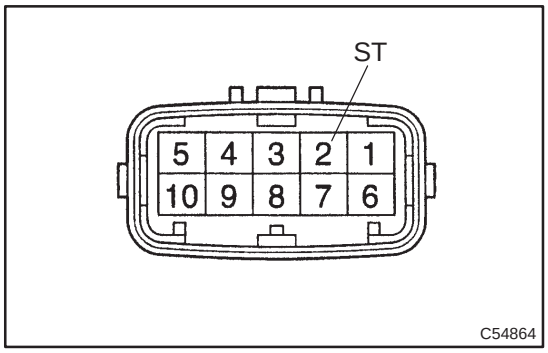

(a) Disconnect the transmission wire connector from the transaxle.
(b) Measure the resistance between terminal ST and body ground.
OK:
Resistance: 11 to 15 Ω at 20°C (68°F)

NG → **Go to step 3**

OK

2	CHECK HARNESS AND CONNECTOR(TRANSMISSION WIRE – ECM)

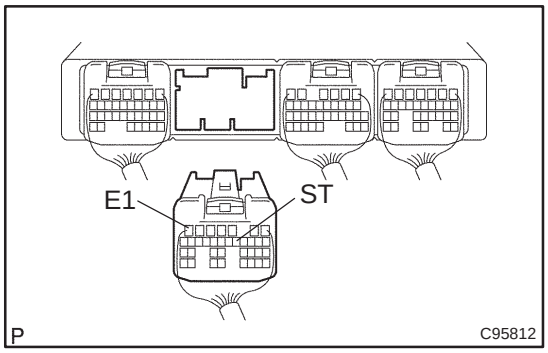

(a) Connect the transmission wire connector to the transaxle.
(b) Disconnect the ECM connector.
(c) Measure the resistance between terminals ST and E1.
OK:
Resistance: 11 to 15 Ω at 20°C (68°F)

NG → **REPAIR OR REPLACE HARNESS OR CONNECTOR**

OK

CHECK AND REPLACE ECM

3	INSPECT SHIFT SOLENOID VALVE(ST)

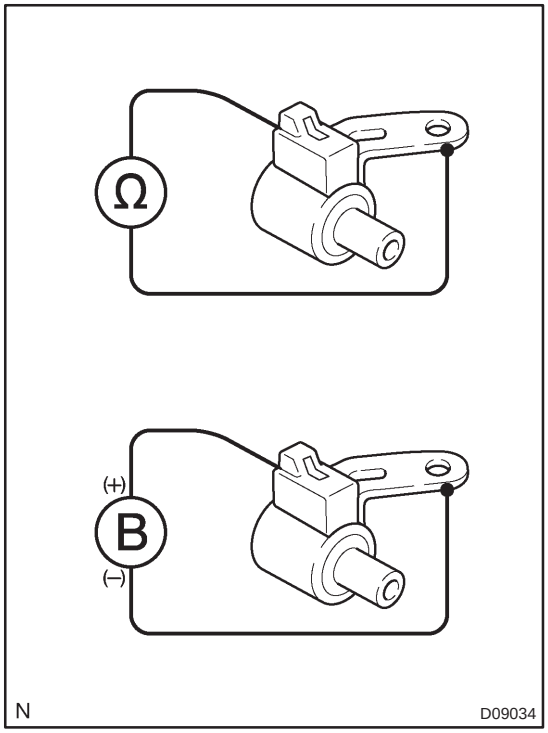

(a) Remove the shift solenoid valve ST.
(b) Measure the resistance between the solenoid connector and the solenoid valve body.
OK:
Resistance: 11 to 15 Ω at 20°C (68°F)
(c) Connect the positive (+) lead to the terminal of solenoid connector and the negative (–) lead to the solenoid valve body.
OK:
The solenoid valve makes an operating noise.

NG → **REPLACE SHIFT SOLENOID VALVE(ST)**

OK

REPAIR OR REPLACE TRANSMISSION WIRE

DTC	P1798	SB SOLENOID CIRCUIT MALFUNCTION (SHIFT SOLENOID VALVE SB)

CIRCUIT DESCRIPTION

Shift solenoid valve SB controls the 2nd brake (B1) and 1st and reverse brake pressures and performs the 1st and 2nd engine brake control.

Fail safe function:

- S shift control prohibition.
- On activating the fail–safe function during S shift, the driving mode turns to the ordinal D range.

DTC No.	DTC Detection Condition	Trouble Area
P1798	ECM memorizes DTC P1798 if (a) or (b) condition below is detected once or more. (a) Solenoid resistance is 30 Ω or lower (short circuit) when solenoid is energized. (b) Solenoid resistance is 100 kΩ or higher (open circuit) when solenoid is not energized.	• Open or short in shift solenoid valve SB circuit • Shift solenoid valve SB • ECM

WIRING DIAGRAM

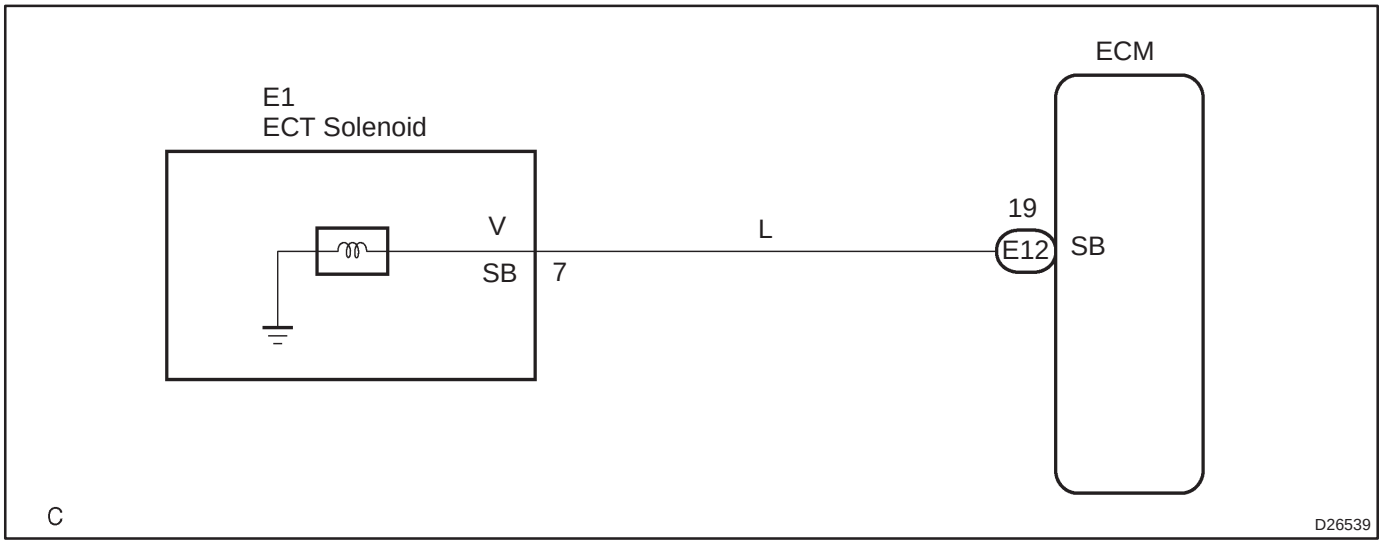

INSPECTION PROCEDURE

1	INSPECT TRANSMISSION WIRE(SB)

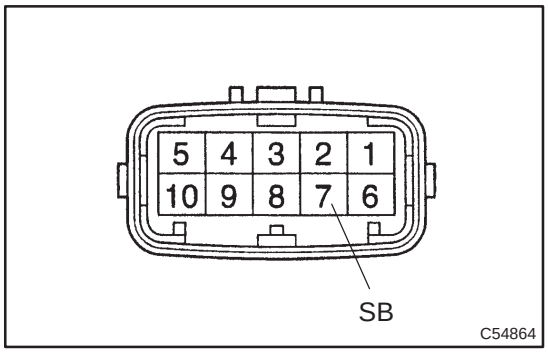

(a) Disconnect the transmission wire connector from the transaxle.
(b) Measure resistance between terminal 7 and body ground.
OK:
Resistance: 11 to 15 Ω at 20°C (68°F)

NG → **Go to step 3**

OK

2	CHECK HARNESS AND CONNECTOR(TRANSMISSION WIRE – ECM)

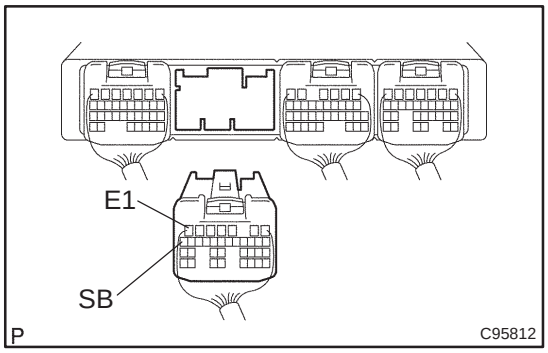

(a) Connect the transmission wire connector to the transaxle.
(b) Disconnect the ECM connector.
(c) Measure resistance between terminals SB and E1.
OK:
Resistance: 11 to 15 Ω at 20°C (68°F)

NG → **REPAIR OR REPLACE HARNESS OR CONNECTOR**

OK

CHECK AND REPLACE ECM

3	INSPECT SHIFT SOLENOID VALVE(SB)

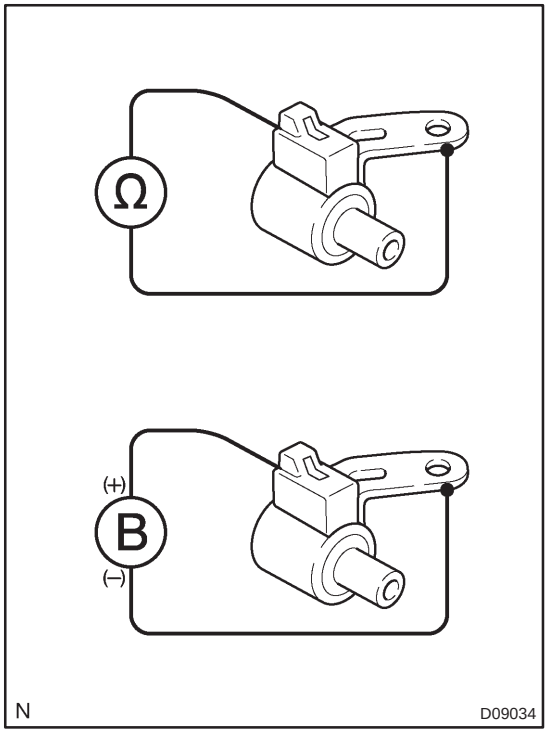

(a) Remove the shift solenoid valve SB.
(b) Measure resistance between the solenoid connector and the solenoid body.
OK:
Resistance: 11 to 15 Ω at 20°C (68°F)
(c) Connect the positive (+) lead to the terminal of solenoid valve connector and the negative (–) lead to the solenoid valve body.
OK:
The solenoid valve makes an operating noise.

NG → **REPLACE SHIFT SOLENOID VALVE(SB)**

OK

REPAIR OR REPLACE TRANSMISSION WIRE

KICK DOWN SWITCH CIRCUIT

CIRCUIT DESCRIPTION

The kick–down switch is turned ON when the accelerator pedal is depressed to the full throttle and sends signals to ECM.

When the kick–down switch is turned ON, the ECM controls gear shifting according to the programmed shift diagrams.

If a short circuit develops in the kick–down switch, the ECM disregards the kick–down signals and controls shifting at the normal shift points.

WIRING DIAGRAM

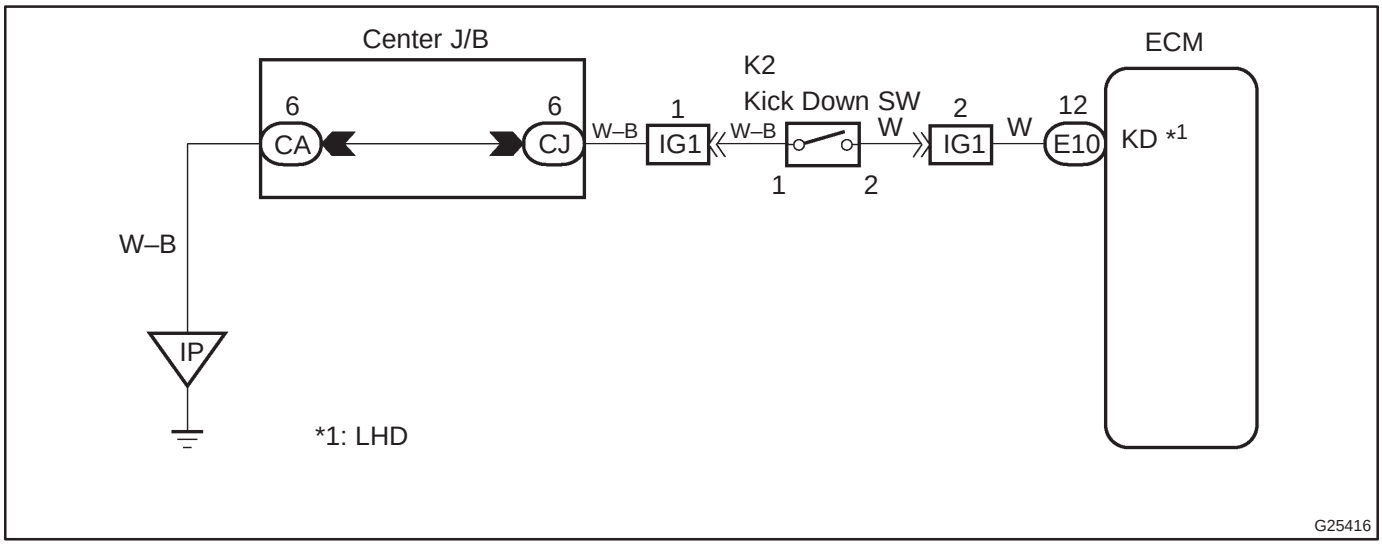

INSPECTION PROCEDURE

1	INSPECT TERMINAL VOLTAGE

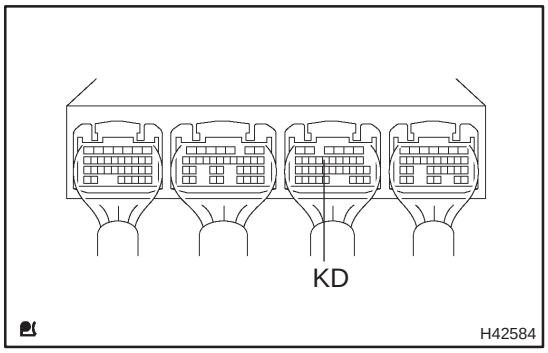

(a) Turn the ignition switch ON.
(b) Measure voltage between terminal KD of ECM and body ground when accelerator pedal is fully depressed or not.
OK:

Accelerator pedal	Voltage
Fully depressed (Kick–down switch is ON)	Below 1 V
Released (Kick–down switch is OFF)	10 to 14 V

OK → **PROCEED TO NEXT CIRCUIT INSPECTION SHOWN ON PROBLEM SYMPTOMS TABLE**

NG

2	INSPECT KICK DOWN SWITCH

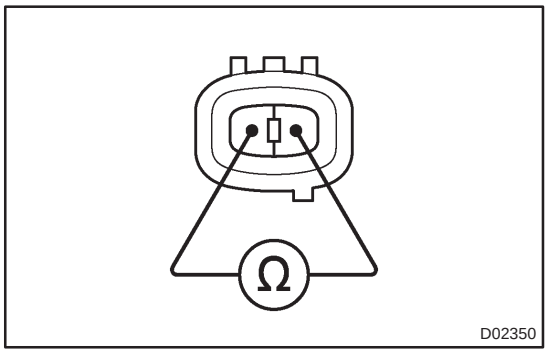

(a) Disconnect the kick–down switch connector.
(b) Check continuity between terminals of the kick–down switch connector when kick–down switch is ON and OFF.
OK:

Kick–down switch	Continuity
ON	Continuity
OFF	No continuity

NG → **REPLACE KICK DOWN SWITCH**

OK

3	CHECK HARNESS AND CONNECTOR

NG → **REPAIR OR REPLACE HARNESS AND CONNECTOR**

OK

CHECK AND REPLACE ECM

TRANSMISSION CONTROL SWITCH CIRCUIT

CIRCUIT DESCRIPTION

When shifting the shift lever into S range using the transmission control switch, it is possible to shift in 1 to 4 positions.
Shifting ”+” once changes up 1 shift range position, ”–” once changes down 1 shift range position respectively.

WIRING DIAGRAM

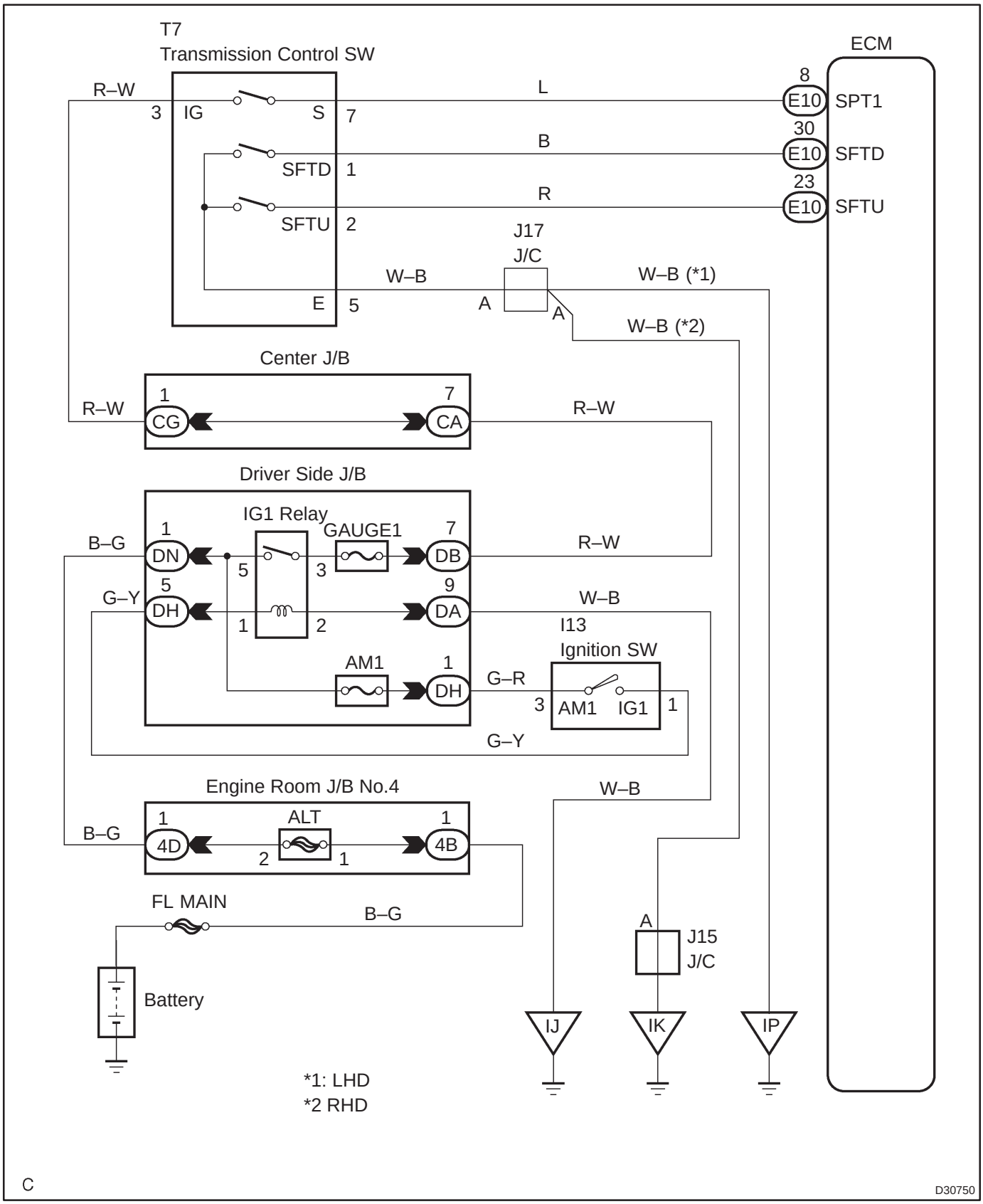

INSPECTION PROCEDURE

1 CHECK ECM

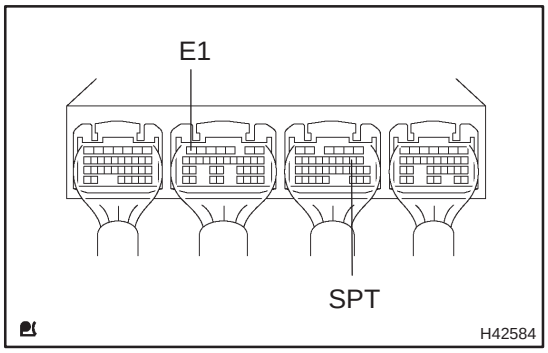

(a) Turn the ignition switch to ON.
(b) Measure the voltage between terminals SPT and E1 of the ECM.

OK:

Shift position	Specified condition
Except S position	Below 1 V
S position	7.5 to 14 V

NG → **Go to step 6**

OK

2 CHECK ECM

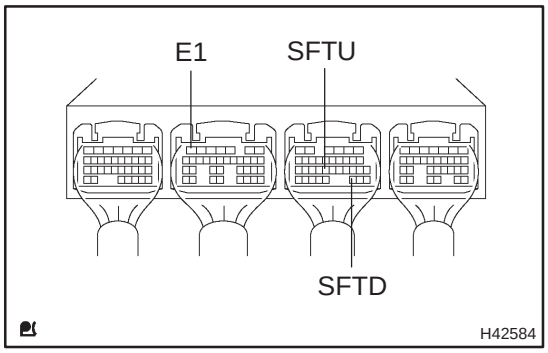

(a) Measure the voltage between terminals E1 and that SFTU as well as SFTD of the ECM.

OK:

Shift position	Tester connection	Specified condition
Shift to "+" (Up shift)	SFTU – E1	Below 1.5 V
S position	SFTU – E1	7.5 to 14 V
Shift to "–" (Down shift)	SFTD – E1	Below 1.5 V
S position	SFTD – E1	7.5 to 14 V

OK → **NORMAL**

NG

3 INSPECT SHIFT LOCK CONTROL UNIT ASSY(TRANSMISSION CONTROL SWITCH)

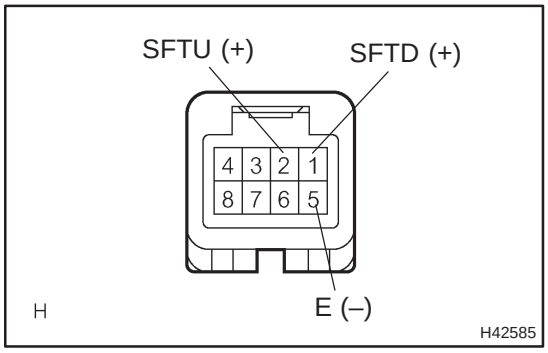

(a) Turn the ignition switch to OFF.
(b) Disconnect the transmission control switch connector.
(c) Measure the resistance between terminals E and that SFTU as well as SFTD of the transmission control switch connector.

OK:

Shift position	Tester connection	Specified condition
Shift to "+" (Up shift)	SFTU – E	Continuity
S position	SFTU – E	No continuity
Shift to "–" (Down shift)	SFTD – E	Continuity
S position	SFTD – E	No continuity

NG → **REPLACE SHIFT LOCK CONTROL UNIT ASSY**

OK

4	CHECK HARNESS AND CONNECTOR(ECM – TRANSMISSION CONTROL SWITCH)

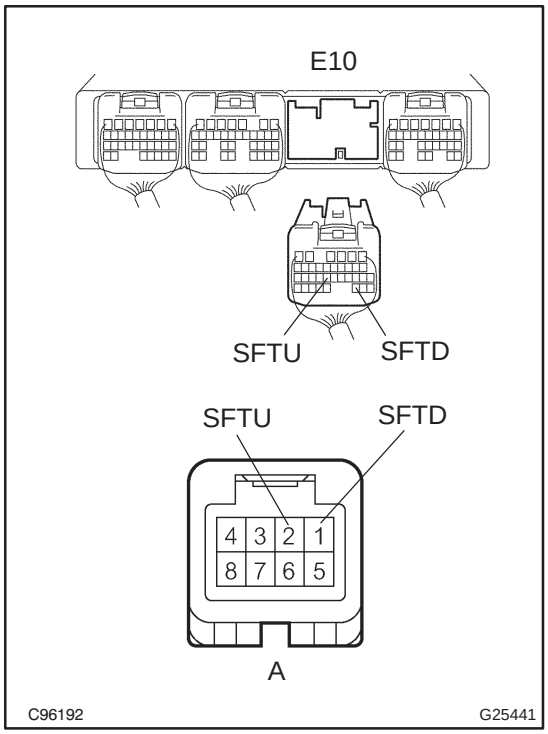

(a) Disconnect the ECM connector.
(b) Check the continuity between ECM and transmission control switch.
OK:

Tester connection	Specified condition
SFTU (E10–23) – SFTU (A–2)	Continuity
SFTD (E10–30) – SFTD (A–1)	Continuity

NG → **REPAIR OR REPLACE HARNESS AND CONNECTOR**

OK

5	CHECK HARNESS AND CONNECTOR(TRANSMISSION COTROL SWITCH – BODY GROUND)

(a) Check the continuity between body ground and E of the transmission control switch connector (wire harness side).
OK:
Continuity

NG → **REPAIR OR REPLACE HARNESS AND CONNECTOR**

OK

CHECK AND REPLACE ECM

6 INSPECT SHIFT LOCK CONTROL UNIT ASSY(TRANSMISSION CONTROL SWITCH)

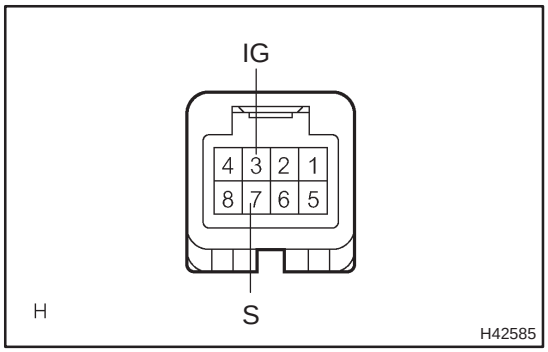

(a) Turn the ignition switch to OFF.
(b) Disconnect the transmission control switch connector.
(c) Check the continuity between terminals IG and S of the transmission control switch.

OK:

Shift position	Tester connection	Specified condition
Except S position	IG – S	No continuity
S position	IG – S	Continuity

NG → **REPLACE SHIFT LOCK CONTROL UNIT ASSY**

OK

7 CHECK HARNESS AND CONNECTOR

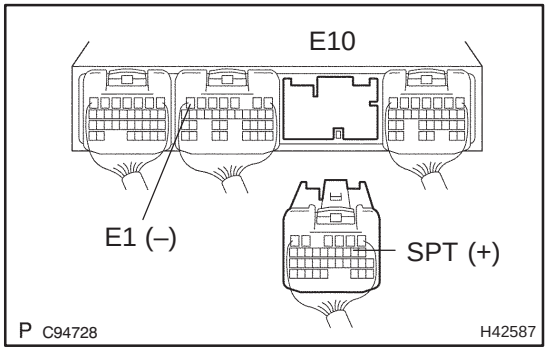

(a) Connect the transmission control switch connector.
(b) Disconnect the ECM connector.
(c) Turn the ignition switch to ON.
(d) Measure the voltage between terminals SPT and E1 of the ECM connector.

OK:

Shift position	Tester connection	Specified condition
Except S position	SPT – E1	Below 1 V
S position	SPT – E1	7.5 to 14 V

NG → **REPAIR OR REPLACE HARNESS AND CONNECTOR**

OK

CHECK AND REPLACE ECM

PATTERN SELECT SWITCH CIRCUIT

CIRCUIT DESCRIPTION

When SNOW mode is selected with the pattern select switch, the ECM controls the solenoid valves and the transmission starts from 2nd gear.
In D range, the transmission automatically shifts up through 3rd to O/D as usual.

WIRING DIAGRAM

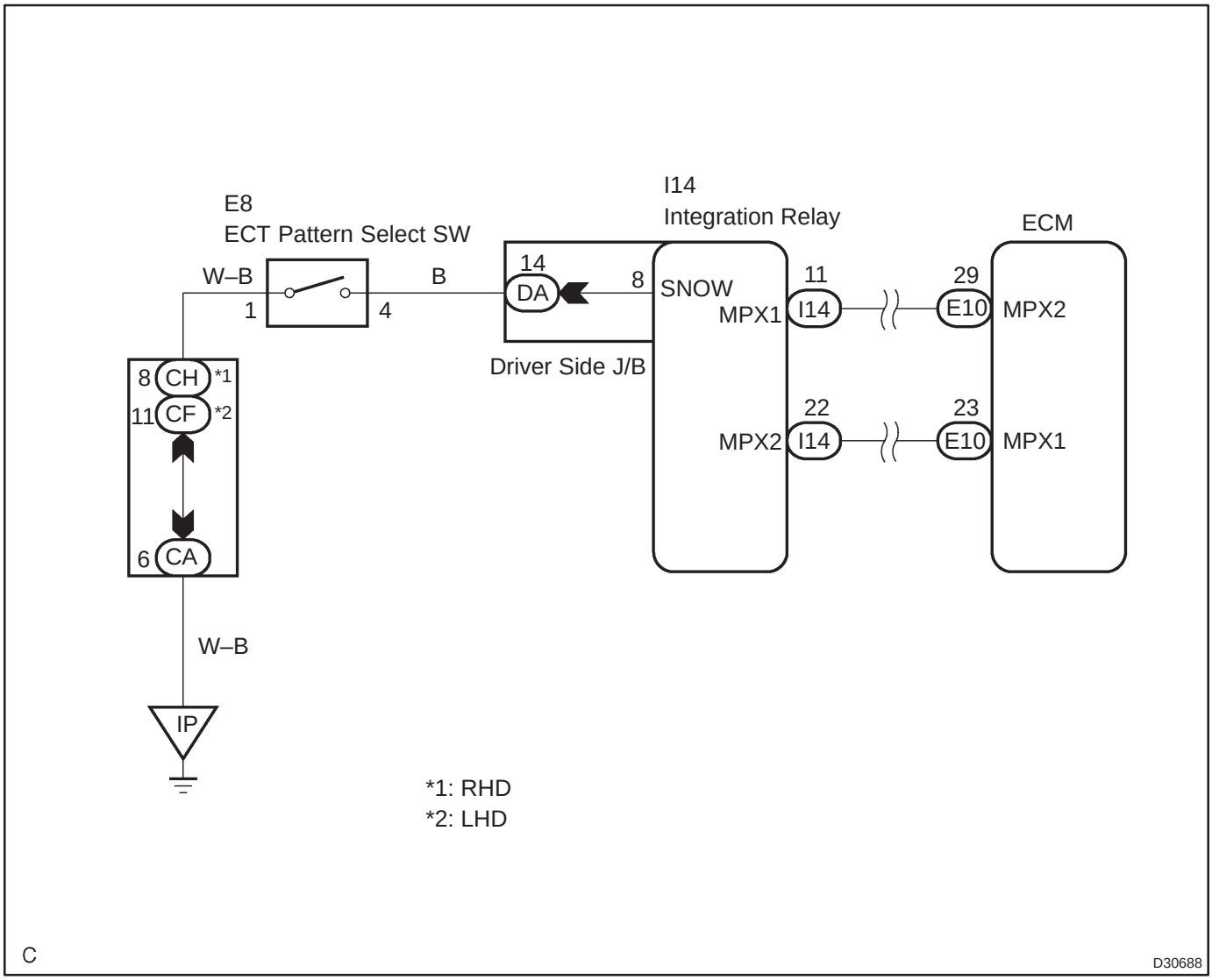

INSPECTION PROCEDURE

1	INSPECT PATTERN SELECT SWITCH ASSY

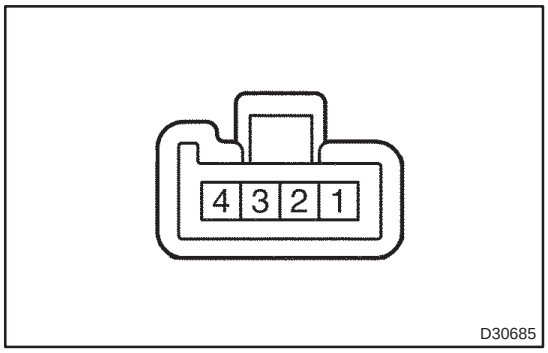

(a) Disconnect the connector of pattern select switch.
(b) Check the continuity between terminals 1 and 4 of the pattern select switch.

OK:

Pattern select switch	Specified condition
Press continuously Pattern select switch	Continuity
Release Pattern select switch	No continuity

NG → **REPLACE PATTERN SELECT SWITCH ASSY**

OK

2	CHECK HARNESS AND CONNECTOR(PATTERN SELECT SWITCH – INTEGRATION RELAY, PATTERN SELECT SWITCH – BODY GROUND)

NG → **REPAIR OR REPLACE HARNESS AND CONNECTOR**

OK

PROCEED TO NEXT CIRCUIT INSPECTION SHOWN ON PROBLEM SYMPTOMS TABLE

ELECTRONIC MOTOR POWER STEERING SYSTEM

HOW TO PROCEED WITH TROUBLESHOOTING

050Y2–04

Perform troubleshooting in accordance with the procedure on the following pages.

HINT:

- See the indicated pages for detailed explanation.
- The hand–held tester can be used at step 3, 6, 9, 12.

1	VEHICLE BROUGHT TO WORKSHOP

2	CUSTOMER PROBLEM ANALYSIS(See page 05–1044)

3	CHECK AND CLEAR DTCS AND FREEZE FRAME DATA

(a) After the completion of the DTC and freeze frame data check, clear the DTCs (See page 05–1045).

4	PROBLEM SYMPTOM CONFIRMATION

- SYMPTOM DOES NOT OCCUR(Go to step 5)
- SYMPTOM OCCURS(Go to step 6)

5	SYMPTOM SIMULATION(See page 01–22)

6	DTC CHECK(See page 05–1045)

- NORMAL CODE(Go to step 7)
- MALFUNCTION CODE(Go to step 8)

7	PROBLEM SYMPTOMS TABLE(See page 05–1058)

8	DTC CHART(See page 05–1054)

9	CIRCUIT INSPECTION(See page 05–1059 to 05–1086)

10	IDENTIFYING PROBLEMS

11	REPAIR

12	CONFIRMATION TEST

END

050Y7–04

CUSTOMER PROBLEM ANALYSIS CHECK

EMPS Check Sheet

Inspector's :
Name

Customer's Name		**VIN**	
		Production Date	/ /
Vehicle Model		**Licence No.**	
Date Vehicle Brought In	/ /	**Odometer Reading**	km miles

Date Problem First Occurred	/ / (Engine ☐ Cooled ☐ Warmed up)
Frequency Problem Occurs	☐ Continuous ☐ Intermittent (times a day)

Symptoms	☐ Steering operation is heavy.	
	☐ Steering force to the right and left differs, or steering force is uneven.	
	☐ While running, the steering force does not alter corresponding the vehicle speed.	
	☐ The steering returns unwell.	
	☐ Vibration or strange sound comes from the steering column assy.	
	☐ When a trouble happens (☐ During turning ☐ During vehicle stop ☐ Always)	
	☐ Others	
	PS Warning Light Abnormal	☐ Remains ON ☐ Does not come on

DTC Check	**1st Time**	☐ Normal Code ☐ Malfunction Code (Code)
	2nd Time	☐ Normal Code ☐ Malfunction Code (Code)

Freeze Frame Data
A malfunction code is outputed at the first time, record the freeze frame data as well (as the DTCs).

PRE–CHECK

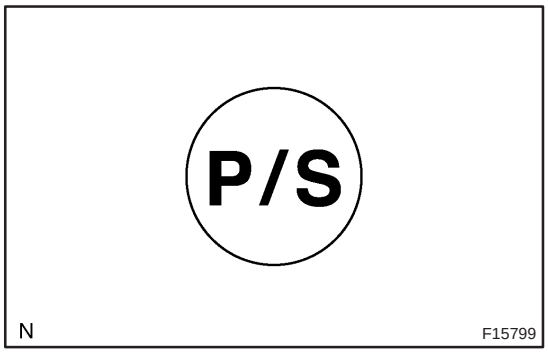

1. DIAGNOSIS SYSTEM

(a) Check the PS warning light.

(1) When the ignition switch is turned ON, check that the PS warning light goes on for 2 seconds.

HINT:

If the indicator check result is not normal, proceed to trouble-shooting for the PS warning light circuit (See page 05–1082).

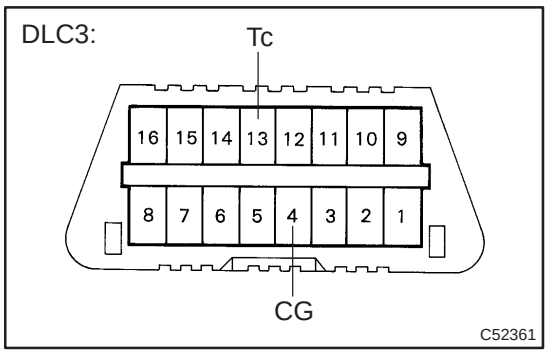

2. DTC CHECK (USING SST CHECK WIRE)

(a) Checking DTCs using a SST check wire.

SST 09843–18040

(1) Using SST, connect terminals Tc and CG of the DLC3.

(2) Turn the ignition switch to ON.

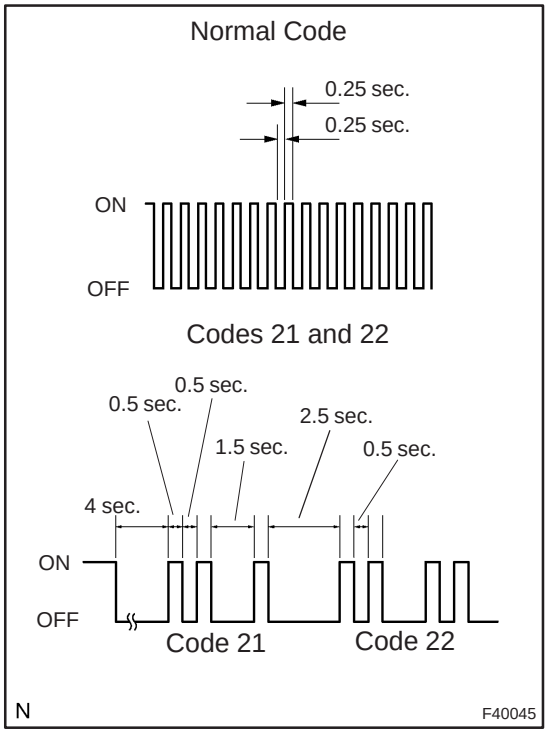

(3) Read and record any DTCs from the P/S warning light on the combination meter. Refer to the chart on the left for examples of a normal code and codes 21 and 22.

HINT:

- If the P/S warning light does not blink any DTC codes or the normal code, inspect the circuit shown in the charts below.

Trouble Area	
Tc Terminal Circuit	05–1084
P/S Warning Light Circuit	05–1082

- If 2 or more malfunctions are detected at the same time, DTC will be displayed in the ascending order.

(4) Refer to the Diagnostic Trouble Code Chart (See page 05–1054) for DTC information.

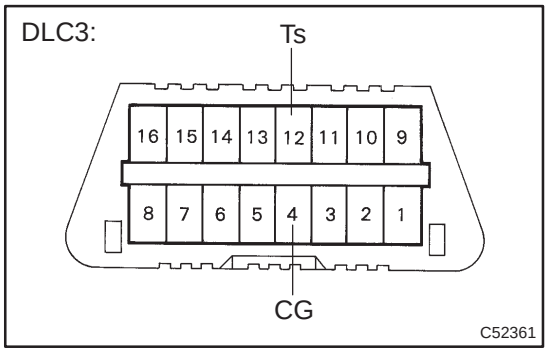

(b) Clearing the DTCs using the SST check wire.
SST 09843–18040
(1) Using SST, connect terminals Ts and CG of the DLC3.
(2) Turn the ignition switch to ON.
(3) Disconnect and connect the SST check wire from the CG terminal 4 times or more in 8 seconds ending with it connected.
(4) Check that the P/S warning light blinks a normal code.
(5) Turn the ignition switch to OFF.
(6) Remove the SST from the DLC3.
SST 09843–18040

3. DTC CHECK (USING HAND–HELD TESTER)

(a) Checking DTCs using the hand–held tester.
(1) Connect the hand–held tester to the DLC3.
(2) Turn the ignition switch to ON.
(3) Read the DTCs by following the prompts on the tester screen.

HINT:
Refer to the hand–held tester operator's manual for further details.

(b) Clearing the DTCs using the hand–held tester.
(1) Connect the hand–held tester to the DLC3.
(2) Turn the ignition switch to ON.
(3) Clear the DTCs by following the prompts on the tester screen.

HINT:
Refer to the hand–held tester operator's manual for further details.

4. DATA LIST AND FREEZE FRAME DATA

HINT:
Ignition switch must be turned ON, and the vehicle should be placed on a leveled ground to observe data by using a hand–held tester.

Data List (*: with freeze frame data):

Item	Measurement Item / Range (Display)	Normal Condition	Diagnostic Note
TRQ1 (*)	Show the output states in the torque sensor / Min.: 0 V, Max.: 5 V	Steering wheel center position: 2.3 to 2.7 V Steering wheel right turned: 2.5 to 4.7 V Steering wheel left turned: 0.3 to 2.5 V	–
TRQ2 (*)	Show the output states in the torque sensor / Min.: 0 V, Max.: 5 V	Steering wheel center position: 2.3 to 2.7 V Steering wheel right turned: 2.5 to 4.7 V Steering wheel left turned: 0.3 to 2.5 V	–

Item	Measurement Item / Range (Display)	Normal Condition	Diagnostic Note
TRQ3 (*)	Show the output states in the torque sensor / Min.: 0 V, Max.: 5 V	Steering wheel center position: 2.3 to 2.7 V Steering wheel right turned: 2.5 to 4.7 V Steering wheel left turned: 0.3 to 2.5 V	–
SPD (*)	Show the vehicle speed on the speedometer / Min.: 0 km/h (0 mph), Max.: 255 km/h (158 mph)	Actual vehicle speed	Vehicle speed indicated on speedometer
ENGINE REV (*)	Show the engine revolution / Min.: 0 rpm Max.: 8,192 rpm	Actual engine speed	–
MOTOR ACTUAL (*)	Show the current flowing motor / Min.: –128 A, Max.: 128 A	0 to 65 A	–
COMMAND VALUE (*)	Show the specified current value / Min.: –128 A, Max.: 128 A	0 to 65 A	–
THERMISTOR TEMP (*)	Show the temperature of the thermistor / Min.: –50 °C, Max.: 205 °C	–	–
PIG SUPPLY (*)	Show the power supply voltage for driving motor / Min.: 0 V, Max.: 25 V	10 to 16 V	While power steering operated
IG SUPPLY (*)	Show the power supply condition / Min.: 0 V, Max.: 25 V	10 to 16 V	–
TRQ1 ZERO VAL (*)	Show the torque sensor/ Min.: 0 V, Max.: 5 V	Steering wheel center position: 2.3 to 2.7 V	–
TRQ2 ZERO VAL (*)	Show the torque sensor/ Min.: 0 V, Max.: 5 V	Steering wheel center position: 2.3 to 2.7 V	–
TRQ3 ZERO VAL (*)	Show the torque sensor/ Min.: 0 V, Max.: 5 V	Steering wheel center position: 2.3 to 2.7 V	–
MTR OVERHEAT	Record of continuous overheat preventive control / record or un–record	Un–record	–
MTR LOW POWER	Record of low motor power supply voltage / record or un–record	Un–record	–
MTR HIGH POWER	Record of high motor power supply voltage / record or un–record	Un–record	
#CODES	Number of DTC recorded / Min.: 0, Max.: 255	Min.: 0, Max.: XX	–
ASSIST MAP	Show the selected condition of the assist map / 01, 02, 03, 11 or 12	–	–
ECU ID	Show the identified information of ECU / 01, 02, 03, 04 or 05	–	–
TEST MODE STAT	Test mode status / NORMAL or TEST	NORMAL: Normal mode TEST: During test mode	–

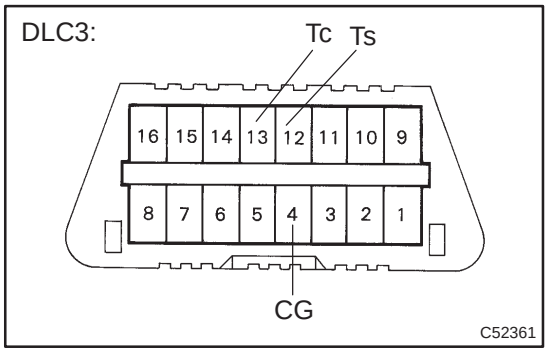

5. INPUT SIGNAL CHECK (TEST MODE) (USING SST CHECK WIRE)

(a) Check the input signal using a SST check wire.

(1) Using SST, connect terminals Ts and CG of DLC3.
SST 09843–18040

(2) Turn the ignition switch to ON.

(3) Check that the PS warning light shows the normal code.

(4) Check that the PS warning light goes off while driving the vehicle more than 10 km/h (6 mph) and the engine speed more than 300 rpm.

HINT:
If the PS warning light goes off during driving, the sensor is judged to be normal.

(5) Stop the vehicle.

(6) Using SST, connect terminals Tc and CG of DLC3.
SST 09843–18040

(7) Read the number of blinks of the PS warning light.

HINT:
- See the list of DTC shown in the table below.
- Even if a sensor is normal, it output codes 71 and 73 during test mode.

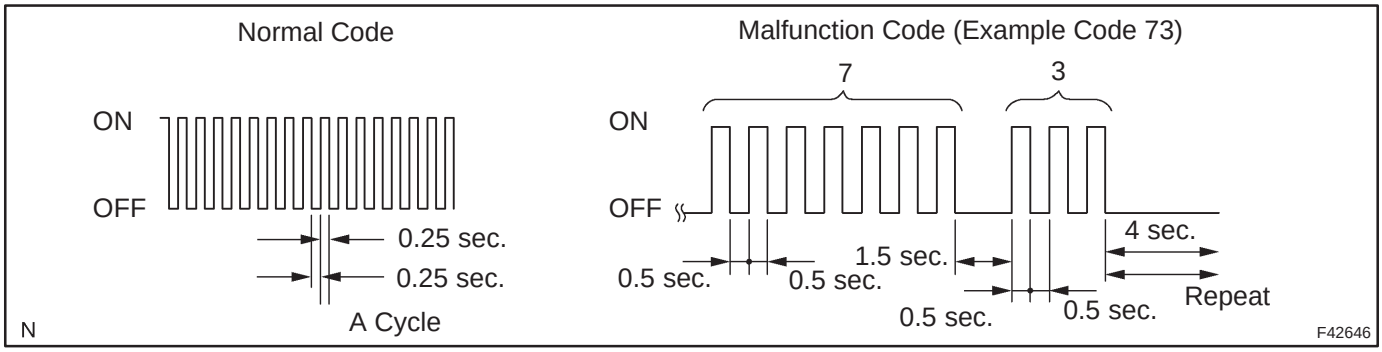

DTC of input signal check function:

Code No. (See page)	Diagnosis	Trouble Area
C1571/71 (05–1067)	Speed sensor signal check 1 (Test mode)	• Speed sensor • Speed sensor circuit • Skid control ECU assy • Combination meter assy • Power steering ECU assy
C1573/73 (05–1070)	Engine revolution signal check (Test mode)	• Engine revolution signal circuit • ECM • Power steering ECU assy

(8) After checking, disconnect the SST from the terminal Ts and CG, Tc and CG of DLC3, and turn the ignition switch to OFF.
SST 09843–18040

6. INPUT SIGNAL CHECK (TEST MODE) (USING HAND–HELD TESTER)

(a) Check the input signal using the hand–held tester.
  (1) Connect the hand–held tester to the DLC3.
  (2) Check that the warning light goes off with driving the vehicle more than 10 km/h (6 mph) and engine speed more than 300 rpm.
  (3) Read the DTC by following the prompts on the tester screen.

HINT:
- Refer to the hand–held tester operator's manual for further details.
- See the list of DTC shown in the table below.
- Even if a sensor is normal, it outputs codes C1571/71 and C1573/73 during test mode.

DTC of input signal check function:

Code No. (See page)	Diagnosis	Trouble Area
C1571/71 (05–1067)	Speed sensor signal check 1 (Test mode)	• Speed sensor • Speed sensor circuit • Skid control ECU assy • Combination meter assy • Power steering ECU assy
C1573/73 (05–1070)	Engine revolution signal check (Test mode)	• Engine revolution signal circuit • ECM • Power steering ECU assy

7. CALIBRATION OF TORQUE SENSOR ZERO POINT (USING SST CHECK WIRE)

HINT:
Perform this operation in the following cases.
- When removing and installing "steering wheel assembly", "tilt steering column assembly" and "steering gear assembly".
- When replacing power steering ECU assy.

(a) Place front wheels and steering wheel facing straight ahead.

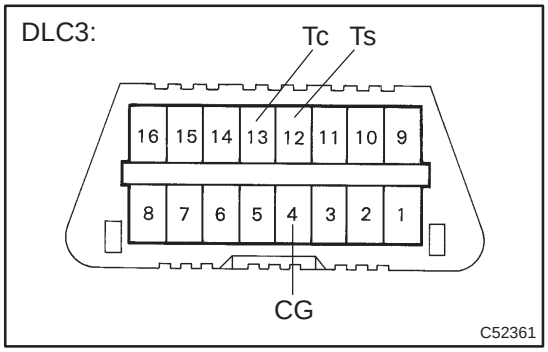

(b) Perform the torque sensor zero point initialization.

HINT:
If the power steering ECU assy is replaced, initialization is not necessary.
  (1) Stop the vehicle and turn the ignition switch OFF.
  (2) Using SST, connect terminals Ts and CG of DLC3.
  SST 09843–18040
  (3) Using SST, connect terminals Tc and CG of DLC3.
  SST 09843–18040
  (4) Turn the ignition switch ON.

(5) Disconnect and connect the terminal Tc of DLC3 20 times within 20 seconds.
(6) Check the DTC C1515/15 output.

(c) Perform the torque sensor zero point calibration.

HINT:

- Do not touch the steering wheel.
- Check that the DTC for except C1515/15 is not output.

(1) Stop the vehicle and turn the ignition switch to OFF.

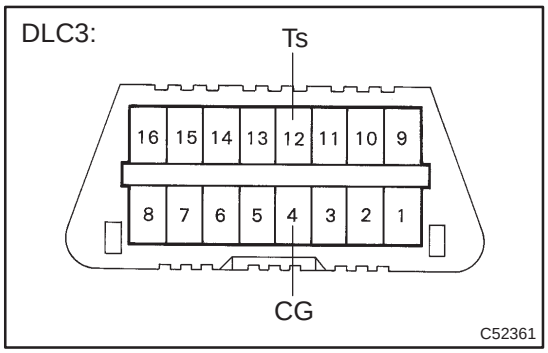

(2) Using SST, connect terminals Ts and CG of DLC3 and turn the ignition switch to ON.

SST 09843–18040

(3) Disconnect the SST.

SST 09843–18040

(4) Check the DTC is not output.

8. CALIBRATION OF TORQUE SENSOR ZERO POINT (USING HAND–HELD TESTER)

HINT:

Perform this operation in the following cases.

- When removing and installing ”steering wheel assembly”, ”tilt steering column assembly” and ”steering gear assembly”.
- When replacing power steering ECU assy.

(a) Place front wheels and steering wheel facing straight ahead.

(b) Perform the torque sensor zero point initialization.

HINT:

If the power steering ECU assy is replaced, initialization is not necessary.

(1) Stop the vehicle.
(2) Connect the hand–held tester to the DLC3.
(3) Select the ”TRQ SENS ADJUST” mode on the hand–held tester.
(4) Select the ”ZERO POINT INITIALIZE”.
(5) Following the screen instructions, perform the torque sensor zero point initialization.

(c) Perform the torque sensor zero point calibration.

HINT:

Do not touch the steering wheel.

(1) Connect the hand–held tester to the DLC3.
(2) Turn the ignition switch ON.
(3) Select the ”TRQ SENS ADJUST” mode on the hand–held tester.
(4) Select the ”ZERO POINT ADJUST”.
(5) Following the screen instructions, perform the torque sensor zero point calibration.

9. REPLACE POWER STEERING ECU ASSY

NOTICE:

Thoroughly check the procedures for removing and installing the power steering ECU assy when replacing it. Do the same operation or procedure for the removing and installing the steering column assy.

(a) Remove the power steering ECU assy (See page 50–20).

(1) Mark the clamp position on the torque sensor wire harness in order to reinstall the wire harness as shown in the illustration.

(2) Disconnect the torque sensor wire harness from the clamp.

NOTICE:

In case the clamp will be reused, pay attention so as not to damage it.

(3) Disconnect the connectors.

(4) LHD:
Remove the 2 bolts, screw and power steering ECU assy.

(5) RHD:
Remove the 2 bolts, 2 screws and power steering ECU assy.

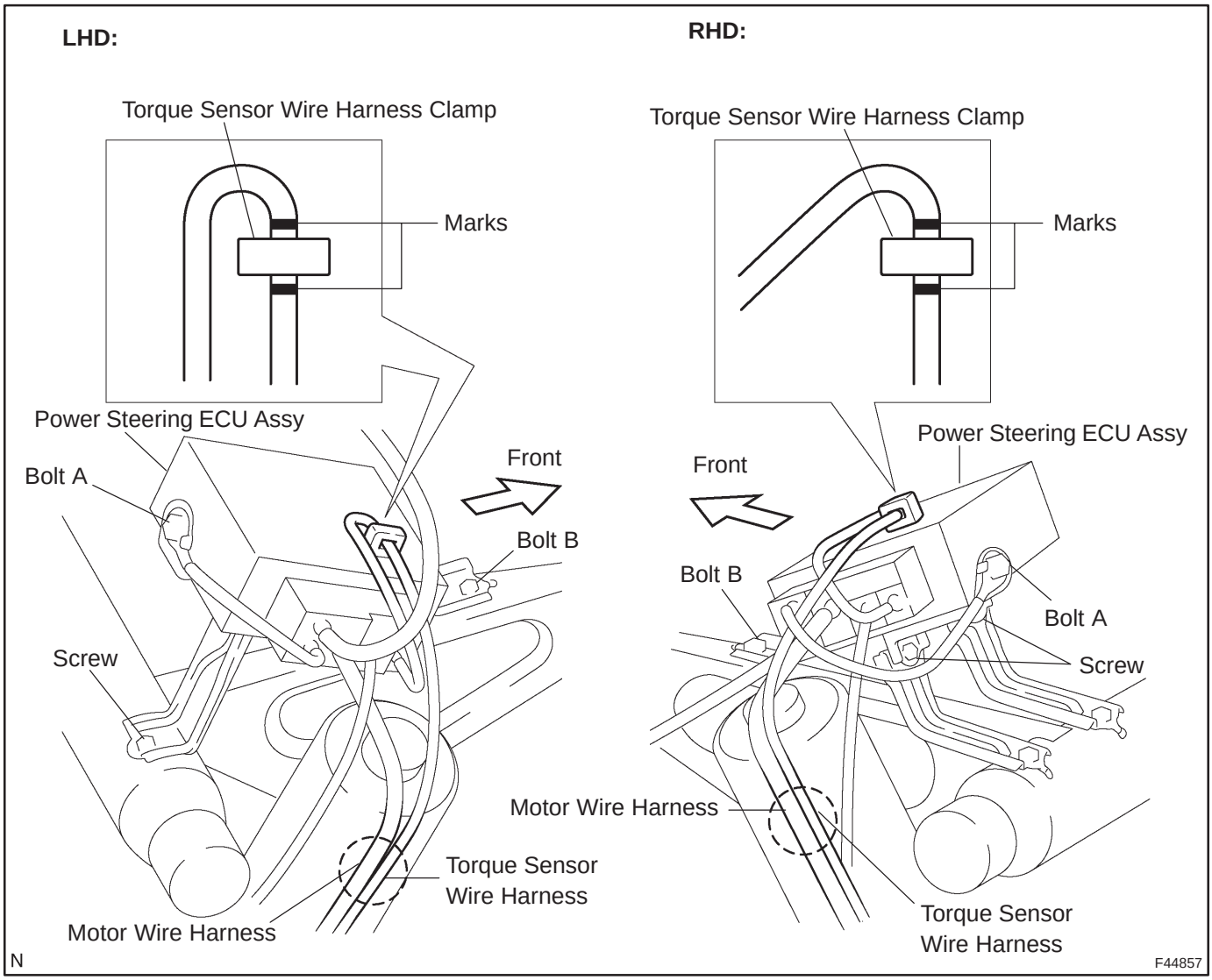

(b) Install the power steering ECU assy (See page 50–20).

(1) LHD:

Install the power steering ECU assy with the 2 bolts and screw.

Torque:
Bolt A: 8.0 N·m (82 kgf·cm, 71 in.·lbf)
Bolt B: 15.5 N·m (158 kgf·cm, 11 ft·lbf)

(2) RHD:

Install the power steering ECU assy with the 2 bolts and 2 screws.

Torque:
Bolt A: 8.0 N·m (82 kgf·cm, 71 in.·lbf)
Bolt B: 15.5 N·m (158 kgf·cm, 11 ft·lbf)

(3) Connect the connectors.

(4) Align the marks on the torque sensor wire harness with the clamp, as shown in the illustration.

NOTICE:

- **When reusing the clamp, check that there is no damage on it.**
- **When reinstalling the wire harness, make sure there is no twist in the harness or with other wire harness.**

10. FAIL SAFE FUNCTION

(a) If the power steering ECU assy detects a trouble, the ECU assy halt, fix or lower the steering power assist in order to protect the system.

HINT:

Repeating the steering operation when stopping or driving at low speed, or leaving the steering wheel turn fully for long hours will lower the amount of power assist in order to prevent power steering ECU assy from heating up. In this case, not operating the steering for about 10 minutes with engine idle will lead the fail safe function to return the normal state.

050WM–04

DIAGNOSTIC TROUBLE CODE CHART

HINT:

- Using SST 09843–18040, connect terminals Tc and CG of the DLC3.
- If a malfunction code is displayed during the DTC check, check the circuit listed for the code. For details of each code, proceed the page referred to under the ”See page” for respective ”DTC No.” in the DTC chart.

DTC No. (See page)	Detection Item	Trouble Area
C1511/11 (05–1059)	Torque sensor circuit malfunction	• Steering column assy • Power steering ECU assy
C1512/12 (05–1059)		
C1513/13 (05–1059)		
C1514/14 (05–1059)	Torque sensor power source circuit malfunction	
C1515/15 (05–1062)	Calibration of torque sensor zero point is not performed	Sensor zero point calibration is not preformed.
C1516/16 (05–1063)	Calibration of torque sensor zero point is not completed	Sensor zero point calibration failure.
C1517/17 (05–1059)	Torque sensor hold malfunction	• Steering column assy • Power steering ECU assy
C1523/23 (05–1064)	Motor circuit malfunction	• Steering column assy • Power steering ECU assy
C1524/24 (05–1064)		
C1531/31 (05–1066)	Power steering ECU assy malfunction	Power steering ECU assy
C1532/32 (05–1066)		
C1533/33 (05–1066)		
C1534/34 (05–1066)		
C1541/41 (05–1067)	Speed sensor malfunction	• Speed sensor • Speed sensor circuit • Skid control ECU • Combination meter assy • Power steering ECU assy
C1542/42 (05–1067)		
C1544/44 (05–1070)	Engine revolution signal malfunction	• Engine revolution signal circuit • ECM • Power steering ECU assy
C1545/45 (05–1070)		
C1551/51 (05–1073)	IG power source circuit malfunction	• ECU–IG fuse • Power steering relay • IG power source circuit • Charging system • Power steering ECU assy
C1552/52 (05–1076)	PIG power source circuit malfunction	• EMPS fuse • EMPS relay • PIG power source circuit • Power steering ECU assy
C1554/54 (05–1076)	EMPS relay circuit malfunction	

C1555/55 (05–1080)	EMPS motor relay circuit malfunction	Power steering ECU assy
C1581/81 (05–1066)	Assist map un–written	Power steering ECU assy

050WN–04

LOCATION

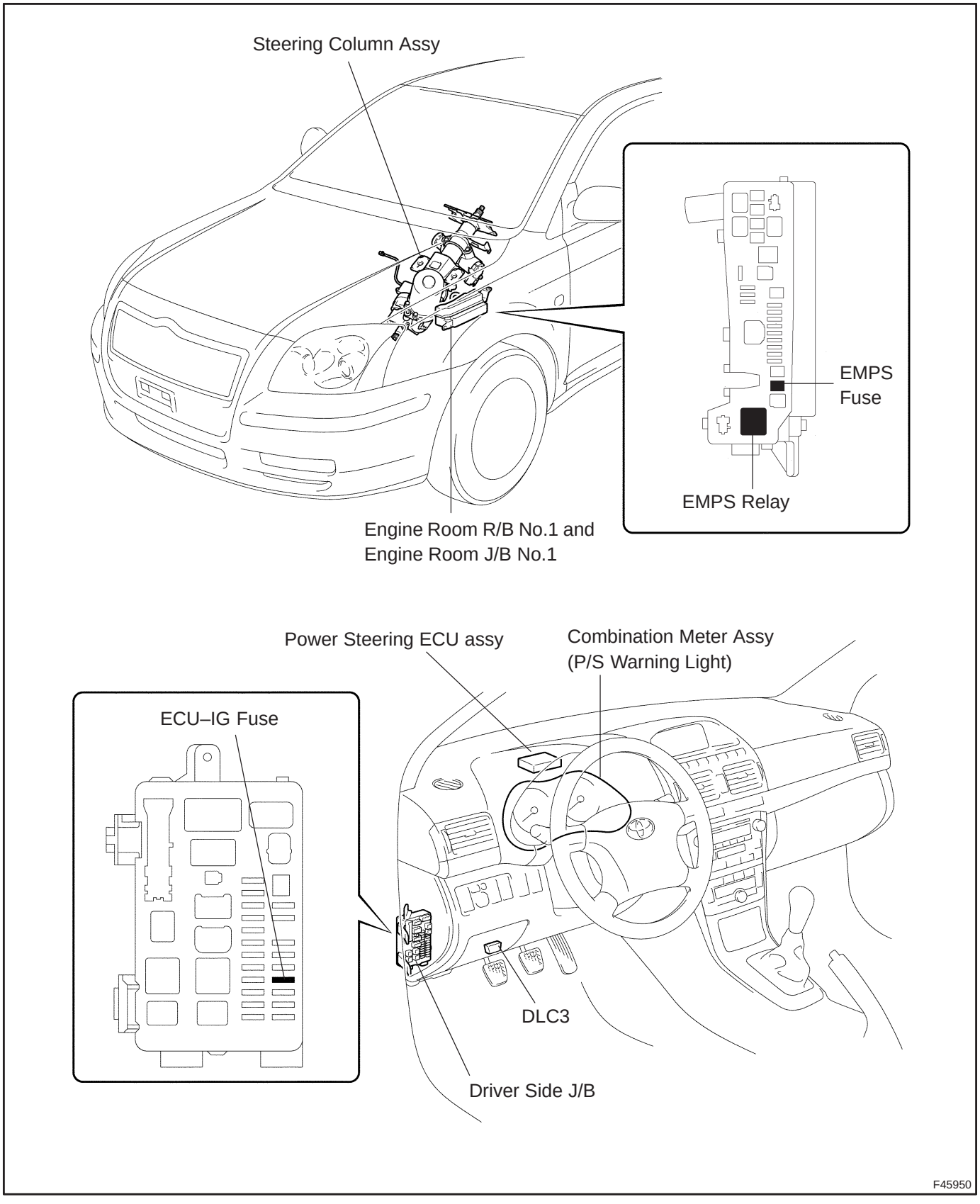

050WO–04

TERMINALS OF ECU

POWER STEERING ECU ASSY

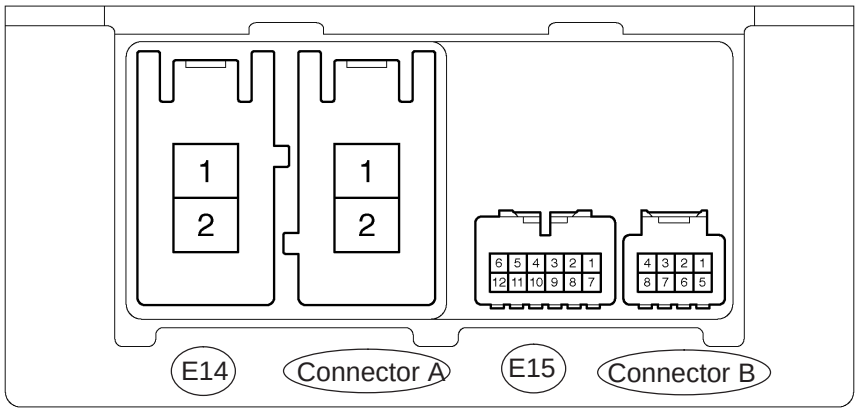

N

F44303

NOTICE:

When performing the inspection of power steering ECU, ECU must be installed to the vehicle or fully fixed.

Symbols (Terminal No.)	Wiring Color	Condition	Specified condition
PIG (E14–1) – PGND (E14–2)	L – W–B	IG switch ON	10 to 16 V
PGND (E14–2) – Body Ground	W–B – Body Ground	Always	Below 1.0 V
M1 (A–1) – PGND (E14–2)	– – W–B	IG switch ON, turn the steering wheel to left	Below 1.0 V
		IG switch ON, turn the steering wheel to right	10 to 16 V
M2 (A–2) – PGND (E14–2)	– – W–B	IG switch ON, turn the steering wheel to left	10 to 16 V
		IG switch ON, turn the steering wheel to right	Below 1.0 V
SIL (E15–2) – PGND (E14–2)	W–G – W–B	IG switch ON	10 to 16 V
RLY (E15–3) PGND (E14–2)	W–R – W–B	IG switch ON, after 1 sec. or more	Below 2.0 V
Tc (E15–4) – PGND (E14–2)	W–L – W–B	IG switch ON	5 to 16 V
		IG switch ON, short circuit Tc and CG terminals of DLC3	Below 1.0 V
SPD (E15–5) – PGND (E14–2)	V–W – W–B	IG switch ON	Pulse generation
IG (E15–6) – PGND (E14–2)	R–W – W–B	IG switch ON	10 to 16 V
IDUP (E15–8) – PGND (E14–2)	GR – W–B	IG switch ON	5 to 16 V
WL (E15–9) – PGND (E14–2)	B–W – W–B	IG switch ON, P/S warning light goes off	10 to 16 V
		IG switch ON, P/S warning light comes on	Below 1.0 V
Ts (E15–11) – PGND (E14–2)	W – W–B	IG switch ON	5 to 16 V
		IG switch ON, short circuit Ts and CG terminals of DLC3	Below 1.0 V
TACH (E15–12) – PGND (E14–2)	GR–R – W–B	IG switch ON	Pulse generation
TRQ1 (B–5) – PGND (E14–2)	– – W–B	IG switch ON, turn the steering wheel to left and right	0.3 to 4.7 V
TRQV (B–6) – PGND (E14–2)	– – W–B	IG switch ON	7.5 to 8.5 V
TRQ2 (B–7) – PGND (E14–2)	– – W–B	IG switch ON, turn the steering wheel to left and right	0.3 to 4.7 V
TRQG (B–8) – PGND (E14–2)	– – W–B	IG switch ON	Below 1.0 V

050WP–04

PROBLEM SYMPTOMS TABLE

If a normal code is displayed during the DTC check but the problem still occurs, check the circuits for each problem symptom in the order given in the table below and proceed to the relevant troubleshooting page.

Symptom	Suspected Area	See page
At the time of idling, steering control force is great.	1. Check the DTC reconfirming that the normal code is output. 2. IG Power source circuit 3. Front tire (Worn or improperly inflated) 4. Front wheel alignment (Incorrect) 5. Steering column assy 6. Power steering ECU assy	05–1045 05–1073 28–1 26–6 50–9 01–32
Even if the vehicle speed is increased, appropriate steering resistance cannot be felt.	1. Check the DTC reconfirming that the normal code is output. 2. Combination meter assy 3. Steering column assy 4. Power steering ECU assy	05–1045 71–21 50–9 01–32
P/S warning light faulty.	1. P/S warning light circuit 2. Power steering ECU assy	05–1082 01–32
DTC check cannot be done.	1. P/S warning light circuit 2. Tc terminal circuit 3. Power steering ECU assy	05–1082 05–1084 01–32
Input signal check cannot be done.	1. Ts terminal circuit 2. Power steering ECU assy 3. Combination meter assy	05–1086 01–32 71–21
Unusual noise.	1. Steering column assy 2. Power steering ECU assy 3. Steering gear assy	50–9 01–32 51–28

DTC	C1511/11	Torque Sensor Circuit Malfunction

DTC	C1512/12	Torque Sensor Circuit Malfunction

DTC	C1513/13	Torque Sensor Circuit Malfunction

DTC	C1514/14	Torque Sensor Power Source Circuit Malfunction

DTC	C1517/17	Torque Sensor Hold Malfunction

CIRCUIT DESCRIPTION

The torque sensor converts the power input in the steering wheel into electric signals, and sends them to the ECU.

DTC No.	DTC Detecting Condition	Trouble Area
C1511/11	Torque sensor circuit malfunction	• Steering column assy • Power steering ECU assy
C1512/12		
C1513/13		
C1514/14	Torque sensor power source circuit malfunction	
C1517/17	Torque sensor hold malfunction	

WIRING DIAGRAM

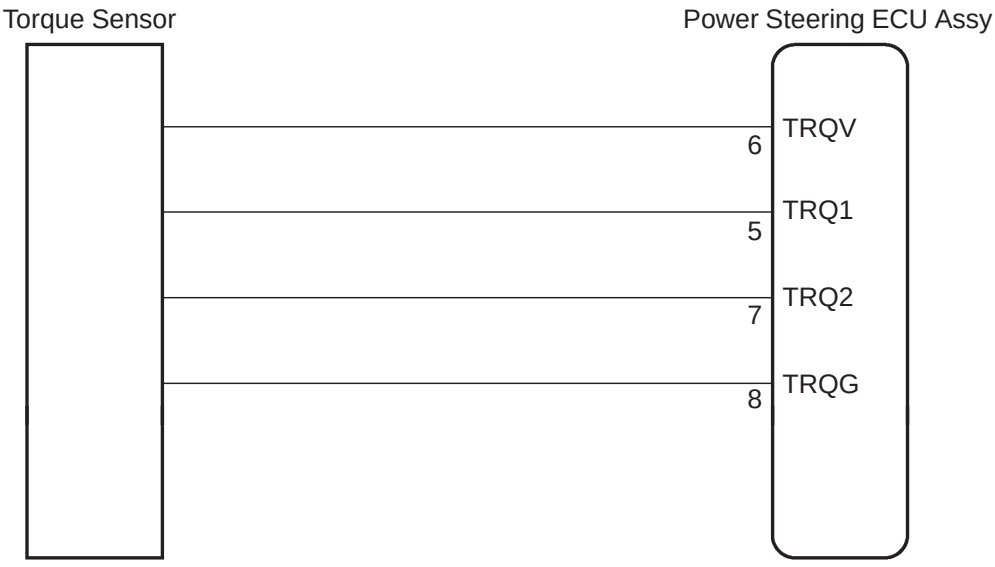

INSPECTION PROCEDURE

NOTICE:

When performing the inspection of power steering ECU, ECU must be installed to the vehicle or fully fixed.

HINT:

Start the inspection from the step 1 with using hand–held tester. Start from step 2 without using hand–held tester.

1	READ VALUE OF HAND–HELD TESTER

(a) Connect the hand–held tester to the DLC3.

(b) Turn the ignition switch to ON and push the hand–held tester main switch ON.

(c) Select the item ”TRQ1” and ”TRQ2” in the DATA LIST and read its value displayed on the hand–held tester.

(d) Check the values on the ”TRQ1” and ”TRQ2” of the data monitor with the steering wheel being in the center value position (no load).

Standard:

2.3 to 2.7 V

(e) Check the difference of the values between ”TRQ1” and ”TRQ2” with the steering wheel being in the center value position (no load).

Standard:

Voltage: 0.3 V or less

(f) Check the values of the torque sensor on the data monitor when turning steering wheel.

(1) Turn the steering wheel to the right end from the center value position, and check the values on the ”TRQ1” and ”TRQ2” of the data monitor.

Standard:

2.5 to 4.7 V

(2) Turn the steering wheel to the left end from the center value position, and check the values on the ”TRQ1” and ”TRQ2” of the data monitor.

Standard:

0.3 to 2.5 V

(3) Check the difference of the values between ”TRQ1” and ”TRQ2”.

Standard:

Voltage: 0.3 V or less

NG → **Go to step 3**

OK

REPLACE POWER STEERING ECU ASSY (See page 50–20)

2 INSPECT STEERING COLUMN ASSY(TORQUE SENSOR)

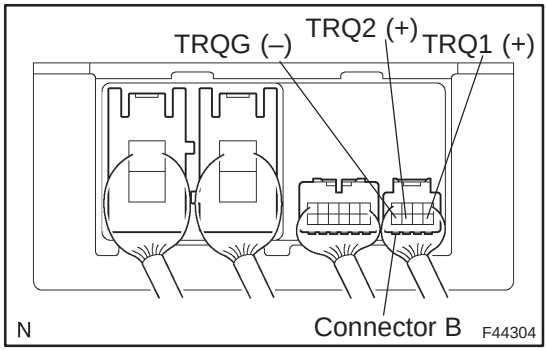

(a) Measure the voltage between terminals TRQ1 and TRQG, TRQ2 and TRQG of power steering ECU assy connector.

Standard:

Steering position	TRQ1	TRQ2
Center position	2.3 to 2.7 V	2.3 to 2.7 V
Right turned	2.5 to 4.7 V	2.5 to 4.7 V
Left turned	0.3 to 2.5 V	0.3 to 2.5 V

OK → **REPLACE POWER STEERING ECU ASSY (See page 50–20)**

NG

3 INSPECT POWER STEERING ECU ASSY

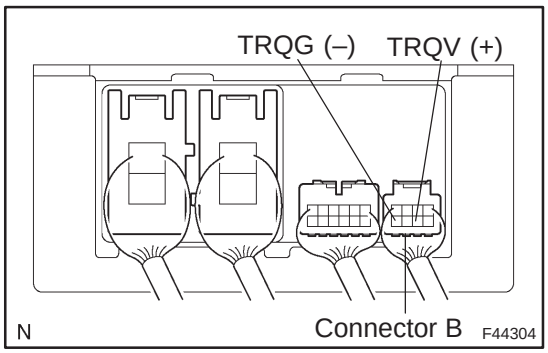

(a) Measure the voltage between terminals TRQV and TRQG of power steering ECU assy connector.

Standard:

7.5 to 8.5 V

OK → **REPLACE STEERING COLUMN ASSY (See page 50–9)**

NG

REPLACE POWER STEERING ECU ASSY (See page 50–20)

DTC	C1515/15	Torque Sensor Zero Point Calbration Not Performed

CIRCUIT DESCRIPTION

This DTC does not indicate trouble. Perform calibration of torque sensor zero point to delete DTC.

DTC No.	DTC Detecting Condition	Trouble Area
C1515/15	When torque sensor zero point calibration is not performed, this DTC is detected.	Sensor zero point calibration is not performed.

INSPECTION PROCEDURE

1	RECONFIRM DTC

(a) Check the DTCs (See page 05–1045).
(b) Is DTC excepted for C1515/15 outputed?

YES → REPAIR CIRCUIT INDICATED BY OUTPUT CODE

NO

2	PERFORM CALIBRATION OF TORQUE SENSOR ZERO POINT(See page 05–1045)

3	RECONFIRM DTC

(a) Check the DTC (See page 05–1045).
(b) Is DTC C1516/16 outputed?

NO → END

YES

REPAIR CIRCUIT INDICATED BY DTC C1516/16(See page 05–1063)

DTC	C1516/16	Calibration of Sensor Zero Point Not Completed

CIRCUIT DESCRIPTION

This DTC does not indicate trouble. This is detected when the torque sensor zero point calibration is not completed normally.

DTC No.	DTC Detecting Condition	Trouble Area
C1516/16	The torque sensor zero point calibration is not completed normally.	Sensor zero point calibration failure.

INSPECTION PROCEDURE

1	CLEAR DTC(See page 05–1045)

2	PERFORM CALIBRATION OF TORQUE SENSOR ZERO POINT(See page 05–1045)

3	RECONFIRM DTC

(a) Check the DTCs (See page 05–1045).

(A): DTC C1516/16 output after attempted 3 time or more.

(B): Normal code output.

HINT:

If the DTC code is output in spite of conducting the steering zero point calibration, replace the steering column assy.

(A) → **REPLACE STEERING COLUMN ASSY**

(B)

END

DTC	C1523/23	Motor Circuit Malfunction

DTC	C1524/24	Motor Circuit Malfunction

CIRCUIT DESCRIPTION

DTC No.	DTC Detecting Condition	Trouble Area
C1523/23	Short circuit of motor terminal or abnormal voltage or current in motor circuit.	• Steering column assy • Power steering ECU assy
C1524/24		

WIRING DIAGRAM

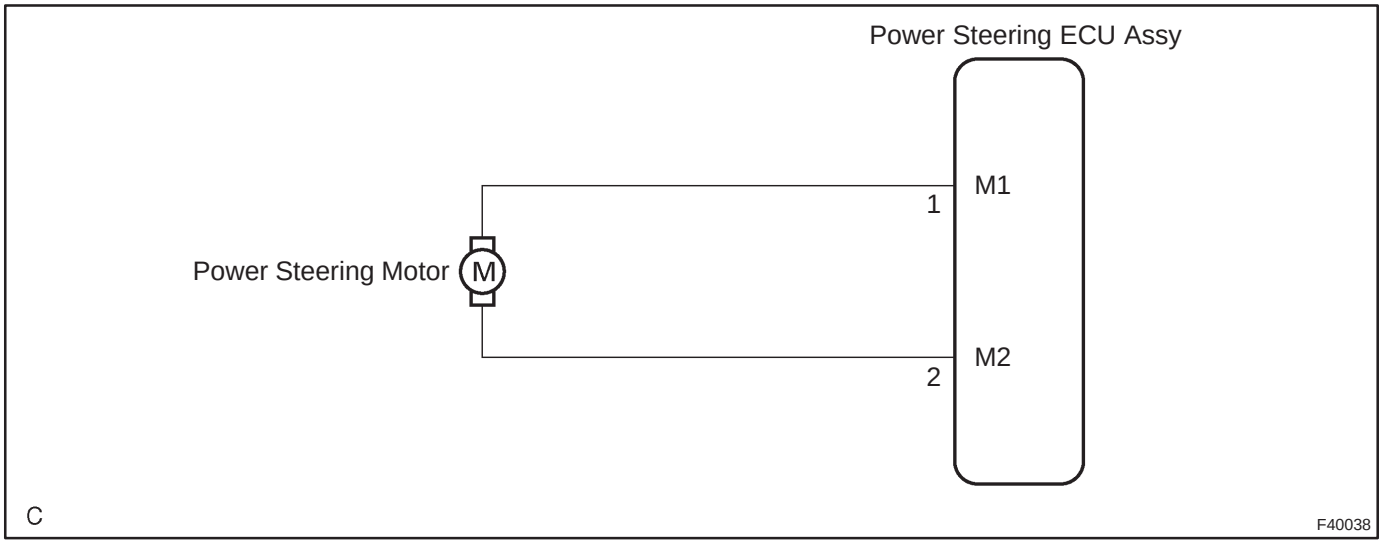

INSPECTION PROCEDURE

NOTICE:

When performing the inspection of power steering ECU, ECU must be installed to the vehicle or fully fixed.

1	INSPECT POWER STEERING ECU ASSY

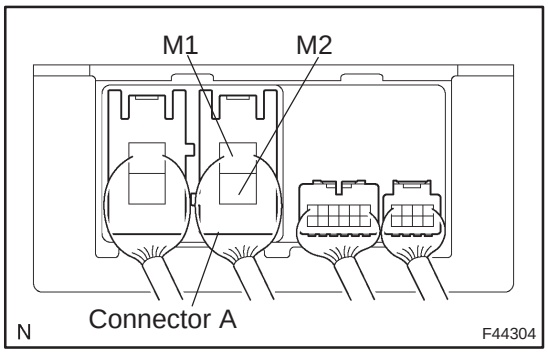

(a) Turn the ignition switch ON.

(b) Turn the steering wheel to the left and right and measure the voltage between terminals M1 and M2 of power steering ECU assy connector.

Standard:

Voltage changes when steering wheel is turned.

NG → **REPLACE POWER STEERING ECU ASSY(See page 50–20)**

OK

2	INSPECT STEERING COLUMN ASSY(POWER STEERING MOTOR)

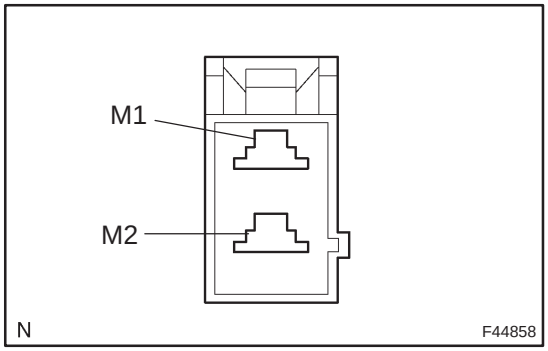

(a) Disconnect the connector from the power steering motor.

(b) Measure the resistance between terminals M1 and M2 of power steering motor connector.

Standard:

Resistance: 0.07 to 1 Ω

NG → **REPLACE STEERING COLUMN ASSY (See page 50–9)**

OK

REPLACE POWER STEERING ECU ASSY(See page 50–20)

DTC	C1531/31	EMPS ECU Circuit Malfunction

DTC	C1532/32	EMPS ECU Circuit Malfunction

DTC	C1533/33	EMPS ECU Circuit Malfunction

DTC	C1534/34	EMPS ECU Circuit Malfunction

DTC	C1581/81	Assist Map Un–written

CIRCUIT DESCRIPTION

DTC No.	DTC Detecting Condition	Trouble Area
C1531/31	Power steering ECU assy malfunction	Power steering ECU assy
C1532/32		
C1533/33		
C1534/34		
C1581/81	Assist map un–written	

INSPECTION PROCEDURE

1	RECONFIRM DTC

(a) Check the DTCs (See page 05–1045).

(b) Is DTC except for C1531/31, C1532/32, C1533/33, C1534/34 and/or C1581/81 output?

YES → **REPAIR CIRCUIT INDICATED BY OUTPUT CODE**

NO

REPLACE POWER STEERING ECU ASSY (See page 50–20)

DTC	C1541/41	Speed Sensor Malfunction

DTC	C1542/42	Speed Sensor Malfunction

DTC	C1571/71	Speed Sensor Malfunction (Test mode)

CIRCUIT DESCRIPTION

DTC No.	DTC Detecting Condition	Trouble Area
C1541/41	Speed sensor malfunction	• Speed sensor • Speed sensor circuit • Skid control ECU assy • Combination meter assy • Power steering ECU assy
C1542/42		
C1571/71	Speed sensor malfunction (Test mode)	

WIRING DIAGRAM

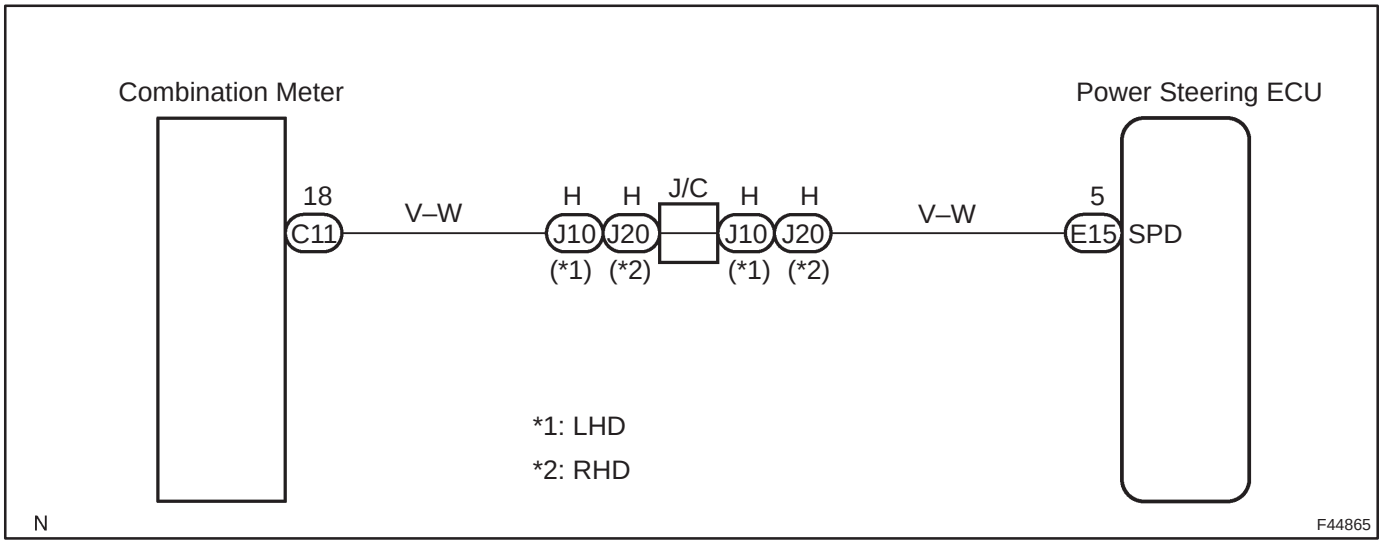

INSPECTION PROCEDURE

NOTICE:

When performing the inspection of power steering ECU, ECU must be installed to the vehicle or fully fixed.

HINT:

Start the inspection from the step 1 with using hand–held tester. Start from step 2 without using hand–held tester.

1	READ VALUE OF HAND–HELD TESTER

(a) Connect the hand–held tester to the DLC3.
(b) Turn the ignition switch to ON, and turn the hand–held tester main switch to ON.
(c) Select the item ”SPD” in the DATA LIST and read its value displayed on the hand–held tester.
(d) Check that there is no difference between the speed value output from the speedometer displayed by the hand–held tester and the speed value displayed by the speedometer when driving the vehicle.
OK:
There is almost no difference in the displayed speed values.

HINT:

There is tolerance of ±10 % in the speedometer indication.

OK → **REPLACE POWER STEERING ECU ASSY(See page 50–20)**

NG

2	CHECK DIAGNOSTIC CODE OUTPUT

(a) Check that DTC for brake system output the normal code.

NG → **REPAIR CIRCUIT INDICATED BY OUTPUT CODE**

OK

3	INSPECT POWER STEERING ECU ASSY(METER SPEED SIGNAL)

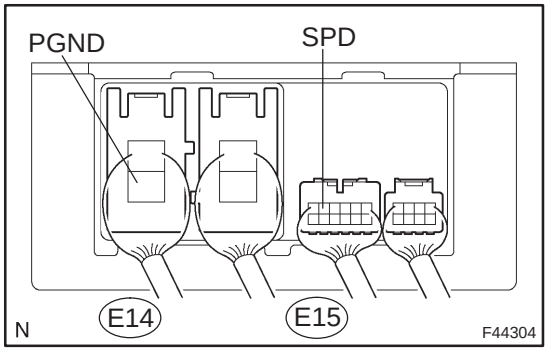

(a) Turn the ignition switch ON.
(b) Connect an oscilloscope to terminals SPD and PGND of the power steering ECU assy connector.

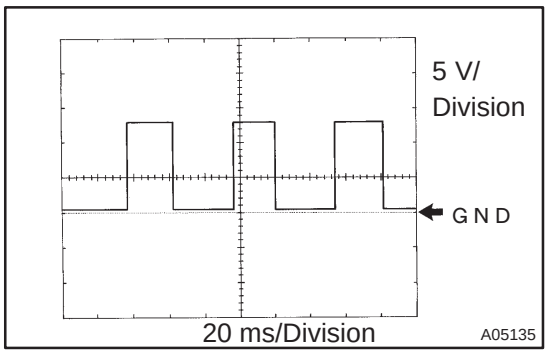

(c) Driving at about 20 km/h (12 mph), check the signal waveform.
Standard:
Signal waveform as shown in the illustration.

HINT:
As the vehicle speed becomes high, the waveform cycle narrows.

OK	REPLACE POWER STEERING ECU ASSY(See page 50–20)

NG

4	CHECK HARNESS AND CONNECTOR(POWER STEERING ECU ASSY – COMBINATION METER ASSY)

(a) Check for an open or short circuit in harness and connector between power steering ECU assy and combination meter assy (See page 01–32).

NG	REPAIR OR REPLACE HARNESS OR CONNECTOR

OK

GO TO COMBINATION METER SYSTEM(See page 05–1510)

DTC	C1544/44	Engine Revolution Signal Malfunction

DTC	C1545/45	Engine Revolution Signal Malfunction

DTC	C1573/73	Engine Revolution Signal Malfunction (Test Mode)

CIRCUIT DESCRIPTION

DTC No.	DTC Detecting Condition	Trouble Area
C1544/44	Engine revolution signal malfunction	• Engine revolution signal circuit • ECM • Power steering ECU assy
C1545/45		
C1573/73	Engine revolution signal malfunction (Test mode)	

WIRING DIAGRAM

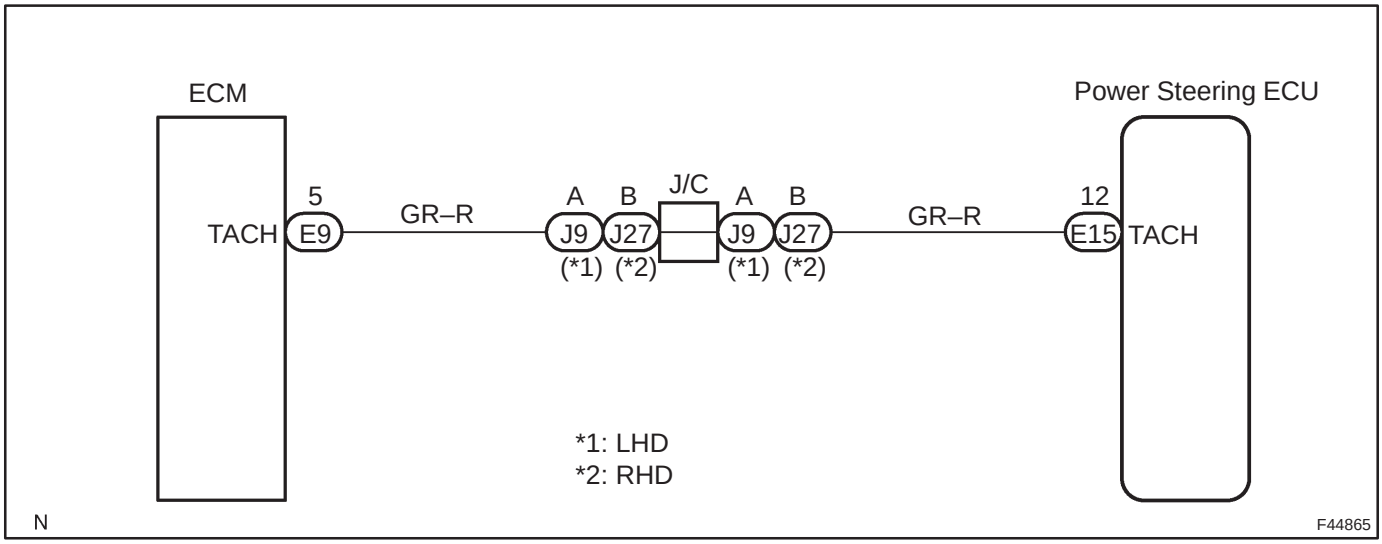

INSPECTION PROCEDURE

NOTICE:

When performing the inspection of power steering ECU, ECU must be installed to the vehicle or fully fixed.

HINT:

Start the inspection from the step 1 with using hand–held tester. Start from step 2 without using hand–held tester.

1	READ VALUE OF HAND–HELD TESTER

(a) Connect the hand–held tester to the DLC3.
(b) Turn the ignition switch to ON, and turn the hand–held tester main switch to ON.
(c) Select the item ”ENGINE REV” in the DATA LIST and read its value displayed on the hand–held tester.
(d) Check that there is no difference between the engine revolution value output from the tachometer displayed by the hand–held tester and the engine revolution value displayed by the tachometer when engine is idle.

OK:

There is almost no difference in the displayed engine revolution values.

HINT:

There is tolerance of ±10 % in the tachometer indication.

OK	REPLACE POWER STEERING ECU ASSY(See page 50–20)

NG

2	CHECK DIAGNOSTIC CODE OUTPUT

(a) Check that the DTC for engine output the normal code.

NG	REPAIR CIRCUIT INDICATED BY OUTPUT CODE

OK

3	INSPECT POWER STEERING ECU ASSY(ENGINE REVOLUTION SIGNAL)

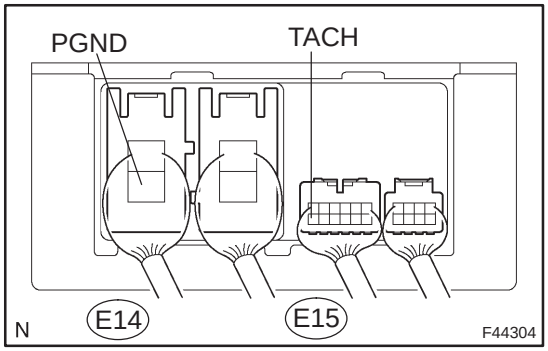

(a) Turn the ignition switch ON.
(b) Connect an oscilloscope to terminals TACH and PGND of the power steering ECU assy connector.

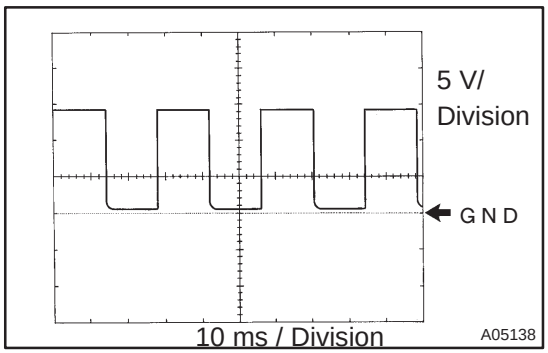

(c) With the engine idling, check the signal waveform.
Standard:
Signal waveform as shown in the illustration.

HINT:
As the engine revolution becomes high, the waveform cycle narrows.

OK → **REPLACE POWER STEERING ECU ASSY(See page 50–20)**

NG

4	CHECK HARNESS AND CONNECTOR(POWER STEERING ECU ASSY – ECM)

(a) Check for an open or short circuit in harness and connector between power steering ECU assy and ECM (See page 01–32).

NG → **REPAIR OR REPLACE HARNESS OR CONNECTOR**

OK

GO TO ENGINE CONTROL SYSTEM

DTC C1551/51 IG Power Source Circuit Malfunction

CIRCUIT DESCRIPTION

The power steering ECU assy identifies ON or OFF status of the ignition switch by this circuit.

DTC No.	DTC Detecting Condition	Trouble Area
C1551/51	Unusual IG voltage value which exceeds the specification is inputed to power steering ECU assy.	• ECU–IG fuse • IG power source circuit • Charging system • Power steering ECU assy

WIRING DIAGRAM

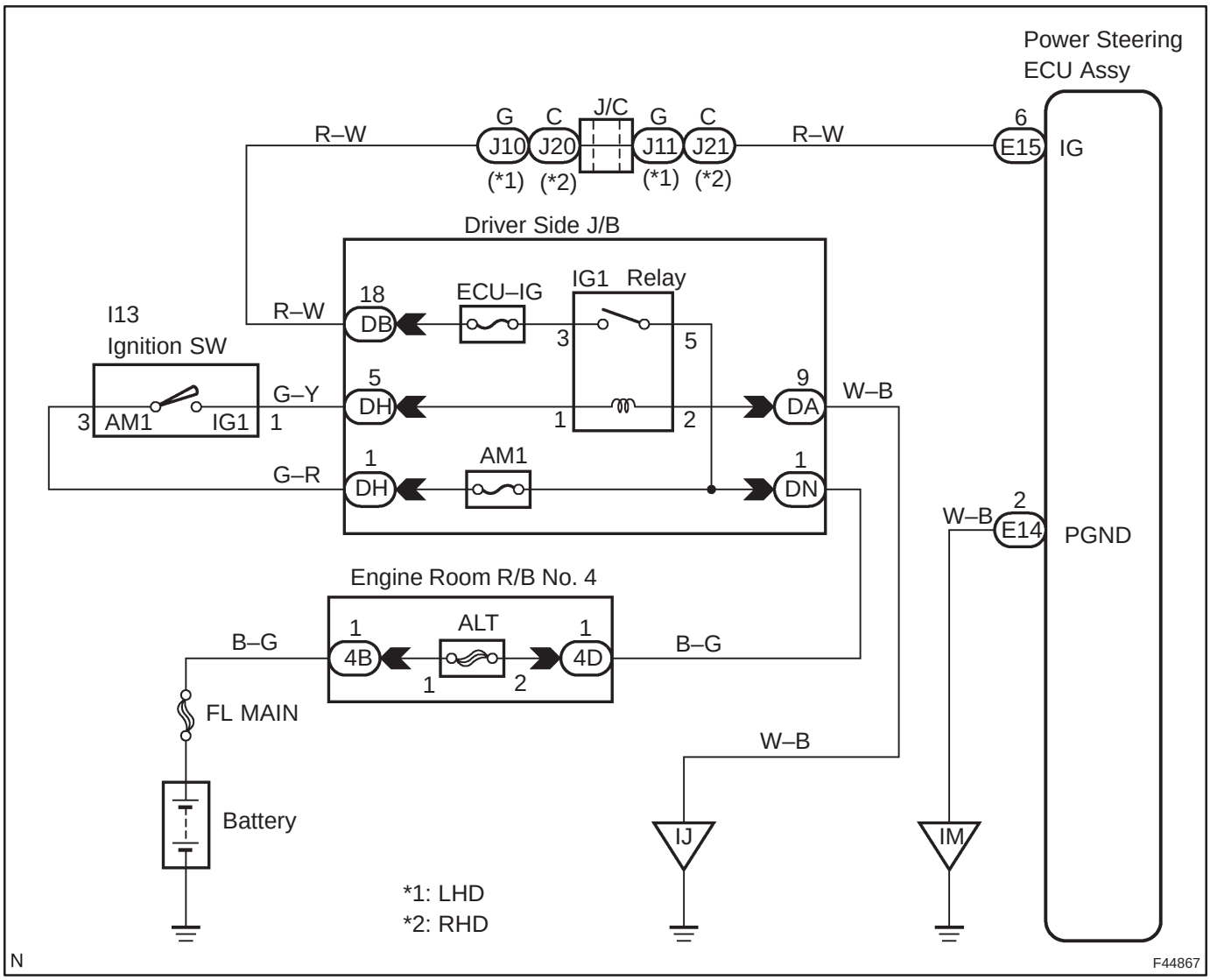

INSPECTION PROCEDURE

NOTICE:

When performing the inspection of power steering ECU, ECU must be installed to the vehicle or fully fixed.

1	INSPECT FUSE(ECU–IG)

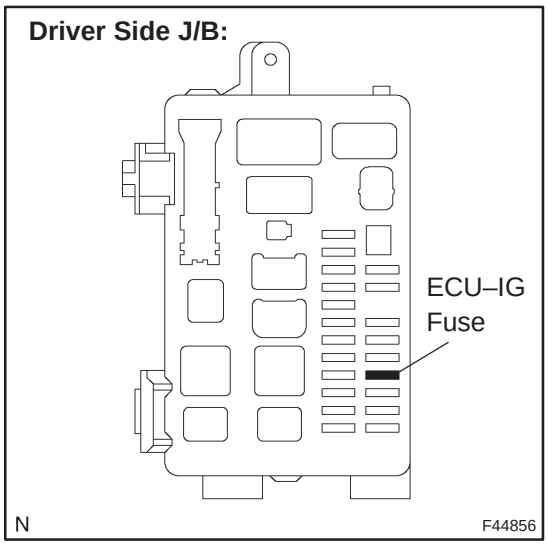

(a) Remove the ECU–IG fuse from the driver side J/B.

(b) Check the continuity of the ECU–IG fuse.

Standard:

Continuity

NG → **INSPECT FOR SHORT CIRCUIT IN ALL HARNESS AND COMPONENTS CONNECTED TO ECU–IG FUSE**

OK

2	CHECK HARNESS AND CONNECTOR(POWER STEERING ECU ASSY – BODY GROUND)

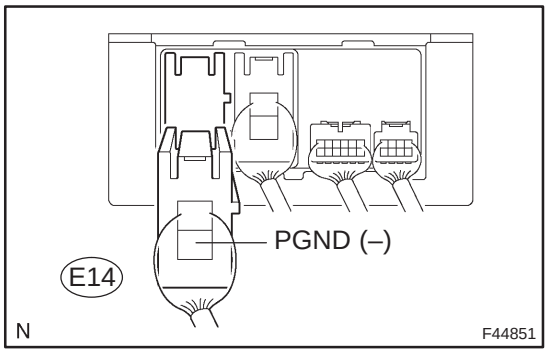

(a) Disconnect the E14 connector from the power steering ECU assy.

(b) Measure the resistance between terminal PGND of E14 connector and body ground.

Standard:

Resistance: 1 Ω or less

NG → **REPAIR OR REPLACE HARNESS OR CONNECTOR**

OK

3	CHECK HARNESS AND CONNECTOR(POWER STEERING ECU ASSY – DRIVER SIDE J/B)

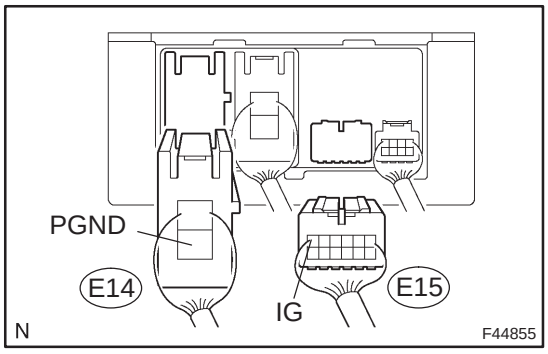

(a) Disconnect the E14 and E15 connectors from the power steering ECU assy.
(b) Turn the ignition switch ON.
(c) Measure the voltage between terminals IG and PGND of the E14 and E15 connectors.
Standard:
Voltage: 10 to 16 V

NG → **REPAIR OR REPLACE HARNESS OR CONNECTOR**

OK

REPLACE POWER STEERING ECU ASSY (See page 50–20)

DTC	C1552/52	PIG Power Source Circuit

DTC	C1554/54	EMPS Relay Circuit

CIRCUIT DESCRIPTION

When turning the ignition switch to ON, battery voltage is supplied to terminal PIG of the power steering ECU assy by EMPS relay operations. If a malfunction occurs in the system, the system prohibits the steering assist by interrupting the circuits of the EMPS relay and the motor relay (built in the power steering ECU assy).

DTC No.	DTC Detecting Condition	Trouble Area
C1552/52	Unusual motor power source voltage value which is not within the specification is input to power steering ECU assy.	• EMPS fuse • EMPS relay • PIG power source circuit • Power steering ECU assy
C1554/54	Open or short circuit of EMPS relay circuit is detected.	

WIRING DIAGRAM

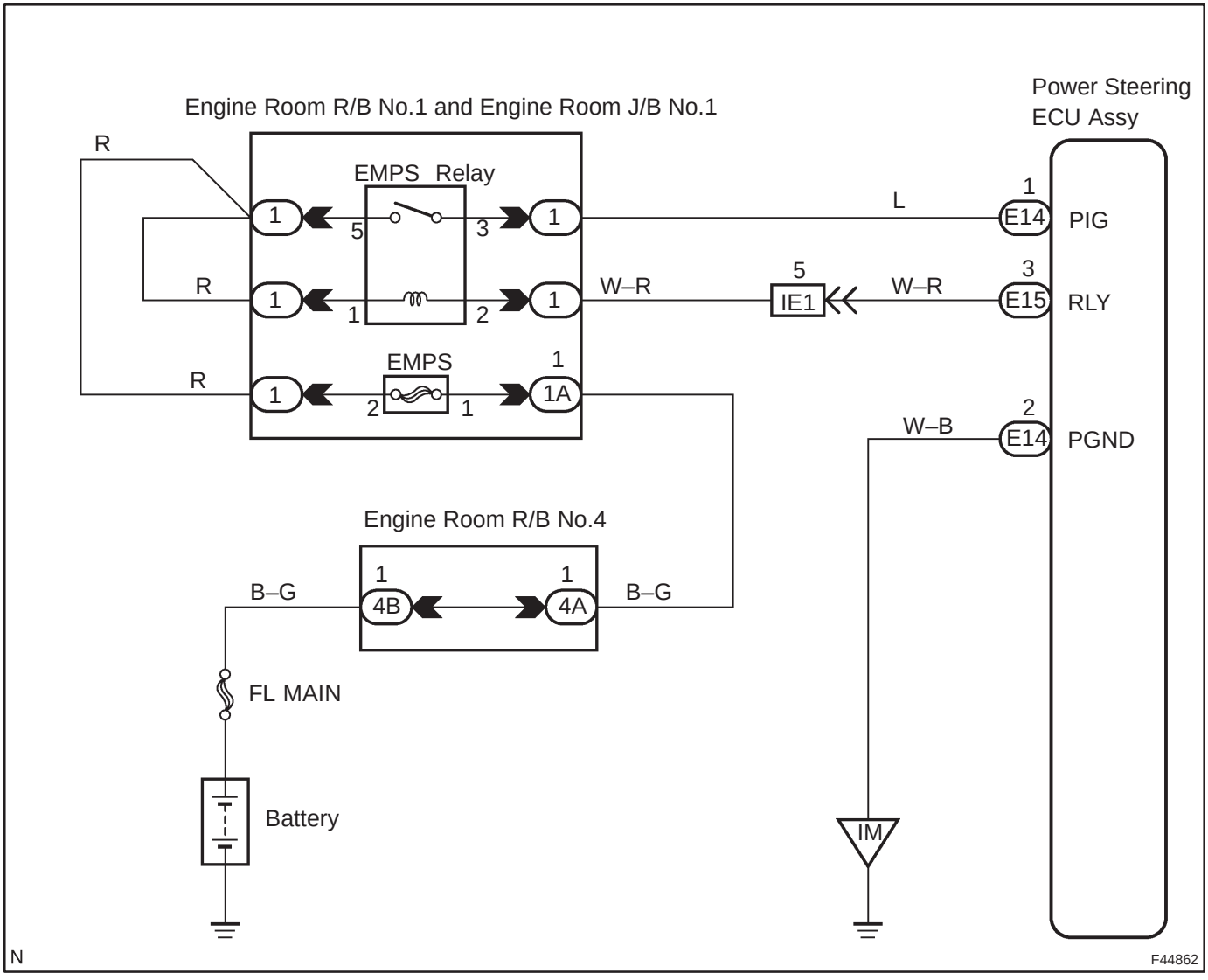

INSPECTION PROCEDURE

NOTICE:

When performing the inspection of power steering ECU, ECU must be installed to the vehicle or fully fixed.

1	INSPECT FUSE(EMPS)

Engine Room R/B No.1 and Engine Room J/B No.1:

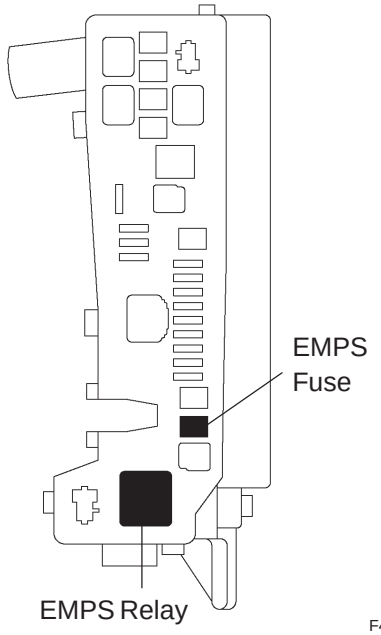

(a) Remove the EMPS fuse from the engine room R/B No.1 and J/B No.1.

(b) Check the continuity of the EMPS fuse.

Standard:

Continuity

NG → **INSPECT FOR SHORT CIRCUIT IN HARNESS AND ALL COMPONENTS CONNECTED TO EMPS FUSE**

OK

2	INSPECT EMPS RELAY

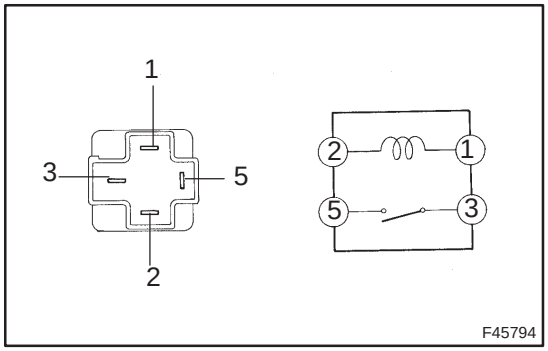

(a) Remove the EMPS relay from the engine room R/B No. 1 and J/B No. 1.

(b) Check operation of the EMPS relay.

Standard:

Terminal No.	Specified condition
3 – 5	10 kΩ or higher
3 – 5	Below 1 Ω (When battery voltage is applied to terminals 1 and 2)

NG → **REPLACE EMPS RELAY**

OK

3	CHECK HARNESS AND CONNECTOR(POWER STEERING ECU ASSY – BODY GROUND)

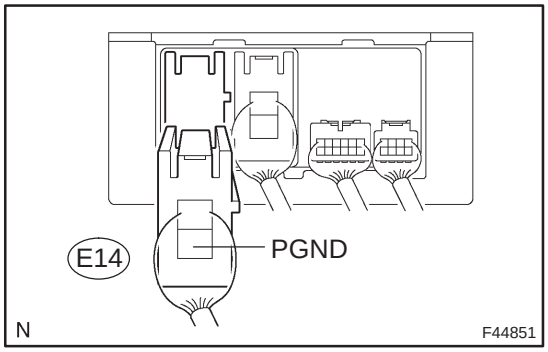

(a) Disconnect the E14 connector from the power steering ECU assy.

(b) Measure the resistance between the terminal PGND of the E14 connector and body ground.

Standard:

Resistance: 1 Ω or less

NG → **REPAIR OR REPLACE HARNESS OR CONNECTOR**

OK

4	CHECK HARNESS AND CONNECTOR(POWER STEERING ECU ASSY – ENGINE ROOM R/B AND J/B)

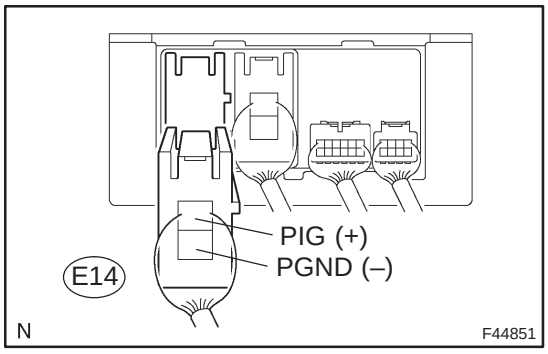

(a) Disconnect the E14 connector from the power steering ECU assy.
(b) Turn the ignition switch ON.
(c) Measure the voltage between the terminals PIG and PGND of the E14 connector.
Standard:
Voltage: 10 to 16 V

NG → **REPAIR OR REPLACE HARNESS OR CONNECTOR**

OK

REPLACE POWER STEERING ECU ASSY(See page 50–20)

DTC C1555/55 EMPS Motor Relay Circuit

CIRCUIT DESCRIPTION

If a malfunction occurs in the system, the system prohibits the steering assist by interrupting the circuits of the EMPS relay and the motor relay (built in the power steering ECU assy).

DTC No.	DTC Detecting Condition	Trouble Area
C1555/55	Open or short circuit of EMPS motor relay in the ECU circuit is detected.	Power steering ECU assy

WIRING DIAGRAM

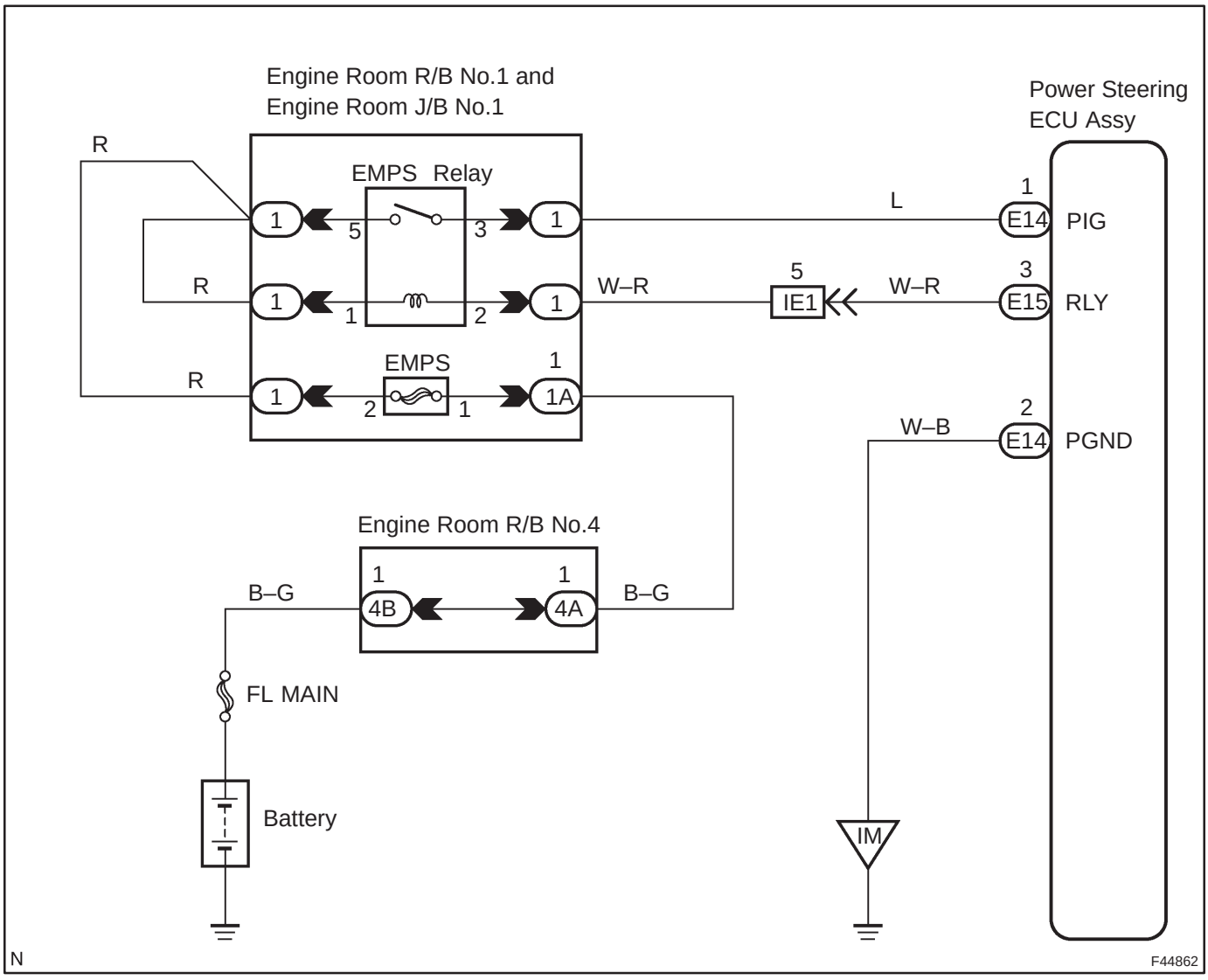

INSPECTION PROCEDURE

NOTICE:

When performing the inspection of power steering ECU, ECU must be installed to the vehicle or fully fixed.

HINT:

Start the inspection from the step 1 with using hand–held tester. Start from step 2 without using hand–held tester.

1 READ VALUE OF HAND–HELD TESTER

(a) Connect the hand–held tester to the DLC3.
(b) Turn the ignition switch to ON and turn the hand–held tester main switch to ON.
(c) Select the item ”PIG SUPPLY” in the FREEZE FRAME DATA and read its value displayed on the hand–held tester.
(d) Check that the power supply voltage value of the drive motor displayed by the hand–held tester.
Standard:
Voltage: 10 to 16 V

OK → **Go to step 3**

NG

GO TO RELEVANT DTC CHART

2 INSPECT POWER STEERING ECU ASSY(PIG TERMINAL VOLTGE)

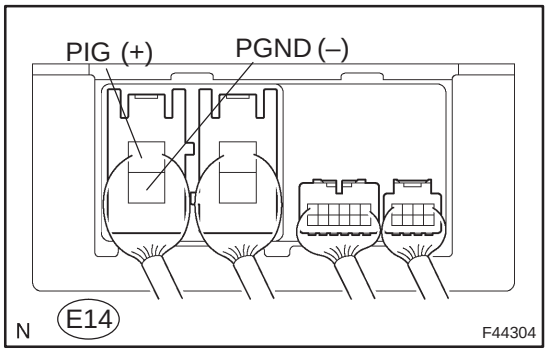

(a) Turn the ignition switch ON.
(b) Measure the voltage between terminals PIG and PGND of power steering ECU assy connector.
Standard:
Voltage: 10 to 16 V

NG → **GO TO RELEVANT DTC CHART (See page 05–1076)**

OK

3 RECONFIRM DTC

(a) Check the DTCs (See page 05–1045).
(b) Is DTC except for C1552/52 output?

YES → **REPAIR CIRCUIT INDICATED BY OUTPUT CODE**

NO

REPLACE POWER STEERING ECU ASSY(See page 50–20)

EMPS Warning Light Circuit

CIRCUIT DESCRIPTION

If the power steering ECU assy detects a trouble, the PS warning lights up. At this time, the power steering ECU assy records a DTC in memory.

WIRING DIAGRAM

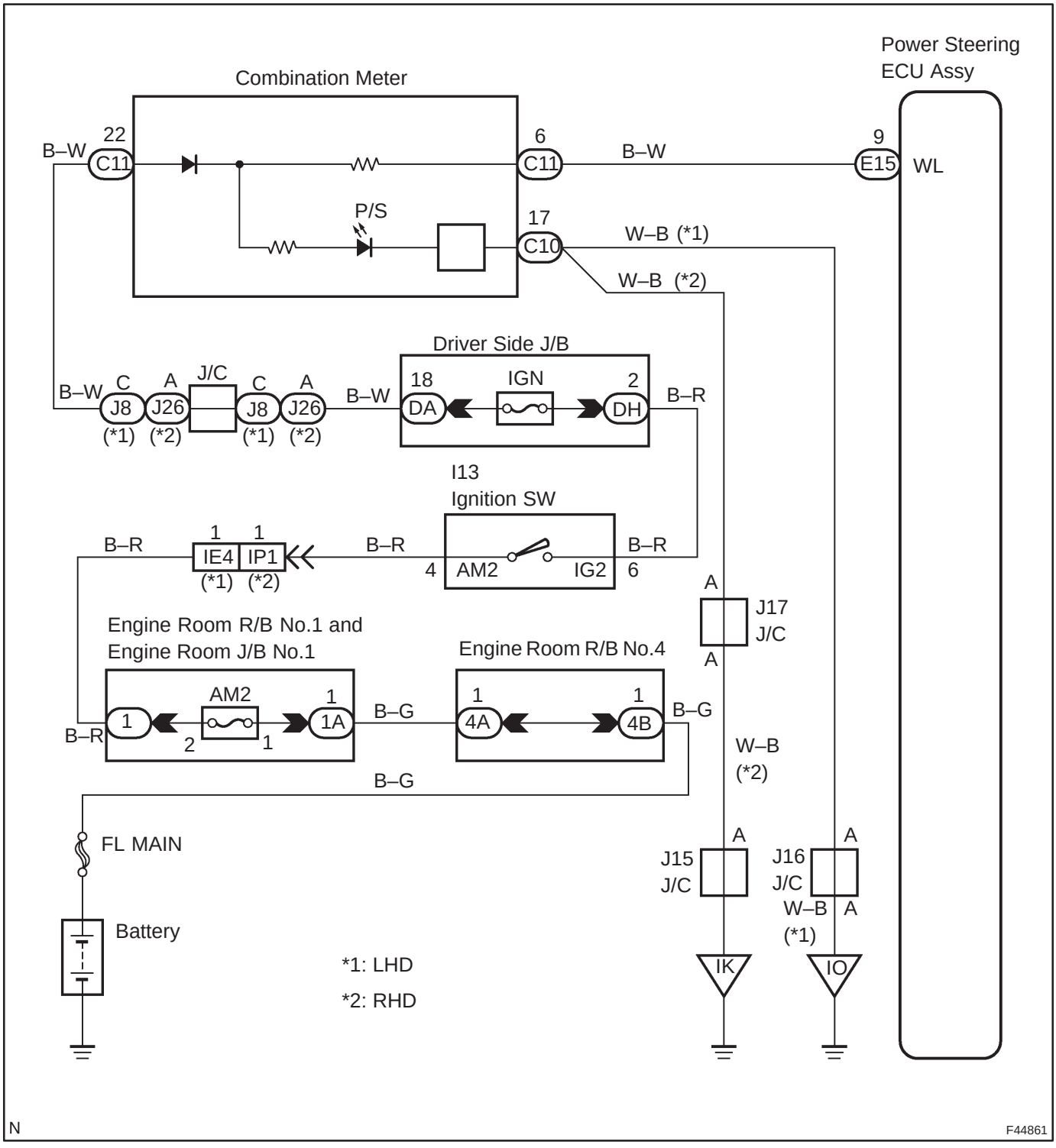

INSPECTION PROCEDURE

NOTICE:

When performing the inspection of power steering ECU, ECU must be installed to the vehicle or fully fixed.

1	CHECK HARNESS AND CONNECTOR(POWER STEERING ECU ASSY – COMBINATION METER ASSY)

(a) Check for an open or short circuit in harness and connector between power steering ECU assy and combination meter assy (See page 01–32).

NG	REPAIR OR REPLACE HARNESS OR CONNECTOR

OK

2	CHECK HARNESS AND CONNECTOR(POWER STEERING ECU ASSY – BODY GROUND)

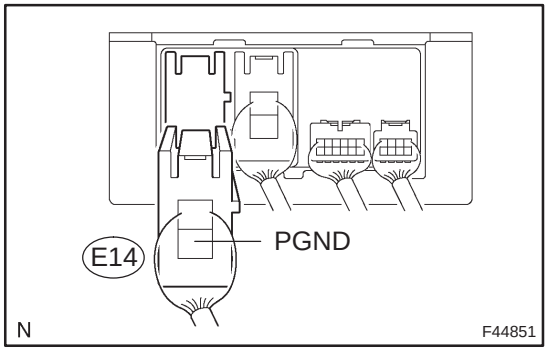

(a) Disconnect the E14 connector from the power steering ECU assy.

(b) Check the continuity between the terminal PGND of the E14 connector and body ground.

Standard:

Continuity

NG	REPAIR OR REPLACE HARNESS OR CONNECTOR

OK

3	INSPECT POWER STEERING ECU ASSY

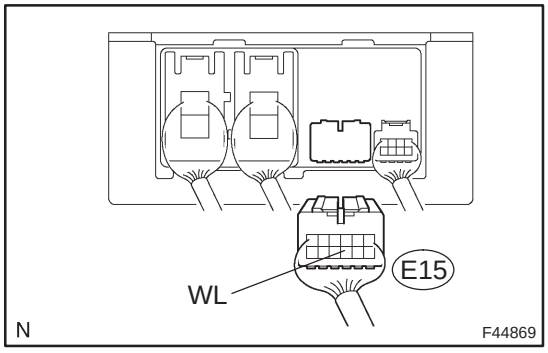

(a) Turn the ignition switch ON.

(b) Disconnect the E15 connector from the power steering ECU assy, and check the P/S warning light comes on.

(c) Using a service wire, ground the terminal WL of the E15 connector, and check the P/S warning light goes off.

Standard:

P/S warning light comes on and then goes off

NG	REPLACE POWER STEERING ECU ASSY (See page 50–20)

OK

CHECK GO TO COMBINATION METER SYSTEM

TC TERMINAL CIRCUIT

CIRCUIT DESCRIPTION

When the terminals Tc and CG of DLC3 are connected, the power steering ECU assy displays the DTC.

WIRING DIAGRAM

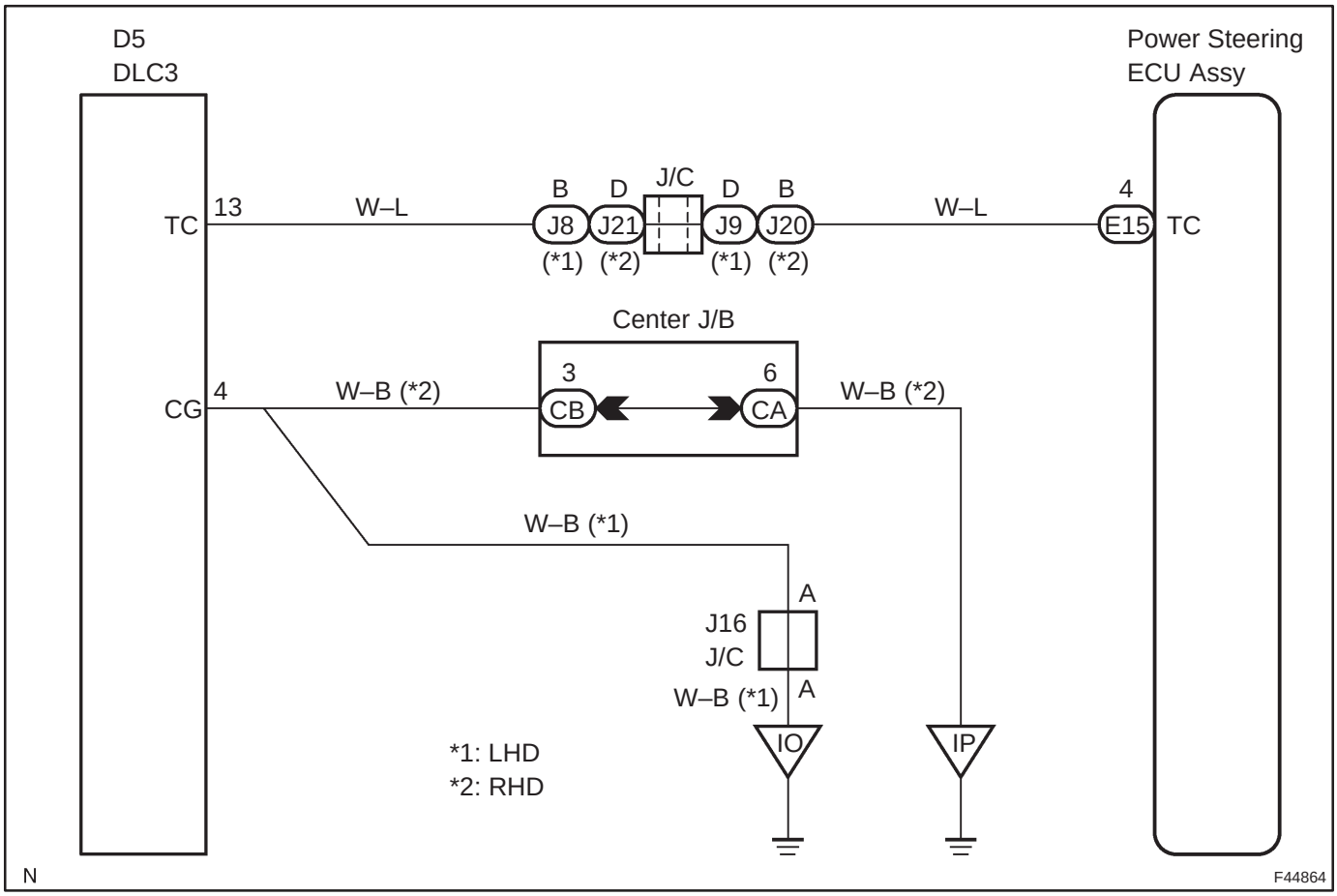

INSPECTION PROCEDURE

1	INSPECT DLC3 TERMINAL VOLTAGE(Tc TERMINAL)

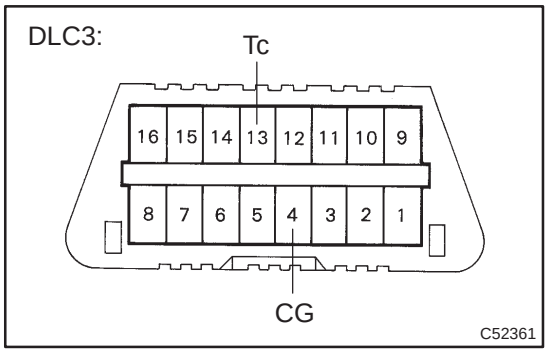

(a) Turn the ignition switch ON.
(b) Measure the voltage between terminals Tc and CG of DLC3.
OK:
Voltage: 5 to 16 V

OK → **Go to step 3**

NG

2	CHECK HARNESS AND CONNECTOR(DLC3 – BODY GROUND)

(a) Check for an open or short circuit in harness and connector between terminals CG of DLC3 and body ground (See page 01–32).

NG → **REPAIR OR REPLACE HARNESS OR CONNECTOR**

OK

3	CHECK HARNESS AND CONNECTOR(DLC3 – POWER STEERING ECU ASSY)

(a) Check for an open or short circuit in harness and connector between terminals Tc of DLC3 and power steering ECU assy (See page 01–32).

NG → **REPAIR OR REPLACE HARNESS OR CONNECTOR**

OK

REPLACE POWER STEERING ECU ASSY(See page 50–20)

TS TERMINAL CIRCUIT

CIRCUIT DESCRIPTION

After making short circuit between terminal Ts and CG of DLC3 with turning the ignition switch OFF, the mode will change from the normal mode to test mode when the ignition switch is turned ON. After the ignition switch is turned ON, there will be DTC output from Tc terminal of DLC3.

WIRING DIAGRAM

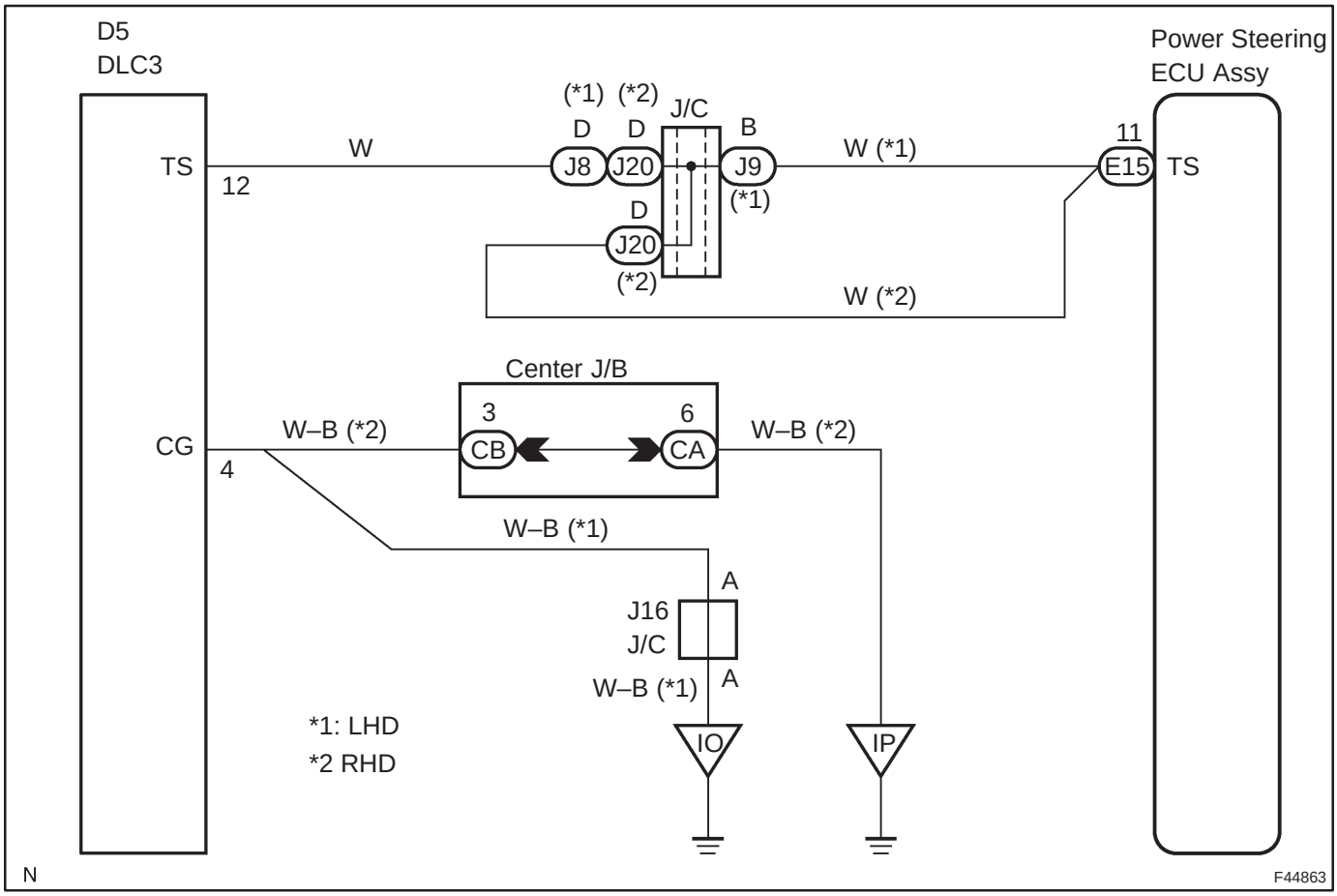

INSPECTION PROCEDURE

1	INSPECT DLC3 TERMINAL VOLTAGE(Ts TERMINAL) (Ts – CG)

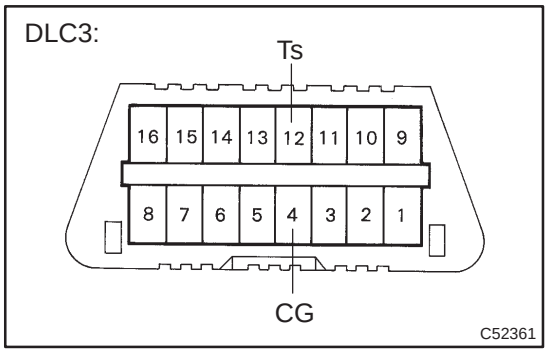

(a) Turn the ignition switch ON.
(b) Measure the voltage between terminals Ts and CG of DLC3.
OK:
Voltage: 5 to 16 V

OK	Go to step 3

NG

2	CHECK HARNESS AND CONNECTOR(DLC3 – BODY GROUND)

(a) Check for an open or short circuit in harness and connector between terminal CG of DLC3 and body ground (See page 01–32).

NG	REPAIR OR REPLACE HARNESS OR CONNECTOR

OK

3	CHECK HARNESS AND CONNECTOR(POWER STEERING ECU ASSY – DLC3)

(a) Check for an open or short circuit in harness and connector between terminal Ts of DLC3 and power steering ECU assy (See page 01–32).

NG	REPAIR OR REPLACE HARNESS OR CONNECTOR

OK

REPLACE POWER STEERING ECU ASSY(See page 50–20)

AIR CONDITIONING SYSTEM

HOW TO PROCEED WITH TROUBLESHOOTING

050TG–11

1	VEHICLE BROUGHT TO WORK SHOP

2	CUSTOMER PROBLEM ANALYSIS (See page 05–1090)

3	CHECK AND CLEAR DTC (See page 05–1091)

4	PROBLEM SYMPTOM CONFIRMATION

SYMPTOM OCCUR (GO TO STEP 6)

SYMPTOM DOES NOT OCCUR (GO TO STEP 5)

5	SYMPTOM SIMULATION (See page 01–22)

6	DTC CHECK (See page 05–1091)

MALFUNCTION CODE (GO TO STEP 7)

NORMAL CODE (GO TO STEP 8)

7	DTC CHART (See page 05–1094)

GO TO STEP 10

8	PROBLEM SYMPTOMS TABLE (See page 05–1100)

9	ACTUATOR CHECK (See page 05–1091)

10	CIRCUIT INSPECTION (See page 05–1102 to 05–1159)

11	IDENTIFICATION OF PROBLEM

12	PARTS INSPECTION

13	REPAIR

14	CONFIRMATION TEST

15	END

050TH–09

CUSTOMER PROBLEM ANALYSIS CHECK

AIR CONDITIONING SYSTEM Check Sheet

Inspector's name:

Customer's Name		**VIN**	
		Production Date	
		Licence No.	
Date vehicle Brought In	/ /	**Odometer Reading**	**km Miles**

Date of Problem Occurrence	/ /
How Often does Problem Occur?	☐ Continuous ☐ Intermittent (times a day)
Weather	☐ Fine ☐ Cloudy ☐ Snowy ☐ Various / Other
Outdoor Temperature	☐ Hot ☐ Warm ☐ Cool ☐ Cold (Approx. °F °C)

Symptoms	**Air Flow Control Faulty**	☐ Blower motor does not operate ☐ Blower motor speed does not change (Always Hi, Always Mid, Always Lo)
	Temperature Control Faulty	☐ Cabin temperature does not go down ☐ Cabin temperature does not rise ☐ Response is slow
	Air Inlet Control Faulty	☐ Cannot change between FRS and REC (Always Fresh or always Recirculating)
	Vent Control Faulty	☐ Mode will not change ☐ Will not enter the desired mode

DTC Check	**1st Time**	☐ Normal Code ☐ Malfunction Code (Code)
	2nd Time	☐ Normal Code ☐ Malfunction Code (Code)

I30150

05C7I–01

PRE–CHECK

1. LIST OF OPERATION METHODS

By operating each of the A/C control switches as shown in the below diagram, it is possible to enter the diagnosis check mode.

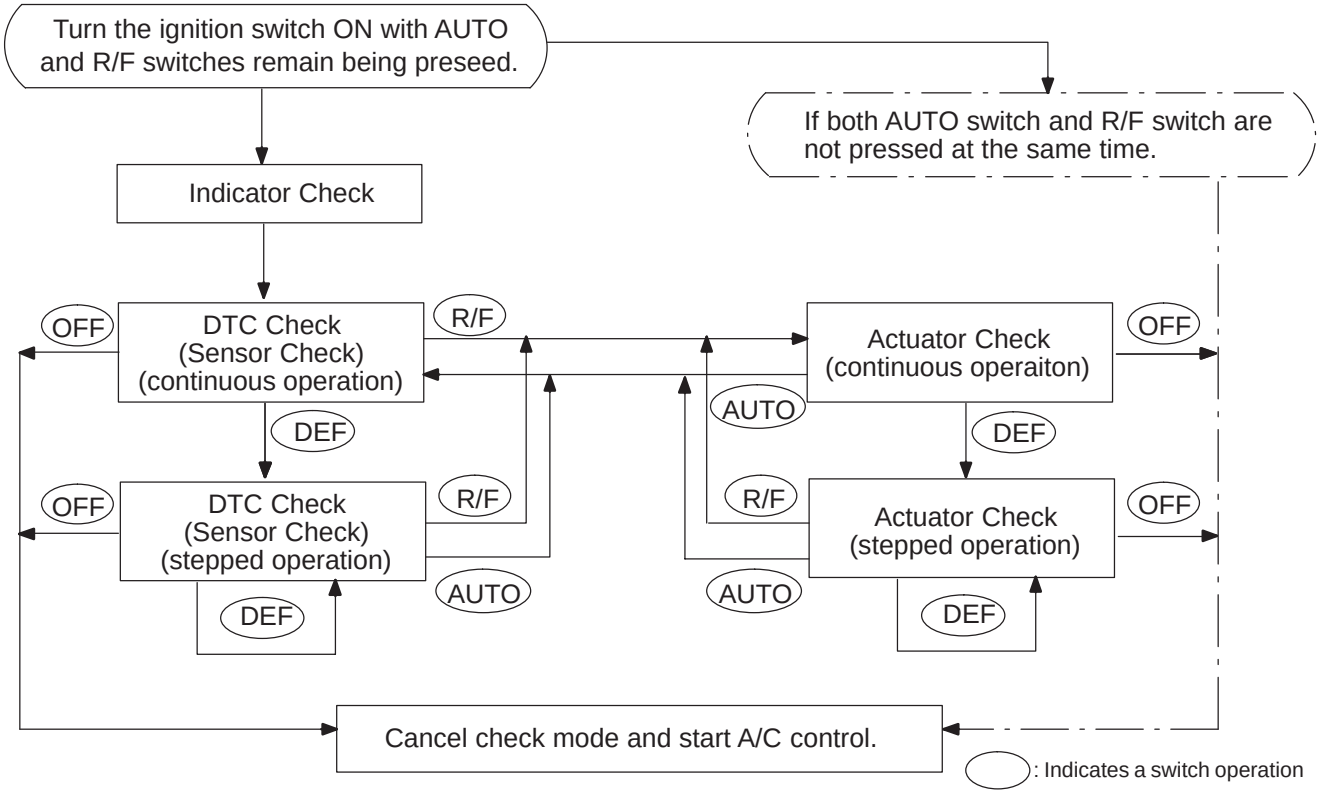

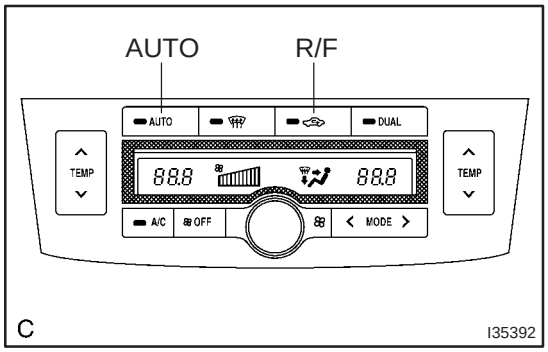

2. INDICATOR CHECK

(a) Turn the ignition switch ON while pressing the A/C control AUTO switch and R/F switch simultaneously.

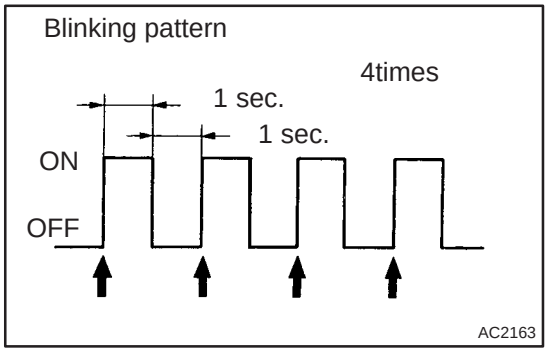

(b) Check that the indicators come on and go off 4 times in succession at a interval of a second.

HINT:

- After the indicator check is completed, the system enters the DTC mode begins automatically.
- Press the OFF switch to cancel the check mode.

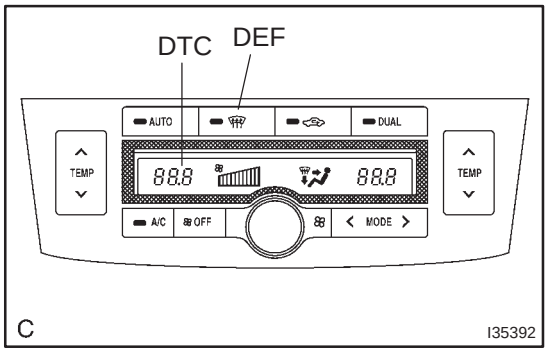

3. DTC CHECK (SENSOR CHECK)

(a) After the indicator check is completed, the system enters the DTC check mode automatically.

(b) Read the codes displayed on the panel. Refer to the list of codes on page 05–1094 when reading the codes. (Trouble codes are outputted at the temperature display.)

(c) If the slower display is desired, press the DEF switch and change it to the stop operation. Each time the DEF switch is pressed, the display changes by 1 step.

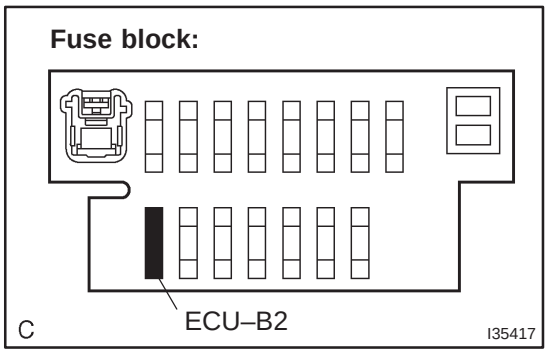

4. CLEARING DTC

(a) To clear diagnostic trouble code, there are 2 ways.

(1) During sensor check, press the ”DEF” switch and ”DUAL” switch at the same time.

(2) Pull the ECU–B2 fuse in fuse block for 20 seconds or longer to clear the DTC memory.

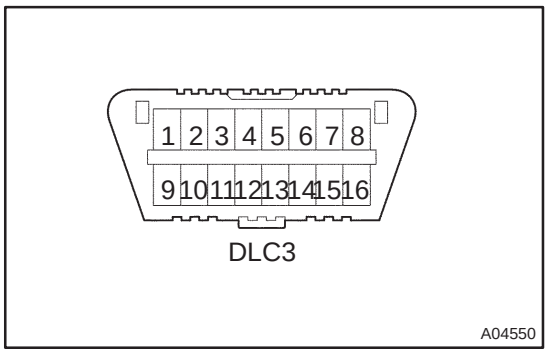

5. CHECK DLC3

(a) The vehicle engine and ECT ECU uses the ISO 9141–2 (Euro–OBD)/ISO 14230 (M–OBD) communication protocol. The terminal arrangement of the DLC3 complies with ISO 15031–3 and matches the ISO 9141–2/ISO 14230 format.

Terminal No.	Connection/Voltage or Resistance	Condition
7	Bus + Line/Pulse generation	During transmission
4	Chassis Ground ↔ Body Ground/1 Ω or less	Always
5	Signal Ground ↔ Body Ground/1 Ω or less	Always
16	Battery Positive ↔ Body Ground/9 – 14 V	Always

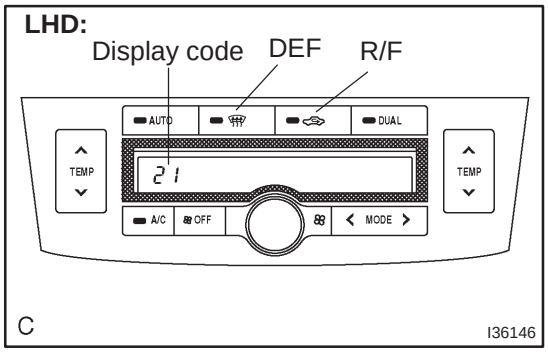

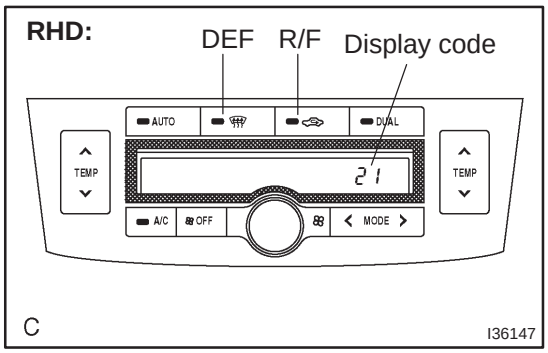

6. ACTUATOR CHECK

(a) After entering the DTC check mode (Sensor Check Mode) press the R/F switch.

(b) Since each damper, motor and relay automatically operates at 1 second intervals beginning in order from 10 in the temperature display, check the temperature and air flow from visual and by hand.
If the slower display is desired, press the DEF switch and change it to step operation. Each time the DEF switch is pressed, the display changes by 1 step.

HINT:

- Codes are displayed from the smaller to the larger numbers in order.
- To cancel the check mode, press the OFF switch.

Step No.	Display code	Conditions					
		Blower level	Air flow bent	Air inlet damper	Compressor	Air mix damper	Hot gas magnetic valve
1	0	0	FACE	FRESH	OFF	”COOL” side (Full closed)	ON
2	1	1	FACE	FRESH	OFF	”COOL” side (Full closed)	ON
3	2	16	FACE	FRESH	OFF	”COOL” side (Full closed)	OFF
4	3	16	FACE	FRESH	ON	”COOL” side (Full closed)	OFF
5	4	16	FACE1	RECIRCULATION	ON	”COOL”/ ”HOT ” (50 % open)	OFF
6	5	16	B/L	RECIRCULATION	ON	”COOL”/ ”HOT ” (50 % open)	OFF
7	6	16	FOOT1	RECIRCULATION	ON	”HOT” side (Full opened)	OFF
8	7	16	FOOT	RECIRCULATION	ON	”HOT” side (Full opened)	OFF
9	8	16	FOOT/ DEF.	RECIRCULATION	ON	”HOT” side (Full opened)	OFF
10	9	31	DEF.	RECIRCULATION	ON	”HOT” side (Full opened)	OFF

050TJ–13

DIAGNOSTIC TROUBLE CODE CHART

If malfunction code is displayed during the DTC check (sensor check), check the circuit listed for the code in the table below (Proceed to the page given for that circuit).

DTC No. (See Page)	Detection Item	Trouble Area	Memory
00	Normal	–	–
11 *1 (05–1102)	Room temperature sensor circuit (open/short)	• Cooler thermistor (room temp. sensor) • Harness or connector between cooler thermistor (room temp. sensor) and A/C amplifier assy • A/C amplifier assy	○ (8.5 min. or more)
12 *2 (05–1106)	Ambient temperature sensor circuit (open/short)	• Thermistor assy (ambient temp. sensor) • Harness or connector between thermistor assy (ambient temp. sensor) and combination meter • Combination meter • Harness or connector between combination meter and A/C amplifier assy • A/C amplifier assy	○ (8.5 min. or more)
13 (05–1109)	Evaporator temperature sensor circuit (open/short)	• Cooler thermistor No.1 (evaporator temp. sensor) • Harness or connector between cooler thermistor No.1 (evaporator temp. sensor) and A/C amplifier assy • A/C amplifier assy	○ (8.5 min. or more)
21 *3 (05–1113)	Solar sensor circuit (open) (Passenger side)	• Automatic light control sensor (solar sensor) • Harness or connector between automatic light control sensor (solar sensor) and A/C amplifier assy • A/C amplifier assy	○ (8.5 min. or more)
	Solar sensor circuit (short) (Passenger side)		–
23 (05–1116)	Pressure sensor circuit	• A/C tube assy (pressure sensor) • Harness or connector between A/C tube assy (pressure sensor) and A/C amplifier assy • A/C amplifier assy	–
24 *3 (05–1119)	Solar sensor circuit (open) (Driver side)	• Automatic light control sensor (solar sensor) • Harness or connector between automatic light control sensor (solar sensor) and A/C amplifier assy • A/C amplifier assy	○ (8.5 min. or more)
	Solar sensor circuit (short) (Driver side)		–
31 (05–1122)	Air mix damper position sensor circuit (Passenger side)	• Air mix damper servo sub–assy (air mix damper position sensor) • Harness or connector between air mix damper servo sub–assy (air mix damper position sensor) and A/C amplifier assy • A/C amplifier assy	○ (1 min. or more)
33 (05–1126)	Air outlet damper position sensor circuit	• Mode damper servo sub–assy (mode damper position sensor) • Harness or connector between mode damper servo sub–assy (mode damper position sensor) and A/C amplifier assy • A/C amplifier assy	○ (1 min. or more)
36 (05–1129)	Air mix damper position sensor circuit (Driver side)	• Air mix damper servo sub–assy (Air mix damper position sensor) • Harness or connector between air mix damper servo sub–assy (air mix damper position sensor) and A/C amplifier assy • A/C amplifier assy	○ (1 min. or more)
41 (05–1133)	Air mix damper control servomotor (Passenger side)	• Air mix damper servo sub–assy (air mix damper control) • Harness or connector between air mix damper servo sub–assy (air mix damper control) and A/C amplifier assy • A/C amplifier assy	○ (15 sec.)

43 (05–1136)	Air outlet damper control servomotor	• Mode damper servo sub–assy (mode damper control) • Harness or connector between mode damper servo sub–assy (mode damper control) and A/C amplifier assy • A/C amplifier assy	○ (15 sec.)
46 (05–1139)	Air mix damper control servomotor (Driver side)	• Air mix damper servo sub–assy (air mix damper control) • Harness or connector between air mix damper servo sub–assy (air mix damper control servomotor) and A/C amplifier • A/C amplifier assy	○ (15 sec.)

HINT:

- *1: If the room temp. is approx. –18.6˚C (–3.7˚F) or lower, DTC 11 may be output even though the system is normal.
- *2: If the ambient temp. is approx. –52.9˚C (–61.4˚F) or lower, DTC may be output even though the system is normal.
- *3: If the check is being performed in a dark place, DTC 21 and 24 (solar sensor circuit abnormal) could be displayed.

05C7J–01

LOCATION

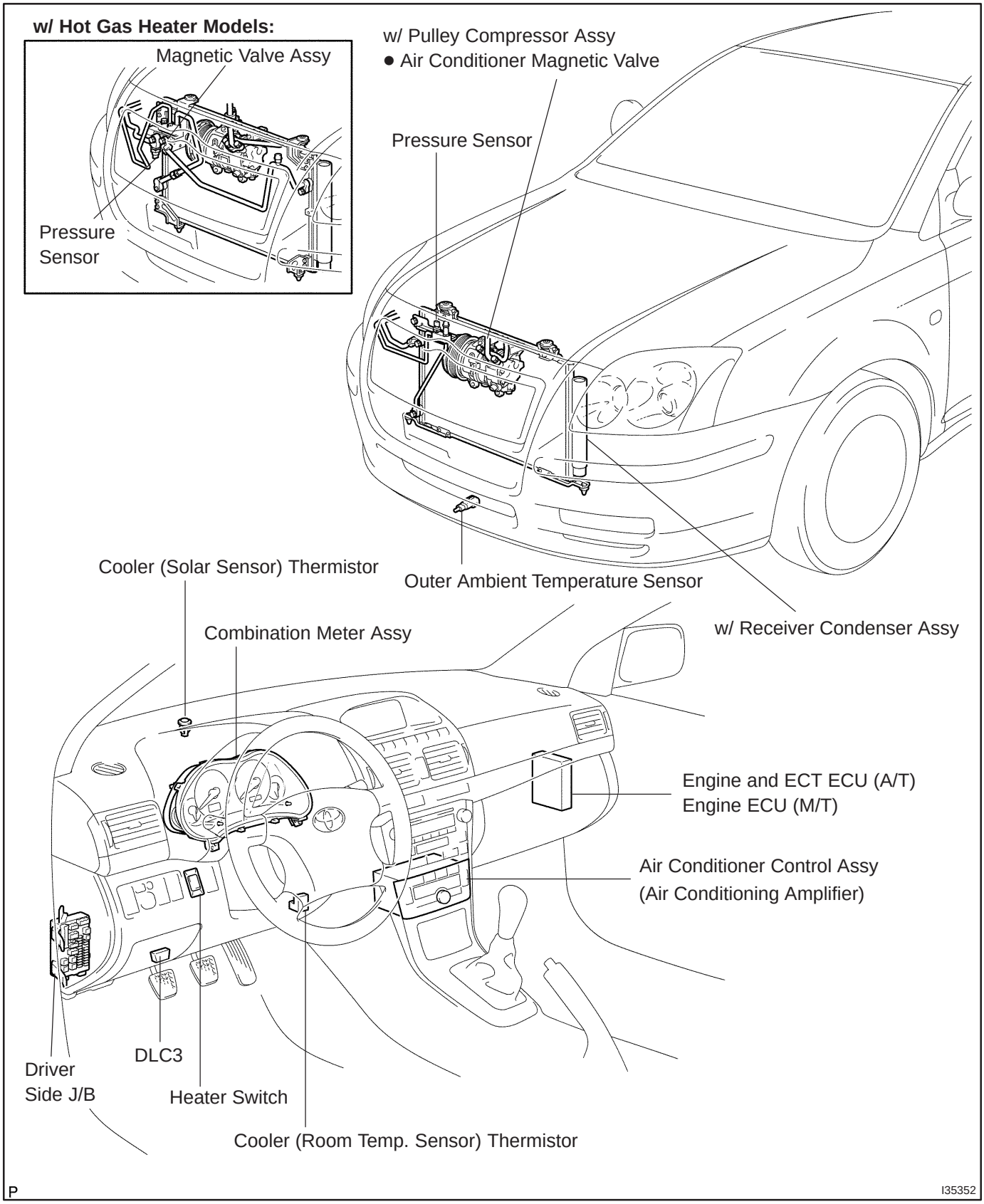

P

I35352

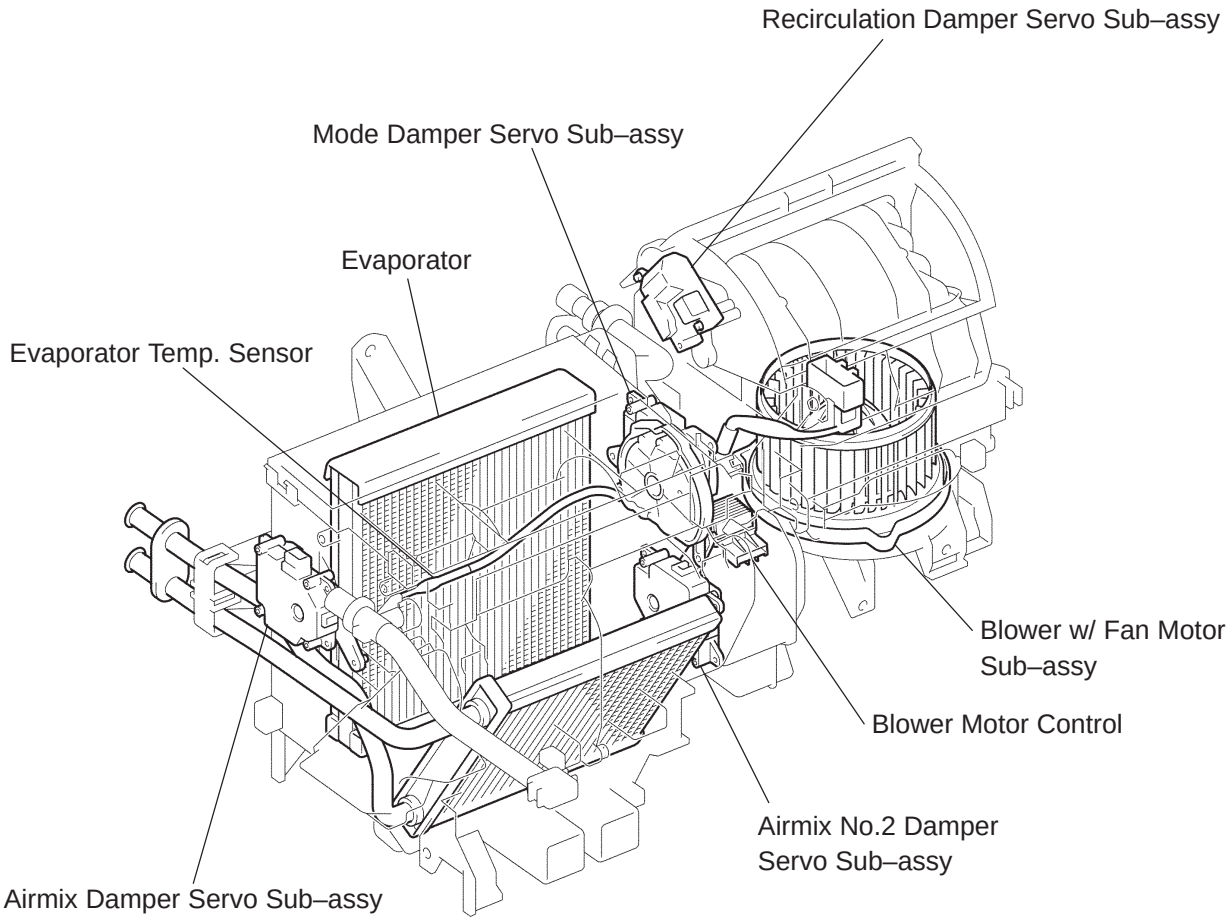
Recirculation Damper Servo Sub–assy
Mode Damper Servo Sub–assy
Evaporator
Evaporator Temp. Sensor
Blower w/ Fan Motor Sub–assy
Blower Motor Control
Airmix No.2 Damper Servo Sub–assy
Airmix Damper Servo Sub–assy
P
I35353

05C7K–01

TERMINALS OF ECU

1. AIR CONDITIONER AMPLIFIER ASSY

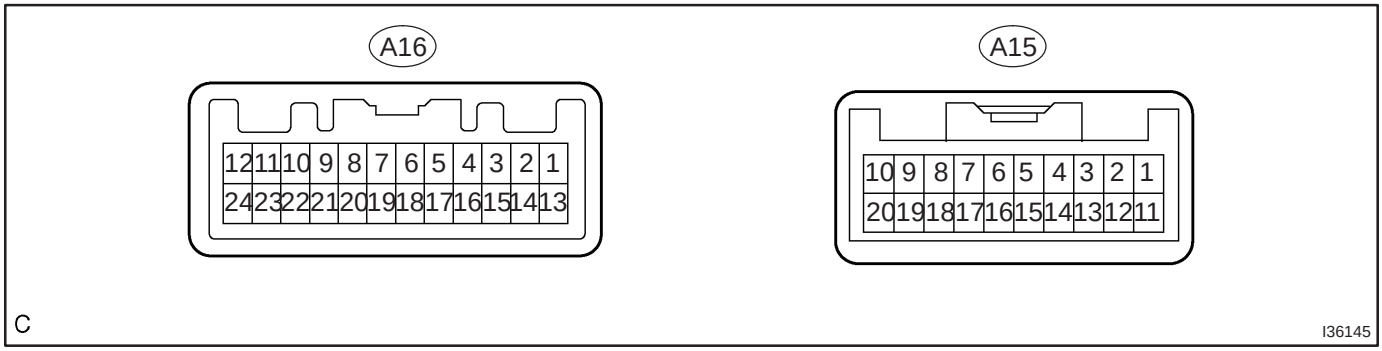

Terminal No. (Symbols)	Wiring Color	Condition	Specification
A16–5 (BLW) – A16–13 (GND)	R – W–B	IG SW: ON Front blower: Operate	Pulse generation
A16–7 (PRE) – A16–18 (SG)	L–W – G–W	Start engine Refrigerant pressure: 0 kPa (0 kgf/cm^2, 0 psi) → 3,138 MPa (32.0 kgf/cm^2, 455 psi)	0.5 → 4.8 V
A15–20 (MPX–) – A16–13 (GND)	P – W–B	Multiplex communication circuit	–
A15–10 (MPX+) – A16–13 (GND)	P–B – W–B	Multiplex communication circuit	–
A15–6 (FRS) – A16–13 (GND)	P–B – W–B	IG SW: ON R/F SW: RECIRCULATION → FRESH	10 to 14 → Below 1.0 V
A15–5 (REC) – A16–13 (GND)	R–Y – W–B	IG SW: ON R/F SW: FRESH → RECIRCULATION	10 to 14 → Below 1.0 V
A16–17 (HR) – A16–13 (GND)	GR–R – W–B	IG SW: ON Front blower: OFF → Operate	10 to 14 → Below 1.0 V
A15–4 (AOF) – A16–13(GND)	L–B – W–B	IG SW: ON Mode switch: DEF. → FACE	Below 1.0 → 10 to 14 V
A15–3 (AOD) – A16–13 (GND)	LG–B – W–B	IG SW: ON Mode switch: FACE → DEF.	Below 1.0 → 10 to 14 V
A16–12 (IG) – A16–13 (GND)	R–W – W–B	IG SW: LOCK → ON	Below 10 to 14 V
A15–2 (AMPH) – A16–13 (GND)	W – W–B	IG SW: ON Set passenger side temp.: MAX. COOL → MAX. HOT	Below 1.0 → 10 to 14 V
A15–1 (AMPC) – A16–13 (GND)	Y – W–B	IG SW: Set passenger side temp.: MAX HOT → MAX. COOL	Below 1.0 → 10 to 14 V
A15–12 (AMDH) – A16–13 (GND)	P–L – W–B	IG SW: Set driver side temp.: MAX. COOL → MAX. HOT	Below 1.0 → 10 to 14 V
A15–11 (AMDC) – A16–13 (GND)	B – W–B	IG SW: Set driver side temp.: MAX HOT → MAX. COOL	Below 1.0 → 10 to 14 V
A16–13 (GND) – Body ground	W–B – Body ground	Always	Continuity
A16–24 (+B) – A16–13 (GND)	W–R – W–B	Always	10 to 14 V
A16–8 (TPD) – A15–14 (SG–2)	GR – Y–R	IG SW: ON Set driver side temp.: MAX HOT → MAX. COOL	1.0 → 4.0 V
A16–20 TPP – A15–13 (SG–1)	V – P	IG SW: ON Set passenger side temp.: MAX HOT → MAX. COOL	1.0 → 4.0 V
A16–9 (TSD) – A16–13 (GND)	LG – W–B	IG SW: ON Solar sensor subject to electric light	0.8 to 3.3 V
A16–21 (TSP) – A16–13 (GND)	L – W–B	IG SW: ON Solar sensor subject to electric light	0.8 to 3.3 V

Terminal No. (Symbols)	Wiring Color	Condition	Specification
A16–22 (TR) – A16–6 (SG–5)	GR – G	IG SW: ON Cabin temp.: 25°C (77°F) → 40°C (104°F)	1.8 to 2.2 → 1.2 to 1.6 V
A16–10 (TE) – A15–16 (SG–4)	B – W–G	Evaporator temp.: 0°C (32°F) → 15°C (59°F)	2.0 to 2.4 → 1.4 to 1.8 V
A16–23 (ILL+) – A16–13 (GND)	G – W–B	Light control switch TAIL or HEAD	10 to 14 V
A16–19 (TPM) – A15–15 (SG–3)	GR–R – G–W	IG SW: ON Set air flow setting: DEF. → FACE	1.0 → 4.0 V
A15–8 (SOL+) – A16–13 (GND)	R – W–B	Start engine Compressor: Operate	Pulse generation
A15–7 (MGV) – A16–13 (GND) (*1)	R–Y – W–B	Start engine Hot gas heater: Operate	10 to 14 → Below 1.0 V
A16–11 (HOTGASIN) – A16–13 (GND) (*1)	G–Y – W–B	IG SW: ON Hot Gas SW: ON	10 to 14 V
A16–16 (S5) – A16–18 (SG)	B–W – G–W	IG SW: LOCK → ON	0 → 5.0 V
A16–1 (S5–1) – A15–13 (SG–1)	R – P	IG SW: LOCK → ON	0 → 5.0 V
A16–2 (S5–2) – A15–14 (SG–2)	Y–B – Y–R	IG SW: LOCK → ON	0 → 5.0 V
A16–14 (S5–3) – A15–15 (SG–3)	BR–W – G–W	IG SW: LOCK → ON	0 → 5.0 V
A16–15 (S5–4) – A16–9 (TSD)	O – LG	IG SW: LOCK → ON	1.7 → 4.2 V
A16–15 (S5–4) – A16–21 (TSP)	O – L	IG SW: LOCK → ON	1.7 → 4.2 V
A15–17 (CFAN) – A16–13 (GND)	W–R – W–B	Start engine Condenser fan: operate	10 to 14 → Below 1.0 V
A16–19 (PBKIG) – A17–13 (GND)	B–W – W–B	IG SW: ON PARKING BRAKE SW: OFF → ON	10 to 14 → Below 1.0 V
A17–3 (PBLT) – A17–13 (GND) (*3)	L–R – W–B	IG SW: ON SEAT BELT SIGNAL: OFF → ON	10 to 14 → Below 1.0 V
A17–4 (RDEFIN) – A17–13 (GND) (*2)	G–W – W–B	IG SW: ON RDEF RELAY : OFF → ON	Below 1.0 → 10 to 14 V

(*1) Diesel (standard) only
(*2) Petrol only
(*3) Except 1AZ–FE

2. COMBINATION METER

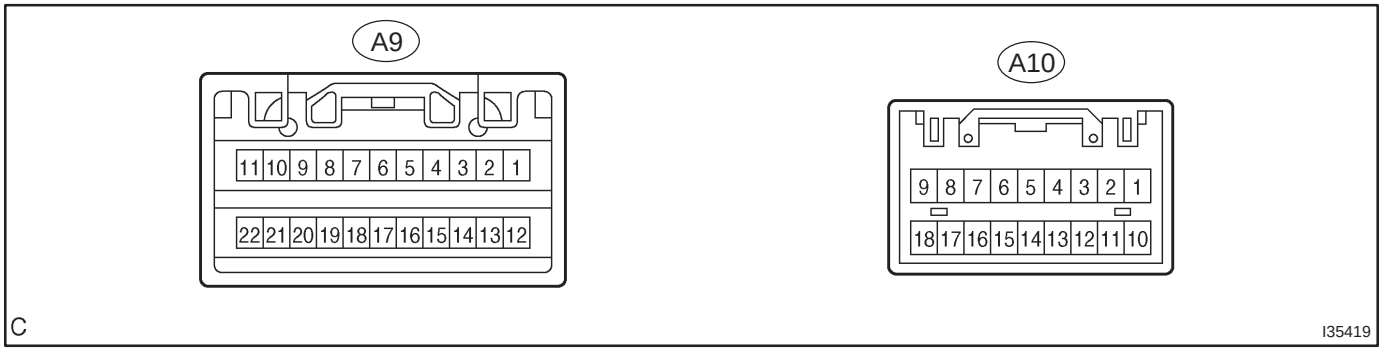

Terminal No. (Symbols)	Wiring Color	Condition	Specification
C10–17 (Z1H) – Body ground	W–B – Body ground	Always	Continuity
C10–11 (HAY) – C10–12 (HAZ)	W–R – W	IG SW: ON Ambient temp.: 25°C (77°F) → 40°C (104°F)	1.35 to 1.75 → 0.85 to 1.25 V

050TM–13

PROBLEM SYMPTOMS TABLE

If the normal code is displayed during DTC check although the problem still occurs, check the circuits for each problem symptom in the order given in the table below, and proceed to the relevant troubleshooting.

Symptom	Suspect Area	See page
Whole functions of the A/C system does not operate.	1. IG power source circuit	05–1144
	2. A/C amplifier assy	05–1098
	3. Engine ECU 1AZ–FSE:	05–294
	1AZ–FE:	05–149
	1ZZ–FE/3ZZ–FE:	05–5
	1CD–FTV:	05–528
Air Flow Control : No blower operation	1. Blower motor circuit	05–1148
	2. Heater relay circuit	05–1146
	3. Blower w/fan motor sub–assy	05–1148
	4. A/C amplifier assy	05–1098
Air Flow Control : No blower control	1. Blower motor circuit	05–1148
Air Flow Control : Insufficient air out	1. Blower w/fan motor sub–assy	05–1148
	2. Blower motor circuit	05–1148
	3. A/C amplifier assy	05–1098
Temperature Control : Cool air does not come out	1. Volume of refrigerant	55–24
	2. Drive belt tension	55–46
	3. Refrigerant pressure	55–24
	4. Air conditioner magnetic valve circut	05–1151
	5. Pressure sensor circuit	05–1116
	6. Air mix control servomotor circuit	05–1133
	7. Air mix damper position sensor circuit	05–1122
	8. Room temp. sensor circuit	05–1102
	9. Ambient temp. sensor circuit	05–1106
	10.A/C amplifier assy	05–1098
Temperature Control : Warm air does not come out	1. Air mix control servomotor circuit	05–1133
	2. Air mix damper position sensor circuit	05–1122
	3. Ambient temp. sensor circuit	05–1106
	4. Room temp. sensor circuit	05–1102
	5. A/C amplifier assy	05–1098
	6. Heater radiator	–
Temperature Control : Output air is warmer or cooler than the set temperature or response is slow.	1. Room temp. sensor circuit	05–1102
	2. Ambient temp. sensor circuit	05–1106
	3. Solar sensor circuit	05–1113
	4. Air mix damper position sensor circuit	05–1122
	5. Air mix control servomotor circuit	05–1133
	6. Evaporator temp. sensor circuit	05–1109
	7. A/C amplifier assy	05–1098
Temperature Control : No temperature control (only Max. cool or Max. warm)	1. Room temp. sensor circuit	05–1102
	2. Ambient temp. sensor circuit	05–1106
	3. Solar sensor circuit	05–1113
	4. Air mix damper position sensor circuit	05–1122
	5. Air mix control servomotor circuit	05–1133
	6. Evaporator temp. sensor circuit	05–1109
	7. A/C amplifier assy	05–1098
No air inlet control	1. Recirculation damper servomotor circuit	05–1153
	2. A/C amplifier assy	05–1098
No air outlet control	1. Air outlet damper position sensor circuit	05–1126
	2. Air outlet control servomotor circuit	05–1136
	3. A/C amplifier assy	05–1098

Engine idle up does not occur, or is continuous	1. Air conditioner magnetic valve circut 2. A/C amplifier assy 3. Engine ECU 1AZ–FSE: 1AZ–FE: 1ZZ–FE/3ZZ–FE: 1CD–FTV:	05–1151 05–1098 05–294 05–149 05–5 05–528
Set temperature value displayed does not much up with operation of temperature control switch.	1. Air conditioner magnetic valve circut 2. A/C amplifier assy	05–1151 05–1098
Brightness does not change when light control switch it turned.	1. Illumination light system 2. A/C amplifier assy	– 05–1098
Unable to access the diagnosis mode.	1. A/C amplifier assy	05–1098
DTC is not recorded. Set mode is cleared when IG switch is turned off.	1. Back–up power source circuit 2. A/C amplifier assy	05–1142 05–1098

Hot gas heater:

Symptom	Suspect Area	See page
Warm wind does not blow out even if the gas heater switch is turned on before the water temperature rises under the condition where the ordinal A/C correctly operates.	1. Hot gas heater magnetic valve circuit 2. Hot gas heater switch circuit 3. A/C amplifier assy	05–1157 05–1159 05–1098

DTC	11	ROOM TEMPERATURE SENSOR CIRCUIT

CIRCUIT DESCRIPTION

This sensor detects the temperature inside the cabin and sends the appreciate signals to the A/C amplifier.

DTC No.	Detection item	Trouble Area
11	Open or short in room temperature sensor circuit	• Cooler thermistor (room temp. sensor) • Harness or connector between cooler thermistor (room temp. sensor) and A/C amplifier assy • A/C amplifier assy

WIRING DIAGRAM

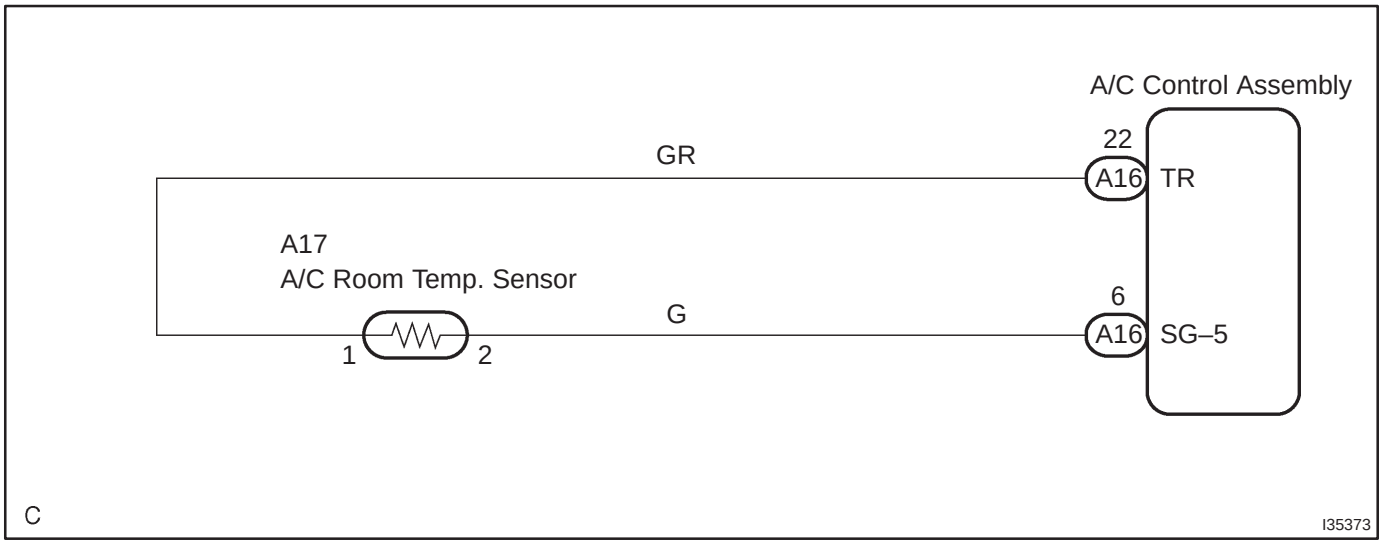

INSPECTION PROCEDURE

1	INSPECT AIR CONDITIONING AMPLIFIER(TR – SG–5)

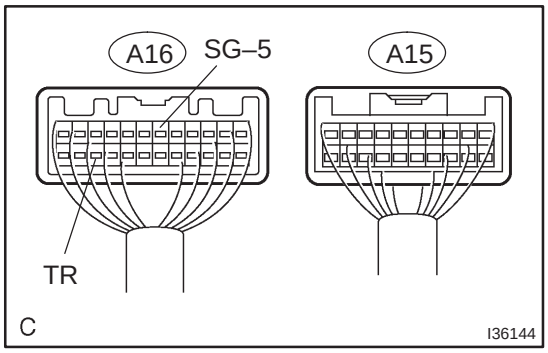

(a) Remove the A/C amplifier with connectors being connected.
(b) Turn the ignition switch to ON.
(c) Measure the voltage between terminal TR and SG–5 of A/C amplifier connector at each temperature.
Standard:
1.8 to 2.2 V at 25°C (77°F)
1.2 to 1.6 V at 40°C (104°F)

HINT:
As the temperature increases, the voltage decreases.

OK → **PROCEED TO NEXT CIRCUIT INSPECTION SHOWN ON PROBLEM SYMPTOMS TABLE**

NG

2 INSPECT COOLER (ROOM TEMP. SENSOR) THERMISTOR

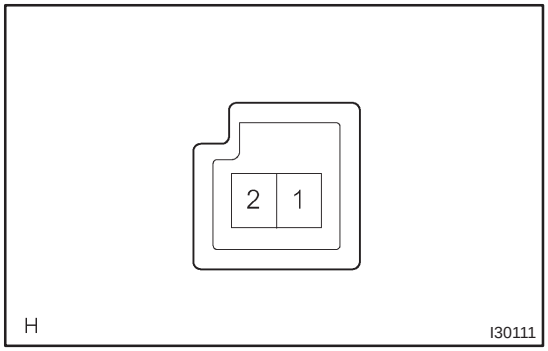

(a) Remove cooler the thermistor (room temp. sensor).
(b) Measure the resistance between terminal 1 and 2 of cooler thermistor (room temp. sensor) connector at each temperature.
Standard:
1,615 to 1,785 Ω at 25°C (77°F)

HINT:
As the temperature increases, the resistance decreases.

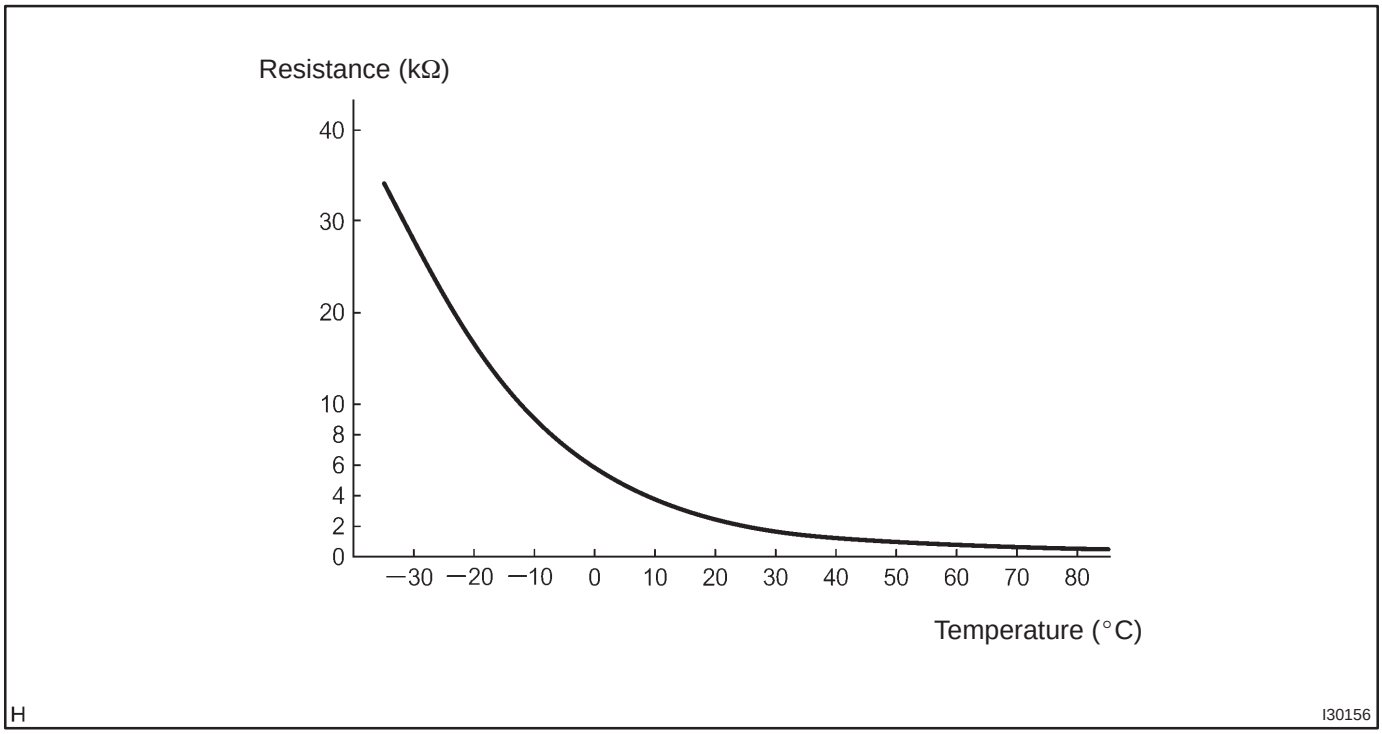

NG → **REPLACE COOLER (ROOM TEMP. SENSOR) THERMISTOR**

OK

3	CHECK HARNESS AND CONNECTOR(COOLER (ROOM TEMP. SENSOR) THERMISTOR – A/C AMPLIFIER)

(a) Check for an open or short circuit in harness and connector between terminal TR and SG–5 of A/C amplifier (See page 01–32).

NG → REPAIR OR REPLACE HARNESS OR CONNECTOR

OK

4	READ OUTPUT DTC

(a) Clear the DTCs.
(b) Read the DTC at least 8.5 minutes after turning the ignition switch ON.
Standard: Normal codes are output.

MG → REPLACE AIR CONDITIONING AMPLIFIER

OK

SYSTEM OK

DTC	12	AMBIENT TEMPERATURE SENSOR CIRCUIT

CIRCUIT DESCRIPTION

This sensor detects the temperature outside the cabin and sends the appropriate signals to the A/C amplifier.

DTC No.	Detection item	Trouble Area
12	Open or short in ambient temperature sensor circuit	• Thermistor assy (ambient temp. sensor) • Harness or connector between thermistor assy (ambient temp. sensor) and combination meter • Combination meter • Harness or connector between combination meter and A/C amplifier assy • A/C amplifier assy

WIRING DIAGRAM

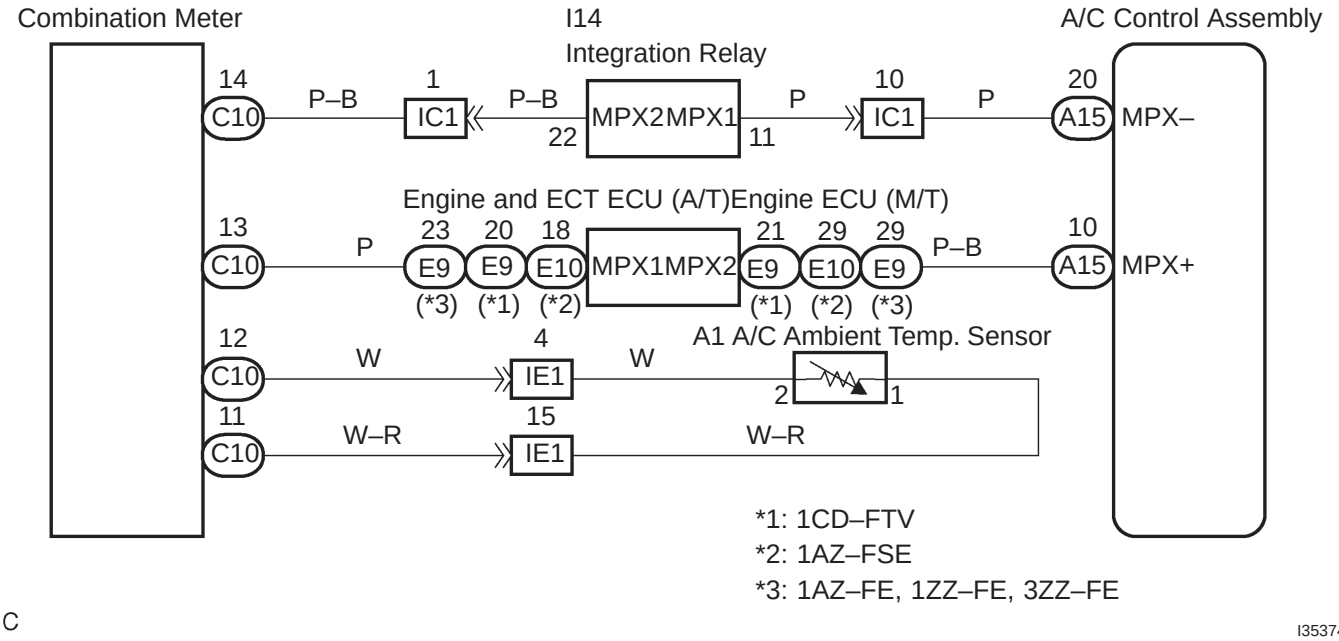

INSPECTION PROCEDURE

1	INSPECT COMBINATION METER ASSY

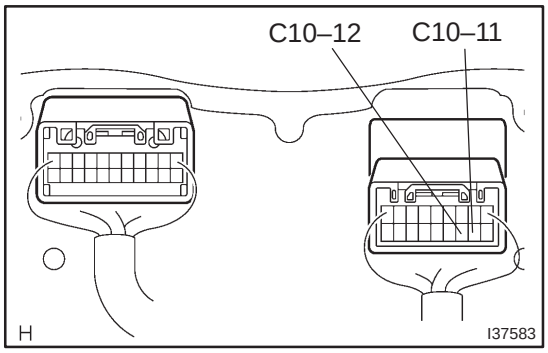

(a) Disconnect the connector from the combination meter assy.

(b) Measure resistance between the terminal C10–11 and C10–12 of the ambient temp. sensor connector at each temperature.

Standard:

9.0 to 9.8 kΩ: at 0°C (0°F)

2.7 to 2.9 kΩ: at 25°C (77°F)

HINT:

As the temperature increases, resistance decreases.

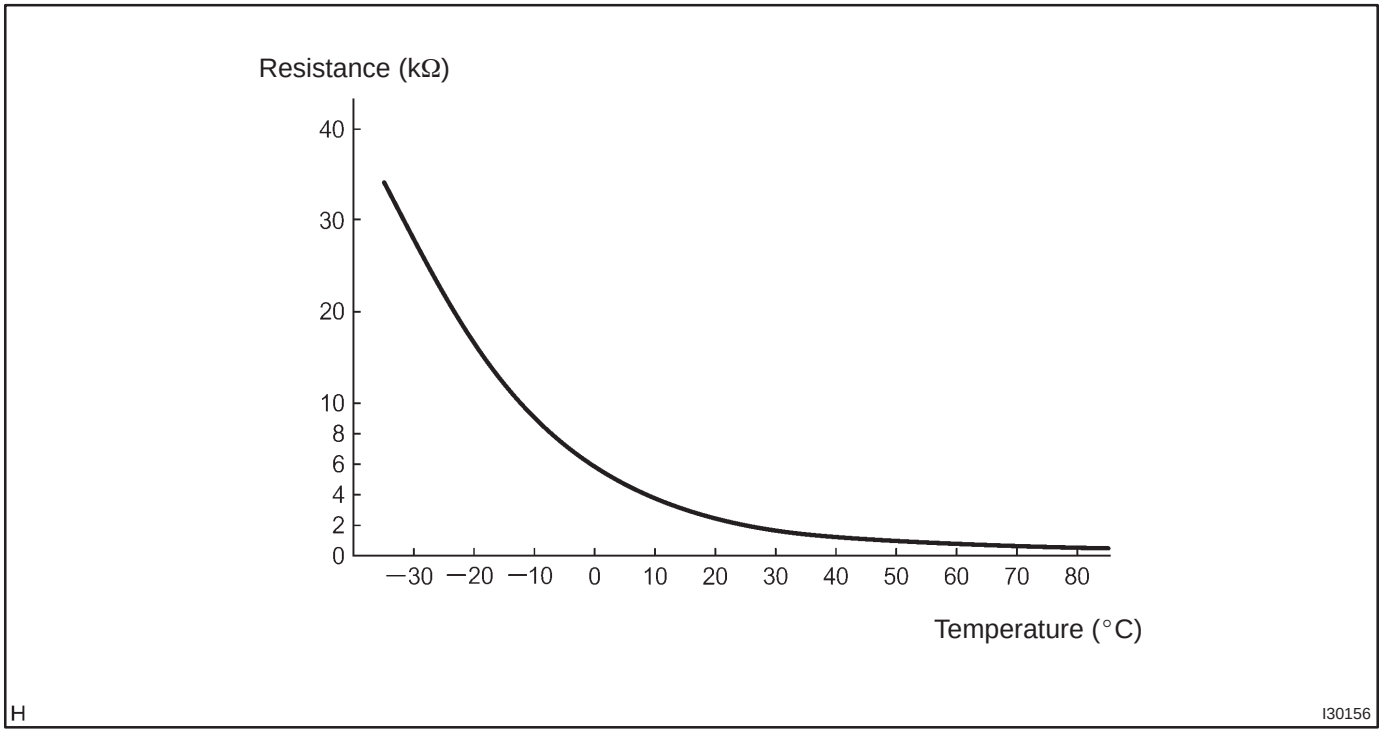

OK → **REPLACE COMBINATION METER ASSY**

NG

2	CHECK HARNESS AND CONNECTOR(COMBINATION METER – OUTER AMBIENT TEMPERATURE SENSOR)

(a) Disconnect the connector from ambient temp. sensor.
(b) Check continuity between the terminal C10–11 (12) of combination meter assy and the terminal A1–1 (2) of ambient temp. sensor connector.
Standard: Continuity

NG → **REPAIR OR REPLACE HARNESS AND CONNECTOR**

OK

3	READ OUTPUT DTC

(a) Clear the DTCs.
(b) Read the DTC at least 8.5 minutes after turning the ignition switch ON.
Standard: Normal codes are output.

NG → **REPLACE OUTER AMBIENT TEMPERATURE SENSOR**

OK

PROCEED TO NEXT CIRCUIT INSPECTION SHOWN ON PROBLEM SYMPTOMS TABLE

DTC	13	EVAPORATOR TEMPERATURE SENSOR CIRCUIT

CIRCUIT DESCRIPTION

This sensor detects the temperature inside the cooling unit and sends the appropriate signals to the A/C amplifier.

DTC No.	Detection Item	Trouble Area
13	Open or short in evaporator temperature sensor circuit.	• Cooler thermistor No.1 (evaporator temp. sensor) • Harness or connector between cooler thermistor No.1 (evaporator temp. sensor) and A/C amplifier assy • A/C amplifier assy

WIRING DIAGRAM

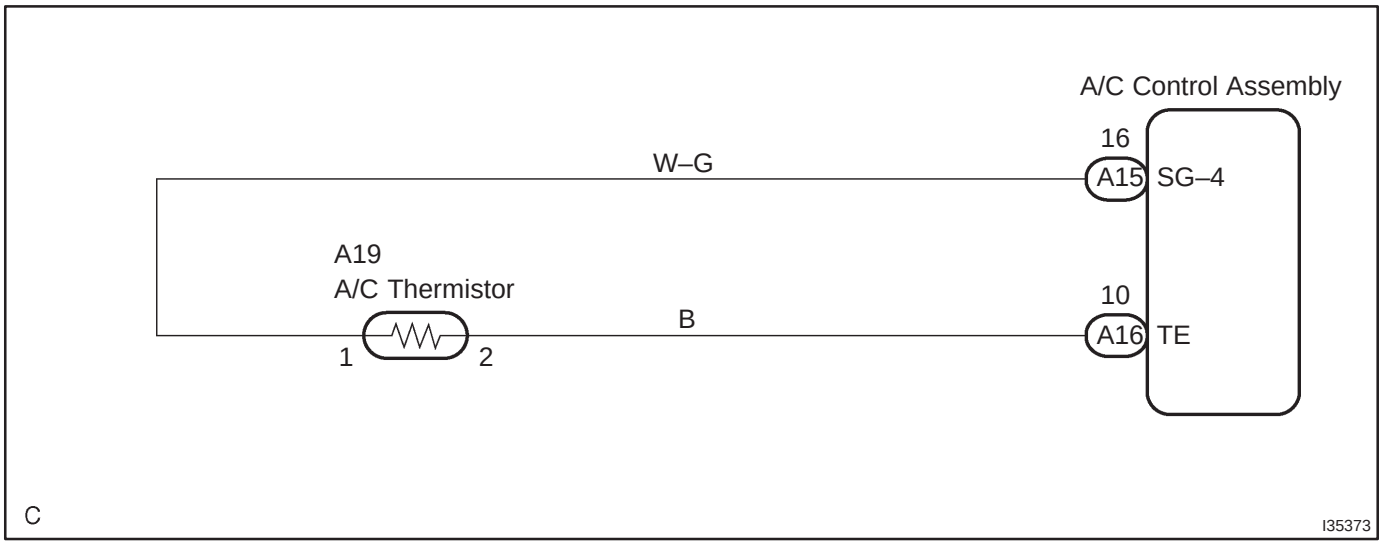

INSPECTION PROCEDURE

1	INSPECT AIR CONDITIONING AMPLIFIER(TE – SG–4)

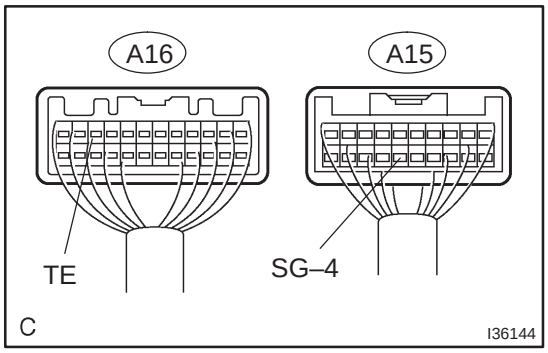

(a) Remove the A/C amplifier with connectors being connected.
(b) Turn the ignition switch to ON.
(c) Measure the voltage between terminal TE and SG–4 of A/C amplifier connector at each temperature.
Standard:
2.0 to 2.4 V at 0°C (32°F)
1.4 to 1.8 V at 15°C (59°F)

OK → **PROCEED TO NEXT CIRCUIT INSPECTION SHOWN ON PROBLEM SYMPTOMS TABLE**

NG

2	INSPECT COOLER THERMISTOR NO.1

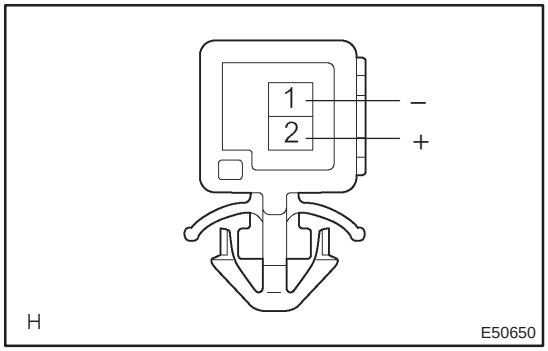

(a) Remove the cooler thermistor No.1 (evaporator temp. sensor).

(b) Check the resistance between terminal 1 and 2 of cooler thermistor No.1 (evaporator temp. sensor) at each temperature, as shown in the chart.

Standard: 1,500 Ω at 25°C (77°F)

HINT:

As the temperature increases, the resistance decreases.

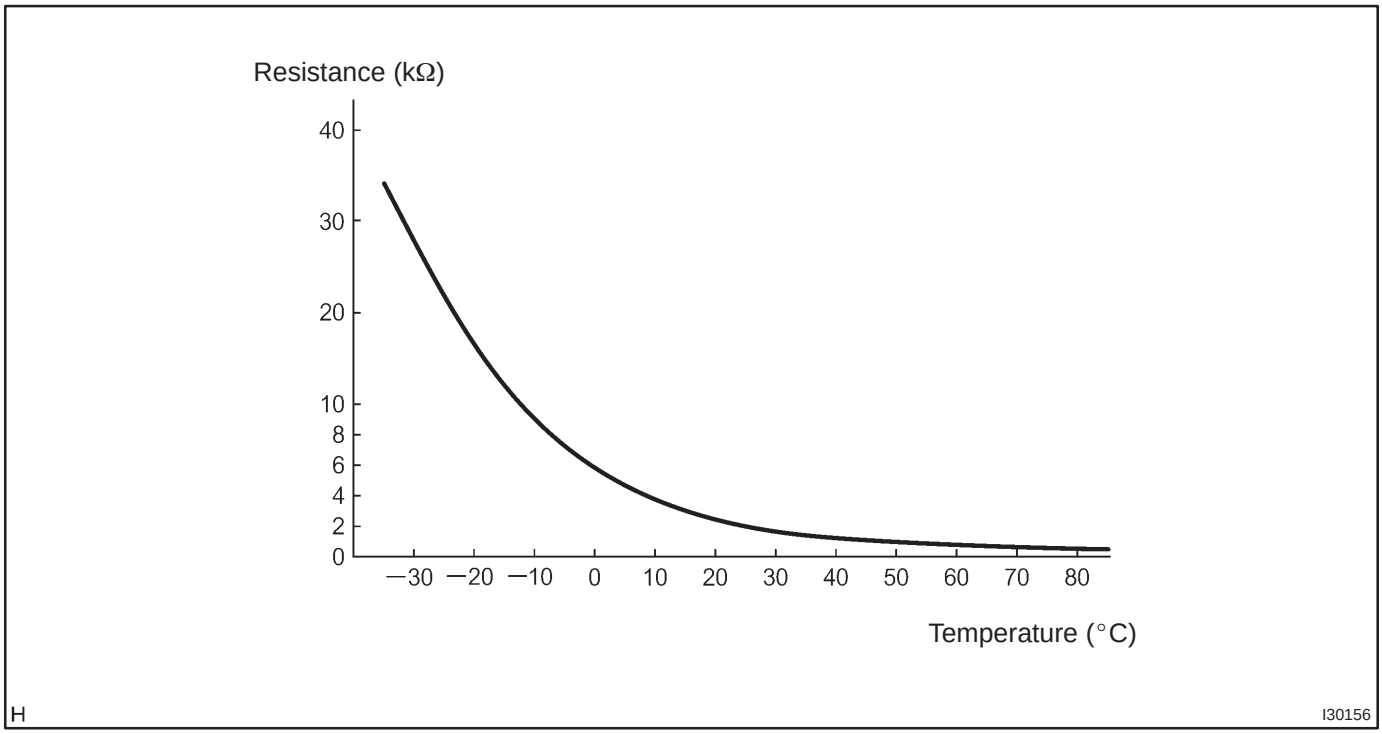

NG → **REPLACE COOLER THERMISTOR NO.1**

OK

3	CHECK HARNESS AND CONNECTOR(COOLER THERMISTOR NO.1 – A/C AMPLIFIER)

(a) Check for an open or short circuit in harness and connector between terminal TE and SG–4 of A/C amplifier (See page 01–32).

NG → **REPAIR OR REPLACE HARNESS OR CONNECTOR**

OK

4	READ OUTPUT DTC

(a) Clear the DTCs.
(b) Read the DTC at least 8.5 minutes after turning the ignition switch ON.
Standard: Normal codes are output.

NG → **REPLACE AIR CONDITIONING AMPLIFIER**

OK

SYSTEM OK

DTC	21	SOLAR SENSOR CIRCUIT(PASSENGER SIDE)

CIRCUIT DESCRIPTION

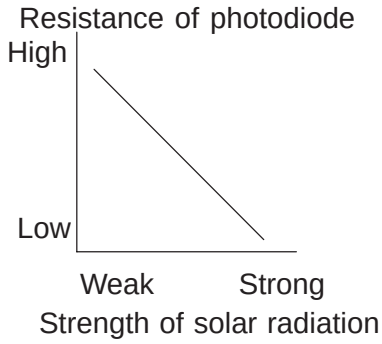

A photo diode in the solar sensor detects solar radiation and sends signals to the A/C amplifier.

DTC No.	Detection Item	Trouble Area
21	Open or short in solar sensor circuit. (If the checking is being performed in a dark place, DTC 21 could be displayed.)	• Automatic light control sensor (solar sensor) • Harness or connector between automatic light control sensor (solar sensor) and A/C amplifier assy • A/C amplifier assy

WIRING DIAGRAM

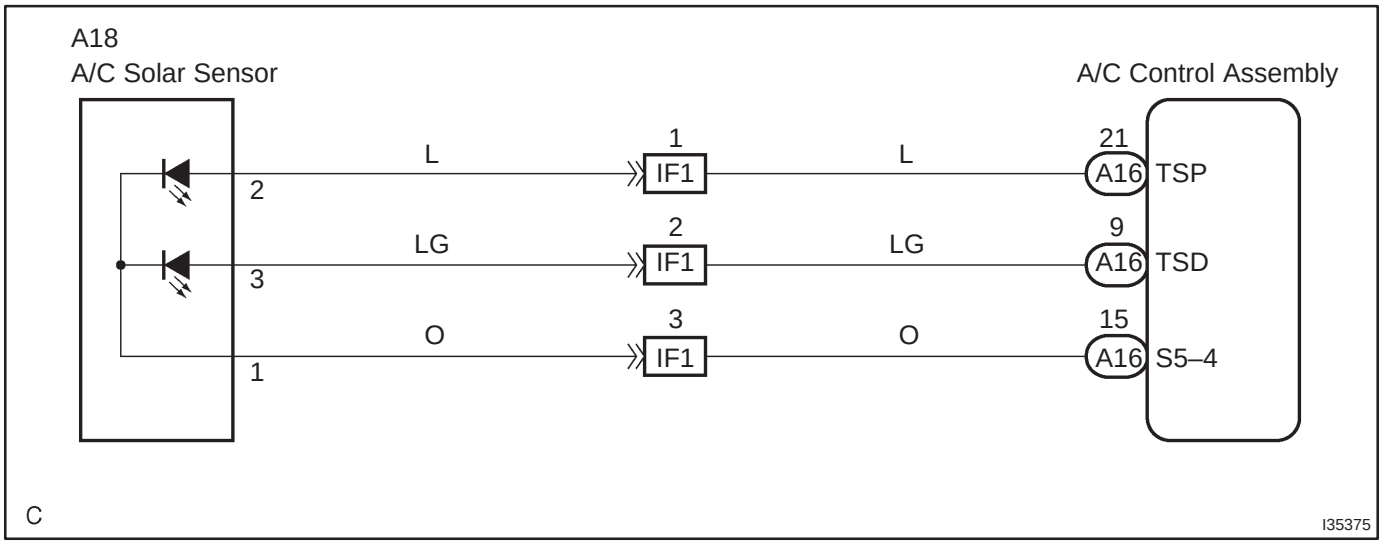

INSPECTION PROCEDURE

1	INSPECT COOLER (SOLAR SENSOR) THERMISTOR

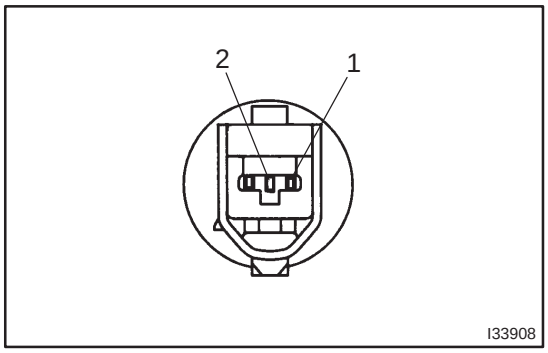

(a) Remove cooler (solar sensor) thermistor.
(b) Cover the sensor with a cloth, and check the cooler (solar sensor) thermistor resistance.
  (1) Measure resistance between terminals 1 and 2 of the cooler (solar sensor) thermistor.
  Resistance: ∞ Ω (No continuity)

HINT:
Connect the ohmmter positive (+) lead to terminal 2 and the ohmmeter negative (–) lead to terminal 1 of the cooler (solar sensor) thermistor.

(c) Remove the cloth from the cooler (solar sensor) thermistor, and subject the sensor to the electric light and check the cooler (solar sensor) thermistor resistance.
  (1) Measure resistance between terminal 1 and 2 of the cooler (solar sensor) thermistor.
  Resistance: Approx. 10 kΩ (Continuity)

HINT:
Connect the positive (+) lead to ohmmeter to terminal 2 and negative (–) lead to terminal 1 of the cooler (solar sensor) thermistor.

NG → **REPLACE COOLER (SOLAR SENSOR) THERMISTOR**

OK

2	CHECK HARNESS AND CONNECTOR(COOLER (SOLAR SENSOR) THERMISTOR – A/C AMPLIFIER)

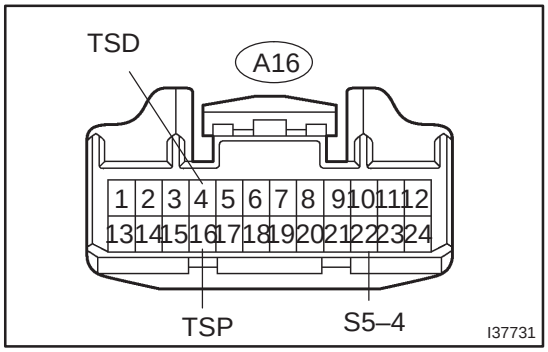

(a) Check for an open or short circuit in harness and connector between solar sensor and A/C amplifier
(See page 01–32).

NG → **REPAIR OR REPLACE HARNESS OR CONNECTOR**

OK

3	READ OUTPUT DTC

(a) Clear the DTCs.
(b) Read the DTC at least 8.5 minutes after turning the ignition switch ON.
Standard: Normal codes are output

NG → **REPLACE AIR CONDITIONING AMPLIFIER**

OK

PROCEED TO NEXT CIRCUIT INSPECTION SHOWN IN PROBLEM SYMPTOMS TABLE

DTC	23	PRESSURE SWITCH CIRCUIT

CIRCUIT DESCRIPTION

The pressure sensor sends the appropriate signals to the A/C amplifier assy when the A/C refrigerant pressure drops too low or rises too high. When the A/C amplifier receives these signals, it outputs signals though the A/C amplifier to switch OFF the compressor relay and turns the magnetic clutch OFF.

DTC No.	Detection Item	Trouble Area
23	• Open in pressure sensor circuit. • Abnormal refrigerant pressure. below 196 kPa (2.0 kgf/cm^2, 28 psi) over 3,140 kPa (32.0 kgf/cm^2, 455 psi)	• A/C tube assy (pressure sensor) • Harness or connector between A/C tube assy (pressure sensor) and A/C amplifier assy • A/C amplifier assy

WIRING DIAGRAM

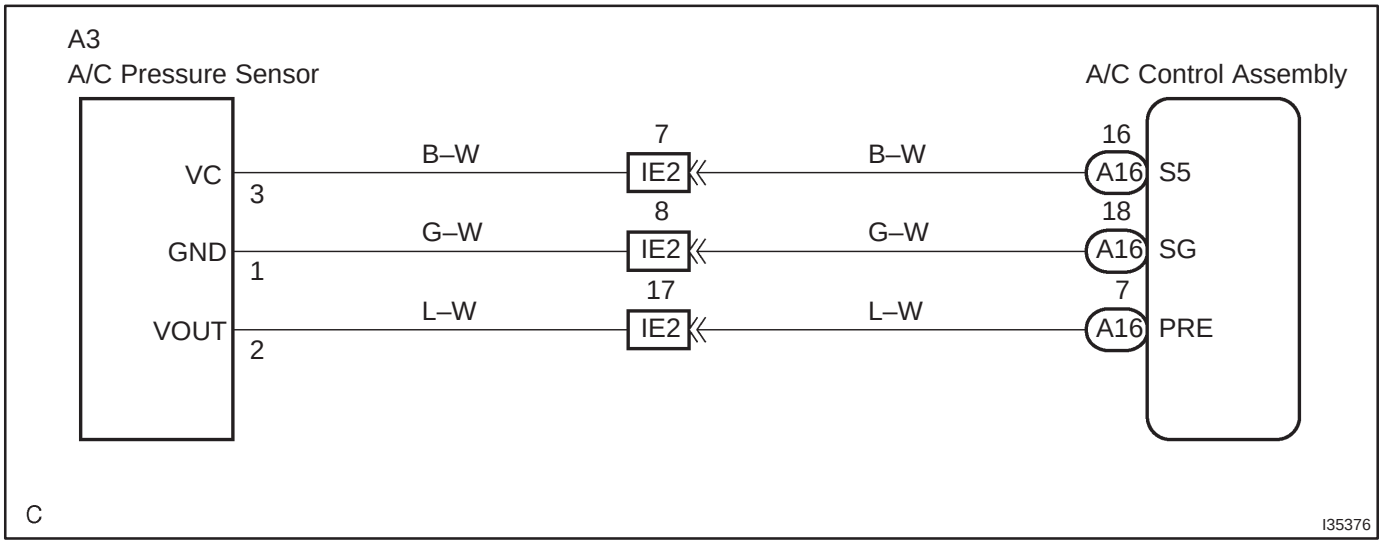

INSPECTION PROCEDURE

1 INSPECT AIR CONDITIONING AMPLIFIER(PRE)

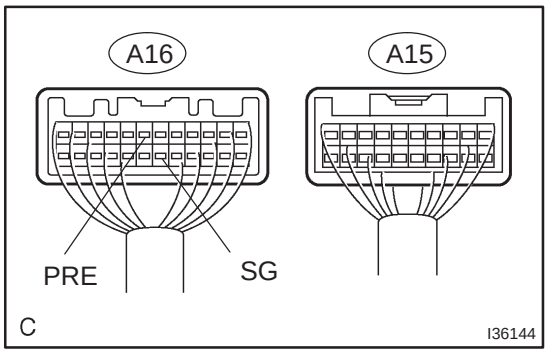

(a) Install the manifold gauge set.
(b) Remove the A/C amplifier with connectors being connected.
(c) Turn the ignition switch to ON.
(d) Check the voltage between terminal PRE and SG of A/C amplifier connector when refrigerant pressure is changed.
(e) The voltage changes following refrigerant pressure change, as shown in the diagram below.

Standard:

Low Pressure Cut Side	Reference : High Pressure Cut Side
ON (0V) 225 kPa 196 kPa OFF (4.5 – 5.5 V)	ON (0V) 2,550 kPa 3,140 kPa OFF (4.5 – 5.5 V)

OK → **PROCEED TO NEXT CIRCUIT INSPECTION SHOWN ON PROBLEM SYMPTOMS TABLE**

NG

2 INSPECT AIR CONDITIOER PRESSURE SENSOR

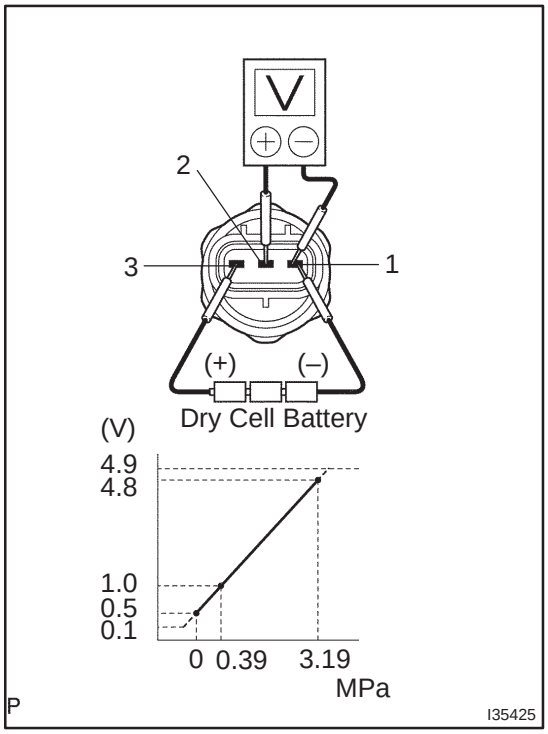

(a) Disconnect the pressure sensor connector.
(b) Install the manifold gauge set (See page 55–38).
(c) Connect the positive (+) lead from the three 1.5 V dry cell batteries to terminal 3 and negative (–) lead to terminal 1.
(d) Check the voltage between terminals 2 and 1 of pressure sensor.

Standard:

The voltage varies with on the refrigerant pressure as shown in the chart.

NG → **REPLACE AIR CONDITIOER PRESSURE SENSOR**

OK

3	CHECK HARNESS AND CONNECTOR(AIR CONDITIONER PRESSURE SENSOR – A/C AMPLIFIER)

(a) Check for an open or short circuit in harness and connector between pressure sensor and A/C amplifier (See page 01–32).

NG → REPAIR OR REPLACE HARNESS OR CONNECTOR

OK

4	READ OUTPUT DTC

(a) Clear the DTCs.
(b) After turning the ignition switch ON, read DTC.
Standard: Normal codes are output.

NG → REPLACE AIR CONDITIONING AMPLIFIER

OK

SYSTEM OK

DTC 24 SOLAR SENSOR CIRCUIT (DRIVER SIDE)

CIRCUIT DESCRIPTION

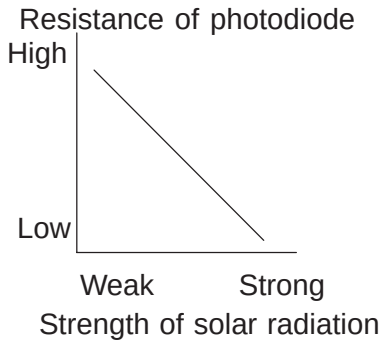

A photo diode in the solar sensor detects solar radiation and sends signals to the A/C amplifier.

DTC No.	Detection Item	Trouble Area
24	Open or short in solar sensor circuit. (If the checking is being performed in a dark place, DTC 24 could be displayed.)	• Automatic light control sensor (solar sensor) • Harness or connector between automatic light control sensor (solar sensor) and A/C amplifier assy • A/C amplifier assy

WIRING DIAGRAM

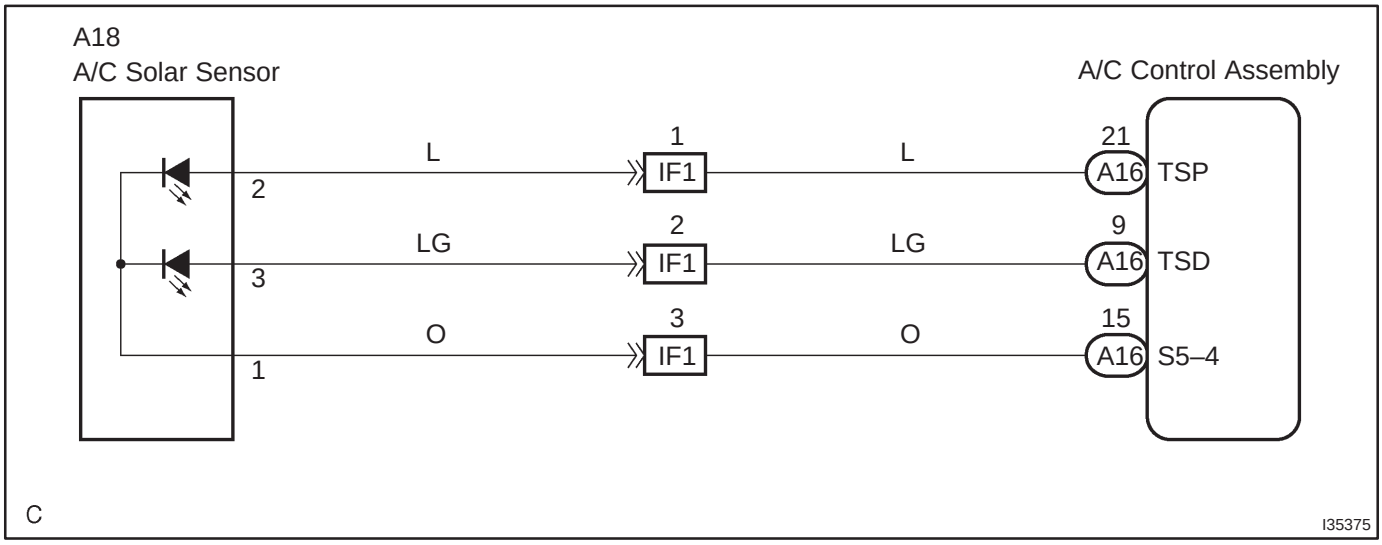

INSPECTION PROCEDURE

1	INSPECT COOLER (SOLAR SENSOR) THERMISTOR

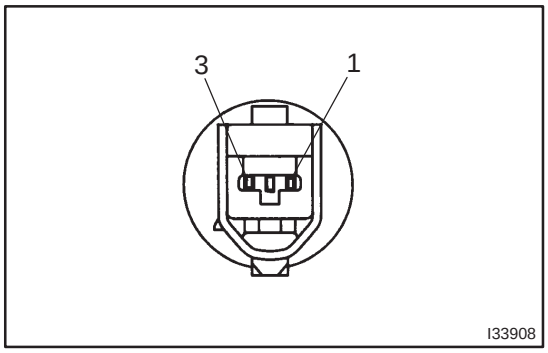

(a) Remove cooler (solar sensor) thermistor.
(b) Cover the sensor with a cloth, and check the cooler (solar sensor) thermistor resistance.
(1) Measure resistance between terminals 1 and 3 of the cooler (solar sensor) thermistor.
Resistance: ∞ Ω (No continuity)

HINT:
Connect the ohmmter positive (+) lead to terminal 3 and the ohmmeter negative (–) lead to terminal 1 of the cooler (solar sensor) thermistor.

(c) Remove the cloth from the cooler (solar sensor) thermistor, and subject the sensor to the electric light and check the cooler (solar sensor) thermistor resistance.
(1) Measure resistance between terminal 1 and 3 of the cooler (solar sensor) thermistor.
Resistance: Approx. 10 kΩ (Continuity)

HINT:
Connect the positive (+) lead to ohmmeter to terminal 3 and negative (–) lead to terminal 1 of the cooler (solar sensor) thermistor.

NG → **REPLACE COOLER (SOLAR SENSOR) THERMISTOR**

OK

2	CHECK HARNESS AND CONNECTOR(COOLER (SOLAR SENSOR) THERMISTOR – A/C AMPLIFIER)

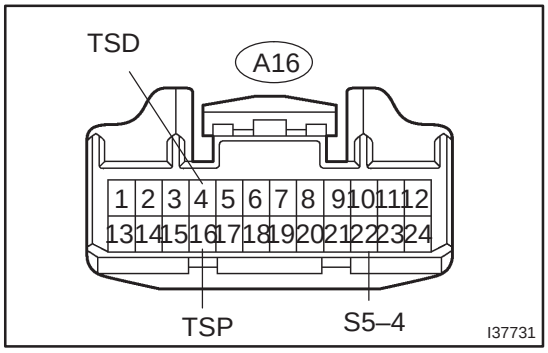

(a) Check for open or short circuit in harness and connector between solor sansor and A/C amplifier
(See page 01–32).

NG → **REPAIR OR REPLACE HARNESS OR CONNECTOR**

OK

3	READ OUTPUT DTC

(a) Clear the DTCs.
(b) Read the DTC at least 8.5 minutes after turning the ignition switch ON.
Standard: Normal codes are output.

NG → **REPLACE AIR CONDITIONING AMPLIFIER**

OK

PROCEED TO NEXT CIRCUIT INSPECTION SHOWN IN PROBLEM SYMPTOMS TABLE

DTC	31	AIR MIX DAMPER POSITION SENSOR CIRCUIT(PASSENGER SIDE)

CIRCUIT DESCRIPTION

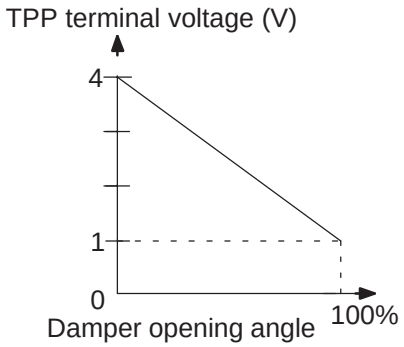

This sensor detects the position of the air mix damper and sends the appropriate signals to the A/C amplifier. The position sensor is built in the air mix damper servo sub–assy.

DTC No.	Detection Item	Trouble Area
31	Short to ground or power source circuit in air mix damper position sensor circuit.	• Air mix damper servo sub–assy (air mix damper position sensor) • Harness or connector between air mix damper servo sub–assy (air mix damper position sensor) and A/C amplifier assy • A/C amplifier assy

WIRING DIAGRAM

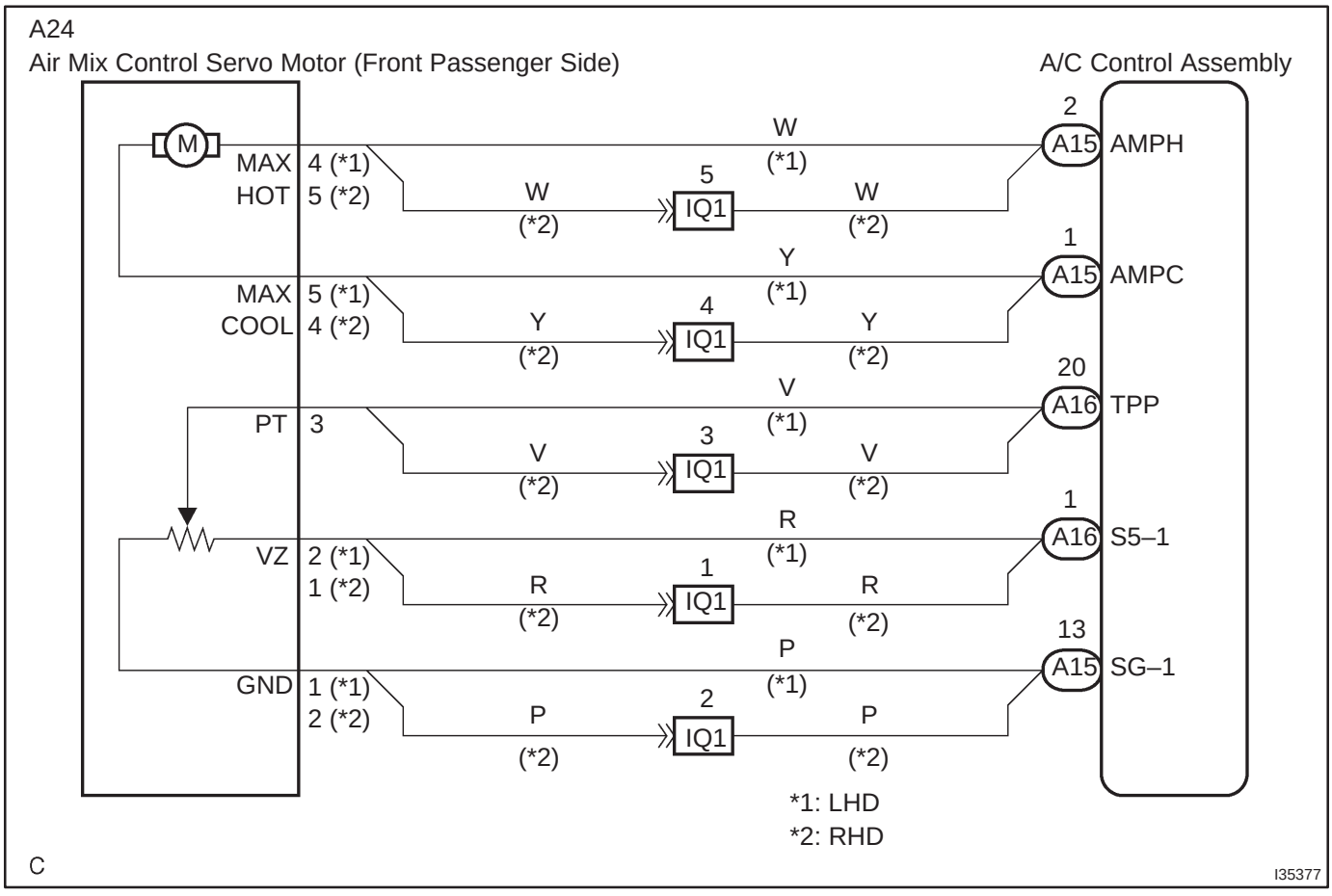

INSPECTION PROCEDURE

1	INSPECT AIR CONDITIONING AMPLIFIER(TPP – SG–1)

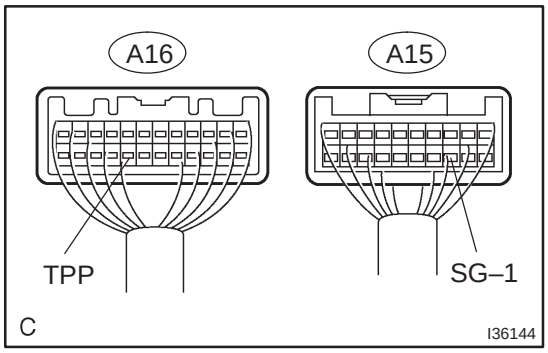

(a) Remove the A/C amplifier with connectors being connected.
(b) Turn the ignition switch to ON.
(c) Change the set temperature to activate the air mix damper and measure the voltage between terminal TPP and SG–1 of A/C amplifier assy.
Standard:
MAX. COOL: 3.5 to 4.5 V
MAX. HOT: 0.5 to 1.8 V

HINT:
As the set temperature increases, the voltage decreases gradually without interruption.

OK → **PROCEED TO NEXT CIRCUIT INSPECTION SHOWN ON PROBLEM SYMPTOMS TABLE**

NG

2 INSPECT AIRMIX NO.2 DAMPER SERVO SUB–ASSY

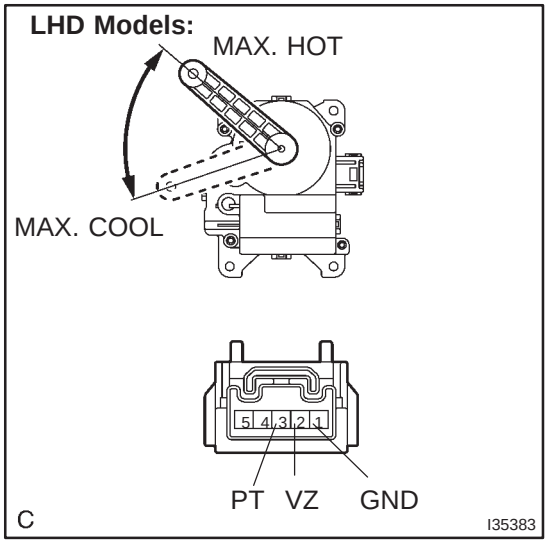

(a) Remove the air mix damper servo sub–assy.
(b) Measure the resistance between terminal VZ and GND of air mix damper servo sub–assy connector.
Resistance: 4.2 to 7.8 kΩ
(c) While operating air mix damper servo sub–assy as shown in the procedure on page 05–1133, measure the resistance between terminal PT and GND of air mix damper servo sub–assy.
Standard:
MAX. HOT: 3.4 to 6.2 V
MAX. COOL: 0.8 to 1.6 V

HINT:
As the air mix damper servo sub–assy moves from COOL side to HOT side, the resistance decreases gradually without interruption.

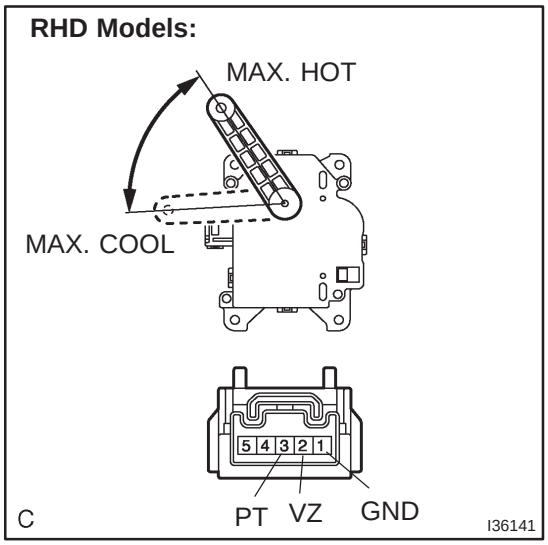

NG → **REPLACE AIRMIX NO.2 DAMPER SERVO SUB–ASSY**

OK

3 CHECK HARNESS AND CONNECTOR(AIRMIX NO.2 DAMPER SERVO SUB–ASSY – A/C AMPLIFIER)

(a) Check for an open or short circuit in harness and connector between air mix damper position sensor and A/C amplifier (See page 01–32).

NG → **REPAIR OR REPLACE HARNESS OR CONNECTOR**

OK

4	READ OUTPUT DTC

(a) Clear the DTCs.
(b) Read the DTC at least 1.0 minutes after turning the ignition switch ON.
Standard: Normal codes are output.

NG → **REPLACE AIR CONDITIONING AMPLIFIER**

OK

PROCEED TO NEXT CIRCUIT INSPECTION SHOWN ON PROBLEM SYMPTOMS TABLE

DTC	33	AIR OUTLET DAMPER POSITION SENSOR CIRCUIT

CIRCUIT DESCRIPTION

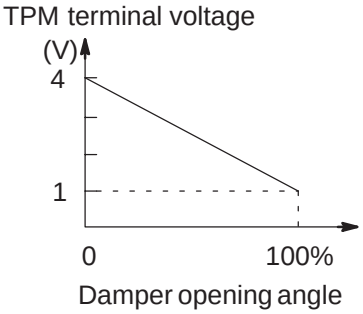

This sensor detects the position of the mode damper and sends the appropriate signals to the A/C amplifier. The position sensor is built in the mode damper servo sub–assy.

DTC No.	Detection Item	Trouble Area
33	Short to ground or power source circuit in mode damper position sensor circuit.	• Mode damper servo sub–assy (mode damper position sensor) • Harness or connector between mode damper servo sub–assy (mode damper position sensor) and A/C amplifier assy • A/C amplifier assy

WIRING DIAGRAM

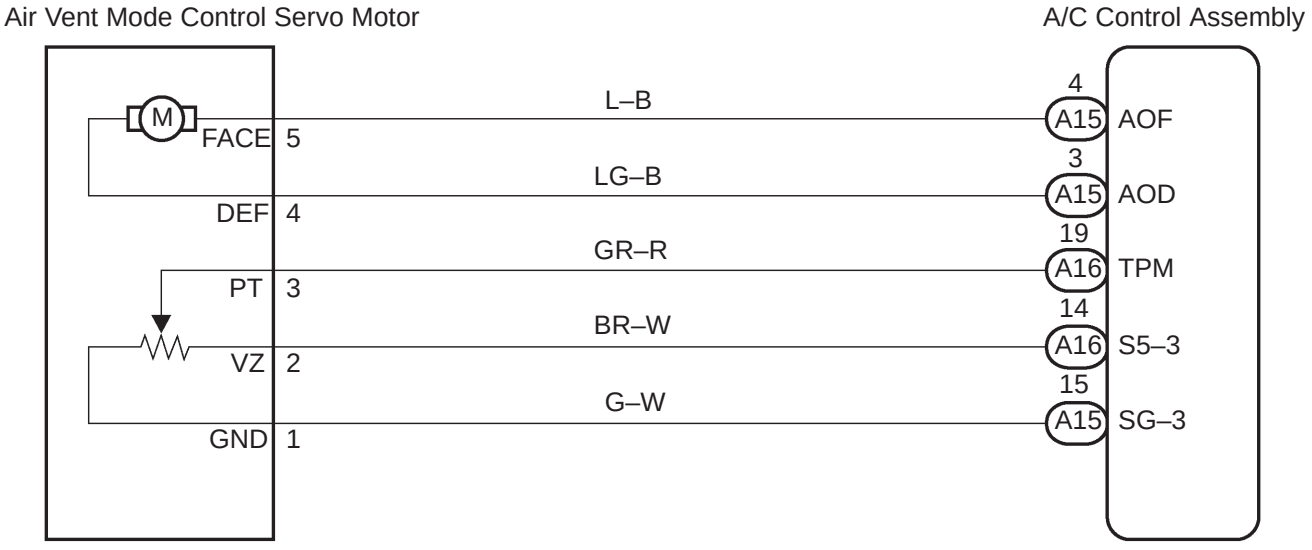

INSPECTION PROCEDURE

1	INSPECT AIR CONDITIONING AMPLIFIER(TPM – SG–3)

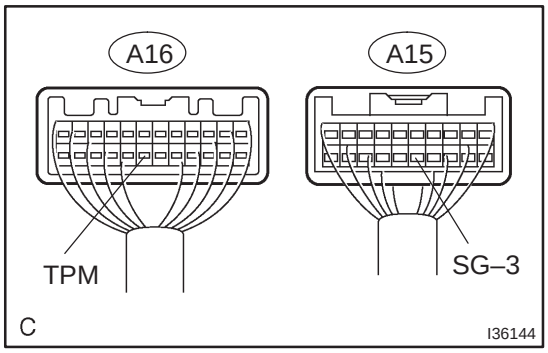

(a) Remove the A/C amplifier with being connectors connected.
(b) Turn the ignition switch to ON.
(c) Change the set to activate the mode damper sub–assy and measure voltage between terminal TPM and SG–3 of A/C amplifier assy.
Standard:
FACE: 3.5 to 4.5 V
DEF: 0.5 to 1.5 V

HINT:
As the is moved from FACE side to DEF side, the voltage decreases gradually with out interruption.

OK → **PROCEED TO NEXT CIRCUIT INSPECTION SHOWN ON PROBLEM SYMPTOMS TABLE**

NG

2	INSPECT MODE DAMPER SERVO SUB–ASSY

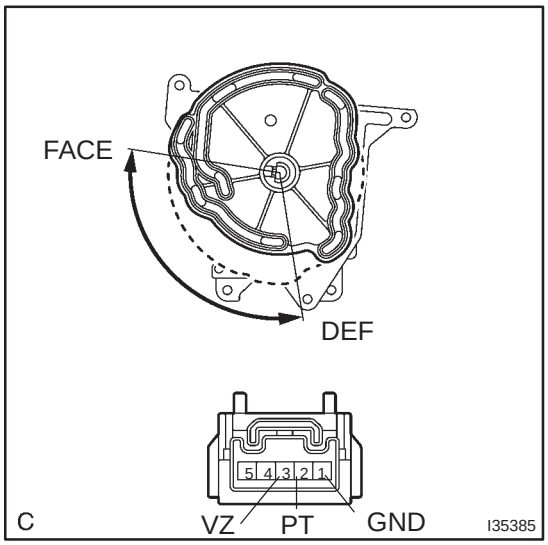

(a) Remove the mode damper servo sub–assy.
(b) Measure the resistance between terminal VZ and GND of mode damper servo sub–assy connector.
Standard: 4.2 – 7.8 kΩ
(c) While operating mode damper servo sub–assy as in the procedure on page 05–1136, measure the resistance between terminal PT and GND of mode damper servo sub–assy.
Standard:
DEF: 3.4 to 6.2 kΩ
FACE: 0.8 to 1.6 kΩ

HINT:
As the mode damper servo sub–assy moved from DEF side to FACE side, the resistance decreases gradually with out interruption.

NG → **REPLACE MODE DAMPER SERVO SUB–ASSY**

OK

3	CHECK HARNESS AND CONNECTOR(MODE DAMPER SERVO SUB–ASSY – A/C AMPLIFIER)

(a) Check for an open or short circuit in harness and connector between mode damper position sensor and A/C amplifier (See page 01–32).

NG → REPAIR OR REPLACE HARNESS OR CONNECTOR

OK

4	READ OUTPUT DTC

(a) Clear the DTCs.
(b) Read the DTC at least 1.0 minutes after turnig the ignition switch ON.
Standard: Normal codes are output.

NG → REPLACE AIR CONDITIONING AMPLIFIER

OK

PROCEED TO NEXT CIRCUIT INSPECTION SHOWN ON PROBLEM SYMPTOMS TABLE

DTC	36	AIR MIX DAMPER POSITION SENSOR CIRCUIT (DRIVER SIDE)

CIRCUIT DESCRIPTION

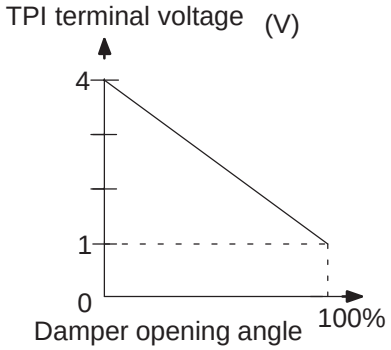

This sensor detects the position of the air mix damper and sends the appropriate signals to the A/C amplifier. The position sensor is built in the air mix damper servo sub–assy.

DTC No.	Detection Item	Trouble Area
36	Short to ground or power source circuit in air mix damper position sensor circuit.	• Air mix damper servo sub–assy (Air mix damper position sensor) • Harness or connector between air mix damper servo sub–assy (air mix damper position sensor) and A/C amplifier assy • A/C amplifier assy

WIRING DIAGRAM

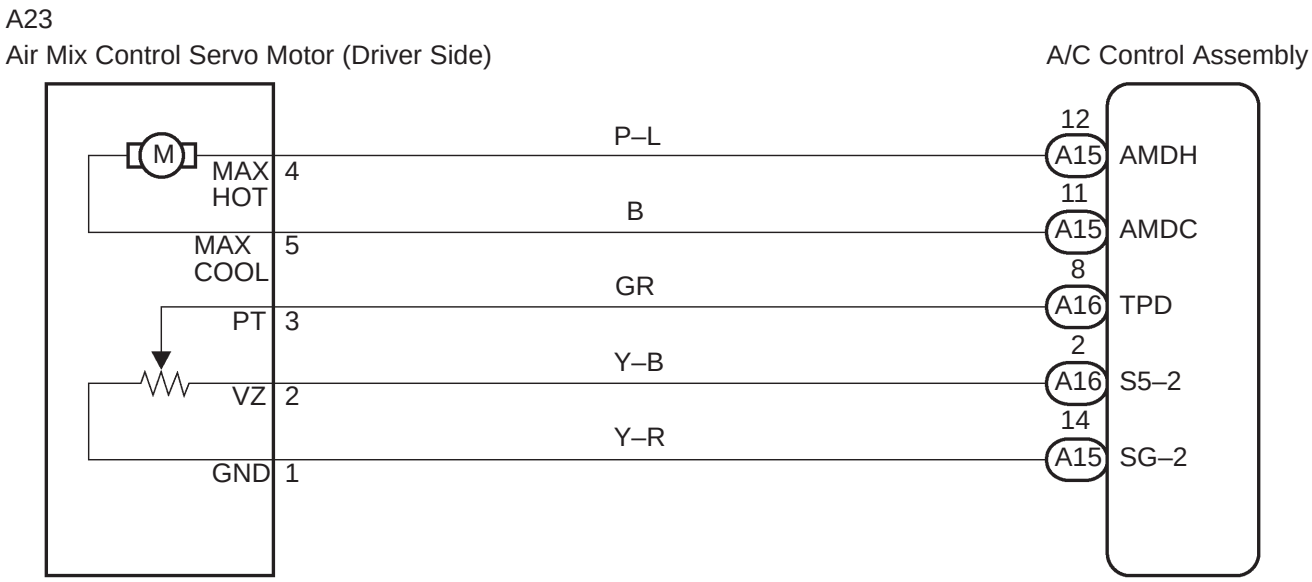

1	**INSPECT AIR CONDITIONING AMPLIFIER(TPD – SG–2)**

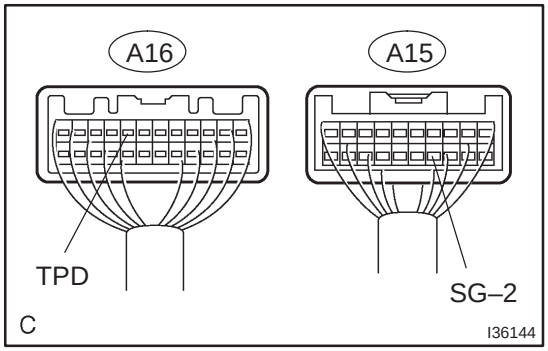

(a) Remove the A/C amplifier with connectors being connected.
(b) Turn the ignition switch to ON.
(c) Change the set temperature to activate the air mix damper and measure the voltage between terminal TPD and SG–2 of A/C amplifier.
Standard:
MAX. COOL: 3.5 to 4.5 V
MAX HOT: 0.5 to 1.8 V

HINT:
As the set temperature increases, the voltage decreases gradually without interruption.

OK → **PROCEED TO NEXT CIRCUIT INSPECTION SHOWN ON PROBLEM SYMPTOMS TABLE**

NG

2 INSPECT AIRMIX DAMPER SERVO SUB–ASSY

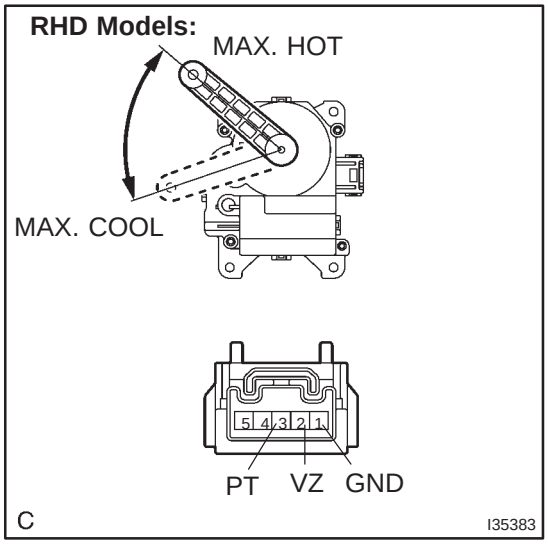

(a) Remove the air mix damper servo sub–assy.
(b) Measure the resistance between terminal VZ and GND of air mix damper servo sub–assy connector.
Resistance: 4.2 to 7.8 kΩ
(c) While operating air mix damper servo sub–assy as shown in the procedure on page 05–1139, measure resistance between terminal PT and GND of air mix damper servo sub–assy.
Resistance:
MAX. HOT: 3.4 to 6.2 kΩ
MAX. COOL: 0.8 to 1.6 kΩ

HINT:
As the air mix damper servo sub–assy moves from COOL side to HOT side, the resistance decreases gradually without interruption.

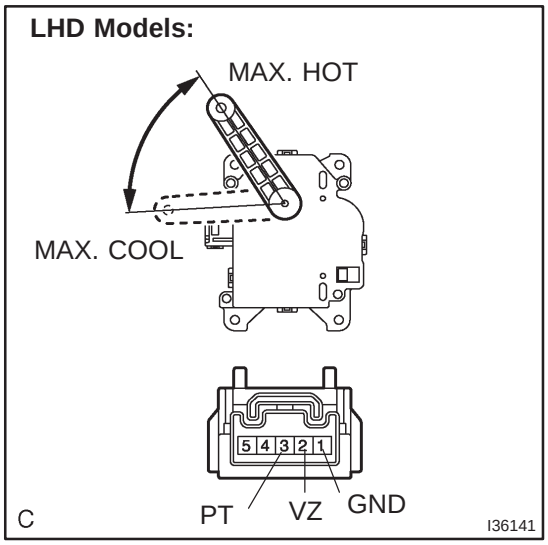

NG → **REPLACE AIRMIX DAMPER SERVO SUB–ASSY**

OK

3 CHECK HARNESS AND CONNECTOR(AIRMIX DAMPER SERVO SUB–ASSY – A/C AMPLIFIER)

(a) Check for an open and short circuit in harness and connector between air mix damper position sensor and A/C amplifier (See page 01–32).

NG → **REPAIR OR REPLACE HARNESS OR CONNECTOR**

OK

4	READ OUTPUT DTC

(a) Clear the DTCs.
(b) Read the DTC at least 1.0 minutes after turning the ignition switch ON.
Standard: Normal codes are output.

NG → **REPLACE AIR CONDITIONING AMPLIFIER**

OK

PROCEED TO NEXT CIRCUIT INSPECTION SHOWN ON PROBLEM SYMPTOMS TABLE

DTC	41	AIR MIX DAMPER CONTROL SERVOMOTOR CIRCUIT(PASSENGER SIDE)

CIRCUIT DESCRIPTION

This air mix damper servo sub–assy is controlled by the A/C amplifier and moves the air mix damper to the desired position.

DTC No.	Detection Item	Trouble Area
41	Air mix damper position sensor value does not change even if A/C amplifier operated air mix damper control servomotor.	• Air mix damper servo sub–assy (air mix damper control) • Harness or connector between air mix damper servo sub–assy (air mix damper control) and A/C amplifier assy • A/C amplifier assy

WIRING DIAGRAM

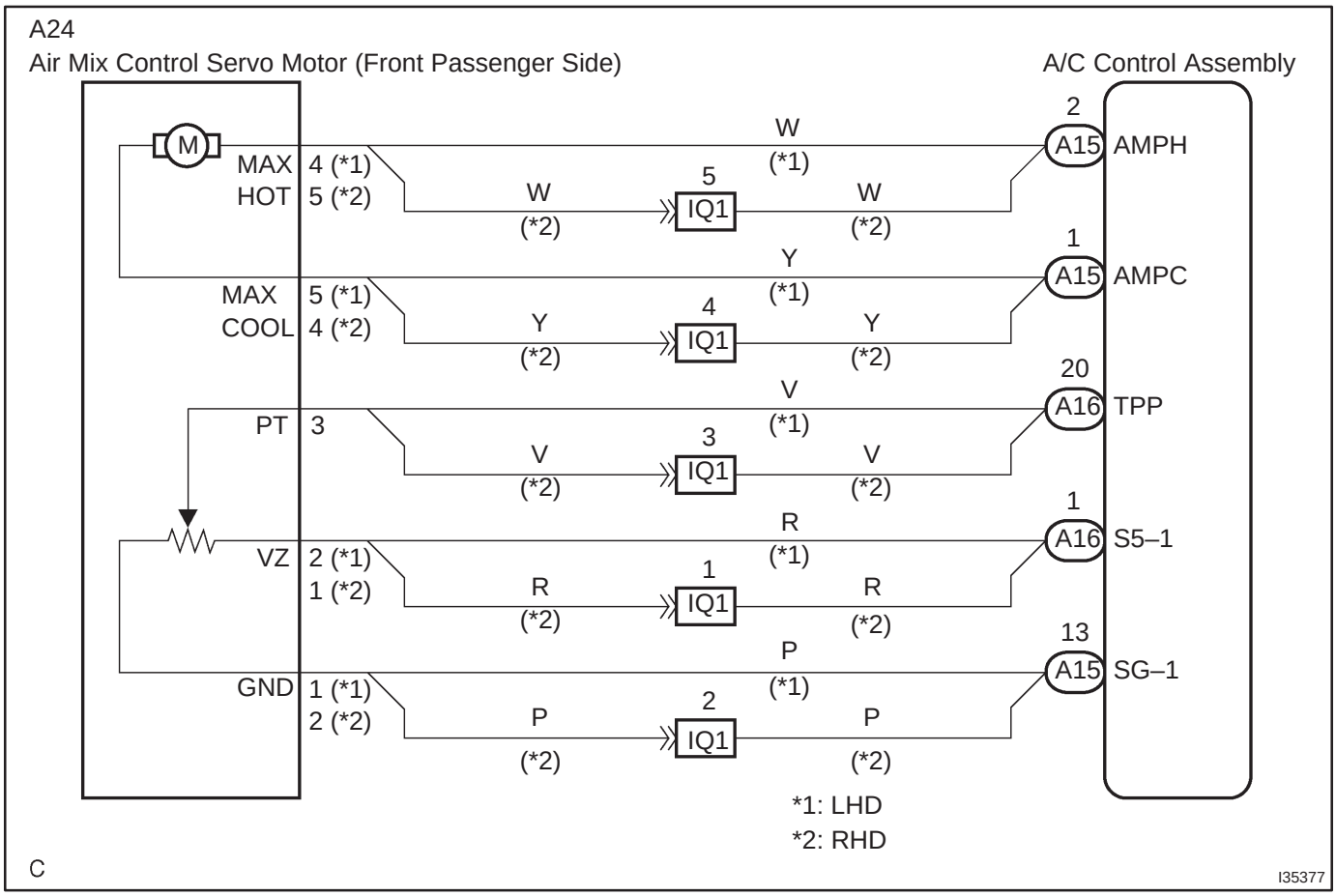

INSPECTION PROCEDURE

1	PERFORM ACTUATOR CHECK

(a) Set the actuator check mode (See page 05–1091).
(b) Press the DEF switch (passenger side) and change to step operation.
(c) Check the air flow temperature by hand.

Display Code	Air Mix Damper Operation
0	COOL side (0% open)
1	COOL side (0% open)
2	COOL side (0% open)
3	COOL side (0% open)
4	COOL/HOT (50% open)
5	COOL/HOT (50% open)
6	HOT side (100% open)
7	HOT side (100% open)
8	HOT side (100% open)
9	HOT side (100% open)

OK → **PROCEED TO NEXT CIRCUIT INSPECTION SHOWN ON PROBLEM SYMPTOMS TABLE**

NG

2	INSPECT AIRMIX NO.2 DAMPER SERVO SUB–ASSY

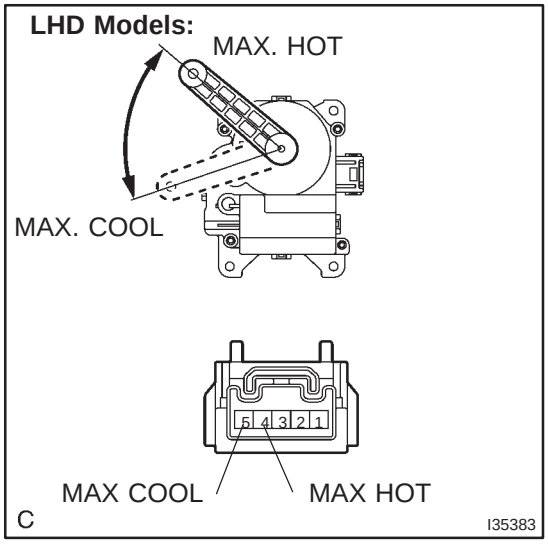

(a) Remove the air mix damper servo sub–assy.
(b) Connect the positive (+) lead from the battery to terminal MAX HOT and negative (–) lead to terminal MAX COOL, then check that the lever turns to ”HOT” side smoothly.
(c) Connect the positive (+) lead from the battery to terminal MAX COOL and negative (–) lead to terminal MAX HOT, then check that the lever turns to ”COOL” side smoothly.

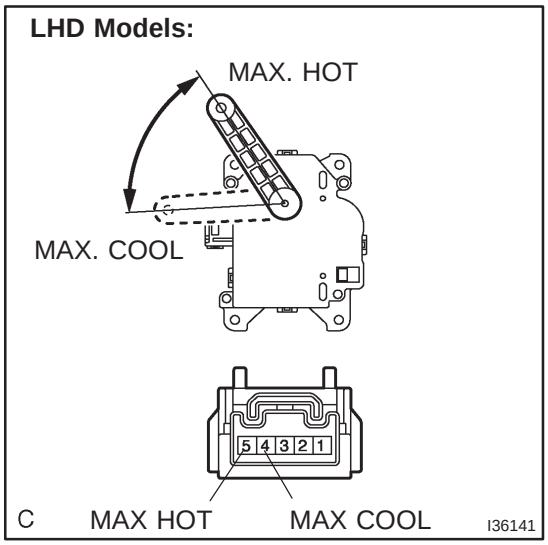

NG → **REPLACE AIRMIX NO.2 DAMPER SERVO SUB–ASSY**

OK

3	CHECK HARNESS AND CONNECTOR(AIRMIX DAMPER NO.2 SERVO SUB–ASSY – A/C AMPLIFIER)

(a) Check for an open or short circuit in harness and connector between air mix damper control servomotor and A/C amplifier (See page 01–32).

NG → **REPAIR OR REPLACE HARNESS OR CONNECTOR**

OK

REPLACE AIR CONDITIONING AMPLIFIER

DTC	43	AIR OUTLET DAMPER CONTROL SERVOMOTOR CIRCUIT

CIRCUIT DESCRIPTION

This circuit turns the servomotor and changes each mode damper position by the signals from the A/C amplifier assy. When the AUTO switch is on, the A/C amplifier changes the mode automatically between ”FACE”, ”BI–LEVEL”, ”FOOT” and ”FOOT/DEF” according to the temperature setting.

DTC No.	Detection Item	Trouble Area
43	Air mode damper position sensor value does not change even if A/C amplifier operated mode damper control servomotor.	• Mode damper servo sub–assy (mode damper control) • Harness or connector between mode damper servo sub–assy (mode damper control) and A/C amplifier assy • A/C amplifier assy

WIRING DIAGRAM

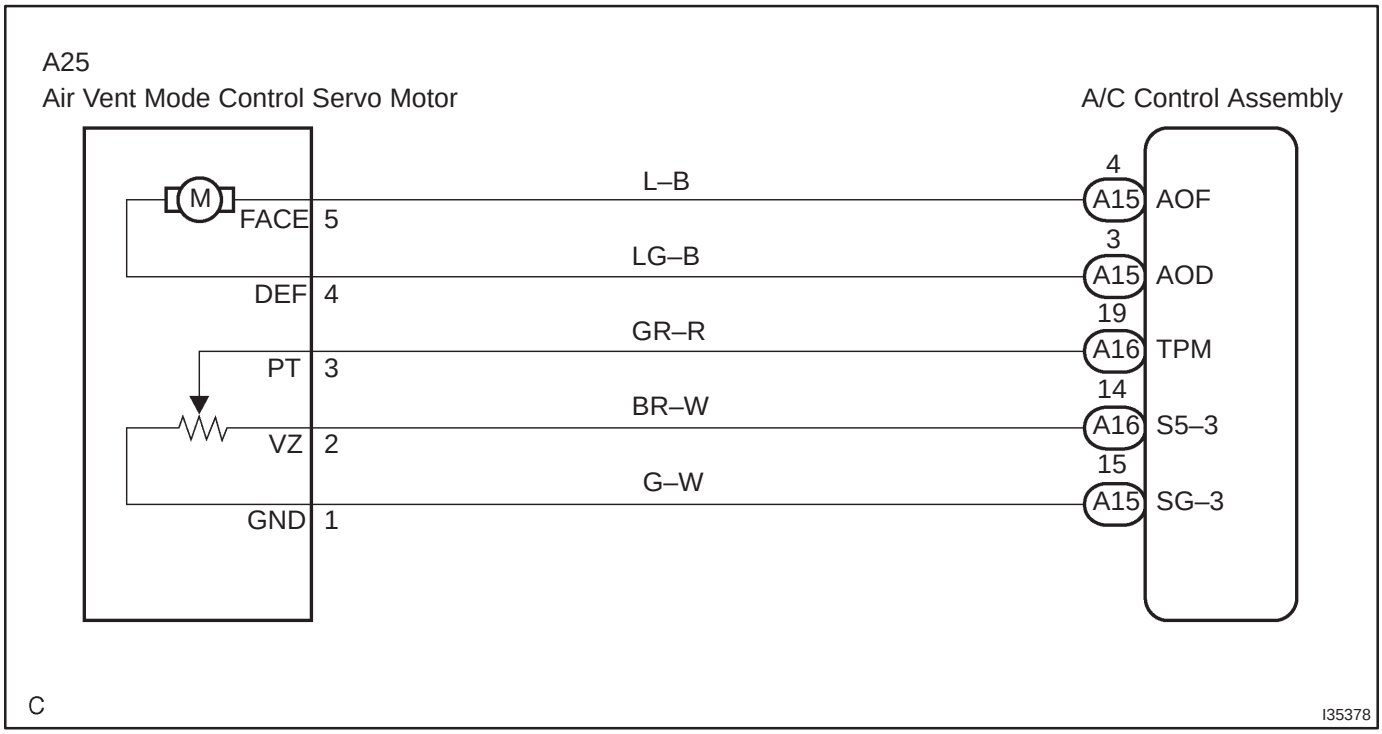

INSPECTION PROCEDURE

1	PERFORM ACTUATOR CHECK

(a) Warm up engine.
(b) Set the actuator check mode (See page 05–1091).
(c) Press the DEF switch and change it to the step operation.
(d) Check the air flow by hand.

Display code	Air flow condition
0	FACE
1	FACE
2	FACE
3	FACE
4	FACE1
5	B/L
6	FOOT1
7	FOOT
8	FOOT/DEF
9	DEF

OK → **PROCEED TO NEXT CIRCUIT INSPECTION SHOWN ON PROBLEM SYMPTOMS TABLE**

NG

2	INSPECT MODE DAMPER SERVO SUB–ASSY

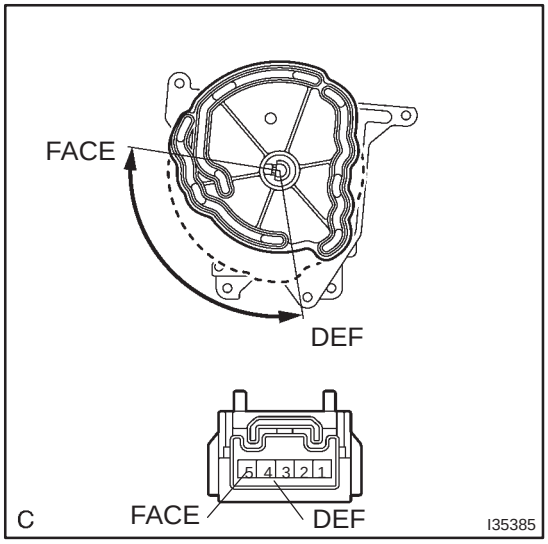

(a) Remove the mode damper servo sub–assy.
(b) Connect the positive (+) lead from the battery to terminal DEF and negative (–) lead to terminal FACE then check that the lever turns to ”DEF” position.
(c) Connect the positive (+) lead from the battery to terminal FACE and negative (–) lead to terminal DEF then check that the lever turn to ”FACE” position.

NG → REPLACE MODE DAMPER SERVO SUB–ASSY

OK

3	CHECK HARNESS AND CONNECTOR(MODE DAMPER SERVO SUB–ASSY – A/C AMPLIFIER)

(a) Check for an open or short circuit in harness and connector between mode damper servo sub–assy and A/C amplifier (See page 01–32).

NG → REPAIR OR REPLACE HARNESS OR CONNECTOR

OK

REPLACE AIR CONDITIONING AMPLIFIER

DTC	46	AIR MIX DAMPER CONTROL SERVOMOTOR CIRCUIT (DRIVER SIDE)

CIRCUIT DESCRIPTION

The air mix damper servo sub–assy is controlled by the A/C amplifier and moves the air mix damper to the desired position.

DTC No.	Detection Item	Trouble Area
46	Air mix damper position sensor value does not change even if A/C amplifier operated air mix damper control servomotor.	• Air mix damper servo sub–assy (air mix damper control) • Harness or connector between air mix damper servo sub–assy (air mix damper control servomotor) and A/C amplifier • A/C amplifier assy

WIRING DIAGRAM

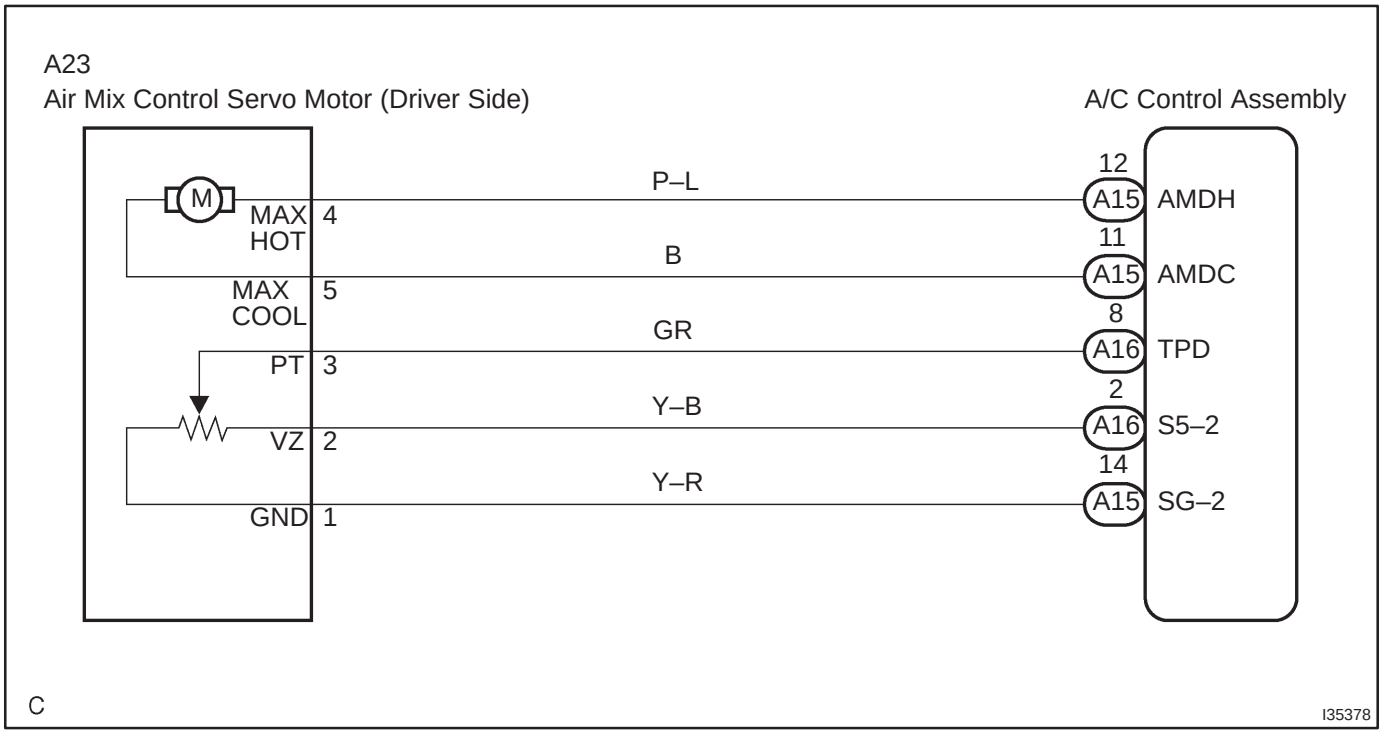

1	PERFORM ACTUATOR CHECK

(a) Set the actuator check mode (See page 05–1091).
(b) Press the DEF switch (driver side) and change to the step operation.
(c) Check the air flow temperature by hand.

Display Code	Air Mix Damper Operation
0	COOL side (0 % open)
1	COOL side (0 % open)
2	COOL side (0 % open)
3	COOL side (0 % open)
4	COOL/HOT (50% open)
5	COOL/HOT (50% open)
6	HOT side (100% open)
7	HOT side (100% open)
8	HOT side (100% open)
9	HOT side (100% open)

NG → **PROCEED TO NEXT CIRCUIT INSPECTION SHOWN ON PROBLEM SYMPTOMS TABLE**

OK

2	INSPECT AIRMIX DAMPER SERVO SUB–ASSY

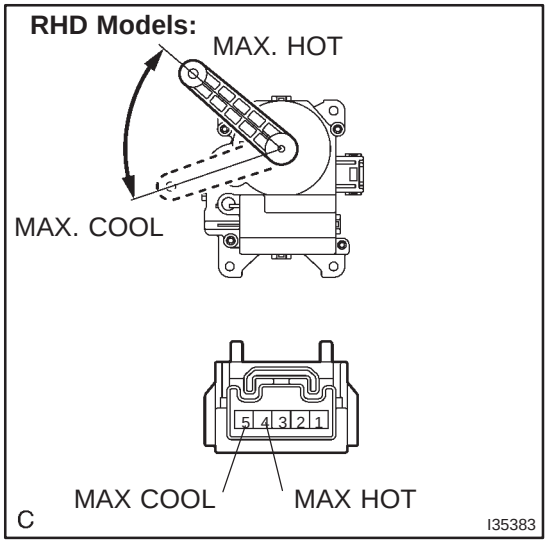

(a) Remove the air mix damper servo sub–assy.
(b) Connect the positive (+) lead from the battery to terminal MAX HOT and negative (–) lead to terminal MAX COOL, then check that the lever turns to ”HOT” side smoothly.
(c) Connect the positive (+) lead from the battery to terminal MAX COOL and negative (–) lead to terminal MAX HOT, then check that the lever turns to ”COOL” side smoothly.

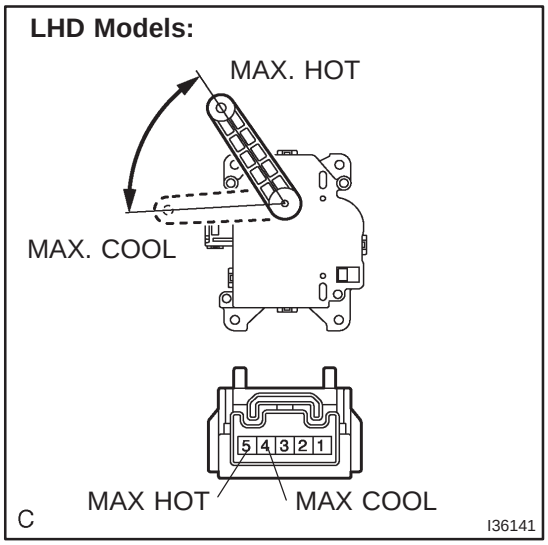

NG → REPLACE AIRMIX DAMPER SERVO SUB–ASSY

OK

3	CHECK HARNESS AND CONNECTOR(AIRMIX DAMPER SERVO SUB–ASSY – A/C AMPLIFIER)

(a) Check for an open or short circuit in harness and connector between air mix control servomotor and A/C amplifier (See page 01–32).

NG → REPAIR OR REPLACE HARNESS OR CONNECTOR

OK

REPLACE AIR CONDITIONING AMPLIFIER

BACK–UP POWER SOURCE CIRCUIT

CIRCUIT DESCRIPTION

This is the back–up power source for the A/C amplifier. Power is supplied even when the ignition switch is off and is used for diagnostic trouble code memory etc.

WIRING DIAGRAM

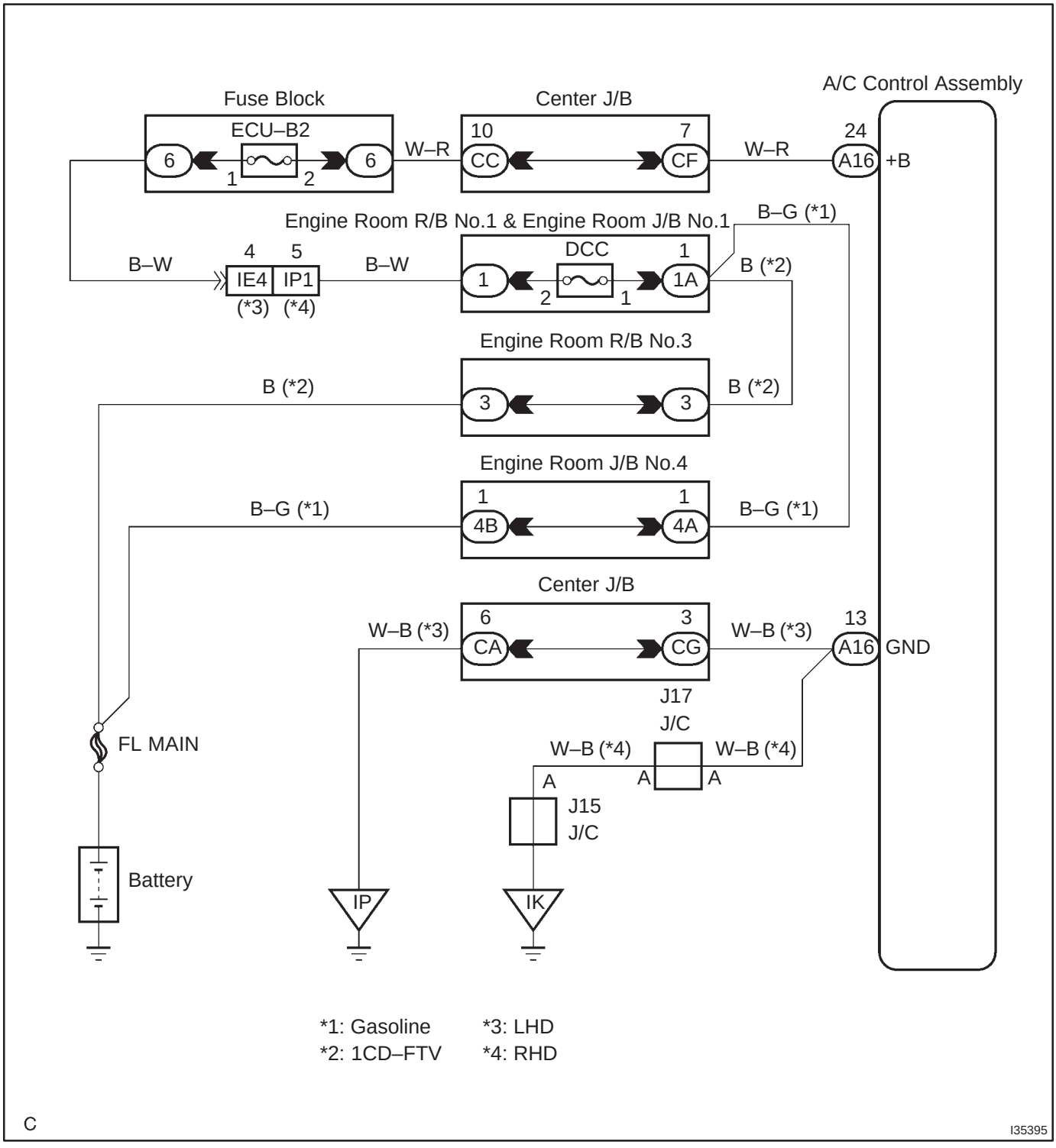

INSPECTION PROCEDURE

1	CHECK FUSE(ECU–B2, DCC FUSE)

(a) Remove the ECU–B2 fuse and DCC fuse from the fuse block and engine room J/B.
(b) Check for the continuity of ECU–B2 fuse and DCC fuse.

NG → **REPLACE FUSE**

OK

2	CHECK HARNESS AND CONNECTOR(A/C AMPLIFIER – BATTERY)

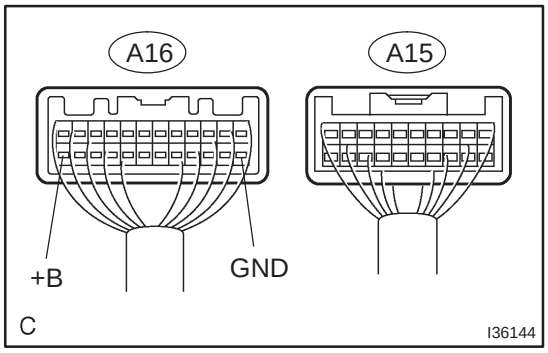

(a) Remove the A/C amplifier with being connected.
(b) Measure the voltage between terminal +B and GND of A/C amplifier.

Standard: 10 to 14 V

NG → **REPAIR OR REPLACE HARNESS OR CONNECTOR**

OK

PROCEED TO NEXT CIRCUIT INSPECTION SHOWN ON PROBLEM SYMPTOMS TABLE

IG POWER SOURCE CIRCUIT

CIRCUIT DESCRIPTION

This is the power source for the A/C amplifier and servomotor, etc.

WIRING DIAGRAM

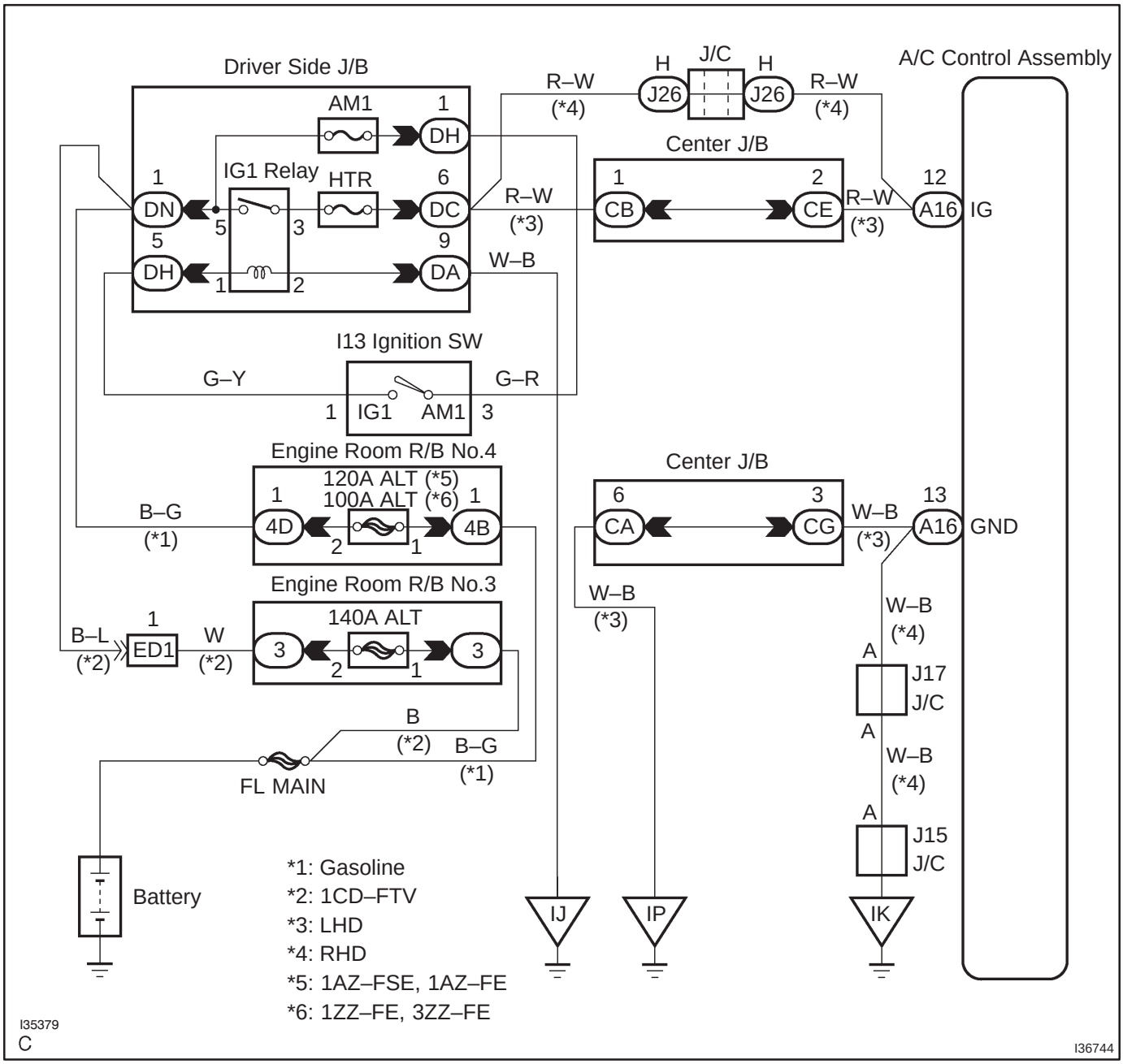

INSPECTION PROCEDURE

1	CHECK FUSE(HTR FUSE)

(a) Remove the HTR fuse from the driver side J/B.
(b) Check for the continuity of HTR fuse.

NG → **REPLACE FUSE**

OK

2	CHECK HARNESS AND CONNECTOR(A/C AMPLIFIER – BATTERY)

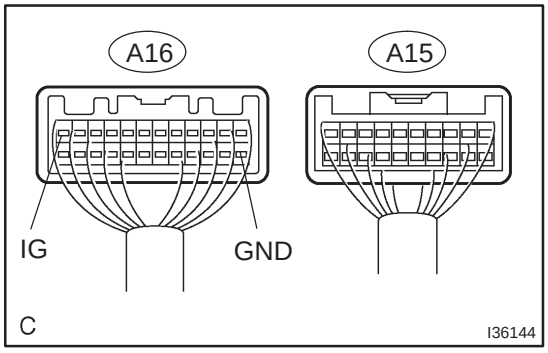

(a) Remove the A/C amplifier with connectors being connected.
(b) Turn the ignition switch to ON.
(c) Measure the voltage between terminal IG and GND of the A/C amplifier.
Standard: 10 to 14 V

NG → **REPAIR OR REPLACE HARNESS OR CONNECTOR**

OK

PROCEED TO NEXT CIRCUIT INSPECTION SHOWN ON PROBLEM SYMPTOMS TABLE

HEATER RELAY CIRCUIT

CIRCUIT DESCRIPTION

The heater relay is switched on by signals from the A/C amplifier. It supplies power to the blower motor.

WIRING DIAGRAM

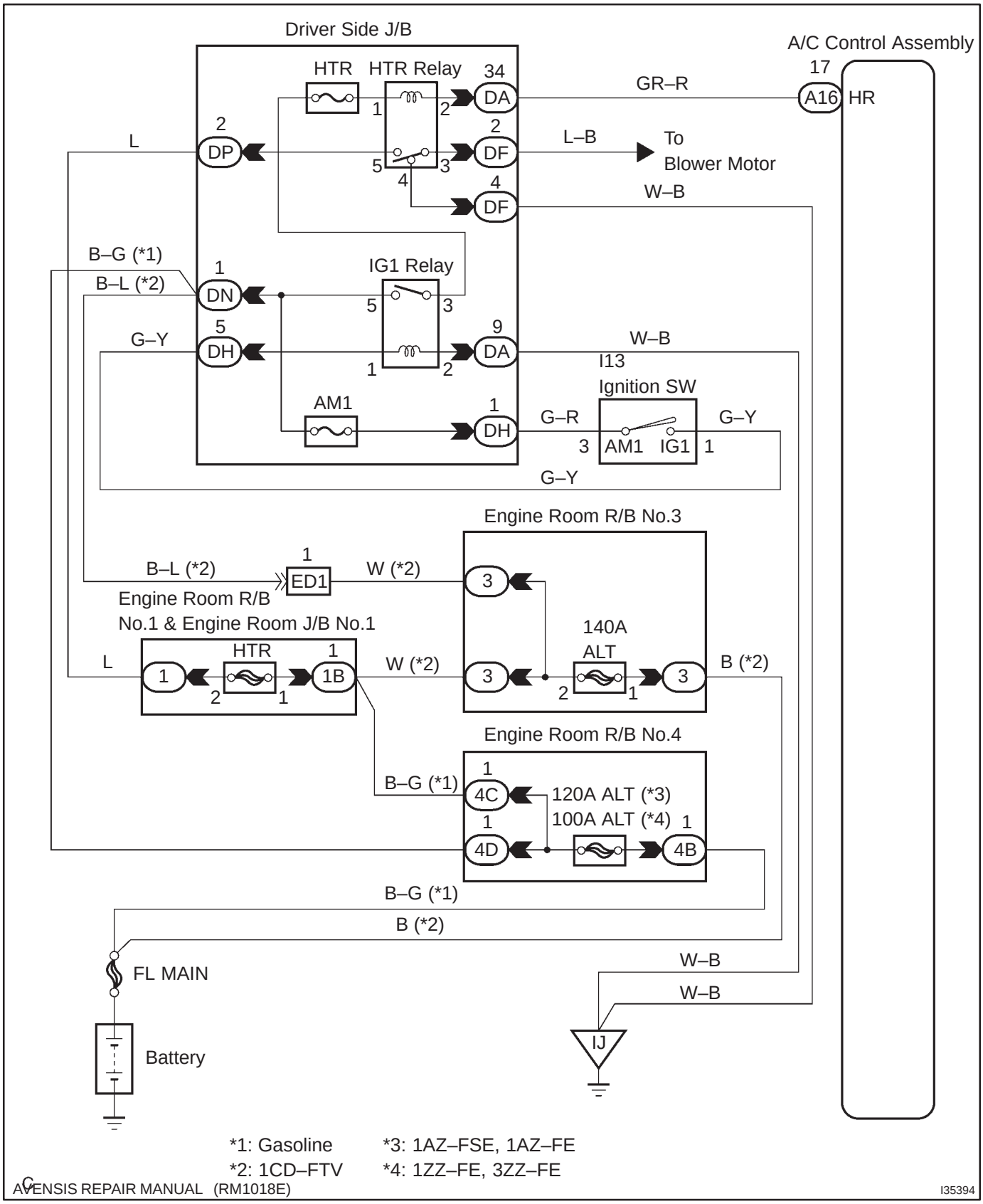

INSPECTION PROCEDURE

1	CHECK FUSE(HTR FUSE)

(a) Remove the HTR fuse from the driver side J/B and engine room J/B.
(b) Check for the continuity of HTR fuse.

NG → **REPLACE FUSE**

OK

2	INSPECT HEATER RELAY

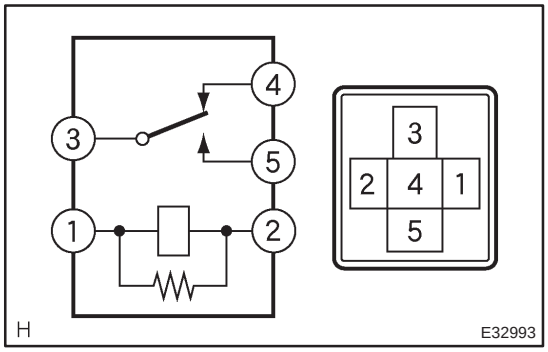

(a) Check for the continuity between each pair of terminals of cooler relay assy, as shown in the chart.
Standard:

Terminal No.	Specified condition
3 – 5	No continuity
	Less than 1 Ω (When battery voltage applied to terminals 1 and 2)
3 – 4	Less than 1 Ω
	No continuity (When battery voltage applied to terminals 1 and 2)
1 – 2	Approx. 1.3 kΩ

NG → **REPLACE HEATER RELAY**

OK

3	CHECK HARNESS AND CONNECTOR(A/C AMPLIFIER – BATTERY)

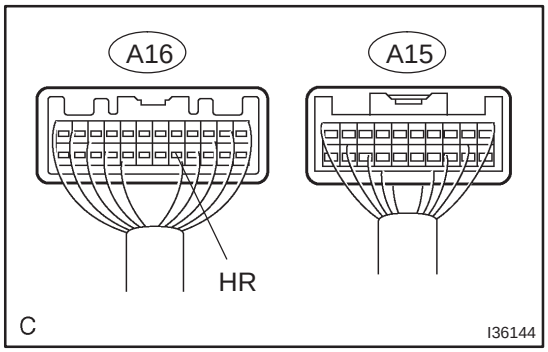

(a) Remove the A/C amplifier with connectors being connected.
(b) Measure the voltage between terminal HR of A/C amplifier and body ground when ignition switch is ON and OFF.
Standard:

Ignition switch position	Blower switch position	Voltage (V)
OFF	OFF	0
ON	ON	Below 1.0
ON	OFF	10 to 14

NG → **REPAIR OR REPLACE HARNESS OR CONNECTOR**

OK

PROCEED TO NEXT CIRCUIT INSPECTION SHOWN ON PROBLEM SYMPTOMS TABLE

BLOWER MOTOR CIRCUIT

CIRCUIT DESCRIPTION

The blower motor is operated by signals from the A/C amplifier. Blower motor speed signals are transmitted by changes in the Duty Ratio.

Duty Ratio

The duty ratio is the ratio of the period of continuity in one cycle. For example, if A is the period of continuity in one cycle, and then B is the period of non–continuity.

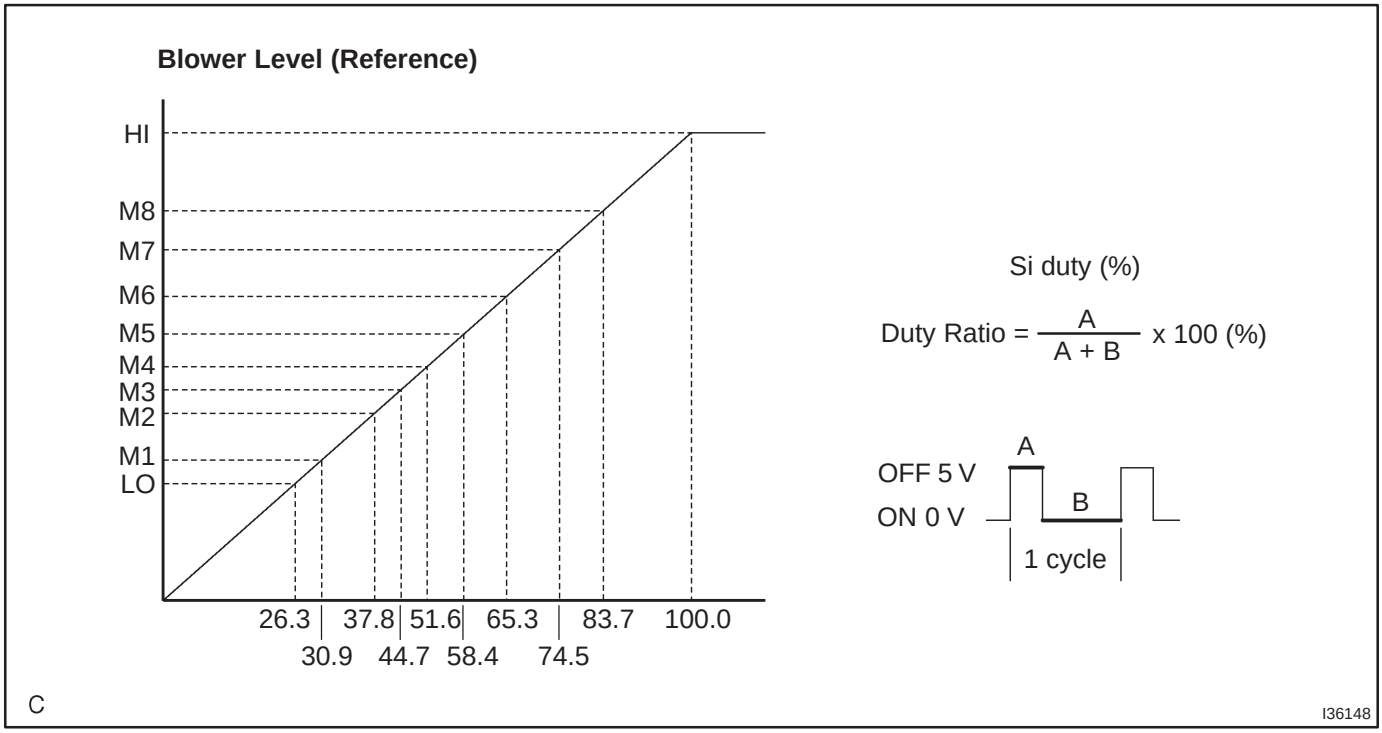

WIRING DIAGRAM

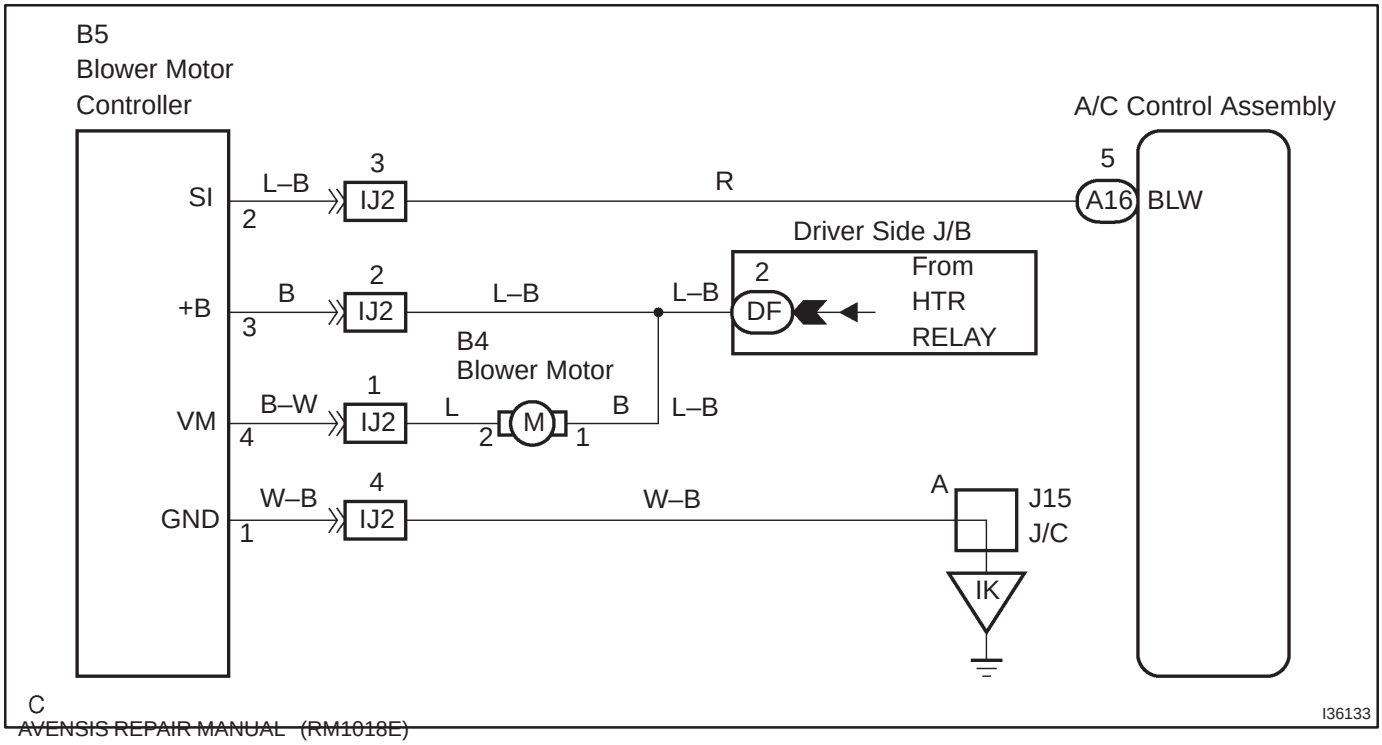

INSPECTION PROCEDURE

1	PERFORM ACTUATOR CHECK

(a) Set to actuator check mode (See page 05–1091).
(b) Press the DEF switch and change to step operation.
(c) Check the air flow level by hand.

Display Code	Blower level
0	0
1	1
2	16
3	16
4	16
5	16
6	16
7	16
8	16
9	31

OK → **PROCEED TO NEXT CIRCUIT INSPECTION SHOWN ON PROBLEM SYMPTOMS TABLE**

NG

2	INSPECT BLOWER W/FAN MOTOR SUB–ASSY

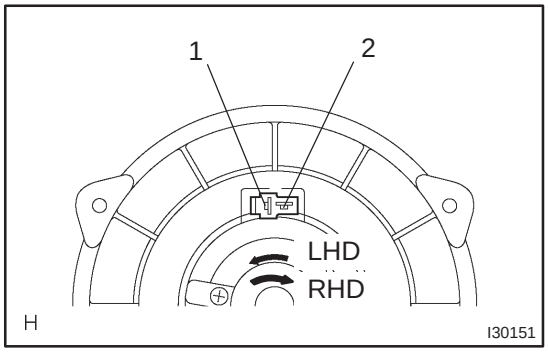

(a) Connect the positive (+) lead from the battery to terminal 1 and negative (–) to terminal 2.
Standard: Blower motor operates smoothly.

If operation is not as specified, replace the blower motor.

NG → **REPLACE BLOWER W/FAN MOTOR SUB–ASSY**

OK

3	CHECK HARNESS AND CONNECTOR(BLOWER W/FAN MOTOR SUB–ASSY – BLOWER MOTOR CONTROL)

(a) Check for an open or short circuit in harness and connector between blower w/fan motor sub–assy and blower motor control (See page 01–32).

NG → **REPAIR OR REPLACE HARNESS OR CONNECTOR**

OK

4	CHECK HARNESS AND CONNECTOR(BLOWER MOTOR CONTROL – BODY GROUND)

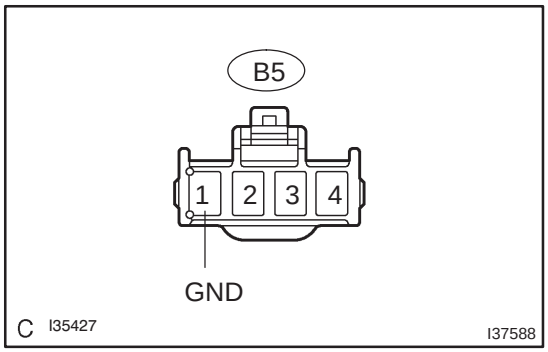

(a) Check for an open circuit in harness and connector between terminal GND of blower motor control and body ground (See page 01–32).

NG → **REPAIR OR REPLACE HARNESS OR CONNECTOR**

OK

5	INSPECT AIR CONDITIONING AMPLIFIER(BLW)

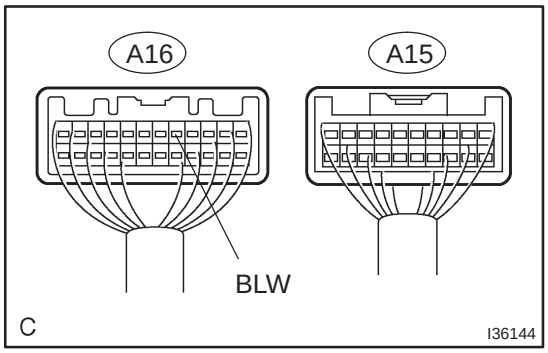

(a) Remove the A/C amplifier with connectors being connected.
(b) Turn the ignition switch ON.
(c) Blower switch is ON.
(d) Measure the waveform between terminal BLW of A/C amplifier and body ground.
OK: Pulse generation

HINT:
- The correct waveform is as shown.
- Waveform varies with blower level.

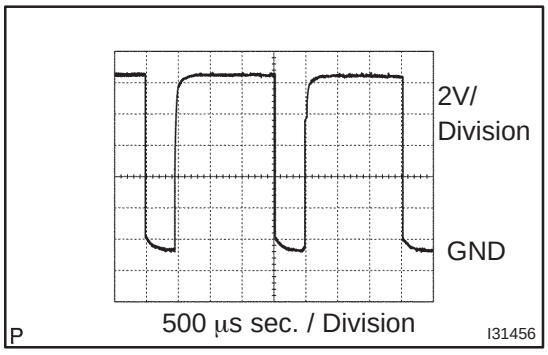

NG → **REPLACE AIR CONDITIONING AMPLIFIER**

OK

6	CHECK HARNESS OR CONNECTOR(A/C AMPLIFIER – BLOWER MOTOR CONTROL)

(a) Check for an open or short circuit in harness and connector between A/C amplifier and blower motor control (See page 01–32).

NG → **REPAIR OR REPLACE HARNESS OR CONNECTOR**

OK

REPLACE BLOWER MOTOR CONTROL

AIR CONDITIONER MAGNETIC VALVE CIRCUIT

CIRCUIT DESCRIPTION

The air conditioner magnetic valve is controlled by A/C amplifier.

WIRING DIAGRAM

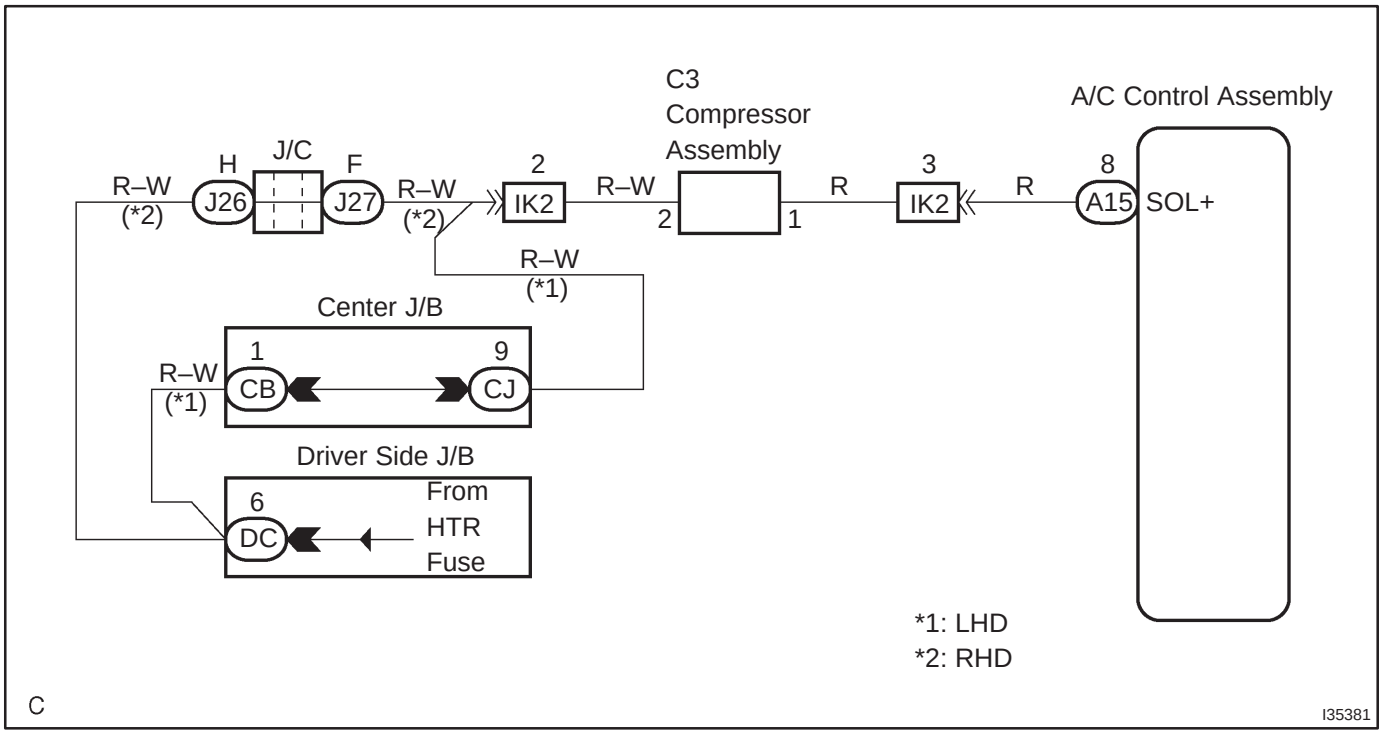

INSPECTION PROCEDURE

1 PERFORM ACTUATOR CHECK

(a) Set the actuator check mode (See page 05–1091).
(b) Press the DEF switch and change to the step operation.
(c) Check the air flow level by hand.

Display Code	Blower level
0	ON
1	ON
2	OFF
3	OFF
4	OFF
5	OFF
6	OFF
7	OFF
8	OFF
9	OFF

OK → **PROCEED TO NEXT CIRCUIT INSPECTION SHOWN ON PROBLEM SYMPTOMS TABLE**

NG

2 INSPECT AIR CONDITIONER MAGNETIC VALVE

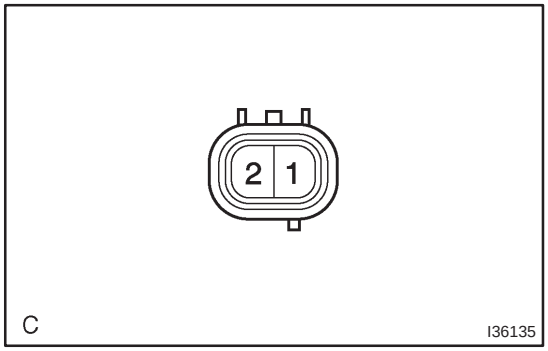

(a) Measure the resistance between terminals 1 and 2.
Standard: 10 to 11 Ω at 25 °C (77 °F)

If the resistance is not as specified, replace the compressor assy.

NG → **REPLACE W/PULLEY COMPRESSOR ASSY**

OK

3 CHECK HARNESS AND CONNECTOR(A/C AMPLIFIER – BATTERY)

(a) Check for an open or short circuit in harness and connector between terminal SOL+ of A/C amplifier and battery + terminal (See page 01–32).

NG → **REPAIR OR REPLACE HARNESS OR CONNECTOR**

OK

REPLACE AIR CONDITIONING AMPLIFIER

RECIRCULATION DAMPER SERVOMOTOR CIRCUIT

CIRCUIT DESCRIPTION

The recirculation damper servomotor is controlled by the A/C amplifier and moves the air inlet damper to the desired position.

WIRING DIAGRAM

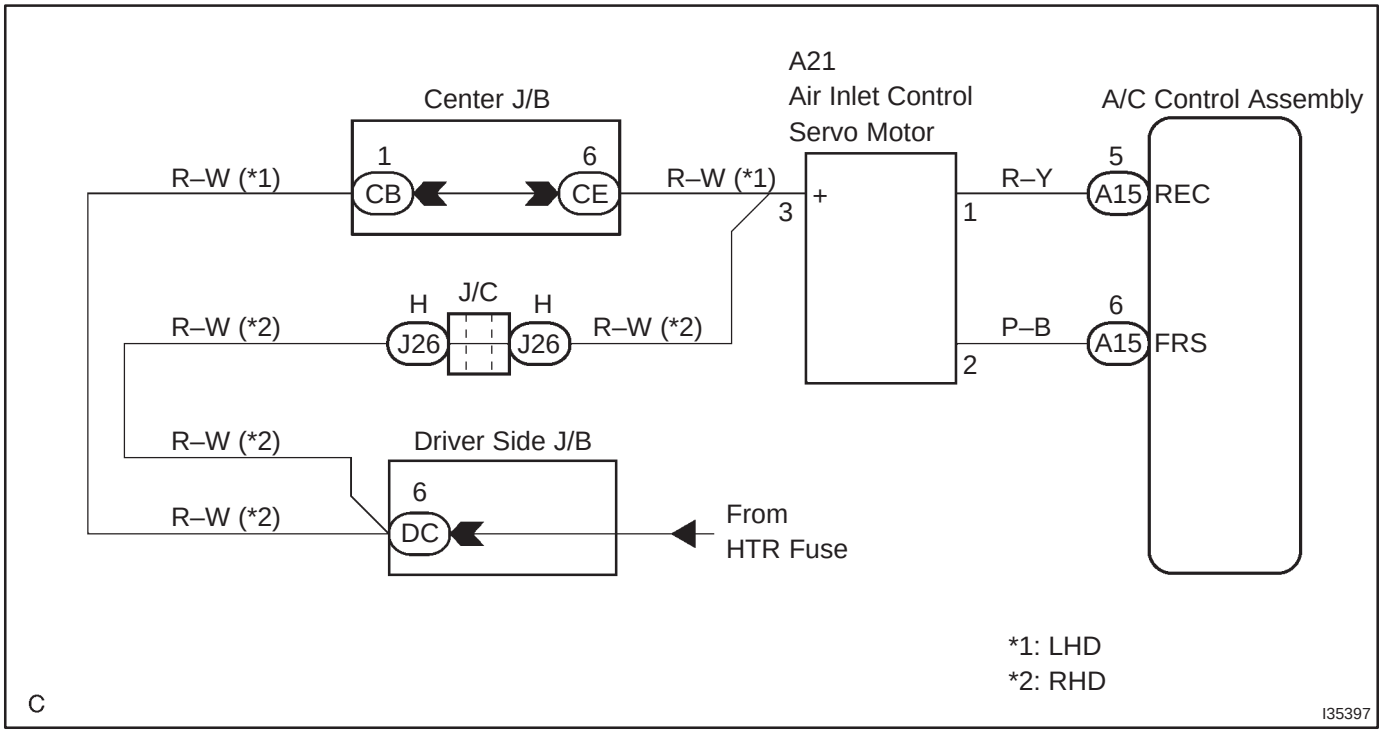

1	PERFORM ACTUATOR CHECK

(a) Set to actuator check mode (See page 05–1091).
(b) Press the DEF switch and change to step operation.
(c) Check the air flow temperature by hand.

Display code	Recirculation damper position
0	FRESH
1	FRESH
2	FRESH
3	FRESH
4	RECIRCULATION
5	RECIRCULATION
6	RECIRCULATION
7	RECIRCULATION
8	RECIRCULATION
9	RECIRCULATION

NG → **PROCEED TO NEXT CIRCUIT INSPECTION SHOWN ON PROBLEM SYMPTOMS TABLE**

OK

2 INSPECT RECIRCULATION DAMPER SERVO SUB–ASSY

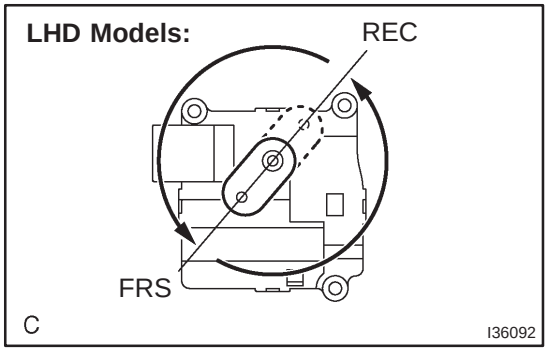

(a) Remove the recirculation damper servo sub–assy.
(b) Connect the positive (+) lead to from the battery to terminal 3 and negative (–) lead to terminal 2, then check that the arm turns to ”FRS” side smoothly.
(c) Connect the positive (+) lead to from the battery to terminal 3 and negative (–) lead to terminal 1, then check that the arm turns to ”REC” side smoothly.

If operattions are not as specified, replace the mode damper servomotor.

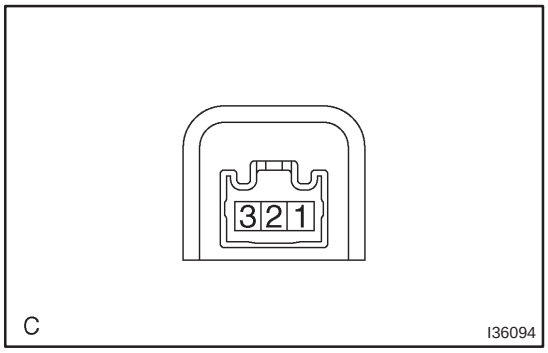

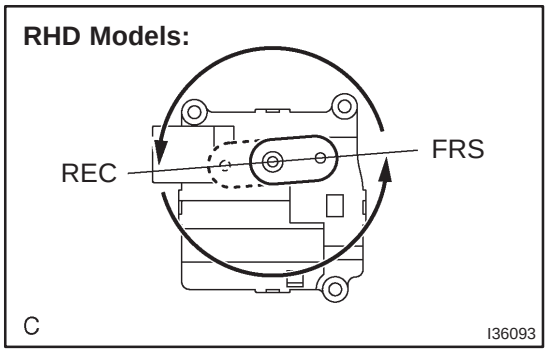

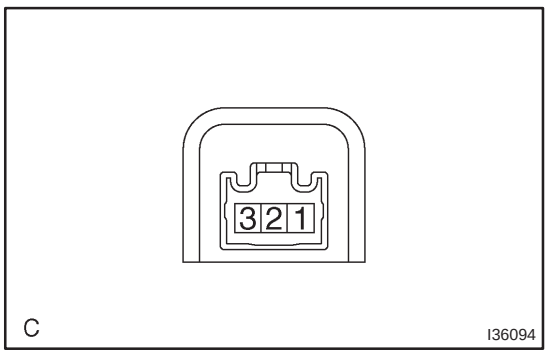

NG → **REPLACE RECIRCULATION DAMPER SERVO SUB–ASSY**

OK

3	CHECK HARNESS AND CONNECTOR(RECIRCULATON DAMPER SERVO SUB–ASSY – BATTERY)

(a) Check for an open or short circuit in harness and connector between recirculation damper and battery + terminal (See page 01–32).

NG → **REPAIR OR REPLACE HARNESS OR CONNECTOR**

OK

4	INSPECT AIR CONDITIONING AMPLIFIER(REC, FRS)

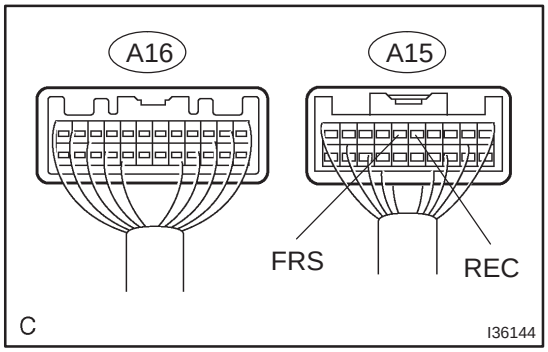

(a) Remove A/C amplifier with connectors being connected.
(b) Measure the voltage between terminal FRS of A/C amplifier and body ground when recirculation switch is operated, as shown in the table.

Standard:

Recirculation switch	Voltage (V)
FRESH	Below 1.0
RECIRCULATION	10 to 14

(c) Measure voltage between terminal REC of A/C amplifier and body ground when recirculation switch is operated, as shown in the table.

Standard:

Recirculation switch	Voltage (V)
FRESH	10 to 14
RECIRCULATION	Below 1.0

NG → **REPLACE AIR CONDITIONING AMPLIFIER**

OK

REPAIR OR REPLACE HARNESS OR CONNECTOR

HOT GAS HEATER MAGNETIC VALVE CIRCUIT

CIRCUIT DESCRIPTION

For the hot gas heater, it is necessary to fulfill the following 6 conditions.

- Hot gas heater switch is ON.
- Recirculation damper position is FRS.
- Blower motor switch is in the position other than OFF.
- Ambient temperature varies according to the following condition;

A/C switch ON	Below –1.5°C (32°F)
A/C switch OFF	Below 8°C (46°F)

- Air mix damper position is MAX HOT.
- Water temperature is 70°C (158°F) or less.

WIRING DIAGRAM

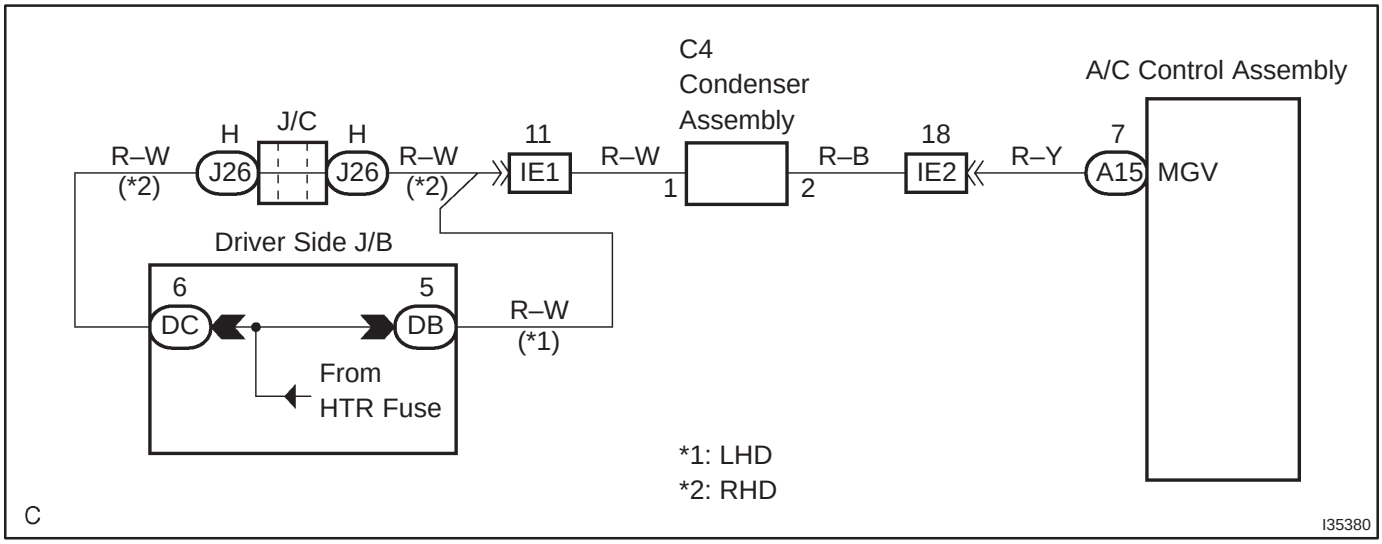

1 INSPECT AIR CONDITIONING AMPLIFIER

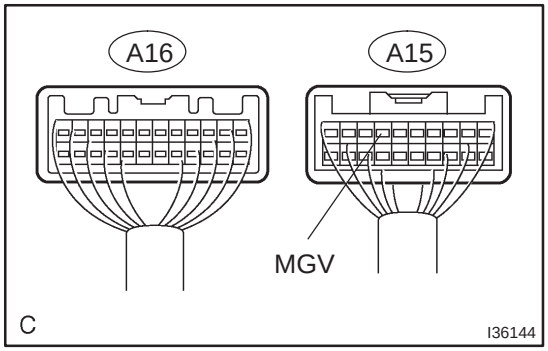

(a) Remove the A/C amplifier with connectors being connected.

(b) Measure the voltage between terminals MGV of the A/C amplifier and body ground.

Standard:

Recirculation switch	Voltage (V)
Operate	Below 1.0
Not Operate	No Continuity

OK → **PROCEED TO NEXT CIRCUIT INSPECTION SHOWN IN PROBLEM SYMPTOMS TABLE**

NG

2 INSPECT W/RECEIVER CONDENSER ASSY

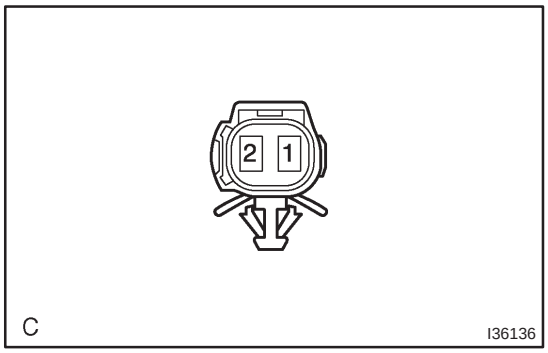

(a) Apply voltage between terminals and check that the refrigerant passages switch.

NG → **REPLACE W/RECEIVER CONDENSER ASSY**

OK

3 CHECK WIRE HARNESS(W/RECEIVER CONDENSER ASSY – AIR CONDITIONING AMPLIFIER)

(a) Check for an open or short circuit in harness and connector between w/ receiver condenser assy and A/C amplifier (See page 01–32).

NG → **REPAIR OR REPLACE WIRE HARNESS**

OK

REPLACE AIR CONDITIONING AMPLIFIER

HOT GAS HEATER SWITCH CIRCUIT

CIRCUIT DESCRIPTION

Hot gas heater performs only when its switch turns to ON and fulfill the following 6 conditions.

- Hot gas heater switch is ON.
- Recirculation damper position is FRS.
- Blower motor switch is in the position other than OFF.
- Ambient temperature varies according to the following condition;

A/C switch ON	Below –1.5°C (32°F)
A/C switch OFF	Below 8°C (46°F)

- Air mix damper position is MAX HOT.
- Water temperature is 70°C (158°F) or less.

WIRING DIAGRAM

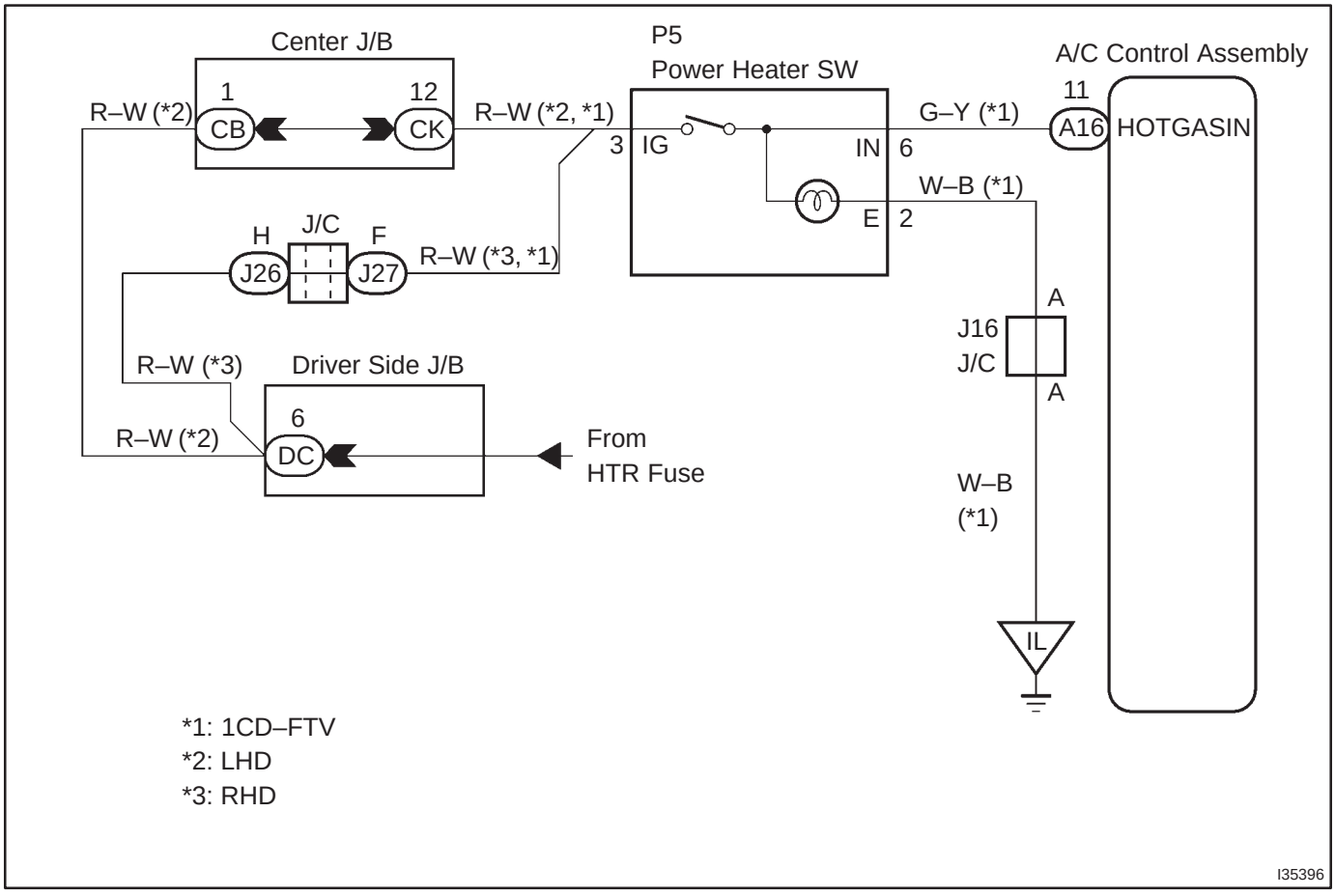

1 INSPECT HETER SWITCH ASSY

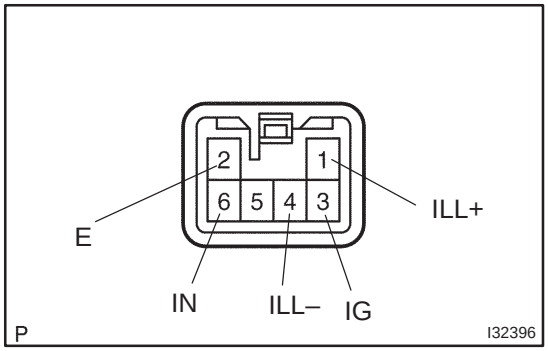

(a) Check that the continuity when connecting the positive tester lead (+) and the negative tester lead (–) to the following terminals.

Standard:

Heater switch condition	Connecting terminals	Standard value
ON	IG – IN	Continuity
OFF	IG – IN	No continuity
ON	IG – E	Continuity
OFF	IG – E	No continuity
ON	ILL+ – ILL–	Continuity
OFF	ILL+ – ILL–	Continuity

NG → **REPAIR OR REPLACE HETER SWITCH ASSY**

OK

2 CHECK WIRE HARNESS(A/C CONTROL ASSEMBLY – BATTERY)

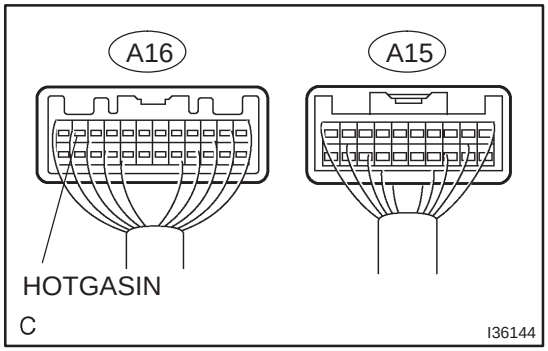

(a) Remove the A/C amplifier with connectors being connected.

(b) Turn the ignition switch to ON.

(c) Measure the voltage between terminal HOTGASIN and GND of the A/C amplifier.

Standard:

Heater switch condition	Standard value
ON	10 to 14 V
OFF	0 V

NG → **REPAIR OR REPLACE WIRE HARNESS**

OK

3 CHECK WIRE HARNESS(HETER SWITCH – BODY GROUND)

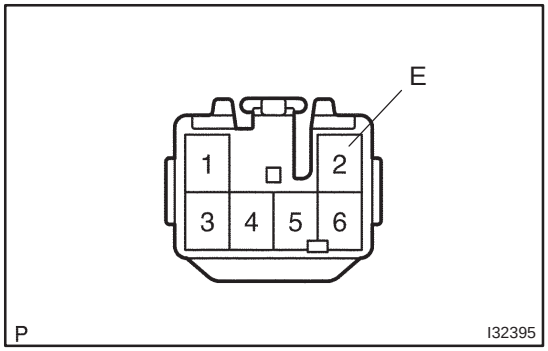

(a) Check for an open or short circuit in harness and connector between heater switch and body ground
(See page 01–32).

NG → **REPAIR OR REPLACE WIRE HARNESS**

OK

PROCEED TO NEXT CIRCUIT INSPECTION SHOWN IN PROBLEM SYMPTOMS TABLE

COMBUSTION TYPE POWER HEATER SYSTEM

05C7T–01

HOW TO PROCEED WITH TROUBLESHOOTING

1	VEHICLE BROUGHT TO WORK SHOP

2	CUSTOMER PROBLEM ANALYSIS (See page 05–1163)

3	CHECK AND CLEAR DTC (See page 05–1164)

4	PROBLEM SYMPTOM CONFIRMATION

SYMPTOM OCCUR (GO TO STEP 6)

SYMPTOM DOES NOT OCCUR (GO TO STEP 5)

5	SYMPTOM SIMULATION (See page 01–22)

6	DTC CHECK (See page 05–1164)

7	DTC CHART (See page 05–1166)

8	PROBLEM SYMPTOMS TABLE (See page 05–1170)

9	CIRCUIT INSPECTION (See page 05–1171 to 05–1179)

10	IDENTIFICATION OF PROBLEM

11	PARTS INSPECTION

12	REPAIR

13	CONFIRMATION TEST

14	END

05C7U–01

CUSTOMER PROBLEM ANALYSIS CHECK

AIR CONDITIONING SYSTEM Check Sheet

Inspector's name:

Customer's Name		**VIN**	
		Production Date	
		Licence No.	
Date vehicle Brought In	/ /	**Odometer Reading**	**km Miles**

Date of Problem Occurrence	/ /
How Often does Problem Occur?	☐ Continuous ☐ Intermittent (times a day)
Weather	☐ Fine ☐ Cloudy ☐ Snowy ☐ Various / Other
Outdoor Temperature	☐ Hot ☐ Warm ☐ Cool ☐ Cold (Approx. °F °C)

DTC Check	**1st Time**	☐ Normal Code ☐ Malfunction Code (Code)
	2nd Time	☐ Normal Code ☐ Malfunction Code (Code)

I35990

05C7V–01

PRE–CHECK

NOTICE:

- **If the glow plug breaks, the ECU detects the breakage and stops the automatic operation, so the burner heater does not activate. (For other failures, similarly activated.)**
- **The cause of failures (such as voltage malfunction, overheating malfunction, short–circuit or breakage of functional components, etc.) and repair methods are shown by connecting the DTC tester and reading the DTC.**

1. DIAGNOSTICS FUNCTION

(a) Connect the DTC tester between the connector A (Vehicle harness) of DTC check harness and connector B (Power heater harness).

(b) Start the engine.

(c) Pressing the DTC calling button displays a 3–digit number DTC.

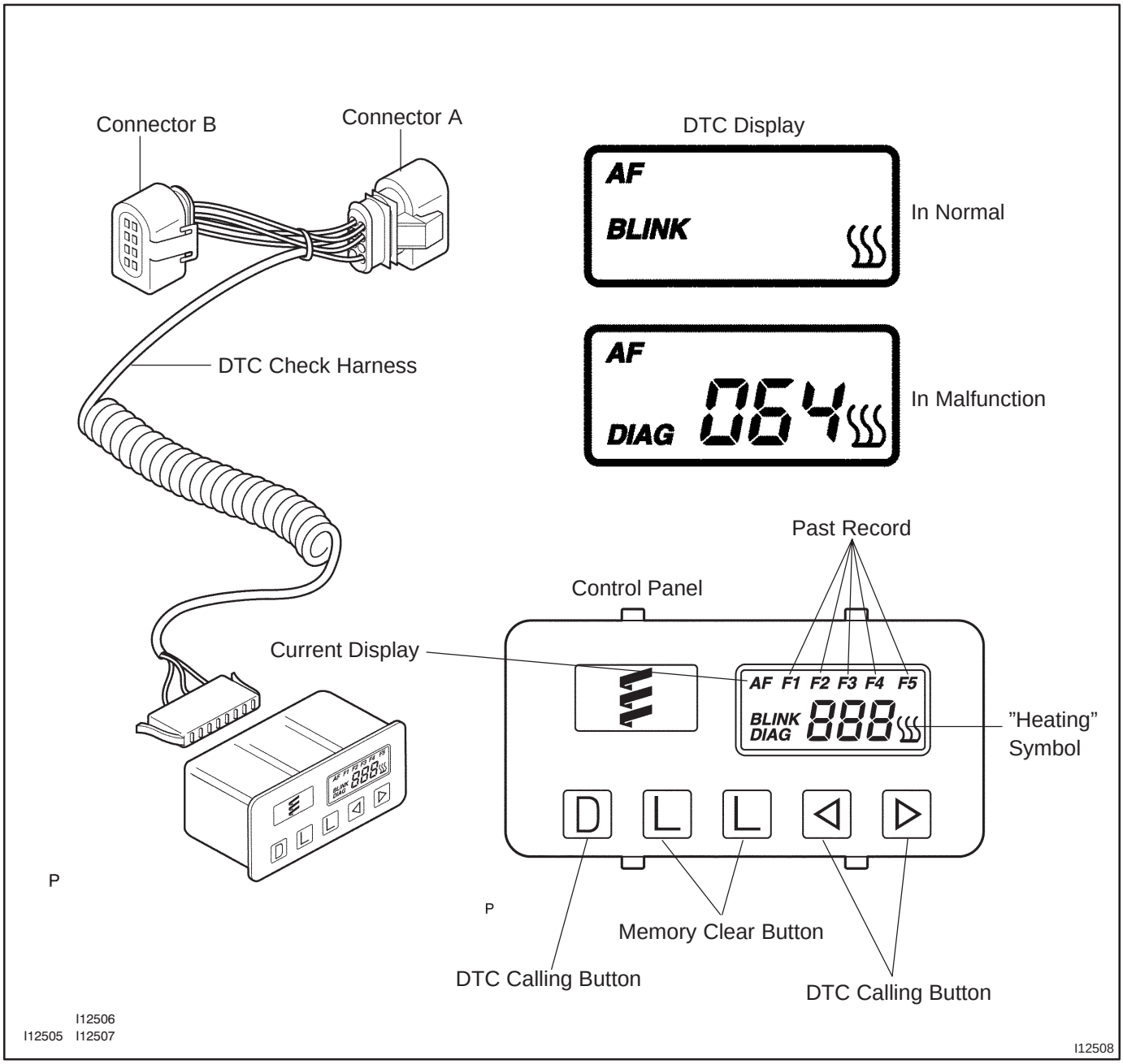

2. DESCRIPTION OF DISPLAY AND BUTTONS

(a) AF: Current Value Malfunction (Blinking at current failure)
Diag: DTC (Example: 064 Flame sensor break)
Memory Clear button: Deletion of faulty memory (Press both buttons together for longer than 2 sec.)
> Button: Scroll up of faulty memory (The past 5 codes can be stored.)
< Button: Scroll down of faulty memory (The past 5 codes can be stored.)

3. FAULTY MEMORY

(a) The ECU is able to store upto 5 pieces of faulty memory. If it is full, the new data is written over F5.

4. WIRING DIAGRAM

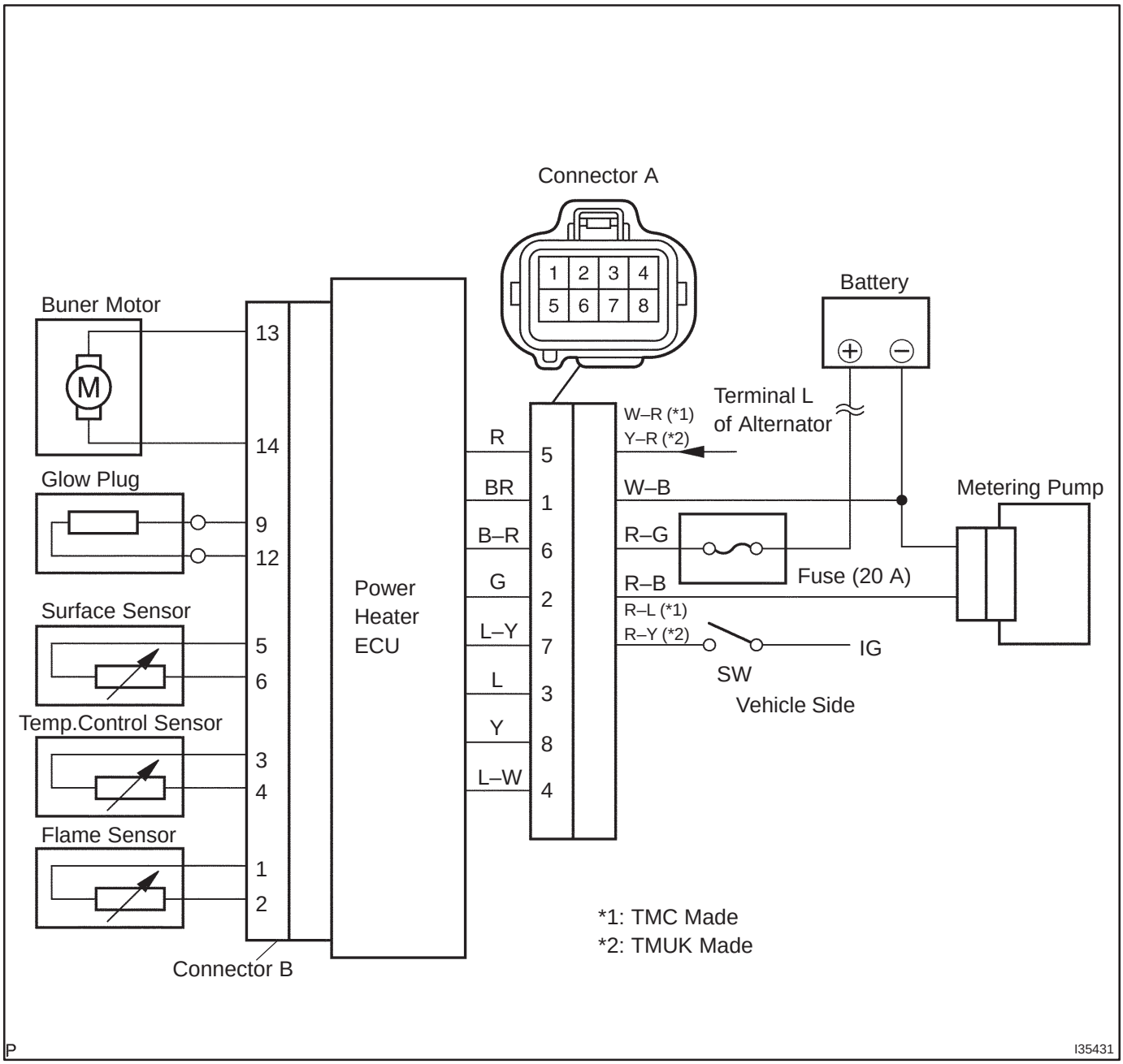

05C7W–01

DIAGNOSTIC TROUBLE CODE CHART

If a malfunction code is displayed during the DTC check, check the circuit listed for that code in the table below and proceed to the appropriate page.

DTC No.	Description of fault	Comment / Remedy
000	No malfunction	–
010 011	Overvoltage shutoff Undervoltage shutoff	Voltage between 1 and 5 at connector A > 16 V Voltage between 1 and 5 at connector A < 10.2 V (Voltage values must be present > 20 seconds) Check battery, regulator and electrical leads.
012	Overheating	Check temperature at temperature or overheating sensor > 125 °C Check water circuit.
014	Possible overheating detected (Hardware threshold value)	Difference of measured values at temperature sensor > 15 °C (min. 70 °C water temperature and metering pump in operation); Check temperature sensor and overheating sensor, replace if necessary.
017	Overheating detected (Hardware threshold value)	Temperature at temperature or overheating sensor > 130 °C, emergency OFF if DTC No. 012 or 014 not is applicable; Check water circuit, temperature sensor and overheating sensor, replace if necessary.
020	Glow plug break	Check glow plug, replace if necessary.
021	Glow plug output overload	Check glow plug, replace if necessary.
030	Combustion air blower motor EMF outside perm. range.	Blower impeller or burner motor fammed (frozen solid, dirty, etc.) Remedy jam, replace burner motor if necessary.
031	Combustion air blower motor break	Check the lead to combustion air motor (burner motor) for continuity, replace if necessary.
032	Combustion air blower motor short–circuit	Check combustion air blower motor (burner motor), replace if necessary. Check supply lead (chafed, etc.).
047	Metering pump short–circuit	Check the supply lead to metering pump for short–circuit, check metering pump, replace if necessary.
048	Metering pump break	Check the supply lead to metering pump for continuity, remedy break, replace metering pump if necessary.
051	Cold blow time exceeded	At start, if flame sensor above 70 °C, > 240 sec.; Check exhaust gas combustion air supply, check flame sensor, replace if necessary.
052	Safety time exceeded	When all perm. start attempts used up; Check the fuel delivery and fuel supply. Check exhaust gas and combustion air ducts.
054	Flame cutout, High setting	Check the fuel delivery and fuel supply. Check exhaust gas combustion air ducts. If combustion OK → Check the flame sensor, replace if necessary.
056	Flame cutout, LOW setting	
060	Temperature conrol sensor break	Check connecting leads. Resistance value between 2 and 10 connector B > 2 MΩ (if break)
061	Temperature control sensor short–circuit	Check connecting leads. Resistance value between 2 and 10 at connector B < 2 MΩ (If short– circuit)
064	Flame sensor break	Check connecting leads. Resistance value between 7 and 14 at connector B > 3,040 Ω (If break)
065	Flame sensor short–circuit	Check connecting leads. Resistance value between 7 and 14 at connector B > 780 Ω (If short–circuit)

DTC No.	Description of fault	Comment / Remedy
071	Surface sensor break	Check connecting leads. Resistance value between 4 and 11 at connector B > 2 MΩ (If break)
072	Surface sensor short–circuit	Check connecting leads. Resistance value between 4 and 11 at connector B > 50 Ω (If short–circuit)
090 092 093	Control unit detective (Internal fault / Reset) Control unit detective (ROM error) Control unit detective (RAM error)	Control unit malfunction due to interference voltage from vehicle electrical system; possible causes low batteries, chargers, other sources of interference; eliminate interference voltages. Internal faults detected in microprocessor / memory detected. Replace control unit.
097	Internal control unit faults	Other faults which cannot lead to DTC No. 90, 92 and 93, replace control unit.

05C7X–01

LOCATION

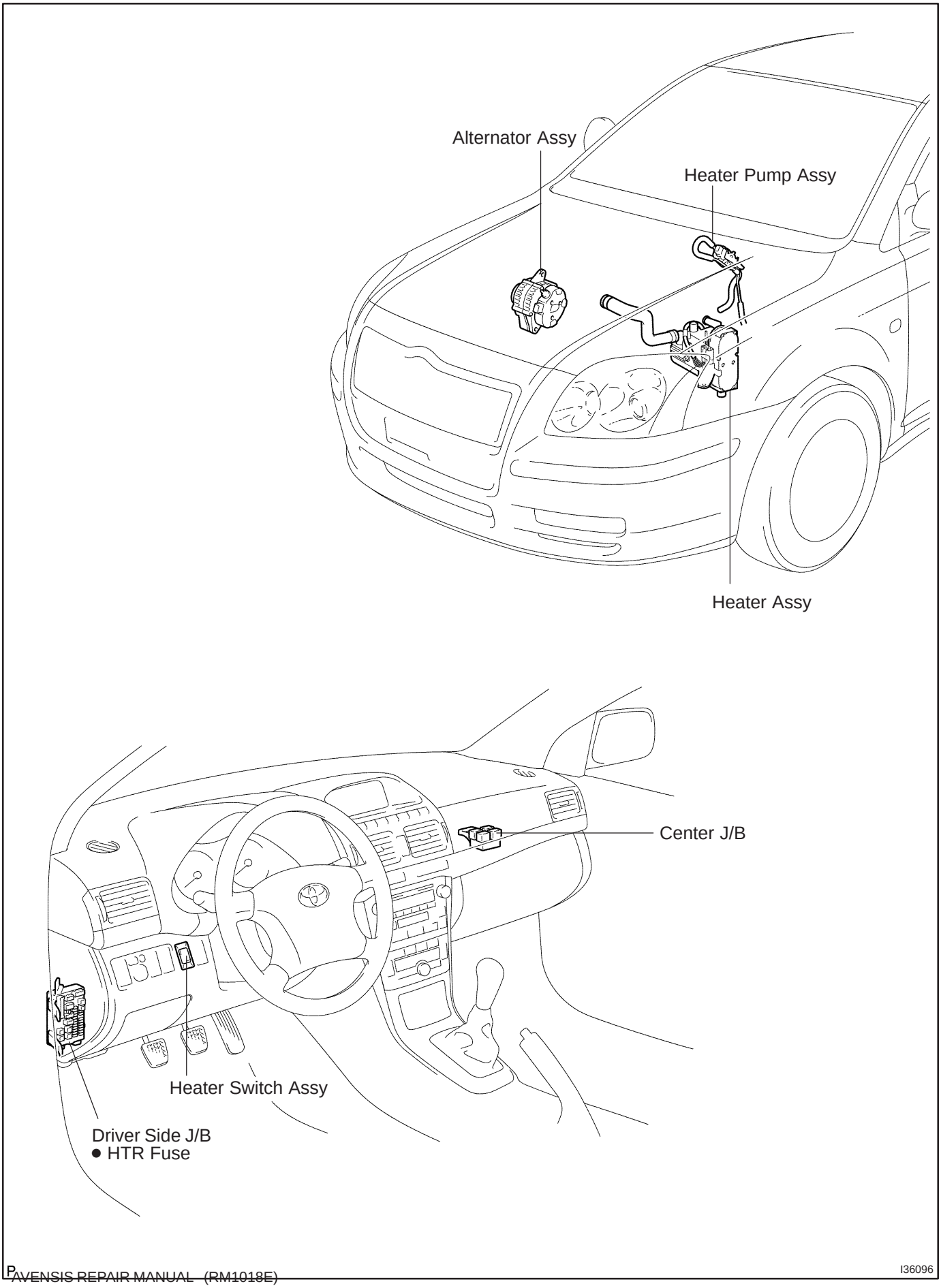

I36096

05C7Y–01

TERMINALS OF ECU

1. POWER HEATER ECU

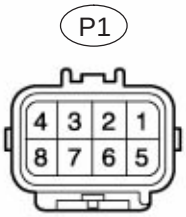

I36138

Terminal No. (Symbols)	Wiring Color	Condition	Specification
P1–1 (–) – Body ground	W–B – Body ground	Always	Continuity
P1–2 (F/P) – Body ground	L – Body ground	Always	Continuity
P1–3 (SW) – Body ground	G–Y – Body ground	IG SW: ON Power heater SW: ON	10 to 14
P1–5 (+) – Body ground	W – Body ground	Always	Continuity
P1–8 (ALT +L) – Body ground	Y – Body ground	Alternator: Operate	Pulse generation

05C7Z–01

PROBLEM SYMPTOMS TABLE

If the normal code is displayed during DTC check although the problem still occurs, check the circuits for each problem symptom in the order given in the table below, and proceed to the relevant troubleshooting.

Symptom	Suspect Area	See page
The combustion type power heater does not operate	1. ECU power source circuit	05–1171
	2. Power heater switch circuit	05–1173
	3. Power heater fuel pump circuit	05–1176
	4. Power heater alternator circuit	05–1179

ECU POWER SOURCE CIRCUIT

CIRCUIT DESCRIPTION

This is power source for the power heater ECU and power heater fuel pump.

WIRING DIAGRAM

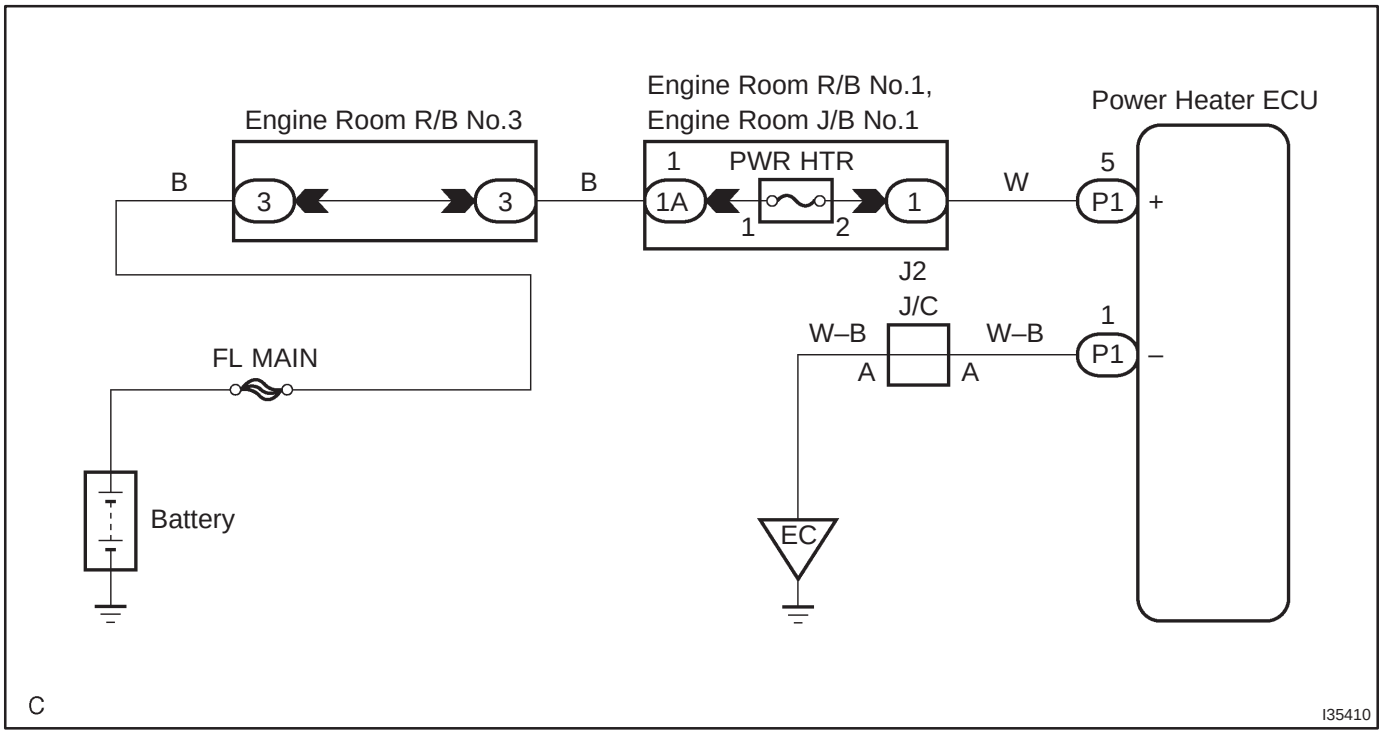

1	CHECK FUSE(PWR HTR)

(a) Remove the PWR HTR from the engine room J/B or R/B No.1.
(b) Check that the continuity exists of PWR HTR fuse.

NG → REPAIR OR REPLACE FUSE

OK

2	INSPECT POWER HEATER ECU(+)

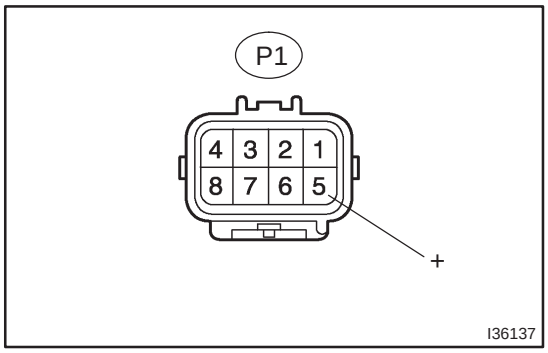

(a) Remove the power heater ECU with connectors being connected.
(b) Turn the ignition switch to ON.
(c) Measure the voltage between terminal "+" of the power heater ECU and body ground.
Standard: 10 to 14 V

NG → REPAIR OR REPLACE WIRE HARNESS

OK

3	CHECK HARNESS AND CONNECTOR(POWER HEATER ECU – BODY GROUND)

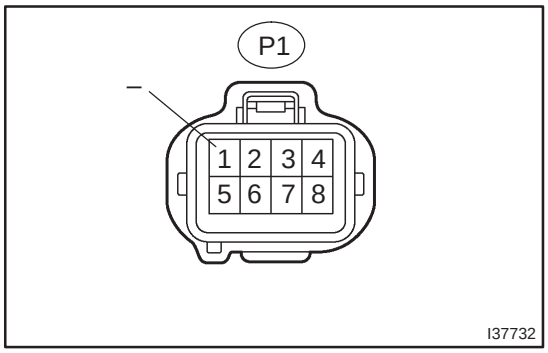

(a) Check for an open or short circuit in harness and connector between the power heater ECU and body ground (See page 01–32).

NG → REPAIR OR REPLACE WIRE HARNESS

OK

PROCEED TO NEXT CIRCUIT INSPECTION SHOWN IN PROBLEM SYMPTOMS TABLE

POWER HEATER SWITCH CIRCUIT

CIRCUIT DESCRIPTION

When the power heter switch is turned on, the power heater ECU sends the drive signal to the fuel pump, causing the combustion type power heater to operate.

WIRING DIAGRAM

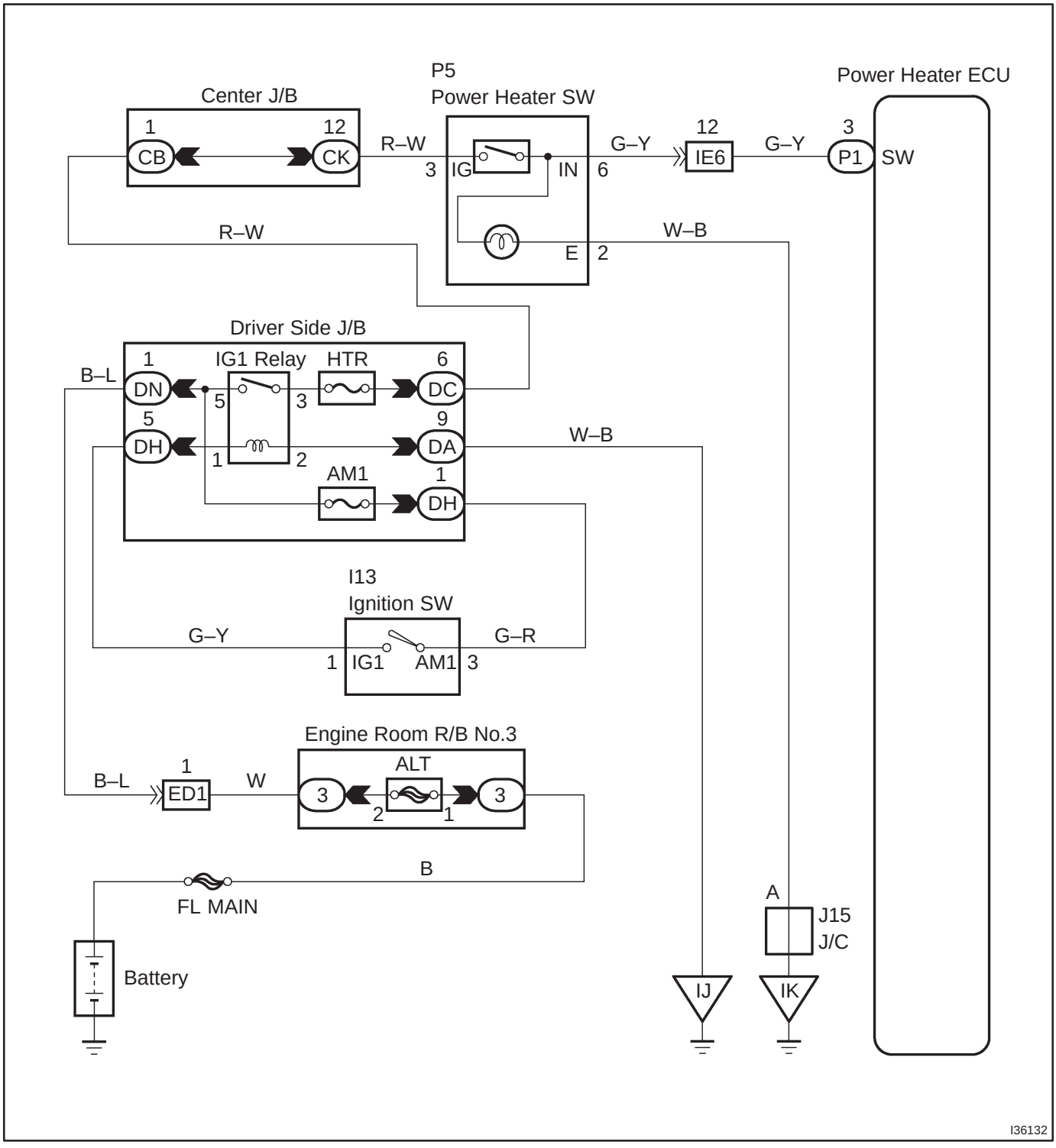

1 INSPECT HETER SWITCH ASSY

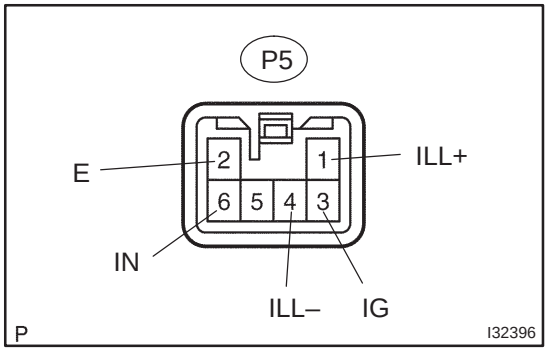

(a) Check that the continuity when connecting the positive tester lead (+) and the negative tester lead (–) to the following terminals.

Heater switch condition	Connectiong terminals	Standard Value
ON	IG – IN	Continuity
OFF	IG – IN	No Continuity
ON	IG – E	Continuity
OFF	IG – E	No Continuity
ON	ILL+ – ILL–	Continuity
OFF	ILL+ – ILL–	Continuity

NG → **REPLACE HETER SWITCH ASSY**

OK

2 CHECK WIRE HARNESS(HETER SWITCH ASSY – POWER HEATER ECU)

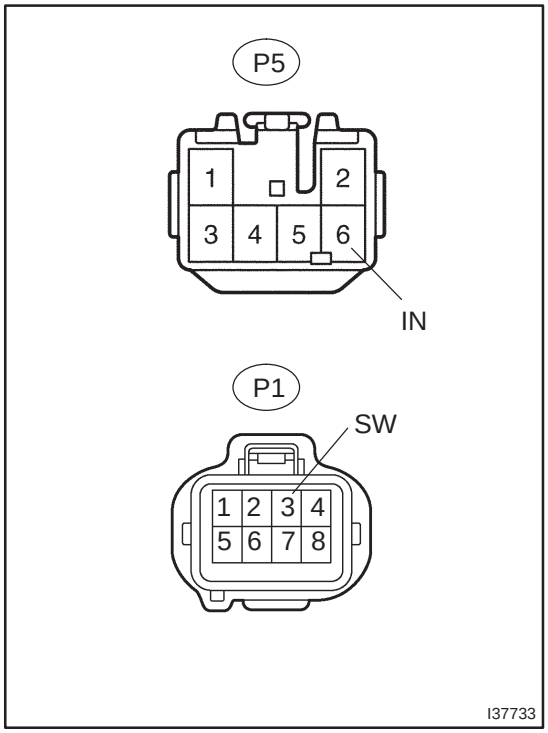

(a) Remove the A/C amplifier with connectors being connected.
(b) Turn the ignition switch to ON.
(c) Measure the voltage between terminal IN of the heater switch and SW of the power heater ECU.

Heater switch condition	Standard value
ON	10 to 14 V
OFF	0 V

NG → **REPAIR OR REPLACE WIRE HARNESS**

OK

3	CHECK WIRE HARNESS(HETER SWITCH ASSY – BATTERY)

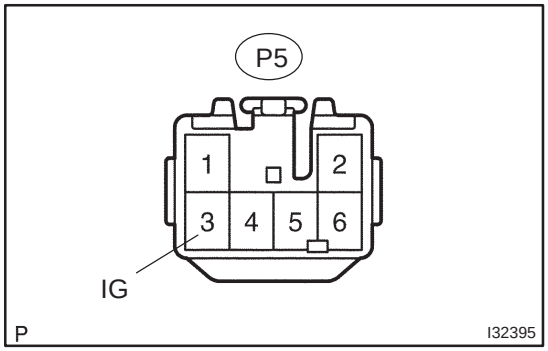

(a) Check for an open and short circuit in harness and connector between heater switch and battery
(See page 01–32).

NG → REPAIR OR REPLACE WIRE HARNESS

OK

4	CHECK WIRE HARNESS(HETER SWITCH ASSY – BODY GROUND)

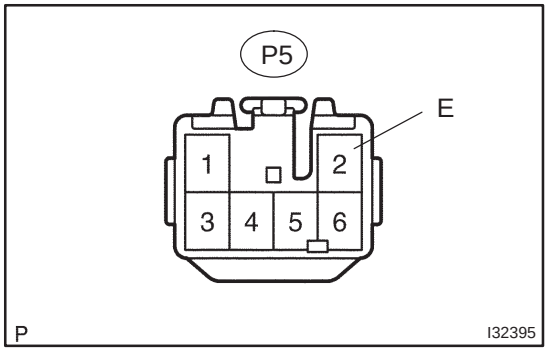

(a) Check for an open circuit in henees and connector between heater swith and body ground
(See page 01–32).

NG → REPAIR OR REPLACE WIRE HARNESS

OK

PROCEED TO NEXT CIRCUIT INSPECTION SHOWN IN PROBLEM SYMPTOMS TABLE

POWER HEATER FUEL PUMP CIRCUIT

CIRCUIT DESCRIPTION

When the power heater switch is turned on, the fuel pump receives the drive voltage from the power heater ECU, causing the combustion type power heater to operate.

WIRING DIAGRAM

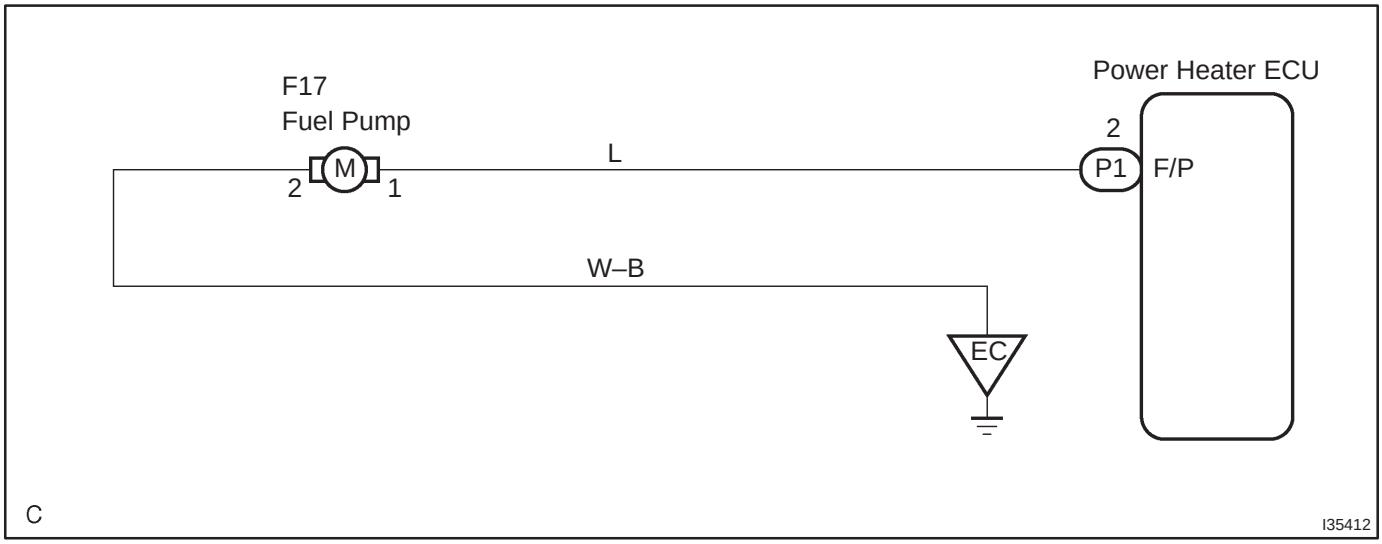

1	CHECK WIRE HARNESS(POWER HEATER ECU – BODY GROUND)

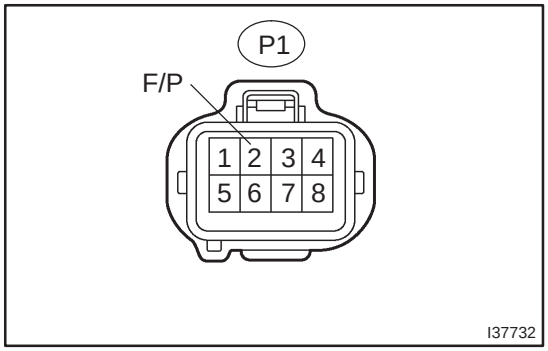

(a) Check for short circuit in harness and connector between terminal F/P of power heater ECU and body ground (See page 01–32).

NG → REPAIR OR REPLACE WIRE HARNESS

OK

2	CHECK WIRE HARNESS(POWER HEATER ECU – POWER HEATER FUEL PUMP)

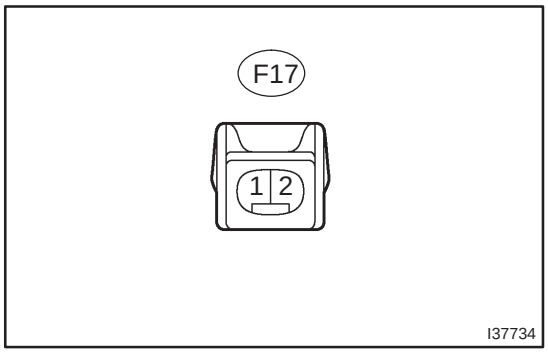

(a) Check for an open or short circuit in harness and connector betwen terminal 1 of power heater ECU and power heater fuel pump (See page 01–32).

NG → REPAIR OR REPLACE WIRE HARNESS

OK

3	CHECK WIRE HARNESS(POWER HEATER FUEL PUMP – BODY GROUND)

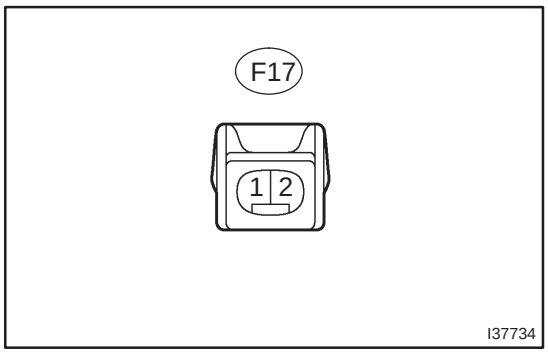

(a) Check for an open circuit in harness and connector between terminal 2 of power heater fuel pump and body ground (See page 01–32).

NG → REPAIR OR REPLACE WIRE HARNESS

OK

4	INSPECT POWER HEATER FUEL PUMP

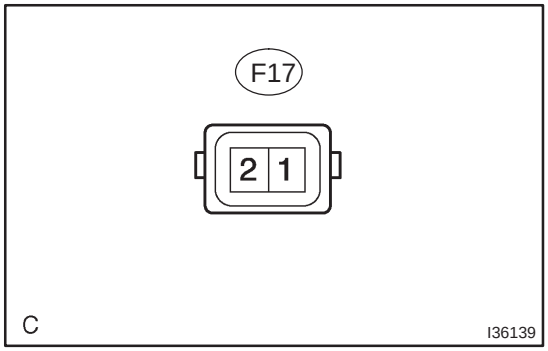

(a) Connect the positive (+) lead from the battery to terminal 1 and negative (–) to terminal 2 with the power heater turned on and check the pressure of the hose by hand.
Standard: The pressure is applied to the hose.

NG → **REPAIR OR REPLACE POWER HEATER FUEL PUMP**

OK

PROCEED TO NEXT CIRCUIT INSPECTION SHOWN IN PROBLEM SYMPTOMS TABLE

POWER HEATER ALTERNATOR CIRCUIT

CIRCUIT DESCRIPTION

Turning on the alternator allows current to flow from the alternator to the power heater. As a result, the power heater ECU control the expanded power of the combustion type power heater.

WIRING DIAGRAM

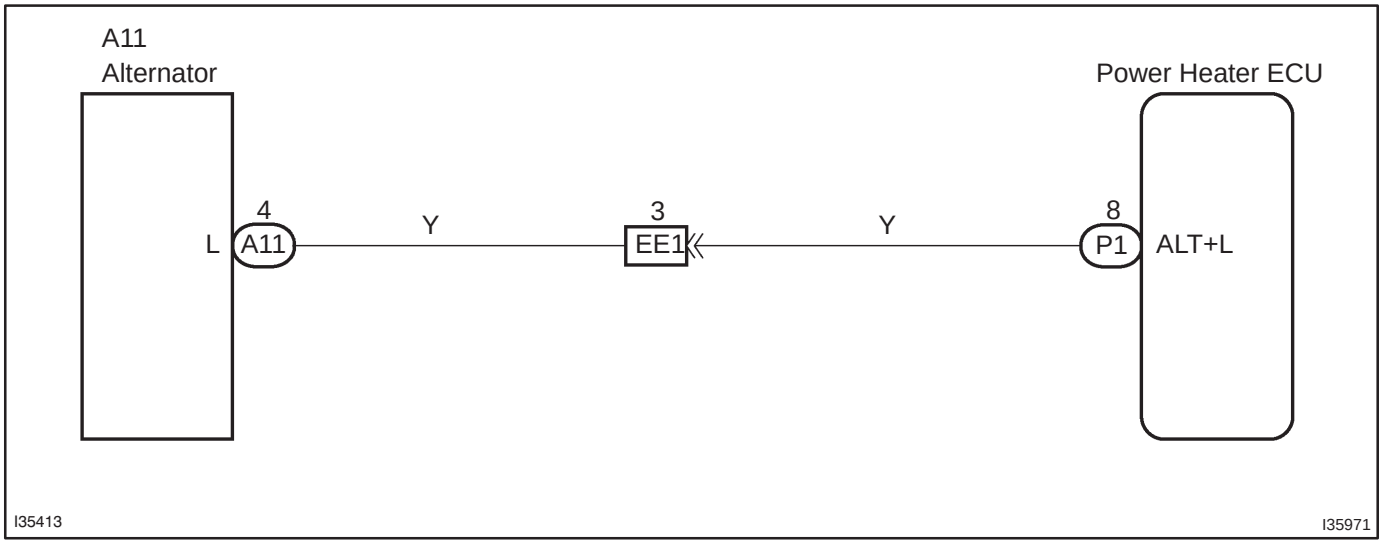

1	CHECK WIRE HARNESS(POWER HEATER ECU – ALTERNATOR)

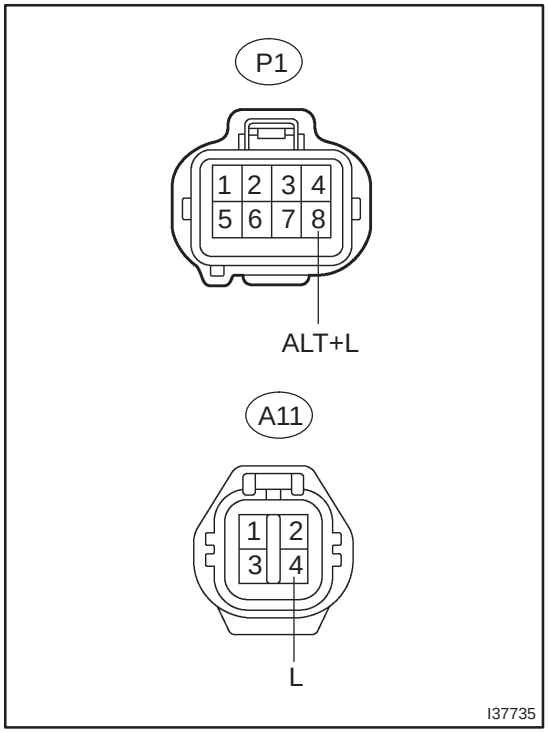

(a) Check for an open or short circuit in harness and connector between terminal ALT+L of power heater ECU and terminal L of alternator (See page 01–32).

NG → REPAIR OR REPLACE WIRE HARNESS

OK

2	CHECK AND REPLACE GENERATOR W/CLUTCH PULLEY

NG → REPAIR OR REPLACE GENERATOR W/CLUTCH PULLEY

OK

REPAIR OR REPLACE POWER HEATER ECU

SUPPLEMENTAL RESTRAINT SYSTEM

050YF–18

HOW TO PROCEED WITH TROUBLESHOOTING

The hand–held tester can be used at step 3, 5, 8, 9.

1	VEHICLE BROUGHT TO WORKSHOP

2	CUSTOMER PROBLEM ANALYSIS (See page 05–1183)

3	DTC CHECK (Present and Past DTC) (See page 05–1184)

- DTC IS OUTPUT: Go to step 4
- DTC IS NOT OUTPUT: Go to step 11

4	THE DTCS CHART (See page 05–1190)

5	CIRCUIT INSPECTION (See page 05–1198 to 05–1374)

- MALFUNCTION CODE IS OUTPUT: Go to step 6
- NORMAL CODE IS OUTPUT: Go to step 11

6	IDENTIFICATION OF PROBLEM

7	REPAIR

8	CLEAR THE DTCS (Present and Past DTC) (See page 05–1184)

9	DTC CHECK (See page 05–1184)

- DTC CODE IS NOT OUTPUT: Go to step 10
- DTC CODE IS OUTPUT: Go to step 4

10	SYMPTOM SIMULATION (See page 01–22)

WARNING LIGHT REMAINS OFF: Go to step 11

WARNING LIGHT IS ON: Go to step 4

11	CONFIRMATION TEST

END

050WX–16

CUSTOMER PROBLEM ANALYSIS CHECK

Supplemental Restraint System Check Sheet

Inspector's Name _____

Customer's Name		**VIN**	
		Production Date	
		Licence No.	
Date Vehicle Brought In		**Odometer Reading**	**km Miles**

Date Problem Occurred	
Weather	☐ Fine ☐ Cloudy ☐ Rainy ☐ Snowy ☐ Other
Temperature	**Approx.**

Vehicle Operation	☐ Starting ☐ Idling ☐ Driving [☐ Constant speed ☐ Acceleration ☐ Deceleration ☐ Other]
Road Condition	
Details of Problem	

Vehicle Inspection, Repair History Prior to Occurrence of Malfunction (Including Supplemental Restraint System)	

Diagnosis System Inspection

SRS Warning Light Inspection	**1st Time**	☐ Remains ON ☐ Sometimes Comes on ☐ Does Not Come on
	2nd Time	☐ Remains ON ☐ Sometimes Comes on ☐ Does Not Come on
DTC Inspection	**1st Time**	☐ Normal Code ☐ Malfunction Code [Code.]
	2nd Time	☐ Normal Code ☐ Malfunction Code [Code.]

H40122

05C5V–01

PRE–CHECK

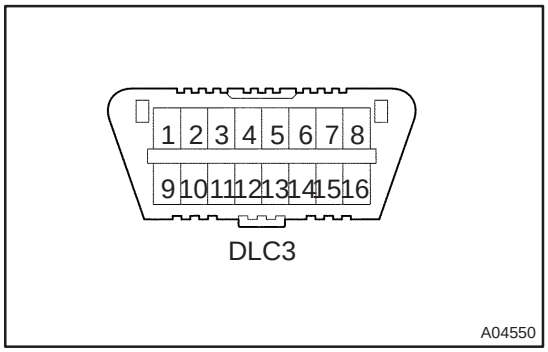

1. DIAGNOSIS SYSTEM

(a) Check the DLC3.

(1) The vehicle's ECM conforms to ISO 9141–2 for communication protocol. The terminal arrangement of the DLC3 complies with ISO 15031–3 and meets the ISO 9141–2 format.

Terminal No.	Connection/Voltage or Resistance	Condition
7	Bus + Line/Pulse generation	During Transmission
4	Chassis Ground ⇔ Body Ground/1 Ω or less	Always
16	Battery Positive ⇔ Body Ground/9 – 14 V	Always

HINT:

If the display shows UNABLE TO CONNECT TO VEHICLE when you connect the cable of the hand–held tester to the DLC3, turn the ignition switch to the ON position and operate the hand–held tester, there is a problem either on the vehicle side or tool side.

- If communication is normal when the tool is connected to another vehicle, inspect the DLC3 on the original vehicle.
- If communication is still not possible when the tool is connected to another vehicle, the problem is probably in the tool itself, so consult the Service Department listed in the tool's instruction manual.

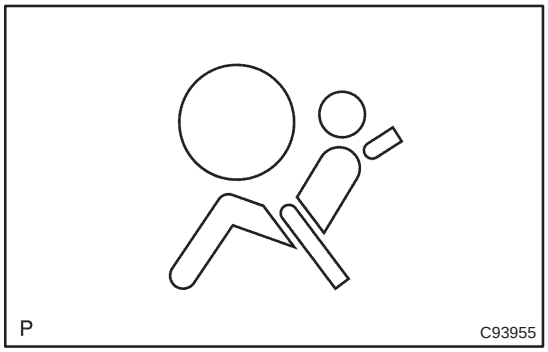

2. SRS WARNING LIGHT CHECK

(a) Turn the ignition switch to the ON position, and check that the SRS warning light comes on.

(b) Check that the SRS warning light goes off after approx. 6 seconds.

HINT:

- When the ignition switch is ON position and the SRS warning light remains on or flashes, the airbag sensor assy center detects a malfunction code.
- When the SRS warning light comes on even when the ignition switch is in the LOCK position, trouble in the power source or combination meter assy is suspected. Proceed to "SRS warning light circuit malfunction (Always lights up, when ignition switch is LOCK position)" on page 05–1386.
- When the ignition switch is turned from the LOCK to ON position, the SRS warning light does not come on. Proceed to "SRS warning light circuit malfunction (Does not light up, when ignition switch is turned ON)" on page 05–1389.

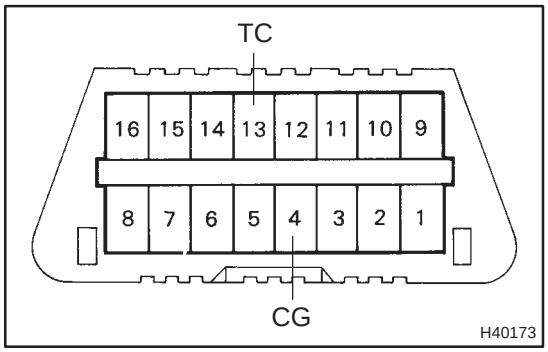

3. DTC CHECK (USING SST CHECK WIRE)

(a) Output the DTCs (Present trouble code).

(1) Turn the ignition switch to the ON position, and wait for approx. 60 seconds.

(2) Using SST, connect the TC and CG of the DLC3.

SST 09843–18040

NOTICE:

Pay attention to the terminal connecting position to avoid a malfunction.

(b) Output the DTCs (Past trouble code).

(1) Using SST, connect the TC and CG of the DLC3.

SST 09843–18040

NOTICE:

Pay attention to the terminal connecting position to avoid a malfunction.

(2) Turn the ignition switch to the ON position, and wait for approx. 60 seconds.

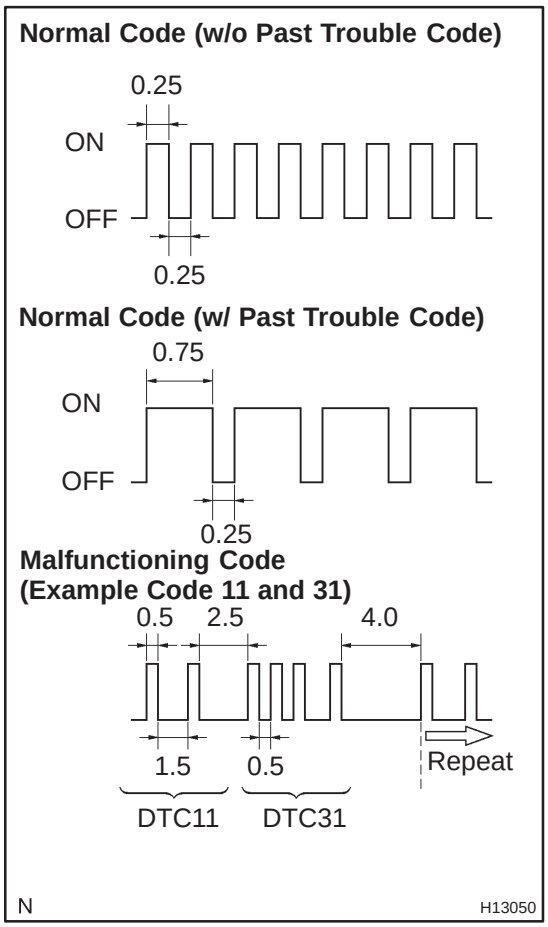

(c) Read the DTCs.

(1) Read the DTC by counting the blinking times. For example, the blinking patterns for normal code, code 11 and code 31 are shown in the illustration.

- Normal code indication (w/o past trouble code)
  The light blinks twice per second.
- Normal code indication (w/ past trouble code)
  When the past trouble code is stored in the airbag sensor assy center, the blinks only once a second.
- Malfunction code indication
  The first blinking indicates the first DTC. Second blinking occurs after 1.5–second of pause.

If there are 2 or more codes, there will be a 2.5–second pause between each code. After all codes are shown, there will be a 4.0–second pause, and they will all be repeated.

HINT:

- If 2 or more malfunctions are found, the indication starts from the smaller numbered code.
- If DTCs are indicated without a connection of the terminals, proceed to the ”TC terminal circuit” on page 05–1391.

(d) Clear the DTCs.

(1) When the ignition switch is turned off, the DTCs are cleared.

HINT:

Depending on the DTC, the code might not be cleared by turning off the ignition switch. In this case, proceed to the next step.

(2) Using SST, connect the TC and CG of the DLC3, and turn the ignition switch to the ON position.
SST 09843–18040

(3) Disconnect the TC of the DLC3 within 3 to 10 seconds after the DTCs are output, and check if the SRS warning light comes on after 3.0 seconds.

(4) Within 2.0 to 4.0 seconds after the SRS warning light comes on, connect the TC and CG of the DLC3.

(5) The SRS warning light goes off within 2.0 to 4.0 seconds after connecting the TC and CG of the DLC3. Then, disconnect the TC of the DLC3 within 2.0 to 4.0 seconds after the SRS warning light goes off.

(6) The SRS warning light comes on again within 2.0 to 4.0 seconds after disconnecting the TC of the DLC3. Then, within 2.0 to 4.0 seconds after the lighting, connect the TC and CG of the DLC3.

(7) Check if the SRS warning light goes off after 2.0 to 4.0 seconds after connecting the TC and CG of the DLC3, and the normal code is output within 1.0 second after the SRS warning light goes off.

If the DTCs are not cleared, repeat the above procedure until the codes are cleared.

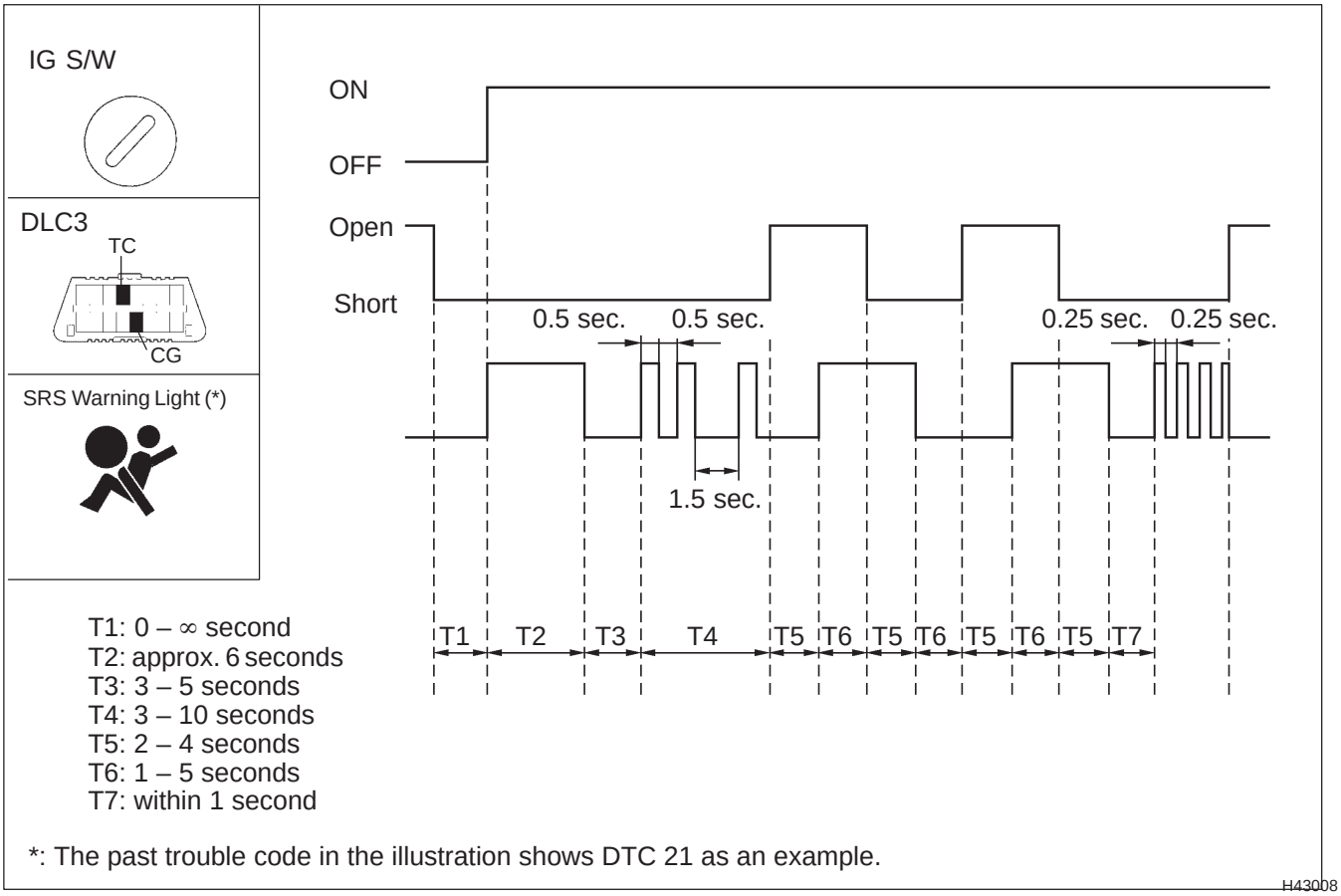

4. DTC CHECK (USING HAND–HELD TESTER)

(a) Check the DTCs.

(1) Connect the hand–held tester to the DLC3.

(2) Turn the ignition switch to the ON position.

(3) Check the DTCs by following the prompts on the tester screen.

HINT:

Refer to the hand–held tester operation's manual for further details.

(b) Clear the DTCs.
  (1) Connect the hand–held tester to the DLC3.
  (2) Turn the ignition switch to the ON position.
  (3) Clear the DTCs by following the prompts on the tester screen.

HINT:

Please refer to the hand–held tester operation's manual for further details.

5. RELEASE METHOD OF ACTIVATION PREVENTION MECHANISM

(a) The activation prevention mechanism is built in the connector for the squib circuit of the SRS.
As explained in the troubleshooting later, insert a paper with the same thickness as the male terminal between the terminal and the short spring to release it (Refer to illustrations on next 2 pages).

CAUTION:

Never release the activation prevention mechanism on the squib connector.

NOTICE:

- **Do not release the activation prevention mechanism unless specially directed by the trouble-shooting procedure.**
- **To prevent the terminal and the short spring from damage, always use a paper with the same thickness as the male terminals.**

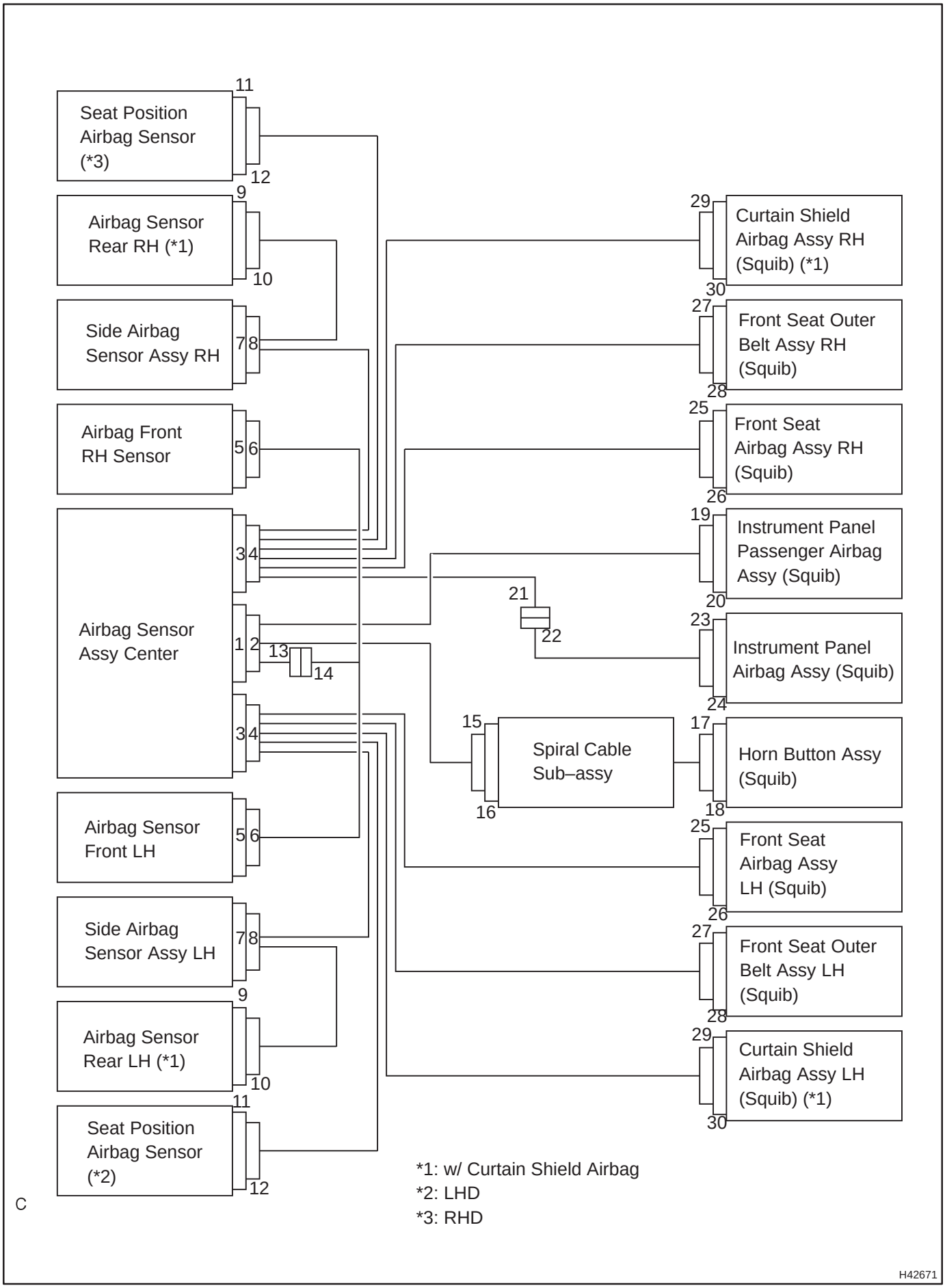
Seat Position Airbag Sensor (*3)
11
12
Airbag Sensor Rear RH (*1)
9
10
Side Airbag Sensor Assy RH
7
8
Airbag Front RH Sensor
5
6
Airbag Sensor Assy Center
3
4
1
2
13
14
Airbag Sensor Front LH
5
6
Side Airbag Sensor Assy LH
7
8
Airbag Sensor Rear LH (*1)
9
10
Seat Position Airbag Sensor (*2)
11
12
Curtain Shield Airbag Assy RH (Squib) (*1)
29
30
Front Seat Outer Belt Assy RH (Squib)
27
28
Front Seat Airbag Assy RH (Squib)
25
26
Instrument Panel Passenger Airbag Assy (Squib)
19
20
21
22
Instrument Panel Airbag Assy (Squib)
23
24
15
16
Spiral Cable Sub–assy
17
18
Horn Button Assy (Squib)
Front Seat Airbag Assy LH (Squib)
25
26
Front Seat Outer Belt Assy LH (Squib)
27
28
Curtain Shield Airbag Assy LH (Squib) (*1)
29
30
*1: w/ Curtain Shield Airbag
*2: LHD
*3: RHD
C
H42671

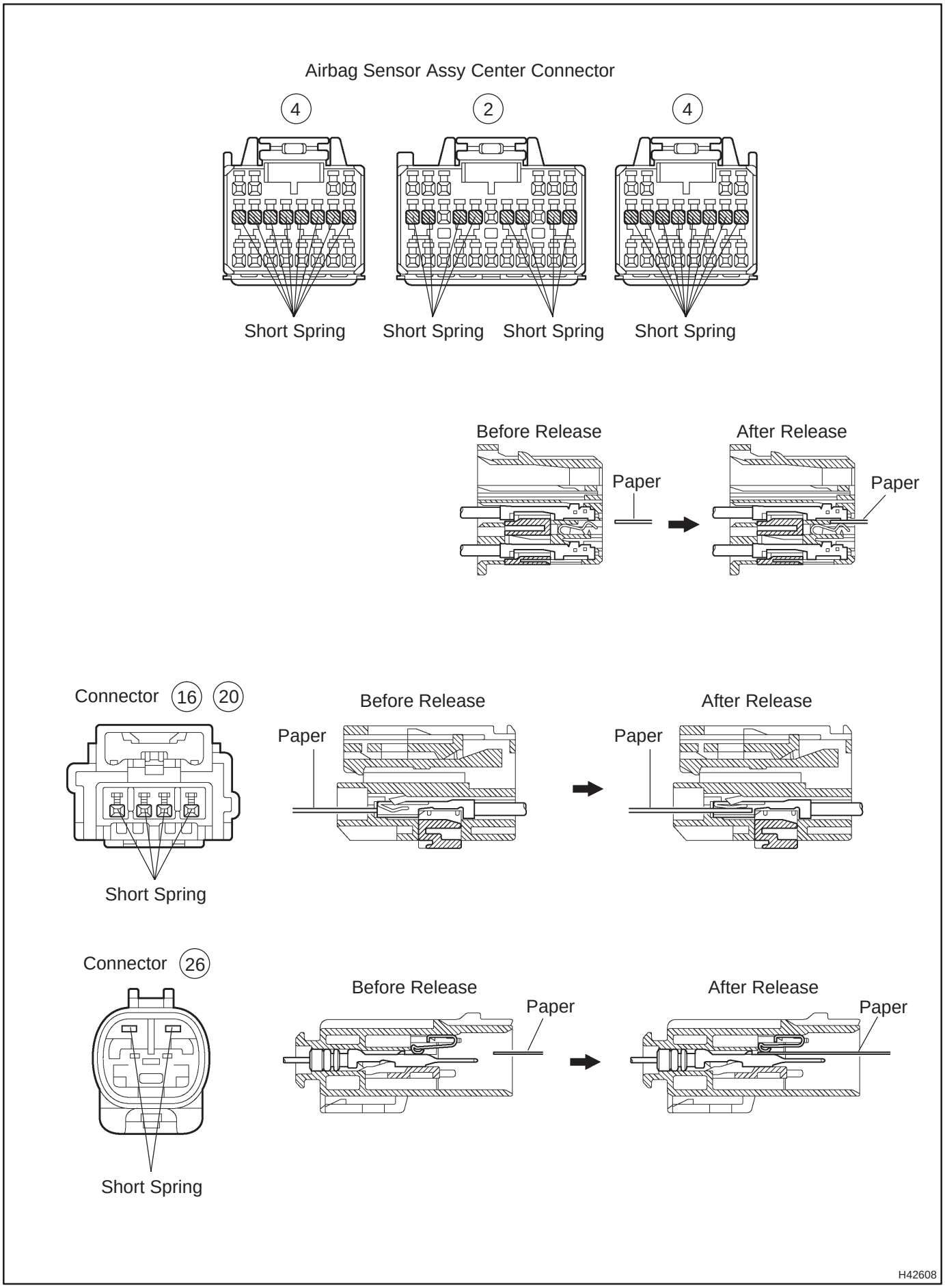
Airbag Sensor Assy Center Connector
4
2
4
Short Spring
Short Spring
Short Spring
Short Spring
Before Release
After Release
Paper
Paper
Connector 16 20
Short Spring
Before Release
After Release
Paper
Paper
Connector 26
Short Spring
Before Release
After Release
Paper
Paper
H42608

050WZ–17

DIAGNOSTIC TROUBLE CODE CHART

If a malfunction code is displayed during the DTC check, check the circuit listed for the code in the table below (Proceed to the page given for that circuit).

DTC No. (See page)	Detection Item	Trouble Area	SRS Warning Light
B0100/13 (05–1198)	• Short in D squib circuit	• Horn button assy (squib) • Spiral cable sub–assy • Airbag sensor assy center • Instrument panel wire	ON
B0101/14 (05–1202)	• Open in D squib circuit	• Horn button assy (squib) • Spiral cable sub–assy • Airbag sensor assy center • Instrument panel wire	ON
B0102/11 (05–1206)	• Short in D squib circuit (to ground)	• Horn button assy (squib) • Spiral cable sub–assy • Airbag sensor assy center • Instrument panel wire	ON
B0103/12 (05–1210)	• Short in D squib circuit (to B+)	• Horn button assy (squib) • Spiral cable sub–assy • Airbag sensor assy center • Instrument panel wire	ON
B0105/53 (05–1214)	• Short in P squib circuit	• Instrument panel passenger airbag assy (squib) • Airbag sensor assy center • Instrument panel wire	ON
B0106/54 (05–1217)	• Open in P squib circuit	• Instrument panel passenger airbag assy (squib) • Airbag sensor assy center • Instrument panel wire	ON
B0107/51 (05–1220)	• Short in P squib circuit (to ground)	• Instrument panel passenger airbag assy (squib) • Airbag sensor assy center • Instrument panel wire	ON
B0108/52 (05–1223)	• Short in P squib circuit (to B+)	• Instrument panel passenger airbag assy (squib) • Airbag sensor assy center • Instrument panel wire	ON
B0110/43 (05–1226)	• Short in side squib (RH) circuit	• Separate type front seat back assy (squib, RH) • Airbag sensor assy center • Floor wire No.2	Blink
B0111/44 (05–1229)	• Open in side squib (RH) circuit	• Separate type front seat back assy (squib, RH) • Airbag sensor assy center • Floor wire No.2	Blink
B0112/41 (05–1232)	• Short in side squib (RH) circuit (to ground)	• Separate type front seat back assy (squib, RH) • Airbag sensor assy center • Floor wire No.2	Blink
B0113/42 (05–1235)	• Short in side squib (RH) circuit (to B+)	• Separate type front seat back assy (squib, RH) • Airbag sensor assy center • Floor wire No.2	Blink
B0115/47 (05–1238)	• Short in side squib (LH) circuit	• Separate type front seat back assy (squib, LH) • Airbag sensor assy center • Floor wire	Blink
B0116/48 (05–1241)	• Open in side squib (LH) circuit	• Separate type front seat back assy (squib, LH) • Airbag sensor assy center • Floor wire	Blink
B0117/45 (05–1244)	• Short in side squib (LH) circuit (to ground)	• Separate type front seat back assy (squib, LH) • Airbag sensor assy center • Floor wire	Blink
B0118/46 (05–1247)	• Short in side squib (LH) circuit (to B+)	• Separate type front seat back assy (squib, LH) • Airbag sensor assy center • Floor wire	Blink

B0121/B0122/26 (*1) (05–1250)	• Seat belt buckle switch (RH) malfunction	• Front seat inner belt assy RH • Airbag sensor assy center • Floor wire No.2	ON
B0126/B0127/27 (*2) (05–1254)	• Seat belt buckle switch (LH) malfunction	• Front seat inner belt assy LH • Airbag sensor assy center • Floor wire	ON
B0130/63 (05–1258)	• Short in P/T squib (RH) circuit	• Front seat outer belt assy RH (squib) • Airbag sensor assy center • Floor wire No.2	Blink
B0131/64 (05–1261)	• Open in P/T squib (RH) circuit	• Front seat outer belt assy RH (squib) • Airbag sensor assy center • Floor wire No.2	Blink
B0132/61 (05–1264)	• Short in P/T squib (RH) circuit (to ground)	• Front seat outer belt assy RH (squib) • Airbag sensor assy center • Floor wire No.2	Blink
B0133/62 (05–1267)	• Short in P/T squib (RH) circuit (to B+)	• Front seat outer belt assy RH (squib) • Airbag sensor assy center • Floor wire No.2	Blink
B0135/73 (05–1270)	• Short in P/T squib (LH) circuit	• Front seat outer belt assy LH (squib) • Airbag sensor assy center • Floor wire	Blink
B0136/74 (05–1273)	• Open in P/T squib (LH) circuit	• Front seat outer belt assy LH (squib) • Airbag sensor assy center • Floor wire	Blink
B0137/71 (05–1276)	• Short in P/T squib (LH) circuit (to ground)	• Front seat outer belt assy LH (squib) • Airbag sensor assy center • Floor wire	Blink
B0138/72 (05–1279)	• Short in P/T squib (LH) circuit (to B+)	• Front seat outer belt assy LH (squib) • Airbag sensor assy center • Floor wire	Blink
B1100/31 (05–1282)	• Airbag sensor assy center malfunction • Half connection detection malfunction	• Airbag sensor assy center • Airbag sensor assy center connector	ON
B1140/32 (05–1284)	• Side airbag sensor assy (RH) malfunction	• Side airbag sensor assy RH • Airbag sensor assy center • Floor wire No.2	Blink
B1141/33 (05–1288)	• Side airbag sensor assy (LH) malfunction	• Side airbag sensor assy LH • Airbag sensor assy center • Floor wire	Blink
B1148/36 (05–1292)	• Front airbag sensor (RH) malfunction	• Airbag front RH sensor • Airbag sensor assy center • Engine room main wire • Instrument panel wire	ON
B1149/37 (05–1298)	• Front airbag sensor (LH) malfunction	• Airbag sensor front LH • Airbag sensor assy center • Engine room main wire • Instrument panel wire	ON
B1153/25 (05–1304)	• Seat position airbag sensor assy malfunction	• Seat position airbag sensor • Airbag sensor assy center • Floor wire (LHD) • Floor wire No.2 (RHD)	ON
B1154/38 (*3) (05–1312)	• Airbag sensor rear (RH) malfunction	• Airbag sensor rear RH • Side airbag sensor assy RH • Airbag sensor assy center • Floor wire No.2	Blink
B1155/39 (*3) (05–1317)	• Airbag sensor rear (LH) malfunction	• Airbag sensor rear LH • Side airbag sensor assy LH • Airbag sensor assy center • Floor wire	Blink

B1160/83 (*3) (05–1322)	• Short in curtain shield squib (RH) circuit	• Curtain shield airbag assy RH (squib) • Airbag sensor assy center • Floor wire No.2	Blink
B1161/84 (*3) (05–1325)	• Open in curtain shield squib (RH) circuit	• Curtain shield airbag assy RH (squib) • Airbag sensor assy center • Floor wire No.2	Blink
B1162/81 (*3) (05–1328)	• Short in curtain shield squib (RH) circuit (to ground)	• Curtain shield airbag assy RH (squib) • Airbag sensor assy center • Floor wire No.2	Blink
B1163/82 (*3) (05–1331)	• Short in curtain shield squib (RH) circuit (to B+)	• Curtain shield airbag assy RH (squib) • Airbag sensor assy center • Floor wire No.2	Blink
B1165/87 (*3) (05–1334)	• Short in curtain shield squib (LH) circuit	• Curtain shield airbag assy LH (squib) • Airbag sensor assy center • Floor wire	Blink
B1166/88 (*3) (05–1337)	• Open in curtain shield squib (LH) circuit	• Curtain shield airbag assy LH (squib) • Airbag sensor assy center • Floor wire	Blink
B1167/85 (*3) (05–1340)	• Short in curtain shield squib (LH) circuit (to ground)	• Curtain shield airbag assy LH (squib) • Airbag sensor assy center • Floor wire	Blink
B1168/86 (*3) (05–1343)	• Short in curtain shield squib (LH) circuit (to B+)	• Curtain shield airbag assy LH (squib) • Airbag sensor assy center • Floor wire	Blink
B1180/17 (05–1346)	• Short in D squib (2nd step) circuit	• Horn button assy (squib, 2nd step) • Spiral cable sub–assy • Airbag sensor assy center • Instrument panel wire	ON
B1181/18 (05–1350)	• Open in D squib (2nd step) circuit	• Horn button assy (squib, 2nd step) • Spiral cable sub–assy • Airbag sensor assy center • Instrument panel wire	ON
B1182/19 (05–1354)	• Short in D squib (2nd step) circuit (to ground)	• Horn button assy (squib, 2nd step) • Spiral cable sub–assy • Airbag sensor assy center • Instrument panel wire	ON
B1183/22 (05–1358)	• Short in D squib (2nd step) circuit (to B+)	• Horn button assy (squib, 2nd step) • Spiral cable sub–assy • Airbag sensor assy center • Instrument panel wire	ON
B1185/57 (05–1362)	• Short in P squib (2nd step) circuit	• Instrument panel passenger airbag assy (squib, 2nd step) • Airbag sensor assy center • Instrument panel wire	ON
B1186/58 (05–1365)	• Open in P squib (2nd step) circuit	• Instrument panel passenger airbag assy (squib, 2nd step) • Airbag sensor assy center • Instrument panel wire	ON
B1187/55 (05–1368)	• Short in P squib (2nd step) circuit (to ground)	• Instrument panel passenger airbag assy (squib, 2nd step) • Airbag sensor assy center • Instrument panel wire	ON
B1188/56 (05–1371)	• Short in P squib (2nd step) circuit (to B+)	• Instrument panel passenger airbag assy (squib, 2nd step) • Airbag sensor assy center • Instrument panel wire	ON
B1650/B1651/ B1652/B1653/ 49 (05–1374)	• Short in knee squib circuit • Open in knee squib circuit • Short in knee squib circuit (to ground) • Short in knee squib circuit (to B+)	• Instrument panel airbag assy (squib) • Instrument panel wire • Floor wire No.2 • Airbag sensor assy center	ON
Normal (05–1383)	• System normal	–	OFF
	• Voltage source drop	• Battery • Airbag sensor assy center	ON

*1: RHD, *2: LHD, *3: w/ Curtain Shield Airbag

HINT:

- When the SRS warning light remains on and the DTC is the normal code, a voltage source drop is suspected.
  This malfunction is not stored in memory by the airbag sensor assy center and if the power source voltage returns to normal, the SRS warning light will automatically go off.
- If a code not listed on the displayed chart, the airbag sensor assy center may be failed.
- In the case of any malfunction concerning any open circuit, short to ground, or short to B+ due to any squib, another malfunction code may not be detected. In this case, repair the malfunction currently indicated and then perform malfunction diagnosis again. Another malfunction code may then be detected.

050X1–21

LOCATION

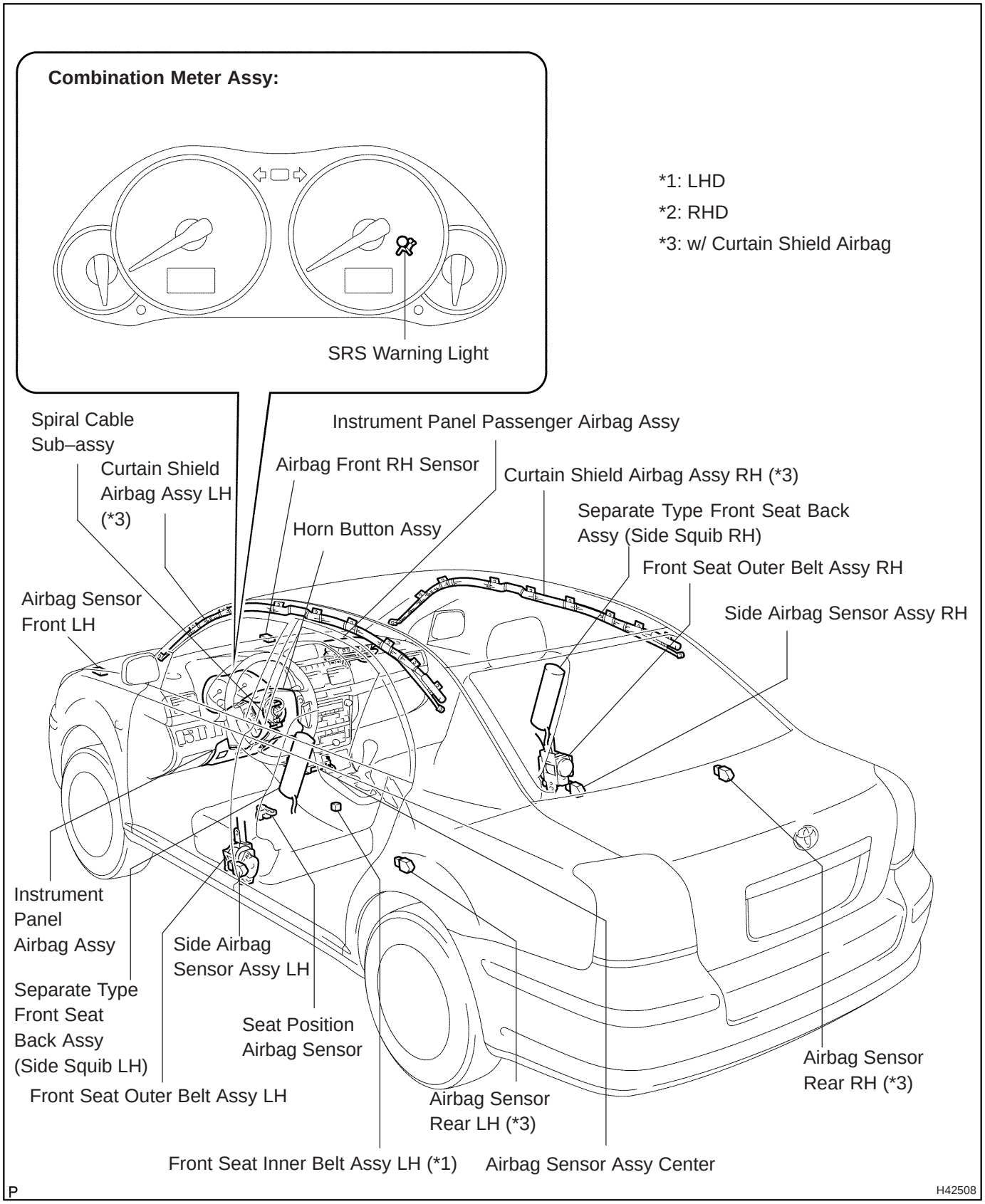

05C5W–01

TERMINALS OF ECU

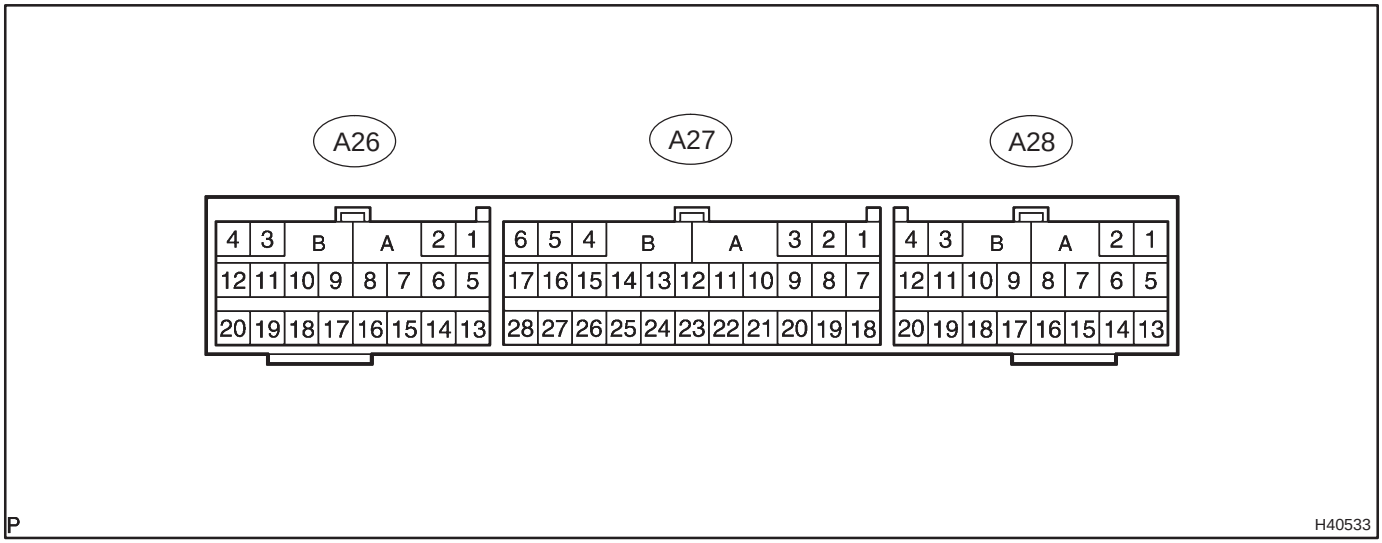

Terminal No.	Terminal Symbol	Destination (Wire Harness Side)
A	–	Half Connection Detection Mechanism
B	–	Half Connection Detection Mechanism
A27–3	LA	Combination Meter Assy (SRS Warning Light)
A27–4	GSW1 DBEW	Integration relay
A27–5	IG2	IGN Fuse
A27–7	P2–	Instrument Panel Passenger Airbag Assy (P Squib, 2nd step)
A27–8	P2+	Instrument Panel Passenger Airbag Assy (P Squib, 2nd step)
A27–9	SR+	Airbag Front RH Sensor
A27–10	P+	Instrument Panel Passenger Airbag Assy (P Squib)
A27–11	P–	Instrument Panel Passenger Airbag Assy (P Squib)
A27–12	SIL	DLC3
A27–13	D–	Horn Button Assy (D Squib)
A27–14	D+	Horn Button Assy (D Squib)
A27–15	SL+	Airbag Sensor Front LH
A27–16	D2+	Horn Button Assy (D Squib, 2nd step)
A27–17	D2–	Horn Button Assy (D Squib,2nd step)
A27–19	TC	DLC3
A27–20	SR–	Airbag Front RH Sensor
A27–23 (*1)	GSW2	ECM
A27–26	SL–	Airbag Sensor Front LH
A27–27	E1	Ground
A27–28	E2	Ground
A26–2 (*2)	LBE–	Front Seat Inner Belt Assy LH (Buckle Switch LH)
A26–3 (*2)	LSP–	Seat Position Airbag Sensor
A26–4 (*2)	LSP+	Seat Position Airbag Sensor
A26–7	PL–	Front Seat Outer Belt Assy LH (P/T Squib LH)
A26–8	PL+	Front Seat Outer Belt Assy LH (P/T Squib LH)
A26–9 (*3)	ICL+	Curtain Shield Airbag Assy LH (Curtain Shield Squib LH)
A26–10 (*3)	ICL–	Curtain Shield Airbag Assy LH (Curtain Shield Squib LH)
A26–11	SFL–	Separate Type Front Seat Back Assy (Side Squib LH)
A26–12	SFL+	Separate Type Front Seat Back Assy (Side Squib LH)
A26–16	BBL+	Side Airbag Sensor Assy LH
A26–18	BBL–	Side Airbag Sensor Assy LH
A26–19 (*2)	LBE+	Front Seat Inner Belt Assy LH (Buckle Switch LH)

Terminal No.	Terminal Symbol	Destination (Wire Harness Side)
A28–1 (*4)	RSP+	Seat Position Airbag Sensor
A28–2 (*4)	RSP–	Seat Position Airbag Sensor
A28–3 (*4)	RBE–	Front Seat Inner Belt Assy RH (Buckle Switch RH)
A28–5	SFR+	Separate Type Front Seat Back Assy (Side Squib RH)
A28–6	SFR–	Separate Type Front Seat Back Assy (Side Squib RH)
A28–7 (*3)	ICR–	Curtain Shield Airbag Assy RH (Curtain Shield Squib RH)
A28–8 (*3)	ICR+	Curtain Shield Airbag Assy RH(Curtain Shield Squib RH)
A28–9	PR+	Front Seat Outer Belt Assy RH (P/T Squib RH)
A28–10	PR–	Front Seat Outer Belt Assy RH (P/T Squib RH)
A28–11	DK–	Instrument Panel Airbag Assy (Knee Squib)
A28–12	DK+	Instrument Panel Airbag Assy (Knee Squib)
A28–14 (*4)	RBE+	Front Seat Inner Belt Assy RH (Buckle Switch RH)
A28–15	BBR–	Side Airbag Sensor Assy RH
A28–17	BBR+	Side Airbag Sensor Assy RH

*1: Gasoline Engine
*2: LHD
*3: w/ Curtain Shield Airbag
*4: RHD

050YH–19

PROBLEM SYMPTOMS TABLE

HINT:

Proceed the troubleshooting for each circuit in the below table.

Symptom	Suspect Area	See page
• When the ignition switch is ON, the SRS warning light sometimes come on after approx. 6 seconds.	• SRS warning light circuit malfunction (Always lights up, when ignition switch is LOCK position).	05–1386
• SRS warning light is always lit up even when ignition switch is in the LOCK position.		
• With the ignition switch is ON, the SRS warning light does not come on.	• SRS warning light circuit malfunction (Does not light up, when ignition switch is turned to ON).	05–1389
• DTC is not displayed.	• TC terminal circuit	05–1391
• SRS warning light is always on at the time of DTC check procedure.		
• DTC is displayed without connecting TC and CG terminal.		

DTC B0100/13 SHORT IN D SQUIB CIRCUIT

CIRCUIT DESCRIPTION

The D squib circuit consists of the airbag sensor assy center, the spiral cable sub–assy and the horn button assy.
This circuit actuates the SRS to deploy when the SRS deployment conditions are fulfilled.
DTC B0100/13 is recorded when a short circuit is detected in the D squib circuit.

DTC No.	DTC Detecting Condition	Trouble Area
B0100/13	• Short circuit between D+ wire harness and D– wire harness of D squib • D squib malfunction • Spiral cable sub–assy malfunction • Airbag sensor assy center malfunction	• Horn button assy (D squib) • Spiral cable sub–assy • Airbag sensor assy center • Instrument panel wire

WIRING DIAGRAM

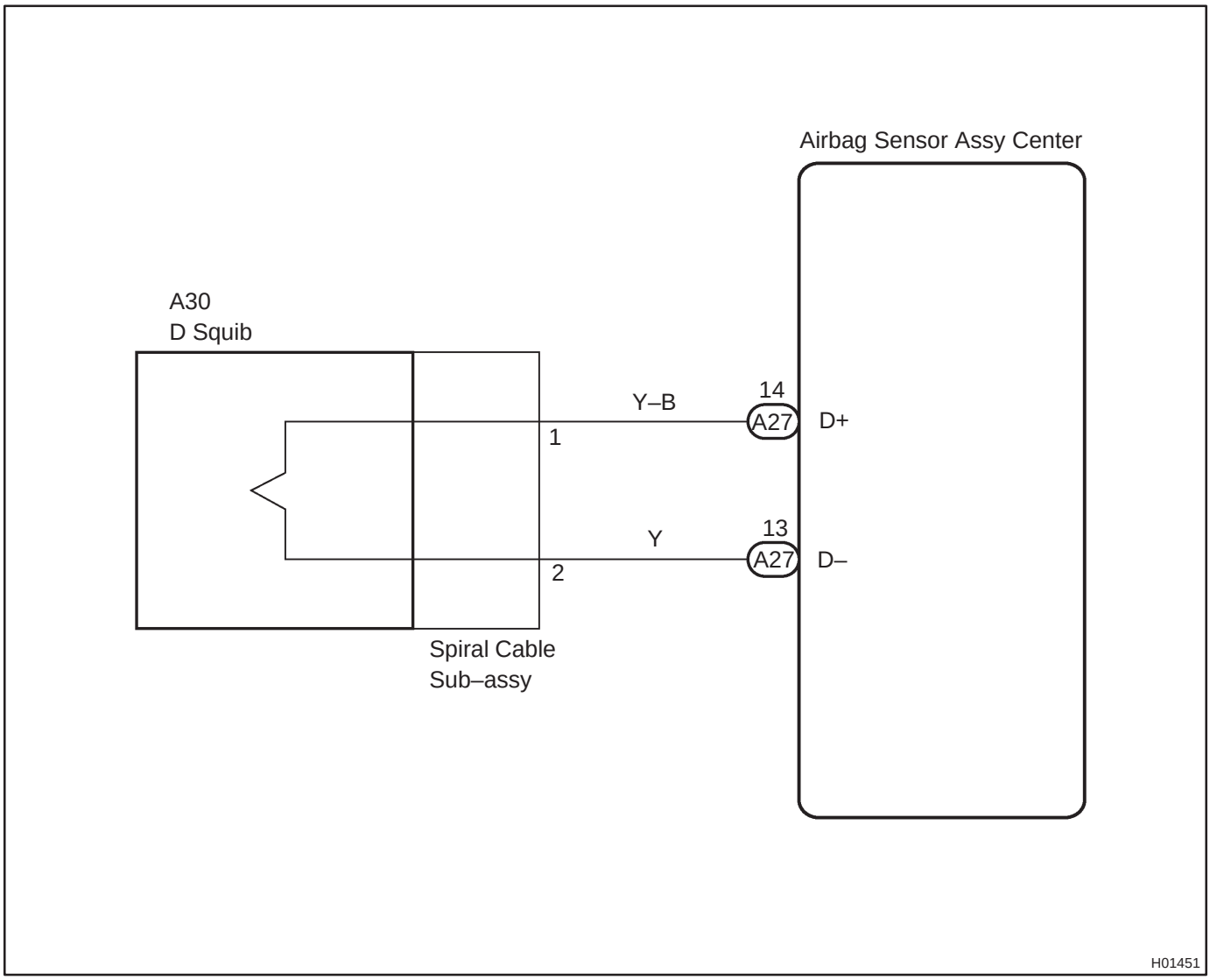

INSPECTION PROCEDURE

1	CHECK CONNECTOR

(a) Turn the ignition switch to the LOCK position.
(b) Disconnect the negative (–) terminal cable from the battery, and wait for at least 90 seconds.
(c) Disconnect the connectors from the airbag sensor assy center and the horn button assy.
(d) Check that the spiral cable sub–assy connectors (on the horn button assy side) are not damaged.
OK:
The lock button is not disengaged, or the claw of the lock is not deformed or damaged.

NG → **REPLACE SPIRAL CABLE SUB–ASSY**

OK

2	CHECK D SQUIB CIRCUIT(AIRBAG SENSOR ASSY CENTER – HORN BUTTON ASSY)

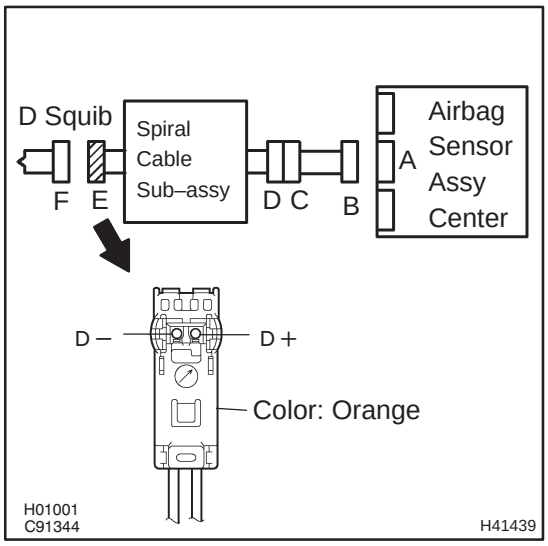

(a) Release the activation prevention mechanism built in the connector "B" (See page 05–1184).
(b) Measure the resistance between D+ and D– of the connector "E".
OK:
Resistance: 1 MΩ or Higher

NG → **Go to step 5**

OK

3 CHECK AIR BAG SENSOR ASSY CENTER

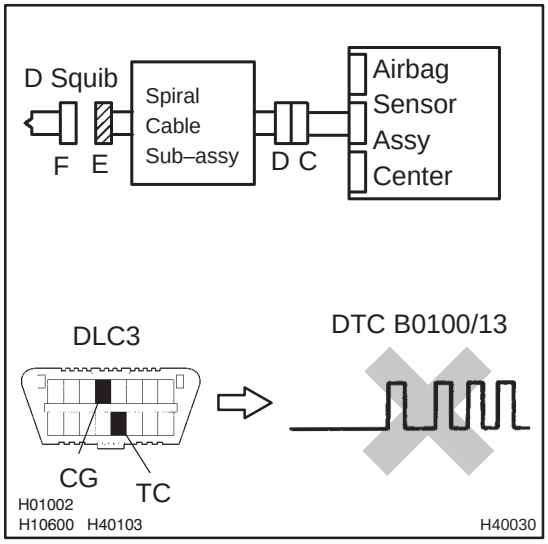

(a) Connect the connector to the airbag sensor assy center.
(b) Connect the negative (–) terminal cable to the battery, and wait for at least 2 seconds.
(c) Turn the ignition switch to the ON position, and wait for at least 10 seconds.
(d) Clear the stored DTCs in the memory (See page 05–1184).
(e) Turn the ignition switch to the LOCK position.
(f) Turn the ignition switch to the ON position, and wait for at least 10 seconds.
(g) Check the DTCs (See page 05–1184).

OK:

DTC B0100/13 is not output.

HINT:

Codes other than code B0100/13 may be output at this time, but they are not related to this check.

NG → **REPLACE AIR BAG SENSOR ASSY CENTER**

OK

4 CHECK HORN BUTTON ASSY(D SQUIB)

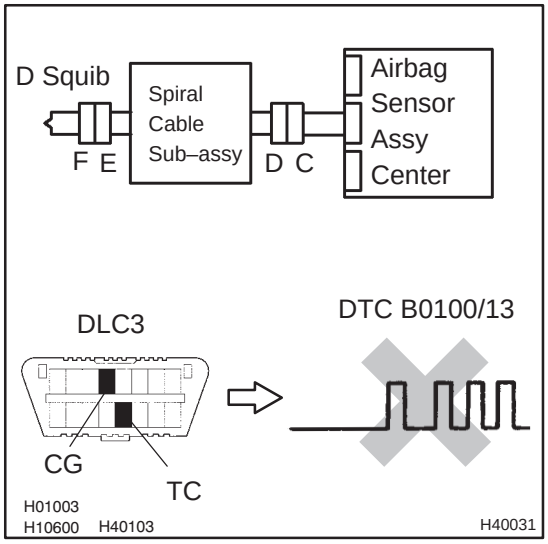

(a) Turn the ignition switch to the LOCK position.
(b) Disconnect the negative (–) terminal cable from the battery, and wait for at least 90 seconds.
(c) Connect the connectors to the horn button assy.
(d) Connect the negative (–) terminal cable to the battery, and wait for at least 2 seconds.
(e) Turn the ignition switch to the ON position, and wait for at least 10 seconds.
(f) Clear the stored DTCs in the memory (See page 05–1184).
(g) Turn the ignition switch to the LOCK position.
(h) Turn the ignition switch to the ON position, and wait for at least 10 seconds.
(i) Check the DTCs (See page 05–1184).

OK:

DTC B0100/13 is not output.

HINT:

Codes other than code B0100/13 may be output at this time, but they are not related to this check.

NG → **REPLACE HORN BUTTON ASSY**

OK

USE SIMULATION METHOD TO CHECK

5 CHECK INSTRUMENT PANEL WIRE

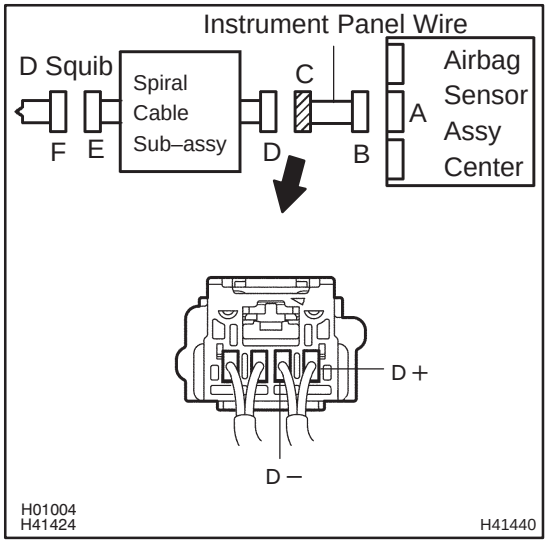

(a) Disconnect the instrument panel wire connector from the spiral cable sub–assy.

(b) Release the activation prevention mechanism built in the connector of the connector "B" (See page 05–1184).

(c) Measure the resistance between D+ and D– of the connector "C".

OK:

Resistance: 1 MΩ or Higher

NG → **REPAIR OR REPLACE INSTRUMENT PANEL WIRE**

OK

6 CHECK SPIRAL CABLE SUB–ASSY

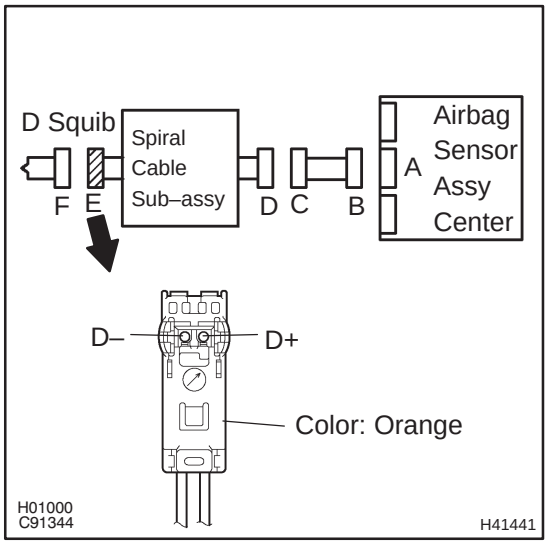

(a) Release the activation prevention mechanism built in the connector "D" (See page 05–1184).

(b) Measure the resistance between D+ and D– of the connector "E".

OK:

Resistance: 1 MΩ or Higher

NG → **REPLACE SPIRAL CABLE SUB–ASSY**

OK

USE SIMULATION METHOD TO CHECK

DTC B0101/14 OPEN IN D SQUIB CIRCUIT

CIRCUIT DESCRIPTION

The D squib circuit consists of the airbag sensor assy center, the spiral cable sub–assy and the horn button assy.

This circuit actuates the SRS to deploy when the SRS deployment conditions are fulfilled.

DTC B0101/14 is recorded when an open circuit is detected in the D squib circuit.

DTC No.	DTC Detecting Condition	Trouble Area
B0101/14	• Open circuit in D+ wire harness or D– wire harness of D squib • D squib malfunction • Spiral cable sub–assy malfunction • Airbag sensor assy center malfunction	• Horn button assy (D squib) • Spiral cable sub–assy • Airbag sensor assy center • Instrument panel wire

WIRING DIAGRAM

See page 05–1198.

INSPECTION PROCEDURE

1	CHECK D SQUIB CIRCUIT(AIRBAG SENSOR ASSY CENTER – HORN BUTTON ASSY)

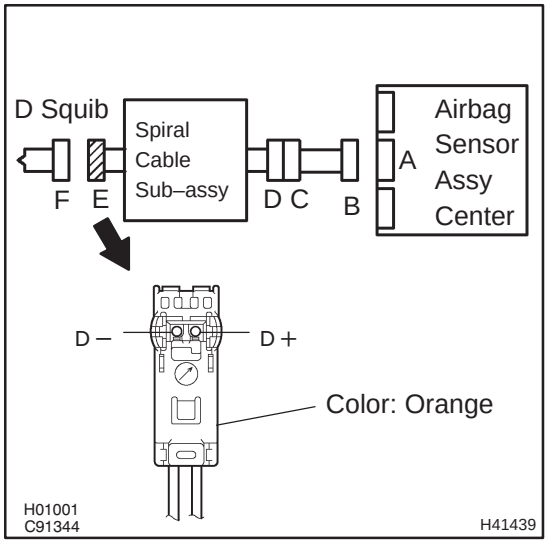

(a) Turn the ignition switch to the LOCK position.

(b) Disconnect the negative (–) terminal cable from the battery, and wait for at least 90 seconds.

(c) Disconnect the connectors from the airbag sensor assy center and the horn button assy.

(d) Measure the resistance between D+ and D– of the connector ”E”.

OK:

Resistance: Below 1 Ω

NG → **Go to step 4**

OK

2 CHECK AIR BAG SENSOR ASSY CENTER

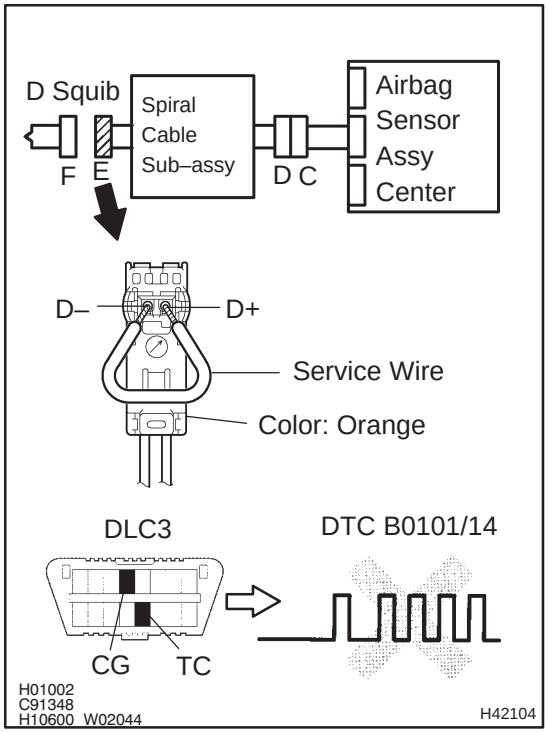

(a) Connect the connector to the airbag sensor assy center.
(b) Using a service wire, connect D+ and D– of the connector "E".

NOTICE:

Do not forcibly insert a service wire into the terminal of the connector when connecting.

(c) Connect the negative (–) terminal cable to the battery, and wait for at least 2 seconds.
(d) Turn the ignition switch to the ON position, and wait for at least 10 seconds.
(e) Clear the stored DTCs in the memory (See page 05–1184).
(f) Turn the ignition switch to the LOCK position.
(g) Turn the ignition switch to the ON position, and wait for at least 10 seconds.
(h) Check the DTCs (See page 05–1184).

OK:

DTC B0101/14 is not output.

HINT:

Codes other than code B0101/14 may be output at this time, but they are not related to this check.

NG → **REPLACE AIR BAG SENSOR ASSY CENTER**

OK

3 CHECK HORN BUTTON ASSY(D SQUIB)

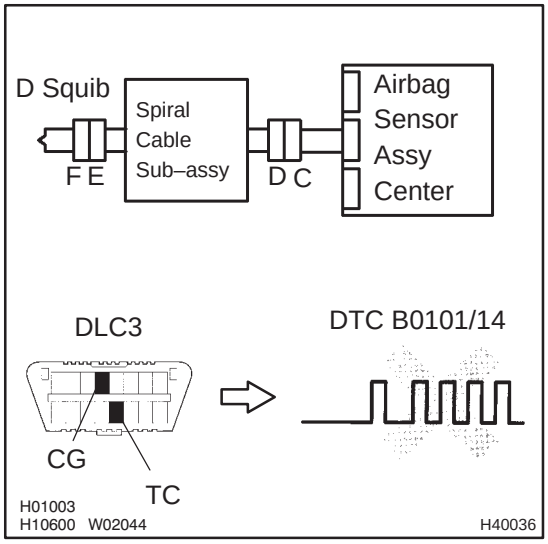

(a) Turn the ignition switch to the LOCK position.
(b) Disconnect the negative (–) terminal cable from the battery, and wait for at least 90 seconds.
(c) Connect the connectors to the horn button assy.
(d) Connect the negative (–) terminal cable to the battery, and wait for at least 2 seconds.
(e) Turn the ignition switch to the ON position, and wait for at least 10 seconds.
(f) Clear the stored DTCs in the memory (See page 05–1184).
(g) Turn the ignition switch to the LOCK position.
(h) Turn the ignition switch to the ON position, and wait for at least 10 seconds.
(i) Check the DTCs (See page 05–1184).
OK:
DTC B0101/14 is not output.

HINT:
Codes other than code B0101/14 may be output at this time, but they are not related to this check.

NG → **REPLACE HORN BUTTON ASSY**

OK

USE SIMULATION METHOD TO CHECK

4 CHECK INSTRUMENT PANEL WIRE

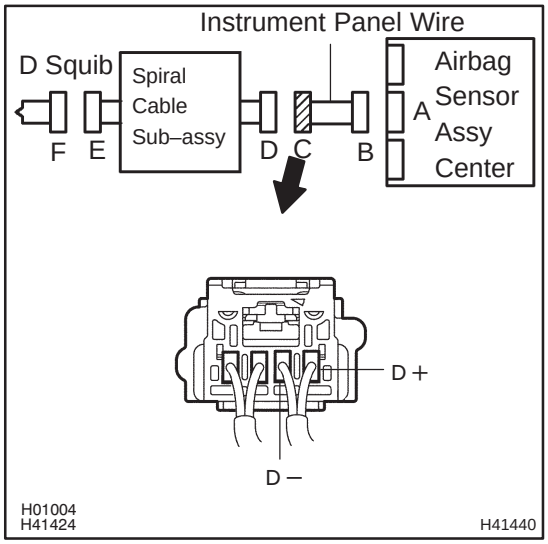

(a) Disconnect the instrument panel wire connector from the spiral cable sub–assy.
(b) Measure the resistance between D+ and D– of the connector ”C”.
OK:
Resistance: Below 1 Ω

NG → **REPAIR OR REPLACE INSTRUMENT PANEL WIRE**

OK

5	CHECK SPIRAL CABLE SUB–ASSY

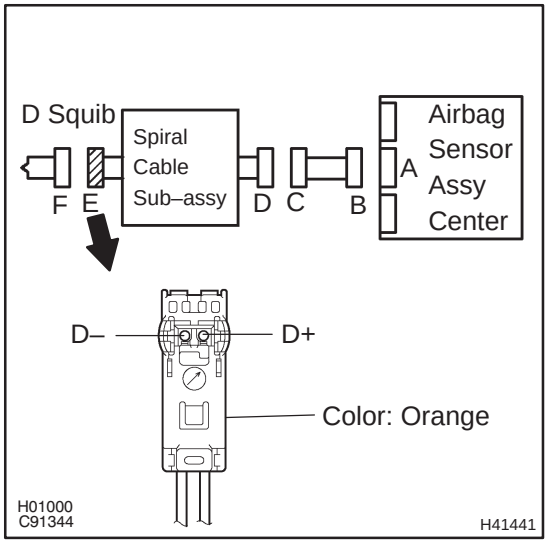

(a) Measure the resistance between D+ and D– of the connector ”E”.

OK:

Resistance: Below 1 Ω

NG → **REPLACE SPIRAL CABLE SUB–ASSY**

OK

USE SIMULATION METHOD TO CHECK

DTC B0102/11 SHORT IN D SQUIB CIRCUIT (TO GROUND)

CIRCUIT DESCRIPTION

The D squib circuit consists of the airbag sensor assy center, the spiral cable sub–assy and the horn button assy.
This circuit actuates the SRS to deploy when the SRS deployment conditions are fulfilled.
DTC B0102/11 is recorded when a short to ground is detected in the D squib circuit.

DTC No.	DTC Detecting Condition	Trouble Area
B0102/11	• Short circuit in D squib wire harness (to ground) • D squib malfunction • Spiral cable sub–assy malfunction • Airbag sensor assy center malfunction	• Horn button assy (D squib) • Spiral cable sub–assy • Airbag sensor assy center • Instrument panel wire

WIRING DIAGRAM

See page 05–1198.

INSPECTION PROCEDURE

1	CHECK D SQUIB CIRCUIT(AIRBAG SENSOR ASSY CENTER – HORN BUTTON ASSY)

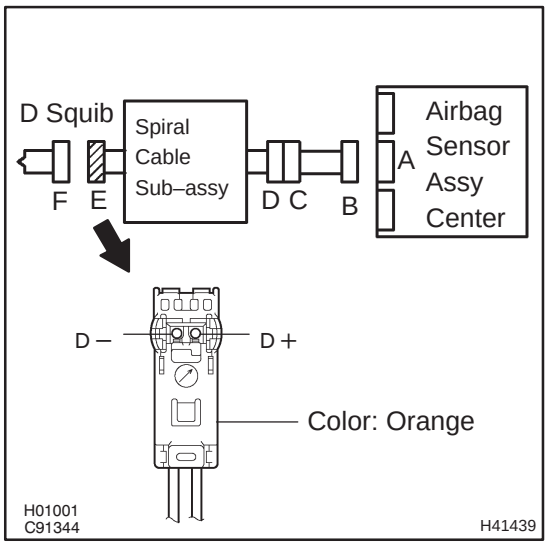

(a) Turn the ignition switch to the LOCK position.
(b) Disconnect the negative (–) terminal cable from the battery, and wait for at least 90 seconds.
(c) Disconnect the connectors from the airbag sensor assy center and the horn button assy.
(d) Measure the resistance between the body ground and D+ of the connector "E".
OK:
Resistance: 1 MΩ or Higher

NG → **Go to step 5**

OK

2 CHECK AIR BAG SENSOR ASSY CENTER

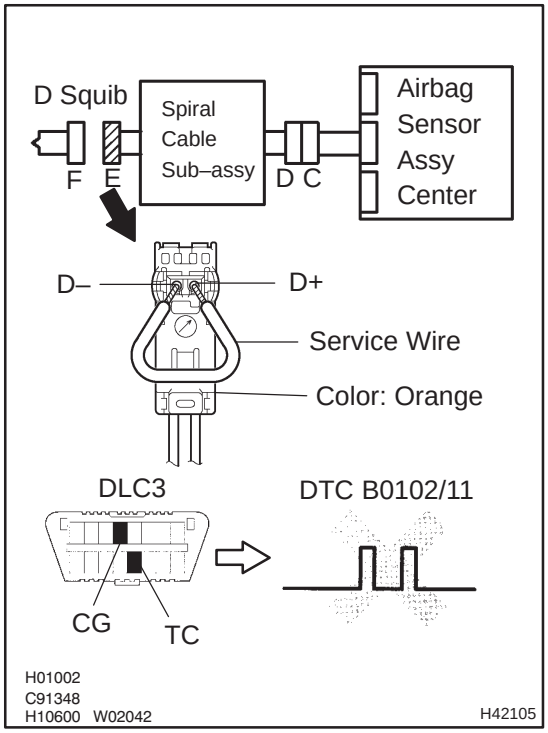

(a) Connect the connector to the airbag sensor assy center.
(b) Using a service wire, connect D+ and D– of the connector "E".

NOTICE:

Do not forcibly insert a service wire into the terminal of the connector when connecting.

(c) Connect the negative (–) terminal cable to the battery, and wait for at least 2 seconds.
(d) Turn the ignition switch to the ON position, and wait for at least 10 seconds.
(e) Clear the stored DTCs in the memory (See page 05–1184).
(f) Turn the ignition switch to the LOCK position.
(g) Turn the ignition switch to the ON position, and wait for at least 10 seconds.
(h) Check the DTCs (See page 05–1184).

OK:

DTC B0102/11 is not output.

HINT:

Codes other than code B0102/11 may be output at this time, but they are not related to this check.

NG → **REPLACE AIR BAG SENSOR ASSY CENTER**

OK

3	CHECK HORN BUTTON ASSY(D SQUIB)

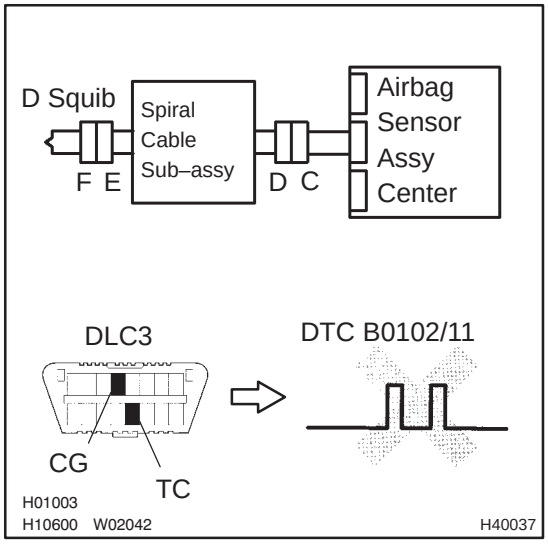

(a) Turn the ignition switch to the LOCK position.
(b) Disconnect the negative (–) terminal cable from the battery, and wait for at least 90 seconds.
(c) Connect the connectors to the horn button assy.
(d) Connect the negative (–) terminal cable to the battery, and wait for at least 2 seconds.
(e) Turn the ignition switch to the ON position, and wait for at least 10 seconds.
(f) Clear the stored DTCs in the memory (See page 05–1184).
(g) Turn the ignition switch to the LOCK position.
(h) Turn the ignition switch to the ON position, and wait for at least 10 seconds.
(i) Check the DTCs (See page 05–1184).

OK:
DTC B0102/11 is not output.

HINT:
Codes other than code B0102/11 may be output at this time, but they are not related to this check.

NG → **REPLACE HORN BUTTON ASSY**

OK

4	USE SIMULATION METHOD TO CHECK

NG → **Go to step 1**

OK

REPLACE ALL SRS COMPONENTS INCLUDING WIRE HARNESS

5 CHECK INSTRUMENT PANEL WIRE

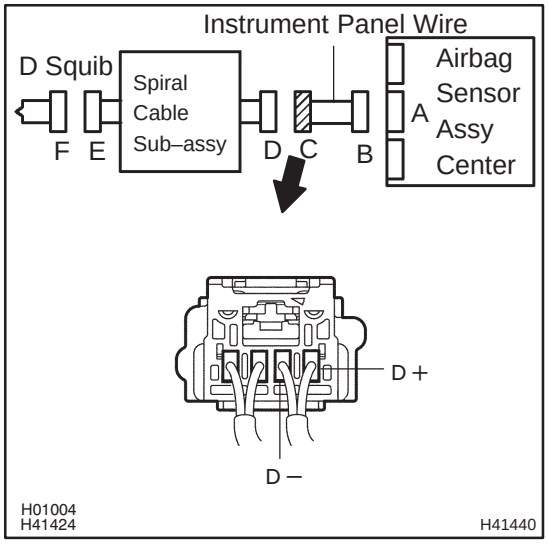

(a) Disconnect the instrument panel wire connector from the spiral cable sub–assy.

(b) Measure the resistance between the body ground and D+ of the connector "C".

OK:

Resistance: 1 MΩ or Higher

NG → **REPAIR OR REPLACE INSTRUMENT PANEL WIRE**

OK

6 CHECK SPIRAL CABLE SUB–ASSY

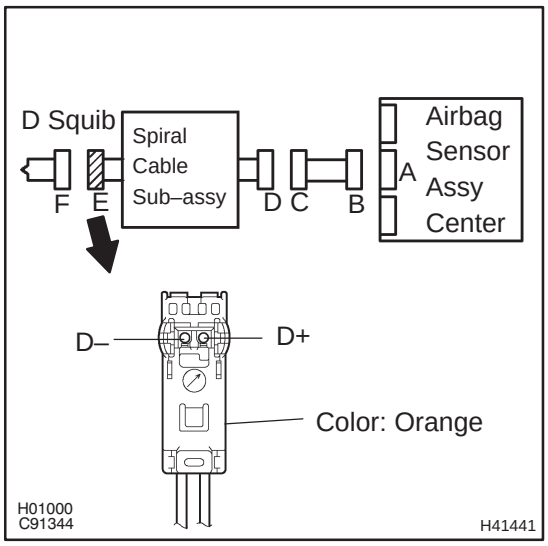

(a) Measure the resistance between the body ground and D+ of the connector "E".

OK:

Resistance: 1 MΩ or Higher

NG → **REPLACE SPIRAL CABLE SUB–ASSY**

OK

7 USE SIMULATION METHOD TO CHECK

NG → **Go to step 1**

OK

REPLACE ALL SRS COMPONENTS INCLUDING WIRE HARNESS

DTC B0103/12 SHORT IN D SQUIB CIRCUIT (TO B+)

CIRCUIT DESCRIPTION

The D squib circuit consists of the airbag sensor assy center, the spiral cable sub–assy and the horn button assy.
This circuit actuates the SRS to deploy when the SRS deployment conditions are fulfilled.
DTC B0103/12 is recorded when a short to B+ is detected in the D squib circuit.

DTC No.	DTC Detecting Condition	Trouble Area
B0103/12	• Short circuit in D squib wire harness (to B+) • D squib malfunction • Spiral cable sub–assy malfunction • Airbag sensor assy center malfunction	• Horn button assy (D squib) • Spiral cable sub–assy • Airbag sensor assy center • Instrument panel wire

WIRING DIAGRAM

See page 05–1198.

INSPECTION PROCEDURE

1	CHECK D SQUIB CIRCUIT(AIRBAG SENSOR ASSY CENTER – HORN BUTTON ASSY)

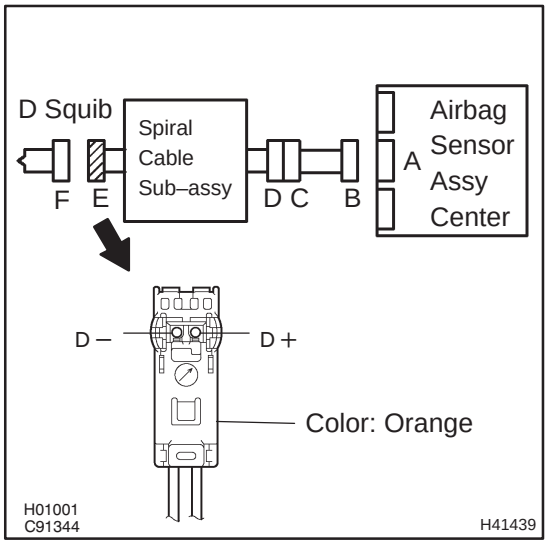

(a) Turn the ignition switch to the LOCK position.
(b) Disconnect the negative (–) terminal cable from the battery, and wait for at least 90 seconds.
(c) Disconnect the connectors from the airbag sensor assy center and the horn button assy.
(d) Connect the negative (–) terminal cable to the battery, and turn the ignition switch to the ON position.
(e) Measure the voltage between the body ground and D+ of the connector "E".
OK:
Voltage: Below 1 V

NG → **Go to step 5**

OK

2 CHECK AIR BAG SENSOR ASSY CENTER

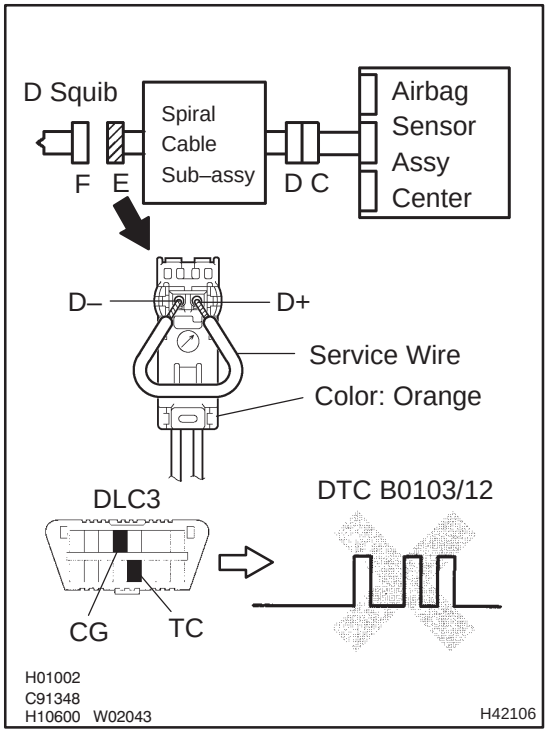

(a) Turn the ignition switch to the LOCK position.
(b) Disconnect the negative (–) terminal cable from the battery, and wait for at least 90 seconds.
(c) Connect the connector to the airbag sensor assy center.
(d) Using a service wire, connect D+ and D– of the connector "E".

NOTICE:
Do not forcibly insert a service wire into the terminal of the connector when connecting.

(e) Connect the negative (–) terminal cable to the battery, and wait for at least 2 seconds.
(f) Turn the ignition switch to the ON position, and wait for at least 10 seconds.
(g) Clear the stored DTCs in the memory (See page 05–1184).
(h) Turn the ignition switch to the LOCK position.
(i) Turn the ignition switch to the ON position, and wait for at least 10 seconds.
(j) Check the DTCs (See page 05–1184).
OK:
DTC B0103/12 is not output.

HINT:
Codes other than code B0103/12 may be output at this time, but they are not related to this check.

NG → **REPLACE AIR BAG SENSOR ASSY CENTER**

OK

3 CHECK HORN BUTTON ASSY(D SQUIB)

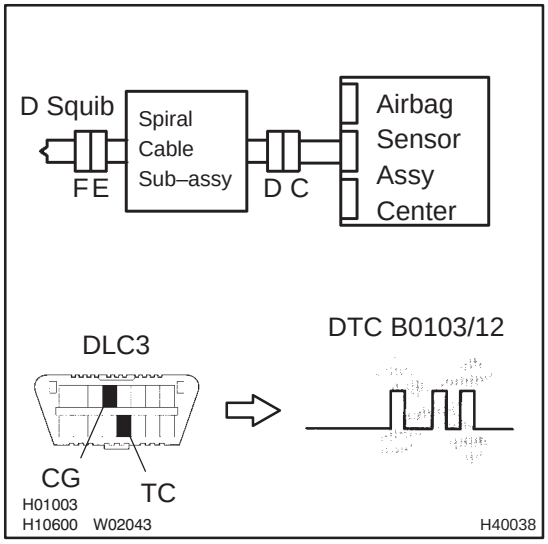

(a) Turn the ignition switch to the LOCK position.
(b) Disconnect the negative (–) terminal cable from the battery, and wait for at least 90 seconds.
(c) Connect the connectors to the horn button assy.
(d) Connect the negative (–) terminal cable to the battery, and wait for at least 2 seconds.
(e) Turn the ignition switch to the ON position, and wait for at least 10 seconds.
(f) Clear the stored DTCs in the memory (See page 05–1184).
(g) Turn the ignition switch to the LOCK position.
(h) Turn the ignition switch to the ON position, and wait for at least 10 seconds.
(i) Check the DTCs (See page 05–1184).

OK:
DTC B0103/12 is not output.

HINT:
Codes other than code B0103/12 may be output at this time, but they are not related to this check.

NG → **REPLACE HORN BUTTON ASSY**

OK

4 USE SIMULATION METHOD TO CHECK

NG → **Go to step 1**

OK

REPLACE ALL SRS COMPONENTS INCLUDING WIRE HARNESS

5 CHECK INSTRUMENT PANEL WIRE

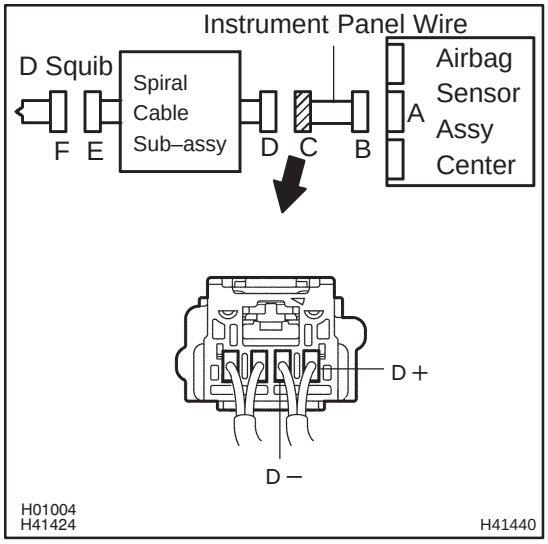

(a) Turn the ignition switch to the LOCK position.
(b) Disconnect the negative (–) terminal cable from the battery, and wait for at least 90 seconds.
(c) Disconnect the instrument panel wire connector from the spiral cable sub–assy.
(d) Connect the negative (–) terminal cable to the battery, and turn the ignition switch to the ON position.
(e) Measure the voltage between the body ground and D+ of the connector ”C”.
OK:
Voltage: Below 1 V

NG	REPAIR OR REPLACE INSTRUMENT PANEL WIRE

OK

6 CHECK SPIRAL CABLE SUB–ASSY

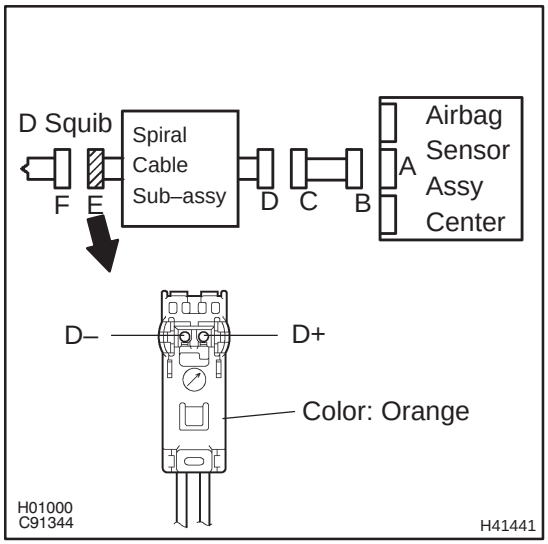

(a) Turn the ignition switch to the LOCK position.
(b) Turn the ignition switch to the ON position.
(c) Measure the voltage between the body ground and D+ of the connector ”E”.
OK:
Voltage: Below 1 V

NG	REPLACE SPIRAL CABLE SUB–ASSY

OK

7 USE SIMULATION METHOD TO CHECK

NG	Go to step 1

OK

REPLACE ALL SRS COMPONENTS INCLUDING WIRE HARNESS

DTC B0105/53 SHORT IN P SQUIB CIRCUIT

CIRCUIT DESCRIPTION

The P squib circuit consists of the airbag sensor assy center and the instrument panel passenger airbag assy.
This circuit actuates the SRS to deploy when the SRS deployment conditions are fulfilled.
DTC B0105/53 is recorded when a short circuit is detected in the P squib circuit.

DTC No.	DTC Detecting Condition	Trouble Area
B0105/53	• Short circuit between P+ wire harness and P– wire harness of P squib • P squib malfunction • Airbag sensor assy center malfunction	• Instrument panel passenger airbag assy (P squib) • Airbag sensor assy center • Instrument panel wire

WIRING DIAGRAM

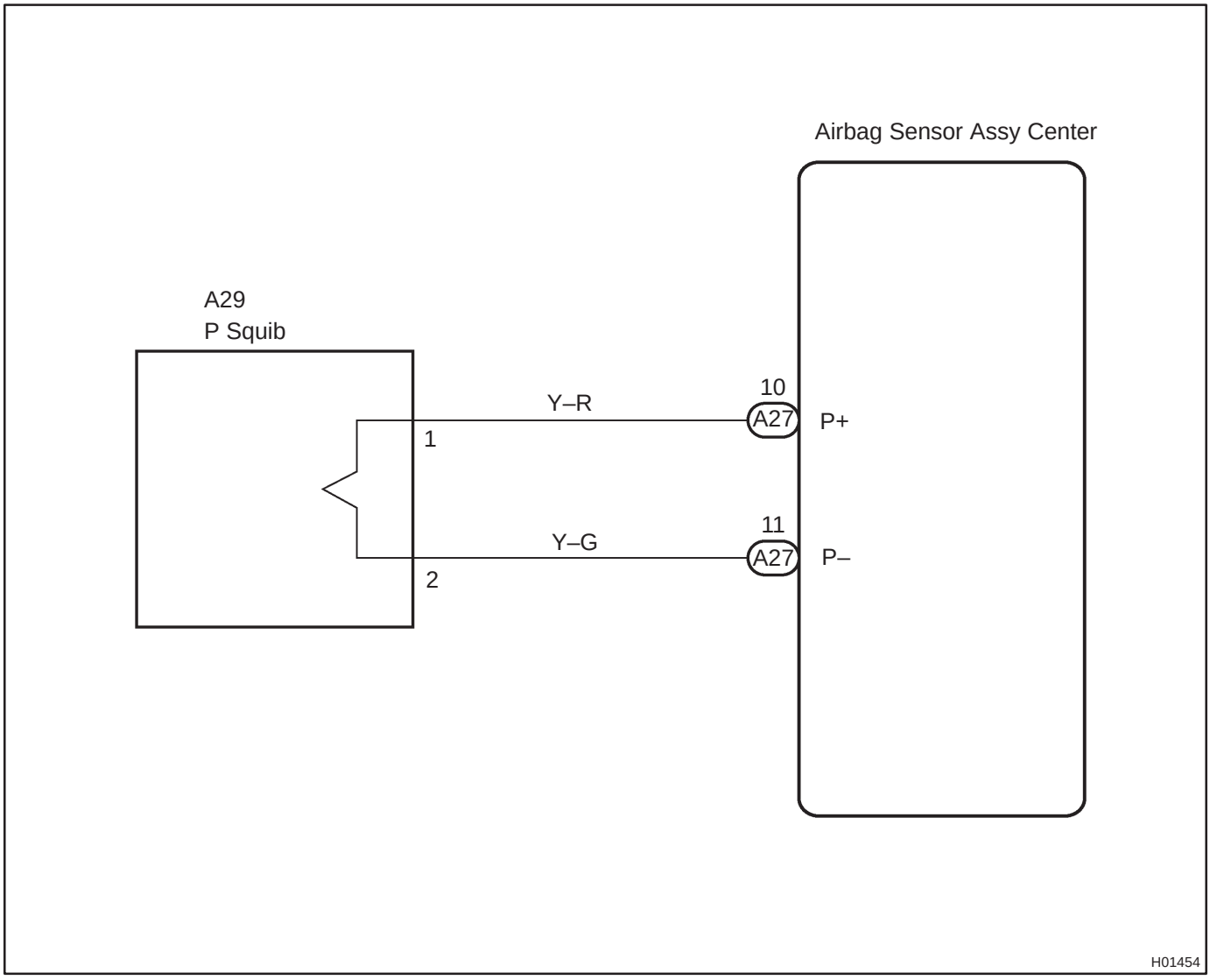

INSPECTION PROCEDURE

1 CHECK INSTRUMENT PANEL WIRE(P SQUIB CIRCUIT)

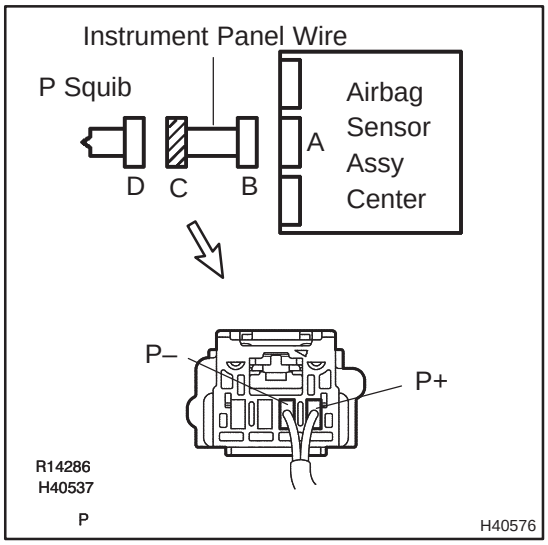

(a) Turn the ignition switch to the LOCK position.
(b) Disconnect the negative (–) terminal cable from the battery, and wait for at least 90 seconds.
(c) Disconnect the connectors between the airbag sensor assy center and the instrument panel passenger airbag assy.
(d) Release the activation prevention mechanism built in the connector "B" (See page 05–1184).
(e) Measure the resistance between P+ and P– of the connector "E".
OK:
Resistance: 1 MΩ or Higher

NG	REPAIR OR REPLACE INSTRUMENT PANEL WIRE

OK

2 CHECK AIR BAG SENSOR ASSY CENTER

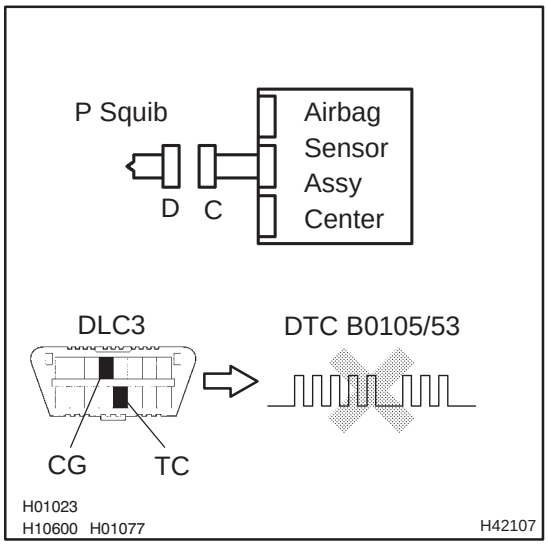

(a) Connect the connector to the airbag sensor assy center.
(b) Connect the negative (–) terminal cable to the battery, and wait for at least 2 seconds.
(c) Turn the ignition switch to the ON position, and wait for at least 10 seconds.
(d) Clear the stored DTCs in the memory (See page 05–1184).
(e) Turn the ignition switch to the LOCK position.
(f) Turn the ignition switch to the ON position, and wait for at least 10 seconds.
(g) Check the DTCs (See page 05–1184).
OK:
DTC B0105/53 is not output.

HINT:
Codes other than code B0105/53 may be output at this time, but they are not related to this check.

NG	REPLACE AIR BAG SENSOR ASSY CENTER

OK

3	CHECK INSTRUMENT PANEL PASSENGER AIR BAG ASSY(P SQUIB)

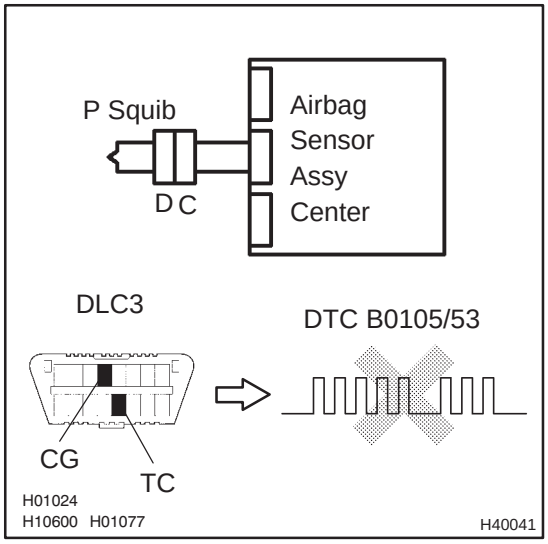

(a) Turn the ignition switch to the LOCK position.
(b) Disconnect the negative (–) terminal cable from the battery, and wait for at least 90 seconds.
(c) Connect the connector to the instrument panel passenger airbag assy.
(d) Connect the negative (–) terminal cable to the battery, and wait for at least 2 seconds.
(e) Turn the ignition switch to the ON position, and wait for at least 10 seconds.
(f) Clear the stored DTCs in the memory (See page 05–1184).
(g) Turn the ignition switch to the LOCK position.
(h) Turn the ignition switch to the ON position, and wait for at least 10 seconds.
(i) Check the DTCs (See page 05–1184).
OK:
DTC B0105/53 is not output.

HINT:
Codes other than code B0105/53 may be output at this time, but they are not related to this check.

NG → **REPLACE INSTRUMENT PANEL PASSENGER AIR BAG ASSY**

OK

USE SIMULATION METHOD TO CHECK

DTC B0106/54 OPEN IN P SQUIB CIRCUIT

CIRCUIT DESCRIPTION

The P squib circuit consists of the airbag sensor assy center and the instrument panel passenger airbag assy.
This circuit actuates the SRS to deploy when the SRS deployment conditions are fulfilled.
DTC B0106/54 is recorded when an open circuit is detected in the P squib circuit.

DTC No.	DTC Detecting Condition	Trouble Area
B0106/54	• Open circuit in P+ wire harness or P– wire harness of P squib • P squib malfunction • Airbag sensor assy center malfunction	• Instrument panel passenger airbag assy (P squib) • Airbag sensor assy center • Instrument panel wire

WIRING DIAGRAM

See page 05–1214.

INSPECTION PROCEDURE

1 CHECK INSTRUMENT PANEL WIRE(P SQUIB CIRCUIT)

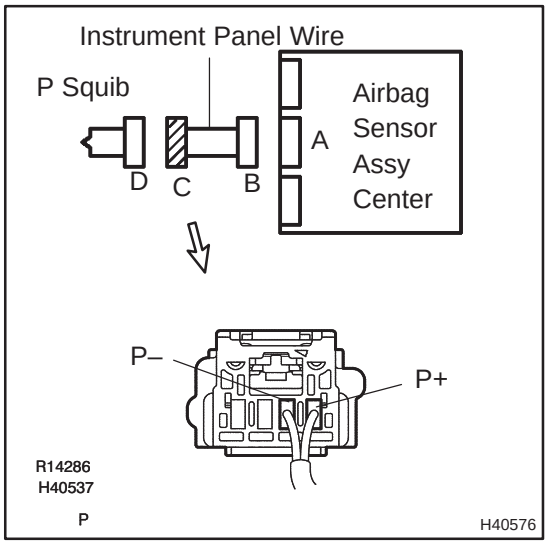

(a) Turn the ignition switch to the LOCK position.
(b) Disconnect the negative (–) terminal cable from the battery, and wait for at least 90 seconds.
(c) Disconnect the connectors from the airbag sensor assy center and the instrument panel passenger airbag assy.
(d) Measure the resistance between P+ and P– of the connector ”C”.
OK:
Resistance: Below 1 Ω

NG → **REPAIR OR REPLACE INSTRUMENT PANEL WIRE**

OK

2 CHECK AIR BAG SENSOR ASSY CENTER

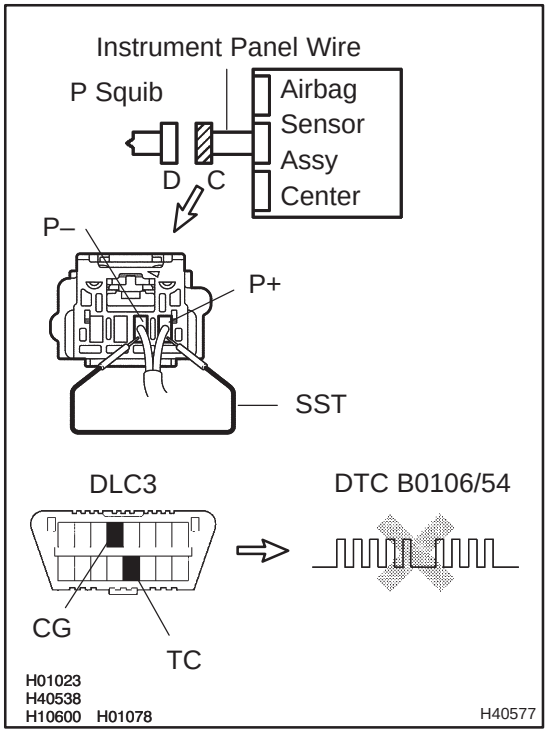

(a) Connect the connector to the airbag sensor assy center.
(b) Using SST, connect P+ and P– of the connector ”C”.
SST 09843–18040
(c) Connect the negative (–) terminal cable to the battery, and wait for at least 2 seconds.
(d) Turn the ignition switch to the ON position, and wait for at least 10 seconds.
(e) Clear the stored DTCs in the memory (See page 05–1184).
(f) Turn the ignition switch to the LOCK position.
(g) Turn the ignition switch to the ON position, and wait for at least 10 seconds.
(h) Check the DTCs (See page 05–1184).
OK:
DTC B0106/54 is not output.

HINT:
Codes other than code B0106/54 may be output at this time, but they are not related to this check.

NG → **REPLACE AIR BAG SENSOR ASSY CENTER**

OK

3	CHECK INSTRUMENT PANEL PASSENGER AIR BAG ASSY(P SQUIB)

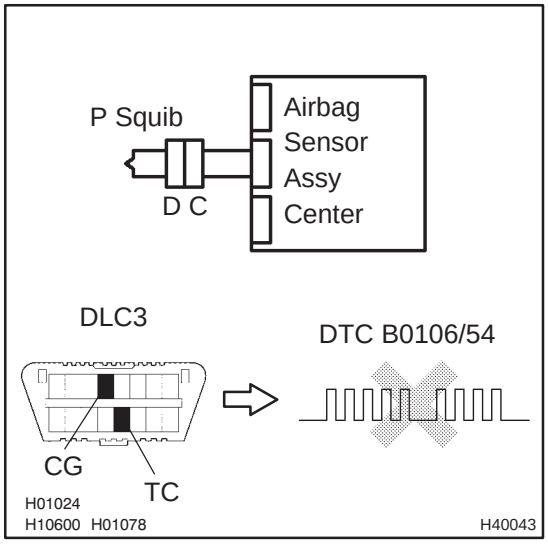

(a) Turn the ignition switch to the LOCK position.
(b) Disconnect the negative (–) terminal cable from the battery, and wait for at least 90 seconds.
(c) Connect the connector to the instrument panel passenger airbag assy.
(d) Connect the negative (–) terminal cable to the battery, and wait for at least 2 seconds.
(e) Turn the ignition switch to the ON position, and wait for at least 10 seconds.
(f) Clear the stored DTCs in the memory (See page 05–1184).
(g) Turn the ignition switch to the LOCK position.
(h) Turn the ignition switch to the ON position, and wait for at least 10 seconds.
(i) Check the DTCs (See page 05–1184).
OK:
DTC B0106/54 is not output.

HINT:
Codes other than code B0106/54 may be output at this time, but they are not related to this check.

NG → **REPLACE INSTRUMENT PANEL PASSENGER AIR BAG ASSY**

OK

USE SIMULATION METHOD TO CHECK

DTC B0107/51 SHORT IN P SQUIB CIRCUIT (TO GROUND)

CIRCUIT DESCRIPTION

The P squib circuit consists of the airbag sensor assy center and the instrument panel passenger airbag assy.
This circuit actuates the SRS to deploy when the SRS deployment conditions are fulfilled.
DTC B0107/51 is recorded when a short to ground is detected in the P squib circuit.

DTC No.	DTC Detecting Condition	Trouble Area
B0107/51	• Short circuit in P squib wire harness (to ground) • P squib malfunction • Airbag sensor assy center malfunction	• Instrument panel passenger airbag assy (P squib) • Airbag sensor assy center • Instrument panel wire

WIRING DIAGRAM

See page 05–1214.

INSPECTION PROCEDURE

1 CHECK INSTRUMENT PANEL WIRE(P SQUIB CIRCUIT)

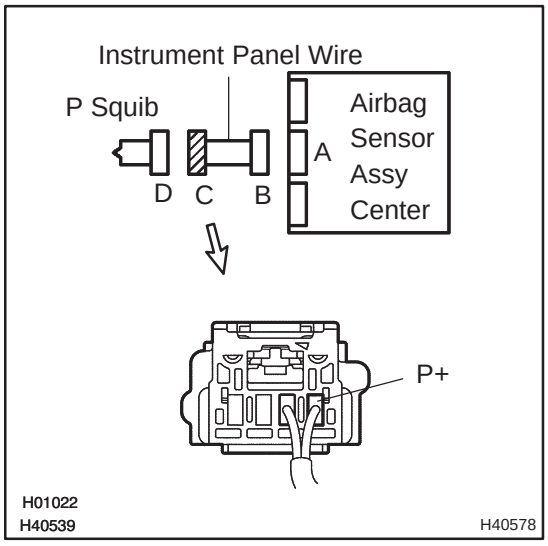

(a) Turn the ignition switch to the LOCK position.
(b) Disconnect the negative (–) terminal cable from the battery, and wait for at least 90 seconds.
(c) Disconnect the connectors from the airbag sensor assy center and the instrument panel passenger airbag assy.
(d) Measure the resistance between the body ground and P+ of the connector "C".
OK:
Resistance: 1 MΩ or Higher

NG → **REPAIR OR REPLACE INSTRUMENT PANEL WIRE**

OK

2 CHECK AIR BAG SENSOR ASSY CENTER

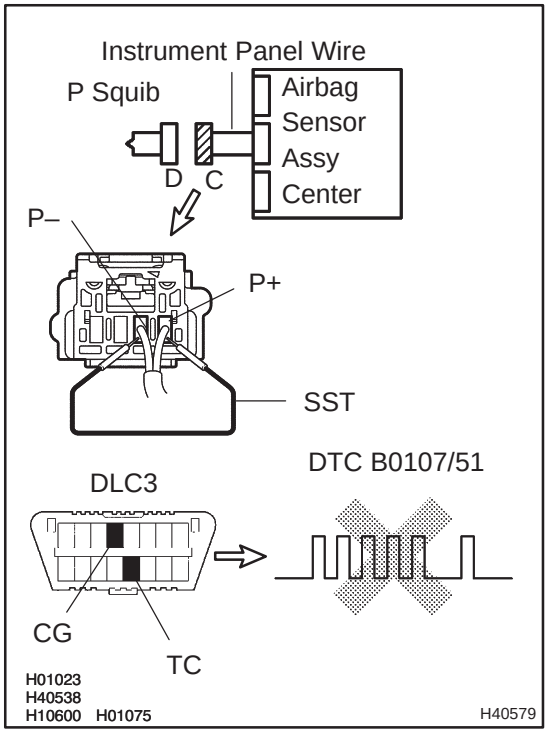

(a) Connect the connector to the airbag sensor assy center.
(b) Using SST, connect P+ and P– of the connector ”C”.
SST 09843–18040
(c) Connect the negative (–) terminal cable to the battery, and wait for at least 2 seconds.
(d) Turn the ignition switch to the ON position, and wait for at least 10 seconds.
(e) Clear the stored DTCs in the memory (See page 05–1184).
(f) Turn the ignition switch to the LOCK position.
(g) Turn the ignition switch to the ON position, and wait for at least 10 seconds.
(h) Check the DTCs (See page 05–1184).
OK:
DTC B0107/51 is not output.

HINT:
Codes other than code B0107/51 may be output at this time, but they are not related to this check.

NG → **REPLACE AIR BAG SENSOR ASSY CENTER**

OK

3	CHECK INSTRUMENT PANEL PASSENGER AIR BAG ASSY(P SQUIB)

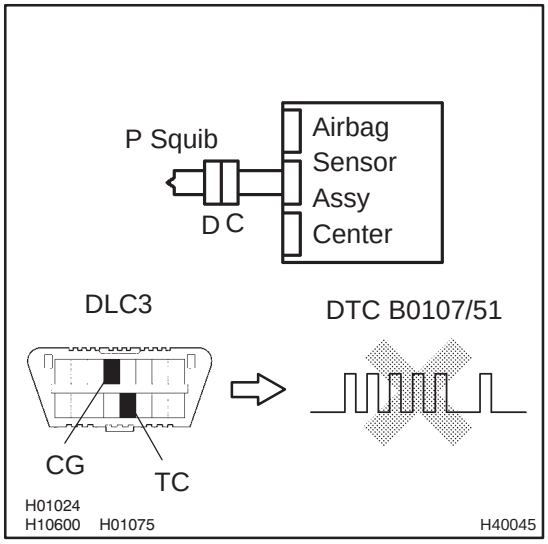

(a) Turn the ignition switch to the LOCK position.
(b) Disconnect the negative (–) terminal cable from the battery, and wait for at least 90 seconds.
(c) Connect the connector to the instrument panel passenger airbag assy.
(d) Connect the negative (–) terminal cable to the battery, and wait for at least 2 seconds.
(e) Turn the ignition switch to the ON position, and wait for at least 10 seconds.
(f) Clear the stored DTCs in the memory (See page 05–1184).
(g) Turn the ignition switch to the LOCK position.
(h) Turn the ignition switch to the ON position, and wait for at least 10 seconds.
(i) Check the DTCs (See page 05–1184).
OK:
DTC B0107/51 is not output.

HINT:
Codes other than code B0107/51 may be output at this time, but they are not related to this check.

NG → **REPLACE INSTRUMENT PANEL PASSENGER AIR BAG ASSY**

OK

4	USE SIMULATION METHOD TO CHECK

NG → **Go to step 1**

OK

REPLACE ALL SRS COMPONENTS INCLUDING WIRE HARNESS

DTC B0108/52 SHORT IN P SQUIB CIRCUIT (TO B+)

CIRCUIT DESCRIPTION

The P squib circuit consists of the airbag sensor assy center and the instrument panel passenger airbag assy.
This circuit actuates the SRS to deploy when the SRS deployment conditions are fulfilled.
DTC B0108/52 is recorded when a short to B+ is detected in the P squib circuit.

DTC No.	DTC Detecting Condition	Trouble Area
B0108/52	• Short circuit in P squib wire harness (to B+) • P squib malfunction • Airbag sensor assy center malfunction	• Instrument panel passenger airbag assy (P squib) • Airbag sensor assy center • Instrument panel wire

WIRING DIAGRAM

See page 05–1214.

INSPECTION PROCEDURE

1 CHECK INSTRUMENT PANEL WIRE(P SQUIB CIRCUIT)

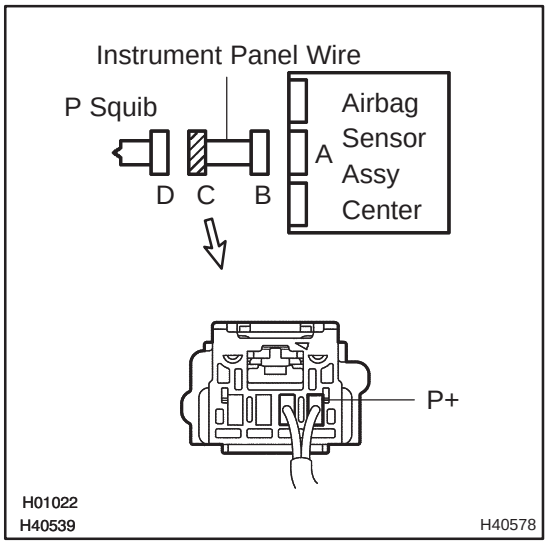

(a) Turn the ignition switch to the LOCK position.
(b) Disconnect the negative (–) terminal cable from the battery, and wait for at least 90 seconds.
(c) Disconnect the connectors from the airbag sensor assy center and the instrument panel passenger airbag assy.
(d) Connect the negative (–) terminal cable to the battery, and turn the ignition switch to the ON position.
(e) Measure the voltage between the body ground and P+ of the connector ”C”.
OK:
Voltage: Below 1 V

NG → **REPAIR OR REPLACE INSTRUMENT PANEL WIRE**

OK

2 CHECK AIR BAG SENSOR ASSY CENTER

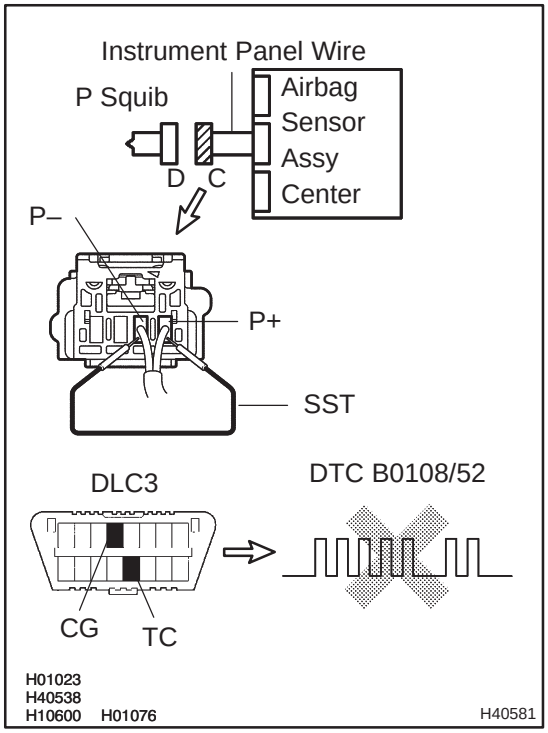

(a) Turn the ignition switch to the LOCK position.
(b) Disconnect the negative (–) terminal cable from the battery, and wait for at least 90 seconds.
(c) Connect the connector to the airbag sensor assy center.
(d) Using SST, connect P+ and P– of the connector ”C”.
SST 09843–18040
(e) Connect the negative (–) terminal cable to the battery, and wait for at least 2 seconds.
(f) Turn the ignition switch to the ON position, and wait for at least 10 seconds.
(g) Clear the stored DTCs in the memory (See page 05–1184).
(h) Turn the ignition switch to the LOCK position.
(i) Turn the ignition switch to the ON position, and wait for at least 10 seconds.
(j) Check the DTCs (See page 05–1184).
OK:
DTC B0108/52 is not output.

HINT:
Codes other than code B0108/52 may be output at this time, but they are not related to this check.

NG → **REPLACE AIR BAG SENSOR ASSY CENTER**

OK

3	CHECK INSTRUMENT PANEL PASSENGER AIR BAG ASSY(P SQUIB)

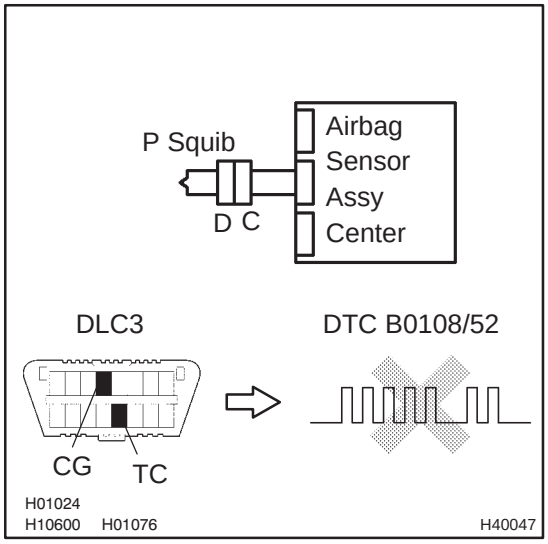

(a) Turn the ignition switch to the LOCK position.
(b) Disconnect the negative (–) terminal cable from the battery, and wait for at least 90 seconds.
(c) Connect the connector to the instrument panel passenger airbag assy.
(d) Connect the negative (–) terminal cable to the battery, and wait for at least 2 seconds.
(e) Turn the ignition switch to the ON position, and wait for at least 10 seconds.
(f) Clear the stored DTCs in the memory (See page 05–1184).
(g) Turn the ignition switch to the LOCK position.
(h) Turn the ignition switch to the ON position, and wait for at least 10 seconds.
(i) Check the DTCs (See page 05–1184).
OK:
DTC B0108/52 is not output.

HINT:
Codes other than code B0108/52 may be output at this time, but they are not related to this check.

NG → **REPLACE INSTRUMENT PANEL PASSENGER AIR BAG ASSY**

OK

4	USE SIMULATION METHOD TO CHECK

NG → **Go to step 1**

OK

REPLACE ALL SRS COMPONENTS INCLUDING WIRE HARNESS

DTC B0110/43 SHORT IN SIDE SQUIB (RH) CIRCUIT

CIRCUIT DESCRIPTION

The side squib RH circuit consists of the airbag sensor assy center and the separate type front seat back assy (side squib RH).
This circuit actuates the SRS to deploy when the SRS deployment conditions are fulfilled.
DTC B0110/43 is recorded when a short circuit is detected in the side squib RH circuit.

DTC No.	DTC Detecting Condition	Trouble Area
B0110/43	• Short circuit between SFR+ wire harness and SFR– wire harness of side squib RH • Side squib RH malfunction • Airbag sensor assy center malfunction	• Separate type front seat back assy (Side squib RH) • Airbag sensor assy center • Floor wire No.2

WIRING DIAGRAM

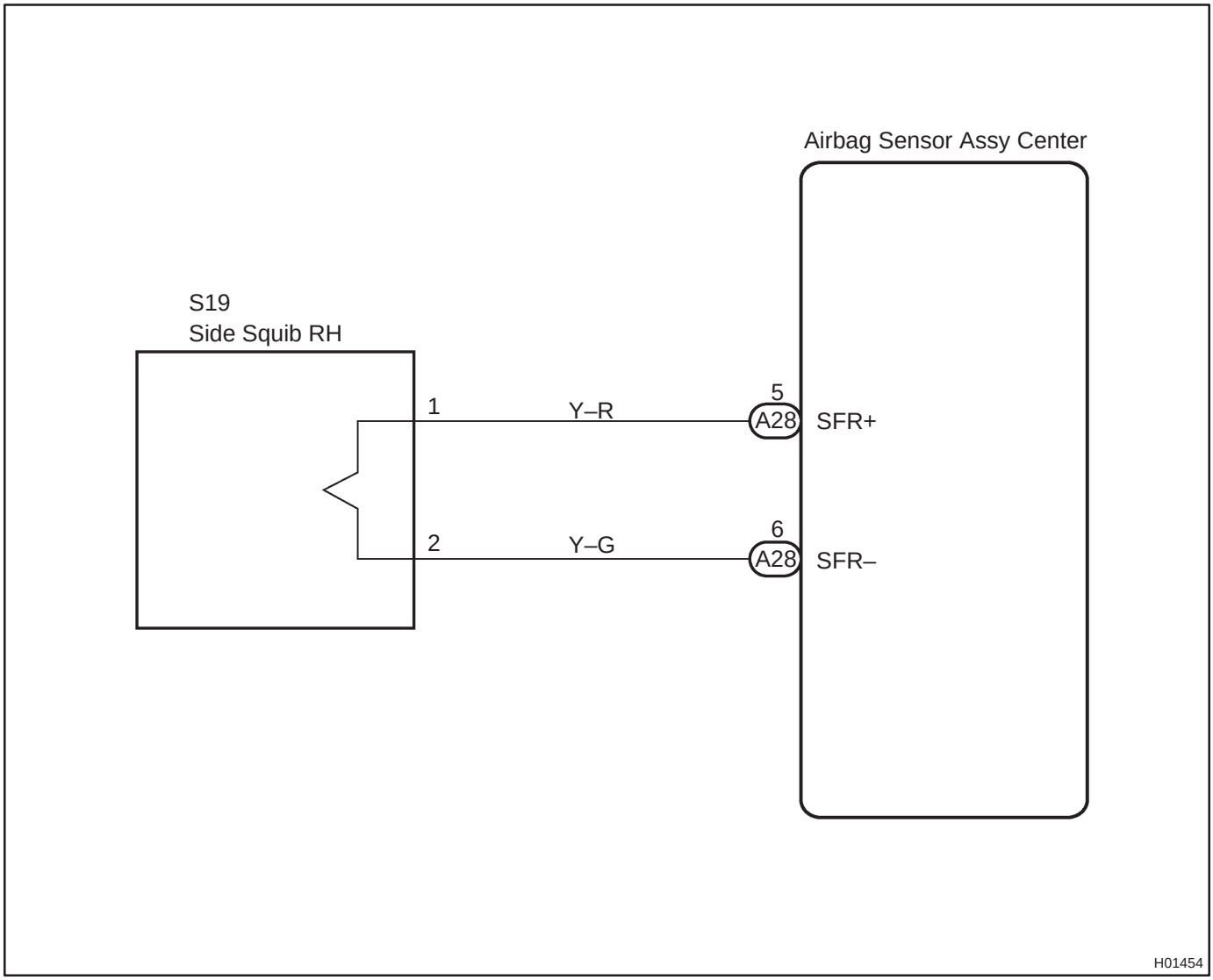

INSPECTION PROCEDURE

1 CHECK FLOOR WIRE NO.2(SIDE SQUIB RH CIRCUIT)

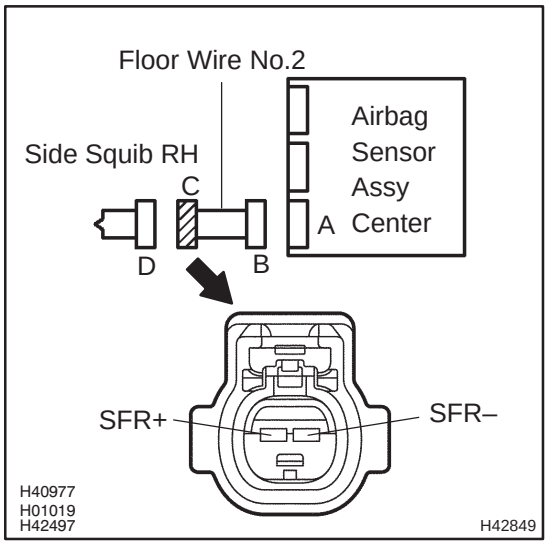

(a) Turn the ignition switch to the LOCK position.
(b) Disconnect the negative (–) terminal cable from the battery, and wait for at least 90 seconds.
(c) Disconnect the connectors from the airbag sensor assy center and the separate type front seat back assy (side squib RH).
(d) Release the activation prevention mechanism built in the connector "B" (See page 05–1184).
(e) Measure the resistance between SFR+ and SFR– of the connector "C".
OK:
Resistance: 1 MΩ or Higher

NG → **REPAIR OR REPLACE FLOOR WIRE NO.2**

OK

2 CHECK AIR BAG SENSOR ASSY CENTER

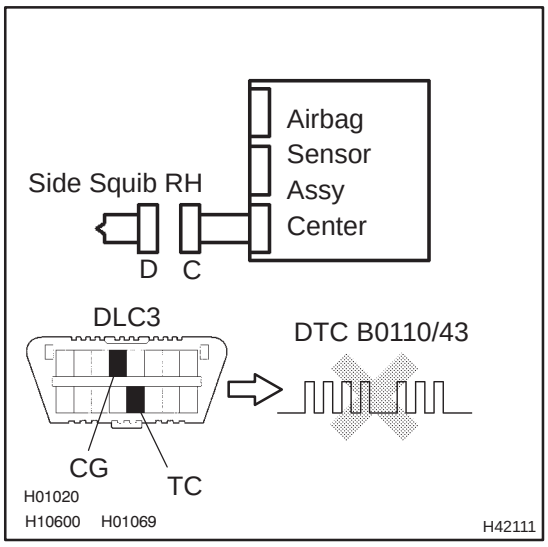

(a) Connect the connector to the airbag sensor assy center.
(b) Connect the negative (–) terminal cable to the battery, and wait for at least 2 seconds.
(c) Turn the ignition switch to the ON position, and wait for at least 10 seconds.
(d) Clear the stored DTCs in the memory (See page 05–1184).
(e) Turn the ignition switch to the LOCK position.
(f) Turn the ignition switch to the ON position, and wait for at least 10 seconds.
(g) Check the DTCs (See page 05–1184).
OK:
DTC B0110/43 is not output.

HINT:
Codes other than code B0110/43 may be output at this time, but they are not related to this check.

NG → **REPLACE AIR BAG SENSOR ASSY CENTER**

OK

3 CHECK SEPARATE TYPE FRONT SEAT BACK ASSY(SIDE SQUIB RH)

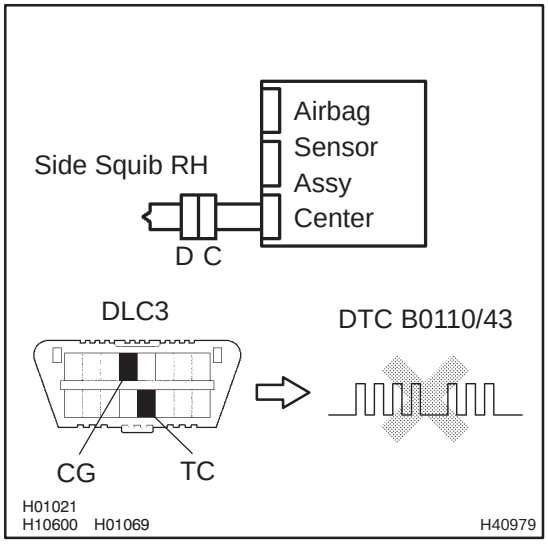

(a) Turn the ignition switch to the LOCK position.
(b) Disconnect the negative (–) terminal cable from the battery, and wait for at least 90 seconds.
(c) Connect the connector to the separate type front seat back assy (side squib RH).
(d) Connect the negative (–) terminal cable to the battery, and wait for at least 2 seconds.
(e) Turn the ignition switch to the ON position, and wait for at least 10 seconds.
(f) Clear the stored DTCs in the memory (See page 05–1184).
(g) Turn the ignition switch to the LOCK position.
(h) Turn the ignition switch to the ON position, and wait for at least 10 seconds.
(i) Check the DTCs (See page 05–1184).
OK:
DTC B0110/43 is not output.

HINT:
Codes other than code B0110/43 may be output at this time, but they are not related to this check.

NG → **REPLACE SEPARATE TYPE FRONT SEAT BACK ASSY**

OK

USE SIMULATION METHOD TO CHECK

DTC B0111/44 OPEN IN SIDE SQUIB (RH) CIRCUIT

CIRCUIT DESCRIPTION

The side squib RH circuit consists of the airbag sensor assy center and the separate type front seat back assy (side squib RH).
This circuit actuates the SRS to deploy when the SRS deployment conditions are fulfilled.
DTC B0111/44 is recorded when an open circuit is detected in the side squib RH circuit.

DTC No.	DTC Detecting Condition	Trouble Area
B0111/44	• Open circuit in SFR+ wire harness or SFR– wire harness of side squib RH • Side squib RH malfunction • Airbag sensor assy center malfunction	• Separate type front seat back assy (Side squib RH) • Airbag sensor assy center • Floor wire No.2

WIRING DIAGRAM

See page 05–1226.

INSPECTION PROCEDURE

1 CHECK FLOOR WIRE NO.2(SIDE SQUIB RH CIRCUIT)

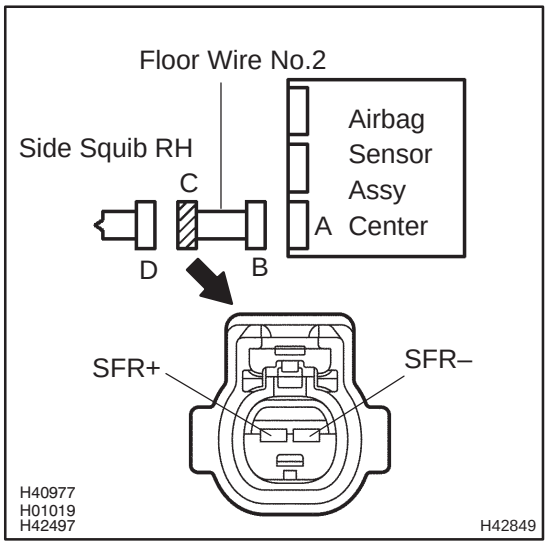

(a) Turn the ignition switch to the LOCK position.
(b) Disconnect the negative (–) terminal cable from the battery, and wait for at least 90 seconds.
(c) Disconnect the connectors from the airbag sensor assy center and the separate type front seat back assy (side squib RH).
(d) Measure the resistance between SFR+ and SFR– of the connector ”C”.
OK:
Resistance: Below 1 Ω

NG → **REPAIR OR REPLACE FLOOR WIRE NO.2**

OK

2 CHECK AIR BAG SENSOR ASSY CENTER

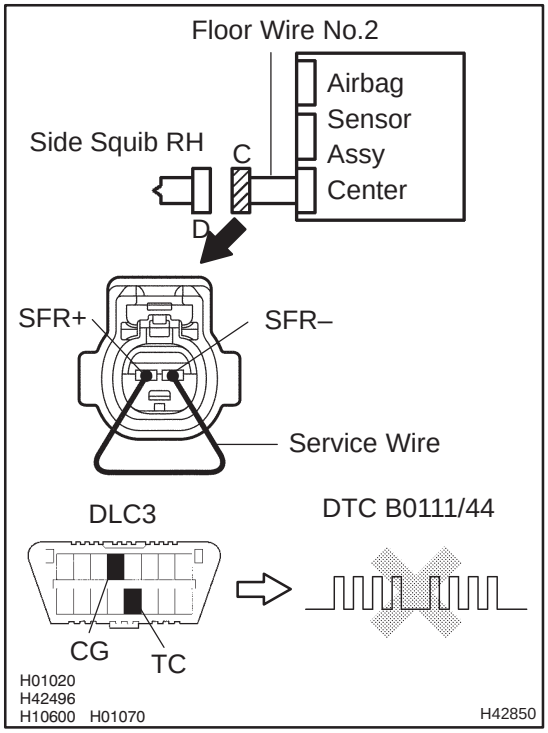

(a) Connect the connector to the airbag sensor assy center.
(b) Using a service wire, connect SFR+ and SFR– of the connector ”C”.

NOTICE:

Do not forcibly insert a service wire into the terminal of the connector when connecting.

(c) Connect the negative (–) terminal cable to the battery, and wait for at least 2 seconds.
(d) Turn the ignition switch to the ON position, and wait for at least 10 seconds.
(e) Clear the stored DTCs in the memory (See page 05–1184).
(f) Turn the ignition switch to the LOCK position.
(g) Turn the ignition switch to the ON position, and wait for at least 10 seconds.
(h) Check the DTCs (See page 05–1184).

OK:

DTC B0111/44 is not output.

HINT:

Codes other than code B0111/44 may be output at this time, but they are not related to this check.

NG → **REPLACE AIR BAG SENSOR ASSY CENTER**

OK

3 CHECK SEPARATE TYPE FRONT SEAT BACK ASSY(SIDE SQUIB RH)

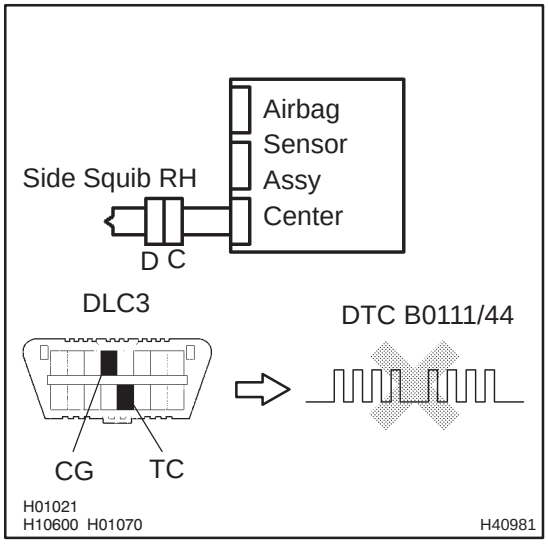

(a) Turn the ignition switch to the LOCK position.
(b) Disconnect the negative (–) terminal cable from the battery, and wait for at least 90 seconds.
(c) Connect the connector to the separate type front seat back assy (side squib RH).
(d) Connect the negative (–) terminal cable to the battery, and wait for at least 2 seconds.
(e) Turn the ignition switch to the ON position, and wait for at least 10 seconds.
(f) Clear the stored DTCs in the memory (See page 05–1184).
(g) Turn the ignition switch to the LOCK position.
(h) Turn the ignition switch to the ON position, and wait for at least 10 seconds.
(i) Check the DTCs (See page 05–1184).
OK:
DTC B0111/44 is not output.

HINT:
Codes other than code B0111/44 may be output at this time, but they are not related to this check.

NG	**REPLACE SEPARATE TYPE FRONT SEAT BACK ASSY**

OK

USE SIMULATION METHOD TO CHECK

DTC	B0112/41	SHORT IN SIDE SQUIB (RH) CIRCUIT (TO GROUND)

CIRCUIT DESCRIPTION

The side squib RH circuit consists of the airbag sensor assy center and the separate type front seat back assy (side squib RH).
This circuit actuates the SRS to deploy when the SRS deployment conditions are fulfilled.
DTC B0112/41 is recorded when a short to ground is detected in the side squib RH circuit.

DTC No.	DTC Detecting Condition	Trouble Area
B0112/41	• Short circuit in side squib RH wire harness (to ground) • Side squib RH malfunction • Airbag sensor assy center malfunction	• Separate type front seat back assy (Side squib RH) • Airbag sensor assy center • Floor wire No.2

WIRING DIAGRAM

See page 05–1226.

INSPECTION PROCEDURE

1	CHECK FLOOR WIRE NO.2(SIDE SQUIB RH CIRCUIT)

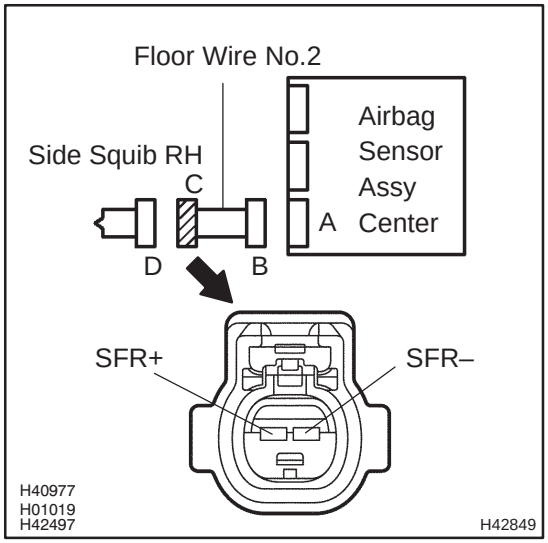

(a) Turn the ignition switch to the LOCK position.
(b) Disconnect the negative (–) terminal cable from the battery, and wait for at least 90 seconds.
(c) Disconnect the connectors from the airbag sensor assy center and the separate type front seat back assy (side squib RH).
(d) Measure the resistance between the body ground and SFR+ of the connector ”C”.
OK:
Resistance: 1 MΩ or Higher

NG → **REPAIR OR REPLACE FLOOR WIRE NO.2**

OK

2 CHECK AIR BAG SENSOR ASSY CENTER

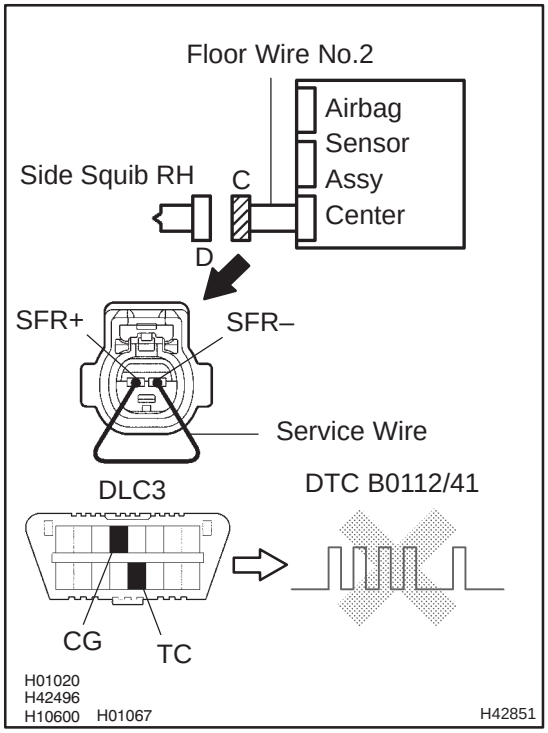

(a) Connect the connector to the airbag sensor assy center.
(b) Using a service wire, connect SFR+ and SFR– of the connector ”C”.

NOTICE:

Do not forcibly insert a service wire into the terminal of the connector when connecting.

(c) Connect the negative (–) terminal cable to the battery, and wait for at least 2 seconds.
(d) Turn the ignition switch to the ON position, and wait for at least 10 seconds.
(e) Clear the stored DTCs in the memory (See page 05–1184).
(f) Turn the ignition switch to the LOCK position.
(g) Turn the ignition switch to the ON position, and wait for at least 10 seconds.
(h) Check the DTCs (See page 05–1184).

OK:

DTC B0112/41 is not output.

HINT:

Codes other than code B0112/41 may be output at this time, but they are not related to this check.

NG → **REPLACE AIR BAG SENSOR ASSY CENTER**

OK

3 CHECK SEPARATE TYPE FRONT SEAT BACK ASSY(SIDE SQUIB RH)

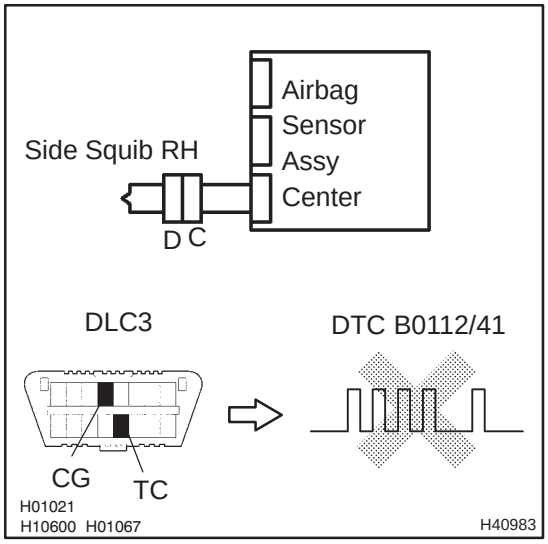

(a) Turn the ignition switch to the LOCK position.
(b) Disconnect the negative (–) terminal cable from the battery, and wait for at least 90 seconds.
(c) Connect the connector to the separate type front seat back assy (side squib RH).
(d) Connect the negative (–) terminal cable to the battery, and wait for at least 2 seconds.
(e) Turn the ignition switch to the ON position, and wait for at least 10 seconds.
(f) Clear the stored DTCs in the memory (See page 05–1184).
(g) Turn the ignition switch to the LOCK position.
(h) Turn the ignition switch to the ON position, and wait for at least 10 seconds.
(i) Check the DTCs (See page 05–1184).
OK:
DTC B0112/41 is not output.

HINT:
Codes other than code B0112/41 may be output at this time, but they are not related to this check.

NG → **REPLACE SEPARATE TYPE FRONT SEAT BACK ASSY**

OK

4 USE SIMULATION METHOD TO CHECK

NG → **Go to step 1**

OK

REPLACE ALL SRS COMPONENTS INCLUDING WIRE HARNESS

DTC	B0113/42	SHORT IN SIDE SQUIB (RH) CIRCUIT (TO B+)

CIRCUIT DESCRIPTION

The side squib RH circuit consists of the airbag sensor assy center and the separate type front seat back assy (side squib RH).
This circuit actuates the SRS to deploy when the SRS deployment conditions are fulfilled.
DTC B0113/42 is recorded when a short to B+ is detected in the side squib RH circuit.

DTC No.	DTC Detecting Condition	Trouble Area
B0113/42	• Short circuit in side squib RH wire harness (to B+) • Side squib RH malfunction • Airbag sensor assy center malfunction	• Separate type front seat back assy (Side squib RH) • Airbag sensor assy center • Floor wire No.2

WIRING DIAGRAM

See page 05–1226.

INSPECTION PROCEDURE

1	CHECK FLOOR WIRE NO.2(SIDE SQUIB RH CIRCUIT)

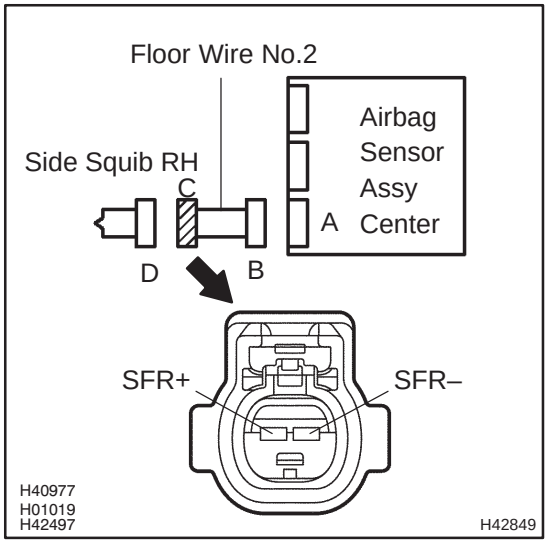

(a) Turn the ignition switch to the LOCK position.
(b) Disconnect the negative (–) terminal cable from the battery, and wait for at least 90 seconds.
(c) Disconnect the connectors from the airbag sensor assy center and the separate type front seat back assy (side squib RH).
(d) Connect the negative (–) terminal cable to the battery, and turn the ignition switch to the ON position.
(e) Measure the voltage between the body ground and SFR+ of the connector ”C”.
OK:
Voltage: Below 1 V

NG → **REPAIR OR REPLACE FLOOR WIRE NO.2**

OK

2 CHECK AIR BAG SENSOR ASSY CENTER

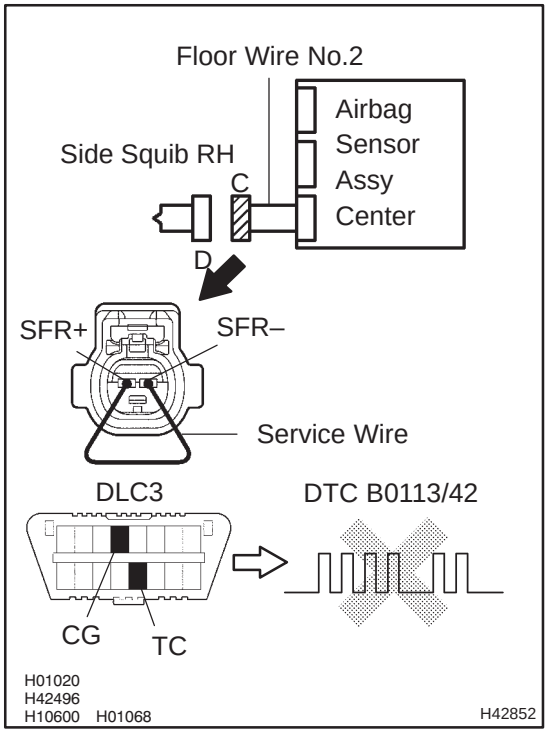

(a) Turn the ignition switch to the LOCK position.
(b) Disconnect the negative (–) terminal cable from the battery, and wait for at least 90 seconds.
(c) Connect the connector to the airbag sensor assy center.
(d) Using a service wire, connect SFR+ and SFR– of the connector "C".

NOTICE:
Do not forcibly insert a service wire into the terminal of the connector when connecting.

(e) Connect the negative (–) terminal cable to the battery, and wait for at least 2 seconds.
(f) Turn the ignition switch to the ON position, and wait for at least 10 seconds.
(g) Clear the stored DTCs in the memory (See page 05–1184).
(h) Turn the ignition switch to the LOCK position.
(i) Turn the ignition switch to the ON position, and wait for at least 10 seconds.
(j) Check the DTCs (See page 05–1184).
OK:
DTC B0113/42 is not output.

HINT:
Codes other than code B0113/42 may be output at this time, but they are not related to this check.

NG → **REPLACE AIR BAG SENSOR ASSY CENTER**

OK

3 CHECK SEPARATE TYPE FRONT SEAT BACK ASSY(SIDE SQUIB RH)

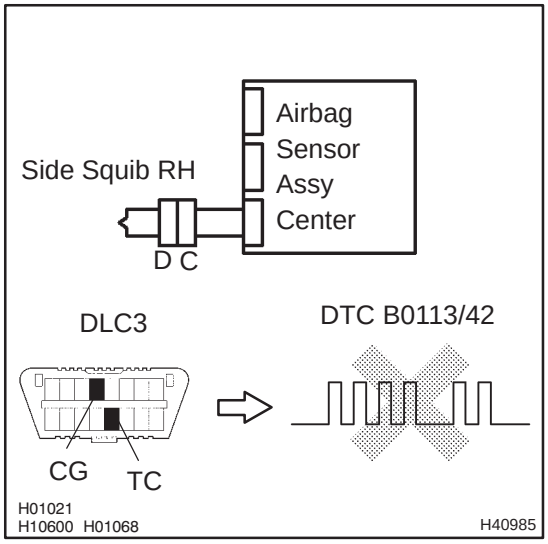

(a) Turn the ignition switch to the LOCK position.
(b) Disconnect the negative (–) terminal cable from the battery, and wait for at least 90 seconds.
(c) Connect the connector to the separate type front seat back assy (side squib RH).
(d) Connect the negative (–) terminal cable to the battery, and wait for at least 2 seconds.
(e) Turn the ignition switch to the ON position, and wait for at least 10 seconds.
(f) Clear the stored DTCs in the memory (See page 05–1184).
(g) Turn the ignition switch to the LOCK position.
(h) Turn the ignition switch to the ON position, and wait for at least 10 seconds.
(i) Check the DTCs (See page 05–1184).
OK:
DTC B0113/42 is not output.

HINT:
Codes other than code B0113/42 may be output at this time, but they are not related to this check.

NG → **REPLACE SEPARATE TYPE FRONT SEAT BACK ASSY**

OK

4 USE SIMULATION METHOD TO CHECK

NG → **Go to step 1**

OK

REPLACE ALL SRS COMPONENTS INCLUDING WIRE HARNESS

DTC B0115/47 SHORT IN SIDE SQUIB (LH) CIRCUIT

CIRCUIT DESCRIPTION

The side squib LH circuit consists of the airbag sensor assy center and the separate type front seat back assy (side squib LH).
This circuit actuates the SRS to deploy when the SRS deployment conditions are fulfilled.
DTC B0115/47 is recorded when a short circuit is detected in the side squib LH circuit.

DTC No.	DTC Detecting Condition	Trouble Area
B0115/47	• Short circuit between SFL+ wire harness and SFL– wire harness of side squib LH • Side squib LH malfunction • Airbag sensor assy center malfunction	• Separate type front seat back assy (Side squib LH) • Airbag sensor assy center • Floor wire

WIRING DIAGRAM

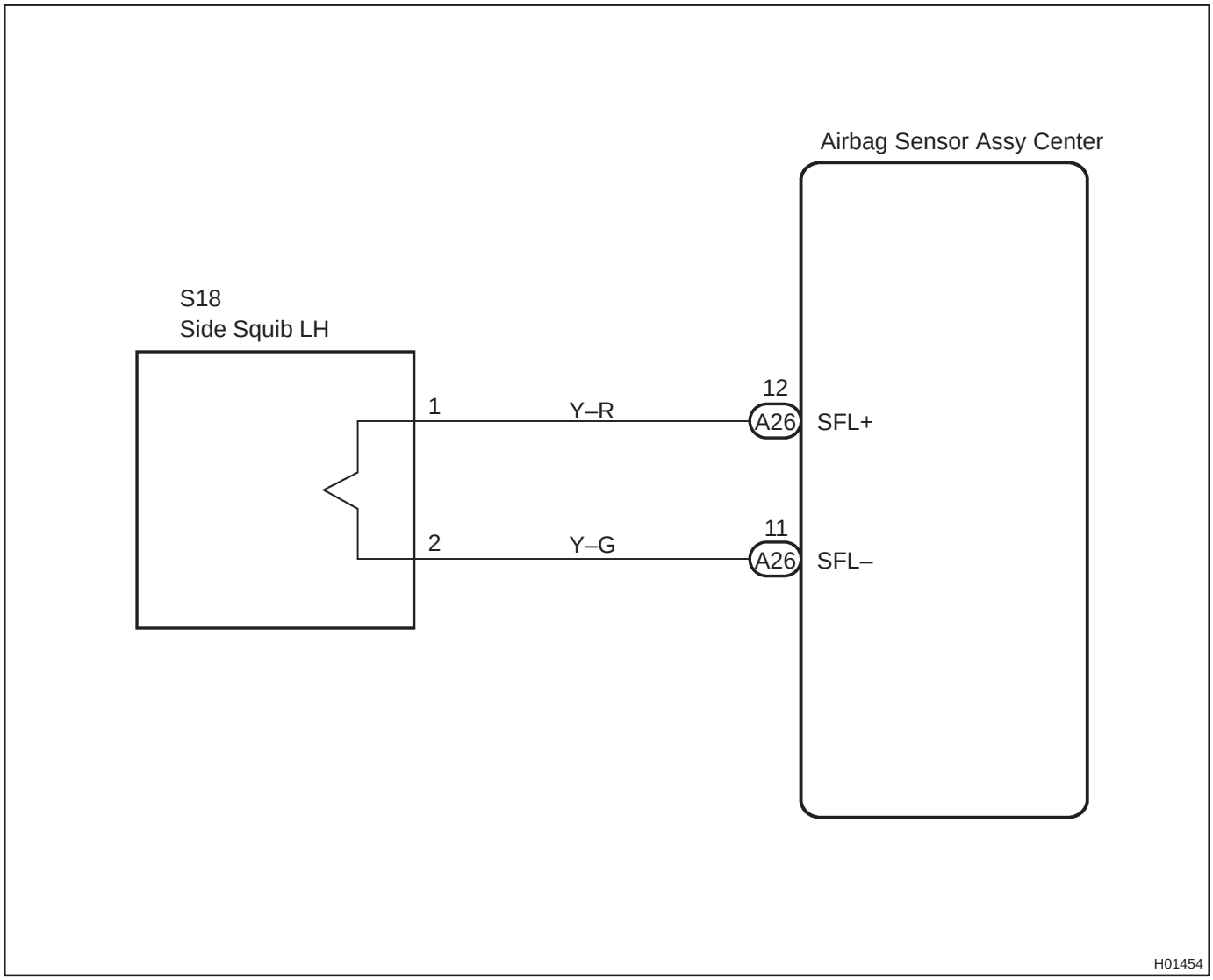

INSPECTION PROCEDURE

1 CHECK FLOOR WIRE(SIDE SQUIB LH CIRCUIT)

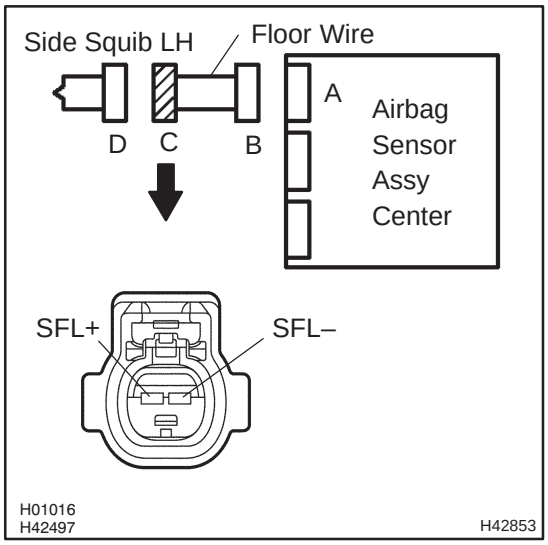

(a) Turn the ignition switch to the LOCK position.
(b) Disconnect the negative (–) terminal cable from the battery, and wait for at least 90 seconds.
(c) Disconnect the connectors from the airbag sensor assy center and the separate type front seat back assy (side squib LH).
(d) Release the activation prevention mechanism built in the connector "B" (See page 05–1184).
(e) Measure the resistance between SFL+ and SFL– of the connector "C".
OK:
Resistance: 1 MΩ or Higher

NG → **REPAIR OR REPLACE FLOOR WIRE**

OK

2 CHECK AIR BAG SENSOR ASSY CENTER

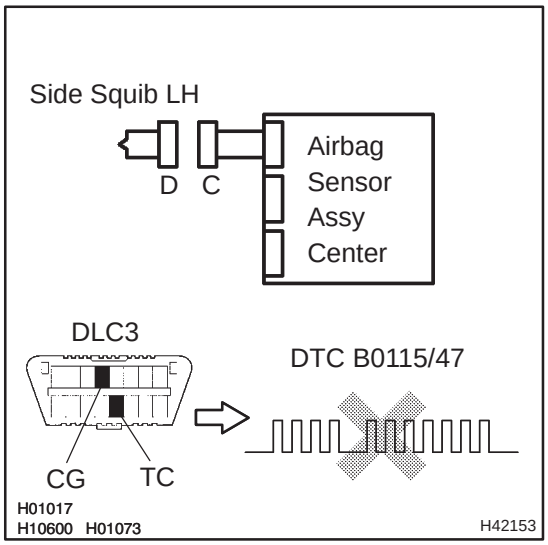

(a) Connect the connector to the airbag sensor assy center.
(b) Connect the negative (–) terminal cable to the battery, and wait for at least 2 seconds.
(c) Turn the ignition switch to the ON position, and wait for at least 10 seconds.
(d) Clear the stored DTCs in the memory (See page 05–1184).
(e) Turn the ignition switch to the LOCK position.
(f) Turn the ignition switch to the ON position, and wait for at least 10 seconds.
(g) Check the DTCs (See page 05–1184).
OK:
DTC B0115/47 is not output.

HINT:
Codes other than code B0115/47 may be output at this time, but they are not related to this check.

NG → **REPLACE AIR BAG SENSOR ASSY CENTER**

OK

3	CHECK SEPARATE TYPE FRONT SEAT BACK ASSY(SIDE SQUIB LH)

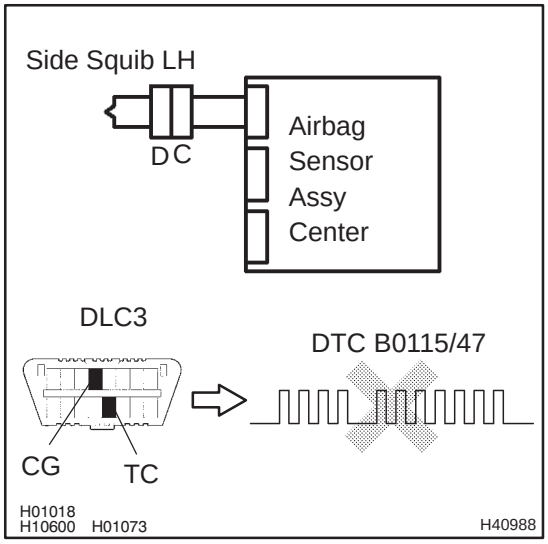

(a) Turn the ignition switch to the LOCK position.
(b) Disconnect the negative (–) terminal cable from the battery, and wait for at least 90 seconds.
(c) Connect the connector to the separate type front seat back assy (side squib LH).
(d) Connect the negative (–) terminal cable to the battery, and wait for at least 2 seconds.
(e) Turn the ignition switch to the ON position, and wait for at least 10 seconds.
(f) Clear the stored DTCs in the memory (See page 05–1184).
(g) Turn the ignition switch to the LOCK position.
(h) Turn the ignition switch to the ON position, and wait for at least 10 seconds.
(i) Check the DTCs (See page 05–1184).
OK:
DTC B0115/47 is not output.

HINT:
Codes other than code B0115/47 may be output at this time, but they are not related to this check.

NG	REPLACE SEPARATE TYPE FRONT SEAT BACK ASSY

OK

USE SIMULATION METHOD TO CHECK

DTC B0116/48 OPEN IN SIDE SQUIB (LH) CIRCUIT

CIRCUIT DESCRIPTION

The side squib LH circuit consists of the airbag sensor assy center and the separate type front seat back assy (side squib LH).
This circuit the SRS to deploy when the SRS deployment conditions are fulfilled.
DTC B0116/48 is recorded when an open circuit is detected in the side squib LH circuit.

DTC No.	DTC Detecting Condition	Trouble Area
B0116/48	• Open circuit in SFL+ wire harness or SFL– wire harness of side squib LH • Side squib LH malfunction • Airbag sensor assy center malfunction	• Separate type front seat back assy (Side squib LH) • Airbag sensor assy center • Floor wire

WIRING DIAGRAM

See page 05–1238.

INSPECTION PROCEDURE

1 CHECK FLOOR WIRE(SIDE SQUIB LH CIRCUIT)

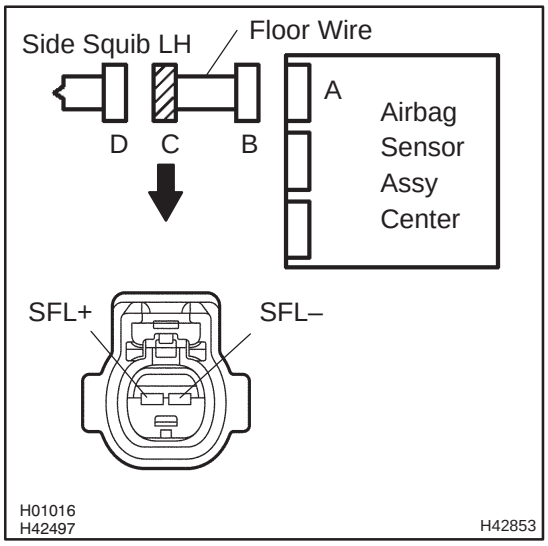

(a) Turn the ignition switch to the LOCK position.
(b) Disconnect the negative (–) terminal cable from the battery, and wait for at least 90 seconds.
(c) Disconnect the connectors from the airbag sensor assy center and the separate type front seat back assy (side squib LH).
(d) Measure the resistance between SFL+ and SFL– of the connector ”C”.
OK:
Resistance: Below 1 Ω

NG → **REPAIR OR REPLACE FLOOR WIRE**

OK

2 CHECK AIR BAG SENSOR ASSY CENTER

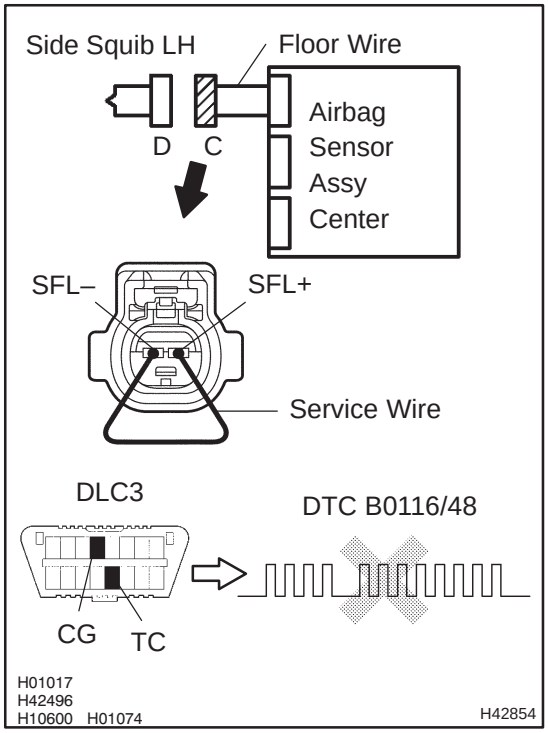

(a) Connect the connector to the airbag sensor assy center.
(b) Using a service wire, connect SFL+ and SFL– of the connector ”C”.

NOTICE:

Do not forcibly insert a service wire into the terminal of the connector when connecting.

(c) Connect the negative (–) terminal cable to the battery, and wait at least 2 seconds.
(d) Turn the ignition switch to the ON position, and wait for at least 10 seconds.
(e) Clear the stored DTCs in the memory (See page 05–1184).
(f) Turn the ignition switch to the LOCK position.
(g) Turn the ignition switch to the ON position, and wait for at least 10 seconds.
(h) Check the DTCs (See page 05–1184).

OK:

DTC B0116/48 is not output.

HINT:

Codes other than code B0116/48 may be output at this time, but they are not related to this check.

NG → **REPLACE AIR BAG SENSOR ASSY CENTER**

OK

3 CHECK SEPARATE TYPE FRONT SEAT BACK ASSY(SIDE SQUIB LH)

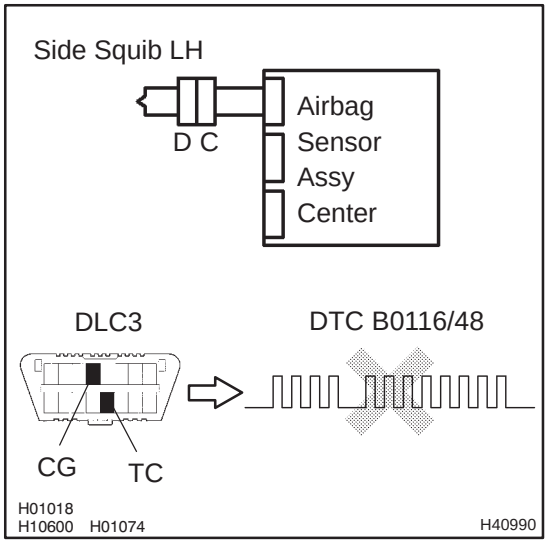

(a) Turn the ignition switch to the LOCK position.
(b) Disconnect the negative (–) terminal cable from the battery, and wait for at least 90 seconds.
(c) Connect the connector to the separate type front seat back assy (side squib LH).
(d) Connect the negative (–) terminal cable to the battery, and wait for at least 2 seconds.
(e) Turn the ignition switch to the ON position, and wait for at least 10 seconds.
(f) Clear the stored DTCs in the memory (See page 05–1184).
(g) Turn the ignition switch to the LOCK position.
(h) Turn the ignition switch to the ON position, and wait for at least 10 seconds.
(i) Check the DTCs (See page 05–1184).
OK:
DTC B0116/48 is not output.

HINT:
Codes other than code B0116/48 may be output at this time, but they are not related to this check.

NG → **REPLACE SEPARATE TYPE FRONT SEAT BACK ASSY**

OK →

USE SIMULATION METHOD TO CHECK

DTC	B0117/45	SHORT IN SIDE SQUIB (LH) CIRCUIT (TO GROUND)

CIRCUIT DESCRIPTION

The side squib LH circuit consists of the airbag sensor assy center and the separate type front seat back assy (side squib LH).
This circuit actuates the SRS to deploy when the SRS deployment conditions are fulfilled.
DTC B0117/45 is recorded when a short to ground is detected in the side squib LH circuit.

DTC No.	DTC Detecting Condition	Trouble Area
B0117/45	• Short circuit in side squib LH wire harness (to ground) • Side squib LH malfunction • Airbag sensor assy center malfunction	• Separate type front seat back assy (Side squib LH) • Airbag sensor assy center • Floor wire

WIRING DIAGRAM

See page 05–1238.

INSPECTION PROCEDURE

1	CHECK FLOOR WIRE(SIDE SQUIB LH CIRCUIT)

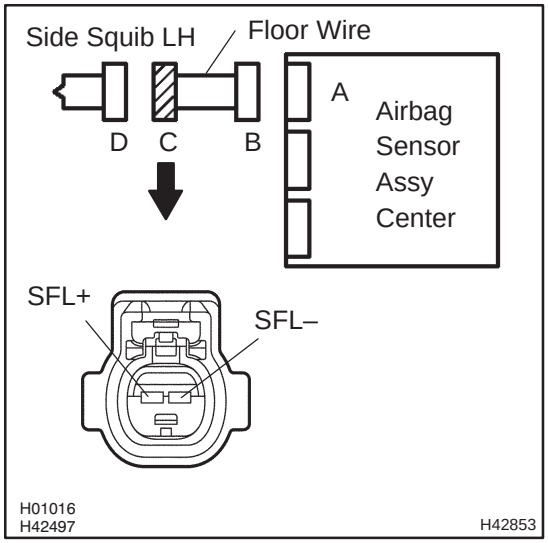

(a) Turn the ignition switch to the LOCK position.
(b) Disconnect the negative (–) terminal cable from the battery, and wait for at least 90 seconds.
(c) Disconnect the connectors from the airbag sensor assy center and the separate type front seat back assy (side squib LH).
(d) Measure the resistance between the body ground and SFL+ of the connector ”C”.
OK:
Resistance: 1 MΩ or Higher

NG → **REPAIR OR REPLACE FLOOR WIRE**

OK

2 CHECK AIR BAG SENSOR ASSY CENTER

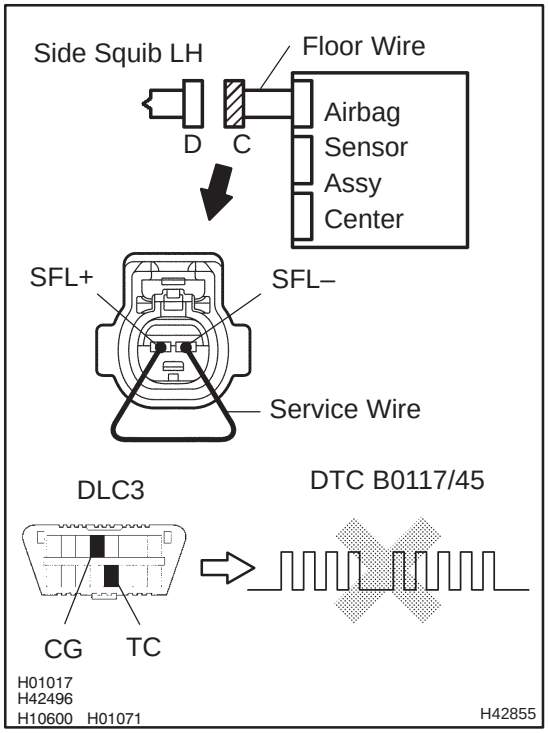

(a) Connect the connector to the airbag sensor assy center.
(b) Using a service wire, connect SFL+ and SFL– of the connector ”C”.

NOTICE:

Do not forcibly insert a service wire into the terminal of the connector when connecting.

(c) Connect the negative (–) terminal cable to the battery, and wait for at least 2 seconds.
(d) Turn the ignition switch to the ON position, and wait for at least 10 seconds.
(e) Clear the stored DTCs in the memory (See page 05–1184).
(f) Turn the ignition switch to the LOCK position.
(g) Turn the ignition switch to the ON position, and wait for at least 10 seconds.
(h) Check the DTCs (See page 05–1184).

OK:

DTC B0117/45 is not output.

HINT:

Codes other than code B0117/45 may be output at this time, but they are not related to this check.

NG → **REPLACE AIR BAG SENSOR ASSY CENTER**

OK

3 CHECK SEPARATE TYPE FRONT SEAT BACK ASSY(SIDE SQUIB LH)

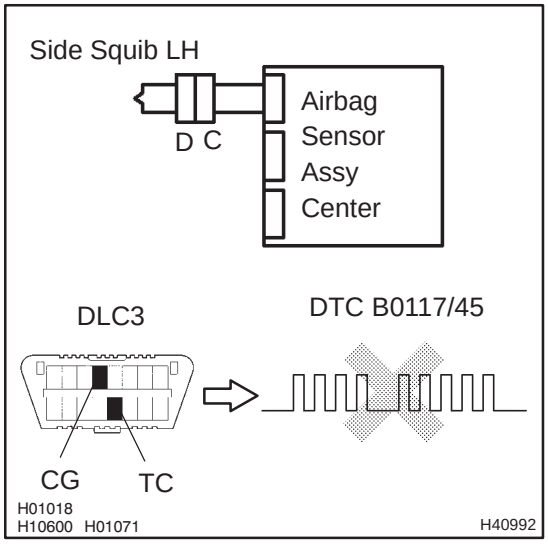

(a) Turn the ignition switch to the LOCK position.
(b) Disconnect the negative (–) terminal cable from the battery, and wait for at least 90 seconds.
(c) Connect the connector to the separate type front seat back assy (side squib LH).
(d) Connect the negative (–) terminal cable to the battery, and wait for at least 2 seconds.
(e) Turn the ignition switch to the ON position, and wait for at least 10 seconds.
(f) Clear the stored DTCs in the memory (See page 05–1184).
(g) Turn the ignition switch to the LOCK position.
(h) Turn the ignition switch to the ON position, and wait for at least 10 seconds.
(i) Check the DTCs (See page 05–1184).
OK:
DTC B0117/45 is not output.

HINT:
Codes other than code B0117/45 may be output at this time, but they are not related to this check.

NG → **REPLACE SEPARATE TYPE FRONT SEAT BACK ASSY**

OK

4 USE SIMULATION METHOD TO CHECK

NG → **Go to step 1**

OK

REPLACE ALL SRS COMPONENTS INCLUDING WIRE HARNESS

DTC	B0118/46	SHORT IN SIDE SQUIB (LH) CIRCUIT (TO B+)

CIRCUIT DESCRIPTION

The side squib LH circuit consists of the airbag sensor assy center and the separate type front seat back assy (side squib LH).
This circuit actuates the SRS to deploy when the SRS deployment conditions are fulfilled.
DTC B0118/46 is recorded when a short to B+ is detected in the side squib LH circuit.

DTC No.	DTC Detecting Condition	Trouble Area
B0118/46	• Short circuit in side squib LH wire harness (to B+) • Side squib LH malfunction • Airbag sensor assy center malfunction	• Separate type front seat back assy (Side squib LH) • Airbag sensor assy center • Floor wire

WIRING DIAGRAM

See page 05–1238.

INSPECTION PROCEDURE

1	CHECK FLOOR WIRE(SIDE SQUIB LH CIRCUIT)

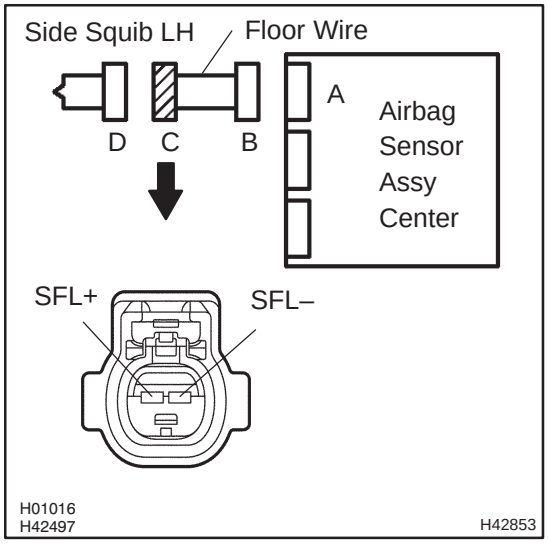

(a) Turn the ignition switch to the LOCK position.
(b) Disconnect the negative (–) terminal cable from the battery, and wait for at least 90 seconds.
(c) Disconnect the connectors from the airbag sensor assy center and the separate type front seat back assy (side squib LH).
(d) Connect the negative (–) terminal cable to the battery, and turn the ignition switch to the ON position.
(e) Measure the voltage between the body ground and SFL+ of the connector "C".
OK:
Voltage: Below 1 V

NG → **REPAIR OR REPLACE FLOOR WIRE**

OK

2 CHECK AIR BAG SENSOR ASSY CENTER

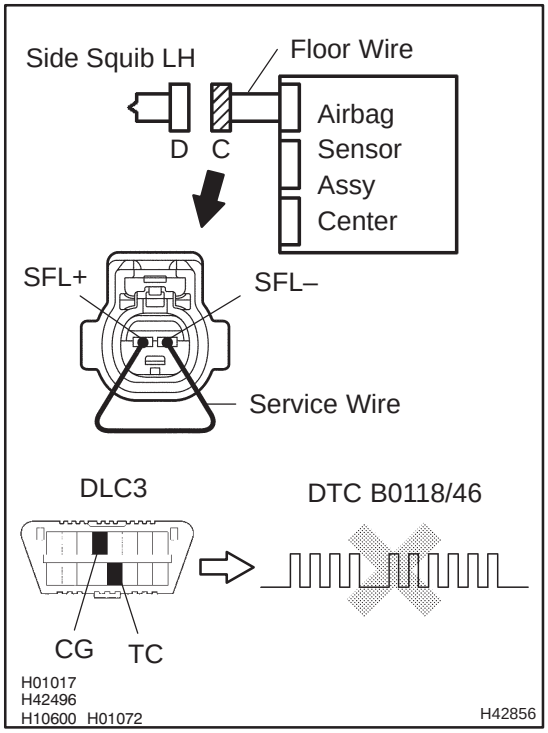

(a) Turn the ignition switch to the LOCK position.
(b) Disconnect the negative (–) terminal cable from the battery, and wait for at least 90 seconds.
(c) Connect the connector to the airbag sensor assy center.
(d) Using a service wire, connect SFL+ and SFL– of the connector ”C”.

NOTICE:
Do not forcibly insert a service wire into the terminal of the connector when connecting.

(e) Connect the negative (–) terminal cable to the battery, and wait for at least 2 seconds.
(f) Turn the ignition switch to the ON position, and wait for at least 10 seconds.
(g) Clear the stored DTCs in the memory (See page 05–1184).
(h) Turn the ignition switch to the LOCK position.
(i) Turn the ignition switch to the ON position, and wait for at least 10 seconds.
(j) Check the DTCs (See page 05–1184).
OK:
DTC B0118/46 is not output.

HINT:
Codes other than code B0118/46 may be output at this time, but they are not related to this check.

NG → **REPLACE AIR BAG SENSOR ASSY CENTER**

OK

3	CHECK SEPARATE TYPE FRONT SEAT BACK ASSY(SIDE SQUIB LH)

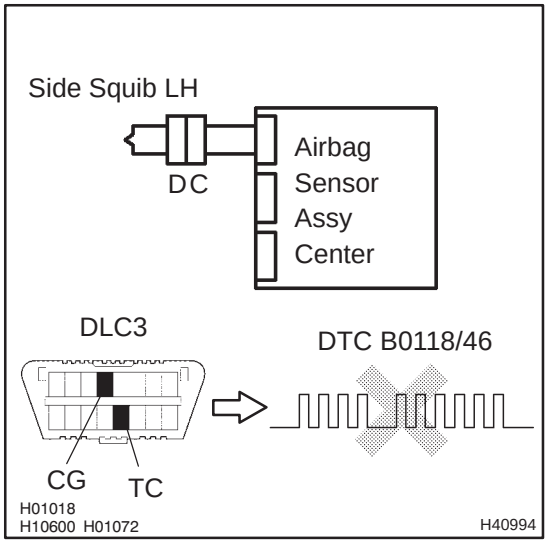

(a) Turn the ignition switch to the LOCK position.
(b) Disconnect the negative (–) terminal cable from the battery, and wait for at least 90 seconds.
(c) Connect the connector to the separate type front seat back assy (side squib LH).
(d) Connect the negative (–) terminal cable to the battery, and wait for at least 2 seconds.
(e) Turn the ignition switch to the ON position, and wait for at least 10 seconds.
(f) Clear the stored DTCs in the memory (See page 05–1184).
(g) Turn the ignition switch to the LOCK position.
(h) Turn the ignition switch to the ON position, and wait for at least 10 seconds.
(i) Check the DTCs (See page 05–1184).
OK:
DTC B0118/46 is not output.

HINT:
Codes other than code B0118/46 may be output at this time, but they are not related to this check.

NG → **REPLACE SEPARATE TYPE FRONT SEAT BACK ASSY**

OK

4	USE SIMULATION METHOD TO CHECK

NG → **Go to step 1**

OK

REPLACE ALL SRS COMPONENTS INCLUDING WIRE HARNESS

DTC	B0121/26	SEAT BELT BUCKLE SWITCH (RH) MALFUNCTION

DTC	B0122/26	SEAT BELT BUCKLE SWITCH (RH) MALFUNCTION

CIRCUIT DESCRIPTION

The seat belt buckle switch RH circuit consists of the airbag sensor assy center and the front seat inner belt assy RH (seat belt buckle switch RH).
DTC B0121/26 or B0122/26 is recorded when a malfunction is detected in the seat belt buckle switch RH circuit.

DTC No.	DTC Detecting Condition	Trouble Area
B0121/B0122/26	• Short circuit in seat belt buckle switch RH wire harness (to ground) • Short circuit in seat belt buckle switch RH wire harness (to B+) • Seat belt buckle switch RH malfunction • Airbag sensor assy center	• Front seat inner belt assy RH (Seat belt buckle switch RH) • Airbag sensor assy center • Floor wire No.2

HINT:
DTC B0121/26 or B0122/26 is indicated only for the RHD vehicle.

WIRING DIAGRAM

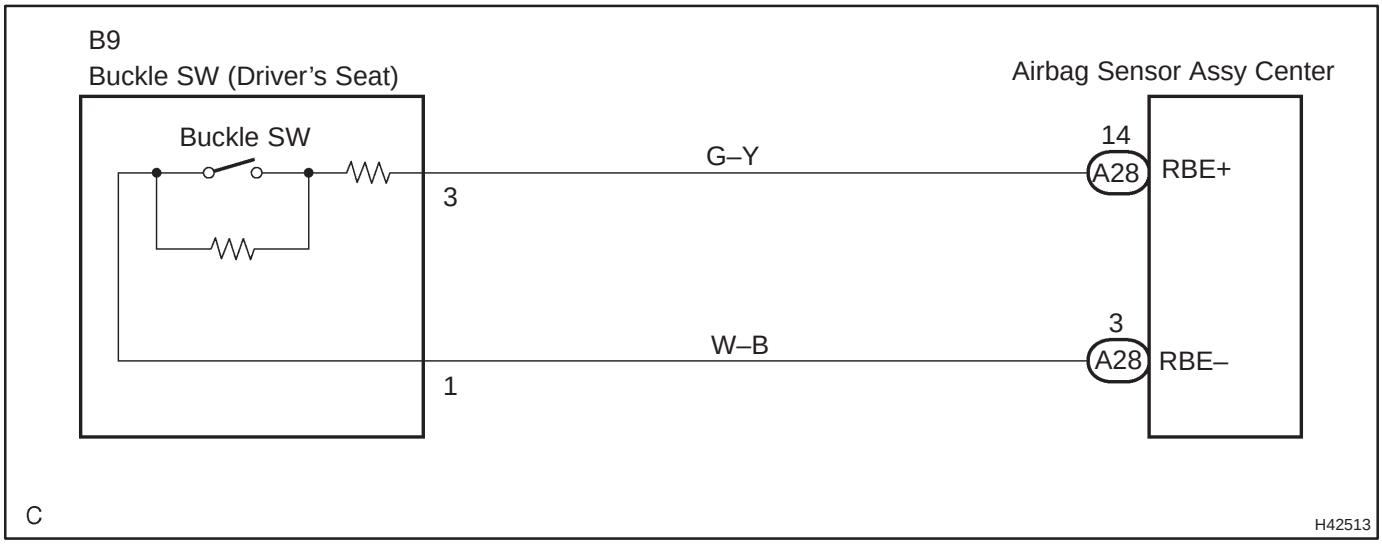

INSPECTION PROCEDURE

1	CHECK FLOOR WIRE NO.2(TO B+)

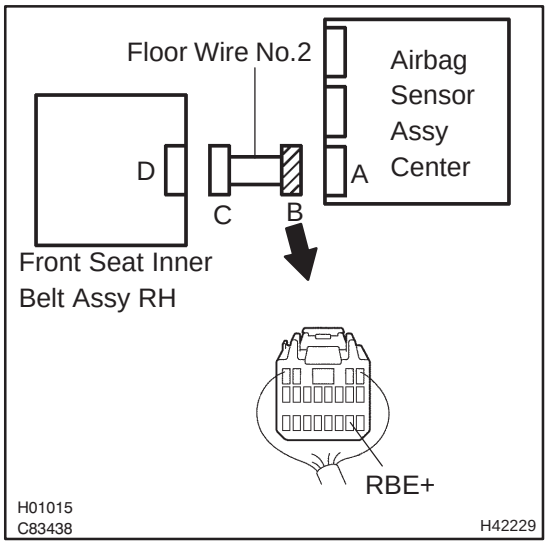

(a) Turn the ignition switch to the LOCK position.
(b) Disconnect the negative (–) terminal cable from the battery, and wait for at least 90 seconds.
(c) Disconnect the connectors from the airbag sensor assy center and the front seat inner belt assy RH.
(d) Connect the negative (–) terminal cable to the battery, and turn the ignition switch to the ON position.
(e) Measure the voltage between the body ground and RBE+ of the connector ”B”.
OK:
Voltage: Below 1 V

NG → **REPAIR OR REPLACE FLOOR WIRE NO.2**

OK

2	CHECK FLOOR WIRE NO.2(TO GROUND)

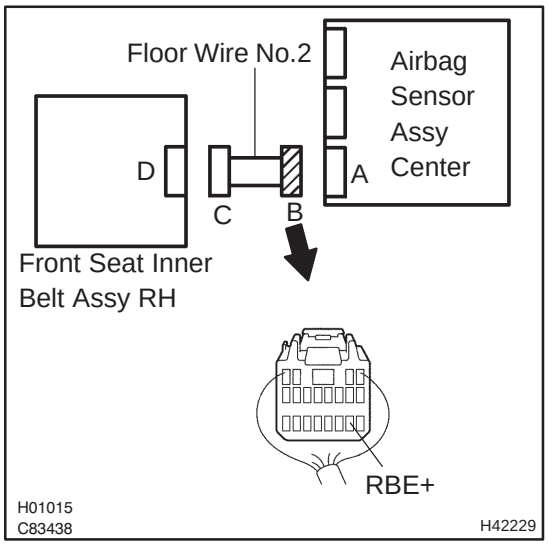

(a) Turn the ignition switch to the LOCK position.
(b) Disconnect the negative (–) terminal cable from the battery, and wait for at least 90 seconds.
(c) Measure the resistance between the body ground and RBE+ of the connector ”B”.
OK:
Resistance: 1 MΩ or Higher

NG → **REPAIR OR REPLACE FLOOR WIRE NO.2**

OK

3 CHECK FRONT SEAT INNER BELT ASSY RH

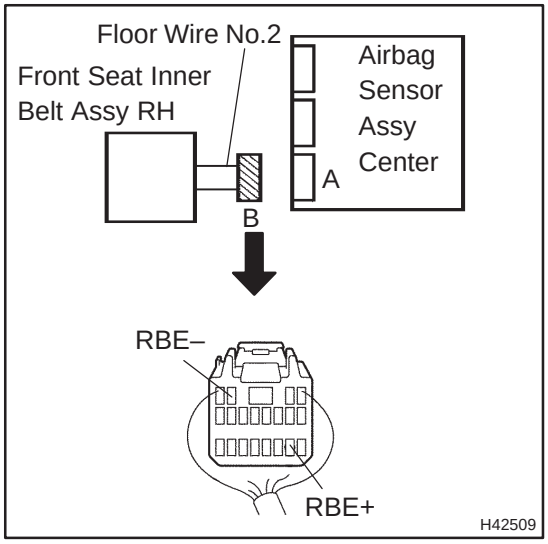

(a) Connect the connector to the front seat inner belt assy RH.
(b) Unlock the seat belt at the front seat RH.
(c) Measure the resistance between RBE+ and RBE– of the connector ”B”.
OK:
Resistance: 1.0 kΩ to 1.6 kΩ

NG → **REPLACE FRONT SEAT INNER BELT ASSY RH**

OK

4 CHECK FRONT SEAT INNER BELT ASSY RH

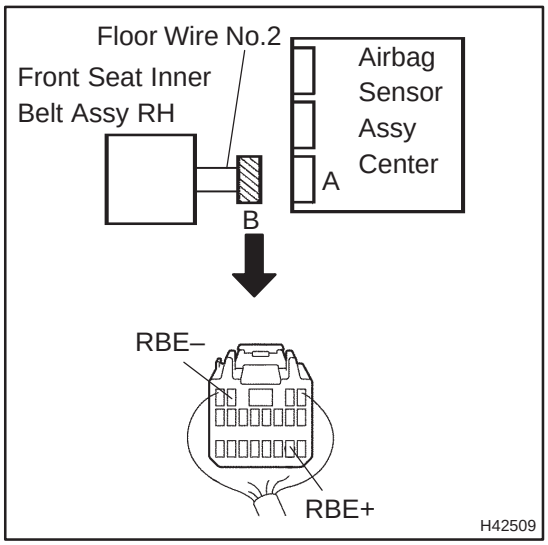

(a) Lock the seat belt at the front seat RH.
(b) Measure the resistance between the RBE+ and RBE– of the connector ”B”.
OK:
Resistance: 100 Ω to 500 Ω

NG → **REPLACE FRONT SEAT INNER BELT ASSY RH**

OK

5	CHECK AIR BAG SENSOR ASSY CENTER

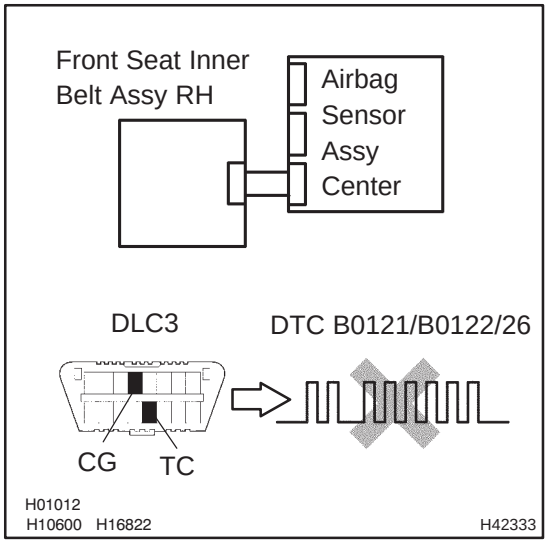

(a) Connect the connector to the airbag sensor assy center.
(b) Connect the negative (–) terminal cable to the battery, and wait for at least 2 seconds.
(c) Turn the ignition switch to the ON position, and wait for at least 10 seconds.
(d) Clear the stored DTCs in the memory (See page 05–1184).
(e) Turn the ignition switch to the LOCK position.
(f) Turn the ignition switch to the ON position, and wait for at least 10 seconds.
(g) Check the DTCs (See page 05–1184).
OK:
DTC B0121/26 or B0122/26 is not output.

HINT:
Codes other than code B0121/26 or B0122/26 may be output at this time, but they are not relevant to this check.

NG → **REPLACE AIR BAG SENSOR ASSY CENTER**

OK

USE SIMULATION METHOD TO CHECK

DTC	B0126/27	SEAT BELT BUCKLE SWITCH (LH) MALFUNCTION

DTC	B0127/27	SEAT BELT BUCKLE SWITCH (LH) MALFUNCTION

CIRCUIT DESCRIPTION

The seat belt buckle switch LH circuit consists of the airbag sensor assy center and the front seat inner belt assy LH (seat belt buckle switch LH).
DTC B0126/27 or B0127/27 is recorded when a malfunction is detected in the seat belt buckle switch LH circuit.

DTC No.	DTC Detecting Condition	Trouble Area
B0126/B0127/27	• Short circuit in seat belt buckle switch LH wire harness (to ground) • Short circuit in seat belt buckle switch LH wire harness (to B+) • Front seat inner belt assy LH malfunction • Airbag sensor assy center malfunction	• Front seat inner belt assy LH (Seat belt buckle switch LH) • Airbag sensor assy center • Floor wire

HINT:
DTC B0126/27 or B0127/27 is indicated only for the LHD vehicle.

WIRING DIAGRAM

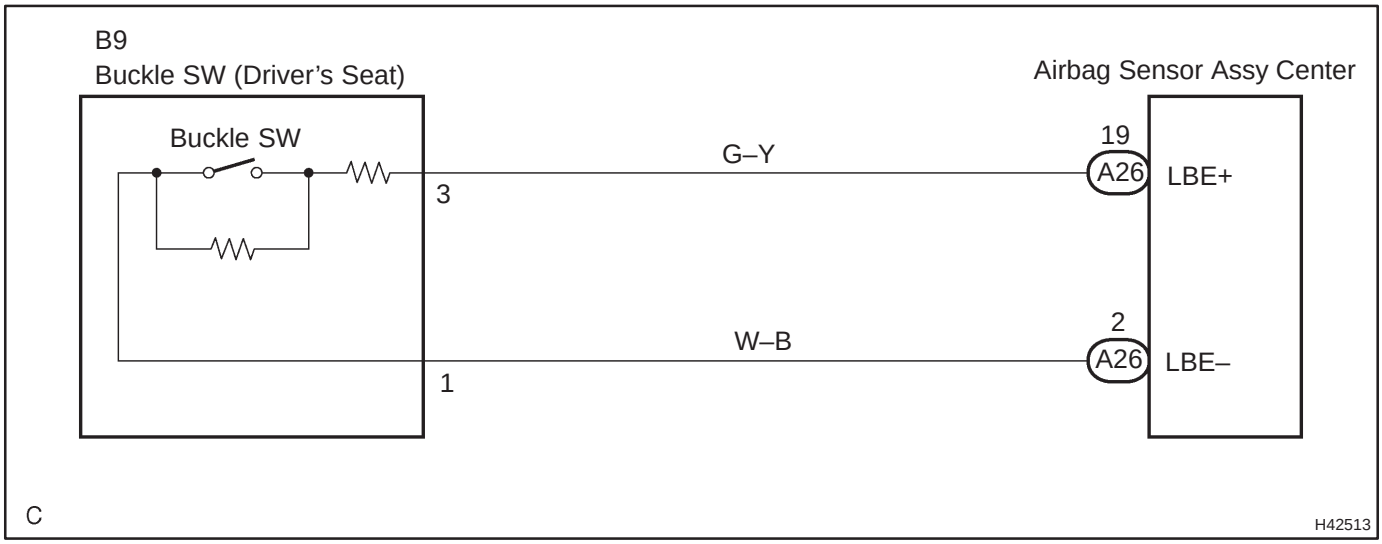

INSPECTION PROCEDURE

1	CHECK FLOOR WIRE(TO B+)

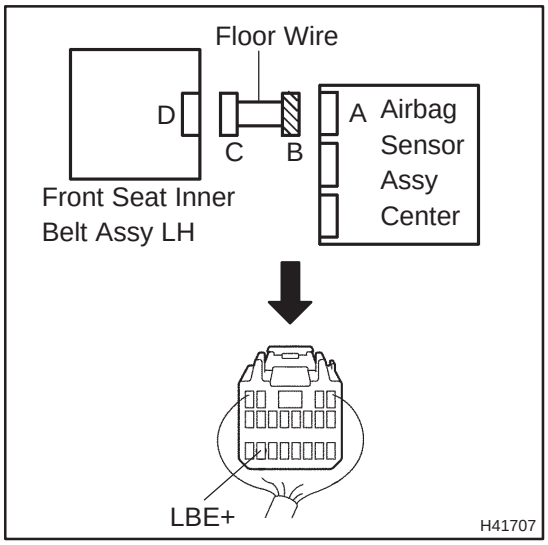

(a) Turn the ignition switch to the LOCK position.
(b) Disconnect the negative (–) terminal cable from the battery, and wait for at least 90 seconds.
(c) Disconnect the connectors from the airbag sensor assy center and the front seat inner belt assy LH.
(d) Connect the negative (–) terminal cable to the battery, and turn the ignition switch to the ON position.
(e) Measure the voltage between the body ground and LBE+ of the connector ”B”.
OK:
Voltage: Below 1 V

NG → **REPAIR OR REPLACE FLOOR WIRE**

OK

2	CHECK FLOOR WIRE(TO GROUND)

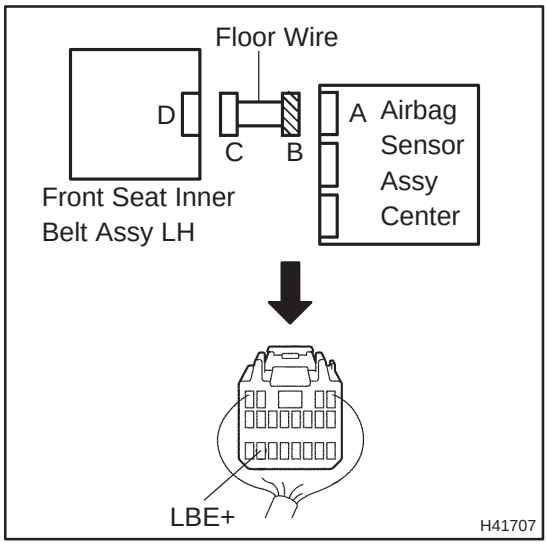

(a) Turn the ignition switch to the LOCK position.
(b) Disconnect the negative (–) terminal cable from the battery, and wait for at least 90 seconds.
(c) Measure the resistance between the body ground and LBE+ of the connector ”B”.
OK:
Resistance: 1 MΩ or Higher

NG → **REPAIR OR REPLACE FLOOR WIRE**

OK

3 CHECK FRONT SEAT INNER BELT ASSY LH

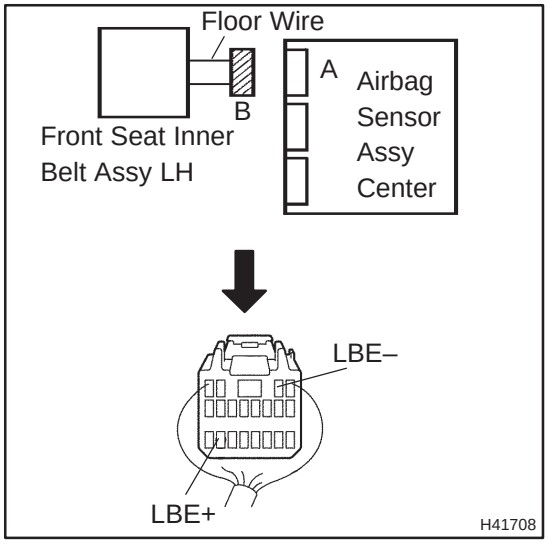

(a) Connect the connector to the front seat inner belt assy LH.
(b) Unlock the seat belt at the front seat LH.
(c) Measure the resistance between LBE+ and LBE– of the connector ”B”.
OK:
Resistance: 1.0 kΩ to 1.6 kΩ

NG → **REPLACE FRONT SEAT INNER BELT ASSY LH**

OK

4 CHECK FRONT SEAT INNER BELT ASSY LH

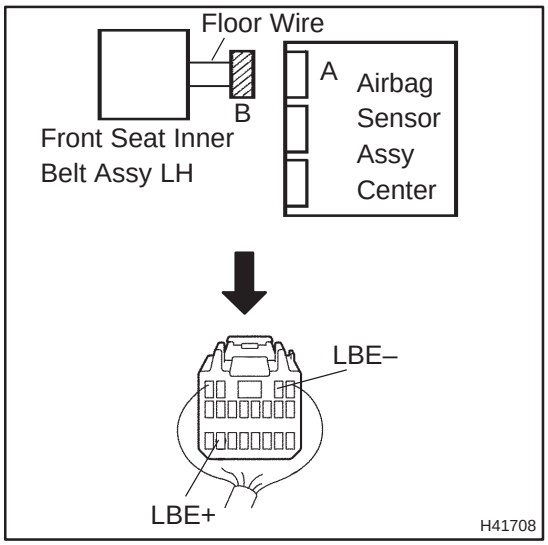

(a) Lock the seat belt at the front seat LH.
(b) Measure the resistance between LBE+ and LBE– of the connector ”B”.
OK:
Resistance: 100 Ω to 500 Ω

NG → **REPLACE FRONT SEAT INNER BELT ASSY LH**

OK

5	CHECK AIR BAG SENSOR ASSY CENTER

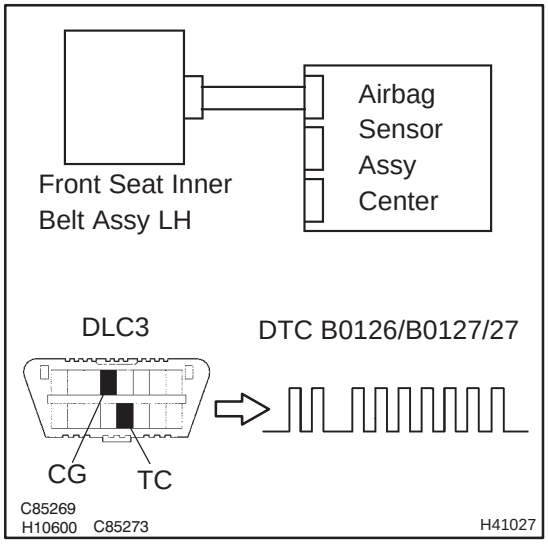

(a) Connect the connector to the airbag sensor assy center.
(b) Connect the negative (–) terminal cable to the battery, and wait for at least 2 seconds.
(c) Turn the ignition switch to the ON position, and wait for at least 10 seconds.
(d) Clear the stored DTCs in the memory (See page 05–1184).
(e) Turn the ignition switch to the LOCK position.
(f) Turn the ignition switch to the ON position, and wait for at least 10 seconds.
(g) Check the DTCs (See page 05–1184).

OK:

DTC B0126/27 or B0127/27 is not output.

HINT:

Codes other than code B0126/27 or B0127/27 may be output at this time, but they are not relevant to this check.

NG → **REPLACE AIR BAG SENSOR ASSY CENTER**

OK

USE SIMULATION METHOD TO CHECK

DTC B0130/63 SHORT IN P/T SQUIB (RH) CIRCUIT

CIRCUIT DESCRIPTION

The P/T squib RH circuit consists of the airbag sensor assy center and the front seat outer belt assy RH (seat belt pretensioner RH).
This circuit actuates the SRS to deploy when the SRS deployment conditions are fulfilled.
DTC B0130/63 is recorded when a short circuit is detected in the P/T squib RH circuit.

DTC No.	DTC Detecting Condition	Trouble Area
B0130/63	• Short circuit between PR+ wire harness and PR– wire harness of P/T squib RH • P/T squib RH malfunction • Airbag sensor assy center malfunction	• Front seat outer belt assy RH (P/T squib RH) • Airbag sensor assy center • Floor wire No.2

WIRING DIAGRAM

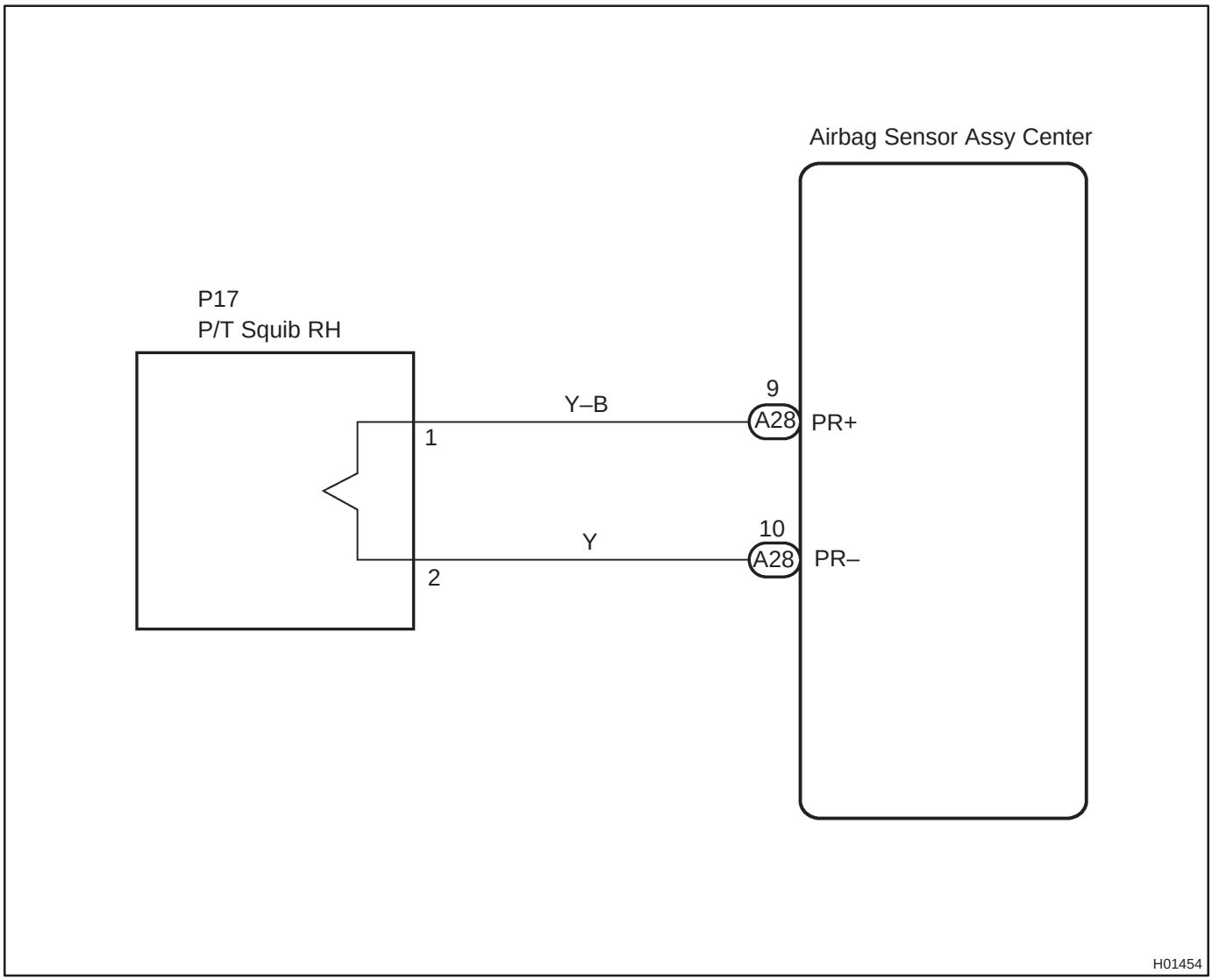

INSPECTION PROCEDURE

1	CHECK CONNECTOR

(a) Turn the ignition switch to the LOCK position.
(b) Disconnect the negative (–) terminal cable from the battery, and wait for at least 90 seconds.
(c) Disconnect the connectors from the airbag assy center and the front seat outer belt assy RH.
(d) Check that the floor wire No.2 connector (on the front seat outer belt assy RH side) is not damaged.
OK:
The lock button is not disengaged, or the claw of the lock is not deformed or damaged.

NG → **REPAIR OR REPLACE FLOOR WIRE NO.2**

OK

2	CHECK FLOOR WIRE NO.2(P/T SQUIB RH CIRCUIT)

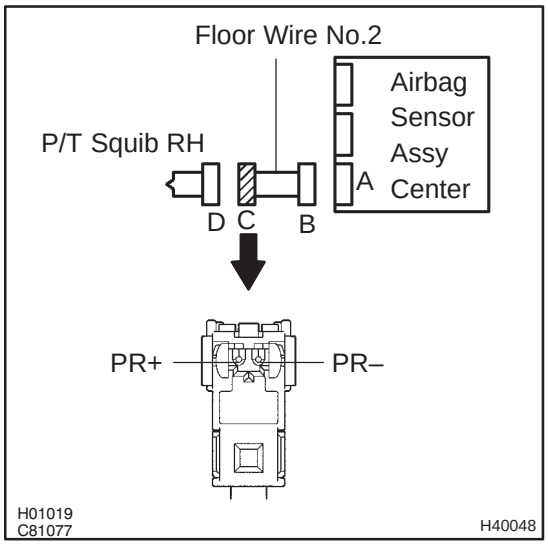

(a) Release the activation prevention mechanism built in the connector "B" (See page 05–1184).
(b) Measure the resistance between PR+ and PR– of the connector "C".
OK:
Resistance: 1 MΩ or Higher

NG → **REPAIR OR REPLACE FLOOR WIRE NO.2**

OK

3 CHECK AIR BAG SENSOR ASSY CENTER

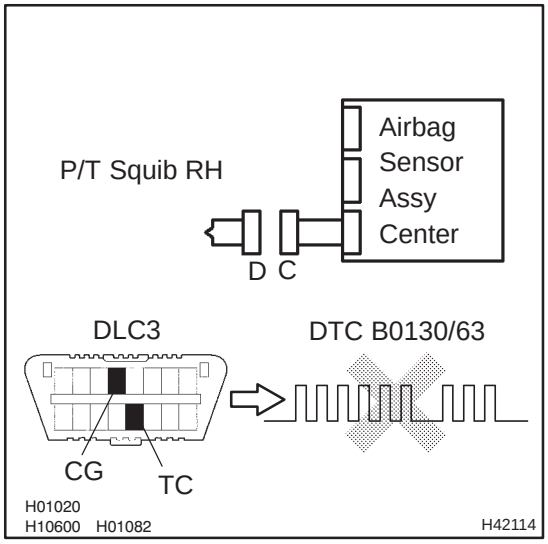

(a) Connect the connector to the airbag sensor assy center.
(b) Connect the negative (–) terminal cable to the battery, and wait for at least 2 seconds.
(c) Turn the ignition switch to the ON position, and wait for at least 10 seconds.
(d) Clear the stored DTCs in the memory (See page 05–1184).
(e) Turn the ignition switch to the LOCK position.
(f) Turn the ignition switch to the ON position, and wait for at least 10 seconds.
(g) Check the DTCs (See page 05–1184).
OK:
DTC B0130/63 is not output.

HINT:
Codes other than code B0130/63 may be output at this time, but they are not related to this check.

NG → **REPLACE AIR BAG SENSOR ASSY CENTER**

OK

4 CHECK FRONT SEAT OUTER BELT ASSY RH(P/T SQUIB RH)

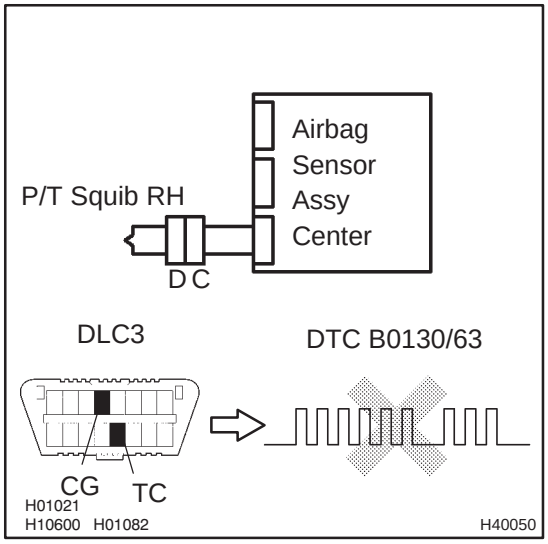

(a) Turn the ignition switch to the LOCK position.
(b) Disconnect the negative (–) terminal cable from the battery, and wait for at least 90 seconds.
(c) Connect the connector to the front seat outer belt assy RH.
(d) Connect the negative (–) terminal cable to the battery, and wait for at least 2 seconds.
(e) Turn the ignition switch to the ON position, and wait for at least 10 seconds.
(f) Clear the stored DTCs in the memory (See page 05–1184).
(g) Turn the ignition switch to the LOCK position.
(h) Turn the ignition switch to the ON position, and wait for at least 10 seconds.
(i) Check the DTCs (See page 05–1184).
OK:
DTC B0130/63 is not output.

HINT:
Codes other than code B0130/63 may be output at this time, but they are not related to this check.

NG → **REPLACE FRONT SEAT OUTER BELT ASSY RH**

OK

USE SIMULATION METHOD TO CHECK

DTC B0131/64 OPEN IN P/T (RH) CIRCUIT

CIRCUIT DESCRIPTION

The P/T squib RH circuit consists of the airbag sensor assy center and the front seat outer belt assy RH (seat belt pretensioner RH).
This circuit actuates the SRS to deploy when the SRS deployment conditions are fulfilled.
DTC B0131/64 is recorded when an open circuit is detected in the P/T squib RH circuit.

DTC No.	DTC Detecting Condition	Trouble Area
B0131/64	• Open circuit in PR+ wire harness or PR– wire harness of P/T squib RH • P/T squib RH malfunction • Airbag sensor assy center malfunction	• Front seat outer belt assy RH (P/T squib RH) • Airbag sensor assy center • Floor wire No.2

WIRING DIAGRAM

See page 05–1258.

INSPECTION PROCEDURE

1 CHECK FLOOR WIRE NO.2(P/T SQUIB RH CIRCUIT)

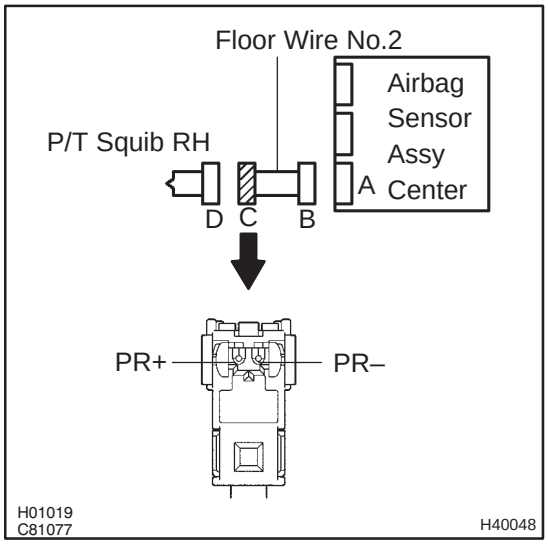

(a) Turn the ignition switch to the LOCK position.
(b) Disconnect the negative (–) terminal cable from the battery, and wait for at least 90 seconds.
(c) Disconnect the connectors from the airbag sensor assy center and the front seat outer belt assy RH.
(d) Measure the resistance between PR+ and PR– of the connector "C".
OK:
Resistance: Below 1 Ω

NG → **REPAIR OR REPLACE FLOOR WIRE NO.2**

OK

2 CHECK AIR BAG SENSOR ASSY CENTER

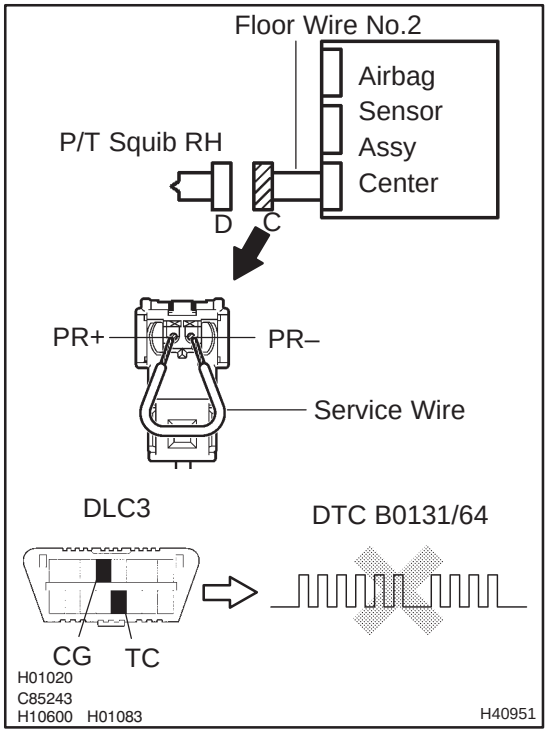

(a) Connect the connector to the airbag sensor assy center.
(b) Using a service wire, connect PR+ and PR– of the connector ”C”.

NOTICE:

Do not forcibly insert a service wire into the terminal of the connector when connecting.

(c) Connect the negative (–) terminal cable to the battery, and wait for at least 2 seconds.
(d) Turn the ignition switch to the ON position, and wait for at least 10 seconds.
(e) Clear the stored DTCs in the memory (See page 05–1184).
(f) Turn the ignition switch to the LOCK position.
(g) Turn the ignition switch to the ON position, and wait for at least 10 seconds.
(h) Check the DTCs (See page 05–1184).

OK:

DTC B0131/64 is not output.

HINT:

Codes other than code B0131/64 may be output at this time, but they are not related to this check.

NG → **REPLACE AIR BAG SENSOR ASSY CENTER**

OK

3	CHECK FRONT SEAT OUTER BELT ASSY RH(P/T SQUIB RH)

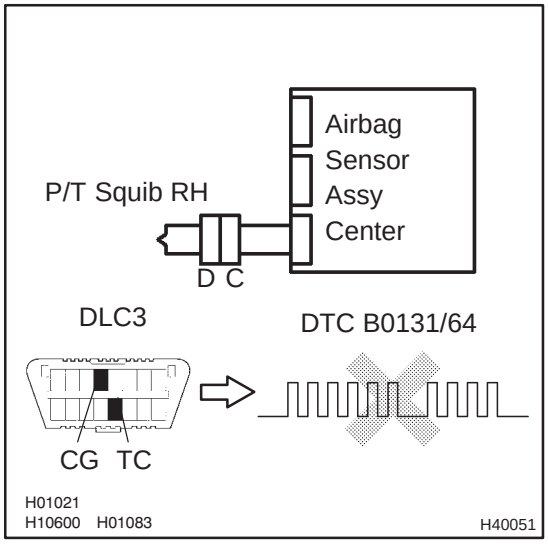

(a) Turn the ignition switch to the LOCK position.
(b) Disconnect the negative (–) terminal cable from the battery, and wait for at least 90 seconds.
(c) Connect the connector to the front seat outer belt assy RH.
(d) Connect the negative (–) terminal cable to the battery, and wait for at least 2 seconds.
(e) Turn the ignition switch to the ON position, and wait for at least 10 seconds.
(f) Clear the stored DTCs in the memory (See page 05–1184).
(g) Turn the ignition switch to the LOCK position.
(h) Turn the ignition switch to the ON position, and wait for at least 10 seconds.
(i) Check the DTCs (See page 05–1184).
OK:
DTC B0131/64 is not output.

HINT:
Codes other than code B0131/64 may be output at this time, but they are not related to this check.

NG → **REPLACE FRONT SEAT OUTER BELT ASSY RH**

OK

USE SIMULATION METHOD TO CHECK

DTC	B0132/61	SHORT IN P/T SQUIB (RH) CIRCUIT (TO GROUND)

CIRCUIT DESCRIPTION

The P/T squib RH circuit consists of the airbag sensor assy center and the front seat outer belt assy RH (seat belt pretensioner RH).
This circuit actuates the SRS to deploy when the SRS deployment conditions are fulfilled.
DTC B0132/61 is recorded when a short to ground is detected in the P/T squib RH circuit.

DTC No.	DTC Detecting Condition	Trouble Area
B0132/61	• Short circuit in P/T squib RH wire harness (to ground) • P/T squib RH malfunction • Airbag sensor assy center malfunction	• Front seat outer belt assy RH (P/T squib RH) • Airbag sensor assy center • Floor wire No.2

WIRING DIAGRAM

See page 05–1258.

INSPECTION PROCEDURE

1	CHECK FLOOR WIRE NO.2(P/T SQUIB RH CIRCUIT)

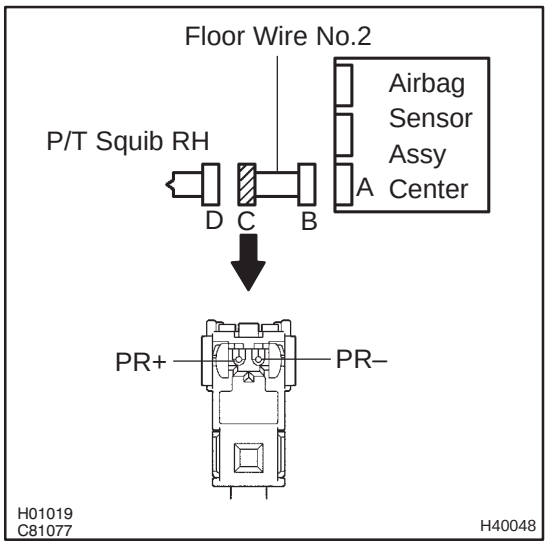

(a) Turn the ignition switch to the LOCK position.
(b) Disconnect the negative (–) terminal cable from the battery, and wait for at least 90 seconds.
(c) Disconnect the connectors from the airbag sensor assy center and the front seat outer belt assy RH.
(d) Measure the resistance between the body ground and PR+ of the connector ”C”.
OK:
Resistance: 1 MΩ or Higher

NG → **REPAIR OR REPLACE FLOOR WIRE NO.2**

OK

2 CHECK AIR BAG SENSOR ASSY CENTER

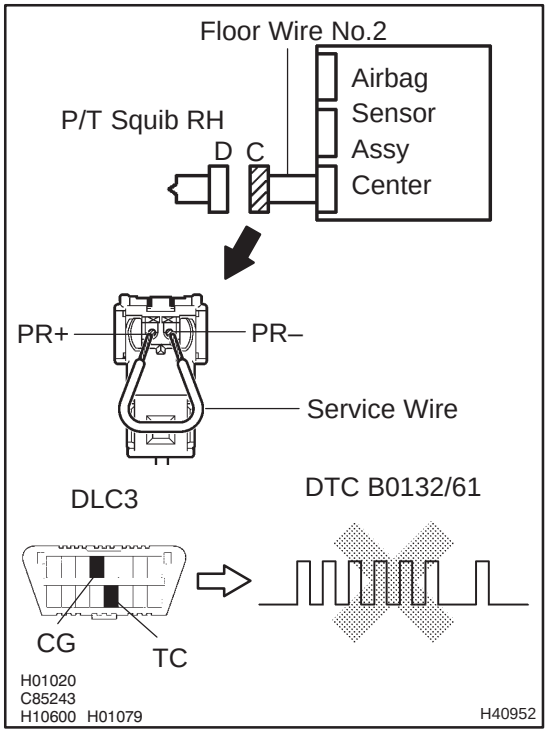

(a) Connect the connector to the airbag sensor assy center.
(b) Using a service wire, connect PR+ and PR– of the connector ”C”.

NOTICE:

Do not forcibly insert a service wire into the terminal of the connector when connecting.

(c) Connect the negative (–) terminal cable to the battery, and wait for at least 2 seconds.
(d) Turn the ignition switch to the ON position, and wait for at least 10 seconds.
(e) Clear the stored DTCs in the memory (See page 05–1184).
(f) Turn the ignition switch to the LOCK position.
(g) Turn the ignition switch to the ON position, and wait for at least 10 seconds.
(h) Check the DTCs (See page 05–1184).

OK:

DTC B0132/61 is not output.

HINT:

Codes other than code B0132/61 may be output at this time, but they are not related to this check.

NG → **REPLACE AIR BAG SENSOR ASSY CENTER**

OK

3	CHECK FRONT SEAT OUTER BELT ASSY RH(P/T SQUIB RH)

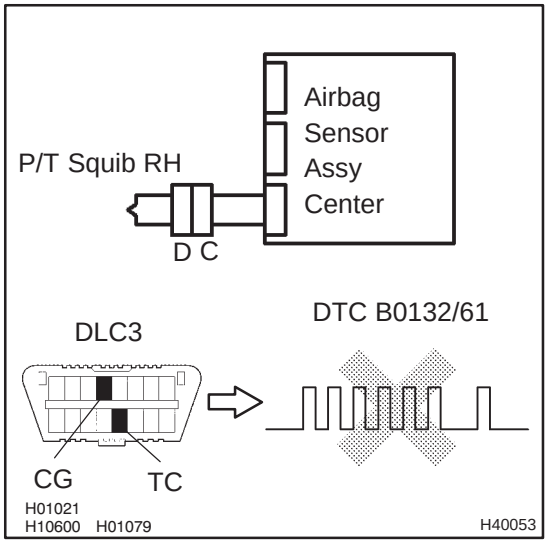

(a) Turn the ignition switch to the LOCK position.
(b) Disconnect the negative (–) terminal cable from the battery, and wait for at least 90 seconds.
(c) Connect the connector to the front seat outer belt assy RH.
(d) Connect the negative (–) terminal cable to the battery, and wait for at least 2 seconds.
(e) Turn the ignition switch to the ON position, and wait for at least 10 seconds.
(f) Clear the stored DTCs in the memory (See page 05–1184).
(g) Turn the ignition switch to the LOCK position.
(h) Turn the ignition switch to the ON position, and wait for at least 10 seconds.
(i) Check the DTCs (See page 05–1184).
OK:
DTC B0132/61 is not output.

HINT:
Codes other than code B0132/61 may be output at this time, but they are not related to this check.

NG → **REPLACE FRONT SEAT OUTER BELT ASSY RH**

OK

4	USE SIMULATION METHOD TO CHECK

NG → **Go to step 1**

OK

REPLACE ALL SRS COMPONENTS INCLUDING WIRE HARNESS

DTC B0133/62 SHORT IN P/T SQUIB (RH) CIRCUIT (TO B+)

CIRCUIT DESCRIPTION

The P/T squib RH circuit consists of the airbag sensor assy center and the front seat outer belt assy RH (seat belt pretensioner RH).
This circuit actuates the SRS to deploy when the SRS deployment conditions are fulfilled.
DTC B0133/62 is recorded when a short to B+ is detected in the P/T squib RH circuit.

DTC No.	DTC Detecting Condition	Trouble Area
B0133/62	• Short circuit in P/T squib RH wire harness (to B+) • P/T squib RH malfunction • Airbag sensor assy center malfunction	• Front seat outer belt assy RH (P/T squib RH) • Airbag sensor assy center • Floor wire No.2

WIRING DIAGRAM

See page 05–1258.

INSPECTION PROCEDURE

1 CHECK FLOOR WIRE NO.2(P/T SQUIB RH CIRCUIT)

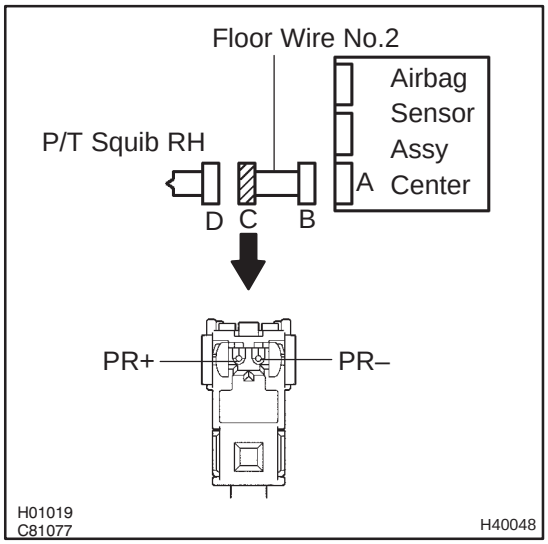

(a) Turn the ignition switch to the LOCK position.
(b) Disconnect the negative (–) terminal cable from the battery, and wait for at least 90 seconds.
(c) Disconnect the connectors from the airbag sensor assy center and the front seat outer belt assy RH.
(d) Connect the negative (–) terminal cable to the battery, and turn the ignition switch to the ON position.
(e) Measure the voltage between the body ground and PR+ of the connector ”C”.
OK:
Voltage: Below 1 V

NG → **REPAIR OR REPLACE FLOOR WIRE NO.2**

OK

2 CHECK AIR BAG SENSOR ASSY CENTER

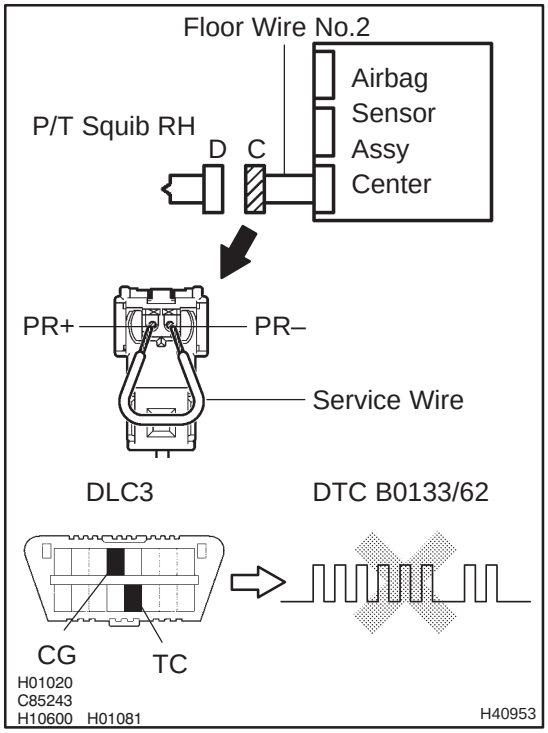

(a) Turn the ignition switch to the LOCK position.
(b) Disconnect the negative (–) terminal cable from the battery, and wait for at least 90 seconds.
(c) Connect the connector to the airbag sensor assy center.
(d) Using a service wire, connect PR+ and PR– of the connector ”C”.

NOTICE:
Do not forcibly insert a service wire into the terminal of the connector when connecting.

(e) Connect the negative (–) terminal cable to the battery, and wait for at least 2 seconds.
(f) Turn the ignition switch to the ON position, and wait for at least 10 seconds.
(g) Clear the stored DTCs in the memory (See page 05–1184).
(h) Turn the ignition switch to the LOCK position.
(i) Turn the ignition switch to the ON position, and wait for at least 10 seconds.
(j) Check the DTCs (See page 05–1184).
OK:
DTC B0133/62 is not output.

HINT:
Codes other than code B0133/62 may be output at this time, but they are not related to this check.

NG → **REPLACE AIR BAG SENSOR ASSY CENTER**

OK

3 CHECK FRONT SEAT OUTER BELT ASSY RH(P/T SQUIB RH)

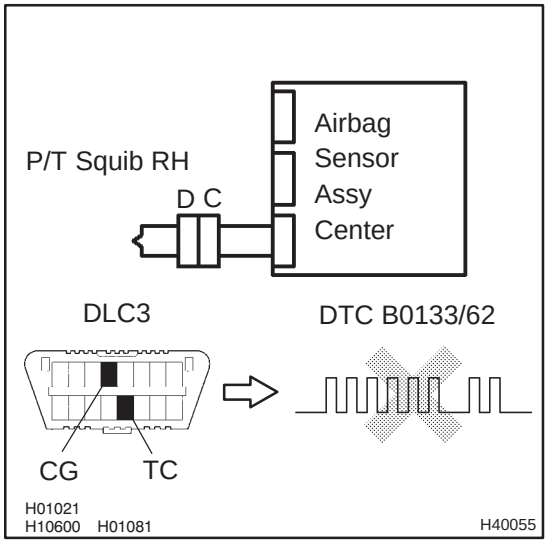

(a) Turn the ignition switch to the LOCK position.
(b) Disconnect the negative (–) terminal cable from the battery, and wait for at least 90 seconds.
(c) Connect the connector to the front seat outer belt assy RH.
(d) Connect the negative (–) terminal cable to the battery, and wait for at least 2 seconds.
(e) Turn the ignition switch to the ON position, and wait for at least 10 seconds.
(f) Clear the stored DTCs in the memory (See page 05–1184).
(g) Turn the ignition switch to the LOCK position.
(h) Turn the ignition switch to the ON position, and wait for at least 10 seconds.
(i) Check the DTCs (See page 05–1184).
OK:
DTC B0133/62 is not output.

HINT:
Codes other than code B0133/62 may be output at this time, but they are not related to this check.

NG → **REPLACE FRONT SEAT OUTER BELT ASSY RH**

OK

4 USE SIMULATION METHOD TO CHECK

NG → **Go to step 1**

OK

REPLACE ALL SRS COMPONENTS INCLUDING WIRE HARNESS

DTC B0135/73 SHORT IN P/T SQUIB (LH) CIRCUIT

CIRCUIT DESCRIPTION

The P/T squib LH circuit consists of the airbag sensor assy center and the front seat outer belt assy LH (seat belt pretensioner LH).
This circuit actuates the SRS to deploy when the SRS deployment conditions are fulfilled.
DTC B0135/73 is recorded when a short circuit is detected in the P/T squib LH circuit.

DTC No.	DTC Detecting Condition	Trouble Area
B0135/73	• Short circuit between PL+ wire harness and PL– wire harness of P/T squib LH • P/T squib LH malfunction • Airbag sensor assy center malfunction	• Front seat outer belt assy LH (P/T squib LH) • Airbag sensor assy center • Floor wire

WIRING DIAGRAM

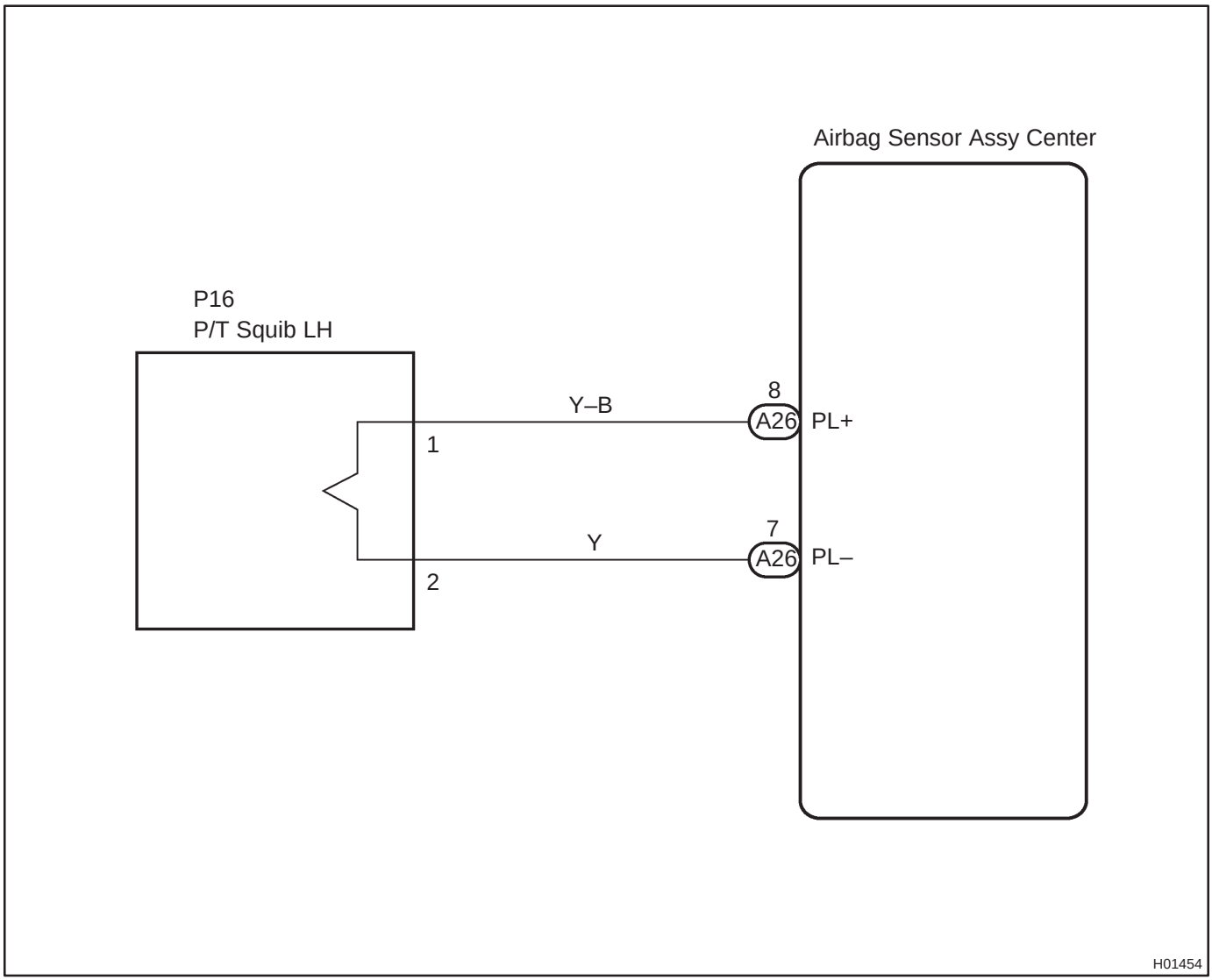

INSPECTION PROCEDURE

1	CHECK CONNECTOR

(a) Turn the ignition switch to the LOCK position.
(b) Disconnect the negative (–) terminal cable from the battery, and wait at least 90 seconds.
(c) Disconnect the connector from the airbag sensor assy center and the front seat outer belt assy LH.
(d) Check that the floor wire connector (on the front seat outer belt assy LH side) is not damaged.
OK:
The lock button is not disengaged, or the claw of the lock is not deformed or damaged.

NG → **REPAIR OR REPLACE FLOOR WIRE**

OK

2	CHECK FLOOR WIRE(P/T SQUIB LH CIRCUIT)

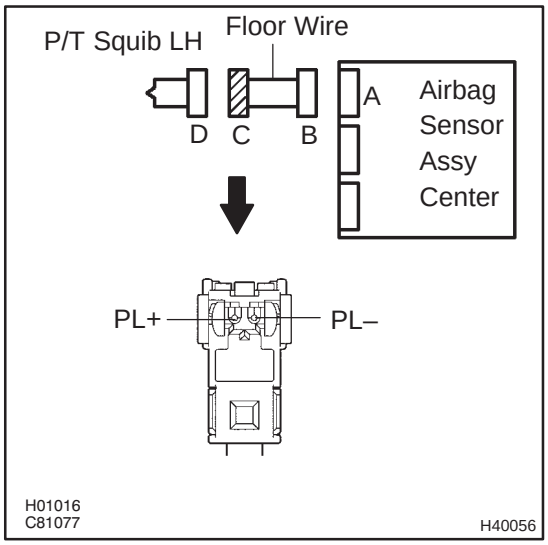

(a) Release the activation prevention mechanism built in the connector "B" (See page 05–1184).
(b) Measure the resistance between PL+ and PL– of the connector "C".
OK:
Resistance: 1 MΩ or Higher

NG → **REPAIR OR REPLACE FLOOR WIRE**

OK

3 CHECK AIR BAG SENSOR ASSY CENTER

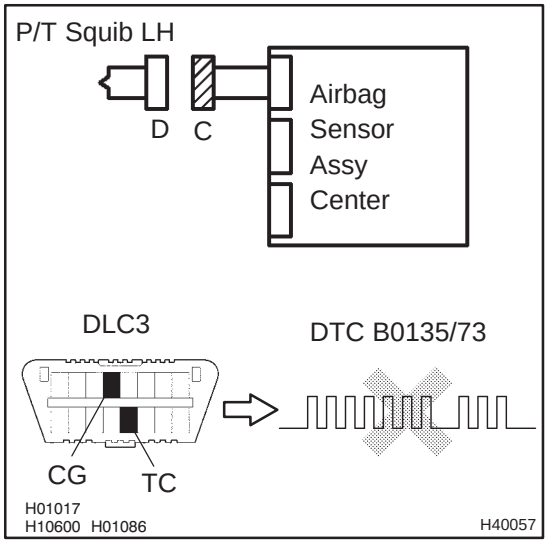

(a) Connect the connector to the airbag sensor assy center.
(b) Connect the negative (–) terminal cable to the battery, and wait for at least 2 seconds.
(c) Turn the ignition switch to the ON position, and wait for at least 10 seconds.
(d) Clear the stored DTCs in the memory (See page 05–1184).
(e) Turn the ignition switch to the LOCK position.
(f) Turn the ignition switch to the ON position, and wait for at least 10 seconds.
(g) Check the DTCs (See page 05–1184).

OK:

DTC B0135/73 is not output.

HINT:

Codes other than code B0135/73 may be output at this time, but they are not related to this check.

NG → **REPLACE AIR BAG SENSOR ASSY CENTER**

OK

4 CHECK FRONT SEAT OUTER BELT ASSY LH(P/T SQUIB LH)

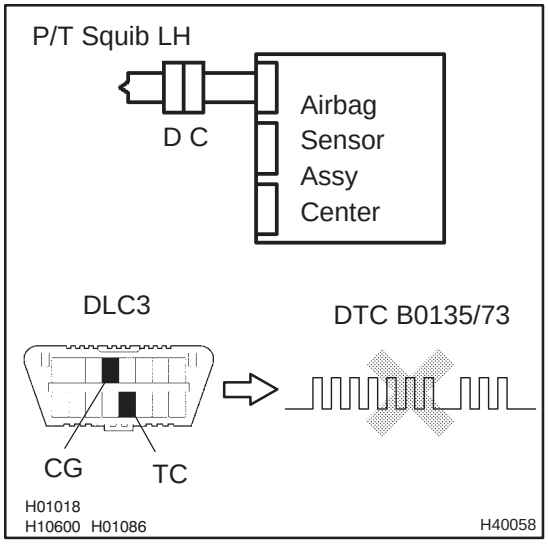

(a) Turn the ignition switch to the LOCK position.
(b) Disconnect the negative (–) terminal cable from the battery, and wait for at least 90 seconds.
(c) Connect the connector to the front seat outer belt assy LH.
(d) Connect the negative (–) terminal cable to the battery, and wait for at least 2 seconds.
(e) Turn the ignition switch to the ON position, and wait for at least 10 seconds.
(f) Clear the stored DTCs in the memory (See page 05–1184).
(g) Turn the ignition switch to the LOCK position.
(h) Turn the ignition switch to the ON position, and wait for at least 10 seconds.
(i) Check the DTCs (See page 05–1184).

OK:

DTC B0135/73 is not output.

HINT:

Codes other than code B0135/73 may be output at this time, but they are not related to this check.

NG → **REPLACE FRONT SEAT OUTER BELT ASSY LH**

OK

USE SIMULATION METHOD TO CHECK

DTC B0136/74 OPEN IN P/T SQUIB (LH) CIRCUIT

CIRCUIT DESCRIPTION

The P/T squib LH circuit consists of the airbag sensor assy center and the front seat outer belt assy LH (seat belt pretensioner LH).
This circuit actuates the SRS to deploy when the SRS deployment conditions are fulfilled.
DTC B0136/74 is recorded when an open circuit is detected in the P/T squib LH circuit.

DTC No.	DTC Detecting Condition	Trouble Area
B0136/74	• Open circuit in PL+ wire harness or PL– wire harness of P/T squib LH • P/T squib LH malfunction • Airbag sensor assy center malfunction	• Front seat outer belt assy LH (P/T squib LH) • Airbag sensor assy center • Floor wire

WIRING DIAGRAM

See page 05–1270.

INSPECTION PROCEDURE

1 CHECK FLOOR WIRE(P/T SQUIB LH CIRCUIT)

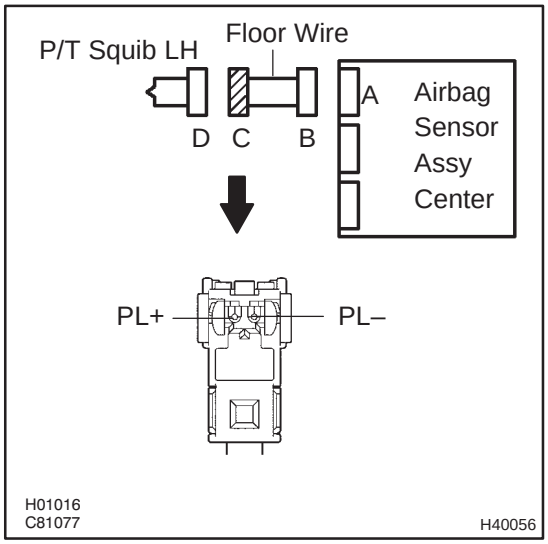

(a) Turn the ignition switch to the LOCK position.
(b) Disconnect the negative (–) terminal cable from the battery, and wait for at least 90 seconds.
(c) Disconnect the connectors from the airbag sensor assy center and the front seat outer belt assy LH.
(d) Measure the resistance between PL+ and PL– of the connector ”C”.
OK:
Resistance: Below 1 Ω

NG → **REPAIR OR REPLACE FLOOR WIRE**

OK

2 CHECK AIR BAG SENSOR ASSY CENTER

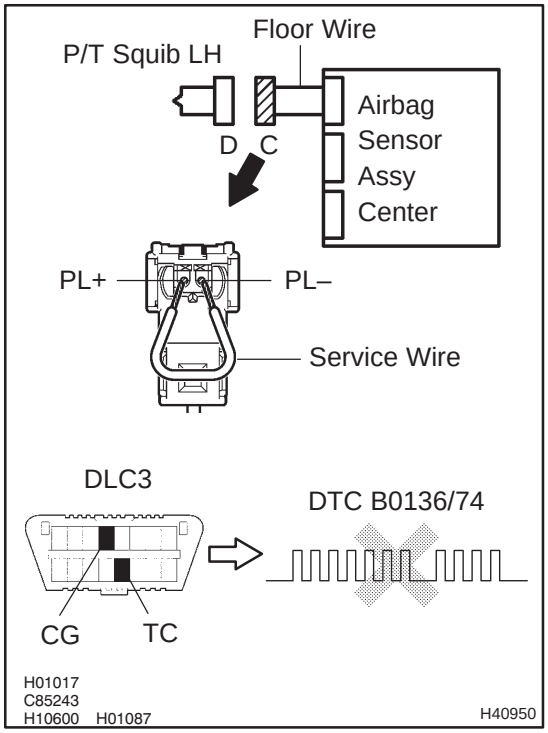

(a) Connect the connector to the airbag sensor assy center.
(b) Using a service wire, connect PL+ and PL– of the connector ”C”.

NOTICE:

Do not forcibly insert a service wire into the terminal of the connector when connecting.

(c) Connect the negative (–) terminal cable to the battery, and wait for at least 2 seconds.
(d) Turn the ignition switch to the ON position, and wait for at least 10 seconds.
(e) Clear the stored DTCs in the memory (See page 05–1184).
(f) Turn the ignition switch to the LOCK position.
(g) Turn the ignition switch to the ON position, and wait for at least 10 seconds.
(h) Check the DTCs (See page 05–1184).

OK:

DTC B0136/74 is not output.

HINT:

Codes other than code B0136/74 may be output at this time, but they are not related to this check.

NG → **REPLACE AIR BAG SENSOR ASSY CENTER**

OK

3 CHECK FRONT SEAT OUTER BELT ASSY LH(P/T SQUIB LH)

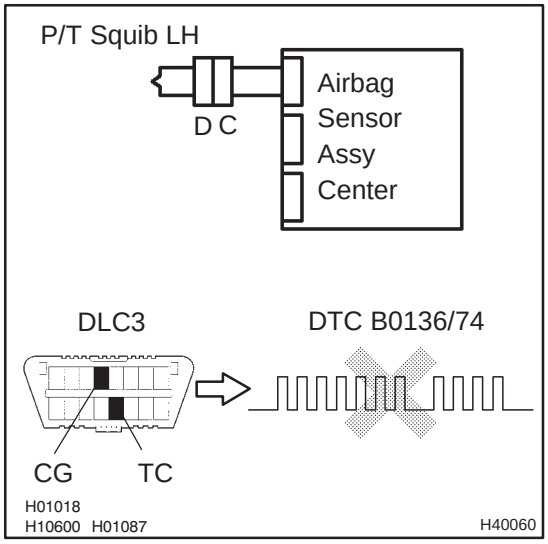

(a) Turn the ignition switch to the LOCK position.
(b) Disconnect the negative (–) terminal cable from the battery, and wait for at least 90 seconds.
(c) Connect the connector to the front seat outer belt assy LH.
(d) Connect the negative (–) terminal cable to the battery, and wait for at least 2 seconds.
(e) Turn the ignition switch to the ON position, and wait for at least 10 seconds.
(f) Clear the stored DTCs in the memory (See page 05–1184).
(g) Turn the ignition switch to the LOCK position.
(h) Turn the ignition switch to the ON position, and wait for at least 10 seconds.
(i) Check the DTCs (See page 05–1184).
OK:
DTC B0136/74 is not output.

HINT:
Codes other than code B0136/74 may be output at this time, but they are not related to this check.

NG → **REPLACE FRONT SEAT OUTER BELT ASSY LH**

OK

USE SIMULATION METHOD TO CHECK

DTC	B0137/71	SHORT IN P/T SQUIB (LH) CIRCUIT (TO GROUND)

CIRCUIT DESCRIPTION

The P/T squib LH circuit consists of the airbag sensor assy center and the front seat outer belt assy LH (seat belt pretensioner LH).
This circuit actuates the SRS to deploy when the SRS deployment conditions are fulfilled.
DTC B0137/71 is recorded when a short to ground is detected in the P/T squib LH circuit.

DTC No.	DTC Detecting Condition	Trouble Area
B0137/71	• Short circuit in P/T squib LH wire harness (to ground) • P/T squib LH malfunction • Airbag sensor assy center malfunction	• Front seat outer belt assy LH (P/T squib LH) • Airbag sensor assy center • Floor wire

WIRING DIAGRAM

See page 05–1270.

INSPECTION PROCEDURE

1	CHECK FLOOR WIRE(P/T SQUIB LH CIRCUIT)

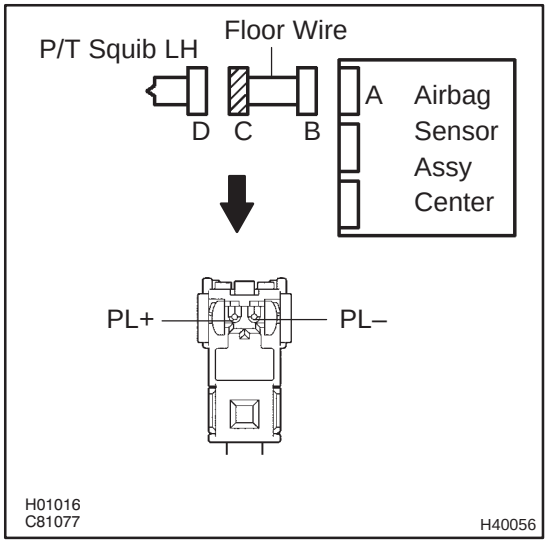

(a) Turn the ignition switch to the LOCK position.
(b) Disconnect the negative (–) terminal cable from the battery, and wait for at least 90 seconds.
(c) Disconnect the connectors from the airbag sensor assy center and the front seat outer belt assy LH.
(d) Measure the resistance between the body ground and PL+ of the connector ”C”.
OK:
Resistance: 1 MΩ or Higher

NG → **REPAIR OR REPLACE FLOOR WIRE**

OK

2 CHECK AIR BAG SENSOR ASSY CENTER

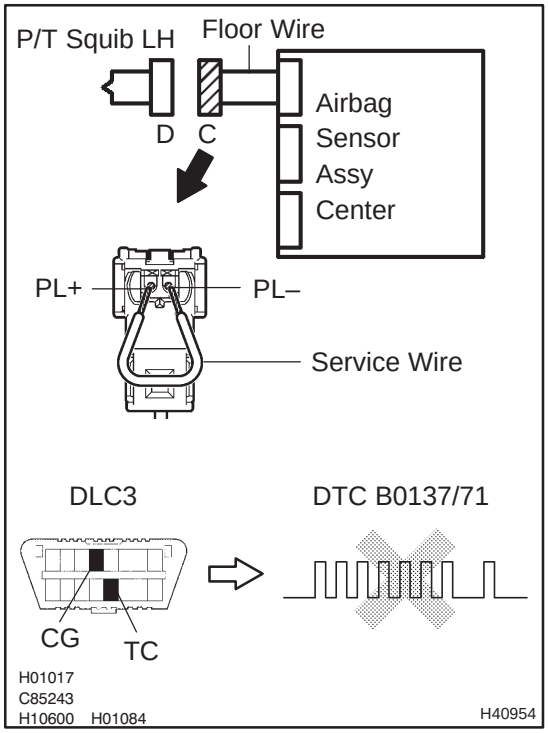

(a) Connect the connector to the airbag sensor assy center.
(b) Using a service wire, connect PL+ and PL– of the connector ”C”.

NOTICE:

Do not forcibly insert a service wire into the terminal of the connector when connecting.

(c) Connect the negative (–) terminal cable to the battery, and wait for at least 2 seconds.
(d) Turn the ignition switch to the ON position, and wait for at least 10 seconds.
(e) Clear the stored DTCs in the memory (See page 05–1184).
(f) Turn the ignition switch to the LOCK position.
(g) Turn the ignition switch to the ON position, and wait for at least 10 seconds.
(h) Check the DTCs (See page 05–1184).

OK:

DTC B0137/71 is not output.

HINT:

Codes other than code B0137/71 may be output at this time, but they are not related to this check.

NG → **REPLACE AIR BAG SENSOR ASSY CENTER**

OK

3	CHECK FRONT SEAT OUTER BELT ASSY LH(P/T SQUIB LH)

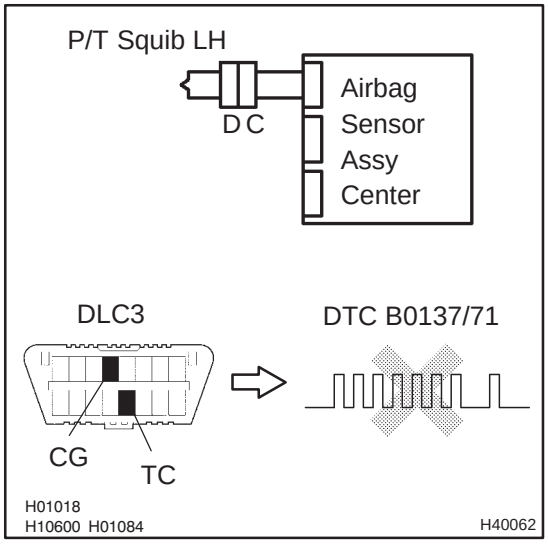

(a) Turn the ignition switch to the LOCK position.
(b) Disconnect the negative (–) terminal cable from the battery, and wait for at least 90 seconds.
(c) Connect the connector to the front seat outer belt assy LH.
(d) Connect the negative (–) terminal cable to the battery, and wait for at least 2 seconds.
(e) Turn the ignition switch to the ON position, and wait for at least 10 seconds.
(f) Clear the stored DTCs in the memory (See page 05–1184).
(g) Turn the ignition switch to the LOCK position.
(h) Turn the ignition switch to the ON position, and wait for at least 10 seconds.
(i) Check the DTCs (See page 05–1184).
OK:
DTC B0137/71 is not output.

HINT:
Codes other than code B0137/71 may be output at this time, but they are not related to this check.

NG → **REPLACE FRONT SEAT OUTER BELT ASSY LH**

OK

4	USE SIMULATION METHOD TO CHECK

NG → **Go to step 1**

OK

REPLACE ALL SRS COMPONENTS INCLUDING WIRE HARNESS

DTC B0138/72 SHORT IN P/T SQUIB (LH) CIRCUIT (TO B+)

CIRCUIT DESCRIPTION

The P/T squib LH circuit consists of the airbag sensor assy center and the front seat outer belt assy LH (seat belt pretensioner LH).
This circuit actuates the SRS to deploy when the SRS deployment conditions are fulfilled.
DTC B0138/72 is recorded when a short to B+ is detected in the P/T squib LH circuit.

DTC No.	DTC Detecting Condition	Trouble Area
B0138/72	• Short circuit in P/T squib LH wire harness (to B+) • P/T squib LH malfunction • Airbag sensor assy center malfunction	• Front seat outer belt assy LH (P/T squib LH) • Airbag sensor assy center • Floor wire

WIRING DIAGRAM

See page 05–1270.

INSPECTION PROCEDURE

1 CHECK FLOOR WIRE(P/T SQUIB LH CIRCUIT)

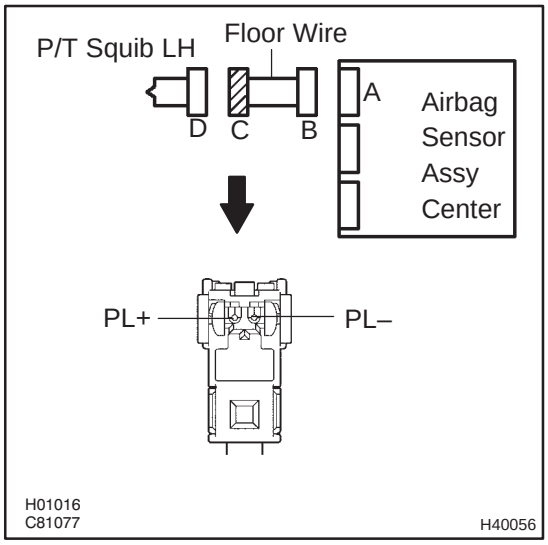

(a) Turn the ignition switch to the LOCK position.
(b) Disconnect the negative (–) terminal cable from the battery, and wait for at least 90 seconds.
(c) Disconnect the connectors from the airbag sensor assy center and the front seat outer belt assy LH.
(d) Connect the negative (–) terminal cable to the battery, and turn the ignition switch to the ON position.
(e) Measure the voltage between the body ground and PL+ of the connector ”C”.
OK:
Voltage: Below 1 V

NG → **REPAIR OR REPLACE FLOOR WIRE**

OK

2 CHECK AIR BAG SENSOR ASSY CENTER

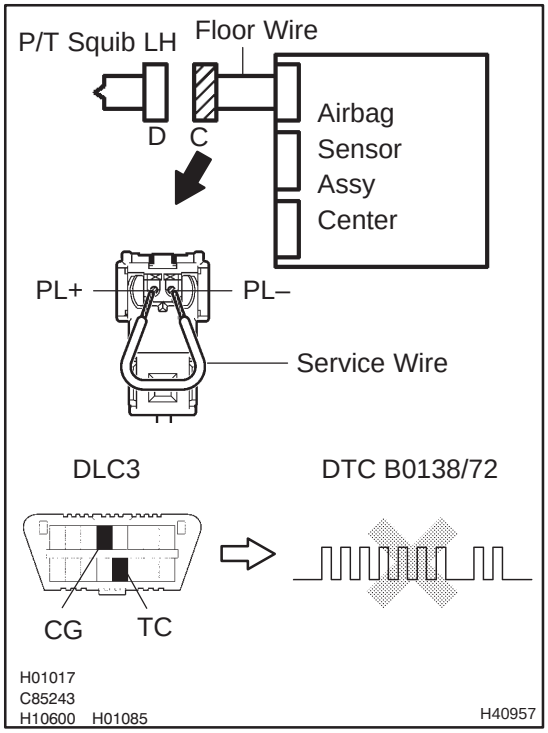

(a) Turn the ignition switch to the LOCK position.
(b) Disconnect the negative (–) terminal cable from the battery, and wait for at least 90seconds.
(c) Connect the connector to the airbag sensor assy center.
(d) Using a service wire, connect PL+ and PL– of the connector ”C”.

NOTICE:
Do not forcibly insert a service wire into the terminal of the connector when connecting.

(e) Connect the negative (–) terminal cable to the battery, and wait for at least 2 seconds.
(f) Turn the ignition switch to the ON position, and wait for at least 10 seconds.
(g) Clear the stored DTCs in the memory (See page 05–1184).
(h) Turn the ignition switch to the LOCK position.
(i) Turn the ignition switch to the ON position, and wait for at least 10 seconds.
(j) Check the DTCs (See page 05–1184).
OK:
DTC B0138/72 is not output.

HINT:
Codes other than code B0138/72 may be output at this time, but they are not related to this check.

NG → **REPLACE AIR BAG SENSOR ASSY CENTER**

OK

3	CHECK FRONT SEAT OUTER BELT ASSY LH(P/T SQUIB LH)

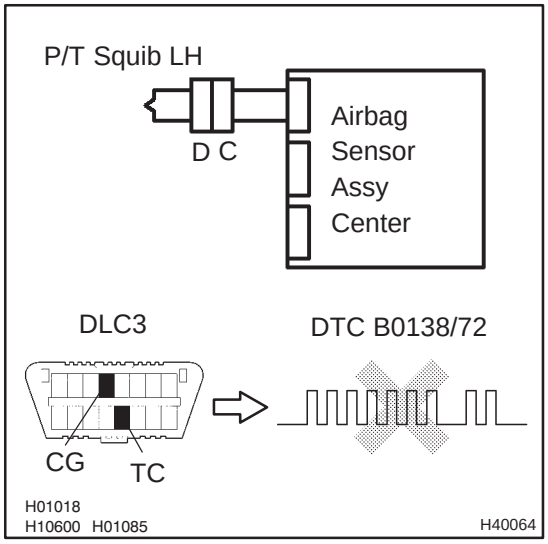

(a) Turn the ignition switch to the LOCK position.
(b) Disconnect the negative (–) terminal cable from the battery, and wait for at least 90 seconds.
(c) Connect the connector to the front seat outer belt assy LH.
(d) Connect the negative (–) terminal cable to the battery, and wait for at least 2 seconds.
(e) Turn the ignition switch to the ON position, and wait for at least 10 seconds.
(f) Clear the stored DTCs in the memory (See page 05–1184).
(g) Turn the ignition switch to the LOCK position.
(h) Turn the ignition switch to the ON position, and wait for at least 10 seconds.
(i) Check the DTCs (See page 05–1184).
OK:
DTC B0138/72 is not output.

HINT:
Codes other than code B0138/72 may be output at this time, but they are not related to this check.

NG → **REPLACE FRONT SEAT OUTER BELT ASSY LH**

OK

4	USE SIMULATION METHOD TO CHECK

NG → **Go to step 1**

OK

REPLACE ALL SRS COMPONENTS INCLUDING WIRE HARNESS

DTC	B1100/31	AIRBAG SENSOR ASSY CENTER MALFUNCTION

CIRCUIT DESCRIPTION

The airbag sensor assy center consists of the airbag sensor, the safing sensor, the drive circuit, the diagnosis circuit and the ignition control, etc.
If the airbag sensor assy center receives signals from the airbag sensor, it judges whether or not the SRS should be activated.
DTC B1100/31 is recorded when a malfunction in the airbag sensor assy center is detected.

DTC No.	DTC Detecting Condition	Trouble Area
B1100/31	• Airbag sensor assy center malfunction • Half connection detection malfunction	• Airbag sensor assy center • Airbag sensor assy center connector

HINT:
When a malfunction code other than code B1100/31 is displayed at the same time, first repair the malfunction indicated by the malfunction code other than code B1100/31.

INSPECTION PROCEDURE

1	CHECK DTC

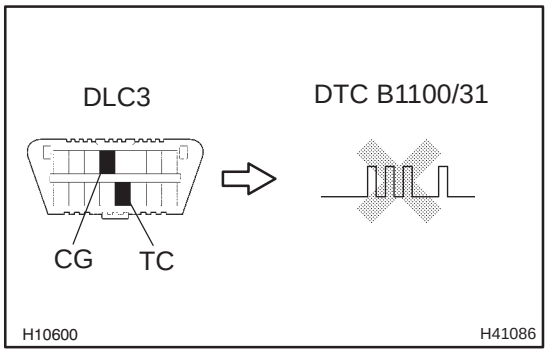

(a) Turn the ignition switch to the LOCK position.
(b) Disconnect the negative (–) terminal cable from the battery, and wait for at least 90 seconds.
(c) Connect the negative (–) terminal cable to the battery, and wait for at least 2 seconds.
(d) Turn the ignition switch to the ON position, and wait for at least 10 seconds.
(e) Clear the stored DTCs in the memory (See page 05–1184).
(f) Turn the ignition switch to the LOCK position.
(g) Turn the ignition switch to the ON position, and wait for at least 10 seconds.
(h) Check the DTCs (See page 05–1184).
OK:
DTC B1100/31 is not output.

HINT:
Codes other than code B1100/31 may be output at this time, but they are not related to this check.

NG	Go to step 2

OK

USE SIMULATION METHOD TO CHECK

2 CHECK CONNECTOR

(a) Turn the ignition switch to the LOCK position.
(b) Disconnect the negative (–) terminal cable from the battery, and wait for at least 90 seconds.
(c) Check the connection of the airbag sensor assy center connectors.
OK:
The connectors are connected.

NG → **CONNECT CONNECTORS, THEN GO TO STEP 1**

OK

3 PERFORM A VISUAL CHECK OF THE DISCONNECTION DETECTION PIN

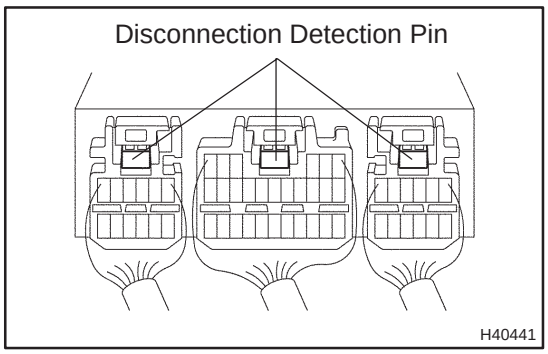

(a) Check that the disconnection detection pin is not deformed.
OK:
The connectors are not deformed.

NG → **REPAIR OR REPLACE AIRBAG SENSOR ASSY CENTER CONNECTOR**

OK

4 CHECK AIR BAG SENSOR ASSY CENTER

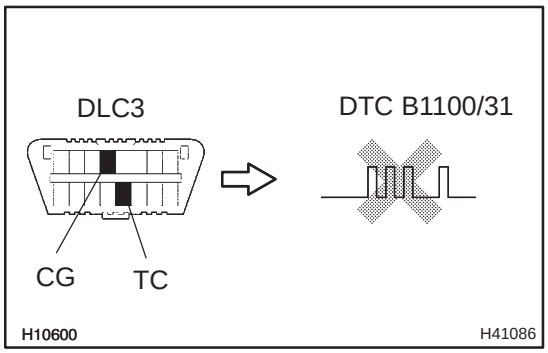

(a) Connect the negative (–) terminal cable to the battery, and wait for at least 2 seconds.
(b) Turn the ignition switch to the ON position, and wait for at least 10 seconds.
(c) Clear the stored DTCs in the memory (See page 05–1184).
(d) Turn the ignition switch to the LOCK position.
(e) Turn the ignition switch to the ON position, and wait for at least 10 seconds.
(f) Check the DTCs (See page 05–1184).
OK:
DTC B1100/31 is not output.

HINT:
Codes other than code B1100/31 may be output at this time, but they are not related to this check.

NG → **REPLACE AIR BAG SENSOR ASSY CENTER**

OK

USE SIMULATION METHOD TO CHECK

DTC	B1140/32	SIDE AIRBAG SENSOR ASSY (RH) MALFUNCTION

CIRCUIT DESCRIPTION

The side airbag sensor assy RH consists of the diagnosis circuit and the lateral deceleration sensor, etc. If the airbag sensor assy center receives signals from the lateral deceleration sensor, it judges whether or not the SRS should be activated.

DTC B1140/32 is recorded when a malfunction in the side airbag sensor assy RH is detected.

DTC No.	DTC Detecting Condition	Trouble Area
B1140/32	• Short circuit in side airbag sensor assy RH wire harness (to B+) • Short circuit in side airbag sensor assy RH wire harness (to ground) • Open circuit in BBR+ wire harness or BBR– wire harness of side airbag sensor assy RH • Side airbag sensor assy RH malfunction • Airbag sensor assy center malfunction	• Side airbag sensor assy RH • Airbag sensor assy center • Floor wire No.2

WIRING DIAGRAM

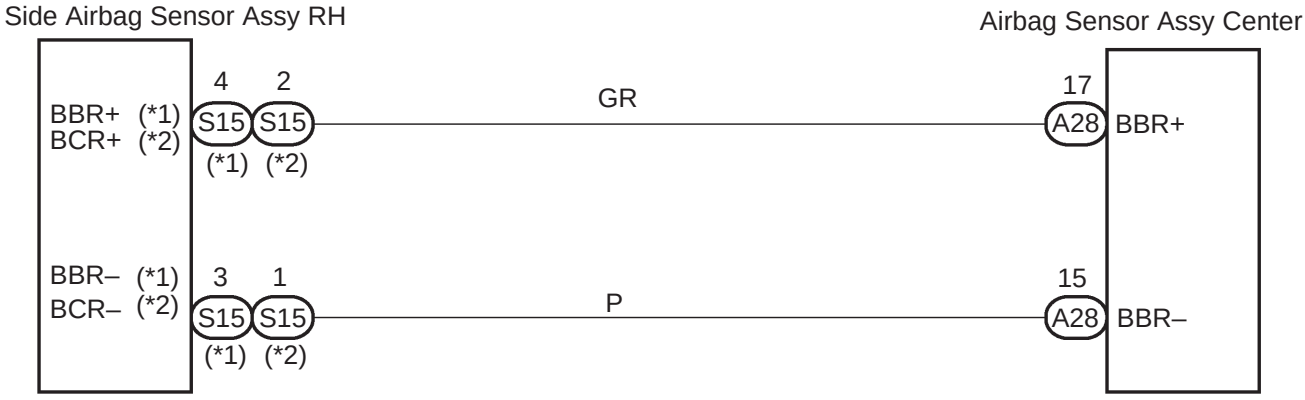

INSPECTION PROCEDURE

1	CHECK DTC

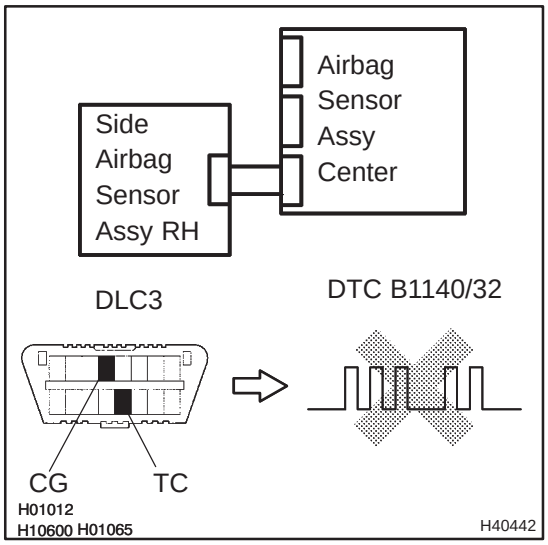

(a) Turn the ignition switch to the LOCK position.
(b) Disconnect the negative (–) terminal cable from the battery, and wait for at least 90 seconds.
(c) Connect the negative (–) terminal cable to the battery, and wait for at least 2 seconds.
(d) Turn the ignition switch to the ON position, and wait for at least 10 seconds.
(e) Clear the stored DTCs in the memory (See page 05–1184).
(f) Turn the ignition switch to the LOCK position.
(g) Turn the ignition switch to the ON position, and wait for at least 10 seconds.
(h) Check the DTCs (See page 05–1184).
OK:
DTC B1140/32 is not output.

HINT:
Codes other than code B1140/32 may be output at this time, but they are not related to this check.

NG → **Go to step 2**

OK

USE SIMULATION METHOD TO CHECK

2	CHECK CONNECTION OF CONNECTORS

(a) Turn the ignition switch to the LOCK position.
(b) Disconnect the negative (–) terminal cable from the battery, and wait for at least 90 seconds.
(c) Check that the connectors are properly connected to the airbag sensor assy center and the side airbag sensor assy RH.
OK:
The connectors are connected.

NG → **CONNECT CONNECTORS**

OK

3 CHECK FLOOR WIRE NO.2(OPEN)

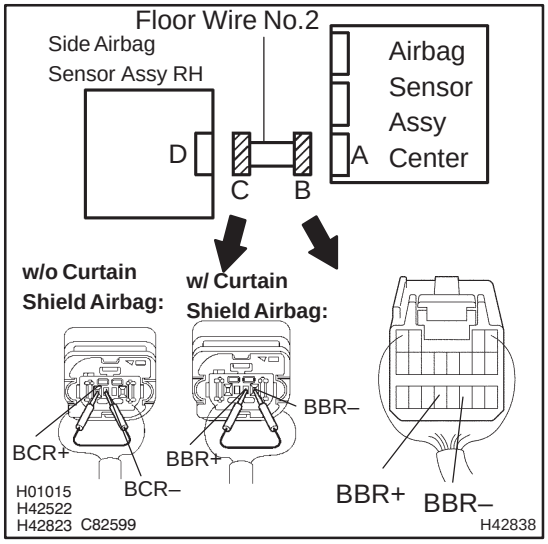

(a) Disconnect the connectors from the airbag sensor assy center and the side airbag sensor assy RH.

(b) w/o Curtain shield airbag:
Using a service wire, connect BCR+ and BCR– of the connector ”C”.

NOTICE:

Do not forcibly insert a service wire into the terminal of the connector when connecting.

(c) w/ Curtain shield airbag:
Using a service wire, connect BBR+ and BBR– of the connector ”C”.

NOTICE:

Do not forcibly insert a service wire into the terminal of the connector when connecting.

(d) Measure the resistance between BBR+ and BBR– of the connector ”B”.
OK:
Resistance: Below 1 Ω

NG → **REPAIR OR REPLACE FLOOR WIRE NO.2**

OK

4 CHECK FLOOR WIRE NO.2(TO B+)

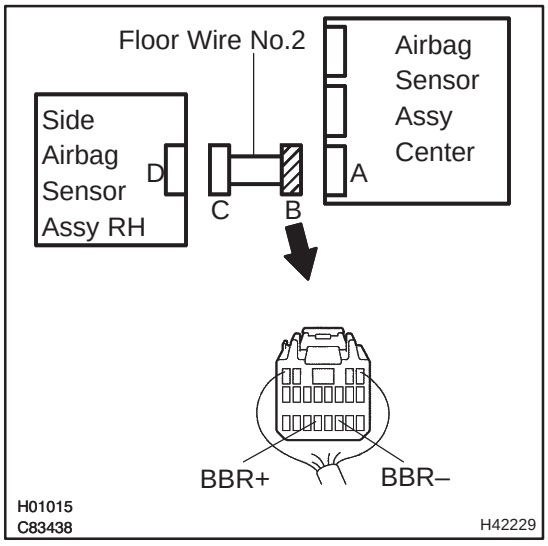

(a) Disconnect the service wire from the connector ”C”.

(b) Connect the negative (–) terminal cable to the battery, and turn the ignition switch to the ON position.

(c) Measure the voltage between the body ground and each of BBR+ and BBR– of the connector ”B”.
OK:
Voltage: Below 1 V

NG → **REPAIR OR REPLACE FLOOR WIRE NO.2**

OK

5 CHECK FLOOR WIRE NO.2(TO GROUND)

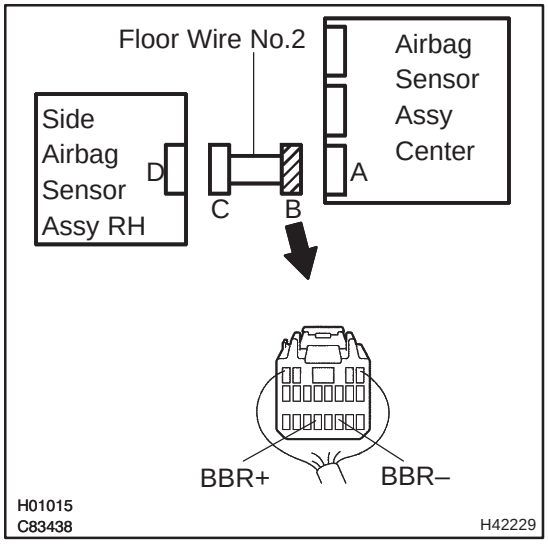

(a) Turn the ignition switch to the LOCK position.
(b) Disconnect the negative (–) terminal cable from the battery, and wait for at least 90 seconds.
(c) Measure the resistance between the body ground and each of BBR+ and BBR– of the connector "C".
OK:
Resistance: 10 kΩ or Higher

NG → **REPAIR OR REPLACE FLOOR WIRE NO.2**

OK

6 CHECK SIDE AIR BAG SENSOR ASSY RH

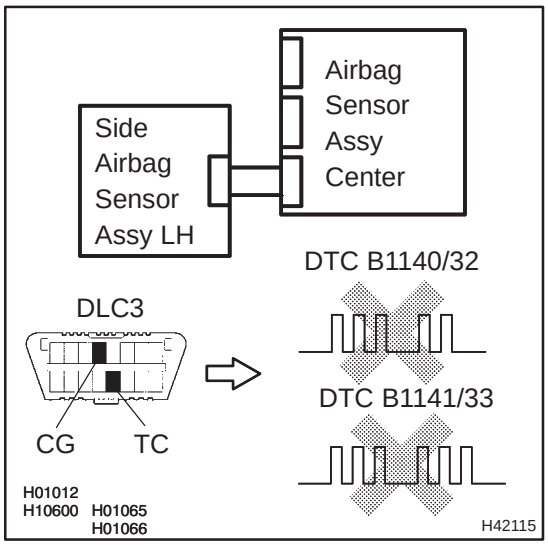

(a) Turn the ignition switch to the LOCK position.
(b) Disconnect the negative (–) terminal cable from the battery, and wait for at least 90 seconds.
(c) Connect the connector to the airbag sensor assy center.
(d) Interchange the side airbag sensor assy RH with LH and connect the connectors to them.
(e) Connect the negative (–) terminal cable to the battery, and wait for at least 2 seconds.
(f) Turn the ignition switch to the ON position, and wait for at least 10 seconds.
(g) Clear the stored DTCs in the memory (See page 05–1184).
(h) Turn the ignition switch to the LOCK position.
(i) Turn the ignition switch to the ON position, and wait for at least 10 seconds.
(j) Check the DTCs (See page 05–1184).
OK:
A: DTC B1140/32 is not output.
B: DTC B1141/33 is not output.

NG:A → **REPLACE SIDE AIR BAG SENSOR ASSY RH**

NG:B → **REPLACE AIR BAG SENSOR ASSY CENTER**

OK

USE SIMULATION METHOD TO CHECK

DTC	B1141/33	SIDE AIRBAG SENSOR ASSY (LH) MALFUNCTION

CIRCUIT DESCRIPTION

The side airbag sensor assy LH consists of the diagnosis circuit and the lateral deceleration sensor, etc. If the airbag sensor assy center receives signals from the lateral deceleration sensor, it judges whether or not the SRS should be activated.

DTC B1141/33 is recorded when a malfunction in the side airbag sensor assy LH is detected.

DTC No.	DTC Detecting Condition	Trouble Area
B1141/33	• Short circuit in side airbag sensor assy LH wire harness (to B+) • Short circuit in side airbag sensor assy LH wire harness (to ground) • Open circuit in BBL+ wire harness or BBL– wire harness of side airbag sensor assy LH • Side airbag sensor assy LH malfunction • Airbag sensor assy center malfunction	• Side airbag sensor assy LH • Airbag sensor assy center • Floor wire

WIRING DIAGRAM

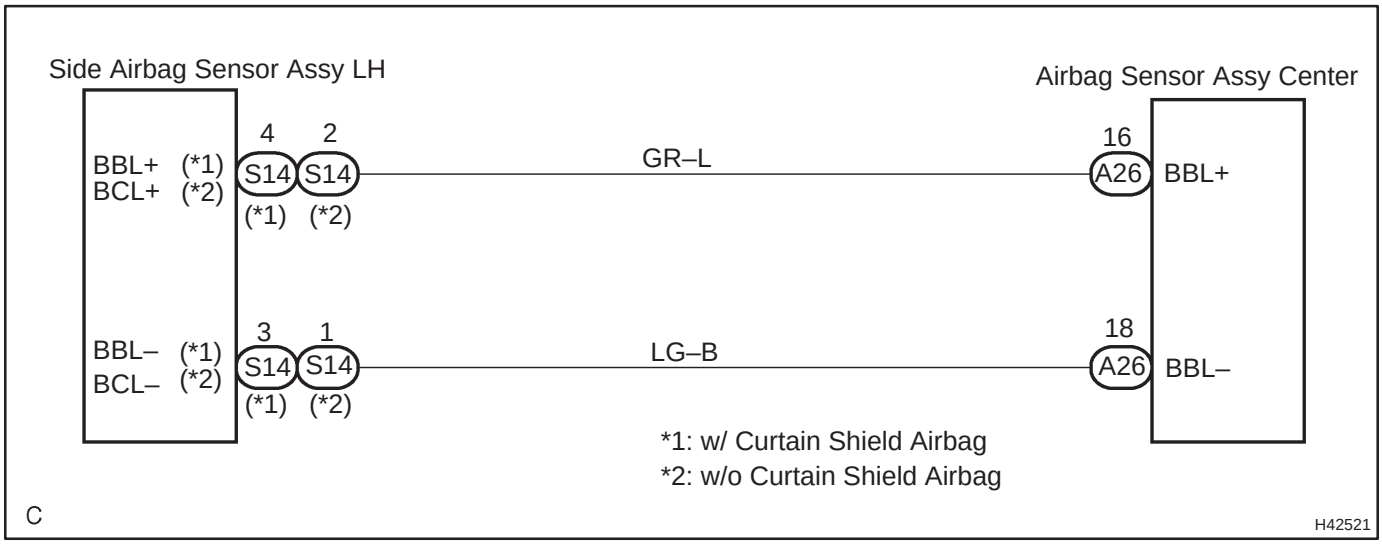

INSPECTION PROCEDURE

1	CHECK DTC

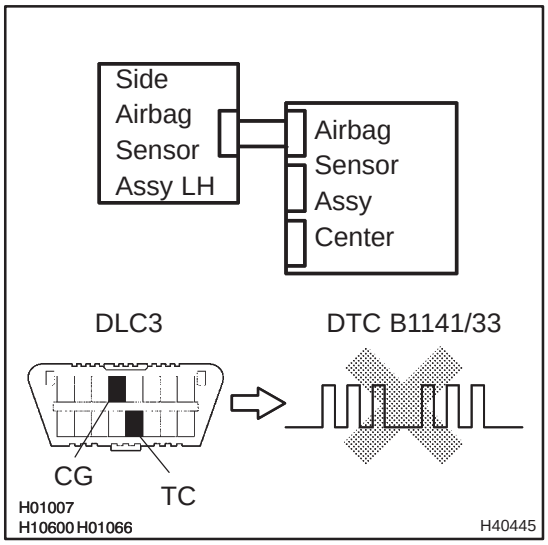

(a) Turn the ignition switch to the LOCK position.
(b) Disconnect the negative (–) terminal cable from the battery, and wait for at least 90 seconds.
(c) Connect the negative (–) terminal cable to the battery, and wait for at least 2 seconds.
(d) Turn the ignition switch to the ON position, and wait for at least 10 seconds.
(e) Clear the stored DTCs in the memory (See page 05–1184).
(f) Turn the ignition switch to the LOCK position.
(g) Turn the ignition switch to the ON position, and wait for at least 10 seconds.
(h) Check the DTCs (See page 05–1184).

OK:

DTC B1141/33 is not output.

HINT:

Codes other than code B1141/33 may be output at this time, but they are not related to this check.

NG → **Go to step 2**

OK

USE SIMULATION METHOD TO CHECK

2	CHECK CONNECTION OF CONNECTORS

(a) Turn the ignition switch to the LOCK position.
(b) Disconnect the negative (–) terminal cable from the battery, and wait for at least 90 seconds.
(c) Check that the connectors are properly connected to the airbag sensor assy center and the side airbag sensor assy LH.

OK:

The connectors are connected.

NG → **CONNECT CONNECTORS**

OK

3 CHECK FLOOR WIRE(OPEN)

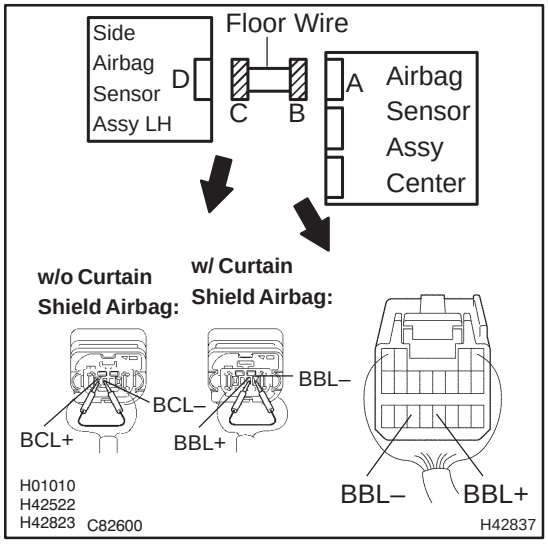

(a) Disconnect the connectors from the airbag sensor assy center and the side airbag sensor assy RH.

(b) w/ Curtain shield airbag:
Using a service wire, connect BCL+ and BCL– of the connector ”C”.

NOTICE:

Do not forcibly insert a service wire into the terminal of the connector when connecting.

(c) w/o Curtain shield airbag:
Using a service wire, connect BBL+ and BBL– of the connector ”C”.

NOTICE:

Do not forcibly insert a service wire into the terminal of the connector when connecting.

(d) Measure the resistance between BBL+ and BBL– of the connector ”B”.
OK:
Resistance: Below 1 Ω

NG → **REPAIR OR REPLACE FLOOR WIRE**

OK

4 CHECK FLOOR WIRE(TO B+)

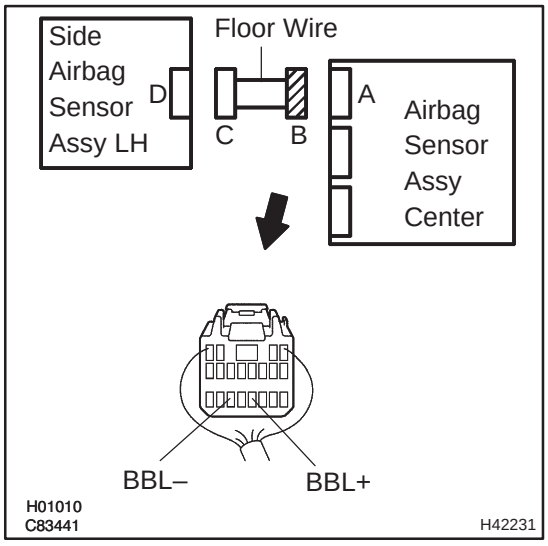

(a) Disconnect the service wire from the connector ”C”.

(b) Connect the negative (–) terminal cable to the battery, and turn the ignition switch to the ON position.

(c) Measure the voltage between the body ground and each of BBL+ and BBL– of the connector ”B”.
OK:
Voltage: Below 1 V

NG → **REPAIR OR REPLACE FLOOR WIRE**

OK

5 CHECK FLOOR WIRE(TO GROUND)

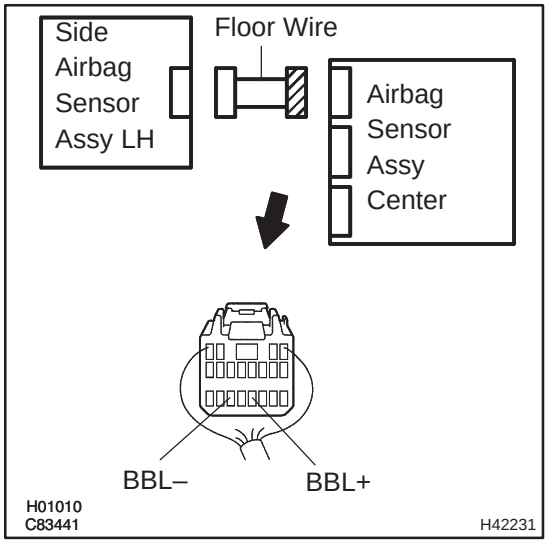

(a) Turn the ignition switch to the LOCK position.
(b) Disconnect the negative (–) terminal cable from the battery, and wait for at least 90 seconds.
(c) Measure the resistance between the body ground and each of BBL+ and BBL– of the connector "B".
OK:
Resistance: 10 kΩ or Higher

NG → **REPAIR OR REPLACE FLOOR WIRE**

OK

6 CHECK SIDE AIR BAG SENSOR ASSY LH

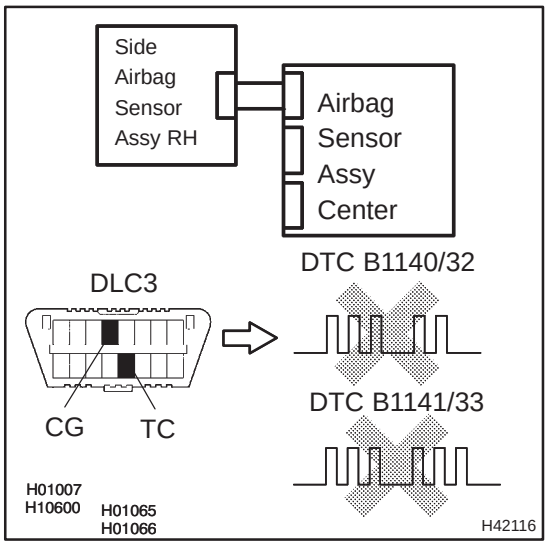

(a) Turn the ignition switch to the LOCK position.
(b) Disconnect the negative (–) terminal cable from the battery, and wait for at least 90 seconds.
(c) Connect the connector to the airbag sensor assy center.
(d) Interchange the side airbag sensor assy RH with LH and connect the connectors to them.
(e) Connect the negative (–) terminal cable to the battery, and wait for at least 2 seconds.
(f) Turn the ignition switch to the ON position, and wait for at least 10 seconds.
(g) Clear the stored DTCs in the memory (See page 05–1184).
(h) Turn the ignition switch to the LOCK position.
(i) Turn the ignition switch to the ON position, and wait for at least 10 seconds.
(j) Check the DTCs (See page 05–1184).
OK:
A: DTC B1140/32 is not output.
B: DTC B1141/33 is not output.

NG:A → **REPLACE AIR BAG SENSOR ASSY CENTER**

NG:B → **REPLACE SIDE AIR BAG SENSOR ASSY LH**

OK

USE SIMULATION METHOD TO CHECK

DTC B1148/36 FRONT AIRBAG SENSOR (RH) MALFUNCTION

CIRCUIT DESCRIPTION

The airbag front RH sensor circuit consists of the diagnosis circuit and the frontal deceleration sensor, etc. If the airbag sensor assy center receives signals from the frontal deceleration sensor, it judges whether or not the SRS should be activated.

DTC B1148/36 is recorded when a malfunction in the airbag front RH sensor is detected.

DTC No.	DTC Detecting Condition	Trouble Area
B1148/36	• Open circuit in SR+ wire harness or SR– wire harness of front airbag sensor RH • Short circuit in airbag front RH sensor wire harness (to B+) • Short circuit in airbag front RH sensor wire harness (to ground) • Airbag front RH sensor malfunction • Airbag sensor assy center malfunction	• Airbag front RH sensor • Airbag sensor assy center • Instrument panel wire • Engine room main wire

WIRING DIAGRAM

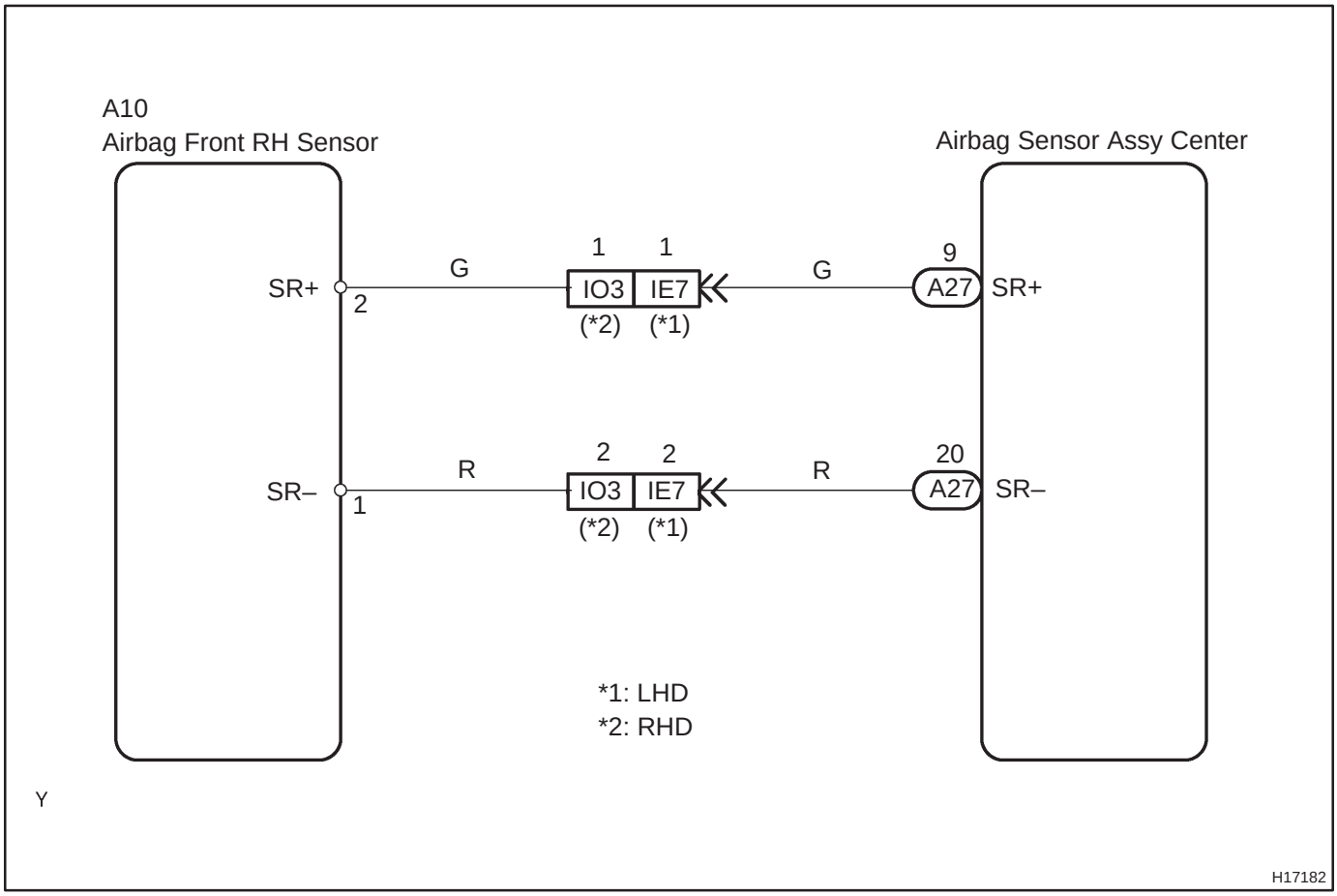

INSPECTION PROCEDURE

1	CHECK DTC

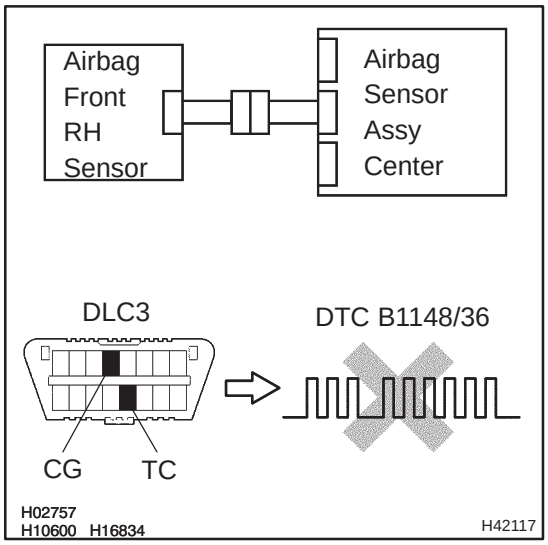

(a) Turn the ignition switch to the LOCK position.
(b) Disconnect the negative (–) terminal cable from the battery, and wait for at least 90 seconds.
(c) Connect the negative (–) terminal cable to the battery, and wait for at least 2 seconds.
(d) Turn the ignition switch to the ON position, and wait for at least 10 seconds.
(e) Clear the stored DTCs in the memory (See page 05–1184).
(f) Turn the ignition switch to the LOCK position.
(g) Turn the ignition switch to the ON position, and wait for at least 10 seconds.
(h) Check the DTCs (See page 05–1184).
OK:
DTC B1148/36 is not output.

HINT:
Codes other than code B1148/36 may be output at this time, but they are not related to this check.

NG → **Go to step 2**

OK

USE SIMULATION METHOD TO CHECK

2	CHECK CONNECTION OF CONNECTORS

(a) Turn the ignition switch to the LOCK position.
(b) Disconnect the negative (–) terminal cable from the battery, and wait for at least 90 seconds.
(c) Check that the connectors are properly connected to the airbag sensor assy center and the airbag front RH sensor.
OK:
The connectors are connected.

NG → **CONNECT CONNECTORS**

OK

3 CHECK FRONT AIRBAG SENSOR (RH) CIRCUIT (OPEN)

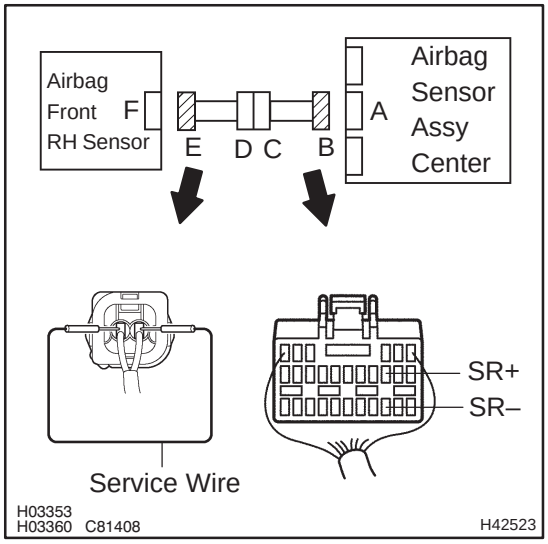

(a) Disconnect the connectors from the airbag sensor assy center and the airbag front RH sensor.

(b) Using a service wire, connect SR+ and SR– of the connector ”E”.

NOTICE:

Do not forcibly insert a service wire into the terminal of the connector when connecting.

(c) Measure the resistance between SR+ and SR– of the connector ”B”.

OK:

Resistance: Below 1 Ω

NG	**Go to step 7**

OK

4 CHECK FRONT AIRBAG SENSOR (RH) CIRCUIT (TO B+)

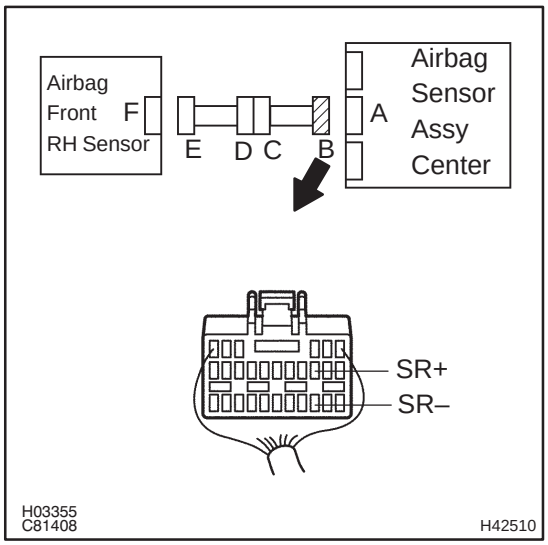

(a) Disconnect the service wire from the connector ”E”.

(b) Connect the negative (–) terminal cable to the battery, and turn the ignition switch to the ON position.

(c) Measure the voltage between the body ground and each of SR+ and SR– of the connector ”B”.

OK:

Voltage: Below 1 V

NG	**Go to step 8**

OK

5 CHECK FRONT AIRBAG SENSOR (RH) CIRCUIT (TO GROUND)

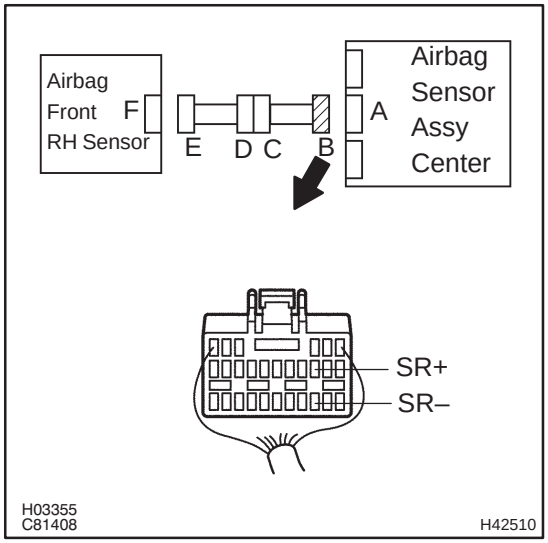

(a) Turn the ignition switch to the LOCK position.
(b) Disconnect the negative (–) terminal cable from the battery, and wait for at least 90 seconds.
(c) Measure the resistance between the body ground and each of SR+ and SR– of the connector "B".
OK:
Resistance: 1 MΩ or Higher

NG → **Go to step 9**

OK

6 CHECK AIR BAG FRONT RH SENSOR

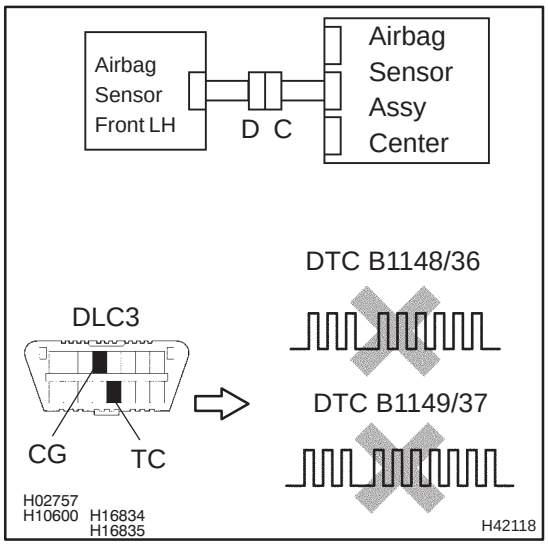

(a) Connect the connector to the airbag sensor assy center.
(b) Interchange the airbag front RH sensor with the airbag sensor front LH and connect the connectors to them.
(c) Connect the negative (–) terminal cable to the battery, and wait for at least 2 seconds.
(d) Turn the ignition switch to the ON position, and wait for at least 10 seconds.
(e) Clear the stored DTCs in the memory (See page 05–1184).
(f) Turn the ignition switch to the LOCK position.
(g) Turn the ignition switch to the ON position, and wait for at least 10 seconds.
(h) Check the DTCs (See page 05–1184).
OK:
A: DTC B1148/36 is not output.
B: DTC B1149/37 is not output.

NG:A → **REPLACE AIR BAG FRONT RH SENSOR**

NG:B → **REPLACE AIR BAG SENSOR ASSY CENTER**

OK

USE SIMULATION METHOD TO CHECK

7 CHECK ENGINE ROOM MAIN WIRE(OPEN)

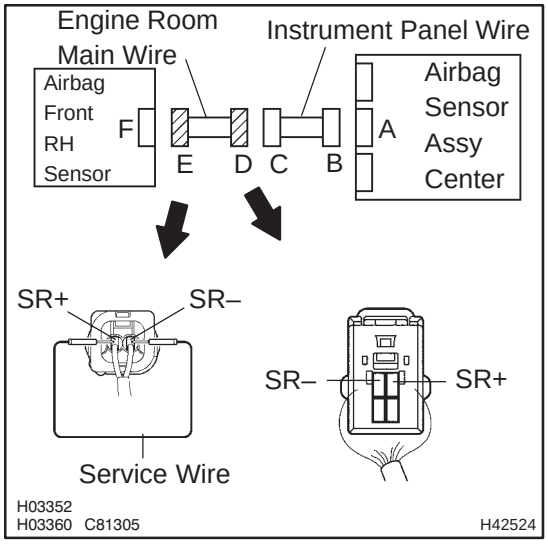

(a) Disconnect the engine room main wire connector from the instrument panel wire.

(b) Using a service wire, connect SR+ and SR– of the connector ”E”.

NOTICE:

Do not forcibly insert a service wire into the terminal of the connector when connecting.

(c) Measure the resistance between SR+ and SR– of the connector ”D”.

OK:

Resistance: Below 1 Ω

NG	**REPAIR OR REPLACE ENGINE ROOM MAIN WIRE**

OK

REPAIR OR REPLACE INSTRUMENT PANEL WIRE

8 CHECK ENGINE ROOM MAIN WIRE(TO B+)

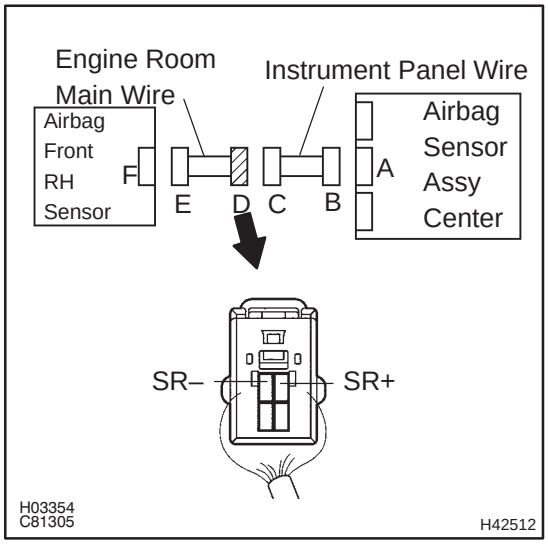

(a) Turn the ignition switch to the LOCK position.

(b) Disconnect the negative (–) terminal cable from the battery, and wait for at least 90 seconds.

(c) Disconnect the engine room main wire connector from the instrument panel wire.

(d) Connect the negative (–) terminal cable to the battery, and turn the ignition switch to the ON position.

(e) Measure the voltage between the body ground and each of SR+ and SR– of the connector ”D”.

OK:

Voltage: Below 1 V

NG	**REPAIR OR REPLACE ENGINE ROOM MAIN WIRE**

OK

REPAIR OR REPLACE INSTRUMENT PANEL WIRE

9	CHECK ENGINE ROOM MAIN WIRE(TO GROUND)

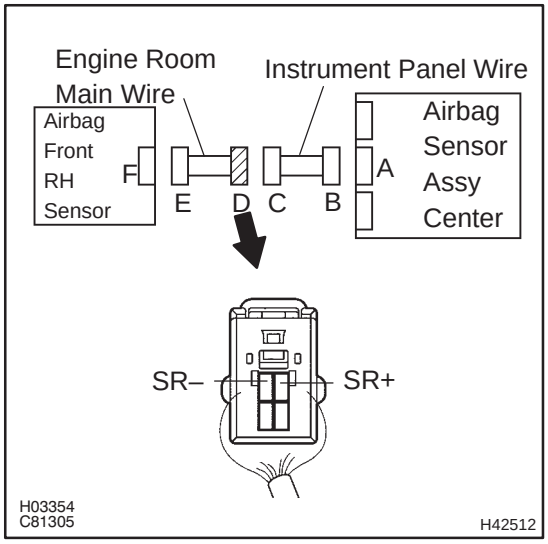

(a) Disconnect the engine room main wire connector from the instrument panel wire.

(b) Measure the resistance between the body ground and each of SR+ and SR– of the connector ”D”.

OK:

Resistance: 1 MΩ or Higher

NG → **REPAIR OR REPLACE ENGINE ROOM MAIN WIRE**

OK

REPAIR OR REPLACE INSTRUMENT PANEL WIRE

DTC	B1149/37	FRONT AIRBAG SENSOR (LH) MALFUNCTION

CIRCUIT DESCRIPTION

The airbag sensor front LH circuit consists of the diagnosis circuit and the frontal deceleration sensor, etc.

If the airbag sensor assy center receives signals from the frontal deceleration sensor, it judges whether or not the SRS should be activated.
DTC B1149/37 is recorded when malfunction is detected in the airbag sensor front LH circuit.

DTC No.	DTC Detecting Condition	Trouble Area
B1149/37	• Open circuit in SL+ wire harness or SL– wire harness of airbag sensor front LH • Short circuit in airbag sensor front LH wire harness (to B+) • Short circuit in airbag sensor front LH wire harness (to ground) • Airbag sensor front LH malfunction • Airbag sensor assy center malfunction	• Airbag sensor front LH • Airbag sensor assy center • Instrument panel wire • Engine room main wire

WIRING DIAGRAM

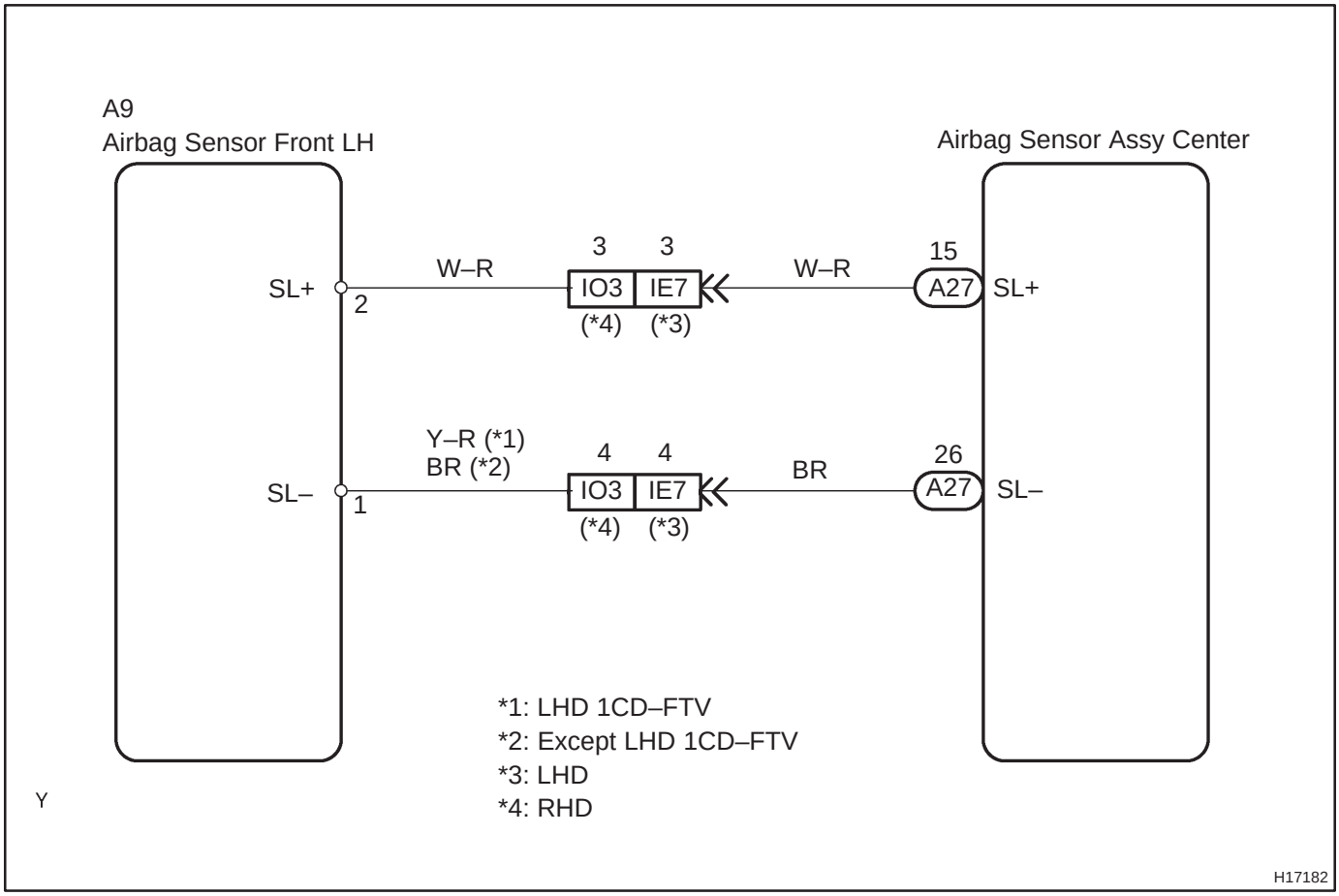

INSPECTION PROCEDURE

1	CHECK DTC

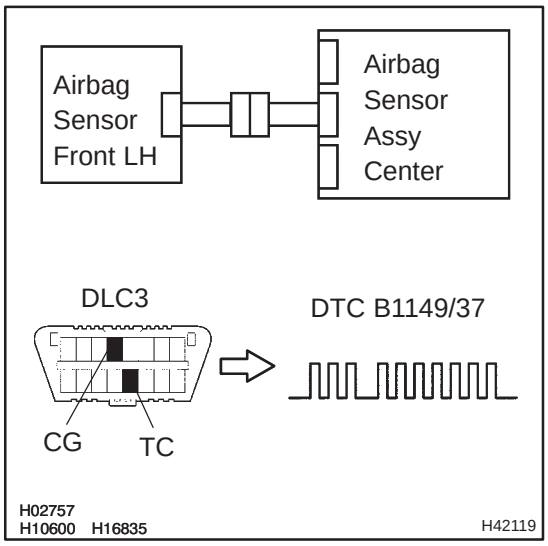

(a) Turn the ignition switch to the LOCK position.
(b) Disconnect the negative (–) terminal cable from the battery, and wait for at least 90 seconds.
(c) Connect the negative (–) terminal cable to the battery, and wait for at least 2 seconds.
(d) Turn the ignition switch to the ON position, and wait for at least 10 seconds.
(e) Clear the stored DTCs in the memory (See page 05–1184).
(f) Turn the ignition switch to the LOCK position.
(g) Turn the ignition switch to the ON position, and wait for at least 10 seconds.
(h) Check the DTCs (See page 05–1184).

OK:

DTC B1149/37 is not output.

HINT:

Codes other than code B1149/37 may be output at this time, but they are not related to this check.

NG → **Go to step 2**

OK

USE SIMULATION METHOD TO CHECK

2	CHECK CONNECTION OF CONNECTORS

(a) Turn the ignition switch to the LOCK position.
(b) Disconnect the negative (–) terminal cable from the battery, and wait for at least 90 seconds.
(c) Check that the connectors are properly connected to the airbag sensor assy center and the airbag sensor front LH.

OK:

The connectors are connected.

NG → **CONNECT CONNECTORS**

OK

3 CHECK FRONT AIRBAG SENSOR (LH) CIRCUIT (OPEN)

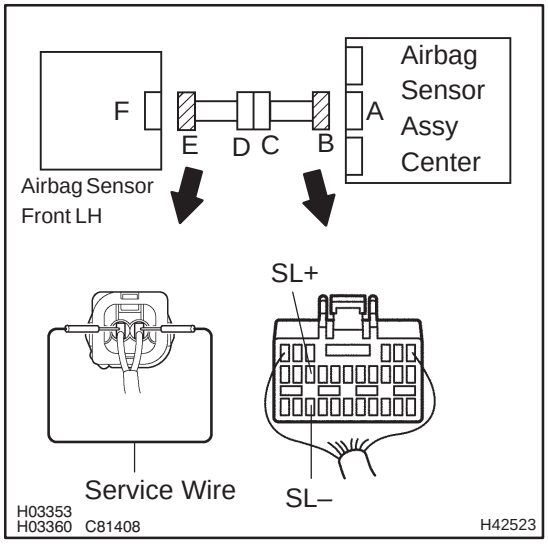

(a) Disconnect the connectors from the airbag sensor assy center and the airbag sensor front LH.

(b) Using a service wire, connect SL+ and SL– of the connector ”E”.

NOTICE:

Do not forcibly insert a service wire into the terminal of the connector when connecting.

(c) Measure the resistance between SL+ and SL– of the connecter ”B”.

OK:

Resistance: Below 1 Ω

NG	**Go to step 7**

OK

4 CHECK FRONT AIRBAG SENSOR (LH) CIRCUIT (TO B+)

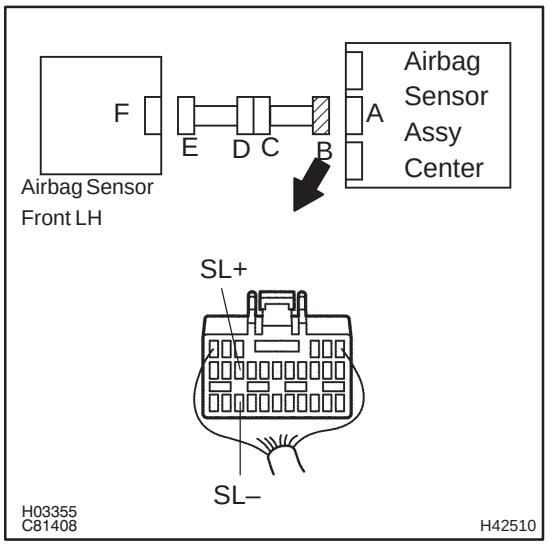

(a) Disconnect the service wire from the connector ”E”.

(b) Connect the negative (–) terminal cable to the battery, and turn the ignition switch to the ON position.

(c) Measure the voltage between the body ground and each of SL+ and SL– of the connector ”B”.

OK:

Voltage: Below 1 V

NG	**Go to step 8**

OK

5 CHECK FRONT AIRBAG SENSOR (LH) CIRCUIT (TO GROUND)

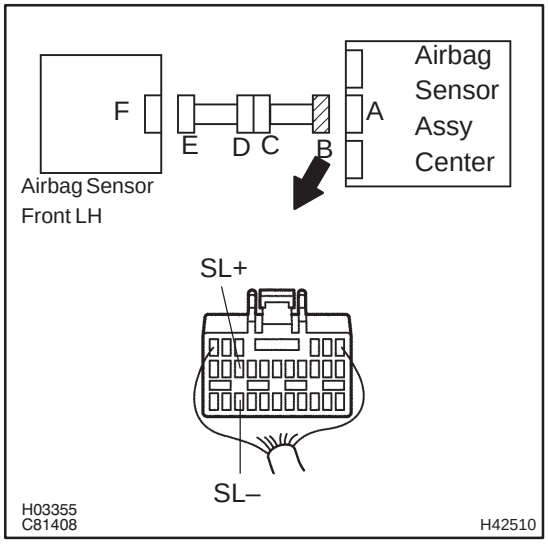

(a) Turn the ignition switch to the LOCK position.
(b) Disconnect the negative (–) terminal cable from the battery, and wait for at least 90 seconds.
(c) Measure the resistance between the body ground and each of SL+ and SL– of the connector "B".
OK:
Resistance: 1 MΩ or Higher

NG → **Go to step 9**

OK

6 CHECK AIR BAG SENSOR FRONT LH

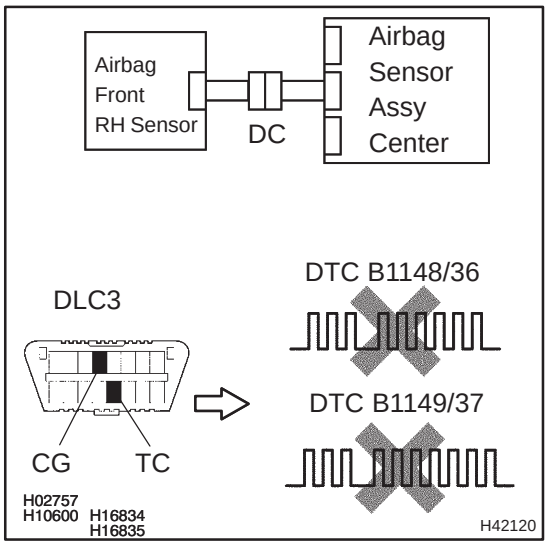

(a) Connect the connector to the airbag sensor assy center.
(b) Interchange the airbag front sensor RH with the airbag sensor front LH and connect the connectors to them.
(c) Connect the negative (–) terminal cable to the battery, and wait for at least 2 seconds.
(d) Turn the ignition switch to the ON position, and wait for at least 10 seconds.
(e) Clear the stored DTCs in the memory (See page 05–1184).
(f) Turn the ignition switch to the LOCK position.
(g) Turn the ignition switch to the ON position, and wait for at least 10 seconds.
(h) Check the DTCs (See page 05–1184).
OK:
A: DTC B1148/36 is not output.
B: DTC B1149/37 is not output.

NG:A → **REPLACE AIR BAG SENSOR ASSY CENTER**

NG:B → **REPLACE AIR BAG SENSOR FRONT LH**

OK

USE SIMULATION METHOD TO CHECK

7 CHECK ENGINE ROOM MAIN WIRE(OPEN)

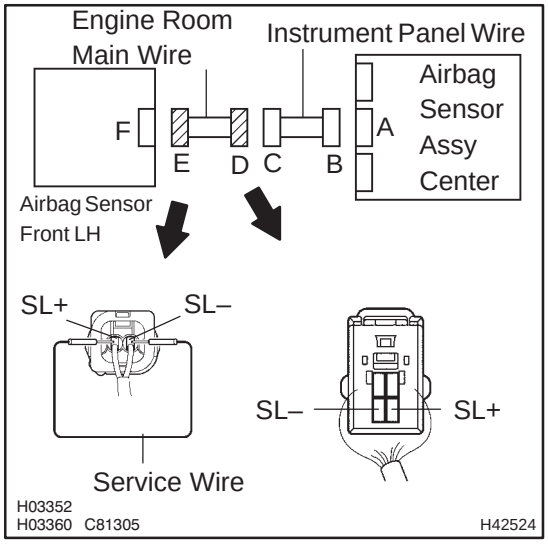

(a) Disconnect the engine room main wire connect from the instrument panel wire.
(b) Using a service wire, connect SL+ and SL– of the connector ”E”.

NOTICE:
Do not forcibly insert a service wire into the terminal of the connector when connecting.

(c) Measure the resistance between SL+ and SL– of the connector ”D”.
OK:
Resistance: Below 1 Ω

NG → **REPAIR OR REPLACE ENGINE ROOM MAIN WIRE**

OK

REPAIR OR REPLACE INSTRUMENT PANEL WIRE

8 CHECK ENGINE ROOM MAIN WIRE(TO B+)

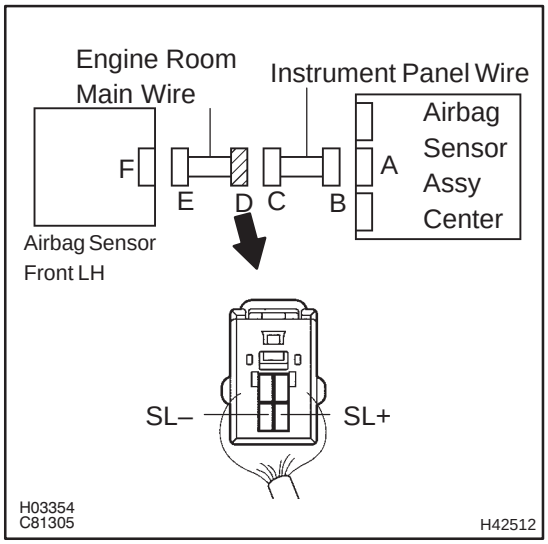

(a) Turn the ignition switch to the LOCK position.
(b) Disconnect the negative (–) terminal cable from the battery, and wait for at least 90 seconds.
(c) Disconnect the engine room main wire connector from the instrument panel wire.
(d) Connect the negative (–) terminal cable to the battery, and turn the ignition switch to the ON position.
(e) Measure the voltage between the body ground and each of SL+ and SL– of the connector ”D”.
OK:
Voltage: Below 1 V

NG → **REPAIR OR REPLACE ENGINE ROOM MAIN WIRE**

OK

REPAIR OR REPLACE INSTRUMENT PANEL WIRE

9	CHECK ENGINE ROOM MAIN WIRE(TO GROUND)

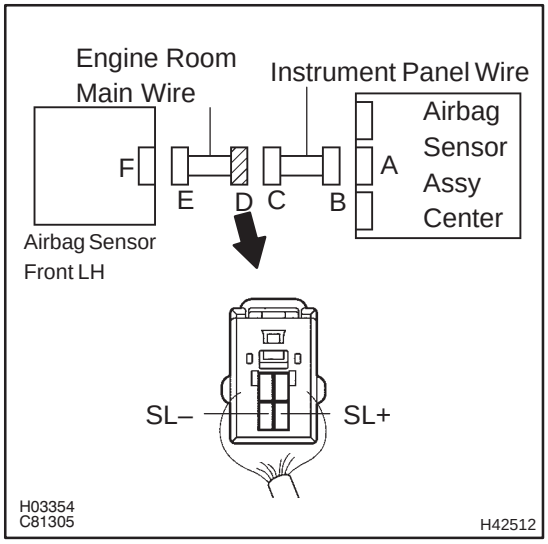

(a) Disconnect the engine room main wire connector from the instrument panel wire.

(b) Measure the resistance between the body ground and each of SL+ and SL– of the connector ”D”.

OK:

Resistance: 1 MΩ or Higher

NG → **REPAIR OR REPLACE ENGINE ROOM MAIN WIRE**

OK

REPAIR OR REPLACE INSTRUMENT PANEL WIRE

DTC	B1153/25	SEAT POSITION AIRBAG SENSOR MALFUNCTION

CIRCUIT DESCRIPTION

The seat position airbag sensor circuits consists of the airbag sensor assy center and the seat position airbag sensor.

DTC B1153/25 is recorded when a malfunction is detected in the seat position airbag sensor circuit.

DTC No.	DTC Detecting Condition	Trouble Area
B1153/25	• Open circuit in LSP+ (RSP+) wire harness or LSP– (RSP–) wire harness of seat position airbag sensor • Short circuit in seat position airbag sensor wire harness (to ground) • Short circuit in seat position airbag sensor wire harness (to B+) • Seat position airbag sensor malfunction • Airbag sensor assy center malfunction	• Seat position airbag sensor • Airbag sensor assy center • Floor wire (LHD) • Floor wire No.2 (RHD)

WIRING DIAGRAM

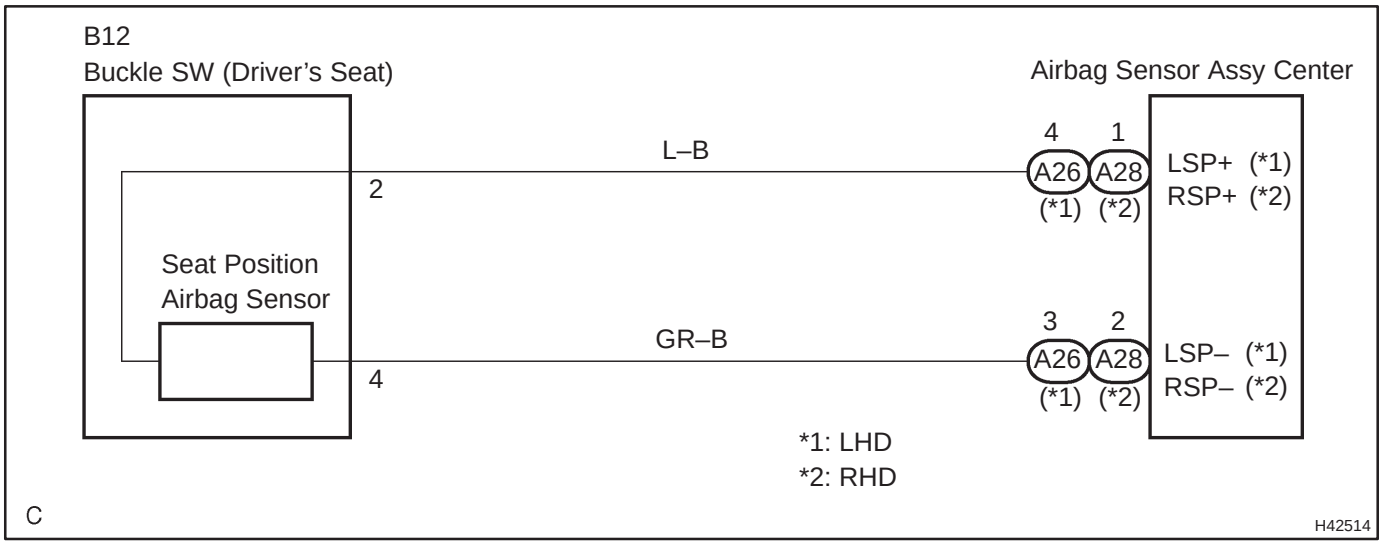

INSPECTION PROCEDURE

1	CHECK DTC

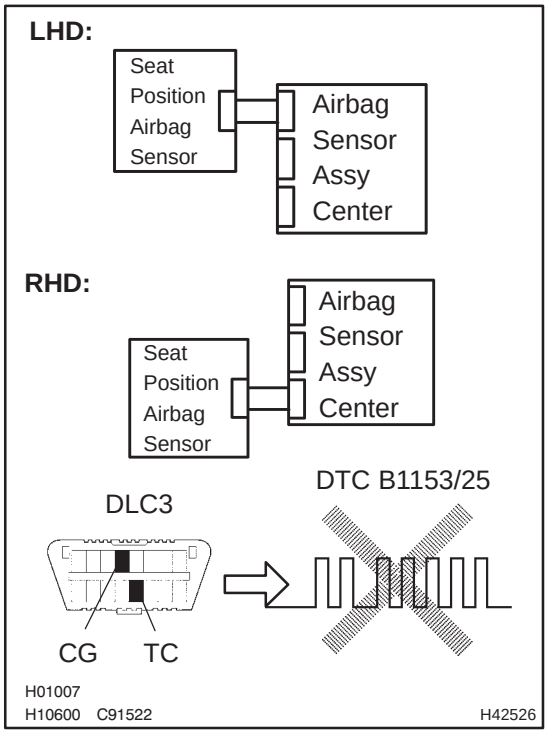

(a) Turn the ignition switch to the LOCK position.
(b) Disconnect the negative (–) terminal cable from the battery, and wait for at least 90 seconds.
(c) Connect the negative (–) terminal cable to the battery, and wait for at least 2 seconds.
(d) Turn the ignition switch to the ON position, and wait for at least 10 seconds.
(e) Clear the stored DTCs in the memory (See page 05–1184).
(f) Turn the ignition switch to the LOCK position.
(g) Turn the ignition switch to the ON position, and wait for at least 10 seconds.
(h) Check the DTCs (See page 05–1184).
OK:
DTC B1153/25 is not output.

HINT:
Codes other than code B1153/25 may be output at this time, but they are not related to this check.

NG → **Go to step 2**

OK

USE SIMULATION METHOD TO CHECK

2	CHECK CONNECTION OF CONNECTORS

(a) Turn the ignition switch to the LOCK position.
(b) Disconnect the negative (–) terminal cable from the battery, and wait for at least 90 seconds.
(c) Check that the connectors are properly connected to the airbag sensor assy center and the seat position airbag sensor.
OK:
The connectors are connected.

NG → **CONNECT CONNECTORS**

OK

3	CHECK VEHICLE CONDITION

(a) Check the vehicle steering position.

RHD → **Go to step 10**

LHD

4 CHECK FLOOR WIRE(OPEN)

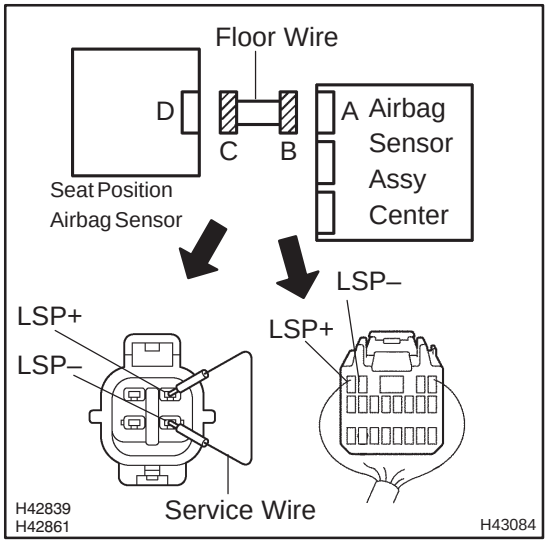

(a) Disconnect the connectors from the airbag sensor assy center and the seat position airbag sensor.

(b) Using a service wire, connect between LSP+ and LSP– of the connector ”C”.

NOTICE:

Do not forcibly insert a service wire into the terminal of the connector when connecting.

(c) Measure the resistance between LSP+ and LSP– of the floor wire connector on the airbag sensor assy center side.

OK:

Resistance: Below 1 Ω

NG → **REPAIR OR REPLACE FLOOR WIRE**

OK

5 CHECK FLOOR WIRE(TO B+)

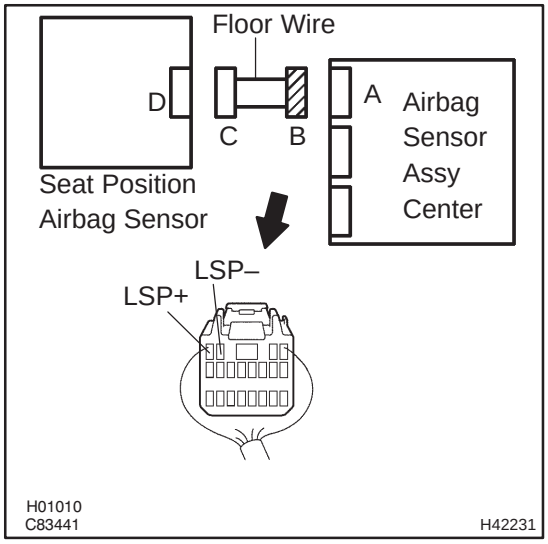

(a) Disconnect the service wire from the connector ”C”.

(b) Connect the negative (–) terminal cable to the battery, and turn the ignition switch to the ON position.

(c) Measure the voltage between the body ground and each of LSP+ and LSP– of the connector ”B”.

OK:

Voltage: Below 1 V

NG → **REPAIR OR REPLACE FLOOR WIRE**

OK

6 CHECK FLOOR WIRE(TO GROUND)

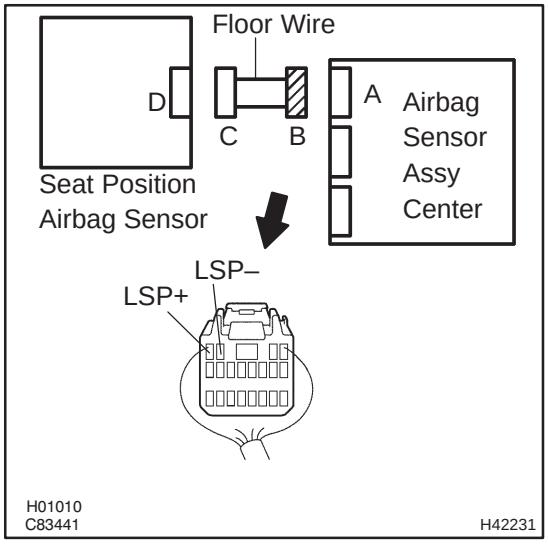

(a) Turn the ignition switch to the LOCK position.
(b) Disconnect the negative (–) terminal cable from the battery, and wait for at least 90 seconds.
(c) Measure the resistance between the body ground and each of LSP+ and LSP– of the connector "B".
OK:
Resistance: 1 MΩ or Higher

NG → **REPAIR OR REPLACE FLOOR WIRE**

OK

7 CHECK SEAT POSITION AIR BAG SENSOR

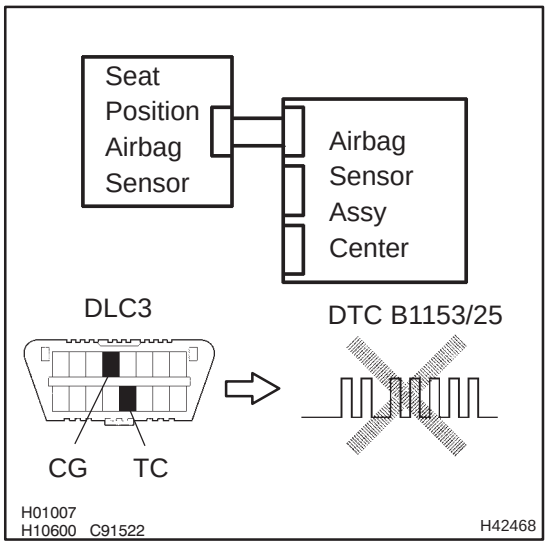

(a) Turn the ignition switch to the LOCK position.
(b) Disconnect the negative (–) terminal cable from the battery, and wait for at least 90 seconds.
(c) Connect the connectors to the seat position airbag sensor and the airbag sensor assy center.
(d) Connect the negative (–) terminal cable to the battery, and wait for at least 2 seconds.
(e) Turn the ignition switch to the ON position, and wait for at least 10 seconds.
(f) Clear the stored DTCs in the memory (See page 05–1184).
(g) Turn the ignition switch to the LOCK position.
(h) Turn the ignition switch to the ON position, and wait for at least 10 seconds.
(i) Check the DTCs (See page 05–1184).
OK:
DTC B1153/25 is not output.

HINT:
Codes other than code B1153/25 may be output at this time, but they are not related to this check.

NG → **Go to step 8**

OK

USE SIMULATION METHOD TO CHECK

8	REPLACE SEAT POSITION AIRBAG SENSOR

(a) Turn the ignition switch to the LOCK position.
(b) Disconnect the negative (–) terminal cable from the battery, and wait for at least 90 seconds.
(c) Replace the seat position airbag sensor (See page 60–70).

9	RECHECK DTC

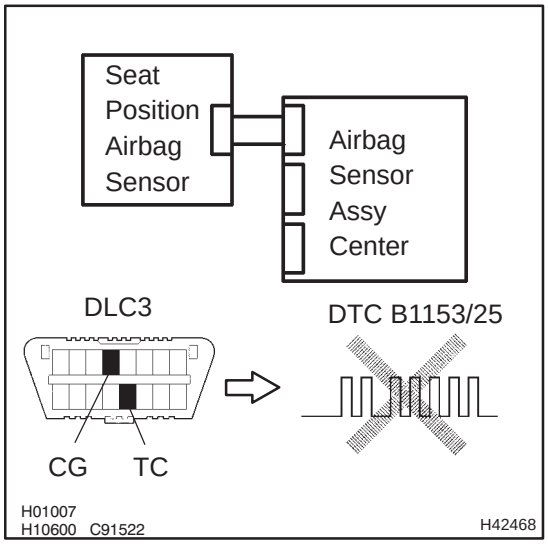

(a) Connect the negative (–) terminal cable to the battery, and wait for at least 2 seconds.
(b) Turn the ignition switch to the ON position, and wait for at least 10 seconds.
(c) Clear the stored DTCs in the memory (See page 05–1184).
(d) Turn the ignition switch to the LOCK position.
(e) Turn the ignition switch to the ON position, and wait for at least 10 seconds.
(f) Check the DTCs (See page 05–1184).
OK:
DTC B1153/25 is not output.

HINT:
Codes other than code B1153/25 may be output at this time, but they are not related to this check.

NG	REPLACE AIR BAG SENSOR ASSY CENTER

OK

USE SIMULATION METHOD TO CHECK

10 CHECK FLOOR WIRE NO.2(OPEN)

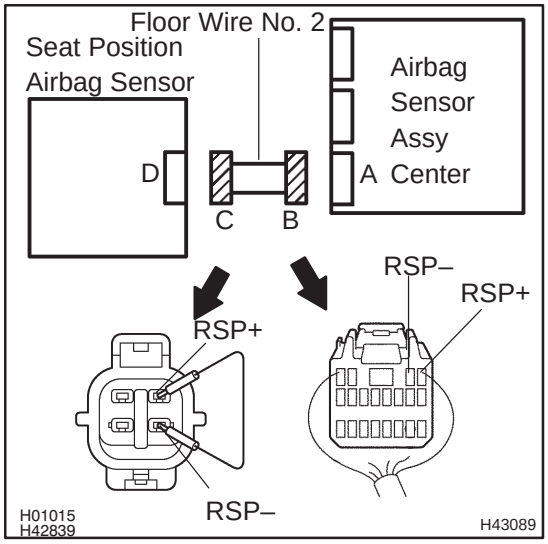

(a) Disconnect the connectors from the airbag sensor assy center and the seat position airbag sensor.

(b) Using a service wire, connect between RSP+ and RSP– of the connector ”C”.

NOTICE:

Do not forcibly insert a service wire into the terminal of the connector when connecting.

(c) Measure the resistance between RSP+ and RSP– of the connector ”B”.

OK:

Resistance: Below 1 Ω

NG	**REPAIR OR REPLACE FLOOR WIRE NO.2**

OK

11 CHECK FLOOR WIRE NO.2(TO B+)

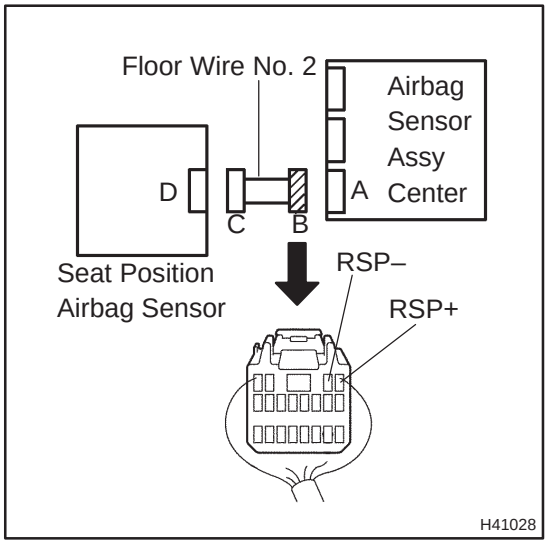

(a) Disconnect the service wire from the connector ”C”.

(b) Connect the negative (–) terminal cable to the battery, and turn the ignition switch to the ON position.

(c) Measure the voltage between the body ground and each of RSP+ and RSP– of the connector ”B”.

OK:

Voltage: Below 1 V

NG	**REPAIR OR REPLACE FLOOR WIRE NO.2**

OK

12 CHECK FLOOR WIRE NO.2(TO GROUND)

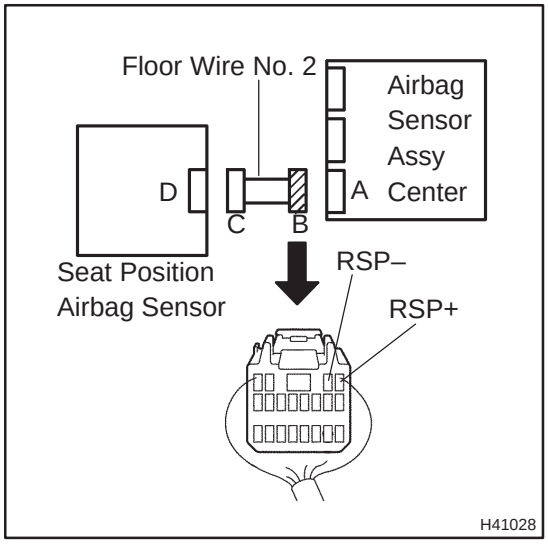

(a) Turn the ignition switch to the LOCK position.
(b) Disconnect the negative (–) terminal cable from the battery, and wait for at least 90 seconds.
(c) Measure the resistance between the body ground and each of RSP+ and RSP– of the connector "B".
OK:
Resistance: 1 MΩ or Higher

NG → **REPAIR OR REPLACE FLOOR WIRE NO.2**

OK

13 CHECK SEAT POSITION AIR BAG SENSOR

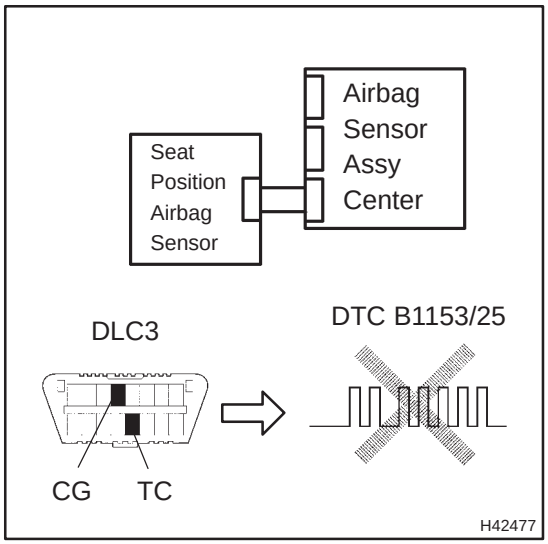

(a) Turn the ignition switch to the LOCK position.
(b) Disconnect the negative (–) terminal cable from the battery, and wait for at least 90 seconds.
(c) Connect the connectors to the seat position airbag sensor and the airbag sensor assy center.
(d) Connect the negative (–) terminal cable to the battery, and wait for at least 2 seconds.
(e) Turn the ignition switch to the ON position, and wait for at least 10 seconds.
(f) Clear the stored DTCs in the memory (See page 05–1184).
(g) Turn the ignition switch to the LOCK position.
(h) Turn the ignition switch to the ON position, and wait for at least 10 seconds.
(i) Check the DTCs (See page 05–1184).
OK:
DTC B1153/25 is not output.

HINT:
Codes other than code B1153/25 may be output at this time, but they are not related to this check.

NG → **Go to step 14**

OK

USE SIMULATION METHOD TO CHECK

14	REPLACE SEAT POSITION AIR BAG SENSOR

(a) Turn the ignition switch to the LOCK position.
(b) Disconnect the negative (–) terminal cable from the battery, and wait for at least 90 seconds.
(c) Replace the seat position airbag sensor (See page 60–70).

15	RECHECK DTC

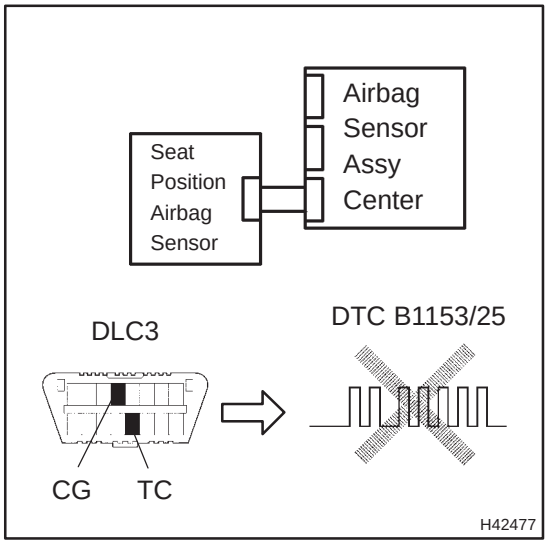

(a) Connect the negative (–) terminal cable to the battery, and wait for at least 2 seconds.
(b) Turn the ignition switch to the ON position, and wait for at least 10 seconds.
(c) Clear the stored DTCs in the memory (See page 05–1184).
(d) Turn the ignition switch to the LOCK position.
(e) Turn the ignition switch to the ON position, and wait for at least 10 seconds.
(f) Check the DTCs (See page 05–1184).
OK:
DTC B1153/25 is not output.

HINT:
Codes other than code B1153/25 may be output at this time, but they are not related to this check.

NG → **REPLACE AIR BAG SENSOR ASSY CENTER**

OK

USE SIMULATION METHOD TO CHECK

DTC	B1154/38	AIRBAG SENSOR REAR (RH) MALFUNCTION

CIRCUIT DESCRIPTION

The airbag sensor rear RH consists of the diagnosis circuit and the lateral deceleration sensor, etc.
If the airbag sensor assy center receives the signal from the lateral deceleration sensor signal in the airbag sensor rear RH, it judges whether or not the SRS should be activated.
DTC B1154/38 is recorded when a malfunction in the airbag sensor rear RH is detected.

DTC No.	DTC Detection Condition	Trouble Area
B1154/38	• Short circuit in airbag sensor rear RH wire harness (to ground) • Short circuit in airbag sensor rear RH wire harness (to B+) • Open circuit in BCR+ wire harness or BCR– wire harness of airbag sensor rear RH • Airbag sensor rear RH malfunction • Side airbag sensor assy RH malfunction • Airbag sensor assy center malfunction	• Airbag sensor rear RH • Side airbag sensor assy RH • Airbag sensor assy center • Floor wire No.2

HINT:
DTC B1154/38 is indicated only for the vehicle equipped with the curtain shield airbag.

WIRING DIAGRAM

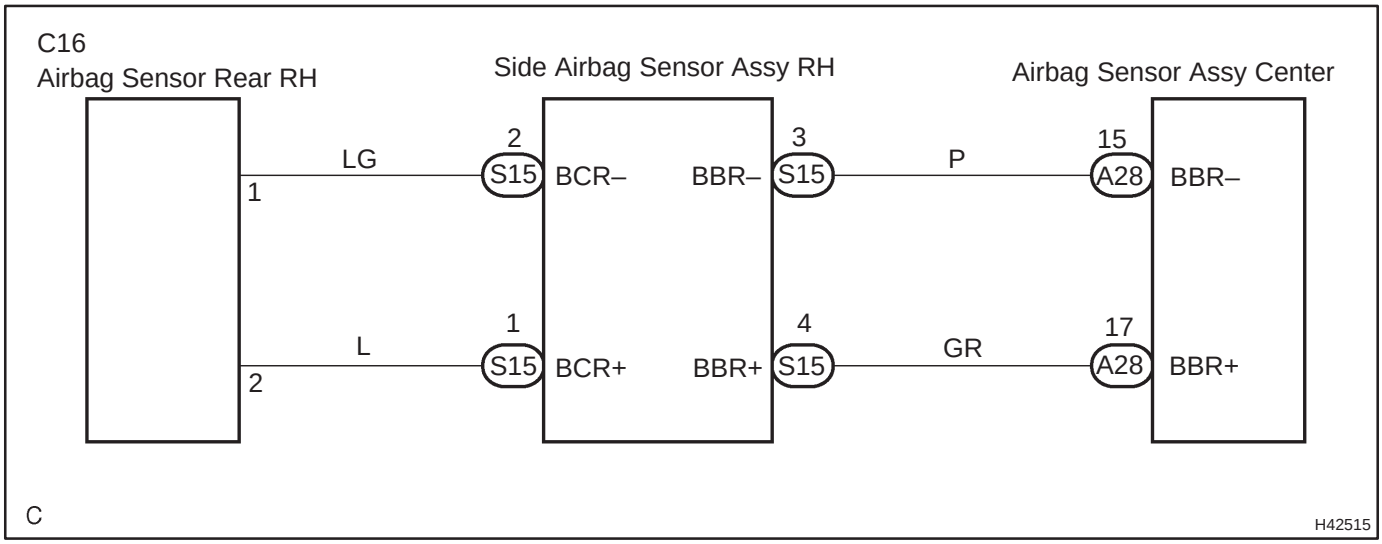

INSPECTION PROCEDURE

1	CHECK DTC

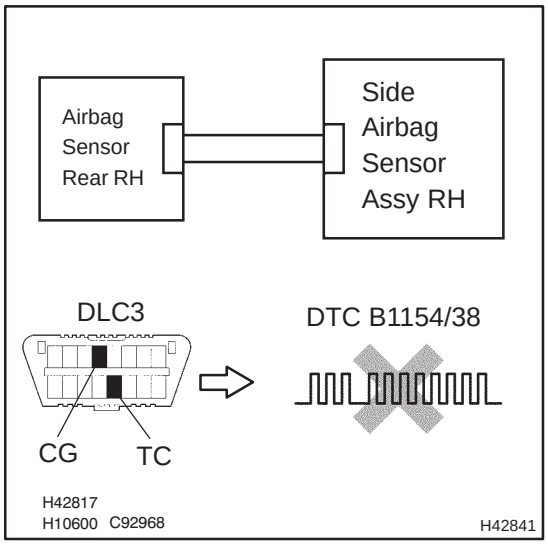

(a) Turn the ignition switch to the LOCK position.
(b) Disconnect the negative (–) terminal cable from the battery, and wait for at least 90 seconds.
(c) Connect the negative (–) terminal cable to the battery, and wait for at least 2 seconds.
(d) Turn the ignition switch to the ON position, and wait for at least 10 seconds.
(e) Clear the stored DTCs in the memory (See page 05–1184).
(f) Turn the ignition switch to the LOCK position.
(g) Turn the ignition switch to the ON position, and wait for at least 10 seconds.
(h) Check the DTCs (See page 05–1184).

OK:

DTC B1154/38 is not output.

HINT:

Codes other than code B1154/38 may be output at this time, but they are not related to this check.

NG → **Go to step 2**

OK

USE SIMULATION METHOD TO CHECK

2	CHECK CONNECTION OF CONNECTORS

(a) Turn the ignition switch to the LOCK position.
(b) Disconnect the negative (–) terminal cable from the battery, and wait for at least 90 seconds.
(c) Check that the connectors are properly connected to the side airbag sensor assy RH and the airbag sensor rear RH.

OK:

The connectors are connected.

NG → **CONNECT CONNECTORS**

OK

3 CHECK FLOOR WIRE NO.2(OPEN)

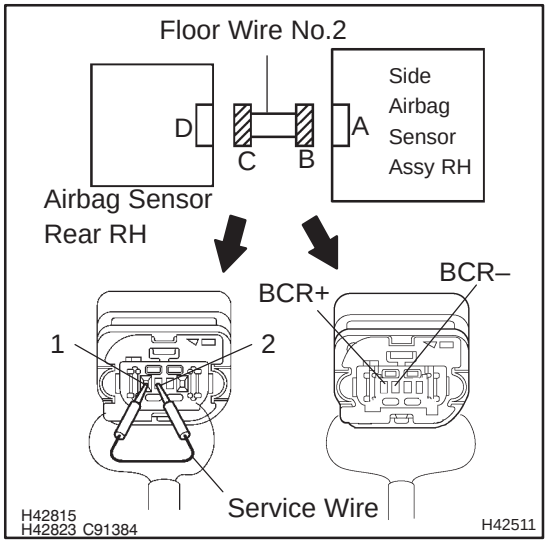

(a) Disconnect the connectors from the side airbag sensor assy RH and the airbag sensor rear RH.

(b) Using a service wire, connect 1 and 2 of the connector ”C”.

NOTICE:

Do not forcibly insert a service wire into the terminal of the connector when connecting.

(c) Measure the resistance between BCR+ and BCR– of the connector ”B”.

OK:

Resistance: Below 1 Ω

NG → **REPAIR OR REPLACE FLOOR WIRE NO.2**

OK

4 CHECK FLOOR WIRE NO.2(TO B+)

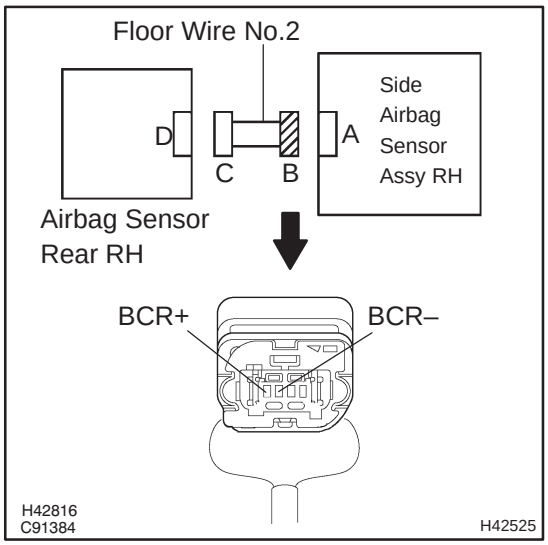

(a) Disconnect the service wire from the connector ”C”.

(b) Connect the negative (–) terminal cable to the battery, and turn the ignition switch to the ON position.

(c) Measure the voltage between the body ground and each of BCR+ and BCR– of the connector ”B”.

OK:

Voltage: Below 1 V

NG → **REPAIR OR REPLACE FLOOR WIRE NO.2**

OK

5 CHECK FLOOR WIRE NO.2(TO GROUND)

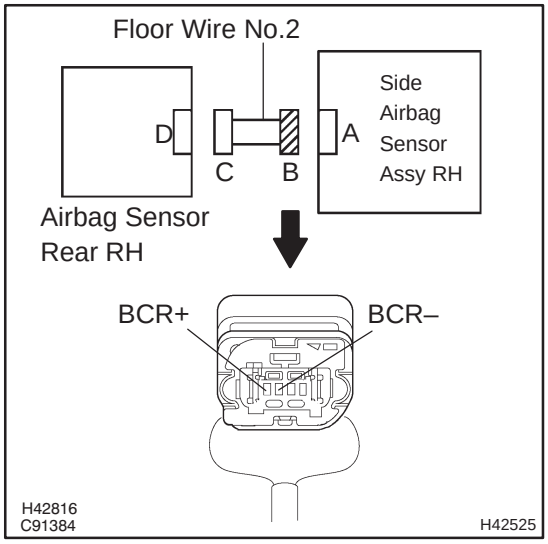

(a) Turn the ignition switch to the LOCK position.
(b) Disconnect the negative (–) terminal cable from the battery, and wait for at least 90 seconds.
(c) Measure the resistance between the body ground and each of BCR+ and BCR– of the connector "B".
OK:
Resistance: 10 kΩ or Higher

NG → **REPAIR OR REPLACE FLOOR WIRE NO.2**

OK

6 CHECK AIR BAG SENSOR REAR RH

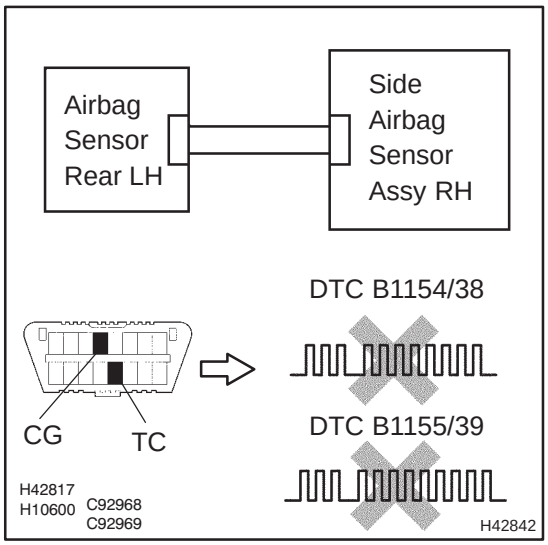

(a) Turn the ignition switch to the LOCK position.
(b) Disconnect the negative (–) terminal cable from the battery, and wait for at least 90 seconds.
(c) Connect the connector to the side airbag sensor assy RH.
(d) Interchange the airbag sensor rear RH with LH and connect the connectors to them.
(e) Connect the negative (–) terminal cable to the battery, and wait for at least 2 seconds.
(f) Turn the ignition switch to the ON position, and wait for at least 10 seconds.
(g) Clear the stored DTCs in the memory (See page 05–1184).
(h) Turn the ignition switch to the LOCK position.
(i) Turn the ignition switch to the ON position, and wait for at least 10 seconds.
(j) Check the DTCs (See page 05–1184).
OK:
A: DTC B1154/38 is not output.
B: DTC B1155/39 is not output.

NG:A → **Go to step 7**

NG:B → **REPLACE AIR BAG SENSOR REAR RH**

OK

USE SIMULATION METHOD TO CHECK

7	CHECK SIDE AIR BAG SENSOR ASSY RH

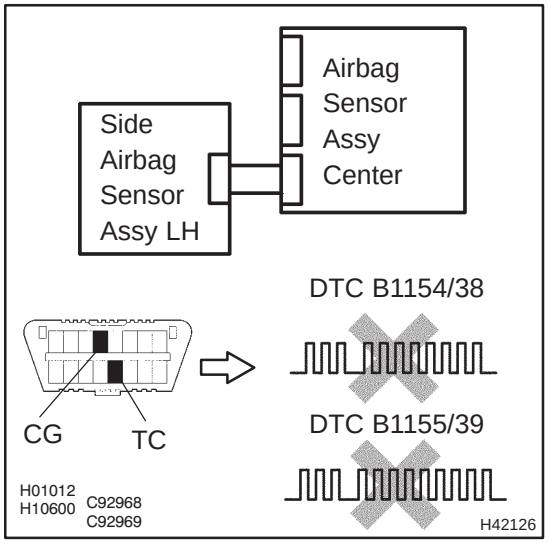

(a) Turn the ignition switch to the LOCK position.
(b) Disconnect the negative (–) terminal cable from the battery, and wait for at least 90 seconds.
(c) Return the interchanged airbag sensor rear RH and LH to the original condition and connect the connectors to them.
(d) Interchange the side airbag sensor assy RH with LH and connect the connectors to them.
(e) Connect the negative (–) terminal cable to the battery, and wait for at least 2 seconds.
(f) Turn the ignition switch to the ON position, and wait for at least 10 seconds.
(g) Clear the stored DTCs in the memory (See page 05–1184).
(h) Tune the ignition switch to the LOCK position.
(i) Turn the ignition switch to the ON position, and wait for at least 10 seconds.
(j) Check the DTCs (See page 05–1184).

OK:
A: DTC B1154/38 is not output.
B: DTC B1155/39 is not output.

NG:A	REPLACE AIR BAG SENSOR ASSY CENTER

NG:B	REPLACE SIDE AIR BAG SENSOR ASSY RH

OK

USE SIMULATION METHOD TO CHECK

DTC	B1155/39	AIRBAG SENSOR REAR (LH) MALFUNCTION

CIRCUIT DESCRIPTION

The airbag sensor rear LH consists of the diagnosis circuit and the lateral deceleration sensor, etc.
If the airbag sensor assy center receives the signal from the lateral deceleration sensor signal in the airbag sensor rear LH, it judges whether or not the SRS should be activated.
DTC B1155/39 is recorded when a malfunction in the airbag sensor rear LH is detected.

DTC No.	DTC Detection Condition	Trouble Area
B1155/39	• Short circuit in airbag sensor rear LH wire harness (to ground) • Short circuit in airbag sensor rear LH wire harness (to B+) • Open circuit in BCL+ wire harness or BCL– wire harness of airbag sensor rear LH • Airbag sensor rear LH malfunction • Side airbag sensor assy LH malfunction • Airbag sensor assy center malfunction	• Airbag sensor rear LH • Side airbag sensor assy LH • Airbag sensor assy center • Floor wire

HINT:
DTC B1155/39 is indicated only for the vehicle equipped with the curtain shield airbag.

WIRING DIAGRAM

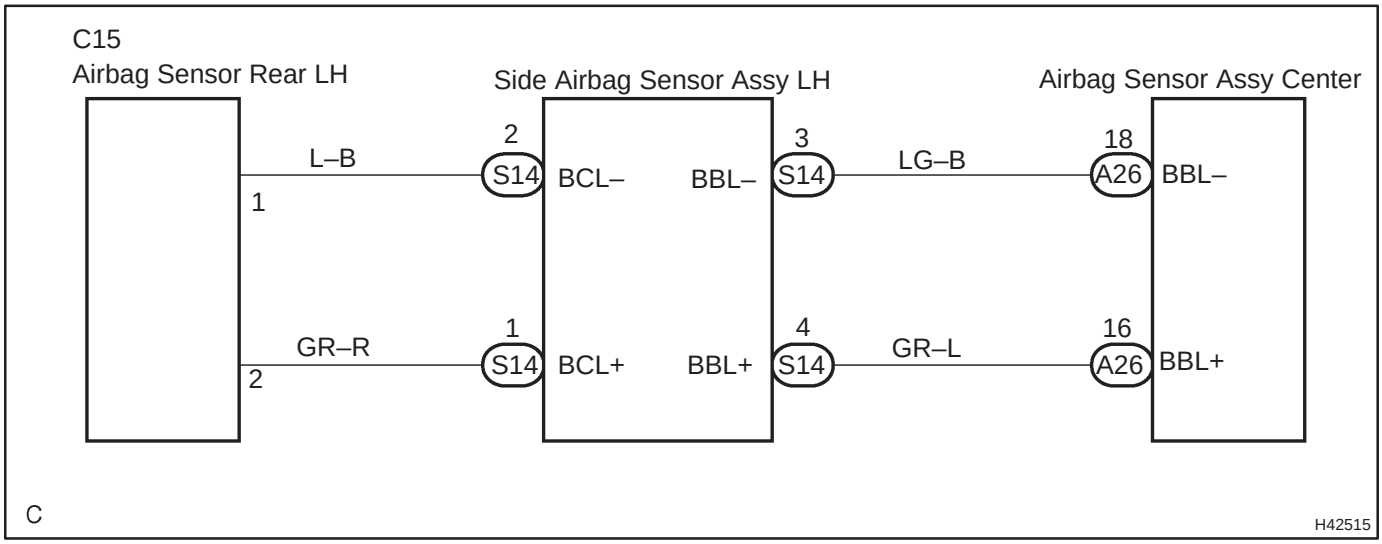

INSPECTION PROCEDURE

1	CHECK DTC

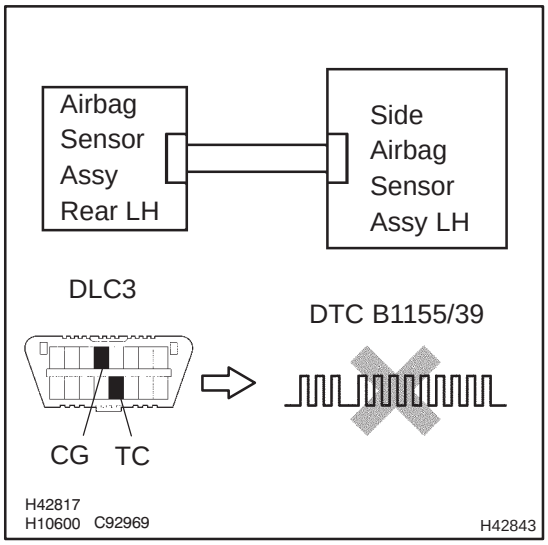

(a) Turn the ignition switch to the LOCK position.
(b) Disconnect the negative (–) terminal cable from the battery, and wait for at least 90 seconds.
(c) Connect the negative (–) terminal cable to the battery, and wait for at least 2 seconds.
(d) Turn the ignition switch to the ON position, and wait for at least 10 seconds.
(e) Clear the stored DTCs in the memory (See page 05–1184).
(f) Turn the ignition switch to the LOCK position.
(g) Turn the ignition switch to the ON position, and wait for at least 10 seconds.
(h) Check the DTCs (See page 05–1184).
OK:
DTC B1155/39 is not output.

HINT:
Codes other than code B1155/39 may be output at this time, but they are not related to this check.

NG → **Go to step 2**

OK

USE SIMULATION METHOD TO CHECK

2	CHECK CONNECTION OF CONNECTORS

(a) Turn the ignition switch to the LOCK position.
(b) Disconnect the negative (–)terminal cable from the battery, and wait for at least 90 seconds.
(c) Check that the connectors are properly connected to the side airbag sensor assy LH and the airbag sensor rear LH.
OK:
The connectors are connected.

NG → **CONNECT CONNECTORS**

OK

3 CHECK FLOOR WIRE(OPEN)

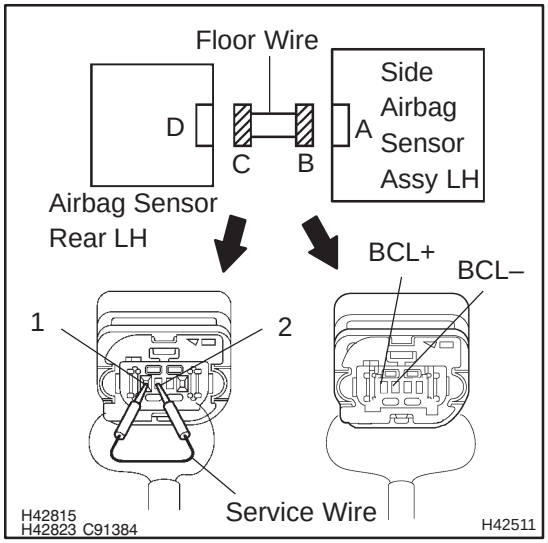

(a) Disconnect the connectors from the side airbag sensor assy LH and the airbag sensor rear LH.

(b) Using a service wire, connect 1 and 2 of the connector ”C”.

NOTICE:

Do not forcibly insert a service wire into the terminal of the connector when connecting.

(c) Measure the resistance between BCL+ and BCL– of the connector ”B”.

OK:

Resistance: Below 1 Ω

NG	**REPAIR OR REPLACE FLOOR WIRE**

OK

4 CHECK FLOOR WIRE(TO B+)

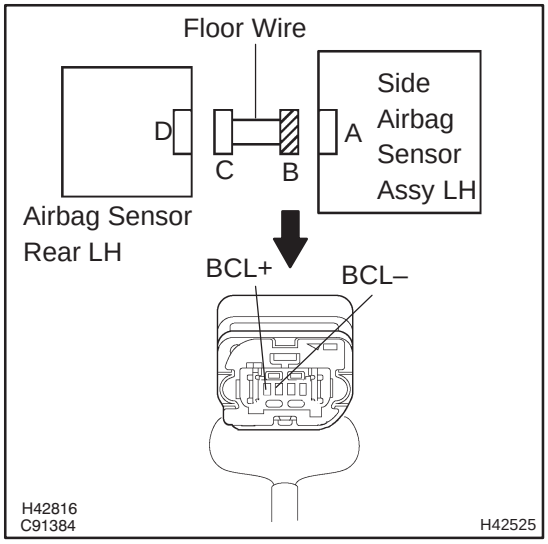

(a) Disconnect the service wire from the connector ”C”.

(b) Connect the negative (–) terminal cable to the battery, and turn the ignition switch to the ON position.

(c) Measure the voltage between the body ground and each of BCL+ and BCL– of the connector ”B”.

OK:

Voltage: Below 1 V

NG	**REPAIR OR REPLACE FLOOR WIRE**

OK

5 CHECK FLOOR WIRE(TO GROUND)

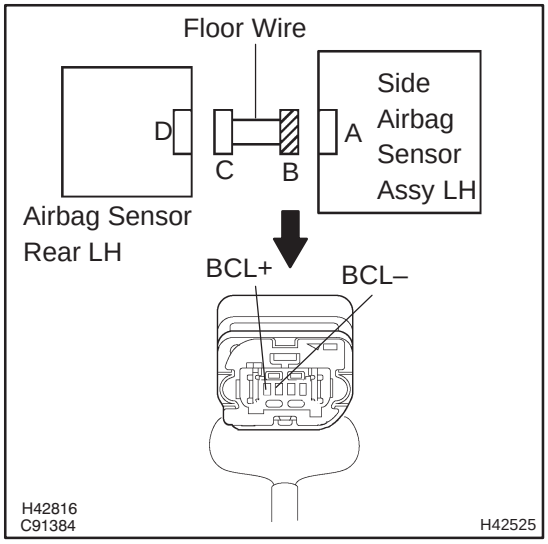

(a) Turn the ignition switch to the LOCK position.
(b) Disconnect the negative (–) terminal cable from the battery, and wait for at least 90 seconds.
(c) Measure the resistance between the body ground and each of BCL+ and BCL– of the connector "B".
OK:
Resistance: 10 kΩ or Higher

NG → **REPAIR OR REPLACE FLOOR WIRE**

OK

6 CHECK AIR BAG SENSOR REAR LH

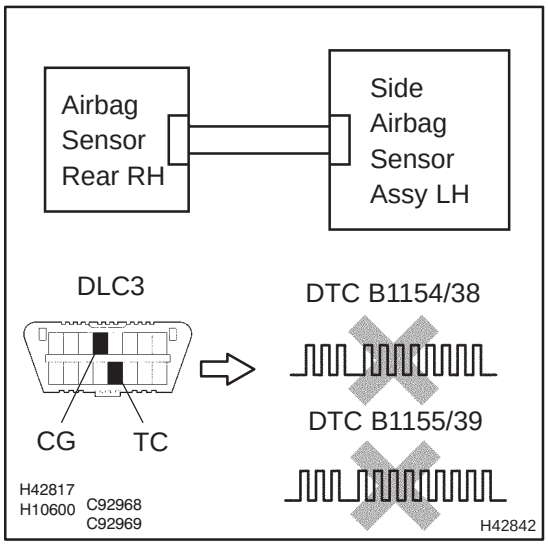

(a) Turn the ignition switch to the LOCK position.
(b) Disconnect the negative (–) terminal cable from the battery, and wait for at least 90 seconds.
(c) Connect the connector to the side airbag sensor assy LH.
(d) Interchange the airbag sensor rear RH with LH and connect the connectors to them.
(e) Connect the negative (–) terminal cable to the battery, and wait for at least 2 seconds.
(f) Turn the ignition switch to the ON position, and wait for at least 10 seconds.
(g) Clear the stored DTCs in the memory (See page 05–1184).
(h) Turn the ignition switch to the LOCK position.
(i) Turn the ignition switch to the ON position, and wait for at least 10 seconds.
(j) Check the DTCs (See page 05–1184).
OK:
A: DTC B1154/38 is not output.
B: DTC B1155/39 is not output.

NG:A → **Go to step 7**

NG:B → **REPLACE AIR BAG SENSOR REAR LH**

OK

USE SIMULATION METHOD TO CHECK

7 CHECK SIDE AIR BAG SENSOR ASSY LH

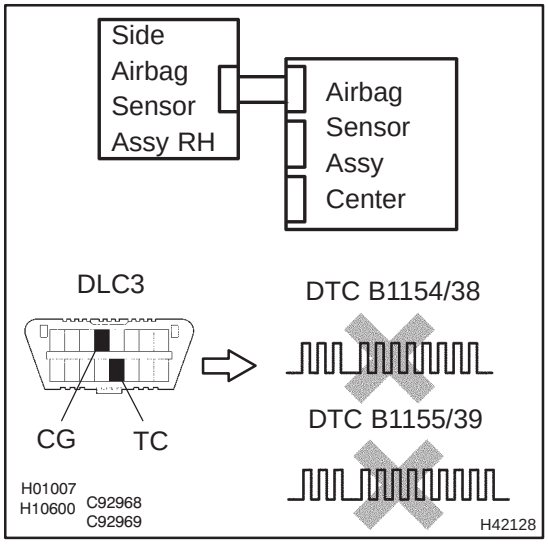

(a) Turn the ignition switch to the LOCK position.
(b) Disconnect the negative (–) terminal cable from the battery, and wait for at least 90 seconds.
(c) Return the interchanged airbag sensor rear RH and LH to the original condition and connect the connectors to them.
(d) Interchange the side airbag sensor assy RH with LH and connect the connectors to them.
(e) Connect the negative (–) terminal cable to the battery, and wait for at least 2 seconds.
(f) Turn the ignition switch to the ON position, and wait for at least 10 seconds.
(g) Clear the stored DTCs in the memory (See page 05–1184).
(h) Tune the ignition switch to the LOCK position.
(i) Turn the ignition switch to the ON position, and wait for at least 10 seconds.
(j) Check the DTCs (See page 05–1184).

OK:
A: DTC B1154/38 is not output.
B: DTC B1155/39 is not output.

NG:A	**REPLACE AIR BAG SENSOR ASSY CENTER**
NG:B	**REPLACE SIDE AIR BAG SENSOR ASSY LH**

OK

USE SIMULATION METHOD TO CHECK

DTC	B1160/83	SHORT IN CURTAIN SHIELD SQUIB (RH) CIRCUIT

CIRCUIT DESCRIPTION

The curtain shield squib RH circuit consists of the airbag sensor assy center and the curtain shield airbag assy RH.
This circuit actuates the SRS to deploy when the SRS deployment conditions are fulfilled.
DTC B1160/83 is recorded when a short circuit is detected in the curtain shield squib RH circuit.

DTC No.	DTC Detecting Condition	Trouble Area
B1160/83	• Short circuit between ICR+ wire harness and ICR– wire harness of curtain shield squib RH • Curtain shield squib RH malfunction • Airbag sensor assy center malfunction	• Curtain shield airbag assy RH (Curtain shield squib RH) • Airbag sensor assy center • Floor wire No.2

HINT:
DTC B1160/83 is indicated only for the vehicle equipped with the curtain shield airbag.

WIRING DIAGRAM

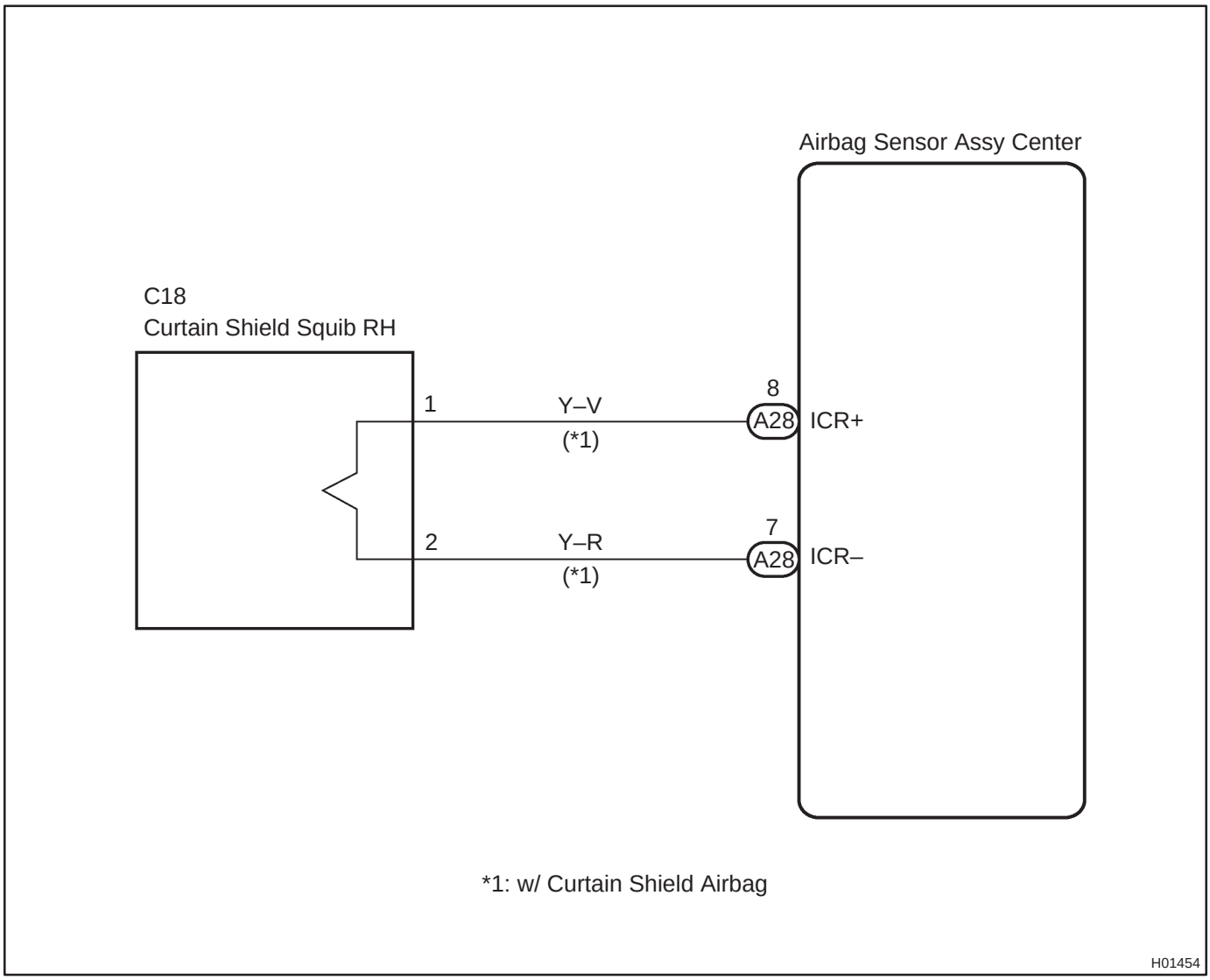

INSPECTION PROCEDURE

1	CHECK CONNECTOR

(a) Turn the ignition switch to the LOCK position.
(b) Disconnect the negative (–) terminal cable from the battery, and wait for at least 90 seconds.
(c) Disconnect the connectors from the airbag sensor assy center and the curtain shield airbag assy RH.
(d) Check that the floor wire No.2 connector (on the curtain shield airbag assy RH side) is not damaged.
OK:
The lock button is not disengaged, or the claw of the lock is not deformed or damaged.

NG → **REPAIR OR REPLACE FLOOR WIRE NO.2**

OK

2	CHECK FLOOR WIRE NO.2(CURTAIN SHIELD SQUIB RH CIRCUIT)

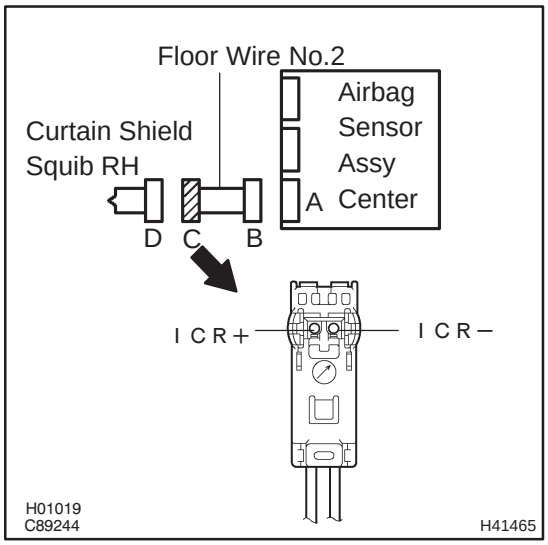

(a) Release the activation prevention mechanism built in the connector "B" (See page 05–1184).
(b) Measure the resistance between ICR+ and ICR– of the connector "C".
OK:
Resistance: 1 MΩ or Higher

NG → **REPAIR OR REPLACE FLOOR WIRE NO.2**

OK

3 CHECK AIR BAG SENSOR ASSY CENTER

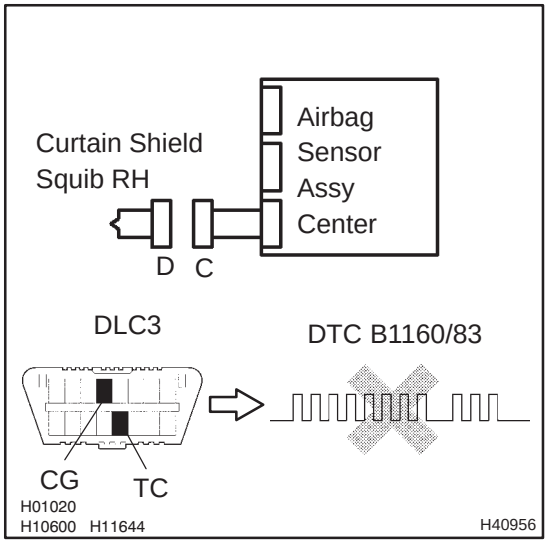

(a) Connect the connector to the airbag sensor assy center.
(b) Connect the negative (–) terminal cable to the battery, and wait for at least 2 seconds.
(c) Turn the ignition switch to the ON position, and wait for at least 10 seconds.
(d) Clear the stored DTCs in the memory (See page 05–1184).
(e) Turn the ignition switch to the LOCK position.
(f) Turn the ignition switch to the ON position, and wait for at least 10 seconds.
(g) Check the DTCs (See page 05–1184).

OK:

DTC B1160/83 is not output.

HINT:

Codes other than code B1160/83 may be output at this time, but they are not related to this check.

NG → **REPLACE AIR BAG SENSOR ASSY CENTER**

OK

4 CHECK CURTAIN SHIELD AIR BAG ASSY RH(CURTAIN SHIELD SQUIB RH)

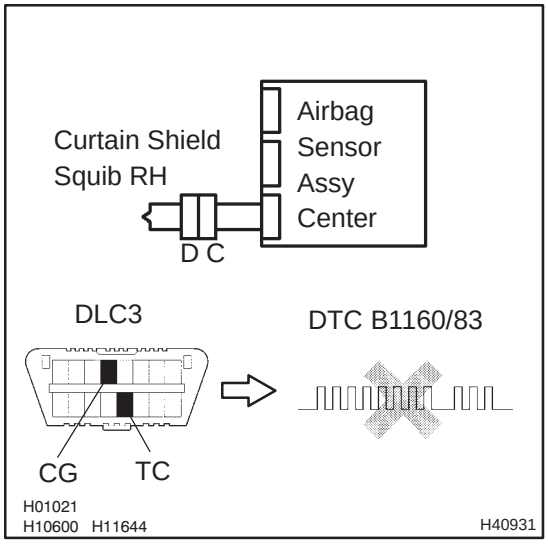

(a) Turn the ignition switch to the LOCK position.
(b) Disconnect the negative (–) terminal cable from the battery, and wait for at least 90 seconds.
(c) Connect the connector to the curtain shield airbag assy RH.
(d) Connect the negative (–) terminal cable to the battery, and wait for at least 2 seconds.
(e) Turn the ignition switch to the ON position, and wait for at least 10 seconds.
(f) Clear the stored DTCs in the memory (See page 05–1184).
(g) Turn the ignition switch to the LOCK position.
(h) Turn the ignition switch to the ON position, and wait for at least 10 seconds.
(i) Check the DTCs (See page 05–1184).

OK:

DTC B1160/83 is not output.

HINT:

Codes other than code B1160/83 may be output at this time, but they are not related to this check.

NG → **REPLACE CURTAIN SHIELD AIR BAG ASSY RH**

OK

USE SIMULATION METHOD TO CHECK

DTC	B1161/84	OPEN IN CURTAIN SHIELD SQUIB (RH) CIRCUIT

CIRCUIT DESCRIPTION

The curtain shield squib RH circuit consists of the airbag sensor assy center and the curtain shield airbag assy RH.
This circuit actuates the SRS to deploy when the SRS deployment conditions are fulfilled.
DTC B1161/84 is recorded when an open circuit is detected in the curtain shield squib RH circuit.

DTC No.	DTC Detecting Condition	Trouble Area
B1161/84	• Open circuit in ICR+ wire harness or ICR– wire harness of curtain shield squib RH • Curtain shield squib RH malfunction • Airbag sensor assy center malfunction	• Curtain shield airbag assy RH (Curtain shield squib RH) • Airbag sensor assy center • Floor wire No.2

HINT:
DTC B1161/84 is indicated only for the vehicle equipped with the curtain shield airbag.

WIRING DIAGRAM

See page 05–1322.

INSPECTION PROCEDURE

1	CHECK FLOOR WIRE NO.2(CURTAIN SHIELD SQUIB RH CIRCUIT)

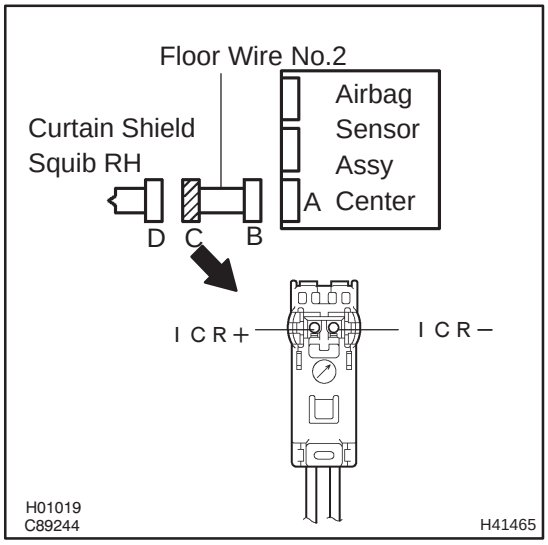

(a) Turn the ignition switch to the LOCK position.
(b) Disconnect the negative (–) terminal cable from the battery, and wait for at least 90 seconds.
(c) Disconnect the connectors from the airbag sensor assy center and the curtain shield airbag assy RH.
(d) Measure the resistance between ICR+ and ICR– of the connector "C".
OK:
Resistance: Below 1 Ω

NG → **REPAIR OR REPLACE FLOOR WIRE NO.2**

OK

2 CHECK AIR BAG SENSOR ASSY CENTER

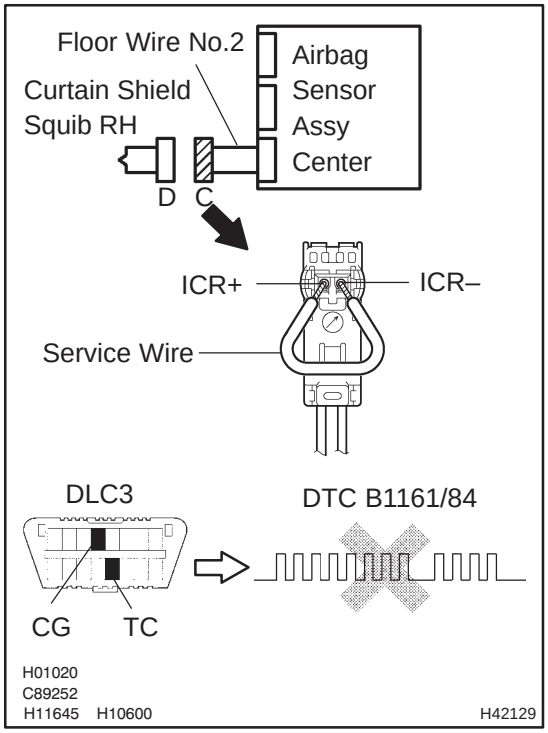

(a) Connect the connector to the airbag sensor assy center.
(b) Using a service wire, connect ICR+ and ICR– of the connector ”C”.

NOTICE:

Do not forcibly insert a service wire into the terminal of the connector when connecting.

(c) Connect the negative (–) terminal cable to the battery, and wait for at least 2 seconds.
(d) Turn the ignition switch to the ON position, and wait for at least 10 seconds.
(e) Clear the stored DTCs in the memory (See page 05–1184).
(f) Turn the ignition switch to the LOCK position.
(g) Turn the ignition switch to the ON position, and wait for at least 10 seconds.
(h) Check the DTCs (See page 05–1184).

OK:

DTC B1161/84 is not output.

HINT:

Codes other than code B1161/84 may be output at this time, but they are not related to this check.

NG → **REPLACE AIR BAG SENSOR ASSY CENTER**

OK

3	CHECK CURTAIN SHIELD AIR BAG ASSY RH(CURTAIN SHIELD SQUIB RH)

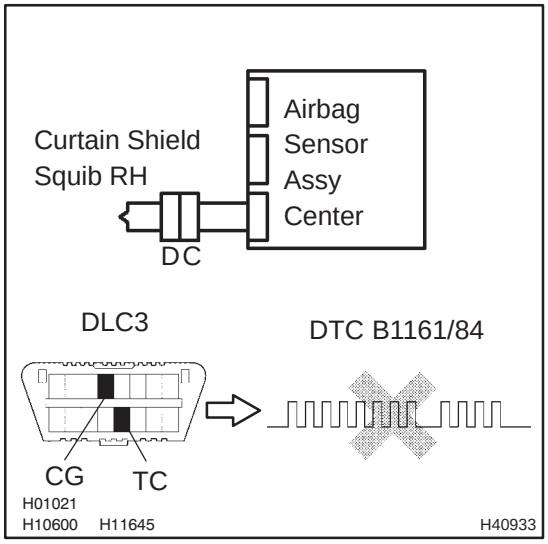

(a) Turn the ignition switch to the LOCK position.
(b) Disconnect the negative (–) terminal cable from the battery, and wait for at least 90 seconds.
(c) Connect the connector to the curtain shield airbag assy RH.
(d) Connect the negative (–) terminal cable to the battery, and wait for at least 2 seconds.
(e) Turn the ignition switch to the ON position, and wait for at least 10 seconds.
(f) Clear the stored DTCs in the memory (See page 05–1184).
(g) Turn the ignition switch to the LOCK position.
(h) Turn the ignition switch to the ON position, and wait for at least 10 seconds.
(i) Check the DTCs (See page 05–1184).
OK:
DTC B1161/84 is not output.

HINT:
Codes other than code B1161/84 may be output at this time, but they are not related to this check.

NG → **REPLACE CURTAIN SHIELD AIR BAG ASSY RH**

OK

USE SIMULATION METHOD TO CHECK

DTC	B1162/81	SHORT IN CURTAIN SHIELD SQUIB (RH) CIRCUIT (TO GROUND)

CIRCUIT DESCRIPTION

The curtain shield squib RH circuit consists of the airbag sensor assy center and the curtain shield airbag assy RH.
This circuit actuates the SRS to deploy when the SRS deployment conditions are fulfilled.
DTC B1162/81 is recorded when a short to ground is detected in the curtain shield squib RH circuit.

DTC No.	DTC Detecting Condition	Trouble Area
B1162/81	• Short circuit in curtain shield squib RH wire harness (to ground) • Curtain shield squib RH malfunction • Airbag sensor assy malfunction	• Curtain shield airbag assy RH (Curtain shield squib RH) • Airbag sensor assy center • Floor wire No.2

HINT:
DTC B1162/81 is indicated only for the vehicle equipped with the curtain shield airbag.

WIRING DIAGRAM

See page 05–1322.

INSPECTION PROCEDURE

1	CHECK FLOOR WIRE NO.2(CURTAIN SHIELD SQUIB RH CIRCUIT)

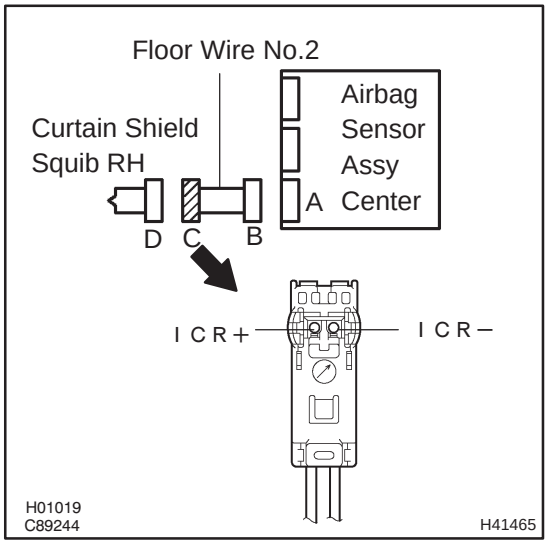

(a) Turn the ignition switch to the LOCK position.
(b) Disconnect the negative (–) terminal cable from the battery, and wait for at least 90 seconds.
(c) Disconnect the connectors from the airbag sensor assy center and the curtain shield airbag assy RH.
(d) Measure the resistance between the body ground and ICR+ of the connector "C".
OK:
Resistance: 1 MΩ or Higher

NG → **REPAIR OR REPLACE FLOOR WIRE NO.2**

OK

2 CHECK AIR BAG SENSOR ASSY CENTER

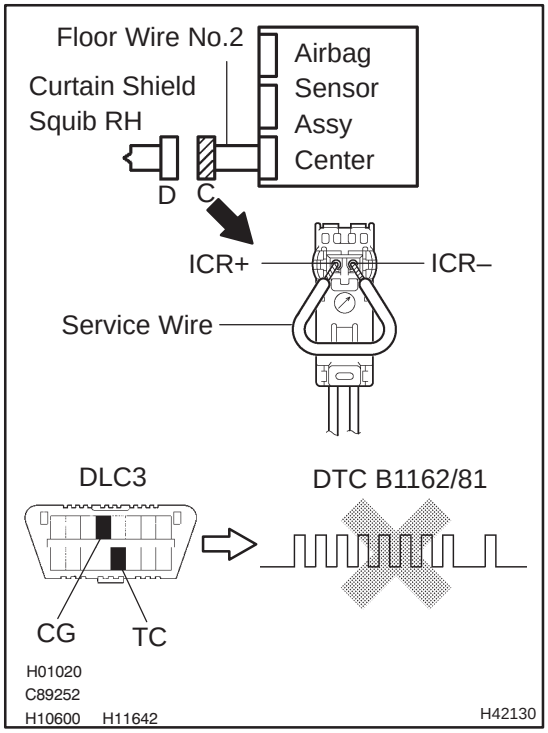

(a) Connect the connector to the airbag sensor assy center.
(b) Using a service wire, connect ICR+ and ICR– of the connector ”C”.

NOTICE:

Do not forcibly insert a service wire into the terminal of the connector when connecting.

(c) Connect the negative (–) terminal cable to the battery, and wait for at least 2 seconds.
(d) Turn the ignition switch to the ON position, and wait for at least 10 seconds.
(e) Clear the stored DTCs in the memory (See page 05–1184).
(f) Turn the ignition switch to the LOCK position.
(g) Turn the ignition switch to the ON position, and wait for at least 10 seconds.
(h) Check the DTCs (See page 05–1184).

OK:

DTC B1162/81 is not output.

HINT:

Codes other than code B1162/81 may be output at this time, but they are not related to this check.

NG → **REPLACE AIR BAG SENSOR ASSY CENTER**

OK

3	CHECK CURTAIN SHIELD AIR BAG ASSY RH(CURTAIN SHIELD SQUIB RH)

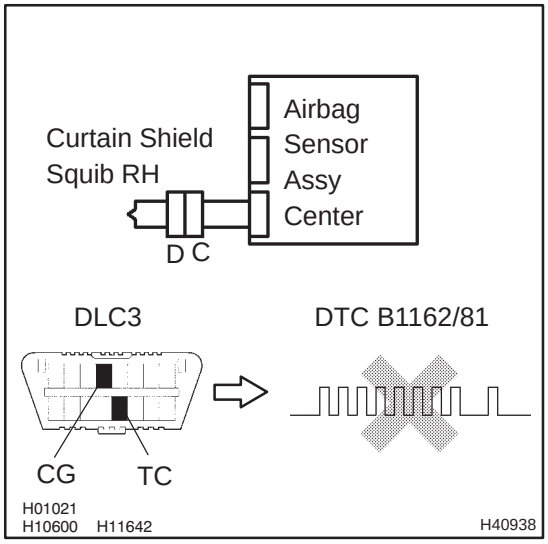

(a) Turn the ignition switch to the LOCK position.
(b) Disconnect the negative (–) terminal cable from the battery, and wait for at least 90 seconds.
(c) Connect the connector to the curtain shield airbag assy RH.
(d) Connect the negative (–) terminal cable to the battery, and wait for at least 2 seconds.
(e) Turn the ignition switch to the ON position, and wait for at least 10 seconds.
(f) Clear the stored DTCs in the memory (See page 05–1184).
(g) Turn the ignition switch to the LOCK position.
(h) Turn the ignition switch to the ON position, and wait for at least 10 seconds.
(i) Check the DTCs (See page 05–1184).
OK:
DTC B1162/81 is not output.

HINT:
Codes other than code B1162/81 may be output at this time, but they are not related to this check.

NG → **REPLACE CURTAIN SHIELD AIR BAG ASSY RH**

OK

4	USE SIMULATION METHOD TO CHECK

NG → **Go to step 1**

OK

REPLACE ALL SRS COMPONENTS INCLUDING WIRE HARNESS

DTC	B1163/82	SHORT IN CURTAIN SHIELD SQUIB (RH) CIRCUIT (TO B+)

CIRCUIT DESCRIPTION

The curtain shield squib RH circuit consists of the airbag sensor assy center and the curtain shield airbag assy RH.
This circuit actuates the SRS to deploy when the SRS deployment conditions are fulfilled.
DTC B1163/82 is recorded when a short to B+ is detected in the curtain shield squib RH circuit.

DTC No.	DTC Detecting Condition	Trouble Area
B1163/82	• Short circuit in curtain shield squib RH wire harness (to B+) • Curtain shield squib RH malfunction • Airbag sensor assy center malfunction	• Curtain shield airbag assy RH (Curtain shield squib RH) • Airbag sensor assy center • Floor wire No.2

HINT:
DTC B1163/82 is indicated only for the vehicle equipped with the curtain shield airbag.

WIRING DIAGRAM

See page 05–1322.

INSPECTION PROCEDURE

1	CHECK FLOOR WIRE NO.2(CURTAIN SHIELD SQUIB RH CIRCUIT)

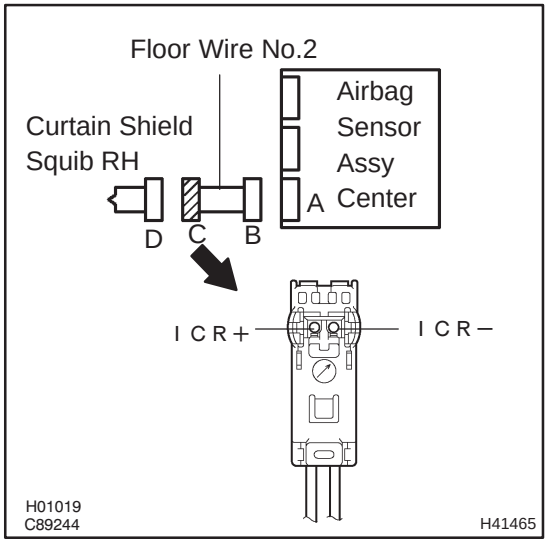

(a) Turn the ignition switch to the LOCK position.
(b) Disconnect the negative (–) terminal cable from the battery, and wait for at least 90 seconds.
(c) Disconnect the connectors from the airbag sensor assy center and the curtain shield airbag assy RH.
(d) Connect the negative (–) terminal cable to the battery, and turn the ignition switch to the ON position.
(e) Measure the voltage between the body ground and ICR+ of the connector ”C”.
OK:
Voltage: Below 1 V

NG → **REPAIR OR REPLACE FLOOR WIRE NO.2**

OK

2 CHECK AIR BAG SENSOR ASSY CENTER

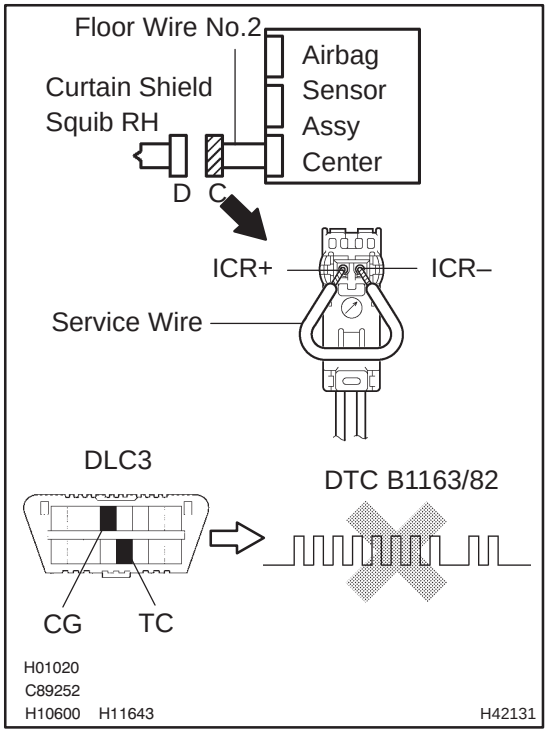

(a) Turn the ignition switch to the LOCK position.
(b) Disconnect the negative (–) terminal cable from the battery, and wait for at least 90 seconds.
(c) Connect the connector to the airbag sensor assy center.
(d) Using a service wire, connect ICR+ and ICR– of the connector ”C”.

NOTICE:
Do not forcibly insert a service wire into the terminal of the connector when connecting.

(e) Connect the negative (–) terminal cable to the battery, and wait for at least 2 seconds.
(f) Turn the ignition switch to the ON position, and wait for at least 10 seconds.
(g) Clear the stored DTCs in the memory (See page 05–1184).
(h) Turn the ignition switch to the LOCK position.
(i) Turn the ignition switch to the ON position, and wait for at least 10 seconds.
(j) Check the DTCs (See page 05–1184).
OK:
DTC B1163/82 is not output.

HINT:
Codes other than code B1163/82 may be output at this time, but they are not related to this check.

NG → **REPLACE AIR BAG SENSOR ASSY CENTER**

OK

3	CHECK CURTAIN SHIELD AIR BAG ASSY RH(CURTAIN SHIELD SQUIB RH)

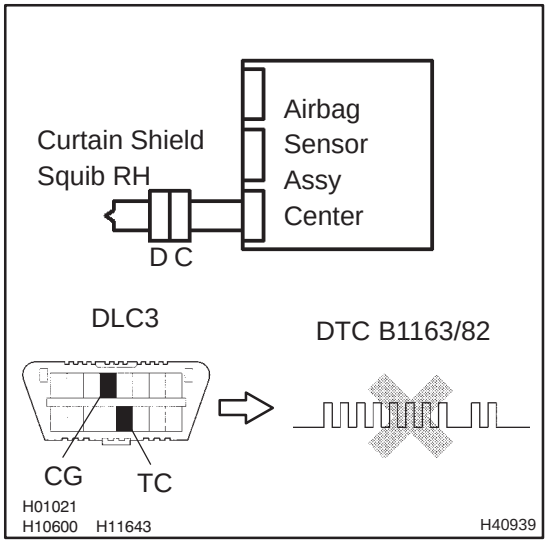

(a) Turn the ignition switch to the LOCK position.
(b) Disconnect the negative (–) terminal cable from the battery, and wait for at least 90 seconds.
(c) Connect the connector to the curtain shield airbag assy RH.
(d) Connect the negative (–) terminal cable to the battery, and wait for at least 2 seconds.
(e) Turn the ignition switch to the ON position, and wait for at least 10 seconds.
(f) Clear the stored DTCs in the memory (See page 05–1184).
(g) Turn the ignition switch to the LOCK position.
(h) Turn the ignition switch to the ON position, and wait for at least 10 seconds.
(i) Check the DTCs (See page 05–1184).
OK:
DTC B1163/82 is not output.

HINT:
Codes other than code B1163/82 may be output at this time, but they are not related to this check.

NG → **REPLACE CURTAIN SHIELD AIR BAG ASSY RH**

OK

4	USE SIMULATION METHOD TO CHECK

NG → **Go to step 1**

OK

REPLACE ALL SRS COMPONENTS INCLUDING WIRE HARNESS

DTC	B1165/87	SHORT IN CURTAIN SHIELD SQUIB (LH) CIRCUIT

CIRCUIT DESCRIPTION

The curtain shield squib LH circuit consists of the airbag sensor assy center and the curtain shield airbag assy LH.
This circuit actuates the SRS to deploy when the SRS deployment conditions are fulfilled.
DTC B1165/87 is recorded when a short circuit is detected in the curtain shield squib LH circuit.

DTC No.	DTC Detecting Condition	Trouble Area
B1165/87	• Short circuit between ICL+ wire harness and ICL– wire harness of curtain shield squib LH • Curtain shield squib LH malfunction • Airbag sensor assy center malfunction	• Curtain shield airbag assy LH (Curtain shield squib LH) • Airbag sensor assy center • Floor wire

HINT:
DTC B1165/87 is indicated only for the vehicle equipped with the curtain shield airbag.

WIRING DIAGRAM

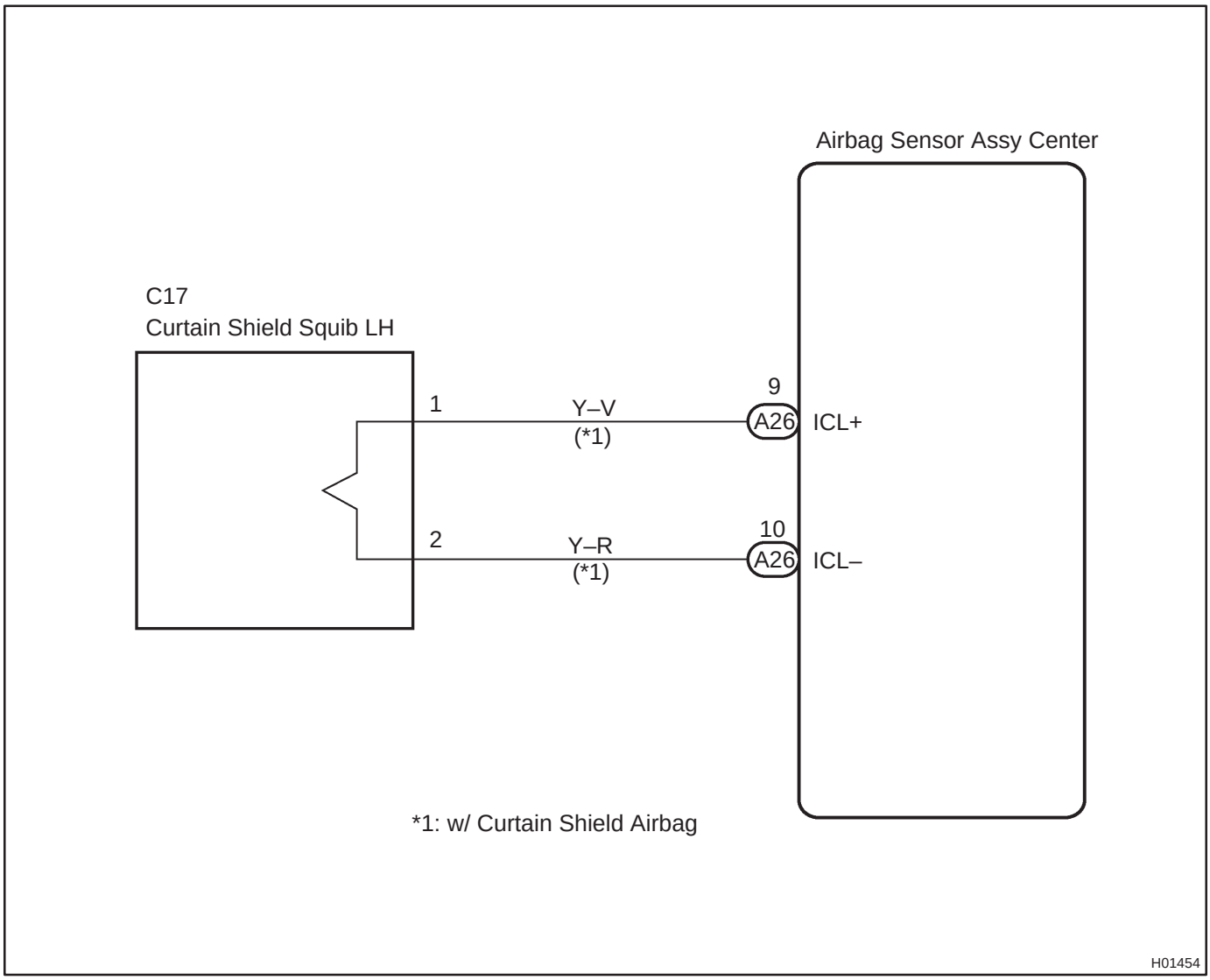

INSPECTION PROCEDURE

1	CHECK CONNECTOR

(a) Turn the ignition switch to the LOCK position.
(b) Disconnect the negative (–) terminal cable from the battery, and wait for at least 90 seconds.
(c) DIsconnect the connectors from the airbag sensor assy center and the curtain shield airbag assy LH.
(d) Check that the floor wire connector (on the curtain shield airbag assy LH side) is not damaged.
OK:
The lock button is not disengaged, or the claw of the lock is not deformed or damaged.

NG → **REPAIR OR REPLACE FLOOR WIRE**

OK

2	CHECK FLOOR WIRE(CURTAIN SHIELD SQUIB LH CIRCUIT)

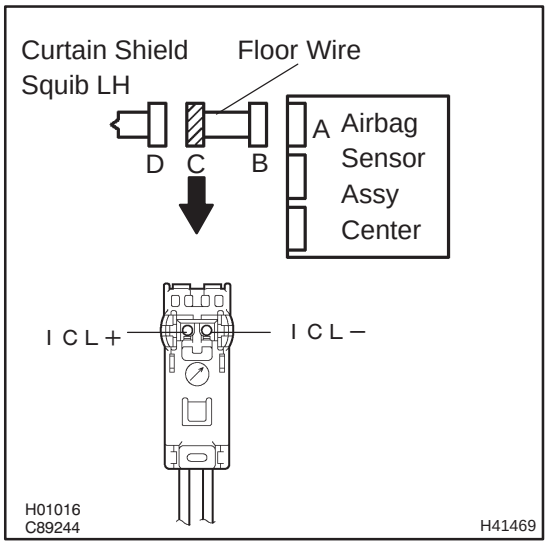

(a) Release the activation prevention mechanism built in the connector "B" (See page 05–1184).
(b) Measure the resistance between ICL+ and ICL– of the connector "C".
OK:
Resistance: 1 MΩ or Higher

NG → **REPAIR OR REPLACE FLOOR WIRE**

OK

3 CHECK AIR BAG SENSOR ASSY CENTER

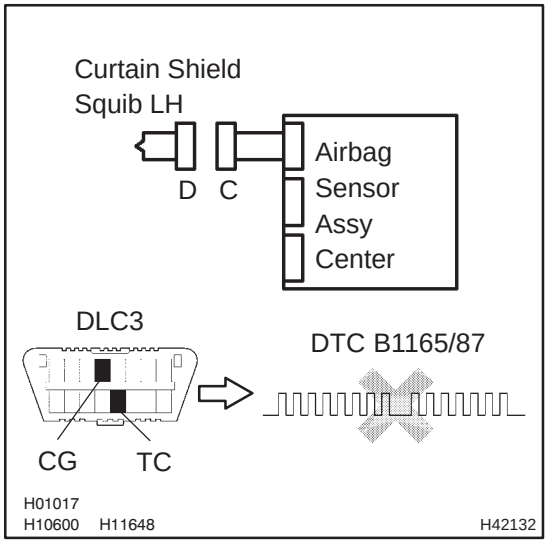

(a) Connect the connector to the airbag sensor assy center.
(b) Connect the negative (–) terminal cable to the battery, and wait for at least 2 seconds.
(c) Turn the ignition switch to the ON position, and wait for at least 10 seconds.
(d) Clear the stored DTCs in the memory (See page 05–1184).
(e) Turn the ignition switch to the LOCK position.
(f) Turn the ignition switch to the ON position, and wait for at least 10 seconds.
(g) Check the DTCs (See page 05–1184).
OK:
DTC B1165/87 is not output.

HINT:
Codes other than code B1165/87 may be output at this time, but they are not related to this check.

NG → **REPLACE AIR BAG SENSOR ASSY CENTER**

OK

4 CHECK CURTAIN SHIELD AIR BAG ASSY LH(CURTAIN SHIELD SQUIB LH)

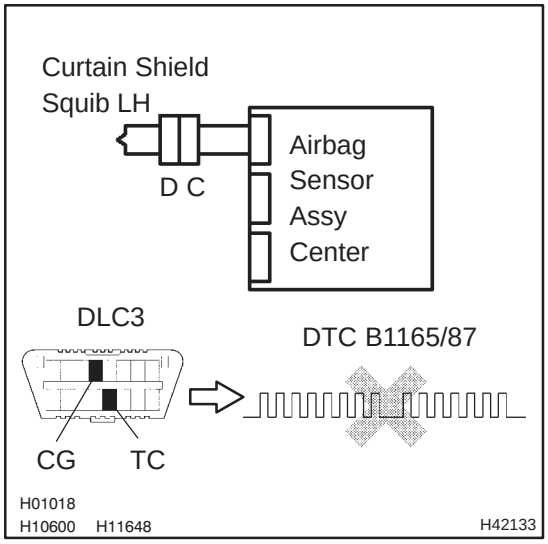

(a) Turn the ignition switch to the LOCK position.
(b) Disconnect the negative (–) terminal cable from the battery, and wait for at least 90 seconds.
(c) Connect the connector to the curtain shield airbag assy LH.
(d) Connect the negative (–) terminal cable to the battery, and wait for at least 2 seconds.
(e) Turn the ignition switch to the ON position, and wait for at least 10 seconds.
(f) Clear the stored DTCs in the memory (See page 05–1184).
(g) Turn the ignition switch to the LOCK position.
(h) Turn the ignition switch to the ON position, and wait for at least 10 seconds.
(i) Check the DTCs (See page 05–1184).
OK:
DTC B1165/87 is not output.

HINT:
Codes other than code B1165/87 may be output at this time, but they are not related to this check.

NG → **REPLACE CURTAIN SHIELD AIR BAG ASSY LH**

OK

USE SIMULATION METHOD TO CHECK

DTC	B1166/88	OPEN IN CURTAIN SHIELD SQUIB (LH) CIRCUIT

CIRCUIT DESCRIPTION

The curtain shield squib LH circuit consists of the airbag sensor assy center and the curtain shield airbag assy LH.
This circuit actuates the SRS to deploy when the SRS deployment conditions are fulfilled.
DTC B1166/88 is recorded when an open circuit is detected in the curtain shield squib LH circuit.

DTC No.	DTC Detecting Condition	Trouble Area
B1166/88	• Open circuit in ICL+ wire harness or ICL– wire harness of curtain shield squib LH • Curtain shield squib LH malfunction • Airbag sensor assy center malfunction	• Curtain shield airbag assy LH (Curtain shield squib LH) • Airbag sensor assy center • Floor wire

HINT:
DTC B1166/88 is indicated only for the vehicle equipped with the curtain shield airbag.

WIRING DIAGRAM

See page 05–1184.

INSPECTION PROCEDURE

1	CHECK FLOOR WIRE(CURTAIN SHIELD SQUIB LH CIRCUIT)

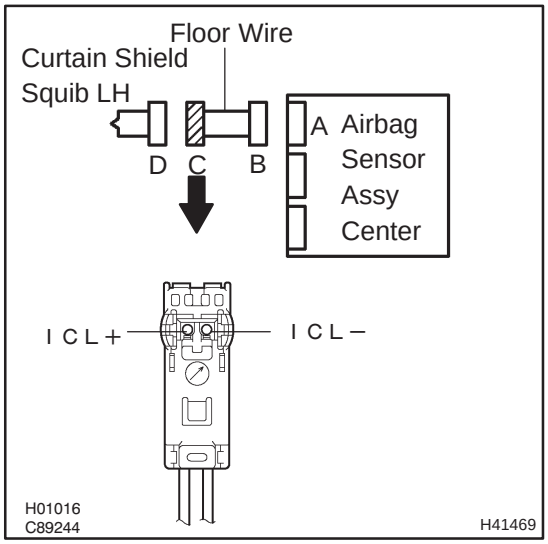

(a) Turn the ignition switch to the LOCK position.
(b) Disconnect the negative (–) terminal cable from the battery, and wait for at least 90 seconds.
(c) Disconnect the connectors from the airbag sensor assy center and the curtain shield airbag assy LH.
(d) Measure the resistance between ICL+ and ICL– of the connector ”C”.
OK:
Resistance: Below 1 Ω

NG → **REPAIR OR REPLACE FLOOR WIRE**

OK

2 CHECK AIR BAG SENSOR ASSY CENTER

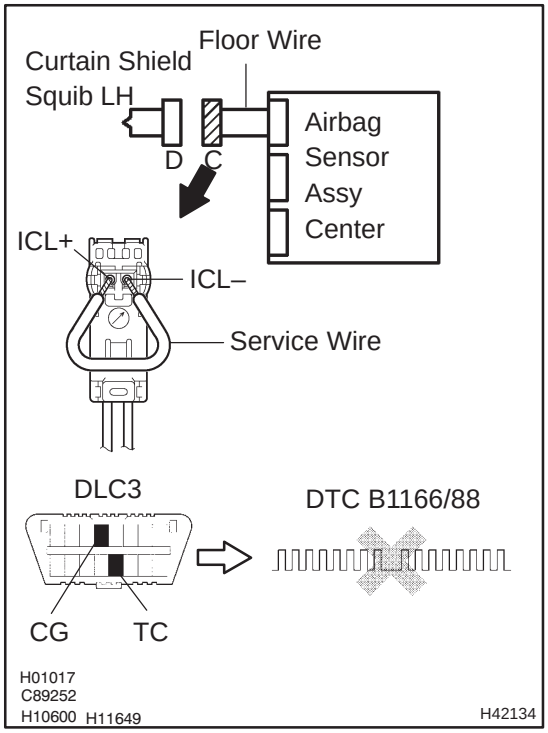

(a) Connect the connector to the airbag sensor assy center.
(b) Using a service wire, connect ICL+ and ICL– of the connector ”C”.

NOTICE:

Do not forcibly insert a service wire into the terminal of the connector when connecting.

(c) Connect the negative (–) terminal cable to the battery, and wait for at least 2 seconds.
(d) Turn the ignition switch to the ON position, and wait for at least 10 seconds.
(e) Clear the stored DTCs in the memory (See page 05–1184).
(f) Turn the ignition switch to the LOCK position.
(g) Turn the ignition switch to the ON position, and wait for at least 10 seconds.
(h) Check the DTCs (See page 05–1184).

OK:

DTC B1166/88 is not output.

HINT:

Codes other than code B1166/88 may be output at this time, but they are not related to this check.

NG → **REPLACE AIR BAG SENSOR ASSY CENTER**

OK

3	CHECK CURTAIN SHIELD AIR BAG ASSY LH(CURTAIN SHIELD SQUIB LH)

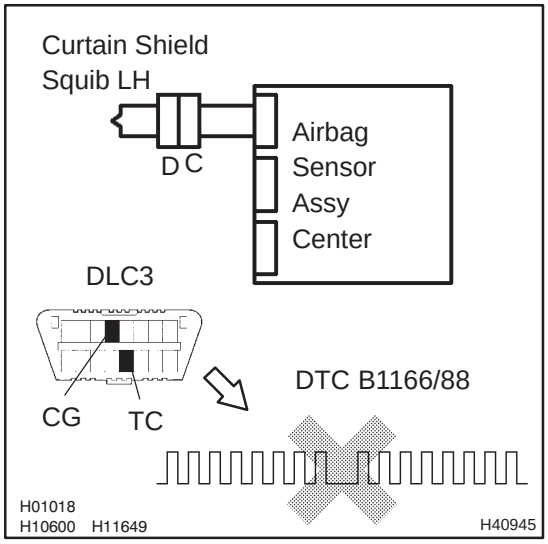

(a) Turn the ignition switch to the LOCK position.
(b) Disconnect the negative (–) terminal cable from the battery, and wait for at least 90 seconds.
(c) Connect the connector to the curtain shield airbag assy LH.
(d) Connect the negative (–) terminal cable to the battery, and wait for at least 2 seconds.
(e) Turn the ignition switch to the ON position, and wait for at least 10 seconds.
(f) Clear the stored DTCs in the memory (See page 05–1184).
(g) Turn the ignition switch to the LOCK position.
(h) Turn the ignition switch to the ON position, and wait for at least 10 seconds.
(i) Check the DTCs (See page 05–1184).
OK:
DTC B1166/88 is not output.

HINT:
Codes other than code B1166/88 may be output at this time, but they are not related to this check.

NG → **REPLACE CURTAIN SHIELD AIR BAG ASSY LH**

OK

USE SIMULATION METHOD TO CHECK

DTC	B1167/85	SHORT IN CURTAIN SHIELD SQUIB (LH) CIRCUIT (TO GROUND)

CIRCUIT DESCRIPTION

The curtain shield squib LH circuit consists of the airbag sensor assy center and the curtain shield airbag assy LH.
This circuit actuates the SRS to deploy when the SRS deployment conditions are fulfilled.
DTC B1167/85 is recorded when a short to ground is detected in the curtain shield squib LH circuit.

DTC No.	DTC Detecting Condition	Trouble Area
B1167/85	• Short circuit in curtain shield squib LH wire harness (to ground) • Curtain shield squib LH malfunction • Airbag sensor assy malfunction	• Curtain shield airbag assy LH (Curtain Shield Squib LH) • Airbag sensor assy center • Floor wire

HINT:
DTC B1167/85 is indicated only for the vehicle equipped with the curtain shield airbag.

WIRING DIAGRAM

See page 05–1334.

INSPECTION PROCEDURE

1	CHECK FLOOR WIRE(CURTAIN SHIELD SQUIB LH CIRCUIT)

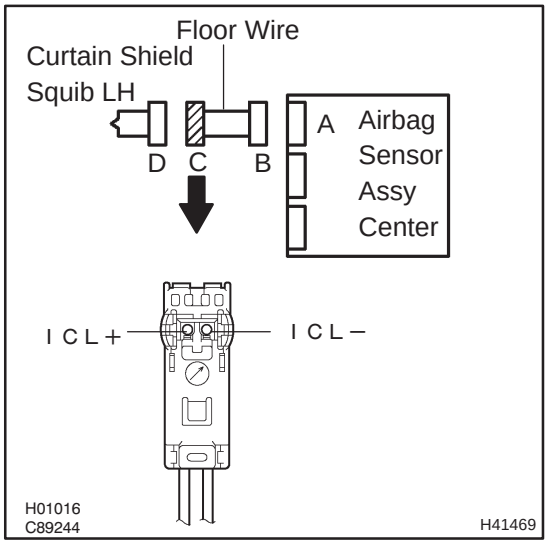

(a) Turn the ignition switch to the LOCK position.
(b) Disconnect the negative (–) terminal cable from the battery, and wait for at least 90 seconds.
(c) Disconnect the connectors from the airbag sensor assy center and the curtain shield airbag assy LH.
(d) Measure the resistance between the body ground and ICL+ of the connector ”C”.
OK:
Resistance: 1 MΩ or Higher

NG → **REPAIR OR REPLACE FLOOR WIRE**

OK

2 CHECK AIR BAG SENSOR ASSY CENTER

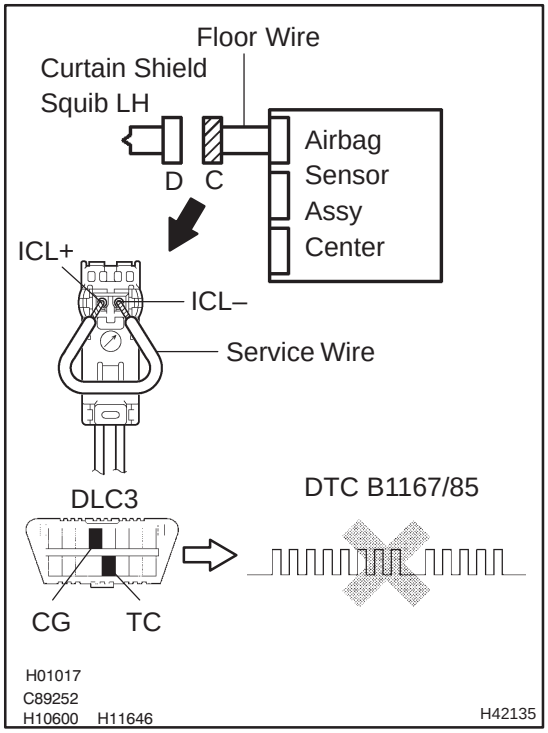

(a) Connect the connector to the airbag sensor assy center.
(b) Using a service wire, connect ICL+ and ICL– of the connector ”C”.

NOTICE:

Do not forcibly insert a service wire into the terminal of the connector when connecting.

(c) Connect the negative (–) terminal cable to the battery, and wait for at least 2 seconds.
(d) Turn the ignition switch to the ON position, and wait for at least 10 seconds.
(e) Clear the stored DTCs in the memory (See page 05–1184).
(f) Turn the ignition switch to the LOCK position.
(g) Turn the ignition switch to the ON position, and wait for at least 10 seconds.
(h) Check the DTCs (See page 05–1184).

OK:

DTC B1167/85 is not output.

HINT:

Codes other than code B1167/85 may be output at this time, but they are not related to this check.

NG → **REPLACE AIR BAG SENSOR ASSY CENTER**

OK

3	CHECK CURTAIN SHIELD AIR BAG ASSY LH(CURTAIN SHIELD SQUIB LH)

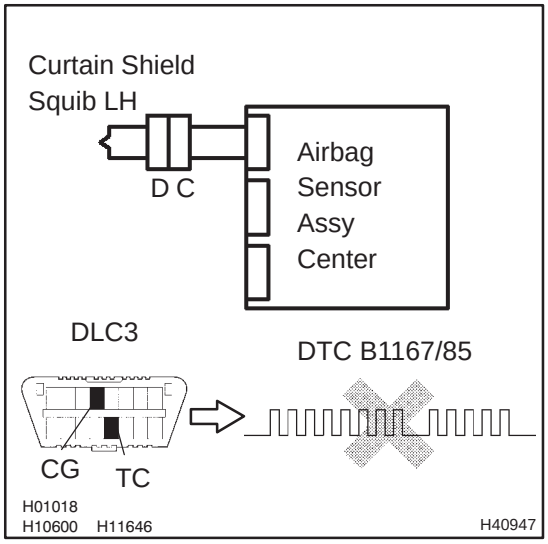

(a) Turn the ignition switch to the LOCK position.
(b) Disconnect the negative (–) terminal cable from the battery, and wait for at least 90 seconds.
(c) Connect the connector to the curtain shield airbag assy LH.
(d) Connect the negative (–) terminal cable to the battery, and wait for at least 2 seconds.
(e) Turn the ignition switch to the ON position, and wait for at least 10 seconds.
(f) Clear the stored DTCs in the memory (See page 05–1184).
(g) Turn the ignition switch to the LOCK position.
(h) Turn the ignition switch to the ON position, and wait for at least 10 seconds.
(i) Check the DTCs (See page 05–1184).
OK:
DTC B1167/85 is not output.

HINT:
Codes other than code B1167/85 may be output at this time, but they are not related to this check.

NG → **REPLACE CURTAIN SHIELD AIR BAG ASSY LH**

OK

4	USE SIMULATION METHOD TO CHECK

NG → **Go to step 1**

OK

REPLACE ALL SRS COMPONENTS INCLUDING WIRE HARNESS

DTC	B1168/86	SHORT IN CURTAIN SHIELD SQUIB (LH) CIRCUIT (TO B+)

CIRCUIT DESCRIPTION

The curtain shield squib LH circuit consists of the airbag sensor assy center and the curtain shield airbag assy LH.
This circuit actuates the SRS to deploy when the SRS deployment conditions are fulfilled.
DTC B1168/86 is recorded when a short to B+ is detected in the curtain shield squib LH circuit.

DTC No.	DTC Detecting Condition	Trouble Area
B1168/86	• Short circuit in curtain shield squib LH wire harness (to B+) • Curtain shield squib LH malfunction • Airbag sensor assy center malfunction	• Curtain shield airbag assy LH (Curtain shield squib LH) • Airbag sensor assy center • Floor wire

HINT:
DTC B1168/86 is indicated only for the vehicle equipped with the curtain shield airbag.

WIRING DIAGRAM

See page 05–1334.

INSPECTION PROCEDURE

1	CHECK FLOOR WIRE(CURTAIN SHIELD SQUIB LH CIRCUIT)

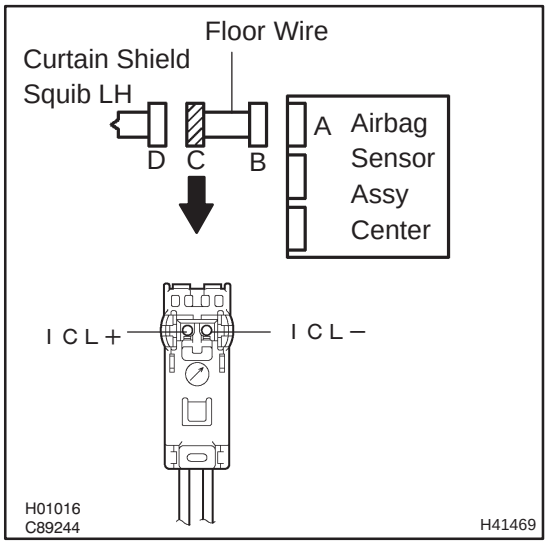

(a) Turn the ignition switch to the LOCK position.
(b) Disconnect the negative (–) terminal cable from the battery, and wait for at least 90 seconds.
(c) Disconnect the connectors from the airbag sensor assy center and the curtain shield airbag assy LH.
(d) Connect the negative (–) terminal cable to the battery, and turn the ignition switch to the ON position.
(e) Measure the voltage between the body ground and ICL+ of the connector ”C”.
OK:
Voltage: Below 1 V

NG → **REPAIR OR REPLACE FLOOR WIRE**

OK

2 CHECK AIR BAG SENSOR ASSY CENTER

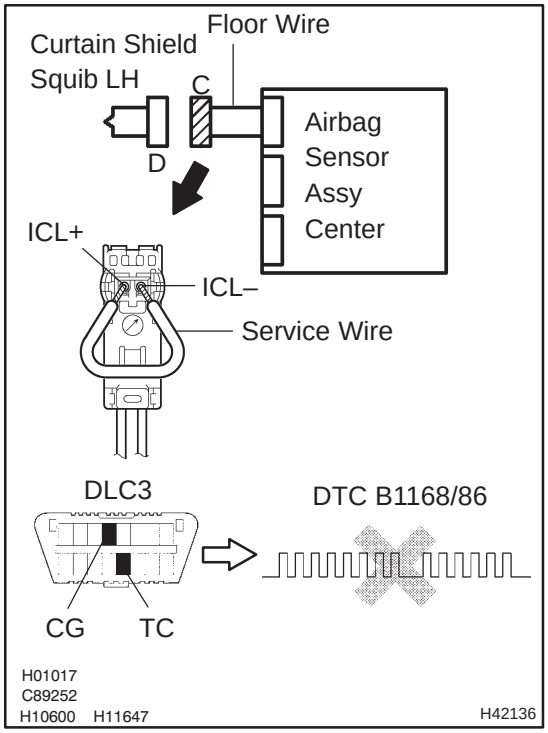

(a) Turn the ignition switch to the LOCK position.
(b) Disconnect the negative (–) terminal cable from the battery, and wait for at least 90 seconds.
(c) Connect the connector to the airbag sensor assy center.
(d) Using a service wire, connect ICL+ and ICL– of the connector ”C”.

NOTICE:
Do not forcibly insert a service wire into the terminal of the connector when connecting.

(e) Connect the negative (–) terminal cable to the battery, and wait for at least 2 seconds.
(f) Turn the ignition switch to the ON position, and wait for at least 10 seconds.
(g) Clear the stored DTCs in the memory (See page 05–1184).
(h) Turn the ignition switch to the LOCK position.
(i) Turn the ignition switch to the ON position, and wait for at least 10 seconds.
(j) Check the DTCs (See page 05–1184).
OK:
DTC B1168/86 is not output.

HINT:
Codes other than code B1168/86 may be output at this time, but they are not related to this check.

NG → **REPLACE AIR BAG SENSOR ASSY CENTER**

OK

3	CHECK CURTAIN SHIELD AIR BAG ASSY LH(CURTAIN SHIELD SQUIB LH)

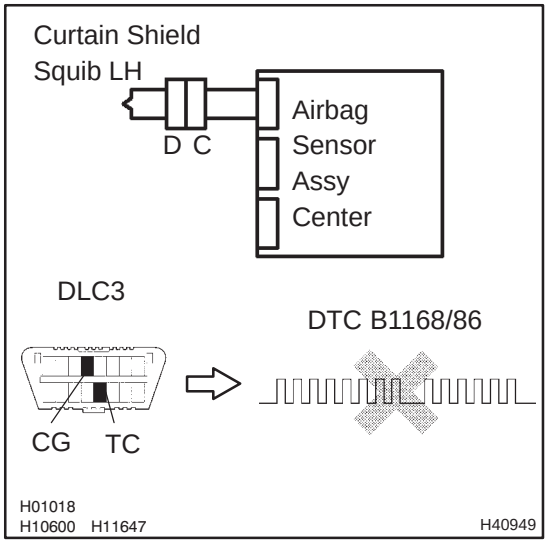

(a) Turn the ignition switch to the LOCK position.
(b) Disconnect the negative (–) terminal cable from the battery, and wait for at least 90 seconds.
(c) Connect the connector to the curtain shield airbag assy LH.
(d) Connect the negative (–) terminal cable to the battery, and wait for at least 2 seconds.
(e) Turn the ignition switch to the ON position, and wait for at least 10 seconds.
(f) Clear the stored DTCs in the memory (See page 05–1184).
(g) Turn the ignition switch to the LOCK position.
(h) Turn the ignition switch to the ON position, and wait for at least 10 seconds.
(i) Check the DTCs (See page 05–1184).
OK:
DTC B1168/86 is not output.

HINT:
Codes other than code B1168/86 may be output at this time, but they are not related to this check.

NG → **REPLACE CURTAIN SHIELD AIR BAG ASSY LH**

OK

4	USE SIMULATION METHOD TO CHECK

NG → **Go to step 1**

OK

REPLACE ALL SRS COMPONENTS INCLUDING WIRE HARNESS

DTC B1180/17 SHORT IN D SQUIB (2ND STEP) CIRCUIT

CIRCUIT DESCRIPTION

The D squib (2nd step) circuit consists of the airbag sensor assy center, the spiral cable sub–assy and the horn button assy.
This circuit actuates the SRS to deploy when the SRS deployment conditions are fulfilled.
DTC B1180/17 is recorded when a short circuit is detected in the D squib (2nd step) circuit.

DTC No.	DTC Detecting Condition	Trouble Area
B1180/17	• Short circuit between D2+ wire harness and D2– wire harness of D squib (2nd step) • D squib (2nd step) malfunction • Spiral cable sub–assy malfunction • Airbag sensor assy center malfunction	• Horn button assy (D squib, 2nd step) • Spiral cable sub–assy • Airbag sensor assy center • Instrument panel wire

WIRING DIAGRAM

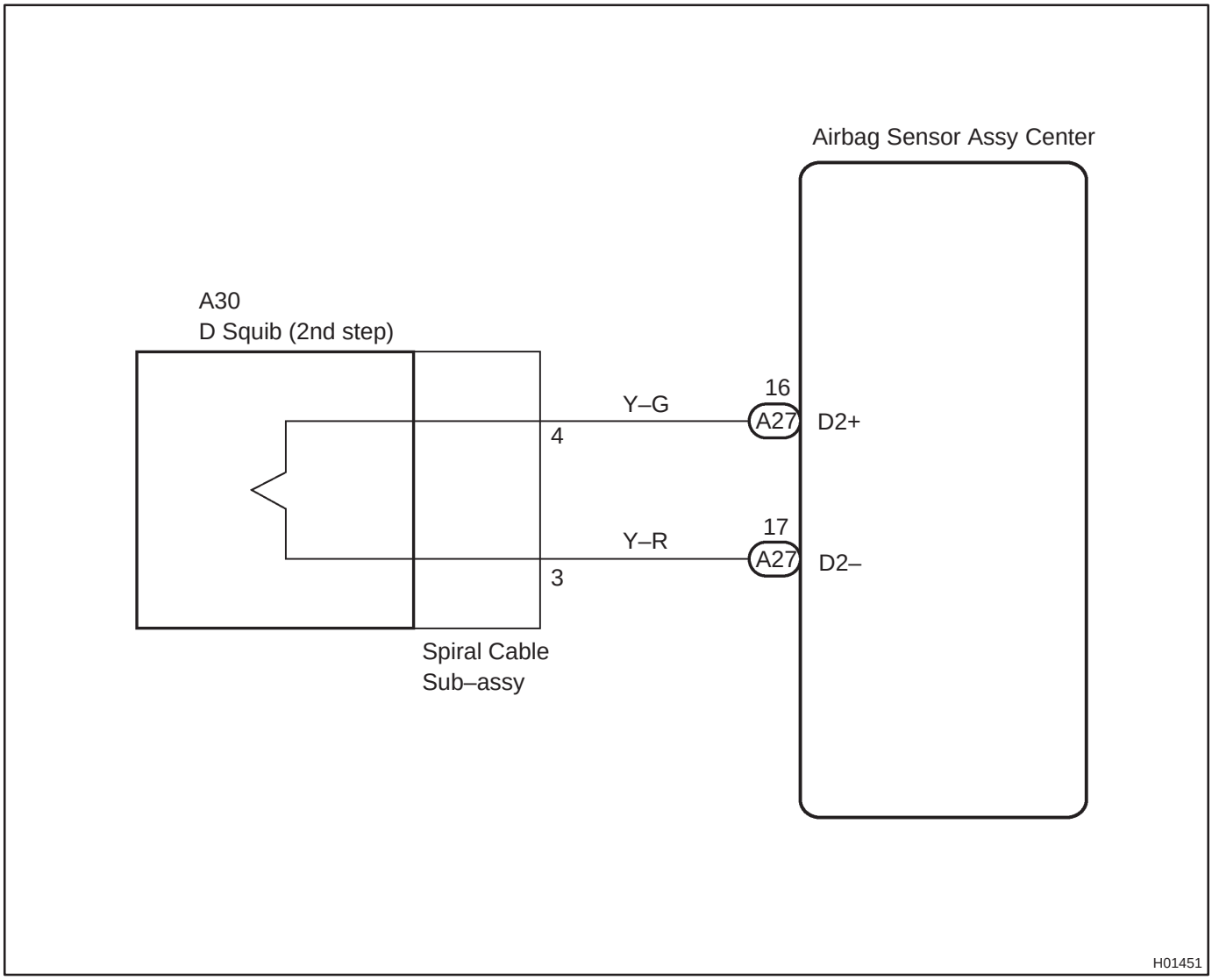

INSPECTION PROCEDURE

1	CHECK CONNECTOR

(a) Turn the ignition switch to the LOCK position.
(b) Disconnect the negative (–) terminal cable from the battery, and wait for at least 90 seconds.
(c) Disconnect the connectors from the airbag sensor assy center and the horn button assy.
(d) Check that the spiral cable sub–assy connector (on the horn button assy side) is not damaged.
OK:
The lock button is not disengaged, or the claw of the lock is not deformed or damaged.

NG → **REPLACE SPIRAL CABLE SUB–ASSY**

OK

2	CHECK D SQUIB CIRCUIT(2ND STEP)

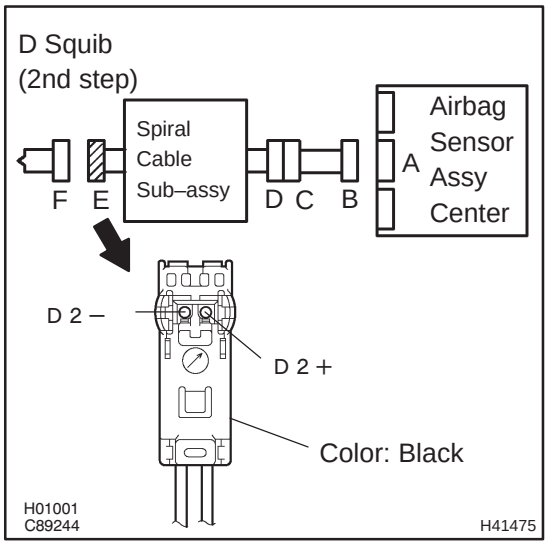

(a) Release the activation prevention mechanism built in the connector "B" (See page 05–1184).
(b) Measure the resistance between D2+ and D2– of the connector "E".
OK:
Resistance: 1 MΩ or Higher

NG → **Go to step 5**

OK

3 CHECK AIR BAG SENSOR ASSY CENTER

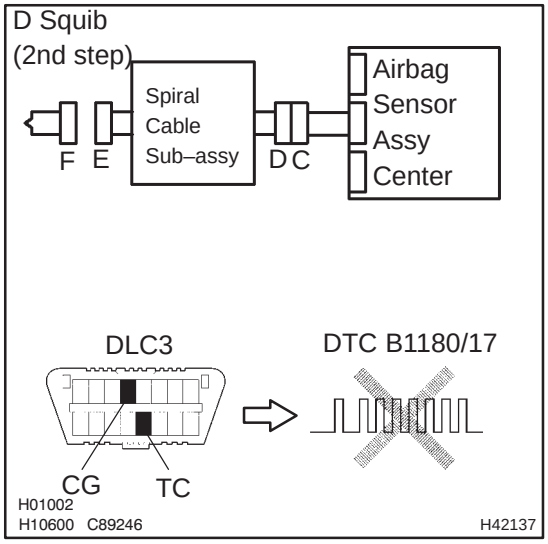

(a) Connect the connector to the airbag sensor assy center.
(b) Connect the negative (–) terminal cable to the battery, and wait for at least 2 seconds.
(c) Turn the ignition switch to the ON position, and wait for at least 10 seconds.
(d) Clear the stored DTCs in the memory (See page 05–1184).
(e) Turn the ignition switch to the LOCK position.
(f) Turn the ignition switch to the ON position, and wait for at least 10 seconds.
(g) Check the DTCs (See page 05–1184).

OK:

DTC B1180/17 is not output.

HINT:

Codes other than code B1180/17 may be output at this time, but they are not related to this check.

NG → **REPLACE AIR BAG SENSOR ASSY CENTER**

OK

4 CHECK HORN BUTTON ASSY(D SQUIB, 2ND STEP)

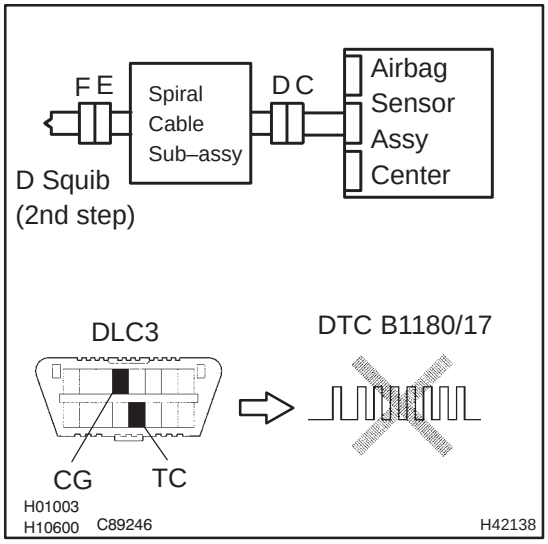

(a) Turn the ignition switch to the LOCK position.
(b) Disconnect the negative (–) terminal cable from the battery, and wait for at least 90 seconds.
(c) Connect the connectors to the horn button assy.
(d) Connect the negative (–) terminal cable to the battery, and wait for at least 2 seconds.
(e) Turn the ignition switch to the ON position, and wait for at least 10 seconds.
(f) Clear the stored DTCs in the memory (See page 05–1184).
(g) Turn the ignition switch to the LOCK position.
(h) Turn the ignition switch to the ON position, and wait for at least 10 seconds.
(i) Check the DTCs (See page 05–1184).

OK:

DTC B1180/17 is not output.

HINT:

Codes other than code B1180/17 may be output at this time, but they are not related to this check.

NG → **REPLACE HORN BUTTON ASSY**

OK

USE SIMULATION METHOD TO CHECK

5 CHECK INSTRUMENT PANEL WIRE

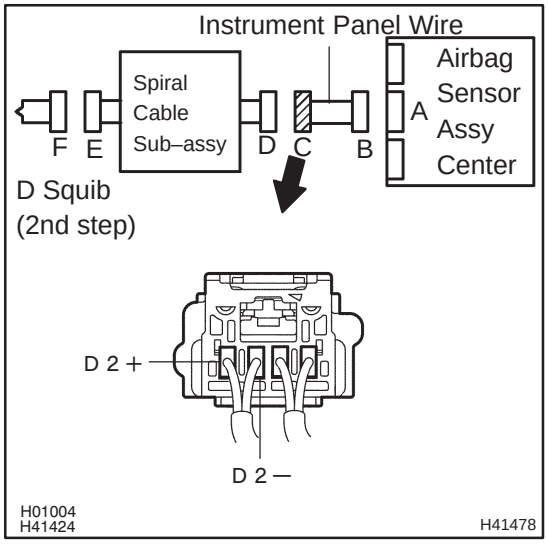

(a) Disconnect the instrument panel wire connector from the spiral cable sub–assy.

(b) Release the activation prevention mechanism built in the connector "B" (See page 05–1184).

(c) Measure the resistance between D2+ and D2– of the connector "C".

OK:

Resistance: 1 MΩ or Higher

NG → **REPAIR OR REPLACE INSTRUMENT PANEL WIRE**

OK

6 CHECK SPIRAL CABLE SUB–ASSY

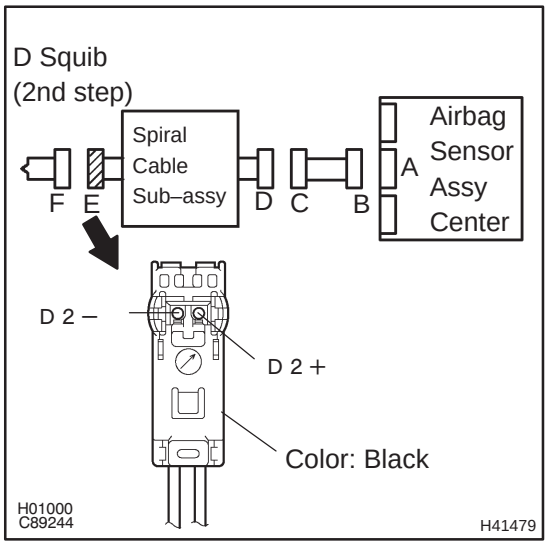

(a) Release the activation prevention mechanism built in the connector "D" (See page 05–1184).

(b) Measure the resistance between D2+ and D2– of the connector "E".

OK:

Resistance: 1 MΩ or Higher

NG → **REPLACE SPIRAL CABLE SUB–ASSY**

OK

USE SIMULATION METHOD TO CHECK

DTC B1181/18 OPEN IN D SQUIB (2ND STEP) CIRCUIT

CIRCUIT DESCRIPTION

The D squib (2nd step) circuit consists of the airbag sensor assy center, the spiral cable sub–assy and the horn button assy.
This circuit actuates the SRS to deploy when the SRS deployment conditions are fulfilled.
DTC B1181/18 is recorded when an open circuit is detected in the D squib (2nd step) circuit.

DTC No.	DTC Detecting Condition	Trouble Area
B1181/18	• Open circuit in D2+ wire harness or D2– wire harness of D squib (2nd step) • D squib (2nd step) malfunction • Spiral cable sub–assy malfunction • Airbag sensor assy center malfunction	• Horn button assy (D squib, 2nd step) • Spiral cable sub–assy • Airbag sensor assy center • Instrument panel wire

WIRING DIAGRAM

See page 05–1346.

INSPECTION PROCEDURE

1	CHECK D SQUIB CIRCUIT(2ND STEP)

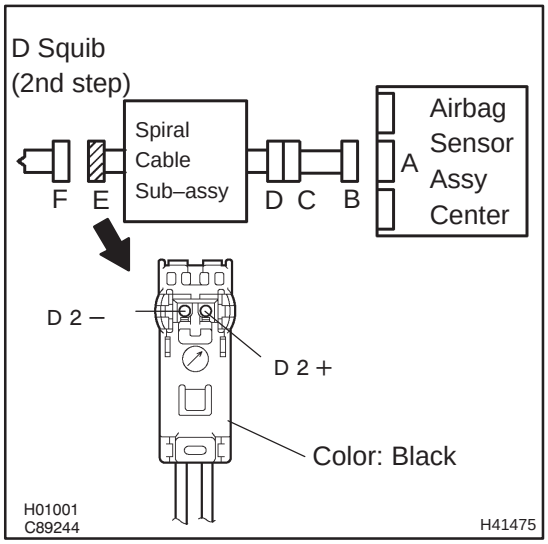

(a) Turn the ignition switch to the LOCK position.
(b) Disconnect the negative (–) terminal cable from the battery, and wait for at least 90 seconds.
(c) Disconnect the connectors from the airbag sensor assy center and the horn button assy.
(d) Measure the resistance between D2+ and D2– of the connector ”E”.
OK:
Resistance: Below 1 Ω

NG → **Go to step 4**

OK

2 CHECK AIR BAG SENSOR ASSY CENTER

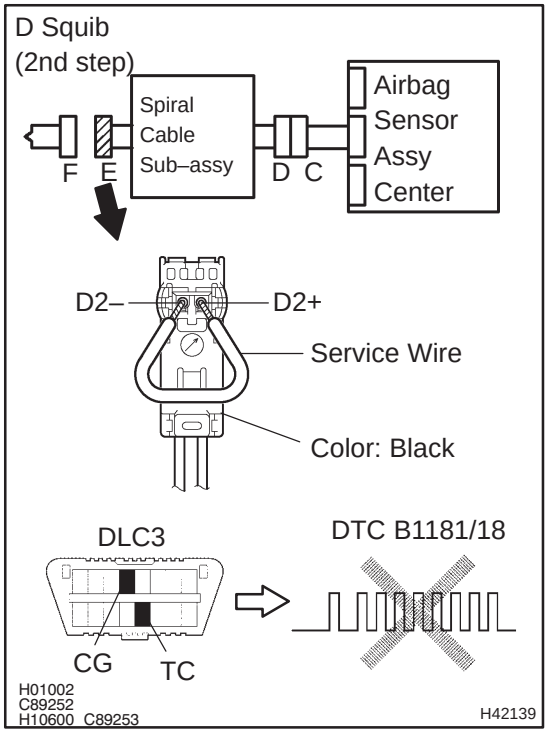

(a) Connect the connector to the airbag sensor assy center.
(b) Using a service wire, connect D2+ and D2– of the connector ”E”.

NOTICE:

Do not forcibly insert a service wire into the terminal of the connector when connecting.

(c) Connect the negative (–) terminal cable to the battery, and wait for at least 2 seconds.
(d) Turn the ignition switch to the ON position, and wait for at least 10 seconds.
(e) Clear the stored DTCs in the memory (See page 05–1184).
(f) Turn the ignition switch to the LOCK position.
(g) Turn the ignition switch to the ON position, and wait for at least 10 seconds.
(h) Check the DTCs (See page 05–1184).

OK:

DTC B1181/18 is not output.

HINT:

Codes other than code B1181/18 may be output at this time, but they are not related to this check.

NG → **REPLACE AIR BAG SENSOR ASSY CENTER**

OK

3 CHECK HORN BUTTON ASSY(D SQUIB, 2ND STEP)

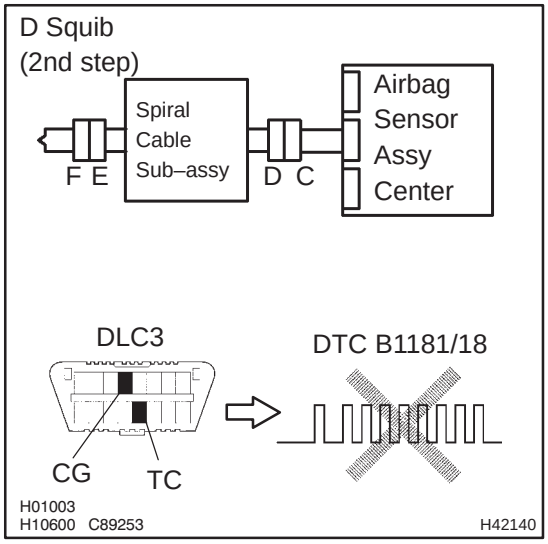

(a) Turn the ignition switch to the LOCK position.
(b) Disconnect the negative (–) terminal cable from the battery, and wait for at least 90 seconds.
(c) Connect the connectors to the horn button assy.
(d) Connect the negative (–) terminal cable to the battery, and wait for at least 2 seconds.
(e) Turn the ignition switch to the ON position, and wait for at least 10 seconds.
(f) Clear the stored DTCs in the memory (See page 05–1184).
(g) Turn the ignition switch to the LOCK position.
(h) Turn the ignition switch to the ON position, and wait for at least 10 seconds.
(i) Check the DTCs (See page 05–1184).
OK:
DTC B1181/18 is not output.

HINT:
Codes other than code B1181/18 may be output at this time, but they are not related to this check.

NG → **REPLACE HORN BUTTON ASSY**

OK

USE SIMULATION METHOD TO CHECK

4 CHECK INSTRUMENT PANEL WIRE

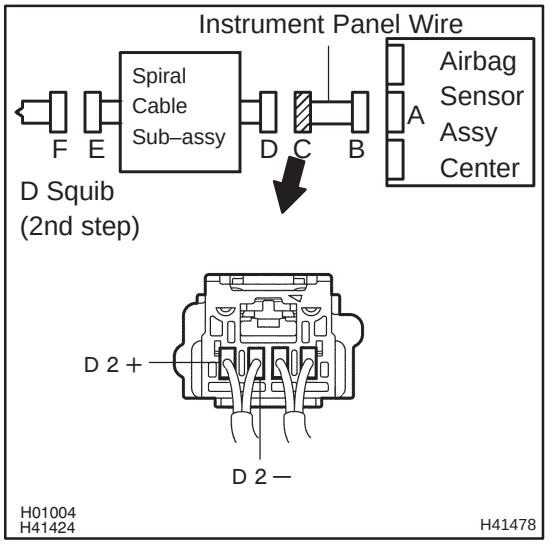

(a) Disconnect the instrument panel wire connector from the spiral cable sub–assy.
(b) Measure the resistance between D2+ and D2– of the connector ”C”.
OK:
Resistance: Below 1 Ω

NG → **REPAIR OR REPLACE INSTRUMENT PANEL WIRE**

OK

5	CHECK SPIRAL CABLE SUB–ASSY

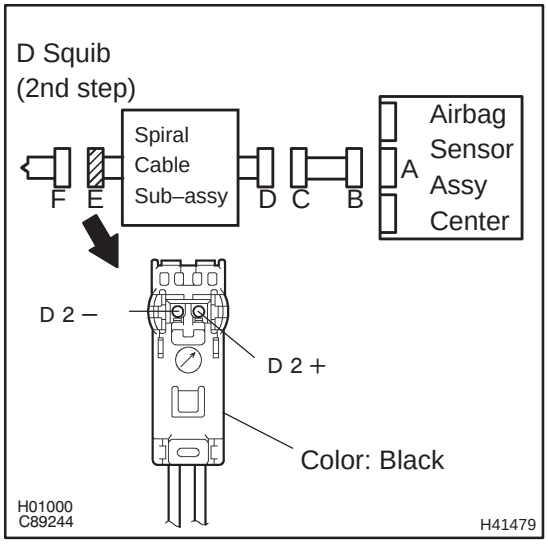

(a) Measure the resistance between D2+ and D2– of the connector ”E”.

OK:

Resistance: Below 1 Ω

NG → **REPLACE SPIRAL CABLE SUB–ASSY**

OK

USE SIMULATION METHOD TO CHECK

DTC	B1182/19	SHORT IN D SQUIB (2ND STEP) CIRCUIT (TO GROUND)

CIRCUIT DESCRIPTION

The D squib (2nd step) circuit consists of the airbag sensor assy center, the spiral cable sub–assy and the horn button assy.
This circuit actuates the SRS to deploy when the SRS deployment conditions are fulfilled.
DTC B1182/19 is recorded when a short to ground is detected in the D squib (2nd step) circuit.

DTC No.	DTC Detecting Condition	Trouble Area
B1182/19	• Short circuit in D squib (2nd step) wire harness (to ground) • D squib (2nd step) malfunction • Spiral cable sub–assy malfunction • Airbag sensor assy center malfunction	• Horn button assy (D squib, 2nd step) • Spiral cable sub–assy • Airbag sensor assy center • Instrument panel wire

WIRING DIAGRAM

See page 05–1346.

INSPECTION PROCEDURE

1	CHECK D SQUIB CIRCUIT(2ND STEP)

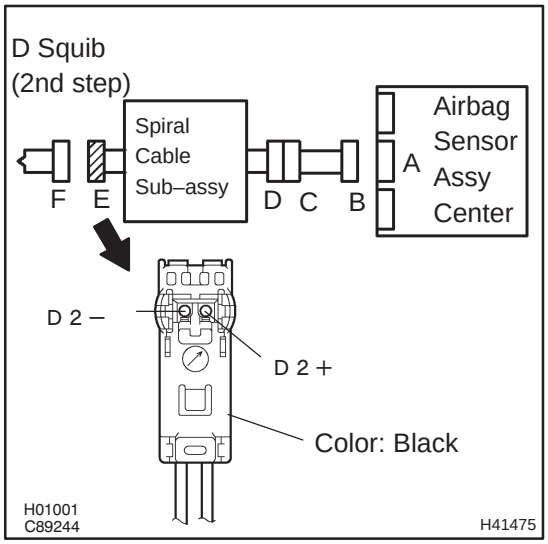

(a) Turn the ignition switch to the LOCK position.
(b) Disconnect the negative (–) terminal cable from the battery, and wait for at least 90 seconds.
(c) Disconnect the connectors from the airbag sensor assy center and the horn button assy.
(d) Measure the resistance between the body ground and D2+ of the connector ”C”.
OK:
Resistance: 1 MΩ or Higher

NG → **Go to step 5**

OK

2 CHECK AIR BAG SENSOR ASSY CENTER

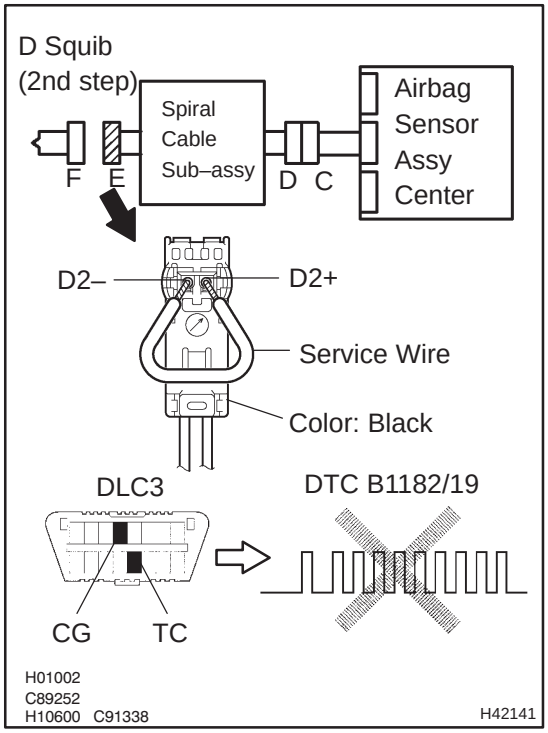

(a) Connect the connector to the airbag sensor assy center.
(b) Using a service wire, connect D2+ and D2– of the connector ”E”.

NOTICE:

Do not forcibly insert a service wire into the terminal of the connector when connecting.

(c) Connect the negative (–) terminal cable to the battery, and wait for at least 2 seconds.
(d) Turn the ignition switch to the ON position, and wait for at least 10 seconds.
(e) Clear the stored DTCs in the memory (See page 05–1184).
(f) Turn the ignition switch to the LOCK position.
(g) Turn the ignition switch to the ON position, and wait for at least 10 seconds.
(h) Check the DTCs (See page 05–1184).

OK:

DTC B1182/19 is not output.

HINT:

Codes other than code B1182/19 may be output at this time, but they are not related to this check.

NG → **REPLACE AIR BAG SENSOR ASSY CENTER**

OK

3	CHECK HORN BUTTON ASSY(D SQUIB, 2ND STEP)

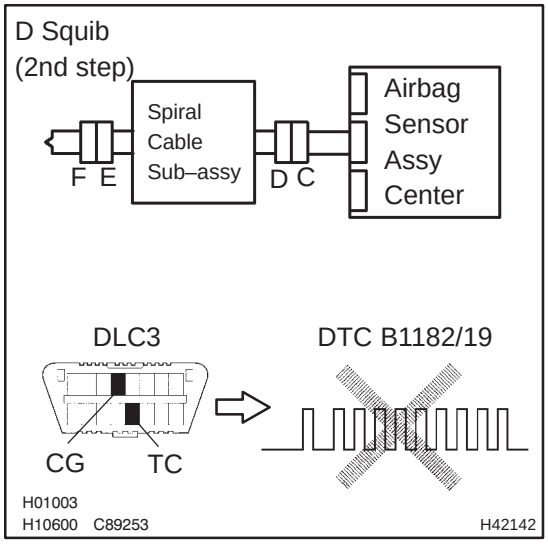

(a) Turn the ignition switch to the LOCK position.
(b) Disconnect the negative (–) terminal cable from the battery, and wait for at least 90 seconds.
(c) Connect the connectors to the horn button assy.
(d) Connect the negative (–) terminal cable to the battery, and wait for at least 2 seconds.
(e) Turn the ignition switch to the ON position, and wait for at least 10 seconds.
(f) Clear the stored DTCs in the memory (See page 05–1184).
(g) Turn the ignition switch to the LOCK position.
(h) Turn the ignition switch to the ON position, and wait for at least 10 seconds.
(i) Check the DTCs (See page 05–1184).
OK:
DTC B1182/19 is not output.

HINT:
Codes other than code B1182/19 may be output at this time, but they are not related to this check.

NG → **REPLACE HORN BUTTON ASSY**

OK

4	USE SIMULATION METHOD TO CHECK

NG → **Go to step 1**

OK

REPLACE ALL SRS COMPONENTS INCLUDING WIRE HARNESS

5 CHECK INSTRUMENT PANEL WIRE

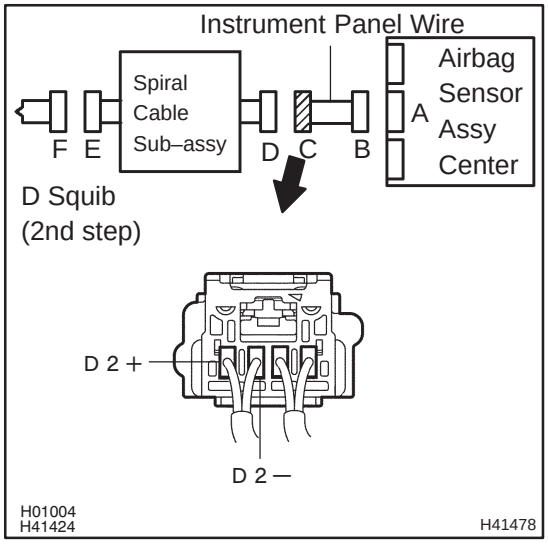

(a) Disconnect the instrument panel wire connector from the spiral cable sub–assy.

(b) Measure the resistance between the body ground and D2+ of the connector ”C”.

OK:

Resistance: 1 MΩ or Higher

NG → **REPAIR OR REPLACE INSTRUMENT PANEL WIRE**

OK

6 CHECK SPIRAL CABLE SUB–ASSY

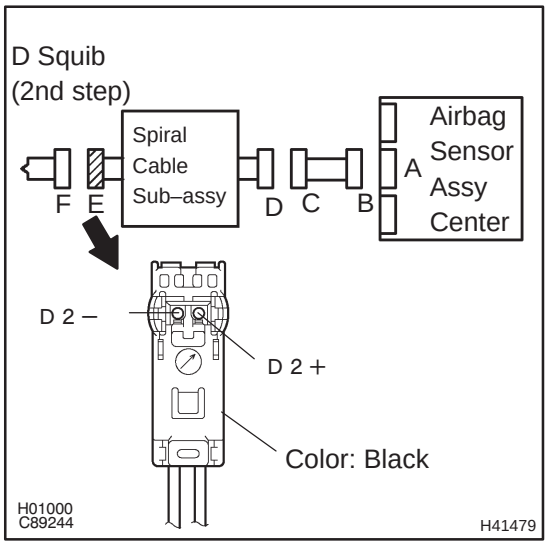

(a) Measure the resistance between the body ground and D2+ of the connector ”E”.

OK:

Resistance: 1 MΩ or Higher

NG → **REPLACE SPIRAL CABLE SUB–ASSY**

OK

7 USE SIMULATION METHOD TO CHECK

NG → **Go to step 1**

OK

REPLACE ALL SRS COMPONENTS INCLUDING WIRE HARNESS

DTC	B1183/22	SHORT IN D SQUIB (2ND STEP) CIRCUIT (TO B+)

CIRCUIT DESCRIPTION

The D squib (2nd step) circuit consists of the airbag sensor assy center, the spiral cable sub–assy and the horn button assy.
This circuit actuates the SRS to deploy when the SRS deployment conditions are fulfilled.
DTC B1183/22 is recorded when a short to B+ is detected in the D squib (2nd step) circuit.

DTC No.	DTC Detecting Condition	Trouble Area
B1183/22	• Short circuit in D squib (2nd step) wire harness (to B+) • D squib (2nd step) malfunction • Spiral cable sub–assy malfunction • Airbag sensor assy center malfunction	• Horn button assy (D squib, 2nd step) • Spiral cable sub–assy • Airbag sensor assy center • Instrument panel wire

WIRING DIAGRAM

See page 05–1346.

CIRCUIT INSPECTION

1	CHECK D SQUIB CIRCUIT(2ND STEP)

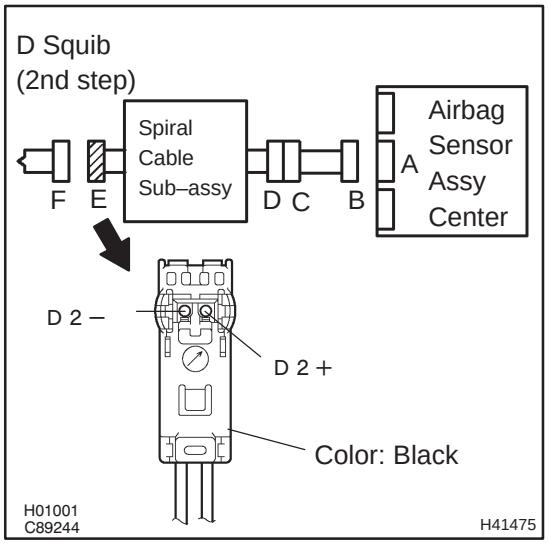

(a) Turn the ignition switch to the LOCK position.
(b) Disconnect negative (–) terminal cable from the battery, and wait for at least 90 seconds.
(c) Disconnect the connectors from the airbag sensor assy center and the horn button assy.
(d) Connect the negative (–) terminal cable to the battery, and turn the ignition switch to the ON position.
(e) Measure the voltage between the body ground and D2+ of the connector "E".
OK:
Voltage: Below 1 V

NG → **Go to step 5**

OK

2 CHECK AIR BAG SENSOR ASSY CENTER

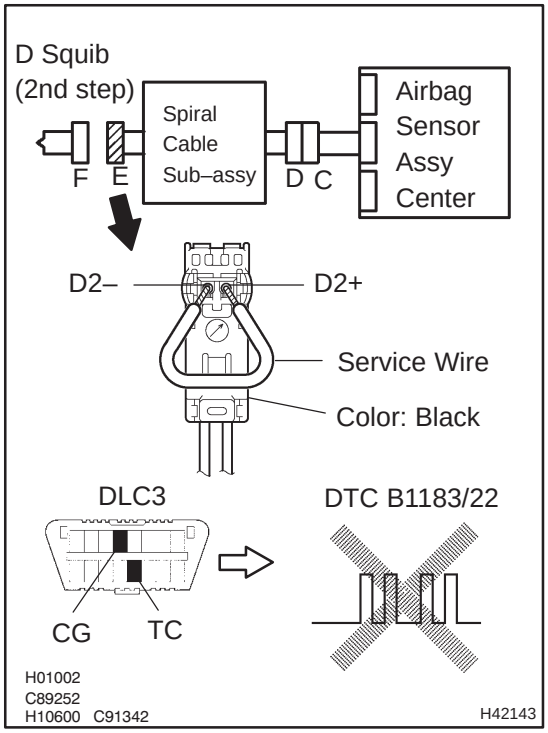

(a) Turn the ignition switch to the LOCK position.
(b) Disconnect the negative (–) terminal cable from the battery, and wait for at least 90 seconds.
(c) Connect the connector to the airbag sensor assy center.
(d) Using a service wire, connect D2+ and D2– of the connector ”E”.

NOTICE:
Do not forcibly insert a service wire into the terminal of the connector when connecting.

(e) Connect the negative (–) terminal cable to the battery, and wait for at least 2 seconds.
(f) Turn the ignition switch to the ON position, and wait for at least 10 seconds.
(g) Clear the stored DTCs in the memory (See page 05–1184).
(h) Turn the ignition switch to the LOCK position.
(i) Turn the ignition switch to the ON position, and wait for at least 10 seconds.
(j) Check the DTCs (See page 05–1184).
OK:
DTC B1183/22 is not output.

HINT:
Codes other than code B1183/22 may be output at this time, but they are not related to this check.

NG → **REPLACE AIR BAG SENSOR ASSY CENTER**

OK

3 CHECK HORN BUTTON ASSY(D SQUIB, 2ND STEP)

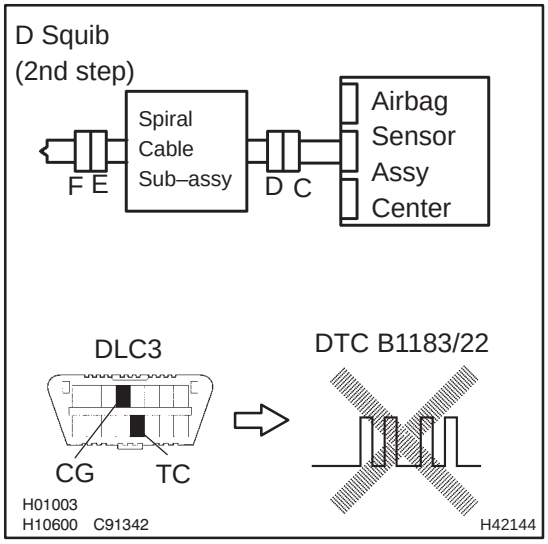

(a) Turn the ignition switch to the LOCK position.
(b) Disconnect the negative (–) terminal cable from the battery, and wait for at least 90 seconds.
(c) Connect the connectors to the horn button assy.
(d) Connect the negative (–) terminal cable to the battery, and wait for at least 2 seconds.
(e) Turn the ignition switch to the ON position, and wait for at least 10 seconds.
(f) Clear the stored DTCs in the memory (See page 05–1184).
(g) Turn the ignition switch to the LOCK position.
(h) Turn the ignition switch to the ON position, and wait for at least 10 seconds.
(i) Check the DTCs (See page 05–1184).

OK:
DTC B1183/22 is not output.

HINT:
Codes other than code B1183/22 may be output at this time, but they are not related to this check.

NG → **REPLACE HORN BUTTON ASSY**

OK

4 USE SIMULATION METHOD TO CHECK

NG → **Go to step 1**

OK

REPLACE ALL SRS COMPONENTS INCLUDING WIRE HARNESS

5 CHECK INSTRUMENT PANEL WIRE

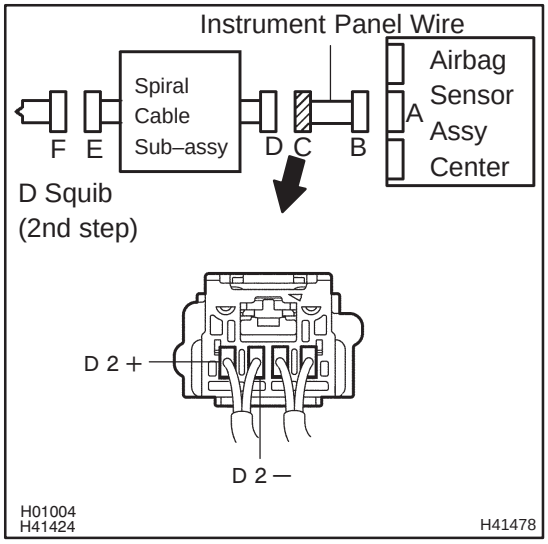

(a) Turn the ignition switch to the LOCK position.
(b) Disconnect the negative (–) terminal cable from the battery, and wait for at least 90 seconds.
(c) Disconnect the instrument panel wire connector from the spiral cable sub–assy.
(d) Connect the negative (–) terminal cable to the battery, and turn the ignition switch to the ON position.
(e) Measure the voltage between the body ground and D2+ of the connector ”C”.
OK:
Voltage: Below 1 V

NG	REPAIR OR REPLACE INSTRUMENT PANEL WIRE

OK

6 CHECK SPIRAL CABLE SUB–ASSY

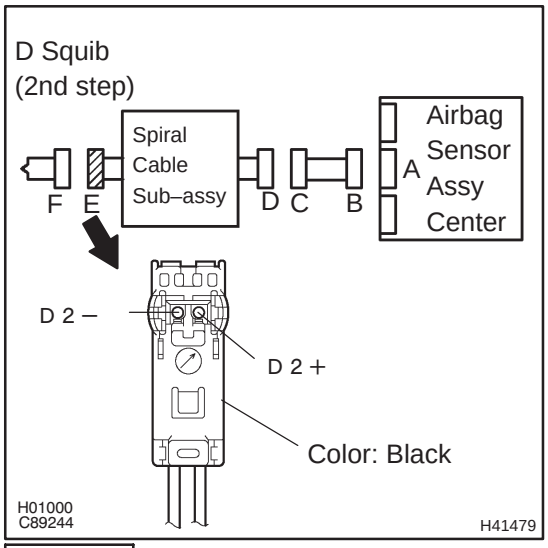

(a) Turn the ignition switch to the LOCK position.
(b) Turn the ignition switch to the ON position.
(c) Measure the voltage between the body ground and D2+ of the connector ”E”.
OK:
Voltage: Below 1 V

NG	REPLACE SPIRAL CABLE SUB–ASSY

OK

7 USE SIMULATION METHOD TO CHECK

NG	Go to step 1

OK

REPLACE ALL SRS COMPONENTS INCLUDING WIRE HARNESS

DTC B1185/57 SHORT IN P SQUIB (2ND STEP) CIRCUIT

CIRCUIT DESCRIPTION

The P squib (2nd step) circuit consists of the airbag sensor assy center and the instrument panel passenger airbag assy.
This circuit actuates the SRS to deploy when the SRS deployment conditions are fulfilled.
DTC B1185/57 is recorded when a short circuit is detected in the P squib (2nd step) circuit.

DTC No.	DTC Detecting Condition	Trouble Area
B1185/57	• Short circuit between P2+ wire harness and P2– wire harness of P squib (2nd step) • P squib (2nd step) malfunction • Airbag sensor assy center malfunction	• Instrument panel passenger airbag assy (P squib, 2nd step) • Airbag sensor assy center • Instrument panel wire

WIRING DIAGRAM

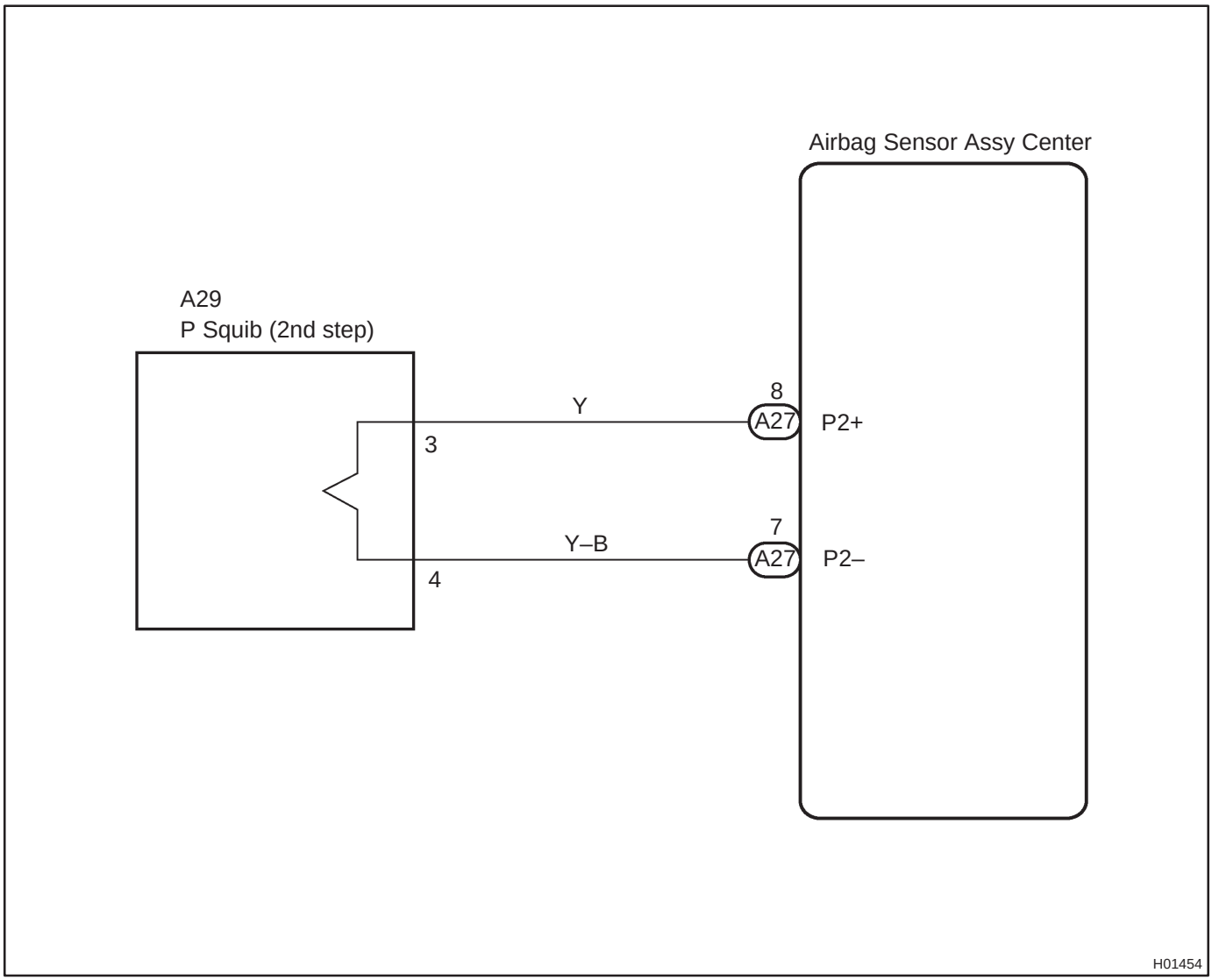

INSPECTION PROCEDURE

1 CHECK INSTRUMENT PANEL WIRE(P SQUIB, 2ND STEP CIRCUIT)

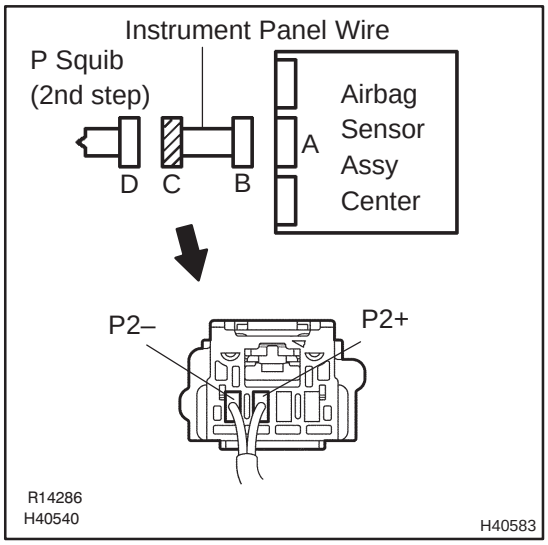

(a) Turn the ignition switch to the LOCK position.
(b) Disconnect the negative (–) terminal cable from the battery, and wait for at least 90 seconds.
(c) Disconnect the connectors from the airbag sensor assy center and the instrument panel passenger airbag assy.
(d) Release the activation prevention mechanism built in the connector "B" (See page 05–1184).
(e) Measure the resistance between P2+ and P2– of the connector "C".
OK:
Resistance: 1 MΩ or Higher

NG → **REPAIR OR REPLACE INSTRUMENT PANEL WIRE**

OK

2 CHECK AIR BAG SENSOR ASSY CENTER

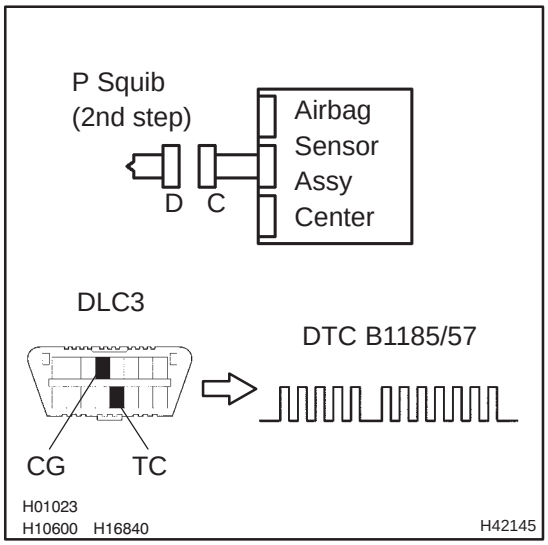

(a) Connect the connector to the airbag sensor assy center.
(b) Connect the negative (–) terminal cable to the battery, and wait for at least 2 seconds.
(c) Turn the ignition switch to the ON position, and wait for at least 10 seconds.
(d) Clear the stored DTCs in the memory (See page 05–1184).
(e) Turn the ignition switch to the LOCK position.
(f) Turn the ignition switch to the ON position, and wait for at least 10 seconds.
(g) Check the DTCs (See page 05–1184).
OK:
DTC B1185/57 is not output.

HINT:
Codes other than code B1185/57 may be output at this time, but they are not related to this check.

NG → **REPLACE AIR BAG SENSOR ASSY CENTER**

OK

3 CHECK INSTRUMENT PANEL PASSENGER AIR BAG ASSY(P SQUIB, 2ND STEP)

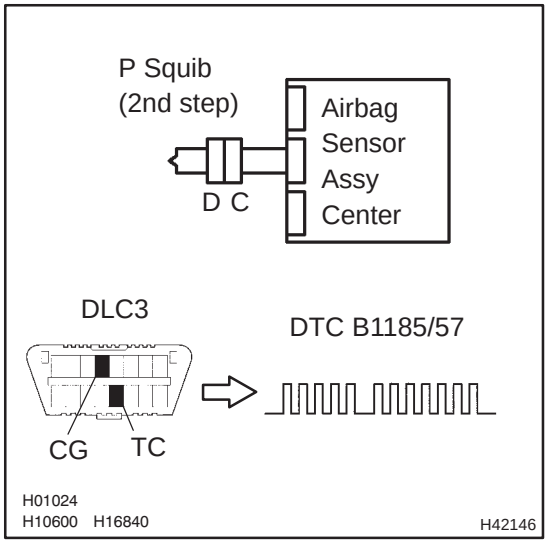

(a) Turn the ignition switch to the LOCK position.
(b) Disconnect the negative (–) terminal cable from the battery, and wait for at least 90 seconds.
(c) Connect the connector to the instrument panel passenger airbag assy.
(d) Connect the negative (–) terminal cable to the battery, and wait for at least 2 seconds.
(e) Turn the ignition switch to the ON position, and wait for at least 10 seconds.
(f) Clear the stored DTCs in the memory (See page 05–1184).
(g) Turn the ignition switch to the LOCK position.
(h) Turn the ignition switch to the ON position, and wait for at least 10 seconds.
(i) Check the DTCs (See page 05–1184).
OK:
DTC B1185/57 is not output.

HINT:
Codes other than code B1185/57 may be output at this time, but they are not related to this check.

NG → **REPLACE INSTRUMENT PANEL PASSENGER AIR BAG ASSY**

OK

USE SIMULATION METHOD TO CHECK

DTC B1186/58 OPEN IN P SQUIB (2ND STEP) CIRCUIT

CIRCUIT DESCRIPTION

The P squib (2nd step) circuit consists of the airbag sensor assy center and the instrument panel passenger airbag assy.
This circuit actuates the SRS to deploy when the SRS deployment conditions are fulfilled.
DTC B1186/58 is recorded when an open circuit is detected in the P squib (2nd step) circuit.

DTC No.	DTC Detecting Condition	Trouble Area
B1186/58	• Open circuit in P2+ wire harness or P2– wire harness of P squib (2nd step) • P squib (2nd step) malfunction • Airbag sensor assy center malfunction	• Instrument panel passenger airbag assy (P squib, 2nd step) • Airbag sensor assy center • Instrument panel wire

WIRING DIAGRAM

See page 05–1362.

INSPECTION PROCEDURE

1 CHECK INSTRUMENT PANEL WIRE(P SQUIB, 2ND STEP CIRCUIT)

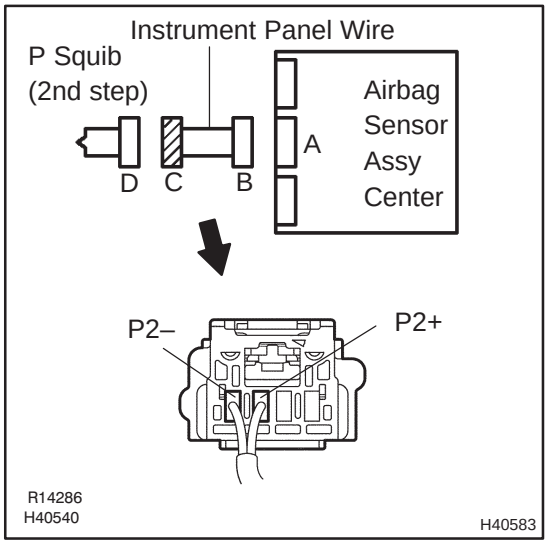

(a) Turn the ignition switch to the LOCK position
(b) Disconnect the negative (–) terminal cable from the battery, and wait for at least 90 seconds.
(c) Disconnect the connectors from the airbag sensor assy center and the instrument panel passenger airbag assy.
(d) Measure the resistance between P2+ and P2– of the connector ”C”.
OK:
Resistance: Below 1 Ω

NG → **REPAIR OR REPLACE INSTRUMENT PANEL WIRE**

OK

2 CHECK AIR BAG SENSOR ASSY CENTER

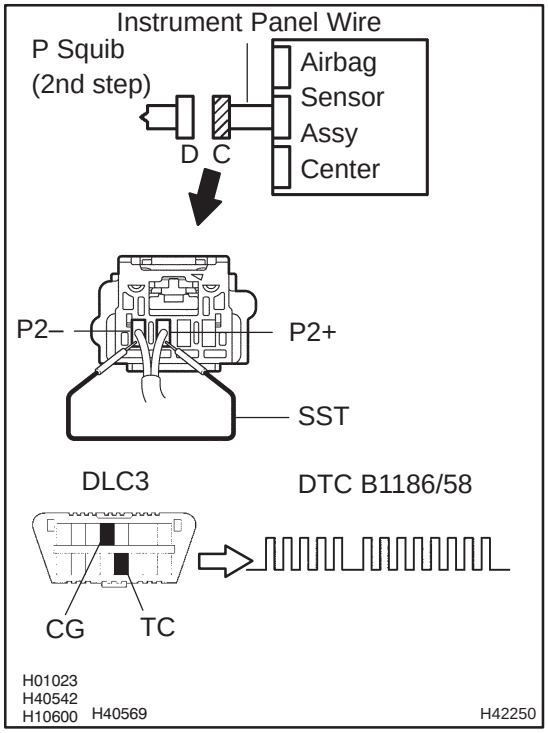

(a) Connect the connector to the airbag sensor assy center.
(b) Using SST, connect P2+ and P2– of the connector ”C”.
SST 09843–18040
(c) Connect the negative (–) terminal cable to the battery, and wait for at least 2 seconds.
(d) Turn the ignition switch to the ON position, and wait for at least 10 seconds.
(e) Clear the stored DTCs in the memory (See page 05–1184).
(f) Turn the ignition switch to the LOCK position.
(g) Turn the ignition switch to the ON position, and wait for at least 10 seconds.
(h) Check the DTCs (See page 05–1184).
OK:
DTC B1186/58 is not output.

HINT:
Codes other than code B1186/58 may be output at this time, but they are not related to this check.

NG → **REPLACE AIR BAG SENSOR ASSY CENTER**

OK

3 CHECK INSTRUMENT PANEL PASSENGER AIR BAG ASSY(P SQUIB, 2ND STEP)

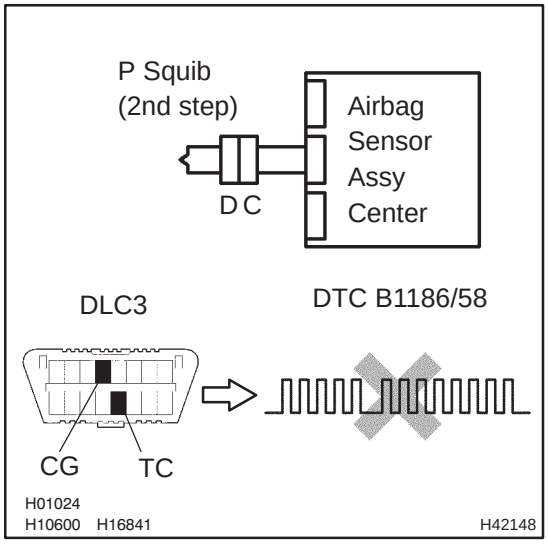

(a) Turn the ignition switch to the LOCK position.
(b) Disconnect the negative (–) terminal cable from the battery, and wait for at least 90 seconds.
(c) Connect the connector to the instrument panel passenger airbag assy.
(d) Connect the negative (–) terminal cable to the battery, and wait for at least 2 seconds.
(e) Turn the ignition switch to the ON position, and wait for at least 10 seconds.
(f) Clear the stored DTCs in the memory (See page 05–1184).
(g) Turn the ignition switch to the LOCK position.
(h) Turn the ignition switch to the ON position, and wait for at least 10 seconds.
(i) Check the DTCs (See page 05–1184).
OK:
DTC B1186/58 is not output.

HINT:
Codes other than code B1186/58 may be output at this time, but they are not related to this check.

NG → **REPLACE INSTRUMENT PANEL PASSENGER AIR BAG ASSY**

OK

USE SIMULATION METHOD TO CHECK

DTC	B1187/55	SHORT IN P SQUIB (2ND STEP) CIRCUIT (TO GROUND)

CIRCUIT DESCRIPTION

The P squib (2nd step) circuit consists of the airbag sensor assy center and the instrument panel passenger airbag assy.
This circuit actuates the SRS to deploy when the SRS deployment conditions are fulfilled.
DTC B1187/55 is recorded when a short to ground is detected in the P squib (2nd step) circuit.

DTC No.	DTC Detecting Condition	Trouble Area
B1187/55	• Short circuit in P squib (2nd step) wire harness (to ground) • P squib (2nd step) malfunction • Airbag sensor assy center malfunction	• Instrument panel passenger airbag assy (P squib, 2nd step) • Airbag sensor assy center • Instrument panel wire

WIRING DIAGRAM

See page 05–1362.

INSPECTION PROCEDURE

1	CHECK INSTRUMENT PANEL WIRE(P SQUIB, 2ND STEP CIRCUIT)

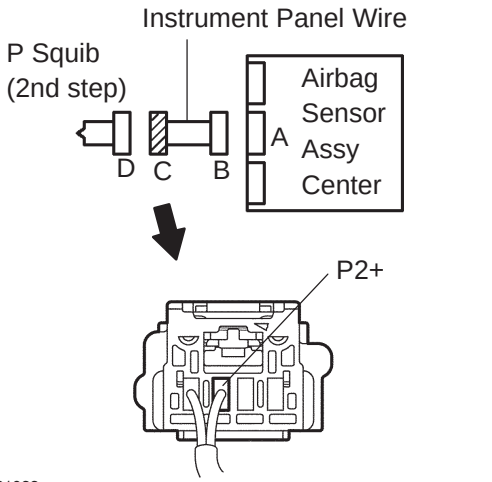

(a) Turn the ignition switch to the LOCK position.
(b) Disconnect the negative (–) terminal cable from the battery, and wait for at least 90 seconds.
(c) Disconnect the connectors from the airbag sensor assy center and the instrument panel passenger airbag assy.
(d) Measure the resistance between the body ground and P2+ of the connector ”C”.
OK:
Resistance: 1 MΩ or Higher

NG → **REPAIR OR REPLACE INSTRUMENT PANEL WIRE**

OK

2 CHECK AIR BAG SENSOR ASSY CENTER

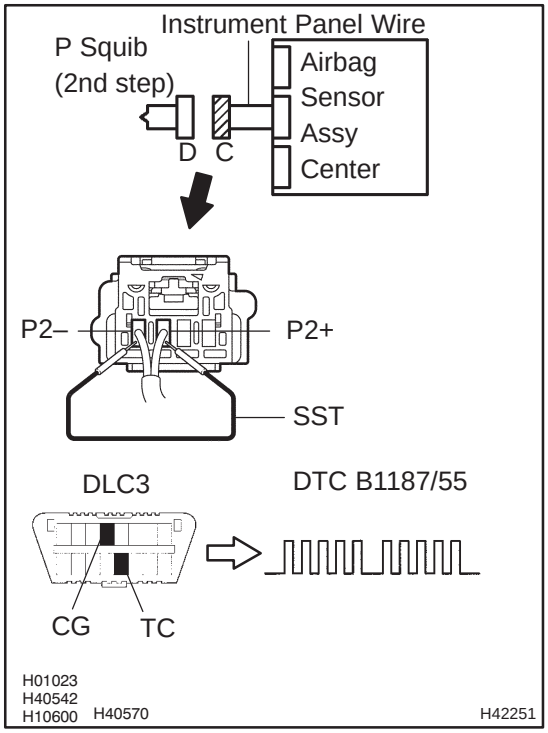

(a) Connect the connector to the airbag sensor assy center.
(b) Using SST, connect P2+ and P2– of the connector ”C”.
SST 09843–18040
(c) Connect the negative (–) terminal cable to the battery, and wait for at least 2 seconds.
(d) Turn the ignition switch to the ON position, and wait for at least 10 seconds.
(e) Clear the stored DTCs in the memory (See page 05–1184).
(f) Turn the ignition switch to the LOCK position.
(g) Turn the ignition switch to the ON position, and wait for at least 10 seconds.
(h) Check the DTCs (See page 05–1184).
OK:
DTC B1187/55 is not output.

HINT:
Codes other than code B1187/55 may be output at this time, but they are not related to this check.

NG → **REPLACE AIR BAG SENSOR ASSY CENTER**

OK

3 CHECK INSTRUMENT PANEL PASSENGER AIR BAG ASSY(P SQUIB, 2ND STEP)

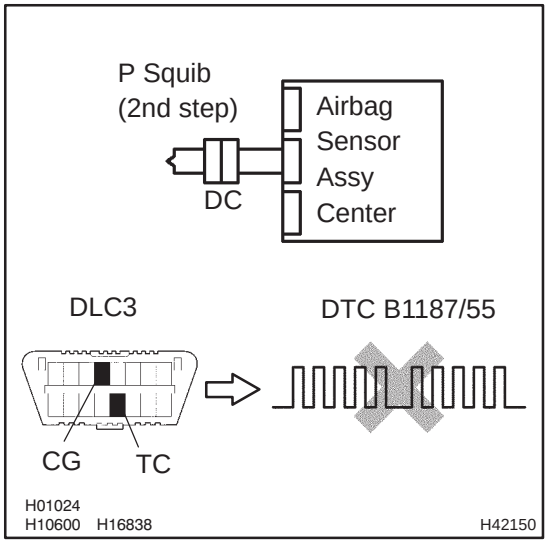

(a) Turn the ignition switch to the LOCK position.
(b) Disconnect the negative (–) terminal cable from the battery, and wait for at least 90 seconds.
(c) Connect the connector to the instrument panel passenger airbag assy.
(d) Connect the negative (–) terminal cable to the battery, and wait for at least 2 seconds.
(e) Turn the ignition switch to the ON position, and wait for at least 10 seconds.
(f) Clear the stored DTCs in the memory (See page 05–1184).
(g) Turn the ignition switch to the LOCK position.
(h) Turn the ignition switch to the ON position, and wait for at least 10 seconds.
(i) Check the DTCs (See page 05–1184).
OK:
DTC B1187/55 is not output.

HINT:
Codes other than code B1187/55 may be output at this time, but they are not related to this check.

NG → **REPLACE INSTRUMENT PANEL PASSENGER AIR BAG ASSY**

OK

4 USE SIMULATION METHOD TO CHECK

NG → **Go to step 1**

OK

REPLACE ALL SRS COMPONENTS INCLUDING WIRE HARNESS

DTC	B1188/56	SHORT IN P SQUIB (2ND STEP) CIRCUIT (TO B+)

CIRCUIT DESCRIPTION

The P squib (2nd step) circuit consists of the airbag sensor assy center and the instrument panel passenger airbag assy.
This circuit actuates the SRS to deploy when the SRS deployment conditions are fulfilled.
DTC B1188/56 is recorded when a short to B+ is detected in the P squib (2nd step) circuit.

DTC No.	DTC Detecting Condition	Trouble Area
B1188/56	• Short circuit in P squib (2nd step) wire harness (to B+) • P squib (2nd step) malfunction • Airbag sensor assy center malfunction	• Instrument panel passenger airbag assy (P squib, 2nd step) • Airbag sensor assy center • Instrument panel wire

WIRING DIAGRAM

See page 05–1362.

INSPECTION PROCEDURE

1	CHECK INSTRUMENT PANEL WIRE(P SQUIB, 2ND STEP CIRCUIT)

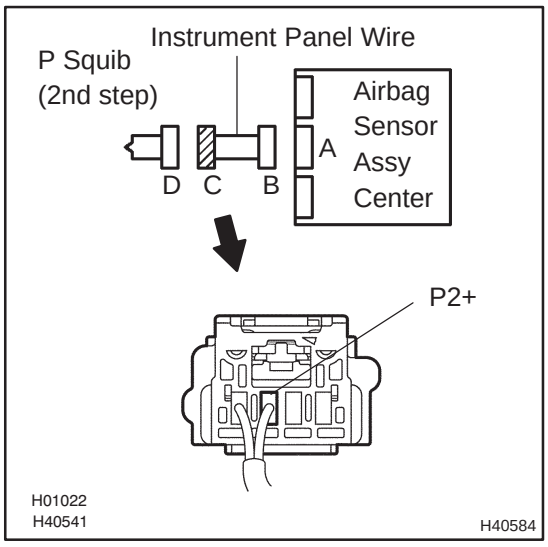

(a) Turn the ignition switch to the LOCK position.
(b) Disconnect the negative (–) terminal cable from the battery, and wait for at least 90 seconds.
(c) Disconnect the connectors from the airbag sensor assy center and the instrument panel passenger airbag assy.
(d) Connect the negative (–) terminal cable to the battery, and turn the ignition switch to the ON position.
(e) Measure the voltage between the body ground and P2+ of the connector "C".
OK:
Voltage: Below 1 V

NG → **REPAIR OR REPLACE INSTRUMENT PANEL WIRE**

OK

2 CHECK AIR BAG SENSOR ASSY CENTER

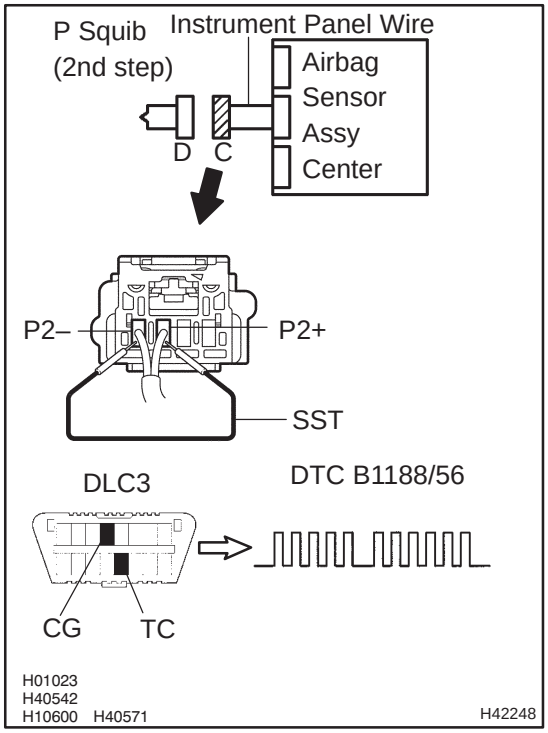

(a) Turn the ignition switch to the LOCK position.
(b) Disconnect the negative (–) terminal cable from the battery, and wait for at least 90 seconds.
(c) Connect the connector to the airbag sensor assy center.
(d) Using SST, connect P2+ and P2– of the connector "C".
SST 09843–18040
(e) Connect the negative (–) terminal cable to the battery, and wait for at least 2 seconds.
(f) Turn the ignition switch to the ON position, and wait for at least 10 seconds.
(g) Clear the stored DTCs in the memory (See page 05–1184).
(h) Turn the ignition switch to the LOCK position.
(i) Turn the ignition switch to the ON position, and wait for at least 10 seconds.
(j) Check the DTCs (See page 05–1184).
OK:
DTC B1188/56 is not output.

HINT:
Codes other than code B1188/56 may be output at this time, but they are not related to this check.

NG → **REPLACE AIR BAG SENSOR ASSY CENTER**

OK

3	CHECK INSTRUMENT PANEL PASSENGER AIR BAG ASSY(P SQUIB, 2ND STEP)

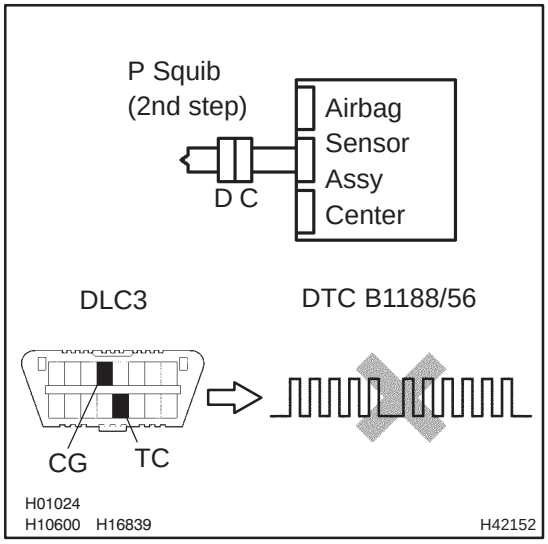

(a) Turn the ignition switch to the LOCK position.
(b) Disconnect the negative (–) terminal cable from the battery, and wait for at least 90 seconds.
(c) Connect the connector to the instrument panel passenger airbag assy.
(d) Connect the negative (–) terminal cable to the battery, and wait for at least 2 seconds.
(e) Turn the ignition switch to the ON position, and wait for at least 10 seconds.
(f) Clear the stored DTCs in the memory (See page 05–1184).
(g) Turn the ignition switch to the LOCK position.
(h) Turn the ignition switch to the ON position, and wait for at least 10 seconds.
(i) Check the DTCs (See page 05–1184).
OK:
DTC B1188/56 is not output.

HINT:
Codes other than code B1188/56 may be output at this time, but they are not related to this check.

NG → **REPLACE INSTRUMENT PANEL PASSENGER AIR BAG ASSY**

OK

4	USE SIMULATION METHOD TO CHECK

NG → **Go to step 1**

OK

REPLACE ALL SRS COMPONENTS INCLUDING WIRE HARNESS

DTC	B1650/49	SHORT IN KNEE SQUIB CIRCUIT

DTC	B1651/49	OPEN IN KNEE SQUIB CIRCUIT

DTC	B1652/49	SHORT IN KNEE SQUIB CIRCUIT (TO GROUND)

DTC	B1653/49	SHORT IN KNEE SQUIB CIRCUIT (TO B+)

CIRCUIT DESCRIPTION

The knee squib circuit consists of the airbag sensor assy center and the instrument panel airbag assy. This circuit actuates the SRS to deploy when the SRS deployment conditions are fulfilled.
When the malfunction is detected in the knee squib circuit under the following conditions, these codes are recorded.

- DTC B1650/49 is for short circuit
- DTC B1651/49 is for open circuit
- DTC B1652/49 is for short to ground
- DTC B1653/49 is for short to B+

DTC No.	DTC Detection Condition	Trouble Area
B1650/49 B1651/49 B1652/49 B1653/49	• Short circuit between DK+ wire harness and DK– wire harness of squib • Open circuit in DK+ wire harness or DK– wire harness of squib • Short circuit in knee squib wire harness (to ground) • Short circuit in knee squib wire harness (to B+) • Knee squib malfunction • Airbag sensor assy center	• Instrument panel airbag assy (Knee squib) • Instrument panel wire • Floor wire No.2 • Airbag sensor assy center

WIRING DIAGRAM

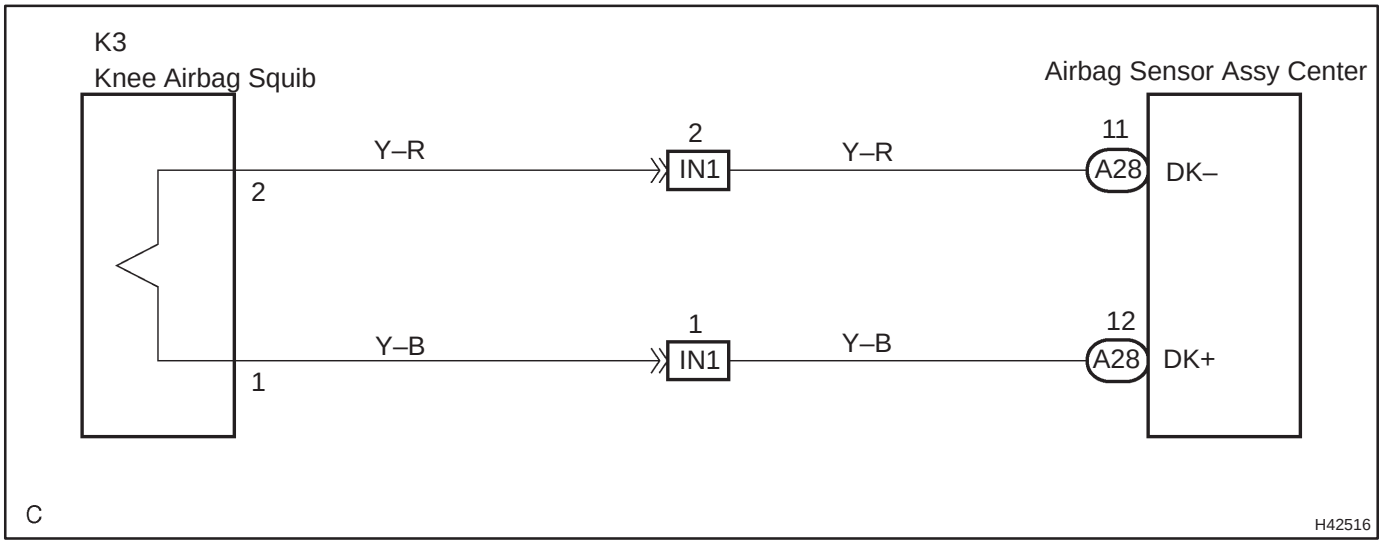

INSPECTION PROCEDURE

1	CHECK CONNECTOR

(a) Turn the ignition switch to the LOCK position.
(b) Disconnect the negative (–) terminal cable from the battery, and wait for at least 90 seconds.
(c) Disconnect the connectors from the airbag sensor assy center and the instrument panel airbag assy.
(d) Check that the instrument panel wire connector (on the instrument panel airbag assy side) is not damaged.
OK:
The lock button is not disengaged, or the claw of the lock is not deformed or damaged.

NG → **REPAIR OR REPLACE INSTRUMENT PANEL WIRE**

OK

2	CHECK KNEE AIRBAG SQUIB CIRCUIT(TO B+)

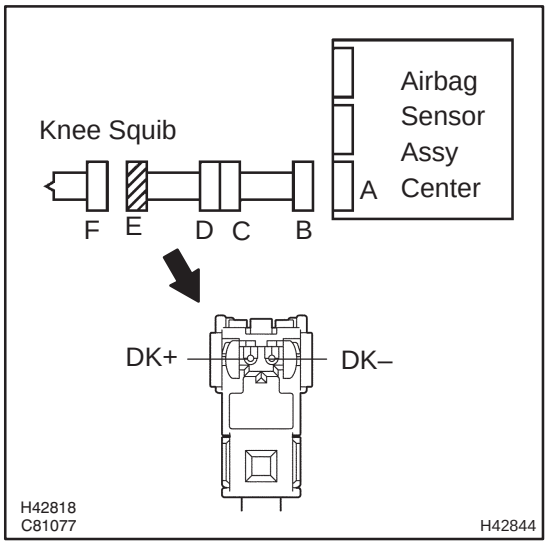

(a) Connect the negative (–) terminal cable to the battery, and turn the ignition switch to the ON position.
(b) Measure the voltage between the body ground and DK+ of the connector ”E”.
OK:
Voltage: Below 1 V

NG → **Go to step 9**

OK

3 CHECK KNEE AIRBAG SQUIB CIRCUIT(TO GROUND)

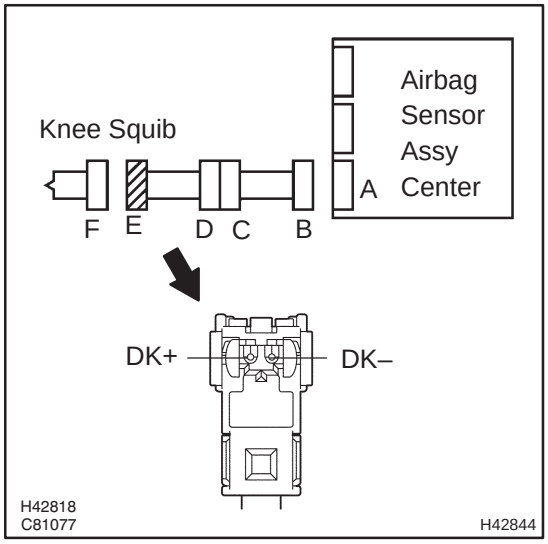

(a) Turn the ignition switch to the LOCK position.
(b) Disconnect the negative (–) terminal cable from the battery, and wait for at least 90 seconds.
(c) Measure the resistance between the body ground and DK+ of the connector "E".
OK:
Resistance: 1 MΩ or Higher

NG → **Go to step 12**

OK

4 CHECK KNEE AIRBAG SQUIB CIRCUIT(OPEN)

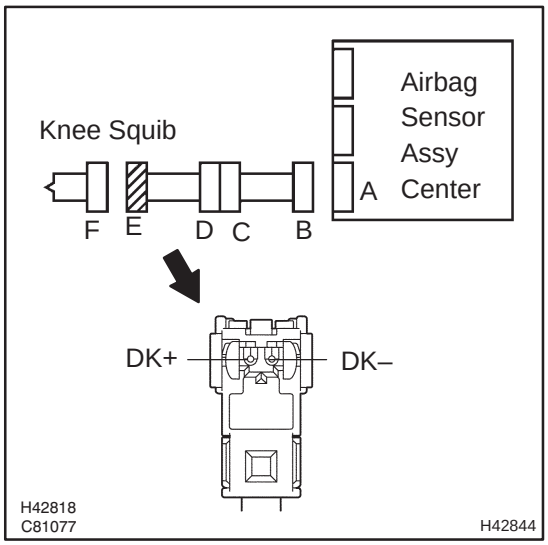

(a) Measure the resistance between DK+ and DK– of the connector "E".
OK:
Resistance: Below 1 Ω

NG → **Go to step 15**

OK

5 CHECK KNEE AIRBAG SQUIB CIRCUIT(SHORT)

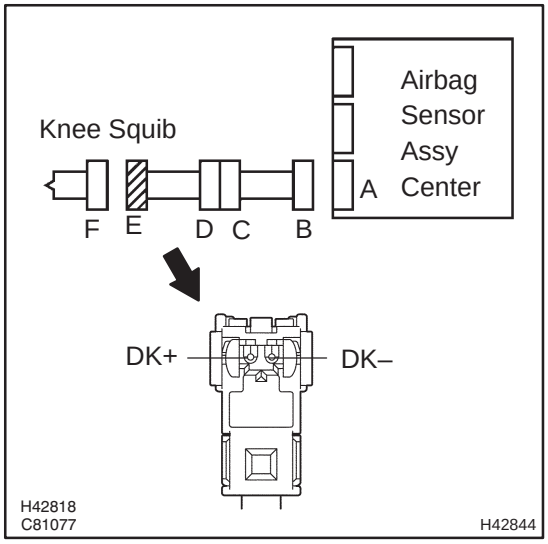

(a) Release the activation prevention mechanism built in the connector "B" (See page 05–1184).

(b) Measure the resistance between DK+ and DK– of the connector "E".

OK:

Resistance 1 MΩ or Higher

NG → **Go to step 17**

OK

6 CHECK AIR BAG SENSOR ASSY CENTER

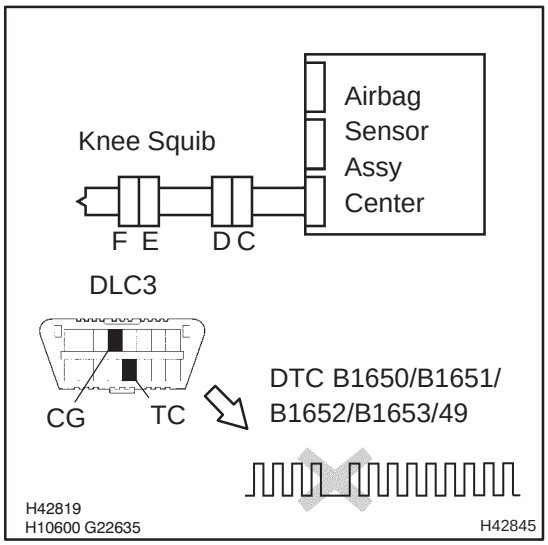

(a) Connect the connectors to the airbag sensor assy center and the instrument panel airbag assy.

(b) Connect the negative (–) terminal cable to the battery, and wait for at least 2 seconds.

(c) Turn the ignition switch to the ON position, and wait for at least 10 seconds.

(d) Clear the stored DTCs in the memory (See page 05–1184).

(e) Turn the ignition switch to the LOCK position.

(f) Turn the ignition switch to the ON position, and wait for at least 10 seconds.

(g) Check the DTCs (See page 05–1184).

OK:

DTC B1650/49, B1651/49, B1652/49 or B1653/49 are not output.

HINT:

Codes other than code B1650/49, B1651/49, B1652/49 or B1683/49 may be output at this time, but they are not related to this check.

NG → **Go to step 7**

OK

USE SIMULATION METHOD TO CHECK

7	REPLACE AIR BAG SENSOR ASSY CENTER

(a) Turn the ignition switch to the LOCK position.
(b) Disconnect the negative (–) terminal cable from the battery, and wait for at least 90 seconds.
(c) Replace the airbag sensor assy center (See page 60–62).

8	RECHECK DTC

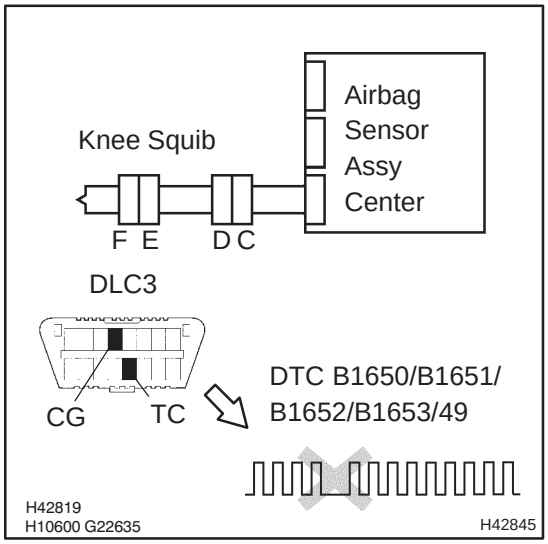

(a) Connect the negative (–) terminal cable to the battery, and wait for at least 2 seconds.
(b) Turn the ignition switch to the ON position, and wait for at least 10 seconds.
(c) Clear the stored DTCs in the memory (See page 05–1184).
(d) Turn the ignition switch to the LOCK position.
(e) Turn the ignition switch to the ON position, and wait for at least 10 seconds.
(f) Check the DTCs (See page 05–1184).

OK:

DTC B1650/49, B1651/49, B1652/49 or B1653/49 are not output.

HINT:

Codes other than code B1650/49, B1651/49, B1652/49 or B1683/49 may be output at this time, but they are not related to this check.

NG → **REPLACE INSTRUMENT PANEL AIR BAG ASSY**

OK

END

9 CHECK INSTRUMENT PANEL WIRE(TO B+)

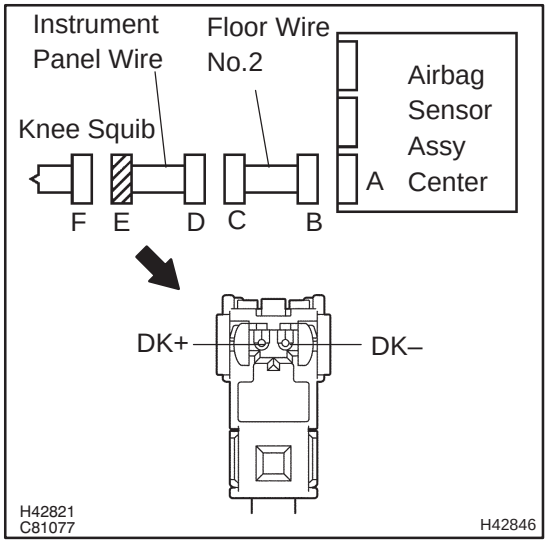

(a) Turn the ignition switch to the LOCK position.
(b) Disconnect the negative (–) terminal cable from the battery, and wait for at least 90 seconds.
(c) Disconnect the instrument panel wire connector from the floor wire No.2.
(d) Connect the negative (–) terminal cable to the battery, and turn the ignition switch to the ON position.
(e) Measure the voltage between the body ground and DK+ of the connector "E".
OK:
Voltage: Below 1 V

NG → **REPAIR OR REPLACE INSTRUMENT PANEL WIRE**

OK

10 CHECK FLOOR WIRE NO.2(TO B+)

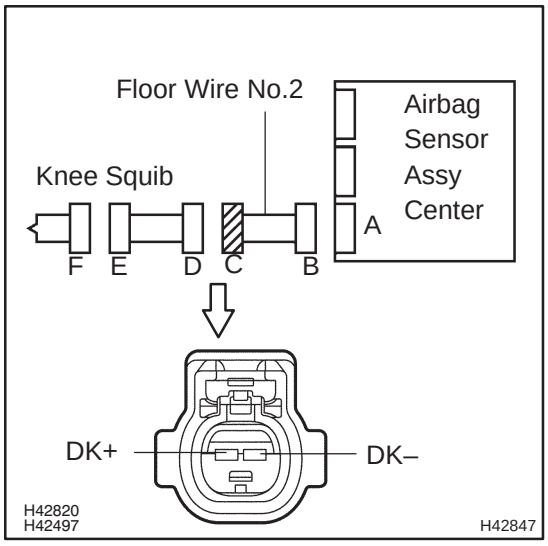

(a) Turn the ignition switch to the LOCK position.
(b) Turn the ignition switch to the ON position.
(c) Measure the voltage between the body ground and DK+ of the connector "C".
OK:
Voltage: Below 1 V

NG → **REPAIR OR REPLACE FLOOR WIRE NO.2**

OK

11 USE SIMULATION METHOD TO CHECK

NG → **Go to step 1**

OK

REPLACE ALL SRS COMPONENTS INCLUDING WIRE HARNESS

12 CHECK INSTRUMENT PANEL WIRE(TO GROUND)

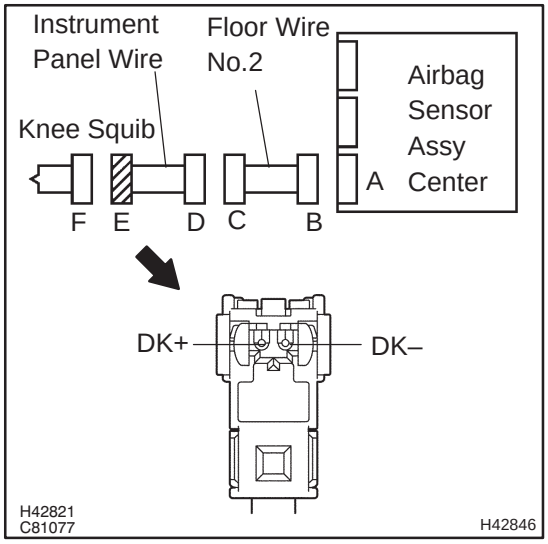

(a) Disconnect the instrument panel wire connector from the floor wire No.2.

(b) Measure the resistance between the body ground and DK+ of the connector "E".

OK:

Resistance: 1 MΩ or Higher

NG → **REPAIR OR REPLACE INSTRUMENT PANEL WIRE**

OK

13 CHECK FLOOR WIRE NO.2(TO GROUND)

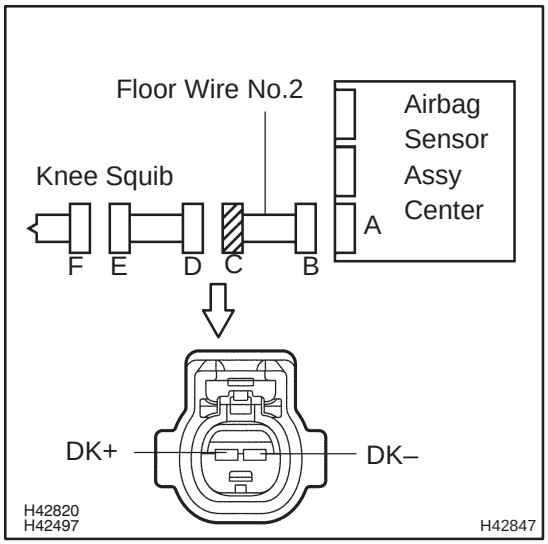

(a) Measure the resistance between the body ground and DK+ of the connector "C".

OK:

Resistance: 1 MΩ or Higher

NG → **REPAIR OR REPLACE FLOOR WIRE NO.2**

OK

14 USE SIMULATION METHOD TO CHECK

NG → **Go to step 1**

OK

REPLACE ALL SRS COMPONENTS INCLUDING WIRE HARNESS

15 CHECK INSTRUMENT PANEL WIRE(OPEN)

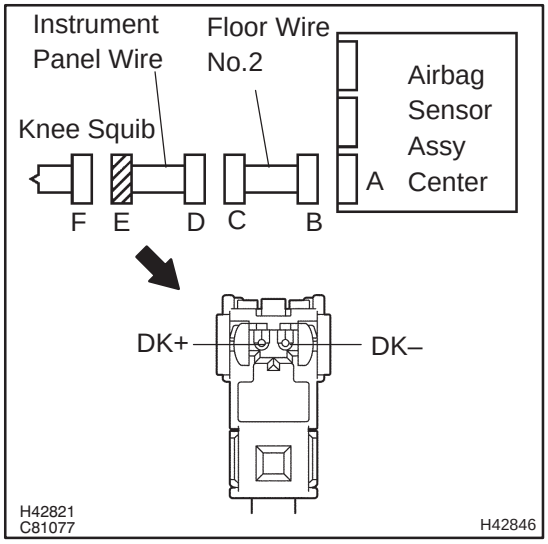

(a) Disconnect the instrument panel wire connector from the floor wire No.2.

(b) Measure the resistance between DK+ and DK– of the connector ”E”.

OK:

Resistance: Below 1 Ω

NG	**REPAIR OR REPLACE INSTRUMENT PANEL WIRE**

OK

16 CHECK FLOOR WIRE NO.2(OPEN)

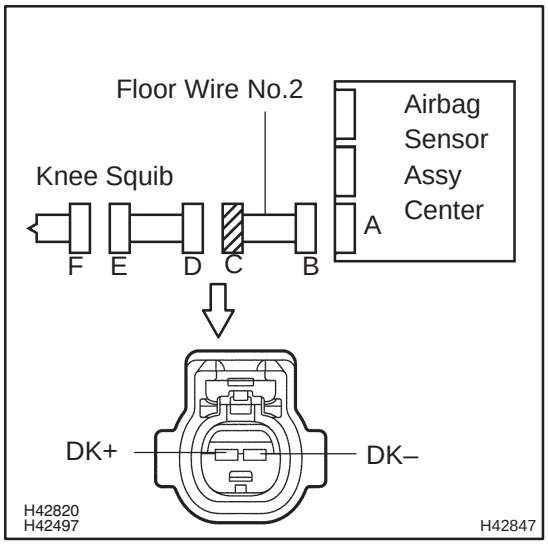

(a) Measure the resistance between DK+ and DK– of the connector ”C”.

OK:

Resistance: Below 1 Ω

NG	**REPAIR OR REPLACE FLOOR WIRE NO.2**

OK

USE SIMULATION METHOD TO CHECK

17 CHECK INSTRUMENT PANEL WIRE(SHORT)

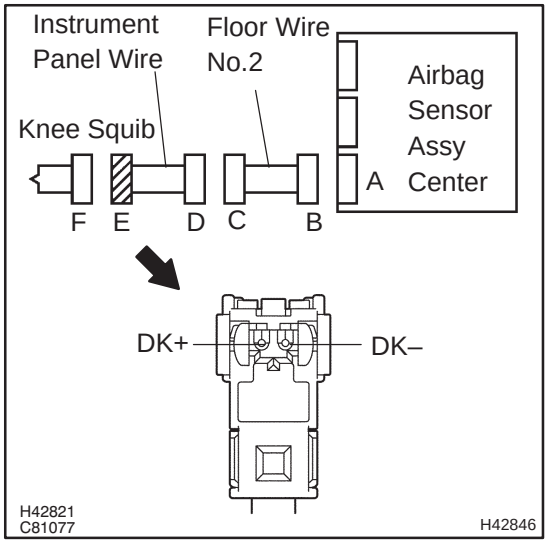

(a) Disconnect the instrument panel wire connector from the floor wire No.2.
(b) Release the activation prevention mechanism built in the connector ”D” (See page 05–1184).
(c) Measure the resistance between DK+ and DK– of the connector ”E”.
OK:
Resistance: 1 MΩ or Higher

NG → **REPAIR OR REPLACE INSTRUMENT PANEL WIRE**

OK

18 CHECK FLOOR WIRE NO.2(SHORT)

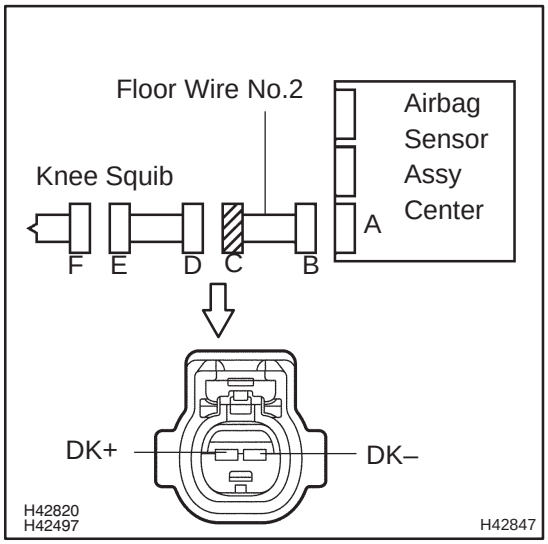

(a) Release the activation prevention mechanism built in the connector ”B”.
(b) Measure the resistance between DK+ and DK– of the connector ”C”.
OK:
Resistance: 1 MΩ or Higher

NG → **REPAIR OR REPLACE FLOOR WIRE NO.2**

OK

USE SIMULATION METHOD TO CHECK

SOURCE VOLTAGE DROP

CIRCUIT DESCRIPTION

The SRS is equipped with a voltage–increase circuit (DC–DC converter) in the airbag sensor assy center in case the source voltage drops.
When the battery voltage drops, the voltage–increase circuit (DC–DC converter) functions to increase the voltage of the SRS to normal voltage.
A malfunction in this circuit is displayed by different form from the other code. The source voltage drop is indicated when the SRS warning light comes on without showing any DTCs.
Malfunction in this circuit is not recorded in the airbag sensor assy center. The SRS warning light automatically goes off when the source voltage returns to normal.

DTC No.	Diagnosis
(Normal)	Source voltage drop

WIRING DIAGRAM

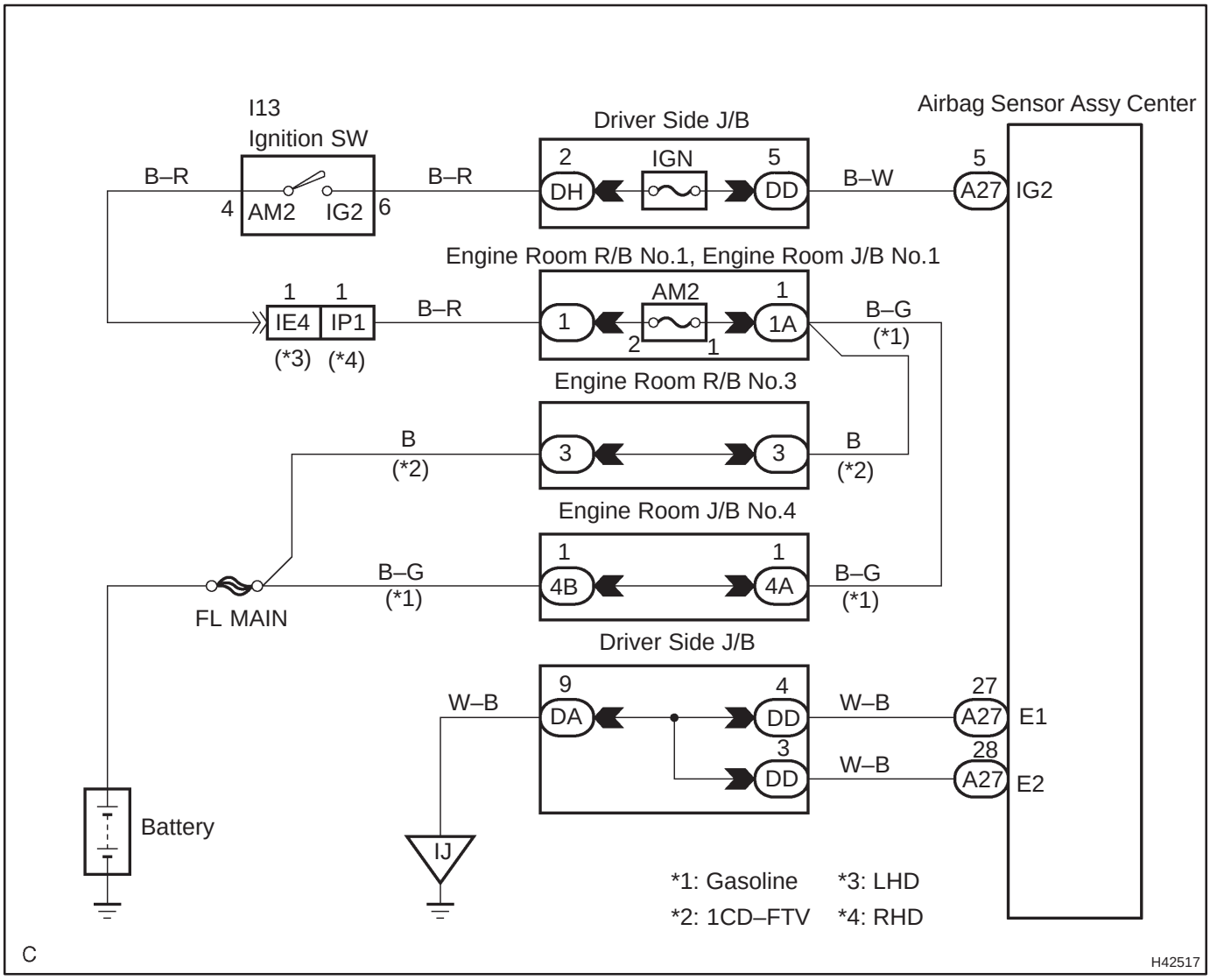

INSPECTION PROCEDURE

1	PREPARE FOR INSPECTION

(a) Turn the ignition switch to the LOCK position.
(b) Disconnect the negative (–) terminal cable from the battery, and wait for at least 90 seconds.
(c) Disconnect the connectors of the airbag sensor assy center (See page 60–62).

2	CHECK SOURCE VOLTAGE

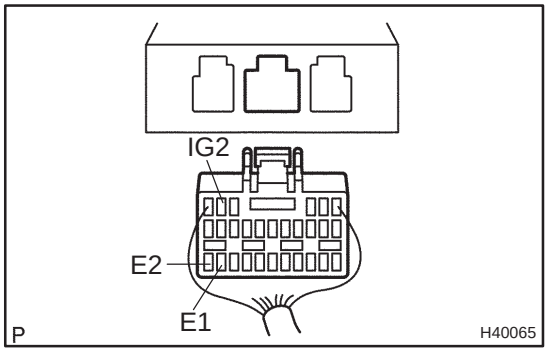

(a) Connect the negative (–) terminal cable to the battery, and turn the ignition switch to the ON position.
(b) Measure the voltage between E1 (E2) and IG2 on the airbag sensor assy center side and operate electric system (defogger, wiper, headlight, heater blower, etc.).
OK:
Voltage: 10 to 14 V

NG	REPAIR OR REPLACE HARNESS BETWEEN BATTERY AND AIRBAG SENSOR ASSY CENTER, AND CHARGING SYSTEM

OK

3	CHECK SRS WARNING LIGHT TURN OFF

(a) Turn the ignition switch to the LOCK position.
(b) Disconnect the negative (–) terminal cable from the battery, and wait for at least 90 seconds.
(c) Connect the airbag sensor assy center connectors.
(d) Connect the negative (–) terminal cable to the battery, and wait for at least 2 seconds.
(e) Turn the ignition switch to the ON position, and wait for at least 10 seconds.
(f) Operate electric system (defogger, wiper, headlight, heater blower, etc.) and check that SRS warning light goes off.
OK:
SRS warning light does not come on.

NG	REPAIR OR REPLACE HARNESS BETWEEN BATTERY AND AIRBAG SENSOR ASSY CENTER, AND CHARGING SYSTEM

OK

4	CHECK AIR BAG SENSOR ASSY CENTER

(a) Turn the ignition switch to the LOCK position.
(b) Disconnect the negative (–) terminal cable from the battery, and wait for at least 90 seconds.
(c) Connect the negative (–) terminal cable to the battery, and wait for at least 2 seconds.
(d) Turn the ignition switch to the ON position, and wait for at least 10 seconds.
(e) Clear the stored DTCs in the memory (See page 05–1184).
(f) Turn the ignition switch to the LOCK position.
(g) Turn the ignition switch to the ON position, and wait for at least 10 seconds.
(h) Check the DTCs (See page 05–1184).

OK:

DTC is not output.

NG → **REPLACE AIR BAG SENSOR ASSY CENTER**

OK

USE SIMULATION METHOD TO CHECK

SRS WARNING LIGHT CIRCUIT MALFUNCTION (ALWAYS LIGHT UP, WHEN IGNITION SWITCH IS ACC OR LOCK POSITION)

CIRCUIT DESCRIPTION

The SRS warning light is located on the combination meter assy.
When the SRS is normal, the SRS warning light comes on for approx. 6 seconds after the ignition switch is turned from the LOCK position to the ON position, and then it turns off automatically.
If there is a malfunction in the SRS, the SRS warning light comes on to inform a trouble to the driver.
When between terminal TC and terminal CG of the DLC3 are connected, the DTC is displayed by blinking the SRS warning light.

WIRING DIAGRAM

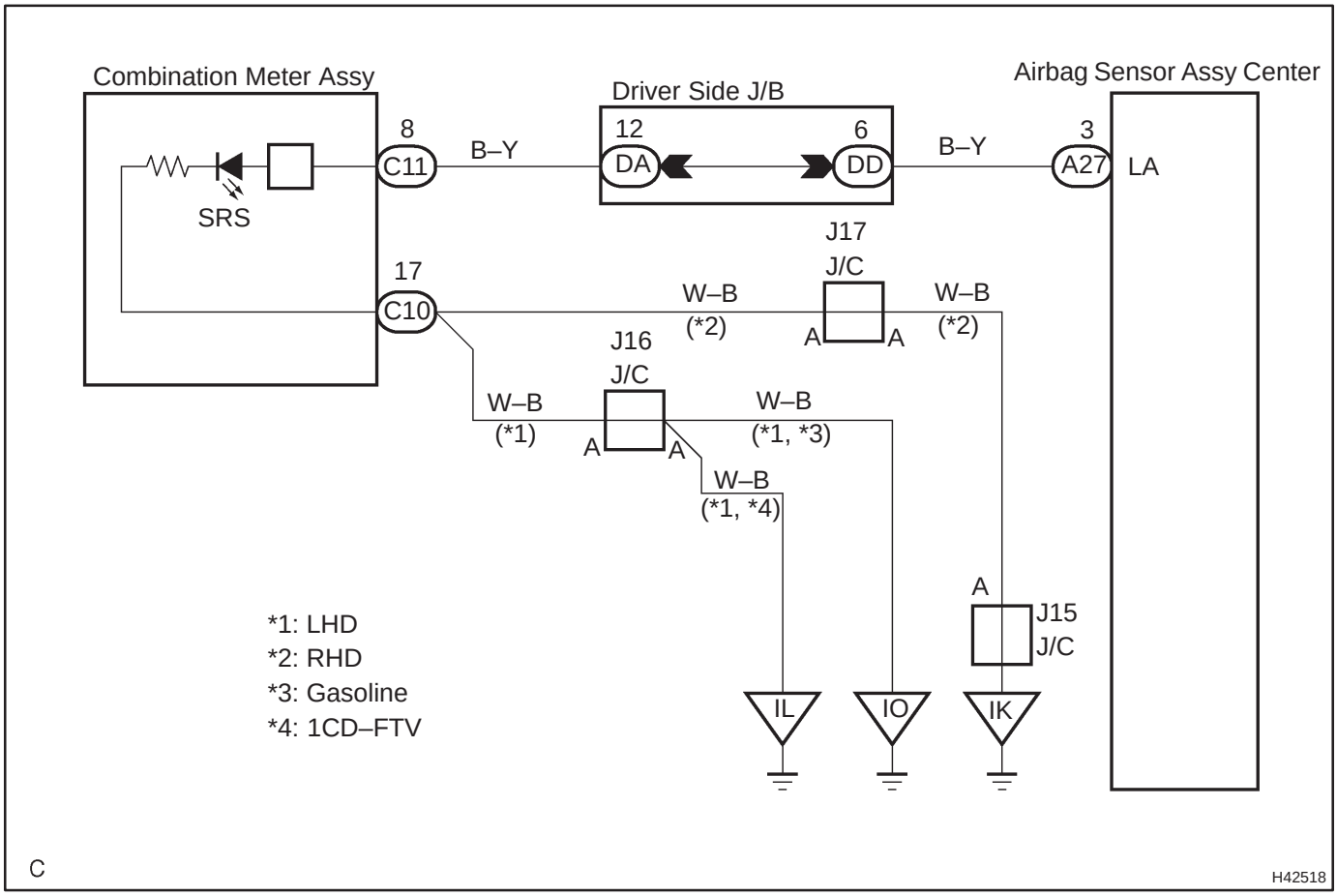

INSPECTION PROCEDURE

1	CHECK CONNECTOR

(a) Turn the ignition switch to the LOCK position.
(b) Disconnect the negative (–) terminal cable from the battery, and wait for at least 90 seconds.
(c) Check that the connection of the airbag sensor assy center connectors.
OK:
The connectors are connector.

NG → **CONNECT CONNECTORS**

OK

2	CHECK WIRE HARNESS(COMBINATION METER ASSY – BODY GROUND)

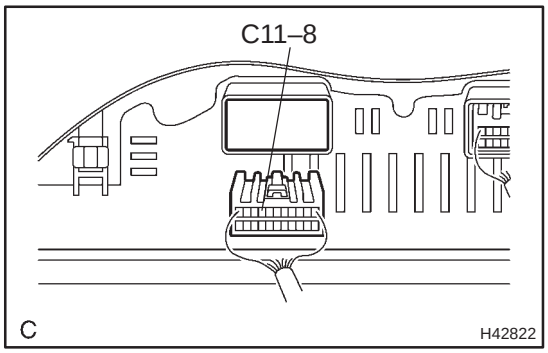

(a) Disconnect the connector from the combination meter assy.
(b) Connect the negative (–) terminal cable to the battery, and turn the ignition switch to the ON position.
(c) Measure the voltage between the body ground and terminal C11–8 of the combination meter assy.
OK:
Voltage: Below 8 V

NG → **REPAIR OR REPLACE COMBINATION METER ASSY**

OK

3	CHECK WIRE HARNESS(AIRBAG SENSOR ASSY CENTER – COMBINATION METER ASSY)

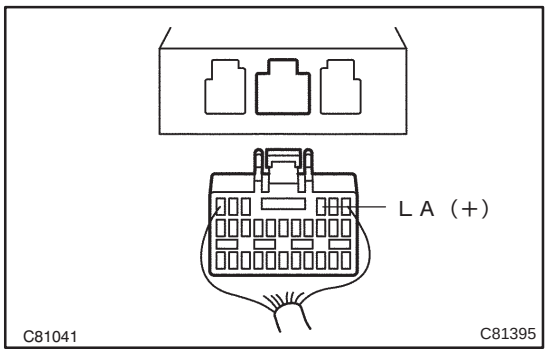

(a) Disconnect the negative (–) terminal cable from the battery, and wait for at least 90 seconds.
(b) Disconnect the connector from the airbag sensor assy center.
(c) Measure the resistance between the body ground and terminal LA of the connector on the airbag sensor assy center side.
OK:
Resistance : 1 MΩ or Higher

NG → **REPAIR OR REPLACE WIRE HARNESS (AIRBAG SENSOR ASSY CENTER – COMBINATION METER ASSY)**

OK

4	CHECK WIRE HARNESS(AIRBAG SENSOR ASSY CENTER – COMBINATION METER ASSY)

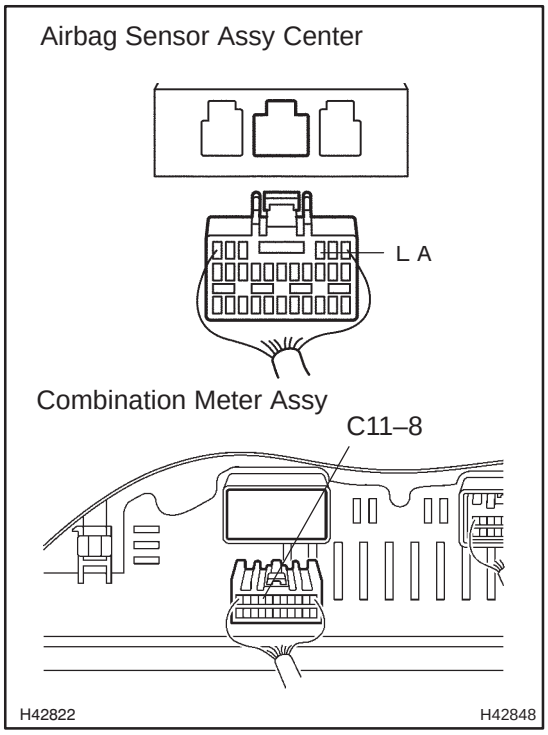

(a) Measure the resistance between terminal C11–8 of the combination meter assy connector and terminal LA of the airbag sensor assy center connector.
OK:
Resistance: Below 1 Ω

NG → **REPAIR OR REPLACE WIRE HARNESS (AIRBAG SENSOR ASSY CENTER – COMBINATION METER ASSY)**

OK

REPLACE AIR BAG SENSOR ASSY CENTER

SRS WARNING LIGHT CIRCUIT MALFUNCTION (DOES NOT LIGHT UP, WHEN IGNITION SWITCH IS TURNED TO ON)

CIRCUIT DESCRIPTION

The SRS warning light is located on the combination meter assy.
When the SRS is normal, the SRS warning light comes on for approx. 6 seconds after the ignition switch is turned from the LOCK position to the ON position, and then it turns off automatically.
If there is a malfunction in the SRS, the SRS warning light comes on to inform a trouble to the driver.
When between terminal TC and terminal CG of the DLC3 are connected, the DTC is displayed by blinking the SRS warning light.

WIRING DIAGRAM

See page .

INSPECTION PROCEDURE

1	CHECK SOURCE VOLTAGE

(a) Measure the voltage of the battery.
OK:
Voltage: 10 to 14 V

NG → **HARNESS BETWEEN BATTERY AND AIRBAG SENSOR ASSY CENTER, AND CHARGING SYSTEM**

OK

2	CHECK AIR BAG SENSOR ASSY CENTER

(a) Turn the ignition switch to the LOCK position.
(b) Disconnect the negative (–) terminal cable from the battery, and wait for at least 90 seconds.
(c) Disconnect the connectors from the airbag sensor assy center.
(d) Connect the negative (–) terminal cable to the battery, and turn the ignition switch to the ON position.
(e) Check that the SRS warning light operation.
OK:
The SRS warning light does not come on.

NG → **REPLACE AIR BAG SENSOR ASSY CENTER**

OK

3	CHECK WIRE HARNESS(AIRBAG SENSOR ASSY CENTER – BODY GROUND)

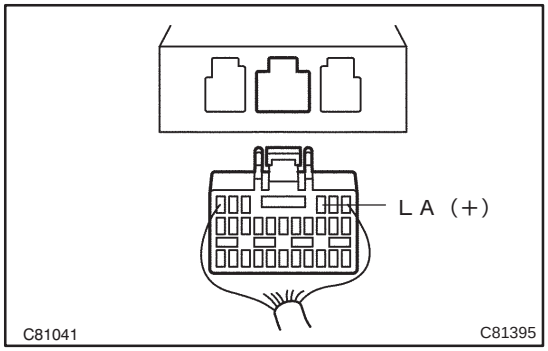

(a) Turn the ignition switch to the LOCK position.
(b) Disconnect the negative (–) terminal cable from the battery, and wait for at least 90 seconds.
(c) Disconnect the connector from the combination meter assy.
(d) Connect the negative (–) terminal cable to the battery, and turn the ignition switch to the ON position.
(e) Measure the voltage between the body ground and LA of the airbag sensor assy center connector.
OK:
Voltage: Below 1 V

NG → **REPAIR OR REPLACE WIRE HARNESS**

OK

REPLACE COMBINATION METER ASSY

TC TERMINAL CIRCUIT

CIRCUIT DESCRIPTION

DTC output mode is set by connecting terminals TC and CG of the DLC3.
The DTCs are displayed by blinking the SRS warning light.

WIRING DIAGRAM

1AZ–FSE, 1CD–FTV Engine:

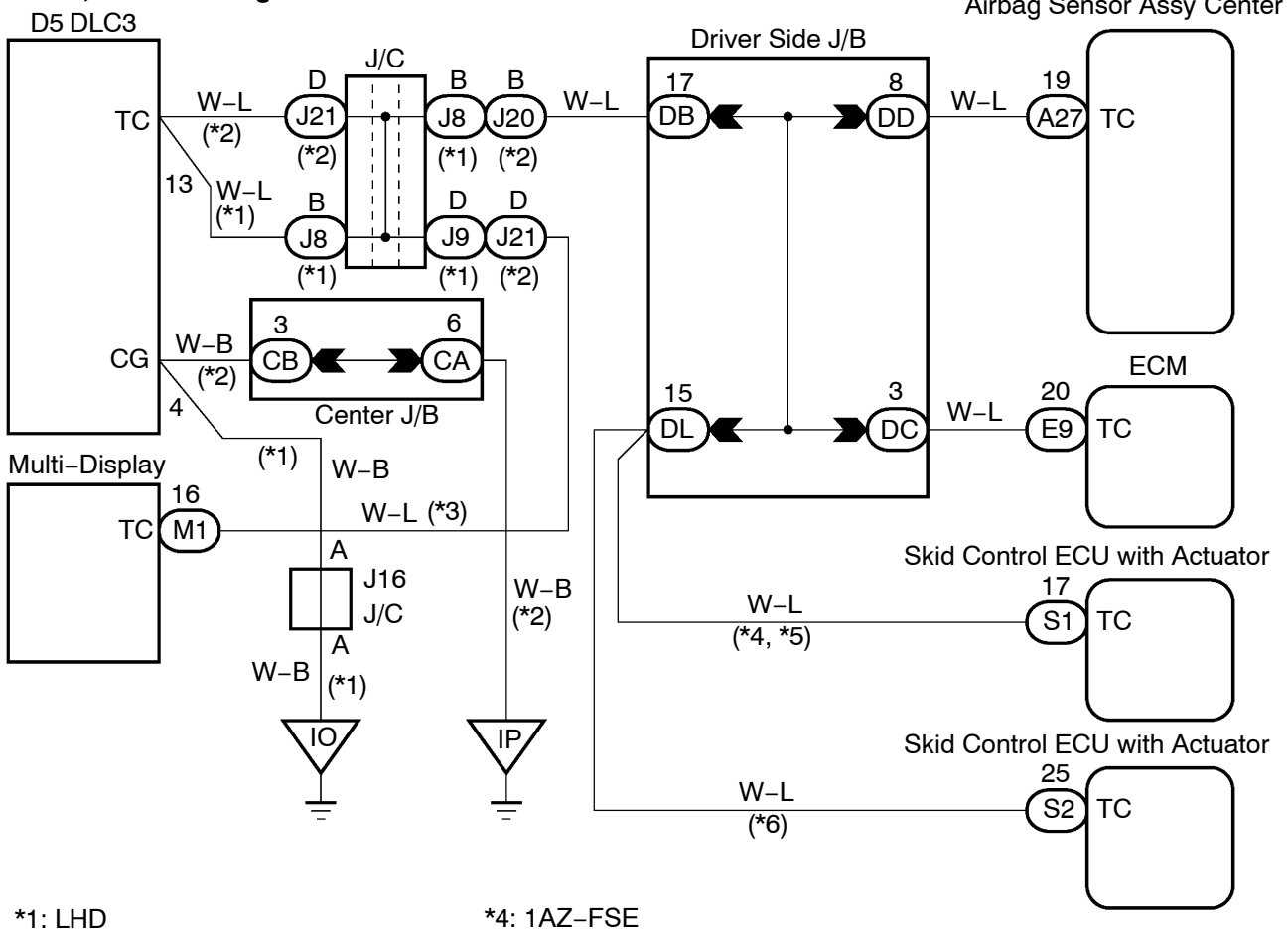

*1: LHD
*2: RHD
*3: w/ Navigation System (Map Type)
*4: 1AZ–FSE
*5: 1CD–FTV (w/ VSC)
*6: 1CD–FTV (w/ ABS)

C

H43588

1AZ–FE Engine:

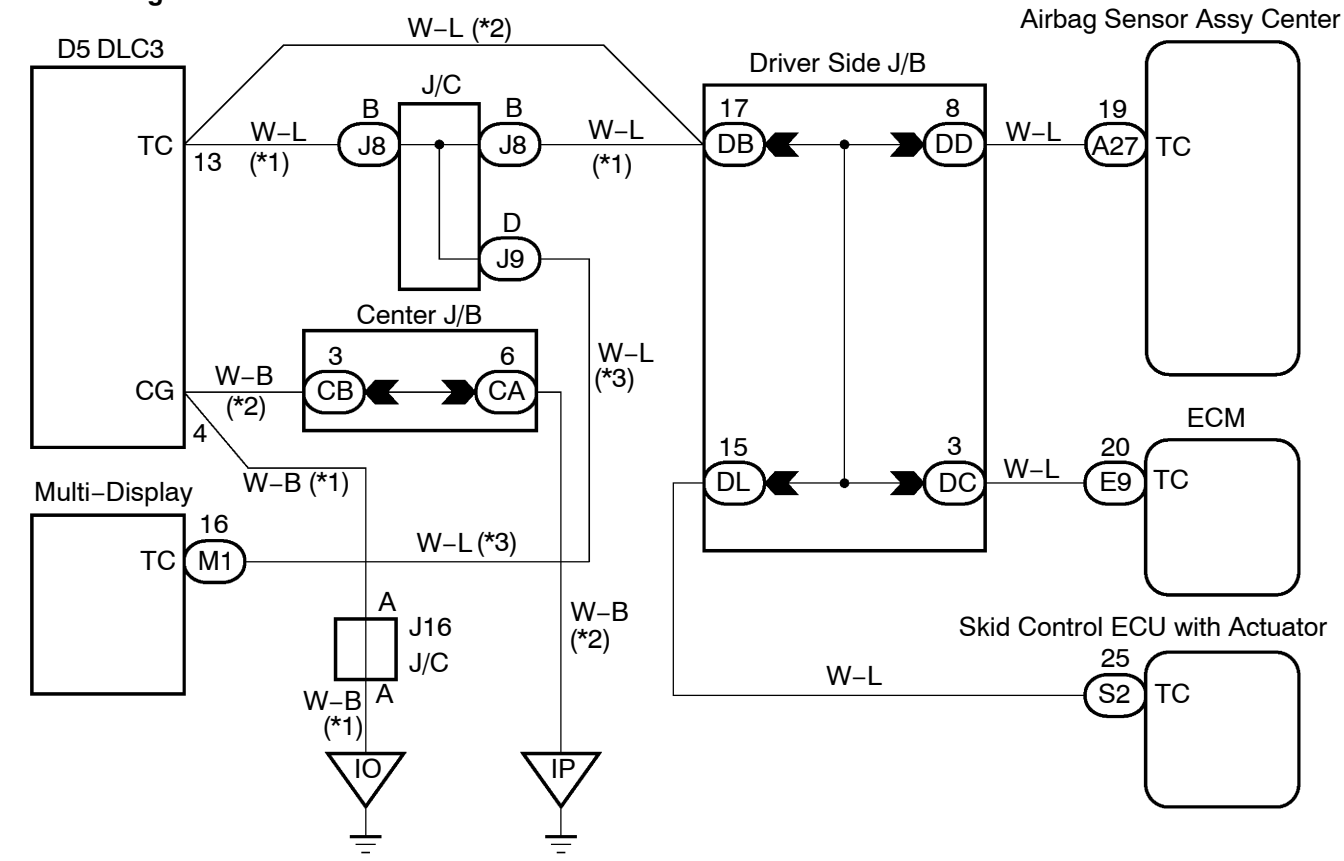

*1: LHD
*2: RHD
*3: w/ Navigation System (Map Type)

C

H43587

1ZZ–FE, 3ZZ–FE Engine:

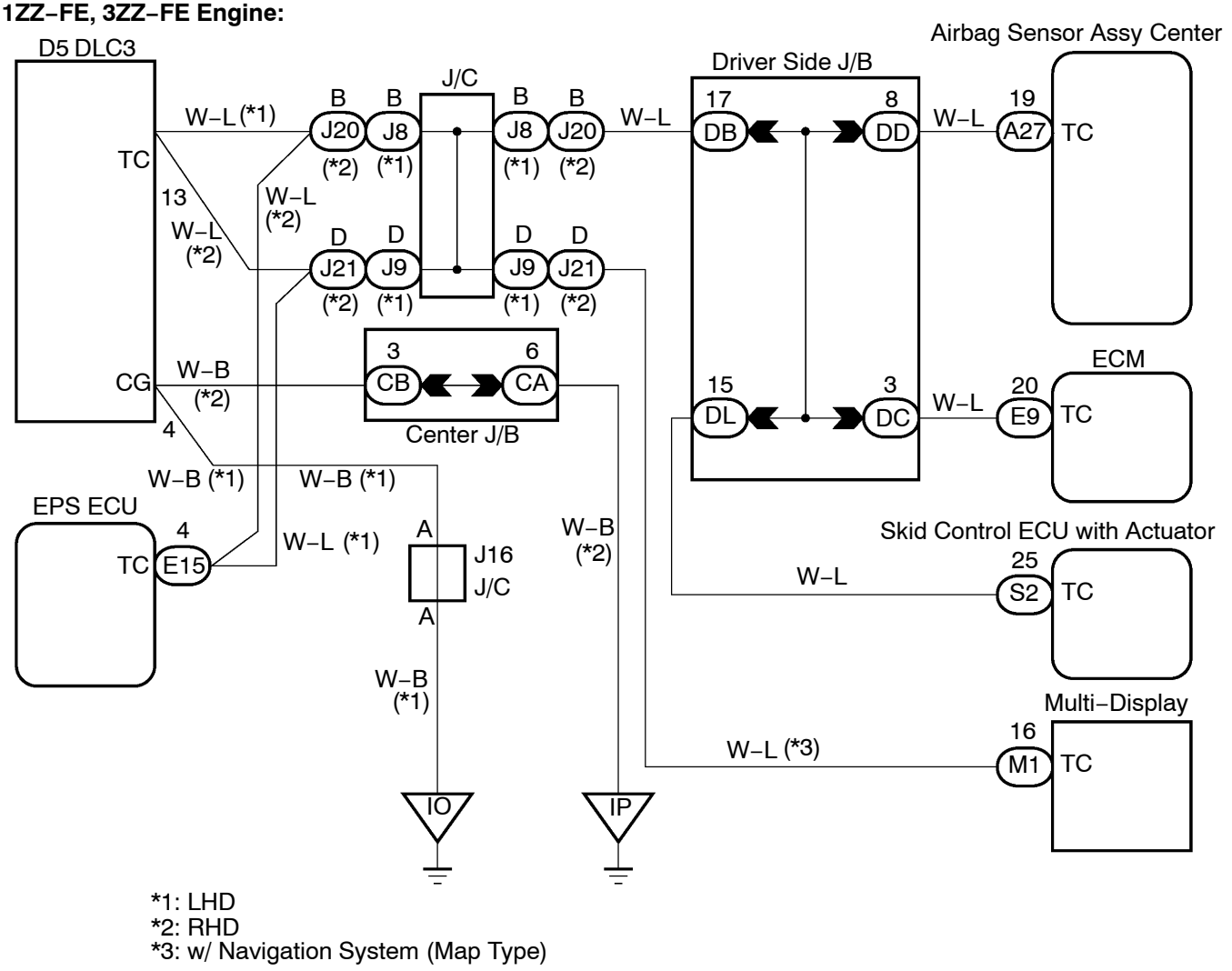

*1: LHD
*2: RHD
*3: w/ Navigation System (Map Type)

C

H43589

HINT:
When each warning light stays blinking, a ground short in the wiring of terminal TC of the DLC3 or an internal ground short in each ECU is suspected.

INSPECTION PROCEDURE

1 CHECK WIRE HARNESS(DLC3 – AIRBAG SENSOR ASSY CENTER)

DLC3:

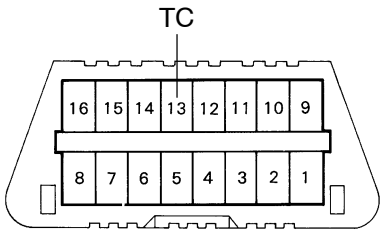

Airbag Sensor Assy Center:

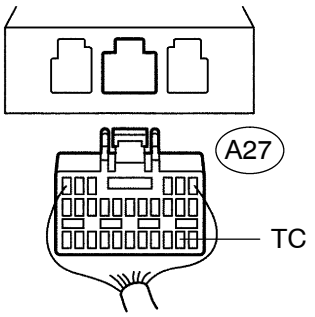

H40173
H40065
H43360

(a) Turn the ignition switch to the LOCK position.
(b) Disconnect the airbag sensor assy center connector.
(c) Measure the resistance according to the value(s) in the table below.

Standard:

Tester connection	Condition	Specified condition
DLC3 (TC) – A27–19 (TC)	Always	Below 1 Ω

NG → **REPAIR OR REPLACE WIRE HARNESS(TC of DLC3 – TC of AIRBAG SENSOR ASSY CENTER)**

OK

2 CHECK WIRE HARNESS(CG of DLC3 – BODY GROUND)

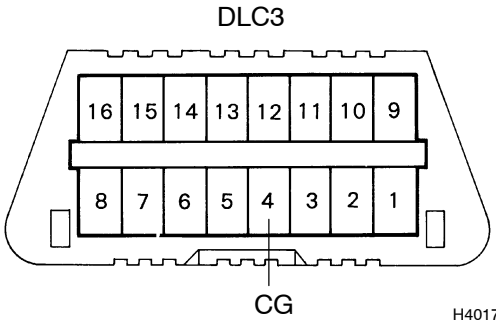

H40173

(a) Measure the resistance according to the value(s) in the table below.

Standard:

Tester connection	Condition	Specified condition
DLC3 (CG) – Body ground	Always	Below 1 Ω

NG → **REPAIR OR REPLACE WIRE HARNESS(CG of DLC3 – BODY GROUND)**

OK

3	**CHECK WIRE HARNESS(TC of AIRBAG SENSOR ASSY CENTER – BODY GROUND)**

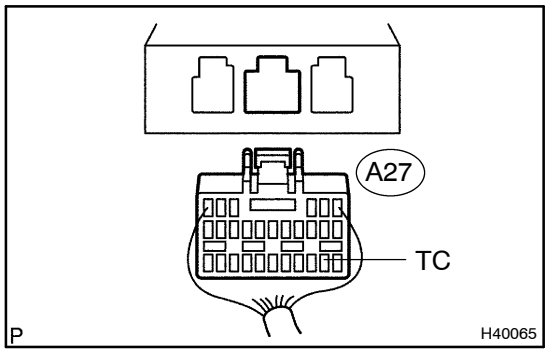

(a) Measure the resistance according to the value(s) in the table below.

Standard:

Tester connection	Condition	Specified condition
A27–19 (TC) – Body ground	Always	1 MΩ or Higher

NG → **REPAIR OR REPLACE WIRE HARNESS AND EACH ECU**

OK

REPLACE AIR BAG SENSOR ASSY CENTER

AUDIO SYSTEM

DESCRIPTION

0549F–10

1. RADIO WAVE BAND

The radio wave bands used in radio broadcasting are as follows:

Frequency	30 kHz	300 kHz	3 MHz	30 MHz	300 MHz
Designation	LF	MF	HF	VHF	
Radio wave		AM ⟷		FM ⟷	
Modulation	Amplitude modulation			Frequency modulation	

LF: Low Frequency
MF: Medium Frequency
HF: High Frequency
VHF: Very High Frequency

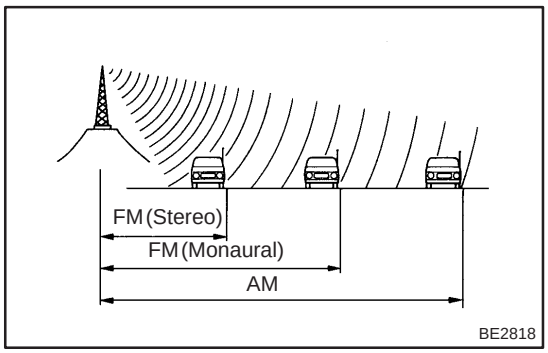

2. SERVICE AREA

There are great differences in the size of the service area for AM and FM broadcasting. Sometimes FM stereo broadcast cannot be received even through AM can be received very clearly. FM stereo has the smaller service area, but it also picks up static and other types of interference (”noise”) easily.

3. RECEPTION PROBLEMS

HINT:

Besides the problem of static, there are some move problems called ”fading”, ”multipath” and ”fade out”. These problems are caused not by electrical noise but by the nature of the radio waves themselves.

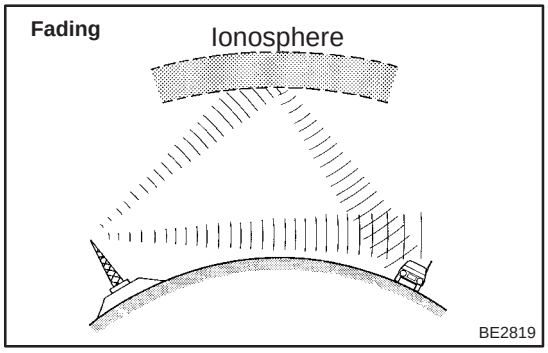

(a) Fading

Besides electrical interference, AM broadcasts are also susceptible to other types of interference, especially at night. This is because AM radio waves bounce off the ionosphere at night. These radio waves then interfere with the signals that reach the vehicle’s antenna directly from the same transmitter. This type of interference is called ”fading”.

Multipath

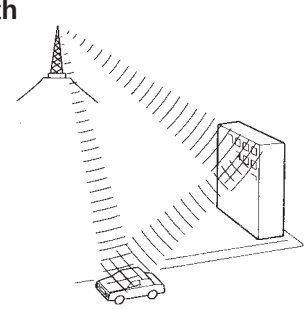

BE2820

(b) Multipath
Interference caused by reflection of radio waves against obstructions is called ”Multipath”. Multipath occurs when radio signals emitted from the broadcast transmitter antenna are reflected against tall buildings or mountains and interferes with other signals which are to be received directly.

Fade Out

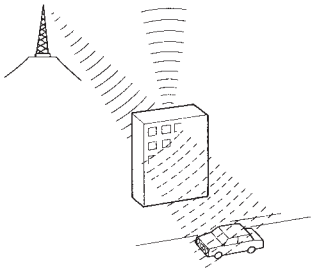

BE2821

(c) Fade Out
Because FM frequency is higher than that of AM, FM radio wave tends to be reflected against obstructions such as tall buildings or mountains. For this reason, FM signals often seems to gradually disappear or fade away as the vehicle goes behind those obstructions. This phenomenon is called ”fade out”.

4. NOISE PROBLEMS

(a) It is very important for noise troubleshooting to understand a customer’s claim clearly. Use the following table to diagnose the phenomenon.

Radio wave	Condition in which noise occurs	Probable cause
AM	Noise occurs at a specific place.	Strong possibility of foreign noise.
	Noise occurs when listening to faint broadcasting.	The same program may be broadcasted from some local stations. If the program is the same, one of those may be tuned in.
	Noise occurs only at night.	Strong possibility of beat from a distant broadcasting.
FM	Noise occurs at a specific place while driving.	Strong possibility of multipath noise and fading noise caused by changes of FM frequency.

HINT:
If the condition where the noise occurs does not meet any of the above, find out the cause based on ”Reception Problems”. Refer to the description about Multipath and Fading mentioned previously.

5. COMPACT DISC PLAYER

(a) Compact Disc (hereafter called ”CD”) Players use a laser beam pick–up to read the digital signals recorded on the CD and reproduce analog signals of the music, etc. 4.7 in. (12 cm) and 3.2 in. (8 cm) discs are available for the CD player.

HINT:
Never attempt to disassemble or apply oil to any part of the player unit. Do not insert any object into the magazine except for a disc.

NOTICE:
CD players use an invisible laser beam which could cause hazardous radiation exposure. Be sure to operate the player correctly as instructed.

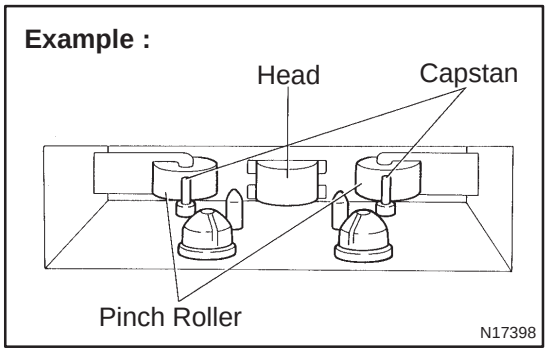

6. MAINTENANCE

Tape Player / Head Cleaning:

(a) Raise the slot cover with your finger.
Using a pencil or similar object, push in the guide.

(b) Using a cleaning pen or cotton applicator soaked in cleaner, clean the head surface, pinch rollers and capstans.

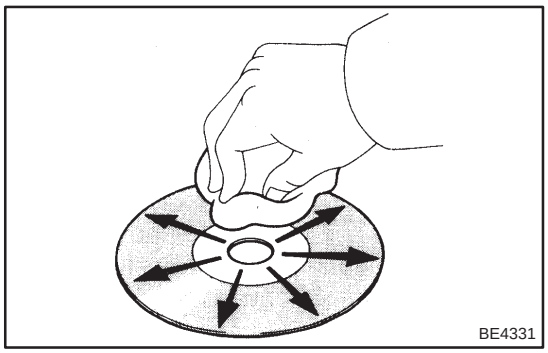

7. MAINTENANCE

CD Player / Disc Cleaning:

If the disc gets dirty, clean the disc by wiping the surface from the center to outside in the radial directions with a soft cloth.

NOTICE:

Do not use a conventional record cleaner or anti–static preservative.

8. COMMUNICATION SYSTEM

(a) Components in the audio system communicate each other though AVC–LAN. (Radio receiver function)

(b) The master component of AVC–LAN is the radio receiver assy with a resistance (60 – 80 Ω), which is necessary for communication.

(c) When short circuit or open circuit occurs in the AVC–LAN circuit, the audio system does not operate normally due to the communication cutoff.

9. DIAGNOSIS FUNCTION

(a) The audio system has diagnosis function (The diagnosis result is displayed on the LCD of the radio receiver assy). (Radio receiver function)

(b) The component code (physical address), or three–digit number (in hexadecimal) is set for each component comprising AVC–LAN.

(c) The logical address, or two–digit number (in hexadecimal) is set for each function and component unit in each component.

0549G–09

HOW TO PROCEED WITH TROUBLESHOOTING

1	VEHICLE BROUGHT TO WORKSHOP

2	CUSTOMER PROBLEM ANALYSIS (SEE PAGE 05–1398)

3	CHECK AND CLEAR THE DTCS (SEE PAGE 05–1399)

4	PROBLEM SYMPTOM CONFIRMATION

→ SYMPTOM OCCURS (GO TO STEP 6)

SYMPTOM DOES NOT OCCUR (GO TO STEP 5)

5	SYMPTOM SIMULATION (SEE PAGE 05–1398)

6	DTC CHECK (SEE PAGE 05–1399)

→ MALFUNCTION CODE (GO TO STEP 7)

→ NORMAL CODE (GO TO STEP 8)

7	DTC CHART (SEE PAGE 05–1405)

→ GO TO STEP 9

8	PROBLEM SYMPTOMS TABLE (SEE PAGE 05–1412)

9	CIRCUIT INSPECTION (SEE PAGE 05–1413 – 05–1432)

10	CONFIRMATION TEST

END

05C4W–01

CUSTOMER PROBLEM ANALYSIS CHECK

AUDIO SYSTEM Check Sheet

Inspector's name: _____

Customer's Name		**VIN**	
		Production Date	
		Licence No.	
Brought–in Date	/ /	**Odometer Reading**	**km Mile**

Date of First Occurrence	/ /
Frequency of Problem Occurrence	☐ Constant ☐ Intermittent (Times a day)

Problem Symptom	☐ **Switch**
	☐ **Radio**
	☐ **CD**
	☐ **Noise**

DTC Check	**Parts name**	**DTC (1st time).**	**DTC (2nd time).**
	Radio receiver assy		

I30195

0549I–12

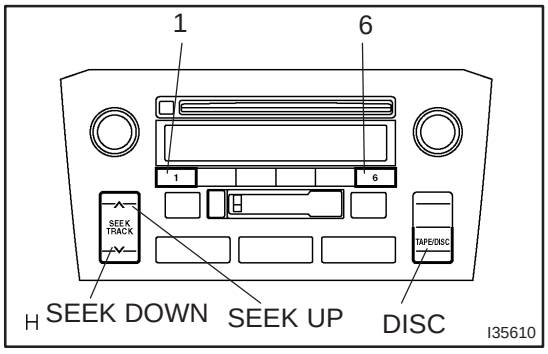

PRE–CHECK

1. DIAGNOSIS CHECK

(a) Starting Diagnosis Mode (All elements are lighting in the SW check mode).

(1) Turn off the audio system and turn the IG switch to ACC. While pressing the preset switches ”1” and ”6” at the same time, press ”DISC” 3 times.

(2) Reference:

- When the system enters the Diagnosis Mode, a ”beep” tone is emitted 3 times and all the elements are lighting in the SW check mode.
- It takes about 40 seconds to complete the check.
- Turn all the elements in the LCD on.
- When pressing the switch, comfirm a beep tone is emitted.
- Press ”SEEK TRACK UP” button switches to enter the ”Service Check Screen”.

(b) Service Check Screen.

(1) Reference

- In the service check mode, the system check and the diagnosis memory check are performed, and the check results are displayed in ascending order of the device codes (physical address.)

Terms	Meaning
Component code (Physical address)	Three–digit code (In hexadecimal) given to each device comprising AVC–LAN. Corresponding to its function, individual symbol is provided.
Logical address	Two–digit code (In hexadecimal) given to each function and device unit in each device comprising AVC–LAN.

Code No. (physical address) List

Code No. (physical address)	Equipment name
190	Radio receiver assy (Audio head unit)

(c) Finishing Diagnosis Mode.

(1) Press ”DISC” for 2 seconds or more, or turn the IG switch OFF.

(d) Service Check Mode Result Display (for checking the current and the past system conditions).

(1) Press the ”SEEK TRACK” switch to see the check result of each device.

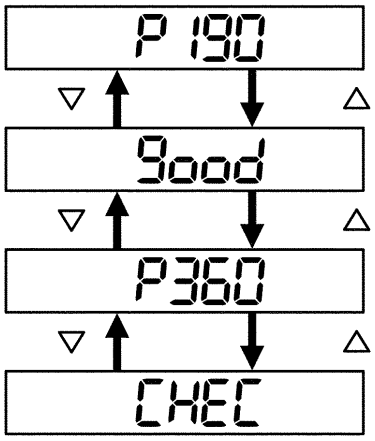

P——indicates physical address
190——physical address

good——”The component is normal”.

P——indicates physical address
360——physical address

CHEC——”Check needed”.

△ : SEEK TRACK UP

▽ : SEEK TRACK DOWN

The illustration shows the case that the system has 2 devices with codes 190 and 360, and the device (code 360) requires a check.
The check result is displayed in ascending order of device code. The device code is displayed first, and then the check result.

P I34696

(2) Check Result Display.

Display	Original Language	Meaning	Action to be taken
good	Good (normal)	No DTCs are detected in both ”System Check Mode” and ”Diagnosis Memory Mode”.	–
NCON	No connection	The system recognized the component when it was registered, but the component gives no response to the ”Diagnosis Mode ON Request”.	Check the power source circuit and the communication circuit of the device indicated by the device code (physical address).
ECHN	Exchange	One or more DTC for ”Exchange” is detected in either ”System Check Mode” or ”Diagnosis Memory Mode”.	Go to the detail information mode to check the trouble area referring to the DTC list.
CHEC	Check	When no DTCs are detected for ”Exchange”, one or more DTC for ”Check is detected in either ”System Check Mode” or ”Diagnosis Memory Mode”.	Go to the detail information mode to check the trouble area referring to the DTC list.

Display	Original Language	Meaning	Action to be taken
OLD	Old version	Old DTC application is identified and DTC is detected in either ”System Check Mode” or ”Diagnosis Memory Mode”.	–
NRES	No response	The device gives no response to any one of ”System Check Mode ON Request”, ”System Check Result Request” and ”Diagnosis Memory Request”.	Check the power source circuit and the communication circuit of the device indicated by the device code (physical code).

(3) To perform the Service Check again, press the preset switch ”1”.

(e) Detailed information Mode (when displaying the troubled device’s DTC)

(1) With ”CHEC” or ”ECHN” being displayed, press the preset switch ”2” to go to the detailed information mode.

(2) Press the ”SEEK TRACK” switch to display ”System Check Result (SYS)” and ”Diagnosis Memory Response (CODE)”.

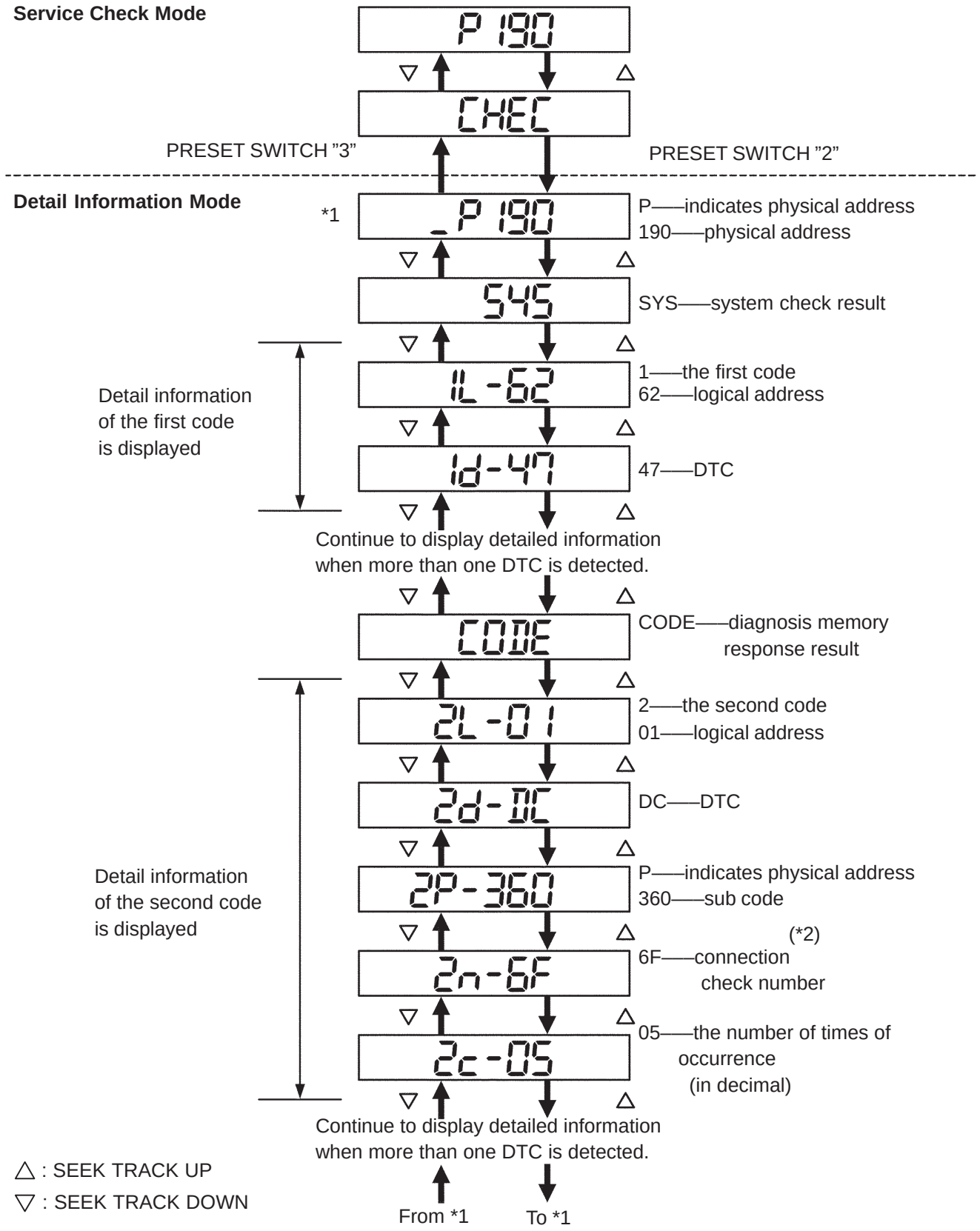

The illustration shows the case that the component with code 190 has DTC "47" and "dC" as a result of the system check and the diagnosis memory response.
The detailed information mode shows the system check result first, then the diagnosis memory response result.
(*2): As for the DTCs that do not have any sub code, sub code is not displayed.

P I34695

(3) Displayed Items in Detailed Information Mode

Division Code for DTC display	Meaning	The order of detailed information displayed when the "SEEK TRACK UP" switch is pressed. (The order is reversed when the "SEEK TRACK DOWN" switch is pressed.)
SYS	System check result is displayed.	Logical address → DTC
CODE	Diagnosis memory check result is displayed.	Logical address→ DTC→ Sub code→ Connection confirmation number→ The number of times of occurrence

(4) Check the trouble area referring to the DTC list.

(5) To return to the service check mode, press the preset switch "3".

(f) Clearing Individual DTC Memory (when clearing the memory of the DTC detected in the past individually)

(1) Press the preset switch "5" for 2 seconds or more while the "ECHN" is displayed in the service check mode or during the detail information mode.

HINT:

- Beep sound is emitted once when the DTC memory is completely cleared.
- When the DTC memory is cleared, only the component code (physical address) is displayed for the target component.
- To check the DTC, press the preset switch "1" and perform the service check again.

(g) Clearance of all the DTC memory (when clearing all the memory of the DTC detected in the past)

(1) Start the diagnosis mode after repairing the trouble area.

(2) Press the preset switch "5" for 2 seconds or more. ("CLR" is displayed at this time.)

HINT:

- Beep sound is given once when the DTC memory is completely cleared.
- When the DTCs memory for all the device is cleared, only the component codes (physical address) are displayed.

(3) Press the preset switch "1" to perform the service check again, and check that no DTCs are displayed for all the component codes (physical address).

2. IDENTIFICATION OF NOISE SOURCE

(a) Identify the condition under which the noise occurs, and check the noise filter on the related part.

Condition in which noise occurs	Noise Source
Depressing the acceleration pedal increases noise, and stopping the engine erases the noise immediately.	Generator
Noise occurs during the A/C or the heater operation.	Blower motor
Rapid acceleration while driving on the unpaved road or after the IG switch is turned ON makes noise.	Fuel pump
Pressing and then releasing the horn switch, and keeping pressing the horn switch makes unusual noise.	Horn
Stopping the engine erases small noise that has been heard.	Ignition
Noise occurs synchronously with the turn signal flash.	Flasher
Noise occurs during the window washer operation.	Washer
Noise occurs during the engine running, and it continues after the engine stops.	Engine coolant temperature sensor
Noise occurs during the wiper operation.	Wiper
Noise occurs when the brake pedal is depressed.	Stop light switch
Others.	Static electricity stored on the vehicle

(b) Reference:

- Make sure first that there is no noise from outside. Failing to do so makes the noise source detection difficult and leads to misunderstanding.
- The noise should be removed in descending order of loudness.
- Setting the radio untuned makes noise noticeable, making the recognition of the phenomenon easier.

0549J–12

DIAGNOSTIC TROUBLE CODE CHART

Terms	Meaning
Physical address	Three–digit code (shown in hexadecimal) which is given to each component comprising the AVC–LAN. Corresponding to the function, individual symbols are specified.
Logical address	Two–digit code (shown in hexadecimal) which is given to each function comprising the inner system of the AVC–LAN.

1. RADIO RECEIVER ASSY (Physical address: 190)

HINT:

- *1: Even if no failure is detected, trouble code may be stored depending on the battery condition or voltage for starting the engine.
- *2: It is stored when 180 seconds have passed after the power supply connector is pulled out after the engine starts.
- *3: It may be stored when the engine key is turned 1 minuite after the engine starts.
- *4: It may be stored when the engine key is turned again after the engine starts.
- *5: When 210 seconds have passed after pulling out the power supply connector of the master component with the ignition switch in ACC or ON, this code is stored.

(a) Logical address: 01 (Communication control)

DTC	Diagnosis item	Description	Action to be taken
22	RAM Error	Abnormal condition of RAM is detected.	Replace radio receiver assy.
D6 *1	Absence of Master	Component in which this code is recorded was disconnected from system or master component with ignition in ACC or ON.	• Check harness for power supply system of radio receiver assy. • Check harness for communication system of radio receiver assy.
D7 *5	Connection check Error	Component in which this code is recorded was disconnected from system or master component ignition with in ACC or ON.	• Check harness for power supply of radio receiver assy. • Check harness for communication system of radio receiver assy.
D8 *2	No Response to Connection Check	Component shown by sub code is or was disconnected from system after engine start.	• Check harness for power supply system of component shown by sub code. • Check harness for communication system of component shown by sub code.
D9 *1	Last Mode Error	Audio or visual component operated before engine stop is or was disconnected with ignition switch in ACC or ON.	• Check harness for power supply system of component shown by sub code. • Check harness for communication system of component shown by sub code.
DA	No Response to ON/OFF Instruction	No response is identified when changing mode (audio and visual mode change). Sound and picture does not change by button operation.	• Check harness for power supply system of component shown by sub code. • Check harness for communication system of component shown by sub code. • If error occurs again, replace component shown by sub code.
DB *1	Mode Status Error	Dual alarm is detected.	• Check harness for power supply of component shown by sub code. • Check harness for communication system of component shown by sub code.
DC *3	Transmission Error	Transmission to component shown by auxiliary code failed. (Detecting this DTC does not necessarily mean actual failure.)	If same sub code is recorded in other component, check harness for power supply and communication system of all components shown by code. (If not, delete DTC and recheck.)

DD *4	Master Reset (Momentary Interruption)	After the engine was started, master component was disconnected from system.	• Check harness for power supply system of multi–display. • Check harness for communication system of radio receiver assy. • If this error occurs frequently, replace radio receiver assy.
DE *4	Slave Reset (Momentary Interruption)	After the engine was started, component shown by sub code had been disconnected from system.	• Check harness for power supply of component shown by sub code. • Check harness for communication system of component shown by sub code.
E0 *1	Registration Completion Instruction Error	”Registration Completion Instruction” command from master cannot be received.	Since this DTC is provided for engineering purpose, it may be detected when no actual failure exists.
E2	ON/OFF Instruction Parameter Error	Error occures in ON/OFF controlling command from master component.	Replace radio receiver assy
E3 *1	Registration Request Transmission	Registration Request command is output from component shown by sub code. Receiving Connection Check Instruction, Registration Request command is output from sub–master component.	Since this DTC is provided for engineering purpose, it may be detected when no actual failure exists.

(b) Logical address: 61 (Cassette switch)

DTC	Diagnosis item	Description	Action to be taken
40	Mechanical Error of Media	Malfunction due to mechanical failure is identified. Or cassette tape is cut or entangled.	• Inspect cassette tape. • Replace radio receiver assy.
41	EJECT Error	Malfunction due to mechanical failure.	Replace radio receiver assy.
42	Tape caught in the radio receiver assy	Hub lock etc.	Inspect cassette tape.

(c) Logical address: 62 (CD player)

DTC	Diagnosis item	Description	Action to be taken
42	No Disc Readout	Disc cannot be read.	• Inspect CD. • Replace radio receiver assy.
44	CD player Error	Error is detected in CD player.	Replace radio receiver assy.
45	EJECT Error	Magazine cannot be ejected.	Replace radio receiver assy.
46	Scratched/Reversed Disc	Scratches or dirt is found on CD surface or CD is set upside down.	Inspect CD.
47	CD High Temp.	High temperature is detected in CD player.	Replace radio receiver assy.
48	CD Excess Current	Excess current is applied CD player.	Replace radio receiver assy.

05C4X–01

LOCATION

Sedan:

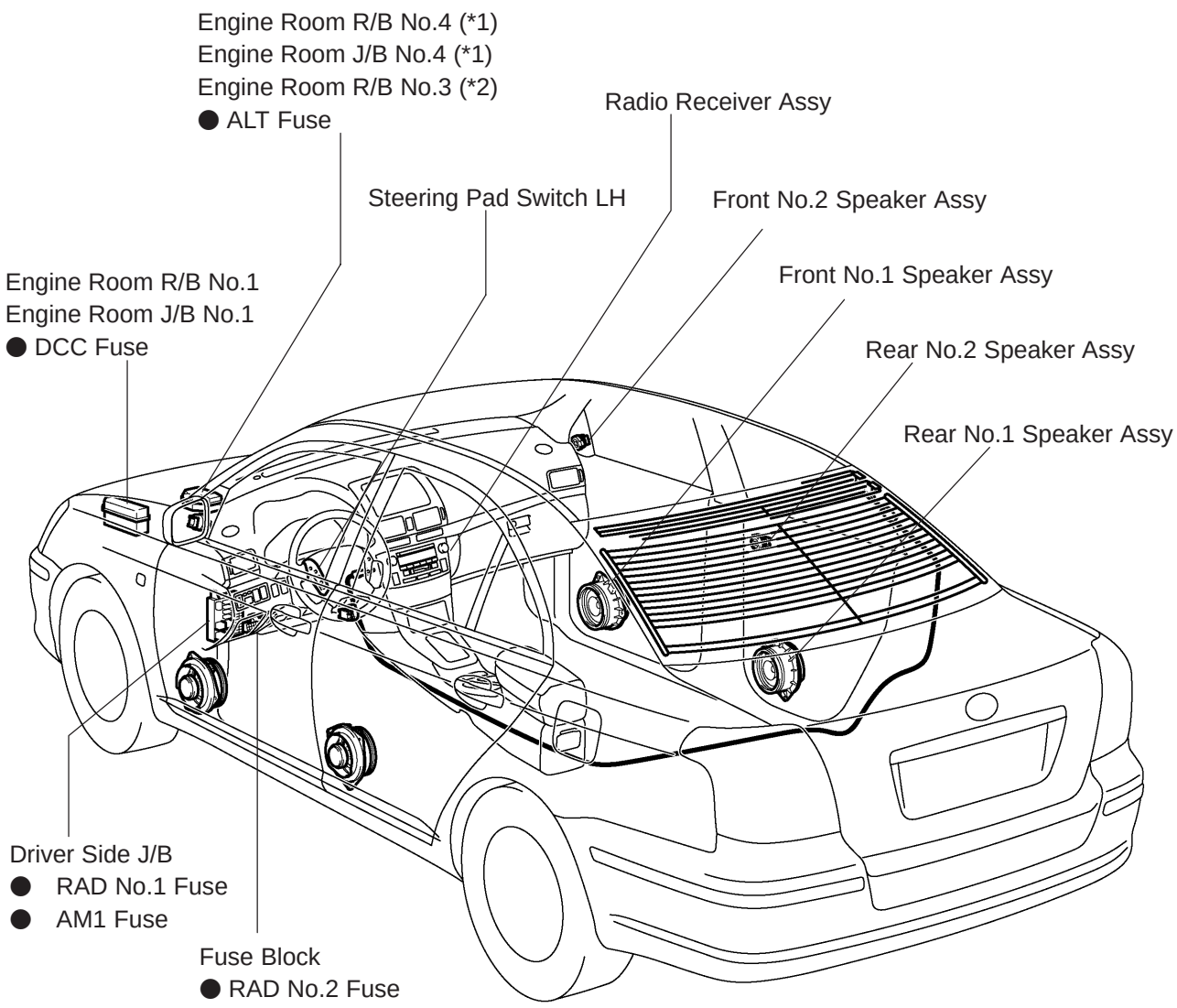

*1: Gasoline
*2: 1CD–FTV

H

I35612

Lift Back:

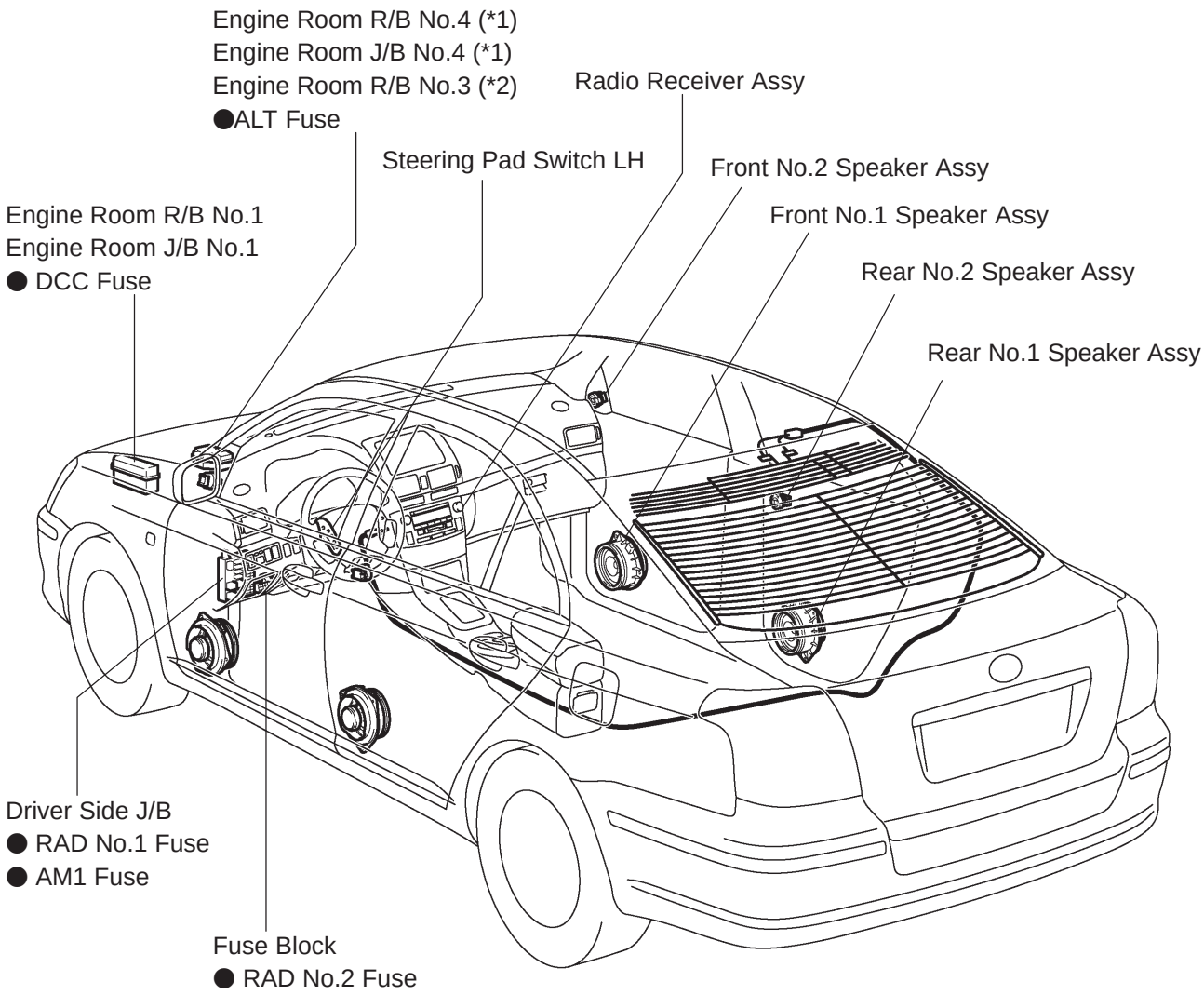

*1: Gasoline
*2: 1CD–FTV

H

I35613

Wagon:

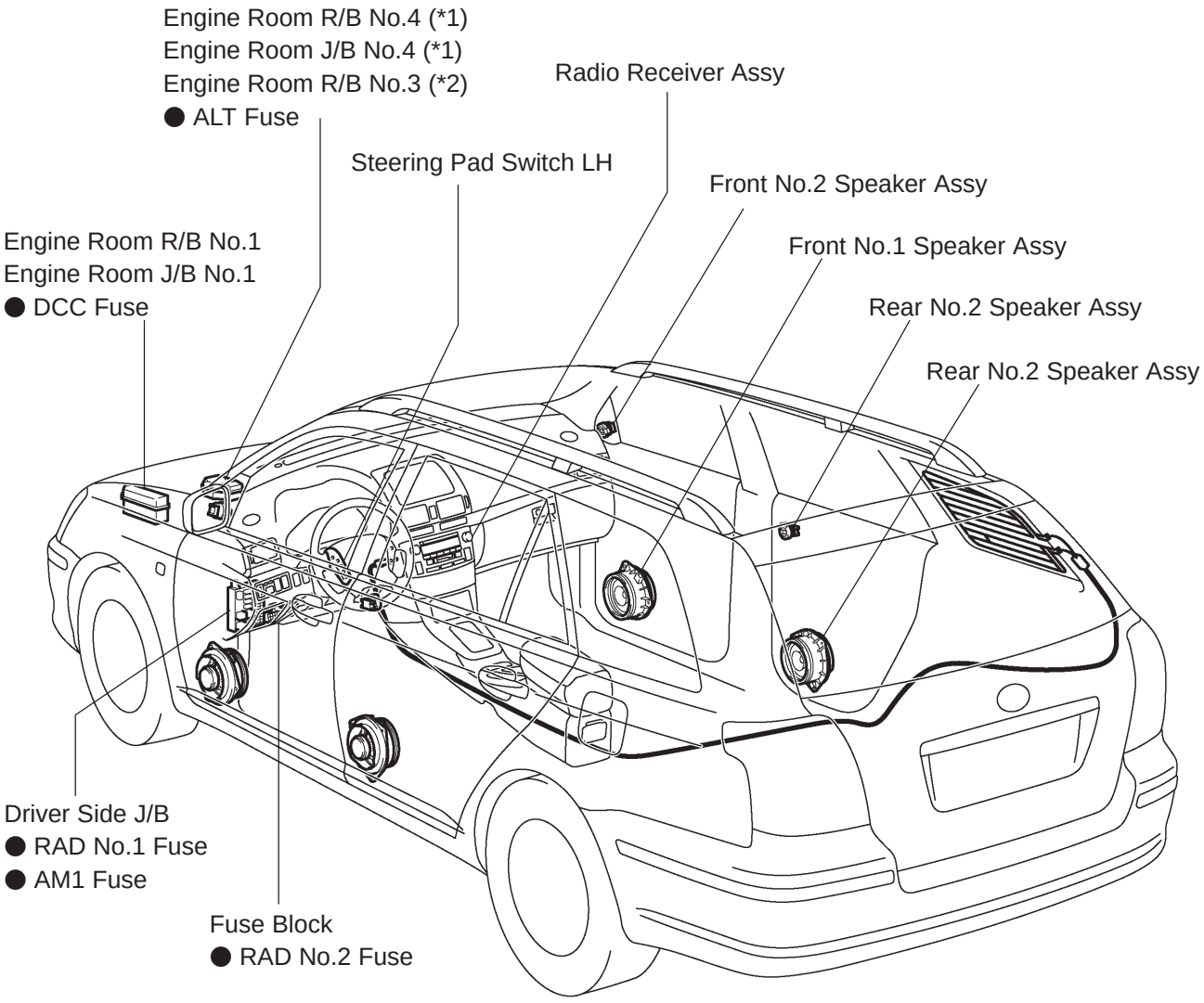

*1: Gasoline
*2: 1CD–FTV

H

I35614

05C4Y–01

TERMINALS OF ECU

1. RADIO RECEIVER ASSY

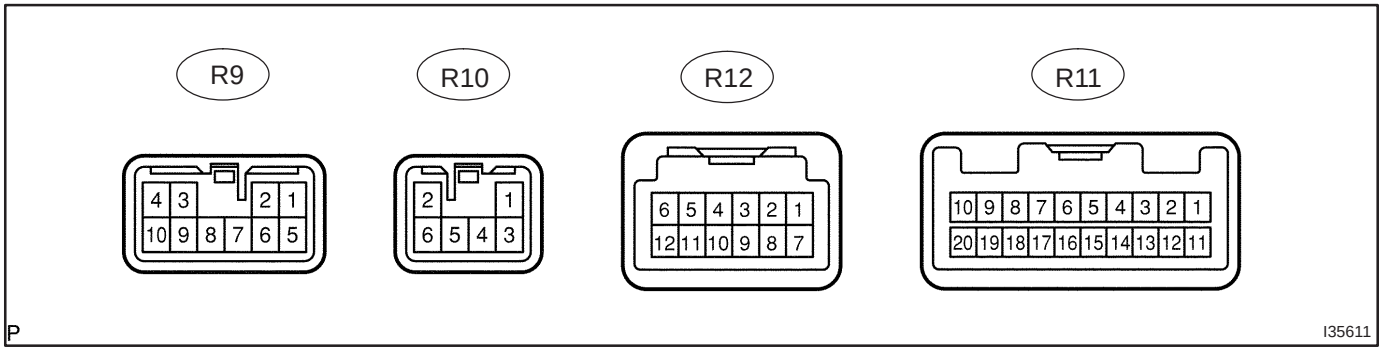

Terminal No. (Symbols)	Wiring Color	Condition	STD Voltage (V)
R9–1(FR+) – R9–7(GND)	LG – BR*1 LG – W–B*2	Audio system is playing	A waveform synchronized with sounds is output
R9–2(FL+) – R9–7(GND)	P – BR*1 P – W–B*2	Audio system is playing	A waveform synchronized with sounds is output
R9–3(ACC) – R9–7(GND)	GR – BR*1 GR – W–B*2	Ignition switch to ACC	10 to 14
R9–4(+B) – R9–7(GND)	L–Y – BR*1 L–Y – W–B*2	Always	10 to 14
R9–5(FR–) – R9–7(GND)	L – BR*1 L – W–B*2	Audio system is playing	A waveform synchronized with sounds is output
R9–6(FL–) – R9–7(GND)	V – BR*1 V – W–B*2	Audio system is playing	A waveform synchronized with sounds is output
R9–7(GND) – Body ground	BR*1 – Body ground W–B*2 – Body ground	Always	Continuity
R9–8(ANT) – R9–7(GND)	B – BR*1 B – W–B*2	Radio switch ON and AM or FM	10 to 14
R9–10(ILL+) – R9–7(GND)	G – BR*1 G – W–B*2	Light control switch TAIL	10 to 14
R10–1(RR+) – R9–7(GND)	B – BR*1 R – W–B*2	Audio system is playing	A waveform synchronized with sounds is output
R10–2(RL+) – R9–7(GND)	B – BR*1 B – W–B*2	Audio system is playing	A waveform synchronized with sounds is output
R10–3(RR–) – R9–7(GND)	W – BR*1 W – W–B*1	Audio system is playing	A waveform synchronized with sounds is output
R10–6(RL–) – R9–7(GND)	Y – BR*1 Y – W–B*2	Audio system is playing	A waveform synchronized with sounds is output
R11–6(GND) – R9–7(GND)	W–R – BR*1 W–R – W–B*2	Always	Below 1.0
R11–7(SW1) – R9–7(GND)	LG – BR*1 LG – W–B*2	Steering pad switch not operating. →SEEK+ switch push →SEEK– switch push →VOL+ switch push →VOL– switch push	4 or more →Approx. 0.5 →Approx. 0.9 →Approx. 2.0 →Approx. 3.4

R11–8(SW2) – R9–7(GND)	P – BR*1 P – W–B*2	Steering pad switch is not operating →MODE switch push	4 or more → Below 2.5
R12–9 (TX+)	P	See "Service Check Mode"	–
R12–10 (TX–)	LG	See "Service Check Mode"	–

*1: LHD

*2: RHD

0549M–11

PROBLEM SYMPTOMS TABLE

RADIO RECEIVER ASSY

Symptom	Suspect Area	See page
Pressing power switch does not start system.	5. Power source circuit (radio receiver assy)	05–1413
Sound quality is bad in all modes. (volume is too low)	1. Power source circuit (radio receiver assy) 2. Sound quality is bad in all modes (volume is too low)	05–1413 05–1415
Noise occurs.	–	05–1419
Radio broadcast cannot be received. (bad reception)	–	05–1420
CD cannot be inserted or is ejected right after insertion.	1. Power source circuit (radio receiver assy) 2. CD cannot be inserted or is ejected right after insertion	05–1413 05–1422
CD cannot be ejected.	1. Power source circuit (radio receiver assy) 2. CD cannot be ejected	05–1413 05–1424
Sound quality is bad only when CD is played.(volume is too low)	–	05–1425
CD sound skips.	–	05–1426
Cassette tape cannot be inserted or played.	1. Power source circuit (radio receiver assy) 2. Cassette tape cannot be inserted or played	05–1413 05–1428
Cassette tape cannot be ejected.	1. Power source circuit (radio receiver assy) 2. Cassette tape cannot be ejected	05–1413 05–1429
Sound quality is bad only when playing tape.	–	05–1430
Tape is tangled due to incorrect tape speed or auto–reverse malfunction.	–	05–1431

STEERING PAD SWITCH

Symptom	Suspect Area	See page
A audio system cannot be operated with steering pad switch	–	05–1432

POWER SOURCE CIRCUIT (RADIO RECEIVER ASSY)

WIRING DIAGRAM

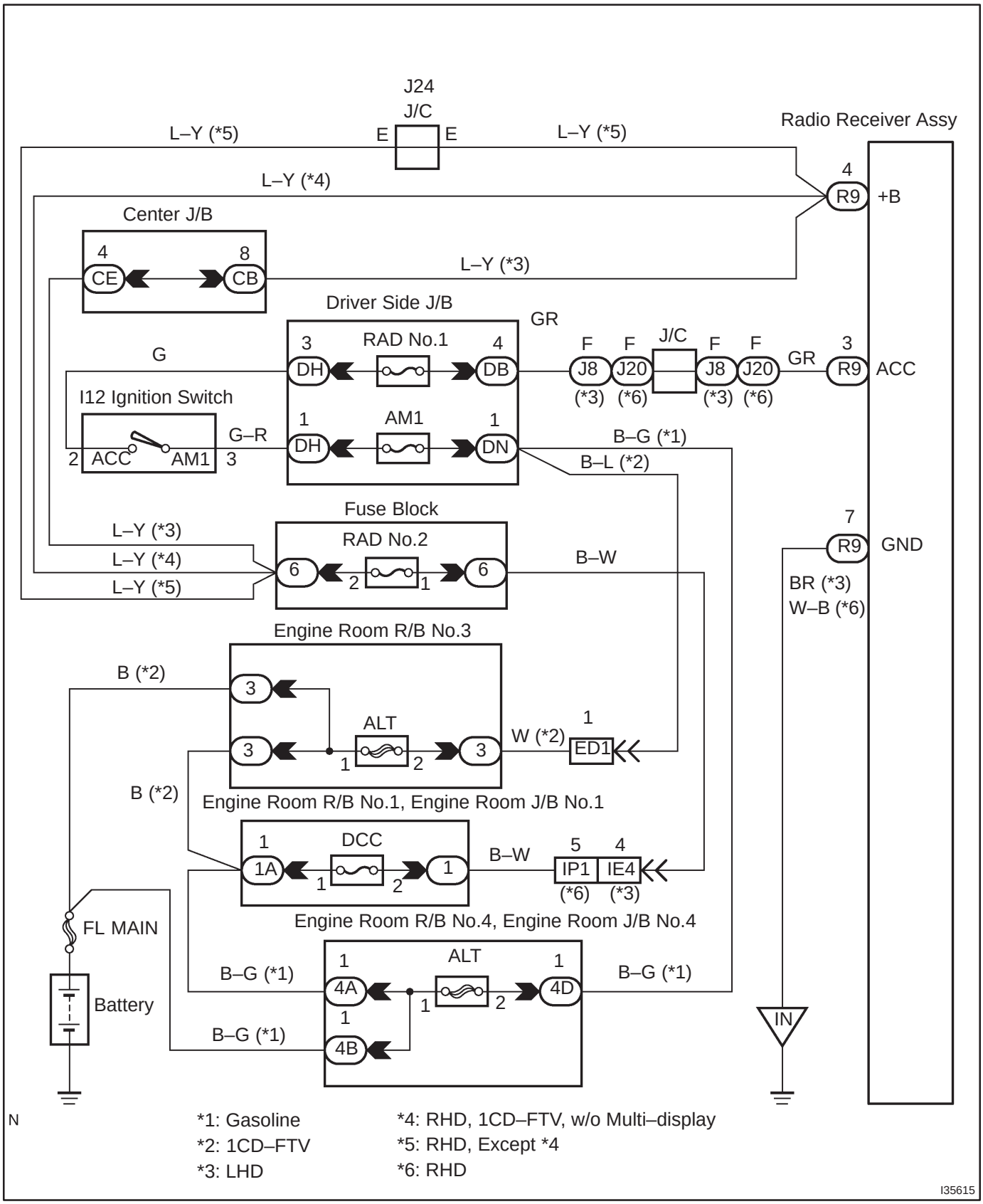

N

*1: Gasoline
*2: 1CD–FTV
*3: LHD
*4: RHD, 1CD–FTV, w/o Multi–display
*5: RHD, Except *4
*6: RHD

I35615

INSPECTION PROCEDURE

1 INSPECT RADIO RECEIVER ASSY(BU, ACC, GND)

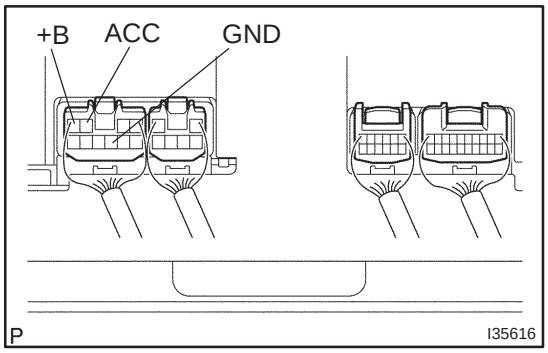

(a) Remove the radio receiver assy.

(b) Check continuity between terminals at each condition, as shown in the chart.

Standard:

Tester connection	Condition	Specified condition
GND – Body ground	Always	Continuity

(c) Check the voltage between terminals at each condition, as shown in the chart.

Standard:

Tester connection	Condition	Specified condition
+B – GND	Always	10 to 14 V
ACC – GND	Ignition SW ACC	10 to 14 V

NG → **REPAIR OR REPLACE HARNESS OR CONNECTOR (See page 01–32)**

OK

2 CHECK FOR PROBLEM SYMPTOMS TABLE

(a) Check problem symptoms table (See page 05–1412).

Suspected areas are cleared	A
Suspected areas still exist	B

B → **PROCEED TO NEXT CIRCUIT INSPECTION SHOWN ON PROBLEM SYMPTOMS TABLE (See page 05–1412)**

A

REPLACE RADIO RECEIVER ASSY

SOUND QUALITY IS BAD IN ALL MODES (VOLUME IS TOO LOW)

WIRING DIAGRAM

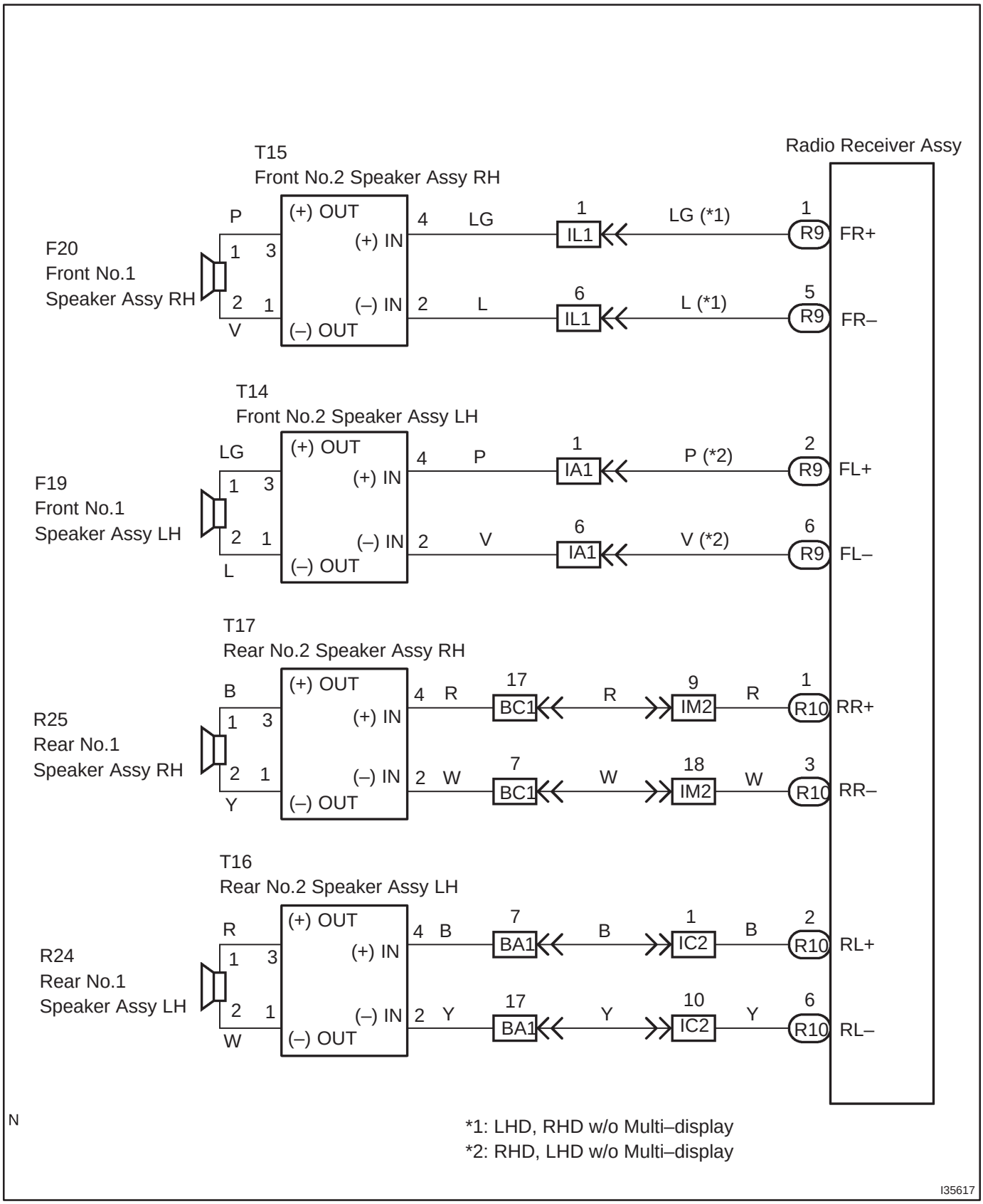

N

INSPECTION PROCEDURE

1	ADJUST SOUND QUALITY

(a) Adjust the sound quality.
(1) Operate the radio receiver assy to adjust the sound quality.
Standard: Malfunction disappears.

OK	BAD SOUND QUALITY

NG

2	COMPARE IT WITH ANOTHER CAR OF SAME MODEL

(a) Compare it with another vehicle of the same models.
(1) Compare with the vehicle of the same type which does not have a trouble to see if there is any difference in the condition of trouble occurrence.
Standard: No difference found.

OK	SETTING

NG

3	CHECK HARNESS AND CONNECTOR(RADIO RECEIVER ASSY – SPEAKER ASSY)

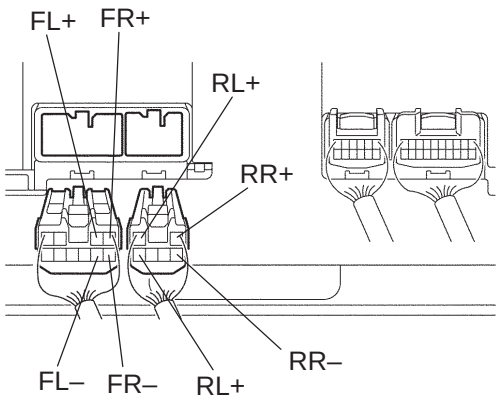

Front No.1 Speaker Assy
Rear No.1 Speaker Assy

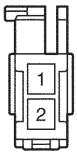

Front No.2 Speaker Assy
Rear No.2 Speaker Assy

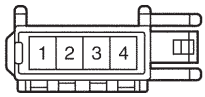

P I35618

(a) Disconnect the connectors from the radio receiver assy and speakers.

(1) Check continuity between terminals at each condition, as shown in the chart.

Tester connection	Specified condition
FL+ – 1 (Front No.1 speaker assy LH)	Continuity
FL– – 2 (Front No.1 speaker assy LH)	Continuity
FR+ – 1 (Front No.1 speaker assy RH)	Continuity
FR– – 2 (Front No.1 speaker assy RH)	Continuity
FL+ – 4 (Front No.2 speaker assy LH)	Continuity
FL– – 2 (Front No.2 speaker assy LH)	Continuity
FR+ – 4 (Front No.2 speaker assy RH)	Continuity
FR– – 2 (Front No.2 speaker assy RH)	Continuity
RL+ – 1 (Rear No.1 speaker assy LH)	Continuity
RL– – 2 (Rear No.1 speaker assy LH)	Continuity
RR+ – 1 (Rear No.1 speaker assy RH)	Continuity
RR– – 2 (Rear No.1 speaker assy RH)	Continuity
RL+ – 4 (Rear No.2 speaker assy LH)	Continuity
RL– – 2 (Rear No.2 speaker assy LH)	Continuity
RR+ – 4 (Rear No.2 speaker assy RH)	Continuity
RR– – 2 (Rear No.2 speaker assy RH)	Continuity

(2) Check for a short between terminals at each condition, as shown in the chart.

Tester connection	Specified condition
FL+ – Body ground	No Continuity
FL– – Body ground	No Continuity
FR+ – Body ground	No Continuity
FR– – Body ground	No Continuity
RL+ – Body ground	No Continuity
RL– – Body ground	No Continuity
RR+ – Body ground	No Continuity
RR– – Body ground	No Continuity

NG → **REPAIR OR REPLACE HARNESS OR CONNECTOR(See page 01–32)**

OK

4	INSPECT FRONT NO.1 SPEAKER ASSY

(a) Resistance check.
(1) Check the resistance between the terminals of the speaker.

NOTICE:
The speaker should not be removed for checking.

Standard value: 4 Ω

NG → **REPLACE FRONT NO.1 SPEAKER ASSY**

OK

5	INSPECT FRONT NO.2 SPEAKER ASSY

(a) Check that malfunction disappears when a known good speaker is installed.
Standard: Malfunction disappears.

HINT:
Connect the all connectors of speakers.

NG → **REPLACE FRONT NO.2 SPEAKER ASSY**

OK

6	INSPECT REAR NO.1 SPEAKER ASSY

(a) Resistance check.
(1) Check the resistance between the terminals of the speaker.

NOTICE:
The speaker should not be removed for checking.

Standard value: 4 Ω

NG → **REPLACE REAR NO.1 SPEAKER ASSY**

OK

7	INSPECT REAR NO.2 SPEAKER ASSY

(a) Check that malfunction disappears when a known good speaker is installed.
Standard: Malfunction disappears.

HINT:
Connect the all connectors of speakers.

NG → **REPLACE REAR NO.2 SPEAKER ASSY**

OK

REPLACE RADIO RECEIVER ASSY

NOISE OCCURS

INSPECTION PROCEDURE

1	CHECK OF SPEAKER INSTALLATION

(a) Check the speaker installation condition.
  (1) Check that each speaker is securely installed.
  Standard: Malfunction disappears.

HINT:

The radio is equipped with the noise prevention system that works against only the excessively large noise, thereby excessively large noise do not occur in the radio. If large noise occurs, check whether or not the earth on the antenna installation part and the proper noise–prevention equipment are all installed, and whether or not the improper wiring is held.

Condition in which noise occurs	Noise type
Depressing the acceleration pedal increases noise, and stopping the engine erases the noise immediately.	Alternator noise
Noise occurs during the A/C or the heater operation.	Blower motor noise
Rapid acceleration during the drive on the unpaved road or after the IG switch is turned ON makes noise.	Fuel pump noise
Pressing and then releasing the horn switch, and keeping pressing the horn switch makes noise.	Horn noise
Stopping the engine erases the small noise that has been heard.	Ignition noise
Noise occurs in turn with the blink of the turn signal flash.	Flasher noise
Noise occurs during the window washer operation.	Washer noise
Noise occurs during the engine running, and it continues to occur after the engine is stopped.	Water temperature sensor noise
Noise occurs during the wiper operation.	Wiper noise
Noise occurs when the brake pedal is depressed.	Stop light switch noise
Others.	Static electricity on the vehicle

HINT:

- Identify the condition under which the noise occurs, and check the noise filter on the related part.
- Make sure first that there is no noise from outside. Failing to do so makes the noise occurrence source detection impossible and leads to misunderstanding.
- The noise should be removed in descending order of loudness.

NG → **INSTALL IT PROPERLY**

OK

IDENTIFICATION OF NOISE SOURCE

RADIO BROADCAST CANNOT BE RECEIVED (BAD RECEPTION)

INSPECTION PROCEDURE

1	CHECK IF RADIO AUTO–SEARCH FUNCTIONS PROPERLY

(a) Check if the radio auto–search functions properly.
  (1) Perform the auto–search of the radio and check that it functions normally.
  Standard: The radio auto–search functions properly.

OK → **REPLACE RADIO RECEIVER ASSY**

NG

2	CHECK OPTIONAL COMPONENT

(a) Check optional component (Sun shade film, telephone antenna etc.).
  (1) Check whether or not any optional component is installed, such as the sunshade film and the telephone antenna.
  Standard: Optional component is installed.

OK → **EFFECT FROM OPTIONAL COMPONENT**

NG

3	CHECK ANTENNA FOR NOISE PRODUCTION

(a) Noise Check with Antenna.
  (1) With the ignition switch in ACC, turn on the radio and choose the AM mode.
  (2) Place a tip of a screwdriver or the antenna of the antenna assembly w/ holder and check that the noise heard from the speaker.
  Standard: Noise occurs.

OK → **REPLACE RADIO RECEIVER ASSY**

NG

4	INSPECT RADIO RECEIVER ASSY(ANTENNA)

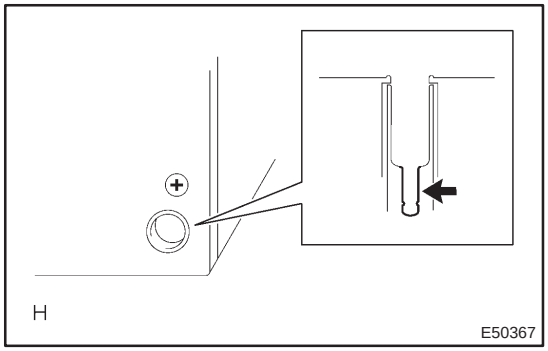

(a) Preparation for Check
  (1) Remove the antenna plug of the radio receiver assy.

(b) Noise Check
  (1) With the radio receiver assy connector connected, turn the ignition switch to ACC.
  (2) Turn on the radio and choose the AM mode.
  (3) Place a flat–head screwdriver or a metal such as a thin wire on the antenna jack of the radio receiver assy and check that the noise heard from the speaker.

Standard: Noise occurs.

OK → **REPLACE RADIO RECEIVER ASSY**

NG

REPLACE ANTENNA CORD SUB–ASSY

CD CANNOT BE INSERTED OR IS EJECTED RIGHT AFTER INSERTION

INSPECTION PROCEDURE

1	CHECK IF A PROPER CD IS INSERTED

(a) Check if a proper CD is inserted.
  (1) Make sure that the CD is normal audio CD, and that there is no deformation, flaw, stain, burr and other defects on the CD.
  Standard: Normal audio CD.

Reference:
- Translucent or different–shaped CD cannot be played.
- CD–ROM for the computers (with music recorded in) and recorded CD –R may not be played.

NG → **CD FAULTY**

OK

2	CHECK IF A CD IS INSERTED PROPERLY

(a) Check that a CD is inserted properly.
  (1) Check whether or not the CD is inserted upside down.
  Standard: Not upside down.

NG → **SET DISC CORRECTLY**

OK

3	DISC CLEANING

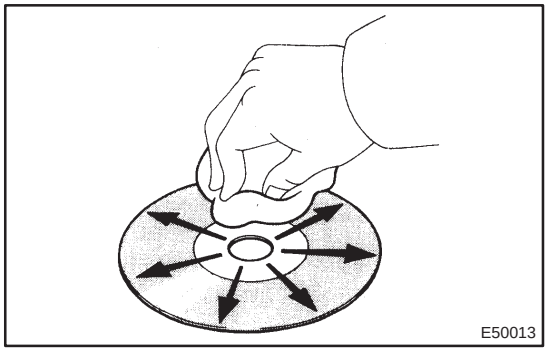
E50013

(a) Disk cleaning
  (1) If the disk gets dirty, clean the disk by wiping the surface from the center to outside in the radial directions with a soft cloth.

NOTICE:
Do not use a conventional record cleaner or anti–static preservative.
  Standard: Malfunction disappears.

OK → **DISC DIRTY**

NG

4	REPLACE CD WITH ANOTHER AND RECHECK

(a) Replace the CD with another and recheck.
  (1) Replace the CD with onother normal one to see if the same trouble occurs again.
  Standard: Malfunction disappears.

OK → **CD FAULTY**

NG

REPLACE RADIO RECEIVER ASSY

CD CANNOT BE EJECTED

INSPECTION PROCEDURE

1	PRESS ”EJECT” AND CHECK OPERATION

(a) Press ”EJECT”and check the operation.
  (1) Press the CD EJECT switch of the radio receiver assembly for 2 seconds or more to see if the CD is ejected.
  Standard: CD is ejected.

Reference:
If the CD is not ejected, send the vehicle for repair.
Do not try to remove it by force.

NG → **REPLACE RADIO RECEIVER ASSY**

OK

2	CHECK IF A PROPER CD IS INSERTED

(a) Check that a proper CD is inserted.
  (1) Check that in what conditions the sound skipping occurs.
  Standard: Driving on the bad road.

NG → **REPLACE RADIO RECEIVER ASSY**

OK

3	REPLACE CD WITH ANOTHER AND RECHECK

(a) Replace the CD with another and recheck.
  (1) Check the installation condition of the radio receiver assembly.
  Standard: Installed properly.

OK → **CD FAULTY**

NG

REPLACE RADIO RECEIVER ASSY

SOUND QUALITY IS BAD ONLY WHEN CD IS PLAYED (VOLUME IS TOO LOW)

INSPECTION PROCEDURE

1	REPLACE CD WITH ANOTHER AND RECHECK

(a) Replace the CD with another and recheck.
  (1) Check the installation condition of the radio receiver assembly.
  Standard: Malfunction disappears.

OK → **CD FAULTY**

NG

REPLACE RADIO RECEIVER ASSY

CD SOUND SKIPS

INSPECTION PROCEDURE

1	DISC CLEANING

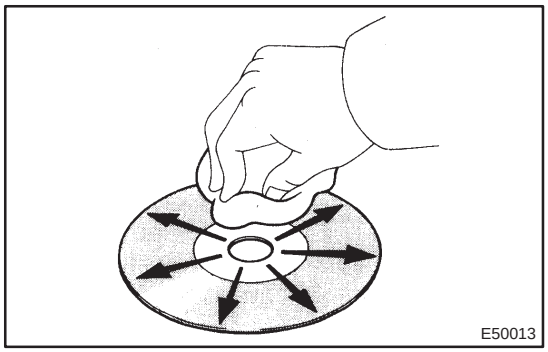

(a) Disk cleaning
  (1) If the disk gets dirty, clean the disk by wiping the surface from the center to outside in the radial directions with a soft cloth.

NOTICE:
Do not use a conventional record cleaner or anti–static preservative.

Standard: Malfunction disappears.

OK > **DISC DIRTY**

NG

2	REPLACE CD WITH ANOTHER AND RECHECK

(a) Replace the CD with another and recheck.
  (1) Replace the CD with onother normal one to see if the same trouble occurs again.
  Standard: Malfunction disappears.

OK > **CD FAULTY**

NG

3	CHECK WHEN THIS HAPPENS

(a) Check when this happens.
  (1) Check that in what condition (place) noise occurs.
  Standard: Driving on the bumpy road.

OK > **Go to step 5**

NG

4	COMPARE IT WITH ANOTHER CAR OF SAME MODEL

(a) Compare it with another vehicle of the same model.
  (1) Compare with the vehicle of the same type which does not have a trouble to see if there is any difference in the condition of trouble occurrence.
  Standard: No difference found.

OK > **SETTING**

NG

5	CHECK OF RADIO RECEIVER ASSEMBLY INSTALLATION

(a) Check of radio receiver assembly installation.
  (1) Check the installation condition of the radio receiver assembly.
  Standard: Installed properly.

NG → **INSTALL THE RADIO RECEIVER ASSEMBLY PROPERLY**

OK

6	DID THE TEMPERATURE IN THE CABIN CHANGE RAPIDLY?

(a) Did the temperature in the cabin change rapidly?
  (1) Check whether or not the rapid temperature change occurred in the cabin.
  Standard: The rapid temperature change occurred.

Reference:
The rapid temperature change creates condensation inside the CD player, which may prevent the CD from being played.

OK → **CONDENSATION DUE TO TEMPERATURE CHANGE (LEAVE IT AS IT IS FOR A WHILE BEFORE USING)**

NG

REPLACE RADIO RECEIVER ASSY

CASSETTE TAPE CANNOT BE INSERTED OR PLAYED

INSPECTION PROCEDURE

1	CHECK FOR ANY FOREIGN OBJECT

(a) Check for any foreign objects.
(1) Check that no foreign objects or defects are detected in the cassette tape player of radio receiver assy.
Standard: No foreign objects or defects detected.

NG → **REMOVE FOREIGN OBJECT**

OK

2	CHECK CASSETTE TAPE

(a) Check the cassette tape.
(1) Check that the cassette tape is a normal tape to which music or voice is recorded.
Standard: Proper cassette tape to which music or voice is recorded.

NG → **CASSETTE TAPE FAULTY**

OK

3	REPLACE CASSETTE TAPE WITH ANOTHER AND RECHECK

(a) Replace the cassette tape with another one and recheck.
(1) Replace the cassette tape with another normal one to see if the same trouble occurs again.
Standard: The function is recovered to be normal.

OK → **CASSETTE TAPE FAULTY**

NG

REPLACE RADIO RECEIVER ASSY

CASSETTE TAPE CANNOT BE EJECTED

INSPECTION PROCEDURE

1	PRESS ”EJECT” AND CHECK OPERATION

(a) Press ”EJECT” and check the operation.
  (1) Press the cassette tape EJECT switch of the radio receiver assembly for 2 seconds or more and check that the cassette tape is ejected.
  Standard: The cassette tape is ejected.

NG → **REPLACE RADIO RECEIVER ASSY**

OK

2	CHECK CASSETTE TAPE

(a) Check the cassette tape.
  (1) Check that the ejected cassette tape does not have the label peeled, cassette body deformation or others.
  Standard: No fault on the cassette tape.

NG → **CASSETTE TAPE FAULTY**

OK

3	REPLACE CASSETTE TAPE WITH ANOTHER AND RECHECK

(a) Replace the cassette tape with another and recheck.
  (1) Replace the cassette tape with another normal one to see if the same trouble occurs again.
  Standard: Malfunction disappears.

OK → **CASSETTE TAPE FAULTY**

NG

REPLACE RADIO RECEIVER ASSY

SOUND QUALITY IS BAD ONLY WHEN PLAYING TAPE

INSPECTION PROCEDURE

1	REPLACE CASSETTE TAPE WITH ANOTHER AND RECHECK

(a) Replace the cassette tape with another and recheck.
(1) Replace the cassette tape with another normal one to see if the same trouble occurs again.
Standard: Malfunction disappear.

OK → **CASSETTE TAPE FAULTY**

NG

2	CHECK FOR ANY FOREIGN OBJECT

(a) Check for foreign objects.
(1) Check that no foreign material and troubles are detected in the radio receiver assembly cassette tape player.
Standard: No foreign objects or defects detected.

NG → **REMOVE FOREIGN OBJECT**

OK

3	CLEAN HEAD AND CHECK OPERATION

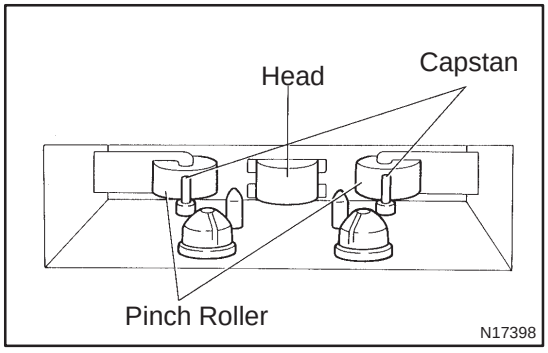

(a) Head cleaning
(1) Raise the cassette door with your finger. Next, using a pencil or similar object, push in the guide.
(2) Using a cleaning pen or cotton applicator soaked in cleaner, clean the head surface, pinch rollers and capstans.
(3) Check that the same trouble occurs again.
Standard: Malfunction disappears.

OK → **HEAD DIRTY**

NG

REPLACE RADIO RECEIVER ASSY

TAPE IS TANGLED DUE TO INCORRECT TAPE SPEED OR AUTO–REVERSE MALFUNCTION

INSPECTION PROCEDURE

1	CHECK FOR ANY FOREIGN OBJECT

(a) Check for any foreign objects.
  (1) Check that no foreign objects or defects are detected in the cassette tape player of radio receiver assy.

Standard: No foreign objects or defects detected.

NG → **REMOVE FOREIGN OBJECT**

OK

2	REPLACE CASSETTE TAPE WITH ANOTHER AND RECHECK(BELOW 90 MIN.)

(a) Replace the cassette tape with another and recheck.
  (1) Replace the cassette tape with another normal one (90min or less) to see if the same trouble occurs again.

Standard: Malfunction disappears.

OK → **CASSETTE TAPE FAULTY**

NG

3	CLEAN HEAD AND CHECK OPERATION

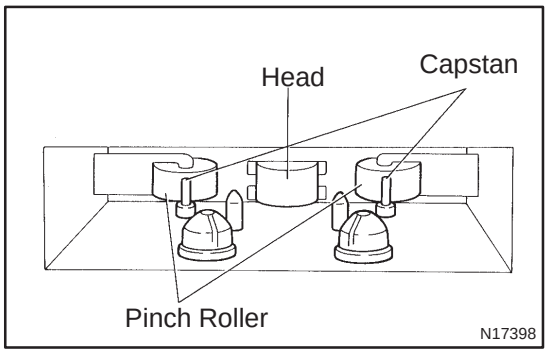

(a) Head cleaning
  (1) Raise the cassette door with your finger. Next, using a pencil or similar object, push in the guide.
  (2) Using a cleaning pen or cotton applicator soaked in cleaner, clean the head surface, pinch rollers and capstans.
  (3) Check that the same trouble occurs again.

Standard: Malfunction disappears.

OK → **HEAD DIRTY**

NG

REPLACE RADIO RECEIVER ASSY

A AUDIO SYSTEM CANNOT BE OPERATED WITH STEERING PAD SWITCH

WIRING DIAGRAM

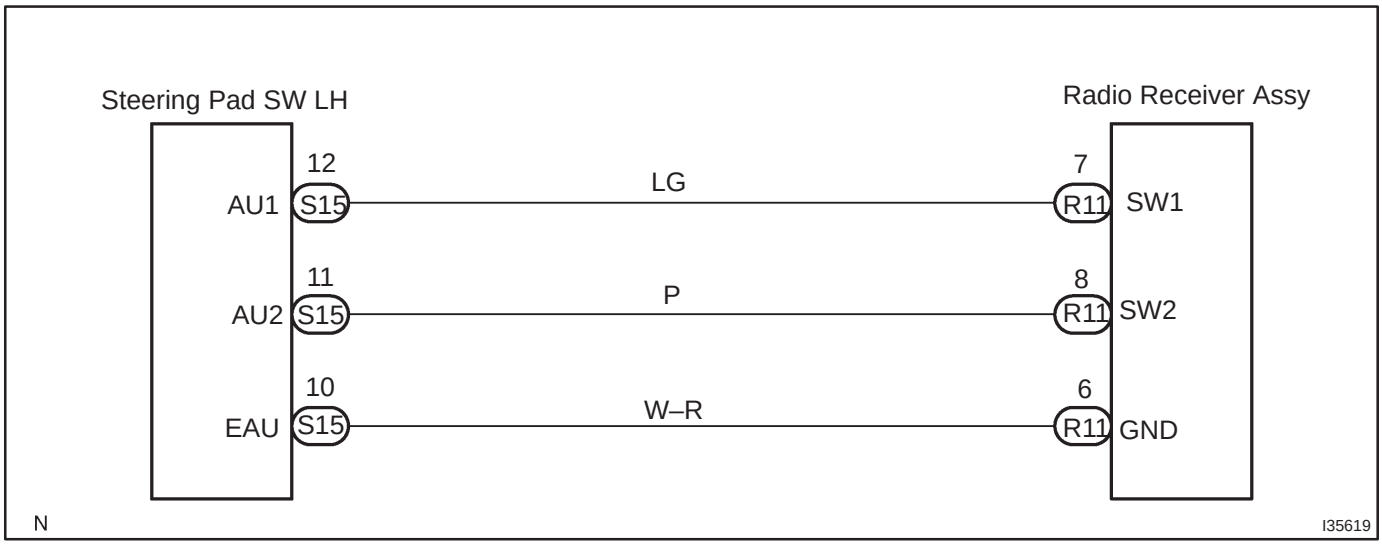

INSPECTION PROCEDURE

1	INSPECT STEERING WHEEL ASSY(AU1, AU2, EAU)

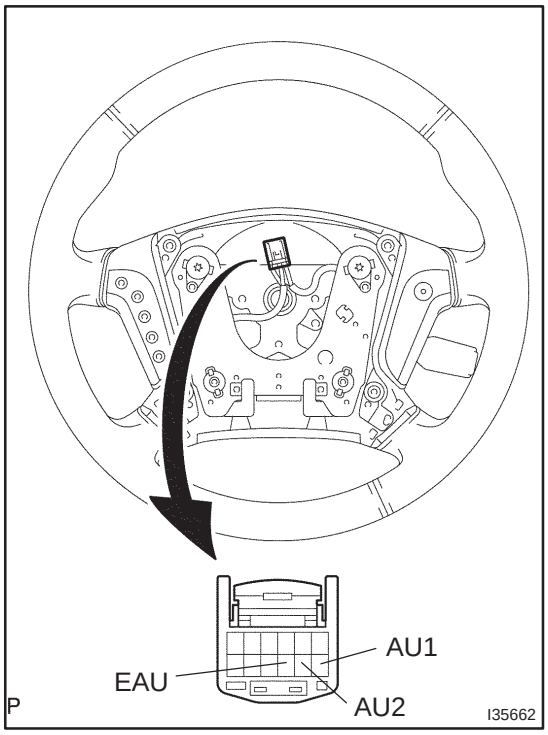

(a) Remove the steering pad switch LH.
(b) Check continuity between terminals at each condition, as shown in the chart.

Standard:

Tester connection	Condition	Specified condition
AU1 – EAU	Do not switch position	Approx. 100 kΩ
AU1 – EAU	SEEK+ switch: push	0 Ω
AU1 – EAU	SEEK– switch: push	Approx. 0.3 kΩ
AU1 – EAU	VOL+ switch: push	Approx. 1 kΩ
AU1 – EAU	VOL– switch: push	Approx. 3.2 kΩ
AU1 – EAU	Do not switch position	Approx. 100 kΩ
AU1 – EAU	MODE switch: push	0 Ω

NG → **REPLACE STEERING WHEEL ASSY**

OK

2	CHECK HARNESS AND CONNECTOR(STEERING WHEEL ASSY – RADIO RECEIVER ASSY)

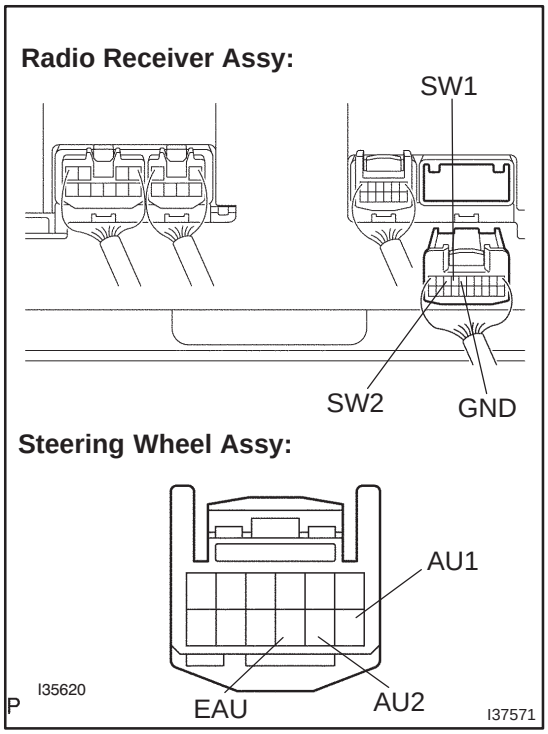

(a) Disconnect the connectors from the steering wheel assy and radio receiver assy.

(1) Check continuity between terminals at each condition, as shown in the chart.

Standard:

Tester connection	Specified condition
SW1– – AU1	Continuity
SW2 – AU2	Continuity
GND – EAU	Continuity

(2) Check for a short between terminals at each condition, as shown in the chart.

Standard:

Tester connection	Specified condition
SW1 – Body ground	No continuity
SW2 – Body ground	No continuity
GND – Body ground	No continuity

NG → **REPAIR OR REPLACE HARNESS OR CONNECTOR (See page 01–32)**

OK

REPLACE RADIO RECEIVER ASSY

NAVIGATION SYSTEM

05C3B–01

HOW TO PROCEED WITH TROUBLESHOOTING

1	Vehicle Brought to Workshop

2	Customer Problem Analysis (See page 05–1437)

3	Problem Symptom Confirmation

- Symptom does not occur (Go to step 4)
- Symptom occurs (Go to step 5)

4	Symptom Simulation (See page 01–32)

5	DTC Check (See page 05–1438)

- Normal code (Go to step 7)
- Malfunction code (Go to step 6)

6	DTC Chart (See page 05–1453)

- Go to step 8

7	Problem Symptoms Table (See page 05–1464)

8	Circuit Inspection and Part Inspection

9	Indemnification of Problem

10	**Repair or Replace**

11	**Confirmation Test**

End

05C3C–01

CUSTOMER PROBLEM ANALYSIS CHECK

NAVIGATION SYSTEM Check Sheet

Inspector's name: _____

Customer's Name		**VIN**	
		Production Date	
		Licence No.	
Date of Vehicle Brought in	/ /	**Odometer Reading**	**km Mile**

Date Problem First Occurred	/ /
Frequency Problem Occurs	☐ Always ☐ Intermittent (Times a day)

Problem Symptom	**Navigation malfunction**	☐ Cursor movement is defective.
		☐ Cursor does not move.
		☐ GPS mark does not appear.
		☐ Map is not displayed.
		☐ Others ( )
	Display malfunction	☐ Screen is dark.
		☐ Screen is white.
		☐ Color is not uniform.
		☐ Screen is out of order.
		☐ Others ( )
	Control Switch malfunction	☐ Cannot operate with navigation controller assy
		☐ Others ( )

	Parts name	**1st time malfunction code.**	**2nd time malfunction code.**
DTC Check	Navigation ECU		
	Radio Receiver Assy		
	Multi–display (CRT display) Display		
	Body ECU		

05C3D–01

PRE–CHECK

1. USER TROUBLES UNDER NORMAL CONDITION OF THE NAVIGATION SYSTEM

(a) Voice guidance does not perform in the following situation even if the system is in normal condition.
  (1) The destination is not set up.
  (2) The vehicle is not driving on the set route. (The remaining distance is not displayed at the lower left of the map screen that tells the current position of the vehicle.)
  (3) ”Guidance in Other Modes” is not set up. (In this case no voice guidance is given except on the map screen.)

(b) The vehicle icon or map turns around arbitrarily on the screen even when the system is in normal condition.

If the ignition switch is turned to ”ACC” or ”ON” while the vehicle is turning around such as being on a turntable, the Navigation System memorizes the angle speed of that moment as the standard figure. To solve this problem, at the vehicle speed of 0 MPH (0 km/h), turn off the ignition switch, and then turn it to ”ACC” or ”ON” again to see whether any trouble occurs again.

2. INSPECTION OF THE LOCATION WITH TROUBLE OCCURRENCE

(a) Check whether the wrong display of the vehicle icon appears in a certain location or in several locations.

HINT:

It is difficult to determine the accurate vehicle position when driving on a freeway, a looped road or a road which runs in parallel with another, and immediately after going out of the parking area. In such cases the vehicle icon can be displayed off the real position of the vehicle.

3. OUTLINE OF AVC–LAN

(a) Each unit of the navigation system connected with AVC–LAN (communication bus) transmits a signal of each switch. When +B or GND shorts out in this AVC–LAN, the navigation system will not function normally as the communication is discontinued. In this AVC–LAN, the multi–display (CRT display) display becomes the master of the communication, and resistance necessary for transmitting the signals is stored in the radio receiver assy.

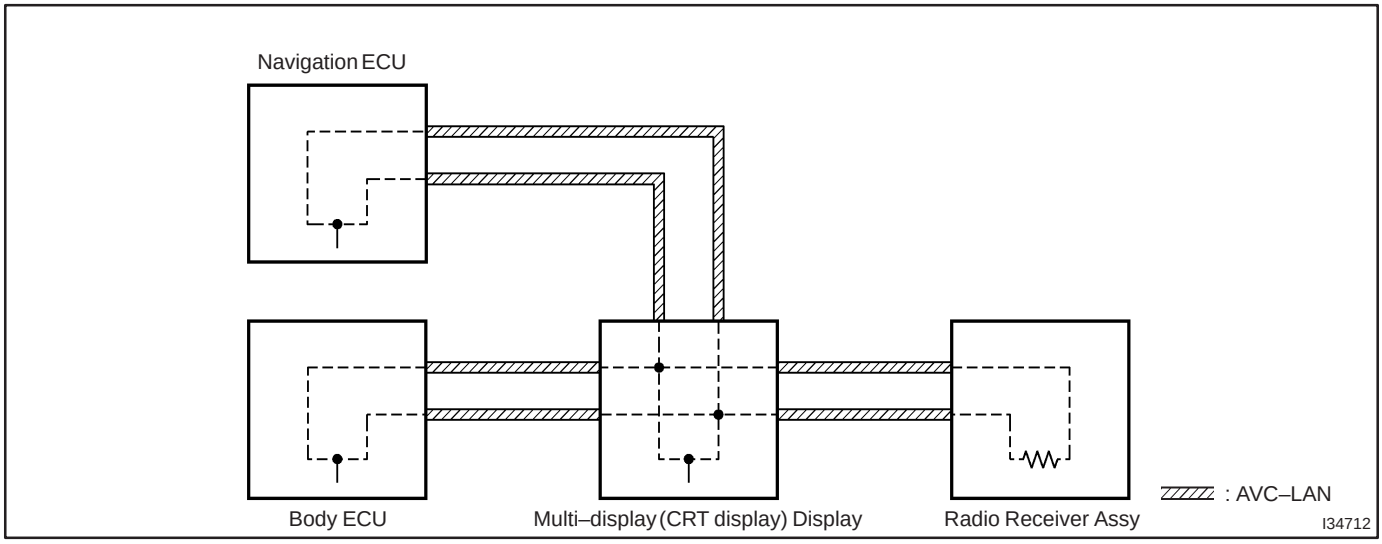

4. DIAGNOSIS SYSTEM MODE

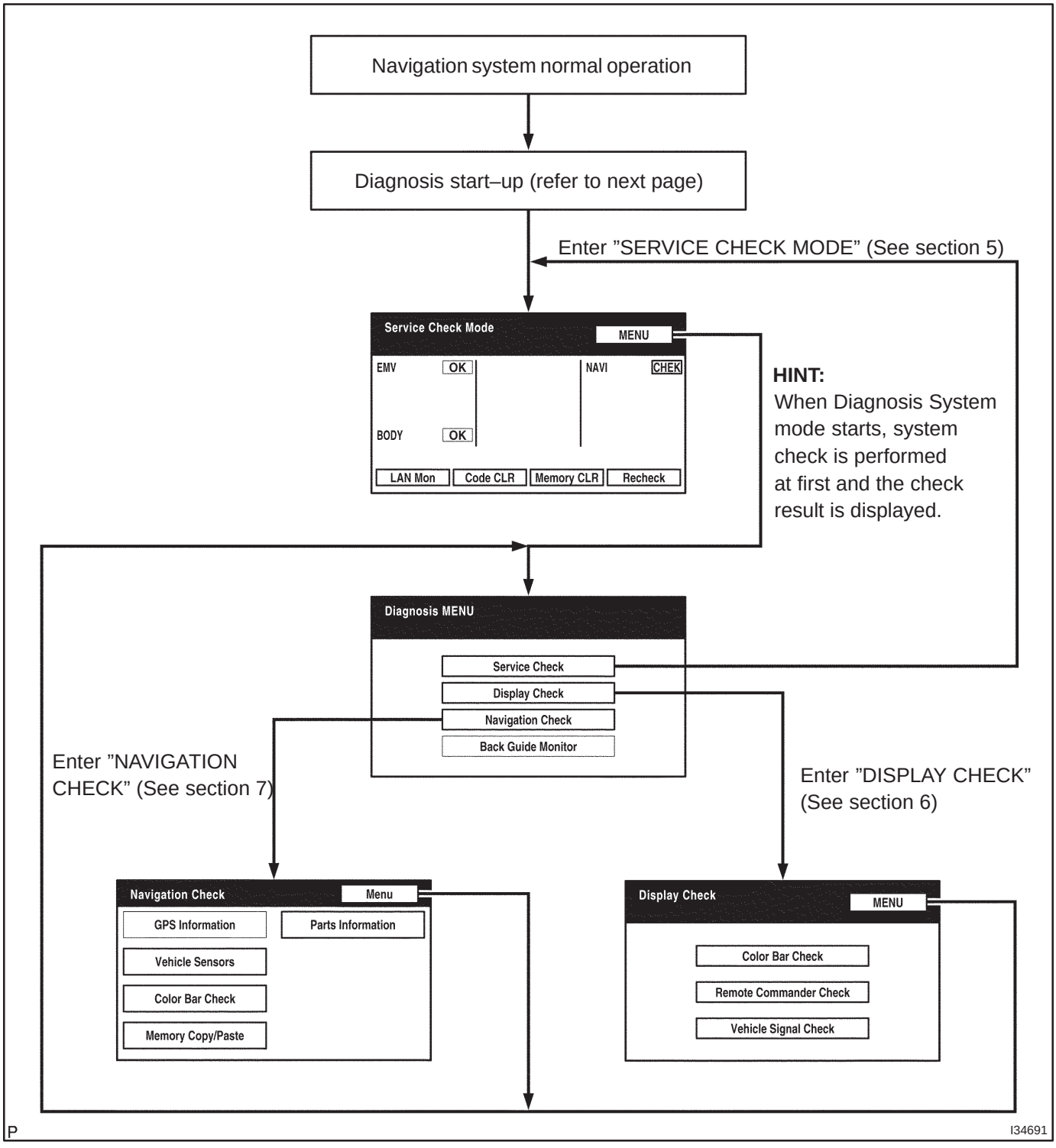

(a) Start–up and finishing of the diagnosis.

HINT:

Before starting the diagnosis system, make sure that the map appears on the screen after turning the IG switch ON.

If not, some items cannot be checked.

(b) Diagnosis start–up by the light control switch.

(1) Vehicle speed should be 0 km/h (0 mph).

(2) Turn the ignition switch to ACC or ON.

(3) While pressing the ”INFO” switches on the navigation controller assy, turn the light control switch from OFF → TAIL → OFF → TAIL → OFF → TAIL → OFF.

Navigation Controller Assy:

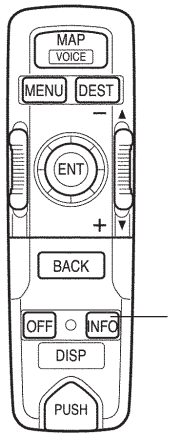

P I34690

HINT:

Operate the navigation controller assy by pointing if to the infrared ray emitted portion on the multi–display (CRT display) display or mounting it to the navigation controller holder.

Display	Description
Service Check	By performing system check and collecting data of diagnosis memory, this mode checks the current and past condition of each connection device.
Display Check	It displays the Display Check on the screen.
Navigation Check	It displays the Navigation ECU Check on the screen.

HINT:

- When the diagnosis system starts, the service check screen is displayed and the service check begins.

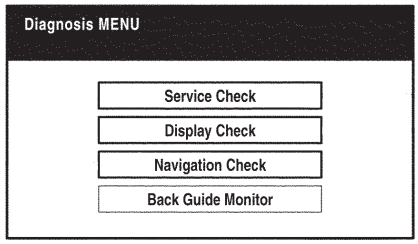

I35902

- Select MENU to display diagnosis check menu.

(c) Finishing the diagnosis system

Turn the ignition switch OFF to finish the mode.

5. SERVICE CHECK MODE

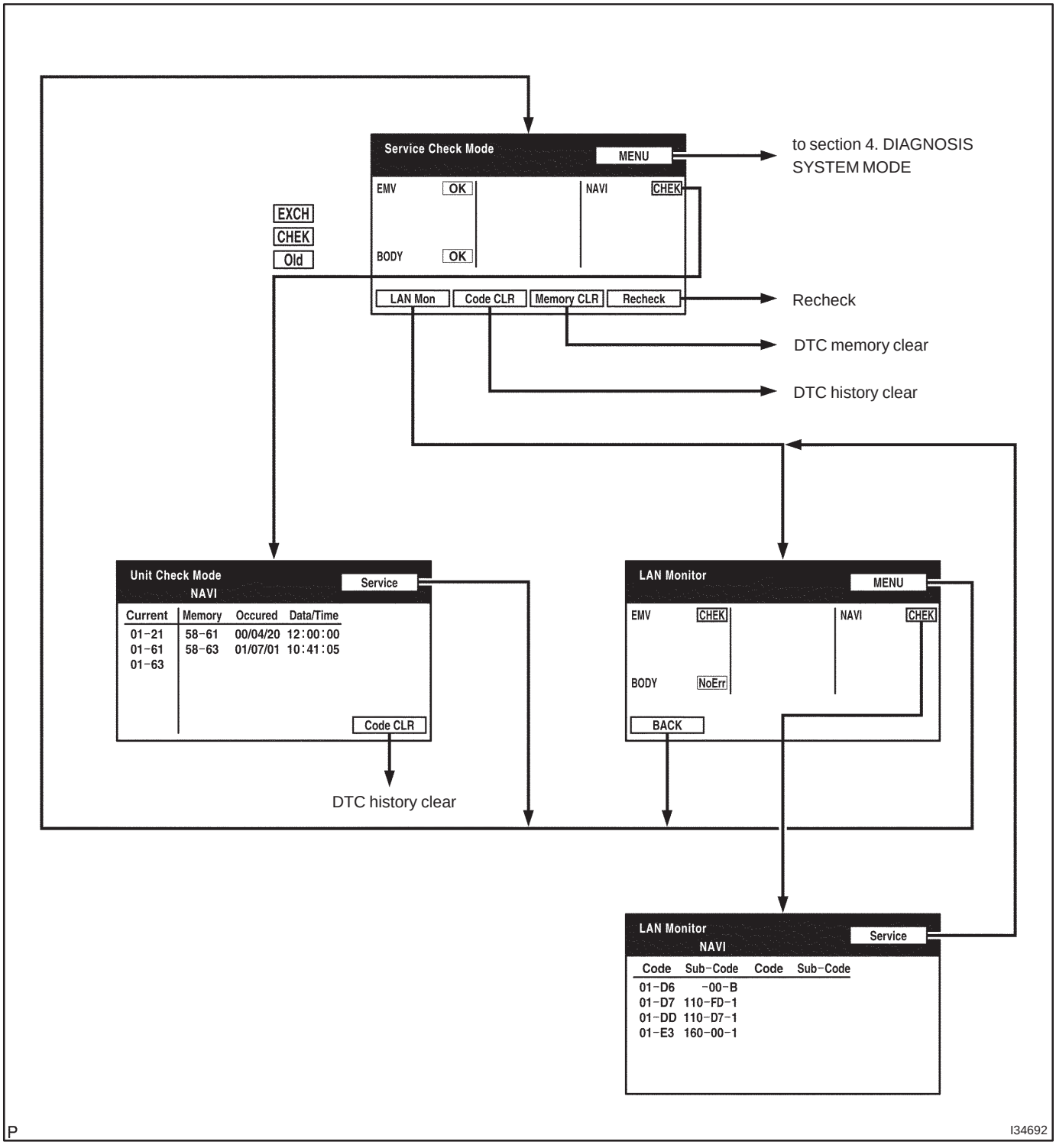

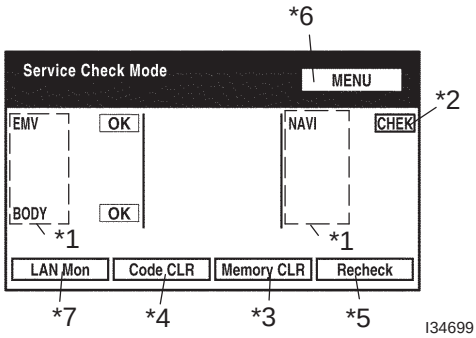

P I34699

(a) Service Check Mode

(1) Start the diagnosis system.

Display Item	Function
Check/*2	Check results are displayed.
Memory CLR/*3	Pressing this switch for 3 sec. deletes all the information about master component registration.
Code CLR/*4	Pressing this switch for 3 sec. deletes diagnosis memory of all the components. It deletes Service Check results and the screen displaying the check results.
Recheck/*5	Pressing this switch performs Service Check again.
MENU/*6	Pressing this switch activates the ”Diagnosis Menu”.
LAN Mon/*7	Pressing this switch activates the ”LAN Monitor”.

Components:/*1

Display	Name
EMV	Multi–display (CRT display) display
NAVI	Navigation ECU
BODY	Body ECU (Combination Meter Assy)
AUDIO H/U	Radio receiver assy

HINT:

Service check displays the check results based on the information obtained from each component’s response to ”Service Check Execution” and ”Diagnosis Memory Request”, and the information of ”Current DTC Notification” (the Unit Check Mode and the LAN Monitor information that will be displayed on the next screens.).

(2) Read Check Result

Check Result	Meaning
OK	No DTC is identified.
EXCH	One or more DTC requesting for exchange are detected.
CHEK	One or more DTC requesting for check are detected.
NCON	No connection response to Diagnosis System start–up, whereas it has the connection response to the AVC–LAN system when the power switch is turned on (when IG is turned to ACC).
Old	One or more DTC are detected because of old version.
NRES	No response to the information about the Diagnosis System, whereas it responds to the Diagnosis System start–up.
No Err	No DTC is identified.

HINT:

- After repairing and checking, press ”Code CLR” for more than 3 seconds. to delete the diagnosis memory.
- After deleting the diagnosis memory, press ”Recheck” and make sure ”OK” is displayed on the screen.

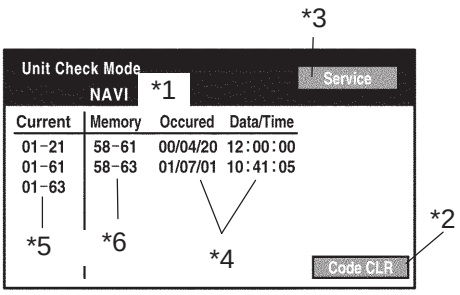

P I32709

(3) ”EXCH”, ”CHEK” and ”Old” can be used as switches to activate ”Unit Check Mode” for detailed information. Check troubled parts of the components in this mode by referring to the DTC code list.

Display Item	Description
Componentname/*1	Name of component to be checked is displayed.
Code CLR/*2	Pressing this switch for 3 sec. deletes DTC memory of the selected diagnosis component.
Service/*3	Pressing this switch returns to the ”Service Check Mode”.
Date/Time/*4	The date and time stamped at the time of DTC occurrence are displayed in the order of year–month–day–hour–minute–second. (If the date and time data is invalid, it is displayed as a blank.)
Current/ *5	Up to 6 DTC codes detected during the System Check are displayed.
Memory/ *6	DTC memories stored and current DTC Notification are displayed.

HINT:

- Detecting Unit DTC activates the Unit Check Mode on the screen.
- In the Unit Check Mode, DTC identified as ”EXCH” in the Service Check is displayed as classified into Current DTC and Past DTC.

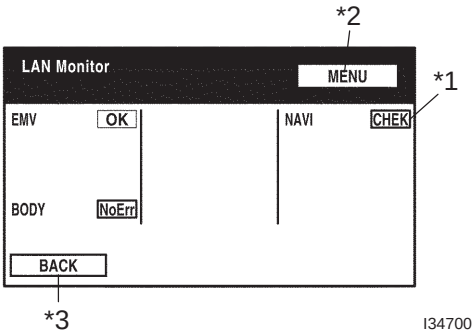

P I34700

(b) LAN Monitor

(1) Start the Diagnosis System.

(2) Select ”LAN Mon”

Display Item	Function
CHEK/*1	Check results are displayed.
MENU/*2	Pressing this switch returns to the ”Service Check Mode”.
BACK/*3	Pressing this switch returns to the ”Service Check Mode”.

HINT:

System Check displays the check results based on the information obtained from each component’s response to ”Service Check Execution” and ”Diagnosis Memory Request”, and the information of ”Current DTC Notification” (the LAN Monitor that will be displayed on the next screens).

(3) Read Check Result

Check Result	Meaning
OK	No DTC is identified.
EXCH	One or more DTC requesting for exchange are detected.

CHEK	One or more DTC requesting for check are detected.
NCON	No connection response to Diagnosis System start–up, where as it has the connection response to the AVC–LAN system when the power switch is turned on (when IG is turned to ACC).
Old	One or more DTC are detected because of old version.
NRES	No response to the information about the Diagnosis System, where as it responds to the Diagnosis System start–up.
No Err	No DTC is identified.

HINT:

- After repair and check, press ”Code CLR” for more than 3 sec. to delete the diagnosis memory.
- After deleting the diagnosis memory, press ”Recheck” and make sure ”OK” is displayed on the screen.

(4) ”CHEK” can be used as switches to activate ”LAN Monitor” for detail information. Check troubled parts of the components in these modes by referring to the DTC code list.

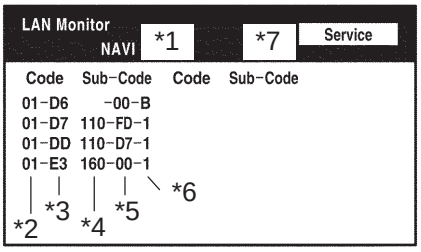

P I34701

Display Item	Description
Components name/*1	Names of components to be checked are displayed.
Segment/*2	Logical address codes corresponding to DTC are displayed.
DTC/*3	DTC is displayed.
Sub–Code (address numbers of related components)/*4	Physical address codes memorized together with DTC are displayed.
Sub–code (Connection confirmation number) /*5	Connection confirmation numbers memorized together with DTC are displayed.
Sub–code (Number of occurrence) /*6	The number of occurrence of the same DTC is displayed.
Service/*7	Pressing this switch returns to the ”LAN Monitor”.

HINT:

Detecting no LAN DTC activates the LAN Monitor on the screen.

6. DISPLAY CHECK MODE

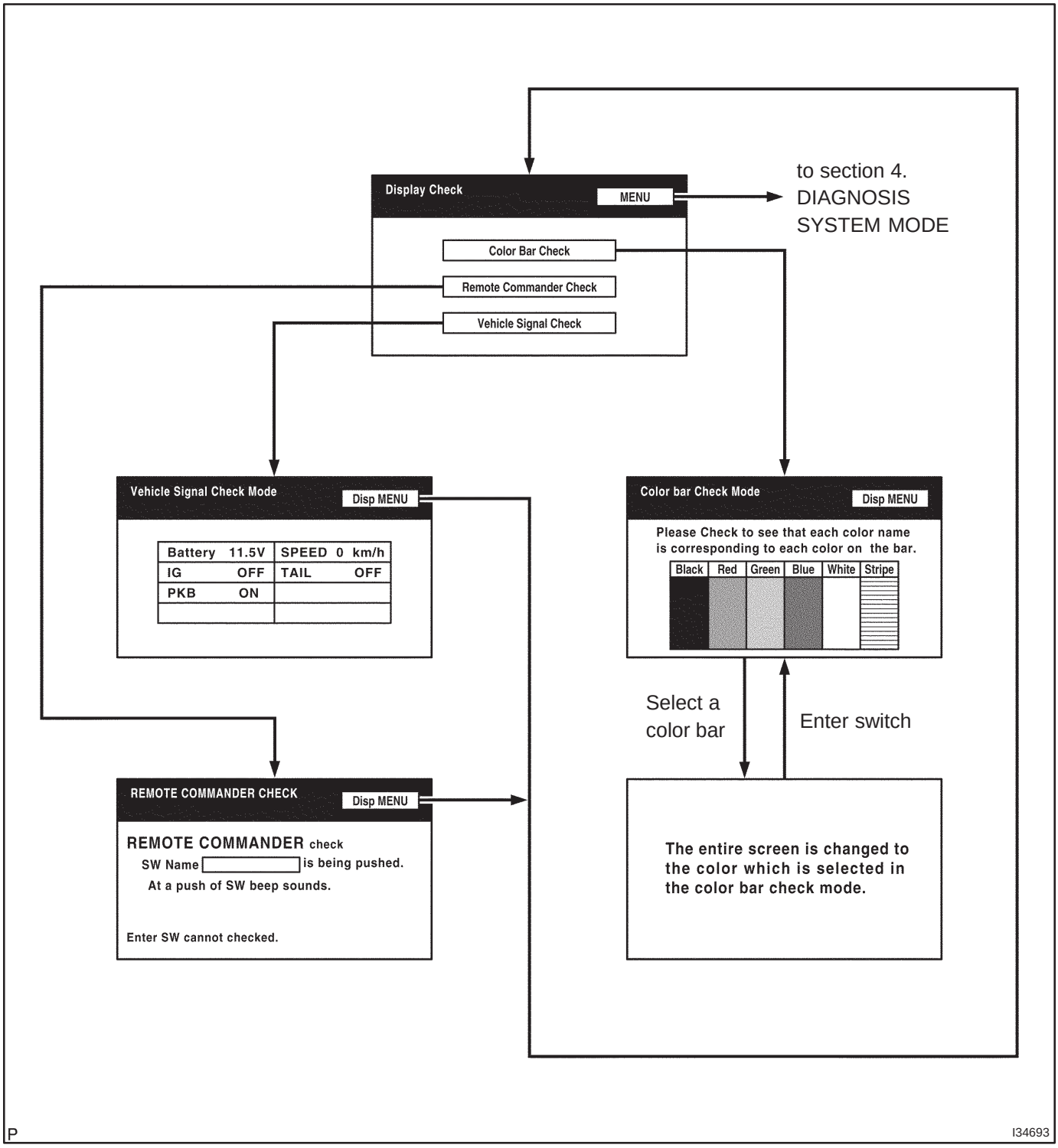

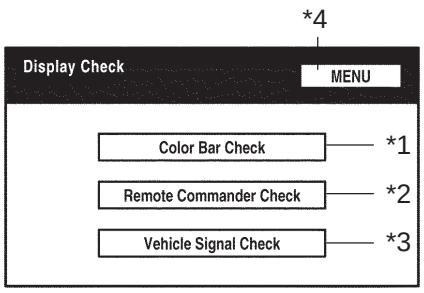

P I34702

(a) Display Check

Display	Contents
Color Bar Check/*1	Color display is checked.
Remote Commander Check/*2	Operating condition of navigation controller assy is checked.
Vehicle Signal Check/*3	Status of the vehicle signal which has been loaded into the display is checked.

HINT:

In Display Check, above checks can be performed.

Display Item	Meaning
MENU/*4	Pressing this switch returns to the "Diagnosis MENU".

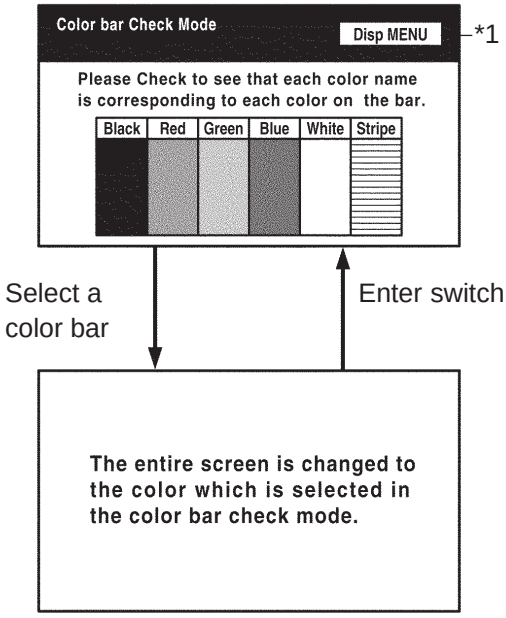

P I34711

(b) Color Bar Check Mode

(1) Start the Diagnosis System.
(2) Select "MENU".
(3) Select "Display Check".
(4) Select "Color Bar Check".
(5) Make sure that each color name is corresponding to each color on the bar.

HINT:

Select Black, Red, Green, Blue, White and Stripe to display selected colors and stripes on the entire screen.

(6) Compare with the Color Bar Check Mode in the Navigation Check and make sure that no difference is found.

Display Item	Meaning
Disp MENU/*1	Pressing this switch returns to the "Display Check".

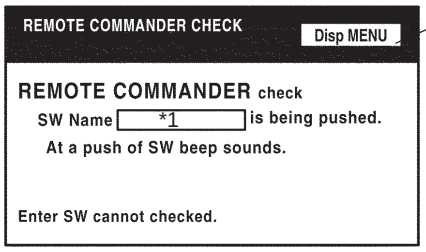

P I34703

(c) Remote Commander Check
(1) Start the Diagnosis system.
(2) Select ”MENU”.
(3) Select ”Display Check”.
(4) Select ”Remote Commander Check”.
(5) Press each switch and make sure that it corresponds to the display on the screen.

Display Data	Description
Names of push–button switches/*1	Names of push–button switches pressed are navigation controller assy.
Disp MENU*2	Pressing this switch returns to the ”Display Check”.

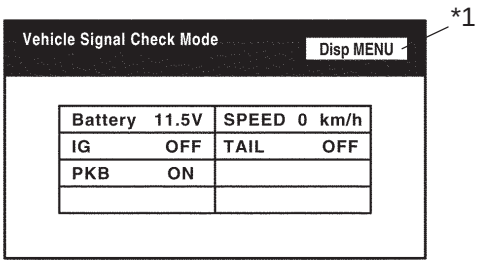

P I34704

(d) Display Vehicle Signal Check
(1) Start the Diagnosis system.
(2) Select ”MENU”.
(3) Select ”Display Check”.
(4) Select ”Vehicle Signal Check”.
(5) Check the status of the vehicle signal (Battery, IG, PKB, SPEED, TAIL) loaded into the display.

HINT:
Vehicle signal data is updated every 1 second.

Display Item	Meaning
Battery	Battery voltage is displayed by V.
IG	IG (Signal State) is displayed by ON/OFF.
PKB	IG (Signal State) is displayed by ON/OFF. (IG switch ON)
SPEED	SPEED is displayed by calculating the vehicle speed from the pulse signal.
TAIL	TAIL (Signal State) is displayed by ON/OFF.
Disp MENU/*1	Pressing this switch returns to the ”Display Check”.

7. NAVIGATION CHECK MODE

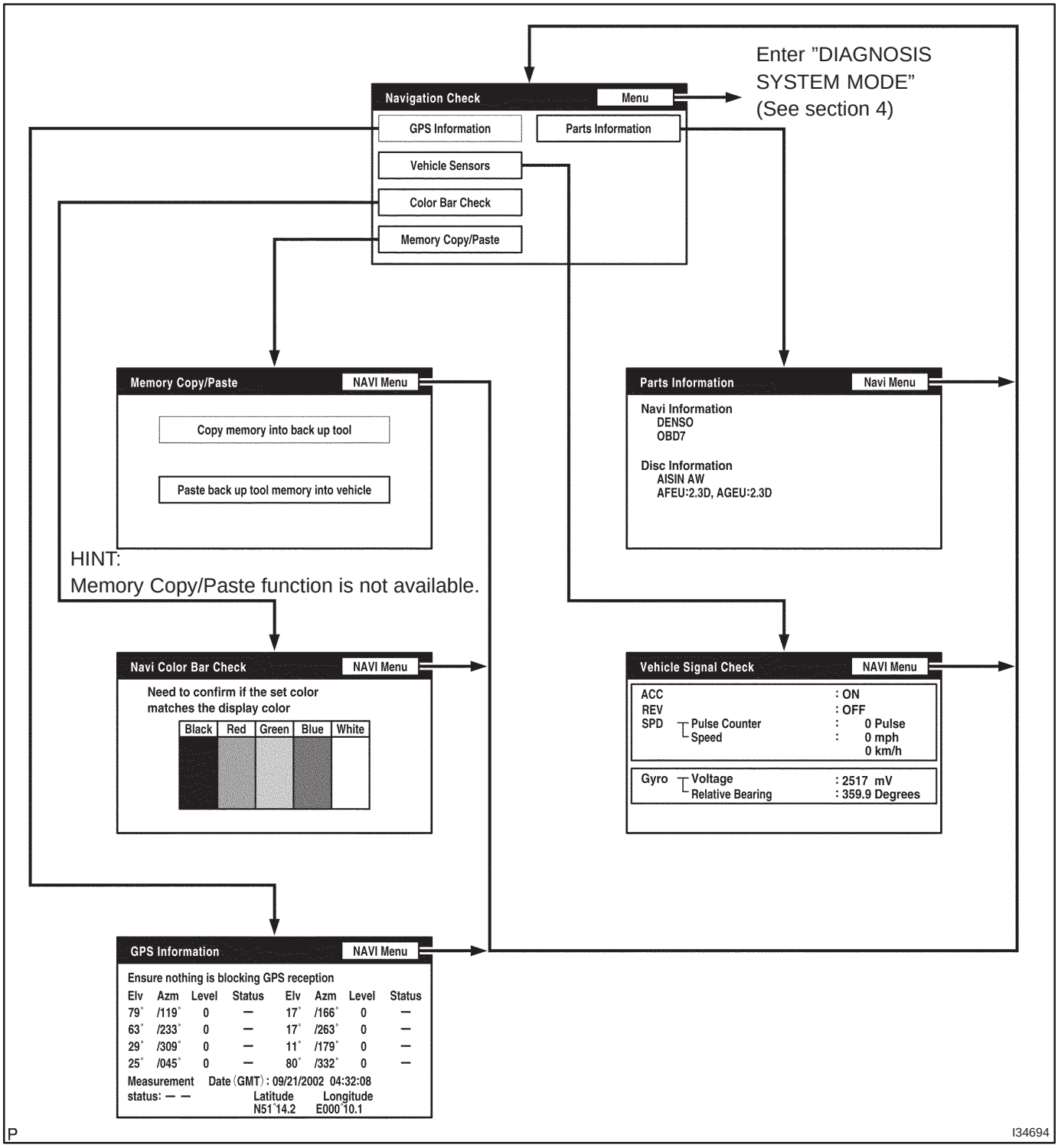

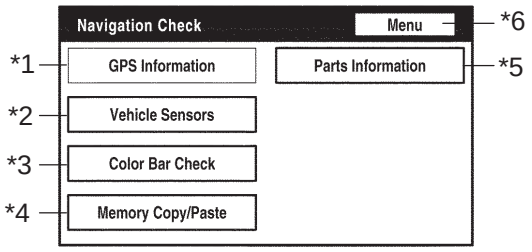

P I34705

(a) Navigation Check

Display	Description
GPS Information/*1	Information related to GPS is displayed (updated every 1 second.).
Vehicle Sensors/*2	Vehicle signal information to be loaded in the Navigation ECU is displayed (updated every 1 second.).
Color Bar Check/*3	Color display of the Navigation ECU is checked. (Compare with the Color Bar Check results in the Display Check.)
Memory Copy / Paste/*4	This function is not available.
Parts Information/*5	Navigation program version and disc version are displayed.
Menu/*6	Pressing this switch returns to the ”Diagnosis MENU”.

HINT:

- In the Navigation Check, the checks mentioned above can be conducted.
- The Navigation ECU operates each Navigation Check.

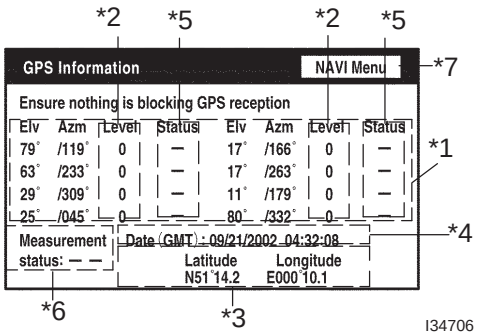

(b) GPS Information

(1) Start the Diagnosis system.
(2) Select ”Menu”.
(3) Select ”Navigation Check”.
(4) Select ”GPS Information”.
(5) Check the GPS–related information.

Display Data	Description
SatelliteInformation/*1	”Angle of elevation”, ”Azimuth”, ”Level of Signal” and ”Status of Wave Reception” of the Satellite captured by the antenna are displayed (for 8 satellites max.)
Level of Signal/*2	As the level of signal is higher, the receiving sensitivity becomes better.
Position Data/*3	The latitude and longitude of the current position are displayed in degree, minute and second.
Time Data/*4	Date and time data obtained from the GPS receiver is displayed.
Navi Menu/*7	Pressing this switch returns to the ”Navigation Check”.

Status of Wave Reception:/*5

Display	Conditions
–	Complement no GPS
T	Complement GPS but no using
P	Using GPS

Measurement Status: /*6

Display	Conditions
2D	Measurement on 2 dimensions
3D	Measurement on 3 dimensions
NG	GPS information cannot be used
Error	Reception error occurs.
–	Other than the above

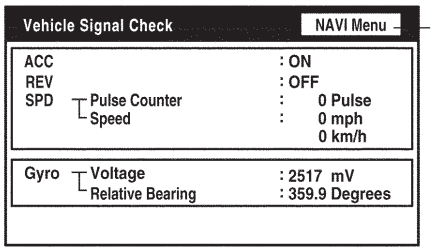

P I34707

(c) Vehicle Signal Check
(1) Start the Diagnosis system.
(2) Select ”MENU”.
(3) Select ”Navigation Check”.
(4) Select ”Vehicle sensors”.
(5) Check the vehicle signals (ACC, REV, SPD) and the output signal of the gyro sensor introduced into the navigation ECU.

Items	Display Method
ACC signal status	Displayed as ON/OFF.
REV signal status	Displayed as ON/OFF.
SPD signal status	The cumulative value of input pulse count and the vehicle speed [km/h] [mph] are displayed. [The cumulative value of input pulse count is set to be 0 when this screen is displayed. When the vehicle starts to drive, it is counted and displayed continually.]
Output signal of the gyro sensor	Voltage [V] and relative azimuthal angle [degree] are displayed. [The position of the vehicle when this screen is displayed is set to be 0 degree in azimuth. Based on this, relative azimuthal angle is measured and displayed continually.]
Navi Menu/*1	Pressing this switch returns to the ”Navigation Check”.

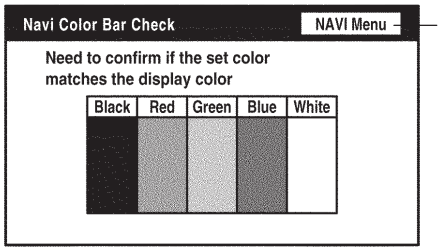

P I34708

(d) Navigation Color Bar Check
(1) Start the Diagnosis system.
(2) Select ”MENU”.
(3) Select ”Navigation Check”.
(4) Select ”Color Bar Check”.
(5) Make sure that the set color matches the display color.
(6) Compare with the Color Bar Check Mode in the Display Check and make sure that no difference is found.

Display Item	Meaning
Navi Menu/*1	Pressing this switch returns to the ”Navigation Check”.

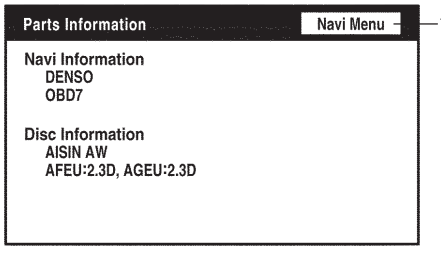

P I34709

(e) Parts Information
(1) Start the Diagnosis system.
(2) Select ”MENU”.
(3) Select ”Navigation Check”.
(4) Select ”Parts Information”.
(5) Check the program and disc version.

Display Item	Meaning
Navi Menu/*1	Pressing this switch returns to the ”Navigation Check”.

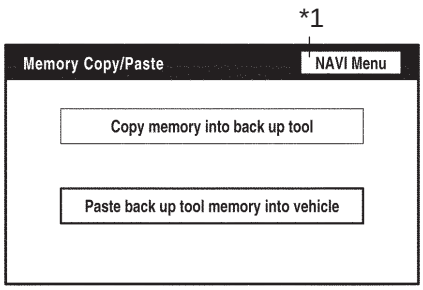

P I34710

(f) Memory Copy/ Paste

HINT:

This function is not available.

Display Item	Meaning
Navi Menu/*1	Pressing this switch returns to the ”Navigation Check”.

05C3E–01

DIAGNOSTIC TROUBLE CODE CHART

Terms	Meaning
Physical address	Three–digit code (shown in hexadecimal) which is given to each component comprising the AVC–LAN. Corresponding to the function, individual symbols are specified.
Logical address	Two–digit code (shown in hexadecimal) which is given to each function comprising the inner system of the AVC–LAN.

1. RADIO RECEIVER ASSY (Physical address: 190)

HINT:

- *1: Even if no failure is detected, this code may be stored depending on the battery condition or voltage for starting an engine.
- *2: This code is stored in 180 sec. after the power supply connector is pulled out after engine start.
- *3: This code may be stored when the ignition switch is turned again after engine start.
- *4: This code may be stored when the ignition switch is turned again in 1 min. after engine start.

(a) Logical address: 01 (Communication control)

DTC	Diagnosis item	Condition	Countermeasure and inspected parts
D5 *1	Registered component disconnected	Component shown by sub–code is or was disconnected from system with ignition switch ACC or ON. Communication with component shown by sub–code is not ensured when engine is started.	• Check harness for power supply of component shown by sub–code. • Check harness for communication system of component shown by sub–code.
D6 *1	Absence of Master	Component in which this code is recorded has been disconnected from system with ignition switch ACC or ON. Or, when this code was recorded, multi–display (CRT display) display was disconnected.	• Check harness for power supply system of multi–display (CRT display) display. • Check harness for communication system of multi–display (CRT display) display.
D8 *2	No response to connection check	Component shown by sub–code is or was disconnected from system after engine is started.	• Check harness for power supply of component shown by sub–code. • Check harness for communication system of component shown by sub–code.
D9 *1	Last Mode Error	Component operated (sound and/or image was provided) before engine stop is or was disconnected with ignition switch ACC or ON.	• Check harness for power supply of component shown by sub–code. • Check harness for communication system of component shown by sub–code.
DA	No Response to ON/OFF Instruction	No response is identified when changing mode (audio and visual mode change). Detected when sound and picture does not change by button operation	• Check harness for power supply system of component shown by sub–code. • Check harness for communication system of component shown by sub–code. • If error occurs again, replace component shown by auxiliary code
DB *1	Mode Status Error	Dual alarm is detected.	• Check harness for power supply system of component shown by sub–code. • Check harness for communication system of component shown by sub–code.
DC *4	Transmission Error	Transmission to component shown by sub–code has been failed. (This code does not necessarily mean actual failure.)	If same sub–code is recorded in other component(s), check harness for power supply and communication system of all components shown by code.
DD *4	Master Reset (Momentary Interruption)	After engine is started, multi–display (CRT display) display was disconnected from system.	• Check harness for power supply system of multi–display (CRT display) display. • Check harness for communication system of multi–display (CRT display) display. • If this error occurs frequently, replace multi–display (CRT display) display.

DTC	Diagnosis item	Condition	Countermeasure and inspected parts
DE *3	Slave Reset (Momentary Interruption)	After engine start, slave component has been disconnected.	• Check harness for power supply system of component shown by sub–code. • Check harness for communication system of component shown by sub–code.
DF *5	Master Error	Due to defective condition of component with a display, master function is switched to audio equipment. Error occurs in communication between sub–master (audio) and master component.	• Check harness for power supply of multi–display (CRT display) display. • Check harness for communication system of multi–display (CRT display) display.
E0 *1	Registration Completion Instruction Error	”Registration Completion Instruction” command from master cannot be received.	Since this DTC is provided for engineering purpose, it may be detected when no actual failure exists.
E1 *1	Audio processor ON error	While source equipment is operating, AMP output is stopped.	• Check harness for power supply of radio receiver assy. • Check harness for communication system of radio receiver assy.
E2	ON/OFF Instruction Parameter Error	Error occurs in ON/OFF controlling command from multi–display (CRT display) display.	Replace multi–display (CRT display) display.
E3 *1	Registration Request Transmission	Registration Request command is output from slave component. Receiving Connection Check Instruction, Registration Request command is output from sub–master component.	Since this DTC is provided for engineering purpose, it may be detected when no actual failure exists.
E4 *1	Multiple Frame Abort	Multiple frame transmission is aborted.	Since this DTC is provided for engineering purpose, it may be detected when no actual failure exists.

(b) Logical address: 21 (Switch)

DTC	Diagnosis item	Condition	Countermeasure and inspected parts
10	Panel Switch Error	Error in panel switch input part is detected. (Error in switch control part, or internal communication error with switch control part is detected.)	• Inspect all switches on panel switch test screen in display check mode. If any of them does not function, replace radio receiver assy. • If all switches function without problem, observe them for a while.
11	Touch Switch Error	Error in touch switch sensor is detected. (Light level of LED is detected to be less than a fixed value.)	• Inspect all touch switches on touch switch test screen in display check mode. If any of lines do not react, replace radio receiver assy. • If all of vertical and horizontal lines react normally, observe them for a while.

(c) Logical address: 61 (Cassette tape player’s switch)

DTC	Diagnosis item	Condition	Countermeasure and inspected parts
40	Mechanical Error of Media	Malfunction due to mechanical failure is identified. Or cassette tape is cut or entangled.	• Inspect cassette tape. • Replace radio receiver assy.

(d) Logical address: 62 (CD player)

DTC	Diagnosis item	Diagnosis content	Countermeasure and inspected parts
42	No Disc Readout	Disc cannot be read.	• Inspect CD. • Replace radio receiver assy.
44	CD player Error	Error is detected in CD player.	Replace radio receiver assy.
45	EJECT Error	Magazine cannot be ejected.	Replace radio receiver assy.
46	Scratched/Reversed Disc	Scratches or dirt is found on CD surface or CD is set upside down.	Inspect CD.

DTC	Diagnosis item	Diagnosis content	Countermeasure and inspected parts
47	CD Player Temp. Too High	Readout cannot be done because temperature around player's pick–up (reading part) is too high.	With IG switch OFF, leave vehicle in cool shaded place for a while and recheck. After deleting the DTC memory, if same code is detected, replace radio receiver assy.
48	CD Player Excess Current	Excess current is applied radio receiver assy.	Replace radio receiver assy.

2. NAVIGATION ECU (Physical address: 178)

HINT:

- *1: Even if no failure is detected, this code may be stored depending on the battery condition or voltage for starting the engine.
- *2: This code is stored in 210 seconds after the master component is turned off with the ignition switch ACC or ON.
- *3: This code may be stored when the ignition switch is turned in 1 min. again after engine start.
- *4: This code may be stored when the ignition switch is turned again after engine start.

(a) Logical address: 01 (Communication control)

DTC	Diagnosis item	Condition	Countermeasure and inspected parts
D6 *1	Absence of Master	Component in which this code is recorded has been disconnected from system with ignition switch ACC or ON. Or, when this code was recorded, multi–display (CRT display) display was disconnected.	• Check harness for power supply system of multi–display (CRT display) display. • Check harness for communication system of multi–display (CRT display) display. • Check harness for power supply system of navigation ECU. • Check harness for communication system of navigation ECU.
D7 *2	Connection Check Error	Component in which this code is recorded has been disconnected from system with ignition switch ACC or ON. Or, when this code was recorded, multi–display (CRT display) display was disconnected.	• Check harness for power supply system of multi–display (CRT display) display. • Check harness for communication system of multi–display (CRT display) display. • Check harness for power supply system of navigation ECU. • Check harness for communication system of navigation ECU.
DC *3	Transmission Error	Transmission to component shown by sub–code has been failed. (This code does not necessarily mean actual failure.)	If same sub–code is recorded in other component(s), check harness for power supply and communication system of all components shown by code.
DD *4	Master Reset (Momentary Interruption)	Component that is to be master has been disconnected after engine start.	• Check harness for power supply system of multi–display (CRT display) display. • Check harness for communication system of multi–display (CRT display) display. • If error occurs frequently, replace multi–display (CRT display) display.
E0 *1	Registration Completion Instruction Error	"Registration Completion Instruction" command from master cannot be received.	Since this DTC is provided for engineering, it may be detected when no actual failure exists.
E2	ON/OFF Instruction Parameter Error	Error is detected in ON/OFF control command from multi–display (CRT display) display .	Replace multi–display (CRT display) display.
E3 *1	Registration Request Transmission	• Registration Request command is output from slave component. • Registration Request command is output from sub–master component.	Since this DTC is provided for engineering, it may be detected when no actual failure exists.

DTC	Diagnosis item	Condition	Countermeasure and inspected parts
DF *4	Master Error	Due to defective condition of component with a display, master function is switched to audioequipment. Error occurs in communication between sub–master (audio) and master component.	• Check harness for power supply of radio receiver assy. • Check harness for communication system of radio receiver assy.
E4 *1	Multiple Frame Abort	Multiple frame transmission is aborted.	Since this DTC is provided for engineering purpose, it may be detected when no actual failure exists.

(b) Logical address: 58 (Navigation ECU)

DTC	Diagnosis item	Condition	Countermeasure and inspected parts
10	Gyro Error	Error in gyro sensor is detected. (Abnormal value in voltage output from sensor is detected for more than specified time.)	Replace navigation ECU.
42	Map Disc Error	Data cannot be read for a certain time due to scratches or dirt on disc surface or insertion of wrong disc.	Inspect disc and replace as necessary. (Visually check disc surface and wipe it with a soft cloth.)
43	Vehicle Signal Error	Input error of vehicle signal is detected. (When no vehicle signal has been input for a certain time.)	• Inspect wire harness. • If wire harness is normal, replace navigation ECU.

(c) Logical address: 58 (GPS receiver)

DTC	Diagnosis item	Condition	Countermeasure and inspected parts
11	GPS Receiver Error	Operation error of GPS receiver is detected.	At an outdoor site with a clear view, operate the system to display GPS data. If GPS mark is not properly displayed after 15 min. or more, replace navigation ECU.
40	GPS Antenna Error	Open condition of GPS antenna is detected. (Open circuit, connection failure of connectors, etc.)	Inspect antenna and replace as necessary.
41	Power Supply Error of GPS Antenna	Abnormal voltage of GPS antenna cable or short circuit is detected.	• Inspect GPS antenna and replace as necessary. (When no continuity is identified between connector's core and sealed part, GPS antenna is normal.) • If GPS antenna is normal, replace navigation ECU.

3. MULTI–DISPLAY (CRT DISPLAY) DISPLAY (Physical address: 110)

HINT:

- *1: Even if no failure is detected, it may be stored depending on the battery condition or voltage for starting an engine.
- *2: It is stored in 180 sec. after the power supply connector is pulled out after engine start.
- *3: It may be stored when the ignition switch is turned again after engine start.
- *4: It may be stored when the ignition switch is turned in 1 min. again after engine start.

(a) Logical address: 01 (Communication control)

DTC	Diagnosis item	Diagnosis content	Countermeasure and inspected parts
21	ROM Error	Abnormal condition of ROM is detected.	Replace multi–display (CRT display) display.
22	RAM Error	Abnormal condition of RAM is detected.	Replace multi–display (CRT display) display.
D5 *1	Registered component disconnected	Component shown by auxiliary code is or was disconnected from system with ignition switch ACC or ON. Communication with component shown by auxiliary code is not ensured when engine is started.	• Check harness for power supply of component shown by auxiliary code. • Check harness for communication system of component shown by auxiliary code.
D8 *2	No response to connection check	Component shown by auxiliary code is or was disconnected from system after engine start.	• Check harness for power supply of component shown by sub– code. • Check harness for communication system of component shown by auxiliary code.

DTC	Diagnosis item	Diagnosis content	Countermeasure and inspected parts
D9 *1	Last Mode Error	Component operated (sound and/or image was provided) before engine stop is or was disconnected with ignition switch ACC or ON.	• Check harness for power supply of component shown by sub–code. • Check harness for communication system of component shown by sub–code.
DB *1	Mode Status Error	Dual alarm is detected.	• Check harness for power supply system of component shown by sub–auxiliary code. • Check harness for communication system of component shown by sub–code.
DC *4	Transmission Error	Transmission to component shown by auxiliary code has been failed. (This code does not necessarily mean actual failure.)	If same auxiliary code is recorded in order component(s), check harness for power supply and communication system of all components shown by code.
DE *3	Slave Reset (Momentary Interruption)	After engine start, slave component has been disconnected. DB	• Check harness for power supply system of component shown by sub–code. • Check harness for communication system of component shown by sub–code.
E2	ON/OFF Instruction Parameter Error	Error is detected in ON/OFF control command from radio receiver assy.	Replace radio receiver assy.
E3 *1	Registration Request Transmission	• Registration Request command is output from slave component. • By reception of connection check instruction, Registration Request command is output from sub–master component.	Since this DTC is provided for engineering, it may be detected when no actual failure exists.

(b) Logical address: 21 (Switch)

DTC	Diagnosis item	Diagnosis content	Countermeasure and inspected parts
10	Panel Switch Error	Error in panel switch input part is detected. (Error in switch control part, or internal communication error with switch control part is detected.)	• Inspect all switches on panel switch test screen in display check mode. If any of them do not function, replace multi–display (CRT display) display. • If all switches function without problem, observe them for a while.
11	Touch Switch Error	Error in touch switch sensor is detected. (Light level of LED is detected to be less than a fixed value.)	• Inspect all touch switches on touch switch test screen in display check mode. If any of lines does not react, replace multi–display (CRT display) display. • If all of vertical and horizontal lines react normally, observe them for a while.

(c) Logical address: 34 (Front passenger monitor)

DTC	Diagnosis item	Diagnosis content	Countermeasure and inspected parts
10	Error in Picture Circuit	Error in power supply system for picture circuit (abnormal voltage) is detected.	Replace multi–display (CRT display) display.
11	Back–light Error (No current)	Decline in power output from inverter circuit for back–light.	Replace multi–display (CRT display) display.
12	Back–light Error (Excess current)	Excess power output from inverter circuit for back–light.	Replace multi–display (CRT display) display.

4. BODY ECU (COMBINATION METER) (Physical address: 1EC)

HINT:

- *1: Even if no failure is detected, it may be stored depending on the battery condition or voltage for starting an engine.
- *2: It may be stored when the ignition switch is turned in 1 min. again after the engine starts.
- *3: It may be stored when the ignition switch is turned again after the engine starts.
- *4: This code is stored in 210 sec. after the master components is turned off with the ignition switch ACC or ON.

Logical address: 01 (Communication control)

DTC	Diagnosis item	Diagnosis content	Countermeasure and inspected parts
D6 *1	Absence of Master	Component in which this code is recorded has been disconnected from system with ignition ACC or ON. Or, when this code was recorded, multi–display (CRT display) display was disconnected.	• Check harness for power supply of multi–display (CRT display) display. • Check harness for communication system of multi–display (CRT display) display. • Check harness for power supply of body ECU. • Check harness for communication system of body ECU.
D7	Communication Check Error	Component in which this code is recorded is or was disconnected from system after engine start. Or, when recording this code, multi–display (CRT display) display was disconnected.	• Check harness for power supply of multi–display (CRT display) display. • Check harness for communication system of multi–display (CRT display) display. • Check harness for power supply of body ECU. • Check harness for communication system of body ECU.
DC *2	Transmission Error	Transmission to component shown by auxiliary code has been failed. (Detecting this DTC does not necessarily mean actual failure.)	If same auxiliary code is recorded in other components, check harness for power supply and communication system of all components shown by code.
DD *3	Master Reset (Momentary Interruption)	After engine was started, multi–display (CRT display) display was disconnected from system	• Check harness for power supply of multi–display (CRT display) display. • Check harness for communication system of multi–display (CRT display) display. • If this error occurs frequently, replace multi–display (CRT display) display.
DF *4	Master Error	Due to defective condition of component with a display, master function is switched to audioequipment. Error occurs in communication between sub–master (audio) and master component.	• Check harness for power supply of radio receiver assy. • Check harness for communication system of multi–display (CRT display) display. • Check harness for communication system between radio receiver assy and multi–display (CRT display) display.
E0 *1	Registration Completion Instruction Error	”Registration Completion Instruction” command from master cannot be received.	Since this DTC is provided for engineering purpose, it may be detected when no actual failure exists.
E1 *1	Audio processor ON error	While source equipment is operating, AMP output is stopped.	• Check harness for power supply of multi–display (CRT display) display. • Check harness for communication system of multi–display (CRT display) display.

DTC	Diagnosis item	Diagnosis content	Countermeasure and inspected parts
E2	ON/OFF Instruction Parameter Error	Error occurs in ON/OFF controlling command from stereo component amplifier assy.	Replace radio receiver assy.
E3 *1	Registration Request Transmission	• Registration Request command is output from slave component. • Registration Connection Check Instruction, Registration Request command is output from sub–master component.	Since this DTC is provided for engineering purpose, it may be detected when no actual failure exists.

05C3F–01

LOCATION

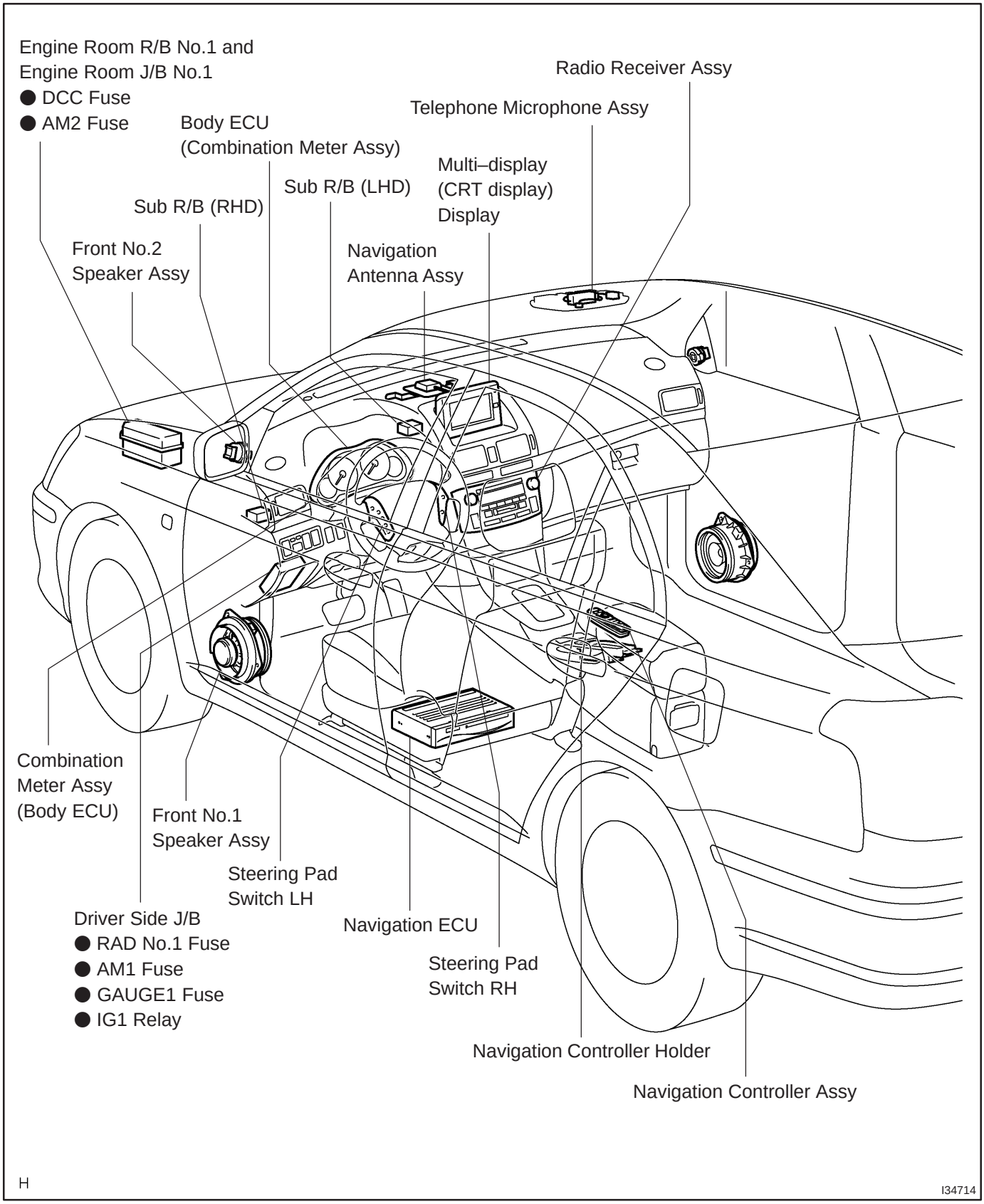

05C3X–01

TERMINALS OF ECU

1. NAVIGATION ECU

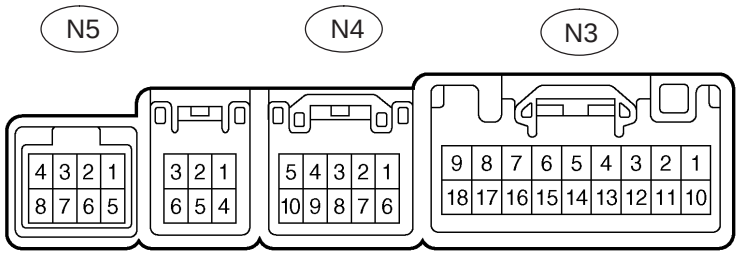

C

I35876

Symbols (Terminals No.)	Wiring Color	Condition	Specification
N5–3 (MIC+) – N5–6 (SGND)	B – BR	Audio system is playing	A waveform synchronized with sounds is output
N5–4 (MACC) – N5–6 (SGND)	R – BR	Ignition switch ACC	4 to 6 V
N5–5 (MIC–) – N5–6 (SGND)	BR – BR	Always	Continuity
N5–6 (SGND) – Body ground	BR – Body ground	Always	Continuity
N5–7 (SNSE) – Body ground	W–B – Body ground	Always	Continuity
N3–1 (AUI+) – N3–17 (GND)	R*1, W*2 – W–B	Audio system is sounding	A waveform synchronized with sounds is output
N3–2 (AUO+) – N3–17 (GND)	P*1, LG*2 – W–B	Sound quality test	–
N3–5 (SPD) – N3–17 (GND)	V–W – W–B	See ”Vehicle Signal Check Mode”	–
N3–9 (+B) – N3–17 (GND)	L–Y – W–B	Always	Below 1 V
N3–10 (AUI–) – N3–17 (GND)	LG*1, R*2 – W–B	Audio system is playing	A waveform synchronized with sounds is output
N3–11 (AUO–) – N3–17 (GND)	V*1, L*2 – W–B	Sound quality test	–
N3–14 (REV) – N3–17 (GND)	R–Y – W–B	See ”Vehicle Signal Check Mode”	–
N3–17 (GND) – Body ground	W–B – Body ground	Always	Continuity
N3–18 (ACC) – N3–17 (GND)	GR – W–B	Ignition switch ACC	10 to 14 V
N4–1 (VR) – N4–6 (VG)	Y – Shielded	Ignition switch OFF	Below 1 V
N4–2 (R) – N4–6 (VG)	R – Shielded	Navigation display is displayed	Pulse generation *2
N4–3 (B) – N4–6 (VG)	B – Shielded	Navigation display is displayed	Pulse generation *2
N4–5 (TX+)	V	See ”Service Check Mode”	–
N4–6 (VG) – Body ground	Shielded – Body ground	Always	Continuity
N4–7 (G) – N4–6 (VG)	G – Shielded	Navigation display is displayed	Pulse generation *2

Symbols (Terminals No.)	Wiring Color	Condition	Specification
N4–8 (SYNC) – N4–6 (VG)	W – Shielded	Navigation display is displayed	Pulse generation *1
N4–10 (TX–)	LG	See "Service Check Mode"	–

*1: LHD

*2: RHD

2. MULTI–DISPLAY (CRT DISPLAY) DISPLAY

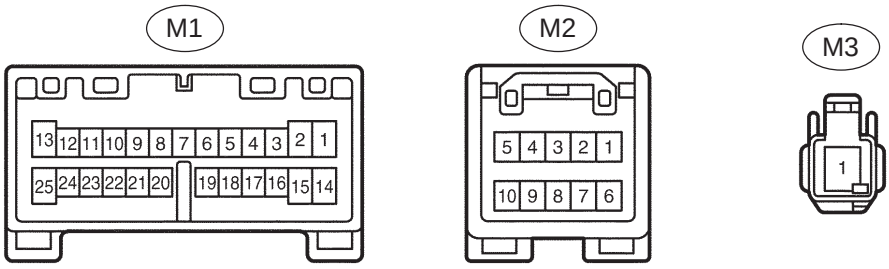

P I34717

Symbols (Terminals No.)	Wiring Color	Condition	Specification
M1–1 (+B1) – M2–1 (GND2)	L–Y – W–B	Always	10 to 14 V
M1–3 (IG) – M2–1 (GND2)	R–W – W–B	Ignition switch ON	10 to 14 V
M1–4 (SPD) – M2–1 (GND2)	V–W – W–B	See "Vehicle Signal Check"	–
M1–5 (GTX+)	P	See "Service Check Mode"	–
M1–10 (RE1) – M1–22 (SGD1)	R – Shielded	Ignition switch ACC	Approx. 3.3 V
M1–12 (TX3+)	G–Y	See "Service Check Mode"	–
M1–14 (ACC) – M2–1 (GND2)	GR – W–B	Ignition switch ACC	10 to 14 V
M1–15 (ST1) – M2–1 (GND2)	B–W – W–B	Ignition switch START	10 to 14 V
M1–16 (TC) – M2–1 (GND2)	W–L – W–B	Ignition switch OFF and connect terminals TC and GND1 of check connector	Continuity
M1–17 (PKB) – M2–1 (GND2)	B–W – W–B	See "Vehicle Signal Check Mode"	–
M1–18 (GTX–)	LG	See "Service Check Mode"	–
M1–22 (SGD1) – Body ground	Shielded – Body ground	Always	Continuity
M1–24 (TX3–)	G	See "Service Check Mode"	–
M1–25 (GND1) – Body ground	W–B – Body ground	Always	Continuity
M2–1 (GND1) – M1–6 (VG)	Y – Shielded	Ignition switch OFF	Below 1 V
M2–2 (R) – M1–6 (VG)	R – Shielded	Navigation display is displayed	Pulse generation *2
M–2 (B) – M1–6 (B – VG)	B – Shielded	Navigation display is displayed	Pulse generation *2
M2–5 (CTX+)	V	See "Service Check Mode"	–
M2–6 (VG) – Body ground	Shielded – Body ground	Always	Continuity
M2–7 (G) – M1–6 (VG)	G – Shielded	Navigation display is displayed	Pulse generation *2

Symbols (Terminals No.)	Wiring Color	Condition	Specification
M2–8 (SYNC) – M1–6 (VG)	W – Shielded	Navigation display is displayed	Pulse generation *1
M2–10 (CTX–)	LG	See "Service Check Mode"	–
M3–1 (GND2) – Body ground	W–B – Body ground	Always	Continuity

3. BODY ECU (COMBINATION METER ASSY)

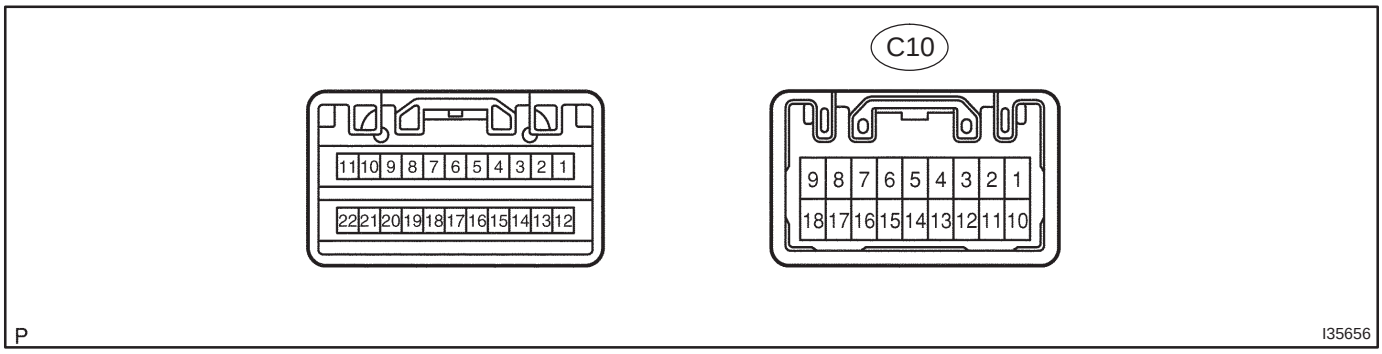

Symbols (Terminals No.)	Wiring Color	Condition	Specification
C10–3 (GTX+)	G–Y	See "Service Check Mode"	–
C10–4 (GTX–)	G	See "Service Check Mode"	–

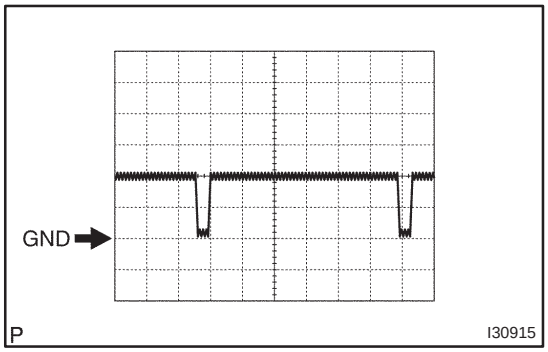

(a) *1: Oscilloscope wave
Terminal to be measured: SYNC – GND
Setting for measurement: 500 mV/DIV10– μs/DIV
Condition: Navigation display is displayed.

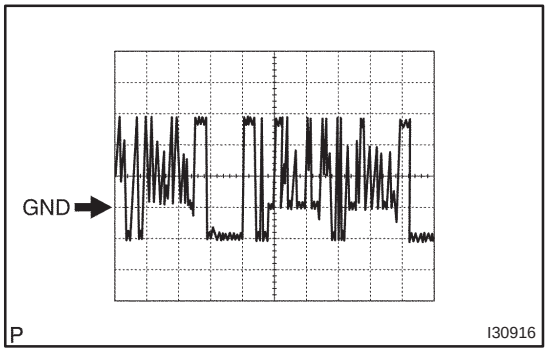

(b) *2: Oscilloscope wave
Terminal to be measured: R, G, B – GND
Setting for measurement: 200 mV/DIV10– μs/DIV
Condition: Navigation map is switched.

05C3G–01

PROBLEM SYMPTOMS TABLE

Symptom	Suspect Area	See page
Black screen	1. RAD No.2 fuse 2. Power source circuit (multi–display (CRT display)display) 3. AVC–LAN circuit	01–5 05–1465 05–1471
Navigation screen display nothing	1. RAD No.2 fuse 2. Power source circuit (navigation ECU) 3. AVC–LAN circuit	01–5 05–1467 05–1471
Navigation screen is not stabilized (Synchronous error)	1. RAD No.2 fuse 2. Power source circuit (navigation ECU) 3. Navigation screen is not stabilized (Synchronous error)	01–5 05–1467 05–1475
Color on navigation screen is unusual (RGB signal error)	1. RAD No.2 fuse 2. Power source circuit (navigation ECU) 3. Color on navigation screen is unusual (RGB signal error)	01–5 05–1467 05–1477
Front speaker (driver side) only is not heard	–	05–1479
Map disc cannot be inserted	1. RAD No.2 fuse 2. Power source circuit (navigation ECU)	01–5 05–1467
Current position cannot be displayed on screen (disc caution screen does not change)	–	05–1483
Map is displayed in white or blue screen (switched and vehicle position mark are displayed)	–	05–1484
Vehicle position is deviated from correct point badly	1. Vehicle position is deviated from correct point badly. 2. GPS mark does not appear.	05–1485 05–1487
GPS mark does not appear	–	05–1487
Vehicle position mark rotates without control (map rotates without control)	–	05–1488
Driving directions are opposite to moving direction of vehicle position mark	–	05–1490
A navigation controller assy does not operate	1. A navigation controller assy does not operate 2. The system cannot be operated by the voice sound	05–1491 05–1494
When mount the navigation controller to the navigation controller system, it cannot be operated	1. RAD No.2 fuse 2. Power source circuit (navigation controller holder) 3. When mount the navigation controller holder to the navigation controller system, it cannot be operated 4. The system cannot be operated by the voice sound	01–5 05–1469 05–1492 05–1494
The system cannot be operated by the voice sound	1. The system cannot be operated by the voice sound 2. AVC–LAN circuit	05–1494 05–1471

POWER SOURCE CIRCUIT (MULTI–DISPLAY (CRT DISPLAY) DISPLAY)

WIRING DIAGRAM

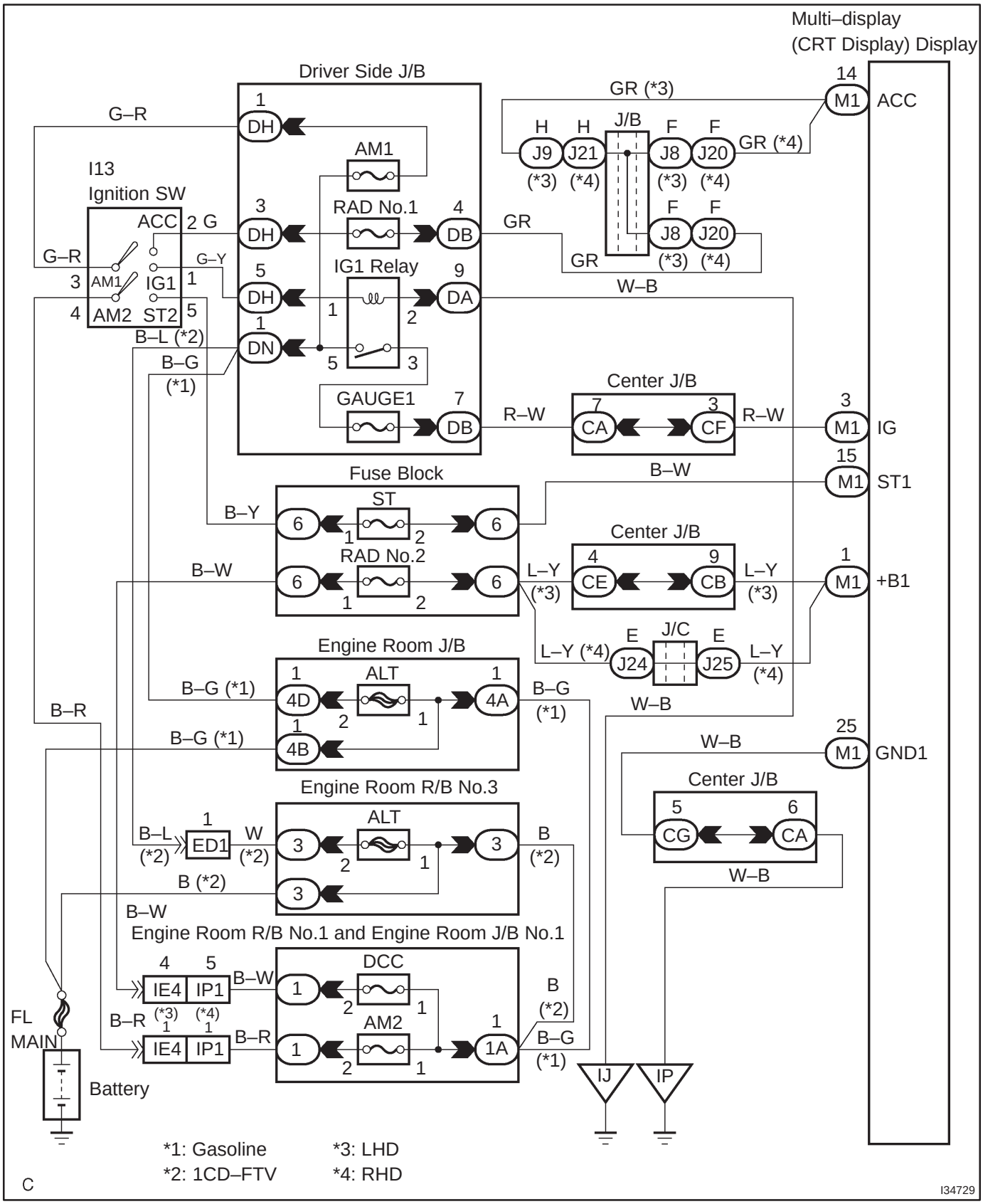

INSPECTION PROCEDURE

1	INSPECT MULTI–DISPLAY (CRT DISPLAY) DISPLAY(ACC, IG, ST1, +B1, GND1)

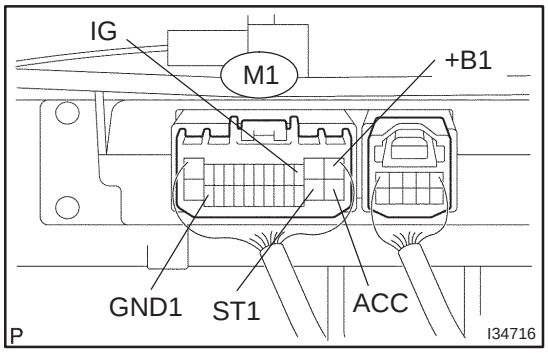

(a) Remove the multi–display (CRT display) display.

(b) Check continuity between the terminals at each condition, as shown in the chart.

Standard:

Tester connection	Condition	Specified condition
GND1 – Body ground	Always	Continuity

(c) Check the voltage between the terminals at each condition, as shown in the chart.

Standard:

Tester connection	Condition	Specified condition
+B1 – GND1	Always	10 to 14 V
IG – GND1	Ignition SW ON	10 to 14 V
ACC – GND1	Ignition SW ACC	10 to 14 V
ST1 – GND1	Ignition SW ON	10 to 14 V

NG → **REPAIR OR REPLACE HARNESS OR CONNECTOR**

OK

2	CHECK FOR PROBLEM SYMPTOMS TABLE

(a) Check the problem symptoms table (See page 05–1464).

A	Suspected areas are cleared
B	Suspected areas still exist

B → **PROCEED TO NEXT CIRCUIT INSPECTION SHOWN ON PROBLEM SYMPTOMS TABLE (See page 05–1464)**

A

REPLACE MULTI–DISPLAY (CRT DISPLAY) DISPLAY (See page 67–6)

POWER SOURCE CIRCUIT (NAVIGATION ECU)

WIRING DIAGRAM

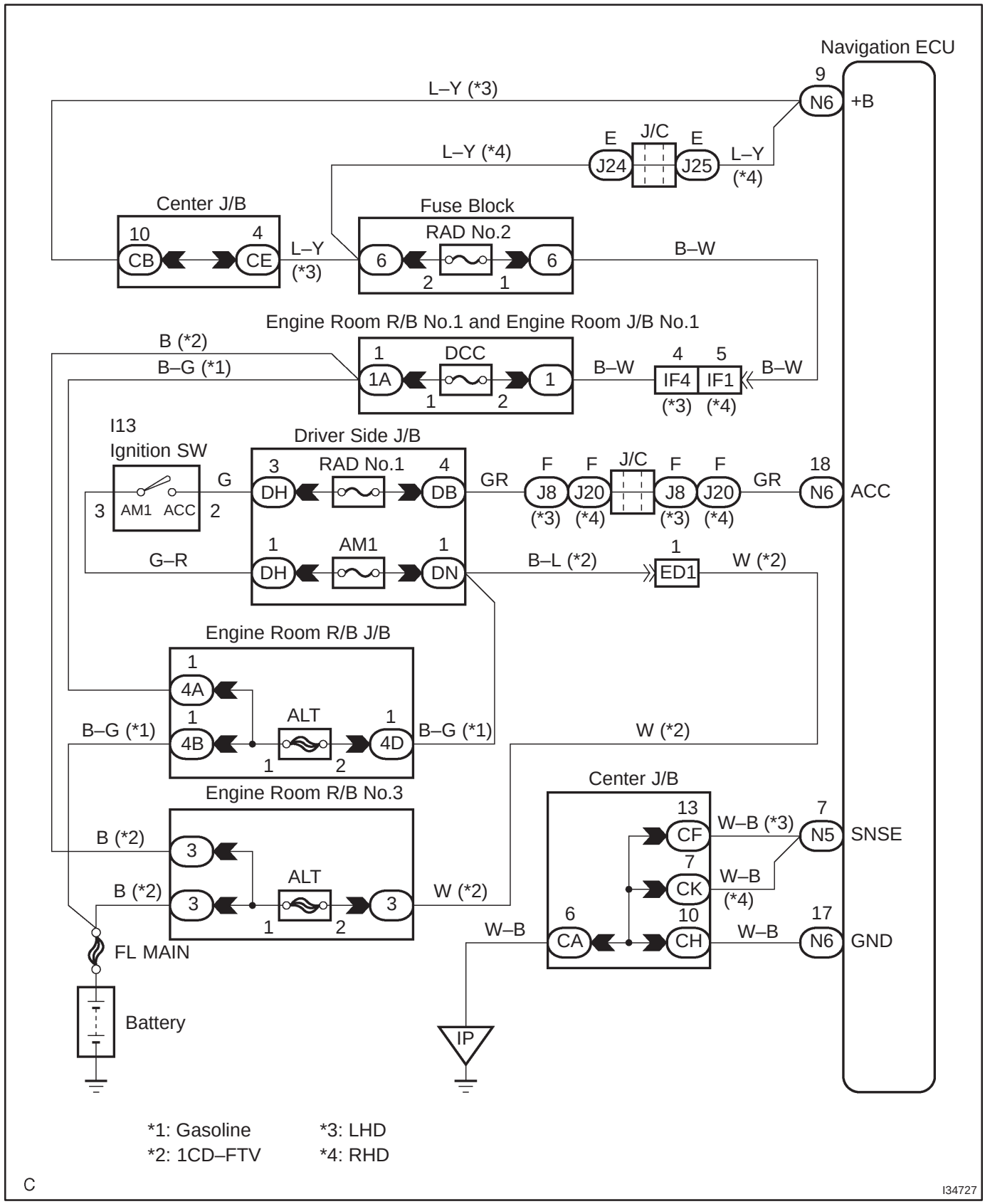

INSPECTION PROCEDURE

1 INSPECT NAVIGATION ECU(+B, ACC, SNSE, GND)

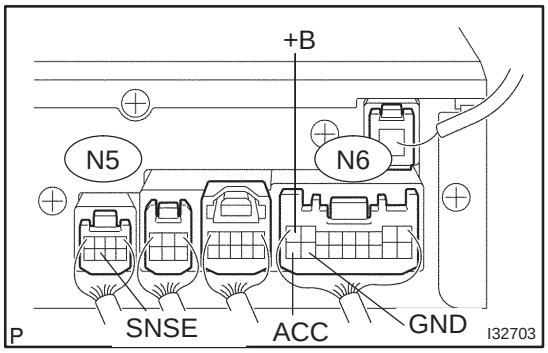

(a) Remove the navigation ECU.

(b) Check continuity between the terminals at each condition, as shown in the chart.

Standard:

Tester connection	Condition	Specified condition
GND – Body ground	Always	Continuity
SNSE – Body ground	Always	Continuity

(c) Check the voltage between the terminals at each condition, as shown in the chart.

Standard:

Tester connection	Condition	Specified condition
+B – GND	Always	10 to 14 V
ACC – GND	Ignition SW ACC, ON	10 to 14 V

NG → **REPAIR OR REPLACE HARNESS OR CONNECTOR**

OK

2 CHECK FOR PROBLEM SYMPTOMS TABLE

(a) Check the problem symptoms table (See page 05–1464).

A	Suspected areas are cleared
B	Suspected areas still exist

B → **PROCEED TO NEXT CIRCUIT INSPECTION SHOWN ON PROBLEM SYMPTOMS TABLE (See page 05–1464)**

A

REPLACE NAVIGATION ECU (See page 67–27)

POWER SOURCE CIRCUIT (NAVIGATION CONTROLLER HOLDER)

WIRING DIAGRAM

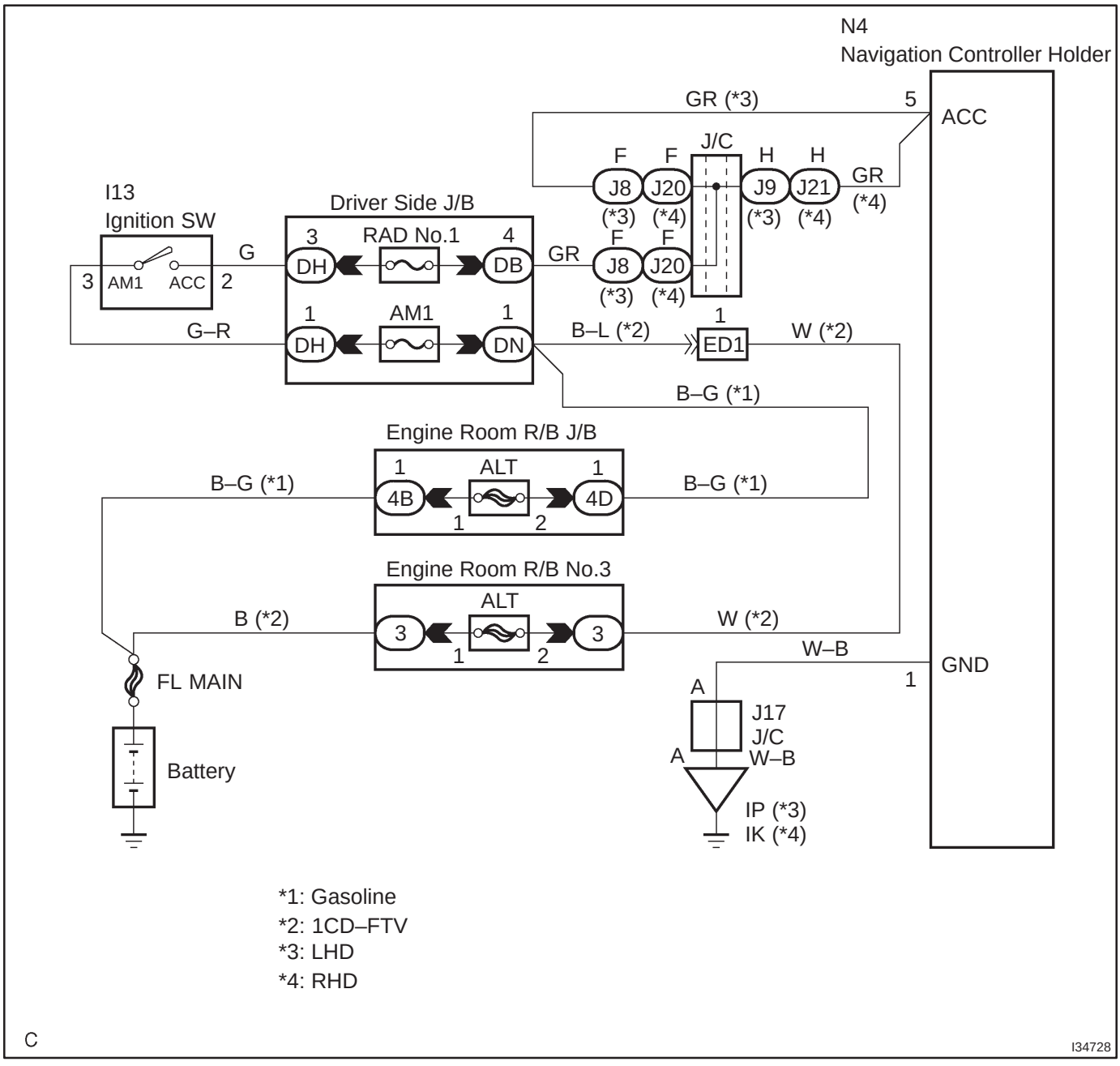

1 INSPECT NAVIGATION CONTROLLER HOLDER(ACC, GND)

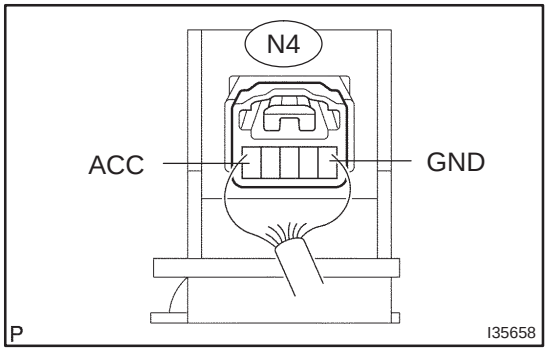

(a) Remove the navigation controller holder.

(b) Check continuity between the terminals at each condition, as shown in the chart.

Standard:

Tester connection	Condition	Specified condition
GND – Body ground	Constant	Continuity

(c) Check the voltage between the terminals at each condition, as shown in the chart.

Standard:

Tester connection	Condition	Specified condition
ACC – GND	Ignition SW ACC	10 to 14 V

NG → **REPAIR OR REPLACE HARNESS OR CONNECTOR**

OK

2 CHECK FOR PROBLEM SYMPTOMS TABLE

(a) Check the problem symptoms table (See page 05–1464).

A	Suspected areas are cleared
B	Suspected areas still exist

B → **PROCEED TO NEXT CIRCUIT INSPECTION SHOWN ON PROBLEM SYMPTOMS TABLE (See page 05–1464)**

A

REPLACE NAVIGATION CONTROLLER HOLDER

AVC–LAN CIRCUIT

WIRING DIAGRAM

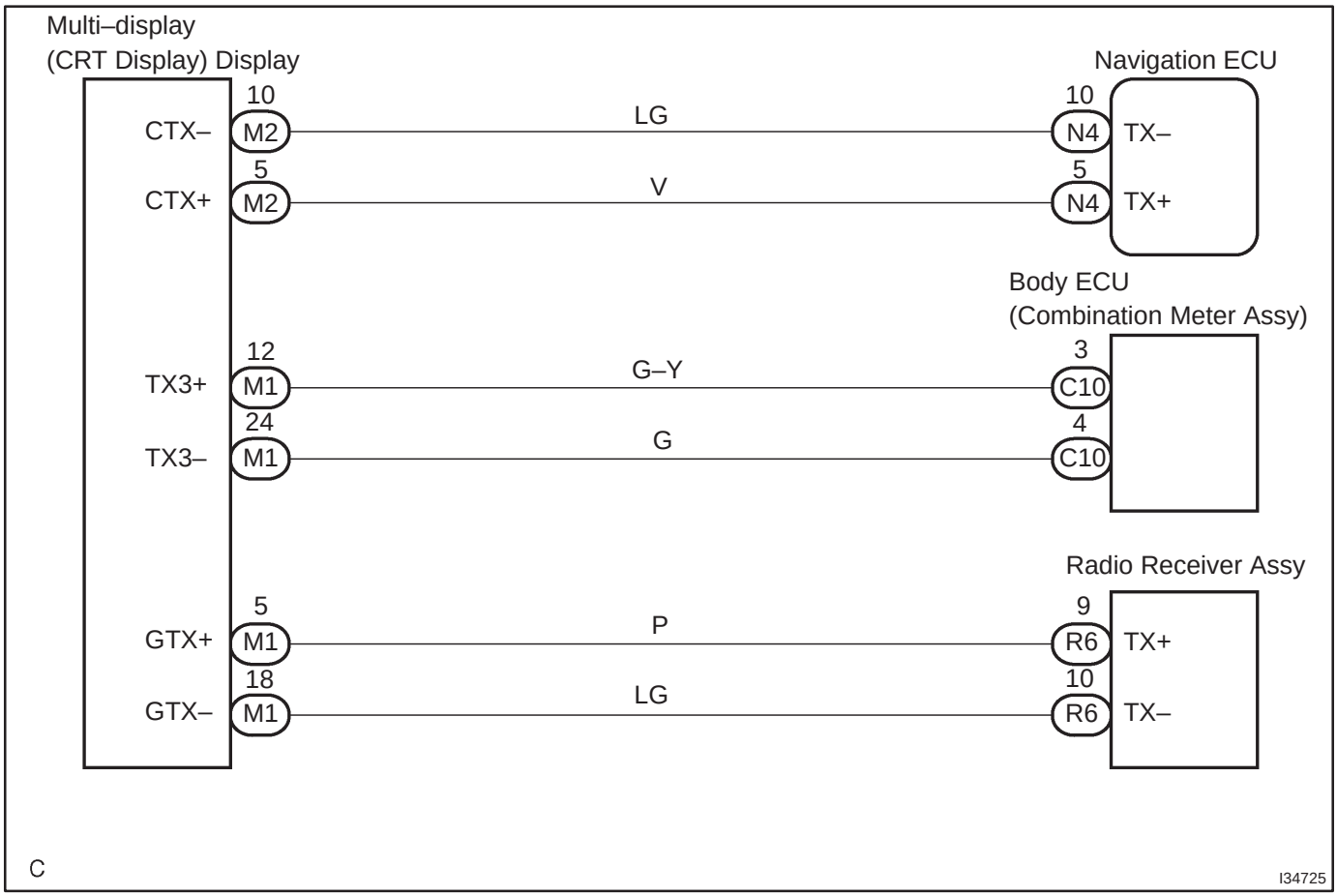

INSPECTION PROCEDURE

1	INSPECT APPARATUS

(a) Choose the apparatus to be inspected.

Apparatus	Go to step
Radio receiver assy	A
Navigation ECU	B
Body ECU (Combination Meter Assy)	C

B → **Go to step 4**

C → **Go to step 6**

A

2	SERVICE CHECK MODE(RADIO RECEIVER ASSY)

(a) Perform the service check.
(1) Start the diagnosis system and read the check result for the radio receiver assy.
Standard:

A	”NCON” is displayed or nothing is displayed (AUDIO H/U)
B	”GOOD” is displayed

B → **REPLACE MULTI–DISPLAY (CRT DISPLAY) DISPLAY (See page 67–6)**

A

3	CHECK HARNESS AND CONNECTOR(MULTI–DISPLAY (CRT DISPLAY) DISPLAY – RADIO RECEIVER ASSY)

Multi–display (CRT Display) Display:

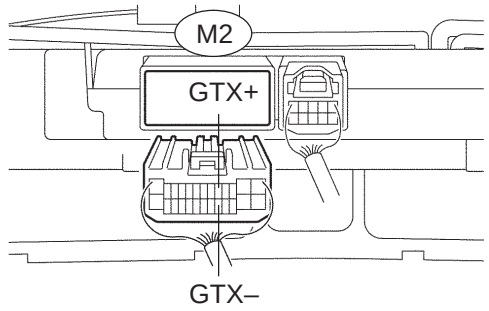

Radio Receiver Assy:

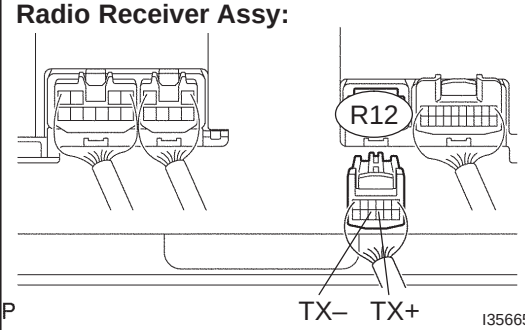

(a) Disconnect the connectors from the multi–display (CRT display) display and radio receiver assy.
(1) Check continuity between the terminals at each condition, as shown in the chart.
Standard:

Tester connection	Specified condition
GTX+ – TX+	Continuity
GTX– – TX–	Continuity

(2) Check for a short between the terminals at each condition, as shown in the chart.
Standard:

Tester connection	Specified condition
GTX+ – Body ground	No continuity
GTX– – Body ground	No continuity

NG → **REPAIR OR REPLACE HARNESS OR CONNECTOR**

OK

REPLACE RADIO RECEIVER ASSY (See page 67–5)

4	SERVICE CHECK MODE(NAVIGATION ECU)

(a) Perform the service check.
(1) Start the diagnosis system and read the check result for the navigation ECU.
Standard:

A	”NCON” is displayed or nothing display (NAVI)
B	”GOOD” is display

B → **REPLACE MULTI–DISPLAY (CRT DISPLAY) DISPLAY (See page 67–6)**

A

5	CHECK HARNESS AND CONNECTOR(MULTI–DISPLAY (CRT DISPLAY) DISPLAY – NAVIGATION ECU)

Multi–display (CRT Display) Display:

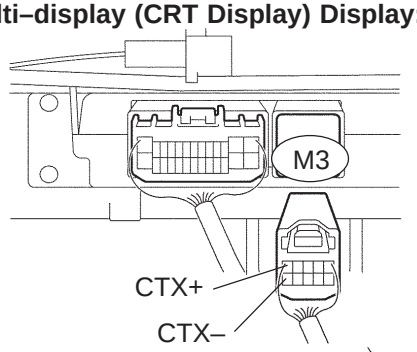

Navigation ECU:

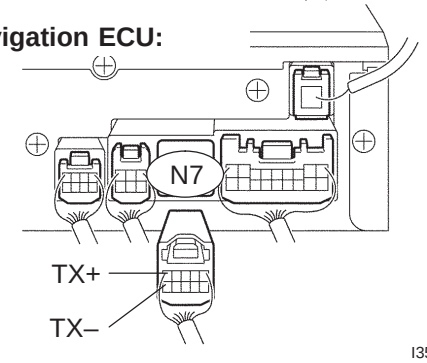

P I35666

(a) Disconnect the connectors from the multi–display (CRT display) display and navigation ECU.
(1) Check continuity between the terminals at each condition, as shown in the chart.
Standard:

Tester connection	Specified condition
CTX+ – TX+	Continuity
CTX– – TX–	Continuity

(2) Check for a short between the terminals at each condition, as shown in the chart.
Standard:

Tester connection	Specified condition
CTX+ – Body ground	No continuity
CTX– – Body ground	No continuity

NG → **REPAIR OR REPLACE HARNESS OR CONNECTOR**

OK

REPLACE NAVIGATION ECU (See page 67–27)

6	SERVICE CHECK MODE(BODY ECU)

(a) Perform the service check.
(1) Start the diagnosis system and read check result for body ECU.
Standard:

A	”NCON” is displayed or nothing display (BODY)
B	”GOOD” is display

B → **REPLACE MULTI–DISPLAY (CRT DISPLAY) DISPLAY (See page 67–6)**

A

7	CHECK HARNESS AND CONNECTOR(MULTI–DISPLAY (CRT DISPLAY) DISPLAY – BODY ECU)

Multi–display (CRT Display) Display:

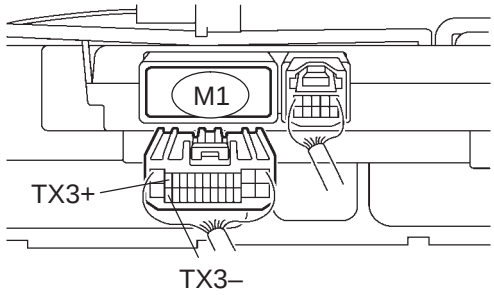

Body ECU (Combination Meter Assy):

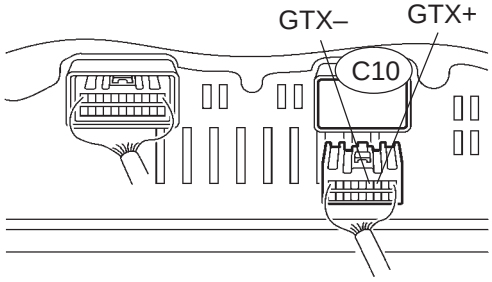

C

I35875

(a) Disconnect the connectors from the multi–display (CRT display) display and body ECU (Combination meter assy).
(1) Check continuity between the terminals at each condition, as shown in the chart.
Standard:

Tester connection	Specified condition
TX3+ – GTX+	Continuity
TX3– – GTX–	Continuity

(2) Check short between the terminals at each condition, as shown in the chart.
Standard:

Tester connection	Specified condition
TX3+ – Body ground	No continuity
TX3– – Body ground	No continuity

NG → **REPAIR OR REPLACE HARNESS OR CONNECTOR**

OK

REPLACE COMBINATION METER ASSY (See page 71–21)

NAVIGATION SCREEN IS NOT STABILIZED (SYNCRONOUS ERROR)

WIRING DIAGRAM

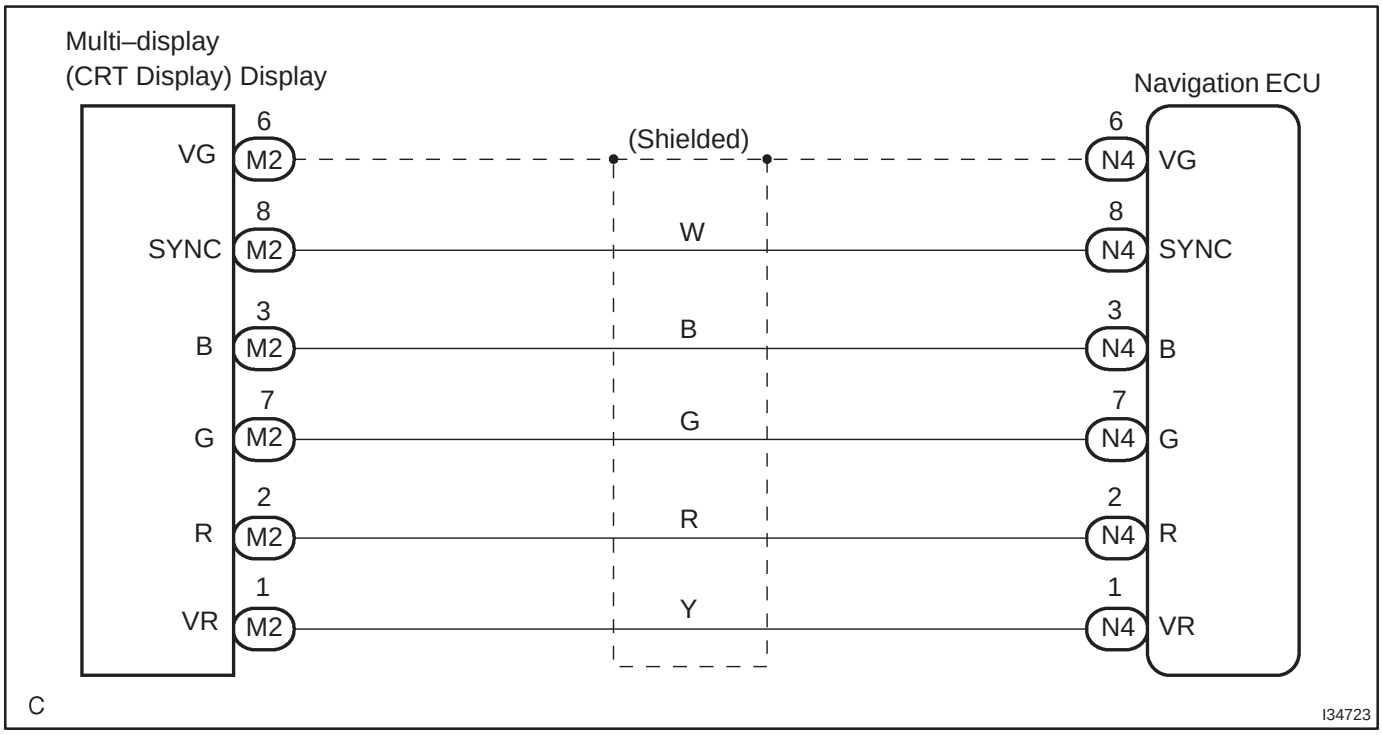

INSPECTION PROCEDURE

1	CHECK HARNESS AND CONNECTOR(MULTI–DISPLAY (CRT DISPLAY)DISPLAY – NAVIGATION ECU)

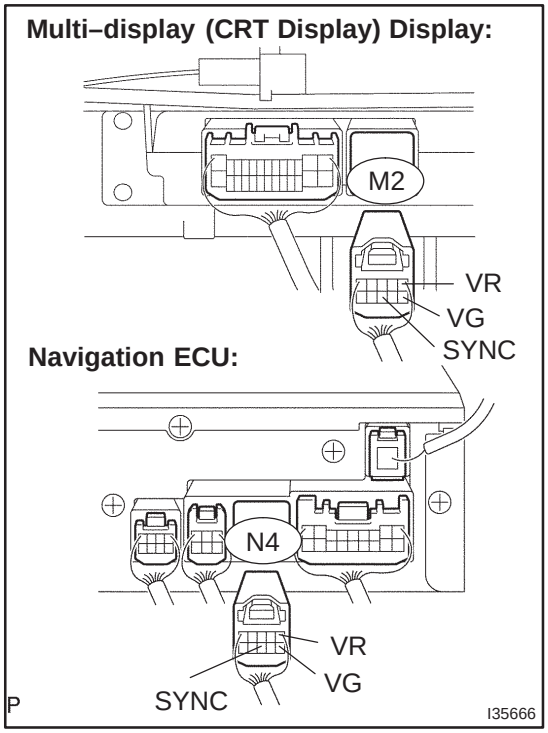

(a) Disconnect the connectors from the multi–display (CRT display)display and navigation ECU.

(1) Check continuity between the terminals at each condition, as shown in the chart.

Standard:

Tester connection	Specified condition
VG – VG	Continuity
VR – VR	Continuity
SYNC – SYNC	Continuity

(2) Check for a short between the terminals at each condition, as shown in the chart.

Standard:

Tester connection	Specified condition
VG – Body ground	Continuity
VR – Body ground	Continuity
SYNC – Body ground	No continuity

NG → **REPAIR OR REPLACE HARNESS OR CONNECTOR**

OK

2	REPLACE MULTI–DISPLAY (CRT DISPLAY) DISPLAY (See page 67–6)

Standard: Normally returns.

NG → **REPLACE NAVIGATION ECU (See page 67–27)**

OK

SYSTEM OK

COLOR ON NAVIGATION SCREEN IS UNUSUAL (RGB SIGNAL ERROR)

WIRING DIAGRAM

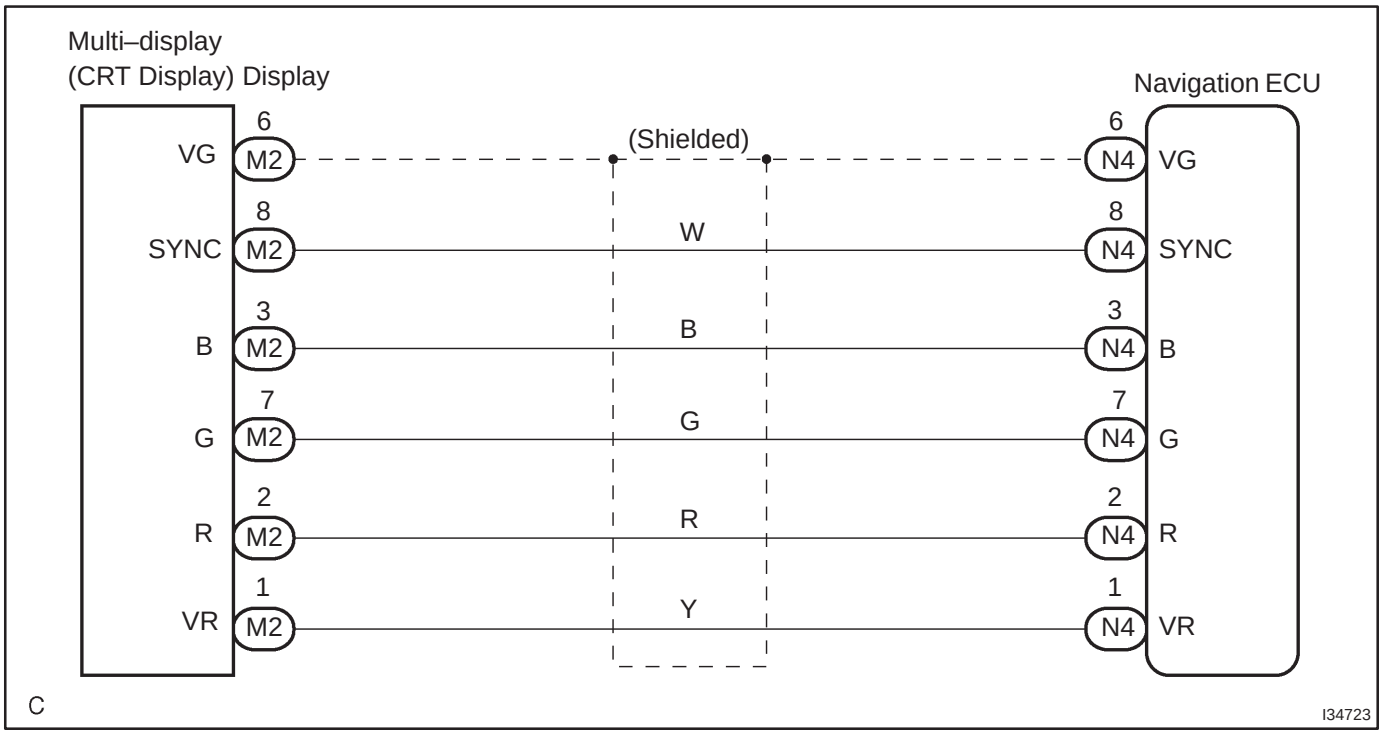

INSPECTION PROCEDURE

1	CHECK HARNESS AND CONNECTOR(MULTI–DISPLAY (CRT DISPLAY)DISPLAY – NAVIGATION ECU)

Multi–display (CRT Display) Display:

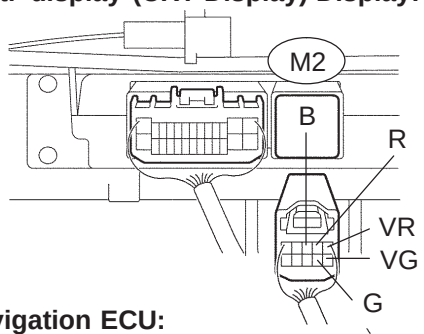

Navigation ECU:

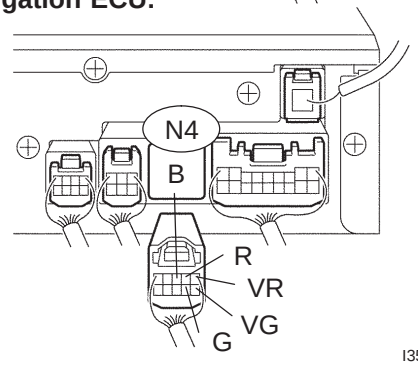

(a) Disconnect the connectors from the multi–display (CRT display)display and navigation ECU.

(1) Check continuity between the terminals at each condition, as shown in the chart.

Standard:

Tester connection	Specified condition
VG – VG	Continuity
VR – VR	Continuity
R – R	Continuity
G – G	Continuity
B – B	Continuity

(2) Check for a short between the terminals at each condition, as shown in the chart.

Standard:

Tester connection	Specified condition
VG – Body ground	Continuity
VR – Body ground	Continuity
R – Body ground	No continuity
G – Body ground	No continuity
B – Body ground	No continuity

NG → **REPAIR OR REPLACE HARNESS OR CONNECTOR**

OK

2	REPLACE MULTI–DISPLAY (CRT DISPLAY) DISPLAY (See page 67–6)

Standard: Normally returns.

NG → **REPLACE NAVIGATION ECU (See page 67–27)**

OK

SYSTEM OK

FRONT SPEAKER (DRIVER SIDE) ONLY IS NOT HEARD

WIRING DIAGRAM

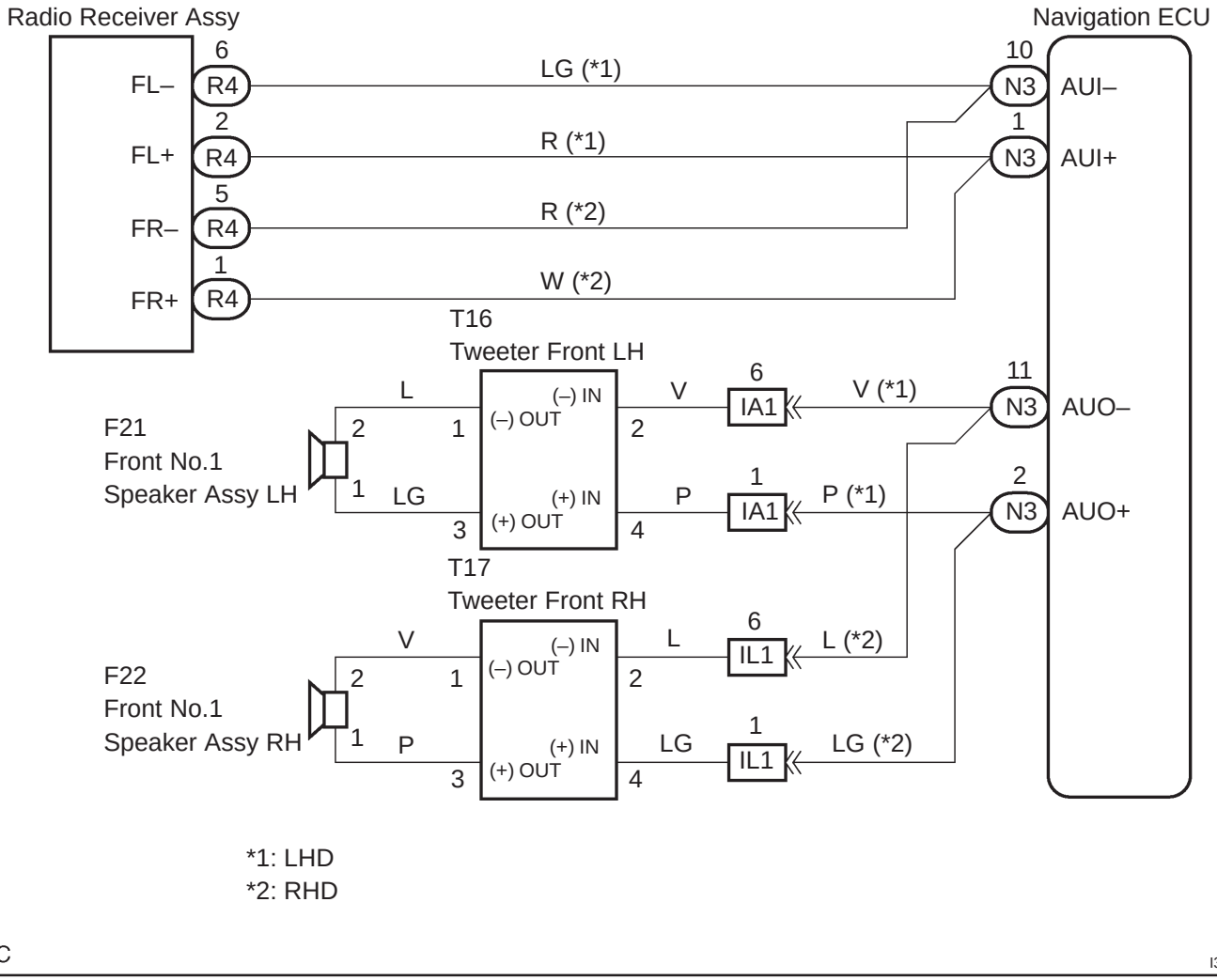

INSPECTION PROCEDURE

1	CHECK SETTING(THE VOLUME OF THE NAVIGATION VOICE SOUND)

(a) Check the settings.
(1) Set the volume MAX at the voice sound settings on the menu.
Standard: "This system will guide you in this volume" is produced.

OK → **Go to step 4**

NG

2	CHECK HARNESS AND CONNECTOR(NAVIGATION ECU – RADIO RECEIVER ASSY)

Navigation ECU:

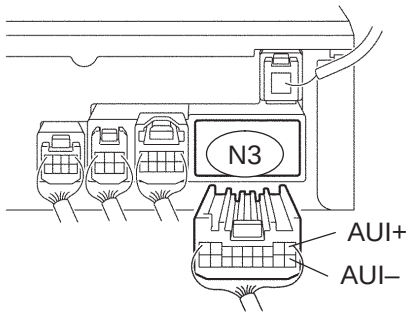

Radio Receiver Assy:

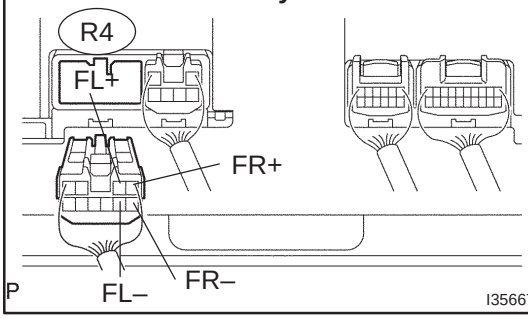

(a) Disconnect the connector between the navigation ECU and radio receiver assy.
(1) Check continuity between the terminals at each condition, as shown in the chart.
Standard:

Tester connection	Specified condition
FL+*1, FR+*2 – AUI+	Continuity
FL–*1, FR–*2 – AUI–	Continuity

*1: LHD Models
*2: RHD Models

(2) Check for a short between the terminals at each condition, as shown in the chart.
Standard:

Tester connection	Specified condition
AUI+ – Body ground	No continuity
AUI– – Body ground	No continuity

NG → **REPAIR OR REPLACE HARNESS OR CONNECTOR**

OK

3 INSPECT RADIO RECEIVER ASSY(FL+(*1), FL–(*1), FR+(*2), FR–(*2), GND)

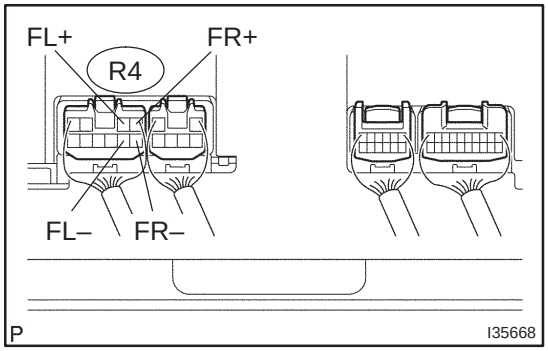

(a) Remove the radio receiver assy.
(b) Using an oscilloscope, check the signal waveform between the terminals FL+*1, FL–*1, FR+*2, FR–*2 and GND of stereo component amplifier assy.
*1: LHD Models
*2: RHD Models

Standard:

Tester connection	Condition	Specified condition
FL+*1, FR+*2 – GND	While voice sound is being produced	A waveform synchronized with sound is output
FL–*1, FL–*2 – GND	While voice sound is being produced	A waveform synchronized with sound is output

NG → **REPLACE RADIO RECEIVER ASSY (See page 67–5)**

OK

4 INSPECT FRONT NO.1 SPEAKER ASSY

(a) Resistance check
(1) Check resistance between the terminals of the front No.1 speaker assy.
Standard: 4 Ω

NOTICE:
The speaker should not be removed for checking

NG → **REPLACE FRONT NO.1 SPEAKER ASSY (See page 67–10)**

OK

5	CHECK HARNESS AND CONNECTOR(NAVIGATION ECU – FRONT NO. 1 SPEAKER ASSY)

Navigation ECU:

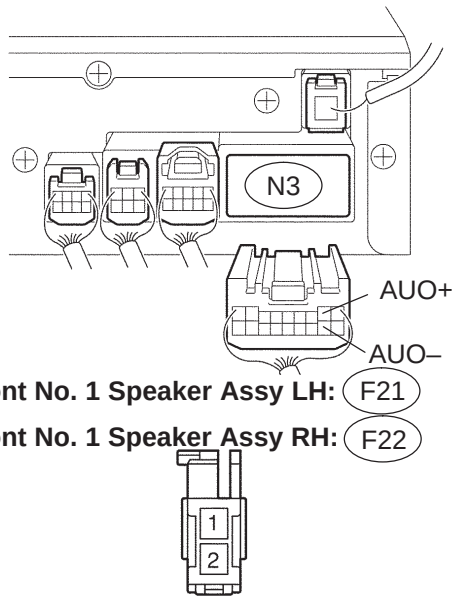

(a) Disconnect the connectors from the navigation ECU and front No.1 speaker assy.

(1) Check continuity between the terminals at each condition, as shown in the chart.

Standard:

Tester connection	Specified condition
AUO+ – 1	Continuity
AUO– – 2	Continuity

(2) Check for a short between the terminals at each condition, as shown in the chart.

Standard:

Tester connection	Specified condition
AUO+ – Body ground	No continuity
AUO– – Body ground	No continuity

NG → **REPAIR OR REPLACE HARNESS OR CONNECTOR**

OK

REPLACE NAVIGATION ECU (See page 67–27)

CURRENT POSITION CANNOT BE DISPLAYED ON SCREEN (DISC CAUTION SCREEN DOES NOT CHANGE)

INSPECTION PROCEDURE

1	TAKE APPROPRIATE MESURES ACCORDING TO CAUTION SCREEN

(a) Take appropriate measures according to the caution screen.

CAUTION SCREEN

CAUTION MESSAGE	CAUSE	CORRECTIVE ACTION
Cover is open. Please close disc cover before using system.	The cover of the map disc slot is open.	Close the cover.
No disc detected. Insert map disc.	No map disc is inserted.	Insert a proper map disc.
No disc detected. Insert map disc. Check flaw or dirt on disc.	Cannot read correctly due to flaw or dirt.	Insert a correct map disc.
Disc read error. Check disc.	Something other than map disc is inserted.	Insert a correct map disc.
Disc read error due to high temperature.	Pick–up part of the player is heated to a high temperature.	Stop the vehicle at a shaded cool place and turn the ignition switch OFF. When confirming that the temperature of the navigation ECU has been lowered, turn the ignition switch ON.
Disc read error. Consult dealer/shop.	Player cannot read map disc temporarily.	Turn the IG switch from OFF to ON. (*1)

*1: If the same ”CAUTION MESSAGE” is displayed again even after turning the ignition switch to ON, replace the navigation ECU.

Standard: Correctly functions.

OK → **SYSTEM OK**

NG

2	REPLACE DISC PLAYER DISC

Standard: Normally returns.

OK → **SYSTEM OK**

NG

REPLACE NAVIGATION ECU (See page 67–27)

MAP IS DISPLAYED IN WHITE OR BLUE SCREEN (SWITCHED AND VEHICLE POSITION MARK ARE DISPLAYED)

INSPECTION PROCEDURE

1	CHECK SETTING

(a) Check the settings.
(1) Check that the map display is normal when the map scale is set to the widest area.
Standard: Map display is normal

OK → **SYSTEM OK**

NG

2	CHECK AND OPERATE AGAIN

(a) Clean the map disc.
(1) After wiping the map disc in the circumference direction with a soft cloth, insert it again.

OK → **SYSTEM OK**

NG

3	REPLACE DISC PLAYER DISC

Standard: Normally returns

OK → **SYSTEM OK**

NG

REPLACE NAVIGATION ECU (See page 67–27)

VEHICLE POSITION IS DEVIATED FROM CORRECT POINT BADLY

INSPECTION PROCEDURE

1	CHECK DISPLAY(GPS MARK DISPLAY)

(a) Preparation for the pre–check.
  (1) Place the vehicle outdoors with a good view of the GPS mark.
(b) Check the screen display.
  (1) Turn the ignition switch ON.
  (2) Turn the power switch of the radio receiver assy ON to display the map.
  Standard: ”GPS” mark appears

NG → **PROCEED TO NEXT CIRCUIT INSPECTION SHOWN ON PROBLEM SYMPTOMS TABLE (See page 05–1464)**

OK

2	CHECK WHEN THIS HAPPENS

(a) Check the abnormal condition.
  (1) Check the point in which the trouble occurs.
  Standard:

A	The trouble occurs outside the specific area
B	The trouble occurs in the specific area

HINT:
At the place difficult to specify the vehicle position (a by–pass road, a overhand road, a loop road, or several–storied car park, etc.), the vehicle position may be out of the point due to the wrong matching.

B → **SYSTEM OK**

A

3	CHECK DISPLAY(AUTOMATIC CALIBRATION)

(a) Check the screen display.
  (1) Check the color of ”Automatic calibration” switch at the distance correction screen.
  Standard: Green (”Automatic calibration” switch)

OK → **SYSTEM OK**

NG

4	NAVIGATION CHECK MODE(VEHICLE SENSORS)

(a) Check the vehicle input signals.
(1) Start up the diagnosis system and read the SPEED signal in vehicle signal check mode.
Standard: Input signal is normal (SPEED)

NG → **Go to step 6**

OK

5	CHECK AND OPERATE AGAIN

Standard: Normally returns

OK → **SYSTEM OK**

NG

REPLACE NAVIGATION ECU (See page 67–27)

6	INSPECT NAVIGATION ECU(SPD, GND1)

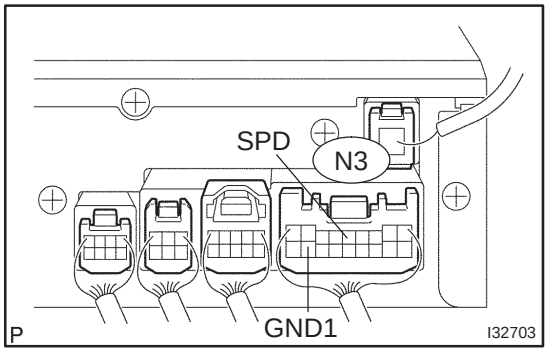

(a) Remove the navigation ECU.
(b) Check the voltage.
(1) Shift the shift lever to neutral.
(2) Jack up either one of the front wheels.
(3) Turn ignition switch ON.
(4) Measure the voltage between the terminal SPD and GND1 of navigation ECU when the front wheels are turned slowly.
Standard: Voltage is pulsed.

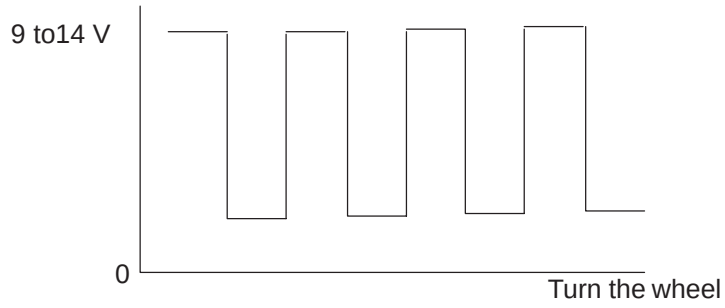

OK → **REPLACE NAVIGATION ECU (See page 67–27)**

NG

REPAIR OR REPLACE HARNESS OR CONNECTOR

GPS MARK DOES NOT APPEAR

INSPECTION PROCEDURE

1	CHECK MARK DISPLAY

(a) Check that the malfunction disappears when placing the vehicle outdoors with a good view.
Standard: GPS mark is displayed.

HINT:
At the place surrounded by the architecture, the vehicle cannot receive the GPS radio wave.

OK → **SYSTEM OK**

NG

2	CHECK OPTIONAL COMPONENT

(a) Check for optional component.
(1) Check if there are any optional components on the vehicle.
Standard: There are no optional components on the vehicle.
(2) Check if there is anything such as film stuck to the window or any metal objects on the instrument panel.
Standard: There is nothing such as film stuck to the window or any metal objects on the instrument panel.

NG → **EFFECT FROM OPTIONAL COMPONENT**

OK

3	REPLACE NAVIGATION ANTENNA ASSY (See page 67–28)

Standard: Normally returns.

NG → **REPLACE NAVIGATION ECU (See page 67–27)**

OK

SYSTEM OK

VEHICLE POSITION MARK ROTATES ARBITRARILY (MAP ROTATES ARBITRARILY)

WIRING DIAGRAM

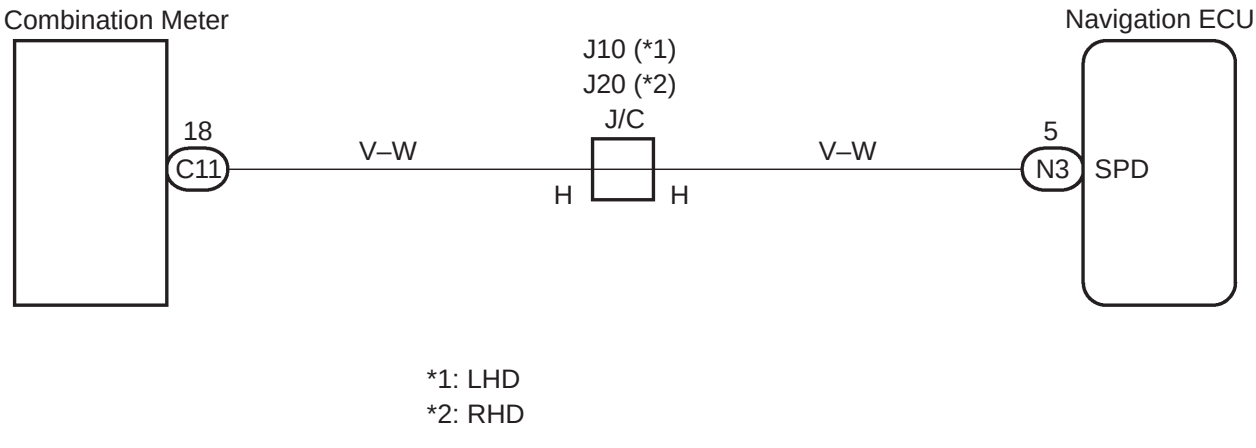

INSPECTION PROCEDURE

1	CHECK AND OPERATE AGAIN

(a) Turn the ignition switch from OFF to ON, check that the malfunction disappears.
Standard: Malfunction disappears

HINT:
Even if the system works correctly, the following conditions may be seen: vehicle position mark turns, or the map turns unwillingly. (It is because by turning the IG switch to ACC or ON during turning, navigation system stores based on the angular speed). In that case, turn the IG switch from OFF to ACC or ON to return the correct function.

OK	SYSTEM OK

NG

2	NAVIGATION CHECK MODE(VEHICLE SENSORS)

(a) Check the vehicle input signals.
(1) Start up the diagnosis system and read the ”SPD” signal in vehicle sensors mode.
Standard: Input signal is normal

OK	REPLACE NAVIGATION ECU (See page 67–27)

NG

3	INSPECT NAVIGATION ECU(SPD)

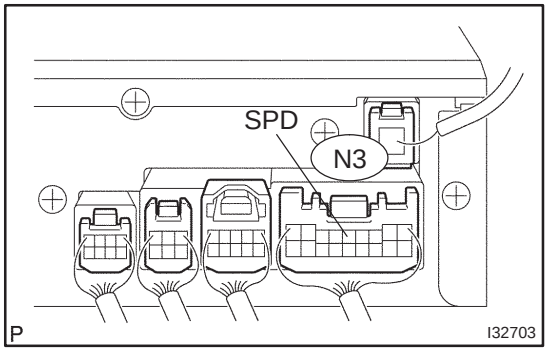

(a) Remove the navigation ECU.
(b) Check the voltage.
  (1) Shift the shift lever to neutral.
  (2) Jack up either one of the front wheels.
  (3) Turn ignition switch ON.
  (4) Measure the voltage between the terminal SPD of navigation ECU and body ground when the front wheel are turned slowly.

Standard: Voltage is pulsed.

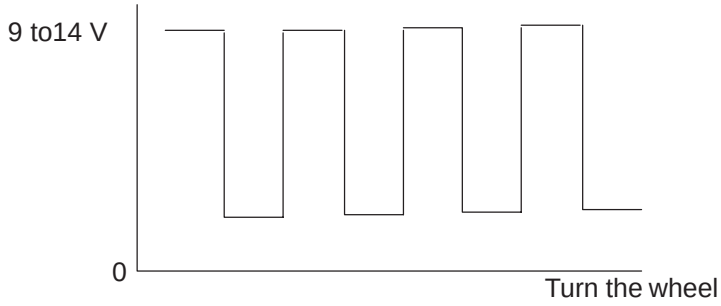

OK → **REPLACE NAVIGATION ECU**
(See page 67–27)

NG

REPAIR OR REPLACE HARNESS OR CONNECTOR

DRIVING DIRECTIONS ARE OPPOSITE TO MOVING DIRECTION OF VEHICLE POSITION MARK

WIRING DIAGRAM

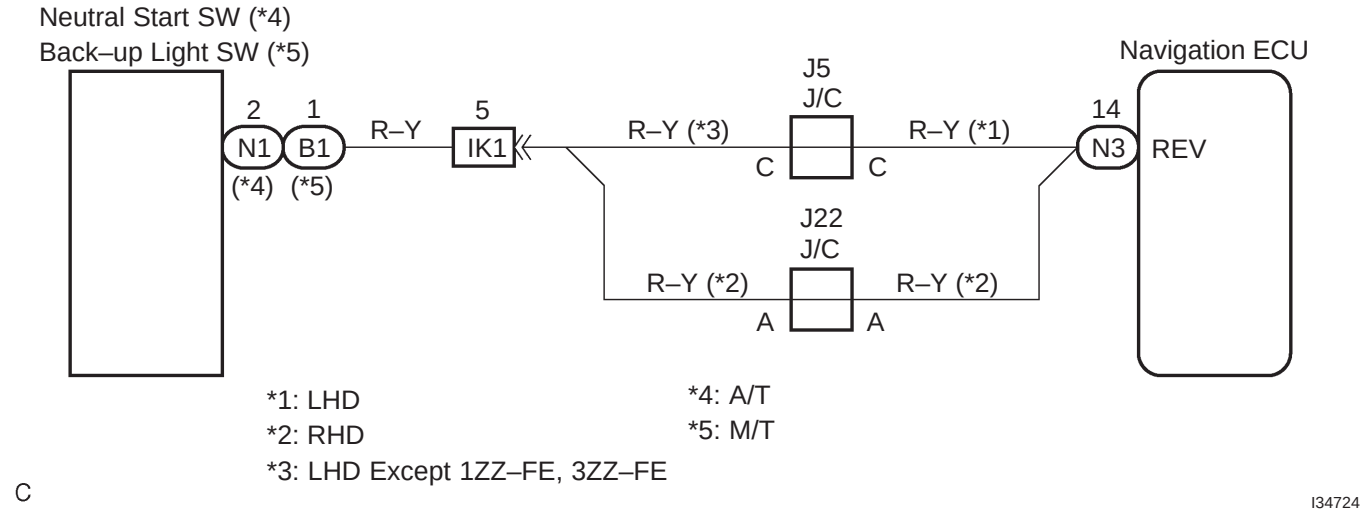

INSPECTION PROCEDURE

1	NAVIGATION CHECK MODE(VEHICLE SENSORS)

(a) Check the vehicle input signals.
(1) Start up the diagnosis system and read the REV signal in vehicle sensors mode.
Standard: Input signal is normal (REV)

OK → **REPLACE NAVIGATION ECU (See page 67–27)**

NG

2	INSPECT NAVIGATION ECU(REV)

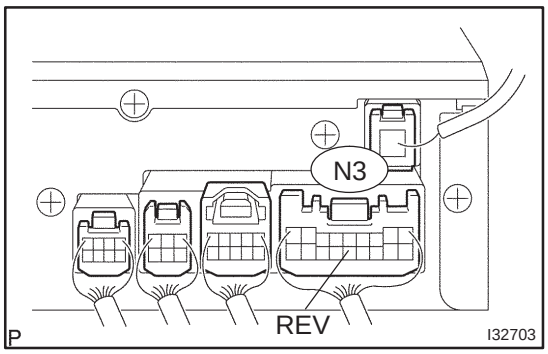

(a) Remove the navigation ECU.
(b) Check the voltage.
(1) Measure the voltage between the terminal REV of navigation ECU and body ground.
Voltage:

Terminal	Condition	Voltage (V)
REV – Body ground	Turn ignition switch ON and put gear shift in R range	10 to 14

OK → **REPLACE NAVIGATION ECU (See page 67–27)**

NG

REPAIR OR REPLACE HARNESS OR CONNECTOR

A NAVIGATION CONTROLLER ASSY DOES NOT OPERATE

INSPECTION PROCEDURE

1	CHECK MALFUNCTION SYMPTOMS

(a) Check obstruction.
(1) Check that there are no obstructions between the navigation controller assy and the infrared ray light emission portion of the multi–display (CRT display) display.
Standard: Normally returns

OK → **SYSTEM OK**

NG

2	CHECK BATTERY(NAVIGATION CONTROLLER ASSY)

(a) Check battery.
(1) Check that the dry–cell battery used for the navigation controller assy is not dead.
Standard: It is not dead

NG → **BATTERY IS DEAD**

OK

3	CLEAN THE INFRARED RAY EMITTED PORTION

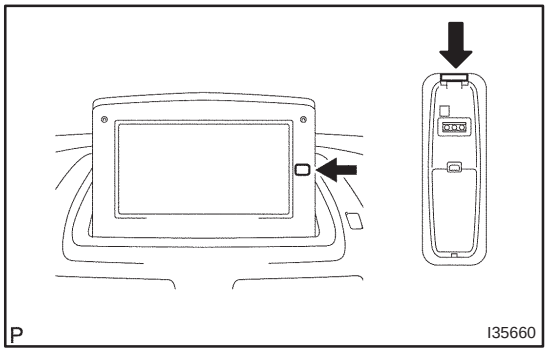

(a) Clean the infrared ray emitted portion.
(1) Clean the infrared ray emitted portion on the multi–display (CRT display) display and navigation controller assy.
(2) Check whether the same malfunction occurs.
Standard: The function returns to normal.

OK → **DIRT AT THE INFRARED RAY EMITTED PORTION**

NG

4	REPLACE NAVIGATION CONTROLLER ASSY

Standard: Normally returns

OK → **SYSTEM OK**

NG

REPLACE MULTI–DISPLAY (CRT DISPLAY) DISPLAY (See page 67–6)

WHEN MOUNT THE NAVIGATION CONTROLLER ASSY TO THE NAVIGATION CONTROLLER HOLDER, IT CANNOT BE OPERATED

WIRING DIAGRAM

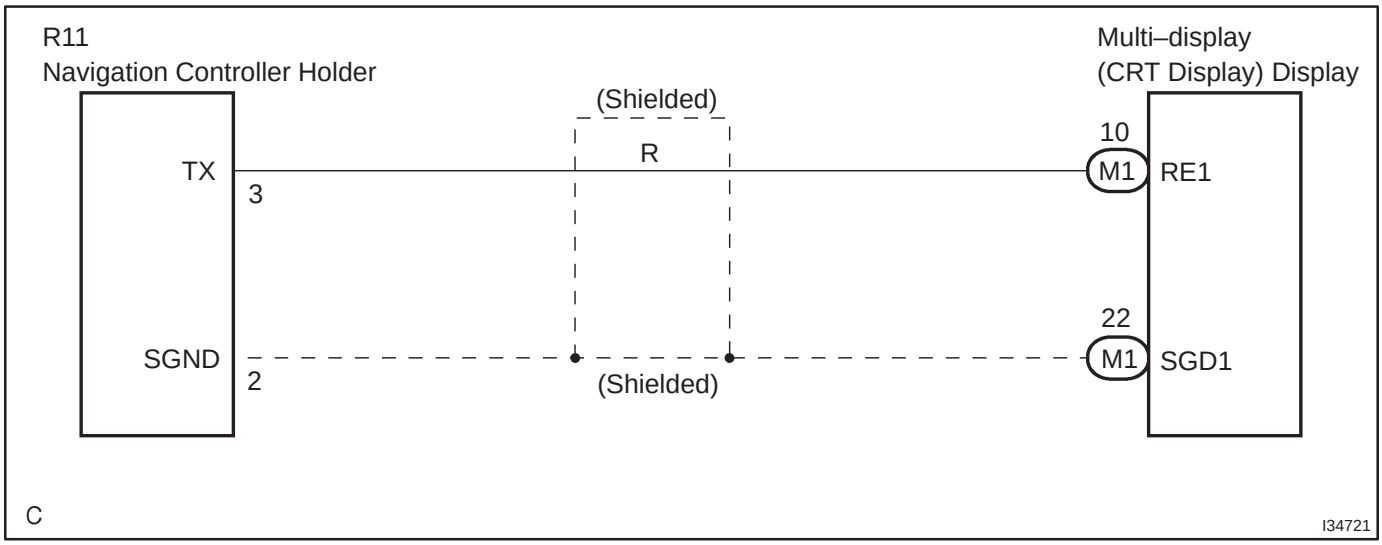

INSPECTION PROCEDURE

1	CLEAN THE INFRARED RAY EMITTED PORTION

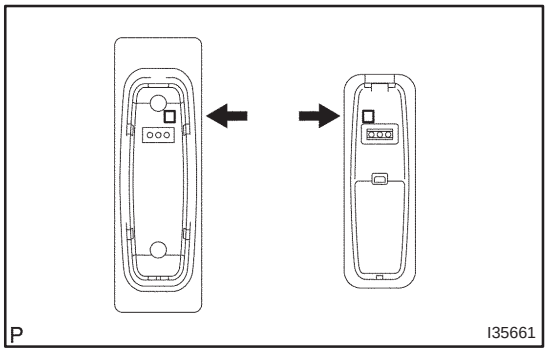

(a) Clean the infrared ray emitted portion.
  (1) Clean the infrared ray emitted portion on the navigation controller holder and navigation controller assy.
  (2) Check whether the same malfunction occurs.

Standard: The function returns to normal.

OK	**DIRT AT THE INFRARED RAY EMITTED PORTION**

NG

2	CHECK HARNESS OR CONNECTOR(NAVIGATION CONTROLLER HOLDER – MULTI–DISPLAY (CRT DISPLAY) DISPLAY)

Navigation Controller Holder:

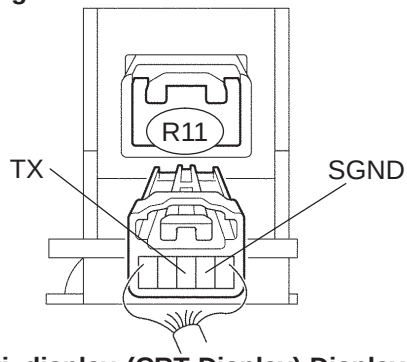

Multi–display (CRT Display) Display:

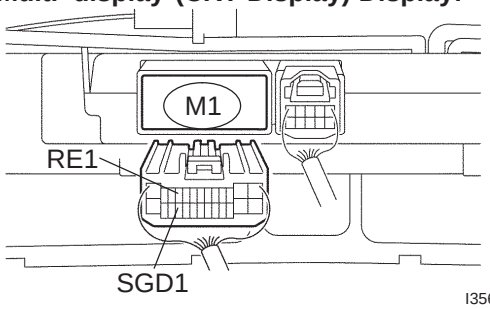

(a) Disconnect the connectors from the navigation controller assy and multi–display (CRT display) display.

(1) Check continuity between the terminals at each condition, as shown in the chart.

Standard:

Tester connecter	Specified condition
TX – RE1	Continuity
SGND – SGD1	Continuity

(2) Check for a short between the terminals at each condition, as shown in the chart

Standard:

Tester connecter	Specified condition
TX – Body ground	No continuity
SGND – Body ground	Continuity

NG → **REPAIR OR REPLACE HARNESS OR CONNECTOR**

OK

3	REPLACE NAVIGATION CONTROLLER HOLDER

Standard: Normally returns.

OK → **SYSTEM OK**

NG

4	REPLACE NAVIGATION CONTROLLER ASSY

Standard: Normally returns.

OK → **SYSTEM OK**

NG

REPLACE MULTI–DISPLAY (CRT DISPLAY) DISPLAY (See page 67–6)

THE SYSTEM CANNOT BE OPERATED BY THE VOICE SOUND

WIRING DIAGRAM

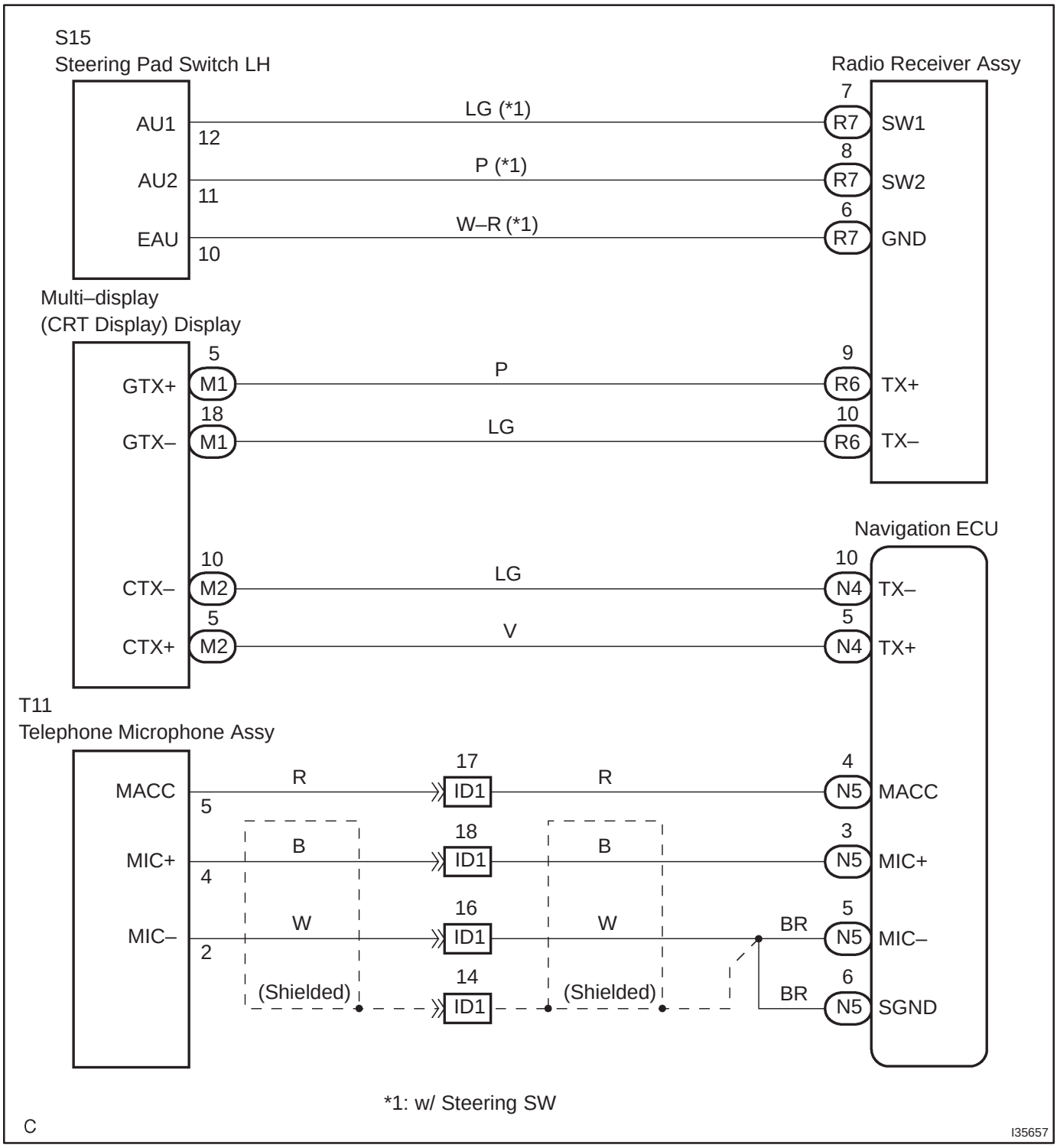

INSPECTION PROCEDURE

1	INSPECT STEERING WHEEL ASSY(BEEP SOUND)

(a) Check the switch (Beep sound).
(1) Press steering pad switch LH to check that the beep sound is produced.

OK → **Go to step 3**

NG

2	INSPECT STEERING WHEEL ASSY(AU2, EAU)

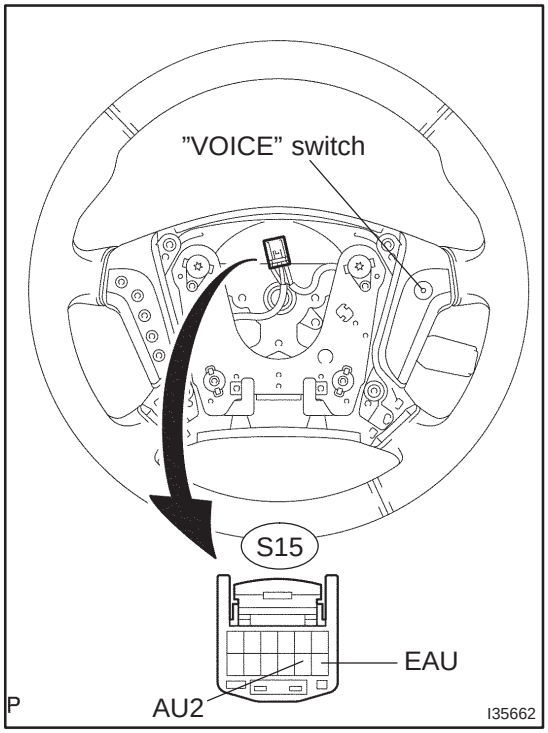

(a) Remove the horn button assy(See page 50–9).
(b) Check continuity between the terminals at each condition, as shown in the chart.

Tester connection	Condition	Specified condition
AU2 – EAU	Do not switch position	Approx. 100 kΩ
AU2 – EAU	VOICE switch: push	Approx. 3.1 k

NG → **REPLACE STEERING WHEEL ASSY (See page 50–9)**

OK

3	CHECK TALK BACK

(a) Check whether the system performs talk back or not.
Standard: The system performs talk back.

OK → **SYSTEM OK**

NG

4	CHECK HARNESS AND CONNECTOR(NAVIGATION ECU – TELEPHONE MICROPHONE ASSY)

Navigation ECU:

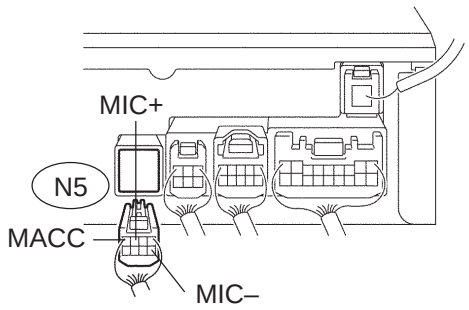

Telephone Microphone Assy:

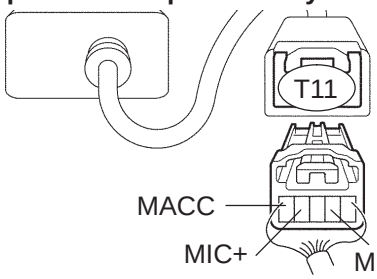

P I35670

(a) Disconnect the connectors from the navigation ECU and telephone microphone assy.

(1) Check continuity between the terminals at each condition, as shown in the chart.

Standard:

Tester connection	Specified condition
MACC – MACC	Continuity
MIC+ – MIC+	Continuity
MIC– – MIC–	Continuity

(2) Check for a short between the terminals at each condition, as shown in the chart.

Standard:

Tester connection	Specified condition
MACC – Body ground	No continuity
MIC+ – Body ground	No continuity
MIC– – Body ground	No continuity

NG → **REPAIR OR REPLACE HARNESS OR CONNECTOR**

OK

5	REPLACE TELEPHONE MICROPHONE ASSY

Standard: Normally returns

NG → **REPLACE NAVIGATION ECU (See page 67–27)**

OK

SYSTEM OK

COMBINATION METER

HOW TO PROCEED WITH TROUBLESHOOTING

056Q7–04

1	Vehicle Brought to Workshop

2	Customer Problem Analysis (See page 05–1498)

3	Check multiplex communication system (See page 05–1654)

(a) Check the DTC output.

- DTC outputs (Proceed to "BODY MULTIPLEX COMMUNICATION SYSTEM)
- DTC does not output (Go to step 4)

4	Problem Symptom Confirmation (See page 05–1509)

5	Circuit Inspection (See page 05–1510 – 05–1522)

6	Repair or Replace

7	Confirmation Test

8	End

05C4F–01

CUSTOMER PROBLEM ANALYSIS CHECK

COMBINATION METER SYSTEM Check Sheet

Inspector's name:

Customer's Name		**VIN**	
		Production Date	
		Licence No.	
Date of Vehicle Brought In	/ /	**Odometer Reading**	**km** **Mile**

Date Problem First Occurred		/ /
Frequency Problem Occurs		☐ Constantly ☐ Sometimes (Times per day, month) ☐ Once only
Weather Conditions When Problem Occurred	**Weather**	☐ Fine ☐ Cloudy ☐ Rainy ☐ Snowy ☐ Various/Others
	Outside temperature	☐ Hot ☐ Warm ☐ Cool ☐ Cold (Approx. °F (°C))

Problem Symptom	**Gauge**	☐ Malfunction in speedometer
		☐ Malfunction in tachometer
		☐ Malfunction in water temperature receiver gauge
		☐ Malfunction in fuel receiver gauge
	Others	☐ Entire combination meter does not operate
		☐ Buzzer does not sound
		☐ Seat belt warning lamp for driver's seat does not come on
		☐ Seat belt warning lamp for front passenger's seat does not come on
		☐ The ambient temperature is not displayed

056Q9–02

PRE–CHECK

1. DATA LIST

According to the DATA LIST displayed by the hand–held tester, you can read the value of the switch, sensor, actuator and so on without parts removal. Reading the DATA LIST as the first step of troubleshooting is one method to shorten work time.

(a) Warm up the engine.
(b) Turn the ignition switch to OFF.
(c) Connect the hand–held tester to DLC3.
(d) Turn the ignition switch to ON.
(e) Operate the hand–held tester according to the steps on the display and select ”DATA LIST”.

ALL(ECM):

Item	Measurement Item/ Range (Display)	Normal Condition	Diagnostic Note
VEHICLE SPEED	Vehicle speed / Min.: 0 km/h, Max.: 255 km/h	Almost same at the meter speed (When driving)	–
ENGINE SPEED	Engine speed / Min.: 0 rpm, Max.: 16,383 rpm	Almost same at the meter rpm (When engine is running)	–
COOLANT TEMP	Coolant Temperature / Min.: –40°C, Max.: 140°C	After warming up: 80 – 95°C (176 – 203°F)	If the value is ”–40 °C” or ”140 °C”, sensor circuit is open or shorted.

2. SET BUZZER OFF MODE (SEAT BELT)

(a) Within 6 seconds after turning ignition switch to the ON position, depress the ODO/TRIP switch for 10 seconds or more, and fasten the driver’s seat belt to enter the buzzer ON/OFF mode.

HINT:

This procedure can be performed when the display shows the ”ODO” mode.

(b) When entering the buzzer ON/OFF mode, current buzzer condition is shown on the display. According to the display, select the buzzer OFF mode by operating the ODO/TRIP switch.

HINT:

- After entering the buzzer ON/OFF mode, when the ODO/TRIP switch is not operated for 10 seconds or more, the display returns to the normal mode.
- When the negative (–) terminal cable is disconnected from the battery, the buzzer setting returns to buzzer ON mode.

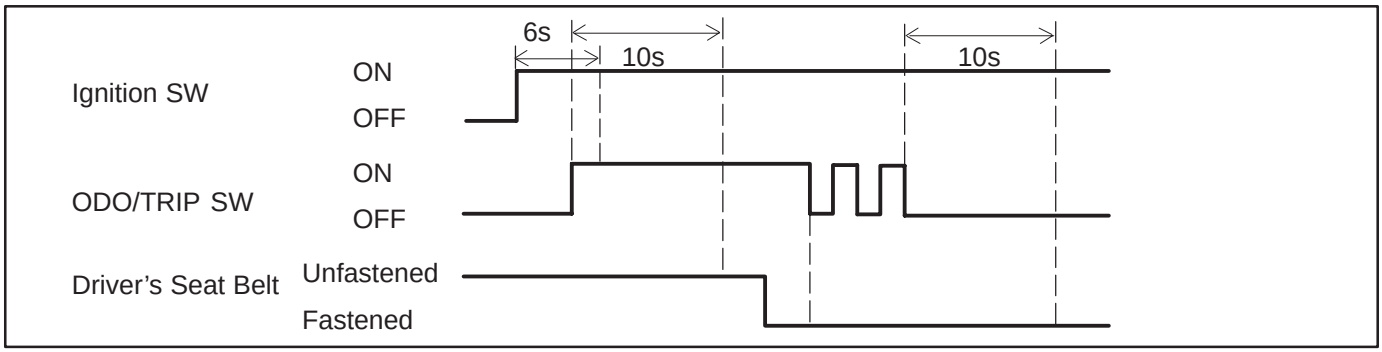

056QA–03

LOCATION

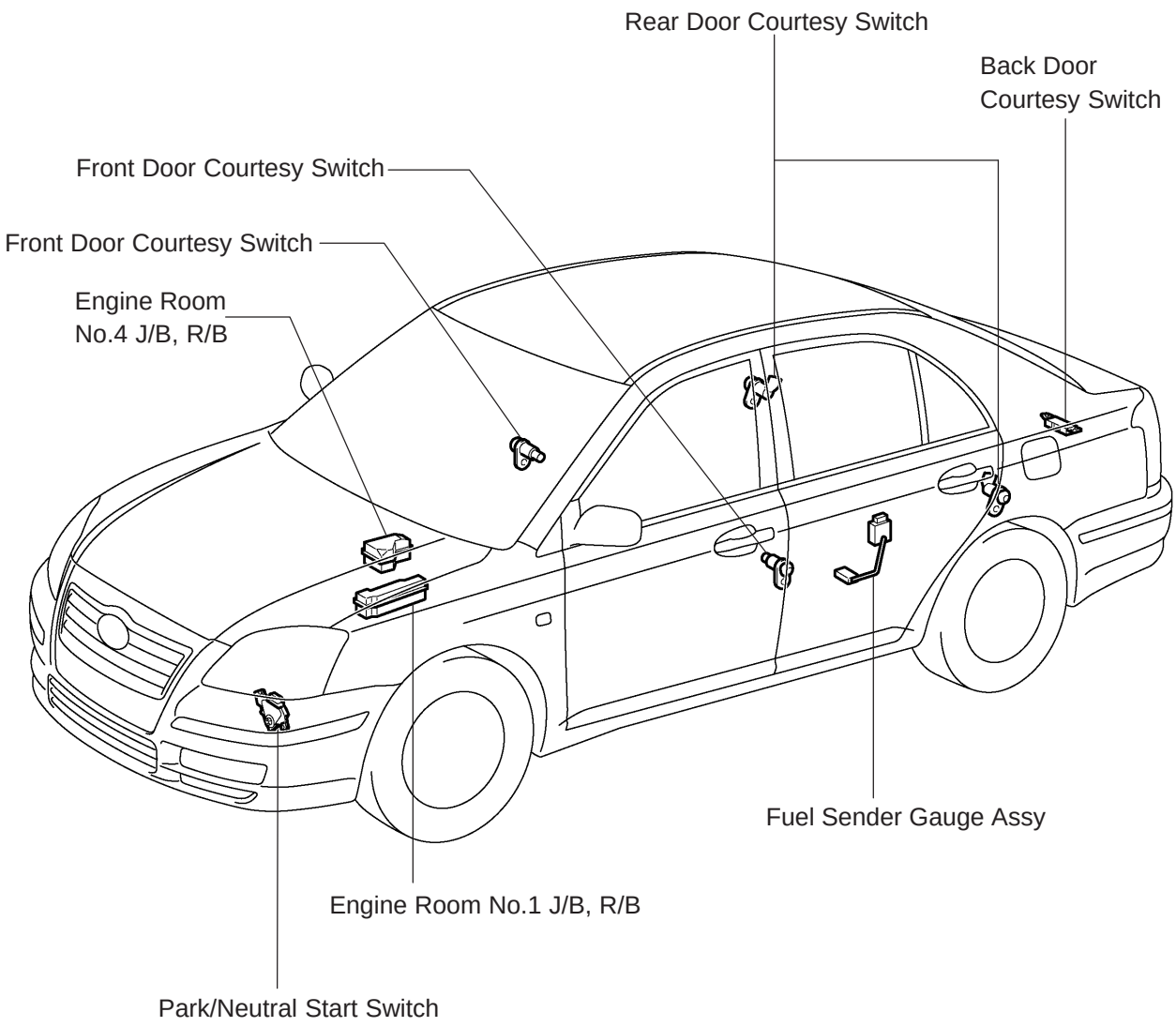

H

I34623

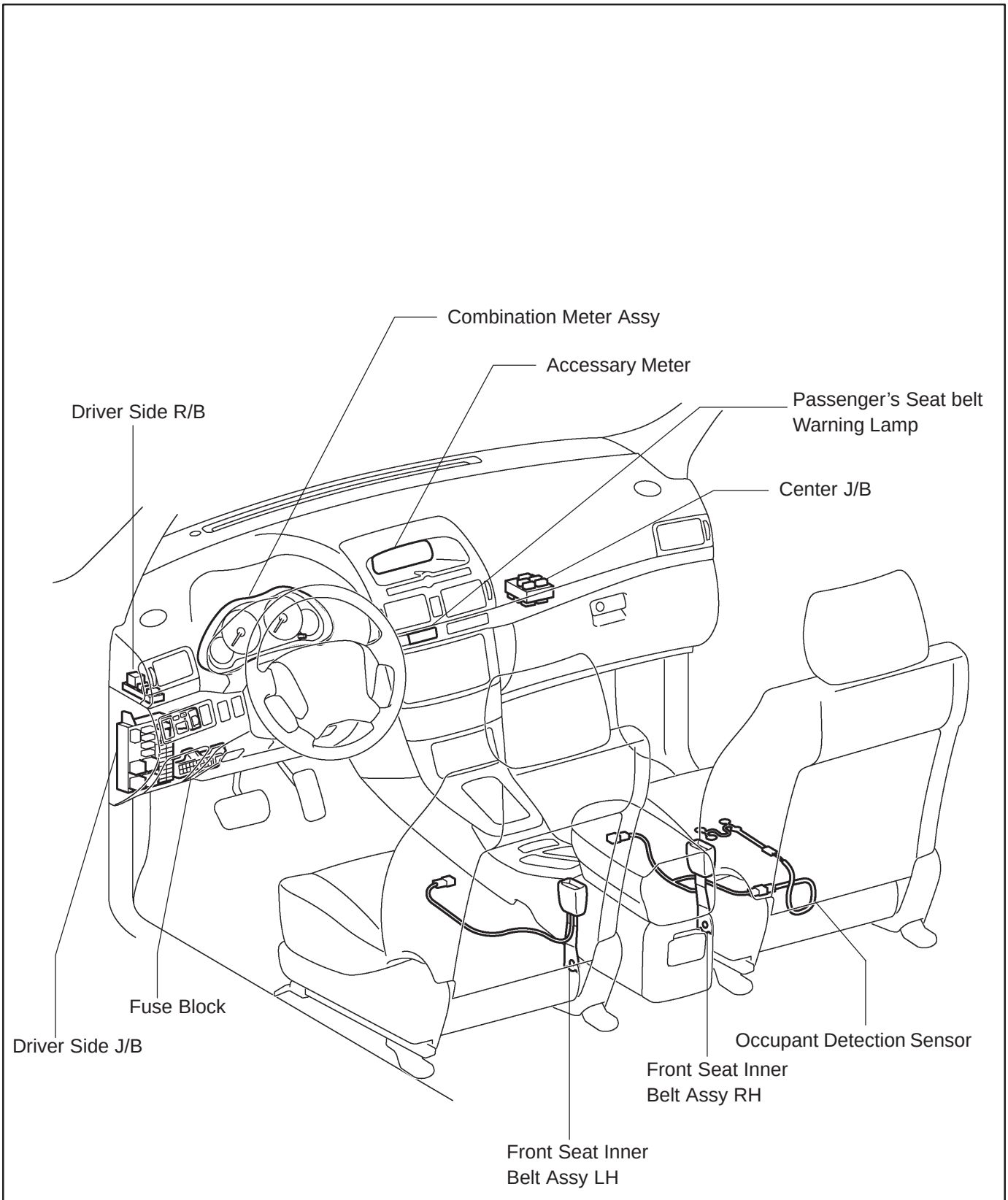
Combination Meter Assy
Accessary Meter
Passenger's Seat belt Warning Lamp
Driver Side R/B
Center J/B
Fuse Block
Driver Side J/B
Occupant Detection Sensor
Front Seat Inner Belt Assy RH
Front Seat Inner Belt Assy LH
H
I34624

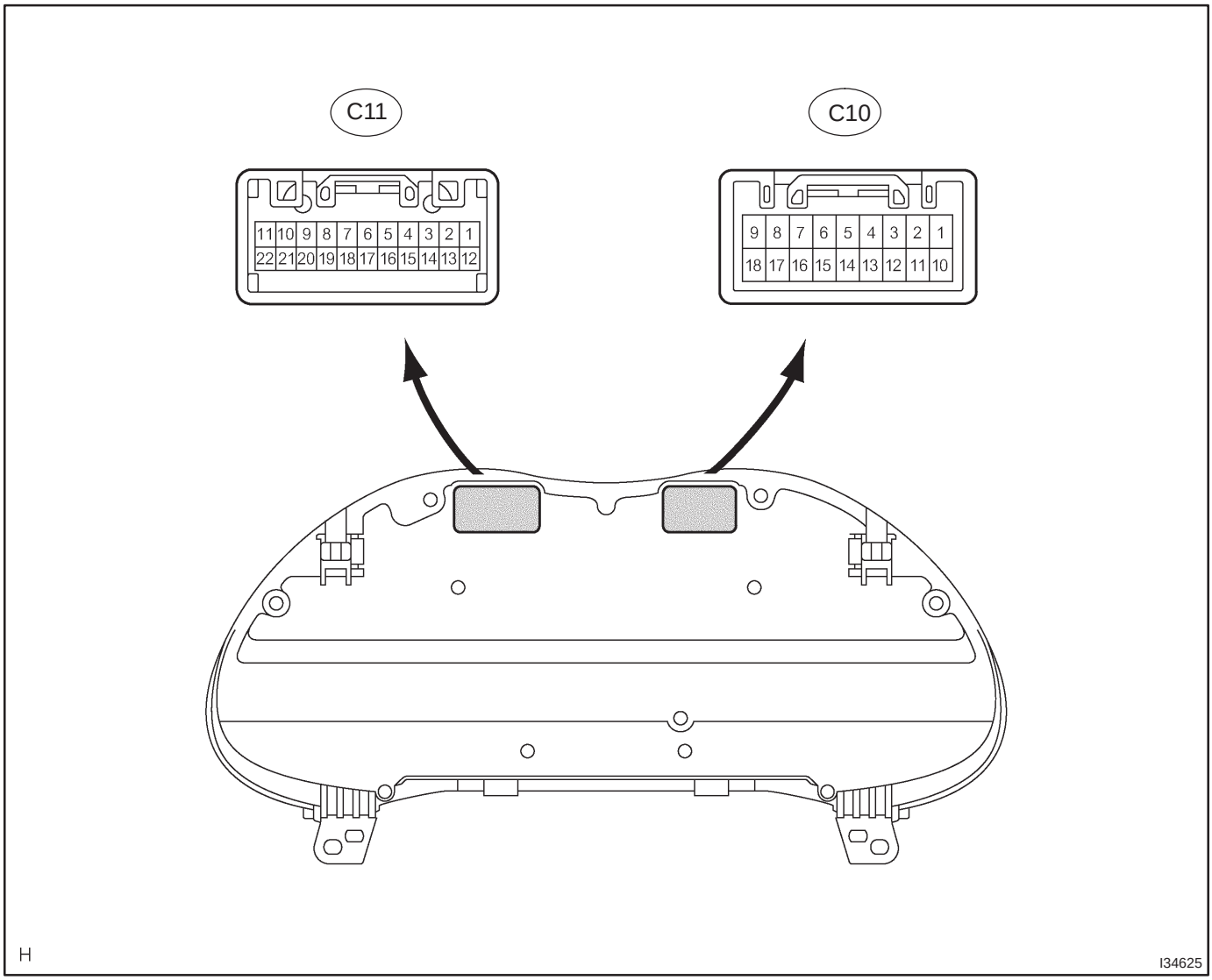
C11
C10
11 10 9 8 7 6 5 4 3 2 1
22 21 20 19 18 17 16 15 14 13 12
9 8 7 6 5 4 3 2 1
18 17 16 15 14 13 12 11 10
H
I34625

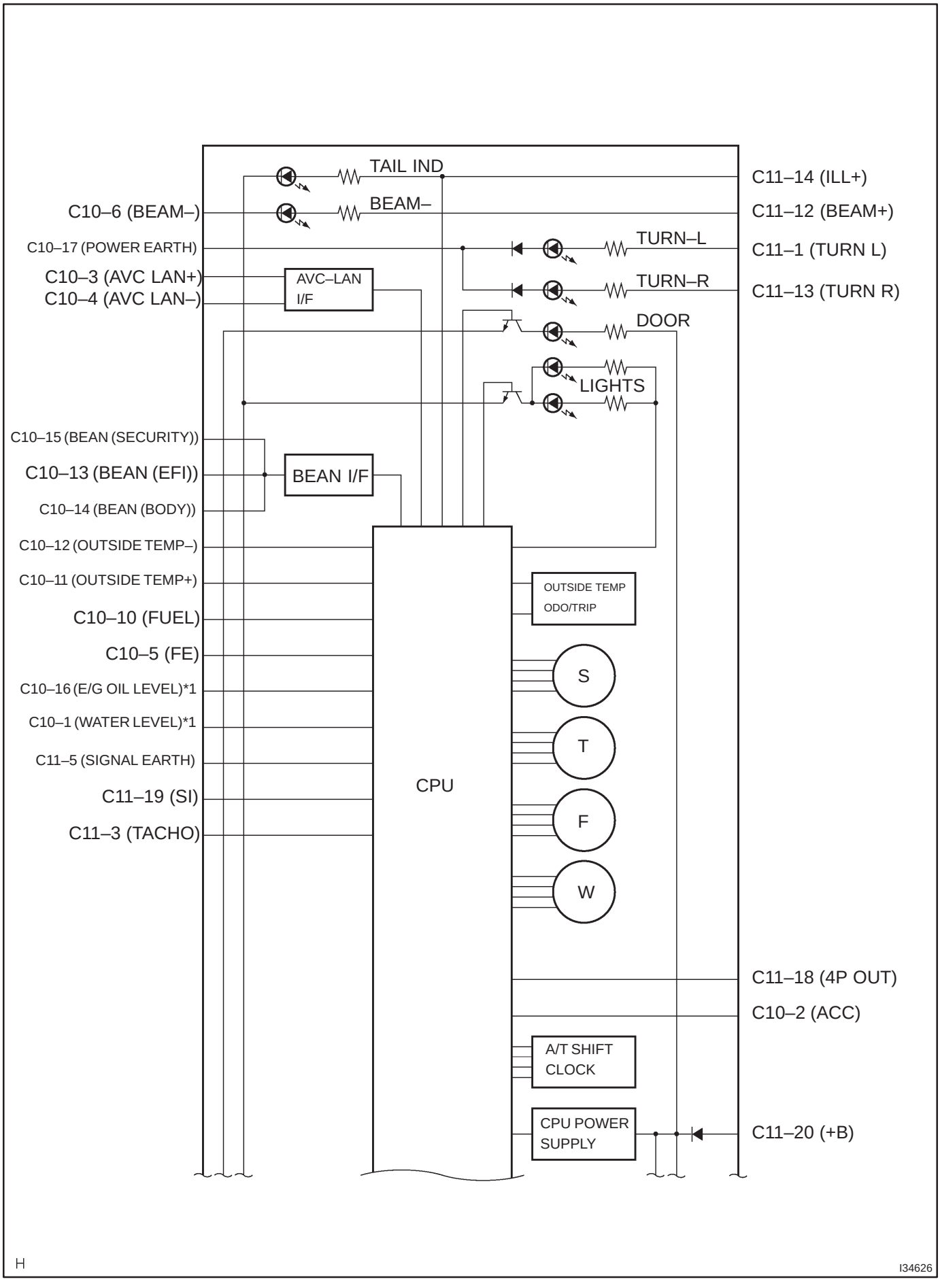
TAIL IND
BEAM–
TURN–L
TURN–R
DOOR
LIGHTS
C10–6 (BEAM–)
C10–17 (POWER EARTH)
C10–3 (AVC LAN+)
C10–4 (AVC LAN–)
AVC–LAN I/F
C10–15 (BEAN (SECURITY))
C10–13 (BEAN (EFI))
C10–14 (BEAN (BODY))
BEAN I/F
C10–12 (OUTSIDE TEMP–)
C10–11 (OUTSIDE TEMP+)
C10–10 (FUEL)
C10–5 (FE)
C10–16 (E/G OIL LEVEL)*1
C10–1 (WATER LEVEL)*1
C11–5 (SIGNAL EARTH)
C11–19 (SI)
C11–3 (TACHO)
CPU
OUTSIDE TEMP
ODO/TRIP
S
T
F
W
A/T SHIFT
CLOCK
CPU POWER
SUPPLY
C11–14 (ILL+)
C11–12 (BEAM+)
C11–1 (TURN L)
C11–13 (TURN R)
C11–18 (4P OUT)
C10–2 (ACC)
C11–20 (+B)
H
I34626

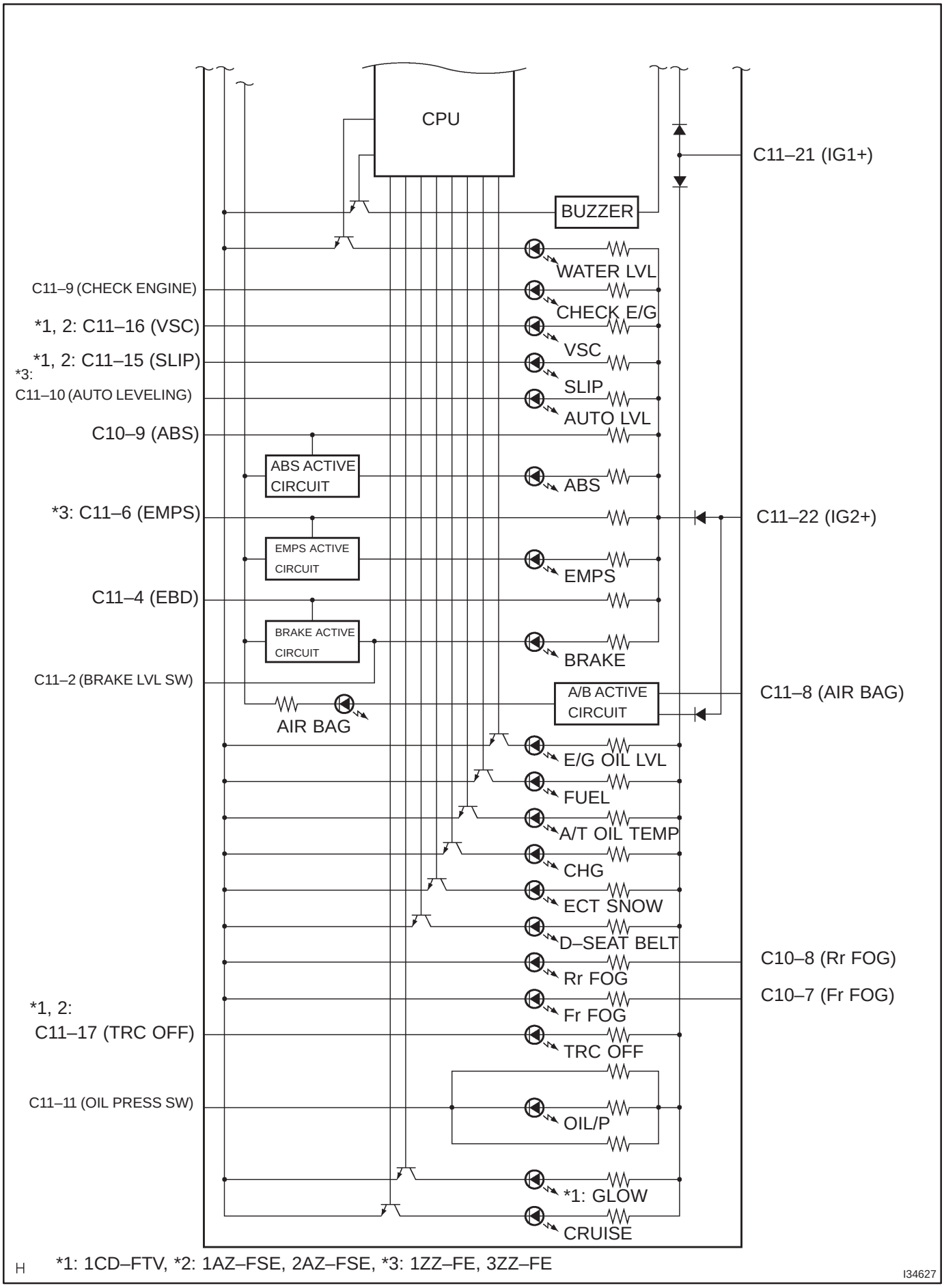
CPU
C11–21 (IG1+)
BUZZER
WATER LVL
C11–9 (CHECK ENGINE)
CHECK E/G
*1, 2: C11–16 (VSC)
VSC
*1, 2: C11–15 (SLIP)
SLIP
*3:
C11–10 (AUTO LEVELING)
AUTO LVL
C10–9 (ABS)
ABS ACTIVE CIRCUIT
ABS
*3: C11–6 (EMPS)
C11–22 (IG2+)
EMPS ACTIVE CIRCUIT
EMPS
C11–4 (EBD)
BRAKE ACTIVE CIRCUIT
BRAKE
C11–2 (BRAKE LVL SW)
A/B ACTIVE CIRCUIT
C11–8 (AIR BAG)
AIR BAG
E/G OIL LVL
FUEL
A/T OIL TEMP
CHG
ECT SNOW
D–SEAT BELT
C10–8 (Rr FOG)
Rr FOG
C10–7 (Fr FOG)
Fr FOG
*1, 2:
C11–17 (TRC OFF)
TRC OFF
C11–11 (OIL PRESS SW)
OIL/P
*1: GLOW
CRUISE
H
*1: 1CD–FTV, *2: 1AZ–FSE, 2AZ–FSE, *3: 1ZZ–FE, 3ZZ–FE
I34627

Terminal No.		Wire harness side
C10	1	Fuse Filter Warning Switch (*1)
	2	RAD No.1 Fuse
	3	Multi Display
	4	Multi Display
	5	Fuel Sender Gauge
	6	GND
	7	Front Fog Light Relay
	8	Rear Fog Light Relay
	9	Skid Control ECU with Actuator
	10	Fuel Sensor Gauge
	11	Ambient Temp. Sensor
	12	Ambient Temp. Sensor
	13	Engine ECU
	14	Integration Relay
	15	Security ECU
	16	Engine Oil Level Sensor
	17	GND
	18	–
C11	1	Turn Signal Flasher Relay
	2	Brake Fluid Level Warning Switch
	3	Engine ECU
	4	Skid Control ECU with Actuator
	5	GND
	6	EMPS ECU
	7	–
	8	Airbag Sensor Assembly
	9	Engine ECU
	10	Headlight Beam Level Control ECU
	11	Oil Pressure Switch
	12	H–HI RH Fuse/H–LP RH Fuse
	13	Turn Signal Flasher Relay
	14	TAIL Fuse
	15	Skid Control ECU with Actuator
	16	Skid Control ECU with Actuator
	17	Skid Control ECU with Actuator
	18	4P OUT (Other Parts)
	19	Skid Control ECU with Actuator
	20	DOME Fuse
	21	GAUGE1 Fuse
	22	IGN Fuse

*1: 1CD–FTV

05C4G–01

TERMINALS OF ECU

COMBINATION METER ASSY

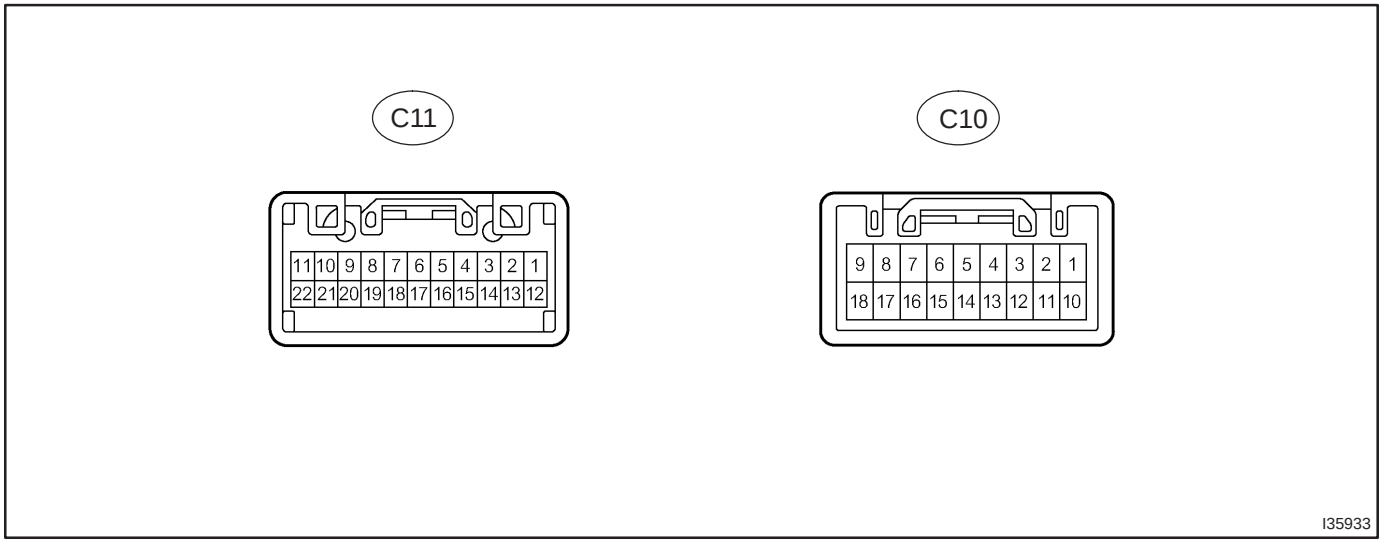

Terminal No.	Wiring color	Condition	Specified condition
C11–1 – Body ground (TURN L – Body ground)	G–W – Body ground	Turn signal LH indicator light OFF → ON	Below 1 V → 10 to 14 V
C11–2 – Body ground (BRAKE LVL SW – Body ground)	R–W – Body ground	Brake fluid level warning switch ON	Below 1 V
C11–3 – Body ground (TACHO – Body ground)	GR–R – Body ground	Ignition switch OFF → ON, Engine idle speed	Puls generation (*2)
C11–5 – Body ground (SIGNAL EARTH – Body ground)	W–B – Body ground	Constant	Continuity
C11–6 – Body ground (EMPS – Body ground)	B–W – Body ground	Ignition switch ON and EMPS Indicator OFF → ON	10 to 14 V → Below 1 V
C11–8 – Body ground (AIRBAG – Body ground)	B–Y – Body ground	Ignition switch ON and AIRBAG Indicator OFF → ON	10 to 14 V → Below 1 V
C11–9 – Body ground (CHECK ENGINE – Body ground)	W – Body ground	Engine running and CHECK ENGINE indicator OFF	9 to 14 V
C11–10 – Body ground (AUTO LEVELING – Body ground)	LG – Body ground	Ignition switch ON and AUTO LEVERING Indicator OFF → ON	10 to 14 V → Below 1 V
C11–11 – Body ground (OIL PRESS SW – Body ground)	Y–B – Body ground	Engine running → Stopped	No continuity → Continuity
C11–12 – Body ground (BEAM+ – Body ground)	R–W (w/HID), R (w/o HID) – Body ground	Headlight OFF → ON	Below 1 V → 10 to 14 V
C11–13 – Body ground (TURN R – Body ground)	G–Y – Body ground	Turn signal RH indicator light OFF → ON	Below 1 V → 10 to 14 V
C11–14 – Body ground (ILL+ – Body ground)	G – Body ground	Combination switch OFF → ON	Below 1 V → 10 to 14 V
C11–15 – Body ground (SLIP – Body ground)	LG – Body ground	Ignition switch ON and SLIP Indicator OFF → ON	10 to 14 V → Below 1 V
C11–16 – Body ground (VSC – Body ground)	W–R – Body ground	Ignition switch ON and VSC Indicator OFF → ON	10 to 14 V → Below 1 V

C11–17 – Body ground (TRC OFF – Body ground)	LG–B – Body ground	Ignition switch ON and TRC OFF Indicator OFF → ON	10 to 14 V → Below 1 V
C1–19 – Body ground (SI – Body ground)	L–W – Body ground	Ignition switch ON and turn the wheel slowly	Puls generation (*1)
C11–20 – Body ground (+B – Body ground)	W–R – Body ground	Any Contents	10 to 14 V
C11–21 – Body ground (IG1+ – Body ground)	R–W – Body ground	Ignition switch OFF → ON	Below 1 V → 10 to 14 V
C11–22 – Body ground (IG2+ – Body ground)	B–W – Body ground	Ignition switch OFF → ON	Below 1 V → 10 to 14 V
C10–1 – Body ground (WATER LEVEL – Body ground)	Y–R – Body ground	Fuel filter warning switch ON	Below 1 V
C10–2 – Body ground (ACC – Body ground)	GR – Body ground	Ignition switch OFF → ACC	Below 1 V → 10 to 14 V
C10–3 – Body ground (AVC LAN+ – Body ground)	G–Y – Body ground	Communication circuit	–
C10–4 – Body ground (AVC LAN– – Body ground)	G – Body ground	Communication circuit	–
C10–5 – Body ground (FE – Body ground)	BR–W – Body ground	Constant	Continuity
C10–6 – Body ground (BEAM– – Body ground)	W–B (DRL) R–W (w/ HID) R– (w/o HID) – Body ground	Headlight ON, Hi–beam indicator OFF → ON	No continuity → Continuity
C10–7 – Body ground (Fr FOG – Body ground)	G – Body ground	Ignition switch ON, Fr fog light indicator ON → OFF	10 to 14 V → Below 1 V
C10–8 – Body ground (Rr FOG – Body ground)	R–W – Body ground	Ignition switch ON, Rr fog light indicator ON → OFF	10 to 14 V → Below 1 V
C10–9 – Body ground (ABS – Body ground)	R–Y – Body ground	Ignition switch ON and ABS Indicator OFF → ON	10 to 14 V → Below 1 V
C10–10 – Body ground (FUEL – Body ground)	G–W – Body ground	Fuel sender gauge is F position → E position	4.0 Ω → 110.0 Ω
C10–11 – Body ground (OUTSIDE TEMP+ – Body ground)	W–R – Body ground	Ignition switch ON	3.31 V (–9°C) 0.8 V (43°C)
C10–12 – Body ground (OUTSIDE TEMP– – Body ground)	W – Body ground	Constant	Continuity
C10–13 – Body ground (BEAN (EFI) – Body ground)	P – Body ground	Communication circuit	–
C10–14 – Body ground (BEAN (BODY) – Body ground)	P–B – Body ground	Communication circuit	–
C10–15 – Body ground (BEAN (SECURITY) – Body ground)	P–L – Body ground	Communication circuit	–
C10–16 – Body ground (E/G OIL LEVEL – Body ground)	Y–G – Body ground	OIL LEVEL switch ON	No continuity
C10–17 – Body ground (POWER EARTH – Body ground)	W–B – Body ground	Constant	Continuity

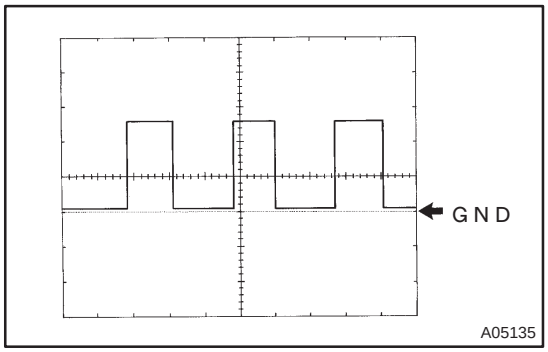

*1: Reference: Using oscilloscope:

Item	Contents
Tool setting	5 V/ DIV, 20 ms/ DIV
Vehicle condition	Driving at approx. 20Km/h

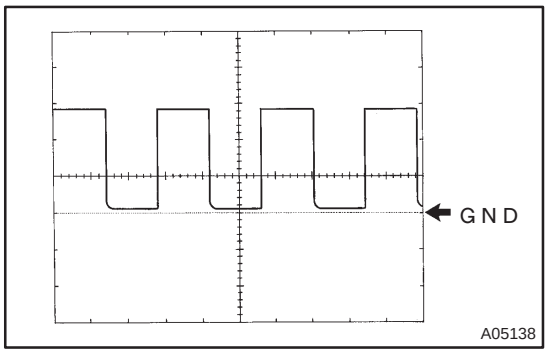

*2: Reference: Using oscilloscope:

Item	Contents
Tool setting	5 V/ DIV, 10 ms/ DIV
Vehicle condition	Engine idle speed

ENGINE ECU

1AZ–FSE:

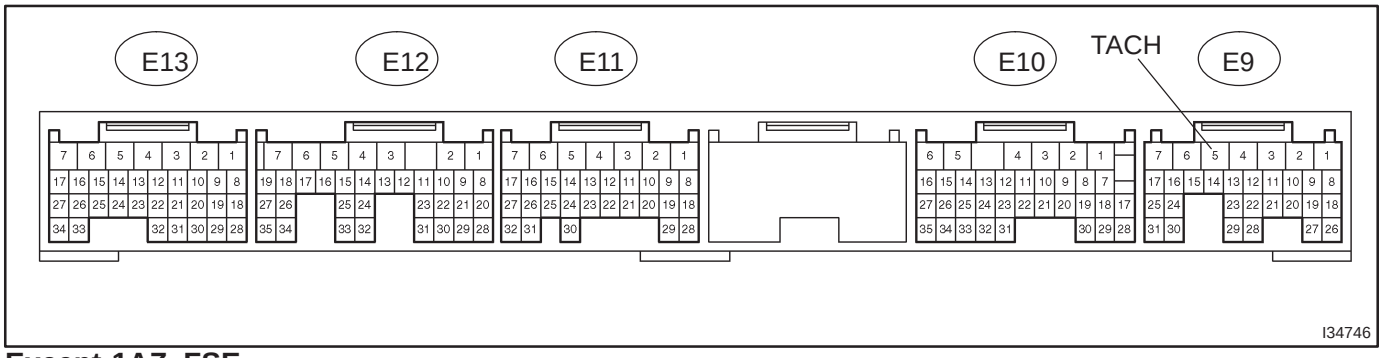

Except 1AZ–FSE:

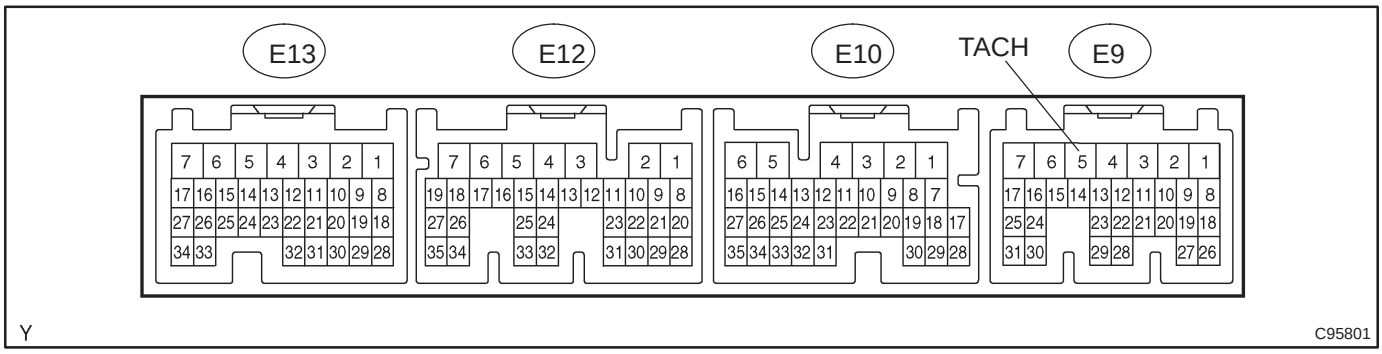

056QC–04

PROBLEM SYMPTOMS TABLE

Chart No.	Symptom	See page
1	Malfunction in speedometer	05–1510
2	Malfunction in tachometer	05–1513
3	Malfunction in water temperature receiver gauge	05–1515
4	Malfunction in fuel receiver gauge	05–1517
5	Entire combination meter does not operate	05–1519
6	Seat belt warning lamp for driver's seat does not operate	05–1522
7	Seat belt warning lamp for front passenger's seat does not flash	05–1524
8	The ambient temperature does not display	05–1527
9	Warning buzzer does not sound	05–1530

MALFUNCTION IN SPEEDOMETER

WIRING DIAGRAM

w/ VSC:

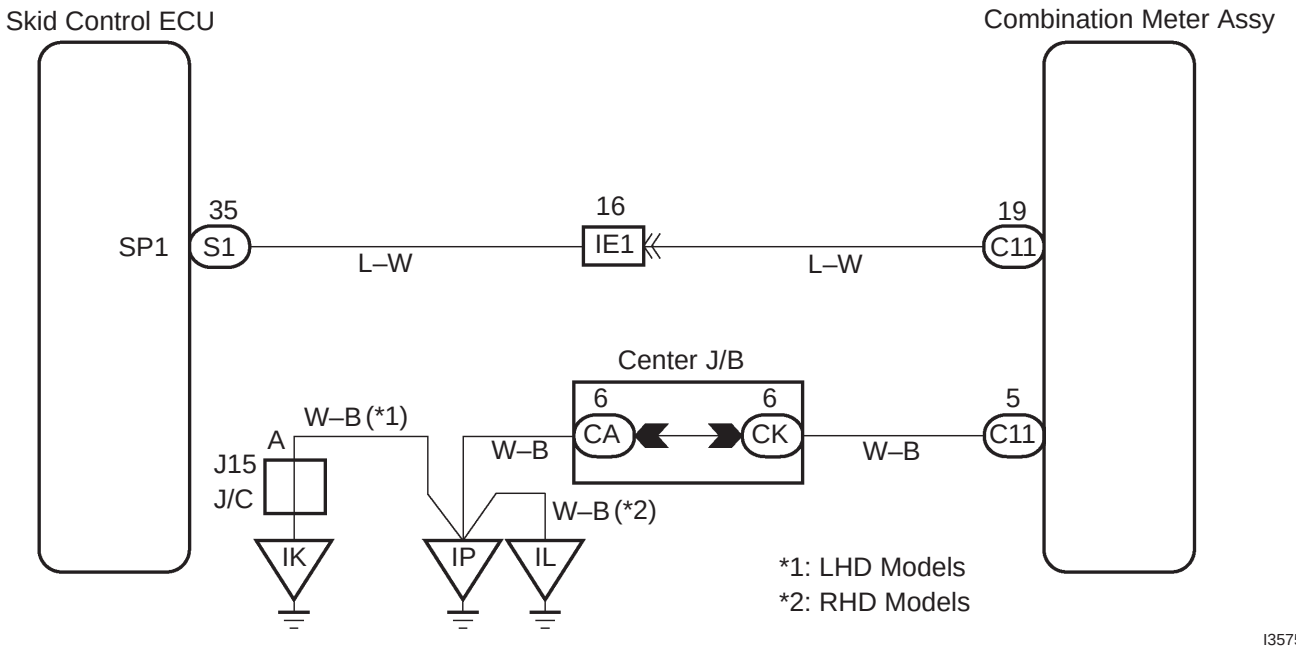

w/o VSC:

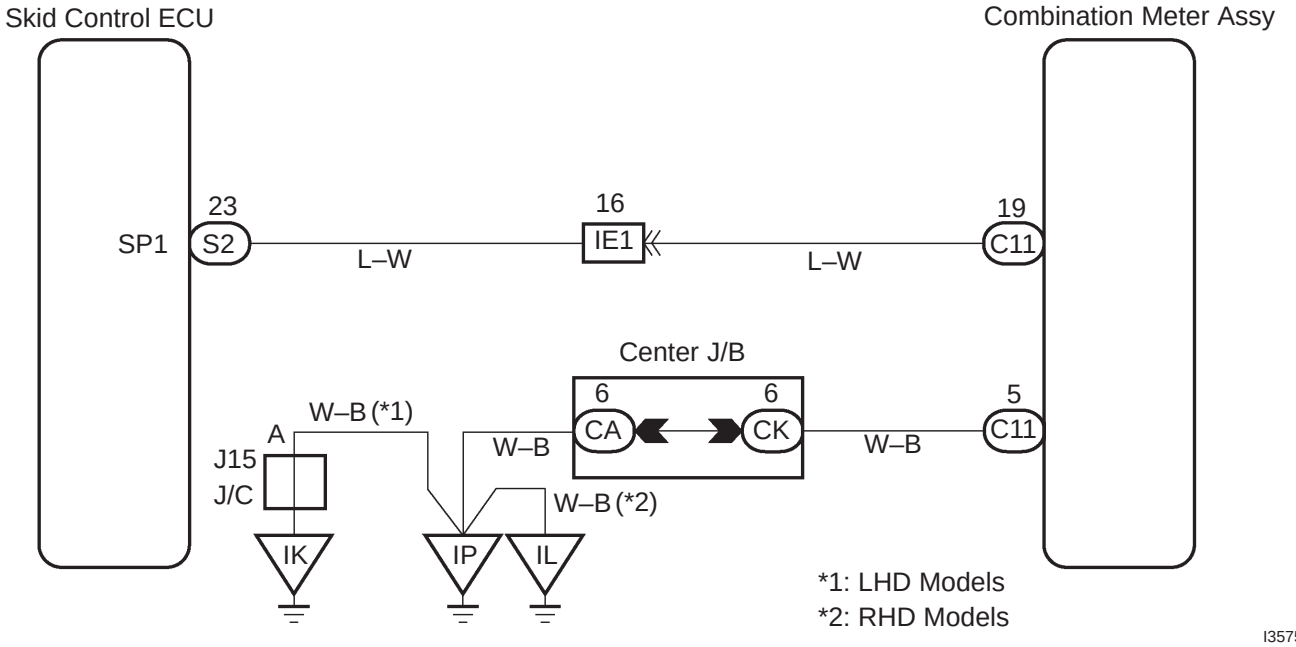

INSPECTION PROCEDURE

1	READ VALUE OF HAND–HELD TESTER(SKID CONTROL ECU)

(a) Operate the hand–held tester according to the steps on the display and select ”DATA LIST”.

ALL(ECM):

Item	Measurement Item/ Range (Display)	Normal Condition	Diagnostic Note
VEHICLE SPEED	Vehicle speed / Min.: 0 km/h, Max.: 255 km/h	Almost same at the meter speed (When driving)	–

NG → **GO TO BRAKE SYSTEM**

OK

2	INSPECT COMBINATION METER ASSY

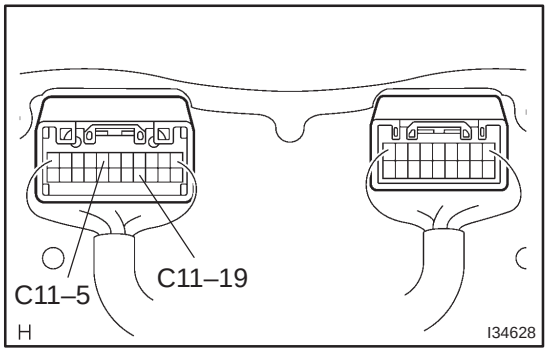

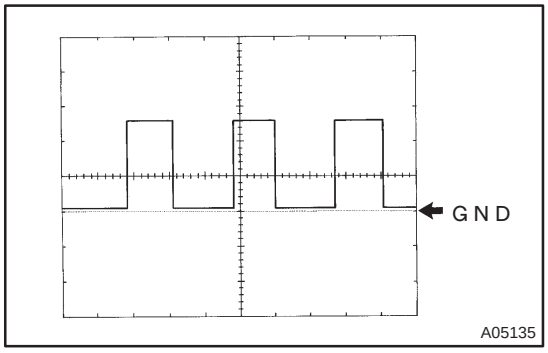

(REFERENCE) INSPECTION USING OSCILLOSCOPE

(a) Check the input signal waveform.
  (1) Remove the combination meter assy.
  (2) Connect the oscilloscope to the terminal C11–19 and C11–5 of the combination meter assy.
  (3) Start the engine.
  (4) Check the signal waveform.

Item	Contents
Tool setting	5 V/ DIV, 20 ms/ DIV
Vehicle condition	Driving at approx. 20Km/h

HINT:

As the vehicle speed becomes higher, the cycle of the signal waveform becomes shorter.

OK → **CHECK AND REPLACE COMBINATION METER ASSY**

NG

3	CHECK HARNESS AND CONNECTOR(BETWEEN SKID CONTROL ECU AND COMBINATION METER ASSY)

(a) Disconnect the connector from the combination meter assy.
(b) Disconnect the connector from the skid control ECU.
(c) Check continuity between the terminal S1–35 (SP1)/S2–23 (SP1) of the skid control ECU and the terminal C11–19 of the combination meter connector (See Page 05–770).
Standard: Continuity.

OK → **CHECK AND REPLACE SKID CONTROL ECU**

NG

REPAIR OR REPLACE HARNESS OR CONNECTOR

MALFUNCTION IN TACHOMETER

WIRING DIAGRAM

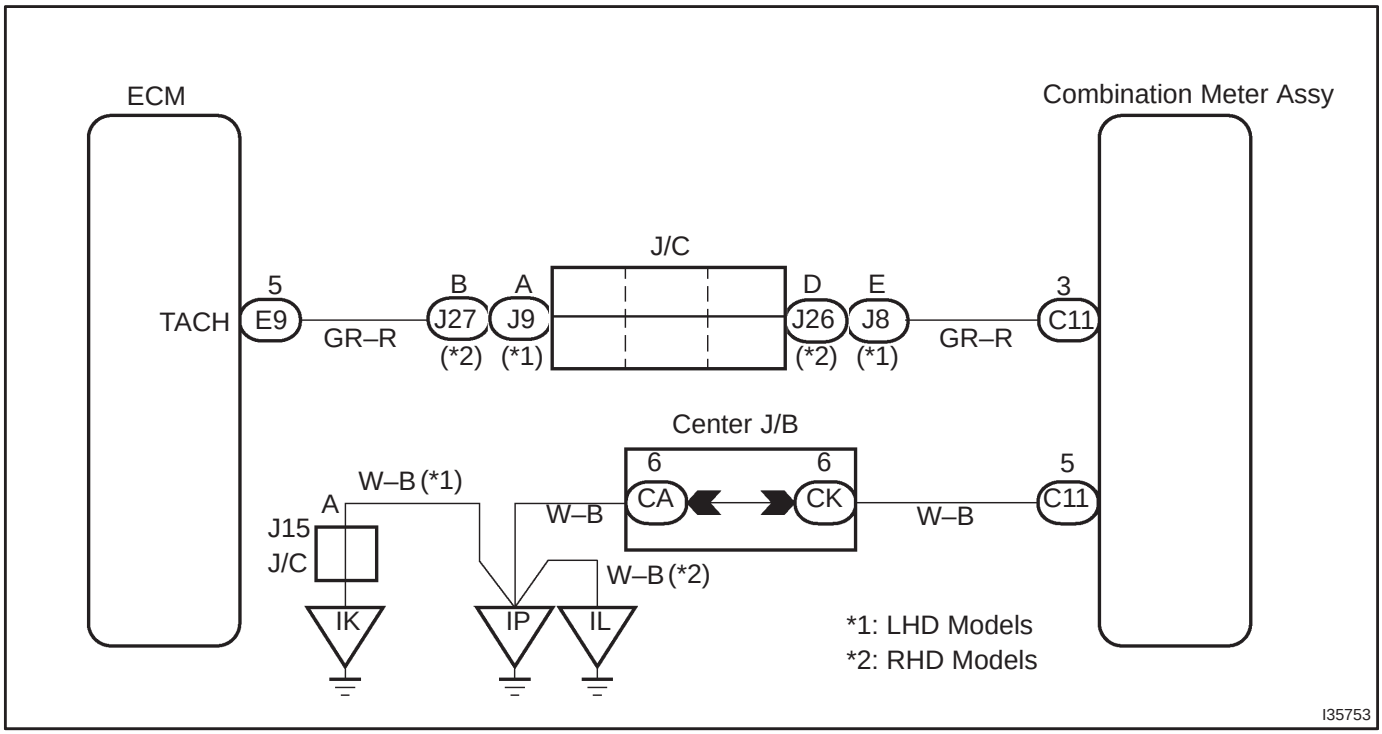

INSPECTION PROCEDURE

1	READ VALUE OF HAND–HELD TESTER(ECM)

(a) Operate the hand–held tester according to the steps on the display and select ”DATE LIST”.

ALL(ECM):

Item	Measurement Item/ Range (Display)	Normal Condition	Diagnostic Note
ENGINE SPEED	Engine speed / Min.: 0 rpm, Max.: 16,383 rpm	Almost same at the meter rpm (When engine is running)	–

NG → **GO TO ENGINE CONTROL SYSTEM**

OK

2	INSPECT COMBINATION METER ASSY

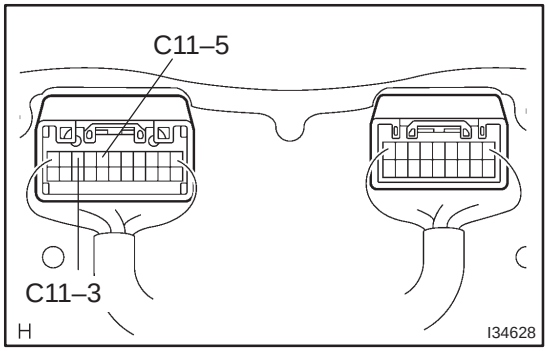

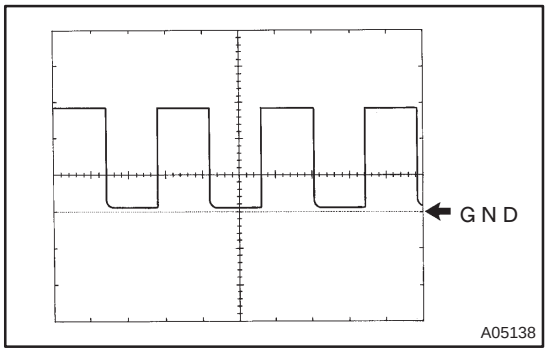

(REFERENCE) INSPECTION USING OSCILLOSCOPE

(a) Check the input signal waveform.

(1) Remove the combination meter assy.

(2) Connect the oscilloscope to the terminals C11–3 and C11–5 of the combination meter connector.

(3) Start the engine.

(4) Check the signal waveform.

Item	Contents
Tool setting	5 V/ DIV, 10 ms/ DIV
Vehicle condition	Engine idle speed

OK → **CHECK AND REPLACE COMBINATION METER ASSY**

NG

3	CHECK HARNESS AND CONNECTOR(BETWEEN ECM AND COMBINATION METER ASSY)

(a) Disconnect the connector from the combination meter assy.

(b) Disconnect the connector from the ECM.

(c) Check continuity between the terminal E9–5 (TACH) of ECM and the terminal C11–3 of the combination meter connector (See Page 05–1506).

Standard: Continuity.

OK → **CHECK AND REPLACE ECM**

NG

REPAIR OR REPLACE HARNESS OR CONNECTOR

MALFUNCTION IN WATER TEMPERATURE RECEIVER GAUGE

WIRING DIAGRAM

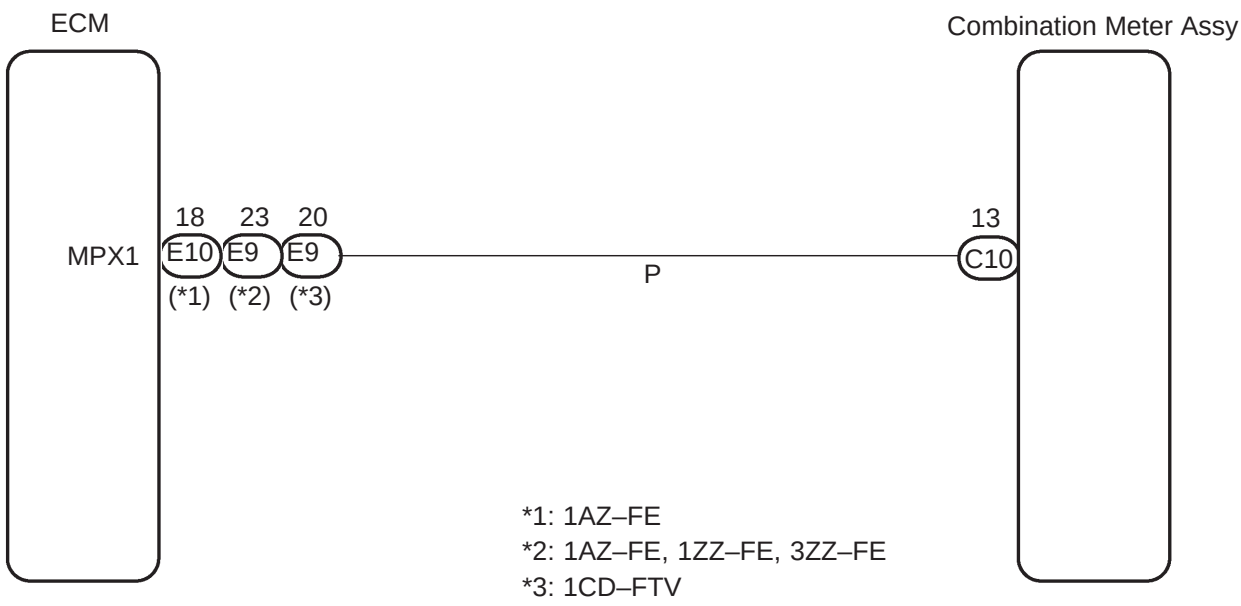

INSPECTION PROCEDURE

HINT:

The ECM sends information on the water temperature sensor to the meter through the Bean. If there is on open or short circuit in the water temperature sensor circuit, the ECM outputs DTCs. Perform troubleshooting with the ”Engine system”.

1	READ VALUE OF HAND–HELD TESTER

(a) Operate the hand–held tester according to the steps on the display and select ”DATA LIST”.

ALL(ECM):

Item	Measurement Item/ Range (Display)	Normal Condition	Diagnostic Note
COOLANT TEMP	Coolant Temperature / Min.: –40°C, Max.: 140°C	After warming up: 80 – 95˚C (176 – 203˚F)	If the value is ”–40 °C” or ”140 °C”, sensor circuit is open or shorted.

NG → **GO TO ENGINE CONTROL SYSTEM**

OK

2	CHECK THAT MALFUNCTION DISAPPEARS A KNOWN GOOD COMBINATION METER IS INSTALLED

NG → **CHECK AND REPLACE ECM**

OK

CHECK AND REPLACE COMBINATION METER ASSY

MALFUNCTION IN FUEL RECEIVER GAUGE

WIRING DIAGRAM

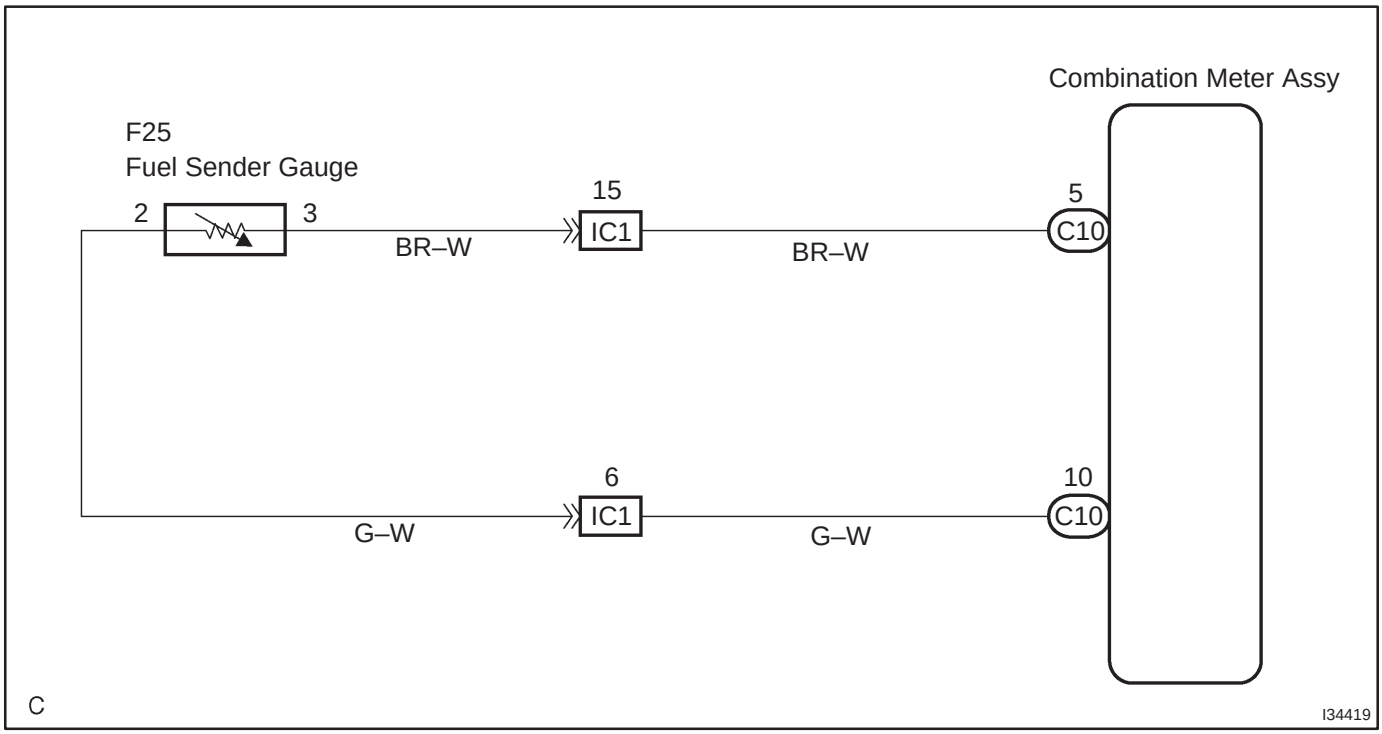

INSPECTION PROCEDURE

1	INSPECT FUEL SENDER GAUGE ASSY

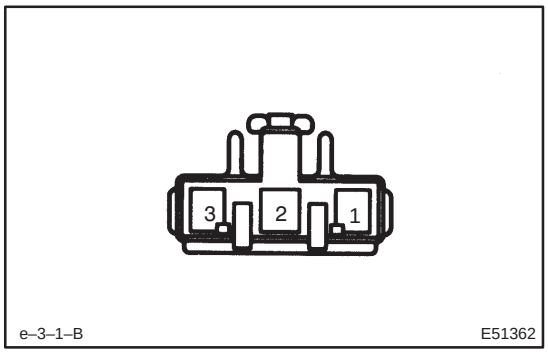

(a) Remove the fuel sender gauge assy.
(b) Check that the float position is between E and F and measure resistance between the terminal 2 and 3 of the connector.
(c) Check that the resistance value changes continuously.

Standard:

Float level	Float position mm (in.)	Resistance (Ω)
F	88.6 (3.49) ± 3 (0.12)	4.0 ± 1.5
1/2	6.4 (0.25) ± 3 (0.12)	50.5 ± 2.6
E	102.9 (4.05) ± 3 (0.12)	110.0 ± 3.0

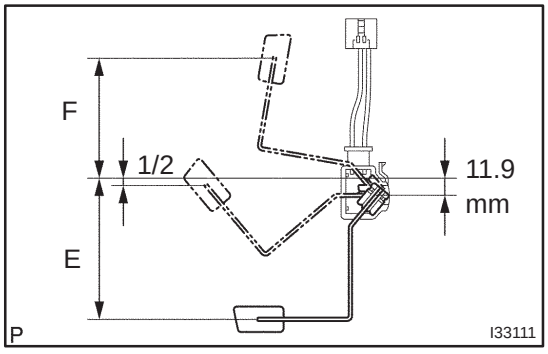

NG → **REPLACE FUEL SENDER GAUGE ASSY**

OK

2	CHECK HARNESS AND CONNECTOR(BETWEEN FUEL SENDER GAUGE ASSY AND COMBINATION METER)

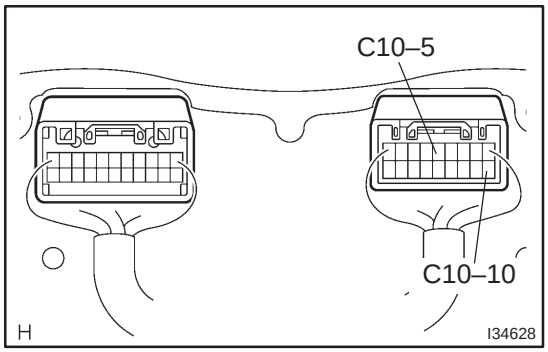

(a) Remove the combination assy and fuel sender gauge.
(b) Check the continuity between the terminal 3 of the fuel sender gauge and the terminal C10–5 of the combination meter assy.
Standard: Continuity.
(c) Check continuity between the terminal 2 of the fuel sender gauge and the terminal C10–10 of the combination meter assy.
Standard: Continuity.

NG → **REPAIR OR REPLACE HARNESS OR CONNECTOR**

OK

CHECK AND REPLACE COMBINATION METER ASSY

ENTIRE COMBINATION METER DOES NOT OPERATE

WIRING DIAGRAM

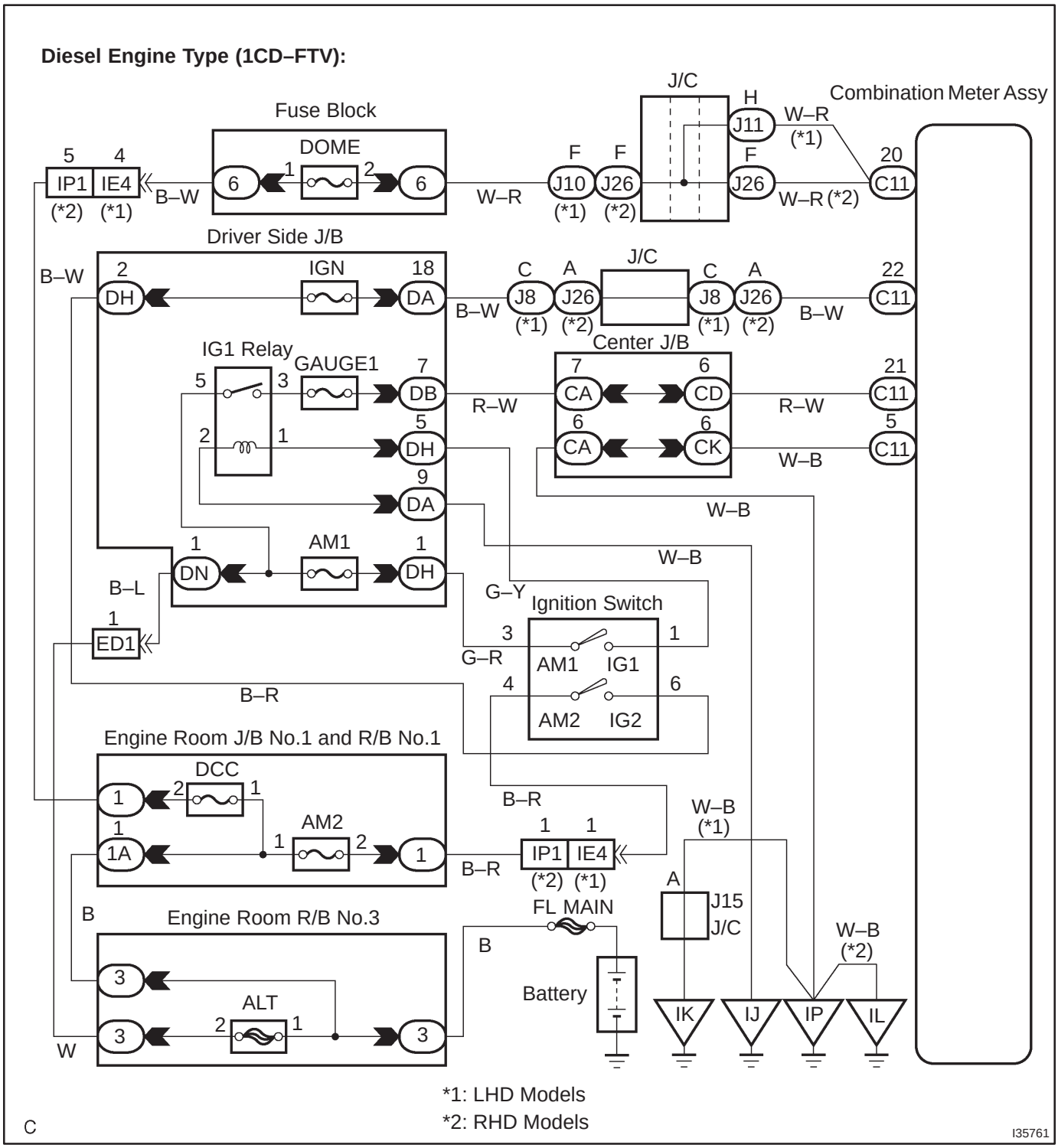

Gasoline Engine Type:

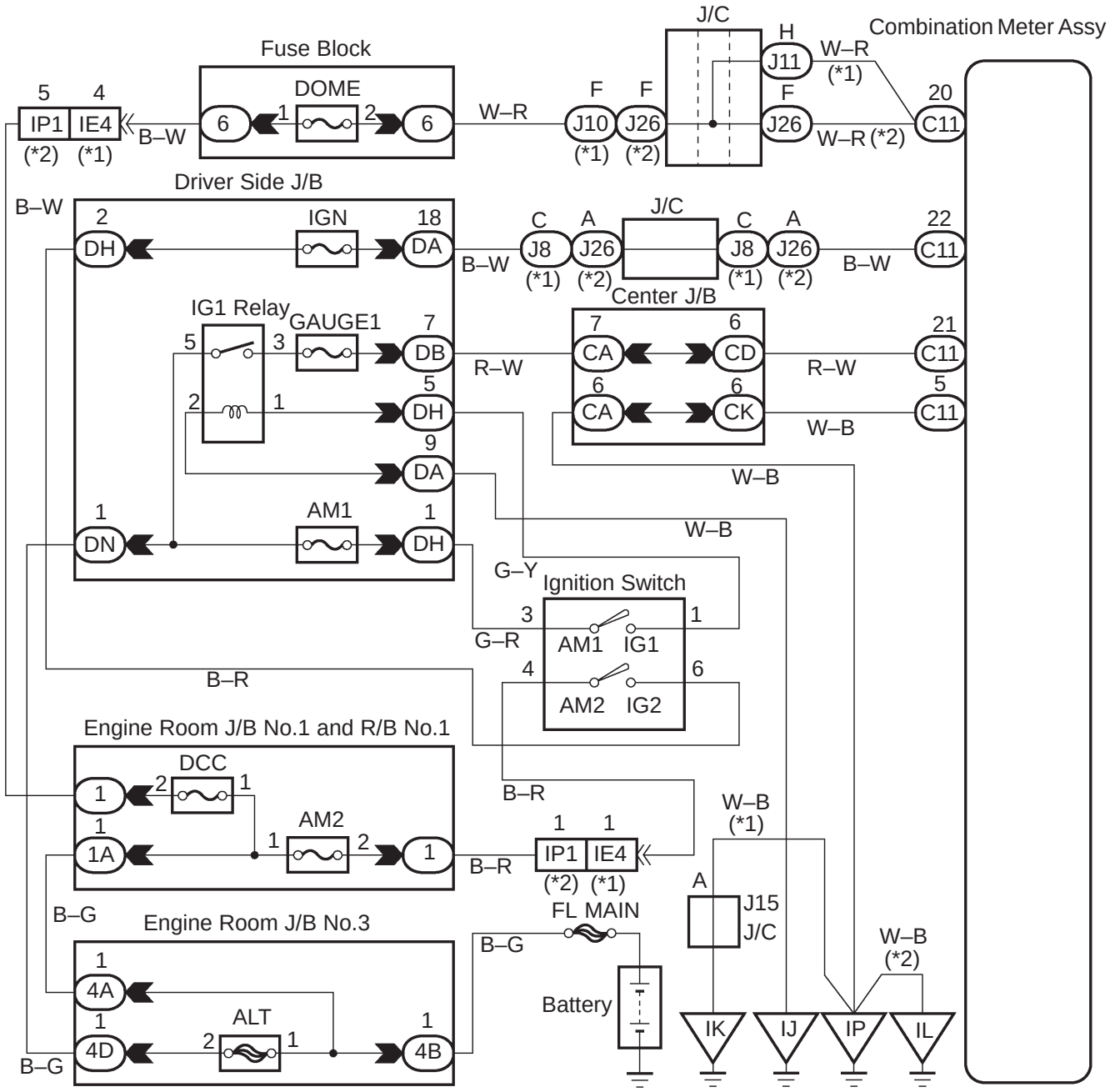

INSPECTION PROCEDURE

1	INSPECT FUSE(GAUGE2, ECU–B)

(a) Check continuity in the GAUGE, DOME fuse.

NG → **REPLACE FUSE**

OK

2	CHECK COMBINATION METER ASSY(POWER SOURCE AND GROUND CIRCUIT)

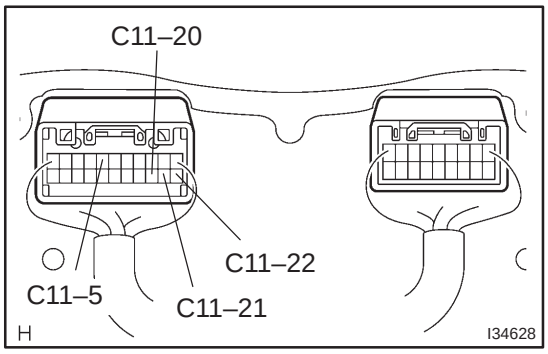

(a) Remove the combination meter assy.
(b) Check continuity.
  (1) Check continuity between the terminal C11–5 of the combination meter connector and the body ground.

  Standard: Continuity.
(c) Check the voltage.
  (1) Measure the voltage between the terminal C11–20 of the combination meter connector and the body ground.

  Standard voltage: 10 – 14 V
  (2) Turn the ignition switch to ON.
  (3) Measure the voltage between the terminal C11–21, 22 of the combination meter connector and the body ground.

  Standard voltage: 10 – 14 V

NG → **REPAIR OR REPLACE HARNESS OR CONNECTOR**

OK

CHECK AND REPLACE COMBINATION METER ASSY

SEAT BELT WARNING LAMP FOR DRIVER'S SEAT DOES NOT OPERATE

WIRING DIAGRAM

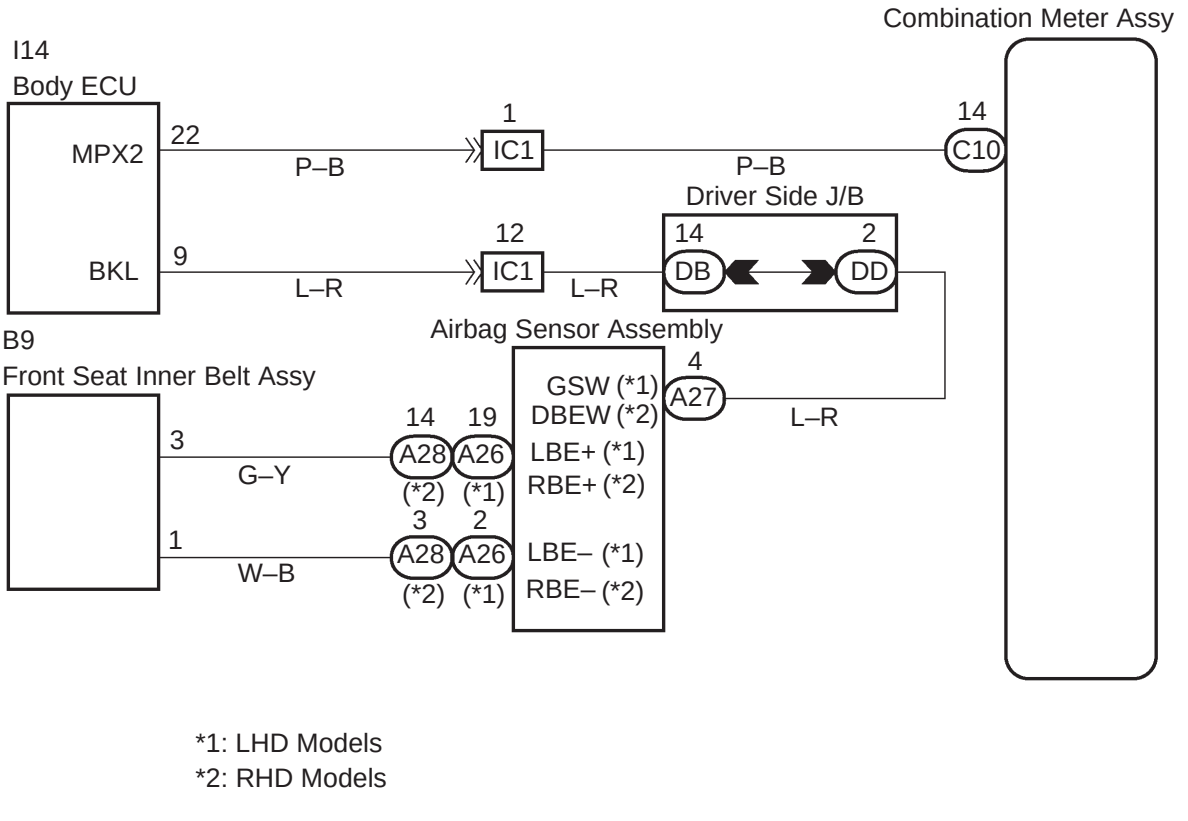

INSPECTION PROCEDURE

1	READ VALUE OF HAND–HELD TESTER

(a) Operate the hand–held tester according to the steps on the display and select "DATA LIST".

BGW(Body):

Item	Measurement Item/ Range (Display)	Normal Condition	Diagnostic Note
D SEAT BUCKL SW	Driver seat belt buckle switch ON / OFF	ON: Fasten the driver seat belt OFF: Unfasten the driver seat belt	–

OK → **CHECK AND REPLACE COMBINATION METER ASSY**

NG

2	CHECK FRONT SEAT INNER BELT ASSY

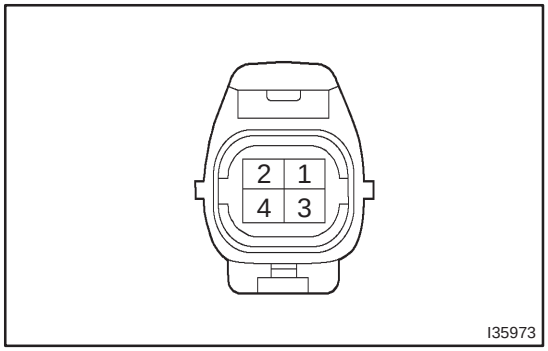

(a) Check resistance.
  (1) Disconnect the connector from front seat inner belt assy.
  (2) Check resistance between the terminal 3 and 1 of the front seat inner belt assy.

Standard:

Condition	Specified Condition
Seat belt is fastened	No continuity
Seat belt is unfastened	Continuity

NG → **REPLACE FRONT SEAT INNER BELT ASSY**

OK

3	CHECK HARNESS OR CONNECTOR(BODY ECU–FRONT SEAT INNER BELT ASSY)

(a) Check continuity between the terminal I14–9 of body ECU and the terminal A27–4 of airbag sensor assembly.
(b) Check continuity between the terminal A28–14 (A26–19) / A28–3 (A26–2)of airbag sensor assembly and the terminal B9–3 / B9–1 of front seat inner belt assy.
  ( ): LHD Models
  Standard: Continuity

NG → **REPAIR OR REPLACE HARNESS OR CONNECTOR**

OK

4	CHECK THAT MALFUNCTION DISAPPEARS A KNOWN GOOD COMBINATION METER IS INSTALLED

NG → **CHECK AND REPLACE BODY ECU**

OK

CHECK AND REPLACE COMBINATION METER ASSY

SEAT BELT WARNING LAMP FOR FRONT PASSENGER'S SEAT DOES NOT FLASH

WIRING DIAGRAM

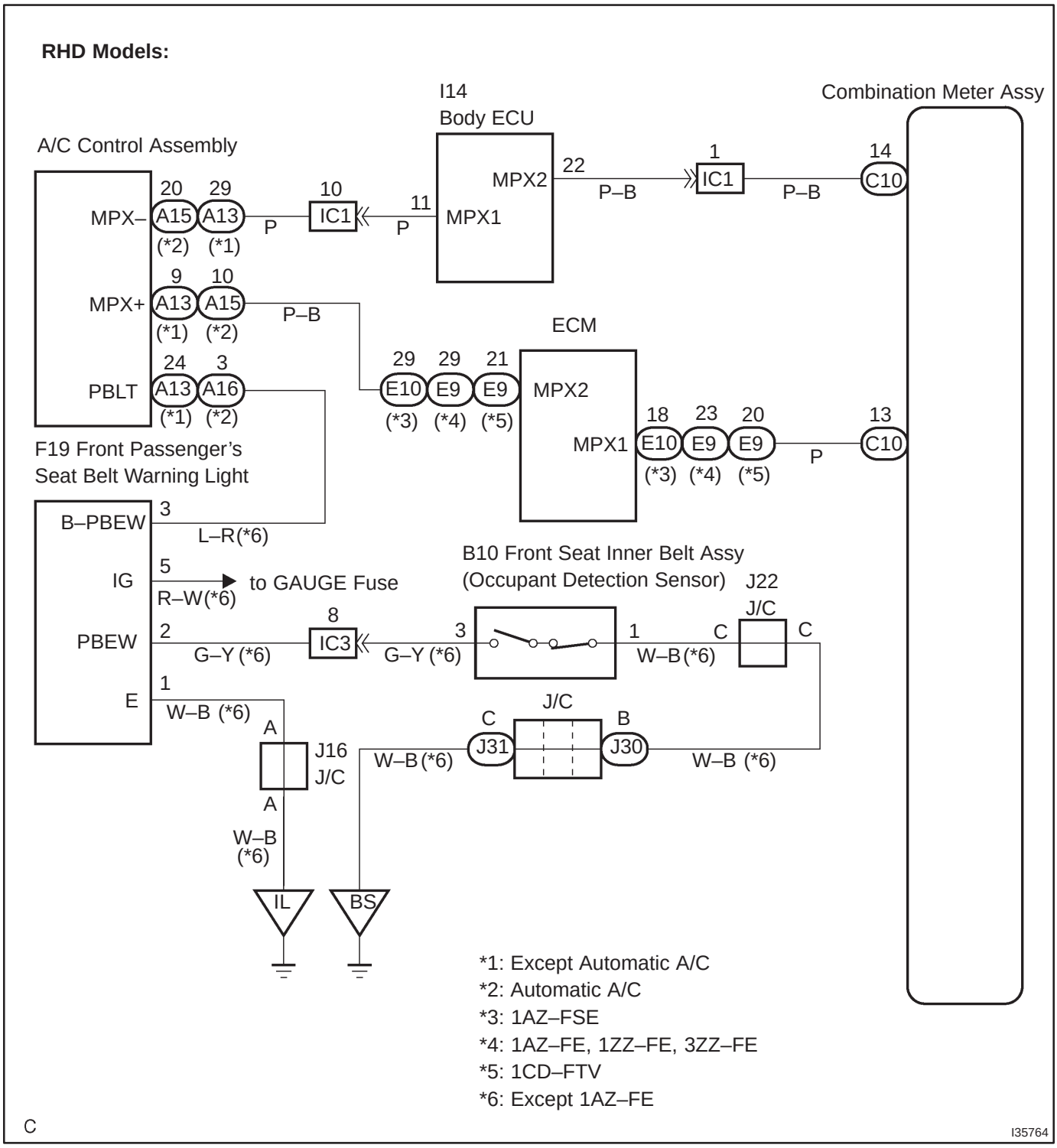

LHD Models:

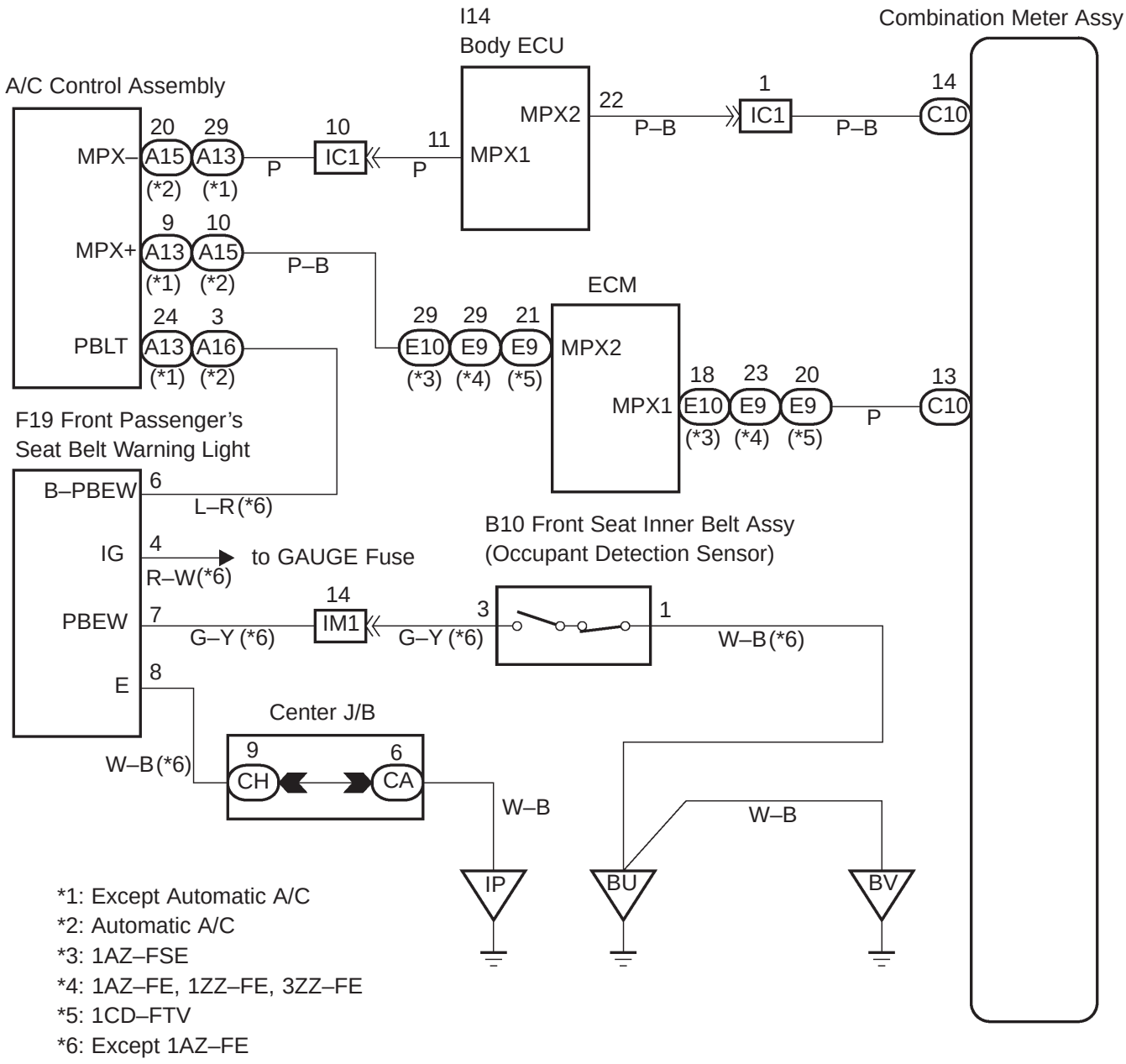
I14
Body ECU
Combination Meter Assy
A/C Control Assembly
MPX2
MPX1
22
1
14
IC1
C10
P–B
P–B
MPX–
20
29
10
11
A15
A13
IC1
P
P
(*2)
(*1)
MPX+
9
10
A13
A15
P–B
(*1)
(*2)
ECM
PBLT
24
3
29
29
21
A13
A16
E10
E9
E9
MPX2
(*1)
(*2)
(*3)
(*4)
(*5)
MPX1
18
23
20
13
E10
E9
E9
C10
P
(*3)
(*4)
(*5)
F19 Front Passenger's
Seat Belt Warning Light
B10 Front Seat Inner Belt Assy
(Occupant Detection Sensor)
B–PBEW
6
L–R (*6)
IG
4
R–W (*6)
to GAUGE Fuse
PBEW
7
14
3
1
G–Y (*6)
IM1
G–Y (*6)
W–B (*6)
E
8
Center J/B
W–B (*6)
9
6
CH
CA
W–B
W–B
IP
BU
BV
*1: Except Automatic A/C
*2: Automatic A/C
*3: 1AZ–FSE
*4: 1AZ–FE, 1ZZ–FE, 3ZZ–FE
*5: 1CD–FTV
*6: Except 1AZ–FE
C
I35765

INSPECTION PROCEDURE

1	CHECK FRONT SEAT INNER BELT ASSY

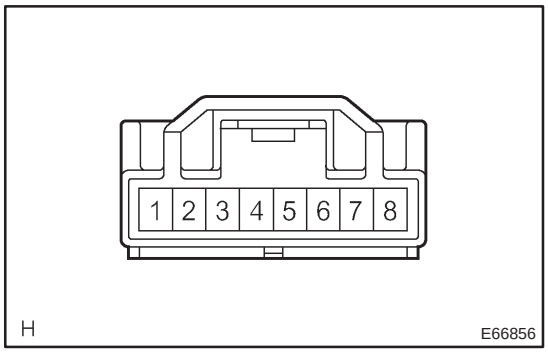

(a) Check resistance.
  (1) Disconnect the connector from front seat inner belt assy.
  (2) Check resistance between the terminal 3 and 1 of the front seat inner belt assy.

Standard:

Condition	Specified Condition
Seat belt is fastened	No continuity
Seat belt is unfastened	Continuity

NG → **REPLACE FRONT SEAT INNER BELT ASSY**

OK

2	CHECK HARNESS OR CONNECTOR(A/C CONTROL ASSEMBLY–FRONT SEAT INNER BELT ASSY)

(a) Check continuity between the terminal A13–24 / A16–3 of A/C control assembly and the terminal F19–3 (6) of front passenger's seat belt warning light.
  ( ): LHD models

(b) Check continuity between the terminal F19–2 (F19–7)of front passenger's seat belt warning light and the terminal B10–3 of front seat inner belt assy.
  ( ): LHD models
  Standard: Continuity

NG → **REPAIR OR REPLACE HARNESS OR CONNECTOR**

OK

3	CHECK THAT MALFUNCTION DISAPPEARS A KNOWN GOOD COMBINATION METER IS INSTALLED

NG → **CHECK AND REPLACE AIR CONDITIONER CONTROL ASSEMBLY**

OK

CHECK AND REPLACE COMBINATION METER ASSY

THE AMBIENT TEMPERATURE DOES NOT DISPLAY

WIRING DIAGRAM

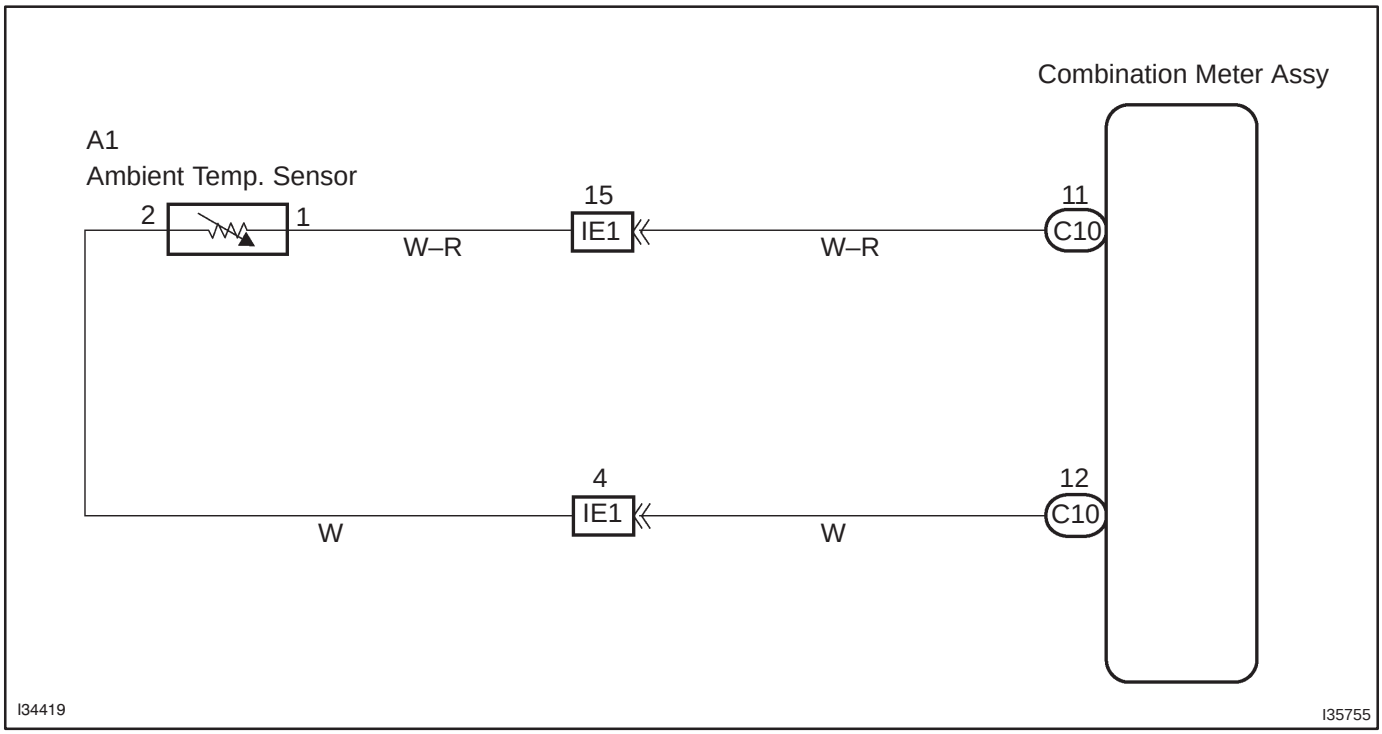

INSPECTION PROCEDURE

1	CHECK COMBINATION METER ASSY

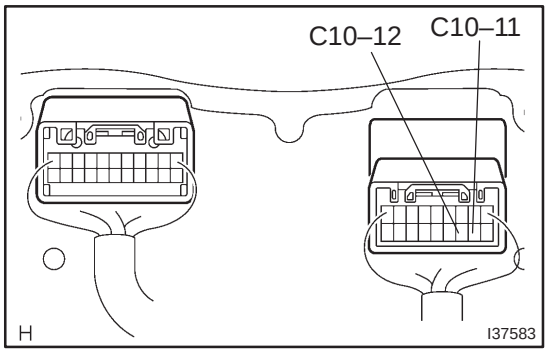

(a) Disconnect the connector from the combination meter assy.

(b) Measure resistance between the terminal C10–11 and C10–12 of the ambient temp. sensor connector at each temperature.

Resistance:

9.0 to 9.8 kΩ: at 0°C (0°F)

2.7 to 2.9 kΩ: at 25°C (77°F)

HINT:

As the temperature increases, resistance decreases.

Resistance:

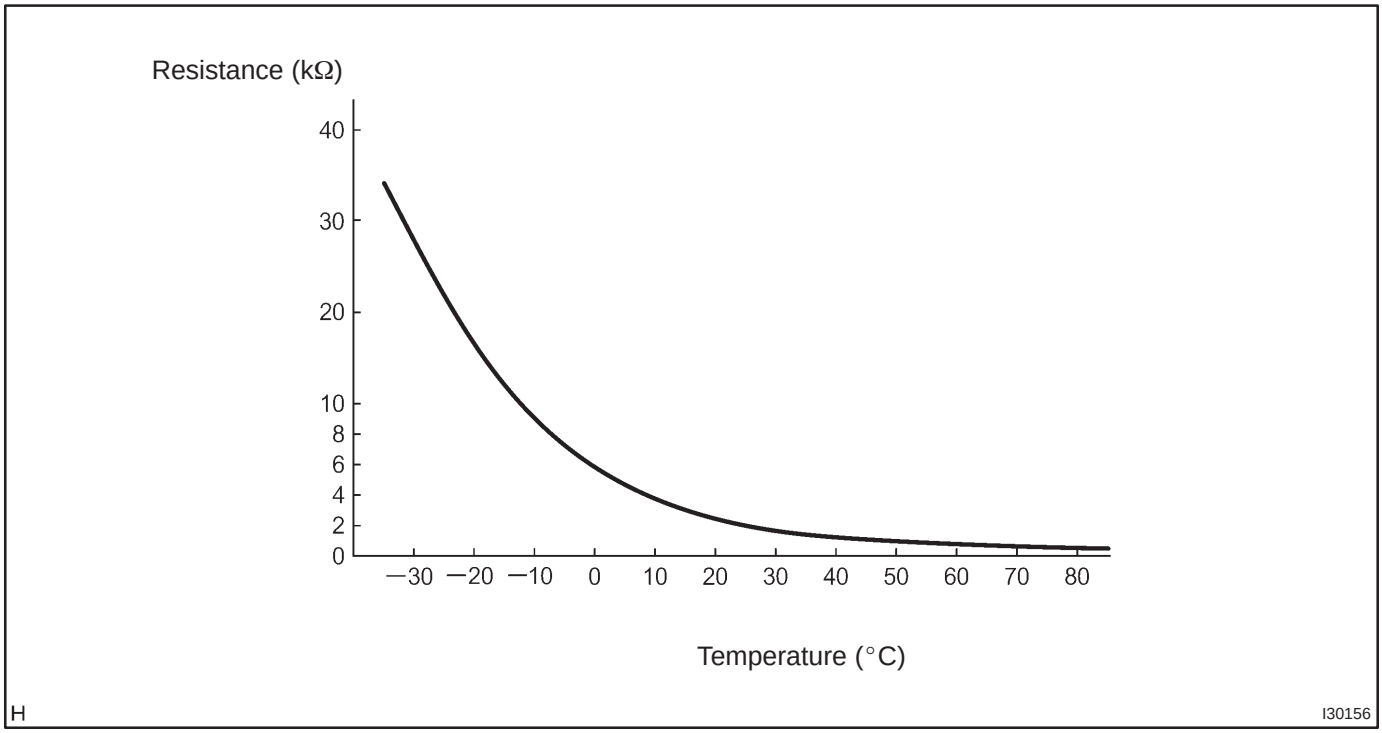

OK → **REPLACE COMBINATION METER ASSY**

NG

2	CHECK HARNESS OR CONNECTOR

(a) Disconnect the connector from ambient temp. sensor.
(b) Check continuity between the terminal C10–11 (12) of combination meter assy and the terminal A1–1 (2) of ambient temp. sensor connector.
Standard: Continuity.

NG → **REPAIR OR REPLACE HARNESS OR CONNECTOR**

OK

REPLACE OUTER AMBIENT TEMPERATURE SENSOR

WARNING BUZZER DOES NOT SOUND

WIRING DIAGRAM

LHD Models:

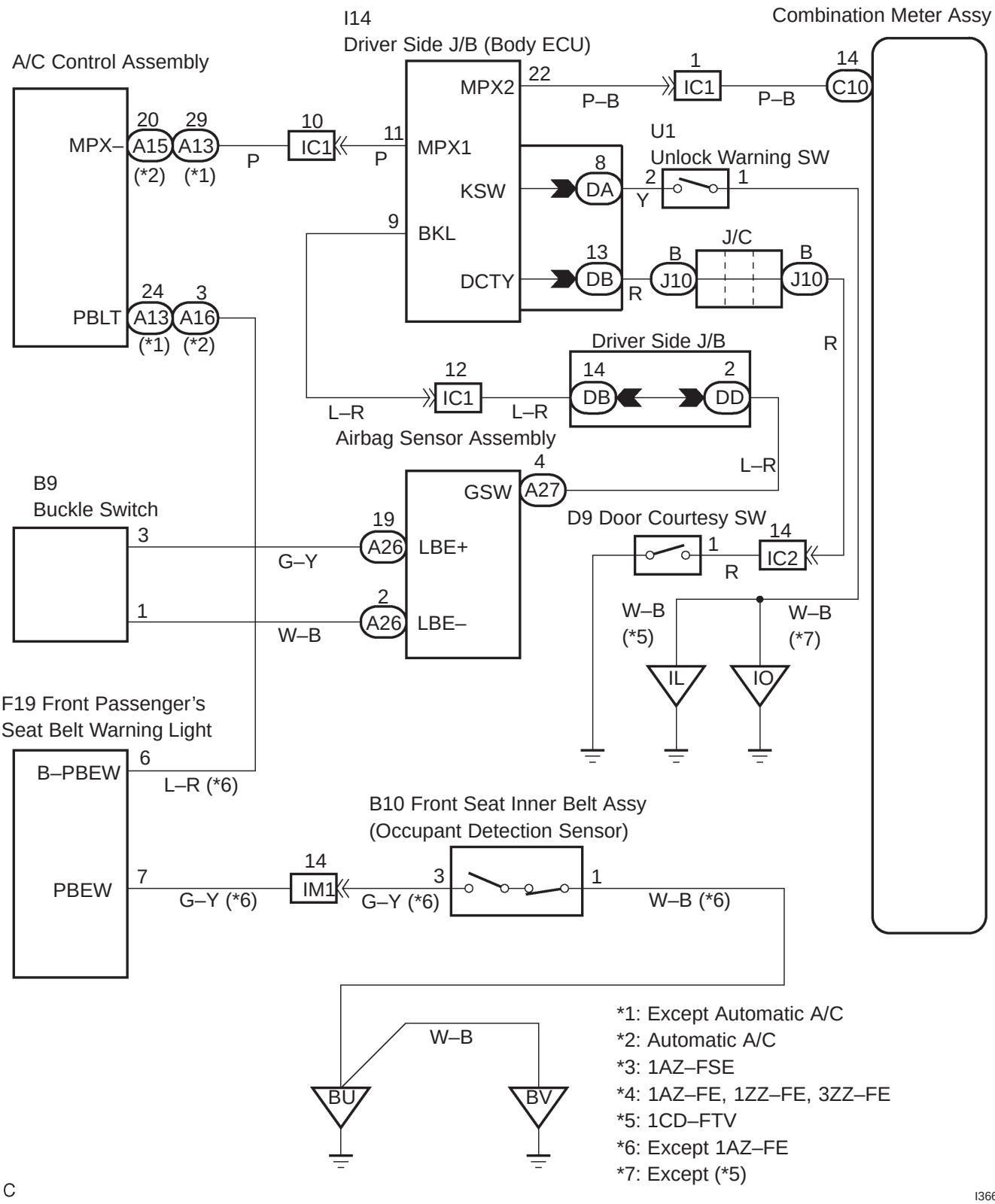

RHD Models:

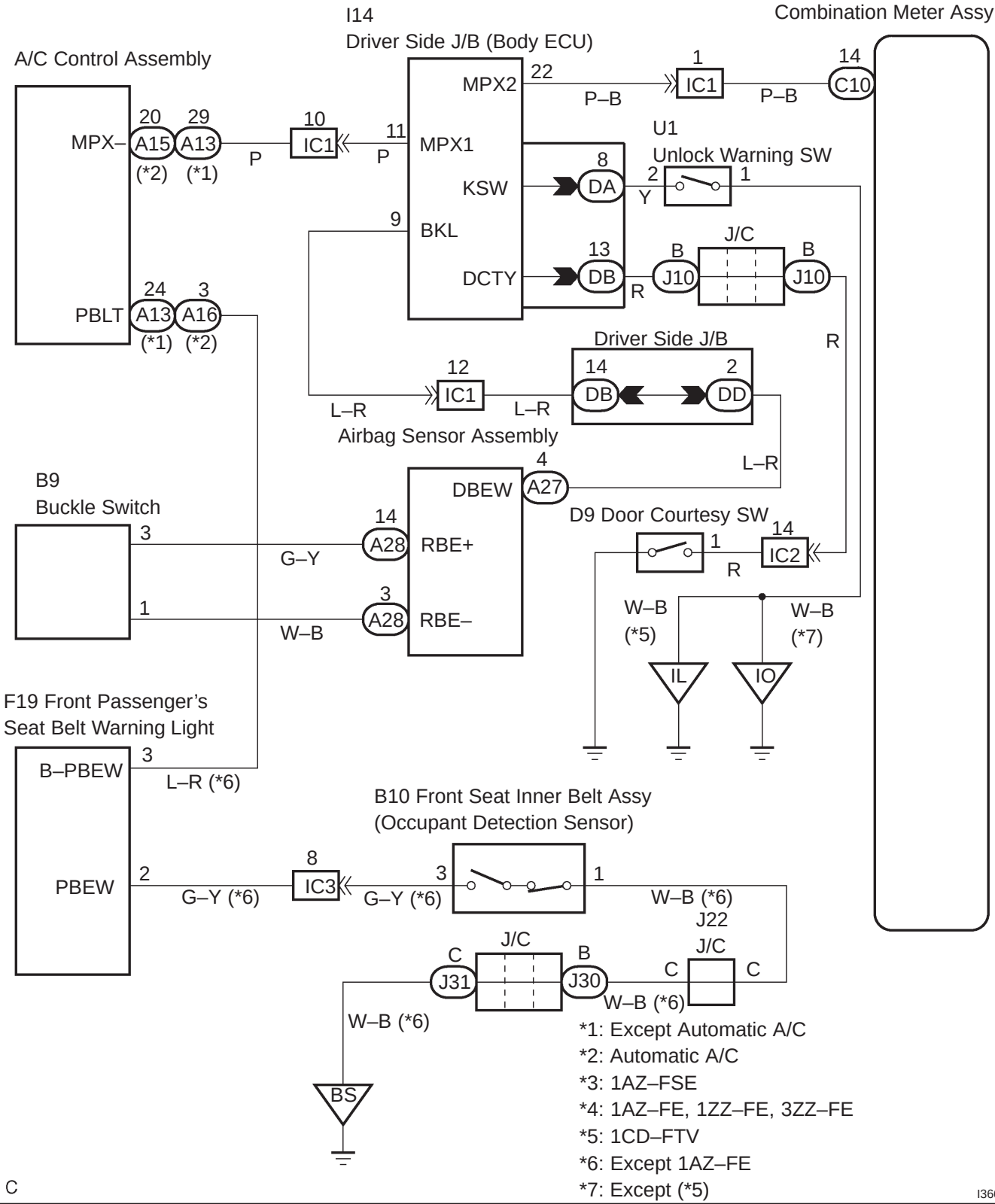
I14
Driver Side J/B (Body ECU)
Combination Meter Assy
A/C Control Assembly
MPX2
22
P–B
1
IC1
P–B
14
C10
MPX–
20
A15
29
A13
(*2)
(*1)
P
10
IC1
11
P
MPX1
U1
Unlock Warning SW
KSW
8
DA
2
Y
1
9
BKL
J/C
DCTY
13
DB
B
J10
R
B
J10
PBLT
24
A13
3
A16
(*1)
(*2)
Driver Side J/B
R
12
IC1
L–R
L–R
14
DB
2
DD
Airbag Sensor Assembly
L–R
4
A27
DBEW
B9
Buckle Switch
D9 Door Courtesy SW
3
G–Y
14
A28
RBE+
1
IC2
R
1
W–B
3
A28
RBE–
W–B
(*5)
W–B
(*7)
IL
IO
F19 Front Passenger's
Seat Belt Warning Light
B–PBEW
3
L–R (*6)
B10 Front Seat Inner Belt Assy
(Occupant Detection Sensor)
PBEW
2
G–Y (*6)
8
IC3
3
G–Y (*6)
1
W–B (*6)
J22
J/C
J/C
C
J31
B
J30
C
C
W–B (*6)
W–B (*6)
BS
*1: Except Automatic A/C
*2: Automatic A/C
*3: 1AZ–FSE
*4: 1AZ–FE, 1ZZ–FE, 3ZZ–FE
*5: 1CD–FTV
*6: Except 1AZ–FE
*7: Except (*5)
C
I36642

INSPECTION PROCEDURE

1	CHECK BUZZER

Buzzer does not sound.	A
Only seat belt buzzer does not sound.	B

HINT:

Perform the buzzer OFF mode check, when only the seat belt buzzer does not sound. If the seat belt buzzer still does not sound even after the check, proceed to step 2.

B → SYSTEM CHECK MODE(SEE PAGE 05–1499)

A

2	READ VALUE OF HAND–HELD TESTER

(a) Operate the hand–held tester according to the display and select the ”DATA LIST”.

Key reminder buzzer:

Item	Measurement Item/ Range (Display)	Normal Condition	Diagnostic Note
KEY UNLOCK WRN SW	Key unlock warning switch OFF / ON	Key unlock warning switch ON	–
D DOOR CTY SW	D door courtesy switch OFF / ON	D door courtesy switch ON	–
IG SW	Ignition switch OFF / ON	Ignition switch OFF	–

Light reminder buzzer:

Item	Measurement Item/ Range (Display)	Normal Condition	Diagnostic Note
KEY UNLOCK WRN SW	Key unlock warning switch OFF / ON	Key unlock warning switch ON	–
D DOOR CTY SW	D door courtesy switch OFF / ON	D door courtesy switch ON	–
IG SW	Ignition switch OFF / ON	Ignition switch OFF	–

Seat belt buzzer:

Item	Measurement Item/ Range (Display)	Normal Condition	Diagnostic Note
D SEAT BUCKL SW	Driver seat buckle switch is OFF / ON	Driver seat buckle switch is OFF position	–
P SEAT BUCKL SW	Passenger seat buckle switch is OFF / ON	Passenger seat buckle switch is OFF position	–
IG SW	Ignition switch OFF / ON	Ignition switch OFF	–
VEHICLE SPD	Vehicle speed / Min.: 0 km/h, Max.: 255 km/h	Vehicle speed ≧15 km/h	Almost same at the meter speed (When driving)

HINT:

When the vehicle speed is not displayed on the hand–held tester, refer to ”Malfunction in speedometer” (See Page 05–1510).

Result:

NG (Seat belt buzzer does not operate)	A
NG (Key reminder / Light reminder buzzer does not operate)	B
OK	C

B	Go to step 5
C	CHECK AND REPLACE COMBINATION METER ASSY

A

3	INSPECT FRONT SEAT INNER BELT ASSY(D–SEAT)(SEE PAGE 05–1594)

NG	CHECK AND REPLACE FRONT SEAT INNER BELT ASSY

OK

4	INSPECT FRONT SEAT INNER BELT ASSY(P–SEAT)(SEE PAGE 05–1594)

NG	CHECK AND REPLACE FRONT SEAT INNER BELT ASSY

OK

REPAIR OR REPLACE HARNESS OR CONNECTOR

5	INSPECT IGNITION SWITCH AND KEY UNLOCK WARNING SWITCH(SEE PAGE 05–1594)

NG	CHECK AND REPLACE IGNITION SWITCH AND KEY UNLOCK WARNING SWITCH

OK

6	INSPECT DOOR COURTESY LAMP SWITCH ASSY(SEE PAGE 05–1594)

NG	CHECK AND REPLACE DOOR COURTESY LAMP SWITCH ASSY

OK

REPAIR OR REPLACE HARNESS OR CONNECTOR

POWER DOOR LOCK CONTROL SYSTEM

HOW TO PROCEED WITH TROUBLESHOOTING

05C84–01

HINT:

Troubleshoot in accordance with the procedures on the following pages.

1	VEHICLE BROUGHT TO WORKSHOP

2	CUSTOMER PROBLEM ANALYSIS CHECK AND PROBLEM SYMPTOM

3	PROBLEM SYMPTOMS TABLE (See page 05–1545)

(a) When problem is not listed on problem symptoms table, proceed to A.

(b) When problem is listed on problem symptoms table, proceed to B.

B → Go to step 6

A

4	PERFORM TROUBLESHOOTING ACCORDING TO MALFUNCTION SYMPTOM

(a) Pre–check (See page 05–1536).
  (1) Inspection with the hand–held tester (ECU DATA LIST).
  (2) Inspection with the hand–held tester (ACTIVE TEST).

(b) On–vehicle inspection (See page 73–1).

(c) Inspection (See page 73–3).

(d) Terminals of ECU (See page 05–1542).

5	ADJUST, REPAIR OR REPLACE

END

05C85–01

CUSTOMER PROBLEM ANALYSIS CHECK

POWER DOOR LOCK CONTROL SYSTEM Check Sheet

Inspector's name:_____

Customer's Name		**VIN**	
		Production Date	
		Licence No.	
Date Vehicle Brought in	/ /	**Odometer Reading**	km miles

Date Problem First Occurred		/ /
Frequency Problem Occurs		☐ Constant ☐ Sometimes (Times per day, month) ☐ Once only
Weather Conditions When Problem Occurred	**Weather**	☐ Fine ☐ Cloudy ☐ Rainy ☐ Snowy ☐ Various/Others
	Outdoor temperature	☐ Hot ☐ Warm ☐ Cool ☐ Cold (Approx. °C (°F))

Problem Symptoms	☐ Malfunction in Door Lock/Unlock Operation Using Door Lock Control Switch	☐ Driver side door lock control switch	☐ Driver side door ☐ Passenger side door ☐ Rear left door ☐ Rear right door ☐ Luggage door ☐ Back door
	☐ Malfunction in Door Lock/Unlock Operation Using Key	☐ Driver side door key lock and unlock control switch	☐ Driver side door ☐ Passenger side door ☐ Rear left door ☐ Rear right door ☐ Luggage door ☐ Back door
	☐ Malfunction in Key Lock–in Prevention Function		
	☐ w/ Double Lock: Malfunction in Double Locking Function System		
	☐ Others		

PRE–CHECK

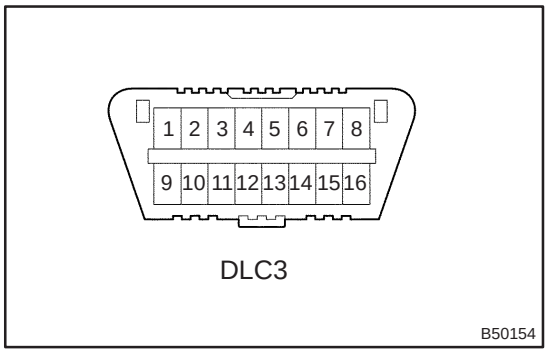

1. DIAGNOSIS SYSTEM

(a) Inspect the DLC3.

HINT:

The vehicle's ECM uses the ISO 14230 (M–OBD) communication protocol. The terminal arrangement of DLC3 complies with ISO 15031–03 and matches the ISO 14230 format.

Tester Connection	Condition	Specified Condition
7 (Bus + line) – 5 (Signal ground)	During communication	Pulse generation
4 (Chassis ground) – Body ground	Constant	Below 1 Ω
5 (Signal ground) – Body ground	Constant	Below 1 Ω
16 (B+) – Body ground	Constant	9 to 14 V

HINT:

If the display shows UNABLE TO CONNECT TO VEHICLE when you have connected the cable of the hand–held tester to the DLC3, turned the ignition switch ON and used the hand–held tester, there is a problem on the vehicle side or tester side.

- If communication is normal when the tester is connected to another vehicle, inspect the DLC3 of the original vehicle.
- If communication is still impossible when the tester is connected to another vehicle, the problem is probably in the tester itself, so consult the Service Department listed in the tester's manual.

(b) Check the battery voltage.

Battery voltage: 11 to 14 V

If voltage is below 11V, recharge the battery before proceeding.

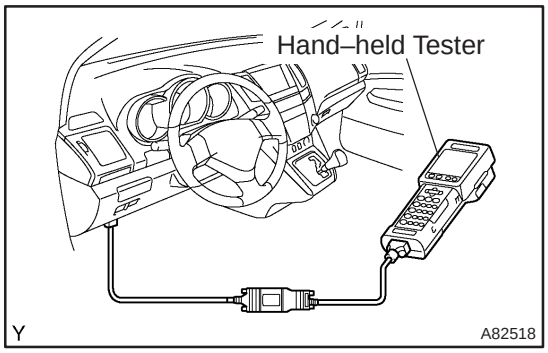

2. USING HAND–HELD TESTER

(a) Connect the hand–held tester to the DLC3.

(b) Monitor the ECU data by following the prompts on the tester screen.

HINT:

The hand–held tester has a "Snapshot" function which records the monitored data.

Refer to the hand–held tester operator's manual for further details.

3. DATA LIST

HINT:

According to the DATA LIST displayed by the hand–held tester, you can read the value of the switch, sensor, actuator, etc. without parts removal. Reading the DATA LIST as the first step of troubleshooting is one way to shorten the labor time.

(a) Connect the hand–held tester to the DLC3.

(b) Turn the ignition switch ON.

(c) Read the DATA LIST according to the display on the tester.

Standard (Integration relay):

Item	MeasurementItem/Display (Range)	NormalCondition	Diagnostic Note
KEY UNLK WRN SW	Unlock warning switch signal /ON or OFF	ON: Key is in ignition key cylinder OFF: No key is in ignition key cylinder	–
D DOR CTY SW	Driver side door courtesy switch signal /ON or OFF	ON: Driver side door is open OFF: Driver side door is closed	–
P DOR CYT SW	Passenger side door courtesy switch signal /ON or OFF	ON: Passenger side door is open OFF: Passenger side door is closed	–
Rr DOR CTY SW	Rear door courtesy switch signal /ON or OFF	ON: Either right or left rear door is open OFF: Both right and left rear doors are closed	–
P LOCK POS SW	Passenger side door lock position switch signal /ON or OFF	ON: Passenger side door lock is in unlock position OFF: Passenger side door lock is in lock position	–
Rr LOCK POS SW	Rear door lock position switch signal /ON or OFF	ON: Rear door lock is in unlock position OFF: Rear door lock is in lock position	–
IG SW	IG switch signal /ON or OFF	ON: Key is in ON or START position OFF: Key is in OFF or ACC position	–
D LOCK POS SW	Driver side door lock position switch signal /ON or OFF	ON: Driver side door lock is in unlock position OFF: Driver side door lock is in lock position	–
D/L SW–LOCK	Manual door lock switch LOCK signal /ON or OFF	ON: Manual door lock switch is in lock position OFF: Manual door lock switch is in original position (Common to driver side and passenger side model)	–
D/L SW–UNLOCK	Manual door lock switch UNLOCK signal /ON or OFF	ON: Manual door lock switch is in unlock position OFF: Manual door lock switch is in original position (Common to driver side and passenger side model)	–
DOR KEY SW–LOCK	Key operation door lock switch signal /ON or OFF	ON: Key operation door lock switch is in lock position OFF: Key operation door lock switch is in original position (Common to driver side and passenger side model)	–
P DOR KEY SW–UL	Key operation passenger door unlock switch signal /ON or OFF	ON: Passenger key operation door lock switch is in unlock position OFF: Passenger key operation door lock switch is in neutral position	–
D DOR KEY SW–UL	Key operation driver door unlock switch signal /ON or OFF	ON: Driver key operation door lock switch is in unlock position OFF: Driver key operation door lock switch is in original position	–
ALL UNLK/OPN–CL	Driver side door courtesy switch signal /ON or OFF	ON: All doors unlock when driver side door is opened OFF: Other doors do not unlock when driver side door is opened	–
OPEN DOOR WARN	Door courtesy switch signal /ON or OFF	ON: Either door is open OFF: All doors are closed	–
AUTO LOCK DELAY	Door courtesy switch signal /60s or 30s	60s: Door auto locking time is 60 sec. 30s: Door auto locking time is 30 sec.	–

Item	Measurement Item/Display (Range)	Normal Condition	Diagnostic Note
DOOR HANDLE SW	Back door opener switch signal (Outside handle switch) /ON or OFF	ON: Back door opener switch is pushed OFF: Back door opener switch is not pushed	–
LOCK STATUS	Back door position switch signal /UNLOCK or LOCK	UNLOCK: Back door is unlock LOCK: Back door is lock	–

4. ACTIVE TEST

HINT:

Performing the ACTIVE TEST using the hand–held tester allows you to operate the relay, VSV, actuator, etc. without parts removal. Performing the ACTIVE TEST as the first step of troubleshooting is one way to shorten the labor time. It is possible to display the DATA LIST during the ACTIVE TEST.

(a) Connect the hand–held tester to the DLC3.

(b) Turn the ignition switch ON.

(c) According to the display on the tester, perform the ACTIVE TEST.

Standard (Integration relay):

Item	Test Details	Diagnostic Note
DOOR LOCK	Operate door lock motor for all doors LOCK/OFF	–
DOOR LOCK	Operate door lock motor for all doors UNLOCK/OFF	–

05C87–01

CUSTOMIZE PARAMETERS

HINT:

The following items can be customized.

NOTICE:

- **After confirming whether the items requested by the customer are applicable or not for customization, perform the customize operation.**
- **Be sure to record the current settings before customizing.**
- **When troubleshooting, make sure that the item in question is not set to ”OFF” as a result of customization.**

Standard (Integration relay):

DISPLAY (ITEM)	DEFAULT	CONTENTS	SETTING
AUTO LOCK DELAY	30s	Function that selects AUTO LOCK time 30 sec. or 60 sec.	30s/60s
ALL UNLK/OPN–CL (All unlock w/ D door open–close)	OFF	Function that unlocks all other doors when opening driver side door within 10 seconds after turning the ignition switch to OFF from ON	ON/OFF

05C88–01

LOCATION

LHD Models

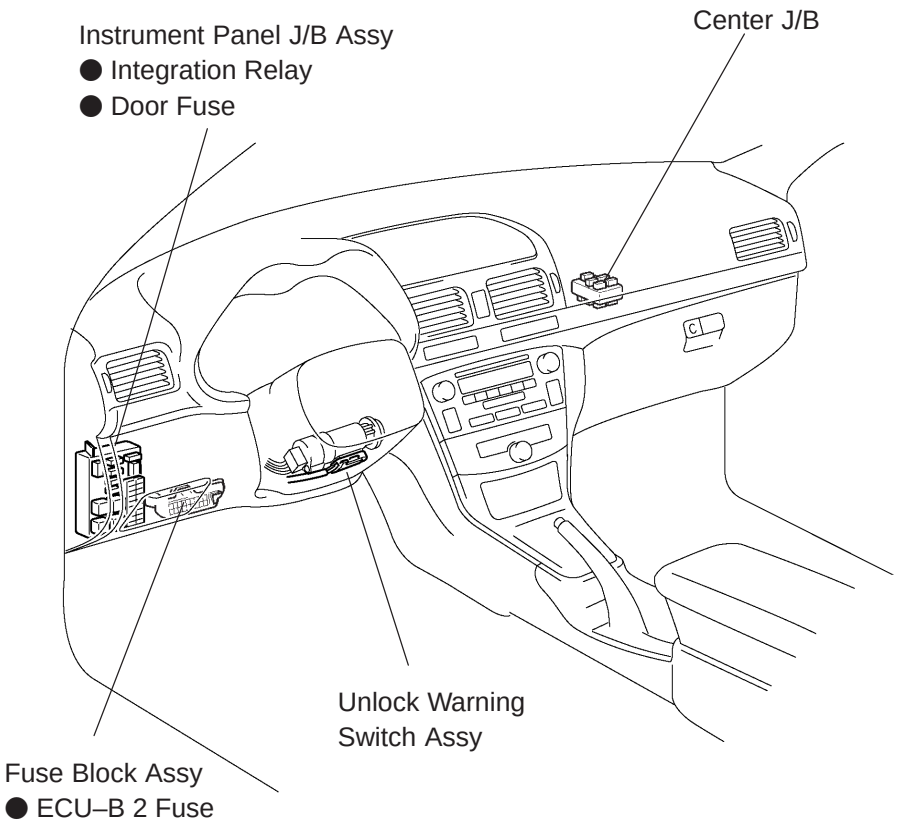

RHD Models

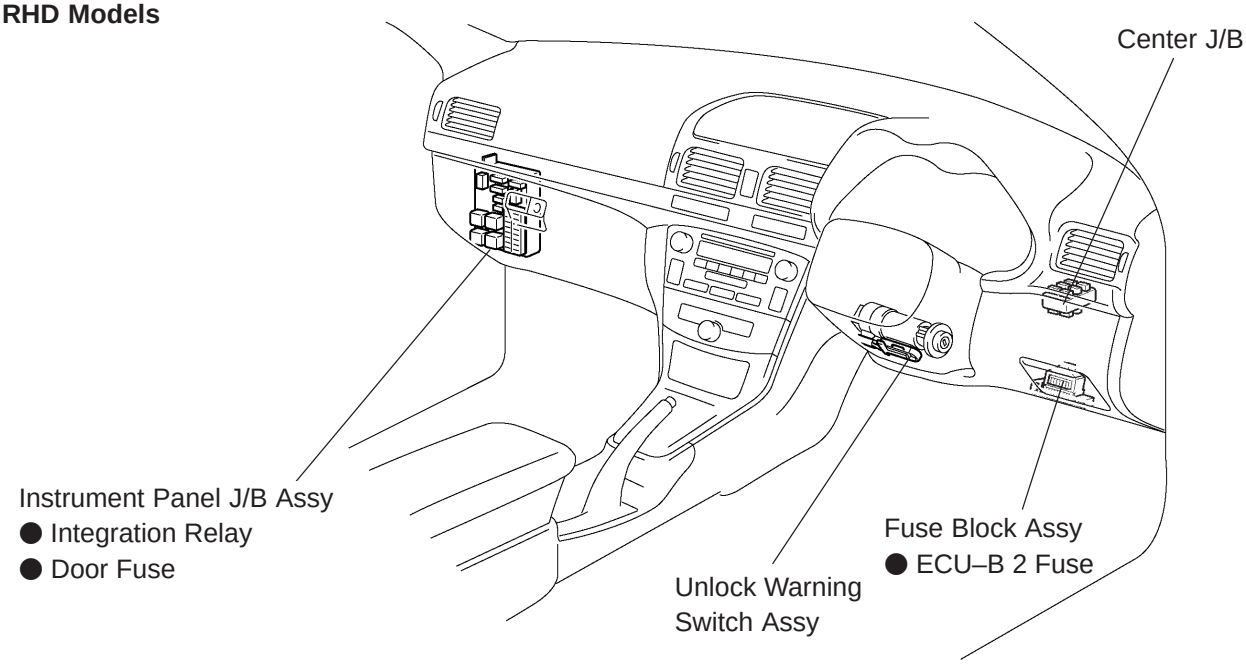

B68459
B70503
B70504
Y

B70813

Sedan Models

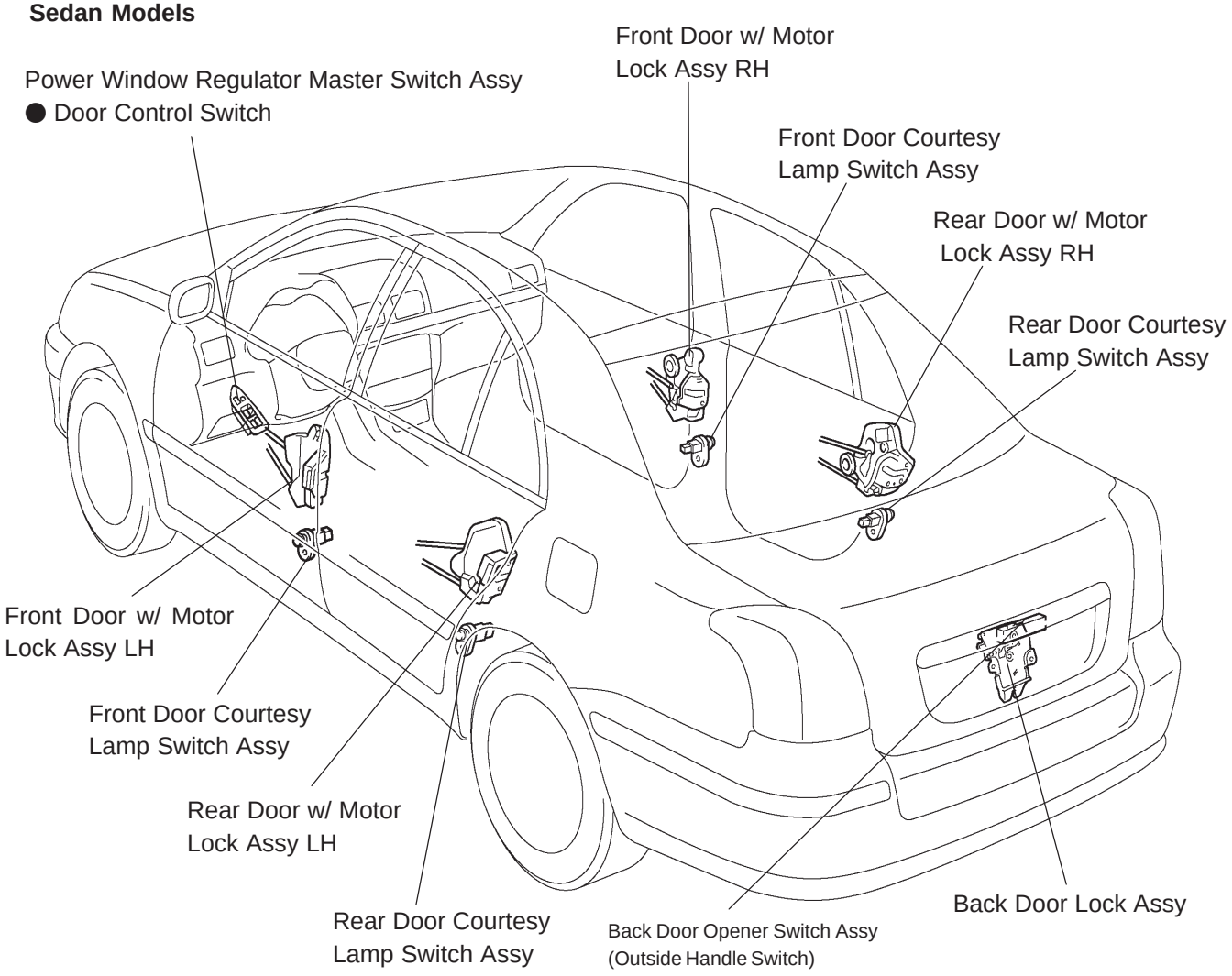

Liftback Models

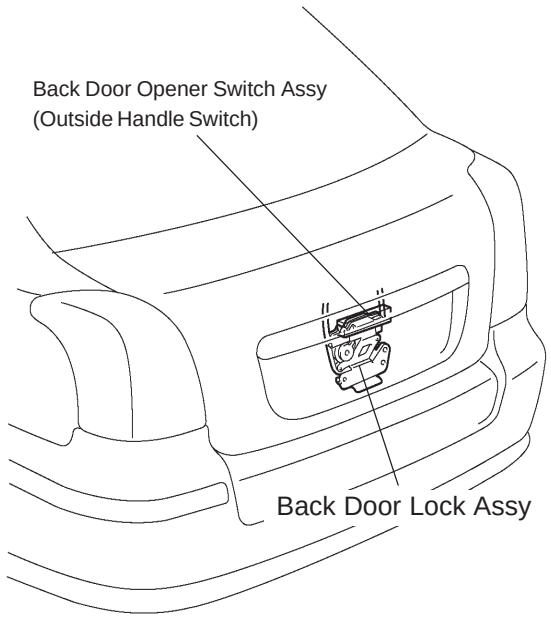

Wagon Models

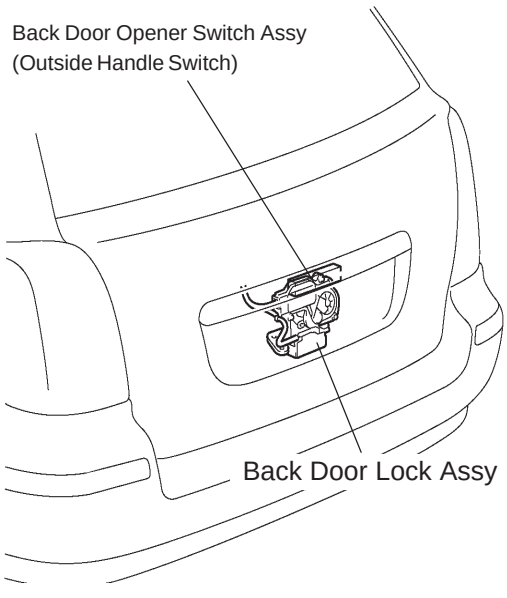

B70496

05C89–01

TERMINALS OF ECU

1. CHECK INSTRUMENT PANEL J/B ASSY (INTEGRATION RELAY)

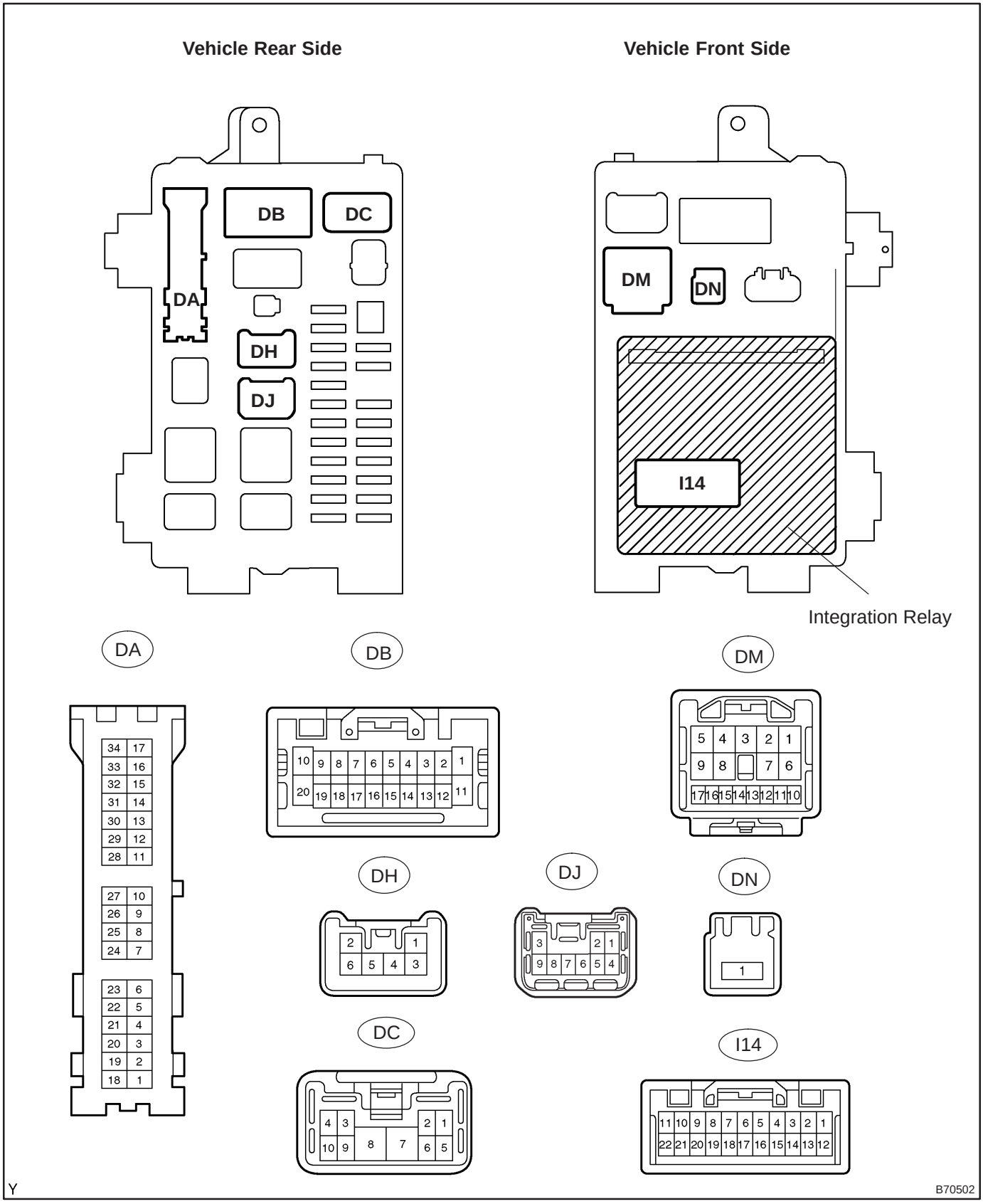

(a) Disconnect the DA, DB, DC, DM, DN and I14 J/B connectors.
(b) Check the voltage or continuity between each terminal of the wire harness side connectors and the body ground.

Standard:

Symbols (Terminal No.)	Wiring Color	Condition	Specified Condition
KSW (DA–8) – Body ground	Y – Body ground	No key in ignition key cylinder → Key inserted	No continuity → Continuity
E (DA–9) – Body ground	W–B – Body ground	Constant	Continuity
B (DB–16) – Body ground	W–R – Body ground	Constant	10 to 14 V
B (DN–1) – Body ground	*1 B–G – Body ground	Constant	10 to 14 V
	*2 B–L – Body ground		
L1 (DA–29) – Body Ground	BR–W – Body ground	Door control switch (Master switch) OFF → LOCK	No continuity → Continuity
UL1 (DA–13) – Body Ground	G–W – Body ground	Door control switch (Master switch) OFF → UNLOCK	
L2 (I14–4) – Body Ground	*3 L–Y – Body ground	Driver door key cylinder OFF → LOCK	
	*4 L–R – Body ground		
UL2 (I14–5) – Body Ground	L – Body ground	Driver door key cylinder OFF → UNLOCK	
*3 BDSU (I14–10) – Body Ground	L–B – Body ground	*3 Luggage component door opener switch FREE → PUSHED *4 Back door opener switch FREE → PUSHED	
DCTY (DB–13) – Body Ground	R – Body ground	Driver door CLOSED → OPEN	10 kΩ or higher → Below 1 Ω
PCTY (DC–9) – Body Ground	R – Body ground	Passenger door CLOSED → OPEN	
RCTY (DM–12) – Body Ground	W–G – Body ground	Rear left door CLOSED → OPEN	
RCTY (DM–13) – Body Ground	W–G – Body ground	Rear right door CLOSED → OPEN	
*3 LGCY (I14–1) – Body Ground	R–Y – Body ground	Luggage door CLOSED → OPEN	
*4 BDCY (I14–12) – Body Ground	R–Y – Body ground	Back door CLOSED → OPEN	

HINT:
*1: Gasoline *2: 1CD–FTV engine *3: Sedan *4: Liftback and Wagon
If the result is not as specified, there may be a malfunction on the wire harness side.

(c) Reconnect the J/B connectors.

(d) Check the voltage between each terminal of the connectors and the body ground.

Standard:

Symbols (Terminal No.)	Wiring Color	Condition	Specified Condition
ACC (DH–3) – Body ground	G – Body ground	Ignition switch ACC	10 to 14 V
ACT+ (DJ–1) – Body Ground	L–R – Body ground	Door control switch (master switch) or door key cylinder OFF → LOCK	Below 1 V → 10 to 14 V → Below 1 V
ACT+ (DM–7) – Body Ground	L–R – Body ground		
ACT+ (DB–20) – Body Ground	L–R – Body ground		
ACT– (DJ–4) – Body Ground	L–B – Body ground	Door control switch (master switch) or door key cylinder OFF → UNLOCK	
ACT– (DM–6) – Body Ground	L–B – Body ground		
ACT– (DB–10) – Body Ground	L–B – Body ground		
LACT (DM–3) – Body Ground	L – Body ground	Back door opener switch (outside handle switch) OFF → ON	
LSWD (I14–3) – Body Ground	LG – Body ground	Driver door UNLOCK → LOCK	Below 1 V → 10 to 14 V
* LSWP (DB–8) – Body Ground	LG–B – Body ground	Passenger door UNLOCK → LOCK	
* LSWP (DA–20) – Body Ground	LG–B – Body ground	Rear right door UNLOCK → LOCK	
* LSWP (DM–10) – Body Ground	LG–B – Body ground	Rear left door UNLOCK → LOCK	
DLPD (I14–6) – Body Ground	B – Body ground	Double lock UNSET → SET	More than 5 V → Less than 1 V
* ACTS (DJ–8) – Body Ground	L – Body ground	Double lock UNSET → SET	Below 1 V → 10 to 14 V
* ACTR (DJ–9) – Body Ground	W – Body ground	Double lock SET → UNSET	

HINT:

*: Double Lock

If the result is not as specified, the J/B assy (integration relay) may have a malfunction.

05C8A–01

PROBLEM SYMPTOMS TABLE

Symptom	Suspected Area	See Page
All doors cannot be locked/unlocked at once	3. DOOR fuse 4. ECU–B 2 fuse 5. Power window regulator master switch assy 6. Front door lock assy LH, RH (Driver side) 7. Instrument panel J/B assy (Integration relay) 8. Wire harness	05–1546
Key lock–in prevention function does not work properly (Manual operation and operation interlocked with key are active)	1. Unlock warning switch assy 2. Courtesy lamp switch assy LH, RH (Driver side) 3. Instrument panel J/B assy (Integration relay) 4. Wire harness	05–1555
w/ Double lock: Double lock function does not operate properly	1. Wireless system 2. DOOR fuse 3. ECU–B 2 fuse 4. Front door lock assy LH, RH 5. Rear door lock assy LH, RH 6. Instrument panel J/B assy (Integration relay) 7. Wire harness	05–1560

ALL DOORS CANNOT BE LOCKED/UNLOCKED AT ONCE

CIRCUIT DESCRIPTION

When the integration relay receives a lock/unlock signal for the doors from the master switch and the driver side door key cylinder, the integration relay drives each door lock.

WIRING DIAGRAM

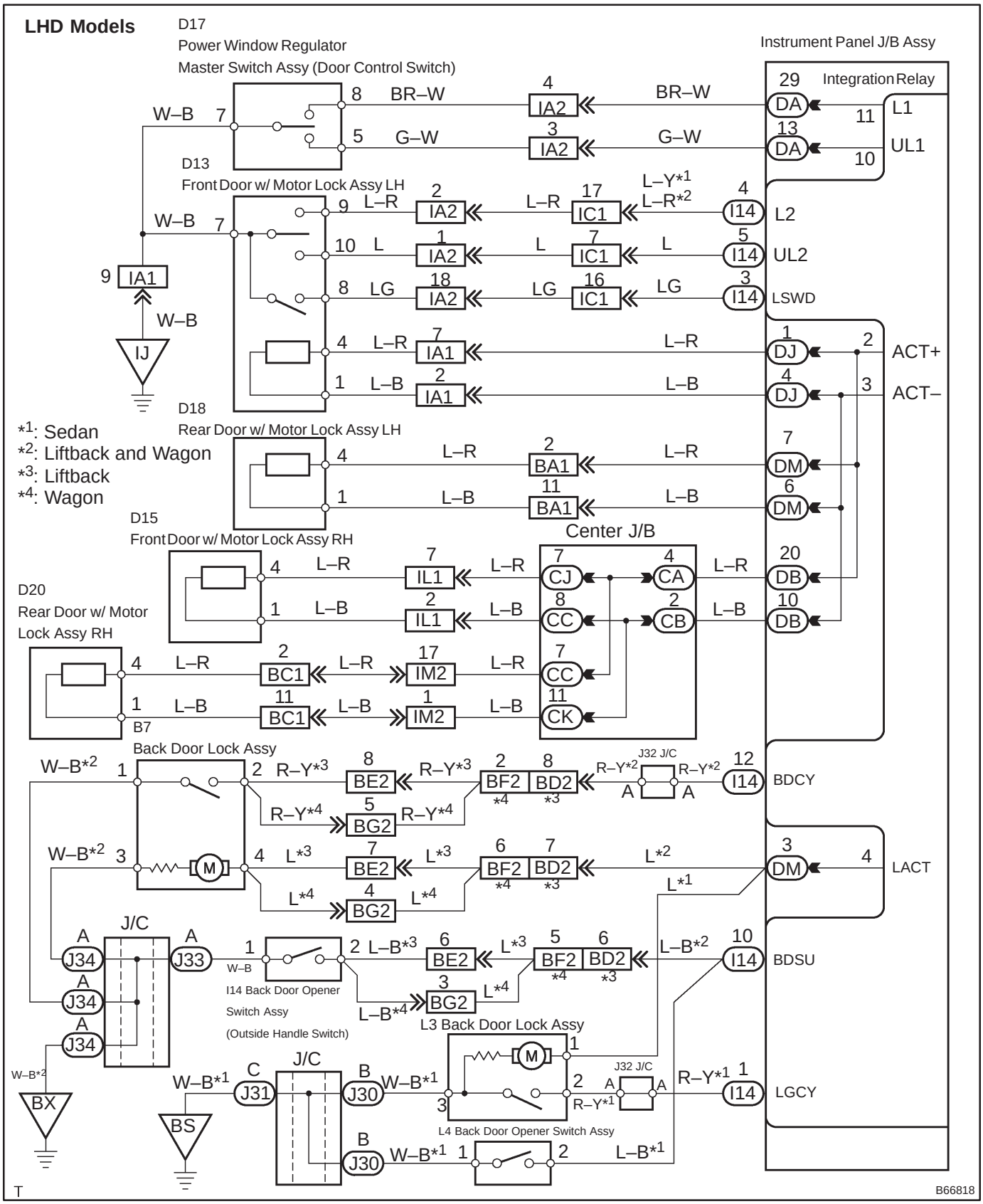

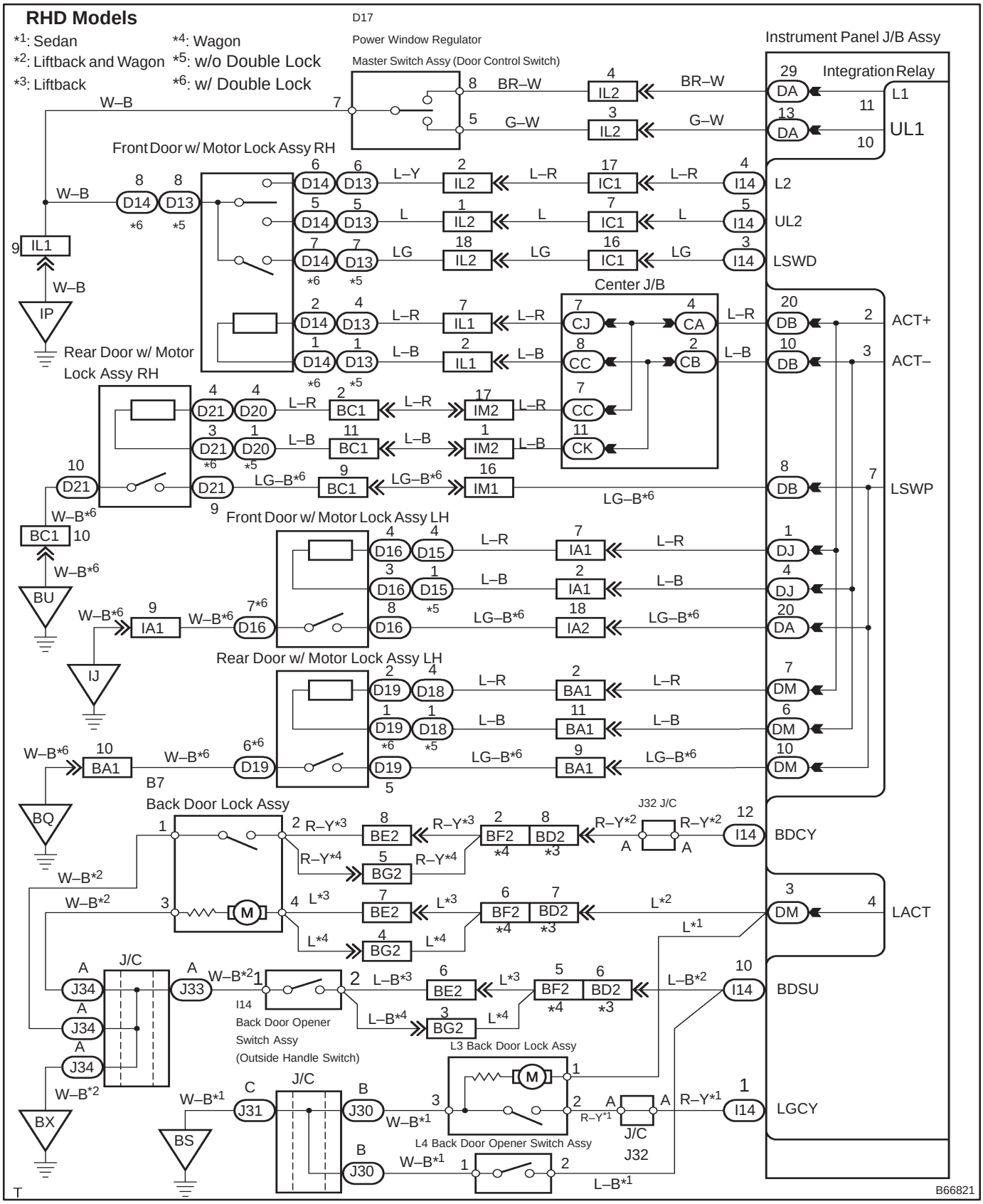
RHD Models
*1: Sedan
*2: Liftback and Wagon
*3: Liftback
*4: Wagon
*5: w/o Double Lock
*6: w/ Double Lock
D17
Power Window Regulator
Master Switch Assy (Door Control Switch)
Instrument Panel J/B Assy
Integration Relay
Front Door w/ Motor Lock Assy RH
Rear Door w/ Motor Lock Assy RH
Center J/B
Front Door w/ Motor Lock Assy LH
Rear Door w/ Motor Lock Assy LH
Back Door Lock Assy
J32 J/C
I14
Back Door Opener Switch Assy (Outside Handle Switch)
L3 Back Door Lock Assy
L4 Back Door Opener Switch Assy
J/C
J32
L1
UL1
L2
UL2
LSWD
ACT+
ACT–
LSWP
BDCY
LACT
BDSU
LGCY
W–B
BR–W
G–W
L–Y
L–R
L
LG
L–B
LG–B*6
R–Y*3
R–Y*4
R–Y*2
L*3
L*4
L*2
L*1
W–B*2
W–B*1
L–B*3
L–B*4
R–Y*1
L–B*2
IL1
IP
BC1
BU
IA1
IJ
BA1
BQ
BX
BS
B7
T
B66821

INSPECTION PROCEDURE

1	INSPECT FUSE (ECU–B 2, DOOR)

(a) Inspect the ECU–B 2 and DOOR fuses (See page 68–1).

NG → **REPLACE FUSE**

OK

2	PERFORM ACTIVE TEST USING HAND–HELD TESTER

(a) Select the ACTIVE TEST, use the hand–held tester to generate a control command and then check that the power door lock operates.

HINT:

During the ACTIVE TEST, the hand–held tester sends a signal to the body ECU to drive all the power door lock motors. If the power door lock operates, the power door lock motor itself and the wire harness between the power door lock motor and body ECU are considered to be functioning normally.

Standard (Multiplex network body ECU):

Item	Test Details	Diagnostic Note
DOOR LOCK	Operate door lock motor for all doors OFF/LOCK/UNLOCK	All doors are closed

NG → **REPLACE INSTRUMENT PANEL JUNCTION BLOCK ASSY (INTEGRATION RELAY)**

OK

3	CHECK MASTER SWITCH OR KEY CYLINDER OPERATION

(a) When manual door lock/unlock operation via the master switch cannot be performed, proceed to A.

(b) When manual door lock/unlock operation interlocked with the driver side door lock key cylinder cannot be performed, proceed to B.

B → **Go to step 6**

A

4 INSPECT POWER WINDOW REGULATOR MASTER SWITCH ASSY

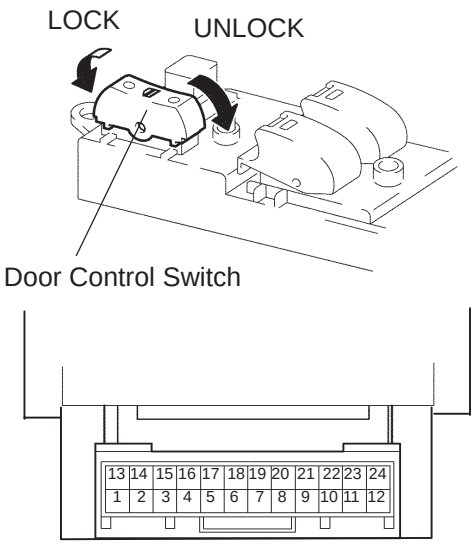

(a) Remove the master switch.
(b) Inspect the door control switch resistance.

Standard:

Tester Connection	Door Lock Position	Specified Condition
7 – 8	Lock	Below 1 Ω
7 – 8, 5 – 7	OFF	10 kΩ or higher
5 – 7	Unlock	Below 1 Ω

NG → **REPLACE POWER WINDOW REGULATOR MASTER SWITCH ASSY**

OK

5	CHECK WIRE HARNESS(POWER WINDOW REGULATOR MASTER SWITCH ASSY – INSTRUMENT PANEL J/B ASSY (INTEGRATION RELAY) AND BODY GROUND)

Wire Harness Side

D17
Power Window Regulator
Master Switch Assy

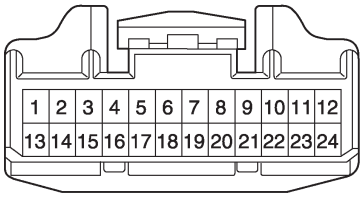

T

DA
Instrument Panel J/B Assy

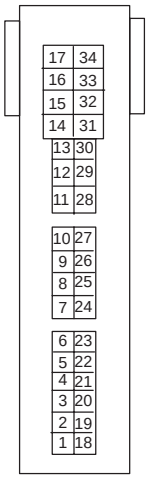

B70497

(a) Disconnect the D17 switch and DA J/B connectors.

(b) Check the resistance between the wire harness side connectors.

Standard (Check for open):

Tester Connection	Specified Condition
D17–8 – DA–29 (L1)	Below 1 Ω
D17–5 – DA13–1 (UL1)	

(c) Check the resistance between the D17 switch connector and body ground.

Standard (Check for open):

Tester Connection	Specified Condition
D17–7 – Body ground	Below 1 Ω

NG → **REPAIR OR REPLACE HARNESS AND CONNECTOR**

OK

REPLACE INSTRUMENT PANEL JUNCTION BLOCK ASSY

6 INSPECT DRIVER DOOR LOCK

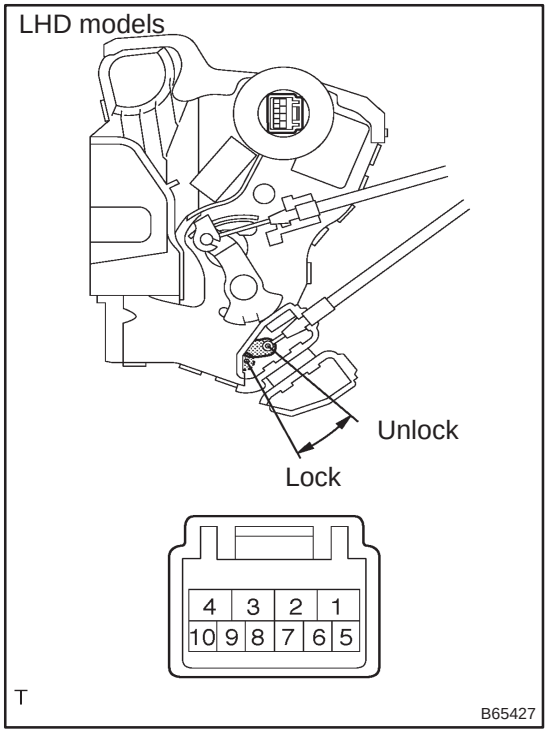

(a) LHD models:
Apply battery voltage to the door lock motor and check operation.
Standard:

Measurement Condition	Specified Condition
Battery positive (+) → Terminal 4 Battery negative (–) → Terminal 1	Lock
Battery positive (+) → Terminal 1 Battery negative (–) → Terminal 4	Unlock

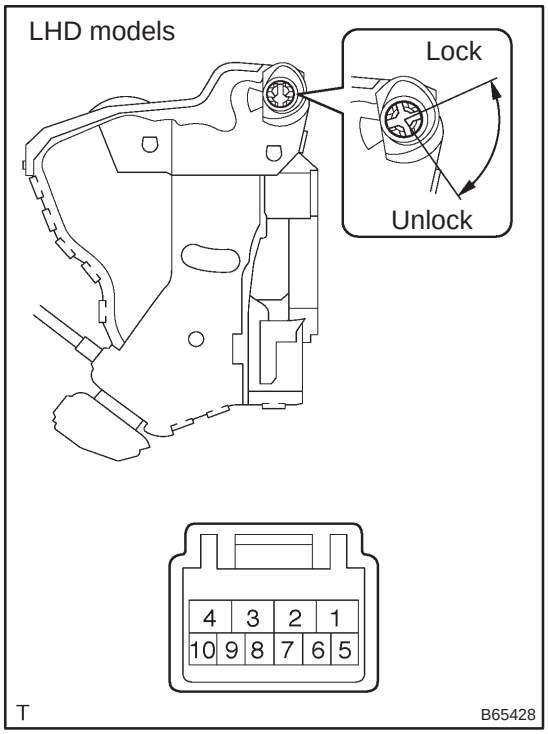

(b) LHD models:
Inspect the door lock and unlock switch resistance.
Standard:

Tester Connection	Door Lock Position	Specified Condition
7 – 9	Lock	Below 1 Ω
7 – 9, 7 – 10	OFF	10 kΩ or higher
7 – 10	Unlock	Below 1 Ω

(c) LHD models:
Inspect the position switch resistance.
Standard:

Tester Connection	Door Lock Position	Specified Condition
7 – 8	Lock	10 kΩ or higher
	Unlock	Below 1 Ω

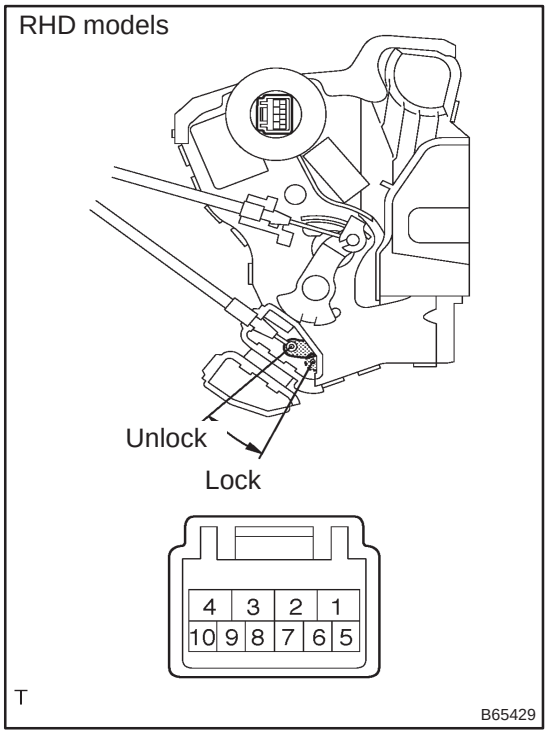

(d) RHD models:
Apply battery voltage to the door lock motor and check operation.
Standard:

MeasurementCondition	SpecifiedCondition
Battery positive (+) → Terminal 4 Battery negative (–) → Terminal 1	Lock
Battery positive (+) → Terminal 1 Battery negative (–) → Terminal 4	Unlock

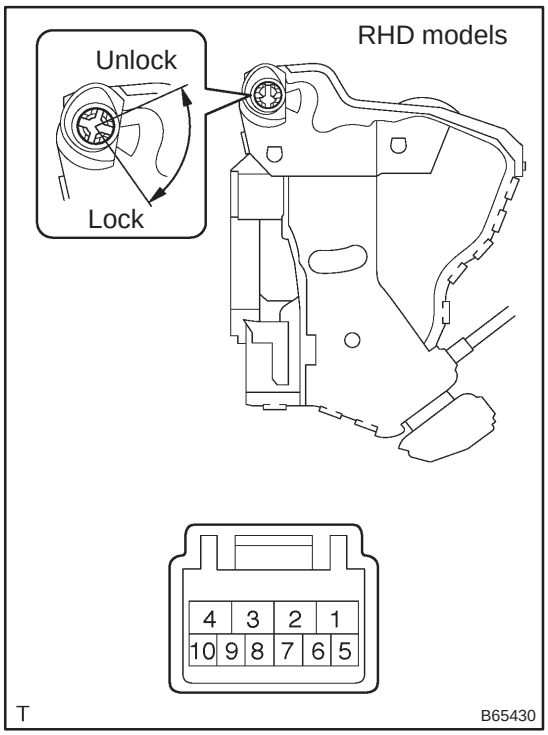

(e) RHD models:
Inspect the door lock and unlock switch resistance.
Standard:

Tester Connection	Door Lock Position	SpecifiedCondition
6 – 8	Lock	Below 1 Ω
6 – 8, 5 – 8	OFF	10 kΩ or higher
5 – 8	Unlock	Below 1 Ω

(f) RHD models:
Inspect the position switch resistance.
Standard:

Tester Connection	Door Lock Position	SpecifiedCondition
7 – 8	Lock	10 kΩ or higher
	Unlock	Below 1 Ω

NG → **REPLACE DRIVER DOOR LOCK**

OK

7	CHECK WIRE HARNESS (DRIVER SIDE DOOR LOCK – INSTRUMENT PANEL J/B ASSY (INTEGRATION RELAY) AND BODY GROUND)

Wire Harness Side

D13*1, D14*2
Driver Side Door Lock

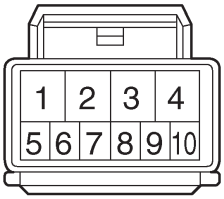

I14
Instrument Panel J/B Assy

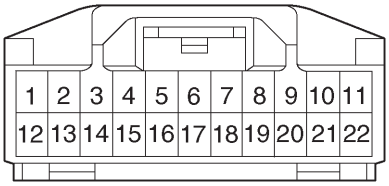

DB
Instrument Panel J/B Assy

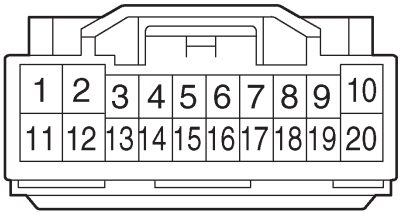

DJ
Instrument Panel J/B Assy

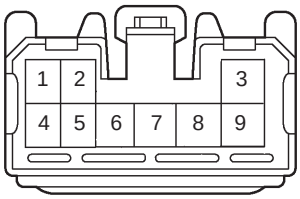

T

*1: w/o Double Lock
*2: w/ Double Lock

B70498

(a) Disconnect the D13, D14 door lock, the I14, DB and DJ J/B connectors.

(b) Check the resistance between the wire harness side connectors.

Standard (Check for open):

LHD models

Tester Connection	Specified Condition
D13–9 – I14–4 (L2)	Below 1 Ω
D13–10 – I14–5 (UL2)	
D13–8 – I14–3 (LSWD)	
D13–4 – DJ–1 (ACT+)	
D13–1 – DJ–4 (ACT–)	

RHD models

Tester Connection	Specified Condition
D13, D14–6 – I14–4 (L2)	Below 1 Ω
D13, D14–5 – I14–5 (UL2)	
D13, D14–7 – I14–3 (LSWD)	
D13, D14–4 – DB–20 (ACT+)	
D13–1*1 – DB–10 (ACT–)	
D14–1*2 – DB–10 (ACT–)	

(c) Check the resistance between the D13, D14 door lock connector and body ground.

Standard (Check for open):

LHD models

Tester Connection	Specified Condition
D13–8 – Body ground	Below 1 Ω

RHD models

Tester Connection	Specified Condition
D13, D14–8 – Body ground	Below 1 Ω

NG → **REPAIR OR REPLACE HARNESS AND CONNECTOR**

OK

REPLACE INSTRUMENT PANEL JUNCTION BLOCK ASSY

KEY LOCK–IN PREVENTION FUNCTION DOES NOT WORK PROPERLY (MANUAL OPERATION AND OPERATION INTERLOCKED WITH KEY ARE ACTIVE)

CIRCUIT DESCRIPTION

The unlock warning switch turns ON when the key is inserted into the ignition key cylinder. The courtesy lamp switch turns ON when the driver side door is opened. These 2 switches are monitored by the integration relay. In order to prevent the key from being locked in, the integration relay controls door locking operation according to the conditions of these switches so that the doors are not locked with the key locked in.

WIRING DIAGRAM

LHD models

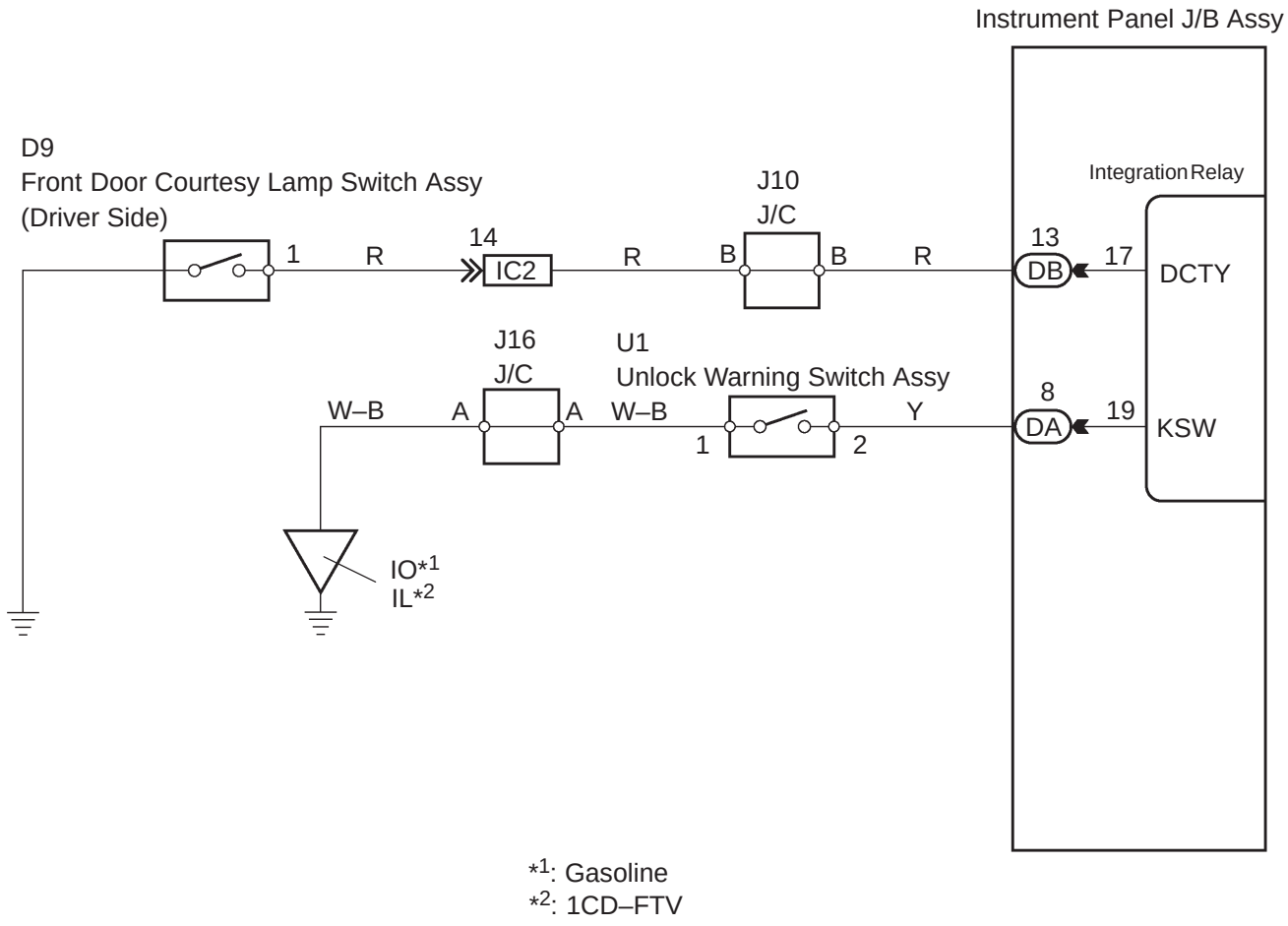

*1: Gasoline
*2: 1CD–FTV

T

B66819

RHD models

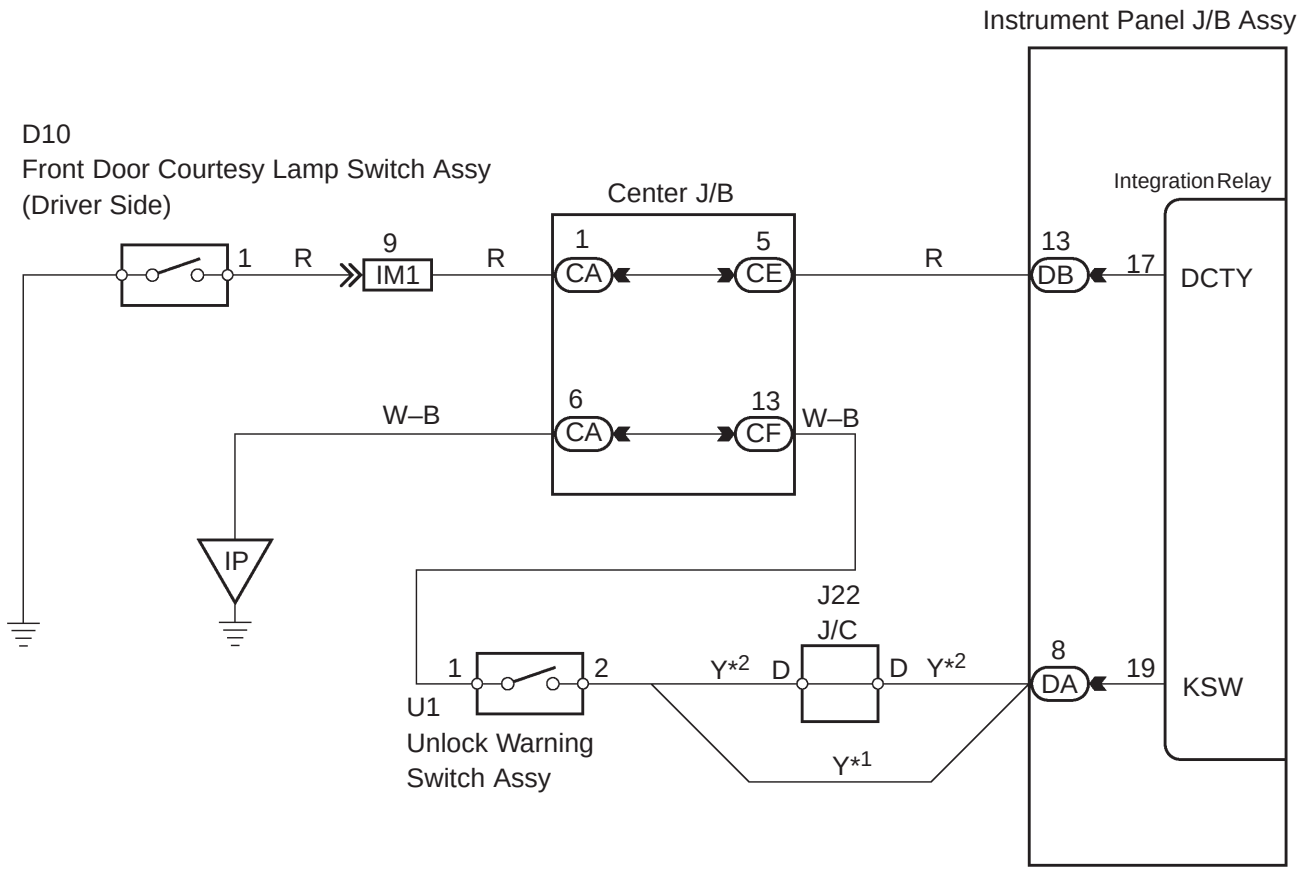

*1: 1AZ–FE
*2: Except 1AZ–FE

T

B66820

INSPECTION PROCEDURE

1 READ VALUE OF HAND–HELD TESTER

(a) Using the hand–held tester, check that the unlock warning switch signal is output when the switch is operated.

Standard (Integration relay):

Item	Measurement Item/Display (Range)	Normal Condition	Diagnostic Note
KEY UNLK WRN SW	Unlock warning switch signal /ON or OFF	ON: Key is in ignition key cylinder OFF: No key is in ignition key cylinder	–

OK → **Go to step 4**

NG

2 INSPECT UNLOCK WARNING SWITCH ASSY

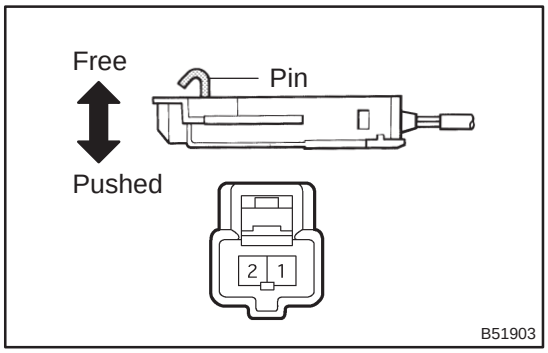

(a) Remove the unlock warning switch.

(b) Inspect the resistance of the switch.

Standard:

Tester Connection	Switch Position	Specified Condition
1 – 2	Free (Key removed)	10 kΩ or higher
	Pushed (Key set)	Below 1 Ω

NG → **REPLACE UNLOCK WARNING SWITCH ASSY**

OK

3 CHECK WIRE HARNESS (UNLOCK WARNING SWITCH ASSY – INSTRUMENT PANEL J/B ASSY (INTEGRATION RELAY))

Wire Harness Side

U1
Unlock Warning Switch Assy

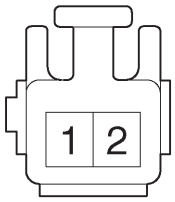

DA
Instrument Panel J/B Assy

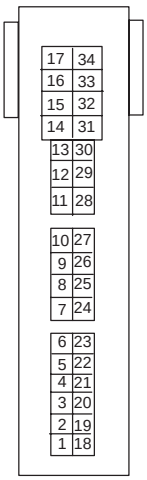

B70499

(a) Disconnect the U1 switch and DA J/B connectors.
(b) Check the continuity between the wire harness connectors.

Standard (Check for open):

Tester Connection	Specified Condition
U1–2 – DA–8 (KSW)	Below 1 Ω

(c) Check the resistance between the U1 switch connector and body ground.

Standard (Check for open):

Tester Connection	Specified Condition
U1–1 – Body ground	Below 1 Ω

NG → **REPAIR OR REPLACE HARNESS AND CONNECTOR**

OK

REPLACE INSTRUMENT PANEL JUNCTION BLOCK ASSY

4 READ VALUE OF HAND–HELD TESTER

(a) Using the hand–held tester, check that the driver side door courtesy lamp switch signal is output when the switch is operated.

Standard (Integration relay):

Item	Measurement Item/Display (Range)	Normal Condition	Diagnostic Note
D DOR CTY SW	Driver side door courtesy switch signal /ON or OFF	ON: Driver side door is open OFF: Driver side door is closed	–

OK → **REPLACE INSTRUMENT PANEL JUNCTION BLOCK ASSY**

NG

5 INSPECT FRONT DOOR COURTESY LAMP SWITCH ASSY (DRIVER SIDE)

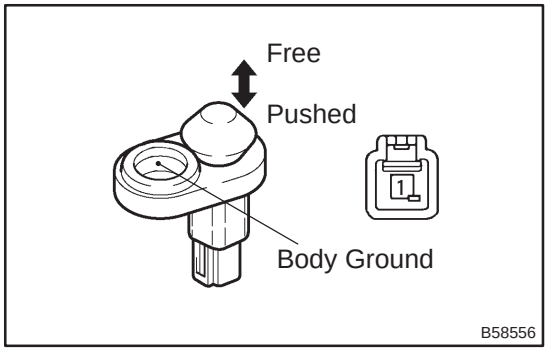

(a) Remove the courtesy lamp switch.
(b) Inspect the resistance of the switch.

Standard:

Tester Connection	Switch Position	Specified Condition
1 – Body ground	Free	Below 1 Ω
	Pushed	10 kΩ or higher

NG → **REPLACE FRONT DOOR COURTESY LAMP SWITCH ASSY (DRIVER SIDE)**

OK

6 CHECK WIRE HARNESS (COURTESY LAMP SWITCH (DRIVER SIDE) – INSTRUMENT PANEL J/B ASSY (INTEGRATION RELAY), BODY GROUND)

Wire Harness Side

D9*1, D10*2

Courtesy Lamp Switch (Driver Side)

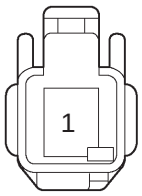

*1LHD models
*2RHD models

DB

Instrument Panel J/B Assy

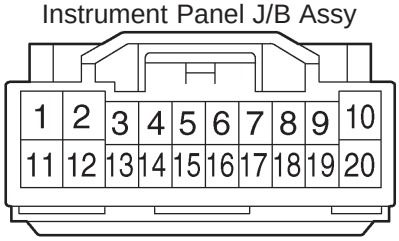

B70500

(a) Disconnect the D9, D10 switch and the DB J/B connectors.
(b) Check the resistance between the wire harness side connectors.

Standard (Check for open):

Tester Connection	Specified Condition
D9, D10–1 – DB–13 (DCTY)	Below 1 Ω

NG → **REPAIR OR REPLACE HARNESS AND CONNECTOR**

OK

REPLACE INSTRUMENT PANEL JUNCTION BLOCK ASSY

DOUBLE LOCK FUNCTION DOES NOT OPERATE PROPERLY

CIRCUIT DESCRIPTION

RHD Models w/ Double Lock Only:

All the doors except the back door have the double locking system. This system is set and unset by the integration relay. When the integration relay receives a request signal from the wireless transmitter (See page 73–1) to set or unset the double locking system, it drives the double lock motor built into each door lock according to the condition of all the double lock position switches, thus causing the double locking system to be set and unset.

WIRING DIAGRAM

RHD Models w/ Double Lock Only

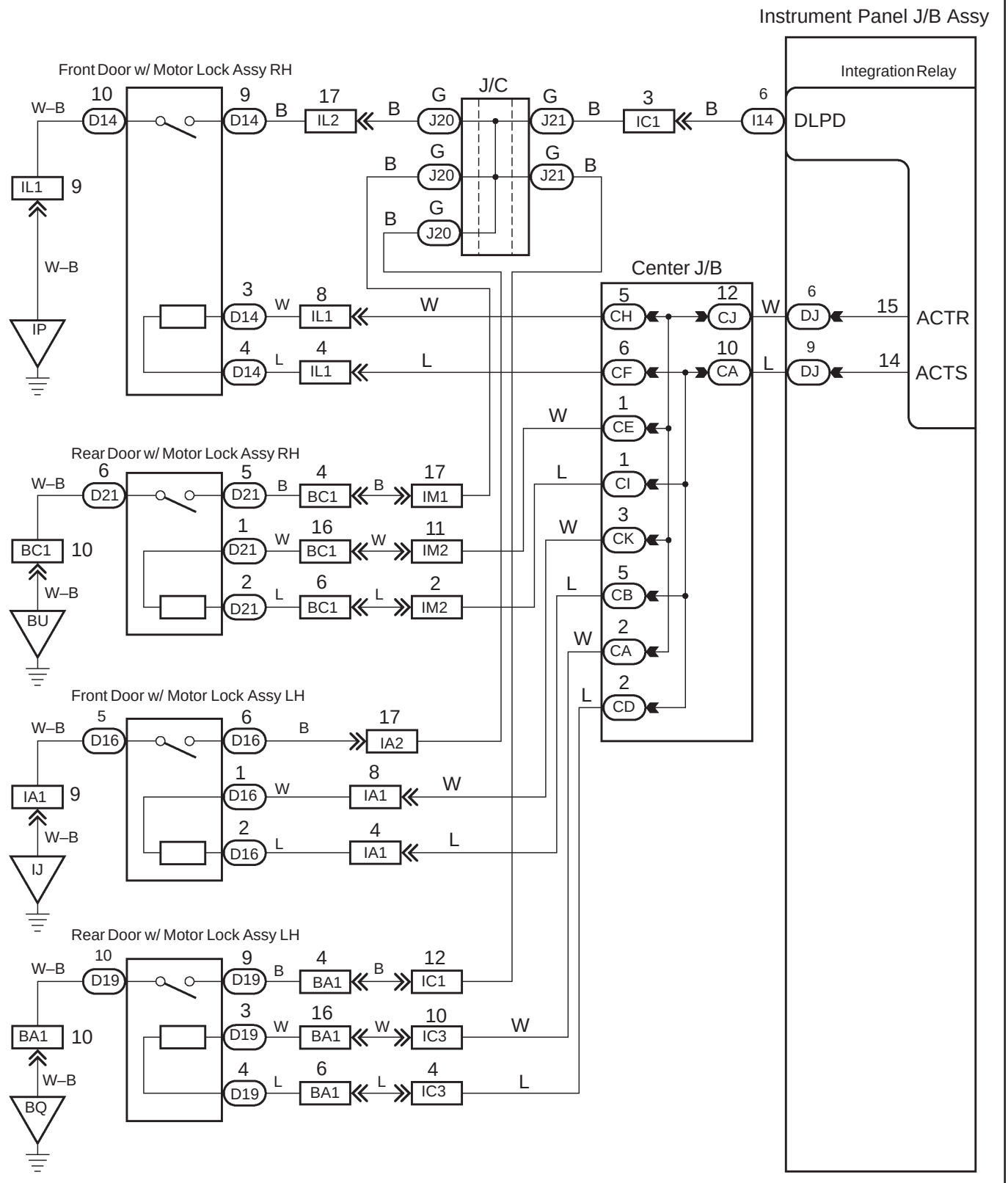

T

B66822

INSPECTION PROCEDURE

1	INSPECT WIRELESS DOOR LOCK OPERATION

(a) Check that the doors can be normally locked and unlocked by the wireless operation.

NG → **GO TO WIRELESS DOOR CONTROL SYSTEM (See page 05–1568)**

OK

2	INSPECT FUSE (ECU–B 2, DOOR)

(a) Inspect the ECU–B 2 and DOOR fuses (See page 68–1).

NG → **REPLACE FUSE**

OK

3 INSPECT FRONT DOOR W/MOTOR LOCK ASSY RH

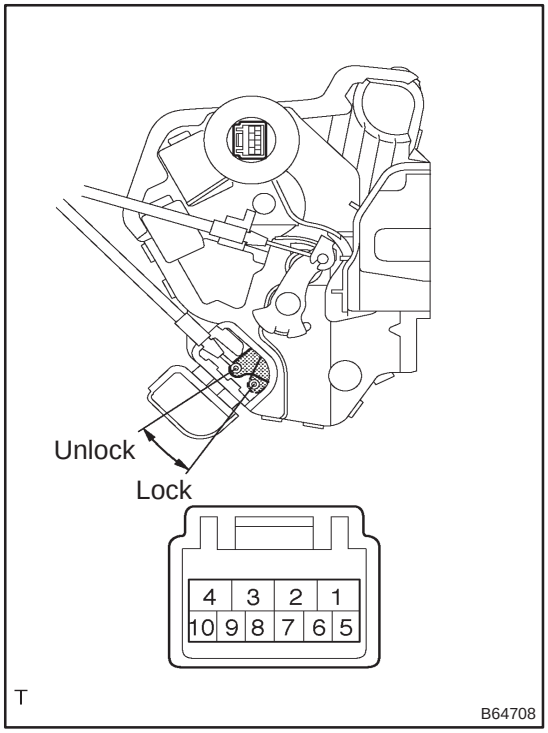

(a) Front Door w/ Motor Lock Assy RH:
Inspect operation of the double lock motor.

(1) Apply battery voltage and set the door lock motor to set.

(2) Apply battery voltage to the double lock motor and inspect operation.

Standard:

Measurement Condition	Specified Condition
Battery positive (+) → Terminal 4 Battery negative (–) → Terminal 3	Double locking system is Set
Battery positive (+) → Terminal 3 Battery negative (–) → Terminal 4	Double locking system is Unset

(3) Check that the doors cannot be unlocked by operating the control cable while the double locking system is set.

(4) Inspect the resistance of the double lock position switch.

Standard:

Tester Connection	Double Lock Position	Specified Condition
9 – 10	SET	Below 1 Ω
	UNSET	10 kΩ or higher

NG → **REPLACE FRONT DOOR W/MOTOR LOCK ASSY RH**

OK

4 INSPECT FRONT DOOR W/MOTOR LOCK ASSY LH

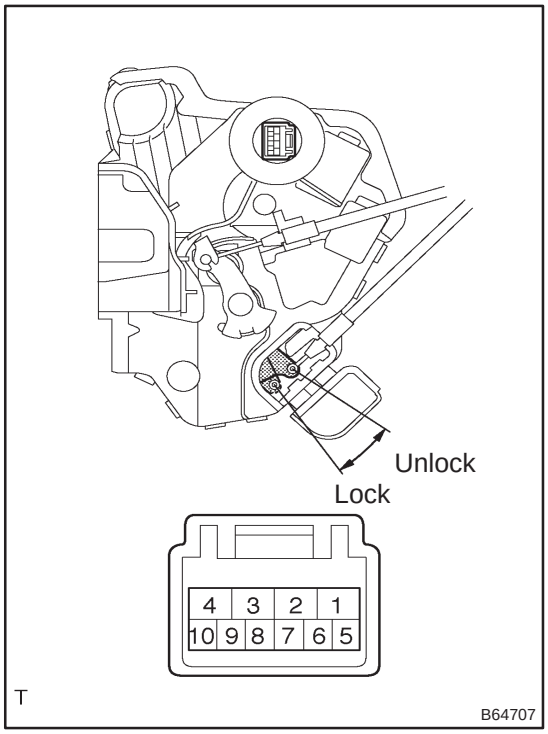

(a) Front Door w/ Motor Lock Assy LH:
Inspect operation of the double lock motor.
(1) Apply battery voltage and set the door lock motor to set.
(2) Apply battery voltage to the double lock motor and inspect operation.

Standard:

MeasurementCondition	SpecifiedCondition
Battery positive (+) → Terminal 2 Battery negative (–) → Terminal 1	Double locking system is Set
Battery positive (+) → Terminal 1 Battery negative (–) → Terminal 2	Double locking system is Unset

(3) Check that the doors cannot be unlocked by operating the control cable while the double locking system is set.
(4) Inspect the resistance of the double lock position switch.

Standard:

Tester Connection	Double Lock Position	SpecifiedCondition
5 – 6	SET	Below 1 Ω
	UNSET	10 kΩ or higher

NG → **REPLACE FRONT DOOR W/MOTOR LOCK ASSY LH**

OK

5 INSPECT REAR DOOR W/MOTOR LOCK ASSY RH

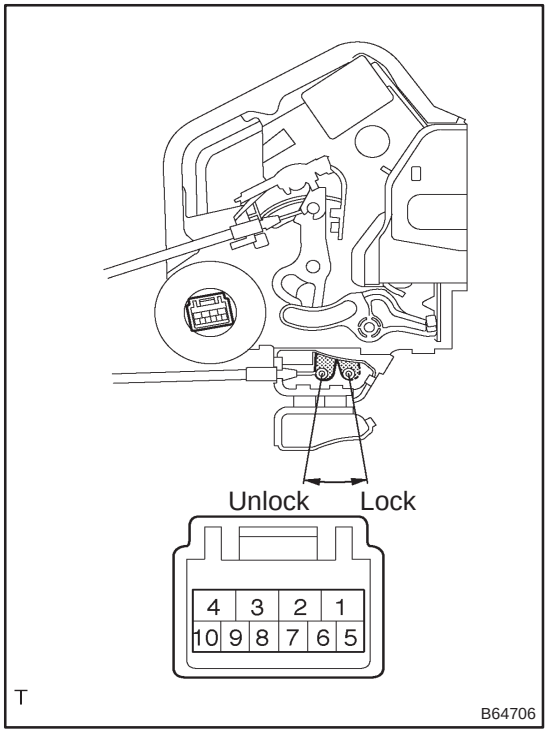

(a) Rear Door w/ Motor Lock Assy RH:
Inspect operation of the double lock motor.

(1) Apply battery voltage and set the door lock motor to set.

(2) Apply battery voltage to the double lock motor and inspect operation.

Standard:

Measurement Condition	Specified Condition
Battery positive (+) → Terminal 2 Battery negative (–) → Terminal 1	Double locking system is Set
Battery positive (+) → Terminal 1 Battery negative (–) → Terminal 2	Double locking system is Unset

(3) Check that the doors cannot be unlocked by operating the control cable while the double locking system is set.

(4) Inspect the resistance of the double lock position switch.

Standard:

Tester Connection	Double Lock Position	Specified Condition
5 – 6	SET	Below 1 Ω
	UNSET	10 kΩ or higher

NG → **REPLACE REAR DOOR W/MOTOR LOCK ASSY RH**

OK

6 INSPECT REAR DOOR W/MOTOR LOCK ASSY LH

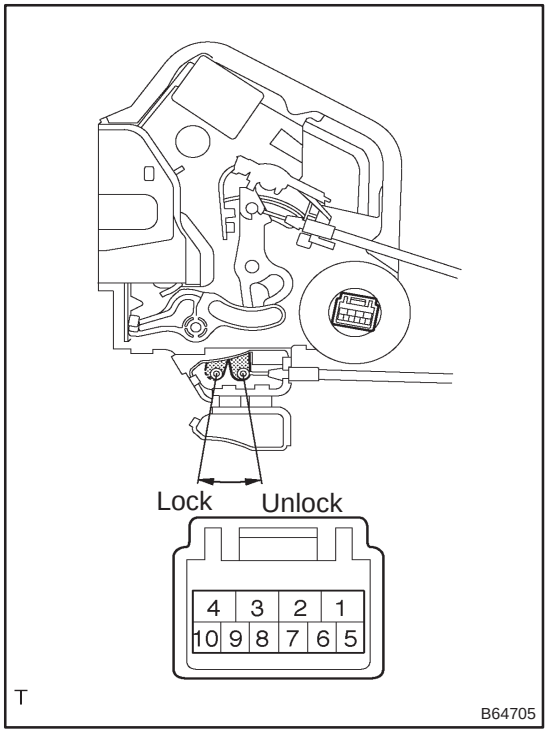

(a) Rear Door w/ Motor Lock Assy LH:
Inspect operation of the double lock motor.

(1) Apply battery voltage and set the door lock motor to set.

(2) Apply battery voltage to the double lock motor and inspect operation.

Standard:

Measurement Condition	Specified Condition
Battery positive (+) → Terminal 4 Battery negative (–) → Terminal 3	Double locking system is Set
Battery positive (+) → Terminal 3 Battery negative (–) → Terminal 4	Double locking system is Unset

(3) Check that the doors cannot be unlocked by operating the control cable while the double locking system is set.

(4) Inspect the resistance of the double lock position switch.

Standard:

Tester Connection	Double Lock Position	Specified Condition
9 – 10	SET	Below 1 Ω
	UNSET	10 kΩ or higher

NG → **REPLACE REAR DOOR W/MOTOR LOCK ASSY LH**

OK

7	CHECK WIRE HARNESS (DOOR LOCK – INSTRUMENT PANEL J/B ASSY (INTEGRATION RELAY))

Wire Harness Side

D14*1, D21*2, D16*3, D19*4
Door Lock

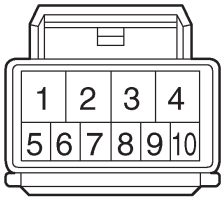

I14
Instrument Panel J/B Assy
(Integration Relay)

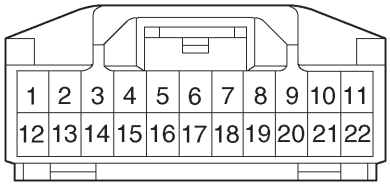

DJ
Instrument Panel J/B Assy

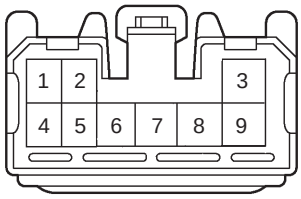

T *1 Driver side *2 Passenger side
*3 Rear right side *4 Rear left side

B70501

(a) Disconnect the D14, D21, D16 or D19 door lock and the I14 and DJ J/B connectors.

(b) Check the resistance between the wire harness side connectors.

Standard (Check for open):

Tester Connection	Specified Condition
D14–9 – I14–6 (DLPD)	Below 1 Ω
D21–5 – I14–6 (DLPD)	
D16–6 – I14–6 (DLPD)	
D19–9 – I14–6 (DLPD)	
D14–4 – DJ–8 (ACTS)	
D21–2 – DJ–8 (ACTS)	
D16–2 – DJ–8 (ACTS)	
D19–4 – DJ–8 (ACTS)	
D14–3 – DJ–9 (ACTR)	
D21–1 – DJ–9 (ACTR)	
D16–1 – DJ–9 (ACTR)	
D19–3 – DJ–9 (ACTR)	

(c) Check the resistance between the D14, D21, D16 or D19 door lock connector and body ground.

Standard (Check for open):

Tester Connection	Specified Condition
D14–10 – Body ground	Below 1 Ω
D21–6 – Body ground	
D16–5 – Body ground	
D19–10 – Body ground	

NG → **REPAIR OR REPLACE HARNESS AND CONNECTOR**

OK

REPLACE INSTRUMENT PANEL JUNCTION BLOCK ASSY

WIRELESS DOOR LOCK CONTROL SYSTEM

HOW TO PROCEED WITH TROUBLESHOOTING

056PX–04

HINT:

- Troubleshooting of the wireless door lock control system is based on the premise that the power door lock system is operating normally. Therefore, before troubleshooting the wireless door lock control system, first make certain that the the power door lock system is operating normally.
- Troubleshoot in accordance with the procedures on the following pages.

1	VEHICLE BROUGHT TO WORKSHOP

2	CUSTOMER PROBLEM ANALYSIS CHECK AND SYMPTOM CHECK (See page 05–1569)

3	PROBLEM SYMPTOMS TABLE (See page 05–1574)

(a) When problem is not listed on the problem symptoms table, proceed to A.
(b) When problem is listed on the problem symptoms table, proceed to B.

B → Go to step 5

A

4	PERFORM TROUBLESHOOTING ACCORDING TO MALFUNCTION SYMPTOM

(a) Terminals of ECU (See page 05–1572)
(b) On–vehicle inspection (See page 73–15)

5	ADJUST, REPAIR OR REPLACE

6	CONFIRMATION TEST

END

056PY–04

CUSTOMER PROBLEM ANALYSIS CHECK

WIRELESS DOOR LOCK CONTROL SYSTEM Check Sheet

Inspector's Name _____

Customer's Name		**VIN**	
		Production Date	/ /
		Licence No.	
Date Vehicle Brought in	/ /	**Odometer Reading**	km miles

Date Problem First Occurred		/ /
Frequency Problem Occurs		☐ Constant ☐ Sometimes (times/per day, month) ☐ Once only
Weather Conditions When Problem Occurred	**Weather**	☐ Fine ☐ Cloudy ☐ Rainy ☐ Snowy ☐ Various/Others
	Outdoor Temperature	☐ Hot ☐ Warm ☐ Cool ☐ Cold (Approx. ˚C (˚F))
	Place	☐ Everywhere ☐ Specific Locality ( )
Date Transmitter Battery Last Replaced		/ /

Problem Symptoms	☐ Whole wireless door lock control system does not operate.
	☐ Only door unlock function does not operate.
	☐ Only door lock function does not operate.
	☐ Doors are locked by wireless door lock operation even when doors are opened.
	☐ Wireless door lock functions abnormally.
	☐ Others

05A68–02

LOCATION

LHD Models

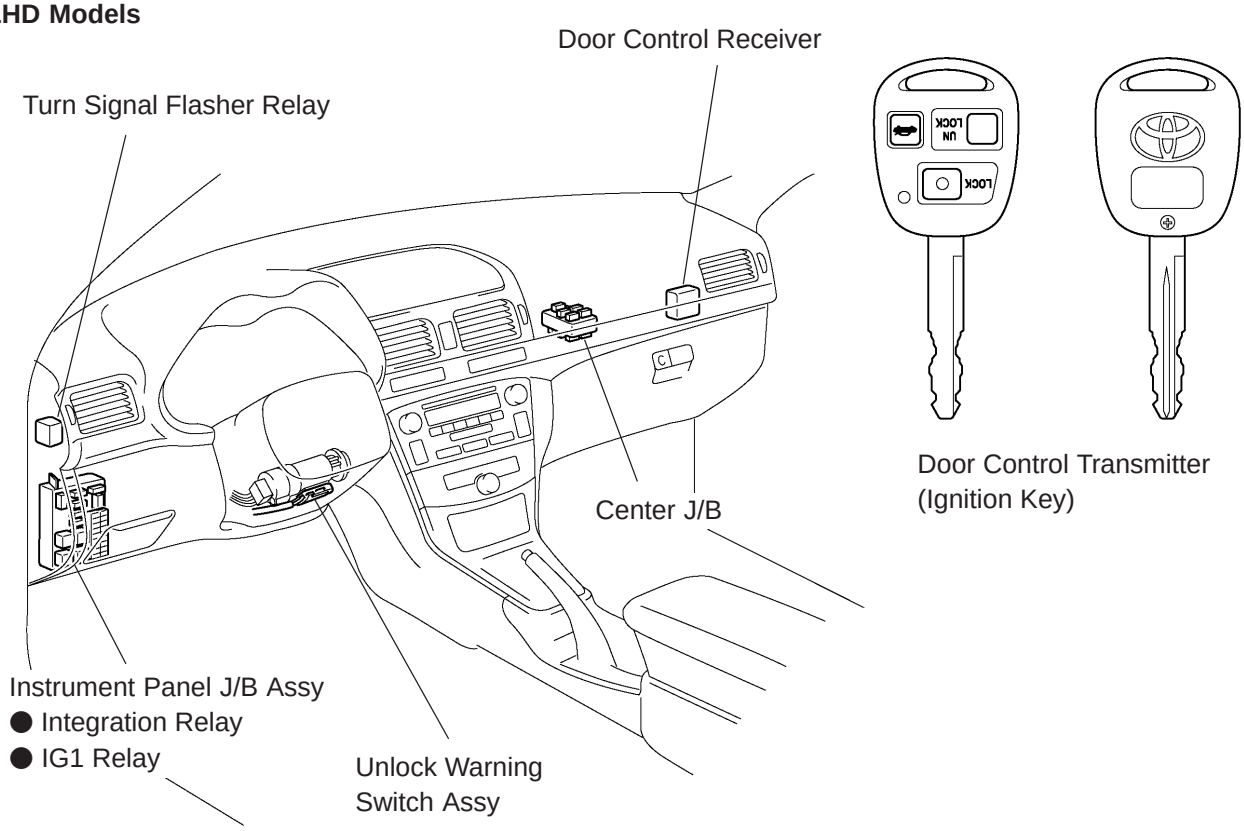

RHD Models

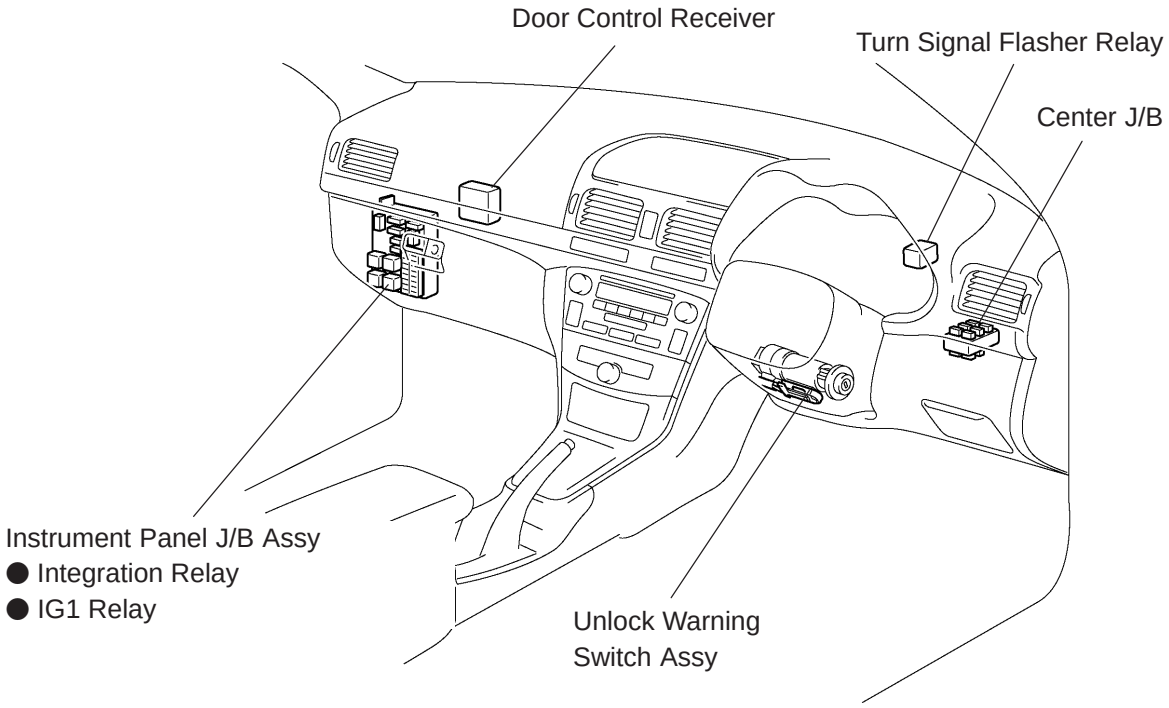

Y

B70326

Sedan

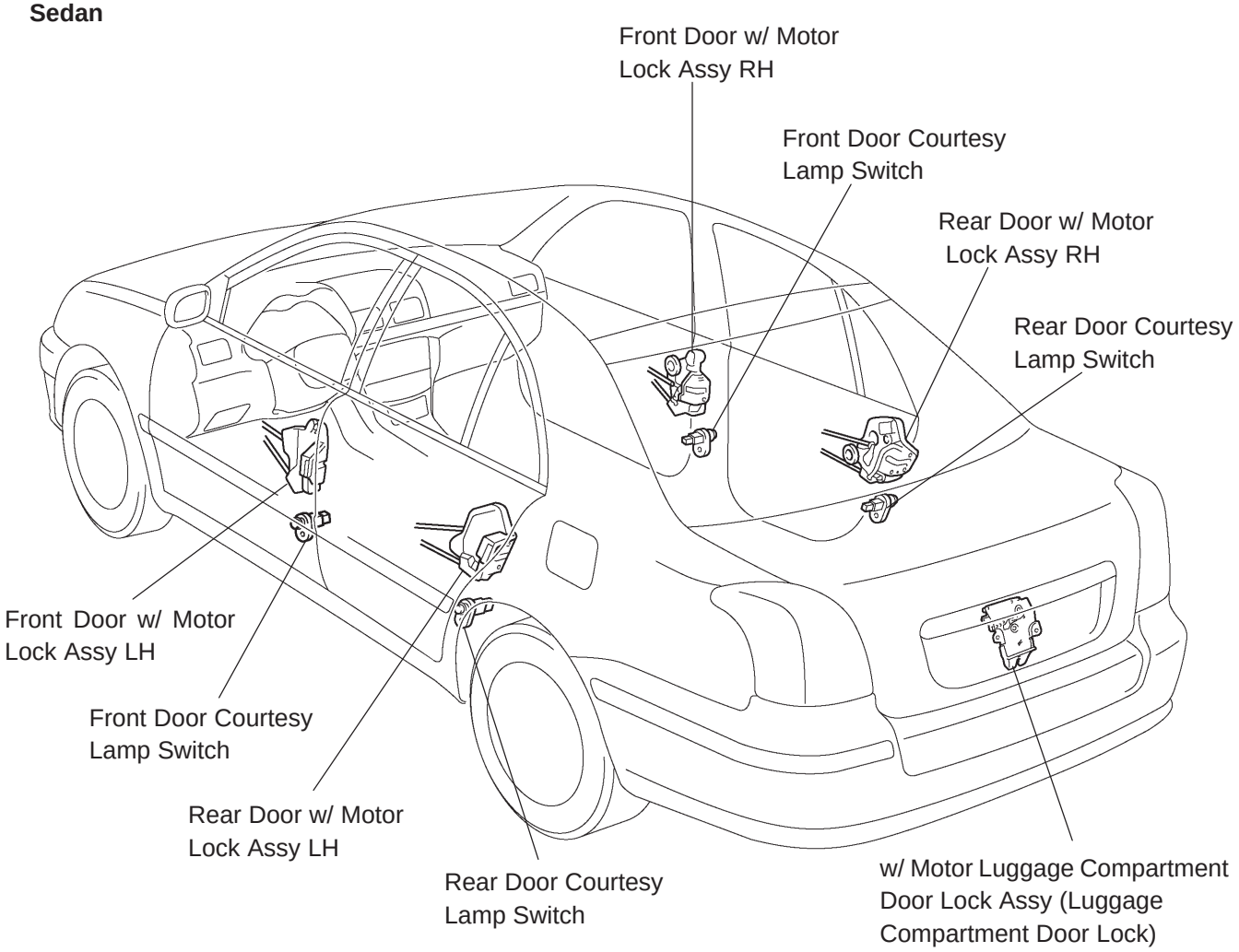

Liftback

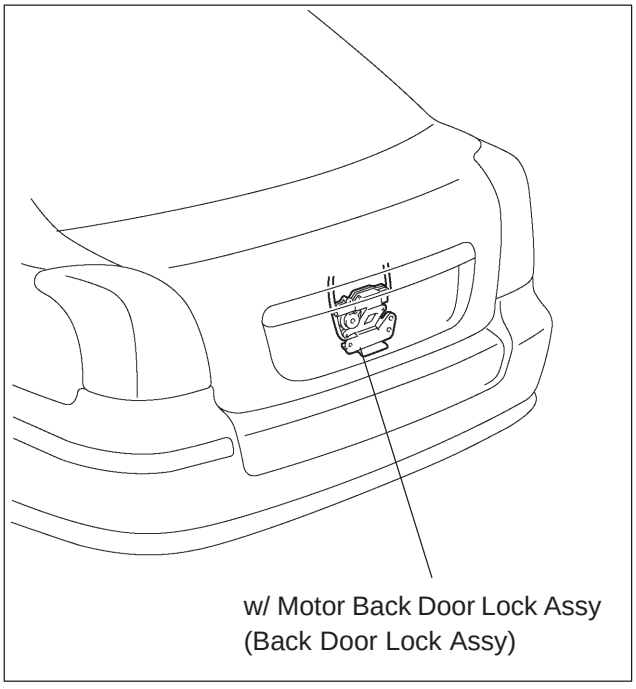

Wagon

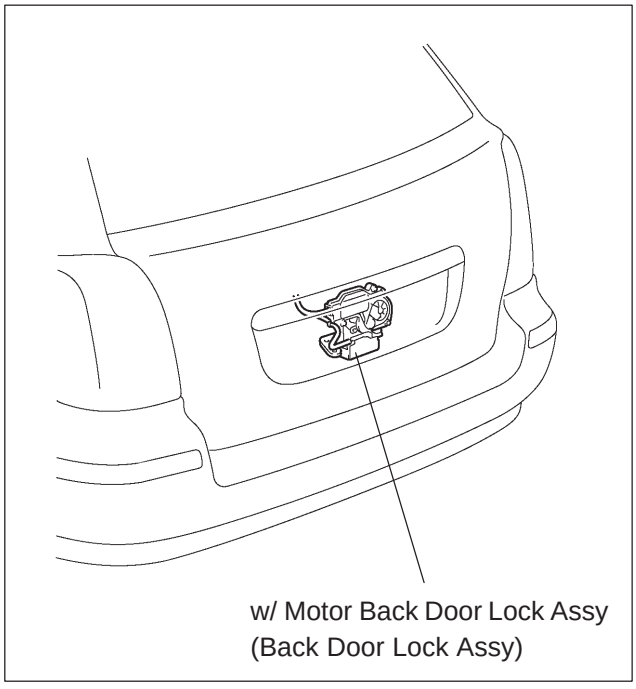

Y

B66777

TERMINALS OF ECU

1. CHECK INSTRUMENT PANEL JUNCTION BLOCK ASSY (INTEGRATION RELAY)

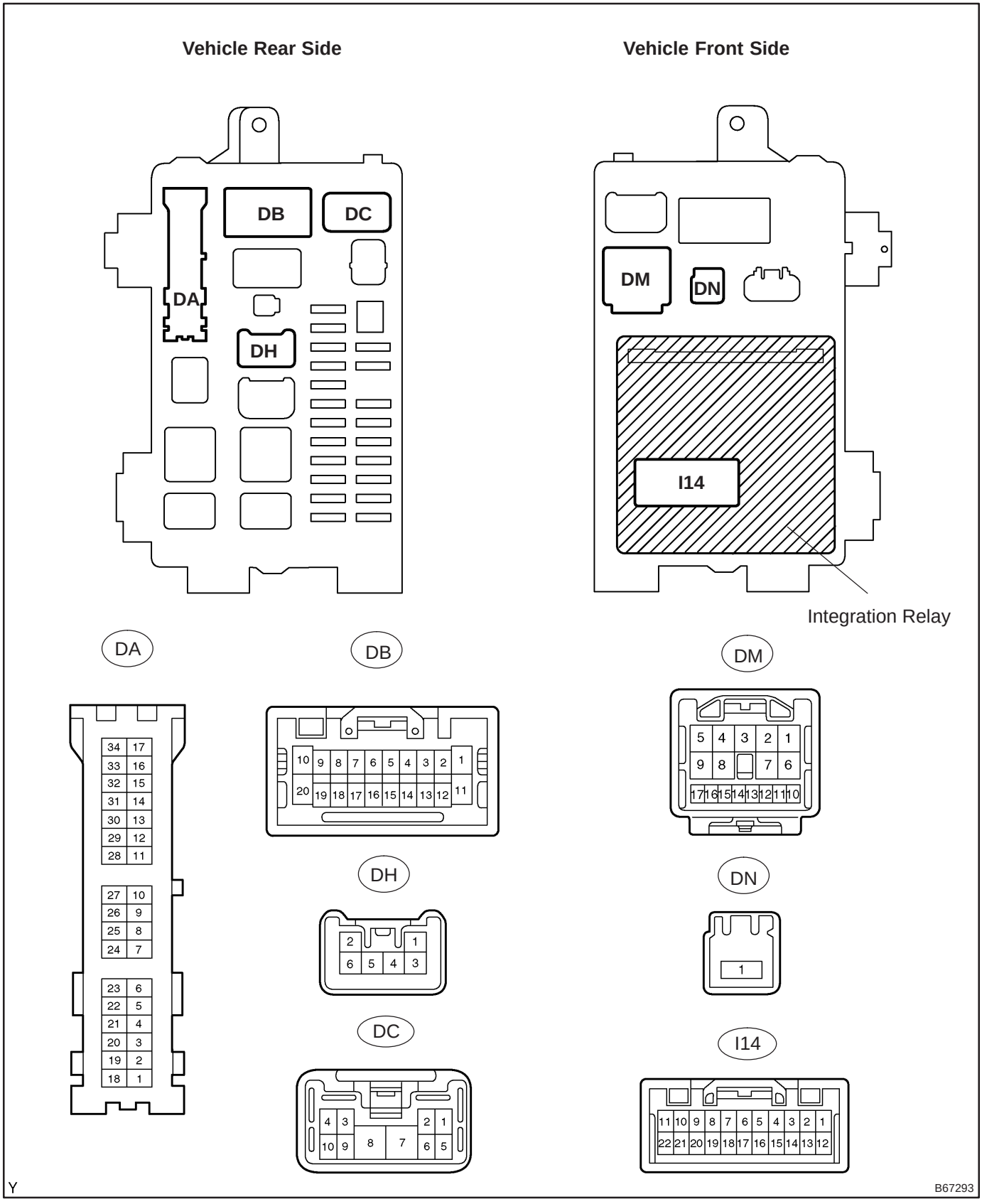

(a) Disconnect the DA, DB, DM and DN J/B connectors.
(b) Disconnect the I14 relay connector.
(c) Check the voltage and resistance between each terminal of the wire harness side connectors and the body ground.

Standard:

Symbols (Terminal No.)	Wiring Color	Condition	Specified Condition
KSW (DA–8) – Body ground	Y – Body ground	No key in ignition key cylinder → Key inserted	10 kΩ or higher → Below 1 Ω
E (DA–9) – Body ground	W–B – Body ground	Constant	Below 1 Ω
B (DB–16) – Body ground	W–R – Body ground	Constant	10 to 14 V
B (DN–1) – Body ground	*1B–G – Body ground *2B–L – Body ground	Constant	10 to 14 V
DCTY (DB13) – Body ground	R – Body ground	Driver side door CLOSED → OPEN	10 kΩ or higher → Below 1 Ω
PCTY (DC–9) – Body ground	R – Body ground	Passenger side door CLOSED → OPEN	10 kΩ or higher → Below 1 Ω
RCTY (DM–12) – Body ground	W–G – Body ground	Rear door LH CLOSED → OPEN	10 kΩ or higher → Below 1 Ω
RCTY (DM–13) – Body ground	W–G – Body ground	Rear door RH CLOSED → OPEN	10 kΩ or higher → Below 1 Ω
*3LCTY (I14–1) – Body ground	R–Y – Body ground	Luggage compartment door CLOSED → OPEN	10 kΩ or higher → Below 1 Ω
*4BDCY (I14–12) – Body ground	R–Y – Body ground	Back door CLOSED → OPEN	10 kΩ or higher → Below 1 Ω

HINT:
*1: Gasoline *2: 1CD–FTV *3: Sedan *4: Liftback, Wagon
If the result is not as specified, there may be a malfunction on the wire harness side.

(d) Reconnect the DA, DB, DM and DN J/B connectors.
(e) Reconnect the I14 relay connector.
(f) Check the voltage between each terminal of the connectors and the body ground.

Standard:

Symbols (Terminal No.)	Wiring Color	Condition	Specified Condition
RDA (I14–7) – Body ground	L–W – Body ground	No key in ignition key cylinder, all doors closed and transmitter switch OFF → ON	Below 1 V → Approx. 6 to 7 V → Below 1 V
FRLY (I14–15) – Body ground	LG – Body ground	Answer–back OFF → Answer–back ON	Below 1 V → Pulse generation
ACC (DH–3) – Body ground	G – Body ground	Ignition switch ON	10 to 14 V

If the result is not as specified, the J/B assy (integration relay) may have a malfunction.

056Q3–04

PROBLEM SYMPTOMS TABLE

Symptom	Suspected Area	See Page
Only wireless control function does not operate (Prepare new or normal transmitter of the same type vehicle)	8. Transmitter battery 9. Door transmitter sub–assy module set door control 10. Door control receiver 11. Unlock warning switch assy 12. Wire harness 13. Instrument panel J/B assy (Integration relay)	05–1575
No answer–back (Hazard warning lamp)	1. Lighting system 2. Wire harness 3. Instrument panel J/B assy (Integration relay)	05–1584

ONLY WIRELESS CONTROL FUNCTION DOES NOT OPERATE (PREPARE NEW OR NORMAL TRANSMITTER OF THE SAME TYPE VEHICLE)

CIRCUIT DESCRIPTION

The door control receiver receives a signal from the transmitter and sends this signal to the integration relay. Then, the integration relay controls door operation by sending a door LOCK/UNLOCK signal and a luggage door (back door) unlock signal to each door lock motor.

WIRING DIAGRAM

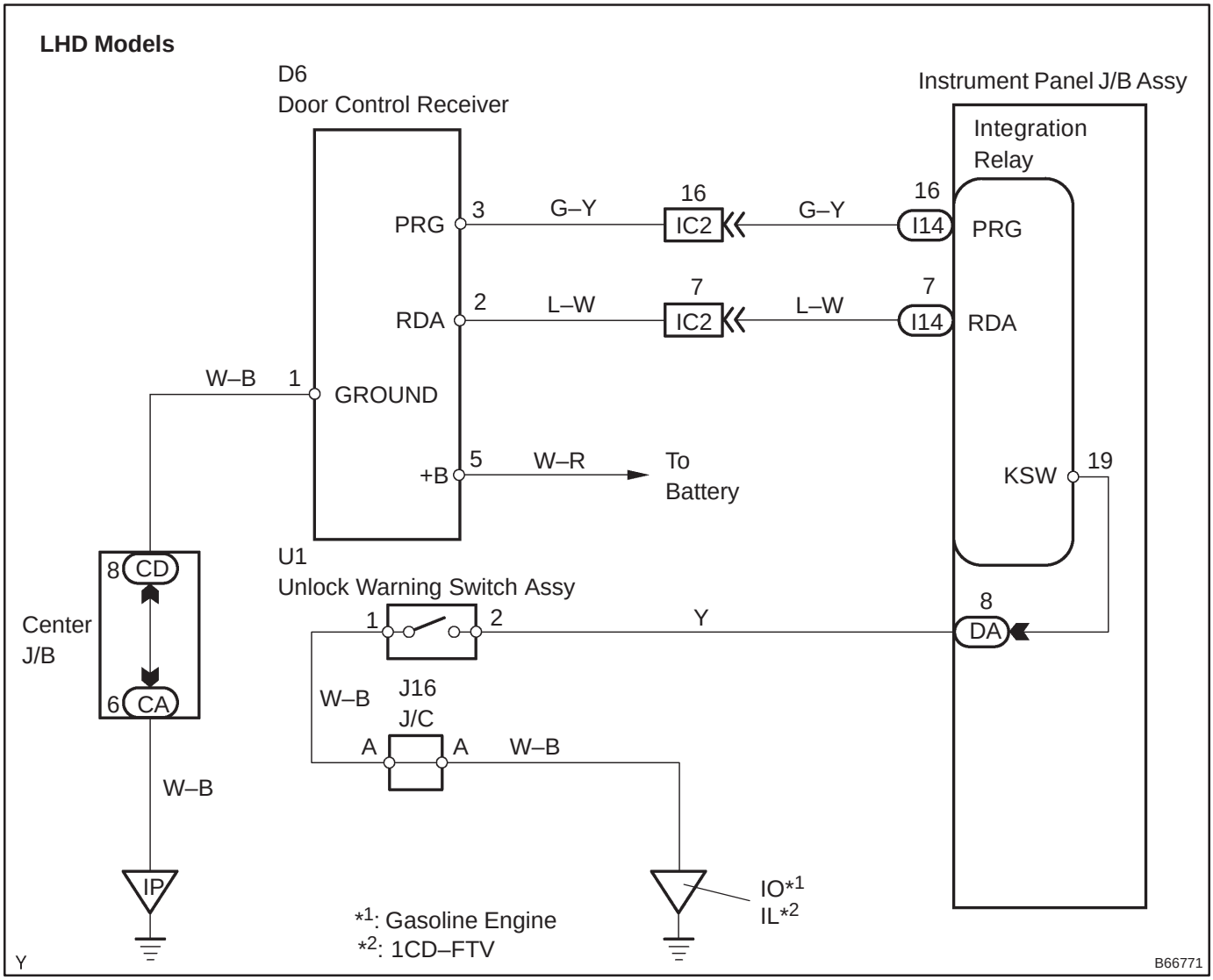

RHD Models

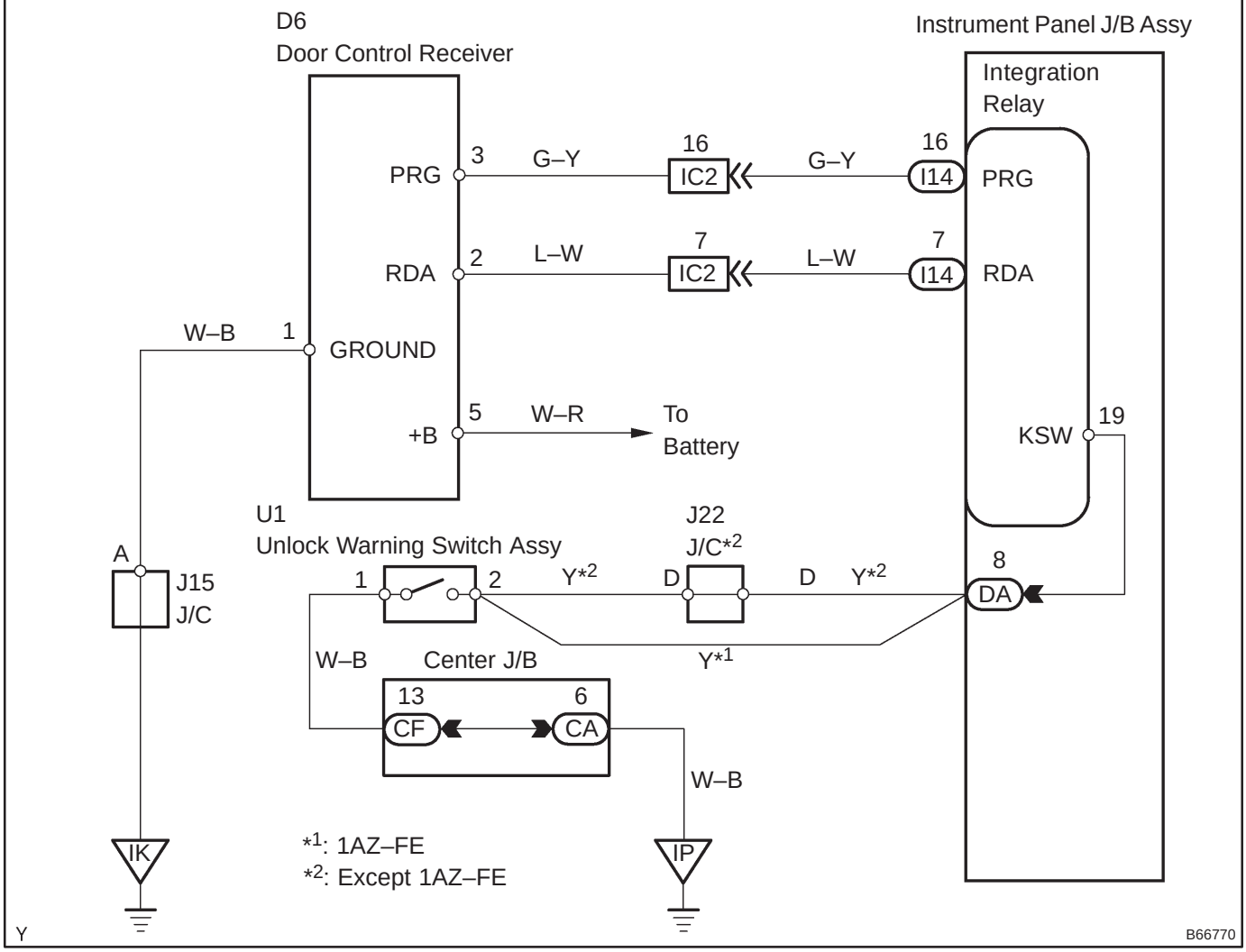
D6
Door Control Receiver
Instrument Panel J/B Assy
Integration Relay
PRG
3
G–Y
16
IC2
G–Y
16
I14
PRG
RDA
2
L–W
7
IC2
L–W
7
I14
RDA
W–B
1
GROUND
+B
5
W–R
To Battery
KSW
19
U1
Unlock Warning Switch Assy
J22
J/C*2
A
J15
J/C
1
2
Y*2
D
D
Y*2
8
DA
Y*1
W–B
Center J/B
13
CF
6
CA
W–B
IK
IP
*1: 1AZ–FE
*2: Except 1AZ–FE
Y
B66770

INSPECTION PROCEDURE

HINT:

The switch described in this text is a switch for transmitting signals, which is built in the door control transmitter.

1	CHECK WIRELESS DOOR LOCK CONTROL FUNCTIONS (See page 73–15)

NG → Go to step 2

OK

NORMAL

2	CHECK THAT TRANSMITTER LED LIGHTS UP

(a) Check that the transmitter LED lights up 3 times when the switch is pressed 3 times.

NG → Go to step 8

OK

3	CHECK WIRELESS DOOR LOCK CONTROL FUNCTIONS (STANDARD OPERATION)

(a) Check if the UNLOCK–LOCK operates in standard operation.

NOTICE:

Standardized test procedure: Press the transmitter switch for 1 second, directing the beam to driver's door outside handle from a distance of 1 m (39.4 in.). The transmitter should be pointed directly at the door handle, i.e. at 90° angle to the vehicle body.

NG → Go to step 4

OK

REPLACE TRANSMITTER SUB–ASSY MODULE SET DOOR CONTROL

4	CONFIRM ROOM LAMP ON

(a) Check that the room lamp lights up.

HINT:

When the room lamp does not light up, proceed to the self–diagnostic mode after repairing the room lamp.

5	SWITCH TO SELF–DIAGNOSTIC MODE

(a) Switch to the self–diagnostic mode by operating the ignition key cylinder.
  (1) Put the vehicle under the vehicle's initial condition (See page 73–15), insert the key into the ignition key cylinder and remove it.
  (2) Within 5 seconds after the key is removed (step 1), insert the key into the ignition key cylinder (ignition key OFF) and perform the following once: Turn the ignition switch to ON and return it to OFF.
  (3) Within 30 seconds after the ignition switch is returned to OFF (step 2), perform the following 9 times: Turn the ignition switch to ON and return it to OFF.

NOTICE:
If operation has failed, the system will return to normal mode.
HINT:
- Turning the ignition switch ON after step 3 has been completed will end the self–diagnostic mode.
- Do not lock or unlock doors during the self–diagnostic mode.

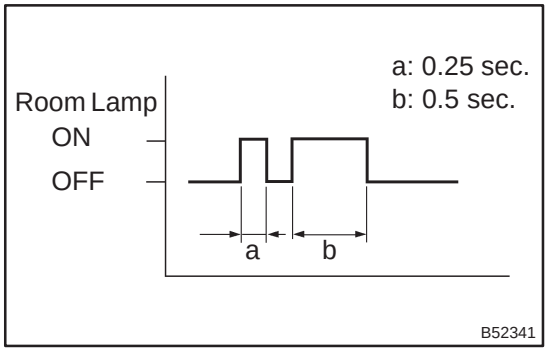

(b) Check that the system has switched to self–diagnostic mode by the blinking frequency of the room lamp.

NG → **Go to step 10**

OK

6	CHECK BY SELF–DIAGNOSTIC MODE

(a) Inspect the diagnosis outputs when the door control transmitter switch is held down (The diagnosis outputs can be checked with the outputs of the room lamp).

HINT:

- In the case of a reception of the normal wave of the door LOCK, UNLOCK switch or luggage door (back door) unlock switch (room lamp blinking), go to step A.
- In the case of an unmatching recognition code (room lamp ON), go to step B.
- In the case of no diagnosis outputs (room lamp OFF), go to step C.

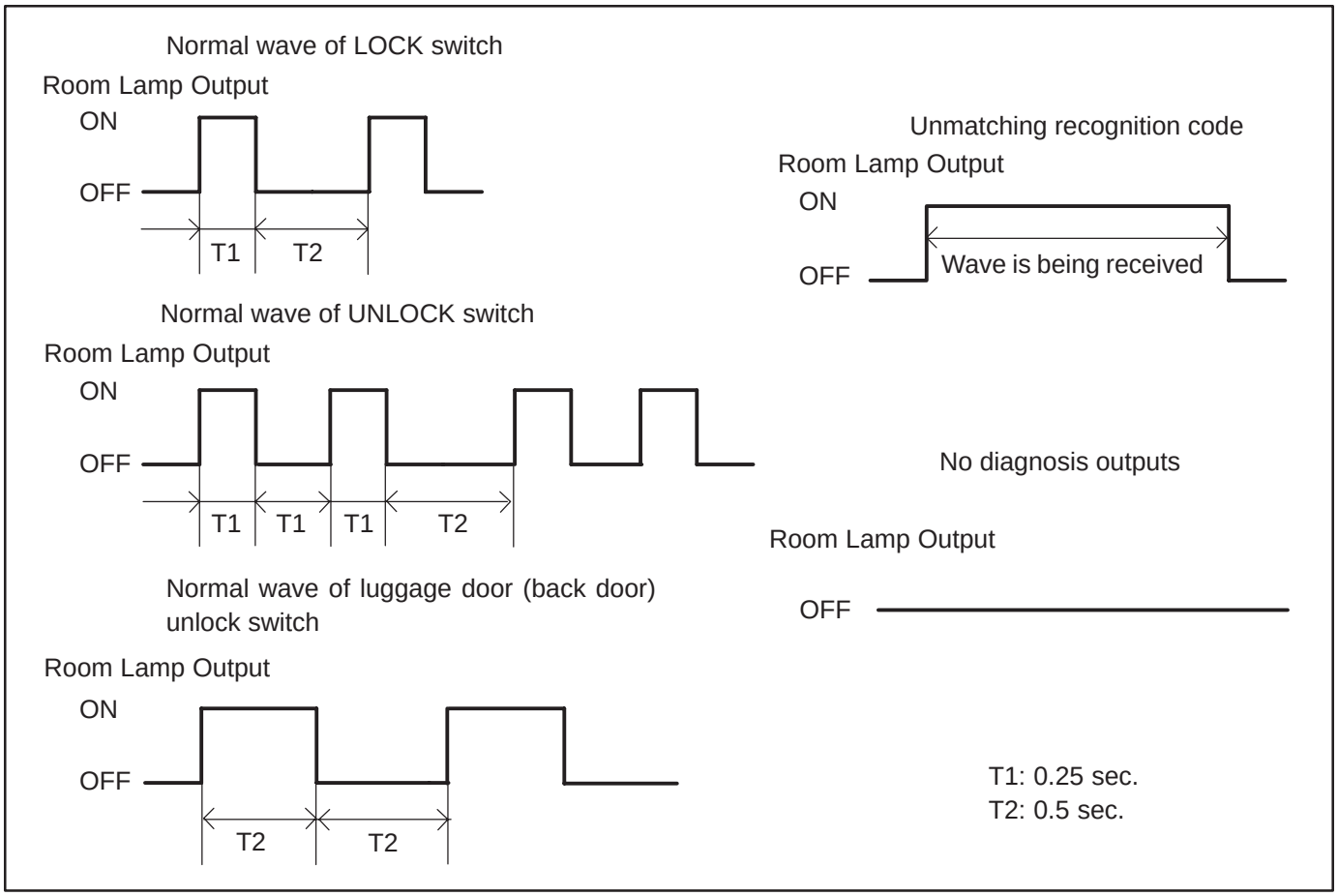

A	REPLACE INSTRUMENT PANEL JUNCTION BLOCK ASSY

C	Go to step 8

B

7	REGISTER RECOGNITION CODE

(a) Check that the system can switch to rewrite mode or add mode and whether a recognition code can be registered.

NG → Go to step 16

OK

NORMAL (CARRY OUT INSPECTION OF FUNCTIONS)

8	SIMPLY CHECK TRANSMITTER BATTERY

(a) After replacing the transmitter battery with a new or normal one, check that the doors can lock and unlock using the transmitter LOCK/UNLOCK switch.

NG → REPLACE TRANSMITTER SUB–ASSY MODULE SET DOOR CONTROL

OK

REPLACE TRANSMITTER BATTERY

9	CHECK RESPONSE OF DOOR CONTROL RECEIVER

(a) When a new or normal door control transmitter switch for the same type vehicle is held down, check that a diagnosis of unmatching recognition code is output.

NG → Go to step 13

OK

REPLACE TRANSMITTER SUB–ASSY MODULE SET DOOR CONTROL

10	CONFIRM INPUT METHOD OF SELF–DIAGNOSTIC MODE

(a) When the method for switching the system to self–diagnostic mode works, proceed to A.
(b) When the method for switching the system to self–diagnostic mode does not work, proceed to B.

B → Go to step 6

A

11 INSPECT UNLOCK WARNING SWITCH ASSY

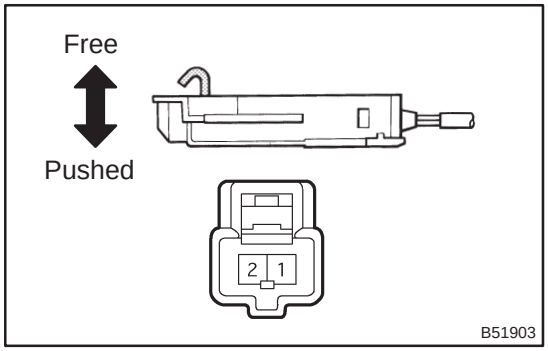

(a) Check the resistance of the switch.
Standard:

Tester Connection	Switch Position	Specified Condition
1 – 2	Switch free (Key removed)	10 kΩ or higher
	Switch pushed (Key set)	Below 1 Ω

NG → **REPLACE UNLOCK WARNING SWITCH ASSY**

OK

12 CHECK WIRE HARNESS (UNLOCK WARNING SWITCH – INSTRUMENT PANEL J/B ASSY (INTEGRATION RELAY) AND BODY GROUND)

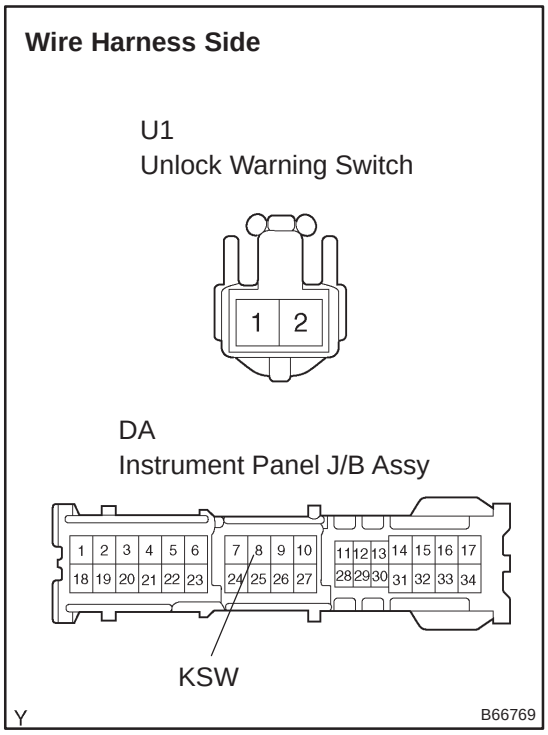

(a) Disconnect the U1 warning switch connector.
(b) Disconnect the DA J/B connector.
(c) Check the resistance of the wire harness side connectors.
Standard:

Tester Connection	Specified Condition
U1–2 – DA–8 (KSW)	Below 1 Ω
U1–1 – Body ground	

NG → **REPAIR OR REPLACE HARNESS AND CONNECTOR**

OK

13 CHECK WIRE HARNESS (DOOR CONTROL RECEIVER – BODY GROUND)

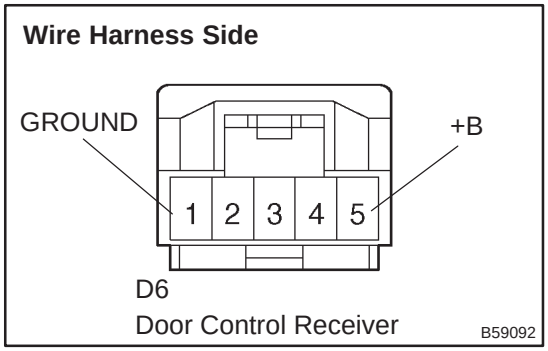

(a) Disconnect the D6 receiver connector.
(b) Check the voltage and resistance between the wire harness side connector and the body ground.

Standard:

Tester Connection	Specified Condition
D6–5 (+B) – Body ground	10 to 14 V
D6–1 (GROUND) – Body ground	Below 1 Ω

NG → **REPAIR OR REPLACE HARNESS AND CONNECTOR**

OK

14 CHECK DOOR CONTROL RECEIVER (OUTPUT)

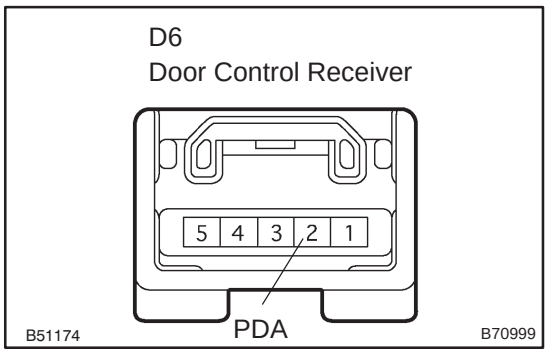

(a) Reconnect the D6 receiver connector, and check the voltage between the terminal and body ground.

Standard:

Tester Connection	Condition	Specified Condition
D6–2 (RDA) – Body ground	No key in ignition key cylinder, all doors closed and each transmitter switch OFF → ON	Below 1 V → Approx. 6 to 7 V → Below 1 V

NG → **Go to step 16**

OK

15	CHECK WIRE HARNESS (DOOR CONTROL RECEIVER – INSTRUMENT PANEL J/B ASSY (INTEGRATION RELAY)) (DOOR CONTROL RECEIVER OR INSTRUMENT PANEL J/B ASSY (INTEGRATION RELAY) – BODY GROUND)

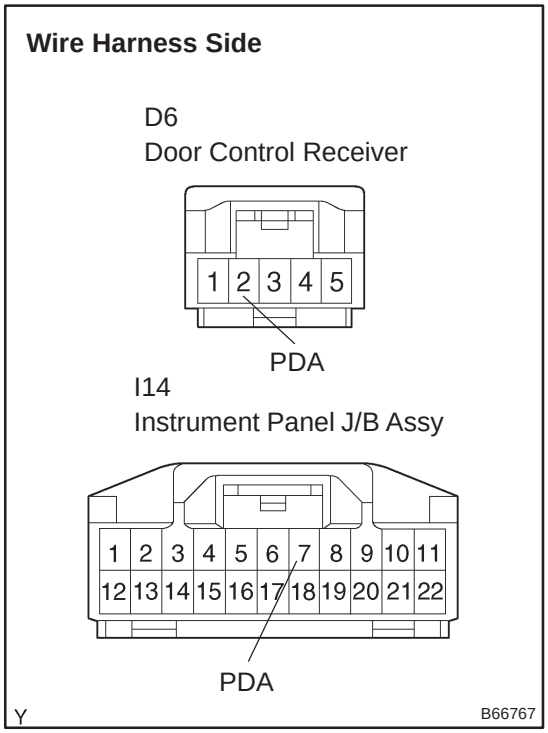

(a) Disconnect the D6 receiver connector.
(b) Disconnect the I14 J/B connector.
(c) Check the resistance of the wire harness side connectors.

Standard:

Tester Connection	Specified Condition
D6–2 (RDA) – I14–7 (RDA)	Below 1 Ω
D6–2 (RDA) – Body ground	10 kΩ or higher
I14–7 (RDA) – Body ground	

NG → **REPAIR OR REPLACE HARNESS AND CONNECTOR**

OK

16	REPLACE DOOR CONTROL RECEIVER WITH NORMAL ONE

NG → **REPLACE INSTRUMENT PANEL JUNCTION BLOCK ASSY**

OK

REPLACE DOOR CONTROL RECEIVER

NO ANSWER–BACK (HAZARD WARNING LAMP)

CIRCUIT DESCRIPTION

If there is no answer–back of the hazard warning lamps although the wireless door lock/unlock function is operating normally, there might be a malfunction in the hazard warning lamp signal that is output from the integration relay.

WIRING DIAGRAM

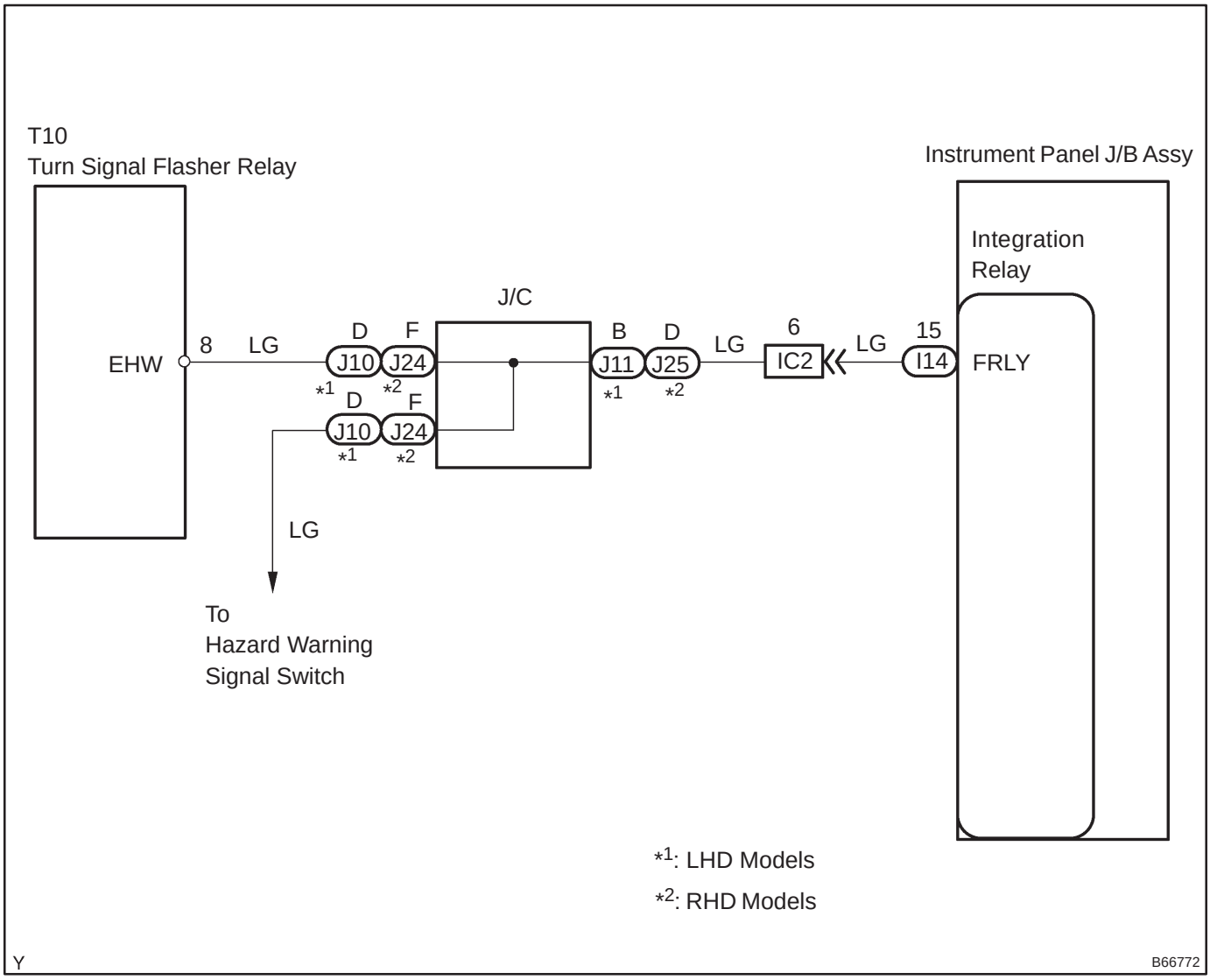

INSPECTION PROCEDURE

1	CHECK WIRELESS DOOR LOCK FUNCTIONS

(a) Check whether the wireless door lock functions by operating the transmitter switch.

HINT:

When the wireless door LOCK/UNLOCK operation can be performed, it means that the wireless signal from the transmitter is properly input to the integration relay.

NG → **Go to FLOW CHART (See page 05–1575)**

OK

2	CHECK OUTPUTS OF HAZARD WARNING LAMPS

(a) Check that the hazard warning lamps blink when the hazard warning signal switch is pressed.

NG → **Go to LIGHTING SYSTEM (See page 65–2)**

OK

3	CHECK WIRE HARNESS (FLASHER RELAY – INSTRUMENT PANEL J/B ASSY)

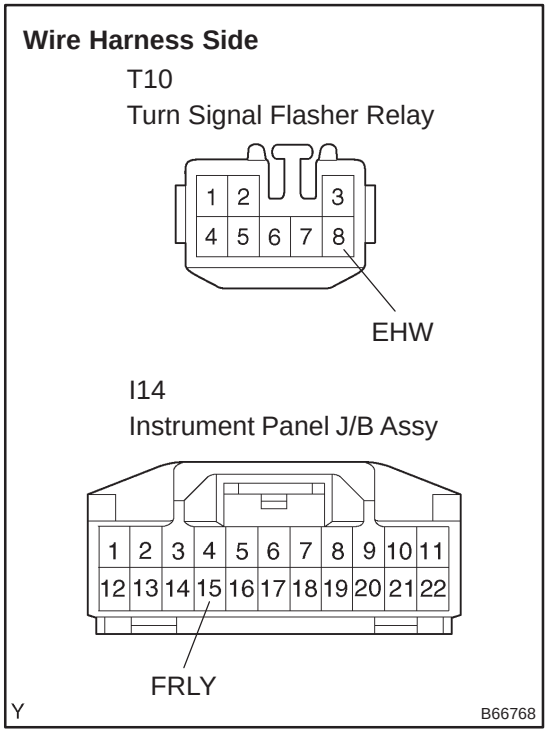

(a) Disconnect the T10 relay connector.

(b) Disconnect the I14 J/B connector.

(c) Check the resistance between the wire harness side connectors.

Standard:

Tester Connection	Specified Condition
T10–8 (EHW) – I14–15 (FRLY)	Below 1 Ω

NG → **REPAIR OR REPLACE HARNESS AND CONNECTOR**

OK

REPLACE INSTRUMENT PANEL JUNCTION BLOCK ASSY

KEY REMINDER WARNING SYSTEM

05AEY–02

HOW TO PROCEED WITH TROUBLESHOOTING

HINT:
Use this procedure to troubleshoot the key reminder warning system.
The hand–held tester should be used in step 3 and 4.

1	VEHICLE BROUGHT TO WORKSHOP

2	CUSTOMER PROBLEM ANALYSIS CHECK AND PROBLEM SYMPTOM

3	DTC CHECK (MULTIPLEX COMMUNICATION SYSTEM) (See page 05–1656)

(a) Check for DTCs and note any codes that are output.
(b) Delete the DTC.
(c) Recheck for DTCs. Try to prompt the DTC by simulating the original activity that the DTC suggests.
  (1) If the DTC does not reoccur, proceed to A.
  (2) If the DTC reoccurs, proceed to B.

B	GO TO MULTIPLEX COMMUNICATION SYSTEM (See page 05–1656)

A

4	PROBLEM SYMPTOMS TABLE (See page 05–1593)

(a) If the fault is not listed on the symptoms table, proceed to A.
(b) If the fault is listed on the symptoms table, proceed to B.

B	Go to step 5

A

5	PERFORM TROUBLESHOOTING ACCORDING TO MALFUNCTION SYMPTOM

(a) Pre–check (See page 05–1655).
  (1) Inspection with the hand–held tester (ECU DATA MONITOR).
(b) Terminals of ECU (See page 05–1659).
(c) On–vehicle inspection (See page 73–26).

6	ADJUST, REPAIR OR REPLACE

7	CONFIRMATION TEST

END

05AEZ–02

CUSTOMER PROBLEM ANALYSIS CHECK

KEY REMINDER WARNING SYSTEM Check Sheet

Inspector's name :

Customer's Name		**VIN**	
		Production Date	/ /
		Licence No.	
Date Vehicle Brought in	/ /	**Odometer Reading**	km miles

Date Problem First Occurred		/ /
Frequency Problem Occurs		☐ Constant ☐ Intermittent (times a day) ☐ Only once
Weather Conditions When Problem Occurred	**Weather**	☐ Fine ☐ Cloudy ☐ Rainy ☐ Snowy ☐ Various/Others
	Outdoor Temperature	☐ Hot ☐ Warm ☐ Cool ☐ Cold (Approx. °C (°F))

Problem Symptoms	☐ Key reminder buzzer does not sound

05AF0–02

PRE–CHECK

1. USING HAND–HELD TESTER

(a) Connect the hand–held tester to the DLC3.

(b) Monitor the ECU data by following the prompts on the tester screen.

HINT:

The hand–held tester has a ”Snapshot” function which records the monitored data.

Refer to the hand–held tester operator’s manual for further details.

2. DATA LIST

HINT:

Using the DATA LIST displayed by the hand–held tester, you can read the value of the switch, sensor, actuator etc. without parts removal. Reading the DATA LIST as the first step of troubleshooting is one way to shorten the labor time.

(a) Connect the hand–held tester to the DLC3.

(b) Turn the ignition switch ON.

(c) Read the DATA LIST according to the display on tester.

Standard (Integuration relay):

Item	Measurement Item/Display (Range)	Normal Condition	Diagnostic Note
KEY UNLK WRN SW	Unlock warning switch signal/ ON or OFF	ON: Key is in ignition key cylinder OFF: No key is in ignition key cylinder	–
D DOOR CTY SW	Driver side door courtesy switch signal/ ON or OFF	ON: Driver side door is open OFF: Driver side door is closed	–

05AF5–02

LOCATION

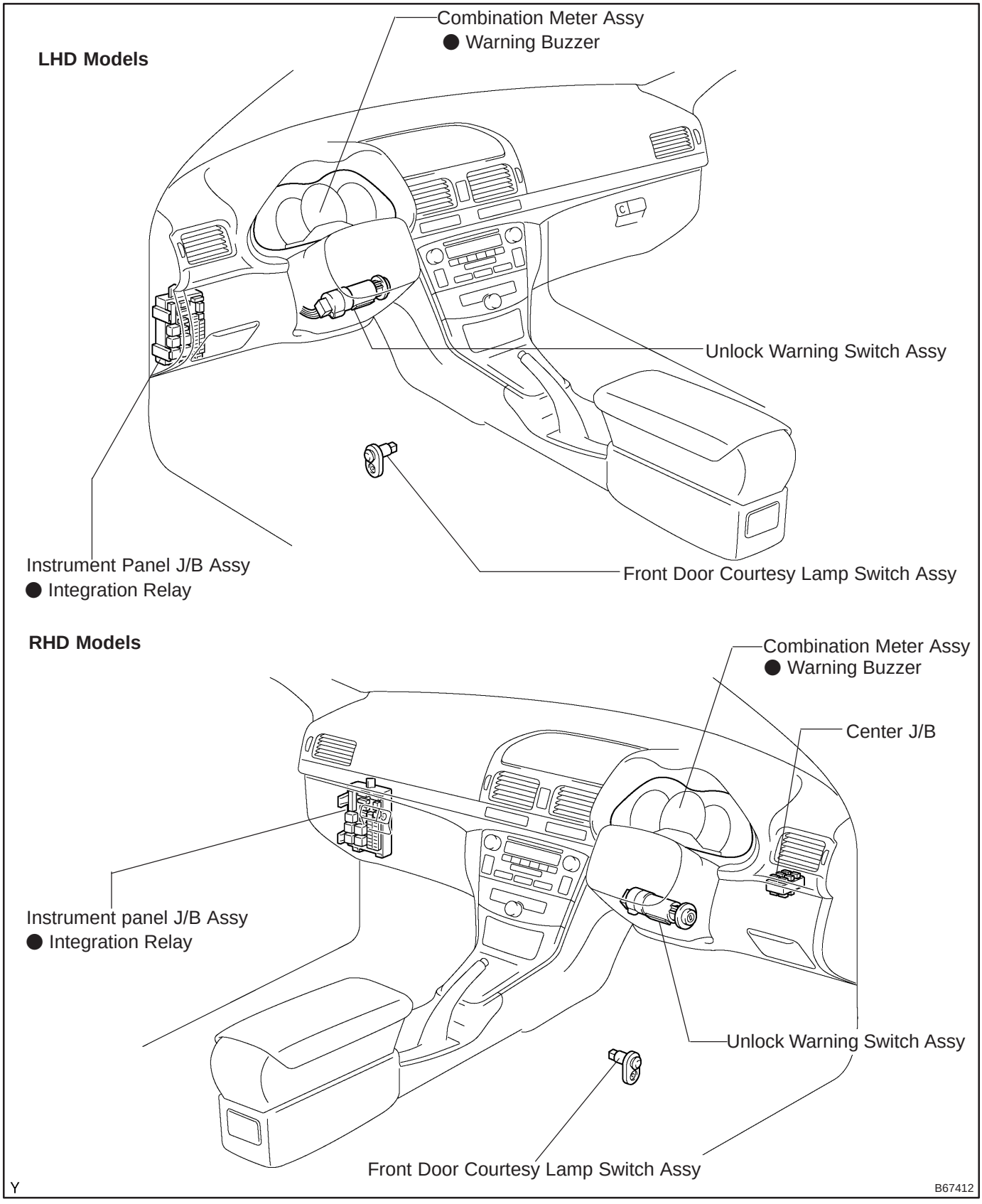

05AF1–02

TERMINALS OF ECU

1. INSPECT INSTRUMENT PANEL J/B ASSY (INTEGRATION RELAY)

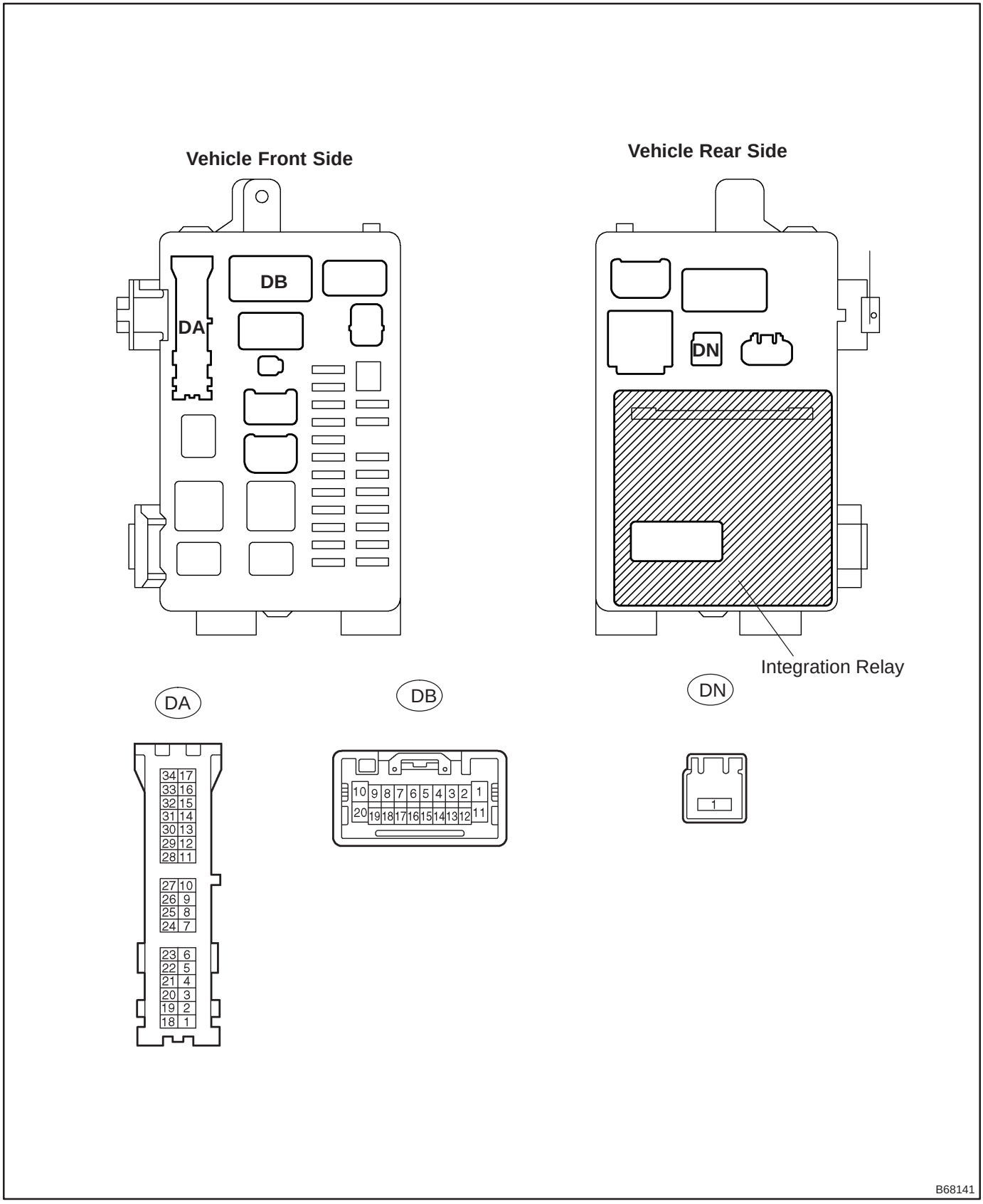

(a) Disconnect the DA, DB and DN J/B connectors.
(b) Check the voltage or resistance of each terminal of the wire harness side connectors.
Standard:

Symbols (Terminal No.)	Wiring Color	Condition	Specified Condition
B (DB–16) – Body ground	W–R – Body ground	Constant	10 to 14 V
B (DN–1) – Body ground	*1 B–G – Body ground		
	*2 B–L – Body ground		10 to 14 V
E (DA–9) – Body ground	W–B – Body ground	Constant	Below 1Ω
KSW (DA–8) – Body ground	Y – Body ground	No key is inserted in ignition key cylinder → Key inserted	10 kΩ or higher → Below 1Ω

HINT:
*1: Except 1CD–FTV
*2: 1CD–FTV
If the result is not as specified, there may be a malfunction on the wire harness side.
(c) Reconnect the DA, DB and DN J/B connectors.
(d) Check the voltage of each terminal of the connectors.
Standard:

Symbols (Terminal No.)	Wiring Color	Condition	Specified Condition
DCTY (DB–13) – Body ground	R – Body ground	Drive side door CLOSED → OPEN	10 to 14 V → Below 1 V

If the result is not as specified, the J/B may have a malfunction.

05AF2–02

PROBLEM SYMPTOMS TABLE

Symptom	Suspected Area	See Page
Key reminder buzzer does not sound	1. Unlock warning switch assy	05–1594
	2. Front door courtesy lamp switch (Driver side)	05–1594
	3. Instrument panel junction block assy (Integration relay)	05–1591
	4. Combination meter	–
	5. Wire harness	–

KEY REMINDER BUZZER DOES NOT SOUND

CIRCUIT DESCRIPTION

When the ignition switch is OFF, the key is in the ignition key cylinder and the driver side door is open the integration relay activates the combination meter to cause the buzzer to sound.

WIRING DIAGRAM

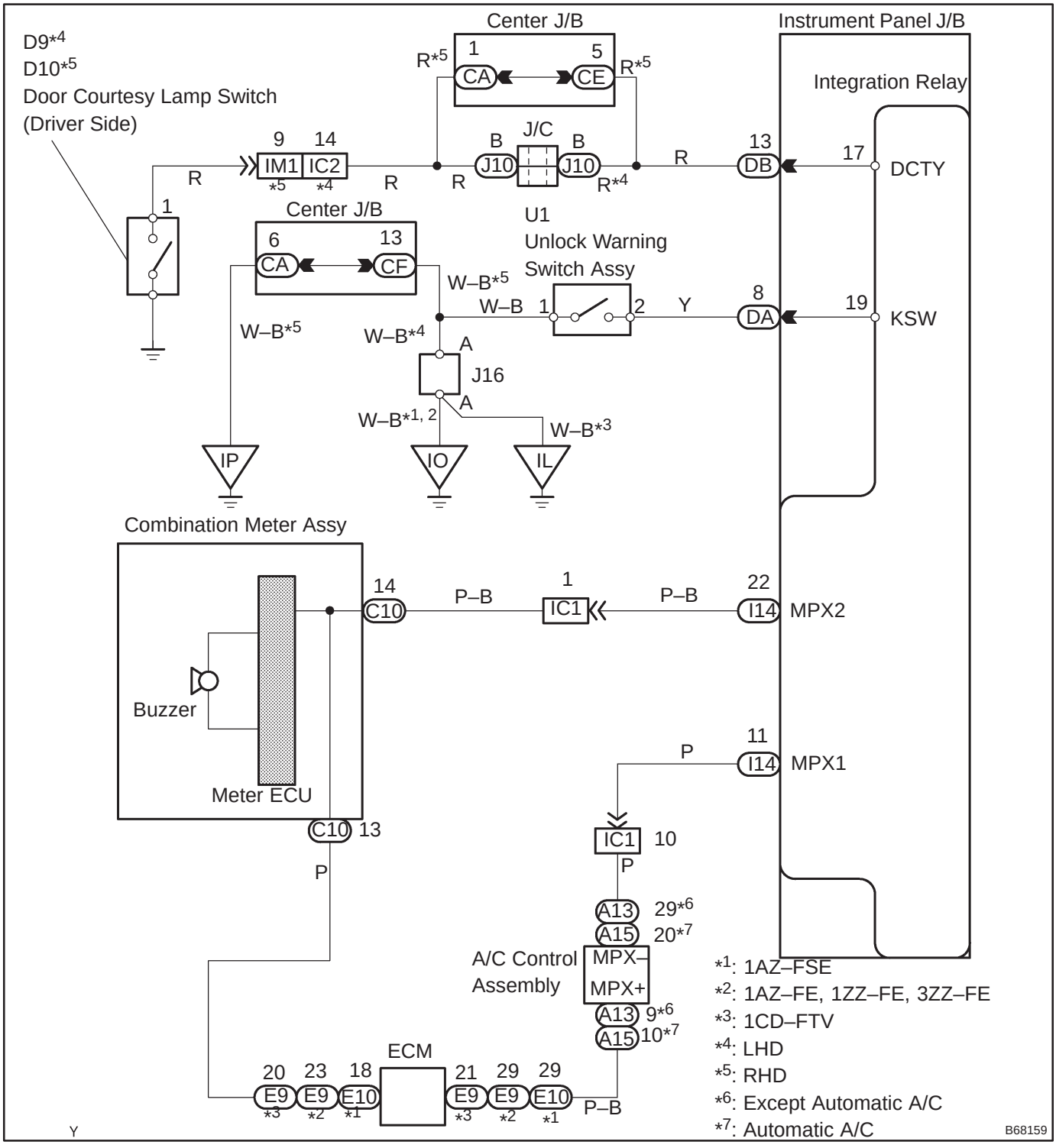

INSPECTION PROCEDURE

1	INSPECT FRONT DOOR COURTESY LAMP SWITCH ASSY (DRIVER SIDE)

(a) When using hand–held tester, proceed to A.
(b) When not using hand–held tester, proceed to B.

B → **Go to step 3**

A

2	READ VALUE OF HAND–HELD TESTER (COURTESY LAMP SWITCH)

(a) Connect the hand–held tester to the DLC3.
(b) Turn the ignition switch ON and push the hand–held tester main switch ON.
(c) Select the item D DOR CTY SW in the DATA LIST and read its value displayed on the hand–held tester.
Standard:
ON: Driver side door is open
OFF: Driver side door is closed

OK → **Go to step 6**

NG → **Go to step 4**

3	CHECK FRONT DOOR COURTESY LAMP SWITCH ASSY

(a) Put the dome lamp No. 2 switch in the door position and open the driver side door. Then check that the courtesy lamp comes on.

OK → **Go to step 7**

NG

4	INSPECT FRONT DOOR COURTESY LAMP SWITCH ASSY (DRIVER SIDE)

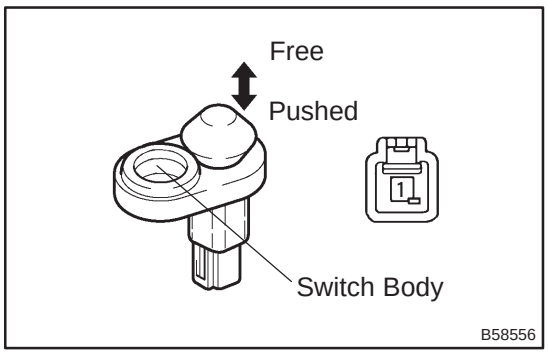

(a) Remove the courtesy lamp switch.
(b) Check the switch resistance.
Standard:

Twster Connection	Swicth	Specified Condition
1 – Swicth Body	Switch Free	10 kΩ or higher
	Switch Pushed	Below 1 Ω

NG → **REPLACE FRONT DOOR COURTESY LAMP SWITCH ASSY**

OK

5	CHECK WIRE HARNESS (INSTRUMENT PANEL J/B ASSY (INTEGRATION RELAY) – FRONT DOOR COURTESY LAMP SWITCH ASSY)

Wire Harness Side

DB
Instrument Panel J/B Assy

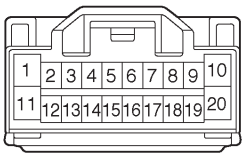

D9*1
D10*2
Y Front Door Courtesy Lamp Switch Assy



Y B68145

(a) Disconnect the DB J/B connector.
(b) Disconnect the D9 or D10 switch connector.
(c) Check the resistance of the wire harness side connectors.

Standard

Tester Connection	Specified Condition
*1 DB–13 (DCTY) – D9–1 *2 DB–13 (DCTY) – D10–1	Below 1 Ω
DB–13 (DCTY) – Body ground	10 kΩ or higher

HINT:
*1: RHD
*2: LHD

OK → **REPLACE INSTRUMENT PANEL JUNCTION BLOCK ASSY**

NG

REPAIR OR REPLACE HARNESS AND CONNECTOR

6	READ VALUE OF HAND–HELD TESTER (UNLOCK WARNING SWITCH ASSY)

(a) Connect the hand–held tester to the DLC3.
(b) Turn the ignition switch ON and push the hand–held tester main switch ON.
(c) Select the item KEY UNLK WRN SW in the DATA LIST and read its value displayed on the hand–held tester.

Standard:
ON: The key is in the ignition key cylinder
OFF: No key is in the ignition key cylinder

OK → **Go to step 9**

NG

7 INSPECT UNLOCK WARNING SWITCH ASSY

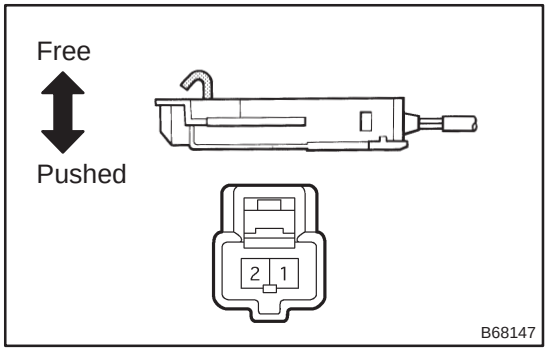

(a) Remove the unlock warning switch.
(b) Check the switch resistance.

Standard:

Tester Connection	Switch Position	Specified Condition
1 – 2	Free	10 kΩ or higher
	Pushed	Below 1 Ω

NG → **REPLACE UNLOCK WARNING SWITCH ASSY**

OK

8 CHECK WIRE HARNESS (INSTRUMENT PANEL J/B ASSY (INTEGRATION RELAY) – UNLOCK WARNING SWITCH ASSY) (UNLOCK WARNING SWITCH ASSY – BODY GROUND)

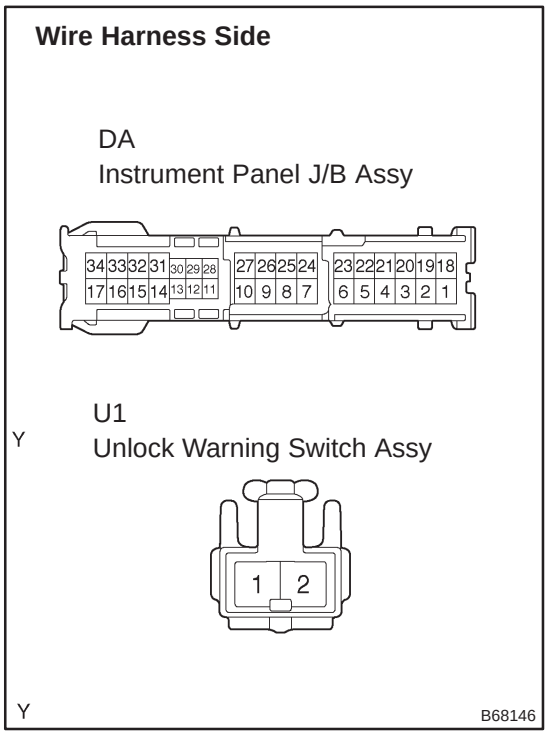

(a) Disconnect the DA J/B connector.
(b) Disconnect the U1 switch connector.
(c) Check the resistance of the wire harness side connectors.

Standard:

Tester Connection	Specified Condition
DA–8 (KSW) – U1–2	Below 1 Ω
U1–1 – Body ground	
DA–8 (KSW) – Body ground	10 kΩ or higher

NG → **REPAIR OR REPLACE HARNESS AND CONNECTOR**

OK

9	CHECK BUZZER (COMBINATION METER)

(a) Check if the seat belt warning buzzer sounds when the vehicle speed is 15 km/h (9 mph) or more (See page 05–1509).

HINT:

When the seat belt warning buzzer sounds, the instrument panel J/B is abnormal.

NG → REPLACE COMBINATION METER ASSY

OK

REPLACE INSTRUMENT PANEL JUNCTION BLOCK ASSY

ENGINE IMMOBILISER SYSTEM

HOW TO PROCEED WITH TROUBLESHOOTING

054CF–07

HINT:

- Use this procedure to troubleshoot the engine immobiliser system.
- The hand–held tester should be used in step 4, 5 and 7.

1	VEHICLE BROUGHT TO WORKSHOP

2	CUSTOMER PROBLEM ANALYSIS CHECK AND SYMPTOM CHECK (See page 05–1601)

3	CRANK ENGINE FOR MORE THAN 10 SECONDS

4	CHECK FOR DTC

(a) Check for DTCs and note any codes that are output.
(b) Delete the DTC.
(c) Recheck for DTCs. Try to prompt the DTC (SFI system and engine immobiliser system) by simulating the original activity that the DTC suggested.
  (1) If the DTC does not reoccur, proceed to A.
  (2) If the DTC (SFI system) reoccurs, proceed to B.
  (3) If the DTC (engine immobiliser system) reoccurs, proceed to C.

B	Go to SFI or ECD SYSTEM (See page 05–290 or 05–517)

C	Go to step 8

A

5	READ VALUE OF HAND–HELD TESTER (IMMOBILISER ECU (TRANSPONDER KEY ECU ASSY) (SWITCH CONDITION))

(a) Connect the hand–held tester to the DLC3.
(b) Turn the ignition switch ON and push the hand–held tester main switch ON.
(c) Select the item KEY SW in the DATA LIST and read its value displayed on the hand–held tester.
Transponder key ECU:

Item	Measurement Item/ Display (Range)	Normal Condition	Diagnostic Note
KEY SW	Un–lock warning switch signal /ON or OFF	ON: Key is in ignition key cylinder OFF: No key is in ignition key cylinder	–

NG	Go to DTC B2780 (See page 05–1613)

OK

6	PROBLEM SYMPTOMS TABLE (See page 05–1612)

(a) When problem is not listed on problem symptoms table, proceed to A.
(b) When problem is listed on problem symptoms table, proceed to B.

B → Go to step 8

A

7	PERFORM TROUBLESHOOTING ACCORDING TO MALFUNCTION SYMPTOM

(a) Pre–check (See page 05–1602)
  (1) Inspect with the hand–held tester (ECU data monitor).
  (2) Inspect with the hand–held tester (ACTIVE TEST).
(b) Terminals of ECU (See page 05–1607)

8	ADJUST, REPAIR OR REPLACE

9	CONFIRMATION TEST

END

054CG–07

CUSTOMER PROBLEM ANALYSIS CHECK

ENGINE IMMOBILISER SYSTEM Check Sheet

Inspector's Name :

Customer's Name		**VIN**	
		Production Date	/ /
		Licence No.	
Date Vehicle Brought In	/ /	**Odometer Reading**	km miles

Date Problem First Occurred		/ /
Frequency Problem Occurs		☐ Constant ☐ Intermittent (times a day) ☐ Only once
Weather Conditions When Problem Occurred	**Weather**	☐ Fine ☐ Cloudy ☐ Rainy ☐ Snowy ☐ Various/Others
	Outdoor Temperature	☐ Hot ☐ Warm ☐ Cool ☐ Cold (Approx. °C (°F)

Symptoms	☐ Immobiliser is not set (Engine starts with key codes other than registered key code)
	☐ Engine does not start

DTC Check	**1st Time**	☐ Normal code ☐ Malfunction code (Code)
	2nd Time	☐ Normal code ☐ Malfunction code (Code)

PRE–CHECK

1. DIAGNOSIS SYSTEM

(a) Description

(1) The ECM controls the function of the immobiliser system on the vehicle.
Data of the immobiliser system and the Diagnostic Trouble Code (DTC) can be read in the Data Link Connector 3 (DLC3) of the vehicle. When trouble occurs in the immobiliser system, even though the security indicator lamp does not come on, DTCs can be checked.
Therefore, the immobiliser system seems to be malfunctioning, use the hand–held tester to check for a malfunction and repair it.

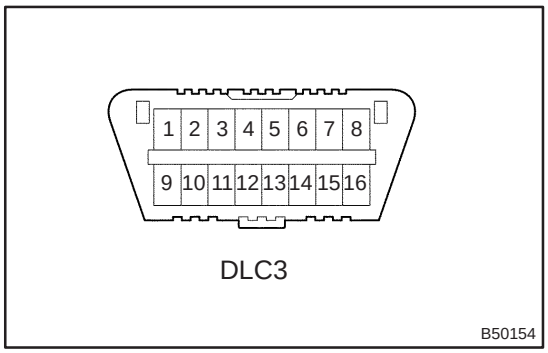

(b) Inspect the DLC3.
The vehicle's ECM uses the ISO 9141–2 (Euro–OBD)/ISO 14230 (M–OBD) communication protocol.
The terminal arrangement of the DLC3 complies with the ISO 15031–3 and matches the ISO 9141–2/ISO 14230 format.

Standard:

Tester Connection	Condition	Specified Condition
7 (Bus + line) – 5 (Signal ground)	During communication	Pulse generation
4 (Chassis ground) – Body ground	Always	Below 1 Ω
5 (Signal ground) – Body ground	Always	Below 1 Ω
16 (B+) – Body ground	Always	10 to 14 V

HINT:
If the screen displays UNABLE TO CONNECT TO VEHICLE after you have connected the cable of the hand–held tester to the DLC3, turned the ignition switch ON and used the hand–held tester, the problem may be on the vehicle side or the tester side.

- If communication is normal when the tester is connected to other vehicle, inspect the DLC3 of the original vehicle.
- If communication is still impossible when the tester is connected to another vehicle, the problem may be in the tester itself, so consult the Service Department listed in the tester's instruction manual.

2. Using hand–held tester:

CHECK DTC

(a) Checking DTCs.

(1) Connect the hand–held tester to DLC3.
(2) Turn the ignition switch ON.
(3) Read DTCs by following the prompts on the tester screen.

HINT:
Refer to the hand–held tester operator's manual for further details.

(b) Clear the DTCs from memory.

(1) Connect the hand–held tester to DLC3.
(2) Turn the ignition switch ON.
(3) Erase DTCs by following the prompts on the tester screen.

HINT:
Refer to the hand–held tester operator's manual for further details.

3. CHECK DIAGNOSIS

(a) Using the hand–held tester, check for DTCs.

NOTICE:

Hand–held tester only:

When the diagnosis system is switched from normal mode to check mode, all the DTCs and freeze frame data recorded in normal mode are erased. So before switching modes, always check the DTCs and freeze frame data, and make a note of them.

(1) Prepare the hand–held tester.
(2) Connect the hand–held tester to the DLC3 under the instrument panel lower pad.
(3) Turn the ignition switch ON and push the hand–held tester switch ON.
(4) Use the hand–held tester to check for DTCs and freeze frame data, and make a note of them (For operating instructions, see the hand–held tester instruction book).
(5) Confirm the details of the DTCs.

(b) Either of the following procedures will erase the DTCs and freeze frame data.
(1) Operating the hand–held tester to erase the codes (See the hand–held tester instruction book for operating instructions).
(2) Disconnecting the battery terminals or ECU–B fuse.

4. DATA LIST

HINT:

Using the DATA LIST displayed on the hand–held tester, you can read the value of the switch, sensor, actuator, etc. without parts removal. Reading the DATA LIST as the first step of troubleshooting is one way to shorten the labor time.

(a) Connect the hand–held tester to the DLC3.
(b) Turn the ignition switch ON.
(c) Read the DATA LIST, according to the display on the tester.

Transponder key ECU:

Item	Measurement Item/ Display (Range)	Normal Condition
KEY SW	Un–lock warning switch signal/ ON or OFF	OFF: Key is in Ignition key cylinder ON: No key is in Ignition key cylinder
IG SW	Ignition switch signal/ ON or OFF	OFF: Ignition switch is ON or START position ON: Ignition switch is OFF or ON position
IMMOBILISER	Immobiliser system status/ SET or UNSET	UNSET: Without key SET: Ignition switch ON
RESPONSE	Transponder chip data/ NG or OK	NG: Data error OK: Data OK
FRAME	Transponder chip data/ NG or OK	NG: Data error OK: Data OK
SERIAL NUMBER	Transponder chip data/ NG or OK	NG: Data error OK: Data OK
ENCRYPT CODE	Transponder chip data/ NG or OK	NG: Data error OK: Data OK
STATUS	Transponder chip data/ NG or OK	NG: Data error OK: Data OK
BCC	Transponder chip signal/ NG or OK	NG: Incorrect data sending OK: Correct data sending
SUB KEY	Sub key code signal/ NOMATCH or MATCH	NOMATCH: Nomatch sub–key code is sent MATCH: Sub key code is sent
MASTER KEY	Master key code signal/ NOMATCH or MATCH	NOMATCH: Nomatch Master key code is sent MATCH: Master key code is sent
REGIST SUB CODE	Number of registered sub–key/ min. 0, max. 15	Number of registered sub–key
REGIST MAS CODE	Number of registered master key/ min. 0, max. 15	Number of registered master key

Item	Measurement Item/ Display (Range)	Normal Condition
REG CODE SPACE	Memory space for key codes registration/ NOT FUL or FULL	NOT FUL: Possible to resister more key code FULL: Impossible to register key code any more
ANTENNA COIL	Antenna coil condition/ NORMAL or FAIL	Normal: Antenna coil is normal FAIL: Antenna coil is abnormal

5. ACTIVE TEST

HINT:

Performing the ACTIVE TEST using the hand–held tester allows you to operate the relay, VSV, actuator, etc. without parts removal. Performing the ACTIVE TEST as the first step of troubleshooting is one way to shorten the labor time.

(a) Connect the hand–held tester to the DLC3.

(b) Turn the ignition switch ON.

(c) Perform the ACTIVE TEST, according to the display on the tester.

Transponder key ECU:

Item	Test Details
SECURITY INDIC	Turn security indicator ON/OFF

054CI–07

DIAGNOSTIC TROUBLE CODE CHART

1. TRANSPONDER KEY ECU DTC CHART

DTC No. (See Page)	Detection Item	Trouble Area
*B2780 (05–1613)	Push Switch/Key Unlock Warning Switch Malfunction	• Unlock warning switch • Wire harness • Transponder key ECU assy
B2784 (05–1616)	Antenna Coil Open/Short	• Wire harness • Transponder key amplifier • Transponder key ECU assy
B2793 (05–1618)	Transponder Chip Malfunction	• Key
B2794 (05–1619)	Unmatched Encryption Code	• Key
B2795 (05–1620)	Unmatched Key Code	• Key
B2796 (05–1621)	No Communication in Immobiliser System	• Key • Transponder key amplifier • Wire harness • Transponder key ECU assy
B2797 (05–1624)	Communication Malfunction No. 1	• Key • Wire harness • Transponder key amplifier • Transponder key ECU assy
B2798 (05–1621)	Communication Malfunction No. 2	• Key

HINT:

*: Except for 1AZ–FE engine

2. ECM DTC CHART

NOTICE:

The DTC for the immobiliser system is specified. If the other codes are output, check the DTC chart of the engine control system.

DTC No. (See Page)	Detection Item	Trouble Area
B2799 (05–1625)	Engine Immobiliser System Malfunction	• Wire harness • Key • Transponder key ECU assy • Transponder key amplifier • ECM

054CM–07

LOCATION

LHD Models

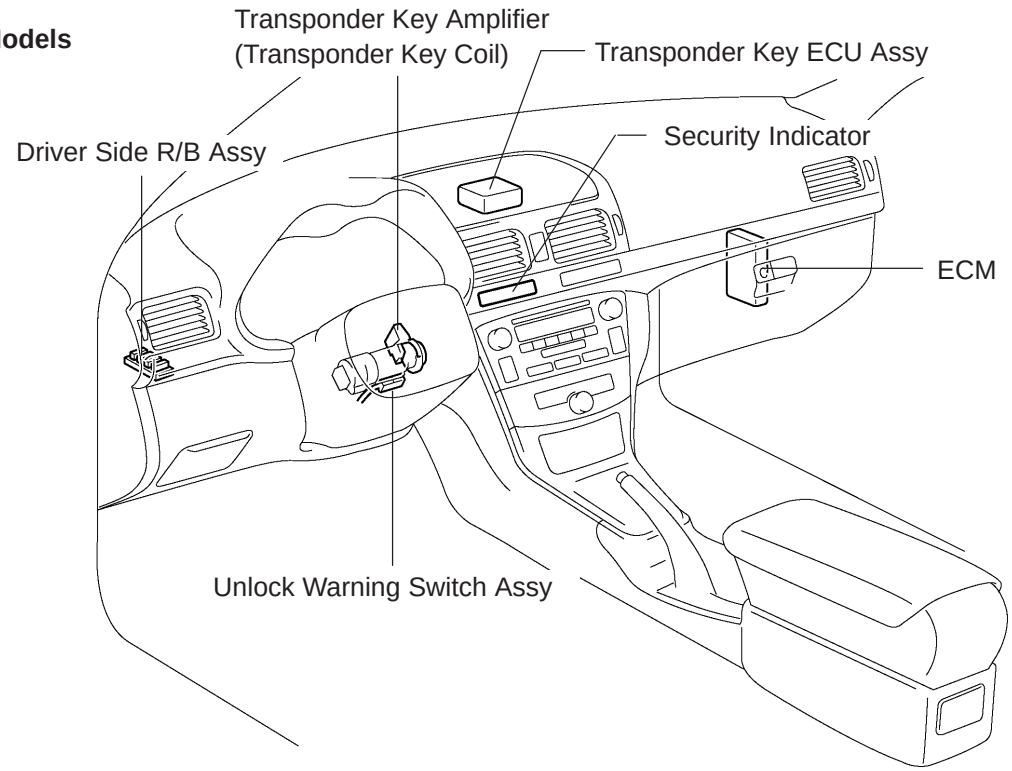

RHD Models

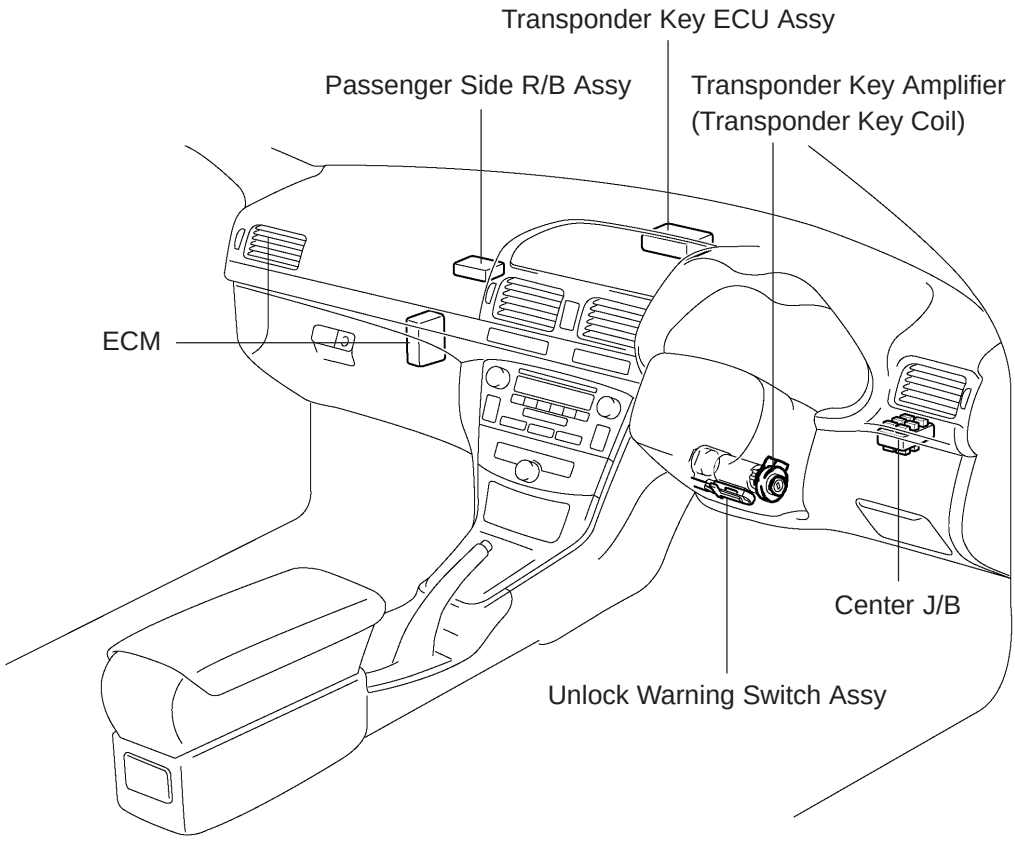

Y

B65753

05B0B–02

TERMINALS OF ECU

1. CHECK TRANSPONDER KEY AMPLIFIER (COIL)

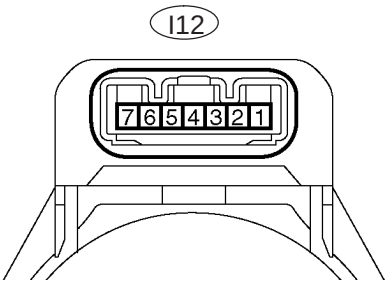

B65593

(a) Disconnect the I12 amplifier connector and check the resistance between the terminal of the wire harness side connector and body ground.

Standard:

Symbols (Terminal No.)	Wiring Color	Condition	Specified Condition
GND (I12–7) – Body ground	GR–R – Body ground	Constant	Below 1 Ω

If the result is not as specified, there may be a malfunction on the wire harness side.

(b) Reconnect the I12 amplifier connector and check the resistance or voltage of each terminal of the connector.

Standard:

Symbols (Terminal No.)	Wiring Color	Condition	Specified Condition
VC5 (I12–1) – GND (I12–7)	Y–B – GR–R	No key in ignition key cylinder → With key	0 V → 10 to 14 V
CODE(I12–4) – GND (I12–7)	Y–G – GR–R	No key in ignition key cylinder → With key	Waveform 1
TXCT (I12–5) – GND (I12–7)	L–R – GR–R	No key in ignition key cylinder → With key	Waveform 2
GND (I12–7) – Body ground	GR–R – Body ground	Constant	Below 1 Ω

If the result is not as specified, the amplifier may have a malfunction.

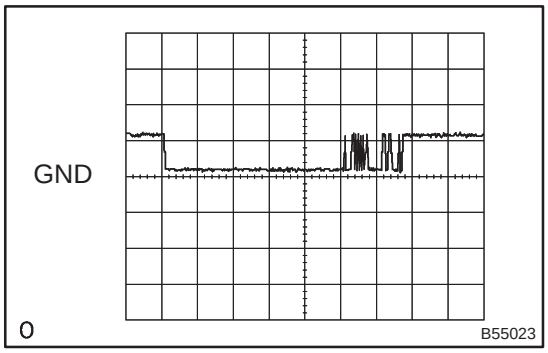

B55023

(c) Inspect using an oscilloscope.

Waveform 1 (Reference):

Terminal	CODE – GND
Tool Setting	10 V/DIV., 10 ms/DIV.
Condition	Ignition switch ON

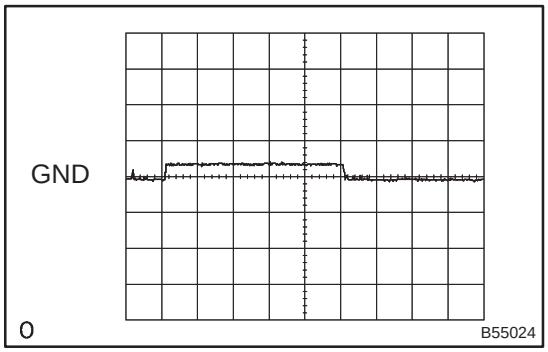

Waveform 2 (Reference):

Terminal	TXCT – GND
Tool Setting	10 V/DIV., 10 ms/DIV.
Condition	Ignition switch ON

2. CHECK TRANSPONDER KEY ECU ASSY

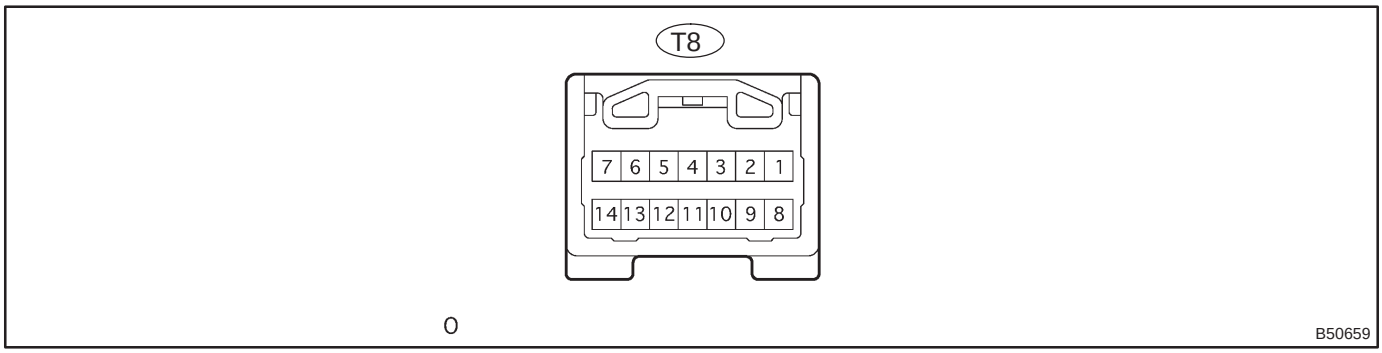

(a) Disconnect the T8 ECU connector and check the voltage and resistance between each terminal of the wire harness side connector.

Standard:

Symbols (Terminal No.)	Wiring Color	Condition	Specified Condition
AGND (T8–13) – Body ground	GR–R – Body ground	Constant	Below 1 Ω
+B (T8–1) – GND (T8–14)	W–R – W–B	Constant	10 to 14 V
IG (T8–2) – AGND (T8–13)	B–W – GR–R	Ignition switch OFF → ON	0 V → 10 to 14 V
KSW (T8–10) – AGND (T8–13)	Y – GR–R	No key in ignition key cylinder → With key	10 kΩ or higher → Below 1 Ω

If the result is not as specified, there may be a malfunction on the wire harness side.

(b) Reconnect the T8 ECU connector and check the voltage between each terminal of the connector.

Standard:

Symbols (Terminal No.)	Wiring Color	Condition	Specified Condition
KSW (T8–10) – AGND (T8–13)	Y – GR–R	No key in ignition key cylinder → With key	10 to 14 V → 0 V
VC5 (T8–8) – AGND (T8–13)	Y–B – GR–R	Ignition switch OFF → ON	0 V → 4.6 to 5.4 V
TXCT (T8–12) – AGND (T8–13)	L–R – GR–R	Ignition switch OFF → ON	Waveform 1
CODE (T8–11) – AGND (T8–13)	Y–G – GR–R	Ignition switch OFF → ON	Waveform 2
EFIO (T8–6) – AGND (T8–13)	GR – GR–R	Ignition switch OFF → ON	Waveform 3
EFII (T8–7) – AGND (T8–13)	W – GR–R	Ignition switch OFF → ON	Waveform 4

If the result is not as specified, the ECU may have a malfunction.

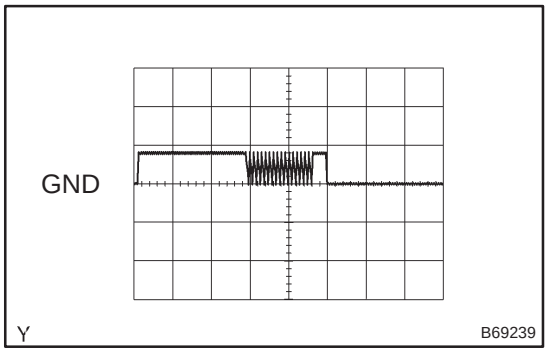

(c) Inspect using an oscilloscope.

Waveform 1 (Reference):

Terminal	TXCT – GND
Tool Setting	5 V/DIV., 20 ms/DIV.
Condition	Ignition switch ON

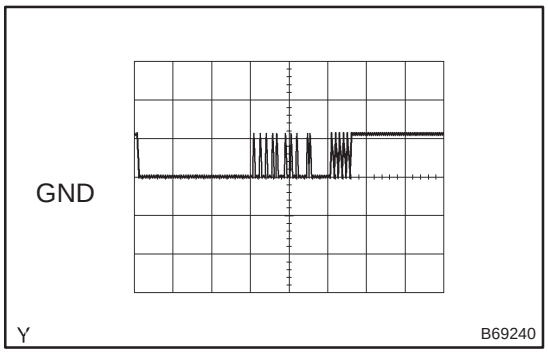

Waveform 2 (Reference):

Terminal	CODE – GND
Tool Setting	10 V/DIV., 20 ms/DIV.
Condition	Ignition switch ON

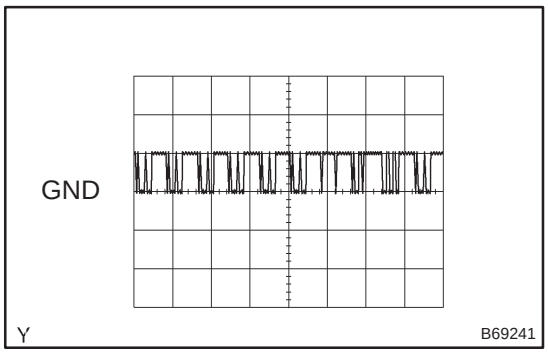

Waveform 3 (Reference):

Terminal	EFIO – GND
Tool Setting	5 V/DIV., 50 ms/DIV.
Condition	Ignition switch ON

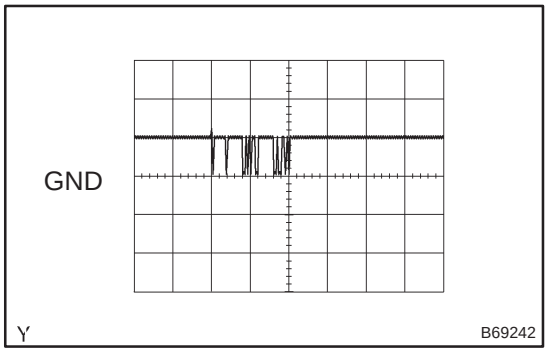

Waveform 4 (Reference):

Terminal	EFII – GND
Tool Setting	5 V/DIV., 50 ms/DIV.
Condition	Constant

3. CHECK ECM

3ZZ–FE, 1ZZ–FE , 1AZ–FE engine:

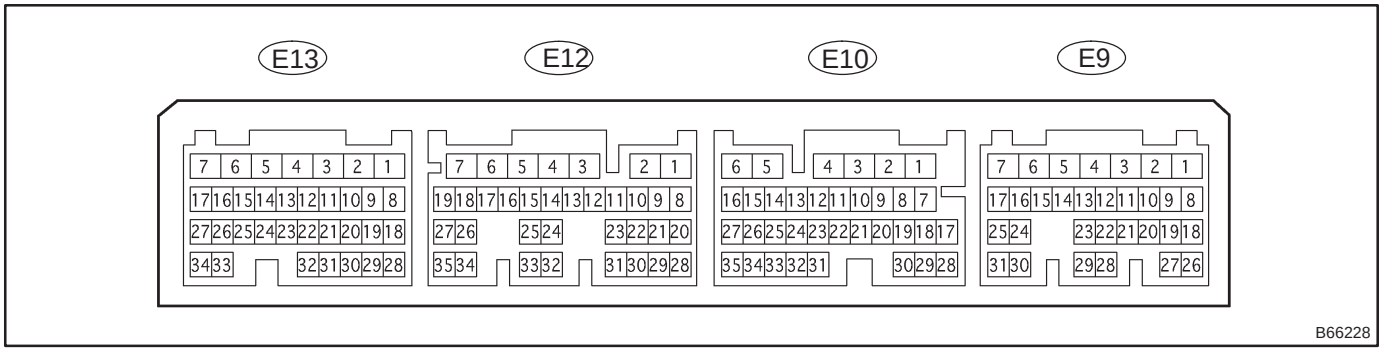

(a) Disconnect the E10 and E12 ECM connectors and check the voltage or resistance between each terminal of the wire harness side connectors.

Standard:

Symbols (Terminal No.)	Wiring Color	Condition	Specified Condition
IMI (E10–27) – E1 (E12–7)	GR–R – BR	No key in ignition key cylinder → With key	Waveform 1
IMO (E10–26) – E1 (E12–7)	W – BR	No key in ignition key cylinder → With key	Waveform 2
E1 (E12–1) – Body ground	BR – Body ground	Constant	Below 1 Ω

1CD–FTV, 1AZ–FSE engine:

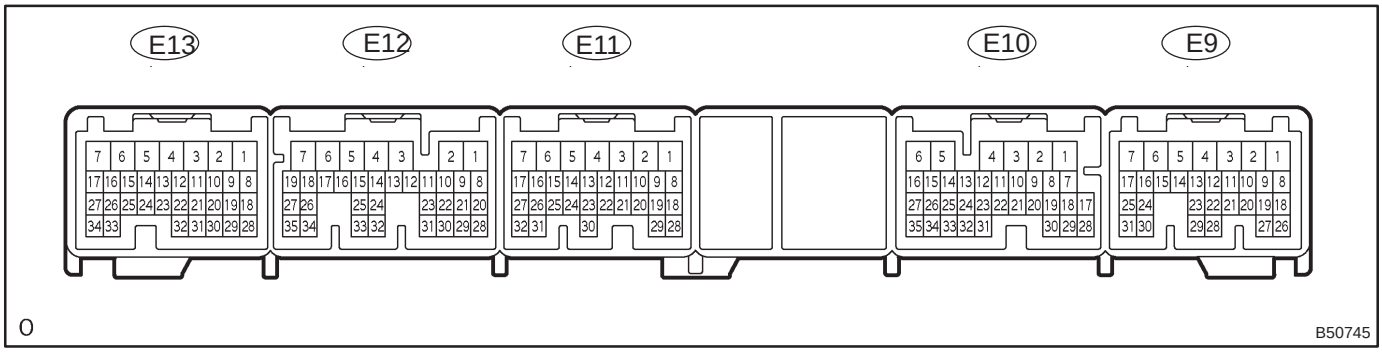

(b) Disconnect the E10 and E11 or E12 ECM connectors and check the voltage or continuity between each terminal of the wire harness side connectors.

Standard:

Symbols (Terminal No.)	Wiring Color	Condition	Specified Condition
*1 IMI (E10–30) – E1 (E12–7)	GR – BR	No key in ignition key cylinder → With key	Waveform 1
*2 IMI (E10–27) – E1 (E11–1)	GR – BR	No key in ignition key cylinder → With key	Waveform 1
*1 IMO (E10–29) – E1 (E12–7)	W – BR	No key in ignition key cylinder → With key	Waveform 2
*2 IMO (E10–26) – E1 (E11–1)	W– BR	No key in ignition key cylinder → With key	Waveform 2
*1 E1 (E12–7) – Body ground	BR – Body ground	Constant	Below 1 Ω
*2 E1 (E11–1)) – Body ground	BR – Body ground	Constant	Below 1 Ω

HINT:
*1: 1CD–FTV engine
*2: 1AZ–FSE engine
If the result is not as specified, there may be a malfunction on the wire harness side.

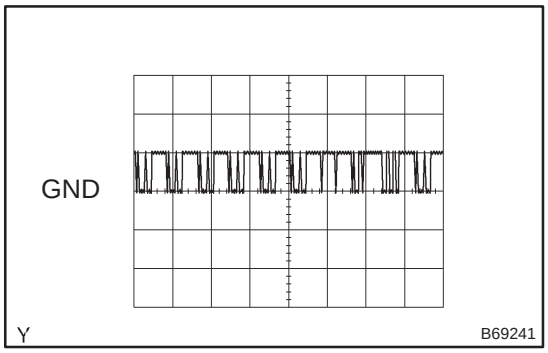

(c) Inspect using an oscilloscope.

Waveform 1 (Reference):

Terminal	IMI – GND
Tool Setting	5 V/DIV., 50 ms/DIV.
Condition	Ignition switch ON

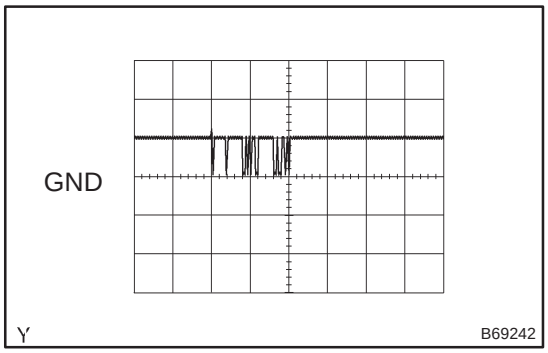

Waveform 2 (Reference):

Terminal	IMO – GND
Tool Setting	5 V/DIV., 50 ms/DIV.
Condition	Constant

054CK–07

PROBLEM SYMPTOMS TABLE

Symptom	Suspected Area	See Page
Engine does not start	1. Key	05–1618 05–1619 05–1620 05–1621 05–1624 05–1625
	2. Transponder key amplifier	05–1616 05–1621 05–1624 05–1625
	3. Transponder key ECU assy	05–1613 05–1616 05–1621 05–1624 05–1625

DTC	B2780	PUSH SWITCH/KEY UNLOCK WARNING SWITCH MALFUNCTION

CIRCUIT DESCRIPTION

This DTC will be output if the transponder key ECU does not detect that the unlock warning switch is ON even when the ignition switch is ON (Under normal conditions, the unlock warning switch is ON when the ignition switch is ON).

DTC No.	DTC Detection Condition	Trouble Area
B2780	Unlock warning switch ON is not detected when ignition switch is ON	• Unlock warning switch assy • Wire harness • Transponder key ECU assy

WIRING DIAGRAM

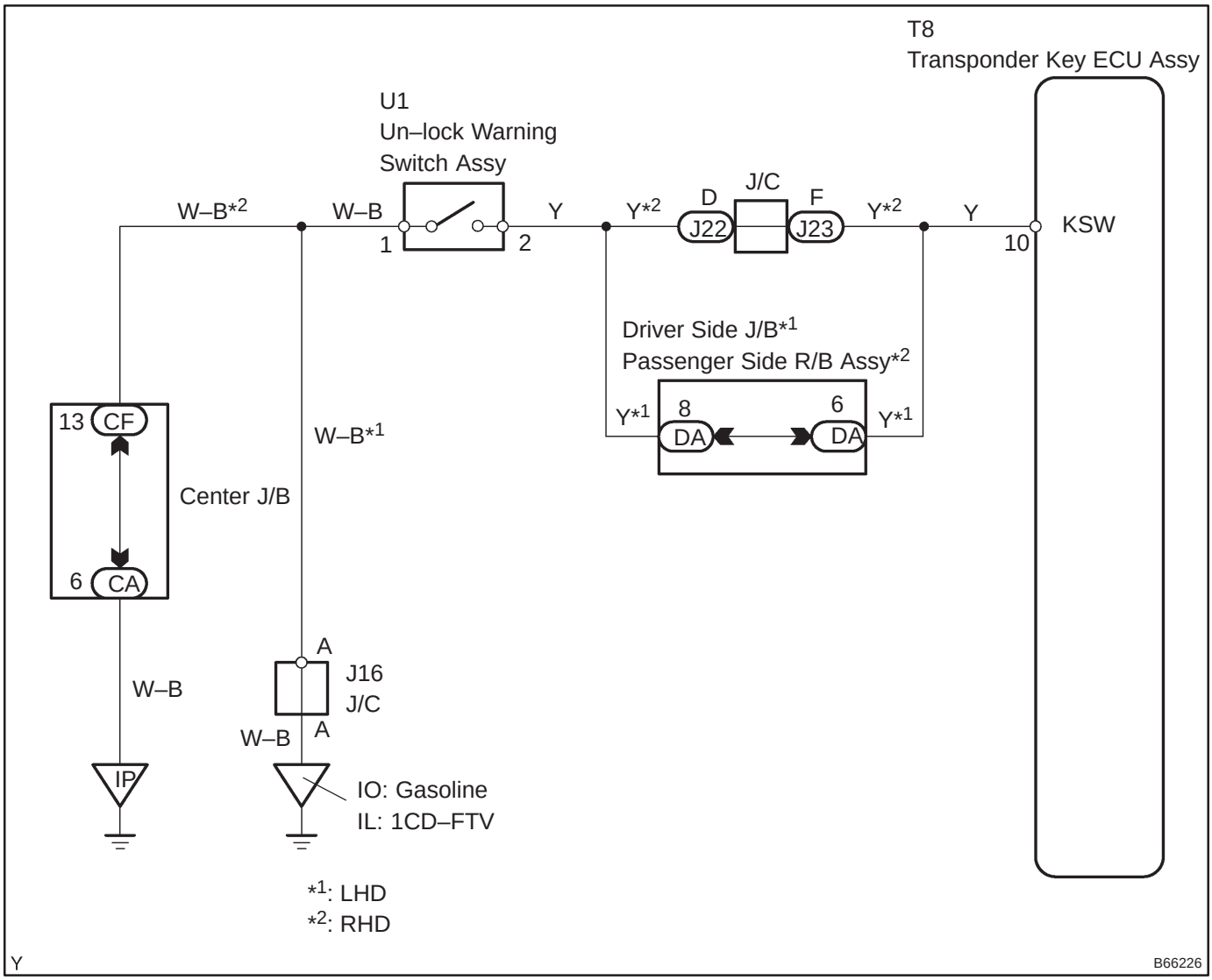

INSPECTION PROCEDURE

HINT:

Start the inspection from step 1 when using the hand–held tester and start from step 2 when not using the hand–held tester.

1	READ VALUE OF HAND–HELD TESTER (TRANSPONDER KEY ECU (SWITCH CONDITION))

(a) Connect the hand–held tester to the DLC3.
(b) Turn the ignition switch ON with the key that will not start the engine.
(c) Select the item KEY SW on the hand–held tester.
OK:
OFF → Key is in ignition key cylinder
ON → No key is in ignition key cylinder

OK → **REPLACE TRANSPONDER KEY ECU ASSY**

NG

2	INSPECT UNLOCK WARNING SWITCH ASSY

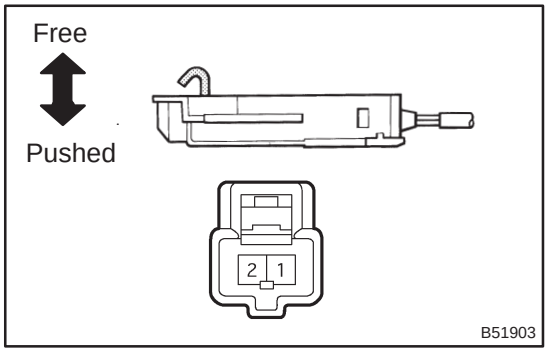

(a) Remove the unlock warning switch.
(b) Inspect the unlock warning switch resistance.
Standard:

Tester Connection	Switch Position	Specified Condition
1 – 2	Switch pushed (Key set)	Below 1 Ω
	Switch free (Key removed)	10 kΩ or higher

NG → **REPLACE UNLOCK WARNING SWITCH ASSY**

OK

3	**CHECK WIRE HARNESS (TRANSPONDER KEY ECU ASSY – UNLOCK WARNING SWITCH ASSY) (UNLOCK WARNING SWITCH ASSY – BODY GROUND)**

Wire Harness Side

T8
Transponder Key ECU Assy

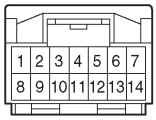

U1
Unlock Warning Switch Assy

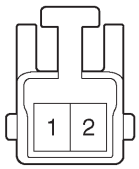

B63404
B65748
B65751

(a) Disconnect the T8 ECU and U1 switch connectors.
(b) Check the resistance between the wire harness side connectors.

Standard:

Tester Connection	Specified Condition
T8–10 (KSW) – U1–2	Below 1 Ω
U1–1 – Body ground	Below 1 Ω

NG → **REPAIR OR REPLACE HARNESS AND CONNECTOR**

OK

REPLACE TRANSPONDER KEY ECU ASSY

DTC B2784 ANTENNA COIL OPEN/SHORT

CIRCUIT DESCRIPTION

The transponder key coil is built into the transponder key amplifier and receives a key code signal from the transponder chip in the key. This signal is amplified by the amplifier and then output to the transponder key ECU.

DTC No.	DTC Detection Condition	Trouble Area
B2784	Antenna coil is open/short	• Wire harness • Transponder key amplifier • Transponder key ECU assy

WIRING DIAGRAM

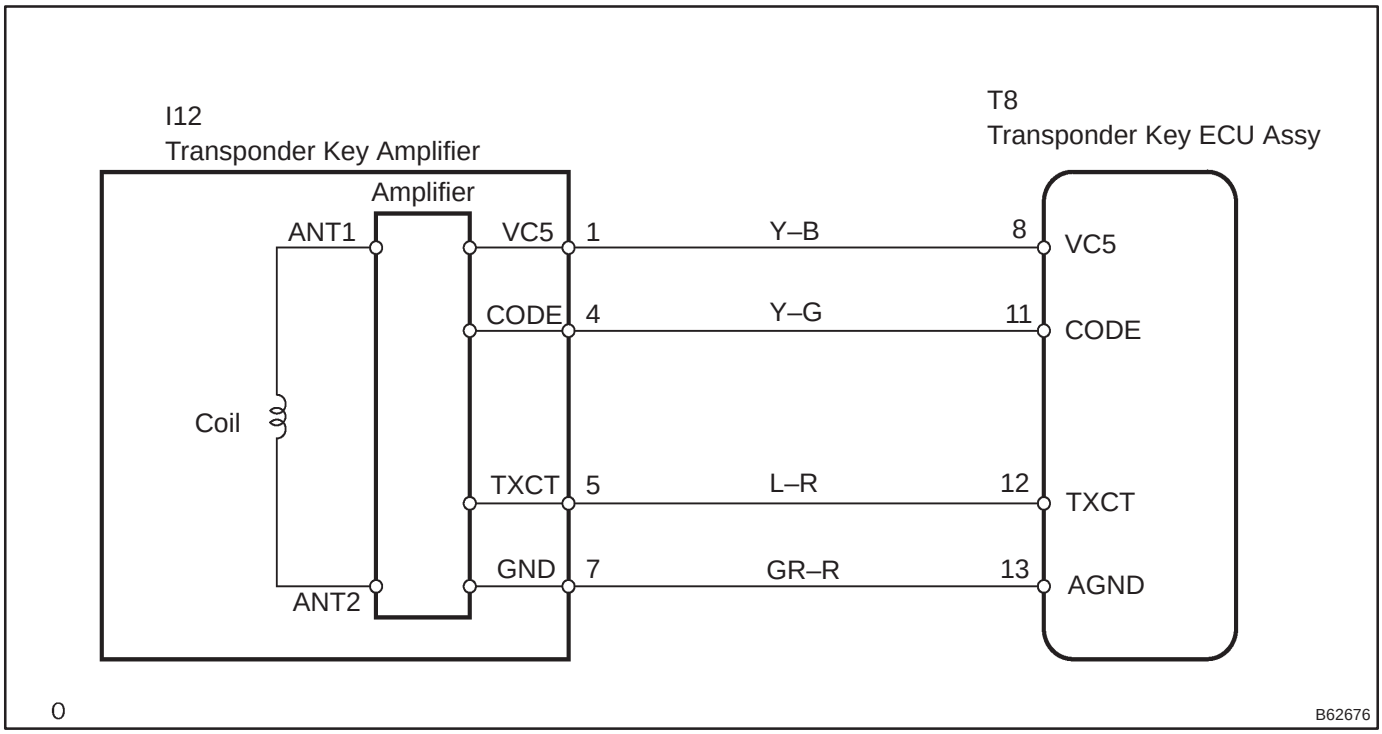

INSPECTION PROCEDURE

HINT:

Start the inspection from step 1 when using the hand–held tester and start from step 2 when not using the hand–held tester.

1	**READ VALUE OF HAND–HELD TESTER (IMMOBILISER ECU (TRANSPONDER KEY ECU ASSY) (SWITCH CONDITION))**

(a) Connect the hand–held tester to the DLC3.
(b) Turn the ignition switch ON with the key that will not start the engine.
(c) Select the item ANTENNA COIL on the hand–held tester.
OK: NORMAL
NG: FAIL

OK → **CHECK AND REPLACE TRANSPONDER KEY ECU ASSY**

NG

2	**CHECK WIRE HARNESS (TRANSPONDER KEY ECU ASSY – TRANSPONDER KEY AMPLIFIER) (TRANSPONDER KEY ECU ASSY OR TRANSPONDER KEY AMPLIFIER – BODY GROUND)**

Wire Harness Side

T8
Transponder Key ECU Assy

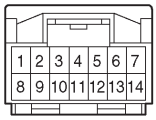

I12
Transponder Key Amplifier

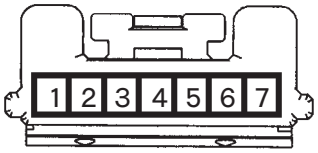

B63404
B55013
B64974

(a) Disconnect the T8 ECU and I12 amplifier connectors.
(b) Check the resistance of the wire harness side connectors.
Standard:

Tester Connection	Specified Condition
T8–8 (VC5) – I12–1 (VC5)	Below 1 Ω
T8–11 (CODE) – I12–4 (CODE)	
T8–12 (TXCT) – I12–5 (TXCT)	
T8–13 (AGND) – I12–7 (GND)	
T8–8 (VC5) or I12–1 (VC5) – Body ground	10 kΩ or higher
T8–11 (CODE) or I12–4 (CODE) – Body ground	
T8–12 (TXCT) or I12–5 (TXCT) – Body ground	
T8–13 (AGND) or I12–7 (GND) – Body ground	

NG → **REPAIR OR REPLACE HARNESS AND CONNECTOR**

OK

REPLACE TRANSPONDER KEY AMPLIFIER

DTC B2793 TRANSPONDER CHIP MALFUNCTION

CIRCUIT DESCRIPTION

This DTC is output when a malfunction is found in a key during the key code registration or the key code is not registered normally. Replace the key when the key code registration is not performed normally and this DTC is detected.

DTC No.	DTC Detection Condition	Trouble Area
B2793	Transponder chip malfunction	• Key

INSPECTION PROCEDURE

1 CHECK DTC

(a) Delete the DTC (See page 05–1602).
(b) Insert the key into the ignition key cylinder.
(c) Check that no code is output.

OK → **NO PROBLEM**

NG

2 RE–REGISTER KEY

(a) Delete the DTC (See page 05–1602).
(b) Re–register the key and check that the engine starts with the key.

OK → **NORMAL**

NG

REPLACE KEY

DTC	B2794	UNMATCHED ENCRYPTION CODE

CIRCUIT DESCRIPTION

This DTC is output when a key with an incomplete key code is inserted into the ignition key cylinder.

DTC No.	DTC Detection Condition	Trouble Area
B2794	Key with incomplete key code is inserted	• Key

INSPECTION PROCEDURE

1	**REPLACE KEY**

DTC	B2795	UNMATCHED KEY CODE

CIRCUIT DESCRIPTION

This DTC is output when a key with a key code that has not been registered in the ECU is inserted into the ignition key cylinder.

DTC No.	DTC Detection Condition	Trouble Area
B2795	Key with unregistered key code is inserted	• Key

INSPECTION PROCEDURE

1	DELETE DTC AND INSERT ALL PRESENTLY AVAILABLE KEYS TO CHECK WHETHER ENGINE STARTS OR NOT

OK → NO PROBLEM (BECAUSE OF KEY RE–REGISTRATION)

NG

REPLACE KEY THAT WILL NOT START ENGINE

DTC	B2796	NO COMMUNICATION IN IMMOBILISER SYSTEM

DTC	B2798	COMMUNICATION MALFUNCTION NO.2

CIRCUIT DESCRIPTION

This code is stored in the memory when a key that does not have a transponder chip is inserted or if communication between the key and transponder key ECU is impossible.

DTC No.	DTC Detection Condition	Trouble Area
B2796	No communication	• Key • Wire harness • Transponder key amplifier (Transponder key coil) • Transponder key ECU assy
B2798	Communication error	• Key

WIRING DIAGRAM

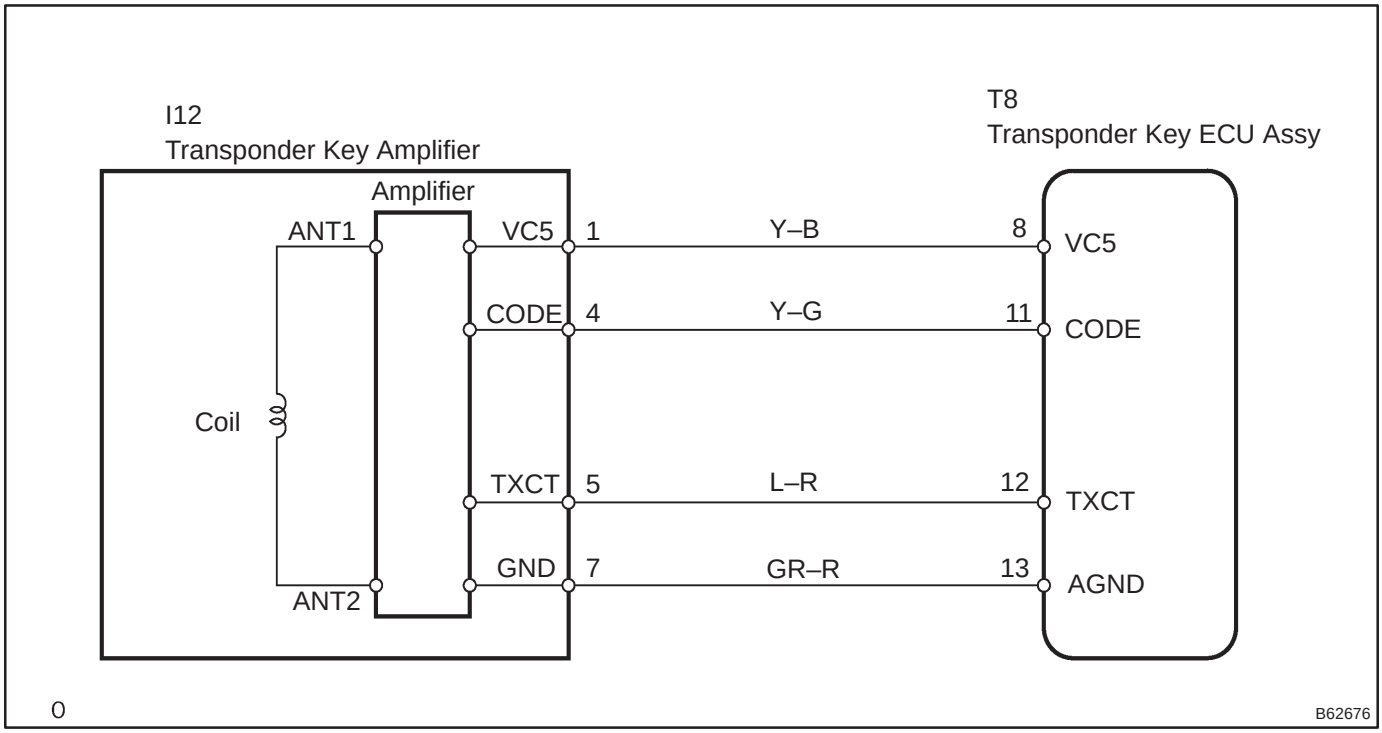

INSPECTION PROCEDURE

HINT:
Start the inspection from step 1 when using the hand–held tester and start from step 2 when not using the hand–held tester.

1	**READ VALUE OF HAND–HELD TESTER (IMMOBILISER ECU (TRANSPONDER KEY ECU ASSY) (SWITCH CONDITION))**

(a) Connect the hand–held tester to the DLC3.
(b) Turn the ignition switch ON with the key that will not start the engine.
(c) Select IMMOBILISER on the hand–held tester.
OK:
SET → Ignition switch ON
UNSET → Without key

OK → **NORMAL**

NG

2	**CHECK WHETHER ENGINE STARTS WITH OTHER KEYS**

(a) Check whether the engine starts with the other keys for the vehicle.

OK → **RE–REGISTER OR REPLACE KEY THAT WILL NOT START ENGINE**

NG

HINT:
Start the inspection from step 3 when using the hand–held tester and start from step 4 when not using the hand–held tester.

3	**READ VALUE OF HAND–HELD TESTER (IMMOBILISER ECU (TRANSPONDER KEY ECU ASSY) (SWITCH CONDITION))**

(a) Connect the hand–held tester to the DLC3.
(b) Turn the ignition switch ON with the key that will does not start the engine.
(c) Select the item ANTENNA COIL on the hand–held tester.
OK: NORMAL
NG: FAIL

NG → **CHECK AND REPLACE TRANSPONDER KEY ECU ASSY**

OK

4	CHECK WIRE HARNESS (TRANSPONDER KEY ECU ASSY – TRANSPONDER KEY AMPLIFIER) (TRANSPONDER KEY ECU ASSY OR TRANSPONDER KEY AMPLIFIER – BODY GROUND)

Wire Harness Side

T8
Transponder Key ECU Assy

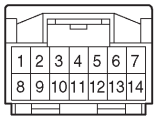

I12
Transponder Key Amplifier

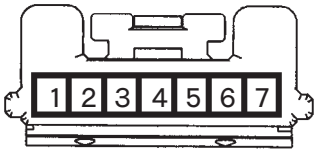

B63404
B55013
B64974

(a) Disconnect the T8 ECU and I12 amplifier connectors.
(b) Check the resistance of the wire harness side connectors.
Standard:

Tester Connection	Specified Condition
T8–8 (VC5) – I12–1 (VC5)	Below 1 Ω
T8–11 (CODE) – I12–4 (CODE)	
T8–12 (TXCT) – I12–5 (TXCT)	
T8–13 (AGND) – I12–7 (GND)	
T8–8 (VC5) or I12–1 (VC5) – Body ground	10 kΩ or higher
T8–11 (CODE) or I12–4 (CODE) – Body ground	
T8–12 (TXCT) or I12–5 (TXCT) – Body ground	
T8–13 (AGND) or I12–7 (GND) – Body ground	

NG → **REPAIR OR REPLACE HARNESS AND CONNECTOR**

OK

5	CHECK OPERATION OF TRANSPONDER KEY AMPLIFIER

(a) After replacing the transponder key amplifier, check that the engine starts.

NG → **NORMAL (TRANSPONDER KEY AMPLIFIER DEFECTIVE)**

OK

REPLACE TRANSPONDER KEY ECU ASSY

DTC B2797 COMMUNICATION MALFUNCTION NO.1

CIRCUIT DESCRIPTION

This DTC is output when an error occurs in normal communication.
HINT:
Some noise is found in the communication line.

DTC No.	DTC Detection Condition	Trouble Area
B2797	Keys are positioned too close to each other or noise occurred in communication line	• Key • Wire harness • Transponder key amplifier • Transponder key ECU assy

WIRING DIAGRAM

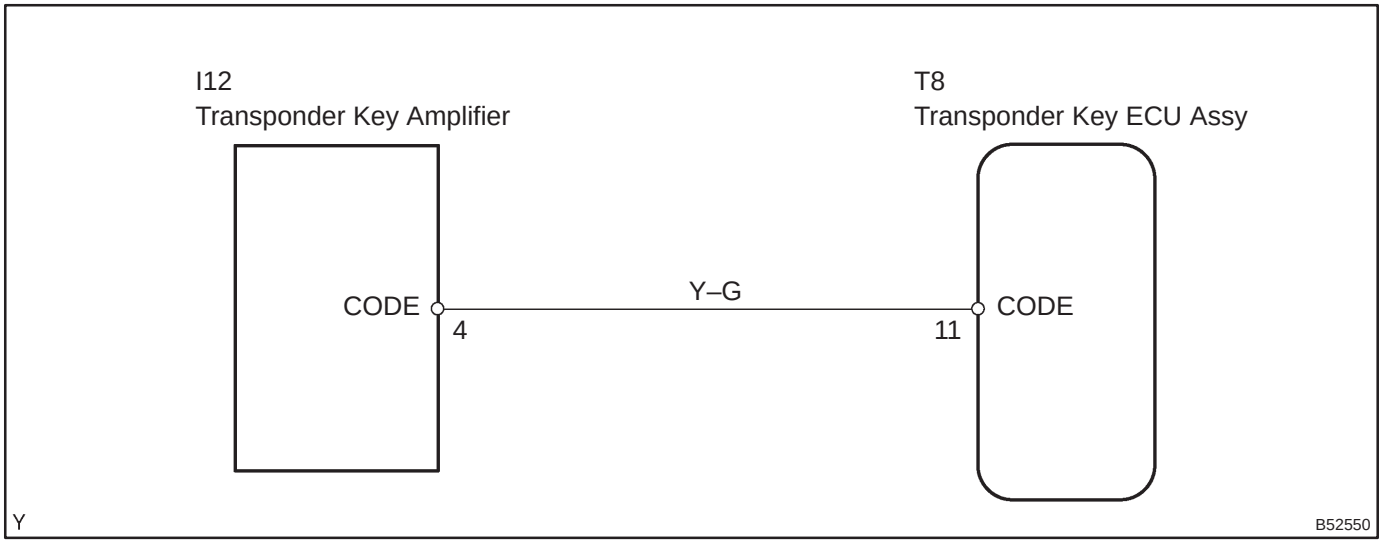

INSPECTION PROCEDURE

1 CHECK OPERATION OF TRANSPONDER KEY AMPLIFIER

(a) After replacing the transponder key amplifier, check that the engine starts.

OK → **NORMAL (TRANSPONDER KEY AMPLIFIER DEFECTIVE)**

NG

REPLACE TRANSPONDER KEY ECU ASSY

DTC	B2799	ENGINE IMMOBILISER SYSTEM MALFUNCTION

CIRCUIT DESCRIPTION

This DTC is output when the ECM detects errors in communication between the transponder key ECU assy and the ECM or in the communication lines.
This DTC is also output when an engine start is attempted while the ECU communication ID between the transponder key ECU and the ECM are different.
Before troubleshooting for this DTC, make sure that there is no DTC detected in the transponder key ECU. If there is a key code–related DTC detected in the transponder key ECU, repair it first.

DTC No.	DTC Detection Condition	Trouble Area
B2799	• Error in communication between ECM and transponder key ECU, and in communication line • Communication ID is different during communication with transponder key ECU	• Wire harness • Transponder key ECU assy • Transponder key amplifier • ECM

WIRING DIAGRAM

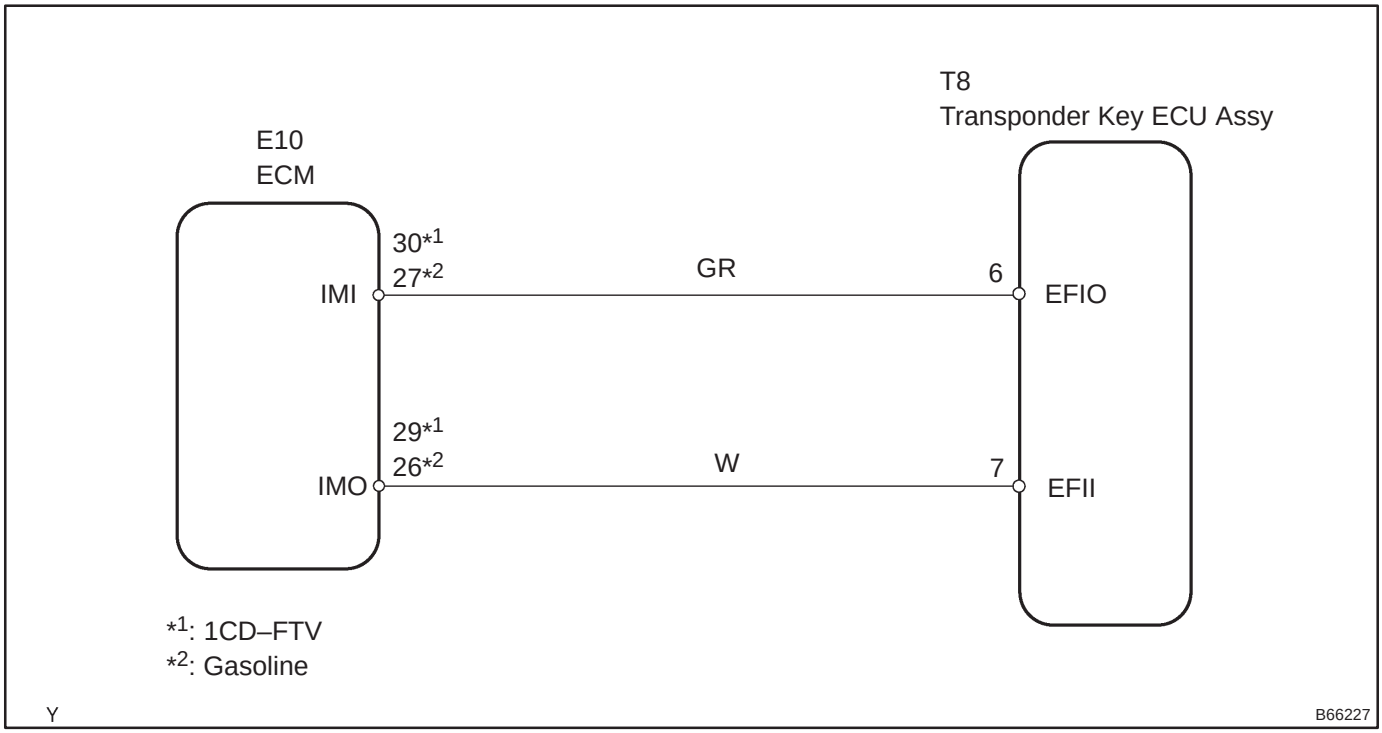

INSPECTION PROCEDURE

1	CHECK WIRE HARNESS (TRANSPONDER KEY ECU ASSY – ECM) (TRANSPONDER KEY ECU ASSY OR ECM – BODY GROUND)

Wire Harness Side

T8
Transponder Key ECU Assy

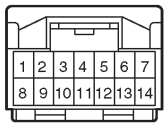

E10
ECM

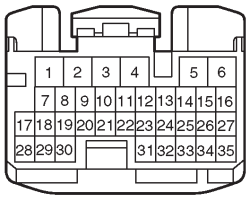

Y B66220 B66229

(a) Disconnect the T8 ECU and E10 ECM connectors.
(b) Check the resistance of the wire harness side connectors.

Standard:

1CD–FTV

Terminal No.	Specified Condition
T8–6 (EFIO) – E10–30 (IMI)	Below 1 Ω
T8–7 (EFII) – E10–29 (IMO)	
T8–6 (EFIO) or E10–30 (IMI) – Body ground	10 kΩ or higher
T8–7 (EFII) or E10–29 (IMO) – Body ground	

Gasoline

Terminal No.	Specified Condition
T8–6 (EFIO) – E10–27 (IMI)	Below 1 Ω
T8–7 (EFII) – E10–26 (IMO)	
EFIO (T8–6) or IMI (E10–27) – Body ground	10 kΩ or higher
EFII (T8–7) or IMO (E10–26) – Body ground	

NG → **REPAIR OR REPLACE HARNESS AND CONNECTOR**

OK

2	CHECK OPERATION OF TRANSPONDER KEY AMPLIFIER

(a) After replacing the transponder key amplifier, check that the engine starts.

NG → **NORMAL (TRANSPONDER KEY AMPLIFIER DEFECTIVE)**

OK

REPLACE TRANSPONDER KEY ECU ASSY

THEFT DETERRENT SYSTEM

05BA6–01

HOW TO PROCEED WITH TROUBLESHOOTING

HINT:

- Use this procedure to troubleshoot the theft deterrent system.
- The hand–held tester should be used at step 3.

1	VEHICLE BROUGHT TO WORKSHOP

2	CUSTOMER PROBLEM ANALYSIS CHECK AND SYMPTOM CHECK (See page 05–1628)

3	INSPECT COMMUNICATION FUNCTION OF LARGE–SCALE MULTIPLEX COMMUNICATION SYSTEM (BEAN)

(a) Use the hand–held tester to check for normal function of the multiplex communication system.
  (1) (ECU unconnected, communication line malfunctioning) Without code outputs, proceed to A.
  (2) (ECU unconnected, communication line malfunctioning) With code outputs, proceed to B.

B	Go to MULTIPLEX COMMUNICATION SECTION (See page 05–1654)

A

4	PROBLEM SYMPTOMS TABLE (See page 05–1634)

(a) When problem is not listed on the problem symptoms table, proceed to A.
(b) When problem is listed on the problem symptoms table, proceed to B.

B	Go to step 6

A

5	PERFORM TROUBLESHOOTING ACCORDING TO MALFUNCTION SYMPTOM

(a) Terminals of ECU (See page 05–1631)
(b) On–vehicle inspection (See page 73–31)

6	ADJUST, REPAIR OR REPLACE

7	CONFIRMATION TEST

END

05BA7–01

CUSTOMER PROBLEM ANALYSIS CHECK

THEFT DETERRENT SYSTEM Check Sheet

Inspector's name: _____

Customer's Name		**VIN**	
		Production Date	
		Licence No.	
Date Vehicle Brought in	/ /	**Odometer Reading**	km miles

Date Problem First Occurred		/ /
Frequency Problem Occurs		☐ Constant ☐ Sometimes (Times per day, month) ☐ Once only
Weather Conditions When Problem Occurred	**Weather**	☐ Fine ☐ Cloudy ☐ Rainy ☐ Snowy ☐ Various/Others
	Outdoor Temperature	☐ Hot ☐ Warm ☐ Cool ☐ Cold (Approx. °C (°F))

Problem Symptom

☐ Theft deterrent system cannot be set.		
☐ Security indicator light does not flash when theft deterrent system is set. (It stays ON or does not light up at all)		
☐ Theft deterrent system does not operate.	☐ When door is opened. ☐ When engine hood is opened.	Malfunction ☐ Horns only ☐ Door lock operation only ☐ Hazard warning light only ☐ Room lamp only ☐ Theft warning siren only ☐ Intrusion sensor only
☐ Theft deterrent system cannot be canceled once set.	☐ When door is unlocked using wireless door lock control system.	
☐ Theft deterrent system cannot be canceled during warning operation.	☐ When door is unlocked using wireless door lock control system. ☐ When key is inserted into ignition key cylinder and ignition switch is turned ON–OFF 10 times within 15 seconds.	
☐ Warning operation does not start when theft deterrent system is set and door is opened with key.		
☐ Others		

05BA8–01

LOCATION

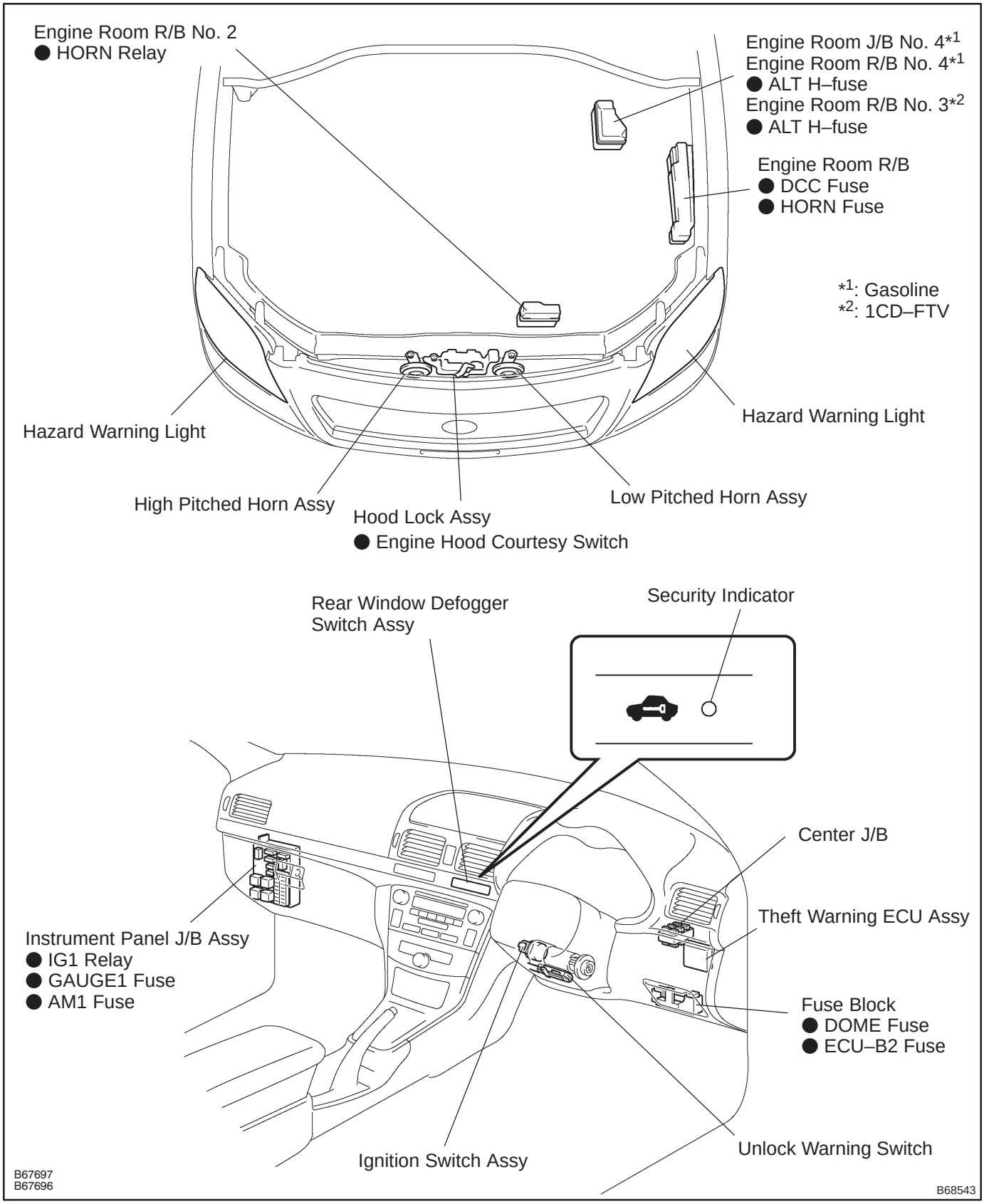

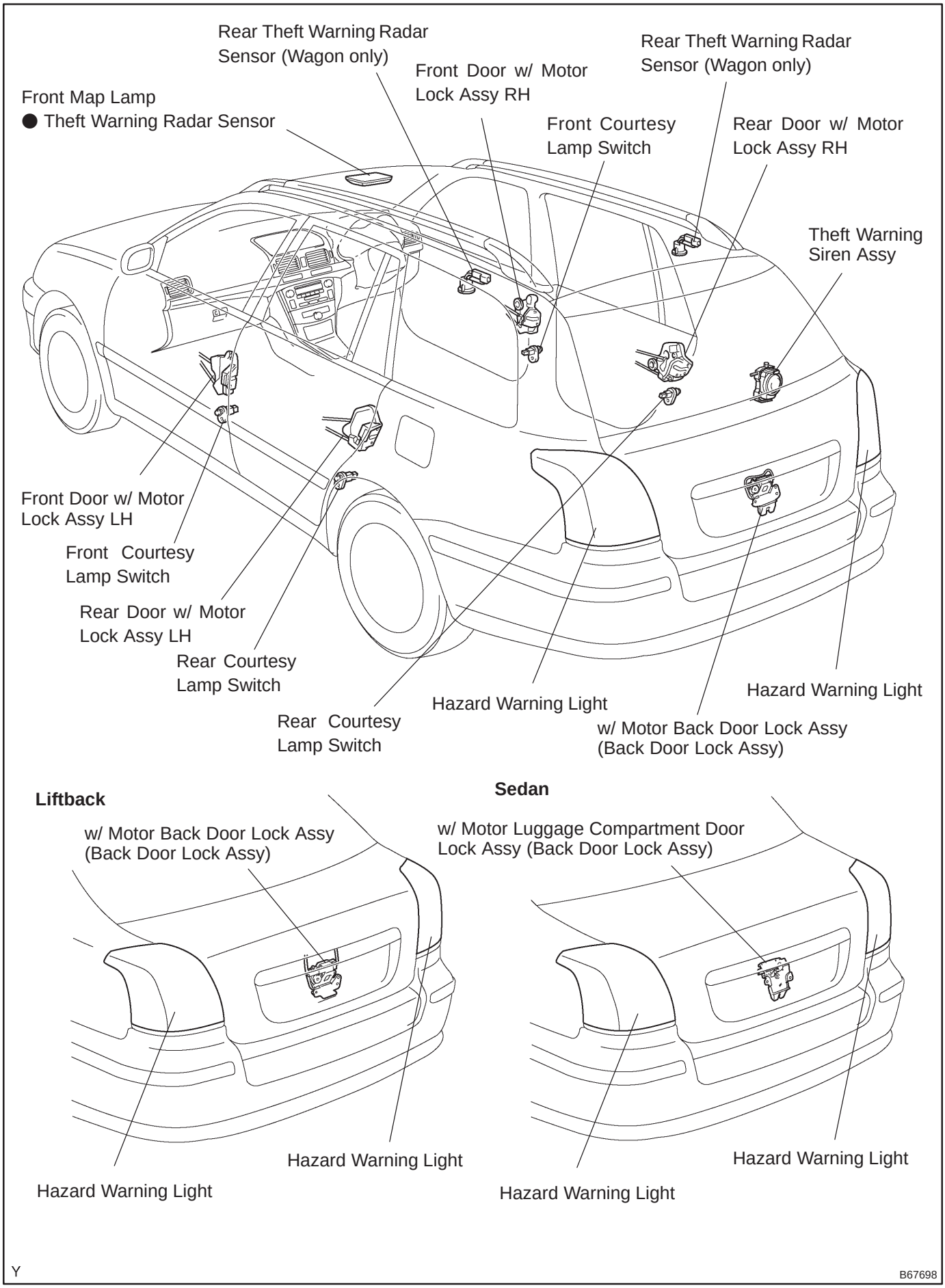
Rear Theft Warning Radar Sensor (Wagon only)
Front Door w/ Motor Lock Assy RH
Rear Theft Warning Radar Sensor (Wagon only)
Front Map Lamp
● Theft Warning Radar Sensor
Front Courtesy Lamp Switch
Rear Door w/ Motor Lock Assy RH
Theft Warning Siren Assy
Front Door w/ Motor Lock Assy LH
Front Courtesy Lamp Switch
Rear Door w/ Motor Lock Assy LH
Rear Courtesy Lamp Switch
Hazard Warning Light
Hazard Warning Light
Rear Courtesy Lamp Switch
w/ Motor Back Door Lock Assy (Back Door Lock Assy)
Liftback
w/ Motor Back Door Lock Assy (Back Door Lock Assy)
Hazard Warning Light
Hazard Warning Light
Sedan
w/ Motor Luggage Compartment Door Lock Assy (Back Door Lock Assy)
Hazard Warning Light
Hazard Warning Light
Y
B67698

05BA9–01

TERMINALS OF ECU

1. CHECK THEFT WARNING ECU ASSY

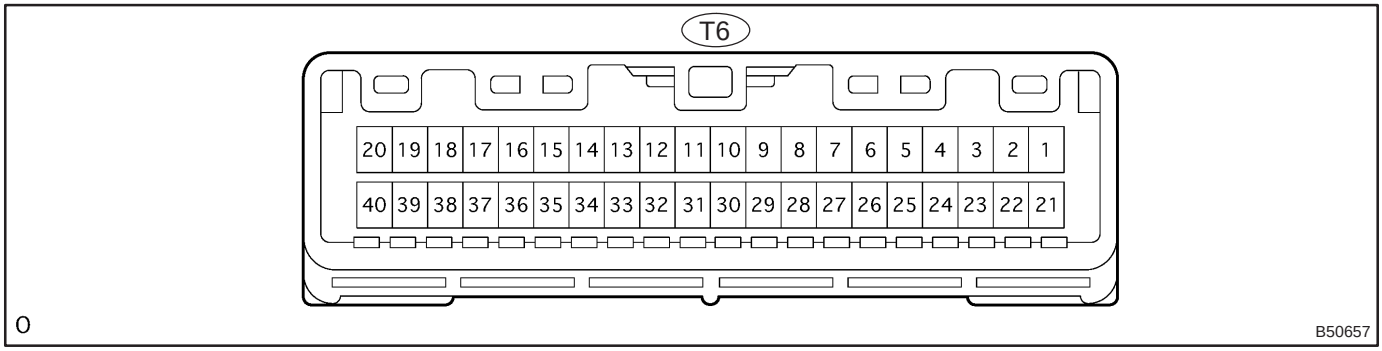

(a) Disconnect the T6 ECU connector.

(b) Check the voltage or resistance of each terminal of the wire harness side connector.

Standard:

Symbols (Terminal No.)	Wiring Color	Condition	Specified Condition
+B1 (T6–2) – E (T6–29)	W–R – W–B	Constant	10 to 14 V
E (T6–29) – Body ground	W–B – Body ground	Constant	Below 1 Ω
IG (T6–10) – Body ground	R–W – Body ground	Ignition switch OFF → ON	0 V → 10 to 14 V
DSWH (T6–34) – Body ground	L–R – Body ground	Engine hood CLOSED → OPEN	10 kΩ or higher → Below 1 Ω

If the result is not as specified, there may be a malfunction on the wire harness side.

(c) Reconnect the T6 ECU connector.

(d) Check the voltage between each terminal of the connector and the body ground.

Standard:

Symbols (Terminal No.)	Wiring Color	Condition	Specified Condition
IND (T6–25) – Body ground	V – Body ground	Security indicator light lights up (It lights up only for 30 sec. in alarm sounding state It flashes when imobiliser system is operating)	3 to 6 V
HORN (T6–5) – Body ground	G – Body ground	Armed state → Alarm sounding state	0 V → 10 to 14 V
CTLS (T6–27) – Body ground	L–R – Body ground	Self–power siren is souding (Theft deterrent system is in alarm sounding state)	5 V
S+B (T6–24) – Body ground	L–W – Body ground	Arming preparation state or armed state	10 to 14 V
		Disarmed state	Below 1 V
IOUT (T6–26) – Body ground	L–B – Body ground	No moving object detected by sensor	10 to 14 V
		Moving object detected by sensor during arming preparation state or armed state	Pulse generation

If the result is not as specified, the ECU may have a malfunction.

2. CHECK INSTRUMENT PANEL J/B ASSY (INTEGRATION RELAY)

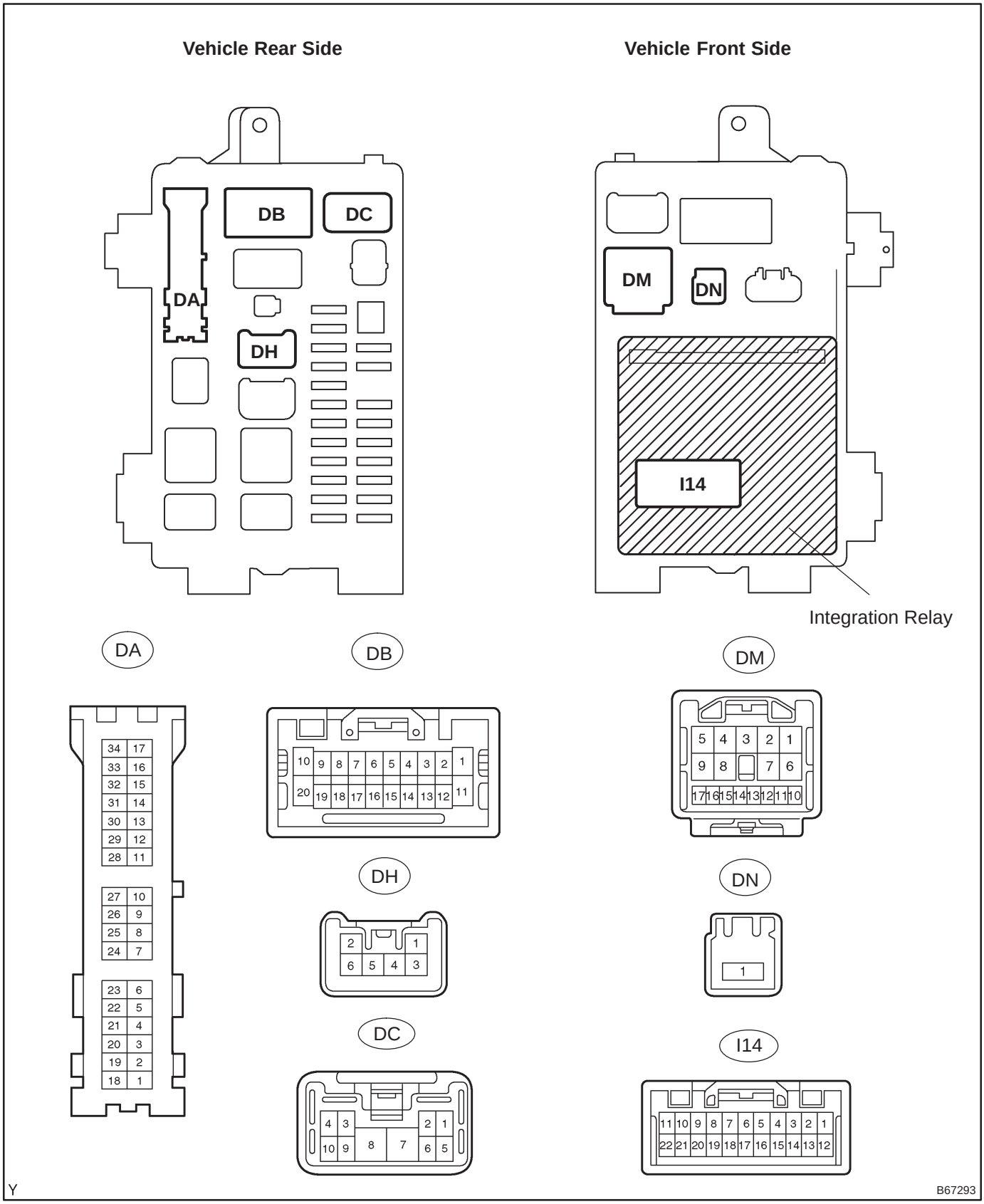

(a) Disconnect the DA, DB, DC, DM and DN J/B connectors.
(b) Disconnect the I14 integration relay connector.
(c) Check the voltage or continuity between each terminal of the wire harness side connectors and the body ground.

Standard:

Symbols (Terminal No.)	Wiring Color	Condition	Specified Condition
KSW (DA–8) – Body ground	Y – Body ground	No key in ignition key cylinder → Key inserted	10 kΩ or higher → Below 1 Ω
E (DA–9) – Body ground	W–B – Body ground	Constant	Below 1 Ω
B (DB–16) – Body ground	W–R – Body ground	Constant	10 to 14 V
B (DN–1) – Body ground	*1B–G – Body ground *2B–L – Body ground	Constant	10 to 14 V
DCTY (DB–13) – Body ground	R – Body ground	Driver side door CLOSED → OPEN	10 kΩ or higher → Below 1 Ω
PCTY (DC–9) – Body ground	R – Body ground	Passenger side door CLOSED → OPEN	10 kΩ or higher → Below 1 Ω
RCTY (DM–12) – Body ground	W–G – Body ground	Rear door LH CLOSED → OPEN	10 kΩ or higher → Below 1 Ω
RCTY (DM–13) – Body ground	W–G – Body ground	Rear door RH CLOSED → OPEN	10 kΩ or higher → Below 1 Ω
*3 LGTY (I14–1) – Body ground	R–Y – Body ground	Luggage compartment door CLOSED → OPEN	10 kΩ or higher → Below 1 Ω
*4 BDCY (I14–12) – Body ground	R–Y – Body ground	Back door CLOSED → OPEN	10 kΩ or higher → Below 1 Ω

HINT:
*1: Gasoline
*2: 1CD–FTV
*3: Sedan
*4: Liftback, Wagon

If the result is not as specified, there may be a malfunction on the wire harness side.

(d) Reconnect the DA, DB, DC, DM and DN J/B connectors.
(e) Reconnect the I14 integration relay connector.
(f) Check the voltage between each terminal of the connector and the body ground.

Standard:

Symbols (Terminal No.)	Wiring Color	Condition	Specified Condition
ACC (DH–3) – Body ground	G – Body ground	Ignition switch ON	10 to 14 V

If the result is not as specified, the J/B (integration relay) may have a malfunction.

05BAA–01

PROBLEM SYMPTOMS TABLE

Proceed to the reference page shown in the table below for each malfunction symptom and troubleshoot each circuit.

HINT:

Troubleshooting of the theft deterrent system is based on the premise that the door lock control system and the wireless door lock control system are operating normally. Accordingly, before troubleshooting the theft deterrent system, first make certain that the door lock control system and the wireless door lock control system are operating normally.

Symptom	Suspected Area	See Page
Theft deterrent system cannot be set	1. Security indicator circuit 2. ECU power source circuit 3. Unlock warning switch circuit 4. Door key lock and unlock switch 5. Luggage compartment door key lock and unlock switch (Sedan) 6. Back door key lock and unlock switch (Liftback, Wagon) 7. Door courtesy switch circuit 8. Luggage compartment door courtesy switch circuit (Sedan) 9. Back door courtesy switch circuit (Liftback, Wagon) 10. Engine hood courtesy switch circuit	05–1635 05–1637 05–1594 73–3 73–3 73–3 05–1631 05–1631 05–1631 05–1642
Security indicator does not blink when theft deterrent system is set	1. Security indicator circuit	05–1635
Alarm sounding state is not canceled when ignition switch is turned ON–OFF 10 times within 15 seconds	1. Ignition switch circuit 2. Unlock warning switch circuit	05–1639 05–1594
Theft deterrent system can be set even when any door is open	1. Door courtesy switch circuit 2. Luggage compartment door courtesy switch circuit (Sedan) 3. Back door courtesy switch circuit (Liftback, Wagon)	05–1631 05–1631 05–1631
Horns (low pitched, high pitched) do not sound while theft deterrent system is in warning operation	1. Horn (low pitched, high pitched) circuit	05–1644
Hazard warning lamps do not flash while theft deterrent system is in warning operation	1. Hazard warning circuit	65–5
Room lamp does not flash while theft deterrent system is in warning operation	1. Room lamp circuit	65–5
Theft warning siren sounds even when theft deterrent system is not set	1. Theft warning siren circuit	05–1647
Hazard warning lamps flash even when theft deterrent system is not set	1. Hazard warning switch circuit	65–5
Room lamp flashes even when theft deterrent system is not set	1. Room lamp circuit	65–5
Theft warning siren sounds even when theft deterrent system is not set	1. Theft warning siren circuit	05–1647
Intrusion (theft warning) sensor does not detect any moving object while theft deterrent system is set	1. Instrution sensor circuit	05–1650
Intrusion (theft warning) sensor sets off alarm while theft deterrent system is not set or there is nothing moving inside vehicle with theft deterrent system set	1. Intrusion sensor circuit	05–1650
Intrusion (theft warning) sensor OFF switch does not operate	1. Intrusion sensor circuit	05–1650
Intrusion (theft warning) sensor OFF switch continues operating	1. Intrusion sensor circuit	05–1650

SECURITY INDICATOR CIRCUIT

CIRCUIT DESCRIPTION

Even in the disarmed state, the security indicator flashes due to a signal output from the immobiliser system. The security indicator always flashes when it receives a signal from the immobiliser system at any time in the armed state.

The theft warning ECU causes the security indicator to light up or blink only during the customizing function mode or the add mode of the transmitter.

WIRING DIAGRAM

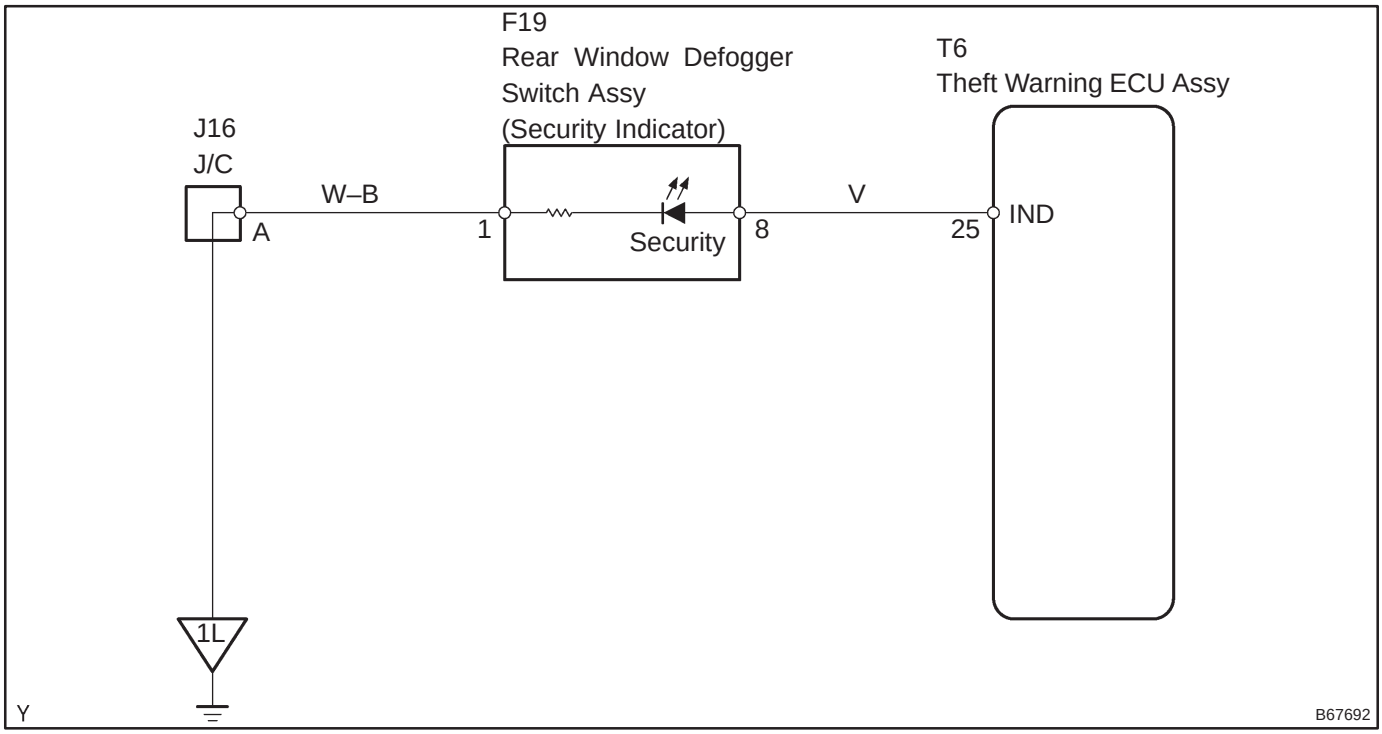

INSPECTION PROCEDURE

1	CHECK REAR WINDOW DEFOGGER SWITCH ASSY (SECURITY INDICATOR)

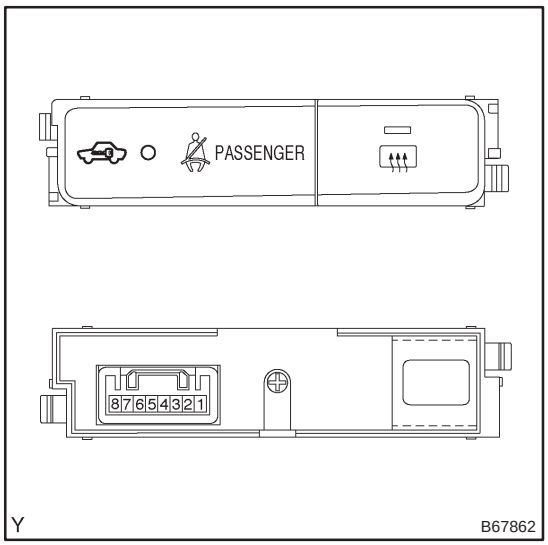

(a) Remove the defogger switch.

(b) Apply 12 V positive voltage between each terminal of the defogger switch connector, and check the lighting condition of the security indicator.

Standard:

MeasurementCondition	SpecifiedCondition
Battery positive (+) → Terminal 8 Battery negative (–) → Terminal 1	Lights up

NOTICE:

- **If the positive (+) lead and the negative (–) lead are incorrectly connected, the security indicator does not light up.**
- **Voltage of more than 12 V will damage the security indicator.**
- **If the voltage is too low, the security indicator does not light up.**

NG → REPLACE REAR WINDOW DEFOGGER SWITCH ASSY

OK

2	CHECK WIRE HARNESS (THEFT WARNING ECU ASSY – REAR WINDOW DEFOGGER SWITCH ASSY (SECURITY INDICATOR))

Wire Harness Side

T6
Theft Warning ECU Assy

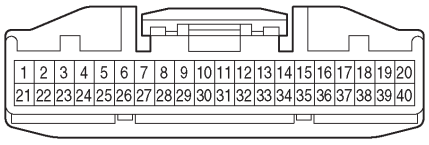

F19
Rear Window Defogger Switch Assy

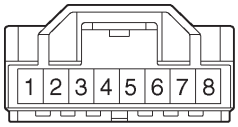

B63408
B67863

B68490

(a) Disconnect the T6 ECU and F19 switch connectors.
(b) Check the resistance between the wire harness side connectors.

Standard:

Tester Connection	Specified Condition
T6–25 (IND) – F19–7	Below 1 Ω

NG → REPAIR OR REPLACE HARNESS AND CONNECTOR

OK

3	CHECK WIRE HARNESS (REAR WINDOW DEFOGGER SWITCH ASSY (SECURITY INDICATOR) – BODY GROUND)

Wire Harness Side

F19
Rear Window Defogger Switch Assy

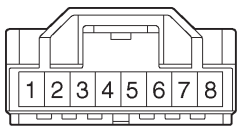

B67863

(a) Disconnect the F19 switch connector.
(b) Check the resistance between the wire harness side connector and the body ground.

Standard:

Tester Connection	Specified Condition
F19–1 – Body ground	Below 1 Ω

NG → REPAIR OR REPLACE HARNESS AND CONNECTOR

OK

REPLACE THEFT WARNING ECU ASSY

ECU POWER SOURCE CIRCUIT

CIRCUIT DESCRIPTION

This circuit provides power to operate the theft warning ECU.

WIRING DIAGRAM

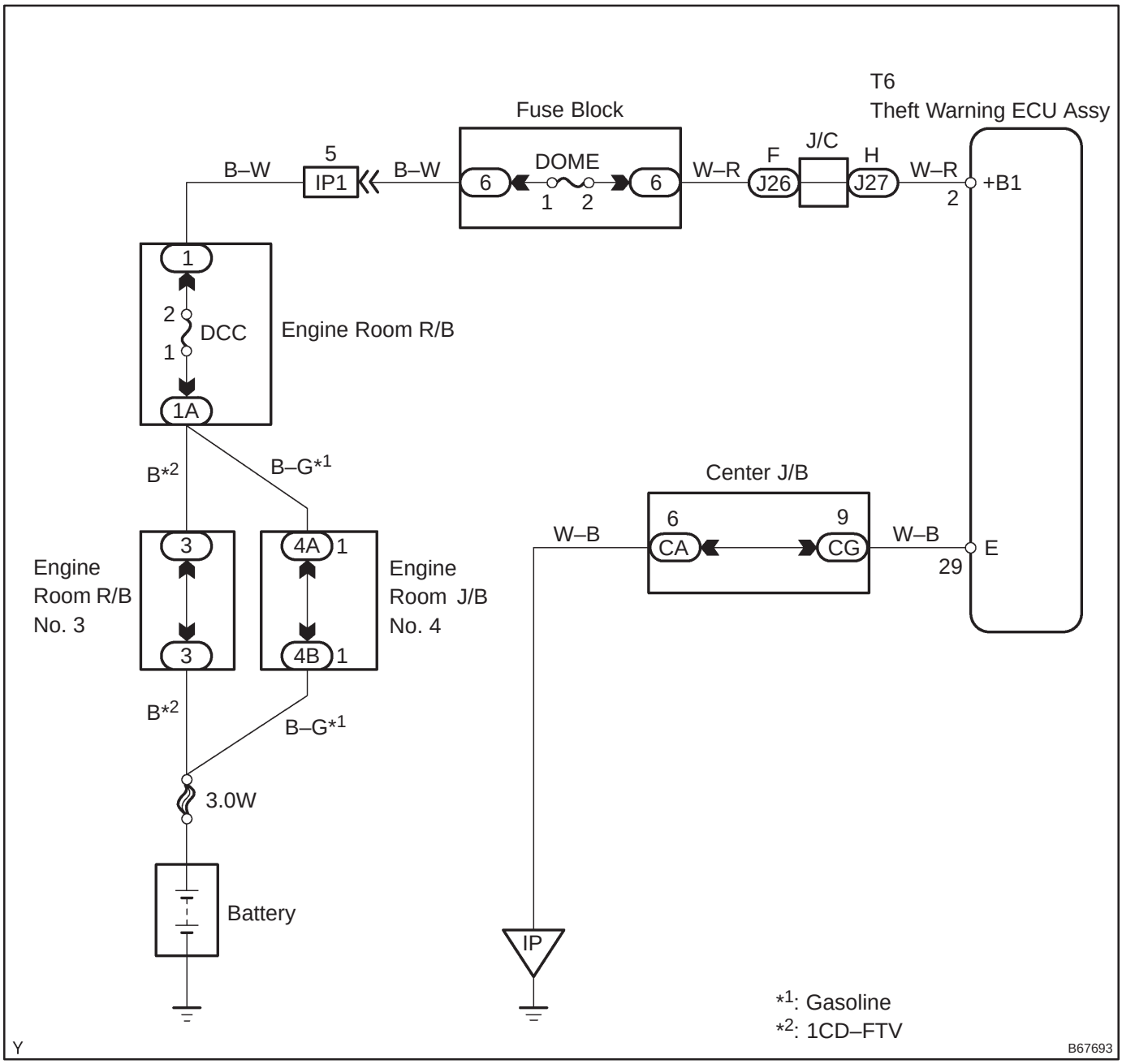

INSPECTION PROCEDURE

1	INSPECT FUSE (DOME, DCC)

(a) Remove the DCC fuse from the engine room R/B.
(b) Remove the DOME fuse from the fuse block.
(c) Check the resistance.
Standard: Resistance

NG → **REPLACE FUSE**

OK

2	CHECK THEFT WARNING ECU ASSY (POWER SOURCE)

Wire Harness Side

T6
Theft Warning ECU Assy

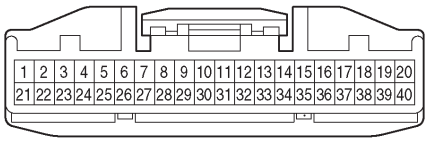

B63408

(a) Disconnect the T6 ECU connector.
(b) Check the voltage between the wire harness side connector and the body ground.
Standard:

Tester Connection	Specified Condition
T6–2 (+B1) – Body ground	10 to 14 V

NG → **REPAIR OR REPLACE HARNESS AND CONNECTOR**

OK

3	CHECK WIRE HARNESS (THEFT WARNING ECU ASSY – BODY GROUND)

Wire Harness Side

T6
Theft Warning ECU Assy

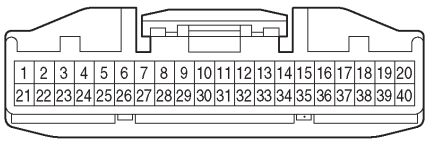

B63408

(a) Disconnect the T6 ECU connector.
(b) Check the resistance between the wire harness side connector and the body ground.
Standard:

Tester Connection	Specified Condition
T6–29 (E) – Body ground	Below 1 Ω

NG → **REPAIR OR REPLACE HARNESS AND CONNECTOR**

OK

REPLACE THEFT WARNING ECU ASSY

IGNITION SWITCH CIRCUIT

CIRCUIT DESCRIPTION

When the ignition switch is turned to the ON position, battery positive voltage is applied to terminal IG of the theft warning ECU.

WIRING DIAGRAM

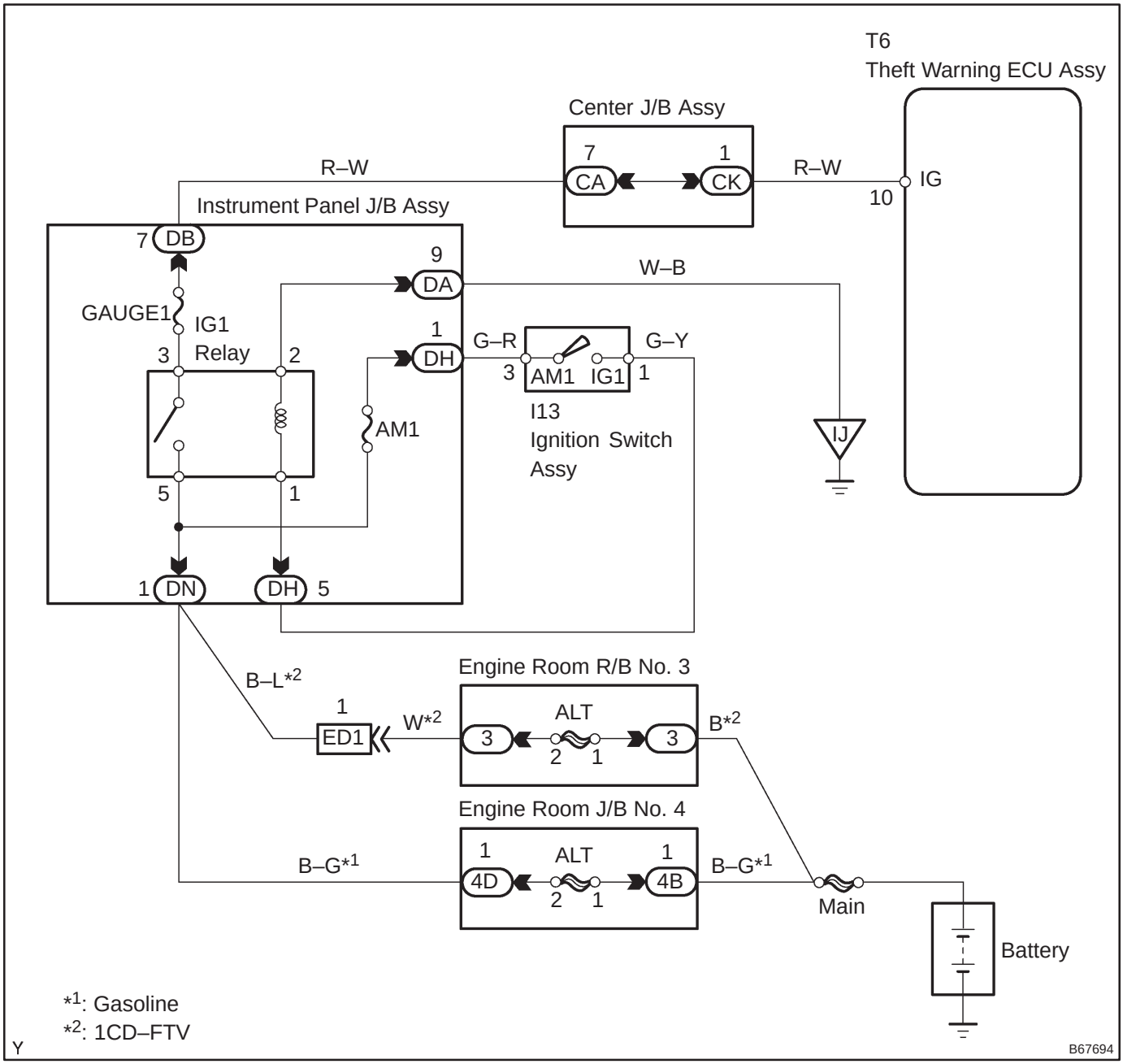

INSPECTION PROCEDURE

1	INSPECT FUSE (GAUGE1, AM1)

(a) Remove the GAUGE1 and AM1 fuses from the instrument panel J/B.
(b) Check the resistance.
Standard: Resistance

NG → **REPLACE FUSE**

OK

2	INSPECT RELAY (IG1)

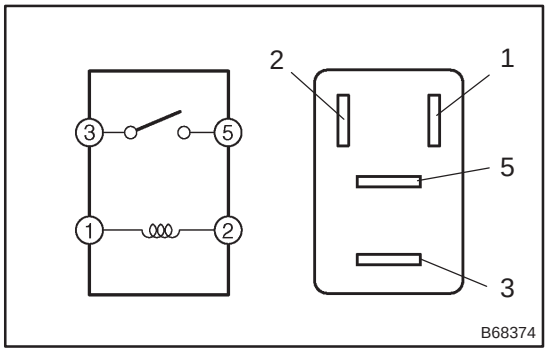

(a) Remove the IG1 relay from the instrument panel J/B.
(b) Check the resistance.
Standard:

Tester Connection	Specified Condition
3 – 5	10 kΩ or higher
	Below 1 Ω (When battery voltage is applied to terminals 1 and 2)

NG → **REPLACE RELAY**

OK

3	INSPECT IGNITION OR STARTER SWITCH ASSY

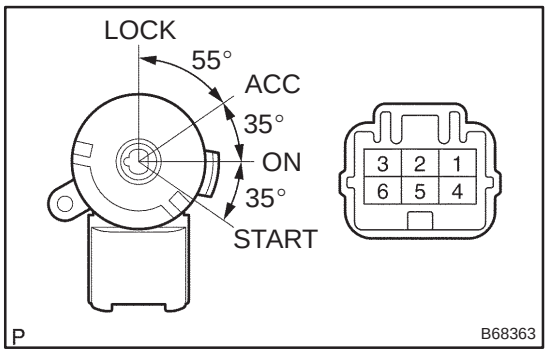

(a) Check the switch resistance.
Standard:

Tester Connection	Switch Position	Specified Condition
1 – 3	ON	Below 1 Ω

NG → **REPAIR OR REPLACE IGNITION OR STARTER SWITCH ASSY**

OK

4	CHECK THEFT WARNING ECU ASSY (POWER SOURCE)

Wire Harness Side

T6
Theft Warning ECU Assy

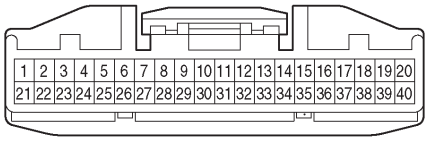

B63408

(a) Disconnect the T6 ECU connector.
(b) Check the voltage between the wire harness side connector and body ground.

Standard:

Tester Connection	Switch Position	Specified Condition
T6–10 (IG) – Body ground	Ignition switch ON	10 to 14 V

NG → **REPAIR OR REPLACE HARNESS AND CONNECTOR**

OK

REPLACE THEFT WARNING ECU ASSY

ENGINE HOOD COURTESY SWITCH CIRCUIT

CIRCUIT DESCRIPTION

The engine hood courtesy switch is installed together with the hood lock assy. This switch comes on when the engine hood is opened and goes off when the engine hood is closed.

WIRING DIAGRAM

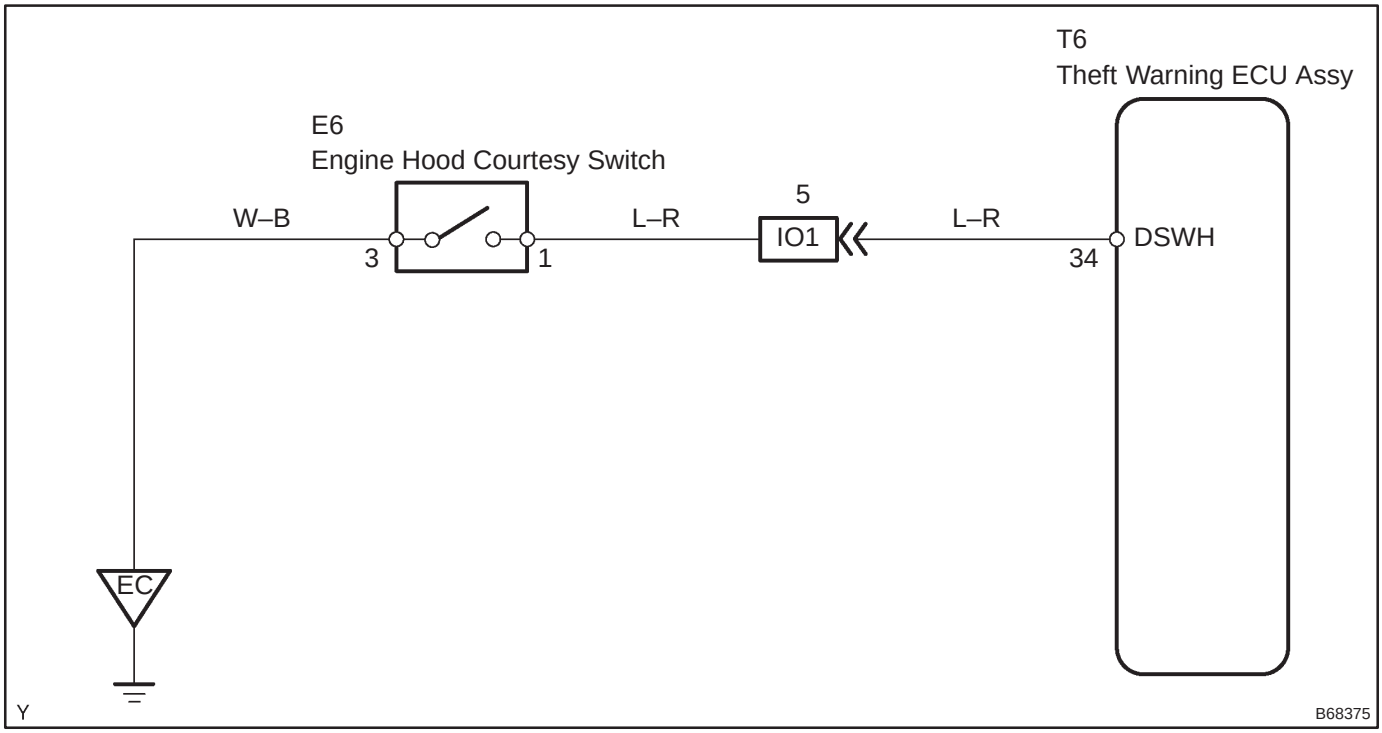

INSPECTION PROCEDURE

1	INSPECT ENGINE HOOD COURTESY SWITCH

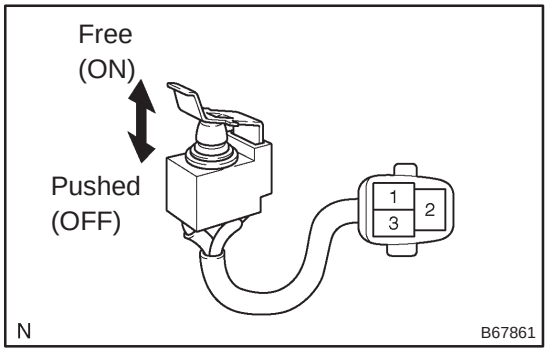

(a) Remove the engine hood courtesy switch from the hood lock assy.

(b) Check the resistance.

Tester Connection	Switch Position	Specified Condition
1 – 3	Pushed (OFF (Lock))	10 kΩ or higher
	Free (ON (Unlock))	Below 1 Ω

NG → **REPAIR OR REPLACE ENGINE HOOD COURTESY SWITCH**

OK

2 CHECK WIRE HARNESS (THEFT WARNING ECU ASSY – ENGINE HOOD COURTESY SWITCH)

Wire Harness Side

T6
Theft Warning ECU Assy

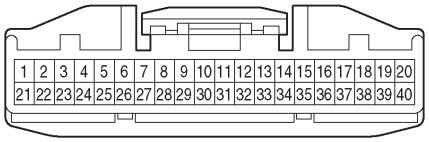

E6
Engine Hood Courtesy Switch

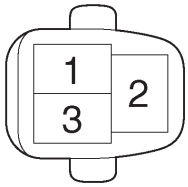

B63408
B67857

B68381

(a) Disconnect the T6 ECU connector.
(b) Disconnect the E6 switch connector.
(c) Check the resistance between the wire harness side connectors.

Standard:

Tester Connection	Specified Condition
T6–34 (DSWH) – E6–1	Below 1 Ω

NG → **REPAIR OR REPLACE HARNESS AND CONNECTOR**

OK

3 CHECK WIRE HARNESS (ENGINE HOOD COURTESY SWITCH – BODY GROUND)

Wire Harness Side

E6
Engine Hood Courtesy Switch

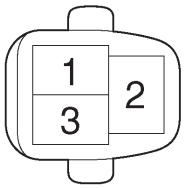

Y

B67857

(a) Disconnect the E6 switch connector.
(b) Check the resistance between the wire harness side connector and body ground.

Standard:

Tester Connection	Specified Condition
E6–3 – Body ground	Below 1 Ω

NG → **REPAIR OR REPLACE HARNESS AND CONNECTOR**

OK

REPLACE THEFT WARNING ECU ASSY

HORN CIRCUIT

CIRCUIT DESCRIPTION

When the theft deterrent system is transferred from the armed state to the alarm sounding state, the theft warning ECU switches on the HORN relay causing the horns to sound. The horn sounds at an interval of 0.4 seconds.

WIRING DIAGRAM

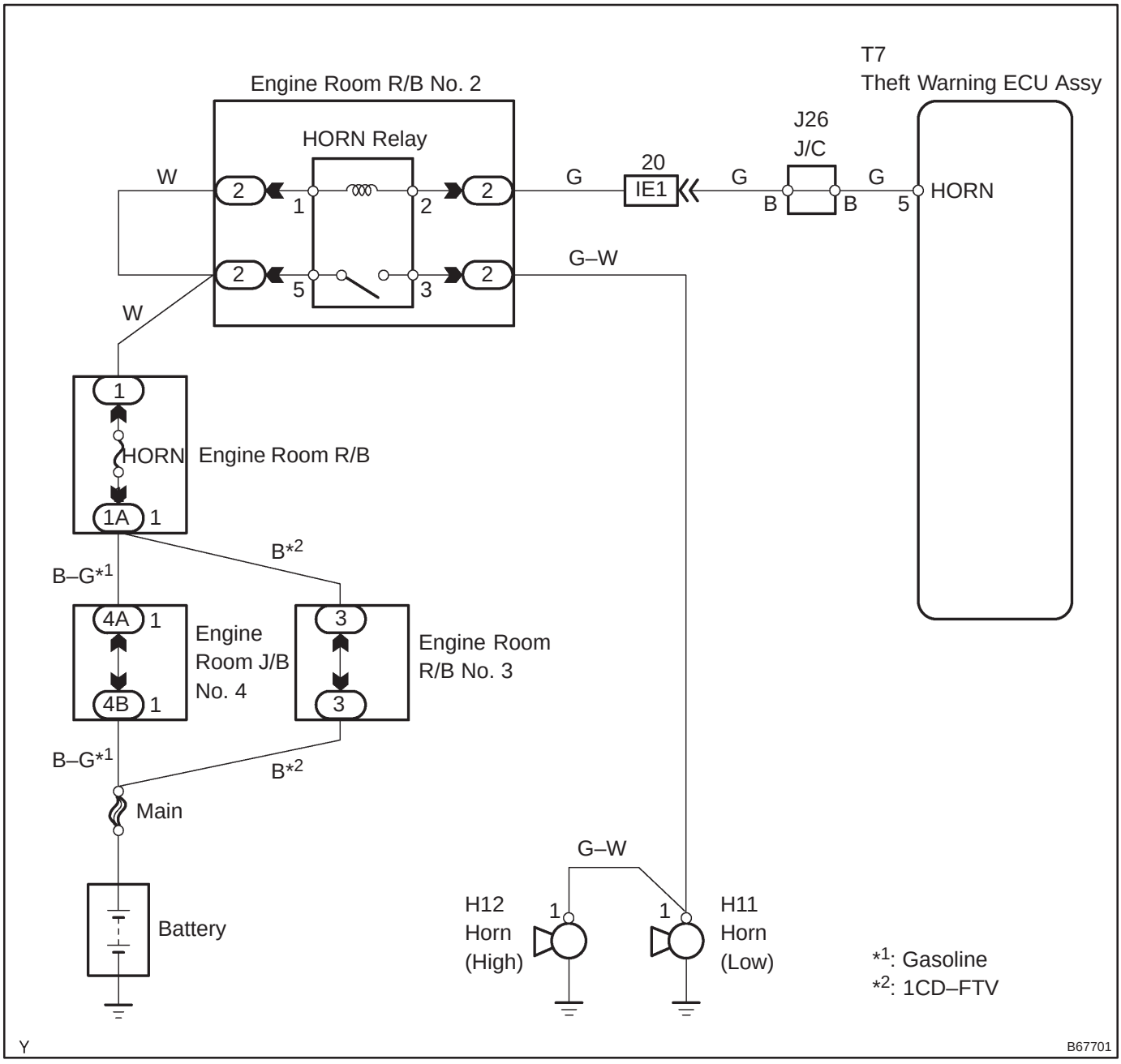

INSPECTION PROCEDURE

1	INSPECT FUSE (HORN)

(a) Remove the HORN fuse from the engine room R/B.
(b) Check the resistance.
Standard: Resistance

NG → **REPLACE FUSE**

OK

2	INSPECT HORN ASSY (LOW PITCED, HIGH PITCHED)

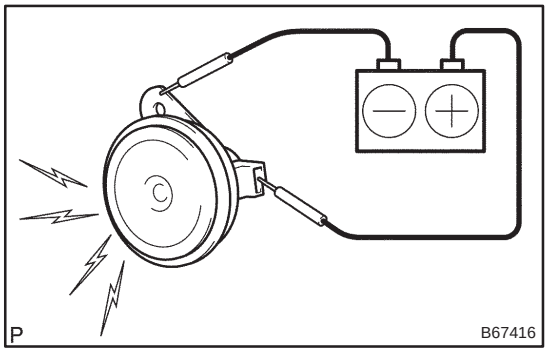

(a) Check operation of the horn.
Standard:

Measurement Condition	Specified Condition
Battery positive (+) → Terminal 1 Battery negative (–) → Horn body	Horn blows

NG → **REPAIR OR REPLACE HORN ASSY**

OK

3	INSPECT RELAY (HORN)

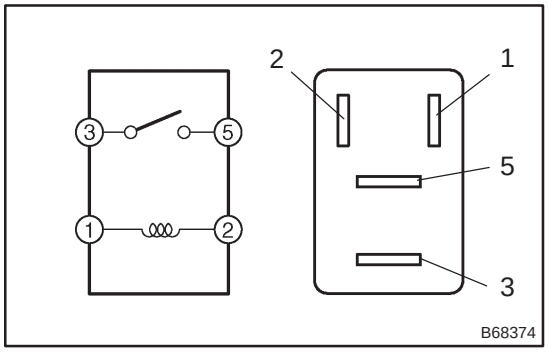

(a) Remove the HORN relay from the engine room R/B No. 2.
(b) Check operation of the HORN relay.
Standard:

Tester Connection	Specified Condition
3 – 5	10 kΩ or higher
	Below 1 Ω (When battery voltage is applied to terminals 1 and 2)

NG → **REPLACE RELAY**

OK

4 CHECK THEFT WARNING ECU ASSY (POWER SOURCE)

Wire Harness Side

T6
Theft Warning ECU Assy

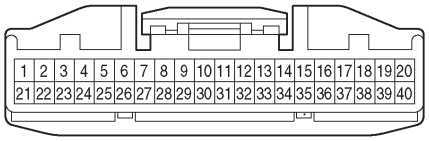

B63408

(a) Disconnect the T6 ECU connector.
(b) Check the voltage between the wire harness side connector and the body ground.

Standard:

Tester Connection	Specified Condition
T6–5 (HORN) – Body ground	10 to 14 V

NG → **REPAIR OR REPLACE HARNESS AND CONNECTOR**

OK

5 CHECK WIRE HARNESS (ENGINE ROOM R/B NO. 2 – HORN ASSY)

Wire Harness Side

Engine Room R/B No. 2

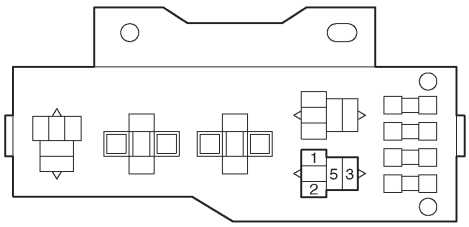

H11
H12
Horn Assy

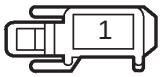

B67859
B58961

B68387

(a) Remove the HORN relay from the engine room R/B No. 2.
(b) Disconnect the H11 and H12 horn connectors.
(c) Check the resistance between the wire harness side connectors.

Standard:

Tester Connection	Specified Condition
3 – H11–1	Below 1 Ω
3 – H12–1	

NG → **REPAIR OR REPLACE HARNESS AND CONNECTOR**

OK

REPLACE THEFT WARNING ECU ASSY

THEFT WARNING SIREN CIRCUIT

CIRCUIT DESCRIPTION

The theft warning siren has an internal battery. If any of the vehicle's battery or communication line is opened, the theft warning siren detects it by itself and sounds. Although the theft warning siren sounds by receiving a signal from the theft deterrent ECU usually, the theft warning siren can sound by its internal battery in case that the vehicle's battery is opened.

The theft deterrent ECU sends an arming signal to the theft warning siren while transferring to the armed state, and it also sends a disarming signal to the siren while transferring to the disarmed state. Besides, the theft deterrent ECU can cause the theft warning siren to sound by sending an alarm signal in the alarm sounding state.

WIRING DIAGRAM

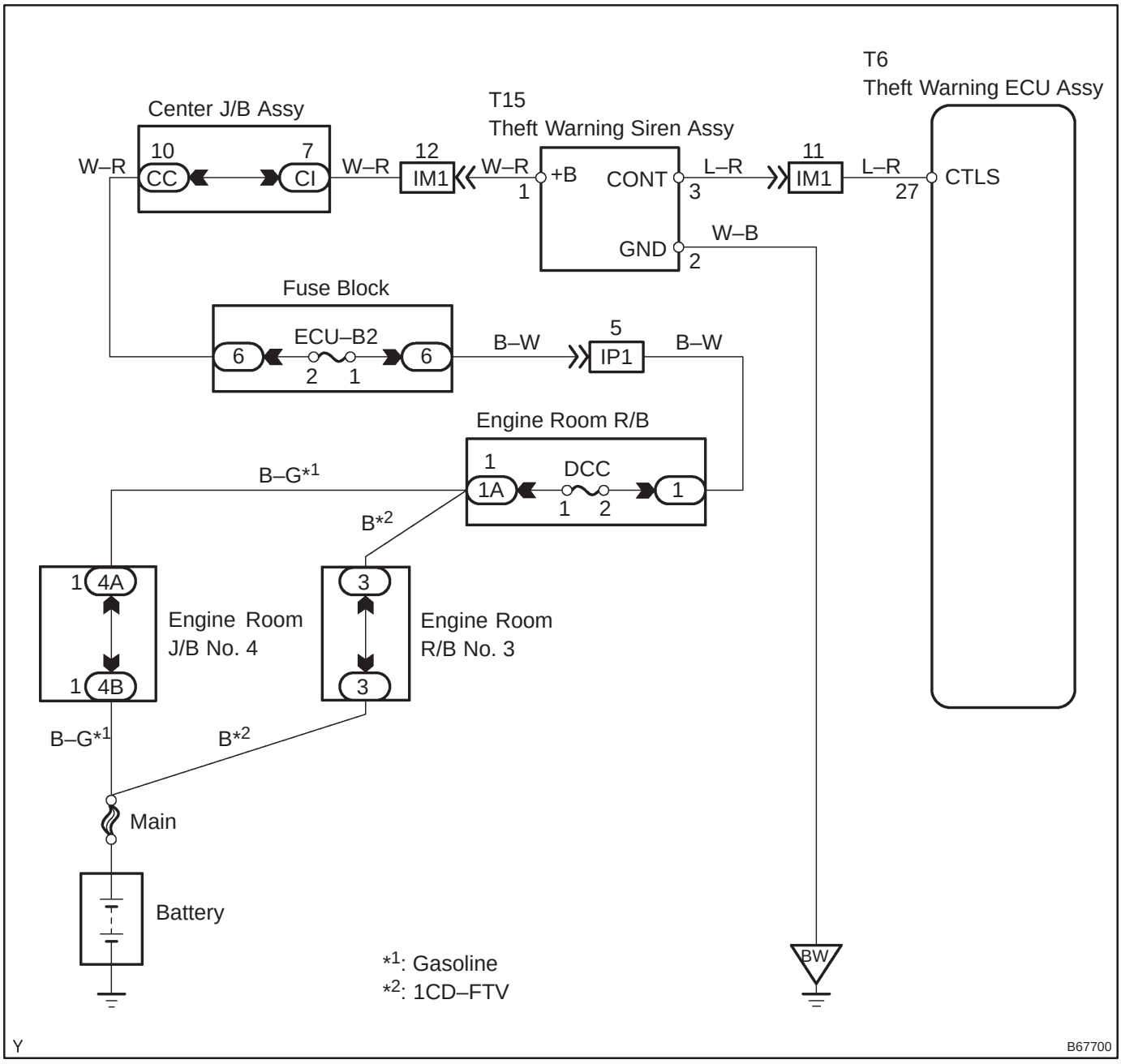

INSPECTION PROCEDURE

1	INSPECT FUSE (ECU–B2, DCC)

(a) Remove the ECU–B2 fuse from the fuse block.
(b) Remove the DCC fuse from the engine room R/B.
(c) Check the resistance.
Standard: Resistance

NG → **REPLACE FUSE**

OK

2	CHECK THEFT WARNING SIREN ASSY

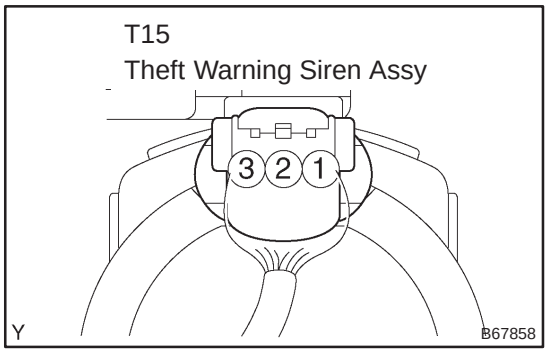

(a) Check the voltage between each terminal of the connector and the body ground.
Standard:

Tester Connection	Condition	Specified Condition
T15–1 (+B) – Body ground	Constant	10 to 14 V
T15–2 (GND) – Body ground	Constant	Below 1 V
T15–3 (CONT) – Body ground	When switched from armed state or arming preparation state to disarmed state (1)	Using an oscilloscope*1
	When switched from arming preparation state to armed state (2)	Using an oscilloscope*2
	Normal condition (Except (1) and (2))	Approx. 1.4 V

Wave pattern:

*1: Wave Pattern

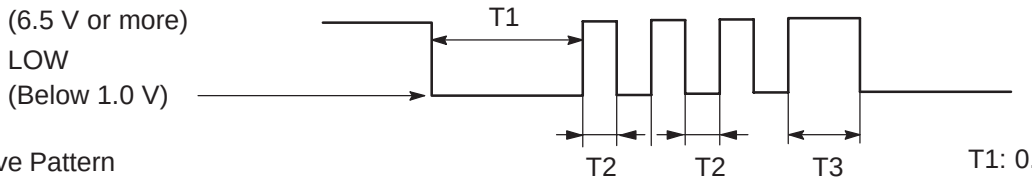

*2: Wave Pattern

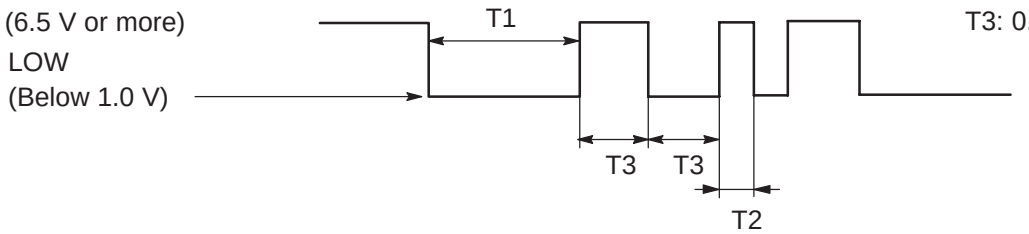

T1: 0.4 sec.
T2: 0.1 sec.
T3: 0.2 sec.

NG → **REPLACE THEFT WARNING SIREN ASSY**

OK

3	CHECK WIRE HARNESS (THEFT WARNING ECU ASSY – THEFT WARNING SIREN ASSY)

Wire Harness Side

T6
Theft Warning ECU Assy

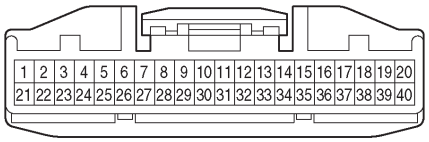

T15
Theft Warning Siren Assy

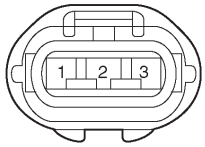

B63408
B68388

B68389

(a) Disconnect the T6 ECU connector.
(b) Disconnect the T15 siren connector.
(c) Check the resistance between the wire harness side connectors.

Standard:

Tester Connection	Specified Condition
T6–27 (CTLS) – T15–3 (CONT)	Below 1 Ω

NG → **REPAIR OR REPLACE HARNESS AND CONNECTOR**

OK

4	CHECK WIRE HARNESS (THEFT WARNING SIREN ASSY – BODY GROUND)

Wire Harness Side

T15
Theft Warning Siren Assy

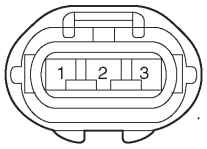

B68388

(a) Disconnect the T15 siren connector.
(b) Check the resistance between the wire harness side connector and the body ground.

Standard:

Tester Connection	Specified Condition
T15–2 (GND) – Body ground	Below 1 Ω

NG → **REPAIR OR REPLACE HARNESS AND CONNECTOR**

OK

REPLACE THEFT WARNING ECU ASSY

INTRUSION SENSOR CIRCUIT

CIRCUIT DESCRIPTION

The intrusion sensor (theft warning radar sensor) senses any moving object by using ultrasonic waves and outputs the signals to inform the theft warning ECU of an intrusion, so that the theft deterrent system can set off the alarm.

When the theft deterrent system is switched to the arming preparation state, the intrusion sensor is supplied with S+B by the theft warning ECU. This causes the theft deterrent system to set off the alarm when the signal is input from the intrusion sensor in a situation such as when the window glass is broken.

WIRING DIAGRAM

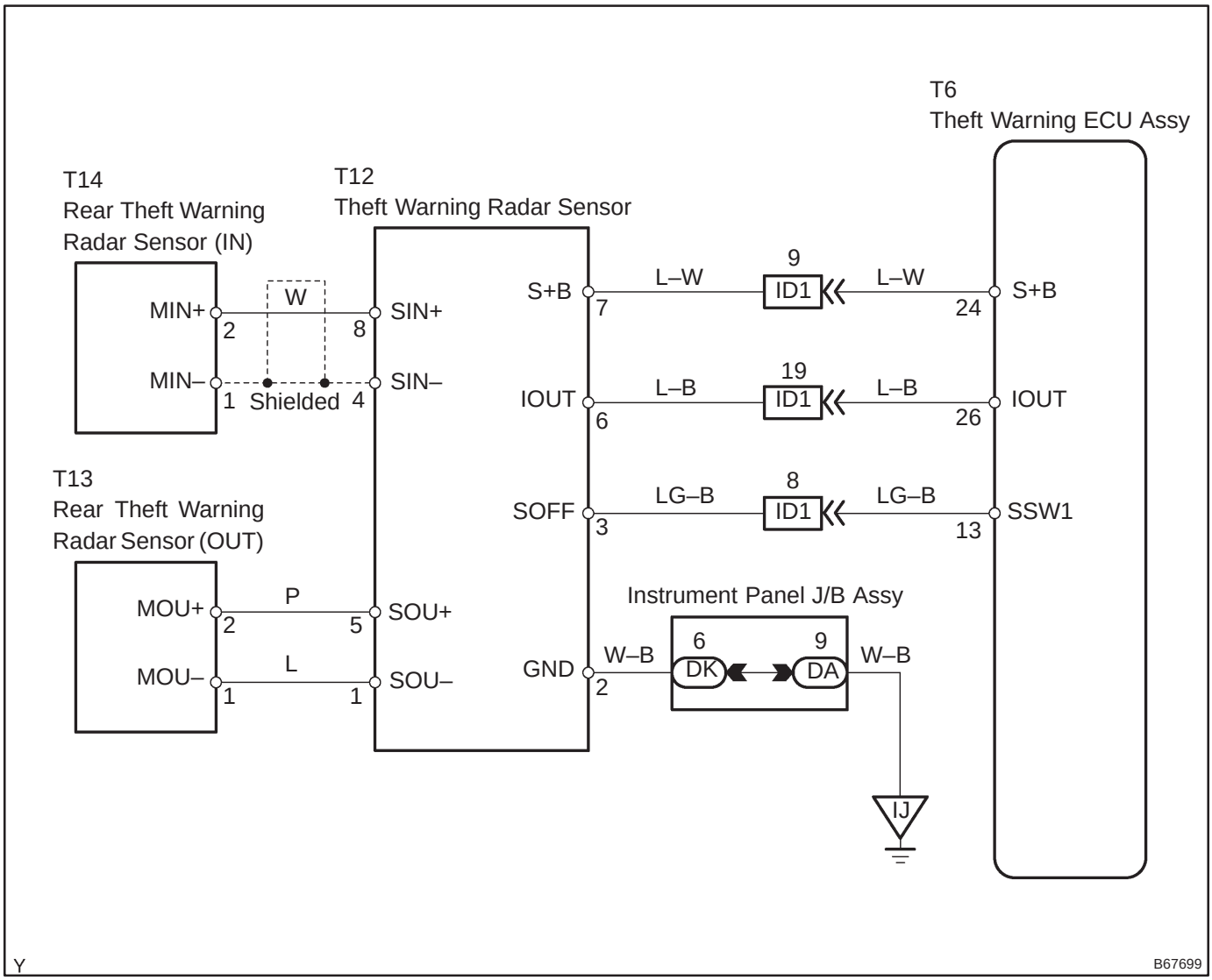

INSPECTION PROCEDURE

1	CHECK THEFT WARNING RADAR SENSOR (OPERATION)

(a) Set the theft deterrent system with a window open and after 30 seconds insert your hand through the window and shake it near the sensor to check if the alarm is triggered.

OK → **NO PROBLEM**

NG

2	CHECK THEFT WARNING RADAR SENSOR (VOLTAGE, RESISTANCE)

T12
Theft Warning Radar Sensor

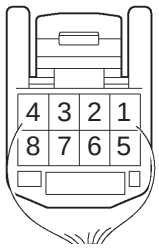

B67866

(a) Check the voltage or resistance between each terminal of the connector and the body ground.

Tester Connection	Condition	Specified Condition
T12–7 (S+B) – Body ground	Arming preparation state or armed state	10 to 14 V
	Disarmed state	Below 1 V
T12–6 (IOUT) – Body ground	When sensor does not detect any movement	10 to 14 V
	When sensor detects movement when in arming preparation state or armed state	Using an oscilloscope *2
T12–3 (SOFF) – Body ground	OFF Switch ON	Below 1 Ω
	OFF Switch OFF	10 kΩ or higher
T12–2 (GND) – Body ground	Constant	Below 1 Ω
*1 T12–8 (SIN+) – T12–4 (SIN–)	Disarmed state	5 – 10 kΩ
*1 T12–1 (SOU+) – T12–5 (SOU–)	Disarmed state	1 MΩ or higher

HINT:
*1: Wagon only

Wave pattern (*2):

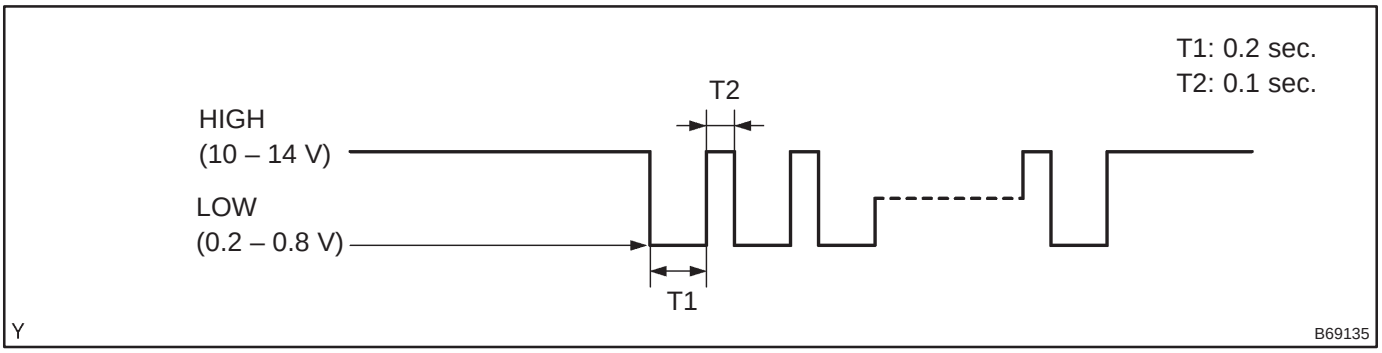

NG → **REPLACE THEFT WARNING RADAR SENSOR**

OK

3 INSPECT REAR THEFT WARNING RADAR SENSOR (IN, OUT)

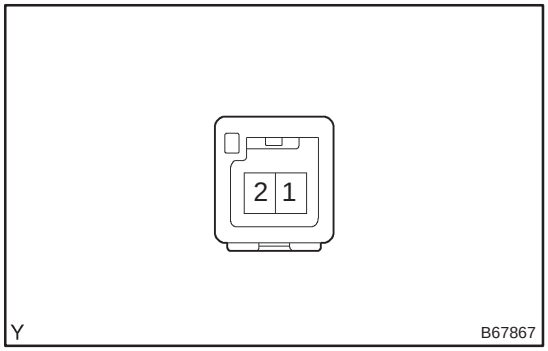

(a) Disconnect the T13 and T14 sensor connectors.
(b) Check the resistance between the sensor terminals.

Standard:

Tester Connection	Specified Condition
2 (MIN+) – 1 (MIN–)	10 kΩ or higher
2 (MOU+) – 1 (MOU–)	

NG → **REPLACE REAR THEFT WARNING RADAR SENSOR**

OK

4 CHECK WIRE HARNESS (THEFT WARNING ECU ASSY – THEFT WARNING SENSOR ASSY)

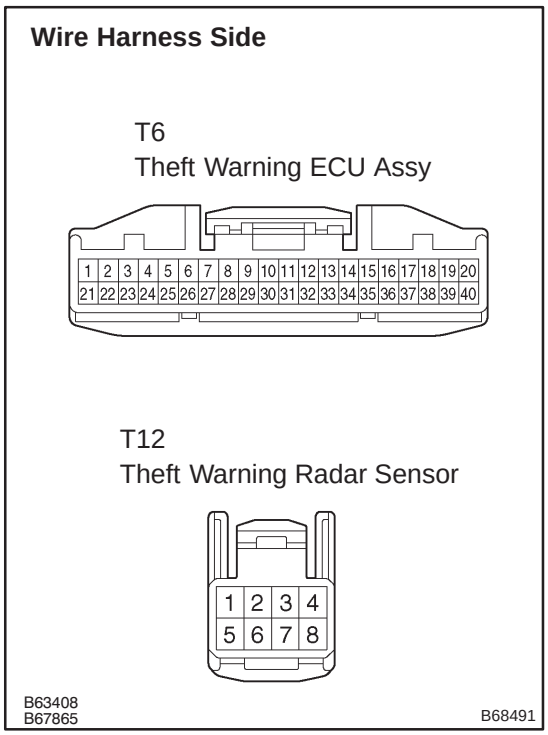

(a) Disconnect the T6 ECU connector.
(b) Disconnect the T12 sensor connector.
(c) Check the resistance between the wire harness side connectors.

Standard:

Tester Connection	Specified Condition
T6–24 (S+B) – T12–7 (S+B)	Below 1 Ω
T6–26 (IOUT) – T12–6 (IOUT)	
T6–13 (SSW1) – T12–3 (SOFF)	

NG → **REPAIR OR REPLACE HARNESS AND CONNECTOR**

OK

5	CHECK WIRE HARNESS (THEFT WARNING SENSOR ASSY – REAR THEFT WARNING SENSOR ASSY (IN, OUT))

Wire Harness Side

T12
Theft Warning Radar Sensor

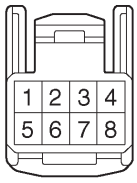

T13
T14
Rear Theft Warning Radar Sensor

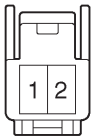

B67865
B67864

B68492

(a) Disconnect the T12, T13 and T14 sensor connectors.
(b) Check the resistance between the wire harness side connectors.

Standard:

Tester Connection	Specified Condition
T12–5 (SOU+) – T13–2 (MOU+)	Below 1 Ω
T12–1 (SOU–) – T13–1 (MOU–)	
T12–8 (SIN+) – T14–2 (MIN+)	
T12–4 (SIN–) – T14–1 (MIN–)	

NG → **REPAIR OR REPLACE HARNESS AND CONNECTOR**

OK

6	CHECK WIRE HARNESS (THEFT WARNING RADAR SENSOR – BODY GROUND)

Wire Harness Side

T12
Theft Warning Radar Sensor

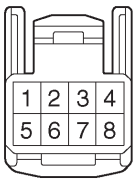

B67865

(a) Disconnect the T12 sensor connector.
(b) Check the resistance between the wire harness side connector and the body ground.

Standard:

Tester Connection	Specified Condition
T12–2 (GND) – Body ground	Below 1 Ω

NG → **REPAIR OR REPLACE HARNESS AND CONNECTOR**

OK

REPLACE THEFT WARNING ECU ASSY

MULTIPLEX COMMUNICATION SYSTEM

HOW TO PROCEED WITH TROUBLESHOOTING

05AEO–02

HINT:

- Use this procedure to troubleshoot the key reminder warning system.
  The hand–held tester should be used at step 3 and 4.

1	VEHICLE BROUGHT TO WORKSHOP

2	CUSTOMER PROBLEM ANALYSIS CHECK AND SYMPTOM

3	DTC CHECK (See page 05–1656)

(a) Check for DTCs and note any codes that are output.
(b) Delete the DTC.
(c) Recheck for DTCs. Try to prompt the DTC by simulating the original activity that the DTC suggests.
  (1) If the DTC does not reoccur, proceed to A.
  (2) If the DTC reoccurs, proceed to B.

B	Go to step 5

A

4	PERFORM TROUBLESHOOTING ACCORDING TO MALFUNCTION SYMPTOM

(a) Pre–check (See page 05–1655).
(b) Terminals of ECU (See page 05–1659).

5	ADJUST, REPAIR OR REPLACE

END

05AEP–02

PRE–CHECK

1. MULTIPLEX COMMUNICATION SYSTEM (BEAN)

(a) The BEAN communication line is used to control the ECM, the A/C control assy (A/C ECU), the combination meter assy (combination meter ECU) and the theft warning ECU, which are connected to the instrument panel J/B assy (integration relay). If there is a short–circuit (bus–down) in the line, the communication to the system that has a short–circuit (bus–down)will be disabled and the DTC concerning the system will be output from the instrument panel J/B assy (integration relay).

2. CHECK COMMUNICATION FUNCTION

(a) Check the battery voltage.

Standard: 10 to 14 V

(b) Inspect the DTC output.

(1) Check a DTC for the instrument panel J/B assy (integration relay) by connecting the hand–held tester to the DLC3 and turning the ignition switch ON.

HINT:

- When DTC check is impossible, check the following items.
- The display shows communication error (refer to new diagnostic system and the operations when an error occurrs.)

(2) When the display shows DTCs of the ECU unconnected and the communication bus defective, perform the inspection depending on the type of troubleshooting.

HINT:

If another DTC is output, refer to the DTC chart and check the applicable section.

05AEQ–02

DIAGNOSTIC TROUBLE CODE CHART

If a malfunction code is displayed during the DTC check, check the circuit listed for that code in the chart below (Proceed to the page given for that circuit).

DTC No. (See Page)	Detection Item	Trouble Area
B1214 (05–1670)	Door System Communication Bus Malfunction (+B Short)	• Wire harness • ECM • A/C control assy (A/C ECU) • Theft warning ECU assy • Combination meter assy (Combination meter ECU) • Instrument panel J/B assy (Integration relay)
B1215 (05–1670)	Door System Communication Bus Malfunction (GND Short)	• Wire harness • ECM • A/C control assy (A/C ECU) • Theft warning ECU assy • Combination meter assy (Combination meter ECU) • Instrument panel J/B assy (Integration relay)
B1261 (05–1680)	ECM Communication Stop	• Wire harness • ECM
B1262 (05–1685)	A/C ECU Communication Stop	• Wire harness • A/C assy (A/C ECU)
B1269 (05–1689)	Theft Deterrent ECU Communication Stop	• Wire harness • Theft warning ECU assy
B1271 (05–1693)	Combination Meter ECU Communication Stop	• Wire harness • Combination meter assy (Combination meter ECU)

05C5K–01

LOCATION

Gasoline

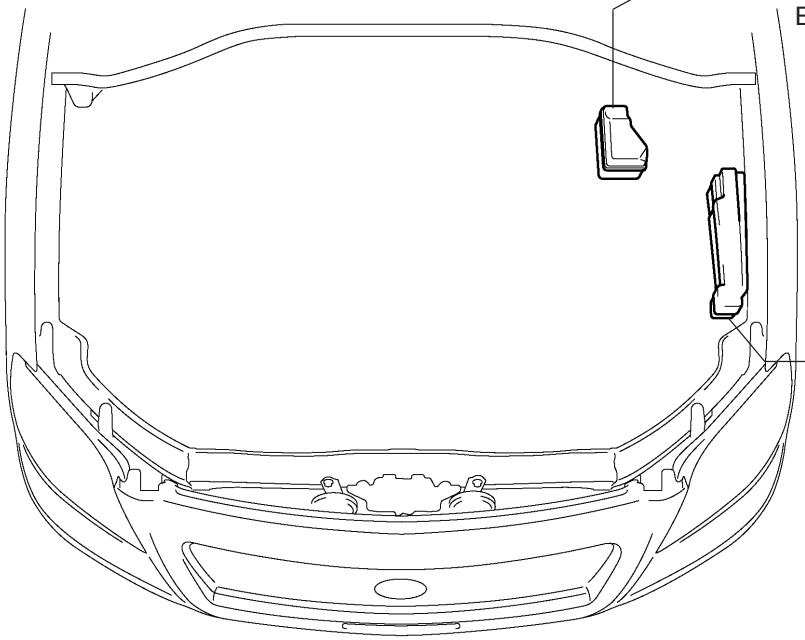

1CD–FTV

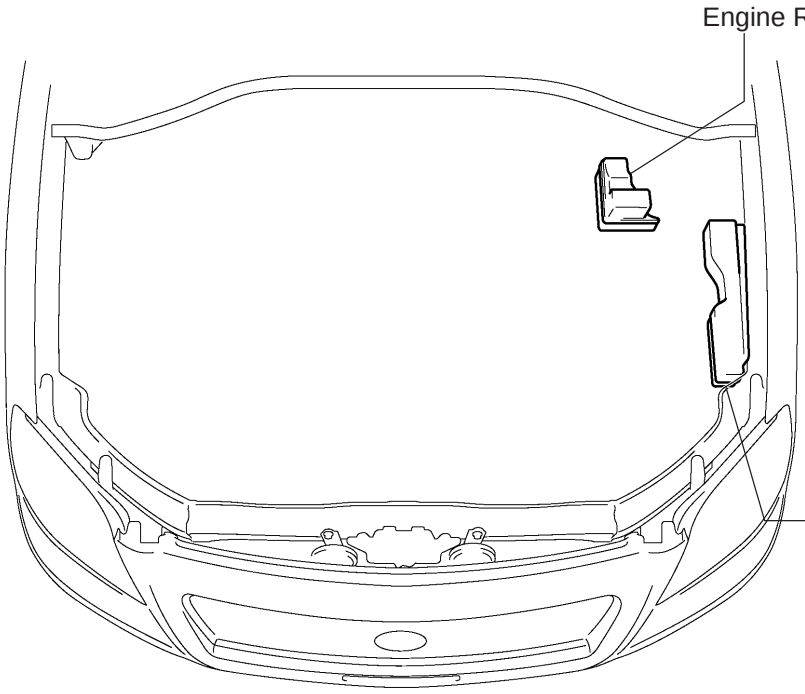

Y

B70602

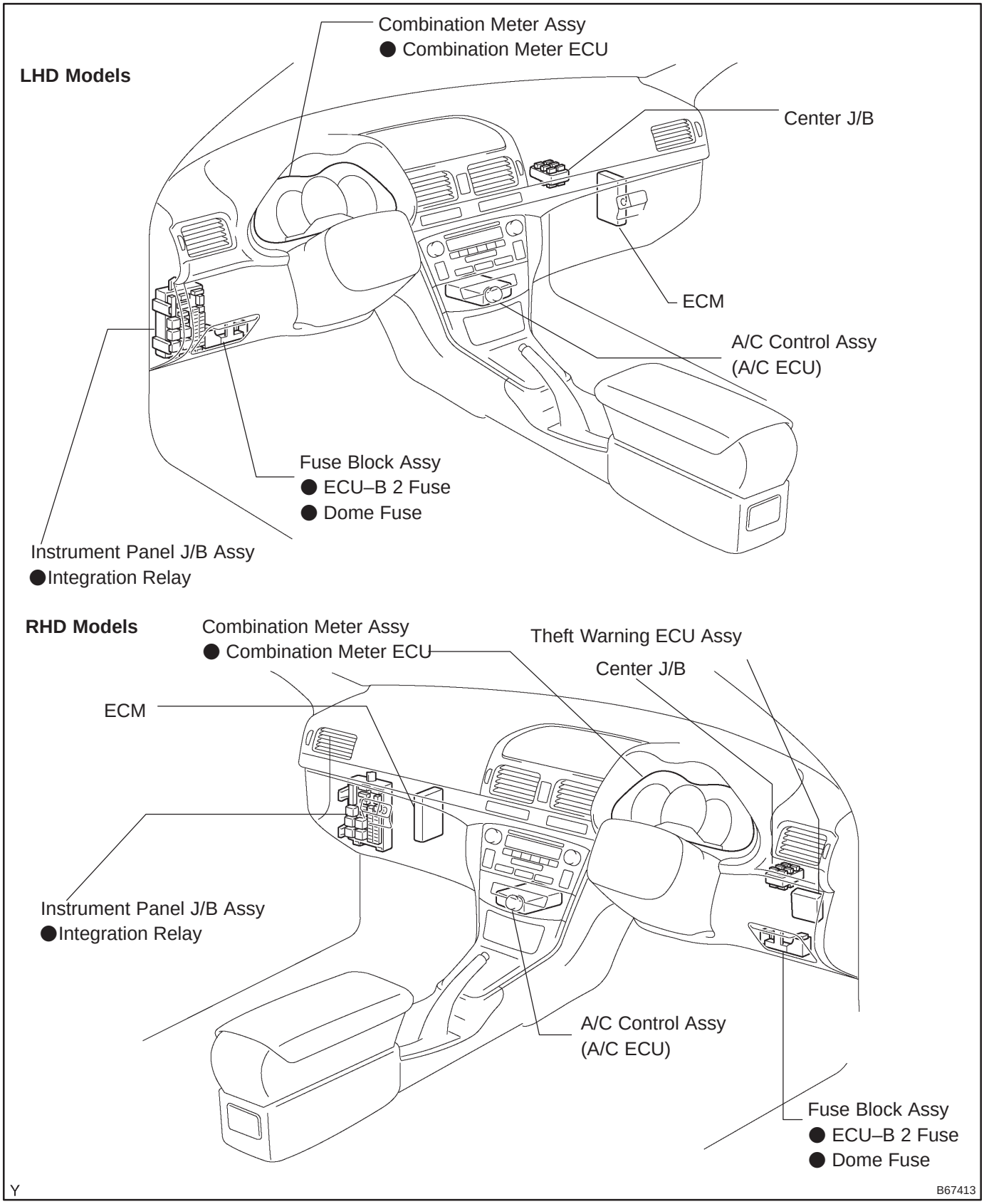
LHD Models
Combination Meter Assy
● Combination Meter ECU
Center J/B
ECM
A/C Control Assy
(A/C ECU)
Fuse Block Assy
● ECU–B 2 Fuse
● Dome Fuse
Instrument Panel J/B Assy
●Integration Relay
RHD Models
Combination Meter Assy
● Combination Meter ECU
Theft Warning ECU Assy
Center J/B
ECM
Instrument Panel J/B Assy
●Integration Relay
A/C Control Assy
(A/C ECU)
Fuse Block Assy
● ECU–B 2 Fuse
● Dome Fuse
Y
B67413

TERMINALS OF ECU

1. CHECK INSTRUMENT PANEL J/B ASSY (INTEGRATION RELAY)

Instrument Panel J/B Assy
(Integuration Relay)

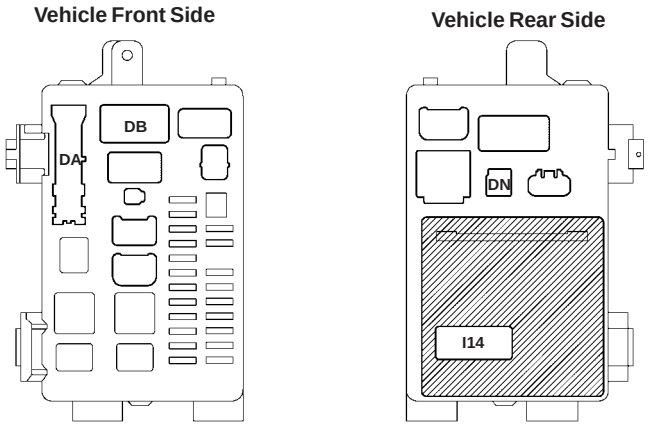

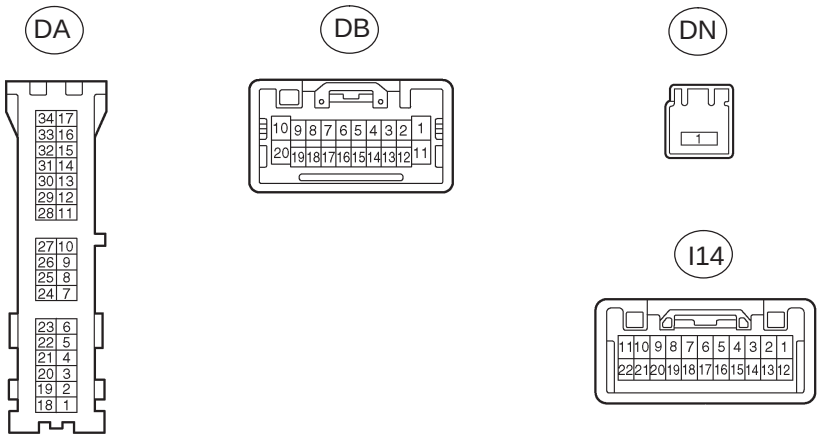

A/C Control Assy
(A/C ECU)

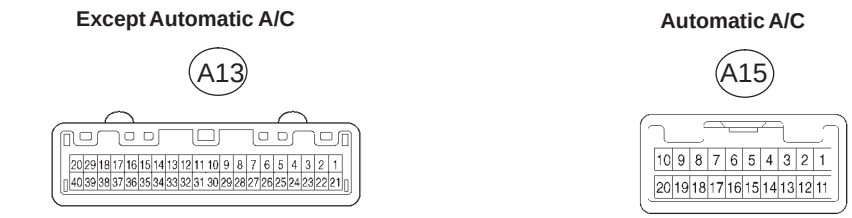

Combination Meter Assy
(Combination Meter ECU)

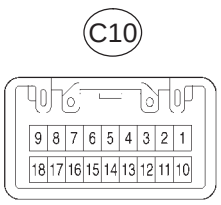

B67982

(a) Disconnect the DA, DB, DN, I14 J/B, A13 or A15 and C10 ECU connectors.
(b) Check the voltage or resistance of each terminal of the wire harness side connectors.
Standard:

Symbols (Terminal No.)	Wiring Color	Condition	Specified Condition
B (DN–1) – Body ground	*1 B–G – Body ground	Constant	10 to 14 V
	*2 B–L – Body ground	Constant	10 to 14 V
B (DB–16) – Body ground	W–R – Body ground	Constant	10 to 14 V
E (DA–9) – Body ground	W–B – Body ground	Constant	Below 1 Ω
*3 MPX1 (I14–11) – MPX– (A13–29)	P – P		
*4 MPX1 (I14–11) – MPX– (A15–20)			
MPX2 (I14–22) – BEAN (BODY) (C10–14)	P–B – P–B		

HINT:
*1: Gasoline
*2: 1CD–FTV
*3: Except automatic A/C
*4: Automatic A/C
If the result is not as specified, there may be a malfunction on the wire harness side.

2. CHECK ECM FOR 1AZ–FSE

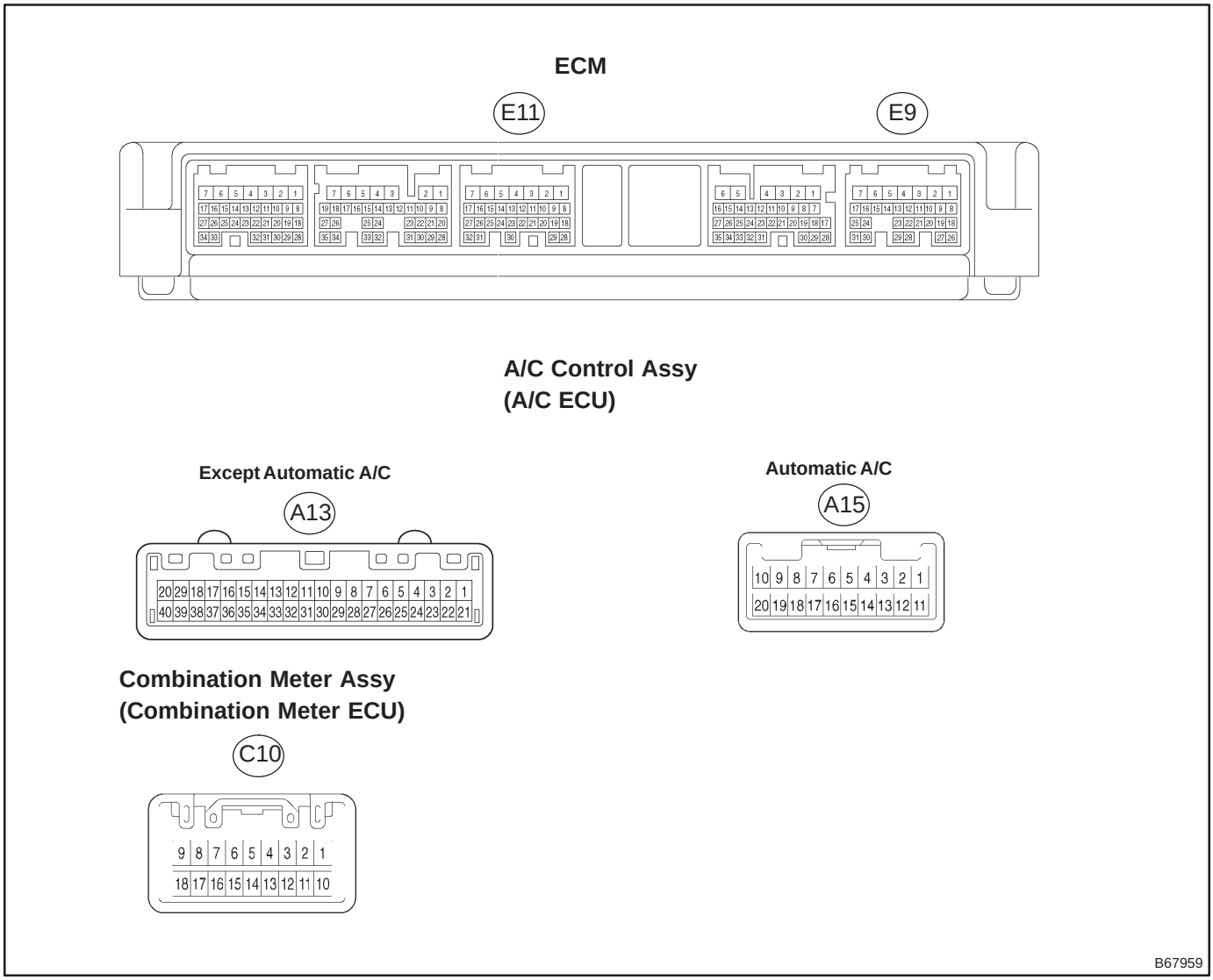

(a) Disconnect the A13 or A15, C10 ECU, E9, E10 and E11 ECM connectors.

(b) Check the voltage and resistance of each terminal of the wire harness side connectors.

Standard:

Symbols (Terminal No.)	Wiring Color	Condition	Specified Condition
E1 (E11–1) – Body ground	BR – Body ground	Constant	Below 1 Ω
+B (E9–1) – E1 (E11–1)	B–R – BR	Constant	10 to 14 V
+B2 (E9–2) – E1 (E11–1)	B–R – BR		
BATT (E9–3) – E1 (E11–1)	B–Y – BR		
MPX1 (E10–18) – BEAN (C10–13)	P – P	Constant	Below 1 Ω
*1 MPX2 (E10–29) – MPX+ (A13–9)	P–B – P–B		
*2 MPX2 (E10–29) – MPX+ (A15–10)			

HINT:

*1: Except Automatic A/C

*2: Automatic A/C

If the result is not as specified, there may be a malfunction on the wire harness side.

3. CHECK ECM FOR 1AZ–FE, 1ZZ–FE, 3ZZ–FE

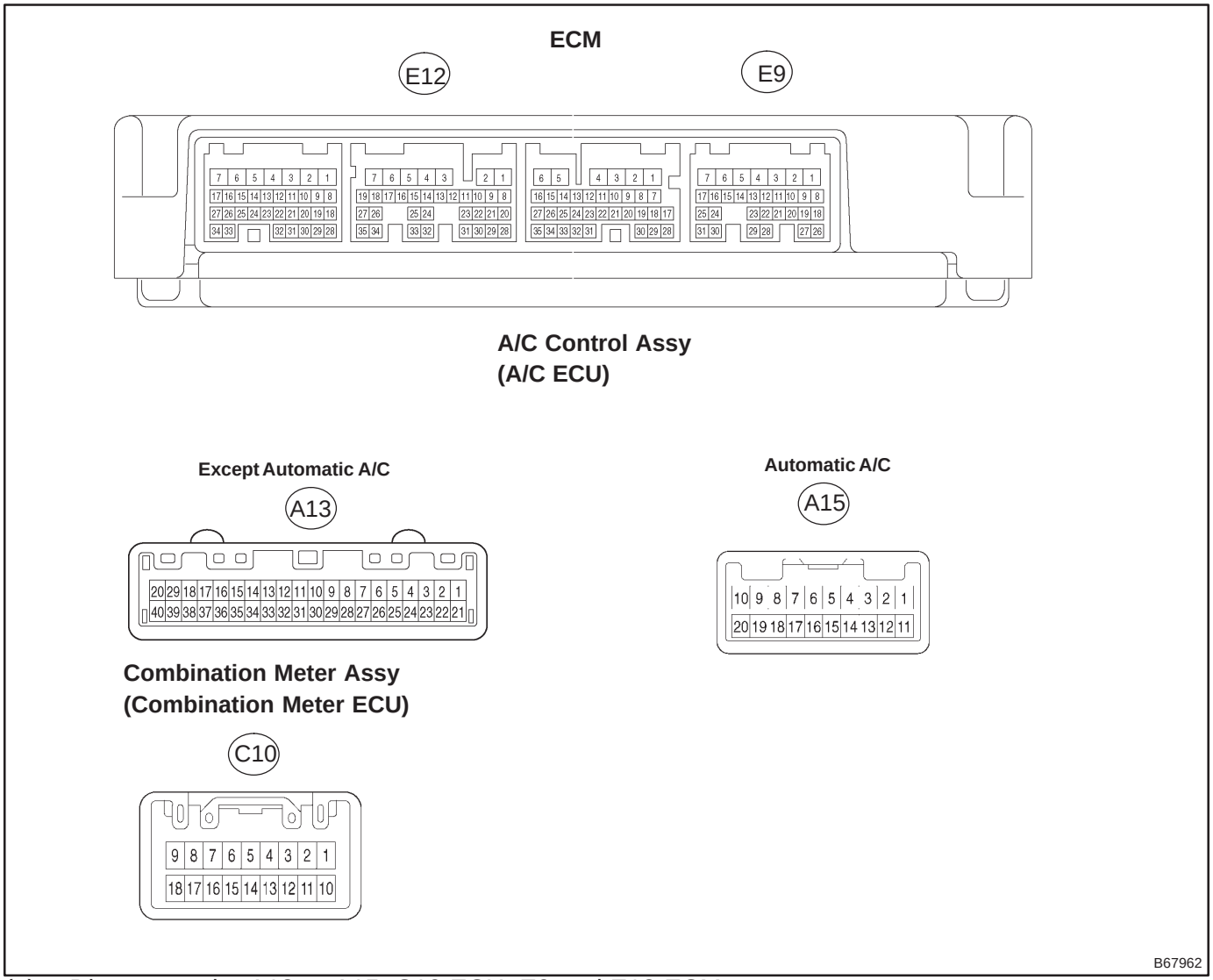

(a) Disconnect the A13 or A15, C10 ECU, E9 and E12 ECM connectors.

(b) Check the voltage or resistance of each terminal of the wire harness side connector.

Standard:

Symbols (Terminal No.)	Wiring Color	Condition	Specified Condition
E1 (E12–7) – Body ground	BR – Body ground	Constant	Below 1 Ω
+B (E9–1) – E1 (E12–7)	B–R – BR	Constant	10 to 14 V
BATT (E9–3) – E1 (E12–7)	B–Y – BR		
MPX1 (E9–23) – BEAN (C10–13)	P – P	Constant	Below 1 Ω
*1 MPX2 (E9–29) – MPX+ (A13–9)	P–B – P–B		
*2 MPX2 (E9–29) – MPX+ (A15–10)			

HINT:

*1: Except Automatic A/C

*2: Automatic A/C

If the result is not as specified, there may be a malfunction on the wire harness side.

4. CHECK ECM FOR 1CD–FTV

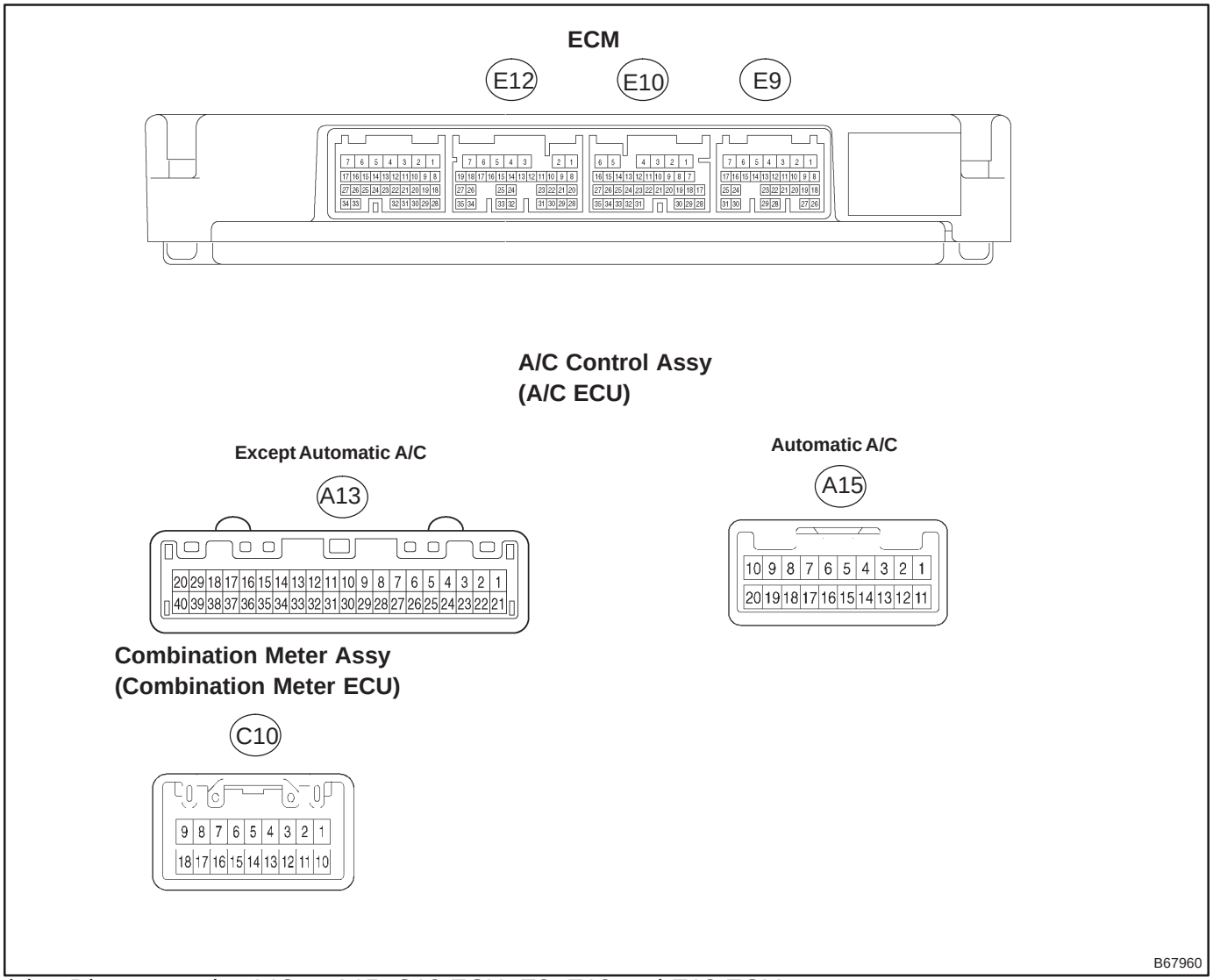

(a) Disconnect the A13 or A15, C10 ECU, E9, E10 and E12 ECM connectors.

(b) Check the voltage or resistance of each terminal of the wire harness side connector.

Standard:

Symbols (Terminal No.)	Wiring Color	Condition	Specified Condition
E1 (E12–7) – Body ground	BR – Body ground	Constant	Below 1 Ω
+B 〈E9–1) – E1 (E12–7)	B–W – BR	Constant	10 to 14 V
BATT (E10–2) – E1 (E12–7)	B–Y – BR		
MPX1 (E9–20) – BEAN (C10–13)	P – P	Constant	Below 1 Ω
*1 MPX2 (E9–21) – MPX+ (A13–9)	P–B – P–B		
*2 MPX2 (E9–21) – MPX+ (A15–10)			

HINT:

*1: Except Automatic A/C

*2: Automatic A/C

If the result is not as specified, there may be a malfunction on the wire harness side.

5. CHECK A/C CONTROL ASSY EXCEPT AUTO (A/C ECU)

A/C Control Assy
(A/C ECU)

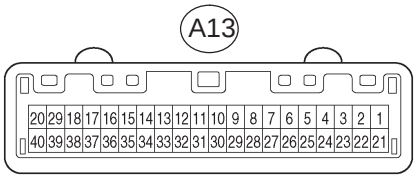

Instrument Panel J/B Assy
(Integration Relay)

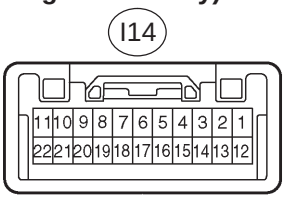

ECM (1AZ–FSE)

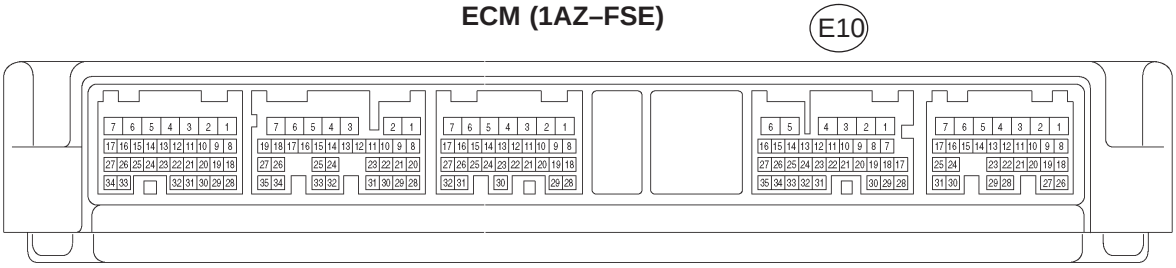

ECM (1AZ–FE, 1ZZ–FE, 3ZZ–FE)

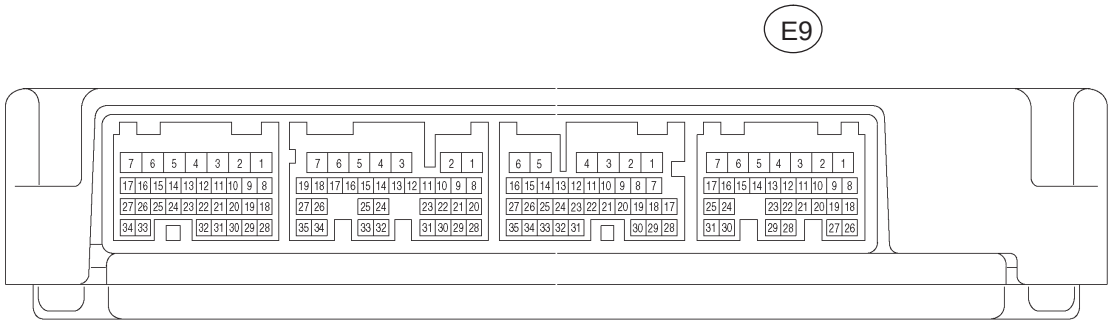

ECM (1CD–FTV)

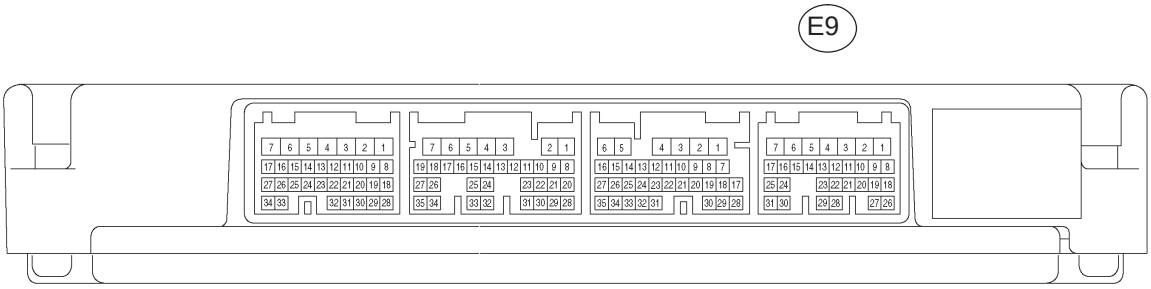

B67983

(a) Disconnect the A13 ECU, E9 or E10 ECM and I14 J/B connectors.
(b) Check the voltage or resistance of each terminal of the wire harness side connector.
Standard:

Symbols (Terminal No.)	Wiring Color	Condition	Specified Condition
GND (A13–40) – Body ground	W–B – body ground	Constant	Below 1 Ω
+B ⟨A13–2) – GND (A13–40)	W–R – W–B	Constant	10 to 14 V
MPX– (A13–29) – MPX1 (I14–11)	P – P	Constant	Below 1 Ω
*1 MPX+ (A13–9) – MPX2 (E10–29)	P–B – P–B		
*2 MPX+ (A13–9) – MPX2 (E9–29)	P–B – P–B		
*3 MPX+ (A13–9) – MPX2 (E9–21)	P–B – P–B		

HINT:
*1: 1AZ–FSE
*2: 1AZ–FE, 1ZZ–FE, 3ZZ–FE
*3: 1CD–FTV
If the result is not as specified, there may be a malfunction on the wire harness side.

6. CHECK A/C CONTROL ASSY FOR AUTO (A/C ECU)

A/C Control Assy (A/C ECU)

A15

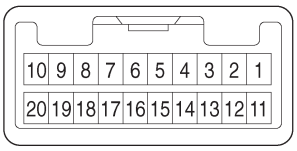

A16

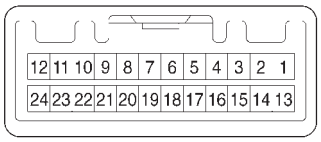

Instrument Panel J/B Assy (Integration Relay)

I14

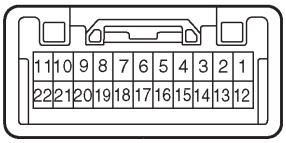

ECM (1AZ–FSE)

E10

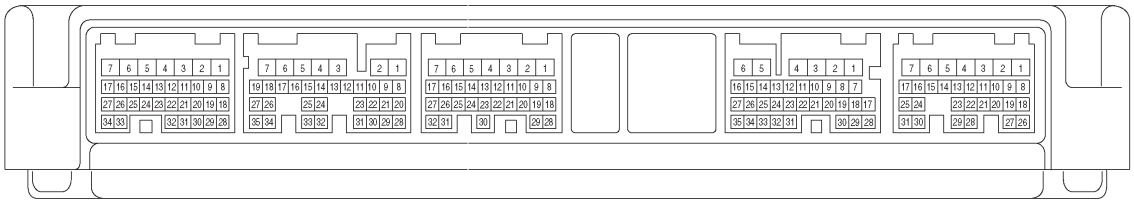

ECM (1AZ–FE, 1ZZ–FE, 3ZZ–FE)

E9

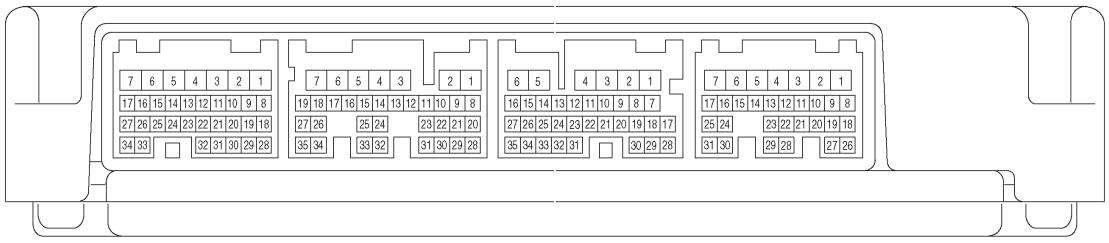

ECM (1CD–FTV)

E9

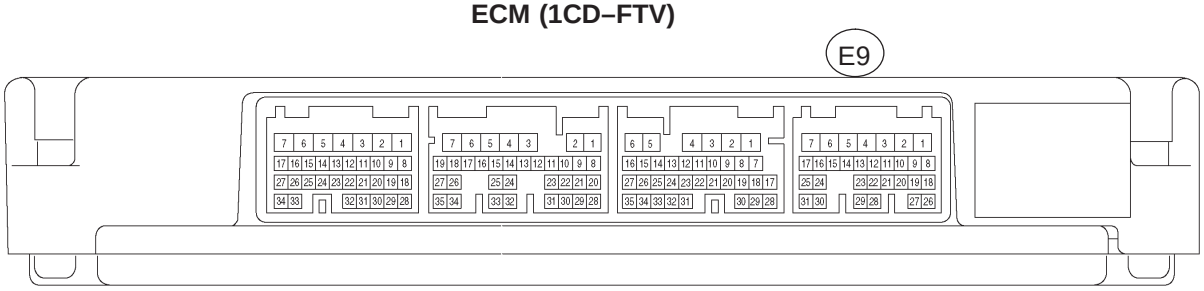

B67984

(a) Disconnect the A15, A16 ECU, E9 or E10 ECM and I14 J/B connectors.
(b) Check the voltage or resistance of each terminal of the wire harness side connector.
Standard:

Symbols (Terminal No.)	Wiring Color	Condition	Specified Condition
GND (A16–13) – Body ground	W–B – Body ground	Constant	Below 1 Ω
+B (A16–24) – GND (A16–13)	W–R – W–B	Constant	10 to 14 V
MPX– (A15–20) – MPX1 (I14–11)	P – P	Constant	Below 1 Ω
*1 MPX+ (A15–10) – MPX2 (E10–29)	P–B – P–B		
*2 MPX+ (A15–10) – MPX2 (E9–29)	P–B – P–B		
*3 MPX+ (A15–10) – MPX2 (E9–21)	P–B – P–B		

HINT:
*1: 1AZ–FSE
*2: 1AZ–FE, 1ZZ–FE, 3ZZ–FE
*3: 1CD–FTV
If the result is not as specified, there may be a malfunction on the wire harness side.

7. CHECK THEFT WARNING ECU ASSY

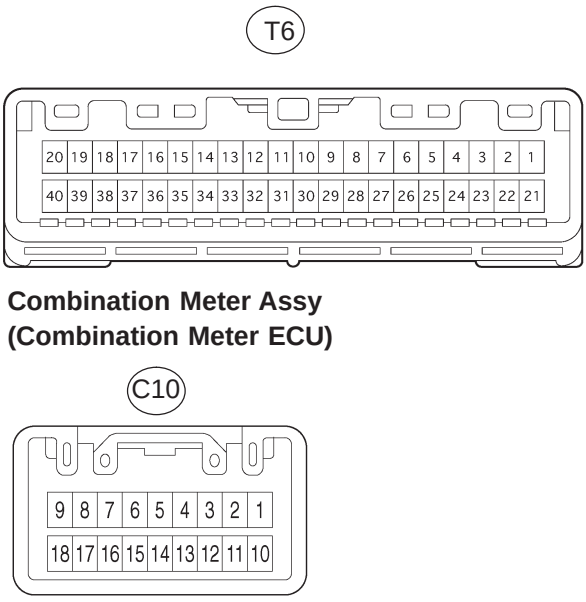

(a) Disconnect the T6 and C10 ECU connectors.
(b) Check the voltage or resistance of each terminal of the wire harness side connector.
Standard:

Symbols (Terminal No.)	Wiring Color	Condition	Specified Condition
E (T6–29) – Body ground	W–B – Body ground	Constant	Below 1 Ω
+B1 (T6–2) – E (T6–29)	W–R – W–B	Constant	10 – 14 V
MPX (T6–31) – BEAN (Security)(C10–15)	P–L – P–L	Constant	Below 1 Ω

If the result is not as specified, there may be a malfunction on the wire harness side.

8. CHECK COMBINATION METER ASSY (COMBINATION METER ECU)

Combination Meter Assy (Conbination Meter ECU)



ECM (1AZ–FSE)

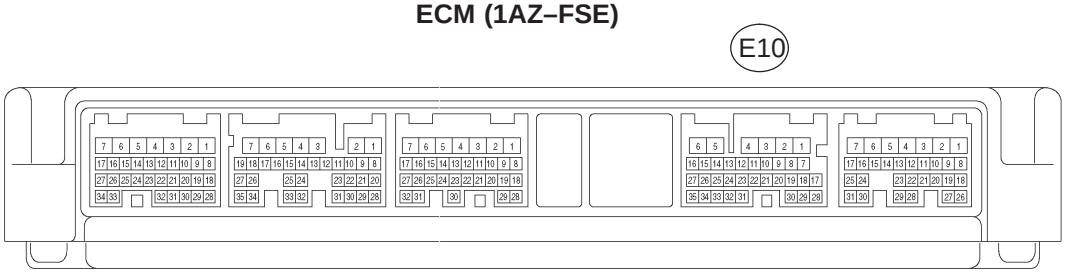

ECM (1AZ–FE, 1ZZ–FE, 3ZZ–FE)

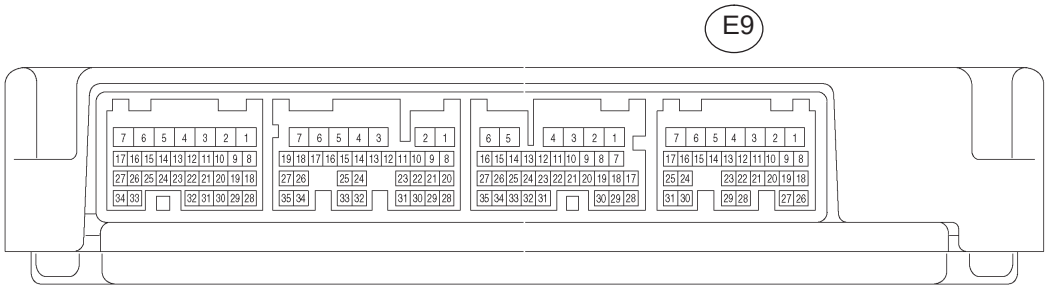

ECM (1CD–FTV)

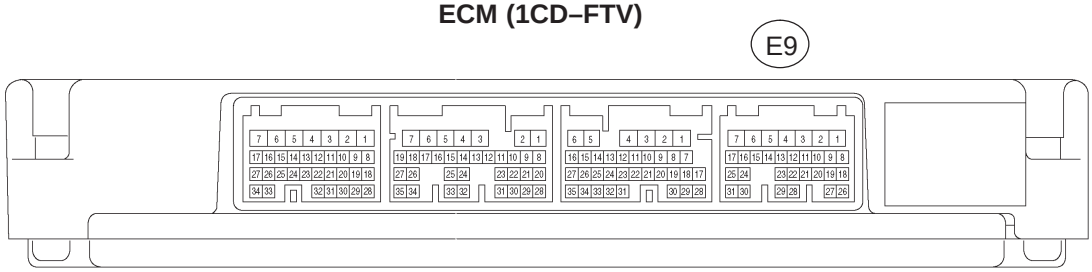

Theft Warning ECU Assy

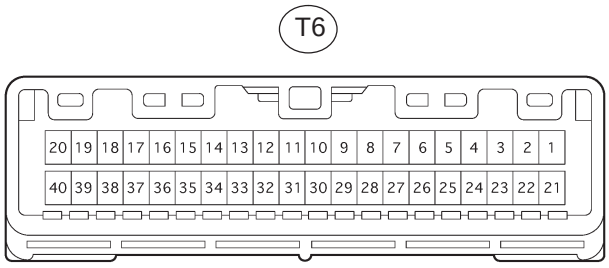

Instrument Panel J/B Assy (Integration Relay)

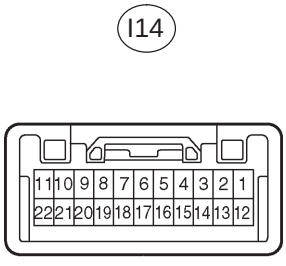

B67985

(a) Disconnect the C10, C11, T6, ECU, E10 or E9 ECM and I14 connectors.
(b) Check the voltage or resistance of each terminal of the wire harness side connector.
Standard:

Symbols (Terminal No.)	Wiring Color	Condition	Specified Condition
POWER EARTH (C10–17) – Body ground	W–B – Body ground	Constant	Below 1 Ω
+B 〈C11–20) – POWER EARTH (C10–17)	W–R – W–B	Constant	10 to 14 V
*1 BEAN (EFI) (C10–13) – MPX1 (E10–18)	P – P	Constant	Below 1 Ω
*2 BEAN (EFI) (C10–13) – MPX1 (E9–23)	P – P		
*3 BEAN (EFI) (C10–13) – MPX1 (E9–20)	P – P		
BEAN (BODY) (C10–14) – MPX2 (I14–22)	P–B – P–B		
*4 BEAN (SECURITY) (C10–15) – MPX (T6–31)	P–L – P–L		

HINT:
*1: 1AZ–FSE
*2: 1AZ–FE, 1ZZ–FE, 3ZZ–FE
*3: 1CD–FTV
*4: w/ Theft deterrent system
If the result is not as specified, there may be a malfunction on the wire harness side.

DTC	B1214	DOOR SYSTEM COMMUNICATION BUS MALFUNCTION (+B SHORT)

DTC	B1215	DOOR SYSTEM COMMUNICATION BUS MALFUNCTION (GND SHORT)

CIRCUIT DESCRIPTION

DTCs B1214 and B1215 are output when +B and the body ground is short–circuited on the communication bus. Detecting this condition disables all the BEAN communication and outputs some DTCs.

DTC No.	DTC Detection Condition	Trouble Area
B1214	Communication circuit and +B battery system short	• ECM • A/C control assy (A/C ECU) • Combination meter assy • Theft warning ECU assy • Wire harness • Instrument panel J/B assy (Integration relay)
B1215	Communication circuit and body ground short	• ECM • A/C control assy (A/C ECU) • Combination meter • Theft warning ECU assy • Wire harness • Instrument panel J/B assy (Integration relay)

WIRING DIAGRAM

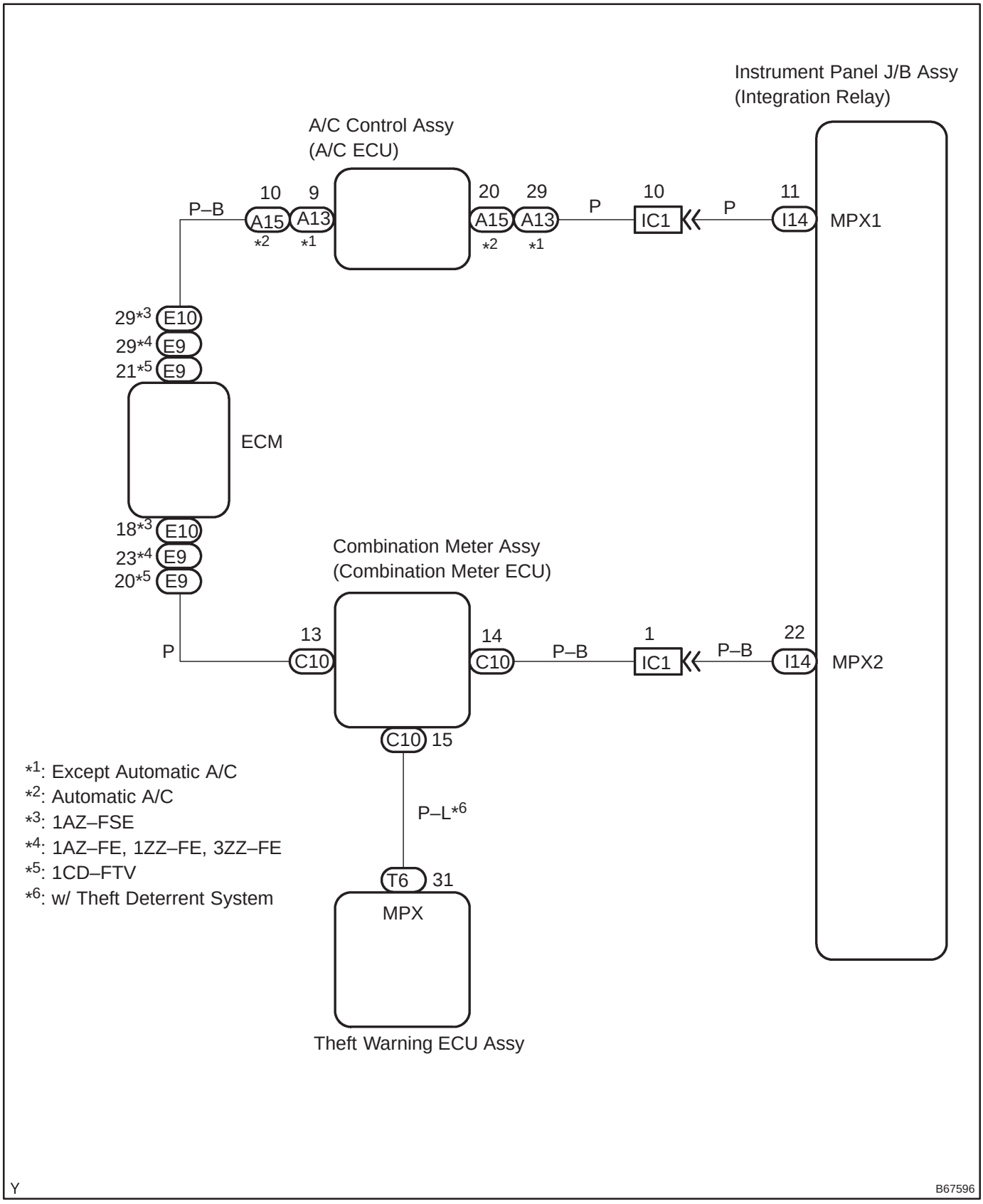

INSPECTION PROCEDURE

NOTICE:

Disconnect connectors in operational sequence and start the next operation after the connector is connected.

1	CHECK DTC (THEFT WARNING ECU ASSY)

(a) Check whether the outputs of the DTC stops when the theft warning ECU connector is disconnected.

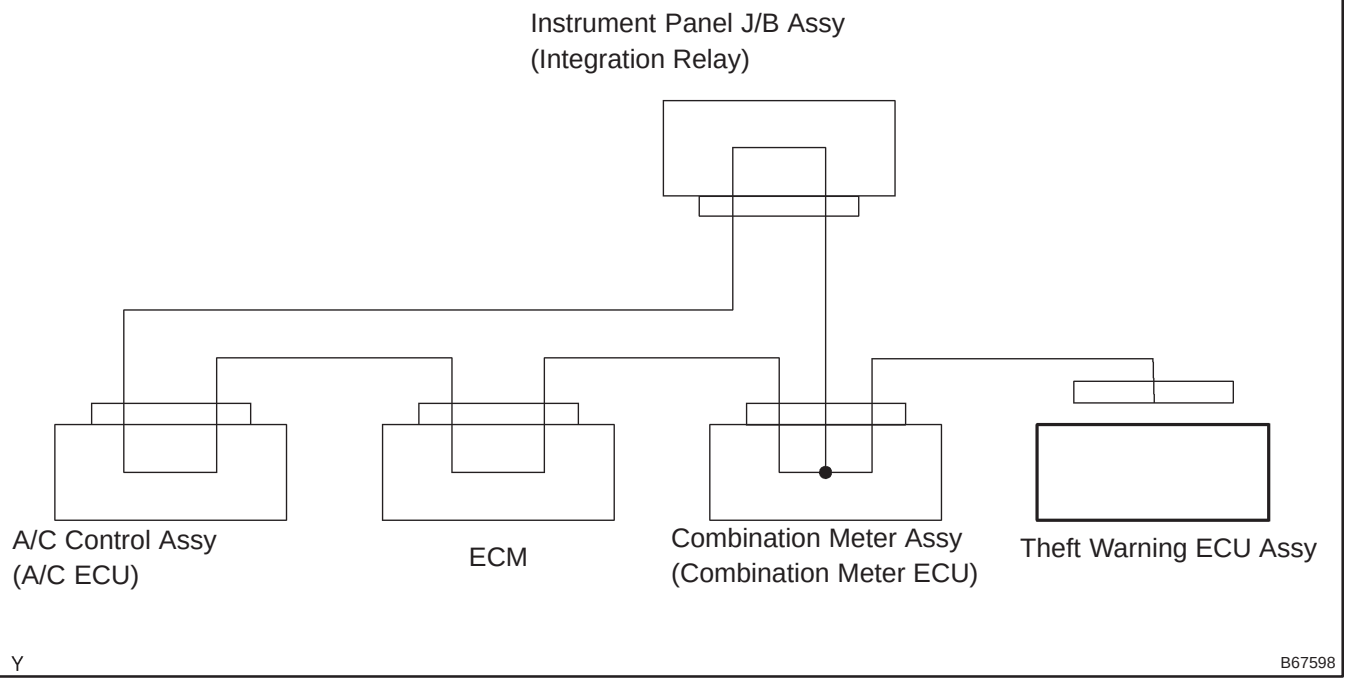

HINT:

When the output of the DTC stops, the theft warning ECU is malfunctioning.

YES → **REPLACE THEFT WARNING ECU ASSY**

NO

2	CHECK DTC (COMBINATION METER ECU AND WIRE HARNESS)

(a) Check whether the outputs of the DTC stops when the combination meter ECU connector is disconnected.

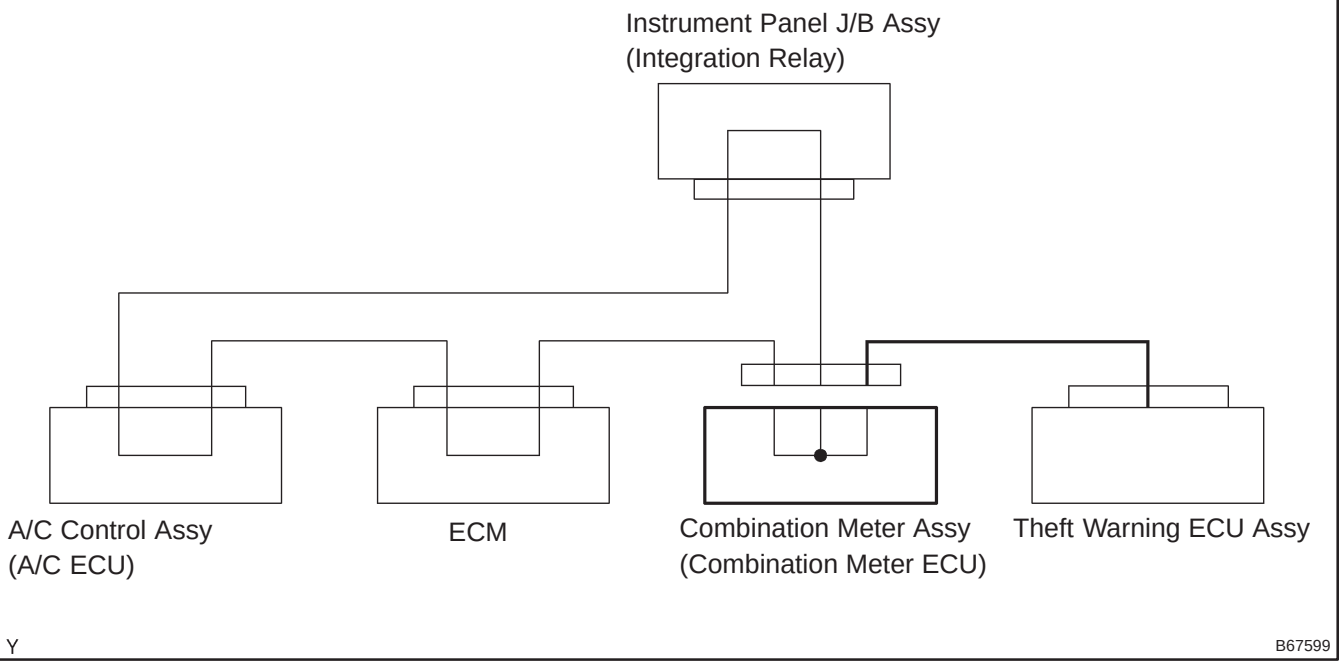

HINT:
When the output of the DTC stops, the combination meter ECU itself or the wire harness between the combination meter ECU and the theft warning ECU is malfunctioning.

NO → **Go to step 4**

YES

3	CHECK WIRE HARNESS (COMBINATION METER ECU – THEFT WARNING ECU ASSY)

(a) Disconnect the combination meter ECU and theft warning ECU connectors.
(b) Check the wire harness (MPX line) between the combination ECU and theft warning ECU.

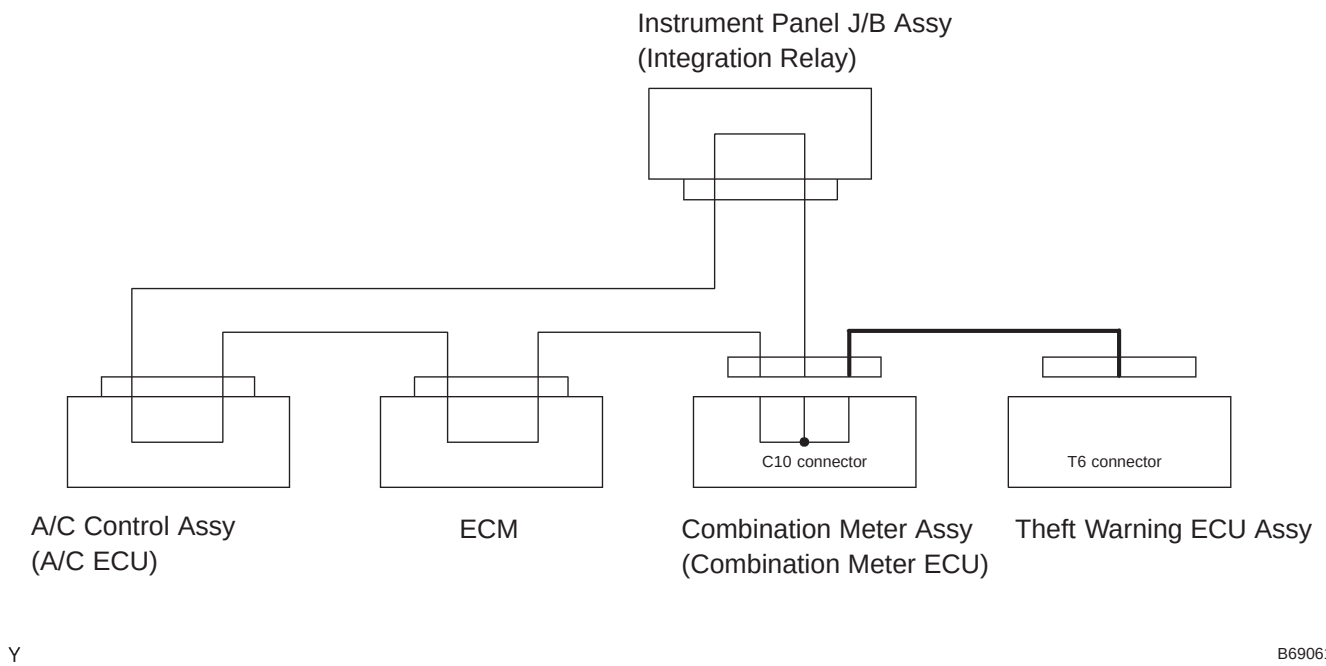

(1) Turn the ignition switch ON.
(2) Check the voltage between the wire harness (MPX line) and the body ground.

Standard:

Tester Condition	Specified Condition
BEAN (SECURITY) (C10–15) or MPX (T6–31) – Body ground	0 V

If the output voltage is not 0 V, the wire harness (MPX line) may be short–circuited with +B.

(3) Check the resistance between the wire harness (MPX line) and the body ground.

Standard:

Tester Condition	Specified Condition
BEAN (SECURITY) (C10–15) or MPX (T6–31) – Body ground	10 kΩ or higher

When the resistance is 10 kΩ or higher, the wire harness (MPX line) and body ground may be short–circuited with the body ground.

NO → **REPAIR OR REPLACE HARNESS AND CONNECTOR**

YES

REPLACE COMBINATION METER ASSY (COMBINATION METER ECU)

4	CHECK DTC (ECM)

(a) Check whether the output of the DTC stops when the ECM connector is disconnected.

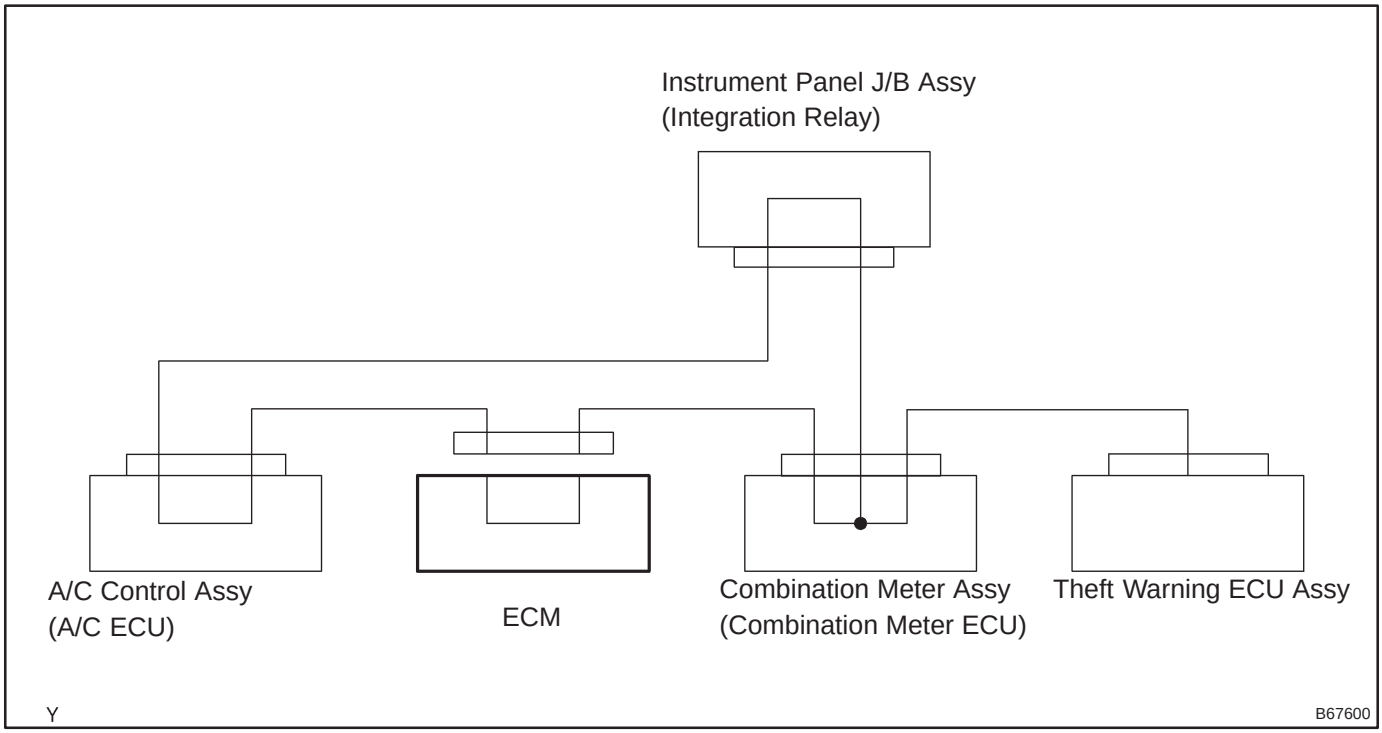

HINT:

When the output of the DTC stops, the ECM is malfunctioning.

YES → **REPLACE ECM**

NO

5	CHECK WIRE HARNESS (COMBINATION METER ECU – ECM)

(a) Check whether the output of the DTC stops when the E10*1 or E9*2 connector of the ECM and the C10 connector of the combination meter ECU are disconnected.

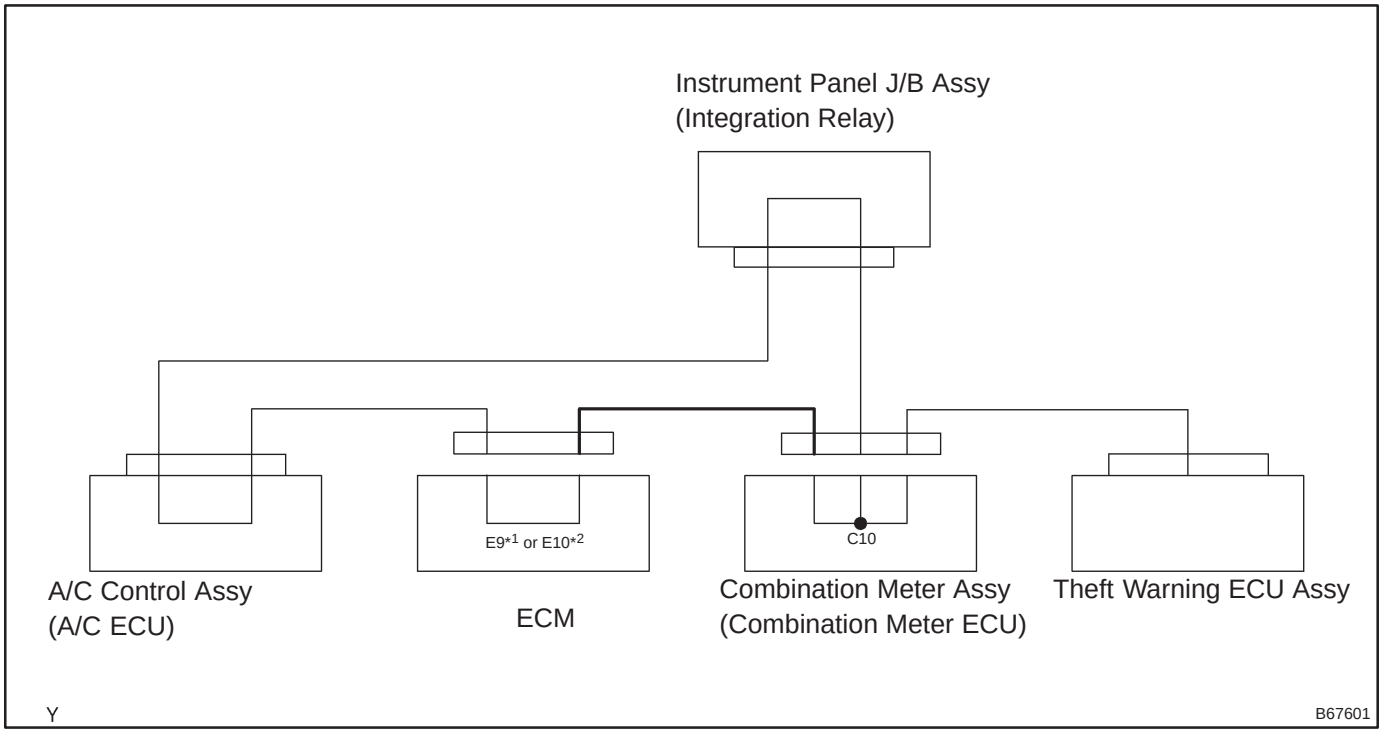

HINT:

When the output of the DTC stops, the wire harness between the E10*1 or E9*2 connector of the ECM and the C10 connector of the combination meter ECU is malfunctioning.

*1: 1AZ–FSE

*2: Except 1AZ–FSE

YES → **REPAIR OR REPLACE HARNESS AND CONNECTOR**

NO

6	CHECK DTC (A/C ECU)

(a) Check whether the output of the DTC stops when the A/C ECU connector is disconnected.

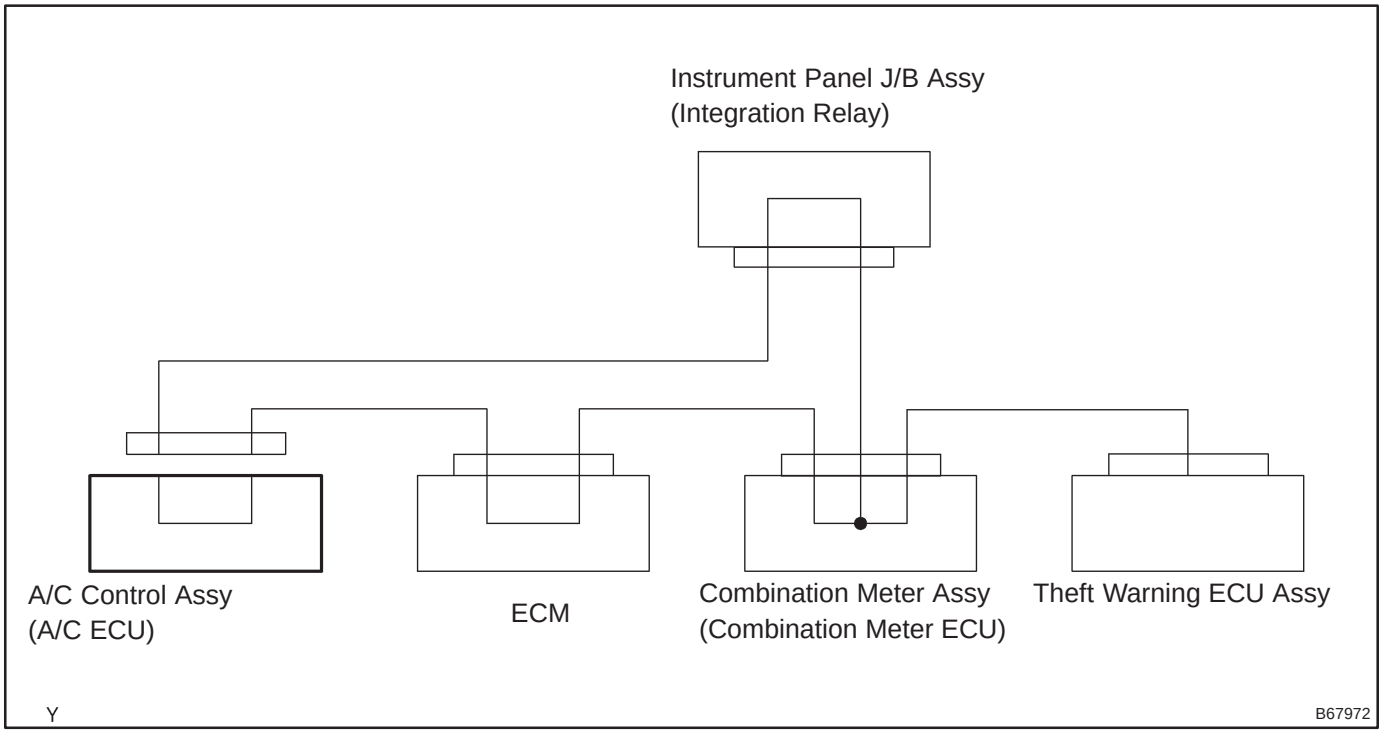

HINT:

When the output of the DTC stops, the A/C ECU is malfunctioning.

YES → **REPLACE AIR CONDITIONING CONTROL ASSY (A/C ECU)**

NO

7	CHECK WIRE HARNESS (A/C ECU – ECM)

(a) Check whether the output of the DTC stops when the A13*1 or A15*2 connector of the A/C ECU and the E10*3 or E9*4 connector of the ECM are disconnected.

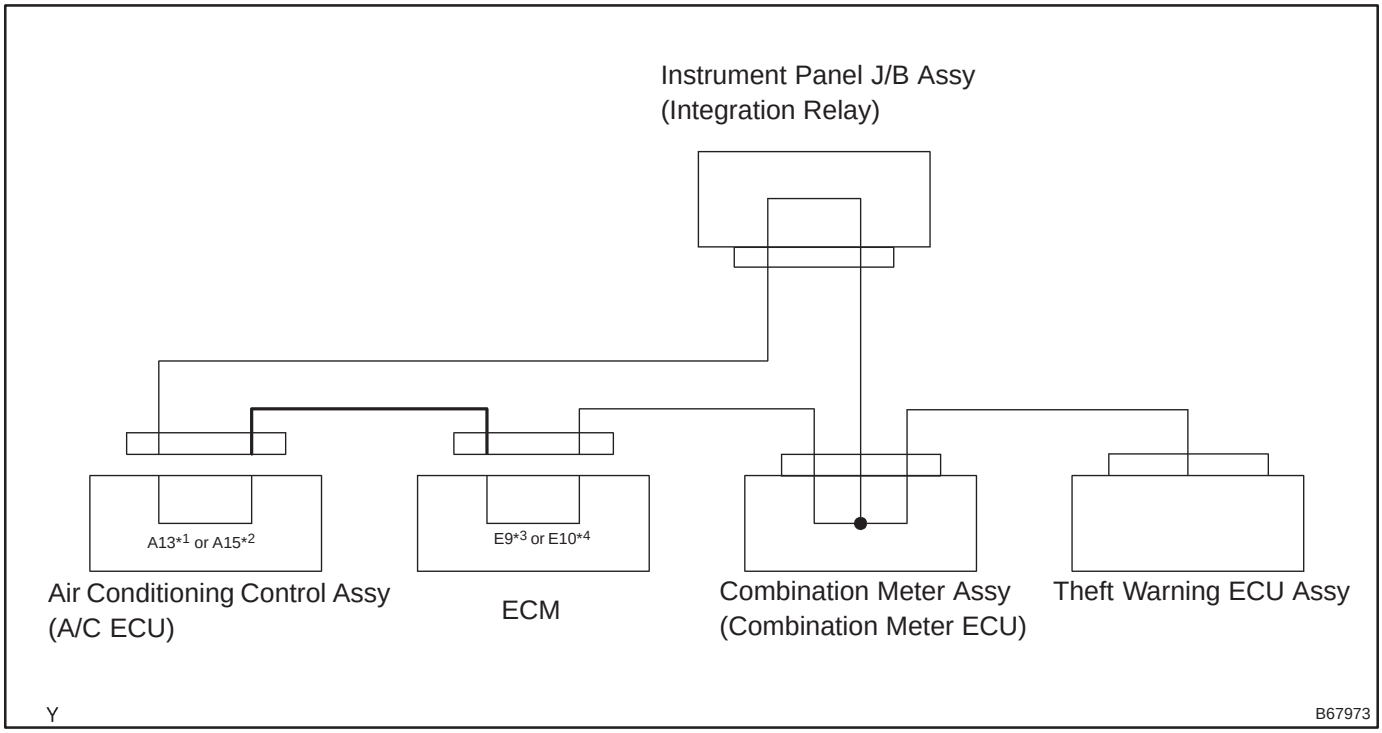

HINT:

When the output of the DTC stops, the wire harness between the A13*1 or A15*2 connector of the A/C ECU and the E10*3 or E9*4 connector of the ECM is malfunctioning.

*1: Except Automatic A/C

*2: Automatic A/C

*3: 1AZ–FSE

*4: Except 1AZ–FSE

YES → **REPAIR OR REPLACE HARNESS AND CONNECTOR**

NO

8	CHECK WIRE HARNESS (INTEGRATION RELAY – A/C ECU) (INTEGRATION RELAY – COMBINATION METER ECU)

(a) Disconnect the A/C ECU, combination meter ECU and integration relay connectors.
(b) Check the wire harness (MPX lines) between the integration relay and A/C ECU as well as in between the integration relay and combination ECU.

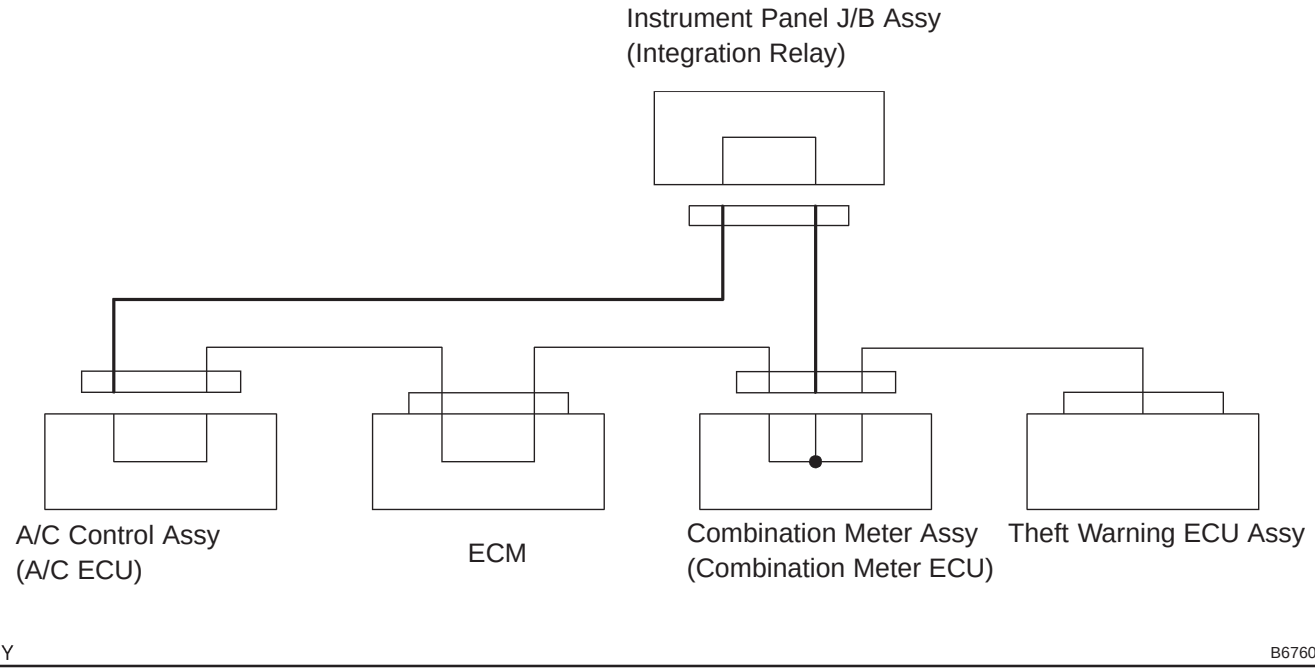

(1) Turn the ignition switch ON.
(2) Check the voltage between the wire harness (MPX lines) and the body ground.

Standard:

Tester Condition	Specified Condition
Integration relay or A/C ECU – Body ground	0 V
Integration relay or combination meter ECU – Body ground	

If the output voltage is not 0 V, the wire harness (MPX line) may be short–circuited with +B.

(3) Check the resistance between the wire harness (MPX lines) and the body ground.

Standard:

Tester Condition	Specified Condition
Integration relay or A/C ECU – Body ground	10 kΩ or higher
Integration relay or combination meter ECU – Body ground	

When the resistance is 10 kΩ or higher, the wire harness (MPX line) and body ground may be short–circuited with the body ground.

NG → **REPAIR OR REPLACE HARNESS AND CONNECTOR**

OK

REPLACE INSTRUMENT PANEL JUNCTION BLOCK ASSY (INTEGRATION RELAY)

DTC	B1261	ECM (ENGINE ECU) COMMUNICATION STOP

CIRCUIT DESCRIPTION

DTC B1261 is output when communication between the ECM and integration relay stops for more than 10 seconds.

DTC No.	DTC Detection Condition	Trouble Area
B1261	No communication from ECM for more than 10 seconds	• ECM • Wire harness

WIRING DIAGRAM

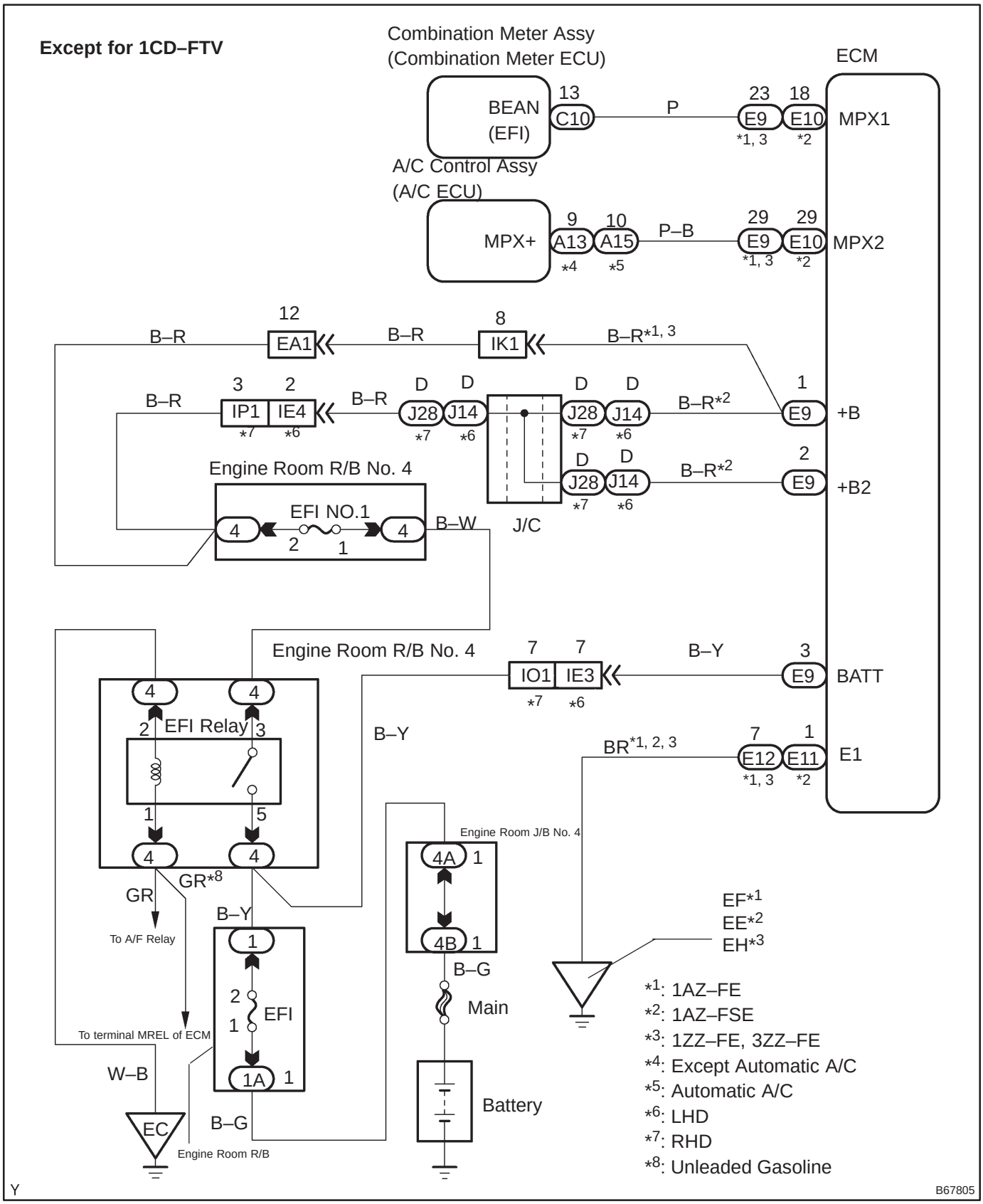

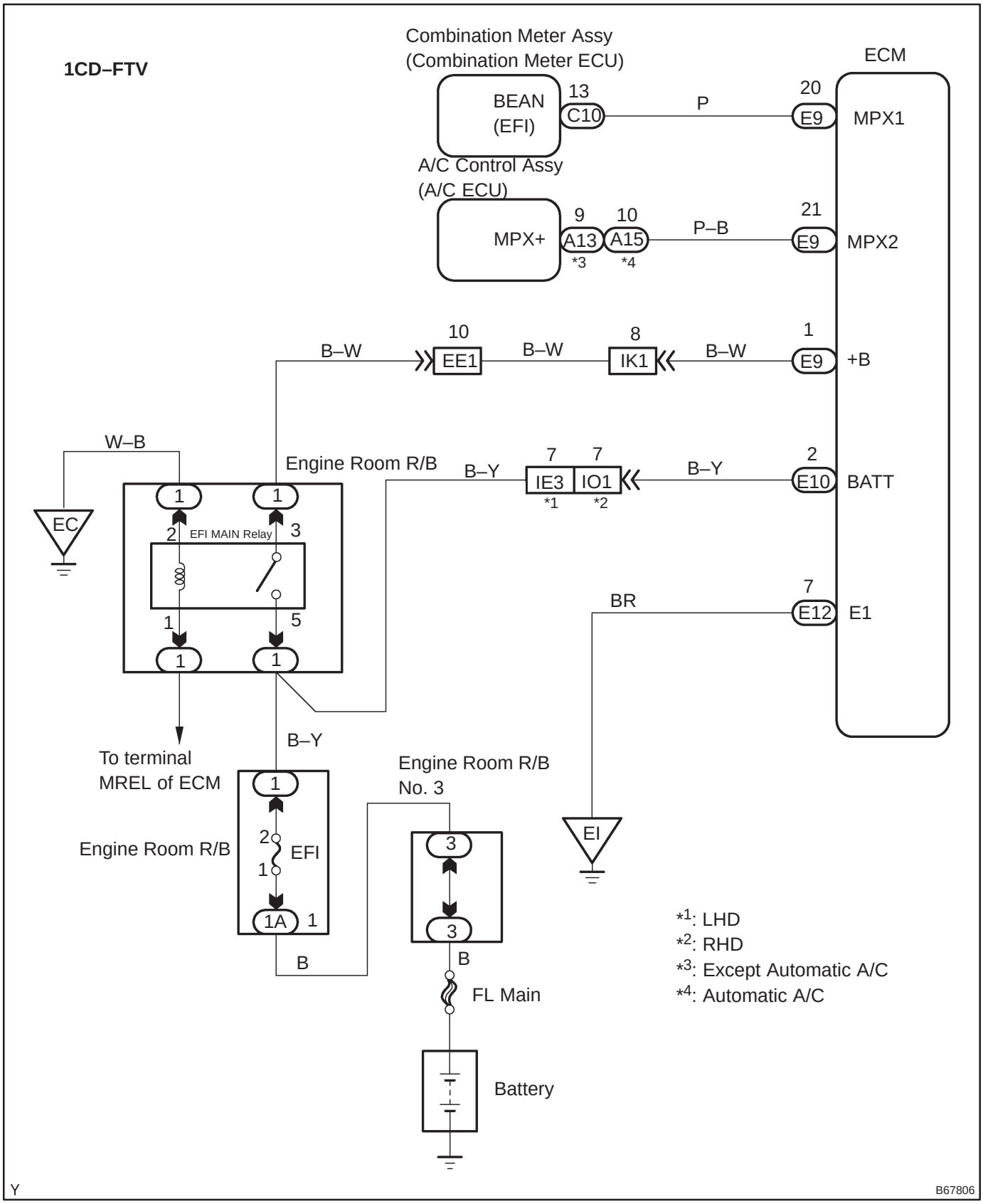
1CD–FTV
Combination Meter Assy
(Combination Meter ECU)
BEAN
(EFI)
13
C10
P
20
E9
ECM
MPX1
A/C Control Assy
(A/C ECU)
MPX+
9
A13
*3
10
A15
*4
P–B
21
E9
MPX2
10
EE1
B–W
B–W
8
IK1
B–W
1
E9
+B
W–B
Engine Room R/B
B–Y
7
IE3
*1
7
IO1
*2
B–Y
2
E10
BATT
EC
EFI MAIN Relay
2
3
1
5
1
1
1
1
BR
7
E12
E1
To terminal
MREL of ECM
B–Y
Engine Room R/B
No. 3
Engine Room R/B
2
EFI
1
1A
1
B
3
3
B
FL Main
Battery
EI
*1: LHD
*2: RHD
*3: Except Automatic A/C
*4: Automatic A/C
Y
B67806

1 CHECK RESISTANCE OF COMMUNICATION LINE

Wire Harness Side

E10*2
ECM

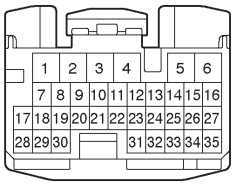

Y E9*1, 3, 4
ECM

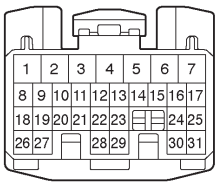

Y C10
Combination Meter Assy
(Combination Meter ECU)

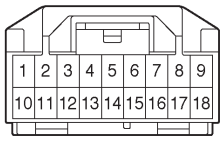

Y A13*5
A/C Control Assy
(A/C ECU)

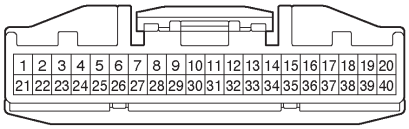

Y A15*6
A/C Control Assy
(A/C ECU)

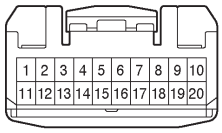

B68027

(a) Disconnect the E9 or E10 ECM, C10 and A13 or A15 ECU connectors.

(b) Check the resistance between wire harness side connectors.

Standard:

1AZ–FSE

Tester Connection	Specified Condition
E10–18 (MPX1) – C10–13 (BEAN)	Below 1 Ω
*5 E10–29 (MPX2) – A13–9 (MPX+)	
*6 E10–29 (MPX2) – A15–10 (MPX+)	

1AZ–FE, 1ZZ–FE, 3ZZ–FE

Tester Connection	Specified Condition
E9–23 (MPX1) – C10–13 (BEAN)	Below 1 Ω
*5 E9–29 (MPX2) – A13–9 (MPX+)	
*6 E9–29 (MPX2) – A15–10 (MPX+)	

1CD–FTV

Tester Connection	Specified Condition
E9–20 (MPX1) – C10–13 (BEAN)	Below 1 Ω
*5 E9–21 (MPX2) – A13–9 (MPX+)	
*6 E9–21 (MPX2) – A15–10 (MPX+)	

HINT:
*1: 1AZ–FE
*2: 1AZ–FSE
*3: 1ZZ–FE, 3ZZ–FE
*4: 1CD–FTV
*5: Except Automatic A/C
*6: Automatic A/C

NG → **REPAIR OR REPLACE HARNESS AND CONNECTOR**

OK

2 CHECK ECM (POWER SOURCE)

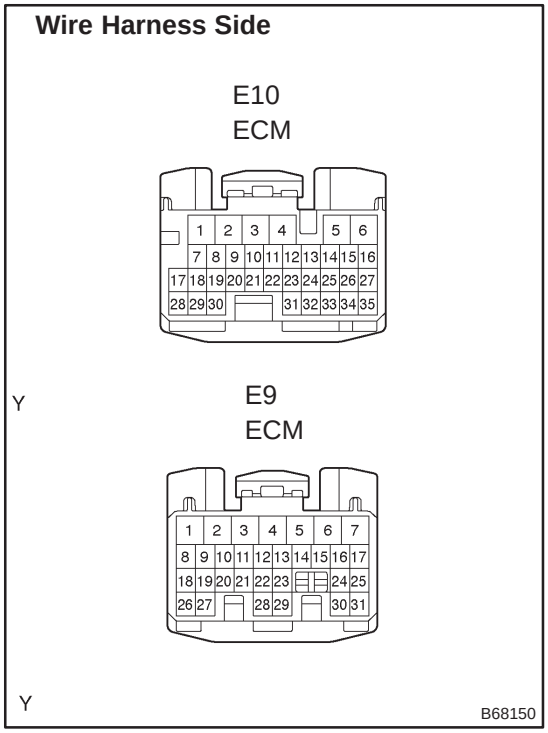

(a) Disconnect the E10 or E9 ECM connector.
(b) Check the voltage between the wire harness side connectors and the body ground.

Standard:

Tester Connection	Specified Condition
+B (E9–1) – Body ground	10 to 14 V
*1 +B2 (E9–2) – Body ground	
*1 BATT (E9–3) – Body ground	
*2 BATT (E10–2) – Body ground	

HINT:
*1: Except 1CD–FTV
*2: 1CD–FTV

NG → **REPAIR OR REPLACE HARNESS AND CONNECTOR**

OK

3 CHECK ECM (GROUND)

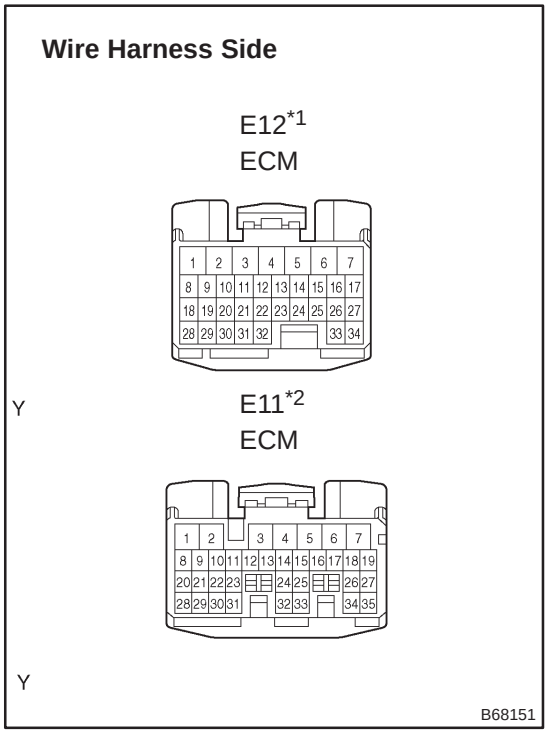

(a) Disconnect the E12 or E11 ECM connector.
(b) Check the resistance between the wire harness side connectors and the body ground.

Standard:

Tester Connection	Specified Condition
*1 E12–7 (E1) – Body ground	Below 1 Ω
*2 E11–1 (E1) – Body ground	

HINT:
*1: Except 1AZ–FSE
*2:1AZ–FSE

NG → **REPAIR OR REPLACE HARNESS AND CONNECTOR**

OK

REPLACE ECM

DTC B1262 A/C ECU COMMUNICATION STOP

CIRCUIT DESCRIPTION

DTC B1262 will be output when the communication between the A/C ECU and the integration relay stops for more than 10 seconds.

DTC No.	DTC Detection Condition	Trouble Area
B1262	No communication from A/C ECU for more than 10 seconds	• A/C control assy (A/C ECU) • Wire harness

WIRING DIAGRAM

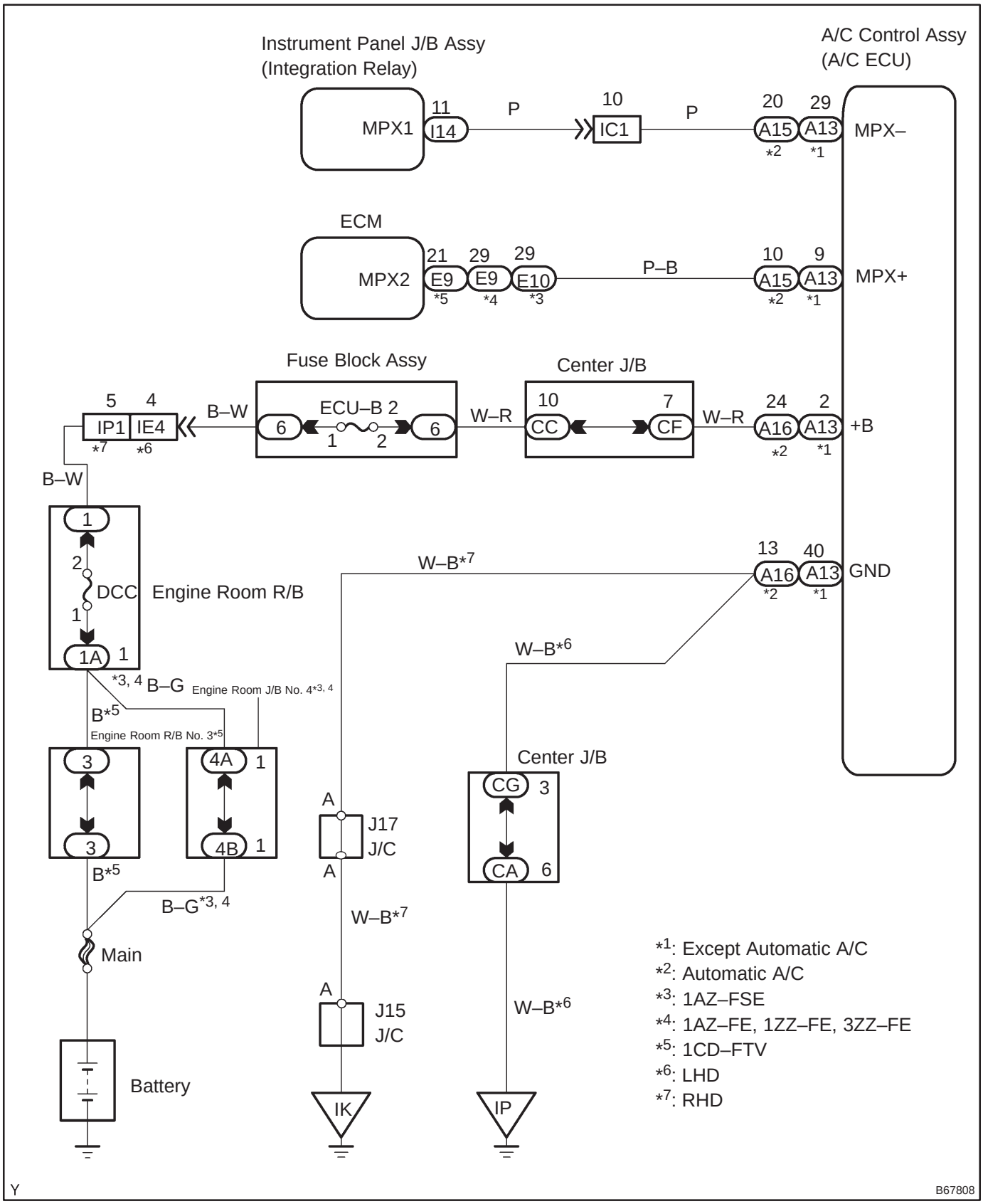

1 CHECK RESISTANCE OF COMMUNICATION LINE

Wire Harness Side

A13*1
Air Conditioning Control Assy

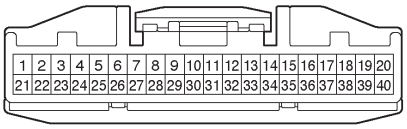

A15*2
Y Air Conditioning Control Assy

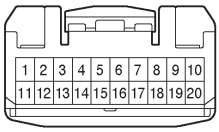

I14
Y Instrument Panel J/B Assy
(Integration Relay)

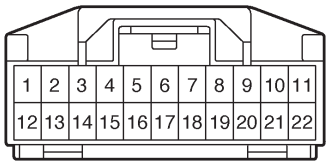

E10*3
ECM

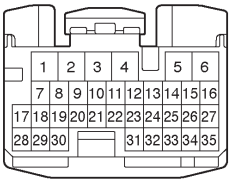

E9*4, 5
Y ECM

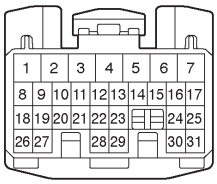

Y

B68152

(a) Disconnect the A13 or A15, E10 or E9 and I14 connectors.

(b) Check the resistance between wire harness side connectors.

Standard:

1AZ–FSE

Tester Connection	Specified Condition
*1 A13–29 (MPX–) – I14–11 (MPX1)	Below 1 Ω
*2 A15–20 (MPX–) – I14–11 (MPX1)	
*1 A13–9 (MPX+) – E10–29 (MPX2)	
*2 A15–10 (MPX+) – E10–29 (MPX2)	

1AZ–FE, 1ZZ–FE, 3ZZ–FE

Tester Connection	Specified Condition
*1 MPX– (A13–29) – MPX1 (I14–11)	Below 1 Ω
*2 MPX– (A15–20) – MPX1 (I14–11)	
*1 MPX+ (A13–9) – MPX2 (E9–29)	
*2 MPX+ (A15–10) – MPX2 (E9–29)	

1CD–FTV

Tester Connection	Specified Condition
*1 MPX– (A13–29) – MPX1 (I14–11)	Below 1 Ω
*2 MPX– (A15–20) – MPX1 (I14–11)	
*1 MPX+ (A13–9) – MPX2 (E9–21)	
*2 MPX+ (A15–10) – MPX2 (E9–21)	

HINT:
*1: Except automatic A/C
*2: Automatic A/C
*3: 1AZ–FSE
*4: 1AZ–FE, 1ZZ–FE, 3ZZ–FE
*5: 1CD–FTV

NG → **REPAIR OR REPLACE HARNESS AND CONNECTOR**

OK

2 CHECK AIR CONDITIONING CONTROL ASSY (A/C ECU) (POWER SOURCE)

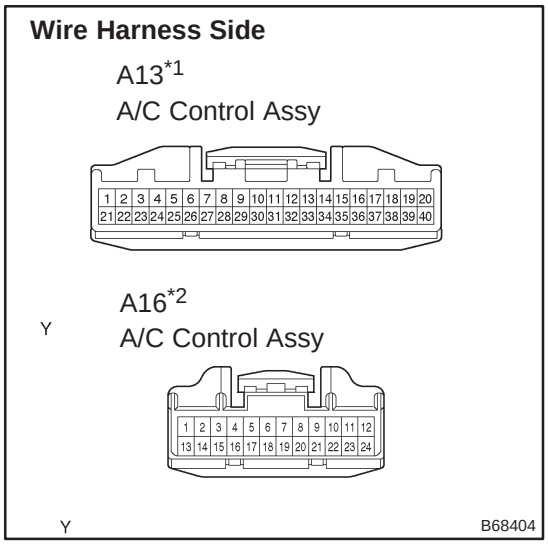

(a) Disconnect the A13 or A16 ECU connector.
(b) Check the voltage between the wire harness side connectors and the body ground.

Standard:

Tester Connection	Specified Condition
*1 A13–2 (+B) – Body ground	10 to 14 V
*2 A16–24 (+B) – Body ground	

*1: Except Automatic A/C
*2: Automatic A/C

NG → **REPAIR OR REPLACE HARNESS AND CONNECTOR**

OK

3 CHECK AIR CONDITIONING CONTROL ASSY (A/C ECU) (GROUND)

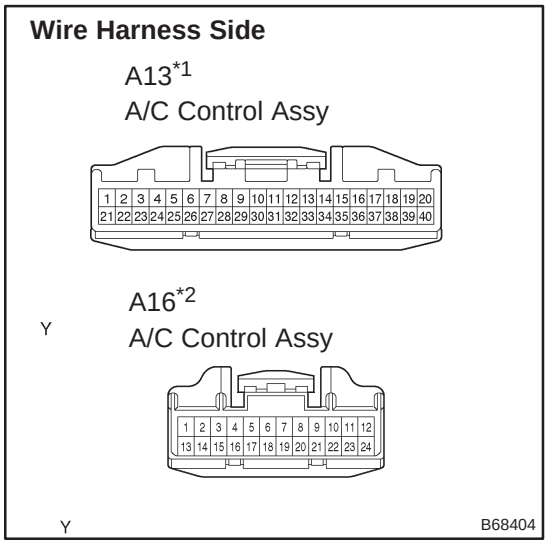

(a) Disconnect the A13 or A16 ECU connector.
(b) Check the voltage between the wire harness side connectors and the body ground.

Standard:

Tester Connection	Specified Condition
*1 A13–40 (GND) – Body ground	10 to 14 V
*2 A16–3 (GND) – Body ground	

*1: Except Automatic A/C
*2: Automatic A/C

NG → **REPAIR OR REPLACE HARNESS AND CONNECTOR**

OK

REPLACE AIR CONDITIONING CONTROL ASSY

DTC	B1269	THEFT DETERRENT ECU COMMUNICATION STOP

CIRCUIT DESCRIPTION

DTC B1269 is output when communication between the theft warning ECU and the combination meter stops for more than 10 seconds.

DTC No.	DTC Detection Condition	Trouble Area
B1269	No communication from theft deterrent ECU for more than 10 seconds	• Theft warning ECU assy • Wire harness

WIRING DIAGRAM

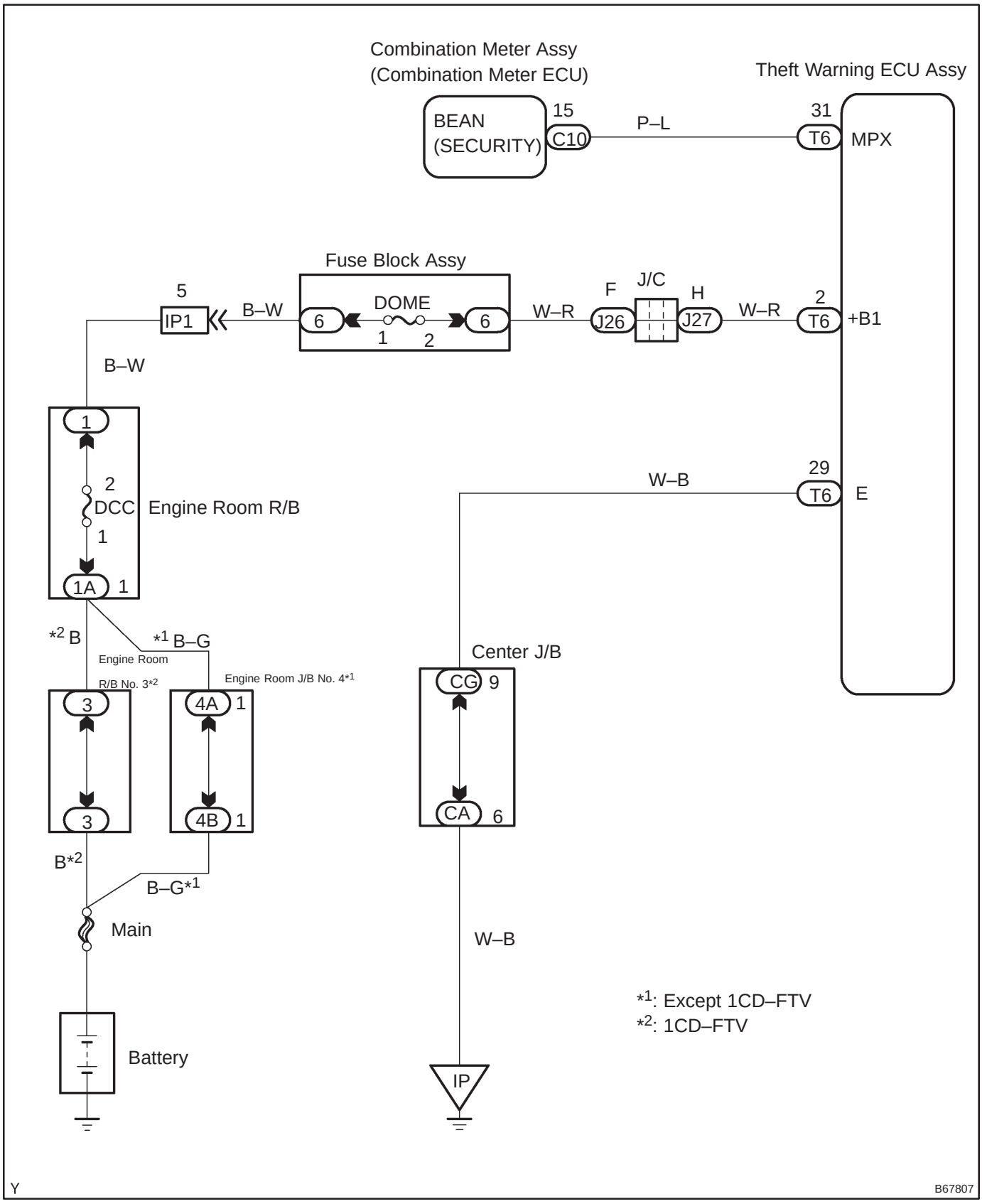

1 CHECK RESISTANCE OF COMMUNICATION LINE

Wire Harness Side

T6
Theft Warning ECU Assy

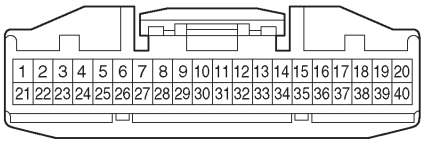

C10
Combination Meter Assy
(Combination Meter ECU)

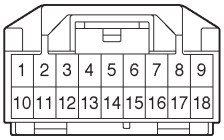

Y

B68155

(a) Disconnect the T6 and C10 ECU connectors.
(b) Check the resistance between wire harness side connectors.

Standard:

Tester Connection	Specified Condition
T6–31 (MPX) – C10–15 (BEAN) (Security)	Below 1 Ω

NG → **REPAIR OR REPLACE HARNESS AND CONNECTOR**

OK

2 CHECK THEFT WARNING ECU ASSY (POWER SOURCE)

Wire Harness Side

T6
Theft Warning ECU Assy

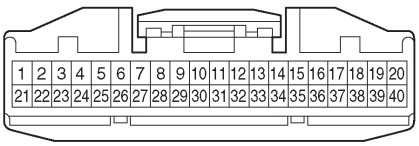

B65849

(a) Disconnect the T6 ECU connector.
(b) Check the voltage between the wire harness side connector and the body ground.

Standard:

Tester Connection	Specified Condition
T6–2 (+B1) – Body ground	10 to 14 V

NG → **REPAIR OR REPLACE HARNESS AND CONNECTOR**

OK

3 CHECK THEFT WARNING ECU ASSY (GROUND)

Wire Harness Side

T6
Theft Warning ECU Assy

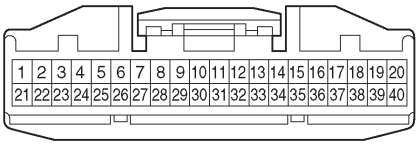

B65849

(a) Disconnect the T6 ECU connector.
(b) Check the resistance between the wire harness side connector and the body ground.

Standard:

Tester Connection	Specified Condition
T6–29 (E) – Body ground	Below 1 Ω

NG → **REPAIR OR REPLACE HARNESS AND CONNECTOR**

OK

REPLACE THEFT WARNING ECU ASSY

DTC	B1271	COMBINATION METER ECU COMMUNICATION STOP

CIRCUIT DESCRIPTION

DTC B1271 is output when communication between the combination meter and integration relay stops for more than 10 seconds.

DTC No.	DTC Detection Condition	Trouble Area
B1271	No communication from Combination meter ECU for more than 10 seconds	• Combination meter assy (Combination meter ECU) • Wire harness

WIRING DIAGRAM

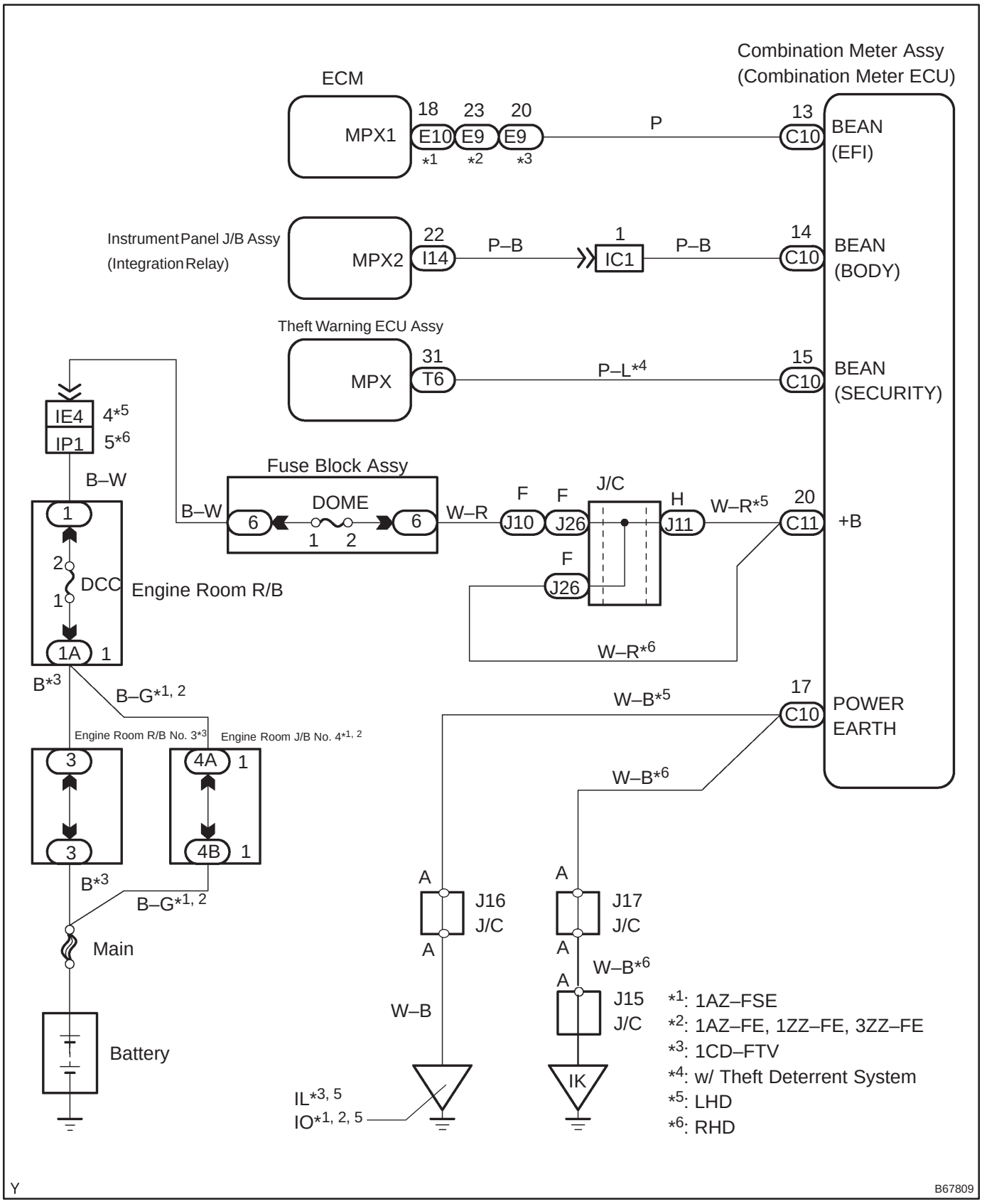

1 CHECK RESISTANCE OF COMMUNICATION LINE

Wire Harness Side

C10
Combination Meter Assy
(Combination Meter ECU)

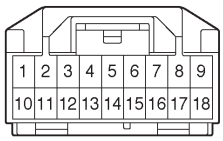

Y

E10*1
ECM

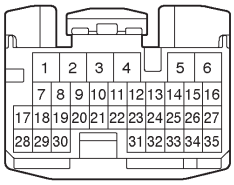

Y

E9*2, 3
ECM

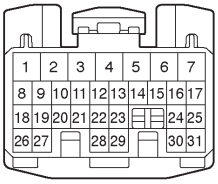

Y

I14
Instrument Panel J/B Assy
(Integration Relay)

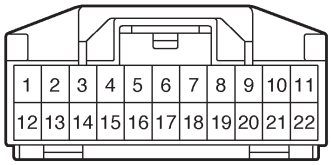

T6
Theft Warning ECU Assy

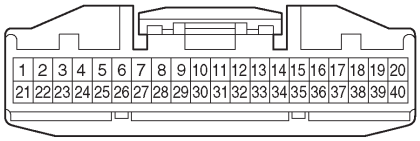

B68156

(a) Disconnect the C10, E10 or E9, T6 and I14 connectors.
(b) Check the resistance between wire harness side connectors.

Standard:

Tester Connection	Specified Condition
*1 C10–13 (BEAN) (EFI) – E10–18 (MPX1)	Below 1 Ω
*2 C10–13 (BEAN) (EFI) – E9–23 (MPX1)	
*3 C10–13 (BEAN) (EFI) – E9–20 (MPX1)	
C10–14 (BEAN) (BODY) – I14–22 (MPX2)	
C10–15 (BEAN) (SECURITY) – T6–31 (MPX)	

HINT:
*1: 1AZ–FSE
*2: 1AZ–FE, 1ZZ–FE, 3ZZ–FE
*3: 1CD–FTV

NG → **REPAIR OR REPLACE HARNESS AND CONNECTOR**

OK

2 CHECK COMBINATION METER ASSY (COMBINATION METER ECU) (POWER SOURCE)

Wire Harness Side
C11
Combination Meter Assy
(Combination Meter ECU)

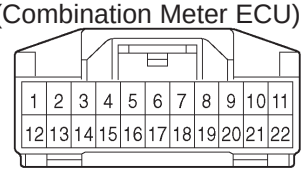

Y B67965

(a) Disconnect the C11 ECU connector.
(b) Check the voltage between the wire harness side connector and the body ground.

Standard:

Tester Connection	Specified Condition
C11–20 (+B) – Body ground	10 to 14 V

NG → **REPAIR OR REPLACE HARNESS AND CONNECTOR**

OK

3 CHECK COMBINATION METER ASSY (COMBINATION METER ECU) (GROUND)

Wire Harness Side
C10
Combination Meter Assy
(Combination Meter ECU)

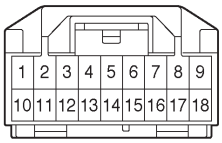

B68158

(a) Disconnect the C10 ECU connector.
(b) Check the resistance between the wire harness side connector and the body ground.

Standard:

Tester Connection	Specified Condition
C10–17 (POWER EARTH) – Body ground	Below 1 Ω

NG → **REPAIR OR REPLACE HARNESS AND CONNECTOR**

OK

REPLACE COMBINATION METER ASSY (COMBINATION METER ECU) (See page 05–1509)

CRUISE CONTROL SYSTEM

HOW TO PROCEED WITH TROUBLESHOOTING

05ADI–04

1	VEHICLE BROUGHT TO WORK SHOP

2	CUSTOMER PROBLEM ANALYSIS (See page 05–1699)

3	CHECK AND CLEAR DTCS (See page 05–1700)

4	PROBLEM SYMPTOM CONFIRMATION

- SYMPTOM DOES NOT OCCUR (GO TO STEP 5)
- SYMPTOM OCCURS (GO TO STEP 6)

5	SYMPTOM SIMULATION (See page 01–22)

6	DTC CHECK (See page 05–1700)

- MALFUNCTION CODE (GO TO STEP 7)
- NORMAL CODE (GO TO STEP 8)

7	DTC CHART (See page 05–1705)

GO TO STEP 9

8	PROBLEM SYMPTOMS TABLE (See page 05–1709)

9	CIRCUIT INSPECTION (See page 05–453)

10	TERMINAL OF ECM (See page 05–1707)

11	INDEMNIFICATION OF PROBLEM

12	REPAIR OR REPLACE

13	CONFIRMATION TEST

END

HINT:
Step 3, 6, 9, 13:
Diagnostic steps permit the use of the hand–held tester.

05ADJ–04

CUSTOMER PROBLEM ANALYSIS CHECK

CRUISE CONTROL SYSTEM Check Sheet

Inspector's name: _____

Customer's Name		**VIN**	
		Production Date	
		Licence No.	
Date of Vehicle Brought in	/ /	**Odometer Reading**	**km Mile**

Condition of Problem Occurrence	**Date of Problem Occurrence**	/ /
	Frequency Problem Occurs?	☐ Continuous ☐ Intermittent (Times a day)
	Vehicle Speed when Problem Occurred	**km Mile**

Symptoms	☐ Auto cancel occurs	● Driving condition ☐ City driving ☐ Freeway ☐ Up hill ☐ Down hill ● After cancel occurred, did the driver activate cruise control again? ☐ Yes ☐ No
	☐ Cancel does not occur	☐ With brake ON ☐ Clutch pedal depressed (M/T) ☐ Except D range shift (A/T) ☐ When control SW turns to CANCEL position
	☐ Cruise control malfunction	☐ Slip to acceleration side ☐ Slip to deceleration side ☐ Hunting occurs ☐ O/D cut off does not occur (A/T) ☐ O/D does not return (A/T)
	☐ Switch malfunction	☐ SET ☐ 'ACCEL' ☐ 'COAST' ☐ RESUME ☐ CANCEL
	☐ CRUISE MAIN indicator light	☐ Remains ON ☐ Does not light up ☐ Blinks

DTC Check	**1st Time**	☐ Normal Code ☐ Malfunction Code (Code)
	2nd Time	☐ Normal Code ☐ Malfunction Code (Code)

056HG–05

PRE–CHECK

1. DIAGNOSIS SYSTEM

(a) Description

ECM controls of the cruise control the function on a vehicle.

Data stored in the cruise control memory and on the DTC can be read from the DLC3 on the vehicle. If CRUISE MAIN indicator light does not come on after the DTC check, there is a malfunction of the cruise control.

Use the hand–held tester or SST to check and solve the problem.

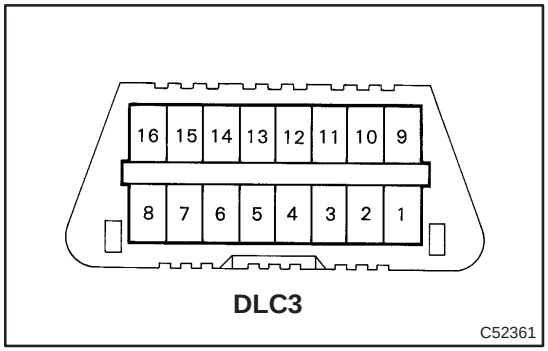

DLC3

(b) Check the DLC3.

The vehicle's ECM uses ISO 9141–2(Euro–OBD)/ISO 14230 (M–OBD) for communication protocol. The terminal arrangement of DLC3 complies with ISO 15031–3 and matches the ISO 9141–2 / ISO 14230 format.

Terminal No.	Connection/SpecifiedCondition	Condition
4	Chassis Ground ↔ Body Ground / 1 Ω or less	Always
7	Bus ⊕ Line / Pulse Generation	DuringCommunication
16	Battery Positive – Body Ground / 9 to 14 V	Always

HINT:

If the display shows "UNABLE TO CONNECT TO VEHICLE" after connecting the hand–held tester to the DLC3 and turning the ignition ON, there is a problem either with the vehicle or with the tool.

- If communication is normal when connecting the tool to another vehicle, inspect the DLC3 on the original vehicle.
- If communication is still not possible when connecting the tool to another vehicle, the problem is probably in the tool itself. Consult the Service Department listed in the tool's instruction manual.

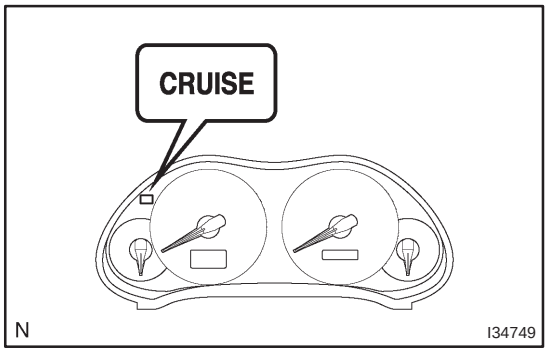

(c) Check the indicator.
(1) Turn the ignition switch to the ON position.
(2) Check that the CRUISE MAIN indicator light comes on when the main switch is ON, and that the indicator light goes off when the main switch is OFF.

HINT:
If there is a problem with the indicator, inspect the cruise main indicator light circuit (See page 05–1722).

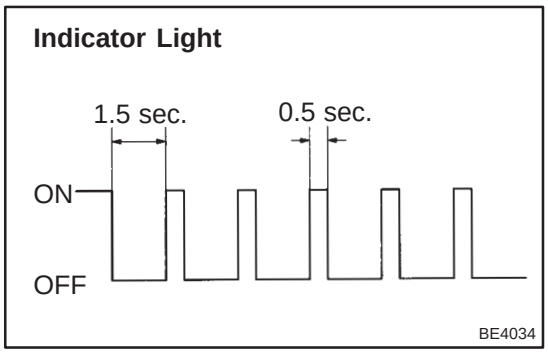

(d) Check the DTC.

HINT:
If a malfunction occurs in the vehicle speed sensors or stop lamp switch assy, etc. during cruise control driving, the ECU actuates AUTO CANCEL of the cruise control and then the CRUISE MAIN indicator light will start to blink, informing the driver of a malfunction. At the same time, data of the malfunction is stored as a diagnostic trouble code, or DTC.

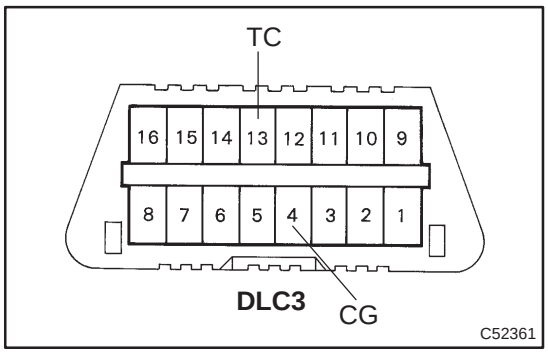

(e) Output of the DTC using diagnosis check wire.
(1) Using SST, connect terminals TC and CG of DLC3.
SST 09843–18040
(2) Turn the ignition switch to the ON position.
(3) Read the DTC on the CRUISE MAIN indicator light.

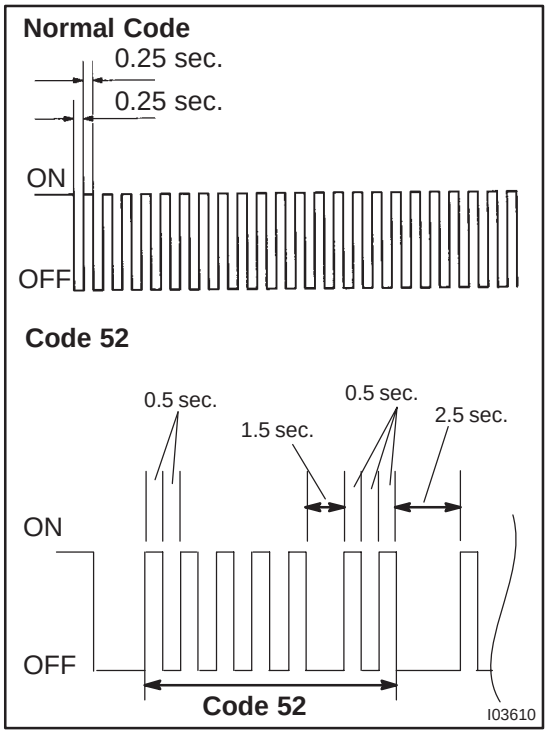

HINT:
If the DTC is not output, inspect the cruise main indicator light circuit (See page 05–1722) and diagnosis circuit (See page 05–1729).
For example, the normal blinking pattern and the blinking pattern for code 52 are shown in the illustration.

2. USING HAND–HELD TESTER

(a) Connect the hand–held tester to the DLC3.
(b) Monitor the ECU data by following the prompts on the tester screen.

HINT:
Hand–held tester has a ”Snapshot” function which records the monitored data.
Refer to the hand–held tester operator’s manual for further details.

3. DATA LIST

HINT:
From the DATA LIST displayed by the the hand–held tester, you can read the value of the switch, the sensor and so on without removing parts. Reading the DATA LIST as the first step to troubleshooting is one way to shorten labor time.

(a) Connect the hand–held tester to the DLC3.
(b) Turn the ignition switch to the ON position.
(c) According to the display on the tester, read the ”DATA LIST”.

Item	Measurement Item / Display (Range)	Normal Condition	Diagnostic Note
VEHICLE SPD	Vehicle speed / min.: 0 km/h (0 mph), max.: 255 km/h (158 mph)	Actual vehicle speed	–
MEMORY SPD	Stored vehicle speed / min.: 36 km/h (22 mph), max.: 200 km/h (124 mph)	Actual stored vehicle speed	–
THROTTLE	Required throttle opening angle / min.: 0°, max.: 125°	Actual required throttle opening	–
CRUISE CONTROL	Cruise control system active condition / ON or OFF	ON : Cruise control activated OFF : Cruise control inactivated	–
MAIN SW (MAIN)	Main SW signal (Main CPU) / ON or OFF	ON : Main SW ON (Pushed in) OFF: Main SW OFF (Pushed out)	”3”
MAIN SW (SUB)	Main SW signal (Sub CPU) / ON or OFF	ON : Main SW ON (Pushed in) OFF: Main SW OFF (Pushed out)	”3”
CCS READY M	Cruise control system standby condition (Main CPU) / ON or OFF	ON – OFF : Change ON/OFF each time Main SW is pushed in.	”1”
CCS READY S	Cruise control system standby condition (Sub CPU) / ON or OFF	ON – OFF : Change ON/OFF each time Main SW is pushed in.	”1”
CCS INDICATOR M	Cruise indicator signal (Main CPU) / ON or OFF	ON : ”CCS READY” ON OFF : ”CCS READY” OFF	”2”
CCS INDICATOR S	Cruise indicator signal (Sub CPU) / ON or OFF	ON : ”CCS READY” ON OFF : ”CCS READY” OFF	”2”
CANCEL SW	CANCEL SW signal / ON or OFF	ON : CANCEL SW ON OFF : CANCEL SW OFF	–
SET/COAST SW	COAST/SET SW signal / ON or OFF	ON : COAST/SET SW ON OFF : COAST/SET SW OFF	–
RES/ACC SW	ACCEL/RES SW signal / ON or OFF	ON : ACCEL/RES SW ON OFF : ACCEL/RES SW OFF	–
STP LIGHT SW2 M	Stop lamp SW signal (Main CPU) / ON or OFF	ON : Brake pedal depressed OFF : Brake pedal released	–
STP LIGHT SW2 S	Stop lamp SW signal (Sub CPU) / ON or OFF	ON : Brake pedal depressed OFF : Brake pedal released	–

STP LIGHT SW1 S	Stop light SW signal (Sub CPU) / ON or OFF	ON : Brake pedal depressed OFF : Brake pedal released	–
SHIFT D POS	PNP SW signal (D position) / ON or OFF	ON : Shift D position OFF : Except shift D position	–

HINT:
”3” is OK but ”1” is NG → ECM failure
”1” is OK but ”2” is NG → DTC output or ECM failure
”3” is OK but cruise indicator does not turn on → CRUISE MAIN indicator or wire harness or ECM failure

4. DTC CLEAR

(a) The following methods will erase the DTCs and freeze frame data.
  (1) The hand–held tester can be used to erase the codes.
  (2) Disconnecting the battery terminals or EFI No.1 fuse can also erase the codes (1AZ–FSE). Disconnecting the battery terminals or EFI the fuse (1CD–FTV).

(b) After completing repairs, the DTC retained in the memory can be cleared by removing the EFI No.1 fuse for 1 minute or more with the ignition switch to the OFF position.

(c) Check that the normal code is displayed after connecting the fuse.

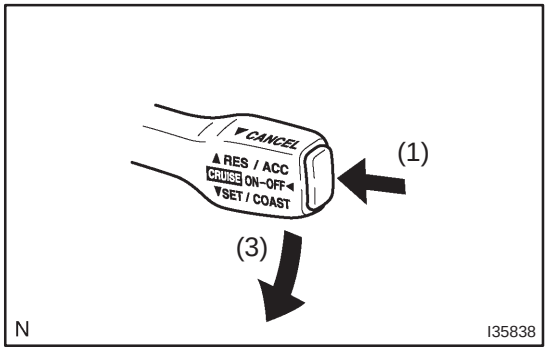

5. PROBLEM SYMPTOM CONFIRMATION (ROAD TEST)

(a) Inspect the SET switch.
  (1) Push the main switch button to ON.
  (2) Drive at a desired speed (40 km/h (25 mph) or higher).
  (3) Push down the control switch to the SET/COAST position.
  (4) After releasing the switch, check that the vehicle cruises at the desired speed.

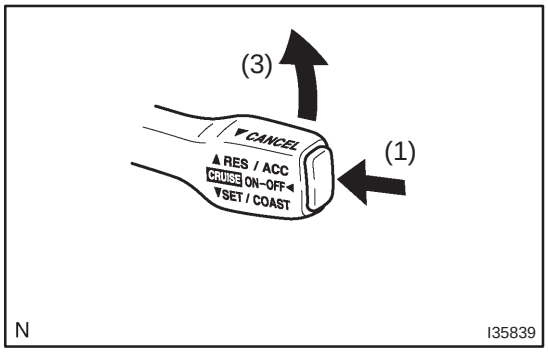

(b) Inspect the ’ACC’ switch.
  (1) Push the main switch button to ON.
  (2) Drive at a desired speed (40 km/h (25 mph) or higher).
  (3) Check that the vehicle speed increases when the control switch is pushed up to RES/ACC, and that the vehicle cruises at the set speed when the switch is released.
  (4) Push the control switch to RES/ACC, and then immediately release it. Check that the vehicle speed increases by about 1.6 km/h (Tap–up function).

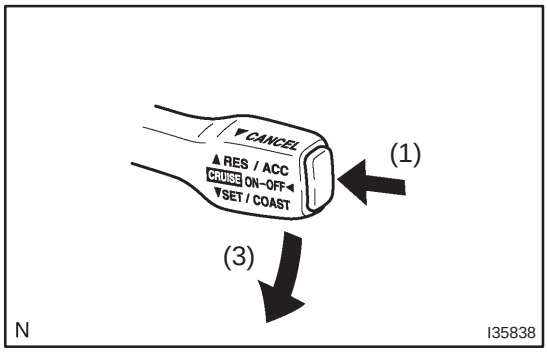

(c) Inspect the 'COAST' switch.
(1) Push the main switch button to ON.
(2) Drive at a desired speed (40 km/h (25 mph) or higher).
(3) Check that the vehicle speed decreases while the control switch is pushed down to SET/COAST, and the vehicle cruises at the set speed when the switch is released.
(4) Push the control switch to SET/COAST, and then immediately release it. Check that the vehicle speed decreases by about 1.6 km/h (Tap–down function).

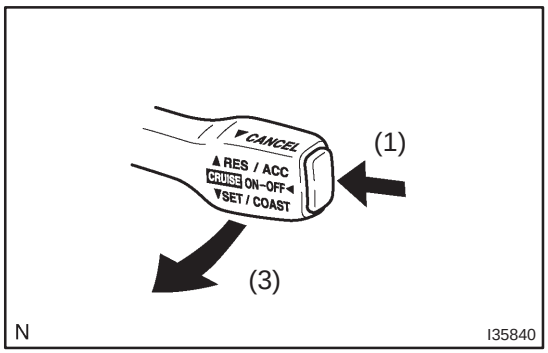

(d) Inspect the CANCEL switch.
(1) Push the main switch button to ON.
(2) Drive at a desired speed (40 km/h (25 mph) or higher).
(3) After doing one of the following, check that the cruise control system is cancelled and that the normal driving mode is resumed.
- Depressing the brake pedal.
- Depressing the clutch pedal (M/T).
- Shifting to any gear besides D (A/T).
- Pushing the main switch button to OFF.
- Pulling the control switch to CANCEL.

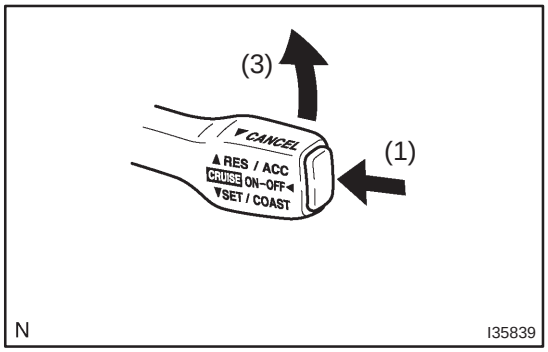

(e) Inspect the RESUME switch.
(1) Push the main switch button to ON.
(2) Drive at a desired speed (40 km/h (25 mph) or higher).
(3) After doing one of the following, check that the cruise control system is cancelled and that the normal driving mode is resumed.
- Depressing the brake pedal.
- Depressing the clutch pedal (M/T).
- Shift to any gear besides D (A/T).
- Pulling the control switch to CANCEL.

(4) After the control switch is press towards RES/ACC at the driving speed of more than 40 km/h (25 mph), check that the vehicle resumes the same speed maintained before the cancellation.

056HH–05

DIAGNOSTIC TROUBLE CODE CHART

If a malfunction code is indicated during the DTC check, check the circuit listed for that code in the table below, and proceed to the applicable page.

DTC No. (See Page)	Circuit Inspection	Trouble Area
P0500/21 (05–1710)	Vehicle Speed Sensor ”A”	• Combination meter assy • Vehicle speed sensor • Vehicle speed sensor circuit • ECM
P0503/23 (05–1710)	Vehicle Speed Sensor ”A” Intermittent/Erratic/High	
P0571/52 (05–1711)	Brake Switch ”A” Circuit	• Stop lamp switch assy • Stop lamp switch assy circuit • ECM
P0607/54 (05–1717)	Control Module Performance	• ECM

05ADK–04

LOCATION

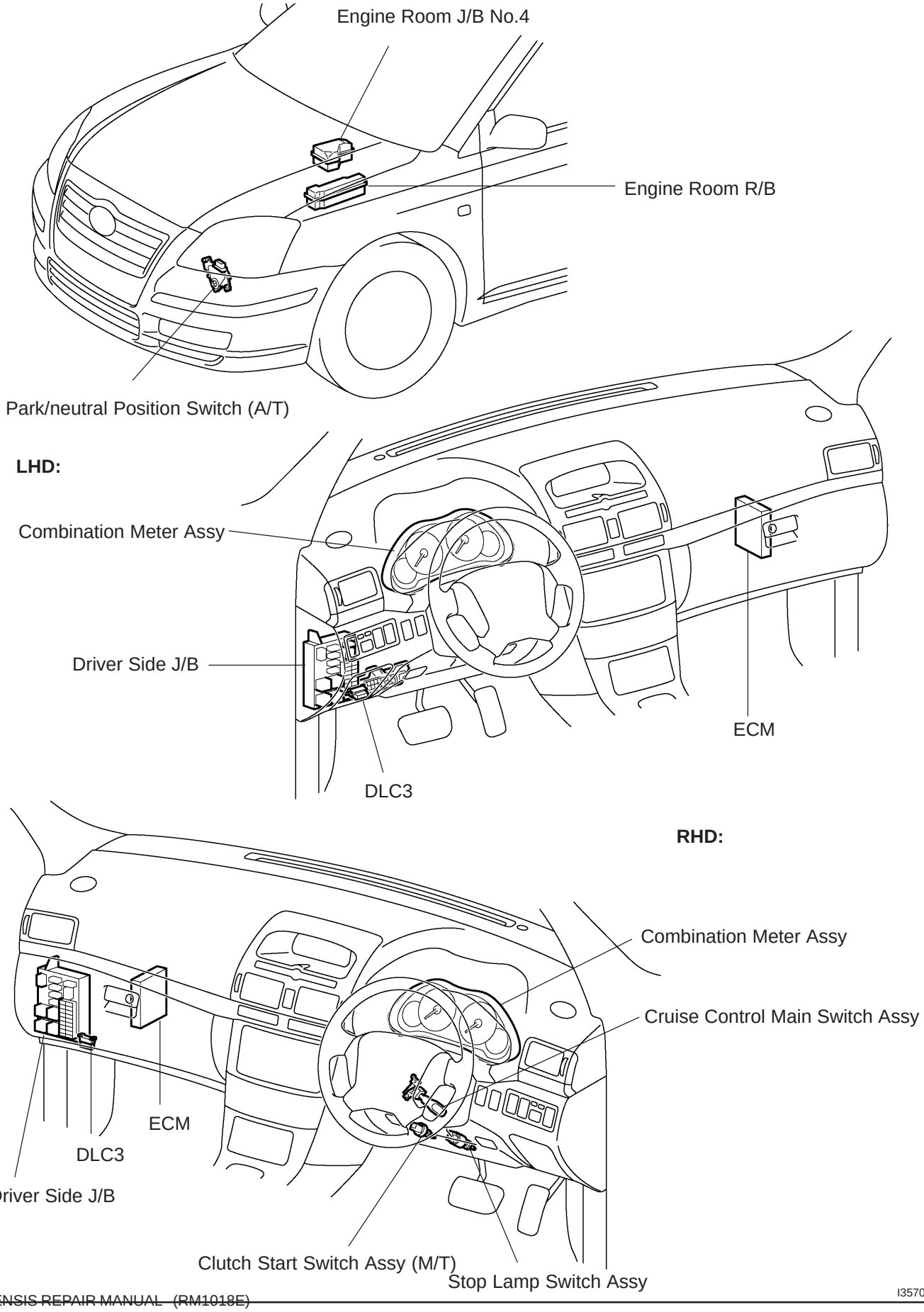

I35700

05ADL–02

TERMINALS OF ECM

1AZ–FSE:

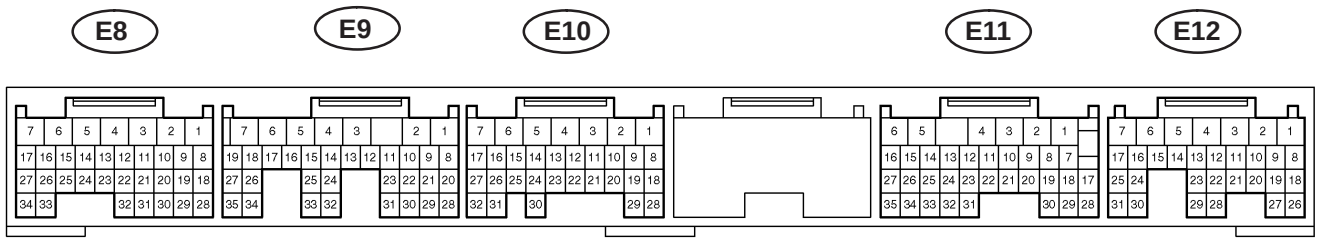

I34746

Symbols (Terminals No.)	Wiring Color	Condition	STD Voltage
TC – E1 (E12–20 – E10–1)	W–L – BR	Ignition switch ON	10 to 14 V
		Ignition switch ON Connect terminals TC and CG of DLC3	Below 2 V
STP – E1 (E11–19 – E10–1)	G–W – BR	Ignition switch ON Depress brake pedal	10 to 14 V
		Ignition switch ON Release brake pedal	Below 1 V
IGSW – E1 (E12–9 – E10–1)	B–W – BR	Ignition switch ON Cruise control main switch ON	0 to 3 V
		Ignition switch ON Cruise control main switch OFF	9 to 14 V
ST1– – E1 (E11–12 – E10–1)	G–W – BR	Ignition switch ON Depress brake pedal	Below 1 V
		Ignition switch ON Release brake pedal	10 to 14 V
CCS – E1 (E11–24 – E10–1)	W – BR	Ignition switch ON	9 to 14 V
		Ignition switch ON CANCEL switch hold ON	6 to 10.1 V
		Ignition switch ON SET/COAST switch hold ON	4 to 7.1 V
		Ignition switch ON RES/ACC switch hold ON	2.1 to 4 V
		Ignition switch ON MAIN switch hold ON	Below 1 V

1CD–FTV:

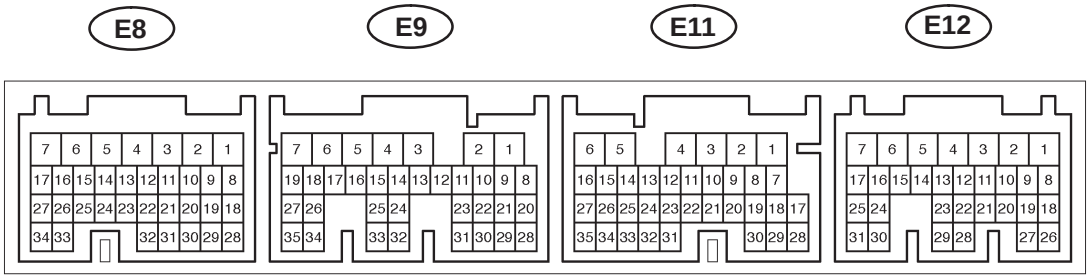

Symbols (Terminals No.)	Wiring Color	Condition	STD Voltage
STP – E1 (E11–19 – E9–7)	G–W – BR	Ignition switch ON Depress brake pedal	10 to 14 V
		Ignition switch ON Release brake pedal	Below 1 V
ST1– – E1 (E11–12 – E9–7)	G–W – BR	Ignition switch ON Depress brake pedal	Below 1 V
		Ignition switch ON Release brake pedal	10 to 14 V
CCS – E1 (E11–24 – E9–7)	W – BR	Ignition switch ON	9 to 14 V
		Ignition switch ON CANCEL switch hold ON	6 to 10.1 V
		Ignition switch ON SET/COAST switch hold ON	4 to 7.1 V
		Ignition switch ON RES/ACC switch hold ON	2.1 to 4 V
		Ignition switch ON MAIN switch hold ON	Below 1 V
M/T: D – E1 (E11–10 – E9–7)	LG–B – BR	Ignition switch ON Depress clutch pedal	Below 1 V
		Ignition switch ON Release clutch pedal	10 to 14 V
TC – E1 (E12–11 – E9–7)	W–L – BR	Ignition switch ON	10 to 14 V
		Ignition switch ON Connect terminals TC and CG of DLC3	Below 2 V

056HK–05

PROBLEM SYMPTOMS TABLE

If a normal code is displayed during the DTC check but the problem still occurs, check the circuits for each problem symptom in the order given in the table below and proceed to the related troubleshooting page.

Symptom	Suspect Area	See page
Main switch cannot be turned ON. (Cruise indicator light in combination meter is not lit.)	1. Cruise control switch circuit 2. CRUISE MAIN indicator light circuit 3. ECM	05–1718 05–1722 01–32
Setting of vehicle speed cannot be done. (Although indicator light in combination meter is lit when the main switch is turned ON, they go off when vehicle speed is set.)	1. Cruise control switch circuit 2. ECM	05–1718 01–32
Setting cannot be done. (Indicator light in combination meter is lit when the main switch is turned ON and they remain ON while setting.)	1. Cruise control switch circuit 2. Stop lamp switch circuit 3. Combination meter system 4. ECM	05–1718 05–1711 71–1 01–32
While the vehicle is driving with cruise control, the set control is canceled. (Indicator light and CRUISE remain ON.)	1. Cruise control switch circuit 2. Vehicle speed sensor circuit 3. Stop lamp switch circuit 4. CRUISE MAIN indicator light circuit 5. ECM	05–1718 05–1710 05–1711 05–1722 01–32
Hunting (Speed is not constant.)	1. Vehicle speed sensor circuit 2. ECM	05–1710 01–32
Setting cannot be cancelled. (When Coast, Acceleration, Resume, Set speed change and Control switch are operated.)	1. Cruise control switch circuit 2. CRUISE MAIN indicator light circuit 3. ECM	05–1718 05–1722 01–32
DTC is not output, or is output when should not be.	1. Diagnosis circuit 2. CRUISE MAIN indicator light circuit 3. ECM	05–1729 05–1722 01–32
CRUISE MAIN indicator light does not light up.	1. Cruise control switch circuit 2. CRUISE MAIN indicator light circuit 3. ECM 4. Combination meter	05–1718 05–1722 01–32 71–1

DTC	P0500/21	VEHICLE SPEED SENSOR ”A”

DTC	P0503/23	VEHICLE SPEED SENSOR ”A” INTERMITTENT/ERRATIC/HIGH

CIRCUIT DESCRIPTION

See page 05–453. (1AZ–FSE) See page 05–640. (1CD–FTV)

DTC No.	DTC Detection Condition	Trouble Area
P0500/21	The malfunction code is output when the vehicle speed signal from the vehicle speed sensor is cut for 0.14 sec. or more while cruise control is in operation.	• Combination meter • Vehicle speed sensor • Vehicle speed sensor • ECM
P0503/23	Momentary interruption and noise malfunction codes are output when a rapid change of vehicle speed occurs while cruise control is in operation.	

WIRING DIAGRAM

See page 05–453. (1AZ–FSE) See page 05–640. (1CD–FTV)

INSPECTION PROCEDURE

See page 05–453. (1AZ–FSE) See page 05–640. (1CD–FTV)

DTC P0571/52 BRAKE SWITCH ”A” CIRCUIT

CIRCUIT DESCRIPTION

When the brake pedal is depressed, the stop lamp switch assy sends a signal to the ECM. When the ECM receives this signal, it cancels the cruise control.
A fail–safe function is provided so that it functions normally, even if there is a malfunction in the stop lamp signal circuit.
The cancel condition occurs when battery positive voltage is supplied to terminal STP.
When the brake is on, battery positive voltage is normally applied through the STOP fuse and the stop lamp switch assy to terminal STP of the ECM, and the ECM turns the cruise control OFF.
If the harness connected to terminal STP has an open circuit, terminal STP will have battery positive voltage and the cruise control will be turned OFF.

DTC No.	DTC Detection Condition	Trouble Area
P0571/52	The malfunction code is output when the voltage of the STP terminal and that of the ST1 terminal on the ECM are less than 1 V for 0.5 sec. or more. When the following conditions are realized, a malfunction is detected. • The STP terminal voltage is less than 1 V. • The ST1 terminal voltage is less than 1 V. • For more than 0.5 sec. or more.	• Stop lamp switch assy • Stop lamp switch assy circuit • ECM

WIRING DIAGRAM

1AZ–FSE

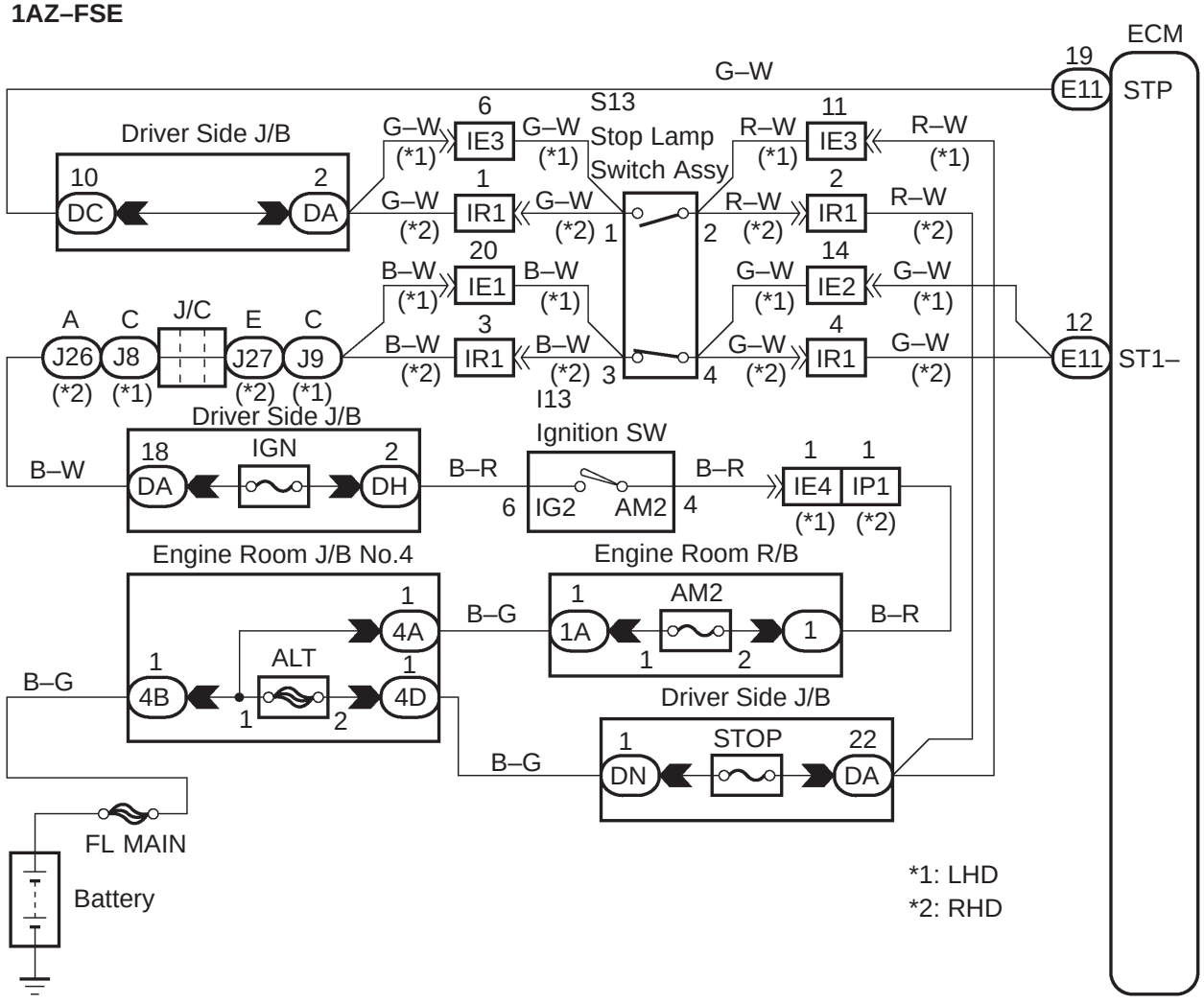

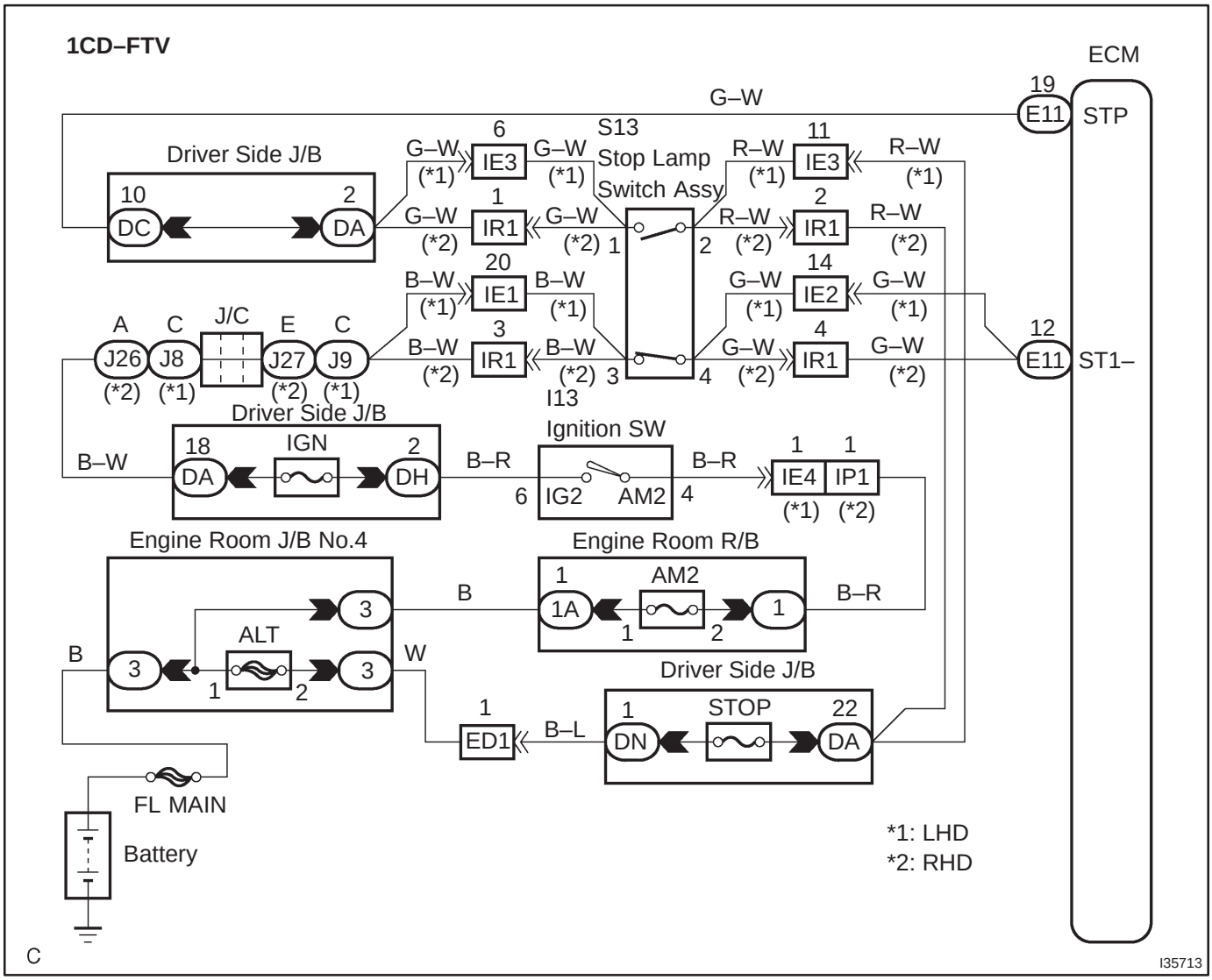
1CD–FTV
ECM
19
E11
STP
G–W
Driver Side J/B
10
DC
2
DA
G–W
(*1)
6
IE3
G–W
(*1)
S13
Stop Lamp
Switch Assy
R–W
(*1)
11
IE3
R–W
(*1)
G–W
(*2)
1
IR1
G–W
(*2)
1
2
R–W
(*2)
2
IR1
R–W
(*2)
B–W
(*1)
20
IE1
B–W
(*1)
G–W
(*1)
14
IE2
G–W
(*1)
A
J26
(*2)
C
J8
(*1)
J/C
E
J27
(*2)
C
J9
(*1)
B–W
(*2)
3
IR1
B–W
(*2)
3
4
G–W
(*2)
4
IR1
G–W
(*2)
12
E11
ST1–
I13
Driver Side J/B
Ignition SW
B–W
18
DA
IGN
2
DH
B–R
6
IG2
AM2
4
B–R
1
IE4
(*1)
1
IP1
(*2)
Engine Room J/B No.4
Engine Room R/B
3
B
1
1A
AM2
1
2
B–R
B
3
ALT
1
2
3
W
Driver Side J/B
1
ED1
B–L
1
DN
STOP
22
DA
FL MAIN
Battery
*1: LHD
*2: RHD
C
I35713

INSPECTION PROCEDURE

HINT:

In case of using the hand–held tester, start the inspection from step1, and in case of not using the hand–held tester, start from step 2.

1	READ VALUE OF HAND–HELD TESTER

(a) Connect the hand–held tester to the DLC3.
(b) Turn the ignition switch to the ON position and turn the hand–held tester main switch ON.
(c) Select the item ”STOP LIGHT SW” in the DATA LIST and read the displayed value.

Item	Measurement Item / Display (Range)	Normal Condition	Diagnostic Note
STP LIGHT SW2 M	Stop lamp SW signal (Main CPU) / ON or OFF	ON : Brake pedal depressed OFF : Brake pedal released	–
STP LIGHT SW2 S	Stop lamp SW signal (Sub CPU) / ON or OFF	ON : Brake pedal depressed OFF : Brake pedal released	–

Standard:
Brake pedal depressed: OK
Brake pedal released: OFF

NG → **Go to step 2**

OK

PROCEED TO NEXT CIRCUIT INSPECTION SHOWN ON PROBLEM SYMPTOMS TABLE

2	INSPECT STOP LAMP SWITCH OPERATION

(a) Check that the stop lamp lights up when brake pedal is depressed, and goes off when the brake pedal is released.

NG → **INSPECT STOP LAMP SWITCH CIRCUIT**

OK

3 INSPECT STOP LAMP SWITCH ASSY

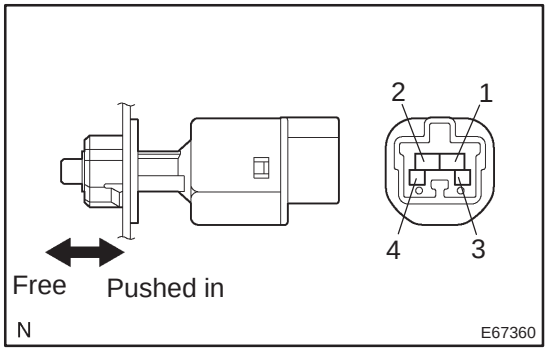

(a) Disconnect the stop lamp switch assy connector.
(b) Measure the resistance according to the value(s) in the table below.

Standard:

Switch condition	Tester connection	Specification
Switch pin free	1 – 2	1 Ω or less
Switch pin free	3 – 4	10 kΩ or higher
Switch pin pushed in	1 – 2	10 kΩ or higher
Switch pin pushed in	3 – 4	1 Ω or less

NG → **REPLACE STOP LAMP SWITCH ASSY**

OK

4 INSPECT ECM

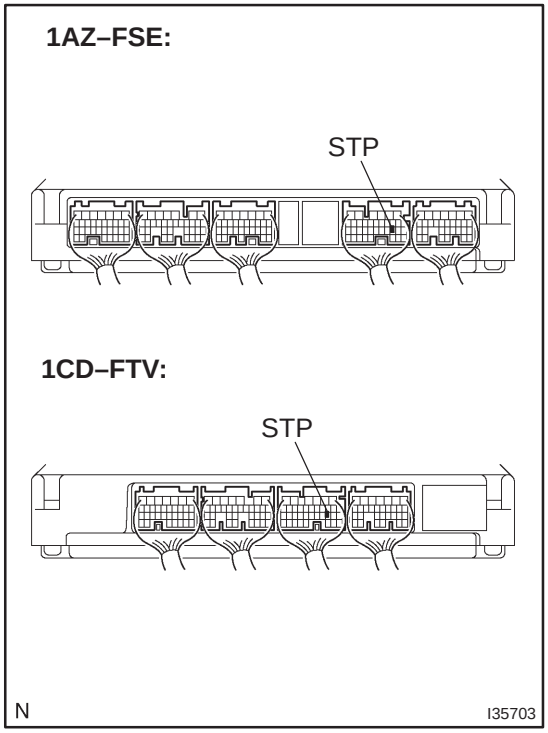

(a) Remove the ECM with connectors.
(b) Turn the ignition switch to the ON position.
(c) Measure the voltage between terminal STP of ECM connector and body ground when the brake pedal is depressed and released.

Standard:

Pedal condition	Tester connection	Specification
Depressed	STP (E11–19) – Body ground	10 to 14 V
Released	STP (E11–19) – Body ground	1 V or less

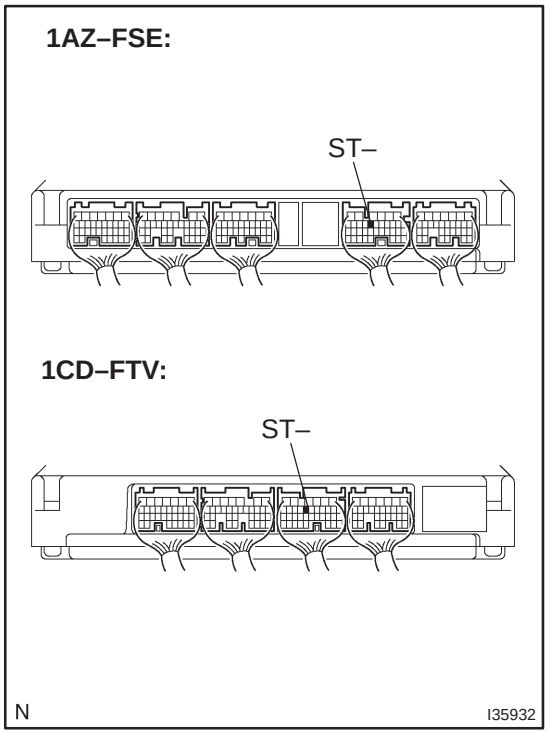

(d) Measure the voltage between terminal ST1– of ECM connector and body ground when the brake pedal is depressed and released.

Standard:

Pedal condition	Tester connection	Specification
Depressed	ST– (E11–12) – Body ground	1 V or less
Released	ST– (E11–12) – Body ground	10 to 14 V

NG → **REPLACE ECM (See page 01–32)**

OK

REPAIR OR REPLACE HARNESS OR CONNECTOR

DTC	P0607/54	CONTROL MODULE PERFORMANCE

CIRCUIT DESCRIPTION

This DTC indicates the internal abnormalities of ECM.

DTC No.	Detection Item	Trouble Area
P0607/54	The ECM has a supervisory CPU and control ECU inside. When each input STP signal is different for 0.15 sec. or more, the malfunction code is output. The malfunction code is output after 0.4 sec. have passed from the time the cruise cancel input signal (STP input) is input into the ECM. HINT: • When a malfunction code is detected, the fail safe must be kept on until the ignition switch is turned off.	• ECM

INSPECTION PROCEDURE

1	**REPLACE ECM (See page 01–32)**

CRUISE CONTROL SWITCH CIRCUIT

CIRCUIT DESCRIPTION

This circuit carries the SET/COAST, RES/ACC and CANCEL signals (each voltage) to the ECM.

WIRING DIAGRAM

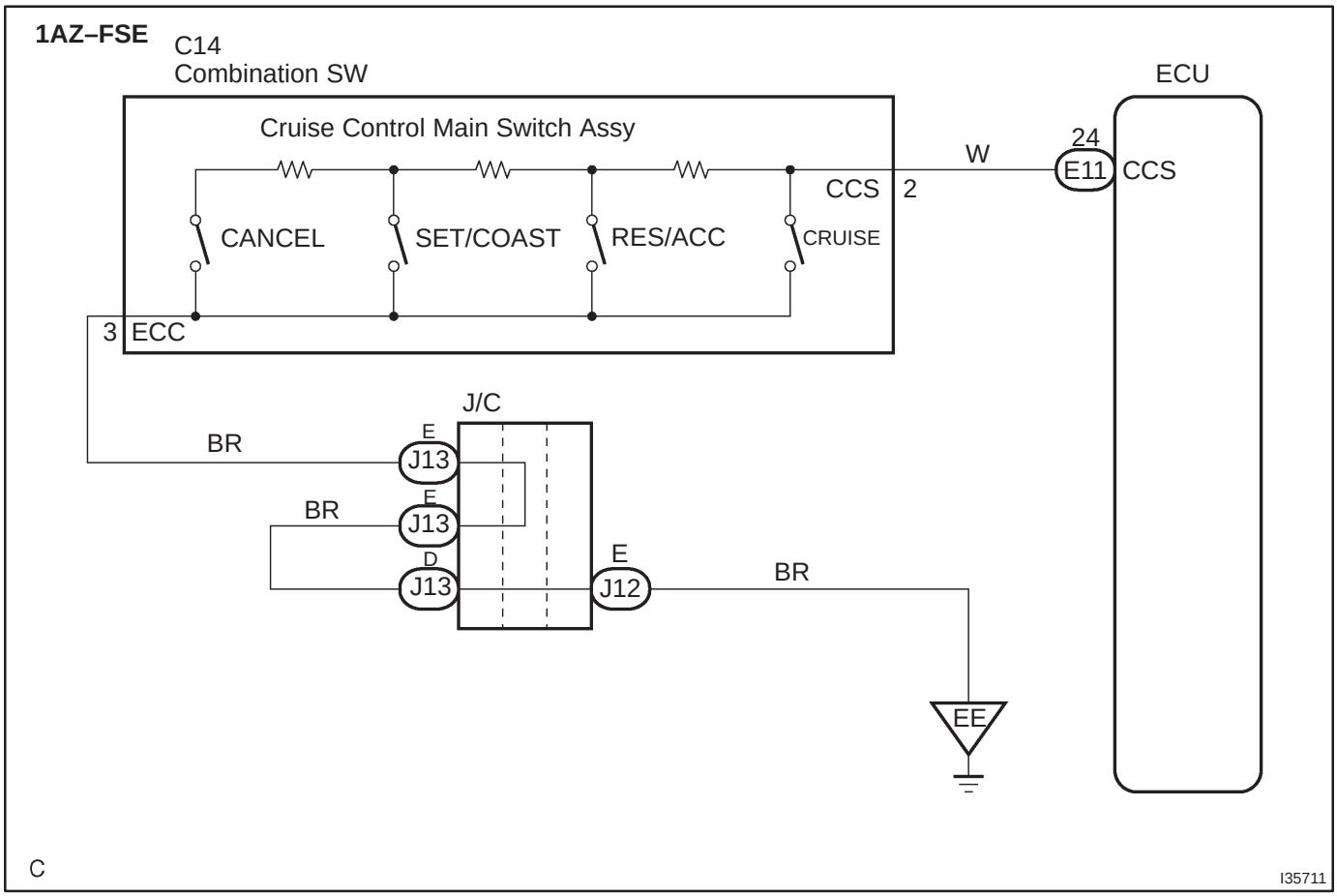

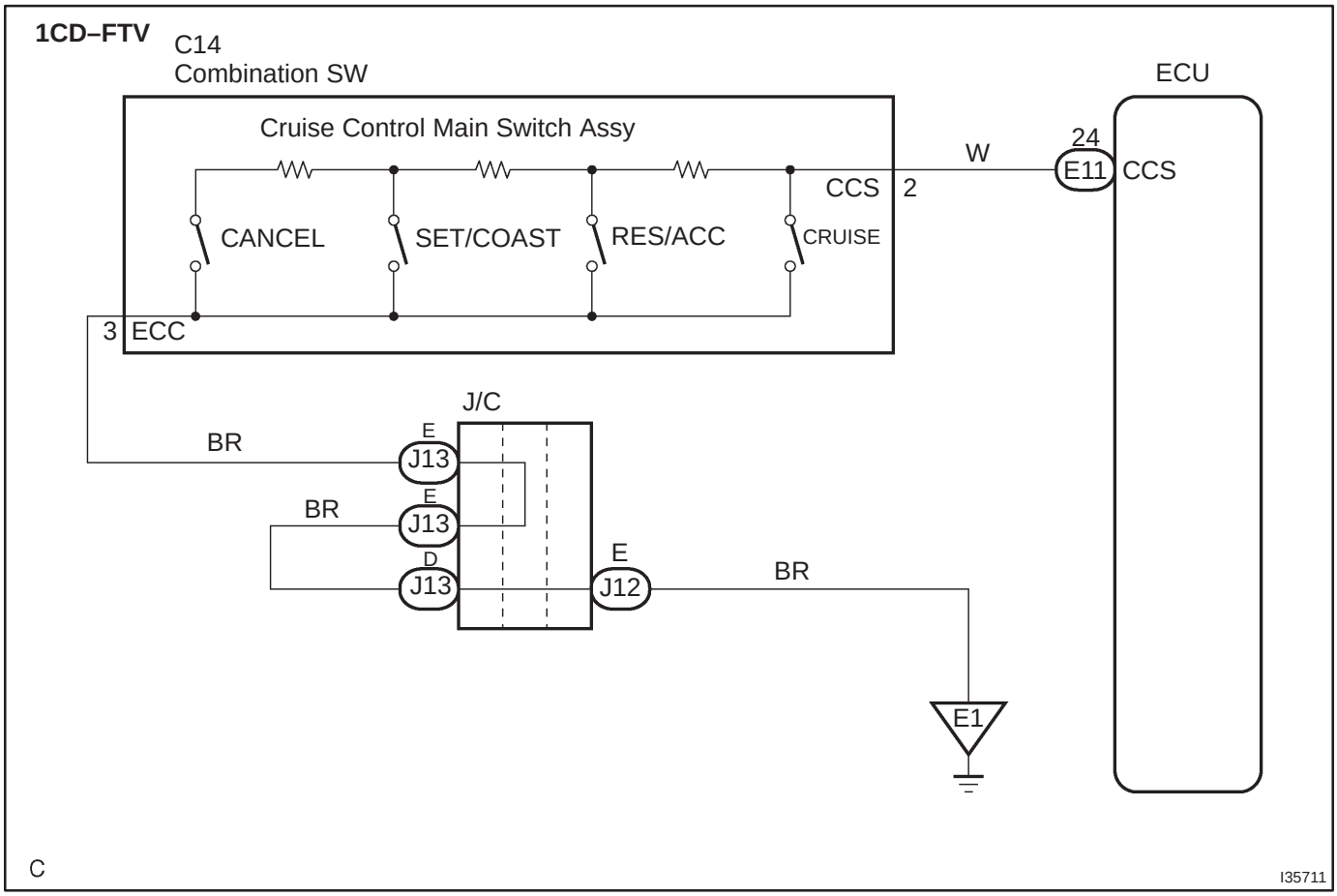
1CD–FTV
C14
Combination SW
Cruise Control Main Switch Assy
CANCEL
SET/COAST
RES/ACC
CRUISE
CCS
2
3
ECC
W
ECU
24
E11
CCS
J/C
E
J13
BR
E
J13
BR
D
J13
E
J12
BR
E1
C
I35711

INSPECTION PROCEDURE

HINT:
In case of using the hand–held tester, start the inspection from step 1, and in case of not using the hand–held tester, start from step 2.

1	READ VALUE OF HAND–HELD TESTER

(a) Connect the hand–held tester to the DLC3.
(b) Turn the ignition switch to the ON position, and turn the hand–held tester main switch ON.
(c) Select the item ”CCS READY” in the DATA LIST and read its prompts displayed on the hand–held tester.

Item	Measurement Item / Display (Range)	Normal Condition	Diagnostic Note
CCS READY M	Cruise control system standby condition (Main CPU) / ON or OFF	ON – OFF : Change ON/OFF each time Main SW is pushed in.	”1”
CCS READY S	Cruise control system standby condition (Sub CPU) / ON or OFF	ON – OFF : Change ON/OFF each time Main SW is pushed in.	”1”

NG → **Go to step 2**

OK

PROCEED TO NEXT CIRCUIT INSPECTION SHOWN ON PROBLEM SYMPTOMS TABLE

2 INSPECT CRUISE CONTROL MAIN SWITCH ASSY

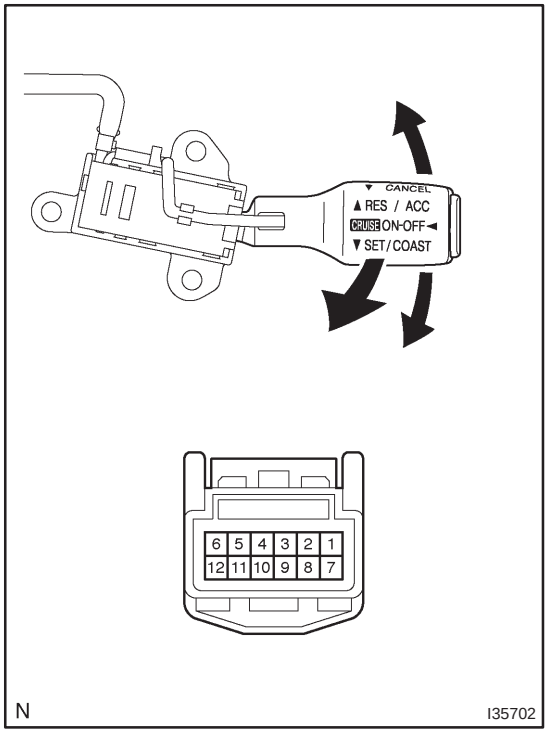

(a) Remove the horn button assy.
(b) Disconnect the cruise control main switch connector.
(c) Measure the resistance according to the value(s) in the table below.

Standard:

Switch condition	Tester connection	Resistance(Ω)
Neutral	2 – 3	∞ (No continuity)
RES/ACC	2 – 3	210 to 270
SET/COAST	2 – 3	560 to 700
CANCEL	2 – 3	1,380 to 1,700

(d) Measure the resistance according to the value(s) in the table below.

Standard:

Switch condition	Tester connection	Specification
OFF	2 – 3	10 kΩ or higher
ON	2 – 3	1 Ω or less

HINT:
When malfunction is found with the cruise control main switch assy, replace the steering wheel assy.

NG → **REPLACE STEERING WHEEL ASSY**

OK

3 CHECK HARNESS AND CONNECTOR(CRUISE CONTROL MAIN SWITCH, BODY GROUND – ECM)

(a) Disconnect the cruise control switch connector and ECM connector.
(b) Measure the resistance according to the value(s) in the table below.

Standard:

Tester connection	Condition	Specification
CCS (S14 – 2) – CCS (E11 – 24)	Always	1 Ω or less

(c) Measure the resistance according to the value(s) in the table below.

Standard:

Tester connection	Condition	Specification
CCS (E11 – 24) – Body ground	Always	10 kΩ or higher

NG → **REPAIR OR REPLACE HARNESS OR CONNECTOR**

OK

PROCEED TO NEXT CIRCUIT INSPECTION SHOWN ON PROBLEM SYMPTOMS TABLE (See page 05–1709)

CRUISE MAIN INDICATOR LIGHT CIRCUIT

CIRCUIT DESCRIPTION

When the cruise control main switch is turned off, the cruise control does not operate.

WIRING DIAGRAM

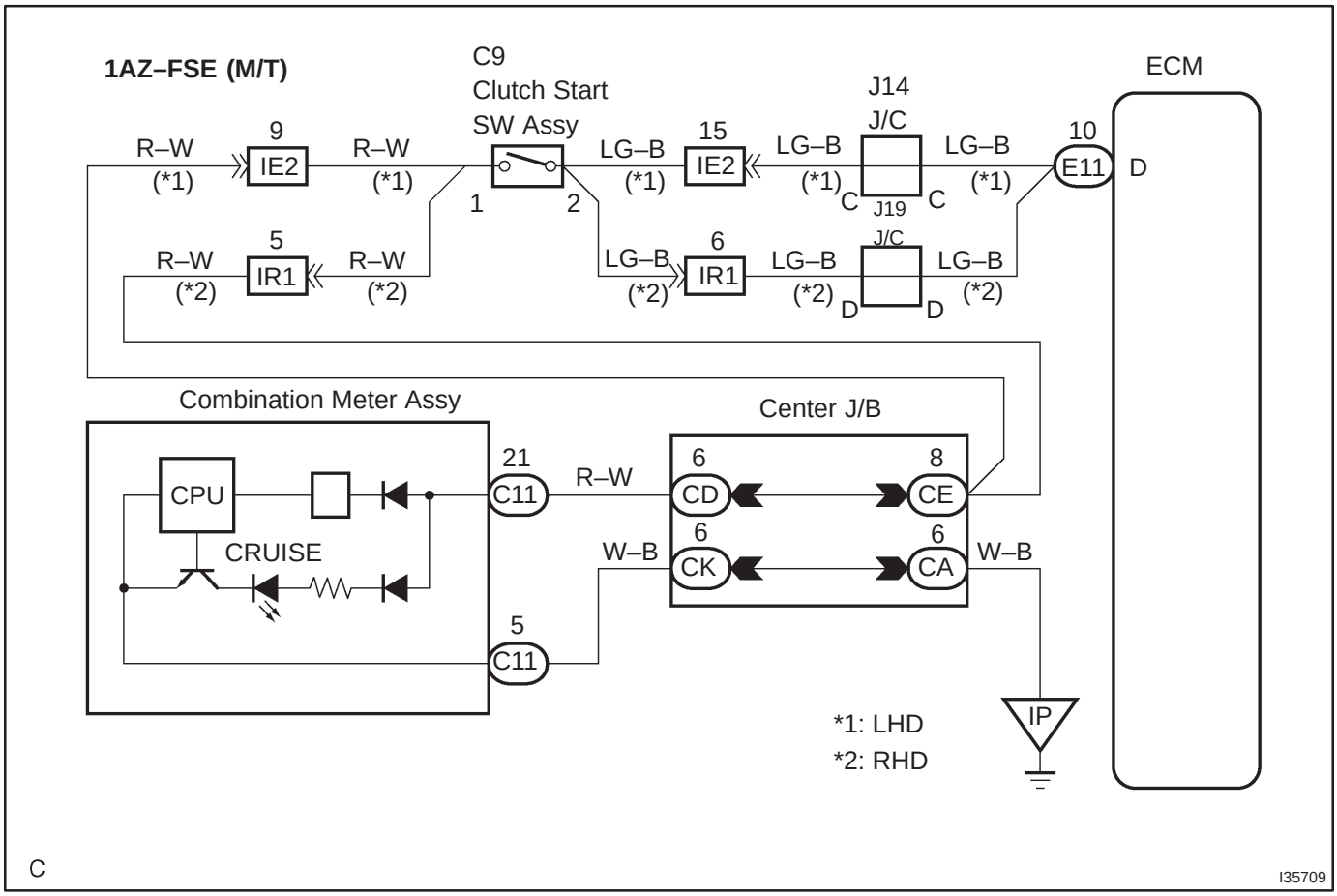

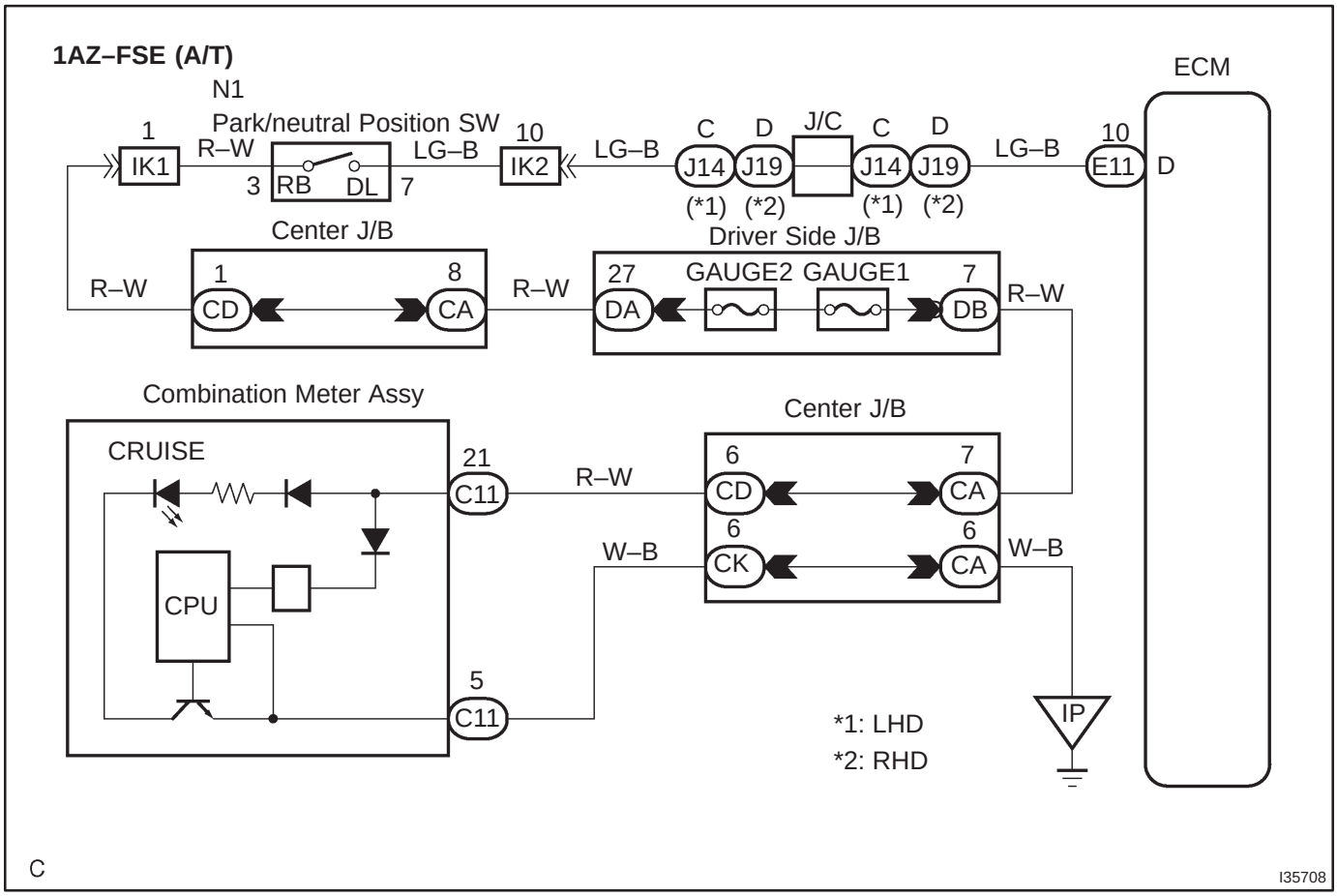
1AZ–FSE (A/T)
N1
Park/neutral Position SW
ECM
1
IK1
R–W
3
RB
DL
7
10
IK2
LG–B
LG–B
C
D
J/C
C
D
J14
J19
J14
J19
(*1)
(*2)
(*1)
(*2)
LG–B
10
E11
D
Center J/B
Driver Side J/B
R–W
1
CD
8
CA
R–W
27
DA
GAUGE2
GAUGE1
7
DB
R–W
Combination Meter Assy
Center J/B
CRUISE
21
C11
R–W
6
CD
7
CA
6
CK
6
CA
W–B
W–B
CPU
5
C11
*1: LHD
*2: RHD
IP
C
I35708

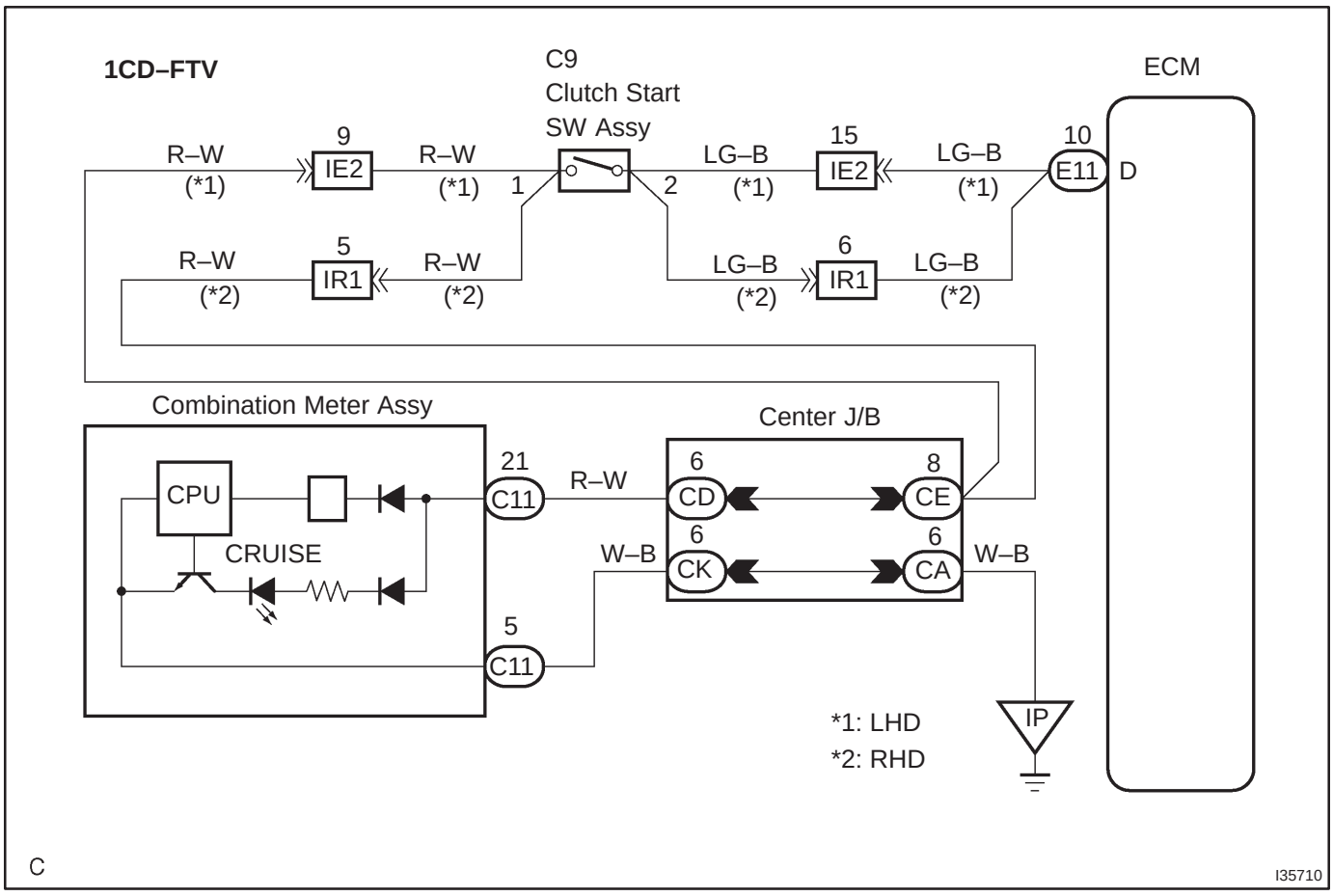
1CD–FTV
C9
Clutch Start
SW Assy
ECM
R–W
(*1)
9
IE2
R–W
(*1)
1
2
LG–B
(*1)
15
IE2
LG–B
(*1)
10
E11
D
R–W
(*2)
5
IR1
R–W
(*2)
LG–B
(*2)
6
IR1
LG–B
(*2)
Combination Meter Assy
Center J/B
CPU
CRUISE
21
C11
R–W
6
CD
8
CE
6
CK
6
CA
W–B
W–B
5
C11
*1: LHD
*2: RHD
IP
C
I35710

INSPECTION PROCEDURE

HINT:

In case of using the hand–held tester, start the inspection from step 1, and in case of not using the hand–held tester, start from step 2.

1	READ VALUE OF HAND–HELD TESTER

(a) Connect the hand–held tester to the DLC3.
(b) Turn the ignition switch to the ON position, and turn the hand–held tester main switch ON.
(c) Select the item ”CCS READY” in the DATA LIST and read its prompts displayed on the hand–held tester.

Item	Measurement Item / Display (Range)	Normal Condition
CCS READY M	Cruise control system standby condition (Main CPU) / ON or OFF	ON ⇔ OFF: Change ON/OFF each time Main SW is pushed in.
CCS READY S	Cruise control system standby condition (Sub CPU) / ON or OFF	ON ⇔ OFF: Change ON/OFF each time Main SW is pushed in.

NG → **PROCEED TO NEXT CIRCUIT INSPECTION SHOWN ON PROBLEM SYMPTOMS TABLE (See page 05–1709)**

OK

2	INSPECT COMBINATION METER ASSY

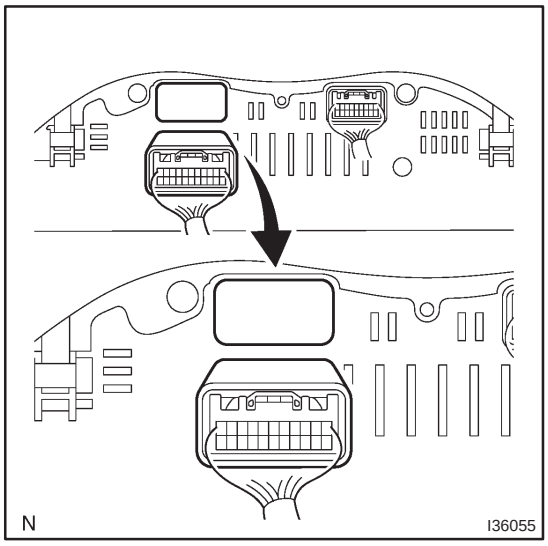

(a) Disconnect the C11connector from combination meter assy.
(b) Measure voltage according to the value(s) in the table below.

Standard:

Tester Connection	Specified Condition
Terminal 21 (C11) – Body ground	10 to 14 V

Result:

OK	A
NG (M/T)	B
NG (A/T)	C

B → **Go to step 4**

C → **Go to step 7**

A

3 INSPECT COMBINATION METER ASSY

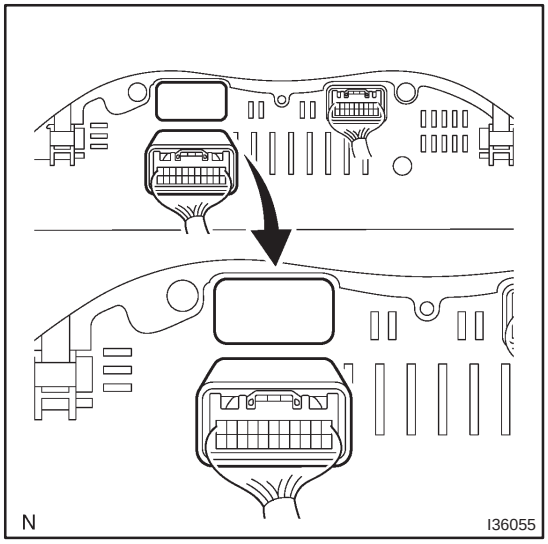

(a) Disconnect the C11 connector from the combination meter.

(b) Measure the resistance according to the value(s) in the table below.

Standard:

Tester Connection	Specified Condition
Terminal 5 (C11) – Body ground	10 kΩ or higher

NG → **REPAIR OR REPLACE HARNESS OR CONNECTOR**

OK

REPAIR OR REPLACE COMBINATION METER ASSY

4 INSPECT CLUTCH START SWITCH ASSY

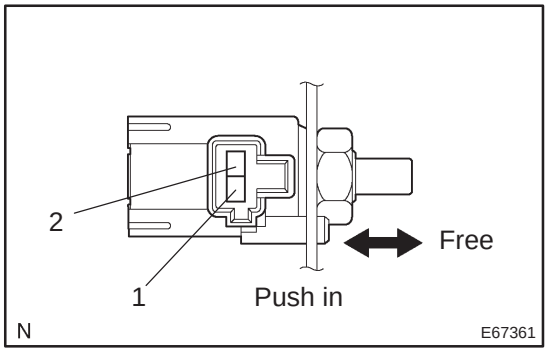

(a) Disconnect the clutch start switch assy connector.

(b) Measure the resistance according to the value(s) in the table below.

Standard:

Switch condition	Tester connection	Specification
Switch pin free	1 – 2	10 kΩ or higher
Switch pin pushed in	1 – 2	1 Ω or less

NG → **INSPECT CLUTCH START SWITCH ASSY**

OK

5	CHECK HARNESS AND CONNECTOR(COMBINAITION METER ASSY – CLUTCH START SWITCH ASSY)

(a) Disconnect the combination meter connector and clutch start switch connector.
(b) Measure the resistance according to the value(s) in the table below.
Standard:

Tester connection	Condition	Specification
Combination meter (C11–21) – Clutch start switch (C9–1)	Always	1 Ω or less

(c) Measure the resistance according to the value(s) in the table below.
Standard:

Tester connection	Condition	Specification
Clutch start switch (C9–1) – Body ground	Always	10 kΩ or higher

NG → **REPAIR OR REPLACE HARNESS OR CONNECTOR**

OK

6	CHECK HARNESS AND CONNECTOR(CLUTCH START SWITCH ASSY – ECM)

(a) Disconnect the clutch start switch connector and ECM connector.
(b) Measure the resistance according to the value(s) in the table below.
Standard:

Tester connection	Condition	Specification
Clutch start switch (C9–2) – D (E11–10)	Always	1 Ω or less

(c) Measure the resistance according to the value(s) in the table below.
Standard:

Tester connection	Condition	Specification
D (E11–10) – Body ground	Always	10 kΩ or higher

NG → **REPAIR OR REPLACE HARNESS OR CONNECTOR**

OK

PROCEED TO NEXT CIRCUIT INSPECTION SHOWN ON PROBLEM SYMPTOMS TABLE (See page 05–1709)

7	INSPECT PARK/NEUTRAL POSITION SWITCH ASSY

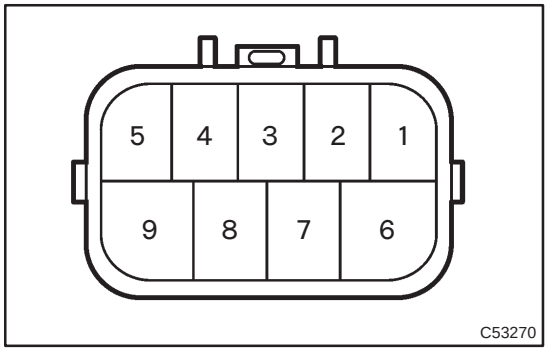

(a) Disconnect the park/neutral position switch connector.
(b) Shift the shift lever to the D range.
(c) Check continuity between terminal 3 and terminal 7.
Standard:
There is continuity.

NG → **REPLACE PARK/NEUTRAL POSITION SWITCH ASSY**

OK

8	CHECK HARNESS AND CONNECTOR(COMBINAITION METER ASSY – PARK/NEUTRAL POSITION SWITCH ASSY)

(a) Disconnect the combination meter connector and park/neutral position switch connector.
(b) Measure the resistance according to the value(s) in the table below.
Standard:

Tester connection	Condition	Specification
Park/neutral start switch (N1–3) – Combination meter (C11–21)	Always	1 Ω or less

(c) Measure the resistance according to the value(s) in the table below.
Standard:

Tester connection	Condition	Specification
Combination meter (C11–21) – Body ground	Always	10 kΩ or higher

NG → **REPAIR OR REPLACE HARNESS OR CONNECTOR**

OK

9	CHECK HARNESS AND CONNECTOR(PARK/NEUTRAL POSITION SWITCH ASSY – ECM)

(a) Disconnect the ECM connector and park/neutral position switch connector.
(b) Measure the resistance according to the value(s) in the table below.
Standard:

Tester connection	Condition	Specification
Park/neutral start switch (N1–7) – D (E11–10)	Always	1 Ω or less

(c) Measure the resistance according to the value(s) in the table below.
Standard:

Tester connection	Condition	Specification
D (E11–10) – Body ground	Always	10 kΩ or higher

NG → **REPAIR OR REPLACE HARNESS OR CONNECTOR**

OK

PROCEED TO NEXT CIRCUIT INSPECTION SHOWN ON PROBLEM SYMPTOMS TABLE
(See page 05–1709)

DIAGNOSIS CIRCUIT

CIRCUIT DESCRIPTION

Making short circuit between terminal TC and CG of DLC3 will output DTC from the DLC3.

WIRING DIAGRAM

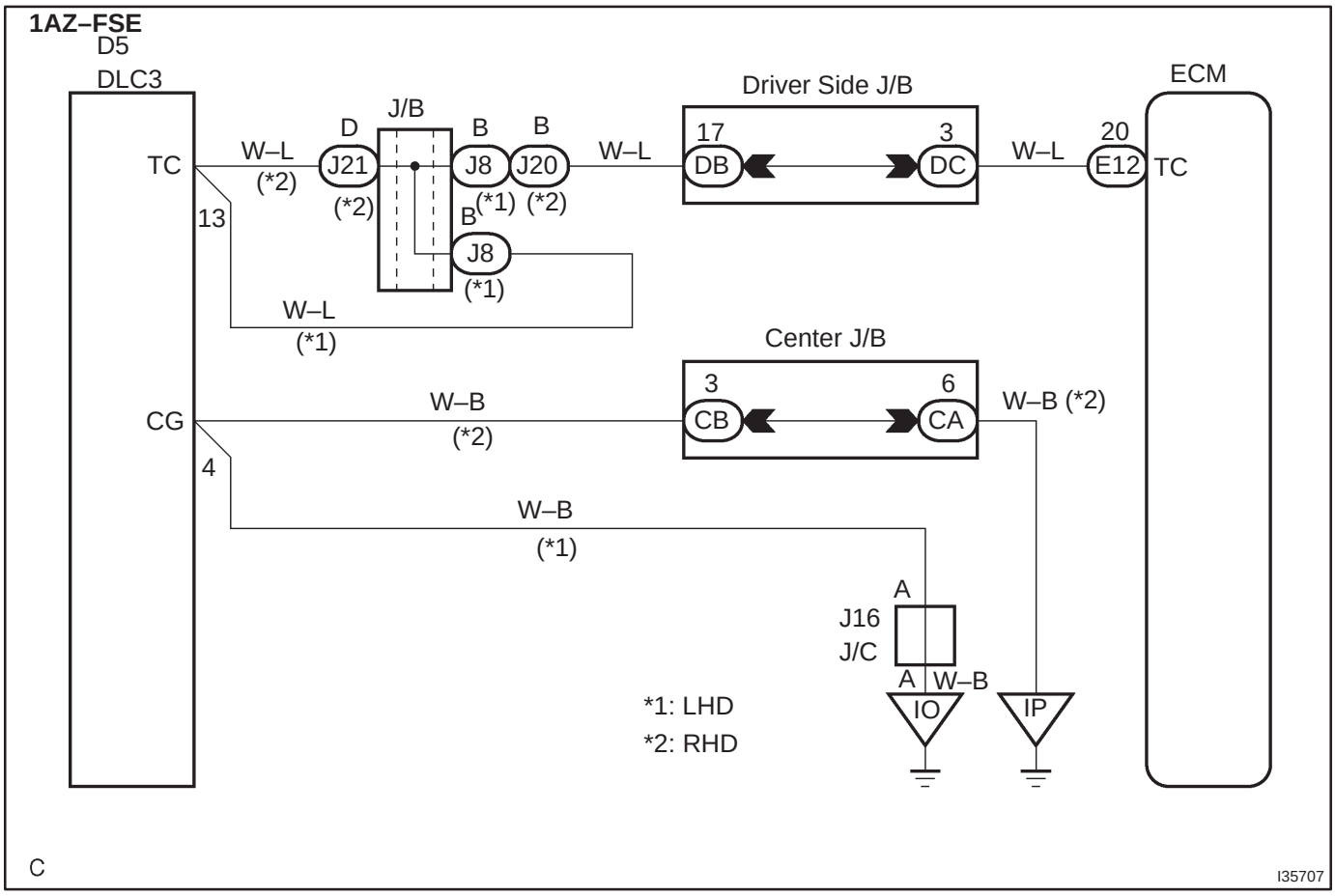

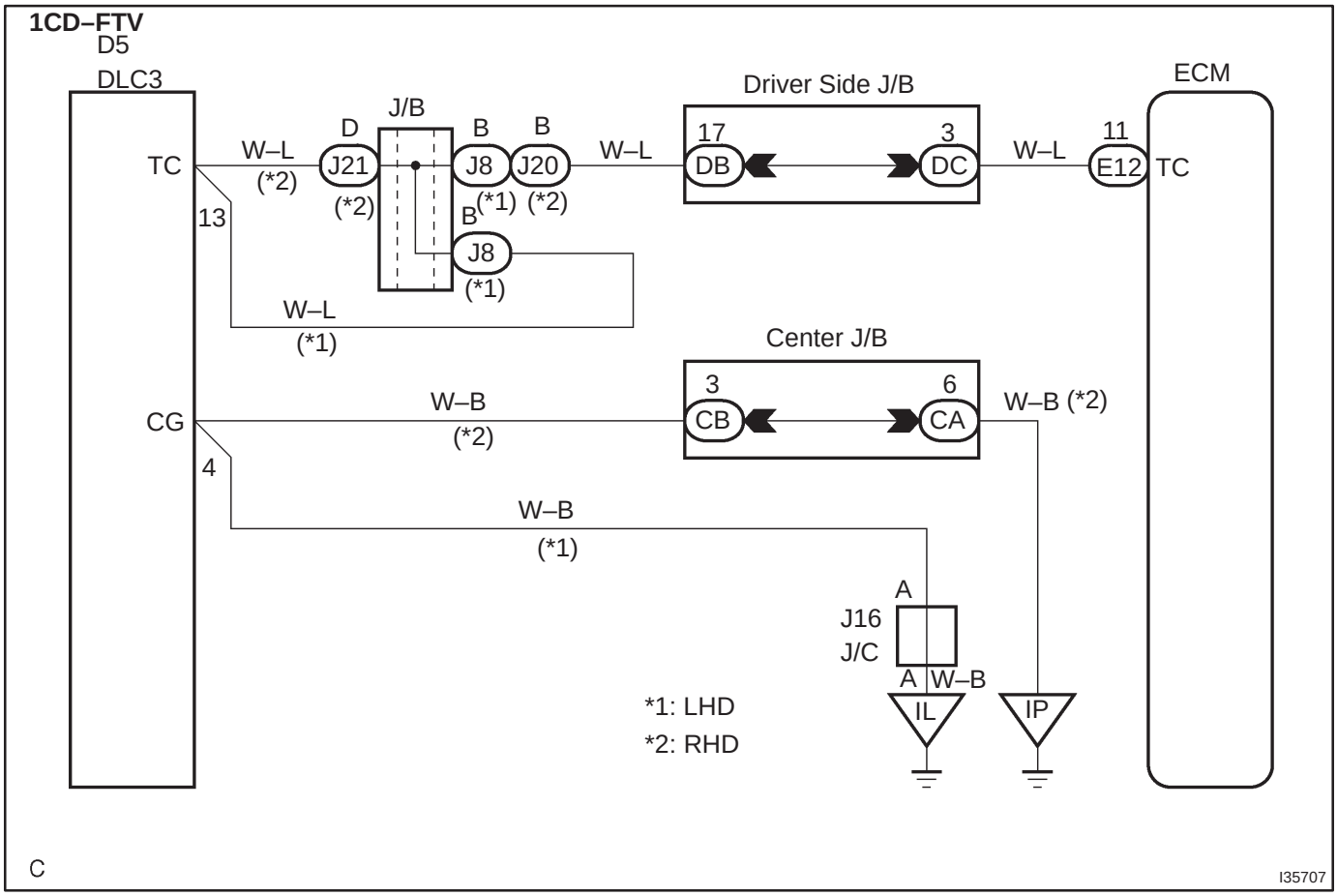

INSPECTION PROCEDURE

1	INSPECT DLC3(TC TERMINAL VOLTAGE)

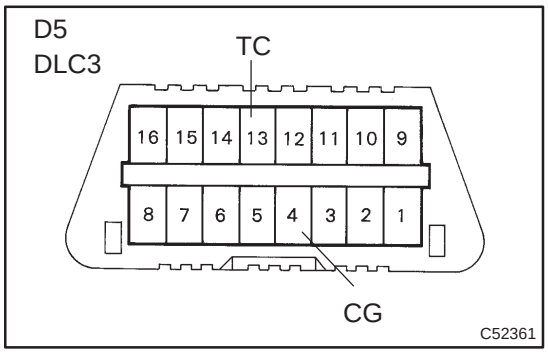

(a) Turn the ignition switch to the ON position.

(b) Measure the voltage according to the value(s) in the table below.

Standard:

Tester Connection	Specified Condition
TC (D5 – 13) – CG (D5 – 4)	10 to 14 V

NG → **Go to step 3**

OK

2 CHECK HARNESS AND CONNECTOR(DLC3 – ECM)

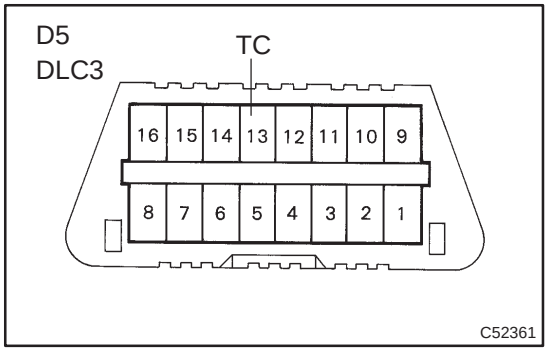

(a) Disconnect the ECM connector.
(b) Measure the resistance according to the value(s) in the table below.
Standard:

1AZ–FSE

Tester Connection	Specified Condition
TC (D5 – 13) – TC (E12 – 20)	1 Ω or less

1CD–FTV

Tester Connection	Specified Condition
TC (D5 – 13) – TC (E12 – 11)	1 Ω or less

(c) Measure the resistance according to the value(s) in the table below.
Standard:

Tester Connection	Specified Condition
TC (E12 – 20) – Body ground	10 kΩ or higher
TC (E12 – 11) – Body ground	10 kΩ or higher

NG → **REPAIR OR REPLACE HARNESS OR CONNECTOR**

OK

REPLACE ECM (See page 01–32)

3 CHECK HARNESS AND CONNECTOR(DLC3 – BODY GROUND)

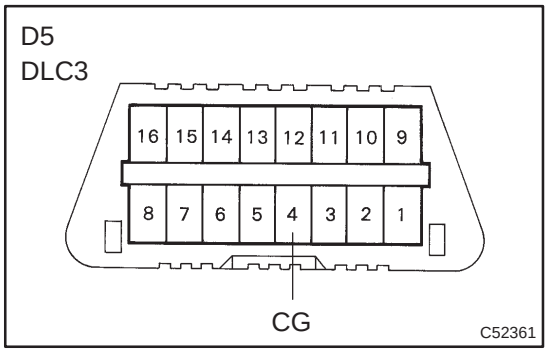

(a) Disconnect the ECM connector.
(b) Measure the resistance according to the value(s) in the table below.
Standard:

Tester Connection	Specified Condition
CG (D5 – 4) – Body ground	10 kΩ or higher

NG → **REPAIR OR REPLACE HARNESS OR CONNECTOR**

OK

4	CHECK HARNESS AND CONNECTOR(DLC3 – ECM)

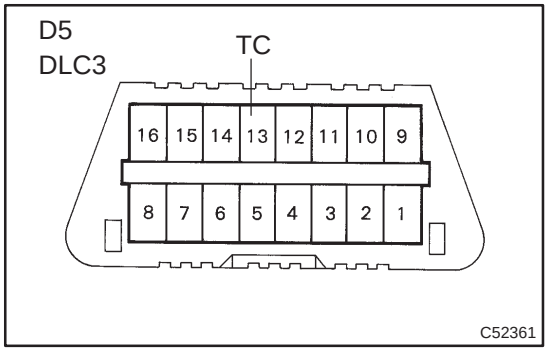

(a) Disconnect the ECM connector.

(b) Measure the resistance according to the value(s) in the table below.

Standard:

1AZ–FSE

Tester Connection	Specified Condition
TC (D5 – 13) – TC (E12 – 20)	1 Ω or less

1CD–FTV

Tester Connection	Specified Condition
TC (D5 – 13) – TC (E12 – 11)	1 Ω or less

(c) Measure the resistance according to the value(s) in the table below.

Standard:

Tester Connection	Specified Condition
TC (E12 – 20) – Body ground	10 kΩ or higher
TC (E12 – 11) – Body ground	10 kΩ or higher

NG → **REPAIR OR REPLACE HARNESS OR CONNECTOR**

OK

REPLACE ECM (See page 01–32)

SFI SYSTEM (1ZZ–FE/3ZZ–FE)

100EX–02

ON–VEHICLE INSPECTION

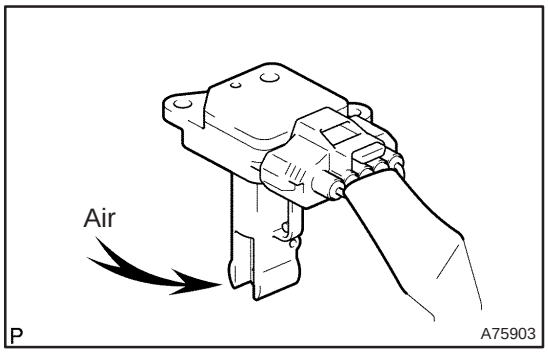

1. INSPECT MASS AIR FLOW METER

(a) If you have hand–held tester:
Inspect for operation
(1) Connect the hand–held tester to the DLC3.
(2) Turn the ignition switch ON.
(3) Blow air into the MAF meter, and check that the air flow fluctuates (MAF) of the ”DIAGNOSIS / OBD/ MOBD / DATA LIST / ALL” shown the standard value.

If operation is not as specified, check the MAF meter (See page 10–3), wiring and ECM.

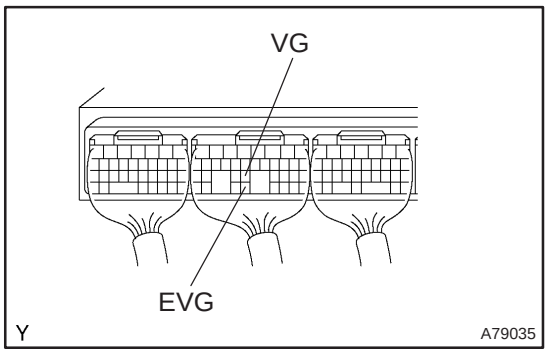

(b) If you have no hand–held tester:
Inspect for operation
(1) Turn the ignition switch ON.
(2) Connect the positive tester probe of the voltmeter to the terminal VG of the ECM. and the negative tester probe of the voltmeter to the terminal EVG of the ECM.
(3) Blow air into the MAF meter, and check that the voltage fluctuates.

If operation is not as specified, check the MAF meter (See page 10–3), wiring and ECM.

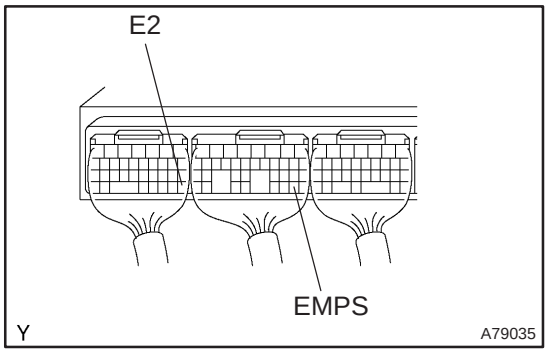

2. INSPECT POWER STEERING OIL PRESSURE SWITCH

(a) Using a voltmeter, measure the voltage between terminals EMPS and E2.
Voltage:

Condition	Voltage (V)
Not spin the steering wheel at engine idling	8 to 14
Spin the steering wheel at engine idling	0 to 1.5

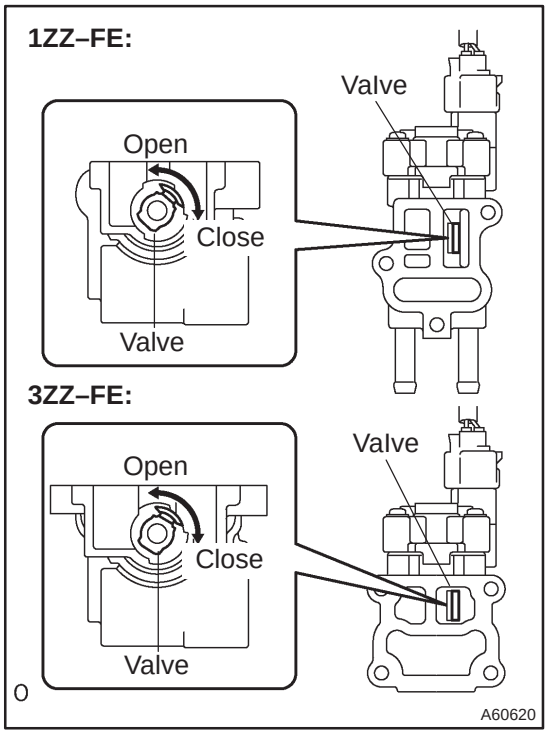

3. INSPECT IDLE AIR CONTROL VALVE

NOTICE:

- **It is impossible to check the resister value and the operation of ISCV by itself, because the ISCV has an IC circuit inside it, which transforms the duty signal from the ECM to the derive signal.**
- **Clear the DTC after inspection.**

HINT:

When the ISCV system has malfunctions except for its adherence, DTC P0505 is detected.

(a) Operation inspection.

(1) Connect the ISCV connector to the ISCV.

(2) Check the valve movement when the ignition switch is turned ON.

Movement:

Half open → fully close → fully open → half open

HINT:

ISCV moves within 0.5 second.

INSPECTION

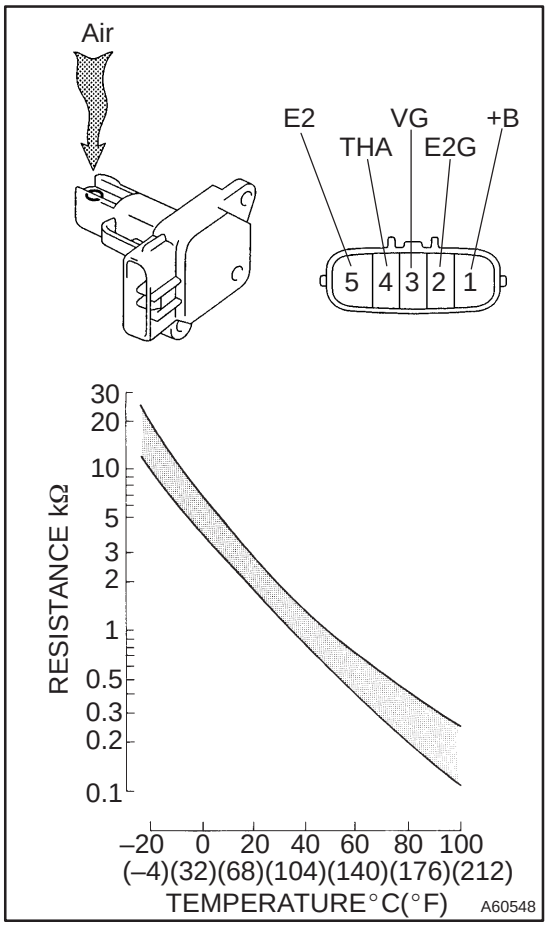

1. INSPECT MASS AIR FLOW METER

(a) Output voltage inspection.

(1) Apply battery voltage across terminals 1 (+B) and 2 (E2G).

(2) Connect the positive (+) tester probe to terminal 3 (VG), and negative (–) tester probe to terminal 2 (E2G).

(3) Blow air into the MAF meter, and check that the voltage output fluctuates.

(b) Resistance inspection.

(1) Using an ohmmeter, measure the resistance between terminals 4 (THA) and 5 (E2).

Resistance:

Terminals	Resistance	Temperature
THA – E2	13.6 to 18.4 kΩ	–20 °C (–4 °F)
THA – E2	2.21 to 2.69 kΩ	20 °C (68 °F)
THA – E2	0.49 to 0.67 kΩ	60 °C (140 °F)

2. INSPECT CAMSHAFT TIMING OIL CONTROL VALVE ASSY

(a) Resistance inspection.

(1) Using an ohmmeter, measure the resistance between terminals.

Resistance: 6.9 to 7.9 Ω at 20°C (68°F)

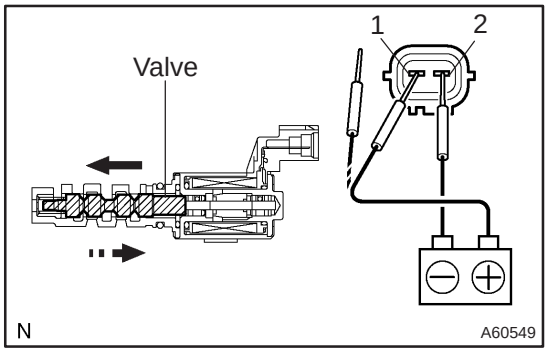

(b) Movement inspection.

(1) Connect the positive (+) lead from the battery to terminal 1 and negative (–) lead to terminal 2, and check the movement of the valve.

NOTICE:

Confirm the valve does not adhere.

HINT:

Bad returning of the valve by catching of foreign objects causes subtle pressure leak to the advanced direction. DTC can be detected.

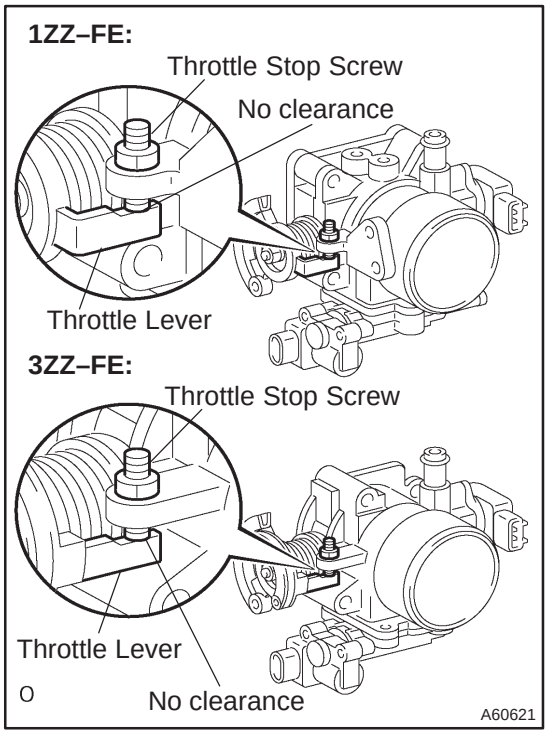

3. INSPECT THROTTLE BODY ASSY

(a) Check throttle body.
  (1) Check that throttle valve shaft is not rickety.
  (2) Check that each port is not stopped up.
  (3) Check that throttle valve opens and closes smoothly.
  (4) Check that there is no clearance between the throttle stop screw and throttle lever at the throttle closed position.

NOTICE:

Do not adjust the throttle stop screw.

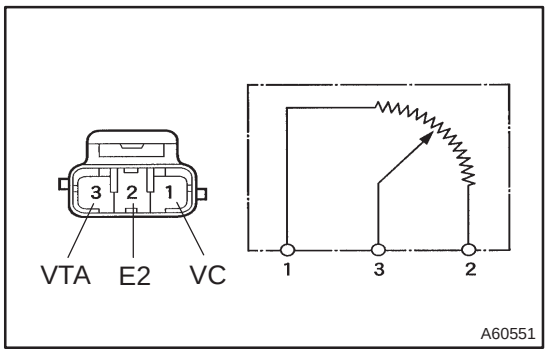

4. INSPECT THROTTLE POSITION SENSOR

(a) Resistance inspection.
  (1) Disconnect the throttle position sensor connector.
  (2) Using an ohmmeter, measure the resistance between terminals 1 (VC) and 2 (E2).

  Resistance: 2.5 to 6.0 kΩ

  (3) Check the variation resistance between terminals 3 (VTA) and 2 (E2).

  Variation in resistance:

  The resistance value increases in proportion to the throttle lever opening value.

HINT:

Throttle valve	Resistance
Fully open	0.2 to 5.7 kΩ
Fully close	2.0 to 10.2 kΩ

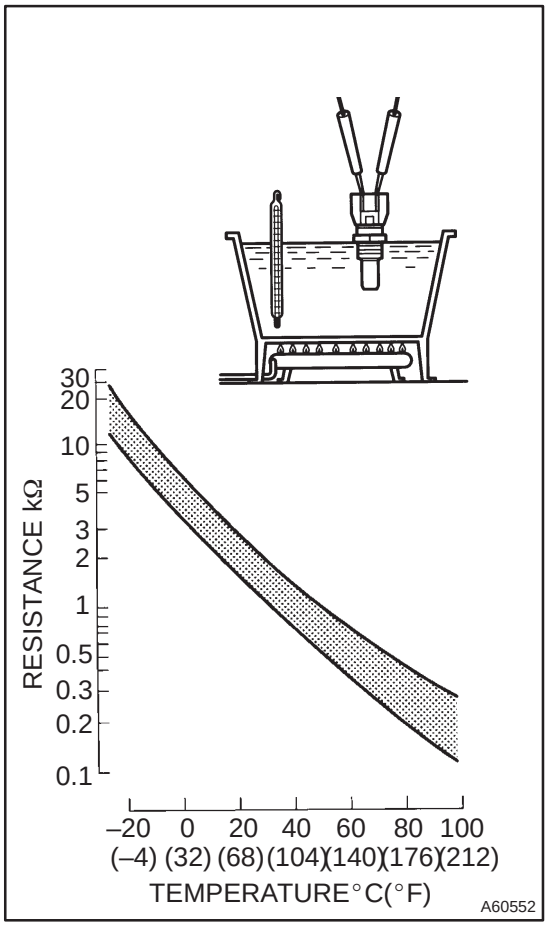

5. INSPECT ENGINE COOLANT TEMPERATURE SENSOR

(a) Resistance inspection.

(1) Using an ohmmeter, measure the resistance between terminals.

Resistance:

2.32 to 2.59 kΩ at 20°C (68°F)

0.310 to 0.326 kΩ at 80°C (176°F)

NOTICE:

In case of checking the water temperature sensor in the water, be careful not to allow water to go into the terminals, and after checking, wipe out the sensor.

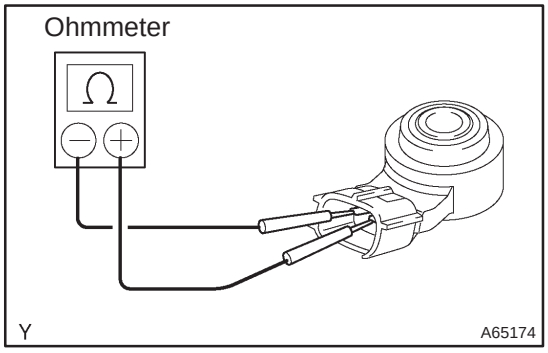

6. INSPECT KNOCK SENSOR

(a) Using an ohmmeter, measure the resistance between terminals.

Resistance: 120 to 280 kΩ at 20°C (68°F)

HINT:

If the resistance is not specified, replace the sensor.

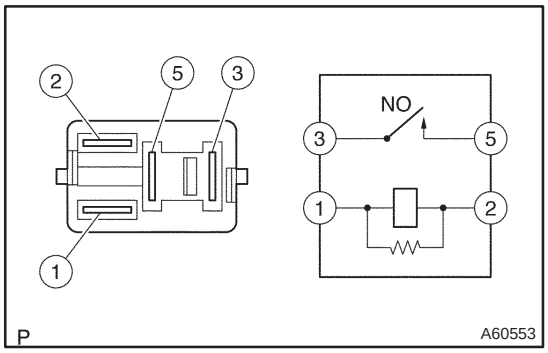

7. INSPECT EFI RELAY

(a) Inspect the relay continuity.

(1) Using an ohmmeter, check that there is continuity between terminals 1 and 2.

Specified condition: Continuity

(2) Check that there is no continuity between terminals 3 and 5.

Specified condition: No continuity

(b) Inspect the relay operation.

(1) Apply battery voltage across terminals 1 and 2.

(2) Using an ohmmeter, check that there is continuity between terminals 3 and 5.

Specified condition: Continuity

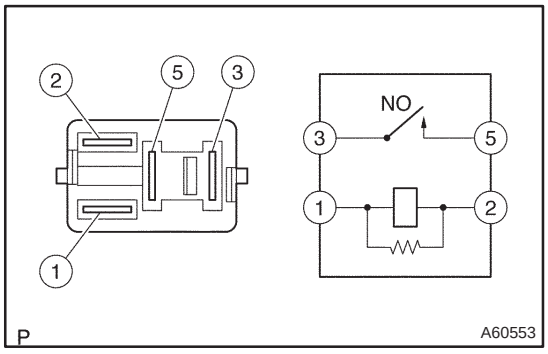

8. INSPECT CIRCUIT OPENING RELAY

(a) Inspect the relay continuity.

(1) Using an ohmmeter, check that there is continuity between terminals 1 and 2.

Specified condition: Continuity

(2) Check that there is no continuity between terminals 3 and 5.

Specified condition: No continuity

(b) Inspect the relay operation.

(1) Apply battery voltage across terminals 1 and 2.

(2) Using an ohmmeter, check that there is continuity between terminals 3 and 5.

Specified condition: Continuity

THROTTLE BODY ASSY (1ZZ–FE)

100FB–01

COMPONENTS

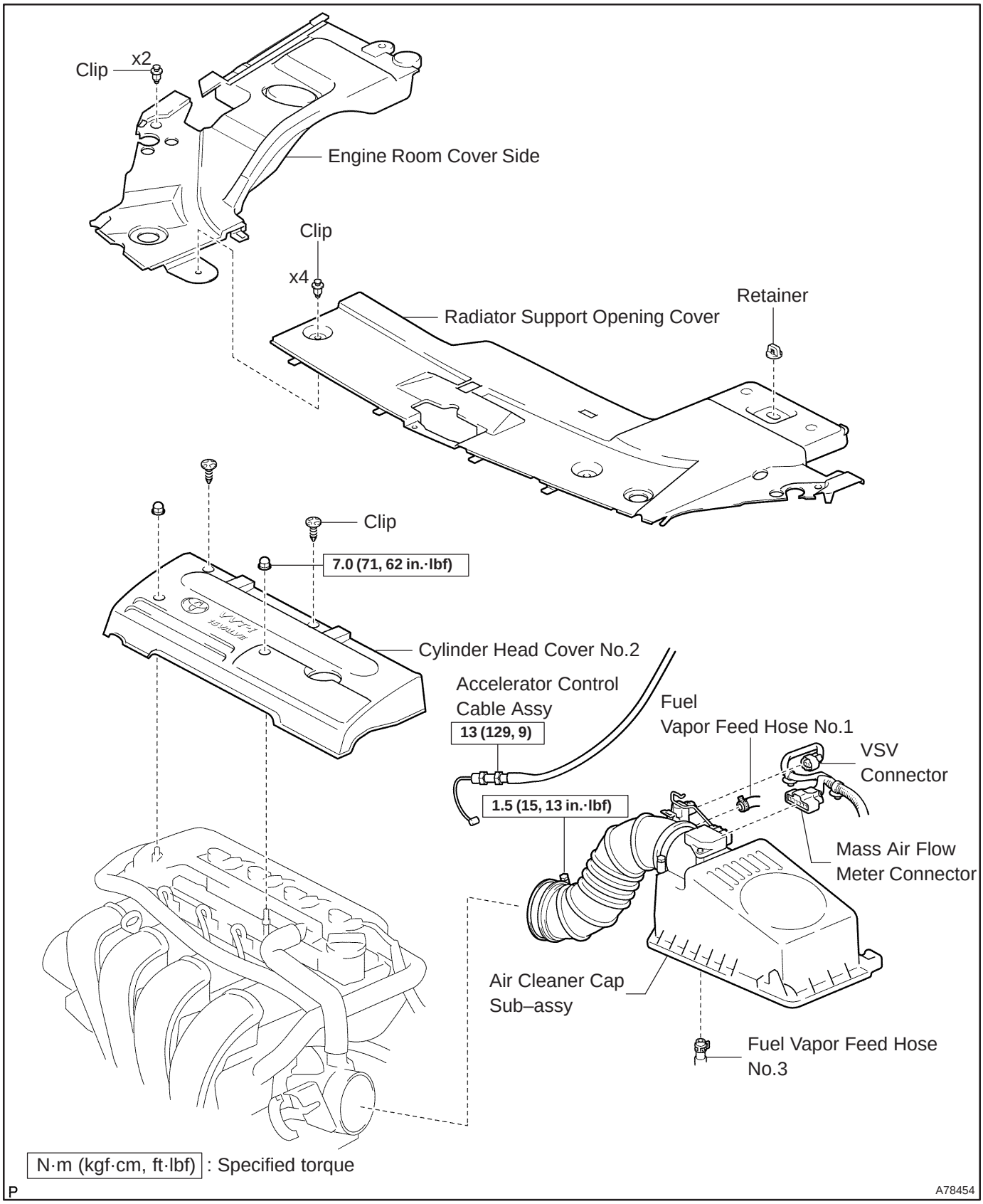

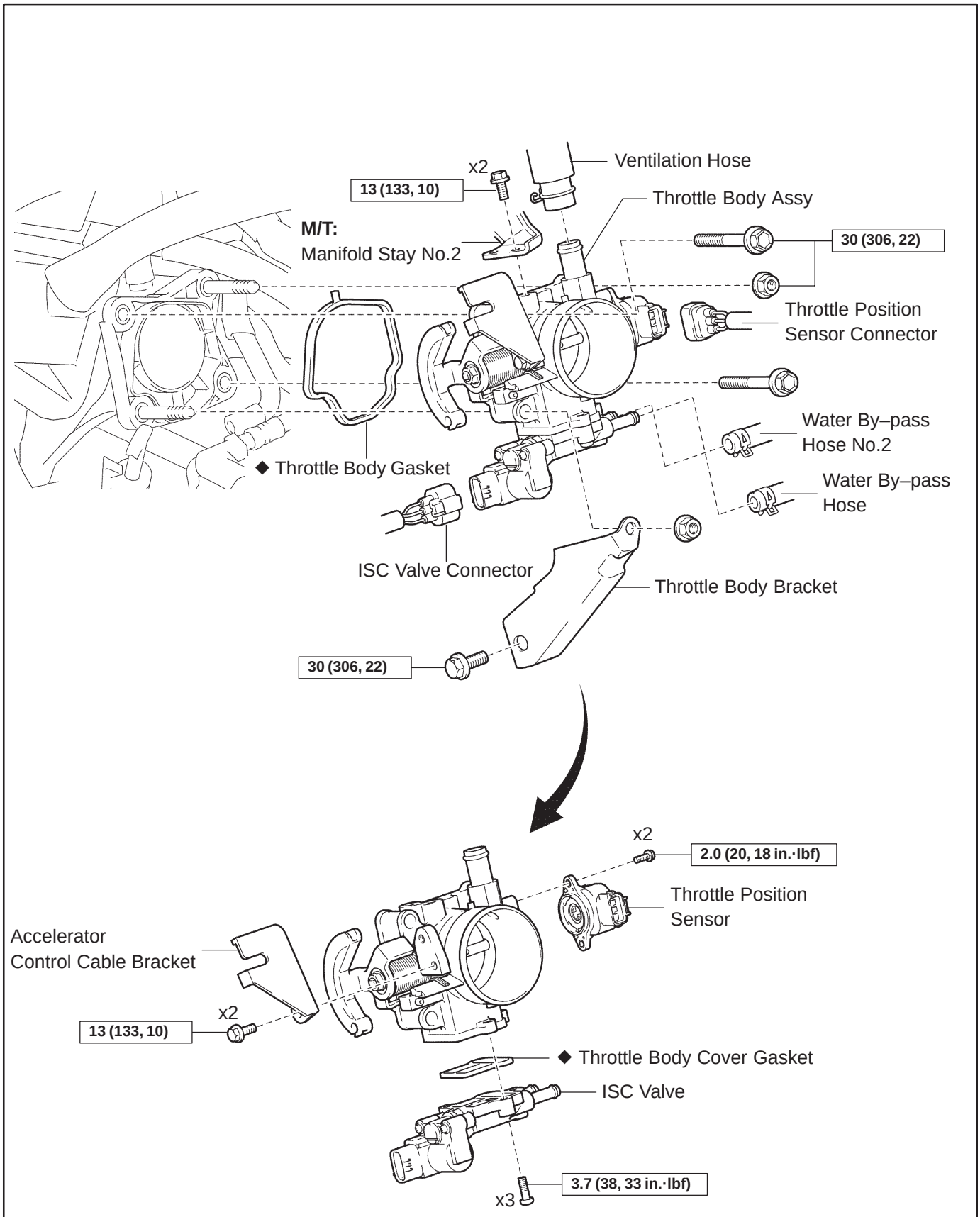
Ventilation Hose
x2
13 (133, 10)
Throttle Body Assy
M/T:
Manifold Stay No.2
30 (306, 22)
Throttle Position
Sensor Connector
Water By–pass
Hose No.2
Water By–pass
Hose
◆ Throttle Body Gasket
ISC Valve Connector
Throttle Body Bracket
30 (306, 22)
x2
2.0 (20, 18 in.·lbf)
Throttle Position
Sensor
Accelerator
Control Cable Bracket
x2
13 (133, 10)
◆ Throttle Body Cover Gasket
ISC Valve
3.7 (38, 33 in.·lbf)
x3
N·m (kgf·cm, ft·lbf) : Specified torque
◆ Non–reusable part
A78455

Removal & Installation and Disassembly & Reassembly

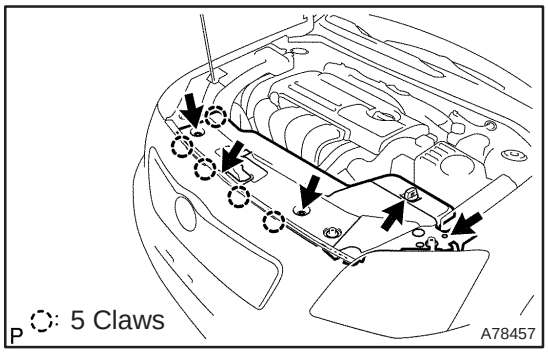

1. REMOVE RADIATOR SUPPORT OPENING COVER

(a) Remove the retainer and 4 clips.

(b) Unfasten the 5 claws and remove the radiator support opening cover.

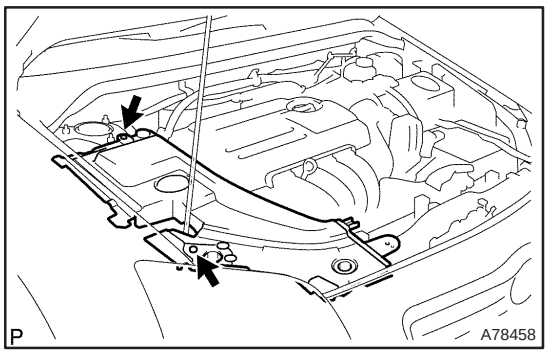

2. REMOVE ENGINE ROOM COVER SIDE

(a) Remove the 2 clips, and then remove the engine room cover side.

3. DRAIN ENGINE COOLANT (See page 16–7)

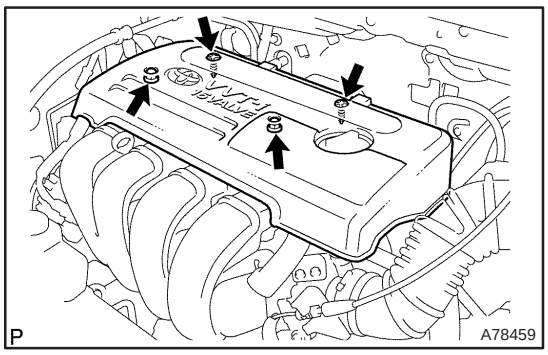

4. REMOVE CYLINDER HEAD COVER NO.2

(a) Remove the 2 nuts and 2 clips, and then remove the cylinder head cover No. 2.

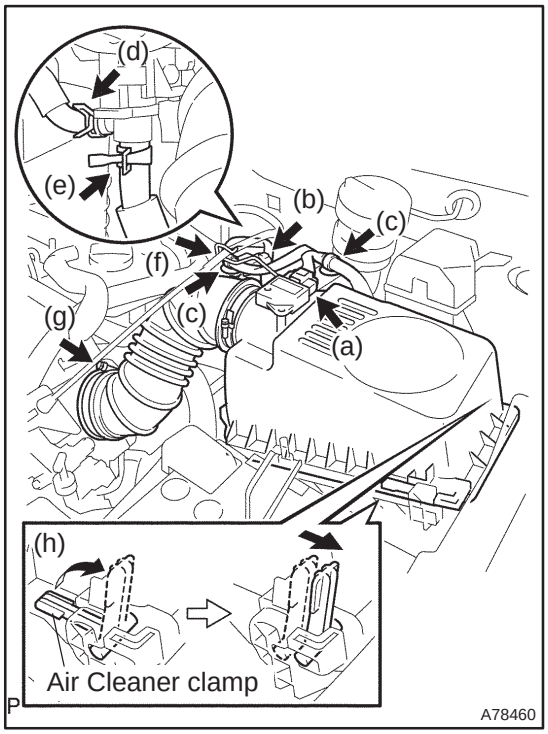

5. REMOVE AIR CLEANER CAP SUB–ASSY

(a) Disconnect the mass air flow meter connector.
(b) Disconnect the VSV connector.
(c) Remove the 2 wire harness clamps.
(d) Disconnect the fuel vapor feed hose No. 1.
(e) Disconnect the fuel vapor feed hose No. 3.
(f) Remove the accelerator control cable from the accelerator control cable support No. 2.
(g) Loosen the hose clamp.
(h) Raise the air cleaner clamp up, slide it to the air cleaner cap.
(i) Remove the air cleaner cap together with the air cleaner hose No. 1.

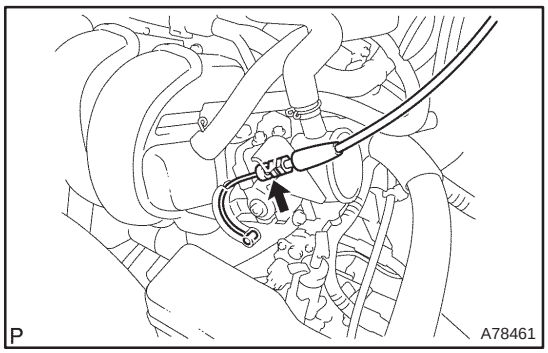

6. SEPARATE ACCELERATOR CONTROL CABLE ASSY

(a) Loosen the nut and separate the accelerator control cable.

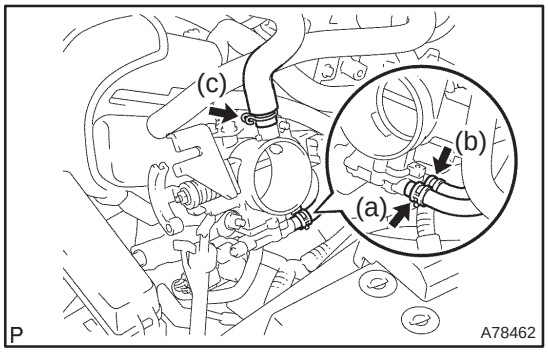

7. REMOVE THROTTLE BODY ASSY

(a) Disconnect the water by–pass hose.
(b) Disconnect the water by–pass hose No. 2.
(c) Disconnect the ventilation hose.

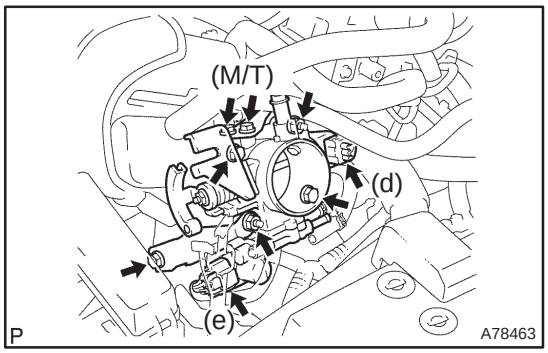

(d) Disconnect the throttle position sensor connector.
(e) Disconnect the ISC valve connector.
(f) Remove the 3 bolts and 2 nuts, and then remove the throttle body bracket and the throttle body. (A/T)
(g) Remove the 5 bolts and 2 nuts, and then remove the throttle body bracket and the throttle body. (M/T)
(h) Remove the gasket from the intake manifold.

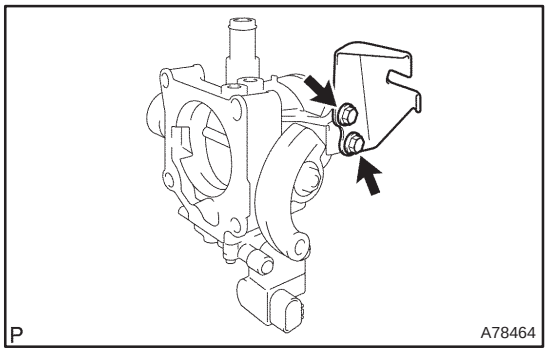

8. REMOVE ACCELERATOR CONTROL CABLE BRACKET

(a) Remove the 2 bolts, and then remove the accelerator control cable bracket.

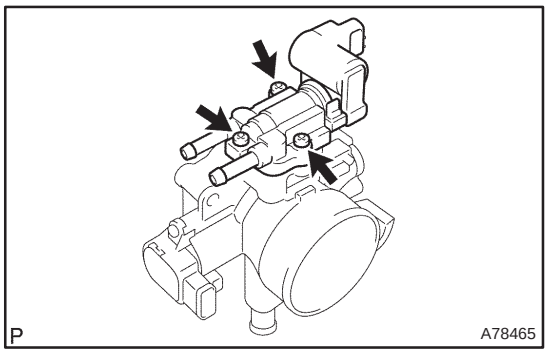

9. REMOVE ISC VALVE

(a) Remove the 3 screws, and then remove the ISC valve.

(b) Remove the gasket from the throttle body.

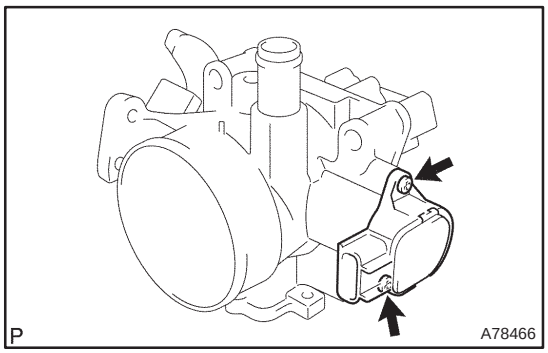

10. REMOVE THROTTLE POSITION SENSOR

(a) Remove the 2 screws, and then remove the throttle position sensor.

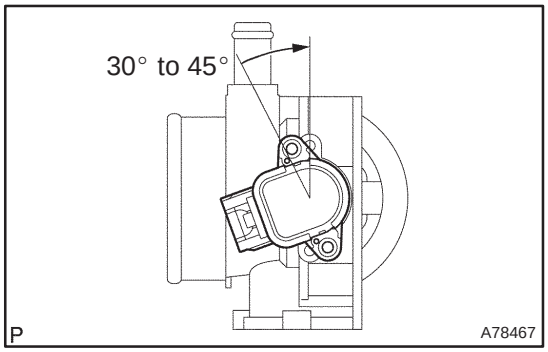

11. INSTALL THROTTLE POSITION SENSOR

(a) Make sure that the throttle valve is fully closed.

(b) With the throttle position sensor rotated 30° to 45° counterclockwise about the fully closed position of the throttle valve, install the throttle position sensor to the throttle body.

(c) Rotate the throttle position sensor clockwise and secure it with the 2 screws.

Torque: 2.0 N·m (20 kgf·cm, 18 in.·lbf)

12. INSTALL ISC VALVE

(a) Install a new gasket to the throttle body.

(b) Install the ISC valve with the 3 screws.

Torque: 3.7 N·m (38 kgf·cm, 33 in.·lbf)

13. INSTALL ACCELERATOR CONTROL CABLE BRACKET

Torque: 13 N·m (133 kgf·cm, 10 ft·lbf)

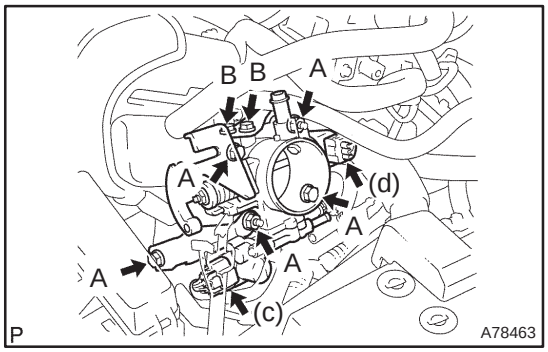

14. INSTALL THROTTLE BODY ASSY

(a) Install a new gasket to the intake manifold.

(b) Install the throttle body and the throttle body bracket with the 3 bolts and 2 nuts. (A/T)

Torque:
30 N·m (306 kgf·cm, 22 ft·lbf) for bolt and nut A

(c) Install the throttle body and the throttle body bracket with the 5 bolts and 2 nuts. (M/T)

Torque:
30 N·m (306 kgf·cm, 22 ft·lbf) for bolt and nut A
13 N·m (133 kgf·cm, 10 ft·lbf) for bolt B

(d) Connect the ISC valve connector.

(e) Connect the throttle position sensor connector.

(f) Connect the ventilation hose.

(g) Connect the water by–pass hose No. 2.

(h) Connect the water by–pass hose.

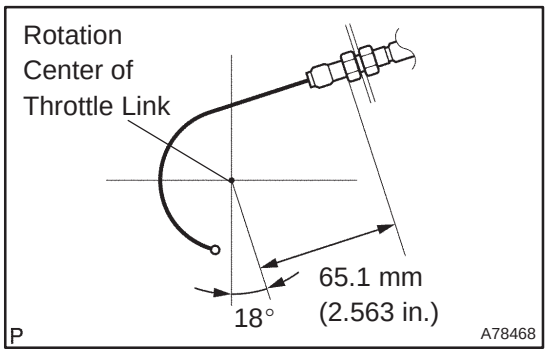

15. INSTALL ACCELERATOR CONTROL CABLE ASSY

(a) Install the accelerator control cable as shown in the illustration.

Torque: 13 N·m (129 kgf·cm, 9 ft·lbf)

16. INSTALL AIR CLEANER CAP SUB–ASSY
Torque: 1.5 N·m (15 kgf·cm, 13 in.·lbf)

17. INSTALL CYLINDER HEAD COVER NO.2
Torque: 7.0 N·m (71 kgf·cm, 62 in.·lbf)

18. ADD ENGINE COOLANT (See page 16–7)

19. CHECK FOR ENGINE COOLANT LEAKS (See page 16–1)

20. INSTALL ENGINE ROOM COVER SIDE

21. INSTALL RADIATOR SUPPORT OPENING COVER

THROTTLE BODY ASSY (3ZZ–FE)

100FD–01

COMPONENTS

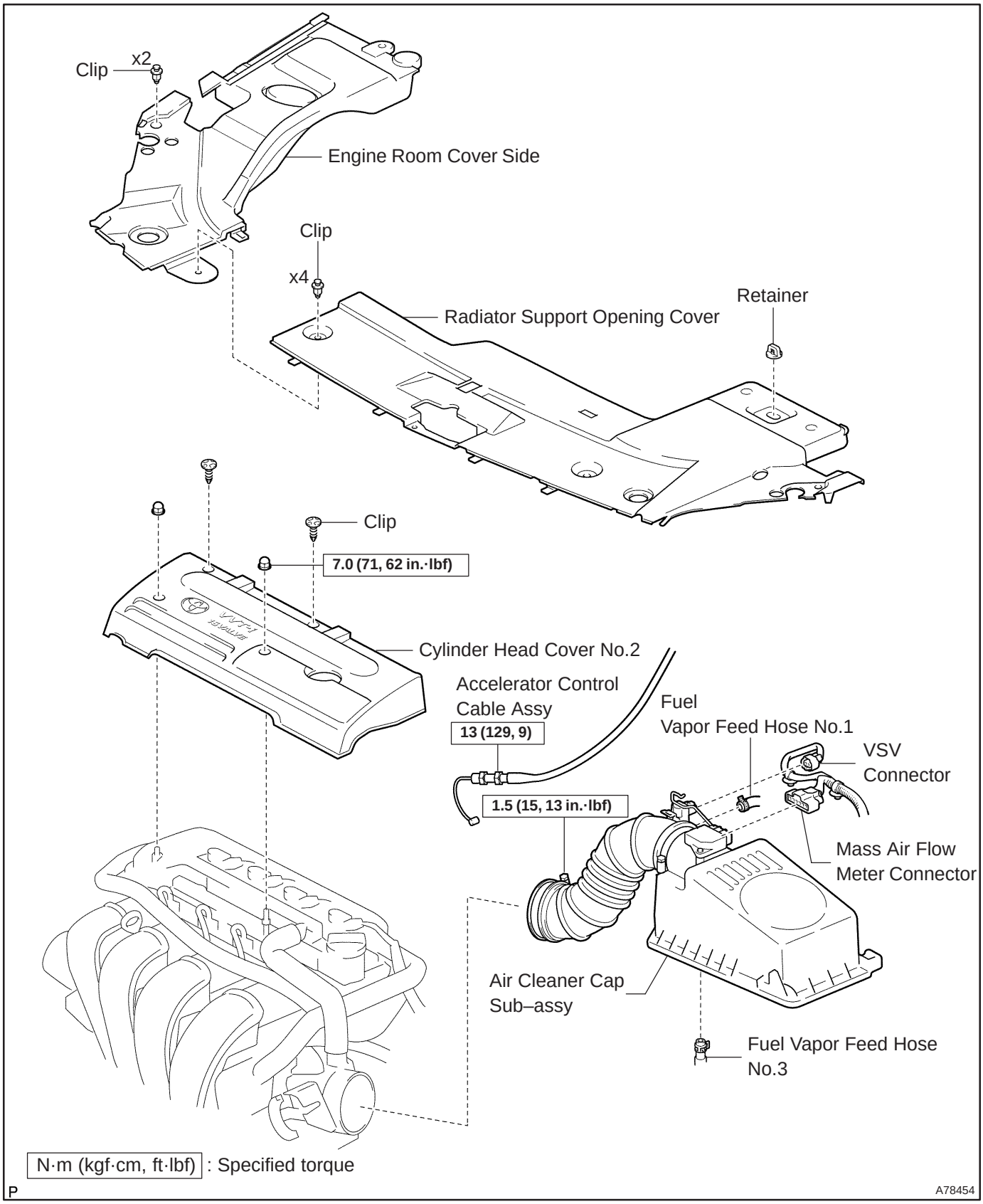

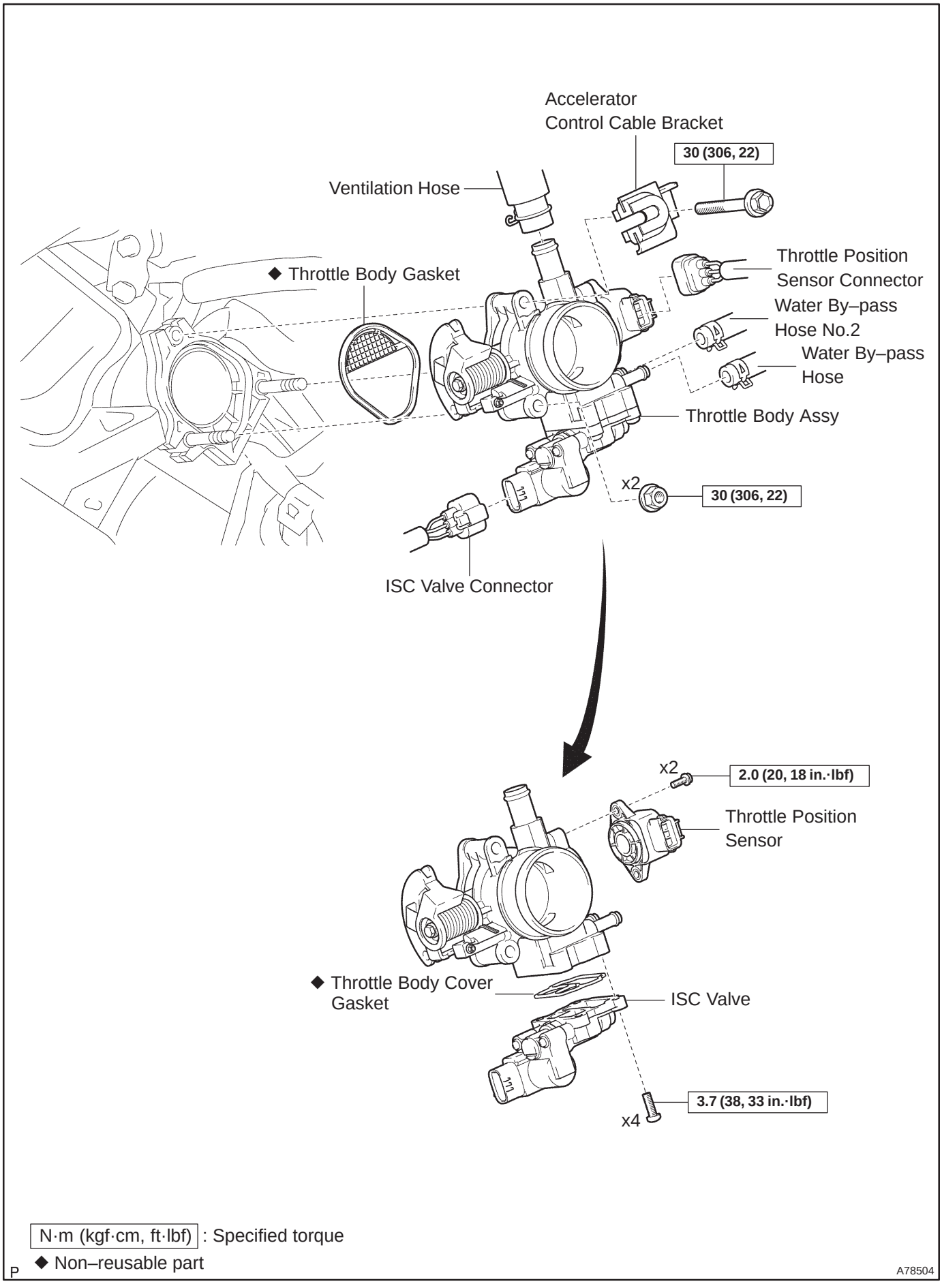

N·m (kgf·cm, ft·lbf) : Specified torque

◆ Non–reusable part

P

A78504

Removal & Installation and Disassembly & Reassembly

1. REMOVE RADIATOR SUPPORT OPENING COVER (See page 10–9)
2. REMOVE ENGINE ROOM COVER SIDE (See page 10–9)
3. DRAIN ENGINE COOLANT (See page 16–7)
4. REMOVE CYLINDER HEAD COVER NO.2 (See page 10–9)
5. REMOVE AIR CLEANER CAP SUB–ASSY (See page 10–9)

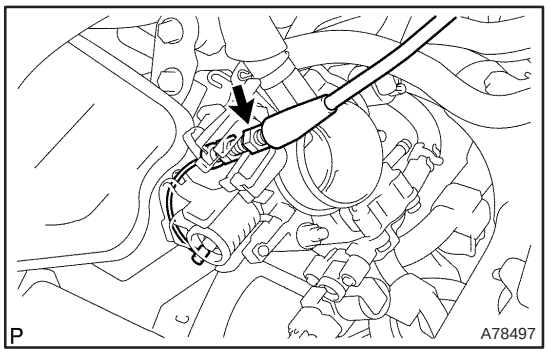

6. SEPARATE ACCELERATOR CONTROL CABLE ASSY

(a) Loosen the nut and separate the accelerator control cable.

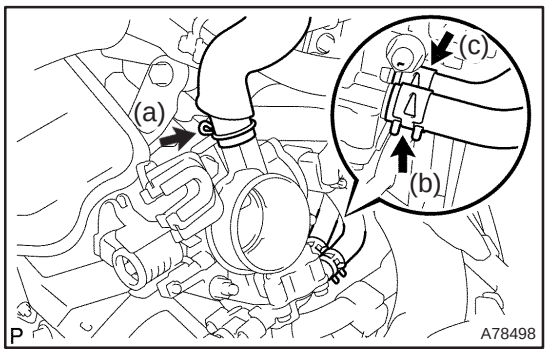

7. REMOVE THROTTLE BODY ASSY

(a) Disconnect the ventilation hose.
(b) Disconnect the water by–pass hose.
(c) Disconnect the water by–pass hose No. 2.

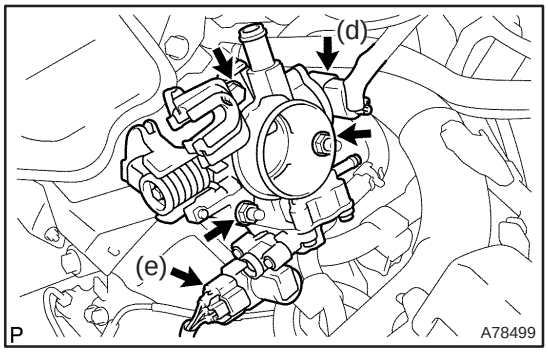

(d) Disconnect the throttle position sensor.
(e) Disconnect the ISC valve connector.
(f) Remove the bolt and 2 nuts, and then remove the accelerator control bracket and the throttle body.
(g) Remove the gasket from the intake manifold.

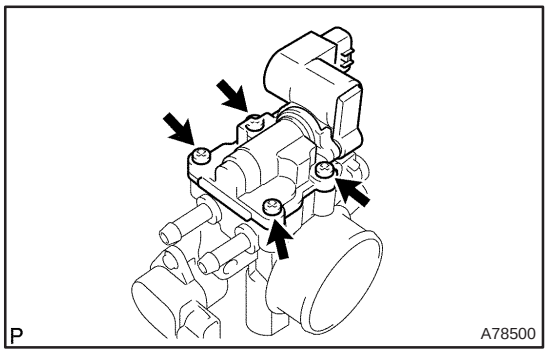

8. REMOVE ISC VALVE

(a) Remove the 4 screws, and then remove the ISC valve.
(b) Remove the gasket from the throttle body.

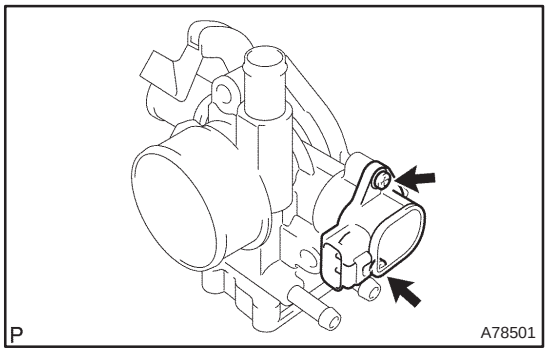

9. REMOVE THROTTLE POSITION SENSOR

(a) Remove the 2 screws, and then remove the throttle position sensor.

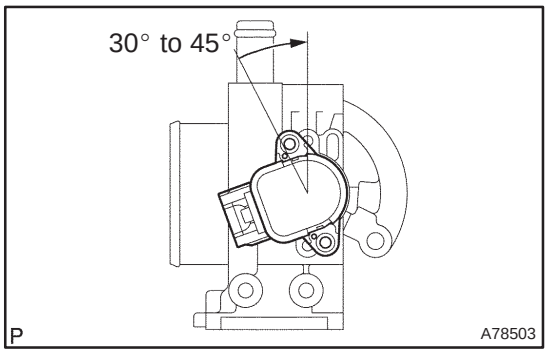

10. INSTALL THROTTLE POSITION SENSOR

(a) Make sure that the throttle valve is fully closed.

(b) With the throttle position sensor rotated 30° to 45° counterclockwise about the fully closed position of the throttle valve, install the throttle position sensor to the throttle body.

(c) Rotate the throttle position sensor clockwise and secure it with the 2 screws.

Torque: 2.0 N·m (20 kgf·cm, 18 in.·lbf)

11. INSTALL ISC VALVE

(a) Install a new gasket to the throttle body.

(b) Install the ISC valve with the 4 screws.

Torque: 3.7 N·m (38 kgf·cm, 33 in.·lbf)

12. INSTALL THROTTLE BODY ASSY

(a) Install a new gasket to the intake manifold.

(b) Install the throttle body and the accelerator control bracket with the bolt and 2 nuts.

Torque: 30 N·m (306 kgf·cm, 22 ft·lbf)

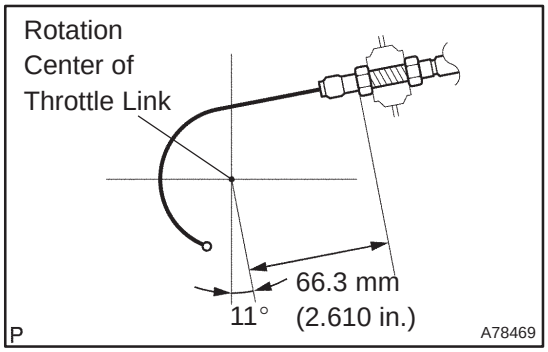

13. INSTALL ACCELERATOR CONTROL CABLE ASSY

(a) Install the accelerator control cable as shown in the illustration.

Torque: 13 N·m (129 kgf·cm, 9 ft·lbf)

14. INSTALL AIR CLEANER CAP SUB–ASSY (See page 10–9)

15. INSTALL CYLINDER HEAD COVER NO.2 (See page 10–9)

16. ADD ENGINE COOLANT (See page 16–7)

17. CHECK FOR ENGINE COOLANT LEAKS (See page 16–1)

18. INSTALL ENGINE ROOM COVER SIDE

19. INSTALL RADIATOR SUPPORT OPENING COVER

KNOCK SENSOR (1ZZ–FE/3ZZ–FE)

100FF–01

REPLACEMENT

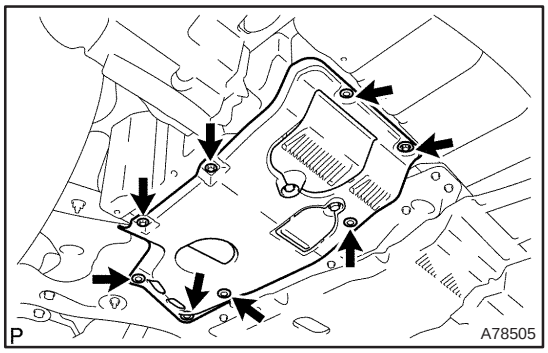

1. REMOVE ENGINE UNDER COVER SUB–ASSY NO.1

(a) Remove the 5 clips, 2 screws and bolt, and then remove the engine under cover.

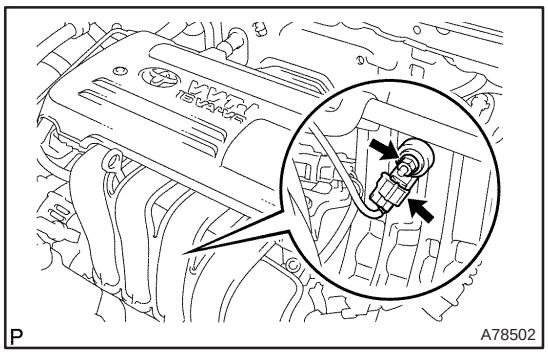

2. REMOVE KNOCK SENSOR

(a) Disconnect the knock sensor connector.

(b) Remove the nut, and then remove the knock sensor.

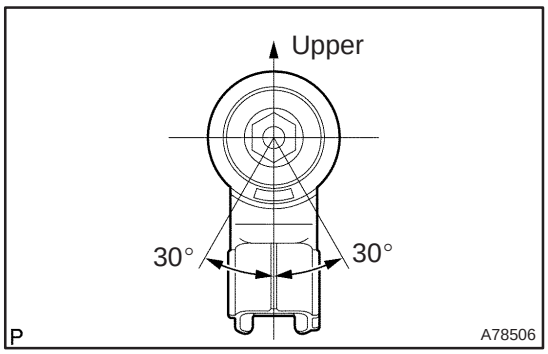

3. INSTALL KNOCK SENSOR

(a) Install the knock sensor with the nut as shown in the illustration.

Torque: 20 N·m (204 kgf·cm, 15 ft·lbf)

(b) Connect the knock sensor connector.

4. INSTALL ENGINE UNDER COVER SUB–ASSY NO.1

SFI SYSTEM (1AZ–FE)

ON–VEHICLE INSPECTION

100G6–02

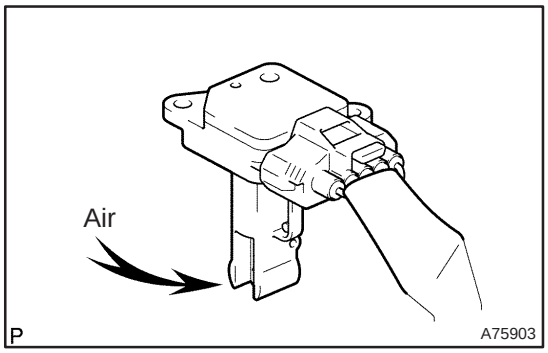

1. INSPECT MASS AIR FLOW METER

(a) If you have hand–held tester:
Inspect for operation
(1) Connect the hand–held tester to the DLC3.
(2) Turn the ignition switch ON.
(3) Blow air into the MAF meter, and check that the air flow fluctuates (MAF) of the ”DIAGNOSIS / OBD/ MOBD / DATA LIST / ALL” shown the standard value.

If operation is not as specified, check the MAF meter (See page 10–20), wiring and ECM.

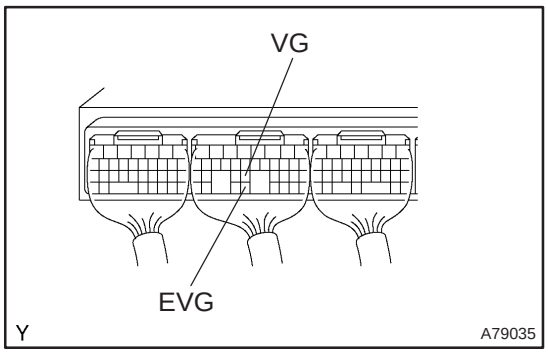

(b) If you have no hand–held tester:
Inspect for operation
(1) Turn the ignition switch ON.
(2) Connect the positive tester probe of the voltmeter to the terminal VG of the ECM. and the negative tester probe of the voltmeter to the terminal EVG of the ECM.
(3) Blow air into the MAF meter, and check that the voltage fluctuates.

If operation is not as specified, check the MAF meter (See page 10–20), wiring and ECM.

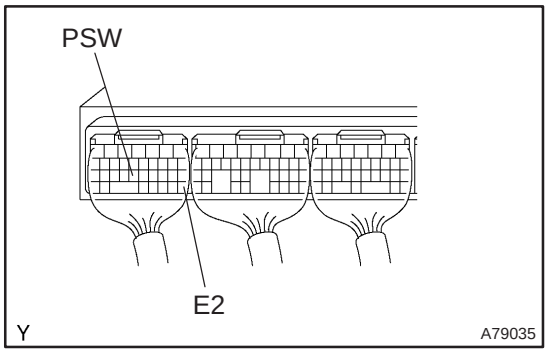

2. INSPECT POWER STEERING OIL PRESSURE SENSOR

(a) Using a voltmeter, measure the voltage between terminals PSW and E2.
Voltage:

Condition	Voltage (V)
Not spin the steering wheel at engine idling	9 to 14
Spin the steering wheel at engine idling	0 to 3

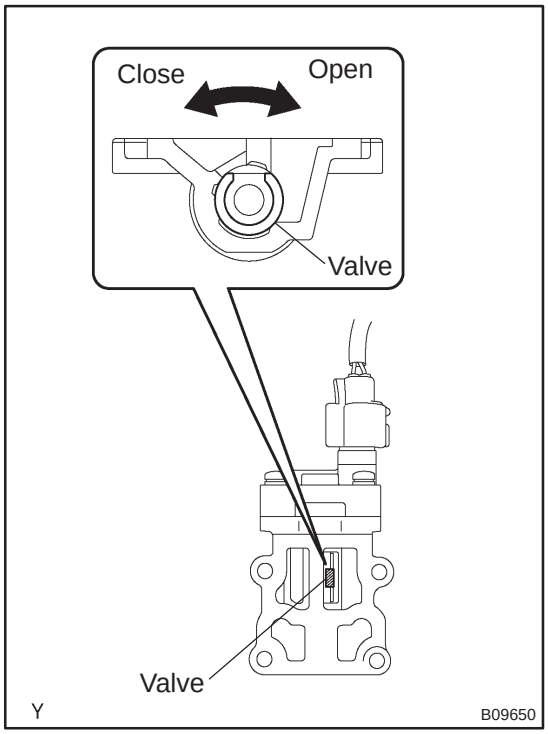

3. INSPECT IDLE AIR CONTROL VALVE

NOTICE:

- **It is impossible to check the resister value and the operation of ISCV by itself, because the ISCV has an IC circuit inside it, which transforms the duty signal from the ECM to the derive signal.**
- **After checking, erase the DTC.**
- **Clear the DTC after inspection.**

HINT:

When the ISCV system has malfunctions except for its adherence, DTC P0511 is detected.

(a) Operation inspection.

(1) Connect the ISC valve connector to the ISC valve.

(2) Check the ISC valve movement when the ignition switch is turned ON.

Movement:

Half open → fully close → fully open → half open

HINT:

ISC valve moves within 0.5 second.

100G7–02

INSPECTION

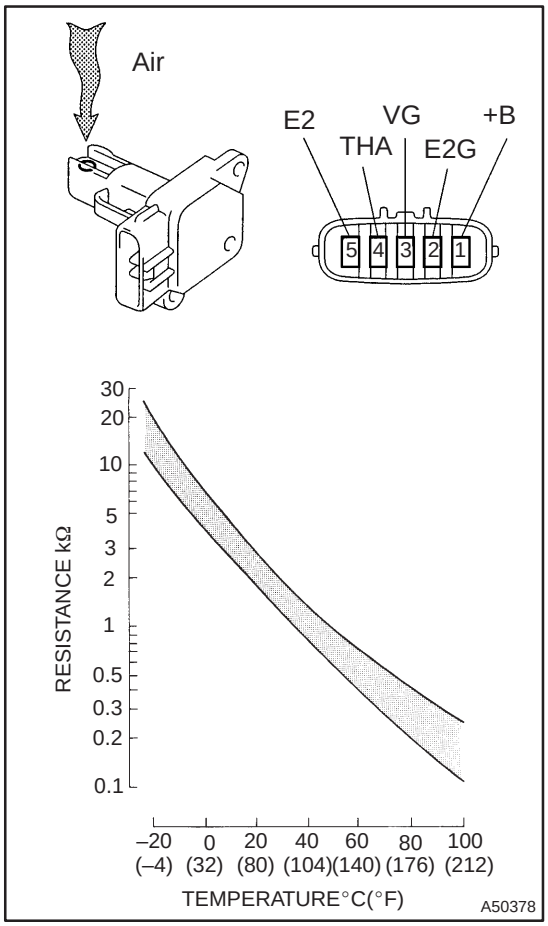

1. INSPECT MASS AIR FLOW METER

(a) Output voltage inspection.

(1) Apply battery voltage across terminals 1 (+B) and 2 (E2G).

(2) Using a voltmeter, connect the positive (+) tester probe to terminal 3 (VG), and negative (–) tester probe to terminal 2 (E2G).

(3) Blow air into the MAF meter, and check that the voltage fluctuates.

(b) Resistance inspection.

(1) Using an ohmmeter, measure the resistance between terminals 4 (THA) and 5 (E2).

Resistance:

Terminals	Resistance	Temperature
THA – E2	13.6 to 18.4 kΩ	–20 °C (–4 °F)
THA – E2	2.21 to 2.69 kΩ	20 °C (68 °F)
THA – E2	0.49 to 0.67 kΩ	60 °C (140 °F)

2. INSPECT CAMSHAFT TIMING OIL CONTROL VALVE ASSY

(a) Resistance inspection.

(1) Using an ohmmeter, measure the resistance between the terminals.

Resistance: 6.9 to 7.9 Ω at 20 °C (68 °F)

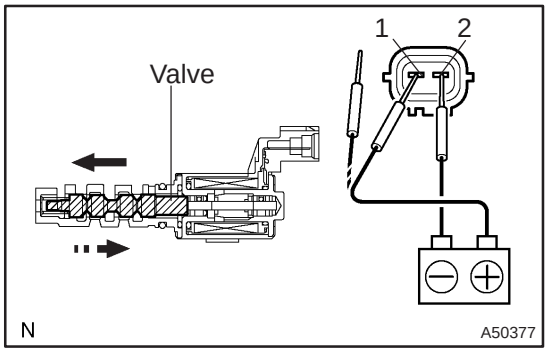

(b) Movement inspection.

(1) Connect the positive (+) lead from the battery to terminal 1 and negative (–) lead to terminal 2, and check the movement of the valve.

NOTICE:

Confirm the valve does not adhere.

HINT:

Bad returning of the valve by entrance of foreign objects causes subtle pressure leak to the advanced direction. Then, DTC can be detected.

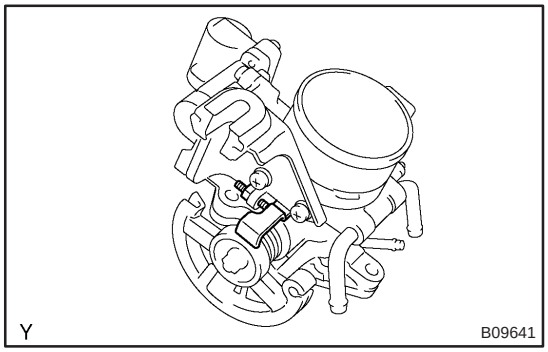

3. INSPECT THROTTLE BODY ASSY

(a) Check throttle body.

(1) Check that throttle valve shaft is not rickety.

(2) Check that each port is not stopped up.

(3) Check that throttle valve opens and closes smoothly.

(4) Check that there is no clearance between the throttle stop screw and throttle lever when the closed throttle position.

(b) Adjust the throttle stop screw.

NOTICE:

The throttle stop screw adjusting is very, so adjust it only when the adjusting is really needed.

(1) Loosen the locknut and loosen the screw until it detaches the lever.
(2) Confirm that the throttle vale is fully closed.
(3) After the screw touches the lever, tighten it by 1/4 revolution additionally and tighten the lock nut.
(4) Seal the lock nut with yellow paint.
(5) Check that the throttle position sensor operates normally.

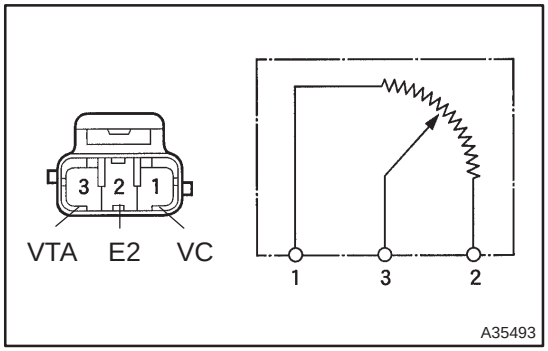

4. INSPECT THROTTLE POSITION SENSOR

(a) Resistance inspection.

(1) Disconnect the throttle position sensor connector.
(2) Using an ohmmeter, measure the resistance between terminals VC and E2.

Resistance: 2.5 to 5.0 kΩ

(3) Check the change of resistance between terminals VTA and E2.

Change of resistance:

The resistance value increases in proportion to the throttle lever opening value.

HINT:

Throttle valve	Resistance
Fully close	0.2 to 5.7 kΩ
Fully open	2.0 to 10.2 kΩ

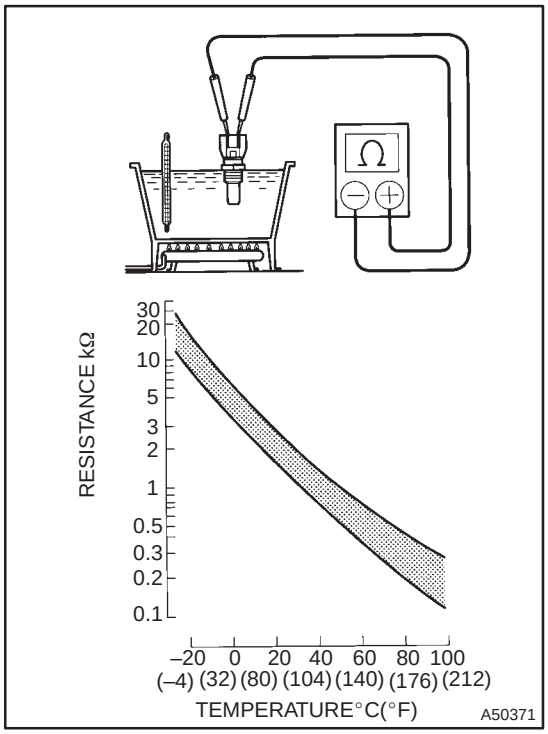

5. INSPECT ENGINE COOLANT TEMPERATURE SENSOR

(a) Resistance inspection.

(1) Using an ohmmeter, measure the resistance between each terminal.

Resistance:

Approx. 20°C (68°F) 2.32 to 2.59kΩ

Approx. 80°C (176°F) 0.310 to 0.326kΩ

NOTICE:

In case of checking the water temperature sensor in the water, be careful not to allow water to go into the terminals, and after checking, wipe out the sensor.

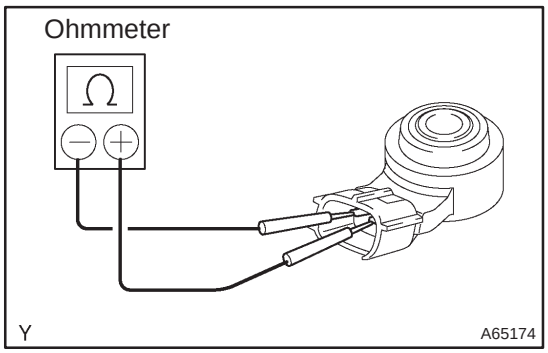

6. INSPECT KNOCK SENSOR

(a) Using an ohmmeter, measure the resistance between terminals.

Resistance: 120 to 280 kΩ at 20°C (68°F)

HINT:

If the resistance is not specified, replace the sensor.

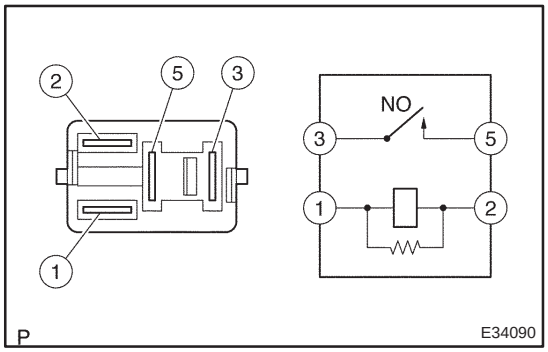

7. INSPECT EFI RELAY

(a) Inspect the relay continuity.

(1) Using an ohmmeter, check that there is continuity between terminals 1 and 2.

Specified condition: Continuity

(2) Check that there is no continuity between terminals 3 and 5.

Specified condition: No continuity

(b) Inspect the relay operation.

(1) Apply battery voltage across terminals 1 and 2.

(2) Using an ohmmeter, check that there is continuity between terminals 3 and 5.

Specified condition: Continuity

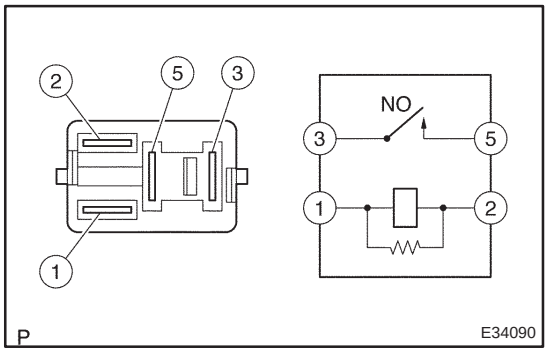

8. INSPECT CIRCUIT OPENING RELAY

(a) Inspect the relay continuity.

(1) Using an ohmmeter, check that there is continuity between terminals 1 and 2.

Specified condition: Continuity

(2) Check that there is no continuity between terminals 3 and 5.

Specified condition: No continuity

(b) Inspect the relay operation.

(1) Apply battery voltage across terminals 1 and 2.

(2) Using an ohmmeter, check that there is continuity between terminals 3 and 5.

Specified condition: Continuity

THROTTLE BODY ASSY (1AZ–FE)

100FG–01

COMPONENTS

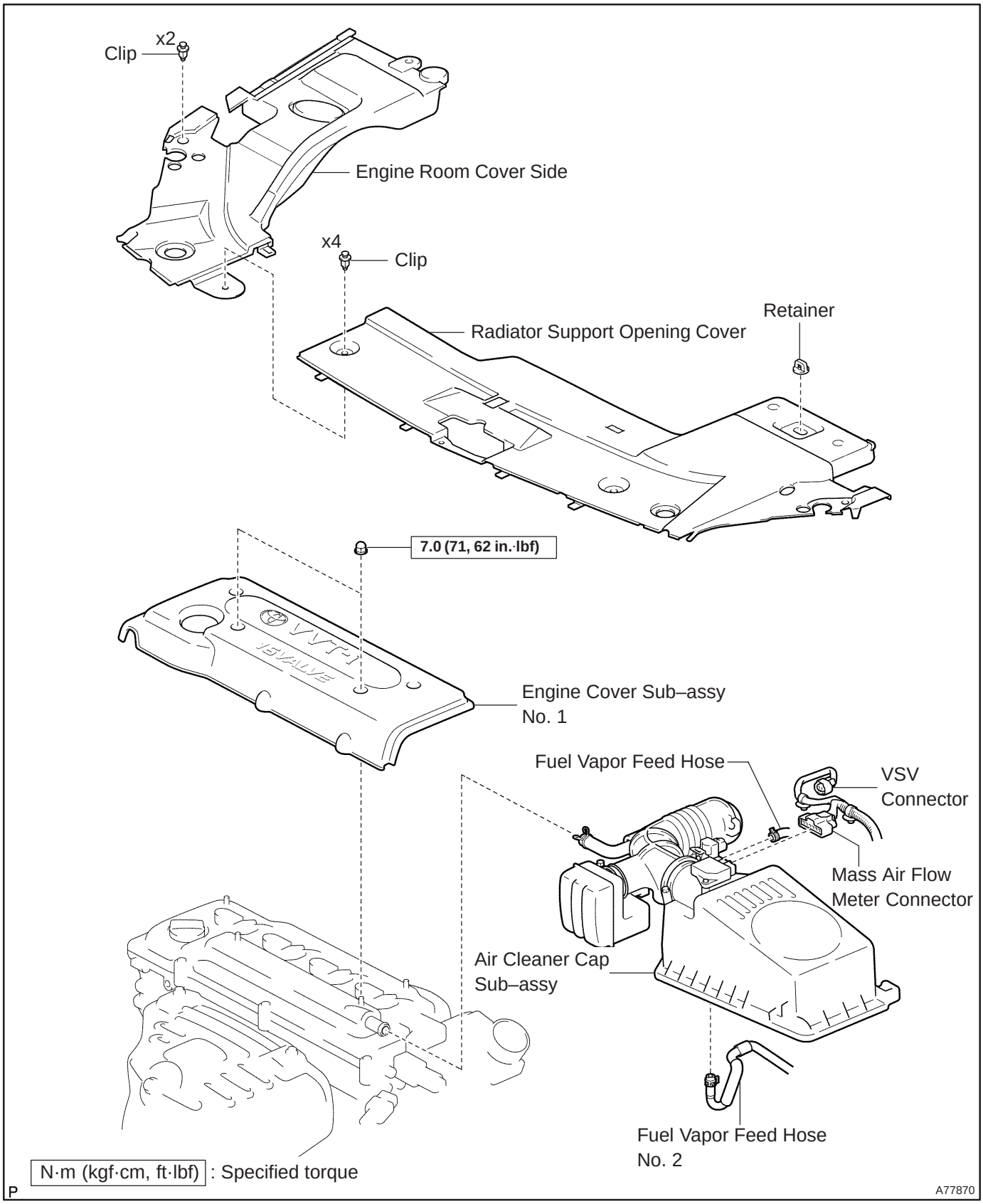

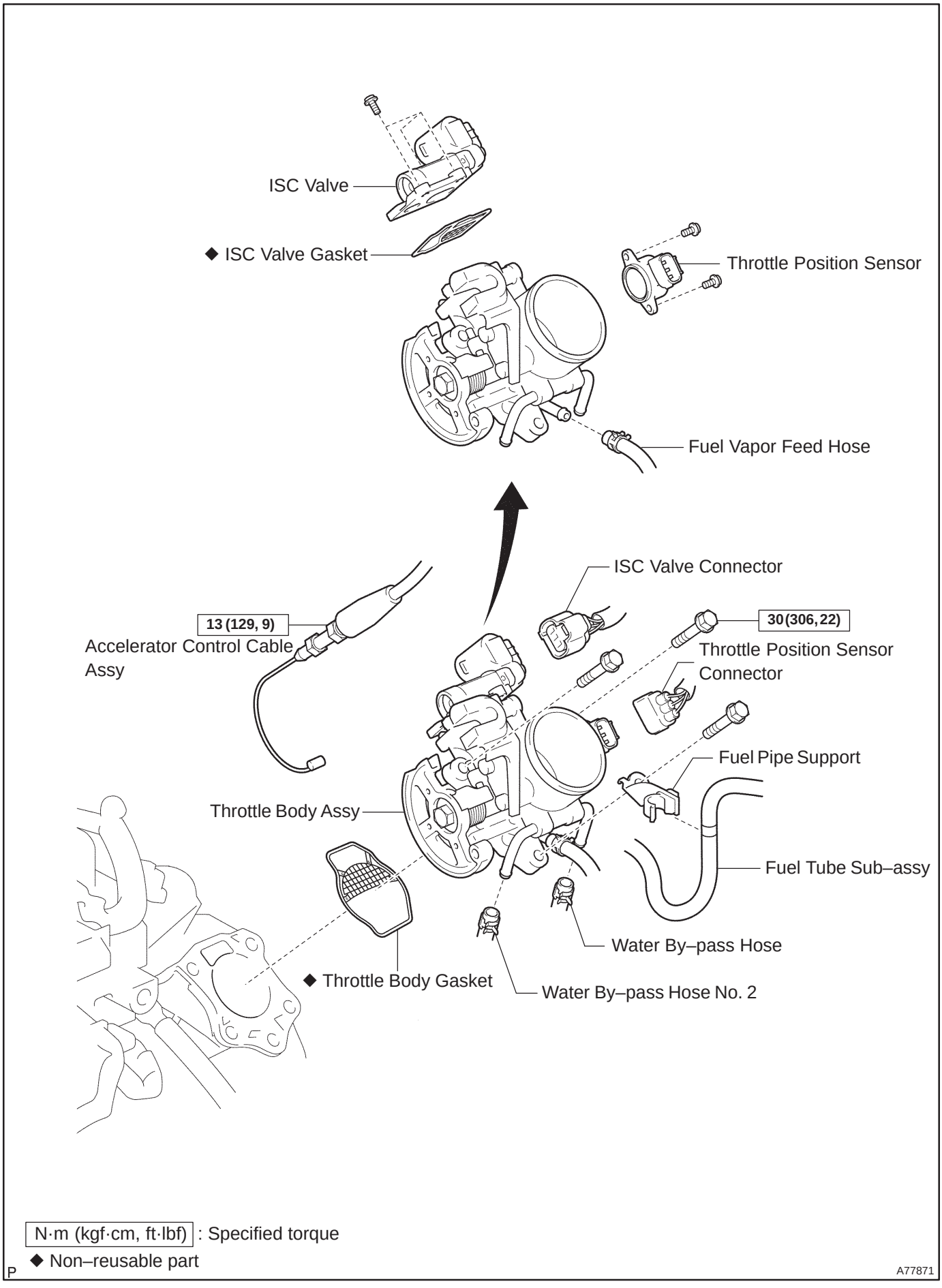
ISC Valve
◆ ISC Valve Gasket
Throttle Position Sensor
Fuel Vapor Feed Hose
ISC Valve Connector
13 (129, 9)
Accelerator Control Cable Assy
30 (306, 22)
Throttle Position Sensor Connector
Fuel Pipe Support
Throttle Body Assy
Fuel Tube Sub–assy
Water By–pass Hose
◆ Throttle Body Gasket
Water By–pass Hose No. 2
N·m (kgf·cm, ft·lbf) : Specified torque
◆ Non–reusable part
P
A77871

100FH–01

Removal & Installation and Disassembly & Reassembly

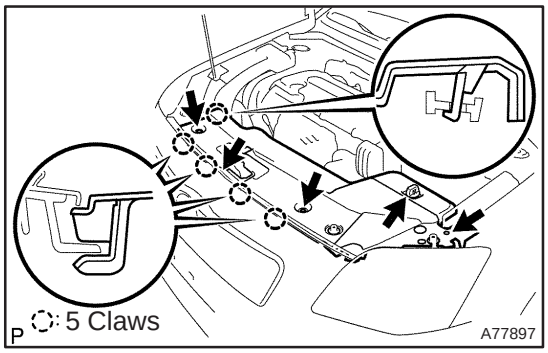

1. REMOVE ENGINE ROOM COVER SIDE

(a) Remove the retainer and 4 clips.

(b) Unfasten the 5 claws and remove the radiator support opening cover.

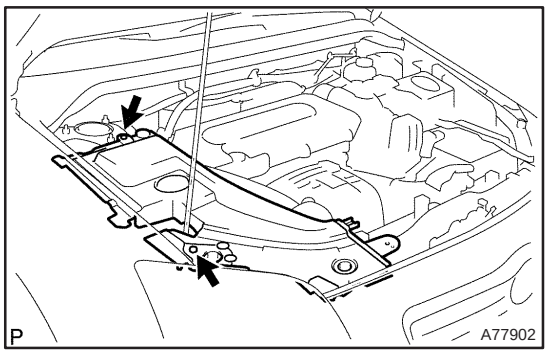

2. REMOVE RADIATOR SUPPORT OPENING COVER

(a) Remove the 2 clips, and then remove the engine room cover side.

3. DRAIN ENGINE COOLANT (See page 16–19)

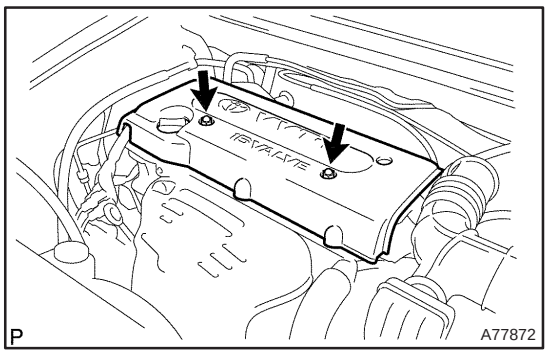

4. REMOVE ENGINE COVER SUB–ASSY NO.1

(a) Remove the 2 nuts, and then remove the engine cover No. 1.

5. REMOVE AIR CLEANER CAP SUB–ASSY

(a) Disconnect the mass air flow meter connector.
(b) Disconnect the VSV connector.
(c) Remove the 2 wire harness clamps.
(d) Disconnect the ventilation hose.
(e) Disconnect the fuel vapor feed hose No. 1.
(f) Disconnect the fuel vapor feed hose N0. 2.
(g) Remove the fuel vapor feed hose No. 2 from 2 clamps of the air cleaner hose.
(h) Lock the hose clamp as shown in the illustration.
(i) Raise the air cleaner clamp up, slide it to the air cleaner cap.
(j) Remove the air cleaner cap together with air cleaner hose No. 1.

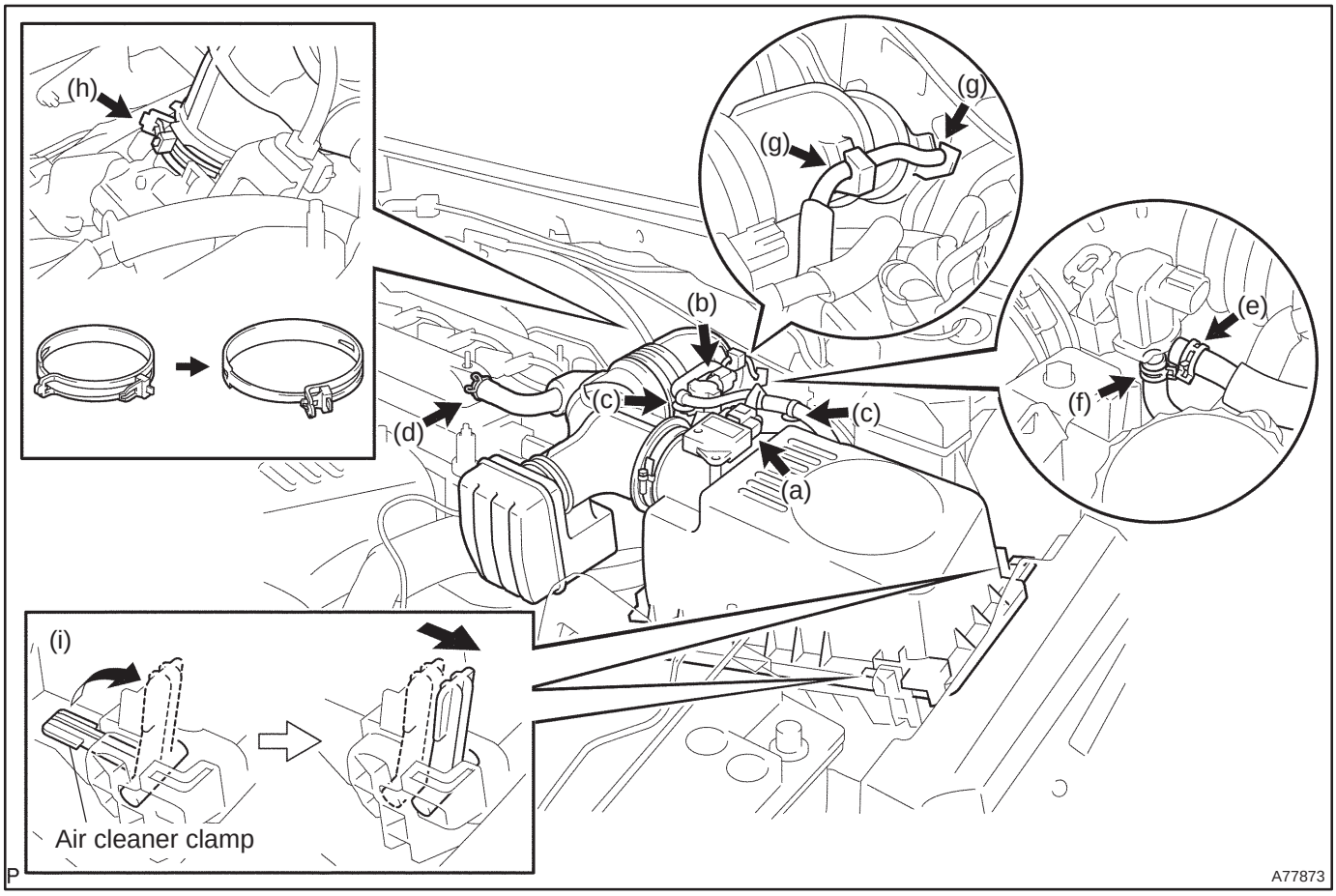

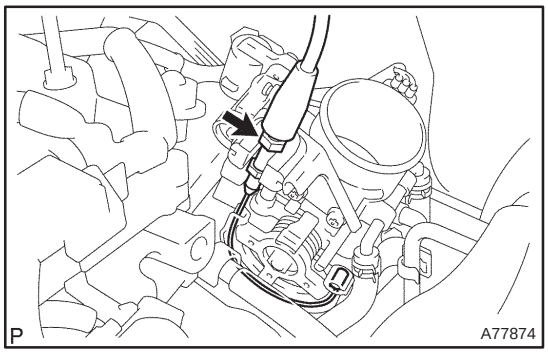

6. SEPARATE ACCELERATOR CONTROL CABLE ASSY

(a) Loosen the nut and separate the accelerator control cable.

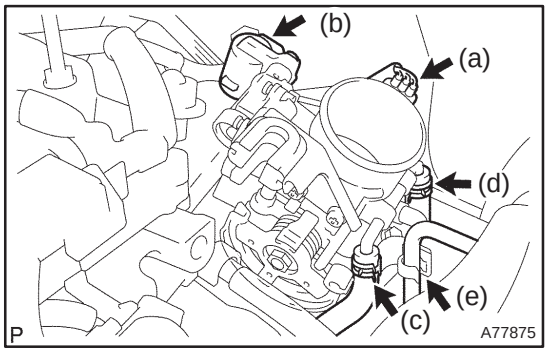

7. REMOVE THROTTLE BODY ASSY

(a) Disconnect the throttle position sensor connector.
(b) Disconnect the ISC valve connector.
(c) Disconnect the water by–pass hose No. 2.
(d) Disconnect the water by–pass hose.
(e) Remove the fuel tube from the fuel pipe support.

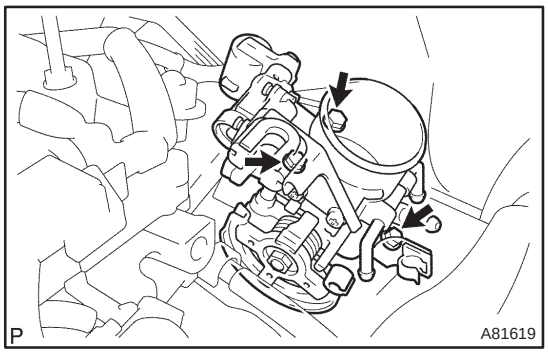

(f) Remove the 3 bolts, and then remove the fuel pipe support and the throttle body.
(g) Remove the gasket from the intake manifold.

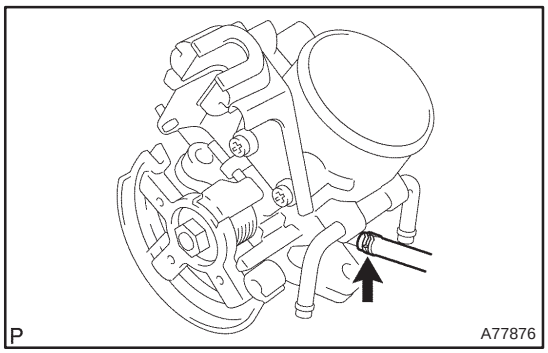

8. REMOVE FUEL VAPOR FEED HOSE NO.2

(a) Remove the fuel vapor feed hose No. 2 from the throttle body.

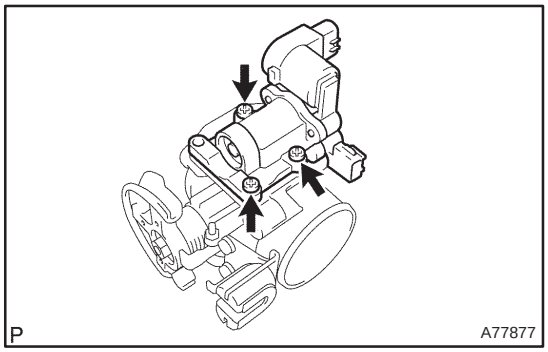

9. REMOVE ISC VALVE

(a) Remove the 3 screws, and then remove the ISC valve.
(b) Remove the gasket from the throttle body.

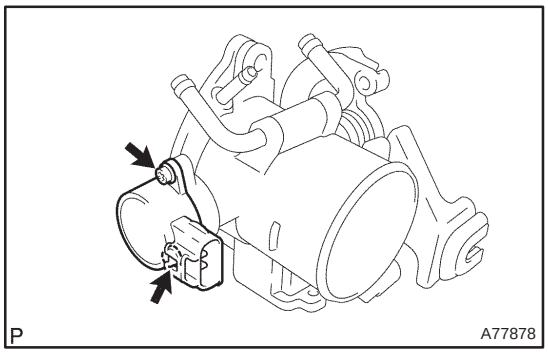

10. REMOVE THROTTLE POSITION SENSOR

(a) Remove the 2 screws, and then remove the throttle position sensor.

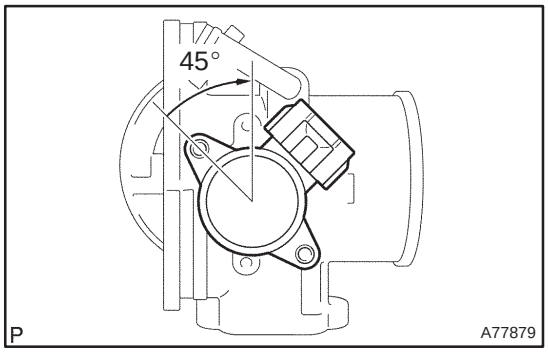

11. INSTALL THROTTLE POSITION SENSOR

(a) Make sure that throttle valve is fully closed.

(b) With the throttle position sensor rotated 45° counter-clockwise about the fully closed position of the throttle valve, install the throttle position sensor to the throttle body.

(c) Rotate the throttle position sensor clockwise and secure it with the 2 screws.

12. INSTALL ISC VALVE

(a) Install a new gasket to the throttle body.

(b) Install the ISC valve with the 3 screws.

13. INSTALL FUEL VAPOR FEED HOSE NO.2

14. INSTALL THROTTLE BODY ASSY

(a) Install a new gasket to the intake manifold.

(b) Install the throttle body and the fuel pipe support with the 3 bolts.

Torque: 30 N·m (306 kgf·cm, 22 ft·lbf)

(c) Install the fuel tube to the fuel pipe support.

(d) Connect the water by–pass hose.

(e) Connect the water by–pass hose No. 2.

(f) Connect the ISC valve connector.

(g) Connect the throttle position sensor connector.

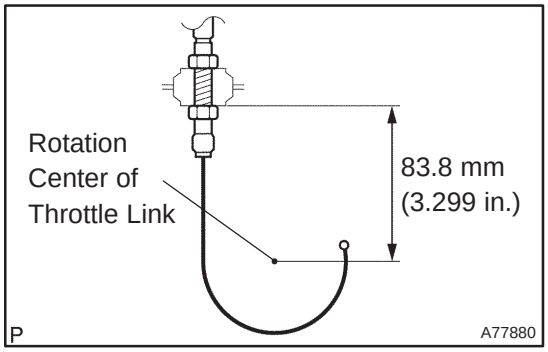

15. INSTALL ACCELERATOR CONTROL CABLE ASSY

(a) Instal the accelerator control cable as shown in the illustration.

Torque: 13 N·m (129 kgf·cm, 9 ft·lbf)

16. INSTALL AIR CLEANER CAP SUB–ASSY

17. INSTALL ENGINE COVER SUB–ASSY NO.1

Torque: 7.0 N·m (71 kgf·cm, 62 in.·lbf)

18. ADD ENGINE COOLANT (See page 16–19)

19. CHECK FOR ENGINE COOLANT LEAKS (See page 16–13)

20. INSTALL ENGINE ROOM COVER SIDE

21. INSTALL RADIATOR SUPPORT OPENING COVER

KNOCK SENSOR (1AZ–FE)

100FK–01

COMPONENTS

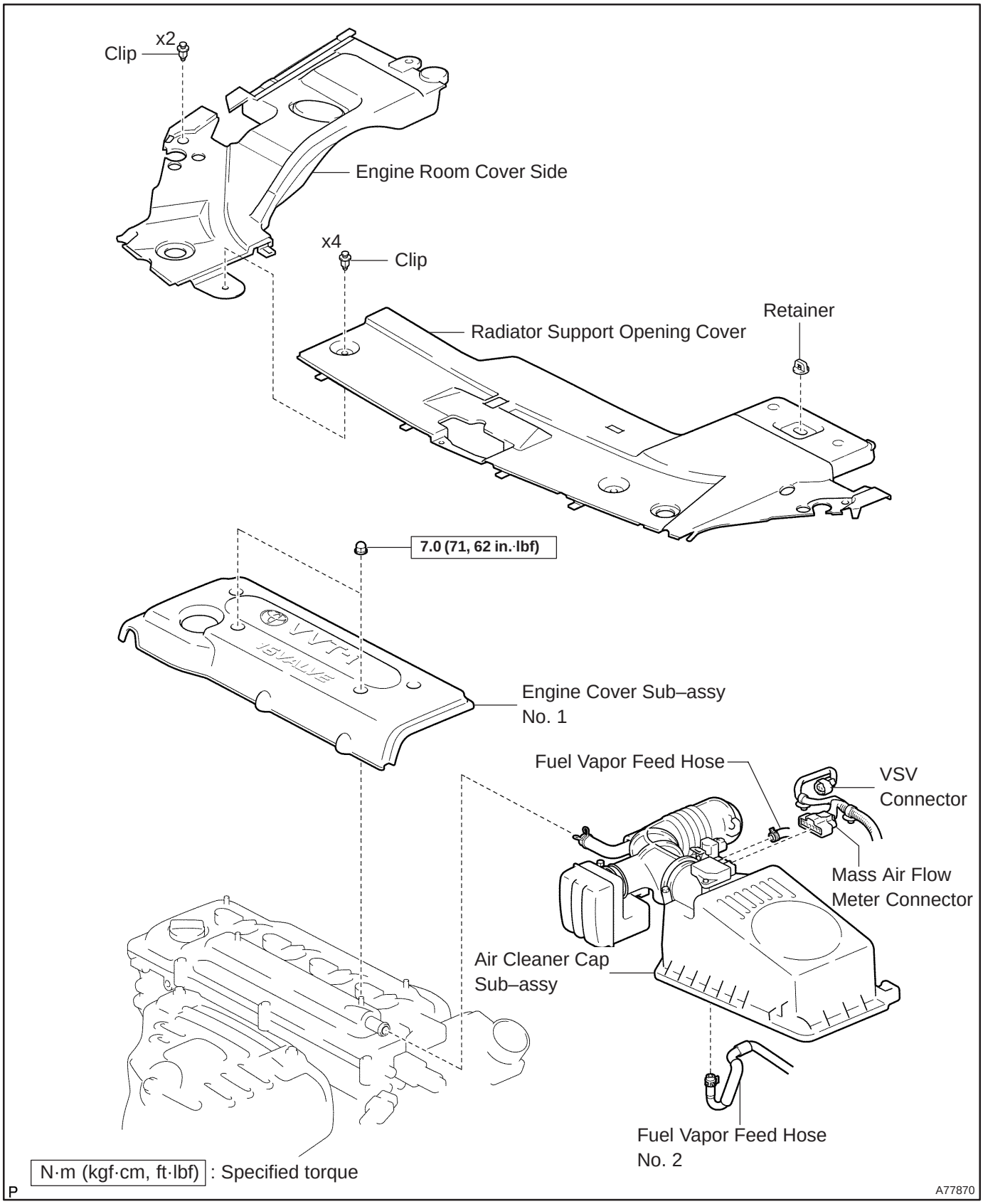

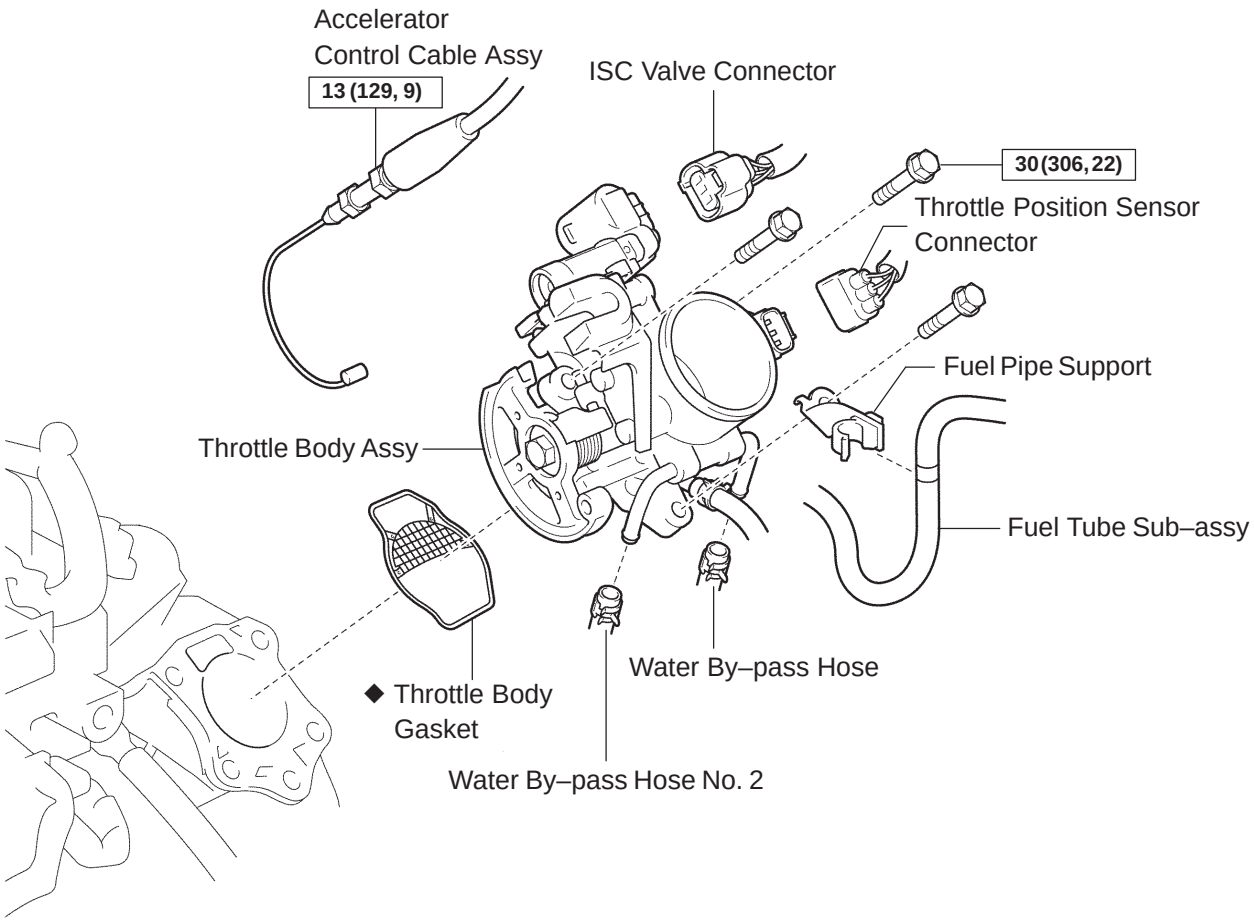

N·m (kgf·cm, ft·lbf) : Specified torque

◆ Non–reusable part

A78452

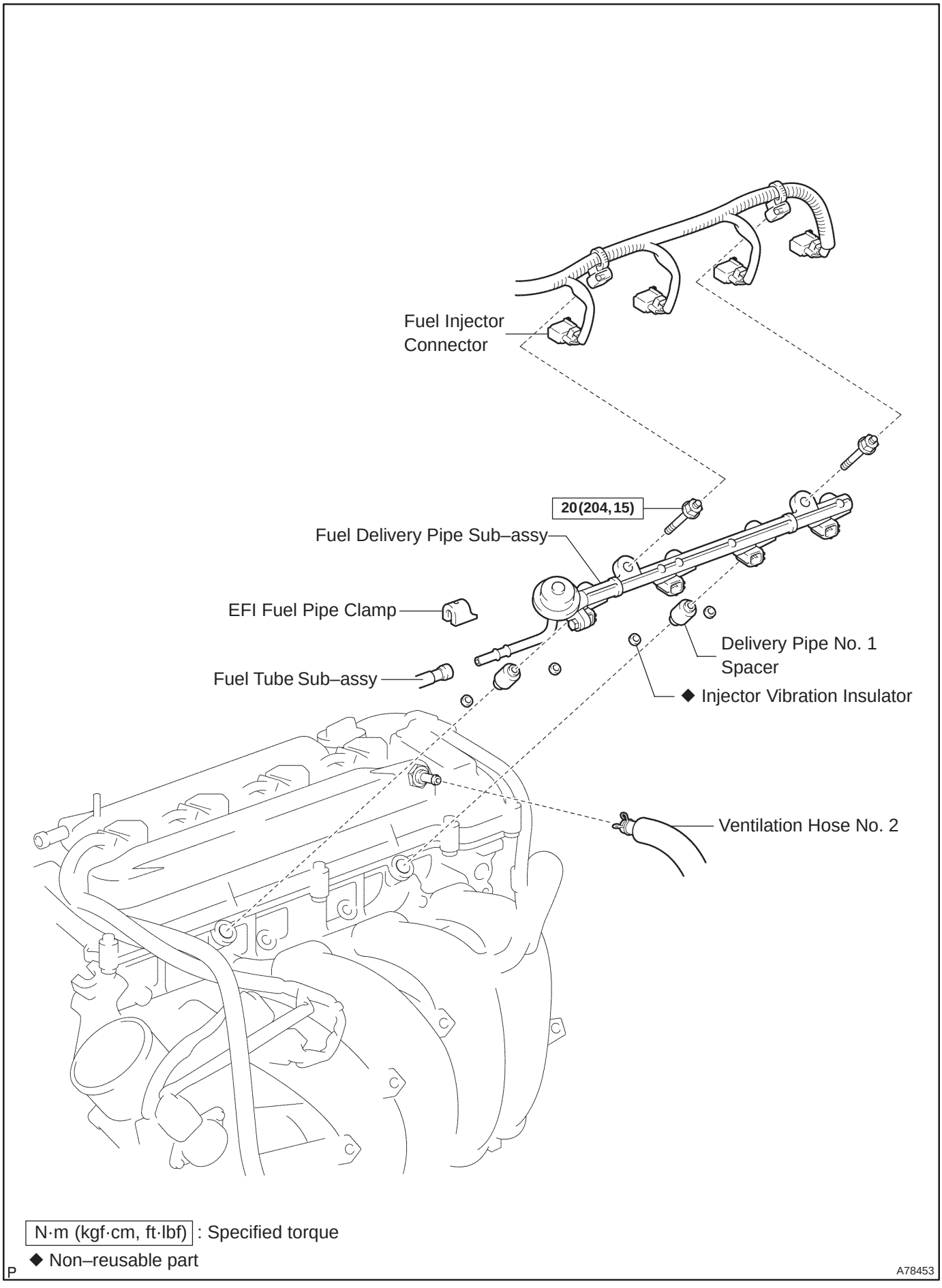
Fuel Injector Connector
20(204, 15)
Fuel Delivery Pipe Sub–assy
EFI Fuel Pipe Clamp
Fuel Tube Sub–assy
Delivery Pipe No. 1 Spacer
◆ Injector Vibration Insulator
Ventilation Hose No. 2
N·m (kgf·cm, ft·lbf) : Specified torque
◆ Non–reusable part
P
A78453

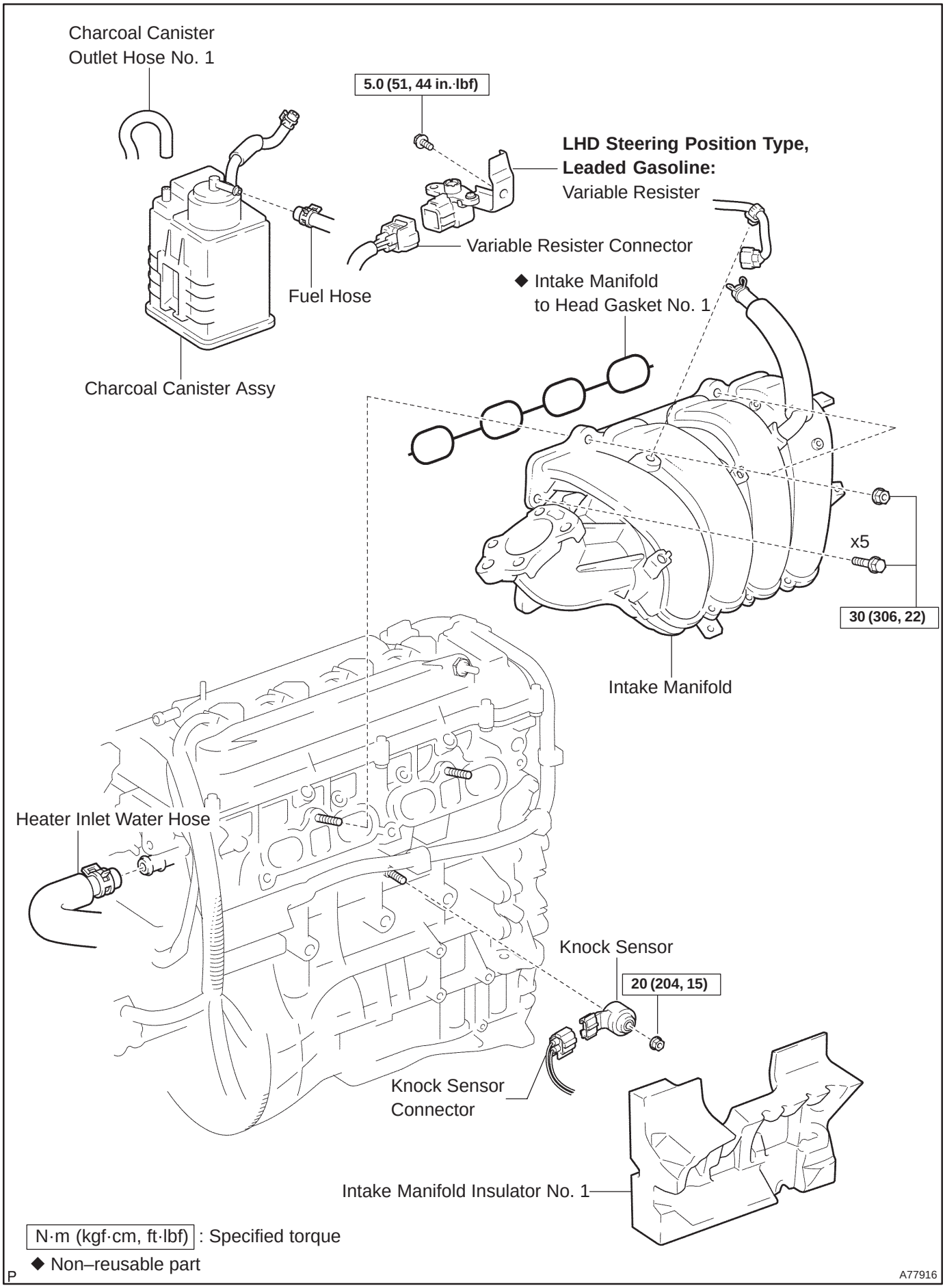
Charcoal Canister
Outlet Hose No. 1
5.0 (51, 44 in.·lbf)
LHD Steering Position Type,
Leaded Gasoline:
Variable Resister
Variable Resister Connector
Fuel Hose
◆ Intake Manifold
to Head Gasket No. 1
Charcoal Canister Assy
x5
30 (306, 22)
Intake Manifold
Heater Inlet Water Hose
Knock Sensor
20 (204, 15)
Knock Sensor
Connector
Intake Manifold Insulator No. 1
N·m (kgf·cm, ft·lbf) : Specified torque
◆ Non–reusable part
P
A77916

100FL–01

REPLACEMENT

1. DISCHARGE FUEL SYSTEM PRESSURE (See page 11–15)
2. REMOVE ENGINE ROOM COVER SIDE (See page 10–26)
3. REMOVE RADIATOR SUPPORT OPENING COVER (See page 10–26)
4. ENGINE COOLANT (See page 16–19)
5. REMOVE ENGINE COVER SUB–ASSY NO.1 (See page 10–26)
6. REMOVE AIR CLEANER CAP SUB–ASSY (See page 10–26)
7. SEPARATE ACCELERATOR CONTROL CABLE ASSY (See page 10–26)
8. REMOVE THROTTLE BODY ASSY (See page 10–26)
9. DISCONNECT FUEL TUBE SUB–ASSY (See page 11–26)
   SST 09268–21010
10. REMOVE FUEL DELIVERY PIPE SUB–ASSY (See page 11–26)

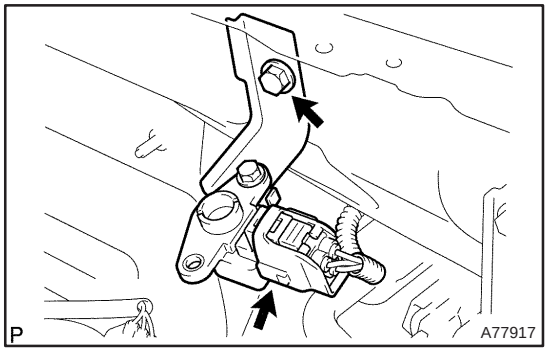

11. REMOVE VARIABLE RESISTOR (LHD STEERING POSITION TYPE, LEADED GASOLINE)
(a) Disconnect the variable resistor connector.
(b) Remove the bolt, and then remove the variable resistor.

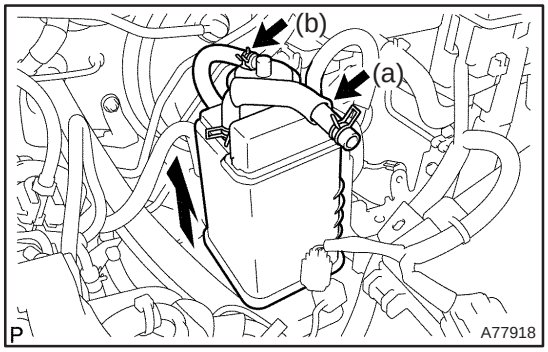

12. REMOVE CHARCOAL CANISTER ASSY
(a) Disconnect the charcoal canister outlet hose No. 1.
(b) Disconnect the fuel hose.
(c) Pull up and remove the charcoal canister.

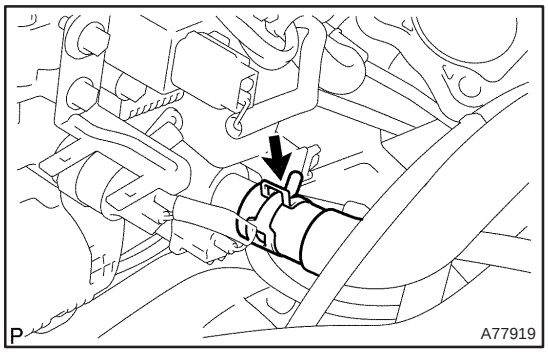

13. DISCONNECT HEATER INLET WATER HOSE

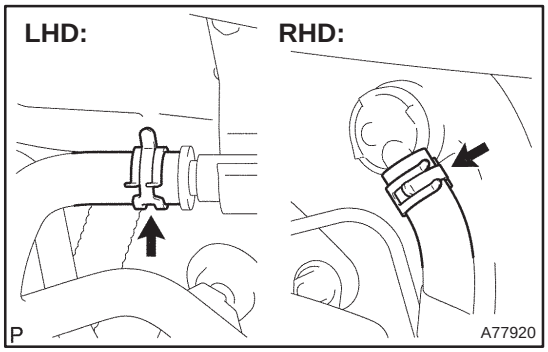

14. REMOVE INTAKE MANIFOLD

(a) Disconnect the union to connector tube hose.

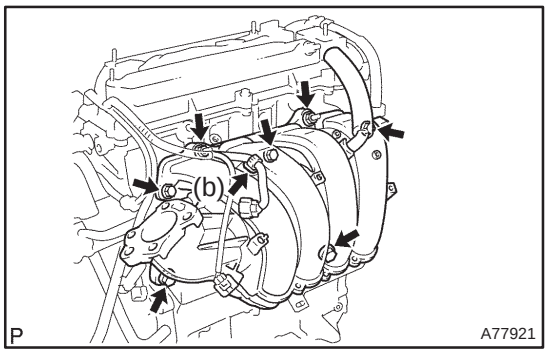

(b) Remove the wire harness clamp.

(c) Remove the 5 bolts and 2 nuts, and then remove the intake manifold.

(d) Remove the gasket from the intake manifold.

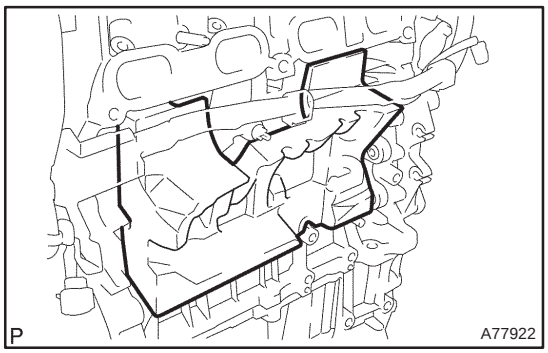

15. REMOVE INTAKE MANIFOLD INSULATOR NO.1

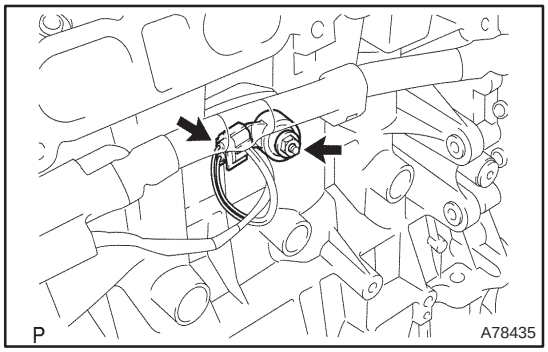

16. REMOVE KNOCK SENSOR

(a) Disconnect the knock sensor connector.

(b) Remove the nut, and then remove the knock sensor.

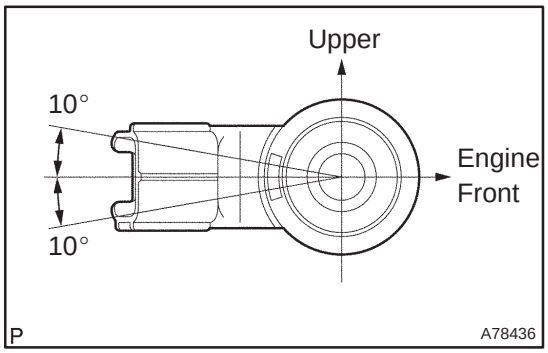

17. INSTALL KNOCK SENSOR

(a) Install the knock sensor with the nut as shown in the illustration.

Torque: 20 N·m (204 kgf·cm, 15 ft·lbf)

(b) Connect the knock sensor connector.

18. INSTALL INTAKE MANIFOLD INSULATOR NO.1

19. INSTALL INTAKE MANIFOLD

(a) Install a new gasket to the intake manifold.

(b) Install the intake manifold with the 5 bolts and 2 nuts.

Torque: 30 N·m (306 kgf·cm, 22 ft·lbf)

(c) Install the wire harness clamp.

(d) Connect the union to connector tube hose.

20. CONNECT HEATER INLET WATER HOSE

21. INSTALL CHARCOAL CANISTER ASSY

22. INSTALL VARIABLE RESISTOR (LHD STEERING POSITION TYPE, LEADED GASOLINE)

Torque: 5.0 N·m (51 kgf·cm, 44 in.·lbf)

23. INSTALL FUEL DELIVERY PIPE SUB–ASSY (See page 11–26)

24. CONNECT FUEL TUBE SUB–ASSY (See page 11–26)

25. INSTALL THROTTLE BODY ASSY (See page 10–26)

26. INSTALL ACCELERATOR CONTROL CABLE ASSY (See page 10–26)

27. INSTALL AIR CLEANER CAP SUB–ASSY

28. ADD ENGINE COOLANT (See page 16–19)

29. CHECK FOR ENGINE COOLANT LEAKS (See page 16–13)

30. CHECK FOR FUEL LEAKS (See page 11–19)

31. INSTALL ENGINE COVER SUB–ASSY NO.1 (See page 10–26)

32. INSTALL ENGINE ROOM COVER SIDE

33. INSTALL RADIATOR SUPPORT OPENING COVER

SFI SYSTEM (1AZ–FSE)

ON–VEHICLE INSPECTION

100G8–02

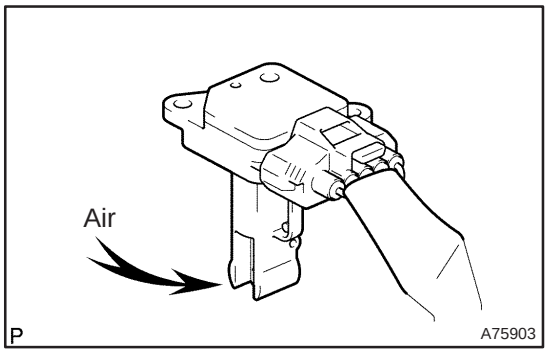

1. INSPECT MASS AIR FLOW METER

(a) If you have hand–held tester:
Inspect for operation
(1) Connect the hand–held tester to the DLC3.
(2) Turn the ignition switch ON.
(3) Blow air into the MAF meter, and check that the air flow fluctuates (MAF) of the CURRENT DATA shown the standard value.

If operation is not as specified, check the MAF meter (See page 10–39), wiring and ECM.

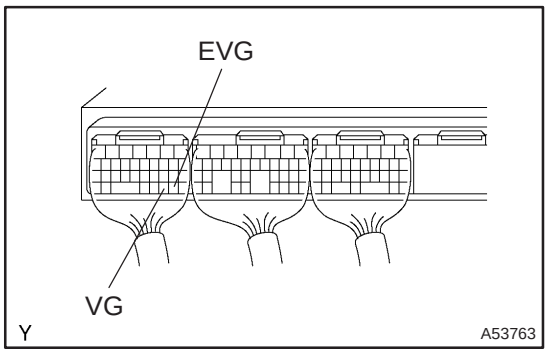

(b) If you have no hand–held tester:
Inspect for operation
(1) Turn the ignition switch ON.
(2) Connect the positive tester probe of the voltmeter to the terminal VG of the ECM. and the negative tester probe of the voltmeter to the terminal EVG of the ECM.
(3) Blow air into the MAF meter, and check that the voltage fluctuates.

If operation is not as specified, check the MAF meter (See page 10–39), wiring and ECM.

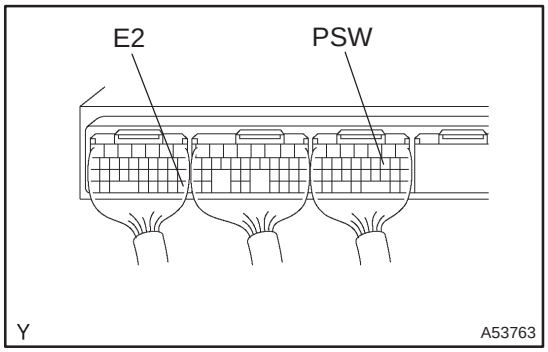

2. INSPECT POWER STEERING OIL PRESSURE SENSOR

(a) Using a voltmeter, measure the voltage between terminals PSW and E2.

Voltage:

Condition	Voltage (V)
Not spin the steering wheel at engine idling	9 to 14
Spin the steering wheel at engine idling	0 to 3

3. INSPECT THROTTLE BODY

(a) Inspect the throttle control motor for operating sound.
  (1) Turn the ignition switch ON.
  (2) When turning the accelerator pedal position sensor lever, check the running sound of the motor. Also, check that there is no friction sound.

If operation is not as specified, check the throttle control motor (See page 10–39), wiring and ECM.

(b) Inspect the throttle position sensor.
  (1) Connect the hand–held tester to the DLC3.
  (2) Turn the ignition switch ON.
  (3) When turning the accelerator pedal position sensor lever to the full–open position, check that the throttle valve opening percentage (THROTTLE POS) of the CURRENT DATA shown the standard value.

  Standard throttle valve opening percentage:
  60 % or more

If operation is not as specified, check that the accelerator pedal position sensor (See page 10–39), wiring and ECM.

If you have no hand–held tester, measure voltage between terminals (VTA1 – E2, VTA2 – E2) of the ECM connector (See page 05–318).

(c) Inspect the air assist system.
  (1) Start the engine and check that the CHK ENG does not light up.
  (2) Allow the engine to warm up to normal operating temperature.
  (3) Turn the A/C compressor ON to OFF, and check the idle speed.

  Idle speed (Transmission in neutral): 700 ± 50 rpm

NOTICE:

Perform inspection under condition without electrical load.

(d) After checking the above (b) to (d), perform the driving test and check that there is no sense of incongruity.

4. INSPECT ACCELERATOR PEDAL POSITION SENSOR

(a) Connect the hand–held tester to the DLC3.

(b) Turn the ignition switch ON.

(c) Check that the voltage (ACCEL POS) of the CURRENT DATA shown the standard value.

  Accelerator pedal released: 0.5 to 1.1 V
  Accelerator pedal depress: 2.6 to 4.5 V

(d) Check that the voltage (ACCEL POS #2) of the CURRENT DATA shown the standard value.

  Accelerator pedal released: 1.2 to 2.0 V
  Accelerator pedal depress: 3.4 to 5.3 V

If you have no hand–held tester, measure voltage between terminals (VPA – EPA, VPA2 – EPA2) of the ECM connector (See page 05–318).

INSPECTION

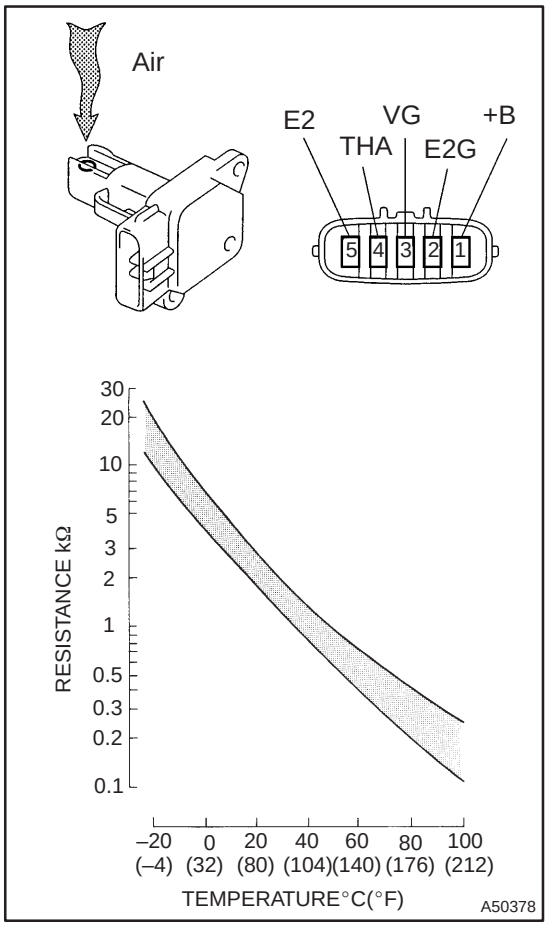

1. INSPECT MASS AIR FLOW METER

(a) Output voltage inspection.

(1) Apply battery voltage across terminals 1 (+B) and 2 (E2G).

(2) Using a voltmeter, connect the positive (+) tester probe to terminal 3 (VG), and negative (–) tester probe to terminal 2 (E2G).

(3) Blow air into the MAF meter, and check that the voltage fluctuates.

(b) Resistance inspection.

(1) Using an ohmmeter, measure the resistance between terminals 4 (THA) and 5 (E2).

Resistance:

Terminals	Resistance	Temperature
THA – E2	13.6 to 18.4 kΩ	–20 °C (–4 °F)
THA – E2	2.21 to 2.69 kΩ	20 °C (68 °F)
THA – E2	0.49 to 0.67 kΩ	60 °C (140 °F)

2. INSPECT CAMSHAFT TIMING OIL CONTROL VALVE ASSY

(a) Resistance inspection.

(1) Using an ohmmeter, measure the resistance between the terminals.

Resistance: 6.9 to 7.9 Ω at 20 °C (68 °F)

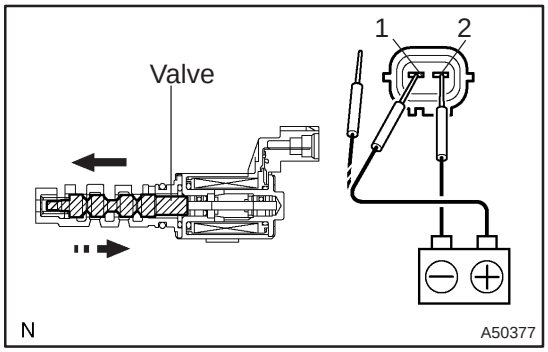

(b) Movement inspection.

(1) Connect the positive (+) lead from the battery to terminal 1 and negative (–) lead to terminal 2, and check the movement of the valve.

NOTICE:

Confirm the valve does not adhere.

HINT:

Bad returning of the valve by entrance of foreign objects causes subtle pressure leak to the advanced direction. Then, DTC can be detected.

3. INSPECT THROTTLE BODY ASSY

(a) Using an ohmmeter, measure the resistance between the terminals.

Resistance:

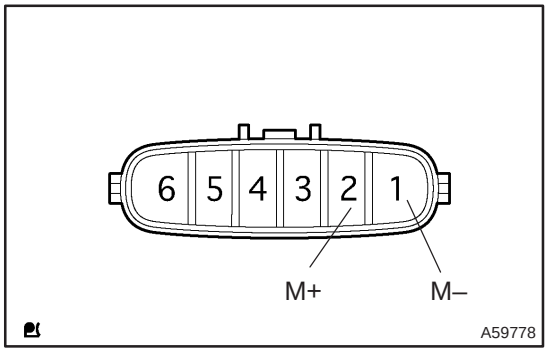

Terminal No.	Resistance
2 (M+) – 1 (M–)	0.3 to 100 Ω at 20 °C (68 °F)

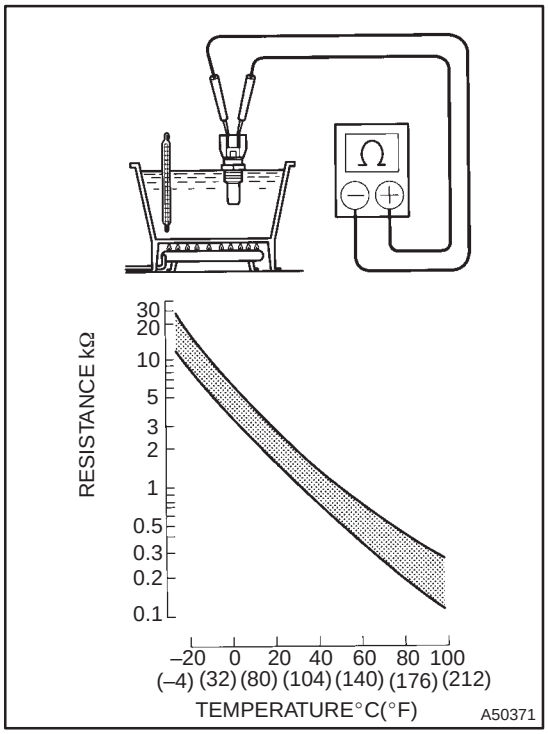

4. INSPECT ENGINE COOLANT TEMPERATURE SENSOR

(a) Resistance inspection.

(1) Using an ohmmeter, measure the resistance between each terminal.

Resistance:

Approx. 20°C (68°F) 2.32 to 2.59kΩ

Approx. 80°C (176°F) 0.310 to 0.326kΩ

NOTICE:

In case of checking the water temperature sensor in the water, be careful not to allow water to go into the terminals, and after checking, wipe out the sensor.

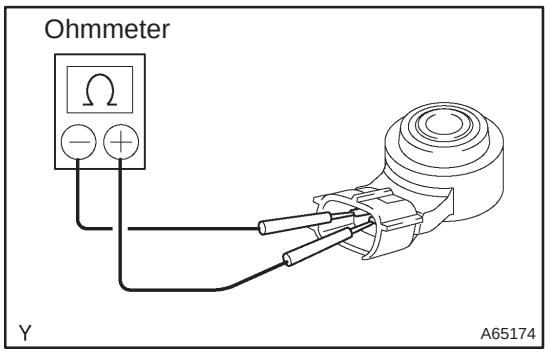

5. INSPECT KNOCK SENSOR

(a) Using an ohmmeter, measure the resistance between terminals.

Resistance: 120 to 280 kΩ at 20°C (68°F)

HINT:

If the resistance is not specified, replace the sensor.

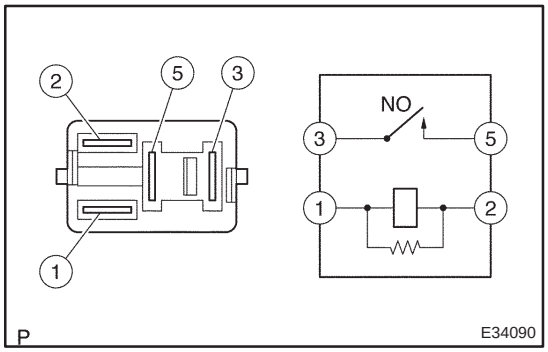

6. INSPECT EFI RELAY

(a) Inspect the relay continuity.

(1) Using an ohmmeter, check that there is continuity between terminals 1 and 2.

Specified condition: Continuity

(2) Check that there is no continuity between terminals 3 and 5.

Specified condition: No continuity

(b) Inspect the relay operation.

(1) Apply battery voltage across terminals 1 and 2.

(2) Using an ohmmeter, check that there is continuity between terminals 3 and 5.

Specified condition: Continuity

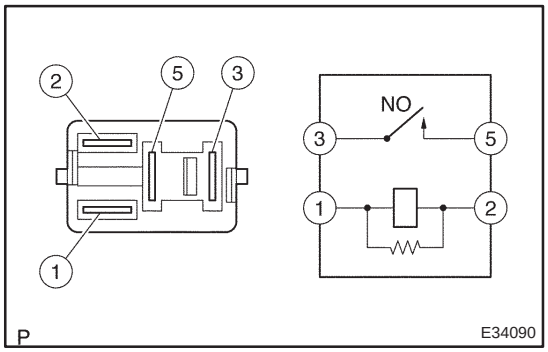

7. INSPECT CIRCUIT OPENING RELAY

(a) Inspect the relay continuity.

(1) Using an ohmmeter, check that there is continuity between terminals 1 and 2.

Specified condition: Continuity

(2) Check that there is no continuity between terminals 3 and 5.

Specified condition: No continuity

(b) Inspect the relay operation.

(1) Apply battery voltage across terminals 1 and 2.

(2) Using an ohmmeter, check that there is continuity between terminals 3 and 5.

Specified condition: Continuity

THROTTLE BODY ASSY (1AZ–FSE)

100FI–01

COMPONENTS

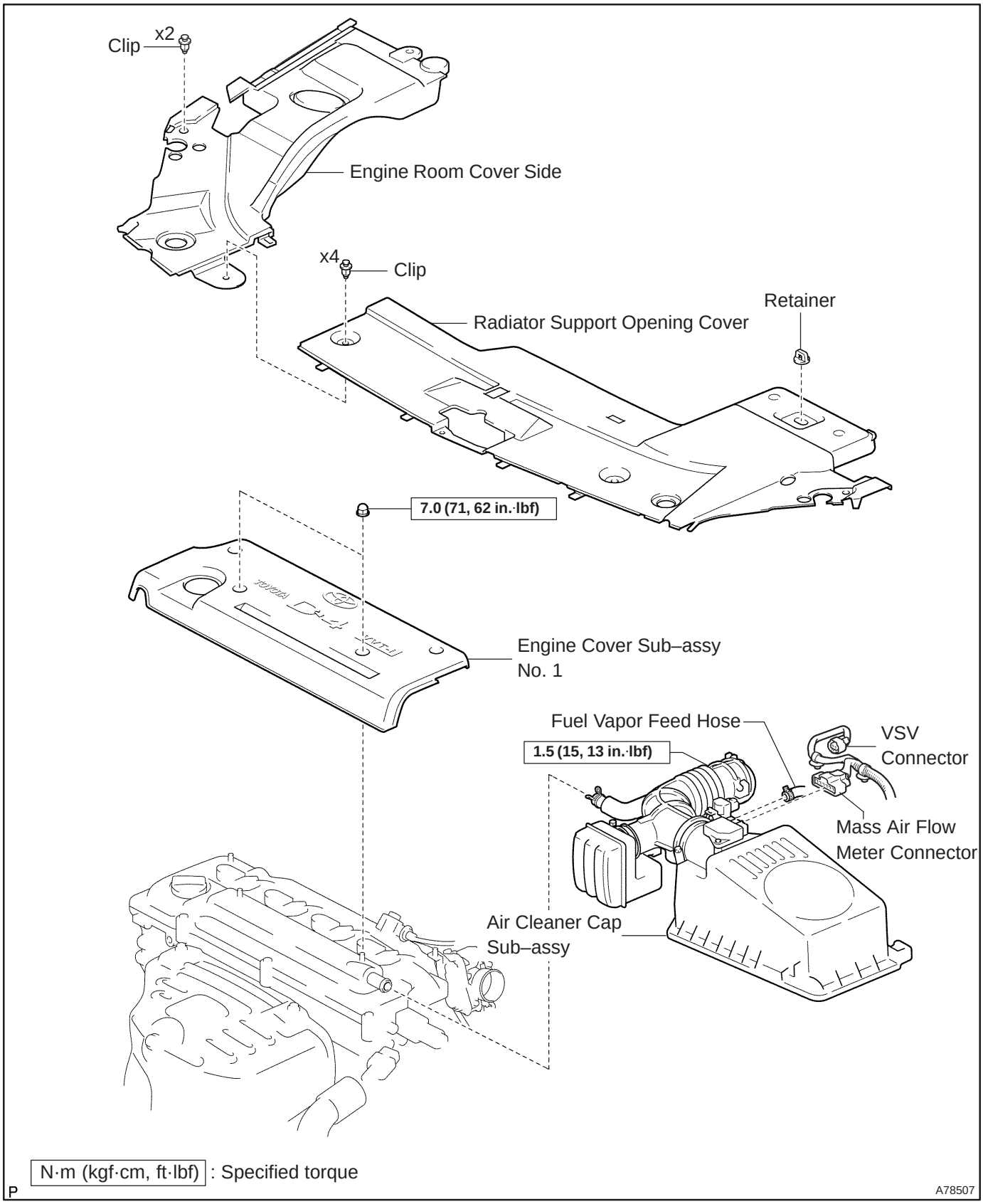

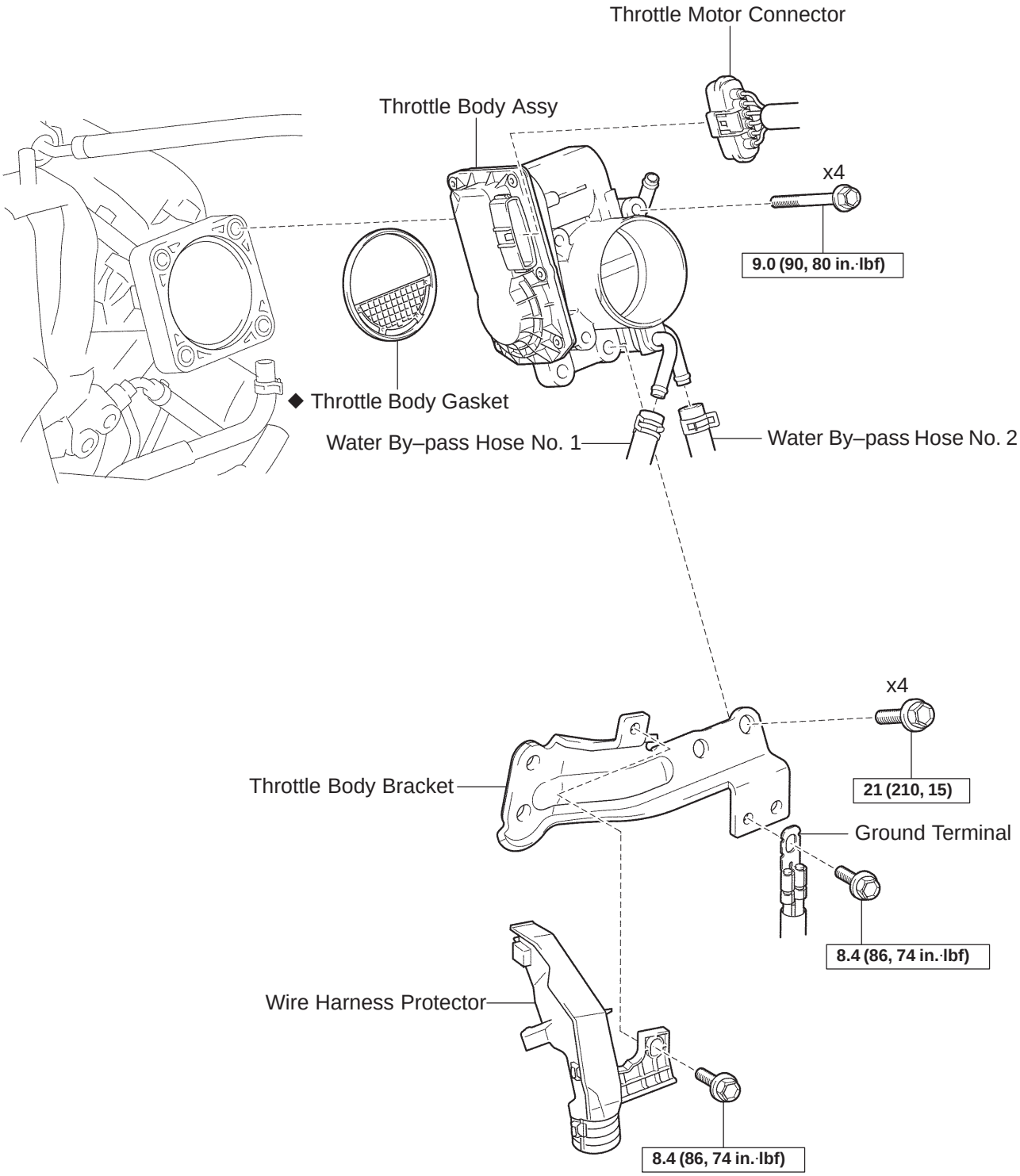

N·m (kgf·cm, ft·lbf) : Specified torque

◆ Non–reusable part

P

A78508

100FJ–01

REPLACEMENT

1. REMOVE ENGINE ROOM COVER SIDE (See page 10–26)
2. REMOVE RADIATOR SUPPORT OPENING COVER (See page 10–26)
3. DRAIN ENGINE COOLANT (See page 16–31)

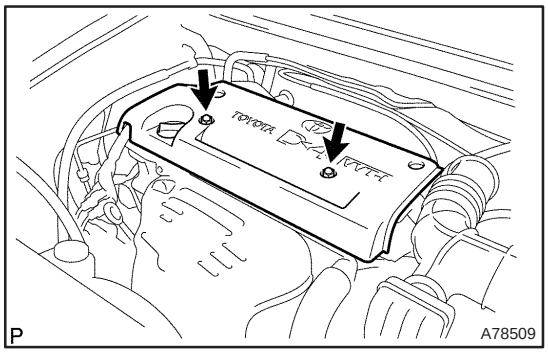

4. REMOVE ENGINE COVER SUB–ASSY NO.1

(a) Remove the 2 nuts, and then remove the engine cover No. 1.

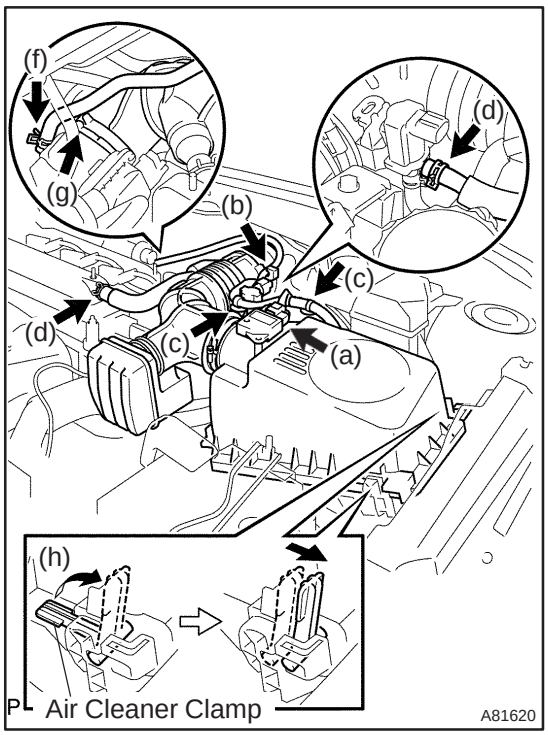

5. REMOVE AIR CLEANER CAP SUB–ASSY

(a) Disconnect the mass air flow meter connector.
(b) Disconnect the VSV connector.
(c) Remove the 2 wire harness clamps.
(d) Disconnect the ventilation hose.
(e) Disconnect the fuel vapor feed hose No. 1.
(f) Disconnect the fuel vapor feed hose No. 2.
(g) Loosen the hose clamp bolt.
(h) Raise the air cleaner clamp up, slide it to the air cleaner cap.
(i) Remove the air cleaner cap together with the air cleaner hose No. 1.

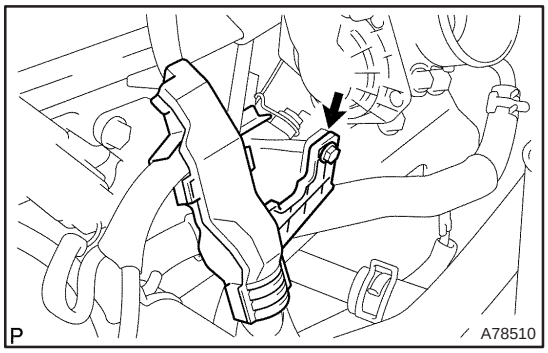

6. REMOVE THROTTLE BODY ASSY

(a) Remove the bolt, and then remove the wire harness protector.

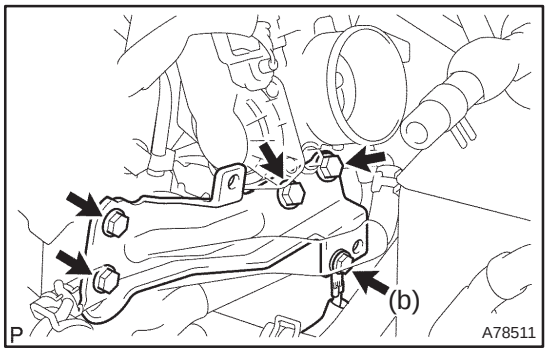

(b) Remove the bolt, and then remove the ground terminal.
(c) Remove the 4 bolts, and then remove the throttle body bracket.

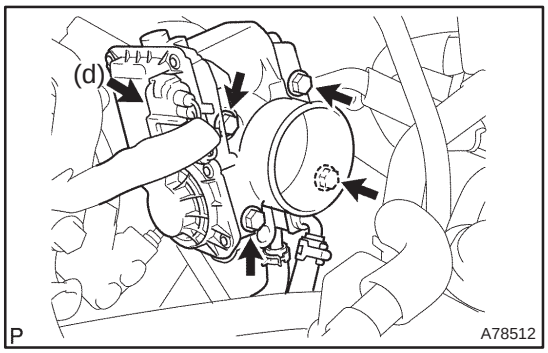

(d) Disconnect the throttle motor connector.
(e) Remove the 4 bolts, and then remove the throttle body.
(f) Remove the gasket from the intake manifold.

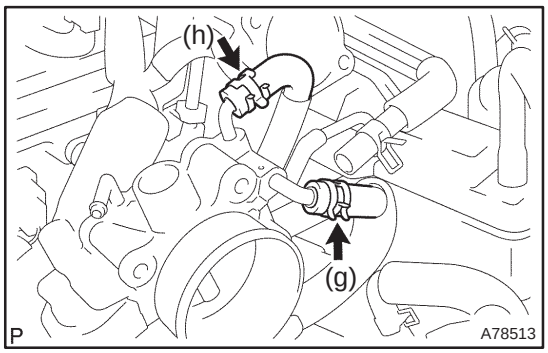

(g) Disconnect the water by–pass hose No. 1.
(h) Disconnect the water by–pass hose No. 2.

7. INSTALL THROTTLE BODY ASSY

(a) Connect the water by–pass hose No. 2.
(b) Connect the water by–pass hose No. 1.
(c) Install a new gasket to the intake manifold.
(d) Install the throttle body with the 4 bolts.
Torque: 9.0 N·m (90 kgf·cm, 80 in.·lbf)
(e) Connect the throttle motor connector.
(f) Install the throttle body bracket with the 4 bolts.
Torque: 21 N·m (210 kgf·cm, 15 ft·lbf)
(g) Install the ground terminal with the bolt.
Torque: 8.4 N·m (86 kgf·cm, 74 in.·lbf)
(h) Install the wire harness protector with the bolt.
Torque: 8.4 N·m (86 kgf·cm, 74 in.·lbf)

8. INSTALL AIR CLEANER CAP SUB–ASSY
Torque: 1.5 N·m (15 kgf·cm, 13 in.·lbf)

9. INSTALL ENGINE COVER SUB–ASSY NO.1
Torque: 7.0 N·m (71 kgf·cm, 62 in.·lbf)

10. ADD ENGINE COOLANT (See page 16–31)

11. CHECK FOR ENGINE COOLANT LEAKS (See page 16–25)

12. INSTALL ENGINE ROOM COVER SIDE

13. INSTALL RADIATOR SUPPORT OPENING COVER

KNOCK SENSOR (1AZ–FSE)

COMPONENTS

100F9–01

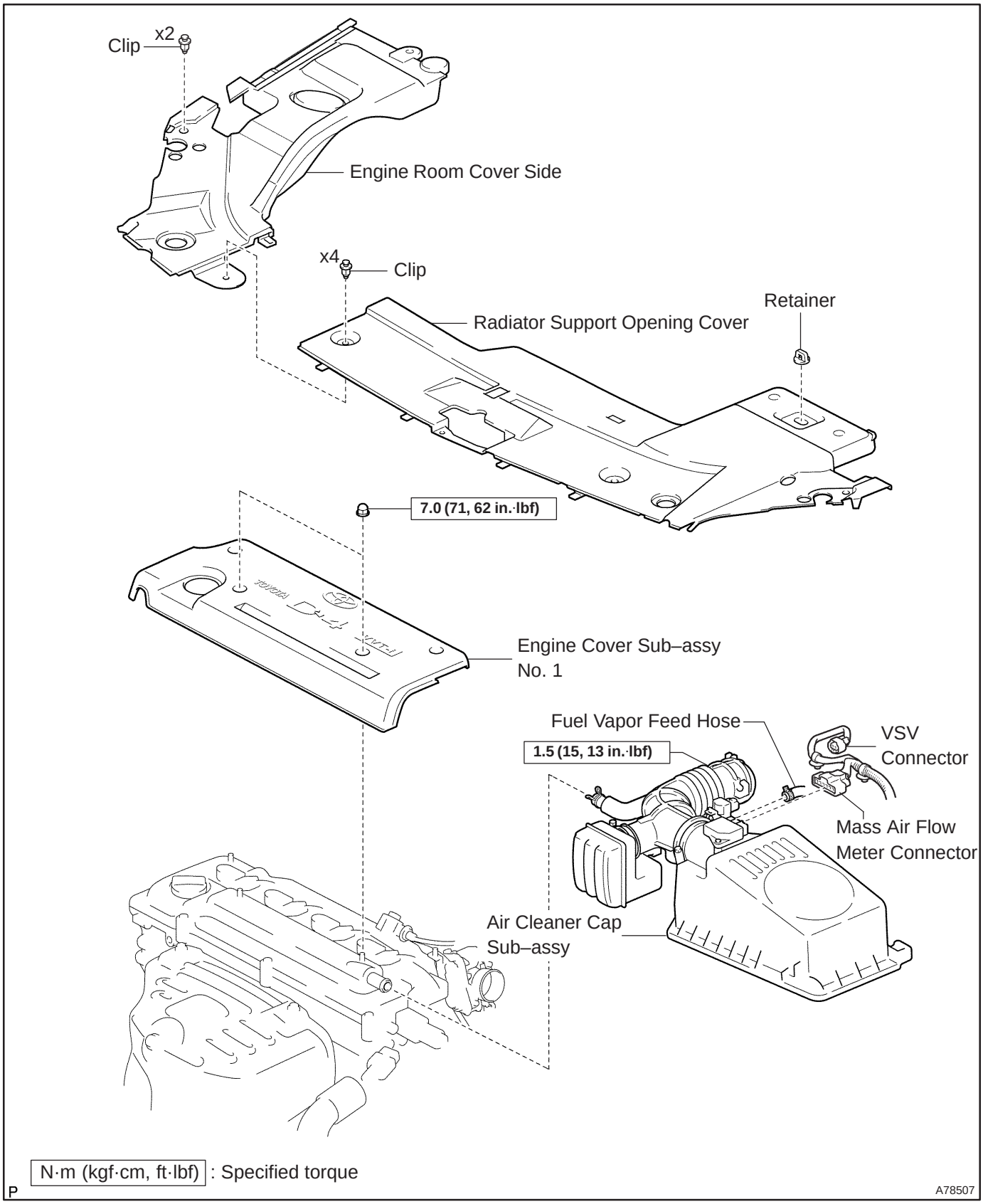

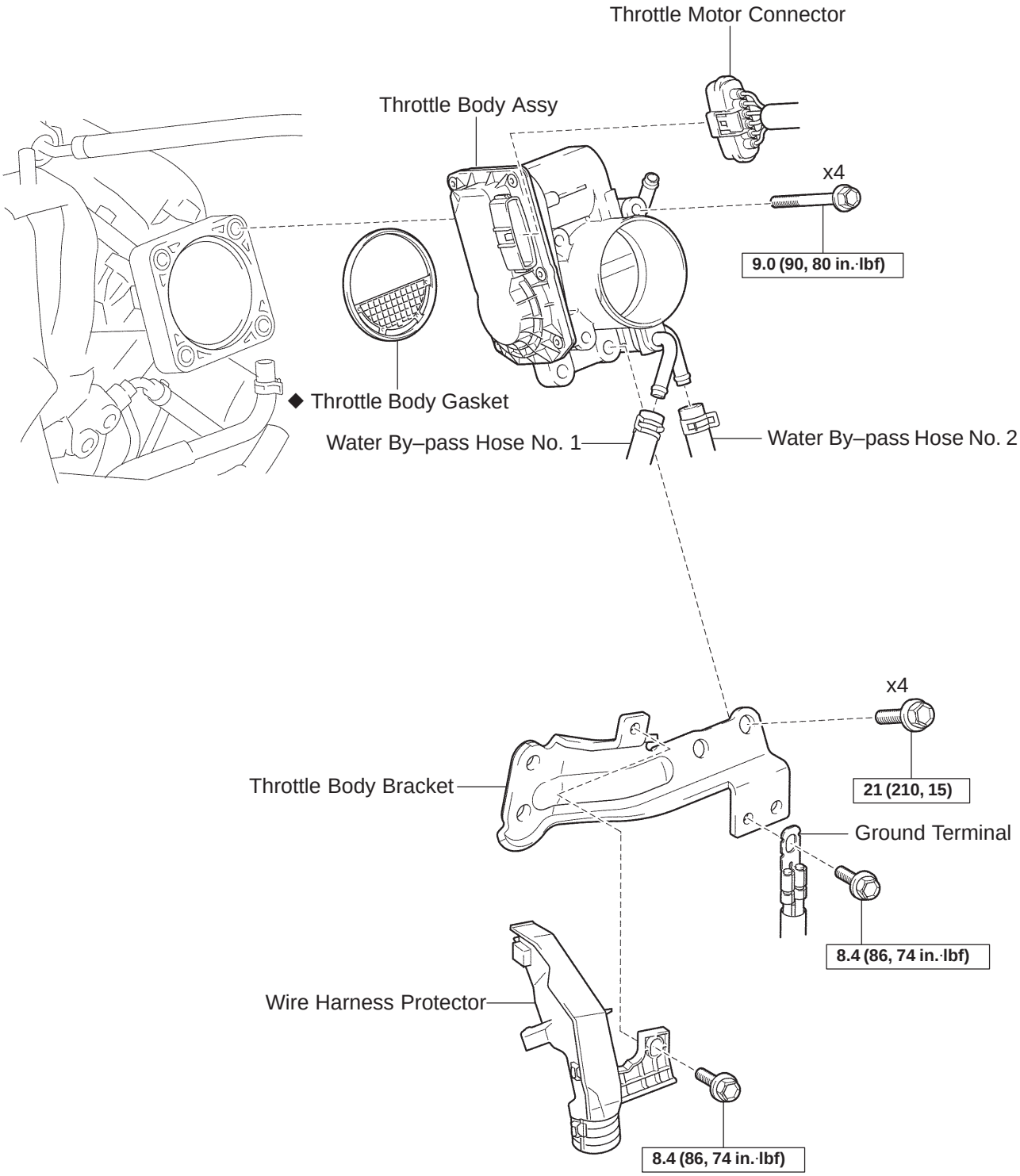

N·m (kgf·cm, ft·lbf) : Specified torque

◆ Non–reusable part

P

A78508

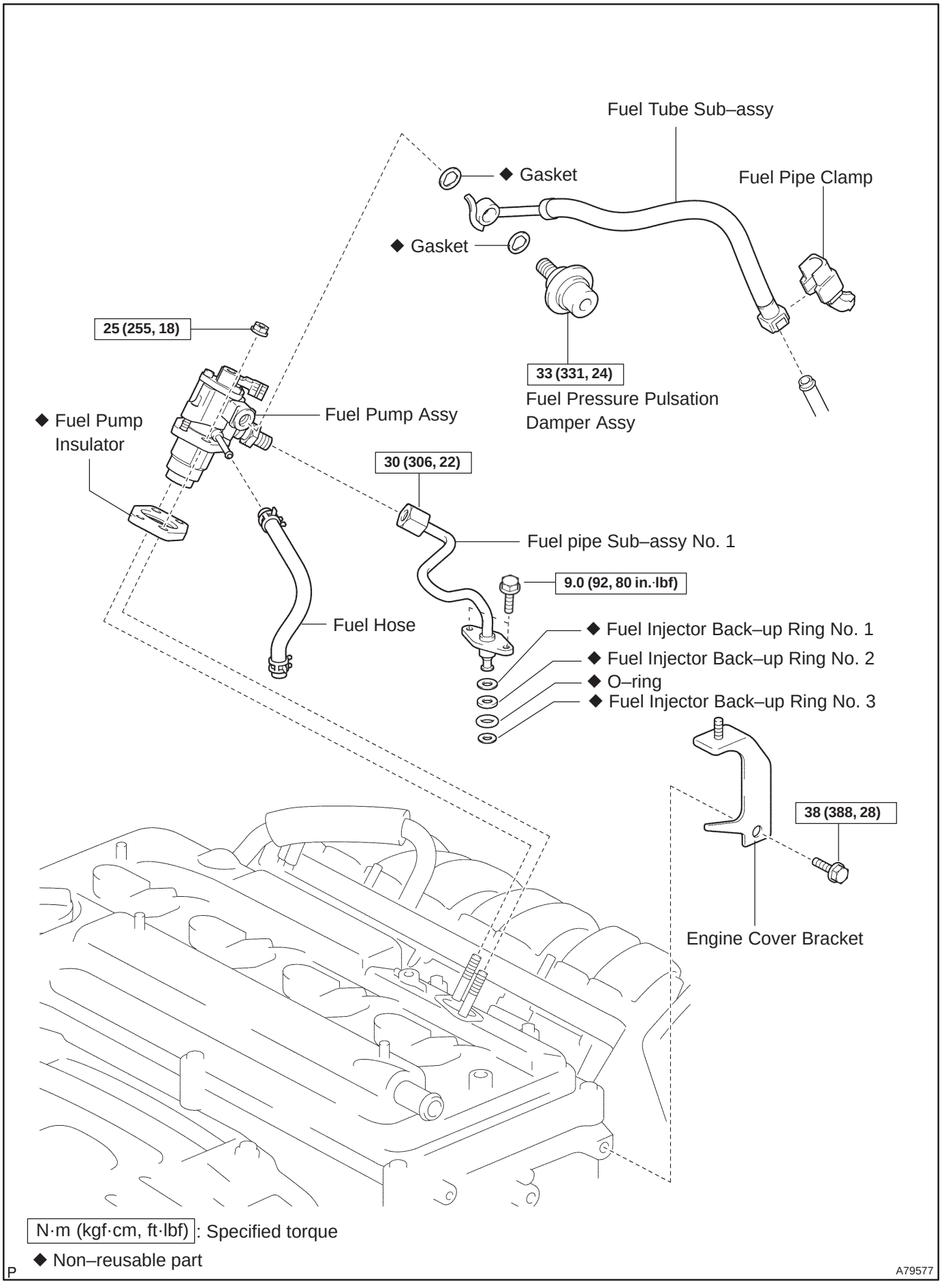
Fuel Tube Sub–assy
◆ Gasket
Fuel Pipe Clamp
◆ Gasket
25 (255, 18)
33 (331, 24)
Fuel Pressure Pulsation Damper Assy
◆ Fuel Pump Insulator
Fuel Pump Assy
30 (306, 22)
Fuel pipe Sub–assy No. 1
9.0 (92, 80 in.·lbf)
Fuel Hose
◆ Fuel Injector Back–up Ring No. 1
◆ Fuel Injector Back–up Ring No. 2
◆ O–ring
◆ Fuel Injector Back–up Ring No. 3
38 (388, 28)
Engine Cover Bracket
N·m (kgf·cm, ft·lbf): Specified torque
◆ Non–reusable part
P
A79577

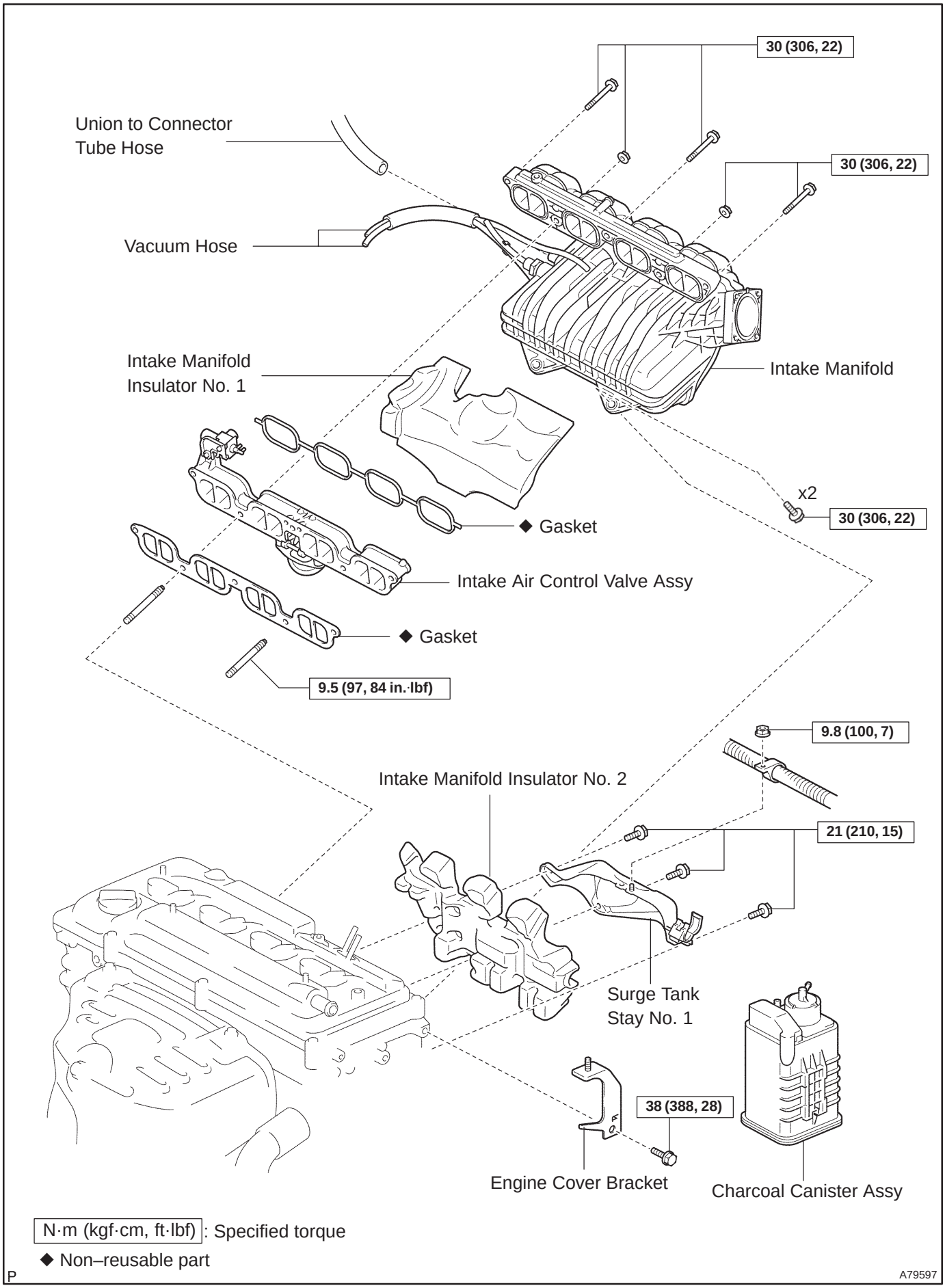
30 (306, 22)
Union to Connector Tube Hose
30 (306, 22)
Vacuum Hose
Intake Manifold Insulator No. 1
Intake Manifold
x2
30 (306, 22)
◆ Gasket
Intake Air Control Valve Assy
◆ Gasket
9.5 (97, 84 in.·lbf)
9.8 (100, 7)
Intake Manifold Insulator No. 2
21 (210, 15)
Surge Tank Stay No. 1
38 (388, 28)
Engine Cover Bracket
Charcoal Canister Assy
N·m (kgf·cm, ft·lbf): Specified torque
◆ Non–reusable part
P
A79597

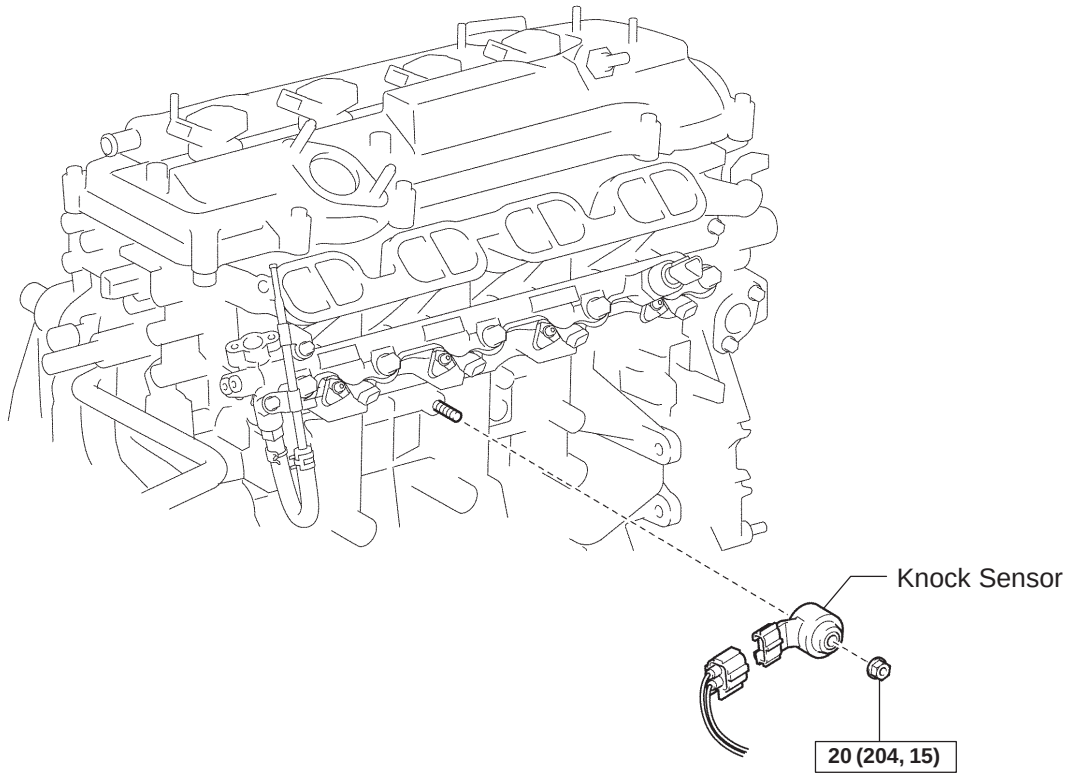

N·m (kgf·cm, ft·lbf): Specified torque

P

A79833

100FA–01

REPLACEMENT

1. DISCHARGE FUEL SYSTEM PRESSURE (See page 11–30)
2. REMOVE RADIATOR SUPPORT OPENING COVER (See page 18–16)
3. REMOVE ENGINE ROOM COVER SIDE (See page 18–17)
4. REMOVE ENGINE COVER SUB–ASSY NO.1 (See page 10–44)
5. DRAIN ENGINE COOLANT (See page 16–31)
6. REMOVE AIR CLEANER CAP SUB–ASSY (See page 10–44)
7. REMOVE THROTTLE BODY ASSY (See page 10–44)
8. REMOVE CHARCOAL CANISTER ASSY
9. REMOVE ENGINE COVER BRACKET (See page 11–52)
10. REMOVE FUEL PUMP ASSY (See page 11–52)
11. REMOVE INTAKE MANIFOLD (See page 11–42)
12. REMOVE SURGE TANK STAY NO.1 (See page 11–42)
13. REMOVE INTAKE MANIFOLD INSULATOR NO.2 (See page 11–42)

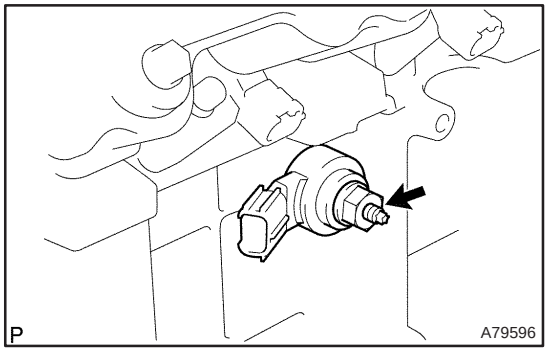

14. REMOVE KNOCK SENSOR

(a) Remove the nut and the knock sensor.

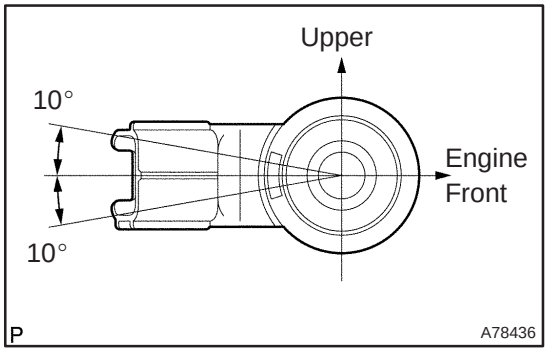

15. INSTALL KNOCK SENSOR

(a) Install the knock sensor with the nut as shown in the illustration.

Torque: 20 N·m (204 kgf·cm, 15 ft·lbf)

16. INSTALL INTAKE MANIFOLD INSULATOR NO.2 (See page 11–42)
17. INSTALL SURGE TANK STAY NO.1 (See page 11–42)
18. INSTALL INTAKE MANIFOLD (See page 11–42)
19. INSTALL FUEL PUMP ASSY (See page 11–52)
20. INSTALL ENGINE COVER BRACKET

(a) Install the engine cover bracket and the bolt.

Torque: 38 N·m (388 kgf·cm, 28 ft·lbf)

21. INSTALL CHARCOAL CANISTER ASSY
22. INSTALL THROTTLE BODY ASSY (See page 10–44)
23. INSTALL AIR CLEANER CAP SUB–ASSY (See page 10–44)
24. ADD ENGINE COOLANT (See page 16–31)
25. CHECK FOR ENGINE COOLANT LEAKS (See page 16–25)
26. CHECK FOR FUEL LEAKS
27. INSTALL ENGINE COVER SUB–ASSY NO.1

Torque: 7.0 N·m (71 kgf·cm, 62 in.·lbf)

28. INSTALL ENGINE ROOM COVER SIDE

29. INSTALL RADIATOR SUPPORT OPENING COVER

ECD SYSTEM (1CD–FTV)

ON–VEHICLE INSPECTION

100EZ–02

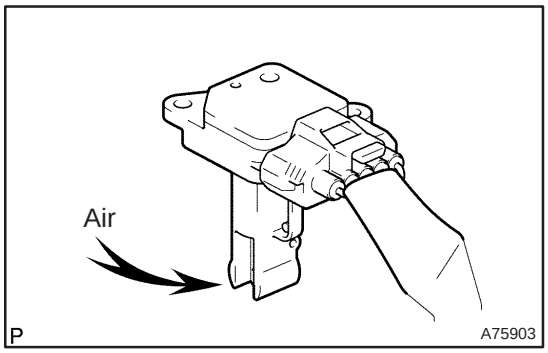

1. INSPECT MASS AIR FLOW METER

(a) If you have hand–held tester:
Inspect for operation
(1) Connect the hand–held tester to the DLC3.
(2) Turn the ignition switch ON.
(3) Blow air into the MAF meter, and check that the air flow fluctuates (MAF) of the CURRENT DATA shown the standard value.

If operation is not as specified, check the MAF meter (See page 10–56), wiring and ECM.

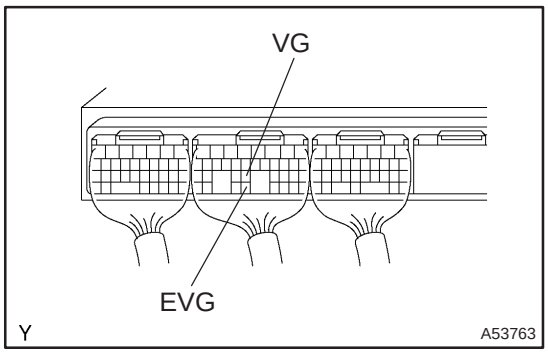

(b) If you have no hand–held tester:
Inspect for operation
(1) Turn the ignition switch ON.
(2) Connect the positive tester probe of the voltmeter to the terminal VG of the ECM. and the negative tester probe of the voltmeter to the terminal EVG of the ECM.
(3) Blow air into the MAF meter, and check that the voltage fluctuates.

If operation is not as specified, check the MAF meter (See page 10–56), wiring and ECM.

2. INSPECT INTAKE SHUTTER

(a) Inspect the throttle control motor for operating sound.
(1) Turn the ignition switch ON.
(2) When turning the accelerator pedal position sensor lever, check the running sound of the motor. Also, check that there is no friction sound.

If operation is not as specified, check the throttle control motor (See page 10–56), wiring and ECM.

(b) Inspect the throttle position sensor.
(1) Connect the hand–held tester to the DLC3.
(2) Turn the ignition switch ON.
(3) When turning the accelerator pedal position sensor lever to the full–open position, check that the throttle valve opening percentage (THROTTLE POS) of the CURRENT DATA shown the standard value.

Standard throttle valve opening percentage:
60 % or more

If operation is not as specified, check that the accelerator pedal position sensor (See page 10–56), wiring and ECM.

If you have no hand–held tester, measure voltage between terminals (LU+A – LU–A, LU+B – LU–B) of the ECM connector (See page 05–549).

(c) Inspect the air assist system.
  (1) Start the engine and check that the CHK ENG does not light up.
  (2) Allow the engine to warm up to normal operating temperature.
  (3) Turn the A/C compressor ON to OFF, and check the idle speed.
  Idle speed (Transmission in neutral): 800 ± 50 rpm

NOTICE:

Perform inspection under condition without electrical load.

(d) After checking the above (b) to (d), perform the driving test and check that there is no sense of incongruity.

3. INSPECT ACCELERATOR PEDAL POSITION SENSOR

(a) Connect the hand–held tester to the DLC3.

(b) Turn the ignition switch ON.

(c) Check that the voltage (ACCEL POS) of the CURRENT DATA shown the standard value.
  Accelerator pedal released: 0.5 to 1.1 V
  Accelerator pedal depress: 2.6 to 4.5 V

(d) Check that the voltage (ACCEL POS #2) of the CURRENT DATA shown the standard value.
  Accelerator pedal released: 1.2 to 2.0 V
  Accelerator pedal depress: 3.4 to 5.3 V

If you have no hand–held tester, measure voltage between terminals (VPA1 – EP1, VPA2 – EP2) of the ECM connector (See page 05–549).

100F0–02

INSPECTION

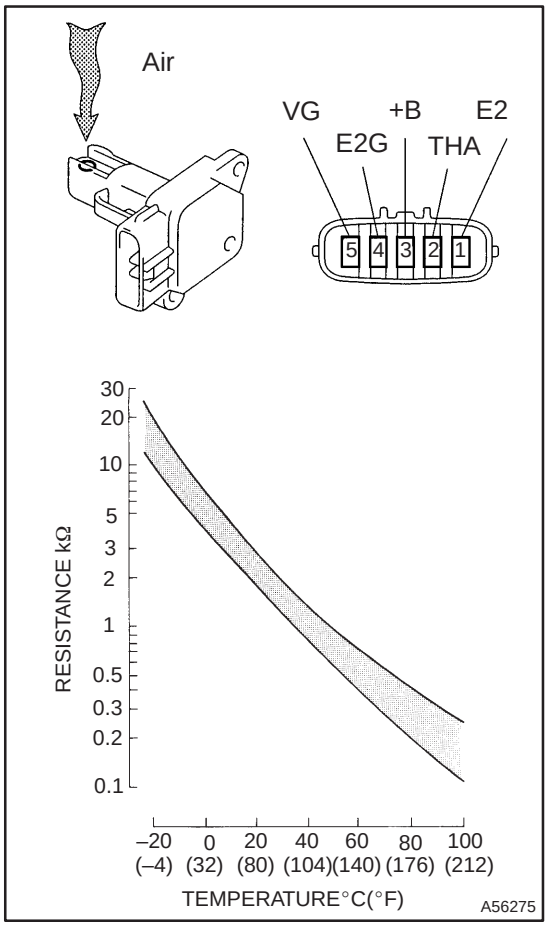

1. INSPECT MASS AIR FLOW METER

(a) Output voltage inspection.

(1) Apply battery voltage across terminals 3 (+B) and 4 (E2G)

(2) Using a voltmeter, connect the positive (+) tester probe to terminal VG, and negative (–) tester probe to terminal E2G.

(3) Blow air into the air flow meter, and check that the voltage fluctuates.

(b) Resistance inspection.

(1) Using an ohmmeter, measure the resistance between terminals 2 (THA) and 1 (E2).

Resistance:

–20°C (–4°F) 12.5 to 16.9 kΩ
20°C (68°F) 2.19 to 2.67 kΩ
60°C (140°F) 0.50 to 0.68 kΩ

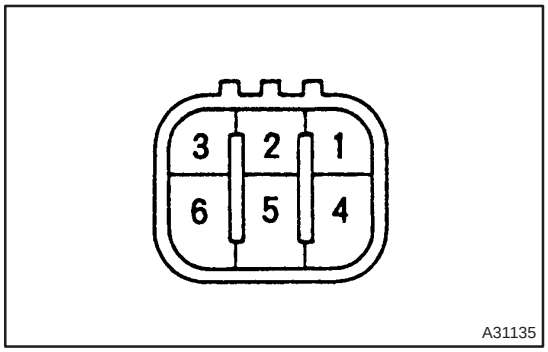

2. INSPECT INTAKE SHUTTER ASSY

(a) Resistance inspection (Throttle control motor)

(1) Using an ohmmeter, measure the resistance between terminals.

Resistance:

Terminals	Temperature	Resistance
2 – 1, 3	at 20°C (68°F)	18 to 22 kΩ
5 – 4, 6	at 20°C (68°F)	18 to 22 kΩ

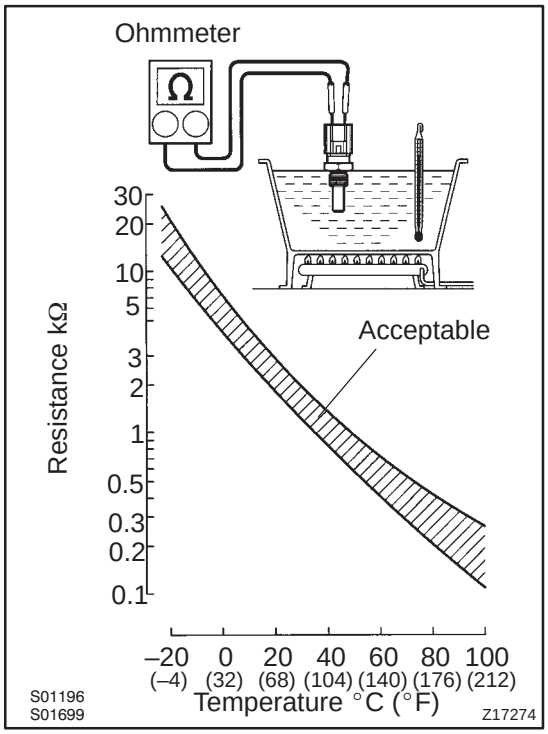

3. INSPECT DIESEL ENGINE ENGINE COOLANT TEMPERATURE SENSOR

(a) Resistance inspection.

(1) Using an ohmmeter, measure the resistance between each terminal.

Resistance:

Approx. 20°C (68°F) 2.32 to 2.59 kΩ

Approx. 80°C (176°F) 0.310 to 0.326 kΩ

NOTICE:

In case of checking the water temperature sensor in the water, be careful not to allow water to go into the terminals, and after checking, wipe out the sensor.

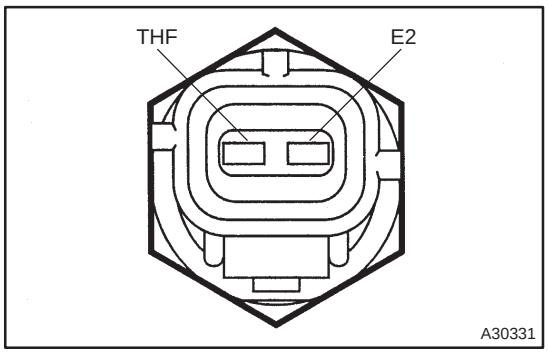

4. INSPECT INJECTION OR SUPPLY PUMP ASSY

(a) Resistance inspection. (Fuel temperature sensor)

(1) Using an ohmmeter, measure the resistance between each terminal.

Resistance:

Approx. 20°C (68°F) 2.21 to 2.69 kΩ

Approx. 80°C (176°F) 0.287 to 0.349 kΩ

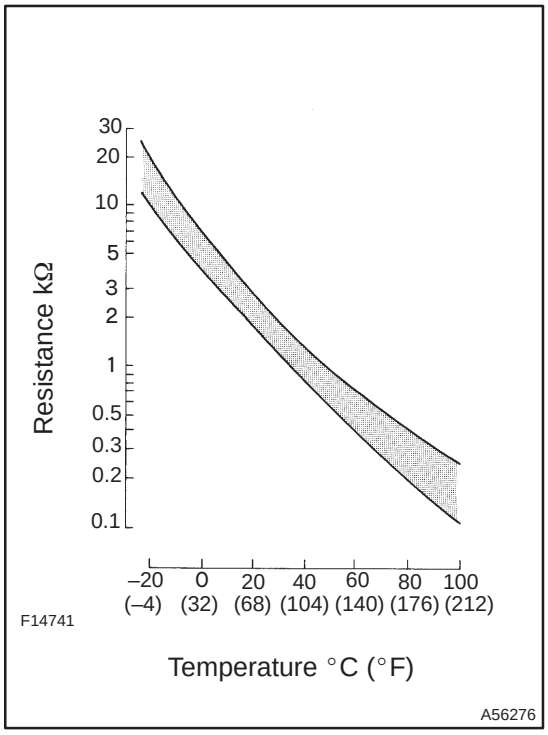

5. INSPECT DIESEL TURBO INLET AIR TENPERATURE SENSOR

(a) Resistance inspection.

(1) Using an ohmmeter, measure the resistance between each terminal.

Resistance:

Approx. 20°C (68°F) 2.21 to 2.65 kΩ

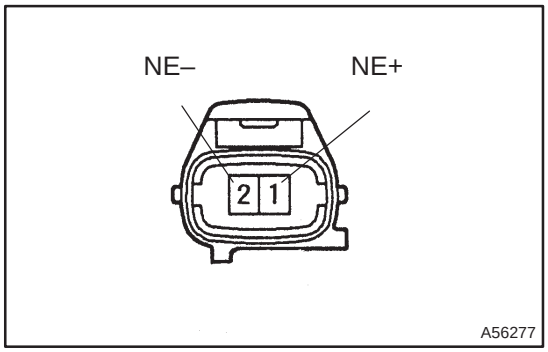

6. INSPECT CRANKSHAFT POSITION SENSOR

(a) Resistance inspection.

(1) Using an ohmmeter, measure the resistance between terminals.

Resistance:
at cold 1630 to 2740 Ω
at hot 2065 to 3225 Ω

NOTICE:

"Cold" and "Hot" in the following sentences express the temperature of the sensor itself. "Cold" is from –10°C (14°F) to 50°C (122°F) and "Hot" is from 50°C (122°F) to 100°C (212°F).

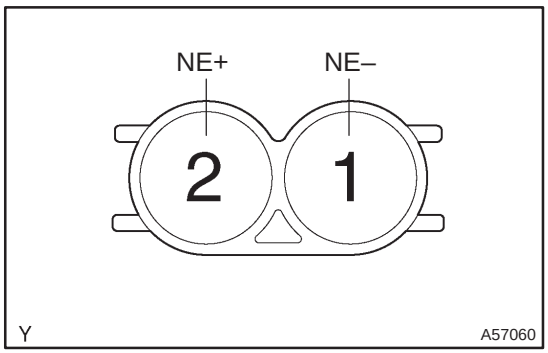

7. INSPECT CAMSHAFT POSITION SENSOR

(a) Resistance inspection.

(1) Using an ohmmeter, measure the resistance between terminal.

Resistance:
at cold 1630 to 2740 Ω
at hot 2065 to 3225 Ω

NOTICE:

"Cold" and "Hot" in the following sentences express the temperature of the sensor itself. "Cold" is from –10°C (14°F) to 50°C (122°F) and "Hot" is from 50°C (122°F) to 100°C (212°F).

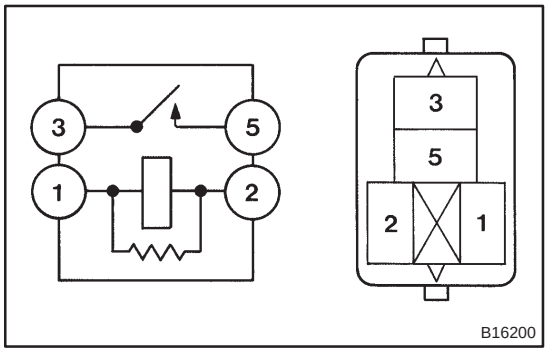

8. INSPECT EDU RELAY

(a) Inspect the relay continuity.

(1) Using an ohmmeter, check that there is continuity between terminals 1 and 2.

Specified condition: Continuity

(2) Check that there is no continuity between terminals 3 and 5.

Specified condition: No continuity

(b) Inspect the relay operation.

(1) Apply battery voltage across terminals 1 and 2.

(2) Using an ohmmeter, check that there is continuity between terminals 3 and 5.

Specified condition: Continuity

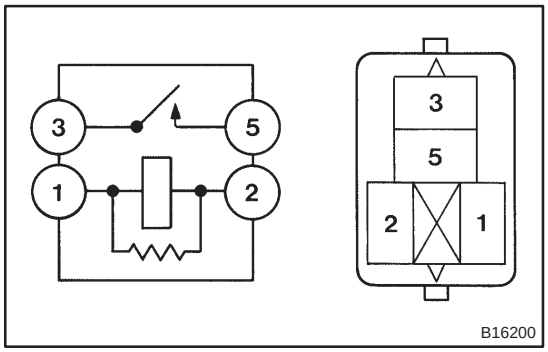

9. INSPECT EFI MAIN RELAY

(a) Inspect the relay continuity.

(1) Using an ohmmeter, check that there is continuity between terminals 1 and 2.

Specified condition: Continuity

(2) Check that there is no continuity between terminals 3 and 5.

Specified condition: No continuity

(b) Inspect the relay operation.

(1) Apply battery voltage across terminals 1 and 2.

(2) Using an ohmmeter, check that there is continuity between terminals 3 and 5.

Specified condition: Continuity

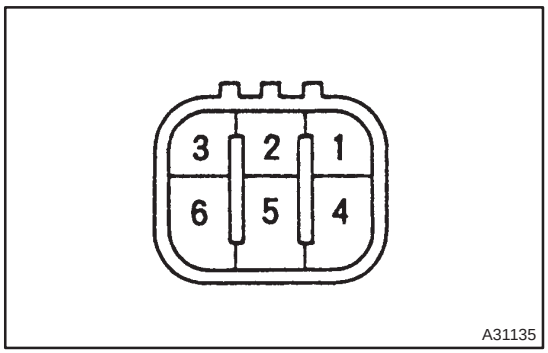

10. INSPECT ACCELERATOR PEDAL ASSY

(a) Inspect the accel position sensor.

(1) Using an ohmmeter, measure the resistance between each terminal.

Resistance:

RHD:

Between terminal	Resistance
5 (VPA1) – 1 (EP1)	5.0 kΩ or less
2 (VPA2) – 3 (EP2)	5.0 kΩ or less
4 (VCP1) – 1 (EP1)	1.5 to 6.0 kΩ
6 (VCP2) – 3 (EP2)	1.5 to 6.0 kΩ

LHD:

Between terminal	Resistance
3 (VPA1) – 4 (EP1)	5.0 kΩ or less
6 (VPA2) – 5 (EP2)	5.0 kΩ or less
2 (VCP1) – 4 (EP1)	1.5 to 6.0 kΩ
1 (VCP2) – 5 (EP2)	1.5 to 6.0 kΩ

INTAKE SHUTTER ASSY (1CD–FTV)

100FN–01

COMPONENTS

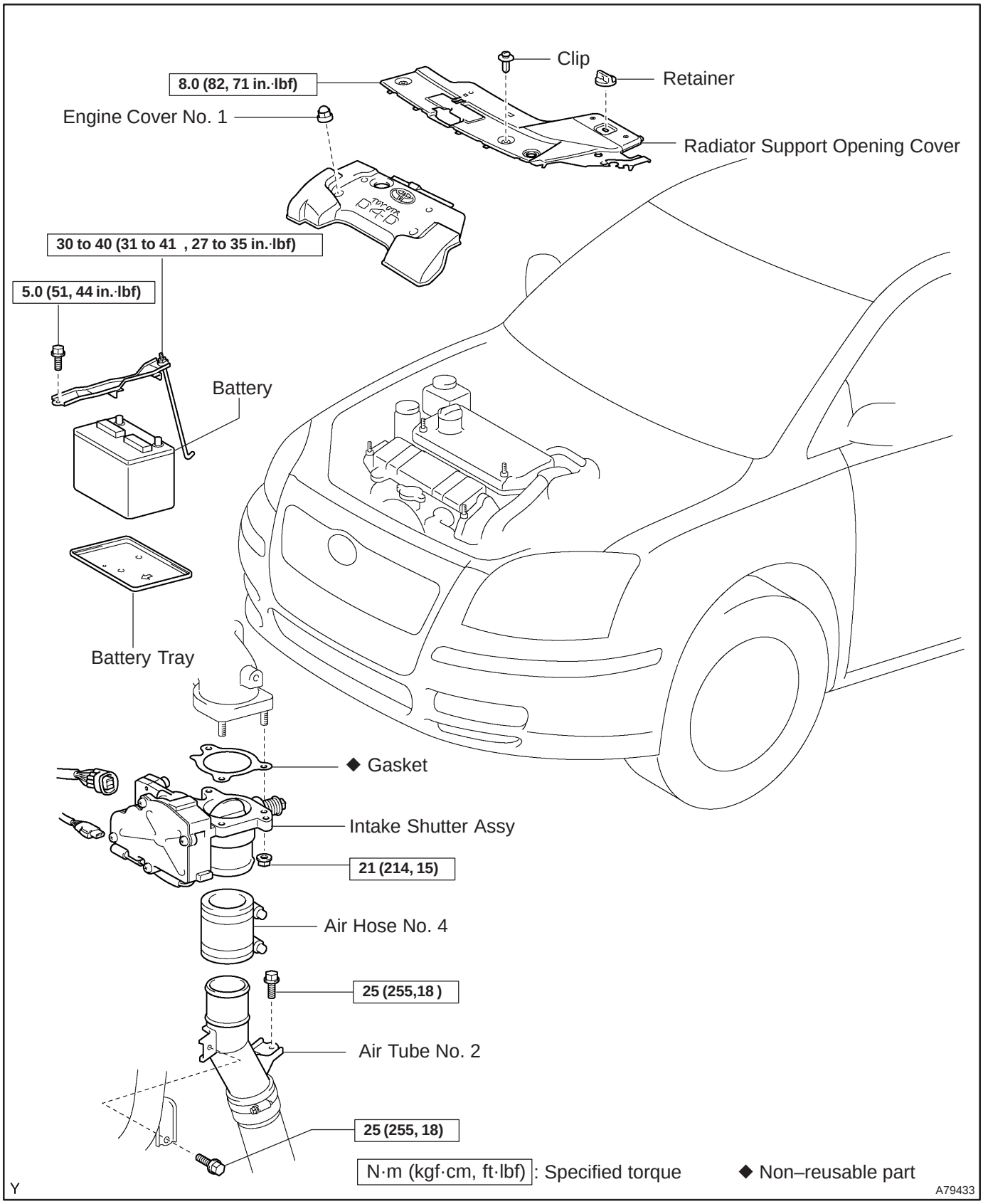

100FO–01

Removal & Installation and Disassembly & Reassembly

1. REMOVE RADIATOR SUPPORT OPENING COVER

2. REMOVE ENGINE COVER NO.1

(a) Remove the 5 nuts and the engine cover.

3. REMOVE BATTERY

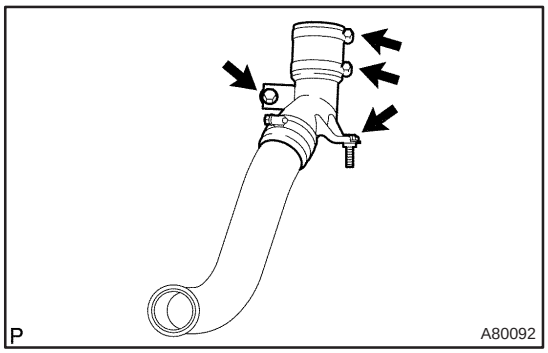

4. REMOVE AIR HOSE NO.4

(a) Loosen the 2 hose clamps.

(b) Remove the 2 bolts and separate the air tube No. 2.

(c) Remove the air hose No. 4.

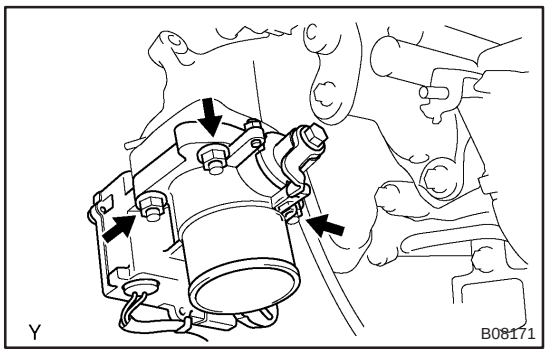

5. REMOVE INTAKE SHUTTER ASSY

(a) Disconnect the 2 connectors.

(b) Remove the 3 nuts, then remove the intake shutter and the gasket.

6. INSTALL INTAKE SHUTTER ASSY

(a) Install a new gasket and the intake shutter with the 3 nuts.

Torque: 21 N·m (214 kgf·cm, 15 ft·lbf)

7. INSTALL AIR HOSE NO.4

(a) Install the air hose No. 4 to the air tube No. 2.

(b) Install the air tube No. 2 with the 2 bolts.

Torque: 25 N·m (255 kgf·cm, 18 ft·lbf)

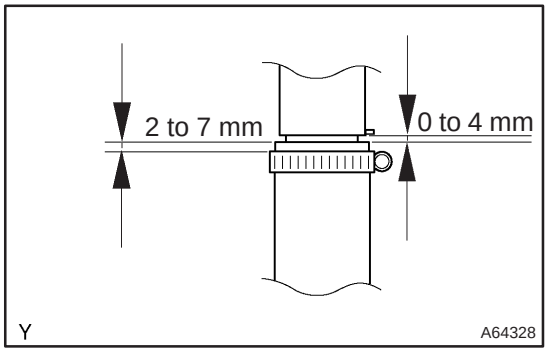

(c) Install the air hose and hose clamp as shown in the illustration.

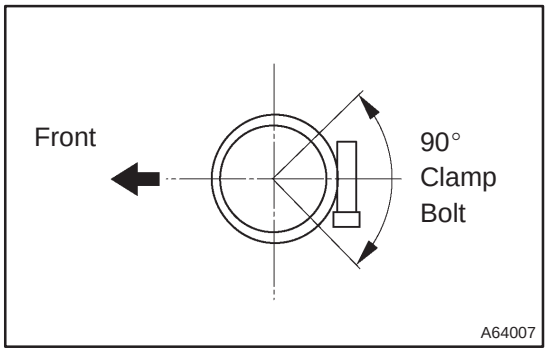

(d) Tighten the hose clamp as shown in the illustration.
Torque: 6.0 N·m (61 kgf·cm, 53 in.·lbf)

8. INSTALL ENGINE COVER NO.1

(a) Install the engine cover with the 5 nuts.
Torque: 8.0 N·m (82 kgf·cm, 71 in.·lbf)

9. INSTALL BATTERY
Torque:
5.0 N·m (51 kgf·cm, 44 in.·lbf) for bolt
3.0 to 4.0 N·m (31 to 41 kgf·cm, 27 to 35 in.·lbf) for nut

CAMSHAFT POSITION SENSOR (1CD–FTV)

100FP–01

REPLACEMENT

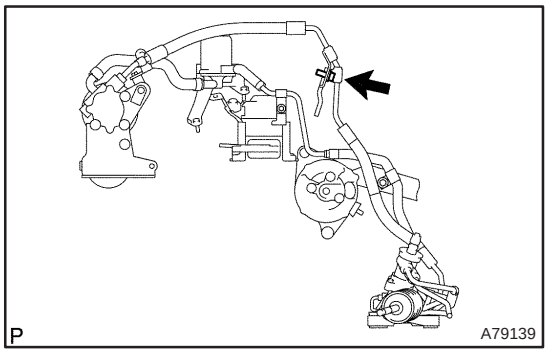

1. SEPARATE RETURN TUBE SUB–ASSY

(a) Remove the bolt and separate the return tube sub–assy.

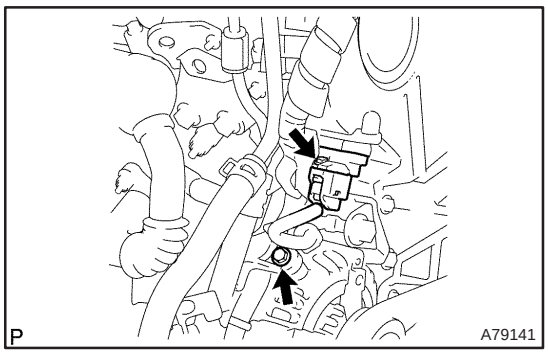

2. REMOVE CAMSHAFT POSITION SENSOR

(a) Remove the bolt and disconnect the wire harness.

(b) Disconnect the connector, remove the bolt and the camshaft position sensor.

3. INSTALL CAMSHAFT POSITION SENSOR

Torque:

8.8 N·m (90 kgf·cm, 79 in.·lbf) for camshaft position sensor

5.0 N·m (51 kgf·cm, 44 in.·lbf) for wire harness

4. INSTALL RETURN TUBE SUB–ASSY

Torque: 9.0 N·m (92 kgf·cm, 80 in.·lbf)

CRANKSHAFT POSITION SENSOR (1CD–FTV)

100FQ–01

REPLACEMENT

1. REMOVE ENGINE UNDER COVER RH

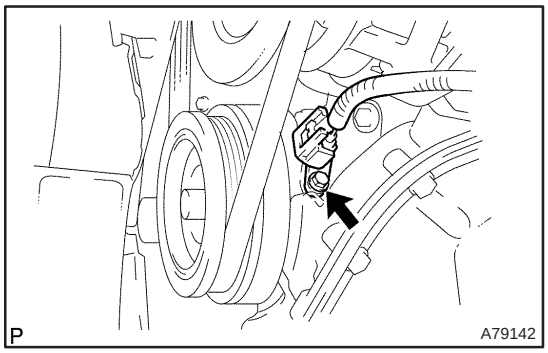

2. REMOVE CRANKSHAFT POSITION SENSOR

(a) Disconnect the connector, remove the bolt and the crankshaft position sensor.

3. INSTALL CRANKSHAFT POSITION SENSOR

Torque: 8.8 N·m (90 kgf·cm, 78 in.·lbf)

ECM

REPLACEMENT

100FR–01

HINT:

1CD–FTV Engine Type:

Each injector assembly has a characteristic fuel injecting behavior. The ECM stores compensation codes which are used to optimize fuel injection for the injectors. When replacing the ECM, the compensation codes must be set to the new ECM.

1. REMOVE GLOVE COMPARTMENT DOOR ASSY (See page 71–11)

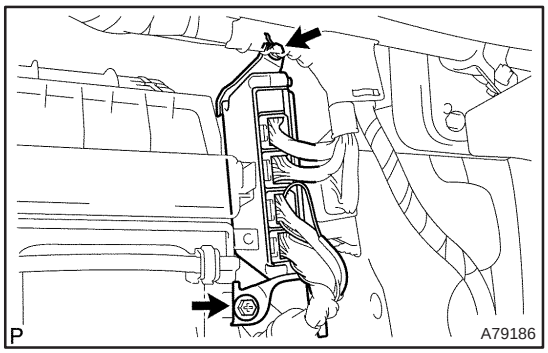

2. REMOVE ECM

(a) Disconnect the 4 ECM connectors (1ZZ–FE, 3ZZ–FE, 1AZ–FE, 1CD–FTV).

(b) Disconnect the 5 ECM connectors (1AZ–FSE).

(c) Disconnect the wire harness clamp.

(d) Remove the bolt and screw, then remove the ECM.

(e) Remove the 2 screws and the ECM bracket No. 1 from the ECM.

(f) Remove the 2 screws and the ECM bracket No. 2 from the ECM.

3. INSTALL ECM

Torque: 5.5 N·m (56 kgf·cm, 49 in.·lbf)

4. INSTALL GLOVE COMPARTMENT DOOR ASSY (See page 71–11)

5. REGISTRATION OF INJECTOR COMPENSATION CODE (1CD–FTV ENGINE TYPE) (See page 05–528)

ACCELERATOR PEDAL ASSY (1AZ–FSE/1CD–FTV)

100FM–02

REPLACEMENT

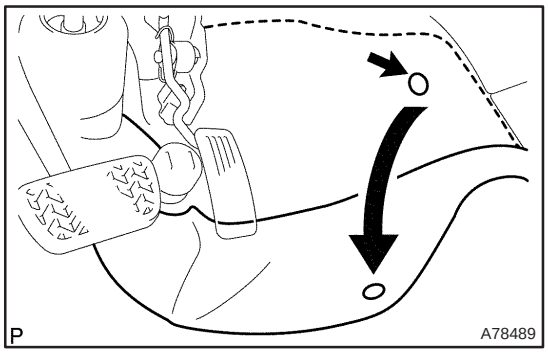

1. REMOVE ACCELERATOR PEDAL

(a) Using a clip remover, remove the clip.

(b) Open the floor carpet.

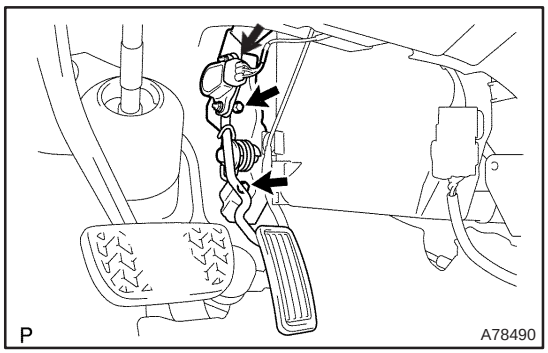

(c) Disconnect the accelerator position sensor connector.

(d) Remove the 2 bolts, and then remove the accelerator pedal.

2. INSTALL ACCELERATOR PEDAL

Torque: 5.4 N·m (55 kgf·cm, 48 in.·lbf)

FUEL SYSTEM (1ZZ–FE/3ZZ–FE)

110UT–01

PRECAUTION

1. PRECAUTION

(a) Before working on fuel system, disconnect negative (–) battery cable.
(b) Do not smoke or work near fire when handling the fuel system.
(c) Keep gasoline away from rubber or leather parts.

2. DISCHARGE FUEL SYSTEM PRESSURE

CAUTION:

- **Do not disconnect any part of the fuel system until you have discharged the fuel system pressure.**
- **Even after discharging the fuel pressure, place a shop rag over fittings as you separate them to reduce risk of fuel spray on yourself or in the engine compartment.**

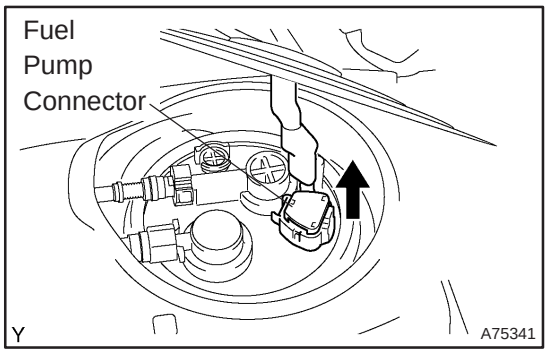

(a) Disconnect the fuel pump connector.
(b) Start the engine. After the engine has stopped, turn the ignition switch OFF.
(c) Disconnect the negative (–) battery cable.
(d) Connect the fuel pump connector.

3. FUEL SYSTEM

(a) When disconnecting the high fuel pressure line, a large amount of gasoline will spill out, so observe these procedures.
  (1) Discharge the pressure in the fuel system. (See step 2)
  (2) Disconnect the fuel pump tube. (See page 11–93)
  (3) Drain the fuel that remained inside the fuel pump tube.

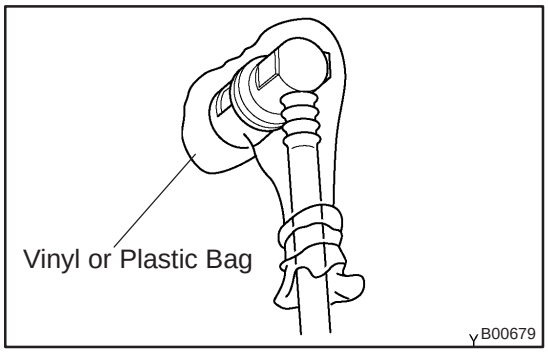

  (4) Cover the disconnected fuel pump tubes with a vinyl or a plastic bag to prevent damage and dirt.
  (5) Place a tray under the vehicle or point of disconnection to catch any fuel that may spill.

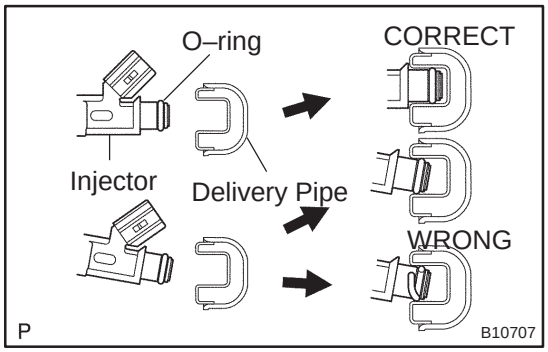

(b) Observe the following precautions when removing and installing fuel injectors.

NOTICE:

Never reuse the O–ring.

(1) When installing a new O–ring on the injector, be careful not to damage the injector.

(2) Coat the new O–ring with grease or gasoline before installing. Never use engine oil, gear oil or brake oil.

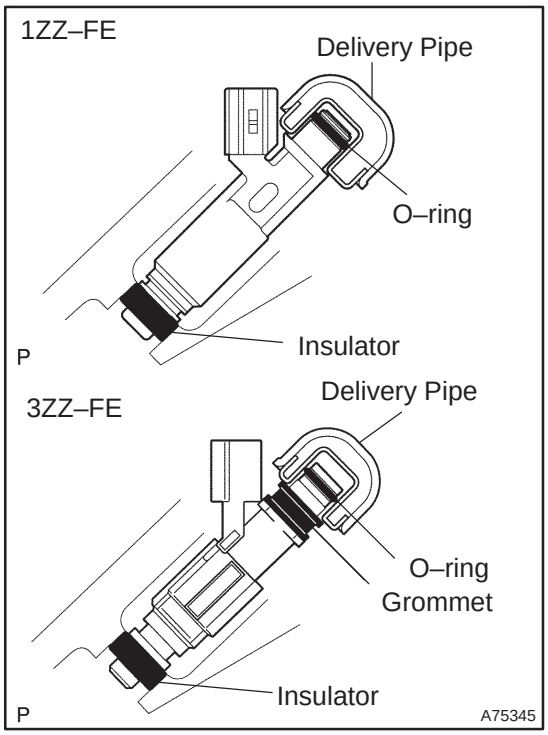

(c) Install the injector to the delivery pipe and cylinder head as shown in the illustration. Before installing the injector, be sure to apply grease or gasoline on the place where the delivery pipe contacts the O–ring of the injector.

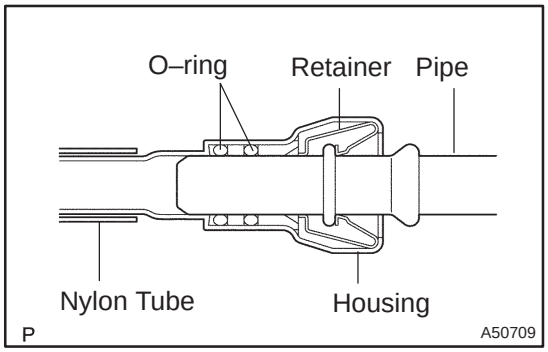

(d) Observe these precautions when disconnecting the fuel delivery pipe.

HINT:

The structure of the metallic connector is as shown in the illustration on the left.

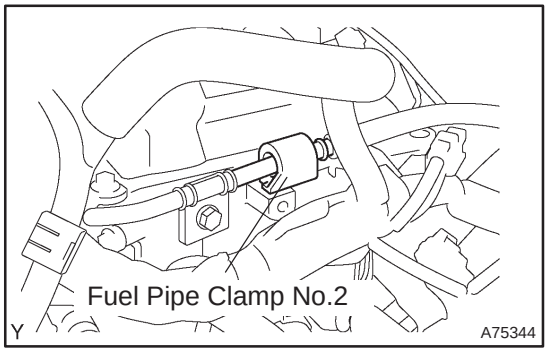

(1) Remove the fuel pipe clamp No.2.

(2) Find the metallic connector of the fuel tube assembly, slide it towards the vehicle rear and hold it as it is.

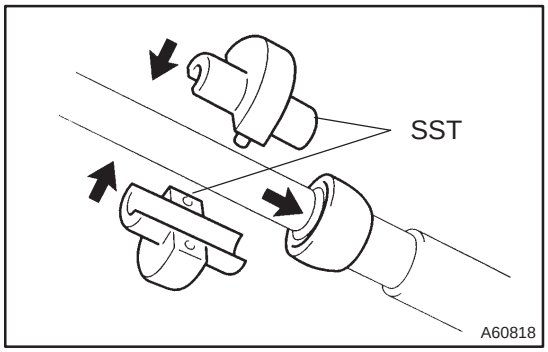

(3) Assemble SST to the connection of fuel pipe as shown in the illustration.

SST 09268–21010

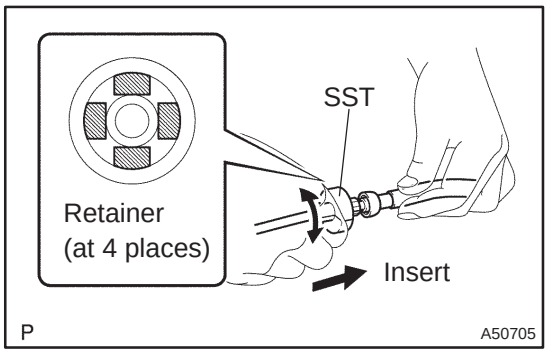

(4) Turn SST, align the retainers inside the connector with SST chamfered parts and insert SST into the connector.

(5) Slide SST and the connector together towards the fuel tube assembly.

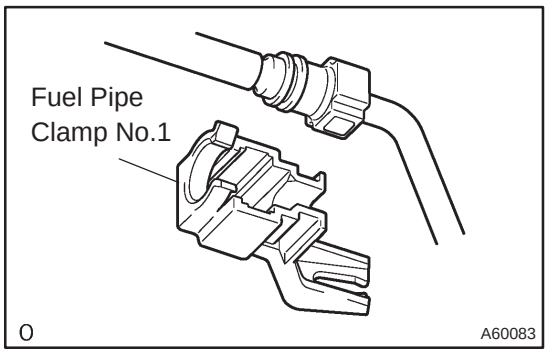

(e) Observe these following precautions when disconnecting the fuel tube connector (quick type).

(1) Remove the fuel pipe clamp No.1.

(2) Check that there is no dirt or mud on the pipe and around the connector before disconnecting them. Clean them if necessary.

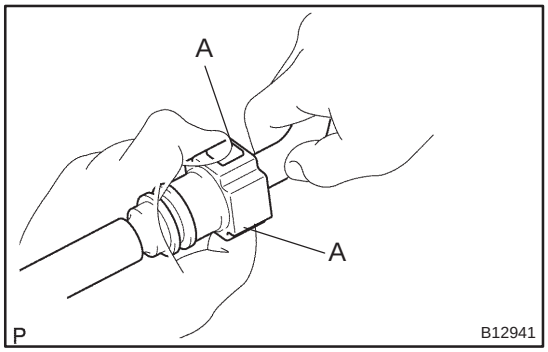

(3) Disconnect the connector from the hose while pinching part A with fingers as shown in the illustration.

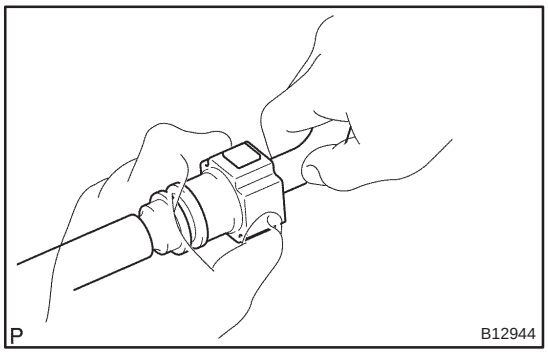

(4) When the connector and the pipe are stuck, push and pull the connector to release and pull the connector out from the pipe carefully.

(5) Inspect that there is no dirt or mud on the sealing surface of the disconnected pipe. Clean it away if necessary.

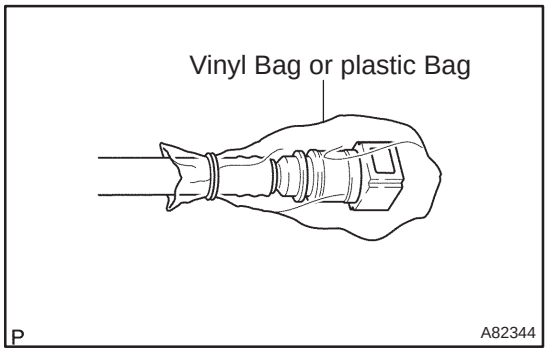

(6) To prevent the disconnected pipe and connector from being damaged and foreign objects from being introduced, cover them with a vinyl or plastic bag.

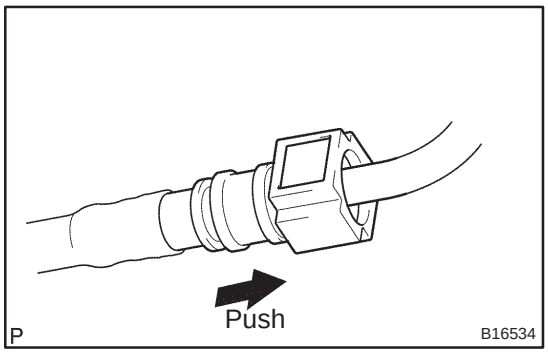

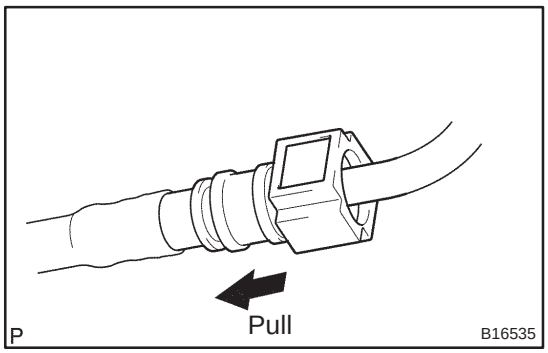

(f) Observe these precautions when connecting the fuel tube connectors (Quick Type):
(1) Check that there is no damage or foreign objects in the connected part of the pipe.
(2) Match the axis of the connector with the axis of the pipe, and push into the connector until the connector makes a ”click” sound. If the connection is tight, apply little amount of fresh engine oil on the tip of the pipe.
(3) After having finished the connection, check if the pipe and the connector are securely connected by pulling on them.
(4) Check for fuel leaks.

4. CHECK FOR FUEL LEAKS

(a) Check that there are no fuel leaks after doing maintenance anywhere on the fuel system.
(See page 11–5)

110UU–01

ON–VEHICLE INSPECTION

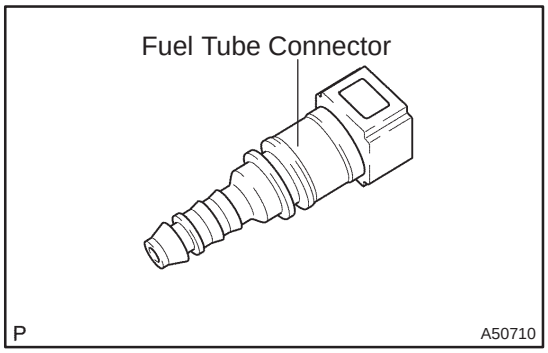

1. CHECK FUEL PRESSURE

(a) Discharge the pressure in the fuel system and take precautions for possible fuel spillage. (See page 11–1)

(b) Check that the battery voltage is above 12 V.

(c) Disconnect the negative (–) battery cable.

(d) Pull out the connecter from a new fuel tube.

HINT:

Part No. 23901–0D030

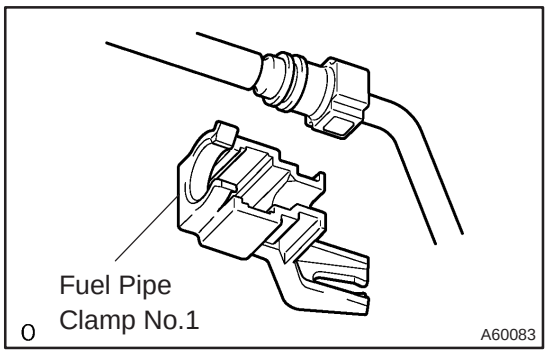

(e) Disconnect the fuel tube clamp from the fuel tube connector.

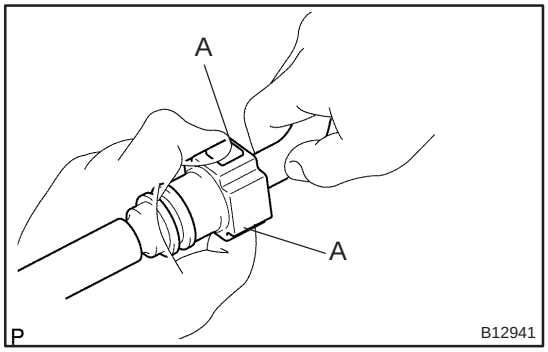

(f) Disconnect the fuel tube connector from the fuel pipe while pinching part A with fingers as shown in the illustration.

CAUTION:

- **Do not disconnect the fuel tube connector (quick type) until after you have discharged the fuel system pressure and taken appropriate steps to prevent fuel spillage.**
- **There may be remained pressure in the fuel lines after discharging the pressure.**
  Take precautions to prevent fuel from spraying on you or your clothing or inside the engine compartment.

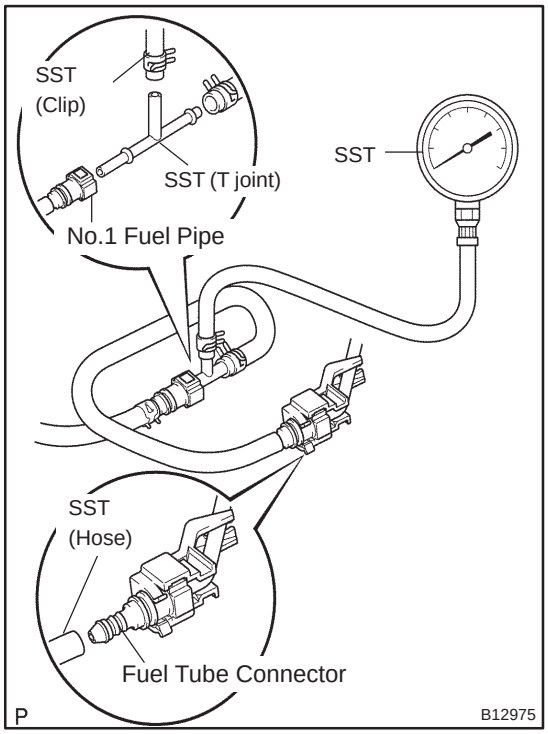

(g) Install SST (pressure gauge) and a fuel tube connector using SST as shown in the illustration.
SST 09268–41047(95336–08070),09268–45014 (09268–41250, 09268–41200, 09268–41220)

(h) Wipe up any gasoline.

(i) Reconnect the negative (–) battery cable.

(j) Connect the hand–hand tester to the DLC3.

(k) Measure the fuel pressure.
Fuel pressure:
304 to 343 kPa (3.1 to 3.5 kgf/cm^2, 44 to 50 psi)

If pressure is high, replace the fuel pressure regulator.
If pressure is low, check the fuel hoses connections, the fuel pump, the fuel filter and the fuel pressure regulator.

(l) Disconnect the hand–held tester from the DLC3.

(m) Start the engine.

(n) Measure the fuel pressure at idle.
Fuel pressure:
304 to 343 kPa (3.1 to 3.5 kgf/cm^2, 44 to 50 psi)

(o) Stop the engine.

(p) Check that the fuel pressure remains as specified for 5 minutes after the engine has stopped.
Fuel pressure:147 kPa (1.5 kgf/cm^2, 21 psi) or more

If pressure is not as specified, check the fuel pump, the pressure regulator and/or the injectors.

(q) After checking the fuel pressure, disconnect the negative (–) battery cable and carefully remove SST and the fuel tube connector to prevent gasoline from splashing.

(r) Reconnect the No. 1 fuel pipe (fuel tube connector).

CAUTION:
After taking the precautions, connect the fuel tube connecter (quick type).

2. CHECK FUEL PUMP OPERATION AND FUEL LEAK

(a) When using the hand–held tester
(1) Connect the hand–held tester to the DLC3.
(2) Turn the ignition switch ON and the hand–held tester main switch ON.

NOTICE:
Do not start the engine.

(3) Select the active test mode on the hand–held tester.
(4) Perform the active test. Check that the fuel pump operates and check for fuel leaks.

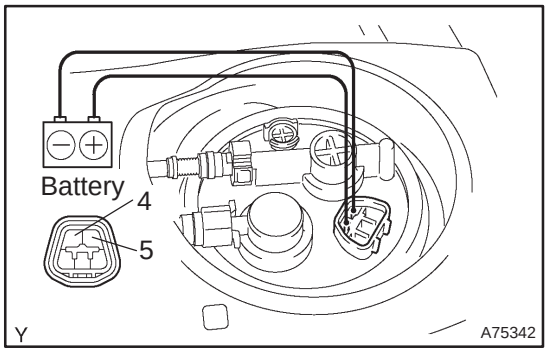

(b) When not using the hand–held tester
  (1) Connect the positive (+) lead form the battery to terminal 4 of the connector and connect the negative (–) lead to terminal 5.
  (2) Check that the pump operates.

110UV–01

INSPECTION

1. FUEL INJECTOR ASSY

(a) Inspect injector resistance

(1) Using an ohmmeter, measure the resistance between the terminals.

Resistance:

Engine	Rersistance	Condition
1ZZ–FE	13.4 to 14.2 Ω	20 °C (68 °F)
3ZZ–FE	13.8 to 15.2 Ω	20 °C (68 °F)

If the resistance is not as specified, replace the injector.

(b) Inspect injector inspection

CAUTION:

This test involves high–pressure fuel and electricity. Take every precaution regarding safe handling of both the fuel and the electricity. Preform this test in a safe area, and avoid any sparks or flame. Do not smoke.

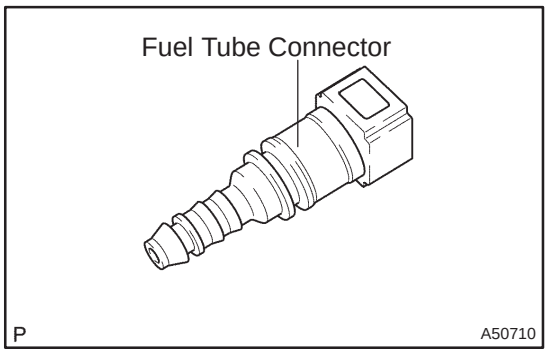

(1) Obtain new No. 1 fuel pipe (part No. 23901–0D030) and remove the fuel tube connector from the pipe.

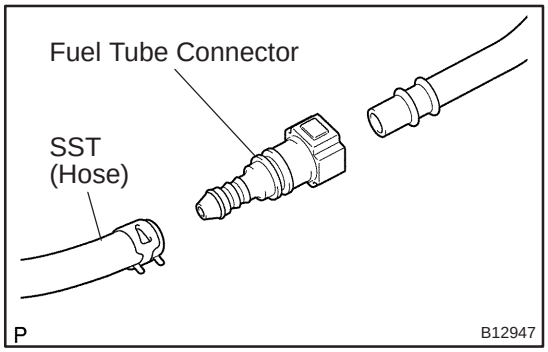

(2) Install the fuel tube connector to SST (hose), then connect the tube connector and the fuel pipe.

SST 09268–41047 (95336–08070)

CAUTION:

Connect the fuel tube connector (quick type) after observing the precautions to prevent fuel from spraying.

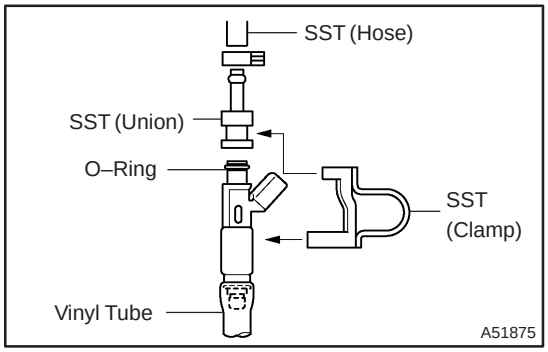

(3) Install the O–ring to the injector.

(4) Connect SSTs (union and hose) to the injector, and hold the injector and the union with SST (clamp)

SST 09268–41047 (95336–08070, 09268–41110, 09268–41300)

(5) Put the injector into a graduated cylinder.

CAUTION:

Install a suitable vinyl tube onto the injector to contain gasoline spray.

(6) Operate the fuel pump.(See Page 11–5)

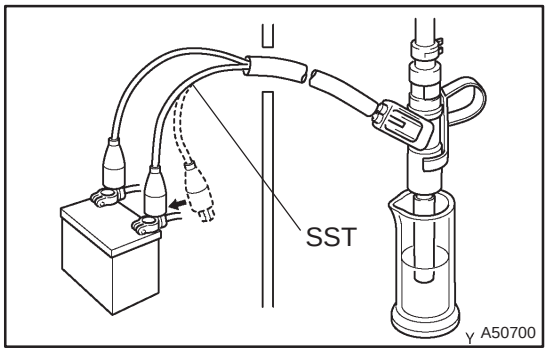

(7) Connect SST (wire) to the injector and the battery for 15 seconds, and measure the injection volume with a graduated cylinder. Test each injector 2 or 3 times.

SST 09842–30080

Injection volume:

Engine	Injection volume	Difference between each injector
1ZZ–FE	60 to 73 cm^3 (3.7 to 4.5 cu in.) in 15 seconds	13 cm^3 (0.8 cu in.) or less
3ZZ–FE	45 to 55 cm^3 (2.7 to 3.3 cu in.) in 15 seconds	10 cm^3 (0.6 cu in.) or less

NOTICE:

Always do the switching at the battery side.

If the injection volume is not as specified, replace the injector.

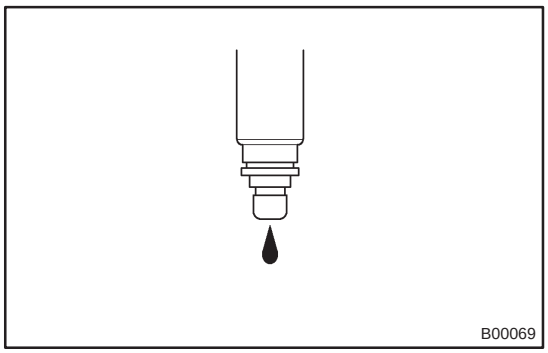

(c) Inspect leakage

(1) In the condition above, disconnect the test probes of SST (wire) from the battery and check the fuel leakage from the injector.

Fuel drop:

1ZZ–FE	1 drop or less in 12 minutes
3ZZ–FE	1 drop or less in 5 minutes

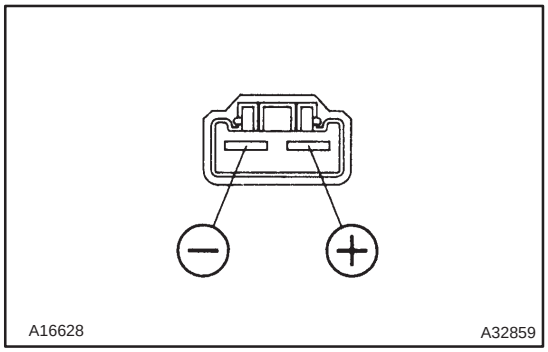

2. INSPECT FUEL PUMP

(a) Insect fuel pump resistance.

(1) Using an ohmmeter, measure the resistance between the terminals.

Resistance: 0.2 to 3.0 Ω at 20°C (68°F)

(b) Inspect fuel pump operation

(1) Apply battery voltage to both the terminals. Check that the pump operates.

NOTICE:

- **These tests must be done quickly (within 10 seconds) to prevent damage to the pump.**
- **Keep fuel pump as far away from the battery as possible.**
- **Always do the switching at the battery side.**

FUEL INJECTOR ASSY (1ZZ–FE/3ZZ–FE)

110TY–01

COMPONENTS

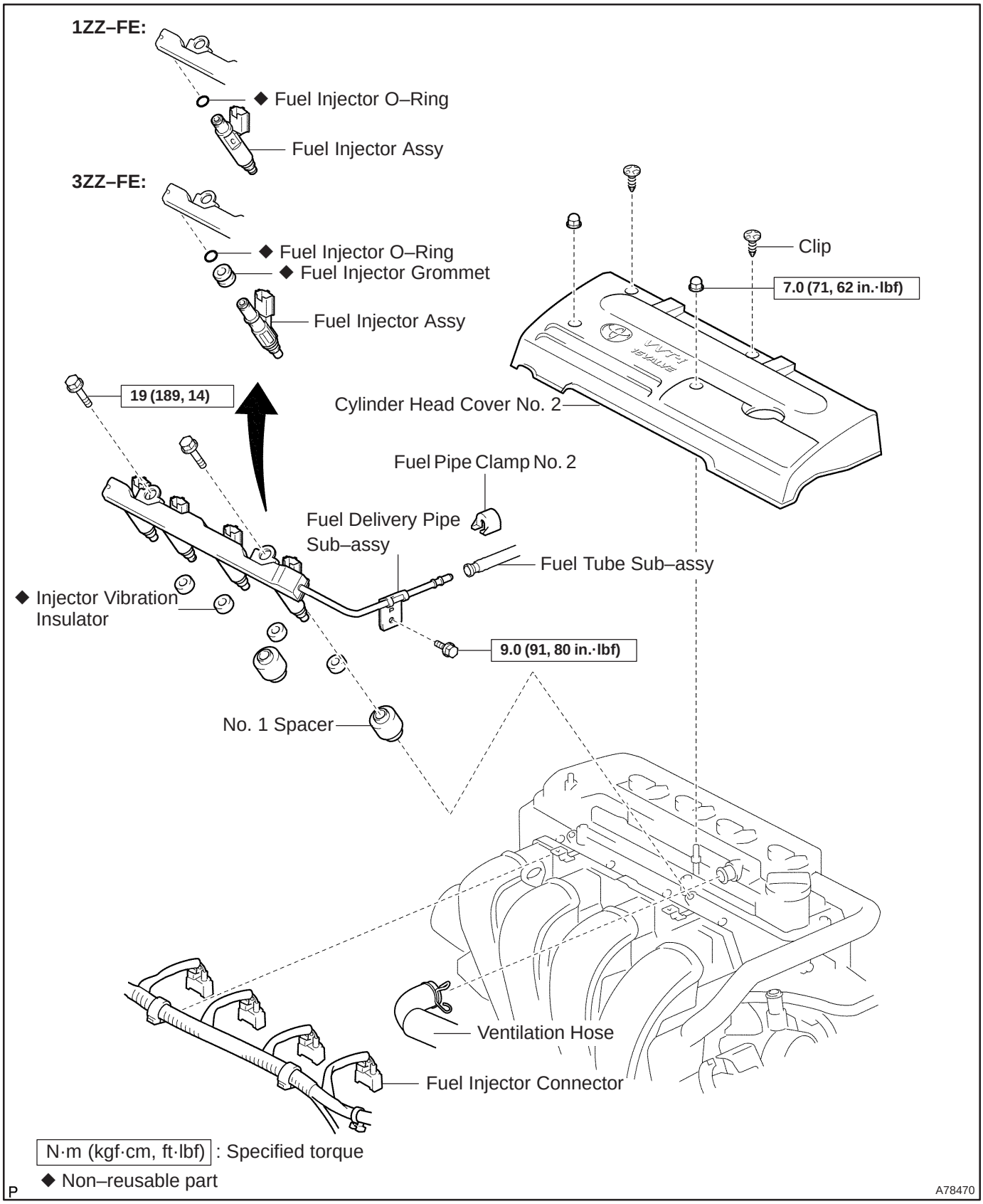

REPLACEMENT

1. DISCHARGE FUEL SYSTEM PRESSURE (See page 11–1)
2. REMOVE CYLINDER HEAD COVER NO.2 (See page 10–9)

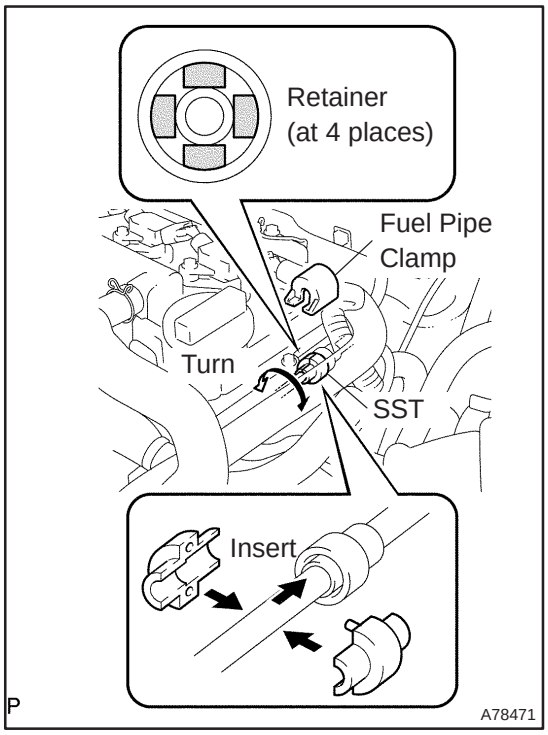

3. SEPARATE FUEL TUBE SUB–ASSY

(a) Remove the fuel pipe clamp.

(b) Using SST, disconnect the fuel tube.

SST 09268–21010

(1) Assemble SST to the connection of the fuel tube as shown in the illustration.

(2) Turn SST, align the retainers inside the connector with SST into the connector.

(3) Push in the SST and the connector together towards the fuel tube assembly.

NOTICE:

- **Check if there is any dirt or mud on the pipe and around the connector before disconnecting them and remove the dirt as necessary.**
- **Do not bent and twist the nylon tube.**
- **When the connector and pipe are stuck, push and pull the connector to free. Pull the connector out carefully.**
- **Prevent the disconnected pipe and connector from being damaged and foreign objects from being introduced, cover with a vinyl or plastic bag.**

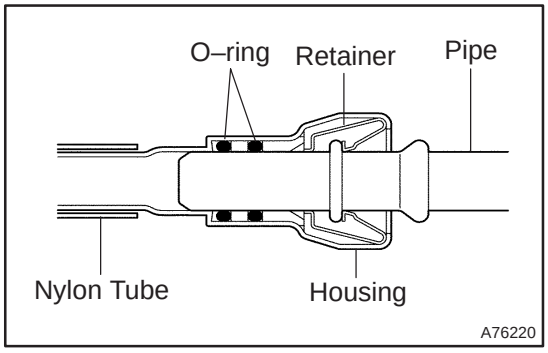

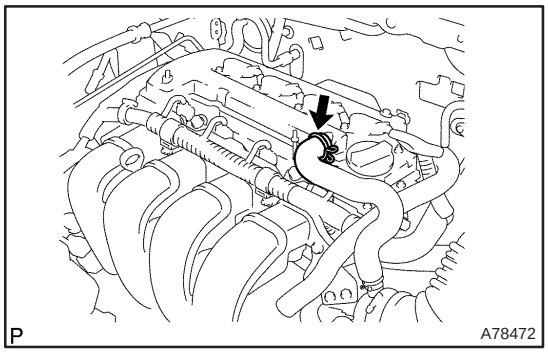

4. REMOVE FUEL DELIVERY PIPE SUB–ASSY

(a) Disconnect the ventilation hose.

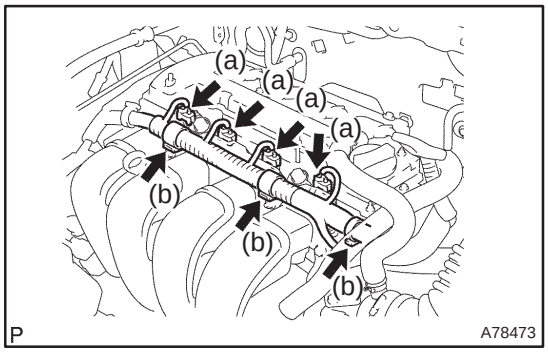

(b) Disconnect the 4 fuel injector connectors.
(c) Remove the 3 wire harness clamps.

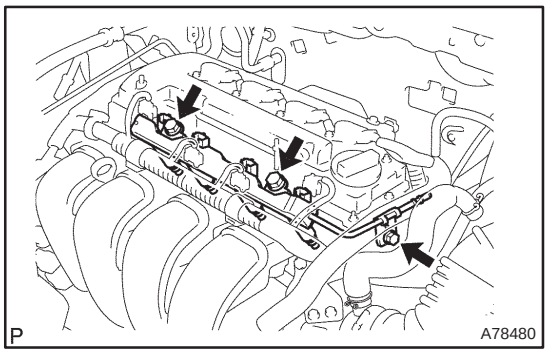

(d) Remove the 3 bolts, and then remove the fuel delivery pipe together with the 4 fuel injectors.

NOTICE:

Be careful not to drop the fuel injectors when removing the fuel delivery pipe.

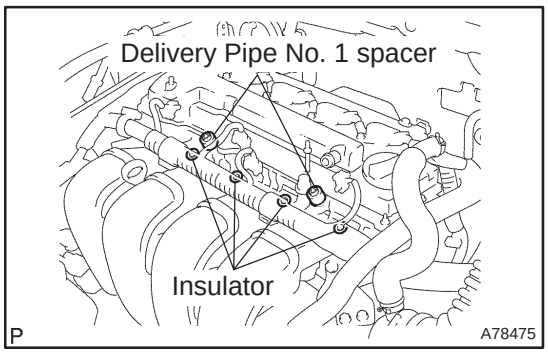

(e) Remove the 2 delivery pipe No. 1 spacers and the 4 insulators from the cylinder head.

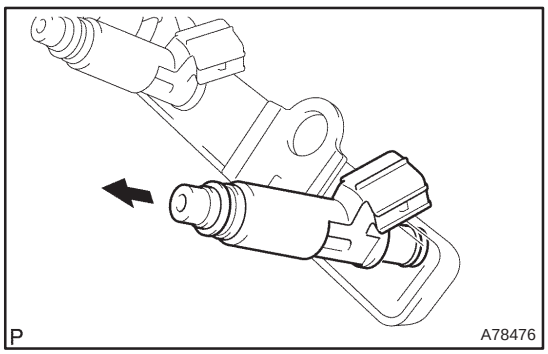

5. REMOVE FUEL INJECTOR ASSY

(a) Pull out the 4 fuel injectors from the fuel delivery pipe.

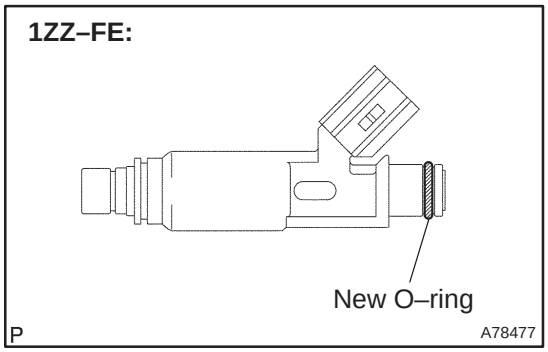

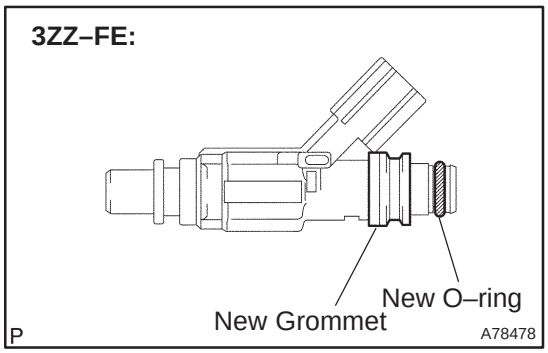

6. INSTALL FUEL INJECTOR ASSY

(a) Install new grommets to each fuel injector. (3ZZ–FE)

(b) Apply a light coat of spindle oil or gasoline to new O–rings, and install them to each fuel injector.

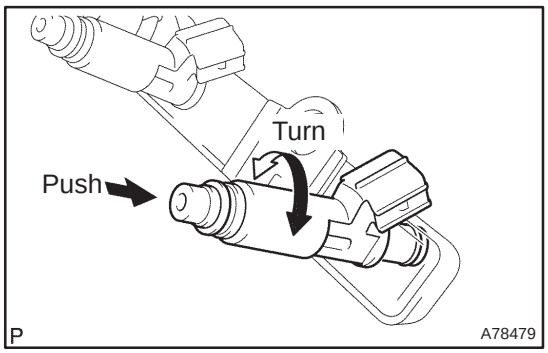

(c) Apply a light coat of spindle oil or gasoline on the place where the fuel delivery pipe contacts the O–ring.

(d) Push the fuel injector while twisting it back and forth to install it to the fuel delivery pipe.

NOTICE:

- **Be careful not to twist the O–ring.**
- **After installing the fuel injectors, check that they turn smoothly. If not, reinstall it with a new O–ring.**

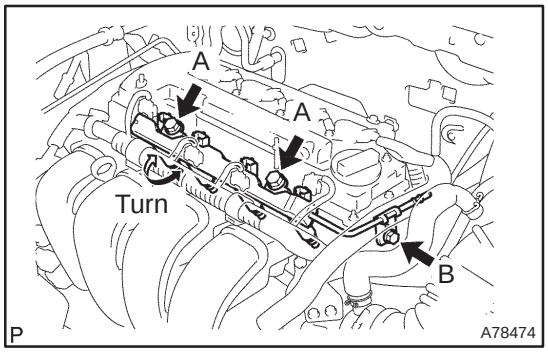

7. INSTALL FUEL DELIVERY PIPE SUB–ASSY

(a) Instal 4 new insulators and the 2 delivery pipe No. 1 spacers to the cylinder head.

(b) Place the fuel delivery pipe and 4 fuel injectors together to the cylinder head.

NOTICE:

Be careful not to drop the fuel injectors when installing the fuel delivery pipe.

(c) Temporarily install 3 bolts which are used to secure the fuel delivery pipe to the cylinder head.

(d) Check that the fuel injectors rotate smoothly.

If fuel injectors do not rotate smoothly, the probable cause is incorrect installation of O–ring. Replace with the O–ring.

(e) Tighten the 3 bolts.

Torque:

19 N·m (194 kgf·cm, 14 ft·lbf) for bolt A

9.0 N·m (92 kgf·cm, 80 in.·lbf) for bolt B

(f) Install the 3 wire harness clamps.

(g) Connect the 4 fuel injector connectors.

(h) Connect the ventilation hose.

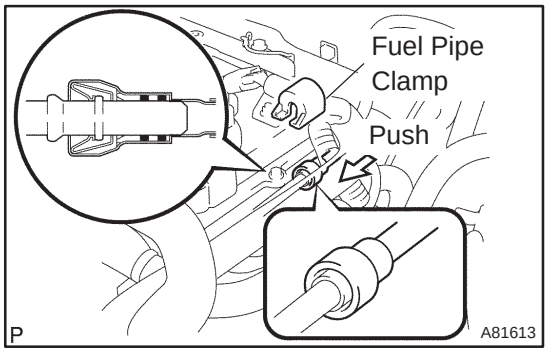

8. CONNECT FUEL TUBE SUB–ASSY

(a) Push in the connector to the pipe until it makes ”click” sound.

NOTICE:

- **Check if there is any damage or foreign objects on the connected part.**
- **After connecting, check if the connector and the pipe are securely connected by pulling on them.**

(b) Install the fuel pipe clamp.

9. CHECK FOR FUEL LEAKS (See page 11–5)

10. INSTALL CYLINDER HEAD COVER NO.2 (See page 10–9)

FUEL SYSTEM (1AZ–FE)

110UW–01

PRECAUTION

1. PRECAUTION

(a) Before working on fuel system, disconnect negative (–) battery cable.
(b) Do not smoke or work near fire when handling the fuel system.
(c) Keep gasoline away from rubber or leather parts.

2. DISCHARGE FUEL SYSTEM PRESSURE

CAUTION:

- **Do not disconnect any part of the fuel system until you have discharged the fuel system pressure.**
- **Even after discharging the fuel pressure, place a shop rag over fittings as you separate them to reduce risk of fuel spray on yourself or in the engine compartment.**

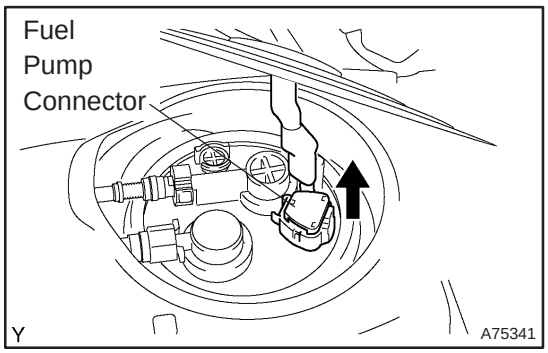

(a) Disconnect the fuel pump connector.
(b) Start the engine. After the engine has stopped, turn the ignition switch OFF.
(c) Disconnect the negative (–) battery cable.
(d) Connect the fuel pump connector.

3. FUEL SYSTEM

(a) When disconnecting the high fuel pressure line, a large amount of gasoline will spill out, so observe these procedures.
  (1) Discharge the pressure in the fuel system. (See step 2)
  (2) Disconnect the fuel pump tube. (See page 11–93)
  (3) Drain the fuel that remained inside the fuel pump tube.

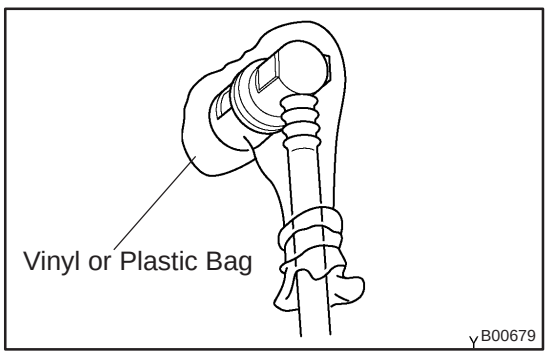

  (4) Cover the disconnected fuel pump tubes with a vinyl or a plastic bag to prevent damage and dirt.
  (5) Place a tray under the vehicle or point of disconnection to catch any fuel that may spill.

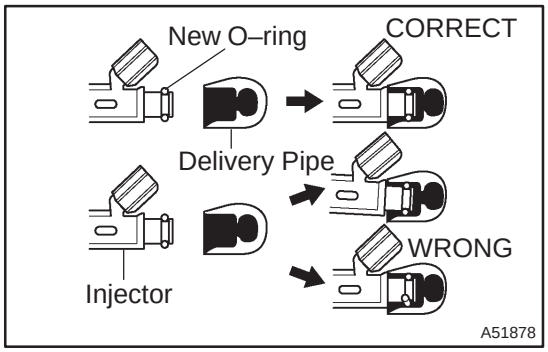

(b) Observe the following precautions when removing and installing fuel injectors.

NOTICE:

Never reuse the O–ring.

(1) When installing a new O–ring to the injector, be careful not to damage the injector.

(2) Coat the new O–ring with grease or gasoline before installing. Never use engine oil, gear oil or brake oil.

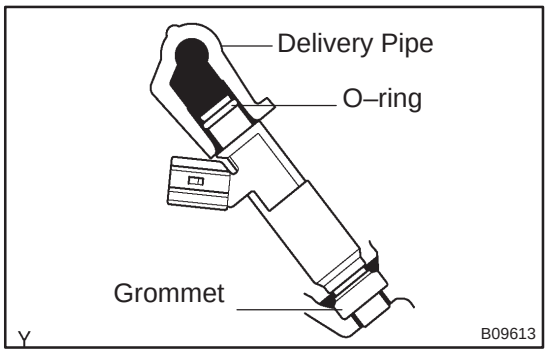

(c) Install the injector to the delivery pipe and cylinder head as shown in the illustration. Before installing the injector, be sure to apply grease or gasoline on the place where the delivery pipe contacts the O–ring of the injector.

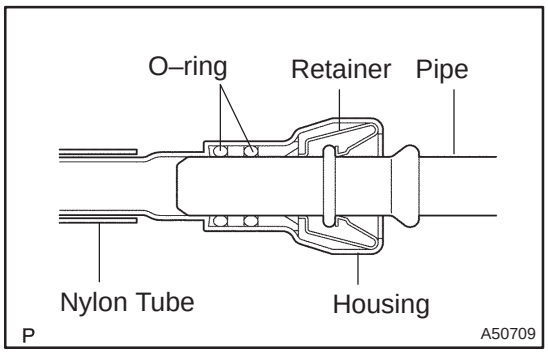

(d) Observe these precautions when disconnecting the fuel delivery pipe.

HINT:

The structure of the metallic connector is as shown in the illustration on the left.

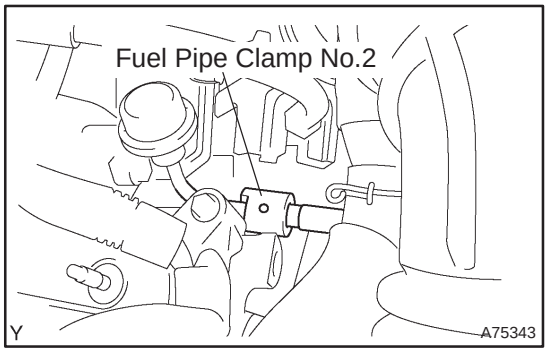

(1) Remove the fuel pipe clamp No.2.

(2) Find the metallic connector of the fuel tube assembly, slide it towards the vehicle rear and hold it as it is.

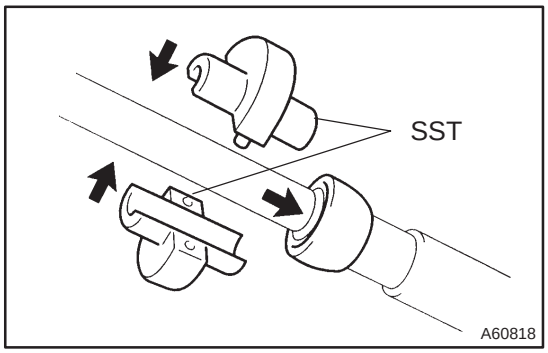

(3) Assemble SST to the connection of the fuel pipe as shown the illustration.

SST 09268–21010

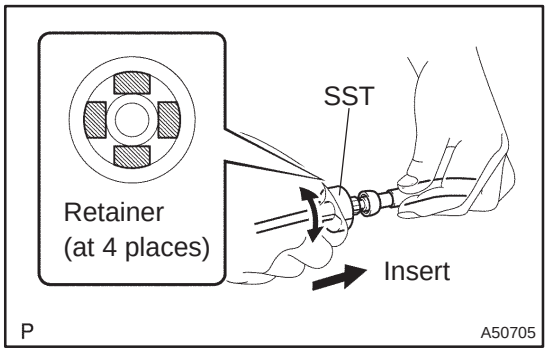

(4) Turn SST, align the retainers inside the connector with SST chamfered parts and insert SST into the connector.

(5) Slide SST and the connector together towards the fuel tube assembly.

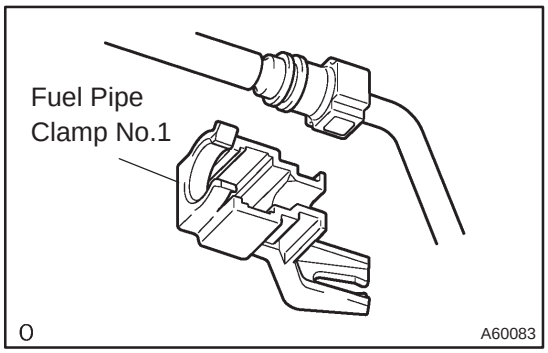

(e) Observe these following precautions when disconnecting the fuel tube connector (quick type).

(1) Remove the fuel pipe clamp No.1.

(2) Check that there is no dirt or mud on the pipe and around the connector before disconnecting them. Clean them if necessary.

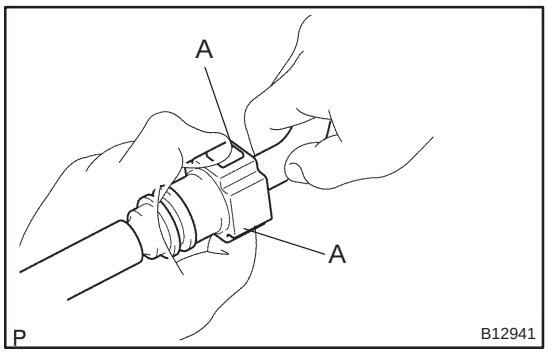

(3) Disconnect the connector from the hose while pinching part A with fingers as shown in the illustration.

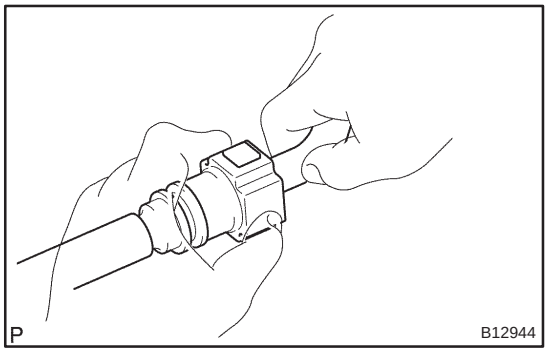

(4) When the connector and the pipe are stuck, push and pull the connector to release and pull the connector out from the pipe carefully.

(5) Inspect that there is no dirt or mud on the sealing surface of the disconnected pipe. Clean it away if necessary.

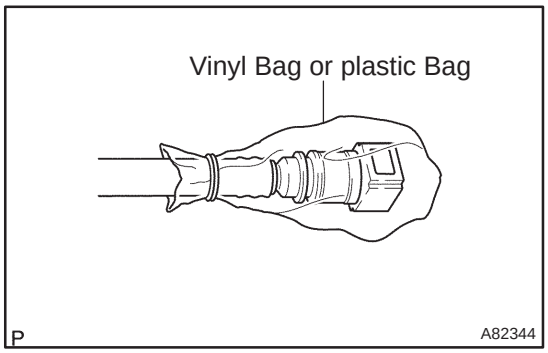

(6) To prevent the disconnected pipe and connector from being damaged and foreign objects from being introduced, cover them with a vinyl or plastic bag.

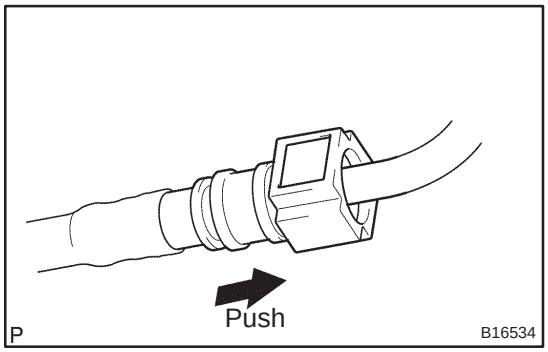

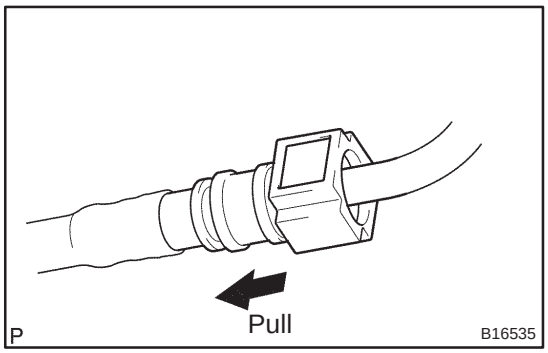

(f) Observe these precautions when connecting the fuel tube connectors (Quick Type):
  (1) Check that there is no damage or foreign objects in the connected part of the pipe.
  (2) Match the axis of the connector with the axis of the pipe, and push into the connector until the connector makes a ”click” sound. If the connection is tight, apply little amount of fresh engine oil on the tip of the pipe.
  (3) After having finished the connection, check if the pipe and the connector are securely connected by pulling on them.
  (4) Check for fuel leaks.

4. CHECK FOR FUEL LEAKS

(a) Check that there are no fuel leaks after doing maintenance anywhere on the fuel system.
(See page 11–19)

ON–VEHICLE INSPECTION

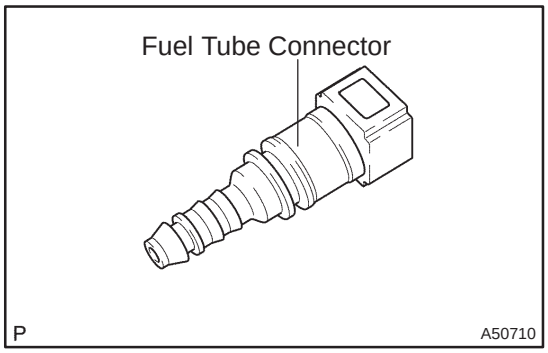

1. CHECK FUEL PRESSURE

(a) Discharge the pressure in the fuel system and take precautions for possible fuel spillage.(See page 11–15)

(b) Check that the battery voltage is above 12 V.

(c) Disconnect the negative (–) battery cable.

(d) Pull out the connecter from a new fuel tube.

HINT:

Part No. 23901–0H040

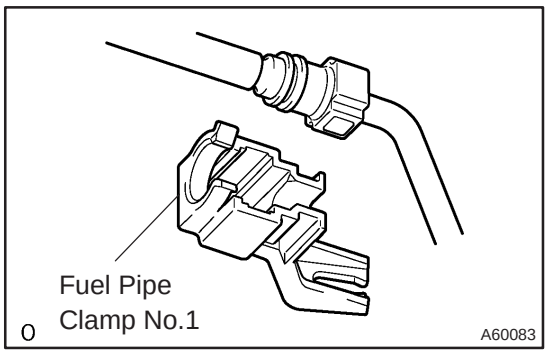

(e) Remove the fuel pipe clamp No.1 from the fuel tube connector.

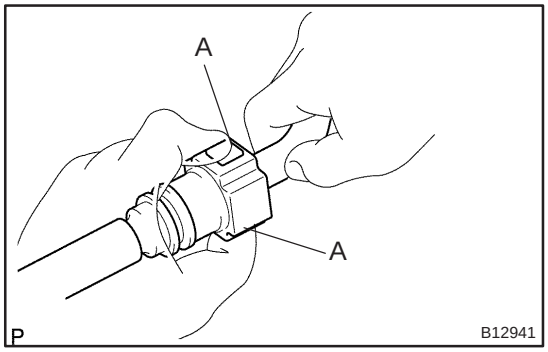

(f) Disconnect the fuel tube connector from the fuel pipe while pinching part A with fingers as shown in the illustration.

CAUTION:

- **Do not disconnect the fuel tube connector (quick type) until after you have discharged the fuel system pressure and taken appropriate steps to prevent fuel spillage.**
- **There may be remained pressure in the fuel lines after discharging the pressure.**
  Take precautions to prevent fuel from spraying on you or your clothing or inside the engine compartment.

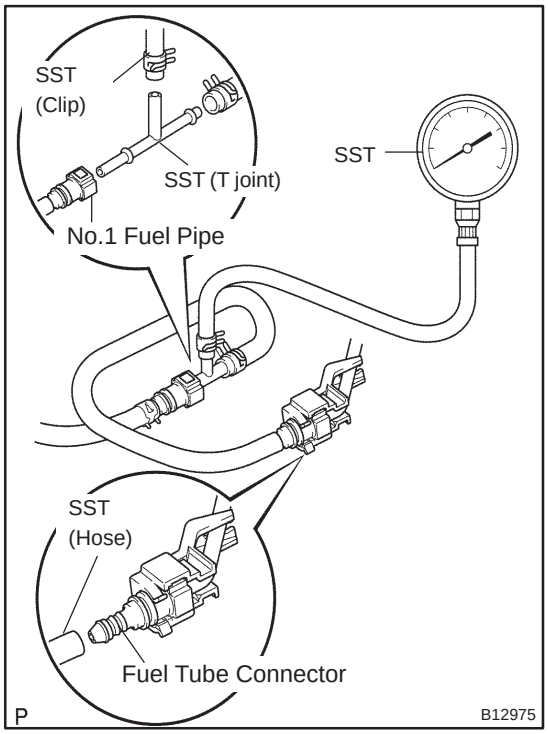

(g) Install SST (pressure gauge) and a fuel tube connector using SST as shown in the illustration.
SST 09268–41047(95336–08070),09268–45014 (09268–41250, 09268–41200, 09268–41220)
(h) Wipe up any gasoline.
(i) Reconnect the negative (–) battery cable.
(j) Connect the hand–hand tester to the DLC3.
(k) Measure the fuel pressure.
Fuel pressure:
304 to 343 kPa (3.1 to 3.5 kgf/cm^2, 44 to 50 psi)

If pressure is high, replace the fuel pressure regulator.
If pressure is low, check the fuel hoses connections, the fuel pump, the fuel filter and the fuel pressure regulator.

(l) Disconnect the hand–held tester from the DLC3.
(m) Start the engine.
(n) Measure the fuel pressure at idle.
Fuel pressure:
304 to 343 kPa (3.1 to 3.5 kgf/cm^2, 44 to 50 psi)
(o) Stop the engine.
(p) Check that the fuel pressure remains as specified for 5 minutes after the engine has stopped.
Fuel pressure:147 kPa (1.5 kgf/cm^2, 21 psi) or more

If pressure is not as specified, check the fuel pump, the pressure regulator and/or the injectors.

(q) After checking the fuel pressure, disconnect the negative (–) battery cable and carefully remove SST and the fuel tube connector to prevent gasoline from splashing.
(r) Reconnect the No. 1 fuel pipe (fuel tube connector).

CAUTION:
After taking the precautions, connect the fuel tube connecter (quick type).

2. CHECK FUEL PUMP OPERATION AND FUEL LEAK

(a) When using the hand–held tester
(1) Connect the hand–held tester to the DLC3.
(2) Turn the ignition switch ON and the hand–held tester main switch ON.

NOTICE:
Do not start the engine.

(3) Select the active test mode on the hand–held tester.
(4) Perform the active test. Check that the fuel pump operates and check for fuel leaks.

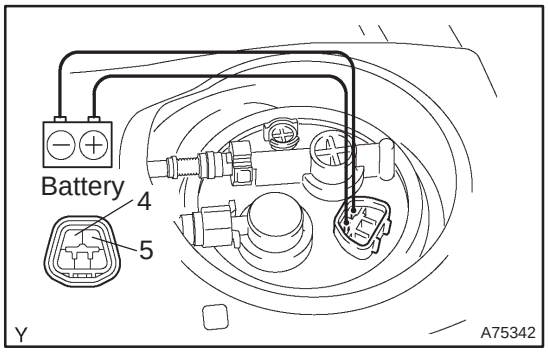

(b) When not using hand–held tester
  (1) Connect the positive (+) lead form the battery to terminal 4 of the connector and connect the negative (–) lead to terminal 5.
  (2) Check that the pump operates.

110UY–01

INSPECTION

1. INSPECT FUEL INJECTOR ASSY

(a) Inspect injector resistance

(1) Using an ohmmeter, measure the resistance between the terminals.

Resistance: 13.4 to 14.2 Ω at 20°C (68°F)

If the resistance is not as specified, replace the injector.

(b) Inspect injector inspection

CAUTION:

This test involves high–pressure fuel and electricity. Take every precaution regarding safe handling of both the fuel and the electricity. Preform this test in a safe area, and avoid any sparks or flame. Do not smoke.

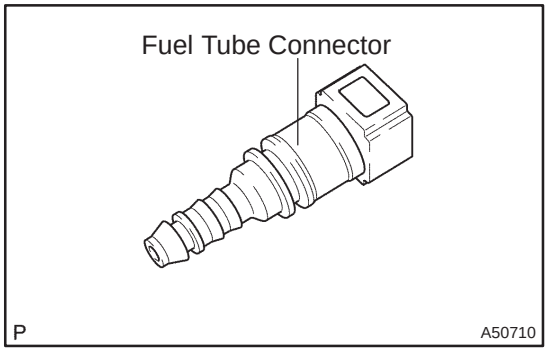

(1) Obtain new No. 1 fuel pipe (part No. 23901–0H040) and remove the fuel tube connector from the pipe.

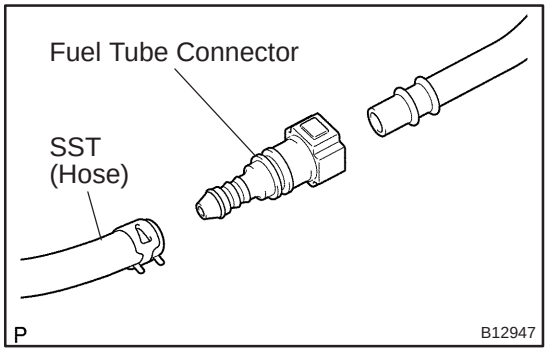

(2) Install the fuel tube connector to SST (hose), then connect the tube connector and the fuel pipe.

SST 09268–41047 (95336–08070)

CAUTION:

Connect the fuel tube connector (quick type) after observing the precautions to prevent fuel from spraying.

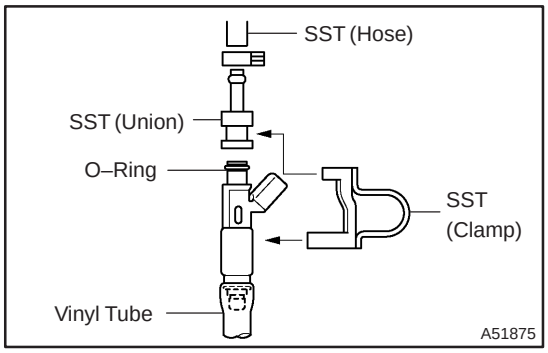

(3) Install the O–ring to the injector.

(4) Connect SST (union and hose) to the injector, and hold the injector and the union with SST (clamp)

SST 09268–41047 (09268–41110, 09268–41300, 95336–08070)

(5) Put the injector into a graduated cylinder.

CAUTION:

Install a suitable vinyl tube onto the injector to contain gasoline spray.

(6) Operate the fuel pump.(See Page 11–19)

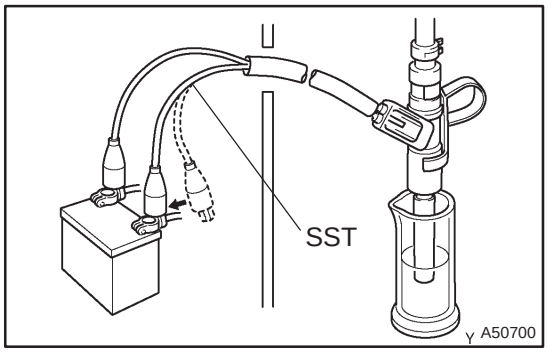

(7) Connect SST (wire) to the injector and the battery for 15 seconds, and measure the injection volume with a graduated cylinder. Test each injector 2 or 3 times.

SST 09842–30080

Injection volume:

Injection volume	Difference between each injector
60 to 73 cm^3 (3.6 to 4.5 cu in.) in 15 seconds	13 cm^3 (0.9 cu in.) or less

NOTICE:

Always do the switching at the battery side.

If the injection volume is not as specified, replace the injector.

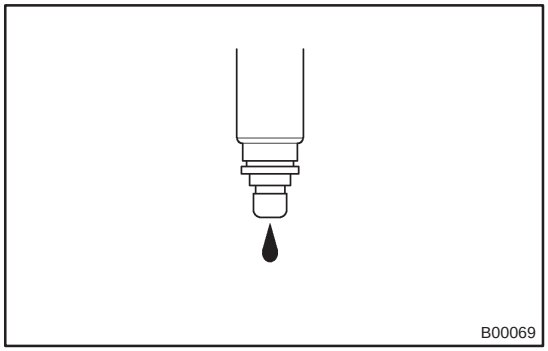

(c) Inspect leakage

(1) In the condition above, disconnect the test probes of SST (wire) from the battery and check the fuel leakage from the injector.

Fuel drop: 1 drop or less in 12 minutes

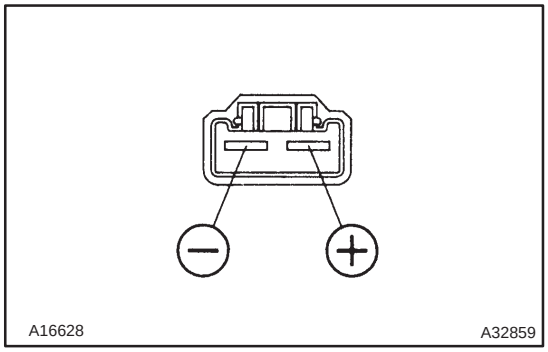

2. INSPECT FUEL PUMP

(a) Insect fuel pump resistance.

(1) Using an ohmmeter, measure the resistance between the terminals.

Resistance: 0.2 to 3.0 Ω at 20°C (68°F)

(b) Inspect fuel pump operation

(1) Apply battery voltage to both the terminals. Check that the pump operates.

NOTICE:

- **These tests must be done quickly (within 10 seconds) to prevent damage to the pump.**
- **Keep fuel pump as far away from the battery as possible.**
- **Always do the switching at the battery side.**

FUEL INJECTOR ASSY (1AZ–FE)

110U0–01

COMPONENTS

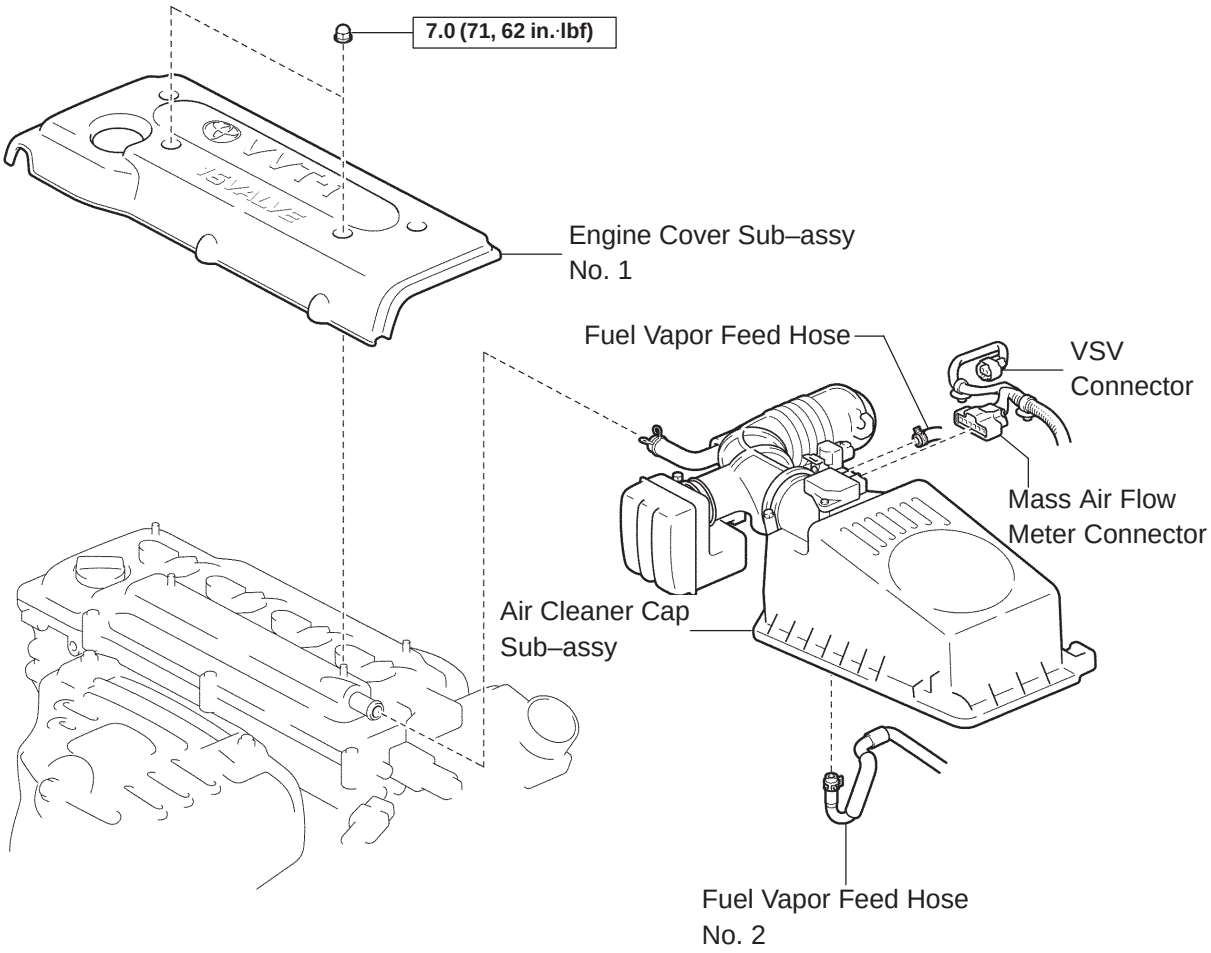

N·m (kgf·cm, ft·lbf) : Specified torque

A79730

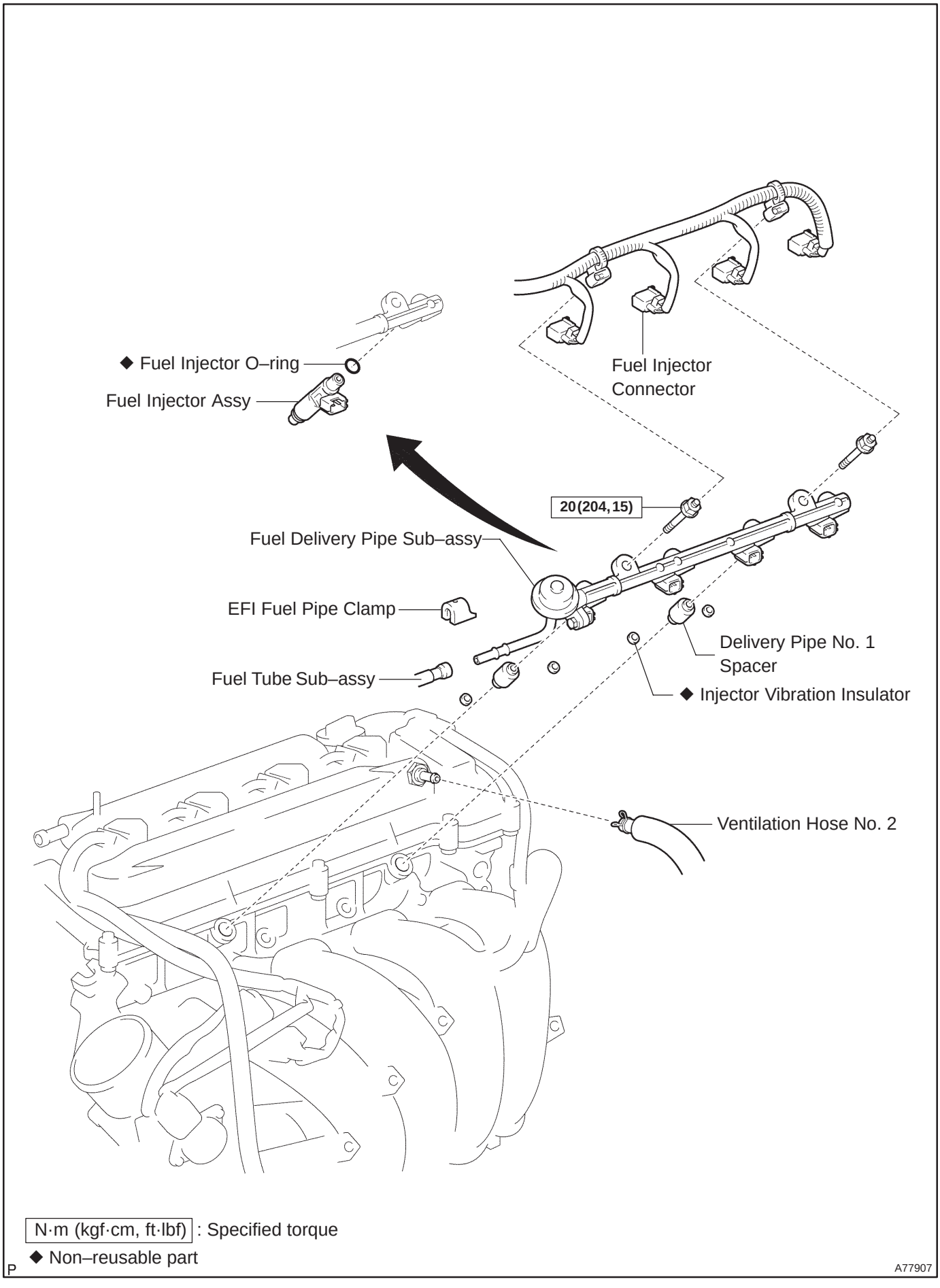
◆ Fuel Injector O–ring
Fuel Injector Assy
Fuel Injector Connector
20(204, 15)
Fuel Delivery Pipe Sub–assy
EFI Fuel Pipe Clamp
Fuel Tube Sub–assy
Delivery Pipe No. 1 Spacer
◆ Injector Vibration Insulator
Ventilation Hose No. 2
N·m (kgf·cm, ft·lbf) : Specified torque
◆ Non–reusable part
P
A77907

110U1–01

REPLACEMENT

1. **DISCHARGE FUEL SYSTEM PRESSURE (See page 11–15)**
2. **REMOVE ENGINE COVER SUB–ASSY NO.1 (See page 10–26)**
3. **REMOVE AIR CLEANER CAP SUB–ASSY (See page 10–26)**

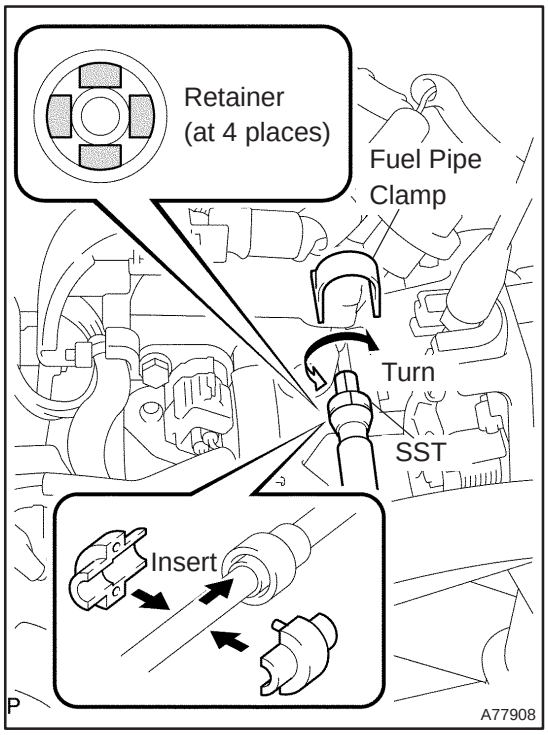

4. DISCONNECT FUEL TUBE SUB–ASSY

(a) Remove the fuel pipe clamp.

(b) Using SST, disconnect the fuel tube.

SST 09268–21010

(1) Assemble SST to the connection of the fuel tube as shown in the illustration.

(2) Turn SST, align the retainers inside the connector with SST into the connector.

(3) Push in the SST and the connector together towards the fuel tube assembly.

NOTICE:

- **Check if there is any dirt or mud on the pipe and around the connector before disconnecting them and remove the dirt as necessary.**
- **Do not bent and twist the nylon tube.**
- **When the connector and pipe are stuck, push and pull the connector to free. Pull the connector out carefully.**
- **Prevent the disconnected pipe and connector from being damaged and foreign objects from being introduced, cover with a vinyl or plastic bag.**

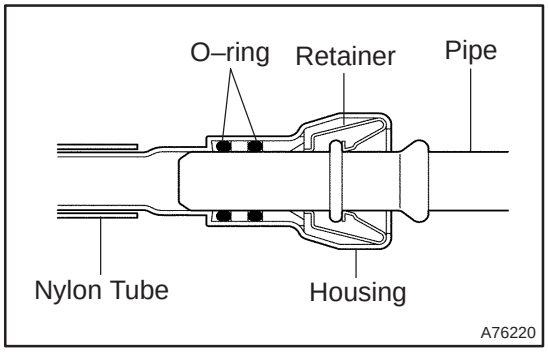

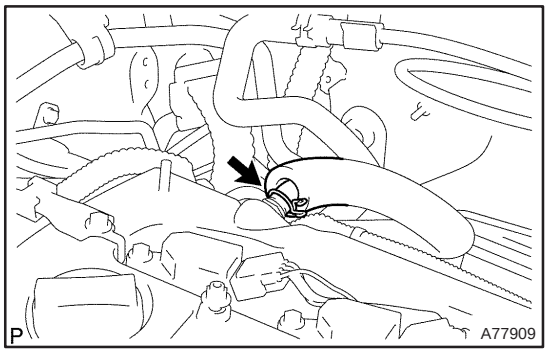

5. REMOVE FUEL DELIVERY PIPE SUB–ASSY

(a) Disconnect the ventilation hose.

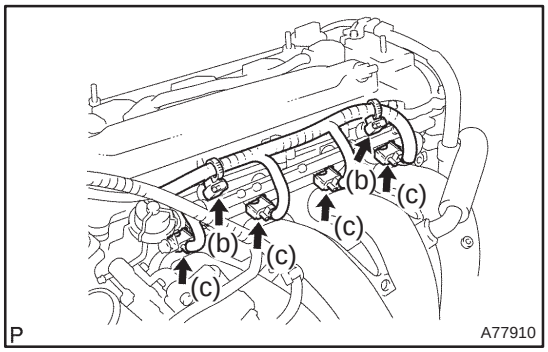

(b) Remove the 2 wire harness clamps.
(c) Disconnect the 4 fuel injector connectors.

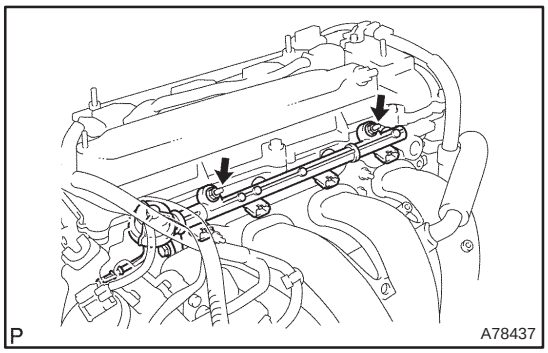

(d) Remove the 2 bolts, and then remove the fuel delivery pipe together with the 4 fuel injectors.

NOTICE:
Be careful not to drop the fuel injectors when removing the delivery pipe.

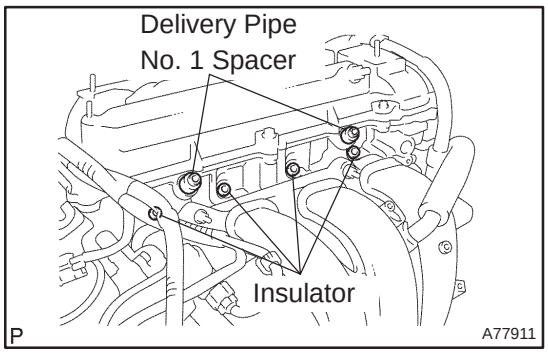

(e) Remove the 2 delivery pipe No. 1 spacers and the 4 insulators from the cylinder head.

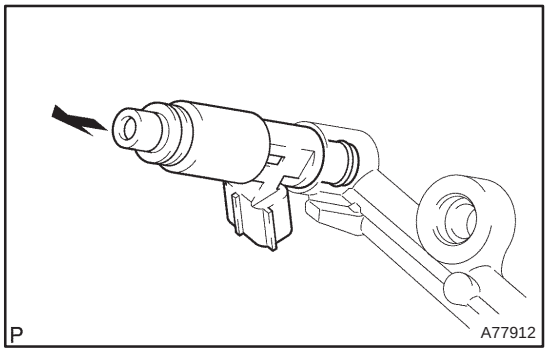

6. REMOVE FUEL INJECTOR ASSY

(a) Pull out the 4 fuel injectors.

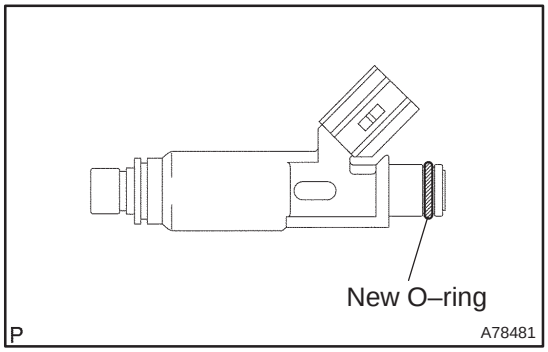

7. INSTALL FUEL INJECTOR ASSY

(a) Apply a light coat of spindle oil or gasoline to new O–rings and install them to each fuel injector.

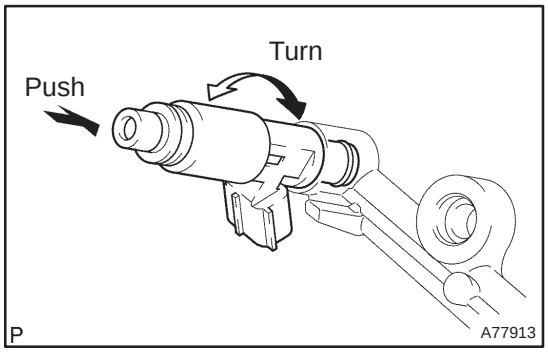

(b) Apply a light coat of spindle oil or gasoline on the place where a fuel delivery pipe contacts the O–ring.
(c) Push the fuel injector while twisting it back and forth to install it to the fuel delivery pipe.

NOTICE:

- **Be careful not to twist the O–ring.**
- **After installing the fuel injectors, check that they turn smoothly. If not, reinstall it with a new O–ring.**

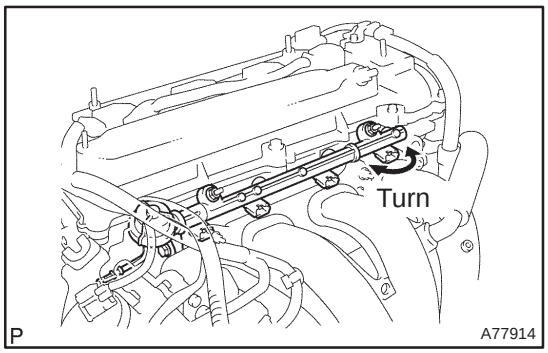

8. INSTALL FUEL DELIVERY PIPE SUB–ASSY

(a) Install 4 new insulators and the 2 delivery pipe No. 1 spacers to the cylinder head.
(b) Place the fuel delivery pipe and the 4 fuel injectors together to the cylinder head.

NOTICE:

Be careful not to drop the fuel injectors when installing the fuel delivery pipe.

(c) Temporarily install 2 bolts which are used to secure the fuel delivery pipe to the cylinder head.
(d) Check that the fuel injectors rotate smoothly.

If the fuel injectors do not rotate smoothly, the probable cause is incorrect installation of O–ring. Replace with the O–ring.

(e) Tighten the 2 bolts.
Torque: 20 N·m (204 kgf·cm, 15 ft·lbf)
(f) Connect the 4 fuel injector connectors.
(g) Install the 2 wire harness clamps.
(h) Connect the ventilation hose.

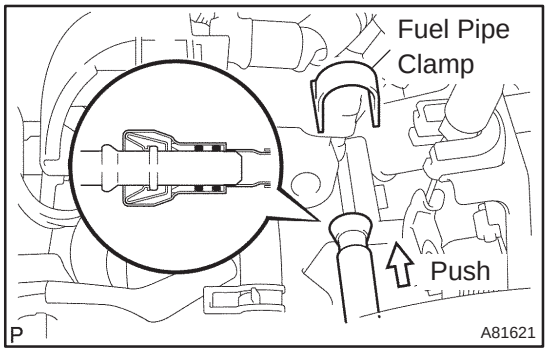

9. CONNECT FUEL TUBE SUB–ASSY

(a) Push in the connector to the pipe until it makes ”click” sound.

NOTICE:

- **Check if there is any damage or foreign objects on the connected part.**
- **After connecting, check if the connector and the pipe are securely connected by pulling on them.**

(b) Install the fuel pipe clamp.

10. INSTALL AIR CLEANER CAP SUB–ASSY
11. CHECK FOR FUEL LEAKS (See page 11–19)
12. INSTALL ENGINE COVER SUB–ASSY NO.1 (See page 10–26)

FUEL PRESSURE PULSATION DAMPER ASSY (1AZ–FE)

110U2–01

REPLACEMENT

1. **DISCHARGE FUEL SYSTEM PRESSURE (See page 11–15)**
2. **REMOVE ENGINE COVER SUB–ASSY NO.1 (See page 10–26)**
3. **REMOVE AIR CLEANER CAP SUB–ASSY (See page 10–26)**
4. **DISCONNECT FUEL TUBE SUB–ASSY (See page 11–26)**
   SST 09268–21010

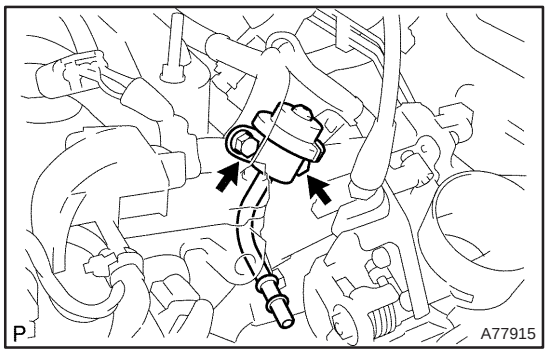

5. **REMOVE FUEL PRESSURE PULSATION DAMPER ASSY**

(a) Remove the 2 bolts, and then remove the fuel pressure pulsation damper.

6. **INSTALL FUEL PRESSURE PULSATION DAMPER ASSY**

(a) Apply a light coat of spindle oil or gasoline to a new O–ring, and install it to the fuel pressure pulsation damper.

(b) Install the fuel pressure pulsation damper with the 2 bolts.
Torque: 9.0 N·m (92 kgf·cm, 80 in.·lbf)

7. **CONNECT FUEL TUBE SUB–ASSY (See page 11–26)**
8. **INSTALL AIR CLEANER CAP SUB–ASSY**
9. **CHECK FOR FUEL LEAKS (See page 11–19)**
10. **INSTALL ENGINE COVER SUB–ASSY NO.1 (See page 10–26)**

FUEL SYSTEM (1AZ–FSE)

110UZ–01

PRECAUTION

1. PRECAUTION

(a) Before working on fuel system, disconnect negative (–) battery cable.
(b) Do not smoke or work near fire when handling the fuel system.
(c) Keep gasoline away from rubber or leather parts.

2. DISCHARGE FUEL SYSTEM PRESSURE

CAUTION:

- **Do not disconnect any part of the fuel system until you have discharged the fuel system pressure.**
- **Even after discharging the fuel pressure, place a shop rag over fittings as you separate them to reduce risk of fuel spray on yourself or in the engine compartment.**

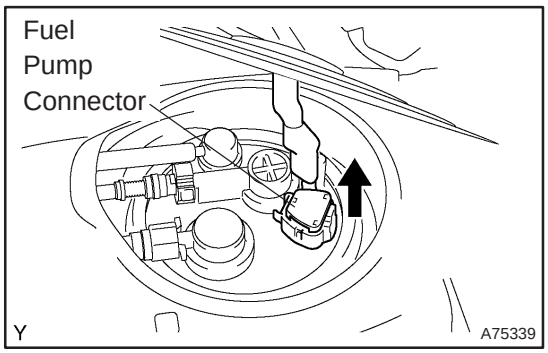

(a) Disconnect the fuel pump connector.
(b) Start the engine. After the engine has stopped, turn the ignition switch OFF.
(c) Disconnect the negative (–) battery cable.
(d) Connect the fuel pump connector.

3. FUEL SYSTEM

(a) When disconnecting the high fuel pressure line, a large amount of gasoline will spill out, so observe these procedures.
  (1) Discharge the pressure in the fuel system. (See step 2)
  (2) Disconnect the fuel pump tube. (See page 11–93)
  (3) Drain the fuel that remained inside the fuel pump tube.

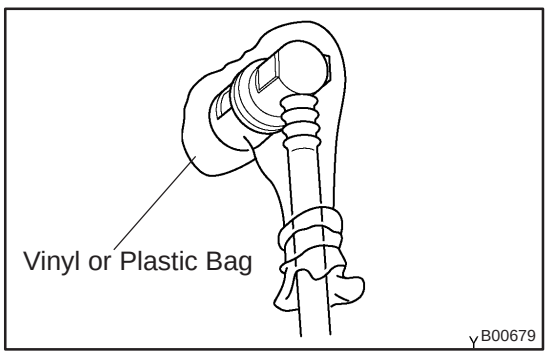

  (4) Cover the disconnected fuel pump tubes with a vinyl or a plastic bag to prevent damage and dirt.
  (5) Place a tray under the vehicle or point of disconnection to catch any fuel that may spill.

(b) Observe the following precautions when removing and installing fuel injectors.

NOTICE:

Never reuse the O–ring.

(1) When installing a new O–ring to the injector, be careful not to damage the injector.

(2) Coat the new O–ring with grease or gasoline before installing. Never use engine oil, gear oil or brake oil.

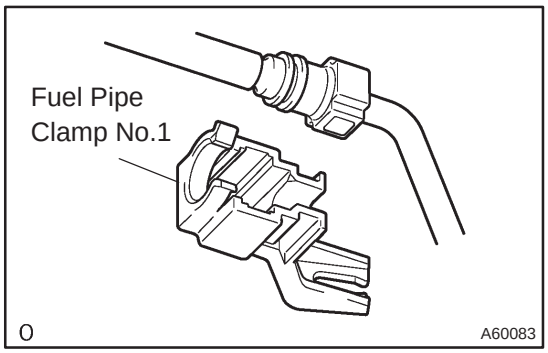

(c) Observe these following precautions when disconnecting the fuel tube connector (quick type).

(1) Remove the fuel pipe clamp No.1.

(2) Check that there is no dirt or mud on the pipe and around the connector before disconnecting them. Clean them if necessary.

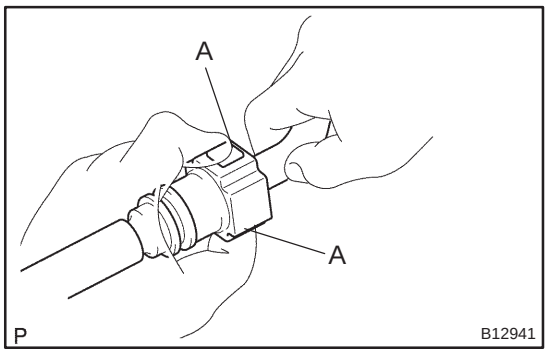

(3) Disconnect the connector from the hose while pinching part A with fingers as shown in the illustration.

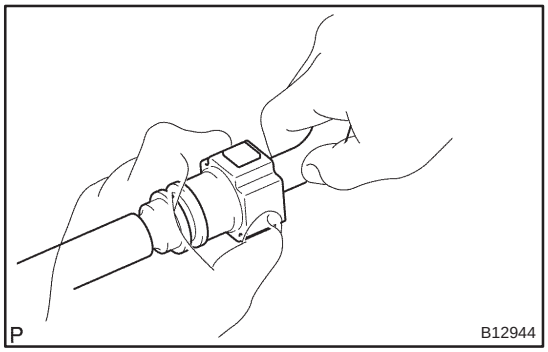

(4) When the connector and the pipe are stuck, push and pull the connector to release and pull the connector out from the pipe carefully.

(5) Inspect that there is no dirt or mud on the sealing surface of the disconnected pipe. Clean it away if necessary.

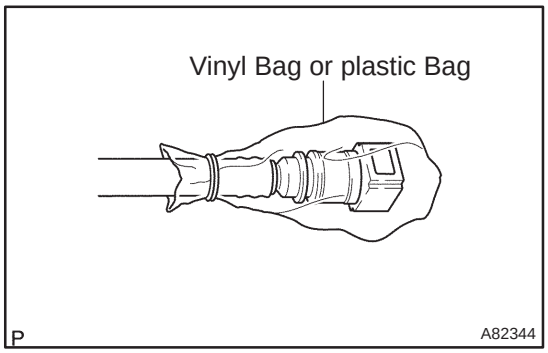

(6) To prevent the disconnected pipe and connector from being damaged and foreign objects from being introduced, cover them with a vinyl or plastic bag.

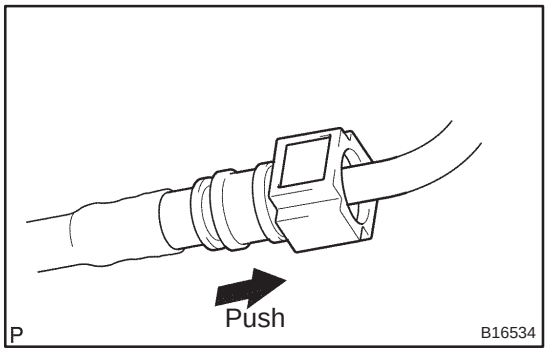

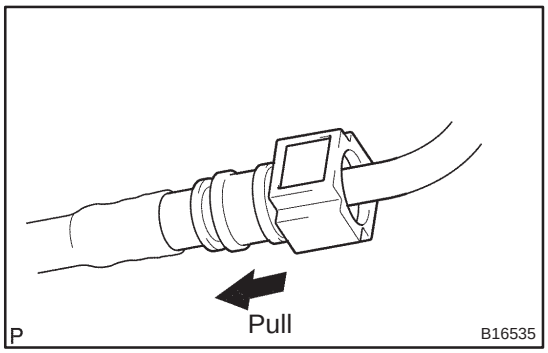

(d) Observe these precautions when connecting the fuel tube connectors (Quick Type):
  (1) Check that there is no damage or foreign objects in the connected part of the pipe.
  (2) Match the axis of the connector with the axis of the pipe, and push into the connector until the connector makes a ”click” sound. If the connection is tight, apply little amount of fresh engine oil on the tip of the pipe.
  (3) After having finished the connection, check if the pipe and the connector are securely connected by pulling on them.
  (4) Check for fuel leaks.

4. CHECK FOR FUEL LEAKS

(a) Check that there are no fuel leaks after doing maintenance anywhere on the fuel system. (See page 11–33)

ON–VEHICLE INSPECTION

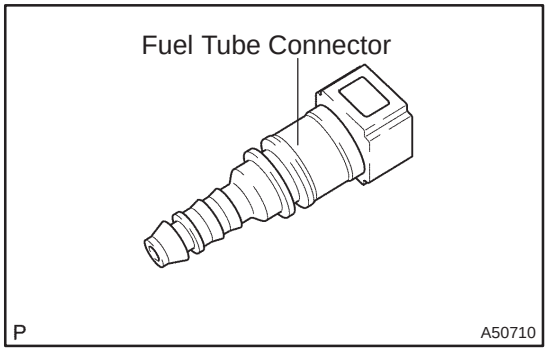

1. CHECK FUEL PRESSURE

(a) Discharge the pressure in the fuel system and take precautions for possible fuel spillage. (See page 11–30)

(b) Check that the battery voltage is above 12 V.

(c) Disconnect the negative (–) battery cable.

(d) Pull out the connecter from a new fuel tube.

HINT:

Part No. 23901–28160

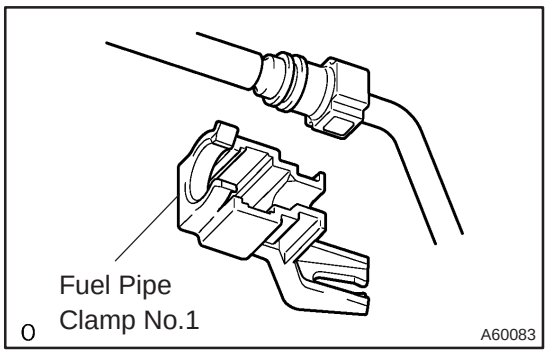

(e) Disconnect the fuel tube clamp from the fuel tube connector.

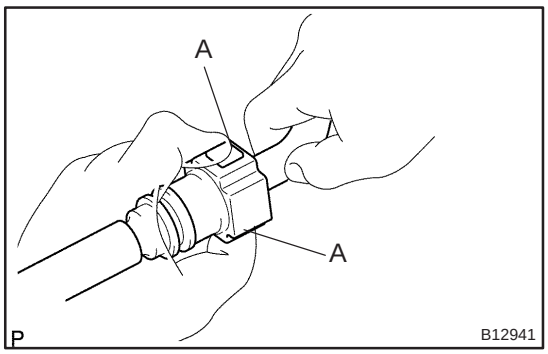

(f) Disconnect the fuel tube connector from the fuel pipe while pinching part A with fingers as shown in the illustration.

CAUTION:

- **Do not disconnect the fuel tube connector (quick type) until after you have discharged the fuel system pressure and taken appropriate steps to prevent fuel spillage.**
- **There may be remained pressure in the fuel lines after discharging the pressure.**
  Take precautions to prevent fuel from spraying on you or your clothing or inside the engine compartment.

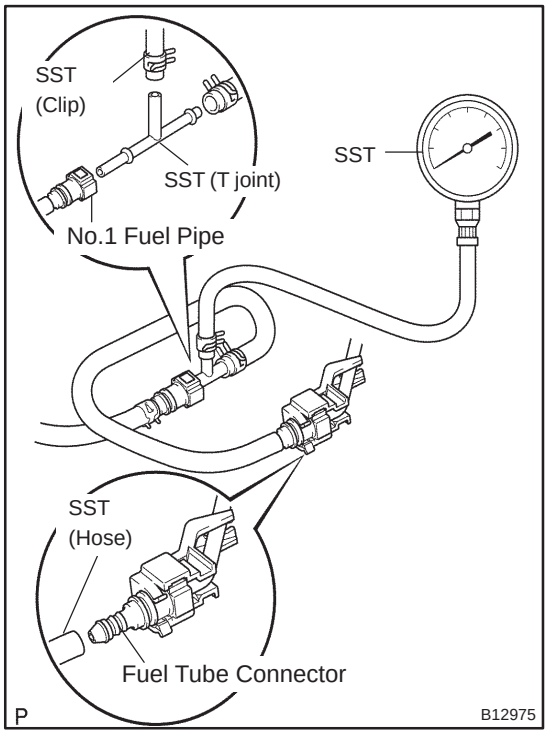

(g) Install SST (pressure gauge) and a fuel tube connector using SST as shown in the illustration.
SST 09268–41047(95336–08070),09268–45014 (09268–41250, 09268–41200, 09268–41220)
(h) Wipe up any gasoline.
(i) Reconnect the negative (–) battery cable.
(j) Connect the hand–hand tester to the DLC3.
(k) Measure the fuel pressure.
Fuel pressure:
196 to 588 kPa (2 to 6 kgf/cm^2, 28 to 85 psi)

If pressure is high, replace the fuel pressure regulator.
If pressure is low, check the fuel hoses connections, the fuel pump, the fuel filter and the fuel pressure regulator.

(l) Disconnect the hand–held tester from the DLC3.
(m) Start the engine.
(n) Measure the fuel pressure at idle.
Fuel pressure:
196 to 588 kPa (2 to 6 kgf/cm^2, 28 to 85 psi)
(o) Stop the engine.
(p) Check that the fuel pressure remains as specified for 5 minutes after the engine has stopped.
Fuel pressure:147 kPa (1.5 kgf/cm^2, 21 psi) or more

If pressure is not as specified, check the fuel pump, the pressure regulator and/or the injectors.

(q) After checking the fuel pressure, disconnect the negative (–) battery cable and carefully remove SST and the fuel tube connector to prevent gasoline from splashing.
(r) Reconnect the No. 1 fuel pipe (fuel tube connector).

CAUTION:
After taking the precautions, connect the fuel tube connecter (quick type).

2. CHECK FUEL PUMP OPERATION AND CHECK FOR FUEL LEAKS

(a) When using the hand–held tester
(1) Connect the hand–held tester to the DLC3.
(2) Turn the ignition switch ON and the hand–held tester main switch ON.

NOTICE:
Do not start the engine.

(3) Select the active test mode on the hand–held tester.
(4) Perform the active test. Check that the fuel pump operates and check for fuel leaks.

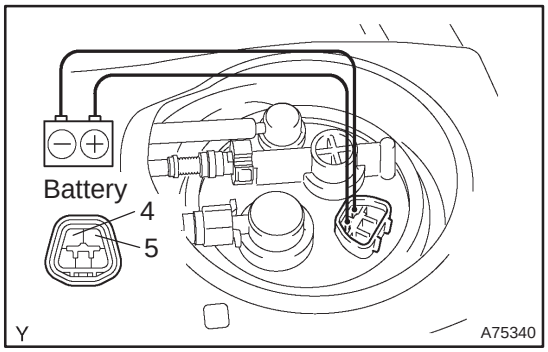

(b) When not using the hand–held tester
  (1) Connect the positive (+) lead form the battery to terminal 4 of the connector and connect the negative (–) lead to terminal 5.
  (2) Check that the pump operates.

3. CHECK FUEL PUMP OPERATION (HIGH PRESSURE)

(a) Remove the No. 1 engine cover.
(b) Start the engine.

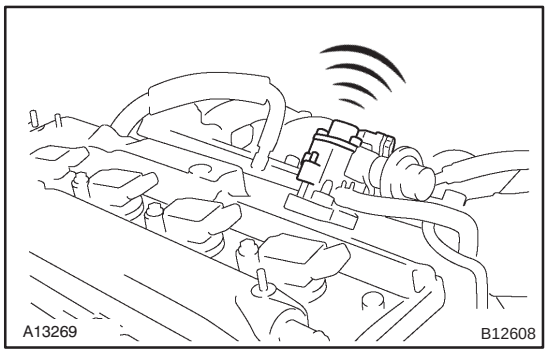

(c) Using a sound scope, hear the operating sound of the pump.

If there is no sound, replace the pump.

(d) Stop the engine.
(e) Reinstall the engine cover.

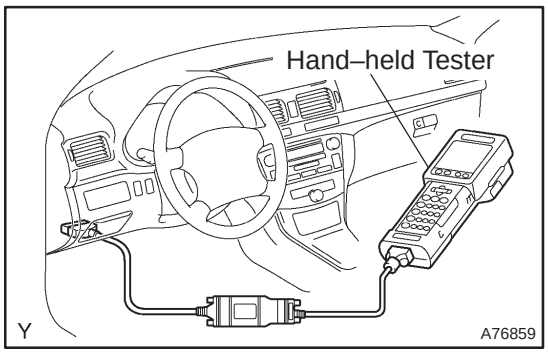

4. CHECK FUEL HIGH PRESSURE

(a) Connect the hand–held tester to the DLC3.
(b) Start the engine.
(c) Select the active test mode on the hand–held tester.
(d) Perform the active test check the fuel high pressure at idle to 3,000 rpm.

Fuel high pressure:

9.5 to 10.5 Mpa (97 to 107 kgf/cm^2, 1,380 to 1,520 psi)

If the pressure is not as specified, check the fuel pump, high pressure fuel pump, fuel pressure sensor, wiring and fuel leakage.

(e) Stop the engine.
(f) Disconnect the hand–held tester.

INSPECTION

1. INSPECT FUEL INJECTOR ASSY

NOTICE:

This inspection aims at inspecting the fuel injectors for open or short, because the fuel injectors of this vehicle are high–pressure type and do not allow to inspect fuel injection volume.

(a) Inspect injector resistance

(1) Using an ohmmeter, measure the resistance between the terminals.

Resistance: 2.55 to 2.85 Ω at 20°C (68°F)

If the resistance is not as specified, replace the injector.

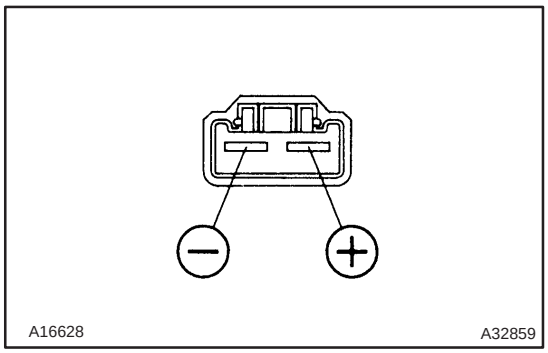

2. INSPECT FUEL PUMP

(a) Insect fuel pump resistance.

(1) Using an ohmmeter, measure the resistance between the terminals.

Resistance: 0.2 to 3.0 Ω at 20°C (68°F)

(b) Inspect fuel pump operation

(1) Apply battery voltage to both the terminals. Check that the pump operates.

NOTICE:

- **These tests must be done quickly (within 10 seconds) to prevent damage to the pump.**
- **Keep fuel pump as far away from the battery as possible.**
- **Always do the switching at the battery side.**

3. INSPECT FUEL PUMP (HIGH PRESSURE)

(a) Remove the engine cover.

(b) Disconnect the fuel pump connector.

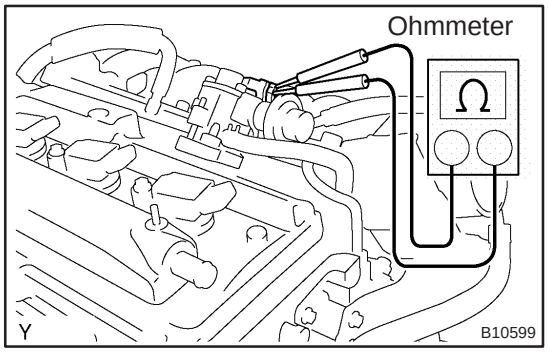

(c) Using an ohmmeter, measure the resistance between the terminals.

Resistance: 1.19 to 1.39 Ω at 20°C (68°F)

If the resistance is not as specified, replace the fuel pump.

(d) Reconnect the connector.

(e) Reinstall the engine cover.

FUEL INJECTOR ASSY (1AZ–FSE)

110TC–01

COMPONENTS

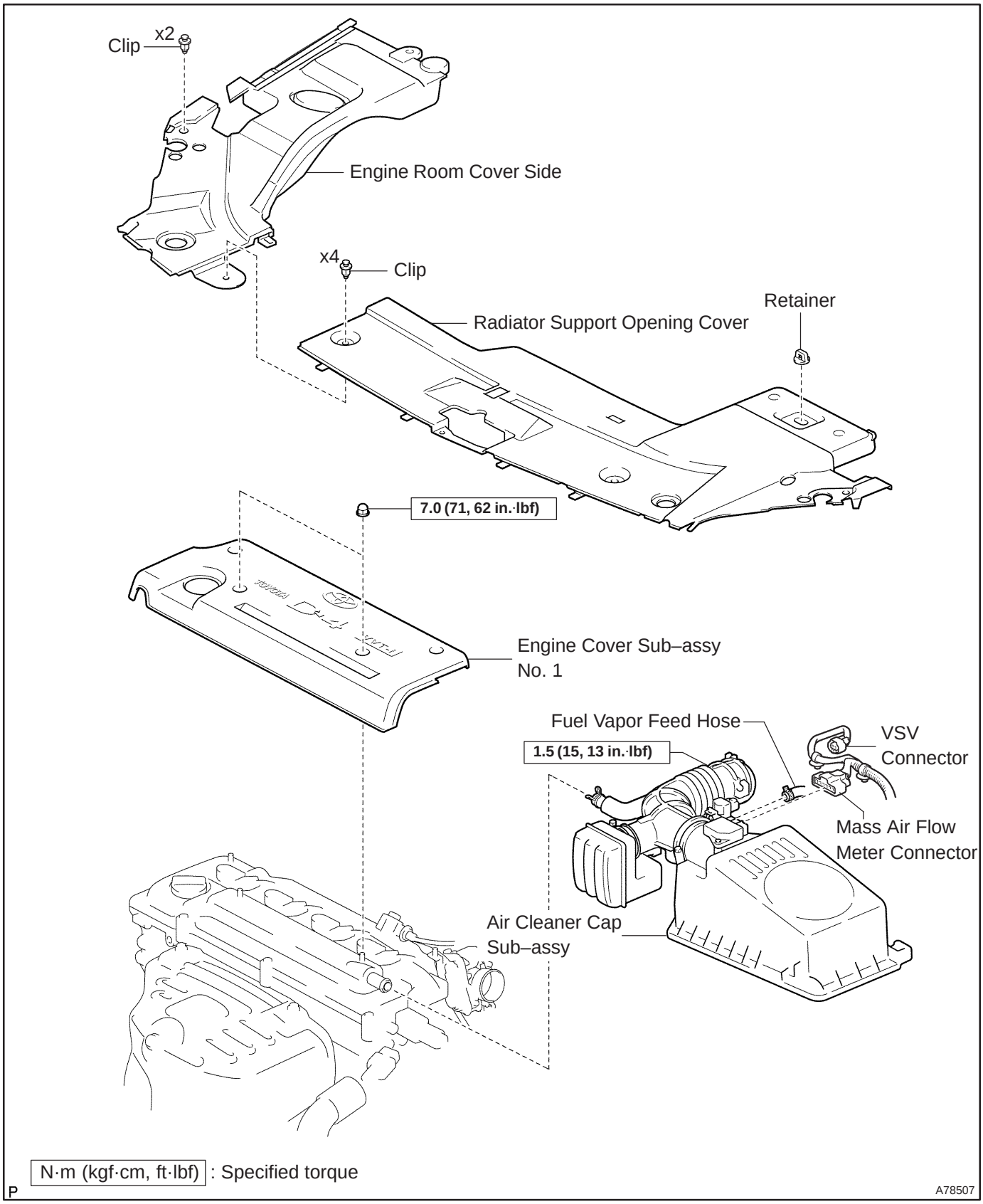

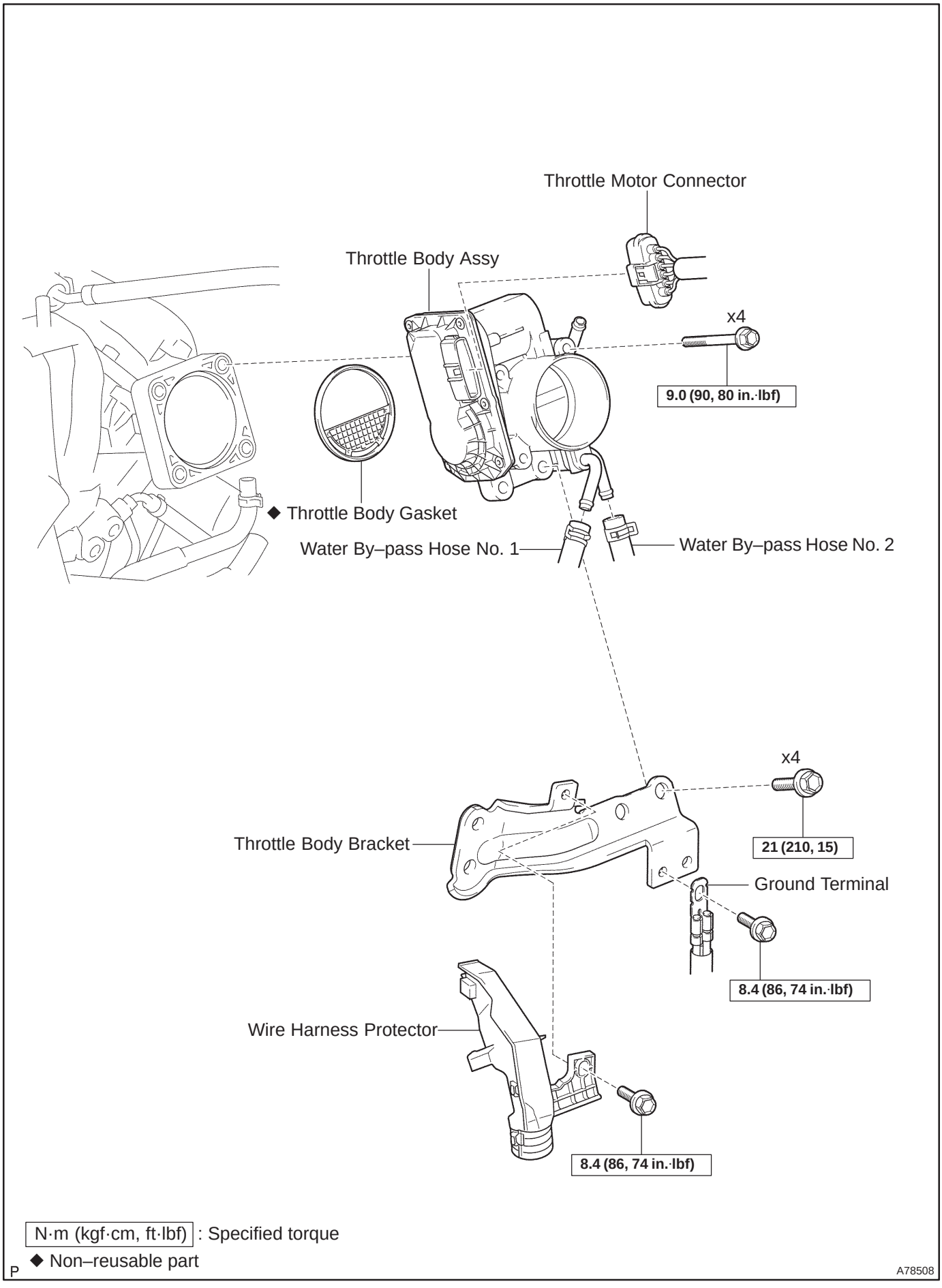
Throttle Motor Connector
Throttle Body Assy
x4
9.0 (90, 80 in.·lbf)
◆ Throttle Body Gasket
Water By–pass Hose No. 1
Water By–pass Hose No. 2
x4
Throttle Body Bracket
21 (210, 15)
Ground Terminal
8.4 (86, 74 in.·lbf)
Wire Harness Protector
8.4 (86, 74 in.·lbf)
N·m (kgf·cm, ft·lbf) : Specified torque
◆ Non–reusable part
P
A78508

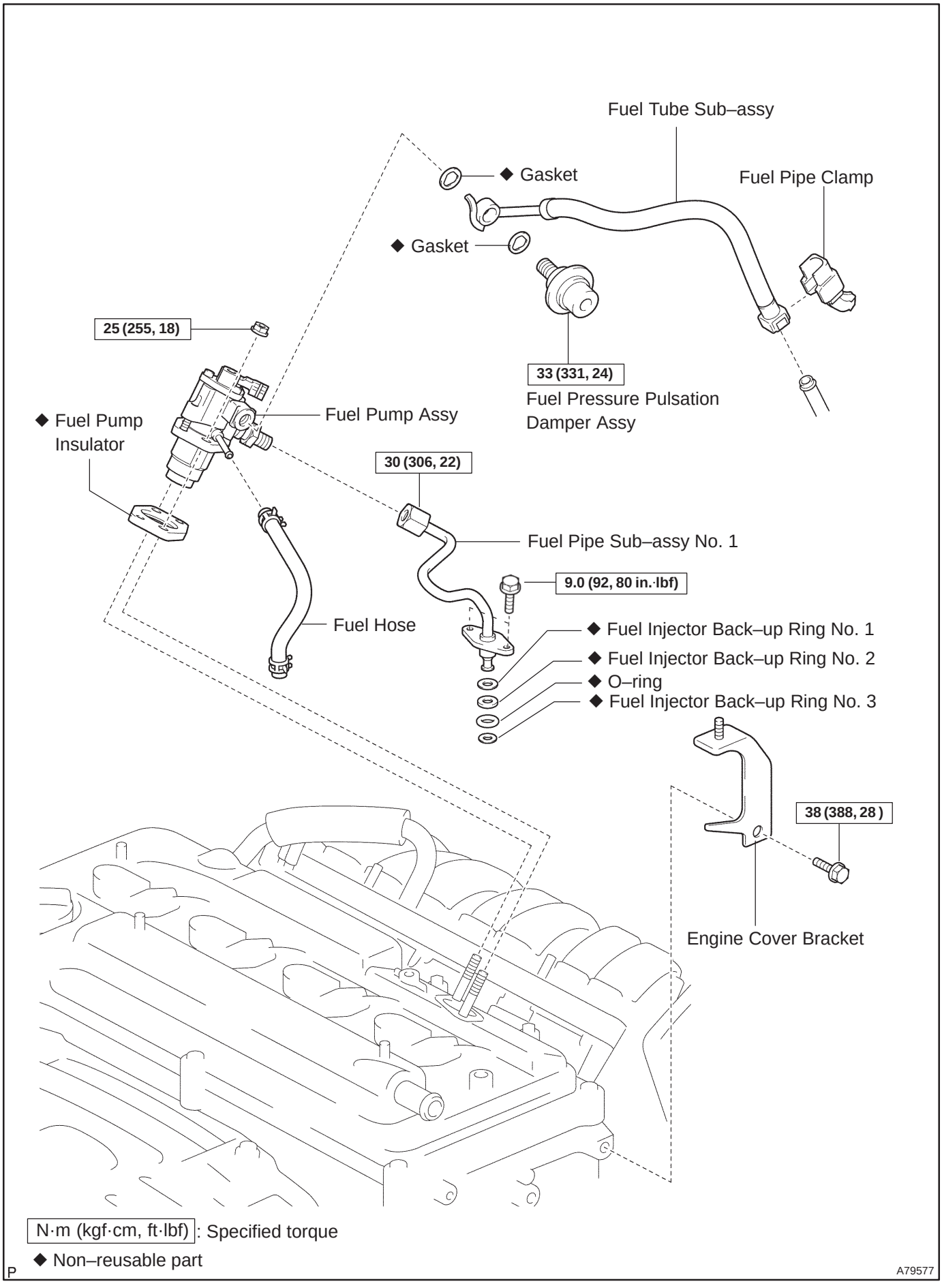
Fuel Tube Sub–assy
◆ Gasket
Fuel Pipe Clamp
◆ Gasket
25 (255, 18)
33 (331, 24)
Fuel Pressure Pulsation Damper Assy
◆ Fuel Pump Insulator
Fuel Pump Assy
30 (306, 22)
Fuel Pipe Sub–assy No. 1
9.0 (92, 80 in.·lbf)
Fuel Hose
◆ Fuel Injector Back–up Ring No. 1
◆ Fuel Injector Back–up Ring No. 2
◆ O–ring
◆ Fuel Injector Back–up Ring No. 3
38 (388, 28)
Engine Cover Bracket
N·m (kgf·cm, ft·lbf): Specified torque
◆ Non–reusable part
P
A79577

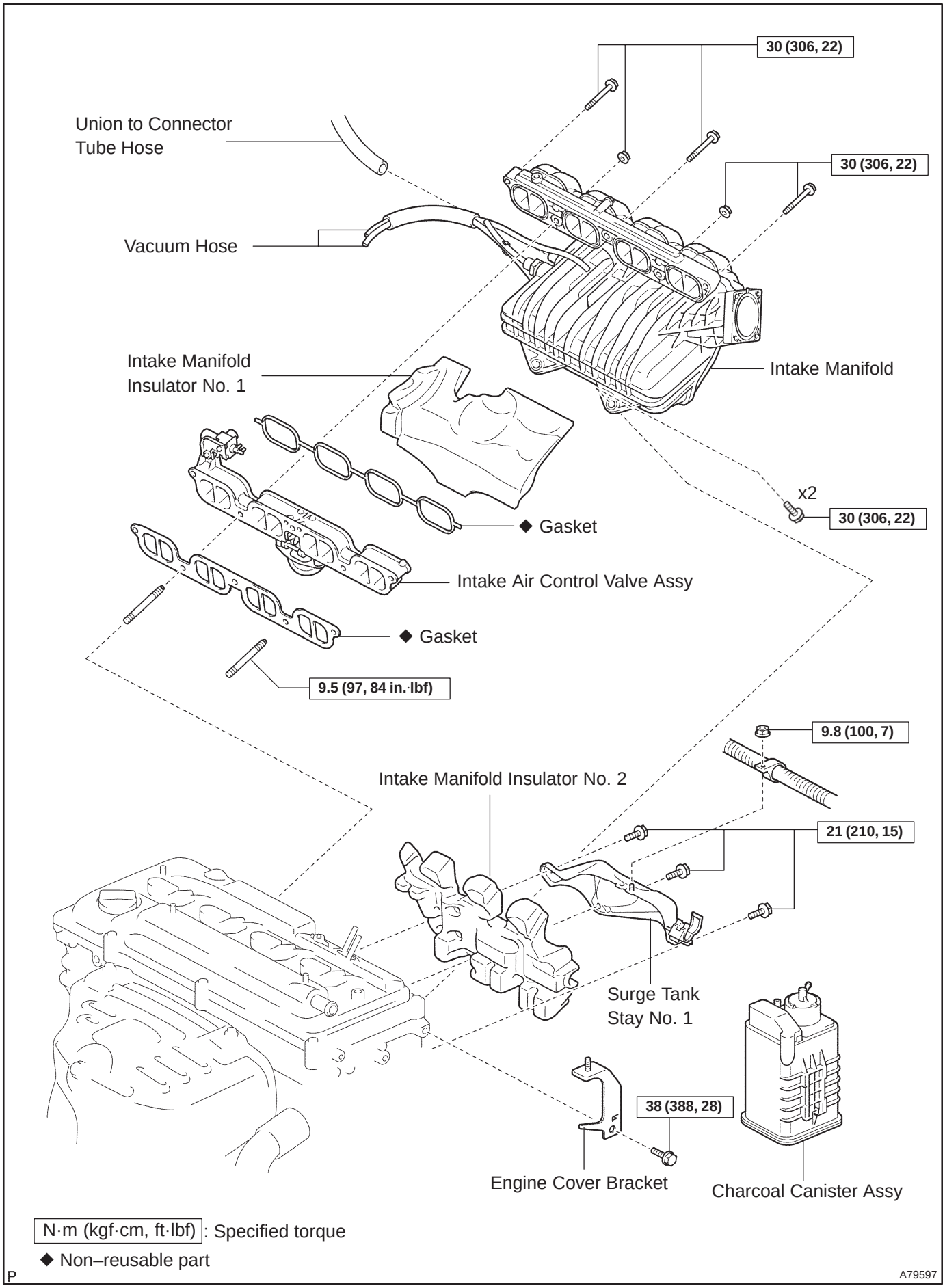
30 (306, 22)
Union to Connector Tube Hose
30 (306, 22)
Vacuum Hose
Intake Manifold Insulator No. 1
Intake Manifold
x2
30 (306, 22)
◆ Gasket
Intake Air Control Valve Assy
◆ Gasket
9.5 (97, 84 in.·lbf)
9.8 (100, 7)
Intake Manifold Insulator No. 2
21 (210, 15)
Surge Tank Stay No. 1
38 (388, 28)
Engine Cover Bracket
Charcoal Canister Assy
N·m (kgf·cm, ft·lbf): Specified torque
◆ Non–reusable part
P
A79597

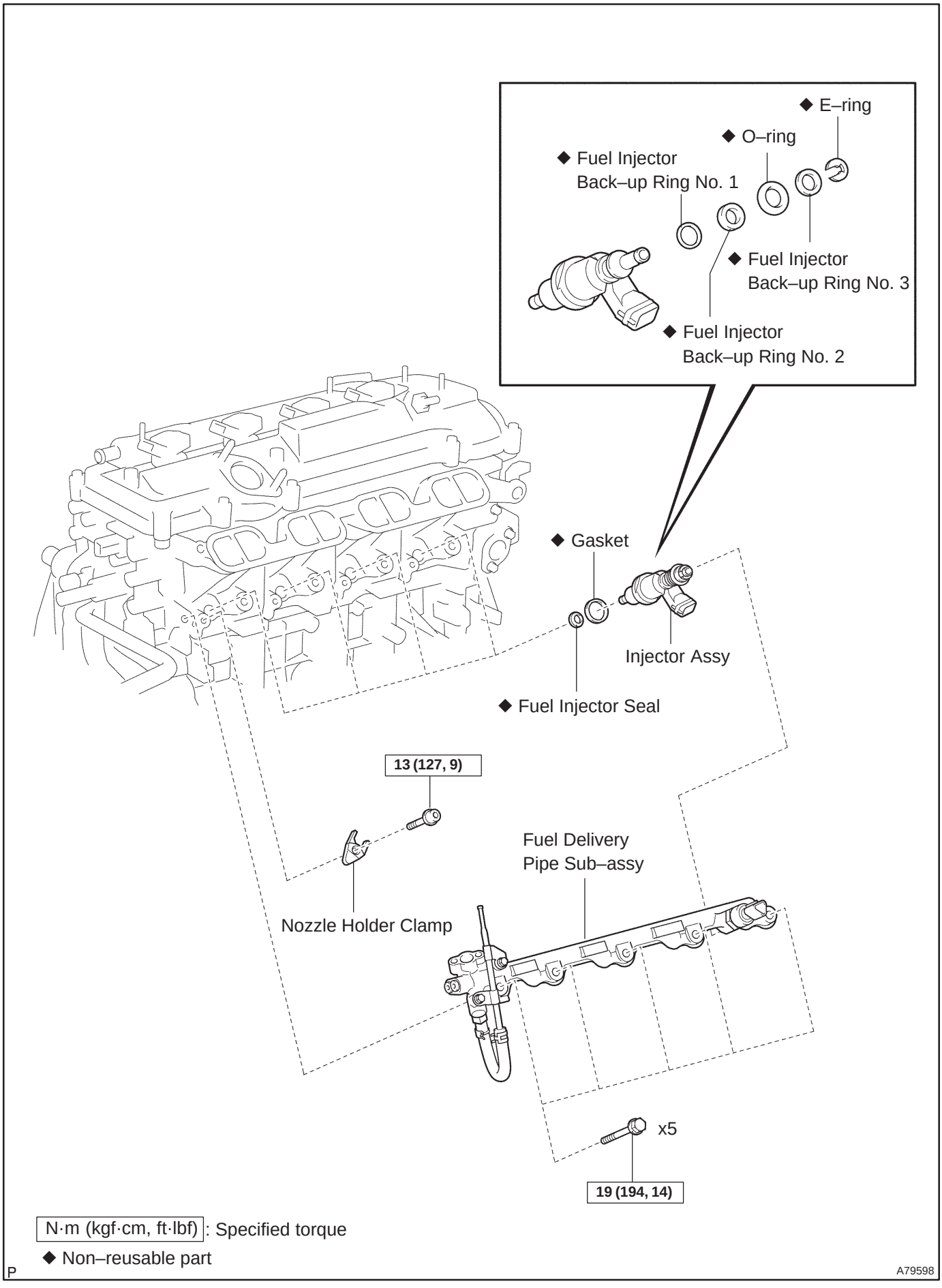
◆ E–ring
◆ O–ring
◆ Fuel Injector Back–up Ring No. 1
◆ Fuel Injector Back–up Ring No. 3
◆ Fuel Injector Back–up Ring No. 2
◆ Gasket
Injector Assy
◆ Fuel Injector Seal
13 (127, 9)
Fuel Delivery Pipe Sub–assy
Nozzle Holder Clamp
x5
19 (194, 14)
N·m (kgf·cm, ft·lbf): Specified torque
◆ Non–reusable part
P
A79598

REPLACEMENT

1. DISCHARGE FUEL SYSTEM PRESSURE (See page 11–30)
2. REMOVE RADIATOR SUPPORT OPENING COVER (See page 18–16)
3. REMOVE ENGINE ROOM COVER SIDE (See page 18–17)
4. REMOVE ENGINE COVER SUB–ASSY NO.1 (See page 10–44)
5. DRAIN ENGINE COOLANT (See page 16–31)
6. REMOVE AIR CLEANER CAP SUB–ASSY (See page 10–44)
7. REMOVE THROTTLE BODY ASSY (See page 10–44)
8. REMOVE CHARCOAL CANISTER ASSY
9. REMOVE ENGINE COVER BRACKET (See page 11–52)
10. REMOVE FUEL PUMP ASSY(See page 11–52)

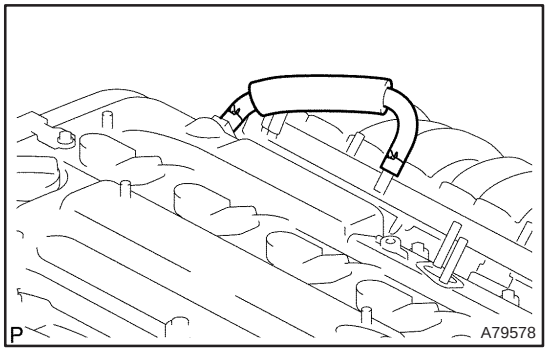

11. REMOVE INTAKE MANIFOLD

(a) Remove the ventilation hose No. 1.

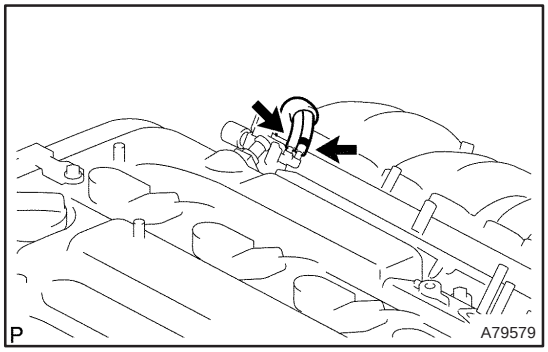

(b) Disconnect the 2 vacuum hoses from the VSV.

(c) Disconnect the union to connector tube hose from the brake booster assy.

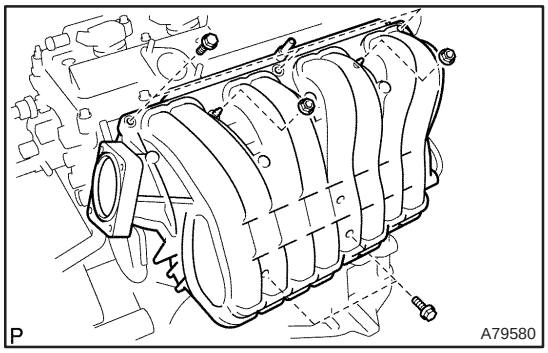

(d) Remove the 5 bolts and 2 nuts from the intake manifold.

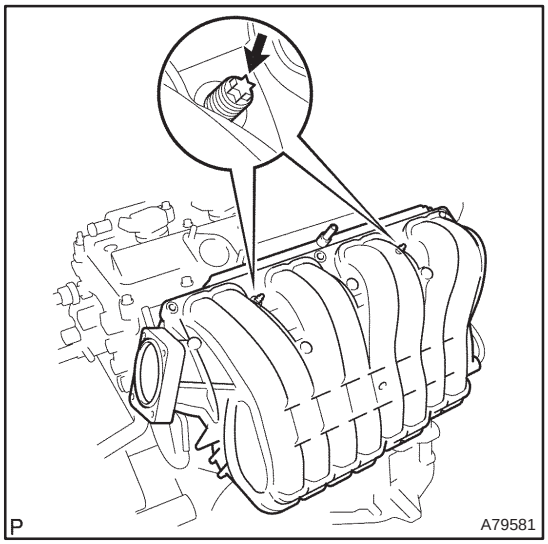

(e) Using a Torx socket, remove the 2 stud bolts.

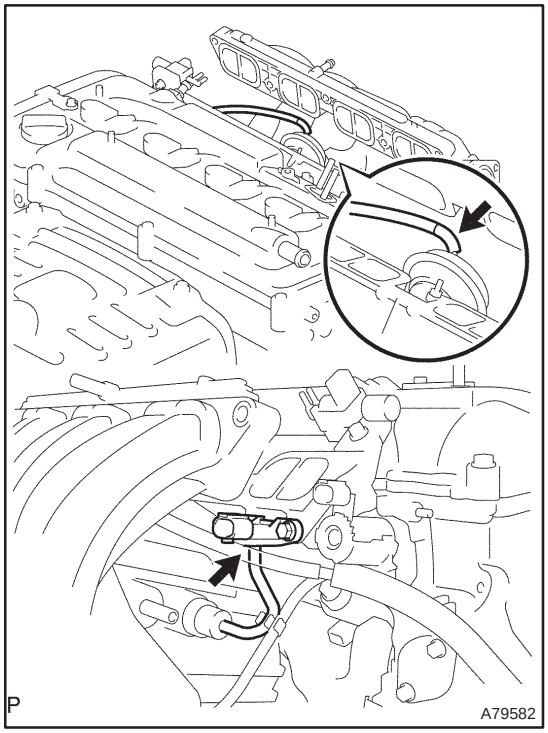

(f) Disconnect the 2 vacuum hoses and the vacuum sensor connector.

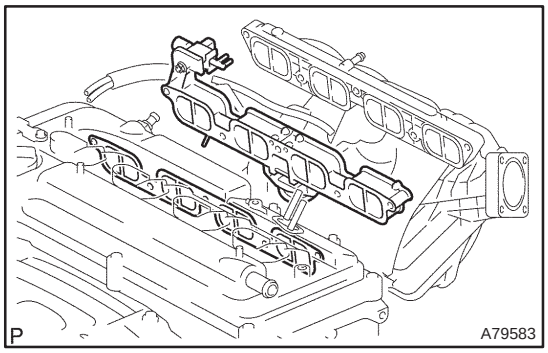

(g) Remove the intake air control valve assy and gasket.

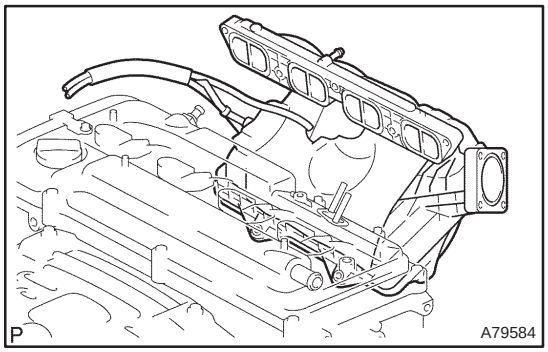

(h) Remove the intake manifold.

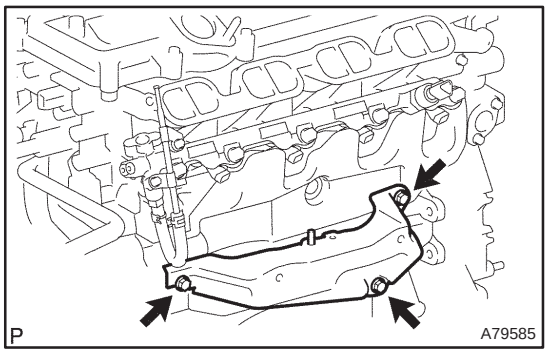

12. REMOVE SURGE TANK STAY NO.1

(a) Disconnect the wire harness from the surge tank stay No.1.

(b) Remove the 3 bolts and the surge tank stay No.1.

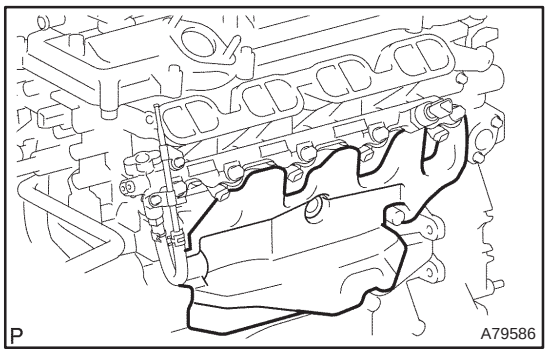

13. REMOVE INTAKE MANIFOLD INSULATOR NO.2

(a) Disconnect the fuel injector assy connector and the knock sensor connector.

(b) Remove the intake manifold insulator No.2 from the cylinder block.

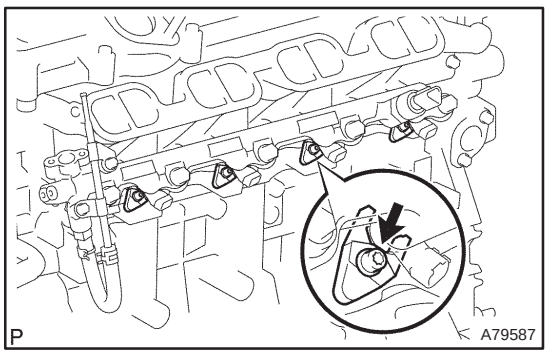

14. REMOVE NOZZLE HOLDER CLAMP

(a) Using a Torx socket (T–40), remove the nozzle holder clamp.

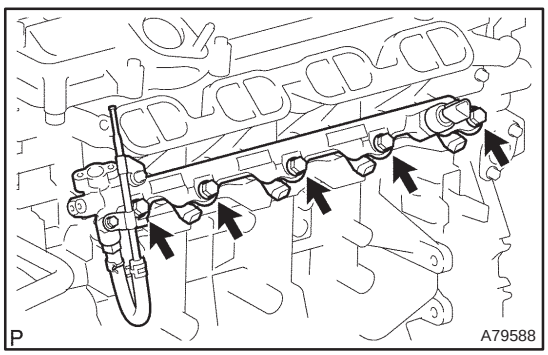

15. REMOVE FUEL DELIVERY PIPE SUB–ASSY

(a) Disconnect the fuel pressure sensor connector.

(b) Disconnect the fuel hose from the fuel delivery pipe sub–assy.

(c) Remove the 5 bolts.

(d) Remove the fuel injector and the fuel delivery pipe sub–assy together.

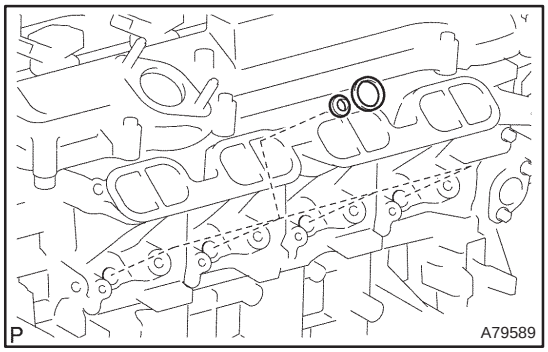

(e) Remove the 4 gaskets and 4 fuel injector seal.

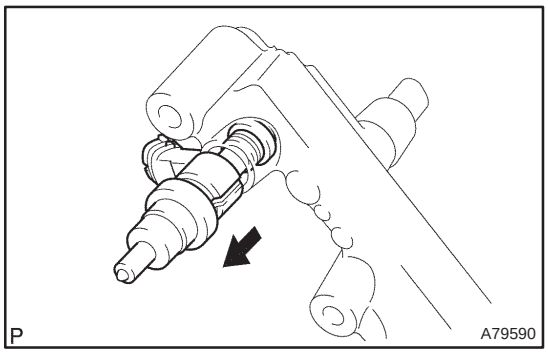

16. REMOVE FUEL INJECTOR ASSY

(a) Remove the fuel injector assy from the fuel delivery pipe sub–assy.

NOTICE:

Be careful not to damage the sealing surface of the fuel delivery pipe when removing the fuel injector.

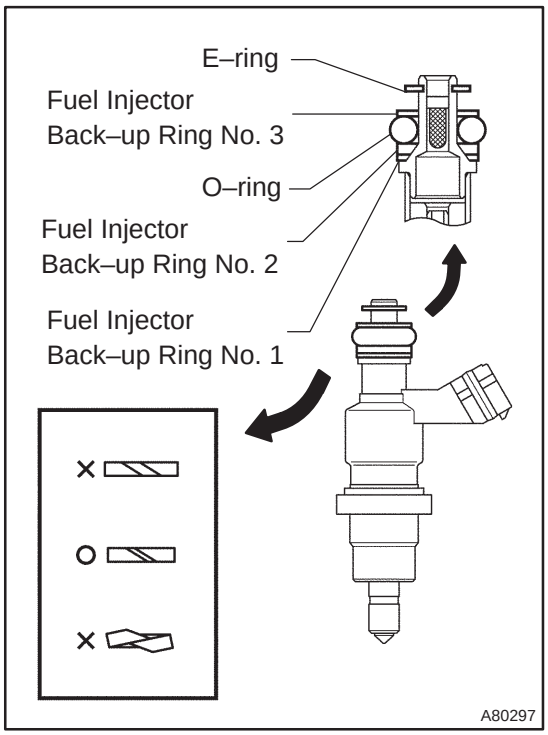

17. INSTALL FUEL INJECTOR ASSY

(a) Install new fuel injector back–up ring No.1, No.2, No.3, a new O–ring and a new E–ring to the fuel injector assy in the following sequence:

(1) Fuel Injector back–up ring No.1
(2) Fuel Injector back–up ring No.2
(3) O–ring
(4) Fuel Injector back–up ring No.3
(5) E–ring

NOTICE:

- **There is a draft angle inside the back–up ring No.1 and No.2. Put the draft angle downward when installing those rings to the fuel injector.**
- **The back–up ring No.1 and No.2 have a diagonal slit. Pay attention to the splice of the slits after installing them.**
- **After Installation of these 5 rings to the fuel injector, check that there are no damages and foreign objects on them.**

(b) Apply a little amount of fuel to the O–ring on the fuel injector and the mounting hole on the fuel delivery pipe.

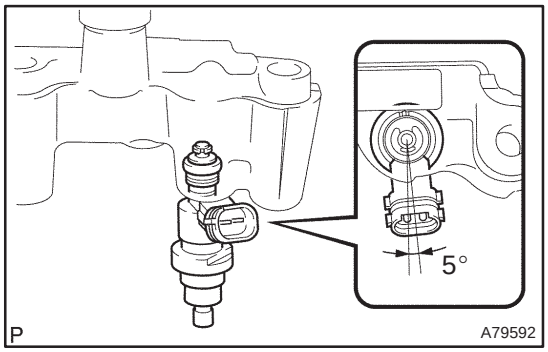

(c) Install the fuel injector to the fuel delivery pipe as shown in the illustration.

NOTICE:

- **Be careful not to damage the sealing surface of the fuel delivery pipe when installing the injector.**
- **Check that there are no damages and foreign objects in the fuel injector mounting hole of the fuel delivery pipe sub–assy.**
- **In order to avoid damaging, be sure to apply fuel to both the O–ring and the mounting hole before installing the fuel injector to the fuel delivery pipe.**

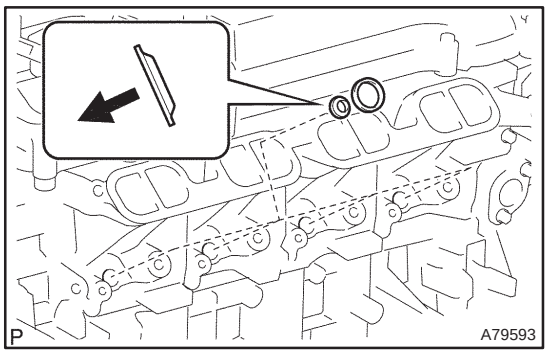

18. INSTALL FUEL DELIVERY PIPE SUB–ASSY

(a) Install a new gasket and a new fuel injector seal to the cylinder head.

NOTICE:

Pay attention the mounting orientation of the fuel injector seal.

(b) Install the fuel delivery pipe sub–assy and the fuel injector assy together to the cylinder head.

NOTICE:

- **Remove carbon from the tip of the fuel injector if necessary.**
- **Since the fuel injector tip is sensitive,do not give physical impact to the tip.**
- **If you mistakenly drop the fuel injector, replace it with a new one.**
- **Check that there are no damages and foreign objects on the fuel injector mounting area of the cylinder head.**

(c) Temporarily install the fuel delivery pipe sub–assy with the 5 bolts.

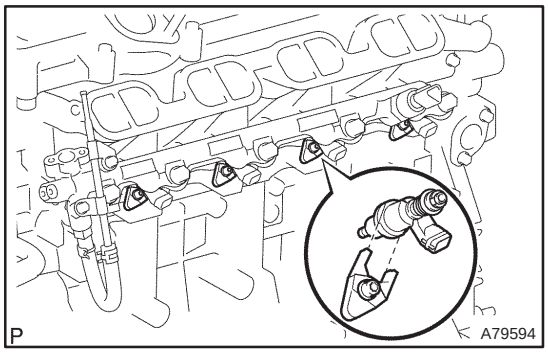

19. INSTALL NOZZLE HOLDER CLAMP

(a) Align the keyway of the fuel injector with the nozzle holder clamp and fit them.

(b) Using a Torx socket (T–40), instal the nozzle holder clamp to the cylinder head.

Torque: 13 N·m (127 kgf·cm, 9 ft·lbf)

(c) Tighten the 5 bolts until they reach the specified torque to secure the fuel delivery pipe sub–assy.

Torque: 19 N·m (194 kgf·cm, 14 ft·lbf)

(d) Connect the fuel hose to the fuel delivery pipe sub–assy.

(e) Connect the fuel pressure sensor connector.

20. INSTALL INTAKE MANIFOLD INSULATOR NO.2

(a) Install the intake manifold insulator No. 2 to the cylinder block.

(b) Connect the fuel injector assy connector and the knock sensor connector.

21. INSTALL SURGE TANK STAY NO.1

(a) Install the surge tank stay No. 1 with the 3 bolts.
Torque: 21 N·m (210 kgf·cm, 15 ft·lbf)

(b) Connect the wire harness to the surge tank stay No. 1.

22. INSTALL INTAKE MANIFOLD

(a) Set a new gasket to the intake manifold.

(b) Temporarily install the intake manifold to the engine assy.

(c) Temporarily install the intake air control valve and a new gasket between the intake manifold and cylinder head, and then check that the stud bolt holes are aligned.

(d) Connect the 2 vacuum hose and the vacuum sensor connector.

(e) Using a Torx socket, install and tighten the 2 stud bolts to secure the intake manifold, the intake air control valve and gasket.
Torque: 9.5 N·m (97 kgf·cm, 84 in.·lbf)

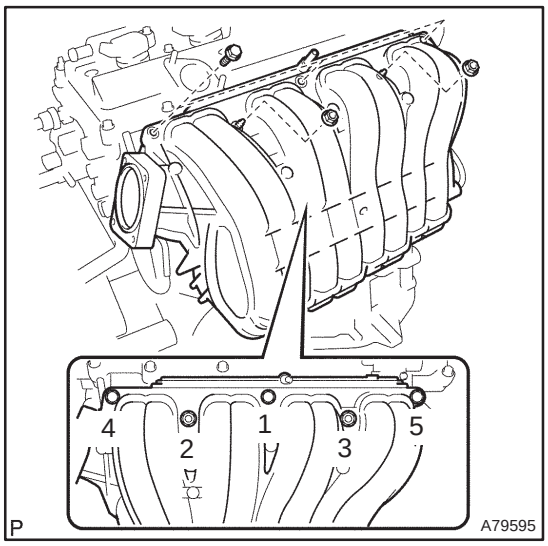

(f) In order to install the intake manifold to the cylinder head, tighten the 3 bolts and 2 nuts in the sequence shown in the illustration.
Torque: 30 N·m (306 kgf·cm, 22 ft·lbf)

(g) Install the intake manifold to the surge tank stay No.1 with the 2 bolts.
Torque: 30 N·m (306 kgf·cm, 22 ft·lbf)

(h) Connect the union to connector tube hose to the brake booster assy.

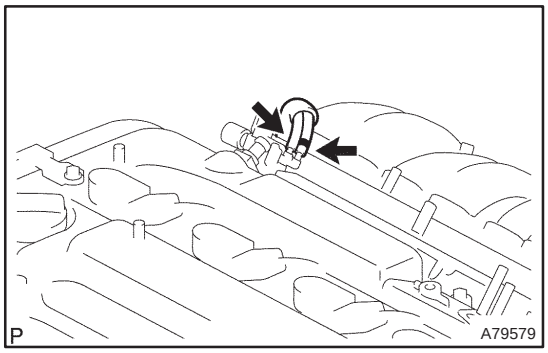

(i) Connect the 2 vacuum hoses to the VSV.

(j) Install the ventilation hose No. 1.

23. INSTALL FUEL PUMP ASSY (See page 11–52)

24. INSTALL ENGINE COVER BRACKET

(a) Install the engine cover bracket the bolt.
Torque: 38 N·m (388 kgf·cm, 28 ft·lbf)

25. INSTALL CHARCOAL CANISTER ASSY

26. **INSTALL THROTTLE BODY ASSY (See page 10–44)**
27. **INSTALL AIR CLEANER CAP SUB–ASSY (See page 10–44)**
28. **ADD ENGINE COOLANT (See page 16–31)**
29. **CHECK FOR ENGINE COOLANT LEAKS (See page 16–25)**
30. **CHECK FOR FUEL LEAKS**
31. **INSTALL ENGINE COVER SUB–ASSY NO.1**
    Torque: 7.0 N·m (71 kgf·cm, 62 in.·lbf)
32. **INSTALL ENGINE ROOM COVER SIDE**
33. **INSTALL RADIATOR SUPPORT OPENING COVER**

FUEL PUMP ASSY (1AZ–FSE)

110TA–01

COMPONENTS

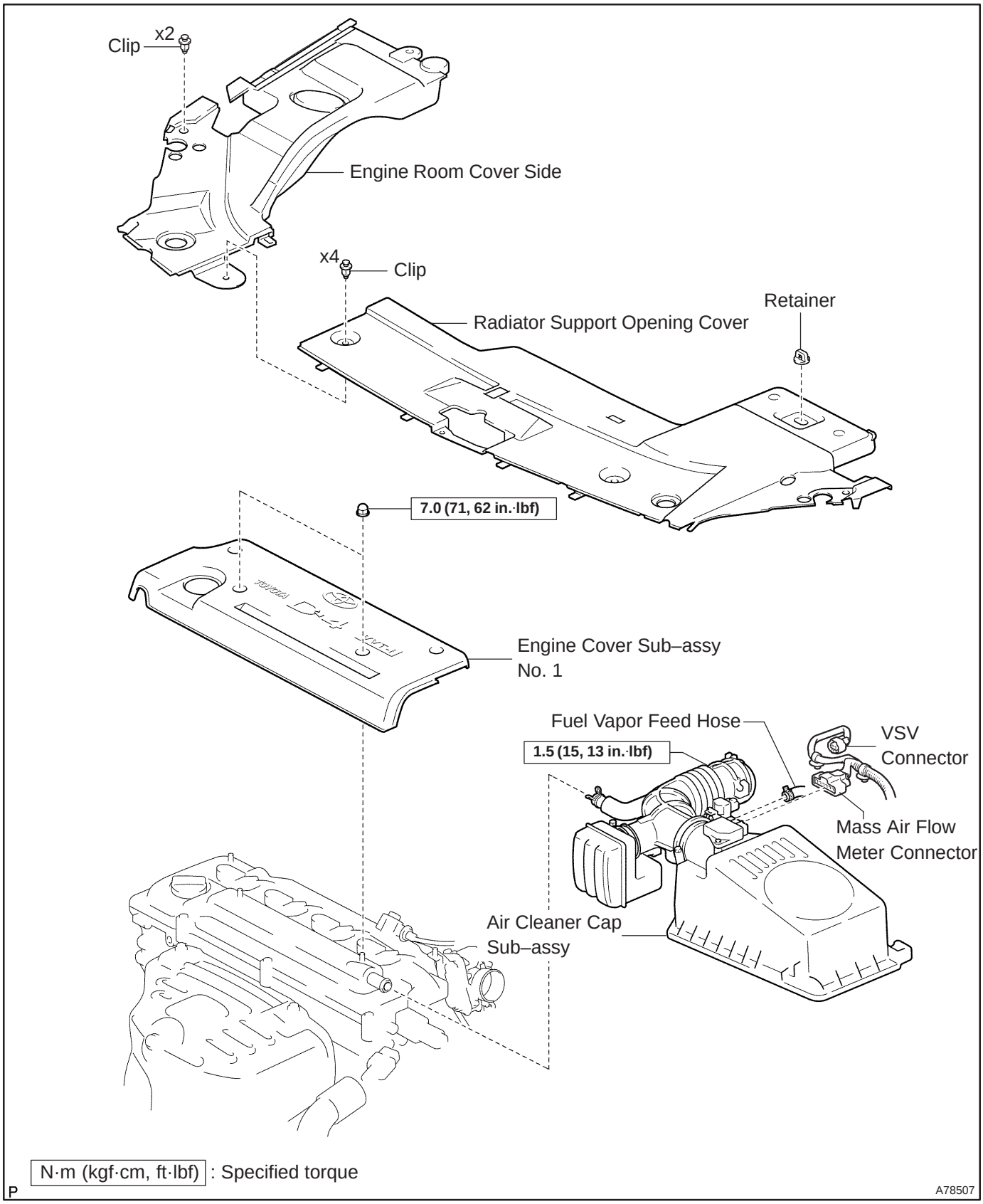

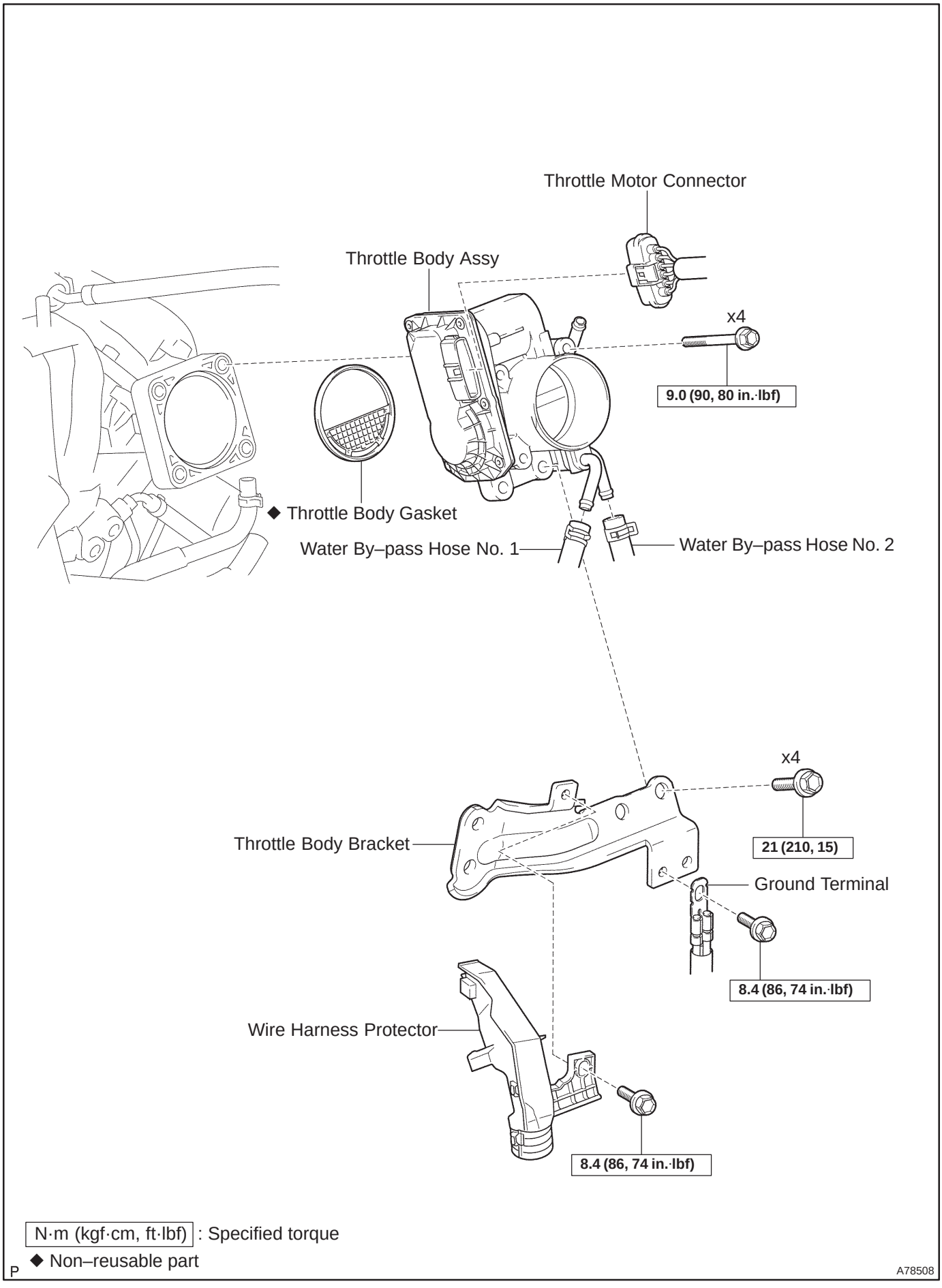
Throttle Motor Connector
Throttle Body Assy
x4
9.0 (90, 80 in.·lbf)
◆ Throttle Body Gasket
Water By–pass Hose No. 1
Water By–pass Hose No. 2
x4
Throttle Body Bracket
21 (210, 15)
Ground Terminal
8.4 (86, 74 in.·lbf)
Wire Harness Protector
8.4 (86, 74 in.·lbf)
N·m (kgf·cm, ft·lbf) : Specified torque
◆ Non–reusable part
P
A78508

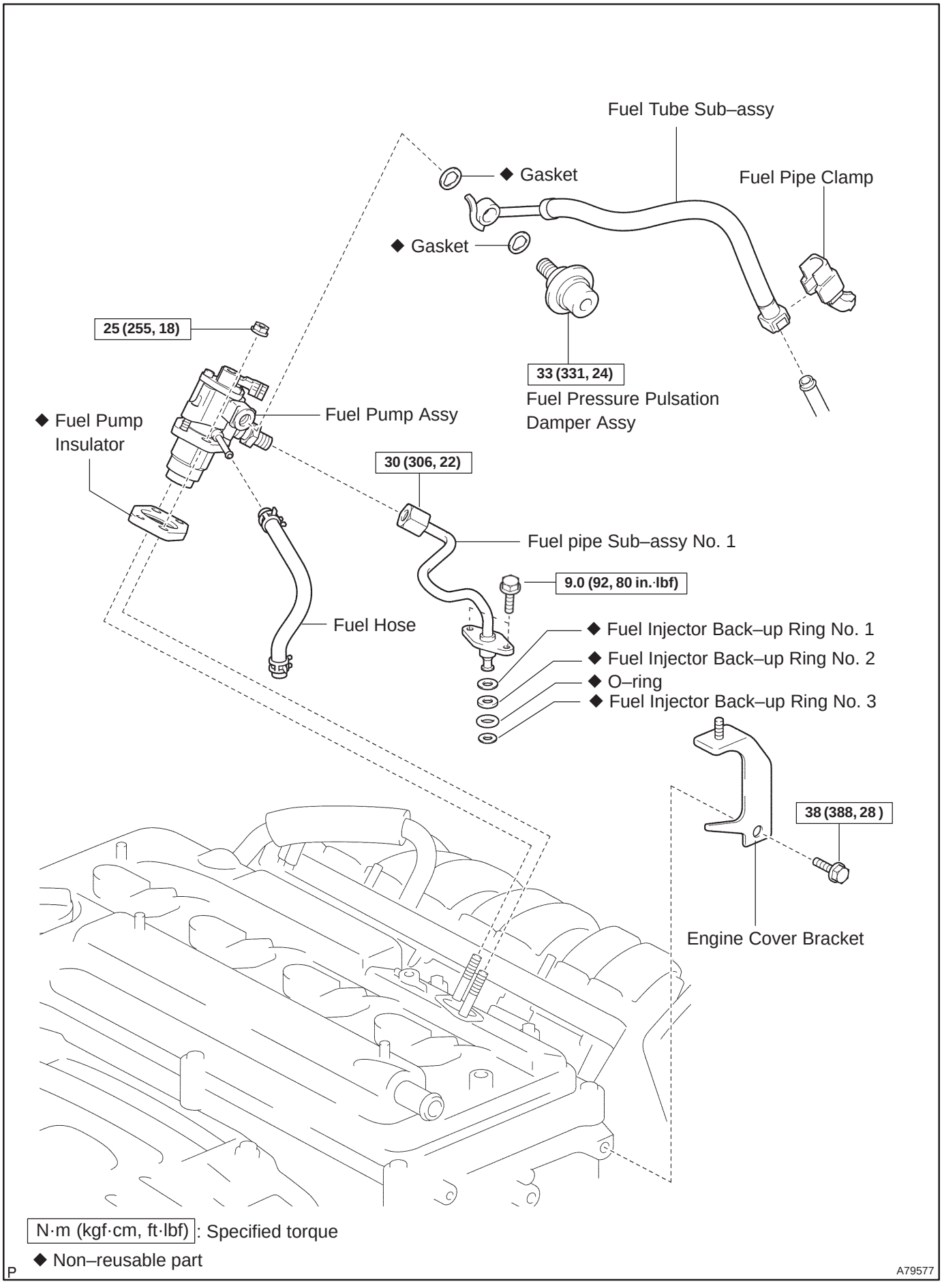
Fuel Tube Sub–assy
◆ Gasket
Fuel Pipe Clamp
◆ Gasket
25 (255, 18)
33 (331, 24)
Fuel Pressure Pulsation Damper Assy
◆ Fuel Pump Insulator
Fuel Pump Assy
30 (306, 22)
Fuel pipe Sub–assy No. 1
9.0 (92, 80 in.·lbf)
Fuel Hose
◆ Fuel Injector Back–up Ring No. 1
◆ Fuel Injector Back–up Ring No. 2
◆ O–ring
◆ Fuel Injector Back–up Ring No. 3
38 (388, 28)
Engine Cover Bracket
N·m (kgf·cm, ft·lbf): Specified torque
◆ Non–reusable part
P
A79577

REPLACEMENT

1. DISCHARGE FUEL SYSTEM PRESSURE (See page 11–30)
2. REMOVE RADIATOR SUPPORT OPENING COVER (See page 18–16)
3. REMOVE ENGINE COVER SUB–ASSY NO.1 (See page 10–44)
4. REMOVE AIR CLEANER CAP SUB–ASSY (See page 10–44)

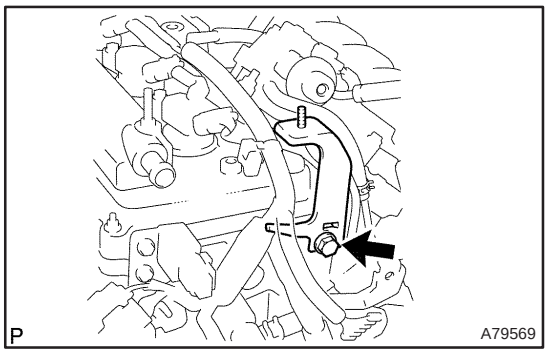

5. REMOVE ENGINE COVER BRACKET

(a) Remove the bolt and the engine cover bracket.

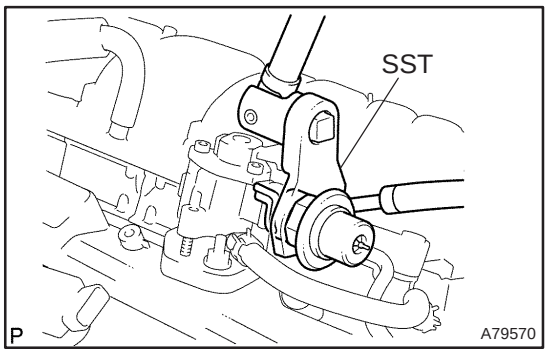

6. REMOVE FUEL PRESSURE PULSATION DAMPER ASSY

(a) Disconnect the fuel tube sub–assy. (See page 11–30)

(b) Using SST, remove the fuel pressure pulsation damper assy, the fuel tube sub–assy and the 2 gasket.
SST 09617–24011

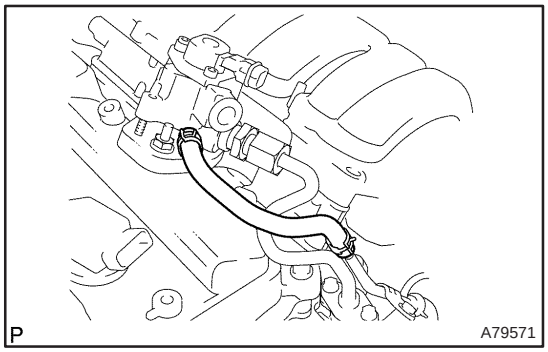

7. REMOVE FUEL PIPE SUB–ASSY NO.1

(a) Remove the fuel hose.

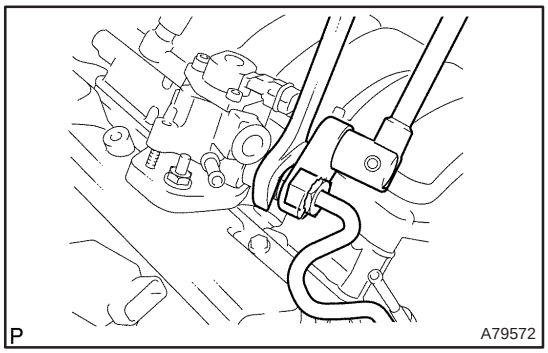

(b) Clamp the union bolt on the fuel pump assy with a 21 mm wrench and remove the fuel pipe sub–assy No. 1 from the fuel pump assy using a 19 mm union–nut wrench.

NOTICE:

Do not loosen the union bolt on the fuel pump assy. If it become loose, replace the fuel pump assy with new fuel pump assy.

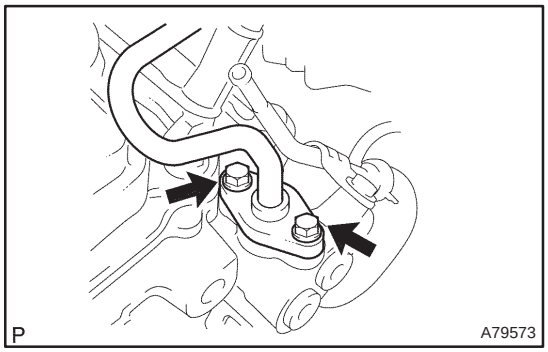

(c) Remove the 2 bolts first, then remove the fuel pipe sub–assy No. 1 from the fuel delivery pipe sub–assy.

NOTICE:

Be careful not to damage both the sealing surfaces of the fuel delivery pipe and the fuel pump when removing the fuel pipe No.1.

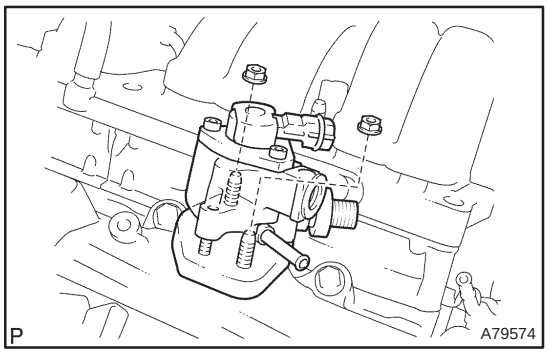

8. REMOVE FUEL PUMP ASSY

(a) Disconnect the fuel pump assy connector.

(b) Remove the 2 nuts and the fuel pump assy.

(c) Remove the fuel pump insulator.

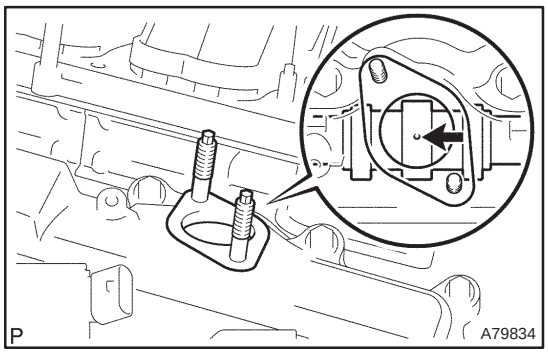

9. INSTALL FUEL PUMP ASSY

(a) Turn the crankshaft and set the camshaft to the position where the oil port of the camshaft can be seen from the fuel pump mounting hole.

(b) From the fuel pump mounting hole of the cylinder head, pour 35 to 45cc (2.14 to 2.75 cu in) engine oil into the cylinder head.

(c) For more smooth rotation, apply engine oil on the cam lobe which can be seen from the fuel pump mounting hole using fingers.

(d) Set a new fuel pump insulator and fuel pump assy with the 2 nuts.

Torque: 25 N·m (255 kgf·cm, 18 ft·lbf)

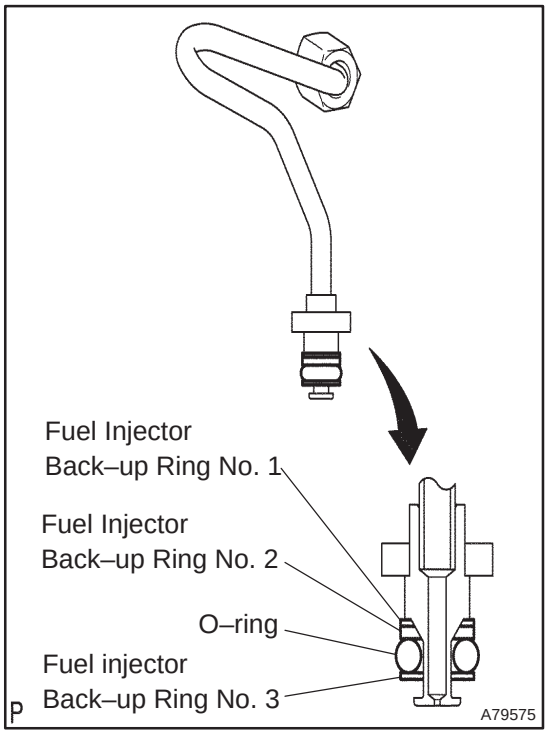

10. INSTALL FUEL PIPE SUB–ASSY NO.1

(a) Attach a new O–ring, fuel injector back–up ring No. 1, No. 2 and No. 3 to the fuel pipe sub–assy No.1.

(b) Apply a small amount of fuel on the O–ring and install the fuel pipe sub–assy No. 1 to the fuel pump assy and the fuel delivery pipe sub–assy.

NOTICE:

Be careful not to damage both the sealing surfaces of the fuel delivery pipe and the fuel pump when installing the fuel pipe No.1.

(c) Tighten the nut by hand to attach the fuel pipe sub–assy No. 1 to the fuel pump assy.

(d) In order to secure the fuel pipe sub–assy No. 1 to the fuel delivery pipe sub–assy, tighten the 2 bolts to the specified torque.

Torque: 9.0 N·m (92 kgf·cm, 80 in.·lbf)

(e) Clamp the union bolt on the fuel pump assy with a 21 mm wrench and tighten the nut with the specified torque to secure the fuel pipe sub–assy No. 1 to the fuel pump assy using a 19 mm union–nut wrench.

Torque: 30 N·m (306 kgf·cm, 22 ft·lbf)

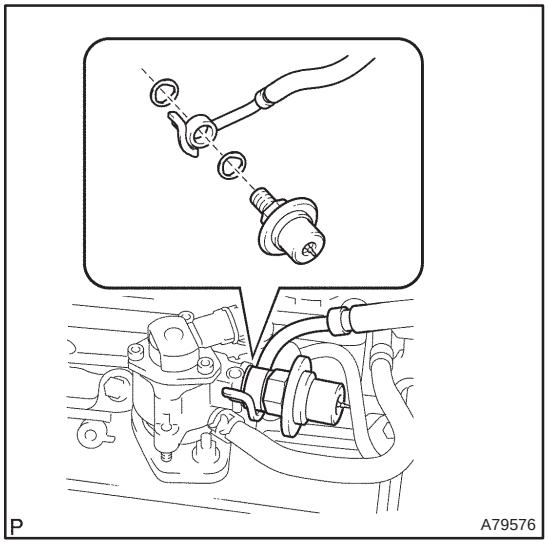

11. INSTALL FUEL PRESSURE PULSATION DAMPER ASSY

(a) Install the fuel pulsation damper assy to the fuel pump assy after fitting new 2 gaskets and fuel tube sub–assy between those assys.

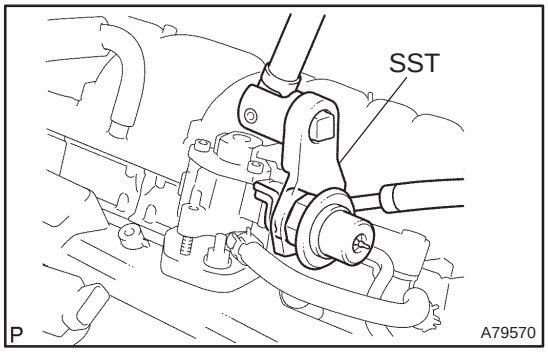

(b) Using SST, install the fuel pressure pulsation damper assy to the fuel pump assy.

SST 09617–24011

Torque: 33 N·m (331 kgf·cm, 24 ft·lbf)

(c) Connect the fuel tube sub–assy.

12. INSTALL ENGINE COVER BRACKET

(a) Install the engine cover bracket with the bolt.
Torque: 38 N·m (388 kgf·cm, 28 ft·lbf)

13. INSTALL AIR CLEANER CAP SUB–ASSY (See page 10–44)

14. CHECK FOR FUEL LEAKS

15. INSTALL ENGINE COVER SUB–ASSY NO.1
Torque: 7.0 N·m (71 kgf·cm, 62 in.·lbf)

16. INSTALL RADIATOR SUPPORT OPENING COVER

FUEL SYSTEM (1CD–FTV)

INSPECTION

110CX–02

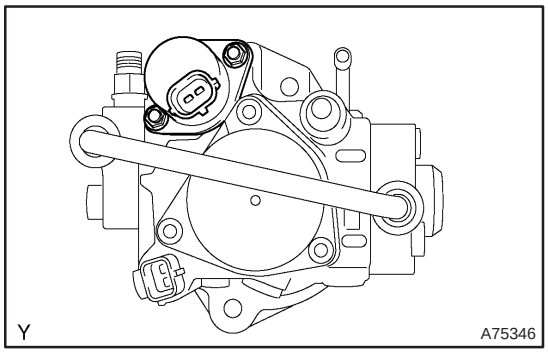

1. INJECTION OR SUPPLY PUMP ASSY

(a) Resistance inspection.

(1) Using an ohmmeter, measure the resistance between the terminals.

Resistance: 1.5 to 2.3 Ω at 20°C (68°F)

2. INJECTOR ASSY

(a) Resistance inspection.

(1) Using an ohmmeter, measure the resistance between the terminals.

Resistance: 0.85 to 1.05 Ω at 20°C (68°F)

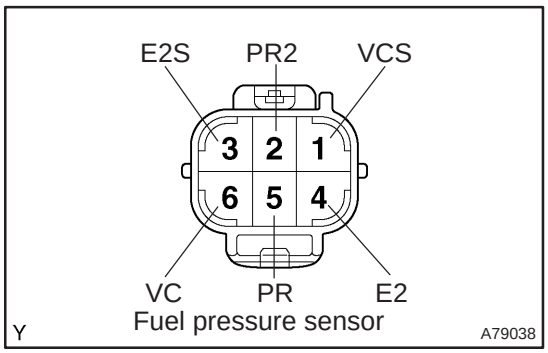

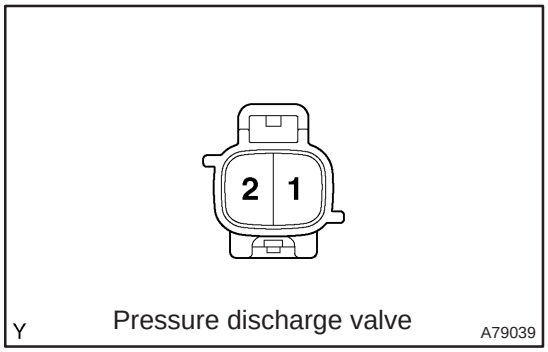

3. COMMON RAIL ASSY

(a) Resistance inspection. (Fuel pressure sensor)

(1) Using an ohmmeter, measure the resistance between terminals 5 (PR) and 4 (E2).

Resistance: 16.4 kΩ or less

(2) Using an ohmmeter, measure the resistance between terminals 2 (PR2) and 3 (E2S).

Resistance: 16.4 kΩ or less

(3) Using an ohmmeter, measure the resistance between terminals 6 (VC) and 5 (PR).

Resistance: 3 kΩ or less

(4) Using an ohmmeter, measure the resistance between terminals 1 (VCS) and 2 (PR2).

Resistance: 3 kΩ or less

(b) Resistance inspection. (Pressure discharge valve)

(1) Using an ohmmeter, measure the resistance between terminals.

Resistance: 0.85 to 1.05 Ω at 20°C (68°F)

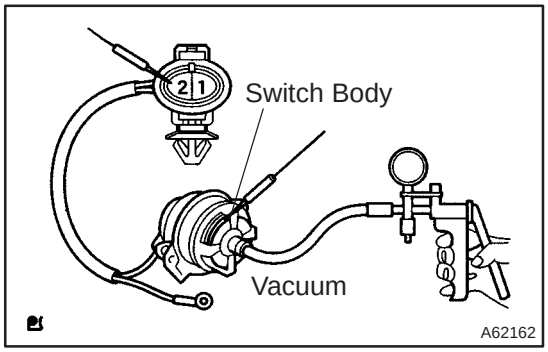

4. FUEL HEATER ASSY

(a) Resistance inspection.

(1) Apply a vacuum of 34.7 ± 5.3 kPa (260 ± 40 mmHg, 10.24 ± 1.57 in Hg) to the vacuum switch port.

(2) Using an ohmmeter, measure the resistance between terminal 2 and switch body.

Resistance: 0.5 to 20 Ω at 20°C (68°F)

5. LEVEL WARNING SWITCH

(a) Continuity inspection.

(1) Using an ohmmeter, check that there is continuity between terminals.

Specified condition:

There is continuity when raising a float.

There is no continuity when letting a float down.

6. FUEL TEMPERATURE SENSOR

(a) Resistance inspection.

(1) Using an ohmmeter, measure the resistance between the terminals.

Resistance:

Approx. 20°C (68°F) 2.21 to 2.69 Ω

Approx. 80°C (176°F) 0.287 to 0.349 Ω

INJECTOR ASSY (1CD–FTV)

COMPONENTS

110U7–01

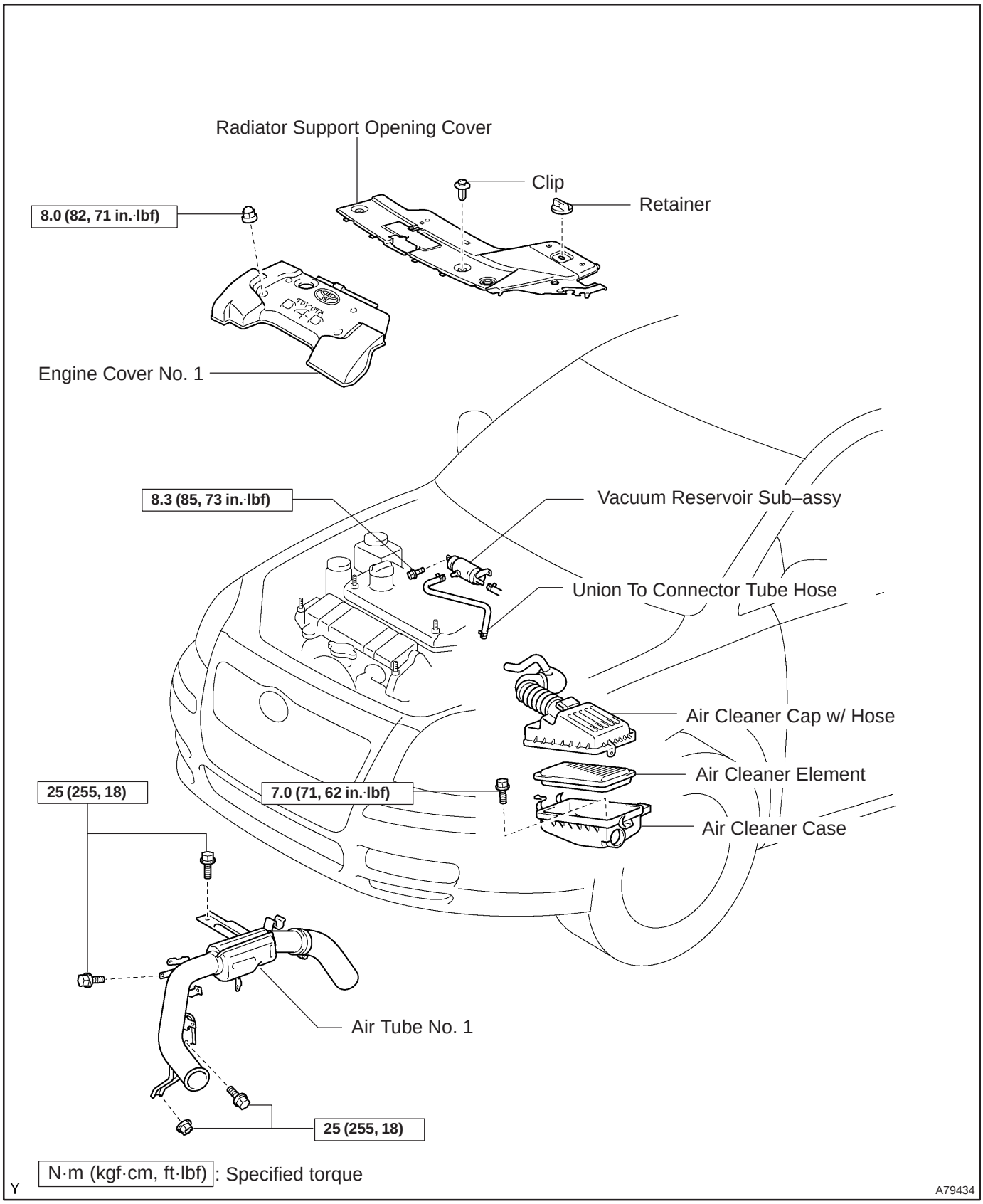

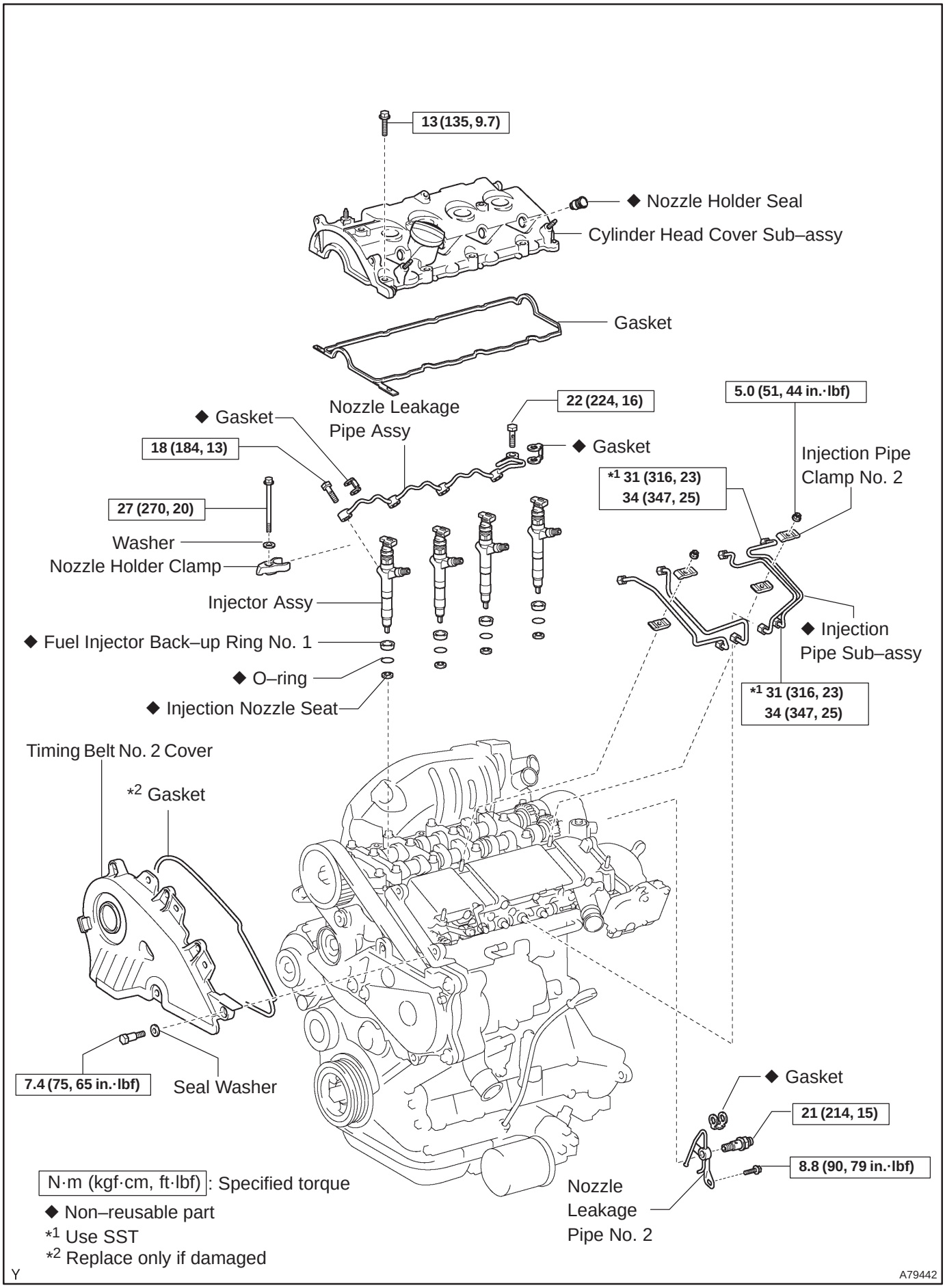
13 (135, 9.7)
◆ Nozzle Holder Seal
Cylinder Head Cover Sub–assy
Gasket
Nozzle Leakage Pipe Assy
22 (224, 16)
◆ Gasket
◆ Gasket
18 (184, 13)
5.0 (51, 44 in.·lbf)
Injection Pipe Clamp No. 2
*1 31 (316, 23)
34 (347, 25)
27 (270, 20)
Washer
Nozzle Holder Clamp
Injector Assy
◆ Fuel Injector Back–up Ring No. 1
◆ O–ring
◆ Injection Nozzle Seat
◆ Injection Pipe Sub–assy
*1 31 (316, 23)
34 (347, 25)
Timing Belt No. 2 Cover
*2 Gasket
7.4 (75, 65 in.·lbf)
Seal Washer
◆ Gasket
21 (214, 15)
8.8 (90, 79 in.·lbf)
Nozzle Leakage Pipe No. 2
N·m (kgf·cm, ft·lbf): Specified torque
◆ Non–reusable part
*1 Use SST
*2 Replace only if damaged
Y
A79442

110U8–01

REPLACEMENT

HINT:

Each injector assembly has a characteristic fuel injecting behavior. The ECM stores compensation codes which are used to optimize fuel injection for the injectors. When replacing the injector assembly, a compensation code for the new injector assembly must be set to the ECM.

1. REMOVE VACUUM RESERVOIR SUB–ASSY

(a) Disconnect the 2 vacuum hoses and the connector.

(b) Remove the 2 bolts and the vacuum reservoir.

2. REMOVE RADIATOR SUPPORT OPENING COVER

3. REMOVE ENGINE COVER NO.1

(a) Remove the 5 nuts and the engine cover.

4. REMOVE AIR CLEANER ASSY

(a) Disconnect the connector.

(b) Remove the air cleaner cap with the air cleaner hose.

(c) Remove the air cleaner filter element.

(d) Remove the 3 bolts and the air cleaner case.

5. REMOVE AIR TUBE NO.1 (See page 14–270)

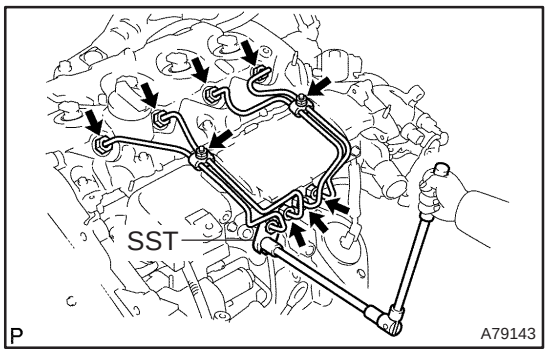

6. REMOVE INJECTION PIPE SUB–ASSY NO.1

(a) Remove the 2 nuts and 2 upper infection pipe clamps from the intake manifold.

(b) Using SST, remove the injection pipe from the common rail side.

SST 09023–12700

(c) Using SST, remove the injection pipe from the injector side.

SST 09023–12700

(d) After removing the fuel pipe, to prevent dust or foreign objects from being introduced, cover the common rail with vinyl tape and protect the injector inlet with a vinyl or plastic bag.

7. REMOVE INJECTION PIPE SUB–ASSY NO.2

SST 09023–12700

HINT:

Perform the same procedures as injection pipe No. 1.

8. REMOVE INJECTION PIPE SUB–ASSY NO.3

SST 09023–12700

HINT:

Perform the same procedures as injection pipe No. 1.

9. REMOVE INJECTION PIPE SUB–ASSY NO.4

SST 09023–12700

HINT:

Perform the same procedures as injection pipe No. 1.

10. REMOVE TIMING BELT NO.2 COVER

(a) Remove the 7 bolts and 7 seal washers, then remove the timing belt cover.

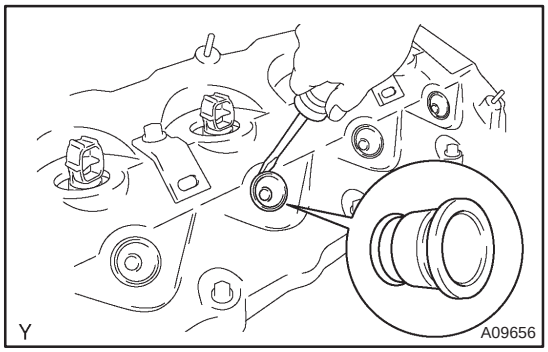

11. REMOVE NOZZLE HOLDER SEAL

(a) Using a screwdriver, pry out the 4 nozzle holder seals.

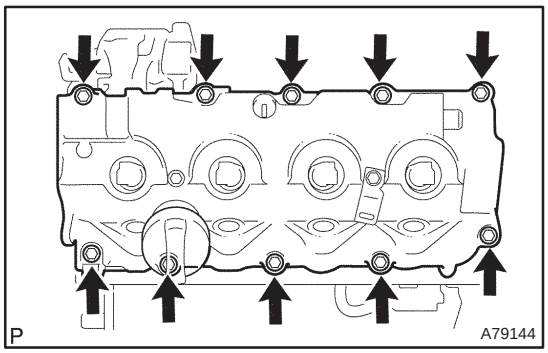

12. REMOVE CYLINDER HEAD COVER SUB–ASSY

(a) Remove the 10 bolts and the cylinder head cover.

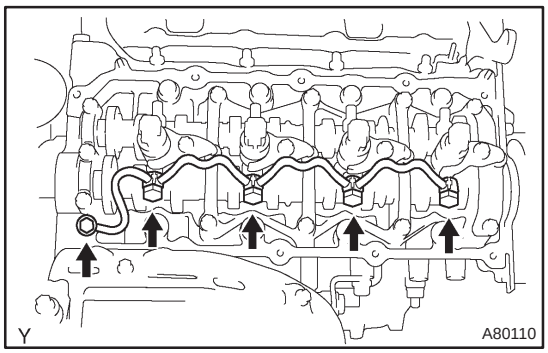

13. REMOVE NOZZLE LEAKAGE PIPE ASSY

(a) Remove the union bolt and the 4 hollow screws, then remove the nozzle leakage pipe and the 5 gaskets.

NOTICE:

When removing then nozzle leakage pipe, place the shop rag under the pipe to protect the cylinder head from the fuel remaining inside the pipe.

14. REMOVE NOZZLE HOLDER CLAMP

(a) Remove the 4 bolts, 4 washers and 4 nozzle holder clamps.

15. REMOVE INJECTOR ASSY

(a) Remove the 4 injectors from the cylinder head.

(b) Remove the O–rings and back–up rings from each injector.

(c) Remove the 4 nozzle seats from the cylinder head.

16. REGISTRATION OF INJECTOR COMPENSATION CODE (See page 05–528)

HINT:

Each injector assembly has a characteristic fuel injecting behavior. When replacing the injector assembly, store them in correct order so that they can be returned to the original locations when re–assembling.

17. INSTALL INJECTOR ASSY

(a) Install 4 new nozzle seats to the cylinder head.

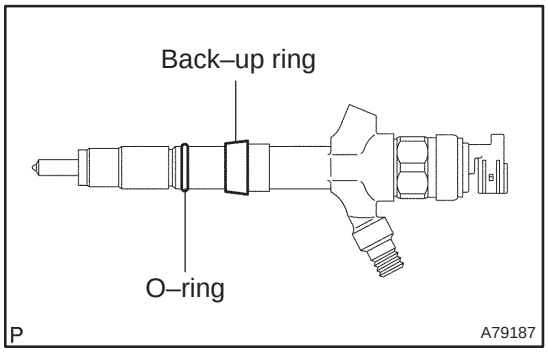

(b) Install new back–up rings and O–rings to each injector.
(c) Apply a light coat of engine oil onto the O–rings on each injector.
(d) Install the injector to the cylinder head.

NOTICE:
Fit the injectors to the nozzle seat.

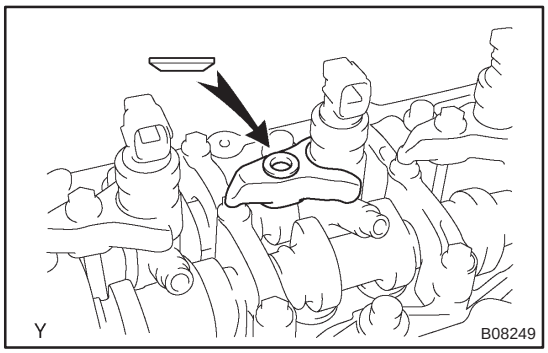

(e) Install the nozzle holder clamp as shown in the illustration. Tighten the camshaft bearing cap bolt by hand to fix the nozzle holder clamp.

NOTICE:
- **Pay attention to the mounting orientation of the washer.**
- **When temporarily attaching the nozzle holder clamp and the mounting bolt, be careful not to orient them at an angle.**

HINT:
Apply a light coat of engine oil on the threads of the nozzle holder clamp bolts.

(f) Install the injection pipe No. 1, No. 2, No. 3 and No. 4, tighten the nuts by hand.
(g) Install new 5 gaskets and the leakage pipe No. 1. Tighten the 4 hollow screws by hand.
(h) Tighten the 4 nozzle holder clamp bolts.
Torque: 26 N·m (265 kgf·cm, 19 ft·lbf)
(i) Remove the 4 injection pipes.

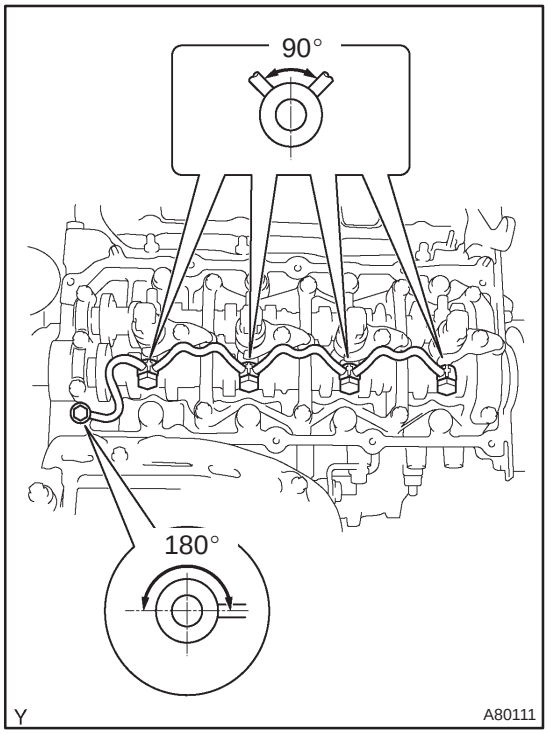

18. INSTALL NOZZLE LEAKAGE PIPE ASSY

(a) Install the nozzle leakage pipe and 5 new gaskets.

NOTICE:
When installing the gaskets, pay attention to the mounting orientation. Install the gasket so that the joint portion of the gasket comes within the ranges shown in the illustration.

(b) Apply a light coat of oil onto the 4 hollow screws and the union bolt.
(c) Tighten the 4 hollow screws and the union bolt by hand.
(d) Tighten the 4 hollow screws and the union bolt.
Torque:
18 N·m (184 kgf·cm, 13 ft·lbf) for hollow screw
22 N·m (224 kgf·cm, 16 ft·lbf) for union bolt
(e) Check that there are no leaks from the nozzle leakage pipe connection.
(1) Disconnect the fuel hose, and remove the bolt, the check valve and the nozzle leakage No. 2 pipe and the gasket.

(2) Install the bolt, the nozzle leakage No. 2 pipe and the gasket to the cylinder head with SST.

SST 09280–00010

Torque:
8.8 N·m (90 kgf·cm, 79 in.·lbf) for bolt
21 N·m (214 kgf·cm, 15 ft·lbf) for SST

(3) Apply a light coat of soapy water (any fluid to detect fuel leakage) on the nozzle leakage pipe No. 2 connection.

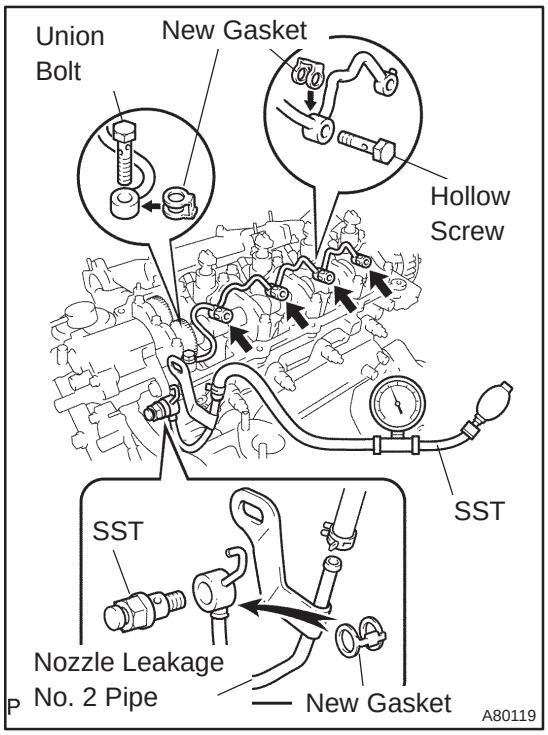

(4) Using SST (turbocharger pressure gauge), attach SST to the fuel return side of the nozzle leakage No. 2 pipe, and maintain 100 kPa (1.0 kgf/cm^2, 14.5 psi) of pressure for 60 seconds to check that there are no bubbles from the pipe connection.

SST 09992–00242

(5) After checking fuel leaks, wipe off soapy water from the pipe connection.

(6) Remove 2 SSTs, and then remove the bolt, the nozzle leakage No.2 pipe and the gasket.

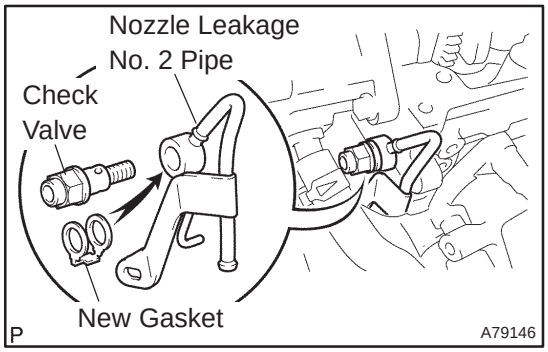

(7) Place a new gasket and reinstall the nozzle leakage No. 2 pipe with the check valve and the bolt.

Torque:
8.8 N·m (90 kgf·cm, 79 in.·lbf) for bolt
21 N·m (214 kgf·cm, 15 ft·lbf) for check valve

HINT:
Do not disassemble the check valve on the engine.

(8) Reconnect the fuel hose to the nozzle leakage No. 2 pipe.

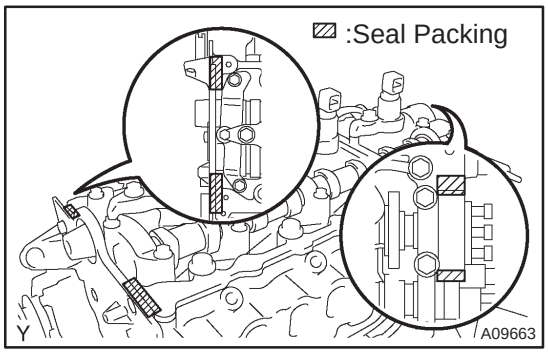

19. INSTALL CYLINDER HEAD COVER SUB–ASSY

(a) Remove any old packing (FIPG) material.

(b) Apply seal packing to the cylinder head.
Seal packing: Part No. 08826–00080 or equivalent

(c) Install the gasket to the cylinder head cover.

(d) Install the cylinder head cover with the 10 bolts.
Torque: 13 N·m (135 kgf·cm, 9.7 ft·lbf)

20. INSTALL NOZZLE HOLDER SEAL

(a) Install new 4 nozzle holder seals.

21. INSTALL TIMING BELT NO.2 COVER (See page 14–307)

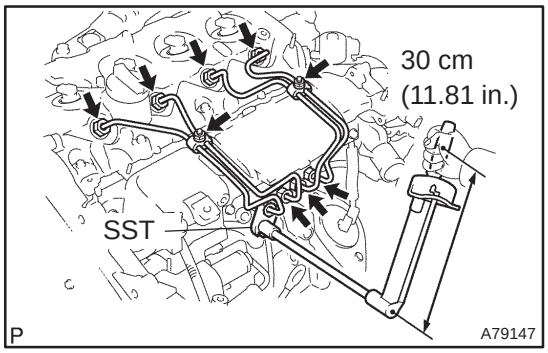

22. INSTALL INJECTION PIPE SUB–ASSY NO.1

NOTICE:

- **In case of having the injectors replaced, must replace the injection pipes, too.**
- **When assembling the pipes, perform the operation with the engine cold under room temperature.**

(a) Remove the vinyl or the plastic bag from the injector and vinyl tape from the common rail.

(b) Temporarily install the injection pipe.

(c) Using SST, tighten the nut of the injection pipe to the common rail.

SST 09023–12700

Torque:

42 N·m (428 kgf·cm, 31 ft·lbf) for a used pipe using SST

46 N·m (469 kgf·cm, 34 ft·lbf) for a used pipe not using SST

31 N·m (316 kgf·cm, 23 ft·lbf) for a new pipe using SST

34 N·m (347 kgf·cm, 25 ft·lbf) for a new pipe not using SST

HINT:

- Use a torque wrench with a fulcrum length of 30 cm (11.81 in.)
- Check if the used pipe has deflection or is installed properly after injection pipe is reassembled. If there is deflection or if it can not be installed properly, replace the used pipe with a new pipe.

(d) Using SST, tighten the nut of the injection pipe to the injector.

SST 09023–12700

Torque:

42 N·m (428 kgf·cm, 31 ft·lbf) for a used pipe using SST

46 N·m (469 kgf·cm, 34 ft·lbf) for a used pipe not using SST

31 N·m (316 kgf·cm, 23 ft·lbf) for a new pipe using SST

34 N·m (347 kgf·cm, 25 ft·lbf) for a new pipe not using SST

HINT:

- Use a torque wrench with a fulcrum length of 30 cm (11.81 in.)
- Check if the used pipe has deflection or is installed properly after injection pipe is reassembled. If there is deflection or if it can not be installed properly, replace the used pipe with a new pipe.

(e) Install the 2 upper injection pipe clamps with the 2 nuts.

Torque: 5.0 N·m (51 kgf·cm, 44 in.·lbf)

23. INSTALL INJECTION PIPE SUB–ASSY NO.2
SST 09023–12700
HINT:
Perform the same procedures as injection pipe No. 1.
24. INSTALL INJECTION PIPE SUB–ASSY NO.3
SST 09023–12700
HINT:
Perform the same procedures as injection pipe No. 1.
25. INSTALL INJECTION PIPE SUB–ASSY NO.4
SST 09023–12700
HINT:
Perform the same procedures as injection pipe No. 1.
26. INSTALL AIR TUBE NO.1 (See page 14–270)
27. INSTALL AIR CLEANER ASSY
Torque: 7.0 N·m (71 kgf·cm, 62 in.·lbf)
28. INSTALL ENGINE COVER NO.1
Torque: 8.0 N·m (82 kgf·cm, 71 in.·lbf)
29. INSTALL VACUUM RESERVOIR SUB–ASSY
Torque: 8.3 N·m (85 kgf·cm, 74 in.·lbf)
30. CHECK FOR FUEL LEAKS
NOTICE:
Under ACTIVE TEST mode, fuel pressure increases. Take precautions to prevent fuel from spraying on you or inside the engine compartment.
HINT:
During ACTIVE TEST mode, engine speed goes high and combustion noise becomes loud.
(a) Check that there are no fuel leaks from any part of the fuel system at the engine stops.
HINT:
If fuel leakage could be found on specific parts, replace them with new parts.
(b) While cranking or when starting the engine, check that there is no leaks from any part of the fuel system.
HINT:
If fuel leakage could be found on specific parts, replace them with new parts.
(c) Disconnect the fuel hose from the common rail.
(d) While cranking the engine, check fuel leaks from the return pipe.
HINT:
If there is fuel leakage, replace the common rail.
(e) Connect the hand–held tester to the DLC3.
(f) Start the engine and push the hand–held tester main switch ON.
(g) Select the FUEL LEAK test of ACTIVE TEST mode on the hand–held tester.
(h) If you do not have the hand–held tester, depress the accelerator pedal quickly and fully to increase the engine speed at maximum and keep it for 2 seconds. Repeat this operation several times.
(i) Check that there are no leaks from any part of the fuel system.
NOTICE:
If the leakage from the return pipe is less than 10 cc (0.6 cu in.) in a minute, it is acceptable.
HINT:
If fuel leakage could be found on specific parts, replace them with new parts.
(j) Reconnect the fuel hose to the common rail.

INJECTION OR SUPPLY PUMP ASSY (1CD–FTV)

110U9–01

COMPONENTS

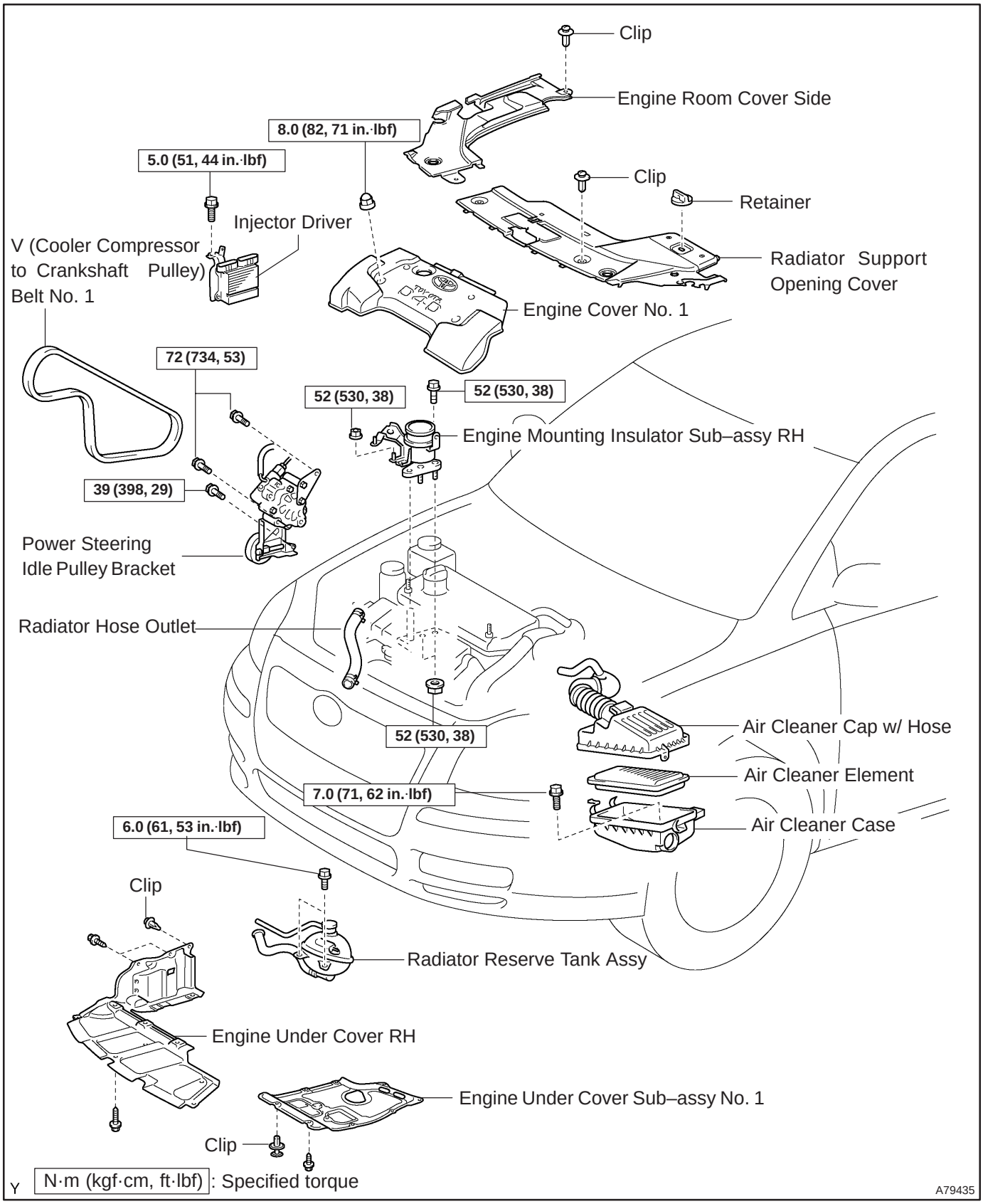

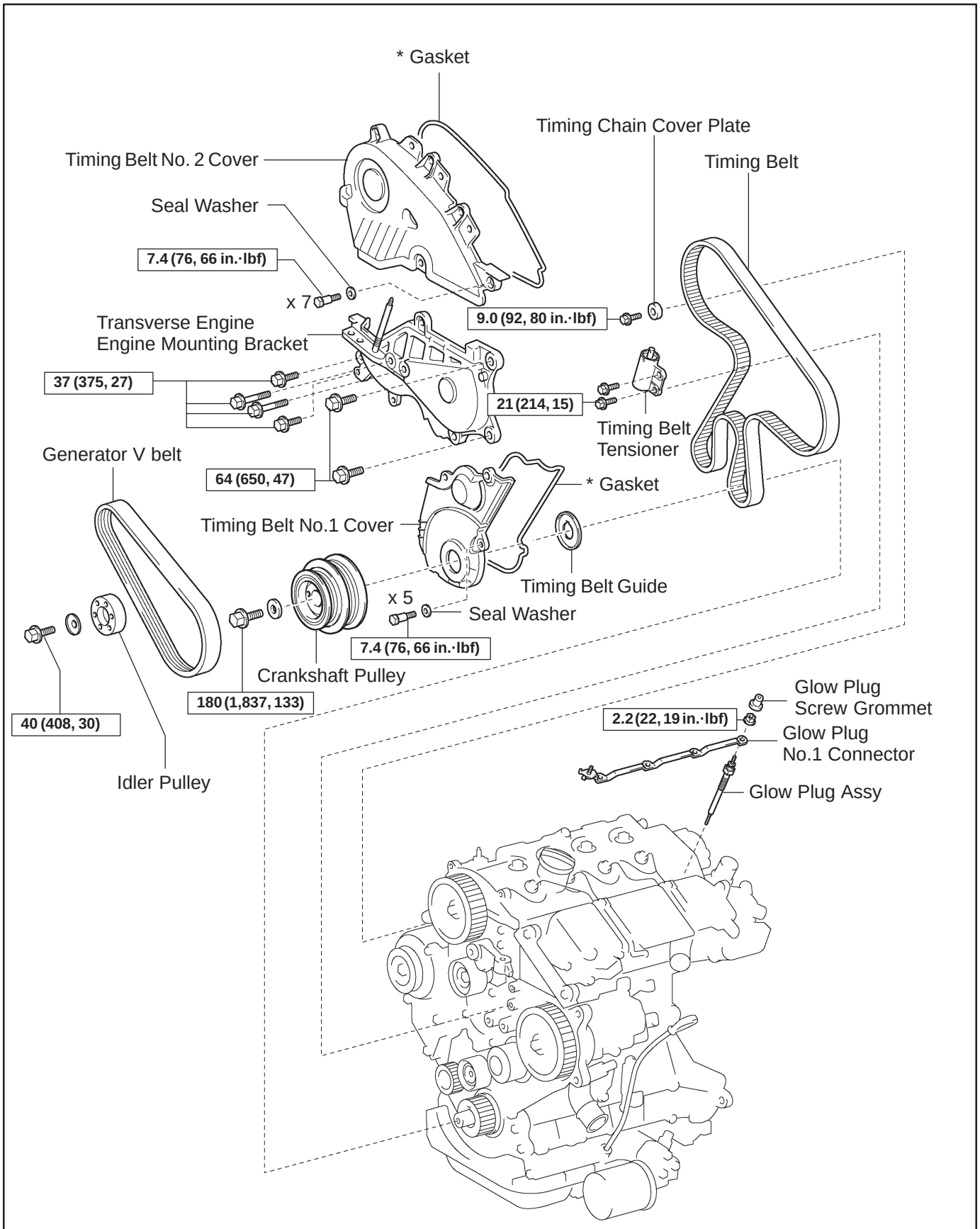

N·m (kgf·cm, ft·lbf) : Specified torque

* Replace only if damaged

Y

A61211

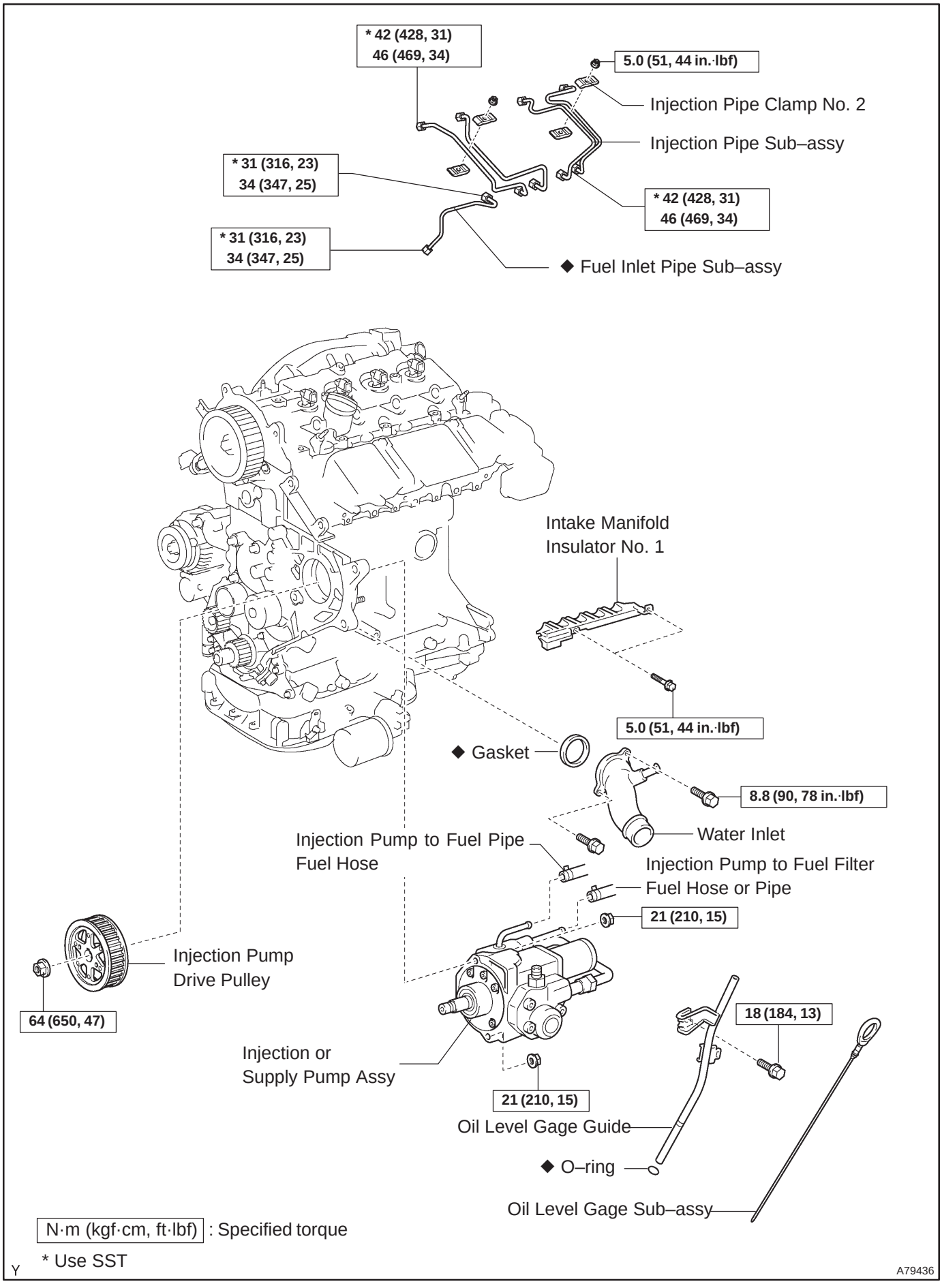
* 42 (428, 31)
46 (469, 34)
5.0 (51, 44 in.·lbf)
Injection Pipe Clamp No. 2
Injection Pipe Sub–assy
* 31 (316, 23)
34 (347, 25)
* 42 (428, 31)
46 (469, 34)
* 31 (316, 23)
34 (347, 25)
◆ Fuel Inlet Pipe Sub–assy
Intake Manifold
Insulator No. 1
5.0 (51, 44 in.·lbf)
◆ Gasket
8.8 (90, 78 in.·lbf)
Water Inlet
Injection Pump to Fuel Pipe
Fuel Hose
Injection Pump to Fuel Filter
Fuel Hose or Pipe
21 (210, 15)
Injection Pump
Drive Pulley
64 (650, 47)
Injection or
Supply Pump Assy
21 (210, 15)
18 (184, 13)
Oil Level Gage Guide
◆ O–ring
Oil Level Gage Sub–assy
N·m (kgf·cm, ft·lbf) : Specified torque
* Use SST
Y
A79436

REPLACEMENT

1. **REMOVE FRONT WHEEL RH**
2. **DRAIN ENGINE COOLANT (See page 16–44)**
3. **REMOVE ENGINE UNDER COVER SUB–ASSY NO.1**
4. **REMOVE ENGINE UNDER COVER RH**
5. **REMOVE RADIATOR SUPPORT OPENING COVER**
6. **REMOVE ENGINE ROOM COVER SIDE**
7. **REMOVE AIR CLEANER ASSY (See page 11–60)**
8. **REMOVE ENGINE COVER NO.1**

(a) Remove the 5 nuts and the engine cover.

9. **REMOVE RADIATOR RESERVE TANK ASSY (See page 16–50)**
10. **DISCONNECT RADIATOR HOSE OUTLET**

(a) Disconnect the radiator hose outlet from the water inlet.

11. **REMOVE V (COOLER COMPRESSOR TO CRANKSHAFT PULLEY) BELT NO.1 (See page 14–269)**
12. **REMOVE GENERATOR V BELT (See page 14–269)**
13. **REMOVE INJECTOR DRIVER**

(a) Remove the 2 nuts which are used to secure the injector driver.
(b) Disconnect the injector driver connector and the harness clamp.
(c) Remove the injector driver.

14. **REMOVE ENGINE MOUNTING INSULATOR SUB–ASSY RH (See page 14–307)**
15. **REMOVE CRANKSHAFT PULLEY (See page 14–307)**

SST 09213–54015 (90105–08076), 09330–00021, 09950–50013 (09951–05010, 09952–05010, 09953–05020, 09954–05031)

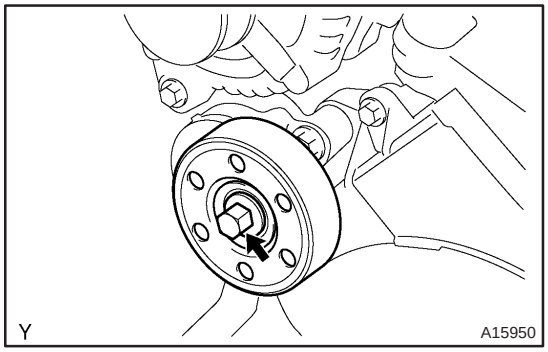

16. **REMOVE IDLER PULLEY SUB–ASSY**

(a) Remove the bolt and washer, then remove the idler pulley.

17. **REMOVE TIMING BELT NO.2 COVER (See page 14–307)**
18. **REMOVE TIMING BELT NO.1 COVER (See page 14–307)**
19. **REMOVE TIMING BELT GUIDE**
20. **REMOVE TRANSVERSE ENGINE ENGINE MOUNTING BRACKET**

(a) Remove the 6 bolts and the engine mounting bracket.

21. **SET NO. 1 CYLINDER TO TDC/COMPRESSION (See page 14–307)**
22. **REMOVE TIMING CHAIN COVER PLATE (See page 14–307)**
23. **REMOVE TIMING BELT (See page 14–307)**

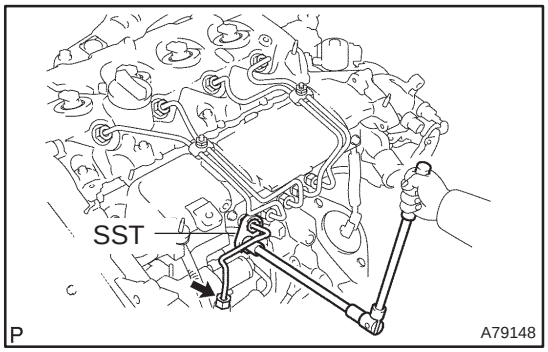

24. REMOVE FUEL INLET PIPE SUB–ASSY

NOTICE:

After removing the fuel inlet pipe, cover the common rail and injection pump with vinyl tape to prevent dust from being introduced.

(a) Remove the wire bracket and slide the engine wire.

(b) Using SST, remove the fuel inlet pipe from the common rail.
SST 09023–12700

(c) Using SST, remove the fuel inlet pipe from the injection pump.
SST 09023–12700

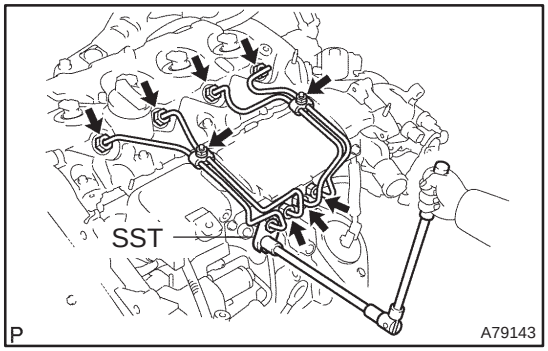

25. REMOVE INJECTION PIPE SUB–ASSY NO.1

(a) Remove the 2 nuts, then remove the 2 upper infection pipe clamps from the intake manifold.

(b) Using SST, remove the injection pipe from the common rail side.
SST 09023–12700

(c) Using SST, remove the injection pipe from the injector side.
SST 09023–12700

(d) After removing the fuel pipe, to prevent dust or foreign objects from being introduced, cover the common rail with vinyl tape and protect the injector inlet with a vinyl or a plastic bag.

26. REMOVE INJECTION PIPE SUB–ASSY NO.2
SST 09023–12700

HINT:

Perform the same procedures as injection pipe No. 1.

27. REMOVE INJECTION PIPE SUB–ASSY NO.3
SST 09023–12700

HINT:

Perform the same procedures as injection pipe No. 1.

28. REMOVE INJECTION PIPE SUB–ASSY NO.4
SST 09023–12700

HINT:

Perform the same procedures as injection pipe No. 1.

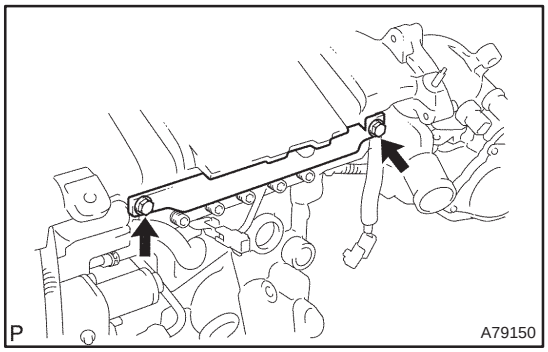

29. REMOVE INTAKE MANIFOLD INSULATOR NO.1

(a) Remove the 2 bolts and the intake manifold insulator.

30. REMOVE OIL LEVEL GAGE SUB–ASSY

31. REMOVE OIL LEVEL GAGE GUIDE (See page 17–22)

32. REMOVE WATER INLET (See page 16–50)

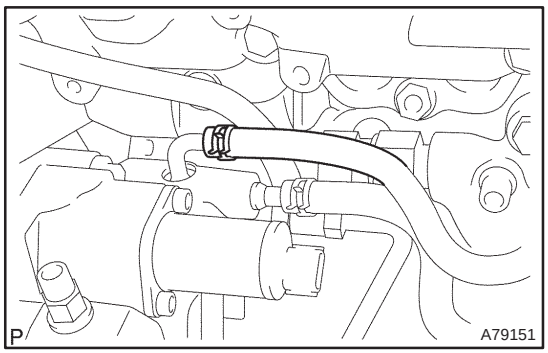

33. DISCONNECT INJECTION PUMP TO FUEL PIPE FUEL HOSE

(a) Disconnect the injection pump to fuel pipe fuel hose from the supply pump.

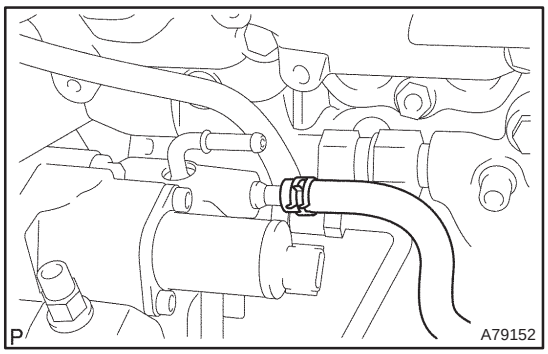

34. DISCONNECT INJECTION PUMP TO FUEL FILTER FUEL HOSE OR PIPE

(a) Disconnect the injection pump to fuel filter fuel hose or pipe from the supply pump.

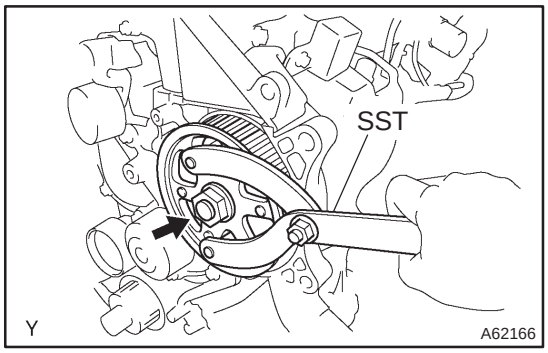

35. REMOVE INJECTION PUMP DRIVE PULLEY

(a) Using SST, remove the pulley nut.

SST 09960–10010 (09962–01000, 09963–01000)

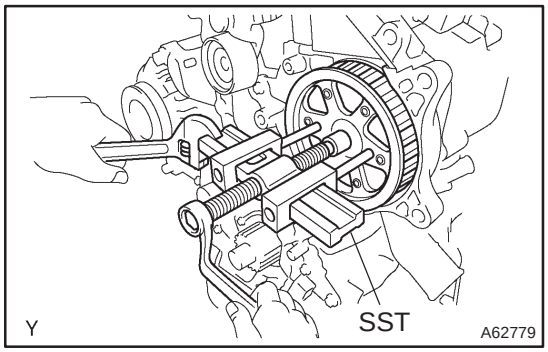

(b) Using SST, remove the injection pump drive pulley.
SST 09950–50013 (09951–05010, 09952–05010, 09953–05020, 09954–05021)

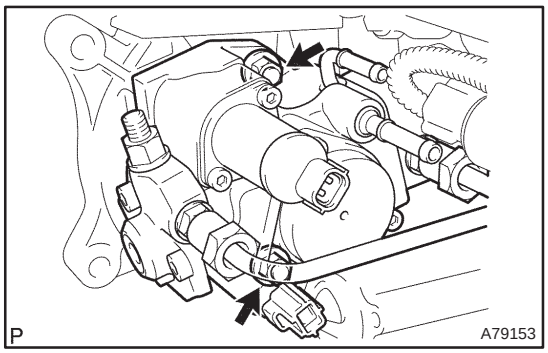

36. REMOVE INJECTION OR SUPPLY PUMP ASSY
(a) Remove the 2 nuts and the injection pump.

37. INSTALL INJECTION OR SUPPLY PUMP ASSY
Torque: 21 N·m (210 kgf·cm, 15 ft·lbf)

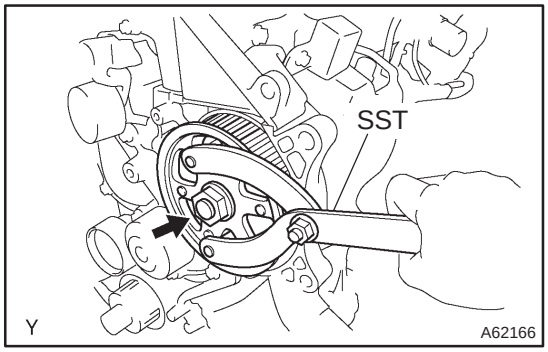

38. INSTALL INJECTION PUMP DRIVE PULLEY
(a) Using SST, install the pulley nut.
SST 09960–10010 (09962–01000, 09963–01000)
Torque: 64 N·m (650 kgf·cm, 47 ft·lbf)

39. INSTALL WATER INLET (See page 16–50)
40. INSTALL OIL LEVEL GAGE GUIDE (See page 17–22)
41. INSTALL INTAKE MANIFOLD INSULATOR NO.1
Torque: 5.0 N·m (51 kgf·cm, 44 in.·lbf)

42. INSTALL INJECTION PIPE SUB–ASSY NO.1
NOTICE:
When assembling the pipes, perform the operation with the engine cold under room temperature.
(a) Remove the vinyl or the plastic bag from the injector and vinyl tape from the common rail.
(b) Temporarily install the injection pipe.

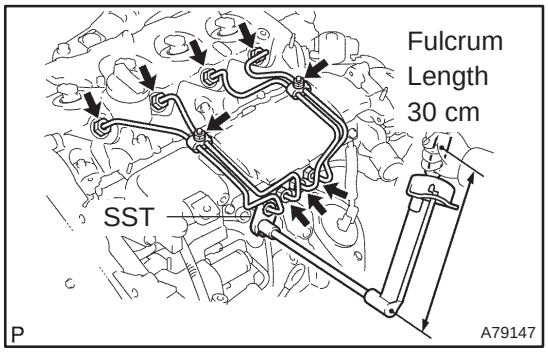

(c) Using SST, tighten the nut of the injection pipe to the common rail side.
SST 09023–12700
Torque:
42 N·m (428 kgf·cm, 31 ft·lbf) for a used pipe using SST
46 N·m (469 kgf·cm, 34 ft·lbf) for a used pipe not using SST
31 N·m (316 kgf·cm, 23 ft·lbf) for a new pipe using SST
34 N·m (347 kgf·cm, 25 ft·lbf) for a new pipe not using SST

HINT:
- Use a torque wrench with a fulcrum length of 30 cm (11.81 in.)
- Check if the used pipe has deflection or is installed properly after injection pipe is reassembled. If there is deflection or if it can not be installed properly, replace the used pipe with a new pipe.

(d) Using SST, tighten the nut of the injection pipe to the injector side.
SST 09023–12700
Torque:
42 N·m (428 kgf·cm, 31 ft·lbf) for a used pipe using SST
46 N·m (469 kgf·cm, 34 ft·lbf) for a used pipe not using SST
31 N·m (316 kgf·cm, 23 ft·lbf) for a new pipe using SST
34 N·m (347 kgf·cm, 25 ft·lbf) for a new pipe not using SST

HINT:
- Use a torque wrench with a fulcrum length of 30 cm (11.81 in.)
- Check if the used pipe has deflection or is installed properly after injection pipe is reassembled. If there is deflection or if it can not be installed properly, replace the used pipe with a new pipe.

(e) Install the 2 upper injection pipe clamps with the 2 nuts.
Torque: 5.0 N·m (51 kgf·cm, 44 in.·lbf)

43. INSTALL INJECTION PIPE SUB–ASSY NO.2
SST 09023–12700

HINT:
Perform the same procedures as injection pipe No. 1.

44. INSTALL INJECTION PIPE SUB–ASSY NO.3
SST 09023–12700

HINT:
Perform the same procedures as injection pipe No. 1.

45. INSTALL INJECTION PIPE SUB–ASSY NO.4
SST 09023–12700

HINT:
Perform the same procedures as injection pipe No. 1.

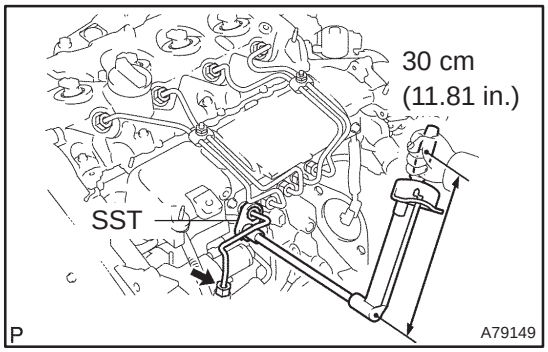

46. INSTALL FUEL INLET PIPE SUB–ASSY

NOTICE:

- **In case of having the injection pump replaced, must replace the fuel inlet pipe, too.**
- **When assembling the pipe, perform the operation with the engine cold under room temperature.**

(a) Temporarily install the fuel inlet pipe.

(b) Using SST, tighten the nut of the fuel inlet pipe to the common rail side.

SST 09023–12700

Torque:

42 N·m (428 kgf·cm, 31 ft·lbf) for a used pipe using SST

46 N·m (469 kgf·cm, 34 ft·lbf) for a used pipe not using SST

31 N·m (316 kgf·cm, 23 ft·lbf) for a new pipe using SST

34 N·m (347 kgf·cm, 25 ft·lbf) for a new pipe not using SST

HINT:

- Use a torque wrench with a fulcrum length of 30 cm (11.81 in.)
- Check if the used pipe has deflection or is installed properly after inlet pipe is reassembled. If there is deflection or if it can not be installed properly, replace the used pipe with a new pipe.

(c) Using SST, tighten the nut of the fuel inlet pipe to the injection pump side.

SST 09023–12700

Torque:

42 N·m (428 kgf·cm, 31 ft·lbf) for a used pipe using SST

46 N·m (469 kgf·cm, 34 ft·lbf) for a used pipe not using SST

31 N·m (316 kgf·cm, 23 ft·lbf) for a new pipe using SST

34 N·m (347 kgf·cm, 25 ft·lbf) for a new pipe not using SST

HINT:

- Use a torque wrench with a fulcrum length of 30 cm (11.81 in.)
- Check if the used pipe has deflection or is installed properly after inlet pipe is reassembled. If there is deflection or if it can not be installed properly, replace the used pipe with a new pipe.

47. SET NO. 1 CYLINDER TO TDC/COMPRESSION (See page 14–307)

SST 09960–10010 (09962–01000, 09963–01000)

48. INSTALL TIMING BELT (See page 14–307)

49. CHECK VALVE TIMING (See page 14–307)

50. INSTALL TIMING CHAIN COVER PLATE (See page 14–307)

51. INSTALL TRANSVERSE ENGINE ENGINE MOUNTING BRACKET

Torque:

37 N·m (375 kgf·cm, 27 ft·lbf) for 14mm head bolt

64 N·m (650 kgf·cm, 47 ft·lbf) for 17mm head bolt

52. **INSTALL TIMING BELT GUIDE (See page 14–307)**
53. **INSTALL TIMING BELT NO.1 COVER (See page 14–307)**
54. **INSTALL TIMING BELT NO.2 COVER (See page 14–307)**
55. **INSTALL IDLER PULLEY SUB–ASSY**
    Torque: 40 N·m (408 kgf·cm, 30 ft·lbf)
56. **INSTALL CRANKSHAFT PULLEY (See page 14–307)**
    SST 09213–54015 (90105–08076), 09330–00021
57. **INSTALL ENGINE MOUNTING INSULATOR SUB–ASSY RH (See page 14–307)**
58. **INSTALL INJECTOR DRIVER**
    Torque: 5.0 N·m (51 kgf·cm, 44 in.·lbf)
59. **ADJUST V (COOLER COMPRESSOR TO CRANKSHAFT PULLEY) BELT NO.1 (See page 14–269)**
60. **INSTALL RADIATOR RESERVE TANK ASSY (See page 16–50)**
61. **INSTALL ENGINE COVER NO.1**
    Torque: 8.0 N·m (82 kgf·cm, 71 in.·lbf)
62. **INSTALL AIR CLEANER ASSY (See page 11–60)**
63. **INSTALL FRONT WHEEL RH**
    Torque: 103 N·m (1,050 kgf·cm, 76 ft·lbf)
64. **ADD ENGINE COOLANT (See page 16–44)**
65. **CHECK FOR ENGINE COOLANT LEAKS (See page 16–37)**
66. **CHECK FOR FUEL LEAKS (See page 11–60)**

COMMON RAIL ASSY (1CD–FTV)

110UB–01

COMPONENTS

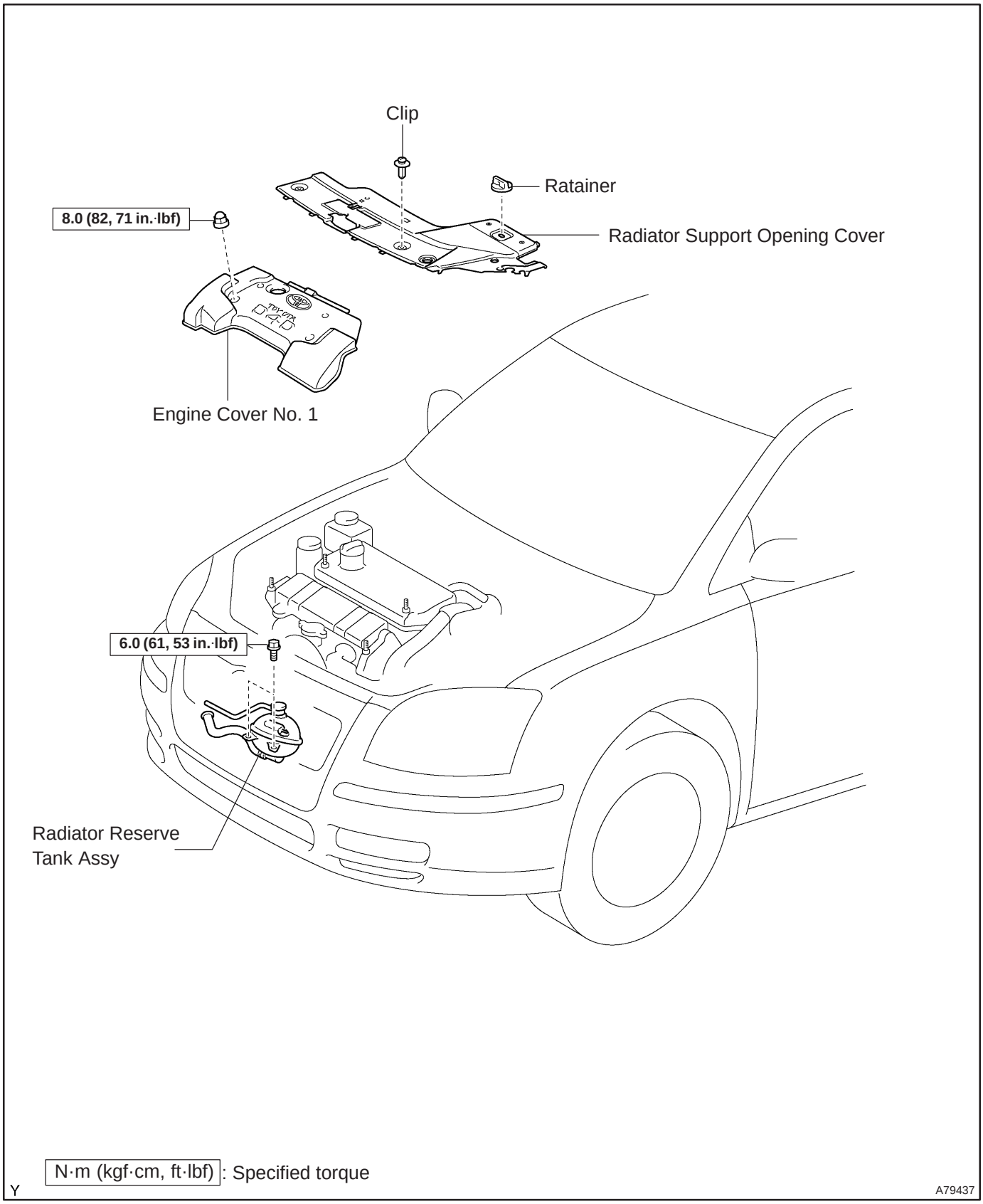

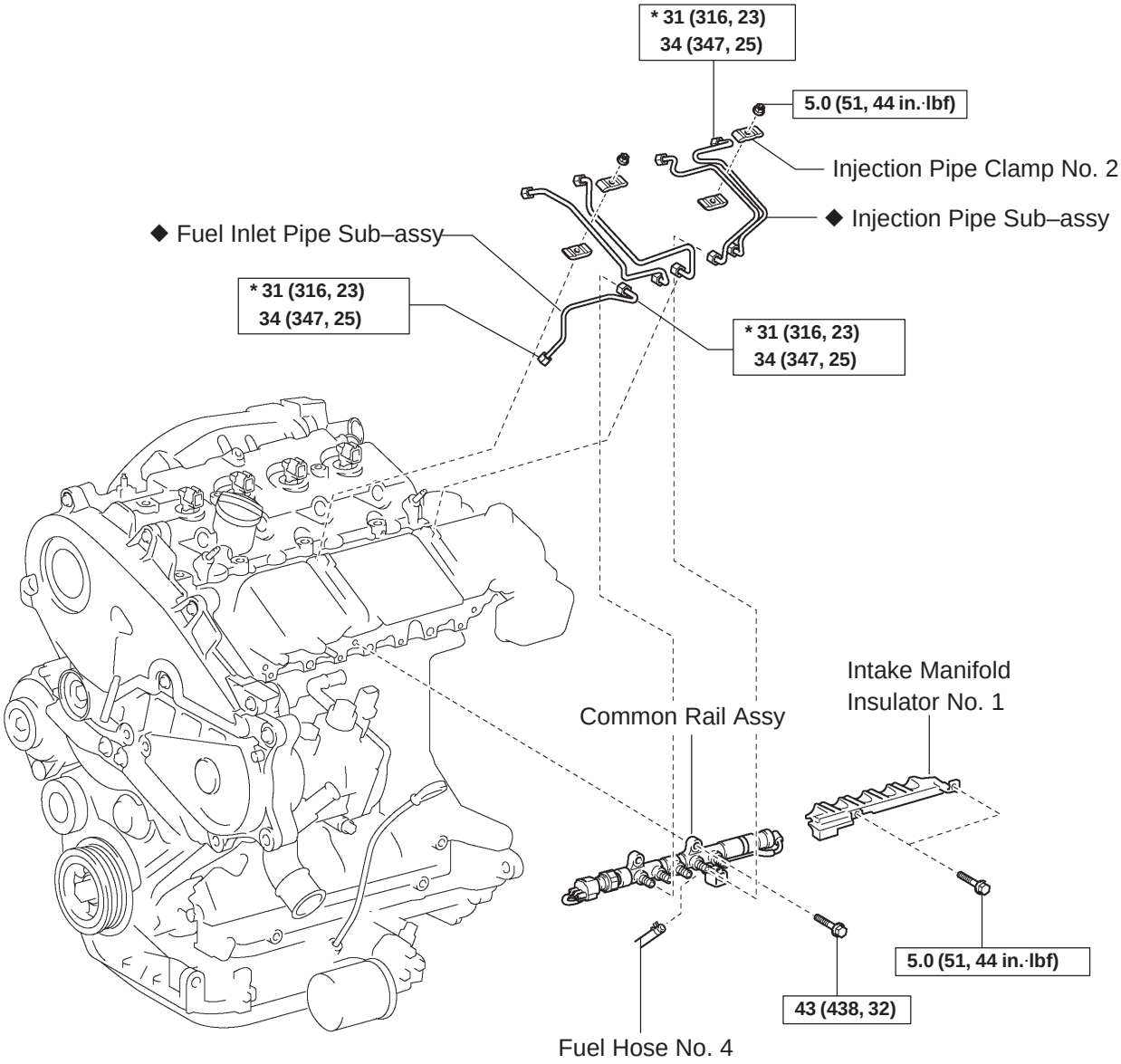

N·m (kgf·cm, ft·lbf): Specified torque

◆ Non–reusable part

* Use SST

Y

A79438

REPLACEMENT

1. DRAIN ENGINE COOLANT (See page 16–44)

2. REMOVE RADIATOR SUPPORT OPENING COVER

3. REMOVE ENGINE COVER NO.1

(a) Remove the 5 nuts and the engine cover.

4. REMOVE RADIATOR RESERVE TANK ASSY (See page 16–50)

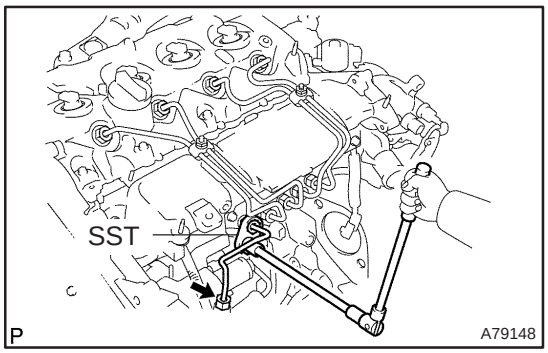

5. REMOVE FUEL INLET PIPE SUB–ASSY

NOTICE:

After removing the fuel inlet pipe, cover the common rail and the injection pump with vinyl tape to prevent dust from being introduced.

(a) Using SST, remove the fuel inlet pipe from the common rail.
SST 09023–12700

(b) Using SST, remove the fuel inlet pipe from the injection pump.
SST 09023–12700

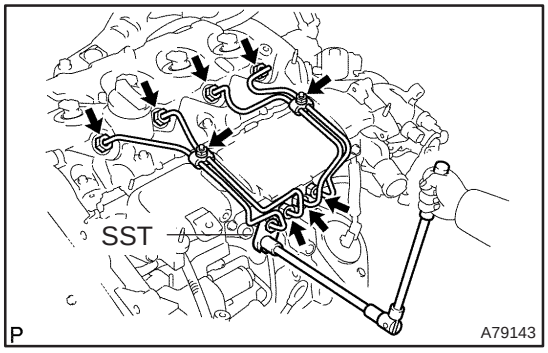

6. REMOVE INJECTION PIPE SUB–ASSY NO.1

(a) Remove the 2 nuts and the 2 upper infection pipe clamps from the intake manifold.

(b) Using SST, remove the injection pipe from the common rail side.
SST 09023–12700

(c) Using SST, remove the injection pipe from the injector side.
SST 09023–12700

(d) After removing the fuel pipe, to prevent dust or foreign objects from being introduced, cover the common rail with vinyl tape and protect the injector inlet with a vinyl or plastic bag.

7. REMOVE INJECTION PIPE SUB–ASSY NO.2

SST 09023–12700

HINT:

Perform the same procedures as injection pipe No. 1.

8. REMOVE INJECTION PIPE SUB–ASSY NO.3

SST 09023–12700

HINT:

Perform the same procedures as injection pipe No. 1.

9. REMOVE INJECTION PIPE SUB–ASSY NO.4

SST 09023–12700

HINT:

Perform the same procedures as injection pipe No. 1.

10. DISCONNECT FUEL HOSE NO.4

(a) Disconnect the fuel hose from the common rail.

11. REMOVE INTAKE MANIFOLD INSULATOR NO.1 (See page 11–69)

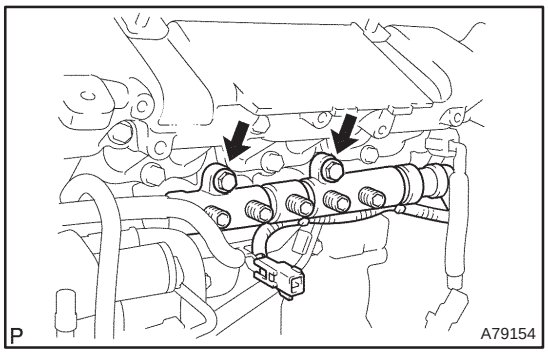

12. REMOVE COMMON RAIL ASSY

(a) Disconnect the engine wire connector from the bracket.

(b) Remove the 2 bolts and the common rail.

13. INSTALL COMMON RAIL ASSY

Torque: 43 N·m (438 kgf·cm, 32 ft·lbf)

14. INSTALL INTAKE MANIFOLD INSULATOR NO.1 (See page 11–69)

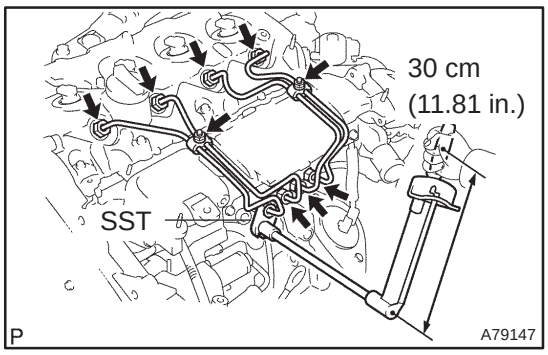

15. INSTALL INJECTION PIPE SUB–ASSY NO.1

NOTICE:

- **In case of having the common rail replaced, must replace the injection pipes, too.**
- **When assembling the pipes, perform the operation with the engine cold under room temperature.**

(a) Remove the vinyl or the plastic bag from the injector and vinyl tape from the common rail.

(b) Temporarily install the injection pipe.

(c) Using SST, tighten the nut of the injection pipe to the common rail side.
SST 09023–12700
Torque:
42 N·m (428 kgf·cm, 31 ft·lbf) for a used pipe using SST
46 N·m (469 kgf·cm, 34 ft·lbf) for a used pipe not using SST
31 N·m (316 kgf·cm, 23 ft·lbf) for a new pipe using SST
34 N·m (347 kgf·cm, 25 ft·lbf) for a new pipe not using SST

HINT:
- Use a torque wrench with a fulcrum length of 30 cm (11.81 in.)
- Check if the used pipe has deflection or is installed properly after injection pipe is reassembled. If there is deflection or if it can not be installed properly, replace the used pipe with a new pipe.

(d) Using SST, tighten the nut of the injection pipe to the injector side.
SST 09023–12700
Torque:
42 N·m (428 kgf·cm, 31 ft·lbf) for a used pipe using SST
46 N·m (469 kgf·cm, 34 ft·lbf) for a used pipe not using SST
31 N·m (316 kgf·cm, 23 ft·lbf) for a new pipe using SST
34 N·m (347 kgf·cm, 25 ft·lbf) for a new pipe not using SST

HINT:
- Use a torque wrench with a fulcrum length of 30 cm (11.81 in.)
- Check if the used pipe has deflection or is installed properly after injection pipe is reassembled. If there is deflection or if it can not be installed properly, replace the used pipe with a new pipe.

(e) Install the 2 upper injection pipe clamps with the 2 nuts.
Torque: 5.0 N·m (51 kgf·cm, 44 in.·lbf)

16. INSTALL INJECTION PIPE SUB–ASSY NO.2
SST 09023–12700

HINT:
Perform the same procedures as injection pipe No. 1.

17. INSTALL INJECTION PIPE SUB–ASSY NO.3
SST 09023–12700

HINT:
Perform the same procedures as injection pipe No. 1.

18. INSTALL INJECTION PIPE SUB–ASSY NO.4
SST 09023–12700

HINT:
Perform the same procedures as injection pipe No. 1.

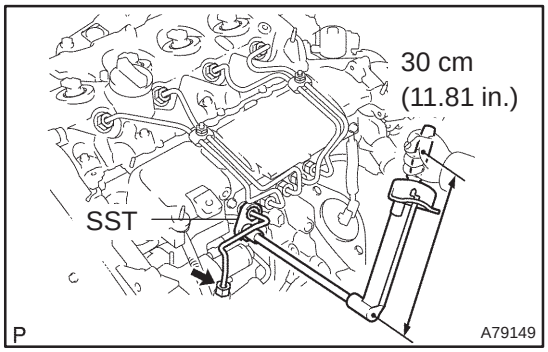

19. INSTALL FUEL INLET PIPE SUB–ASSY

NOTICE:

- **In case of having the common rail replaced, must replace fuel inlet pipe, too.**
- **When assembling the pipe, perform the operation with the engine cold under room temperature.**

(a) Temporarily install the fuel inlet pipe.

(b) Using SST, tighten the nut of the fuel inlet pipe to the common rail side.

SST 09023–12700

Torque:

42 N·m (428 kgf·cm, 31 ft·lbf) for a used pipe using SST

46 N·m (469 kgf·cm, 34 ft·lbf) for a used pipe not using SST

31 N·m (316 kgf·cm, 23 ft·lbf) for a new pipe using SST

34 N·m (347 kgf·cm, 25 ft·lbf) for a new pipe not using SST

HINT:

- Use a torque wrench with a fulcrum length of 30 cm (11.81 in.)
- Check if the used pipe has deflection or is installed properly after inlet pipe is reassembled. If there is deflection or if it can not be installed properly, replace the used pipe with a new pipe.

(c) Using SST, tighten the nut of the fuel inlet pipe to the injection pump side.

SST 09023–12700

Torque:

42 N·m (428 kgf·cm, 31 ft·lbf) for a used pipe using SST

46 N·m (469 kgf·cm, 34 ft·lbf) for a used pipe not using SST

31 N·m (316 kgf·cm, 23 ft·lbf) for a new pipe using SST

34 N·m (347 kgf·cm, 25 ft·lbf) for a new pipe not using SST

HINT:

- Use a torque wrench with a fulcrum length of 30 cm (11.81 in.)
- Check if the used pipe has deflection or is installed properly after inlet pipe is reassembled. If there is deflection or if it can not be installed properly, replace the used pipe with a new pipe.

20. INSTALL RADIATOR RESERVE TANK ASSY (See page 16–50)

21. INSTALL ENGINE COVER NO.1

Torque: 8.0 N·m (82 kgf·cm, 71 in.·lbf)

22. ADD ENGINE COOLANT (See page 16–44)

23. CHECK FOR ENGINE COOLANT LEAKS (See page 16–37)

24. CHECK FOR FUEL LEAKS (See page 11–60)

FUEL FILTER ASSY (1CD–FTV)

110UD–01

REPLACEMENT

1. REMOVE AIR CLEANER ASSY

(a) Disconnect the connector.
(b) Remove the air cleaner cap with the air cleaner hose.
(c) Remove the air cleaner filter element.
(d) Remove the 3 bolts and the air cleaner case.

2. REMOVE FUEL FILTER ASSY

(a) Disconnect the 2 fuel hose from the fuel filter. (STD or COLD)
(b) Disconnect the 3 fuel hose from the fuel filter. (W/ ADDTIONAL HEATER)
(c) Disconnect the 2 connectors.
(d) Remove the 2 bolts and the fuel filter.

3. DRAIN FUEL

(a) Loosen the drain plug, and drain the fuel from the fuel filter.

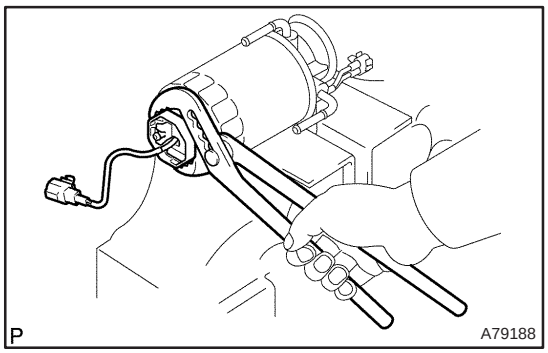

4. REMOVE LEVEL WARNING SWITCH

(a) Clamp the fuel filter in a soft jaw vise.
(b) Using pliers, remove the level warning switch.

NOTICE:

Be careful not to damage the level warning switch.

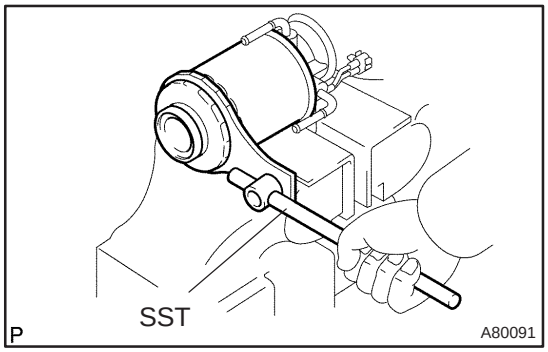

5. REMOVE FUEL FILTER ELEMENT

(a) Using SST, remove the fuel filter element.
SST 09228–64030

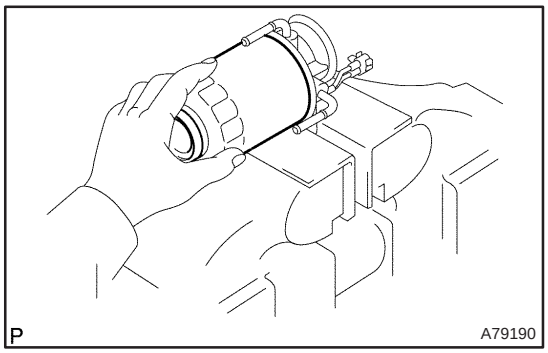

6. INSTALL FUEL FILTER ELEMENT

(a) Check and clean the fuel filter installation surface.
(b) Apply fuel to a gasket of a new fuel filter element.
(c) Lightly screw the fuel filter element into place, and tighten it until the gasket comes into contact with the seat.
(d) Tighten it additional 3/4 turn by hand.

7. INSTALL LEVEL WARNING SWITCH

(a) Install a new O–ring to the level warning switch.

(b) Apply fuel to the O–ring of the level warning switch.

(c) Install the level warning switch to the fuel filter by hand.

8. INSTALL FUEL FILTER ASSY

Torque: 18 N·m (178 kgf·cm, 13 ft·lbf)

9. INSTALL AIR CLEANER ASSY

Torque: 7.0 N·m (71 kgf·cm, 62 in.·lbf)

10. CHECK FOR FUEL LEAKS (See page 11–60)

FUEL PUMP ASSY (GASOLINE)

110U3–01

COMPONENTS

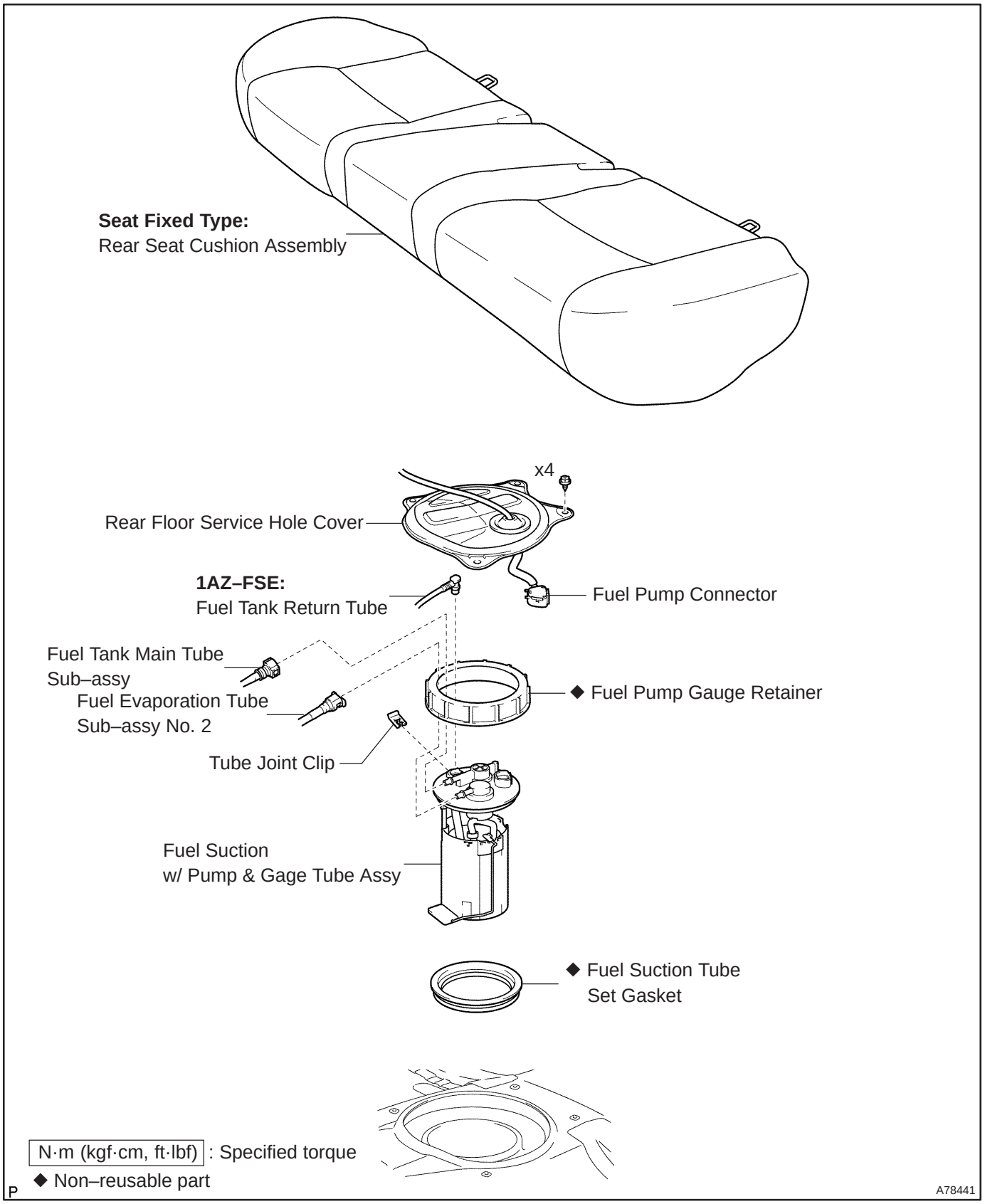

REPLACEMENT

1. DISCHARGE FUEL SYSTEM PRESSURE

HINT:

- 1ZZ–FE/3ZZ–FE: 11–1
- 1AZ–FE: 11–15
- 1AZ–FSE: 11–30

2. REMOVE REAR SEAT CUSHION ASSY (SEAT FIXED TYPE) (See page 72–32)

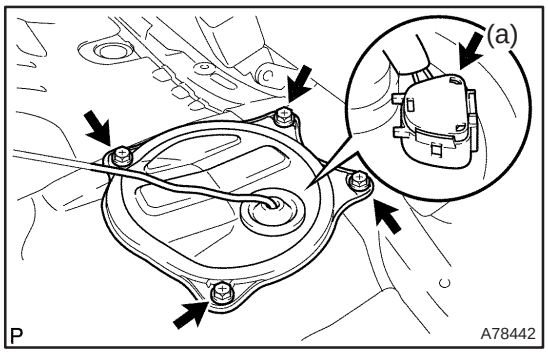

3. REMOVE REAR FLOOR SERVICE HOLE COVER

(a) Remove the 4 screws, and then remove the rear floor service hole cover.

(b) Disconnect the fuel pump connector.

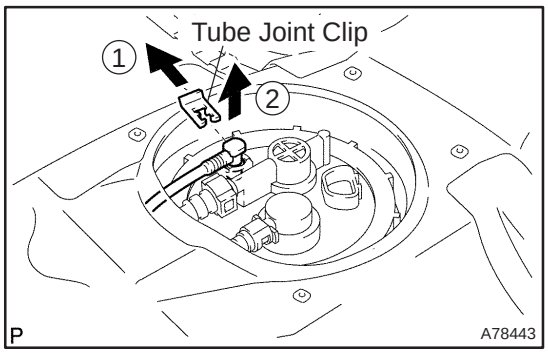

4. DISCONNECT FUEL TANK RETURN TUBE (1AZ–FSE ENGINE TYPE)

(a) Remove the tube joint clip, and pull out the fuel return tube.

NOTICE:

- **Check if there is any dirt or mud around the connector before this operation and remove the dirt as necessary.**
- **Be careful of mud because the fuel tube joint has an O–ring which seals the pipe and connector that can be contaminated.**
- **Do not use any tool in this operation.**
- **Do not bend or twist the nylon tube. Protect the connector by covering it with a vinyl or plastic bag.**
- **When the pipe and connector are stuck, push and pull the connector to release and pull the connector out carefully.**

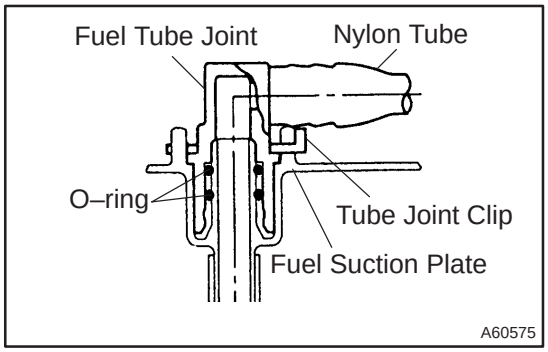

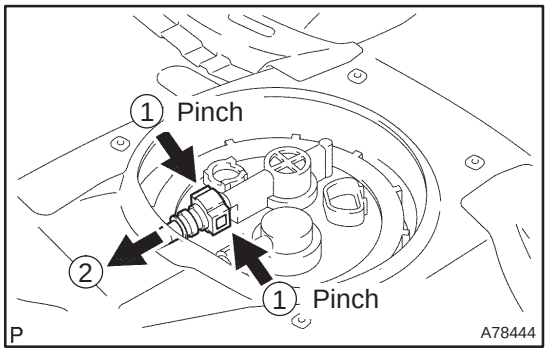

5. DISCONNECT FUEL TANK MAIN TUBE SUB–ASSY

(a) Pinch the tube connector and pull out the fuel tank main tube.

NOTICE:

- **Check if there is any dirt or mud around the connector before this operation and remove the dirt as necessary.**
- **Be careful of mud because the quick connector has an O–ring which seals the pipe and connector that can be contaminated.**
- **Do not use any tool in this operation.**
- **Do not bend or twist the nylon tube. Protect the connector by covering it with a vinyl or plastic bag.**
- **When the pipe and connector are stuck, push and pull the connector to release and pull the connector out carefully.**

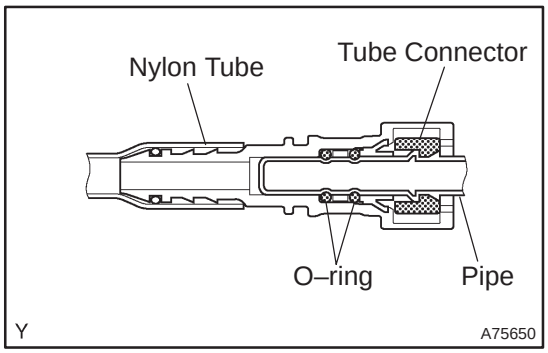

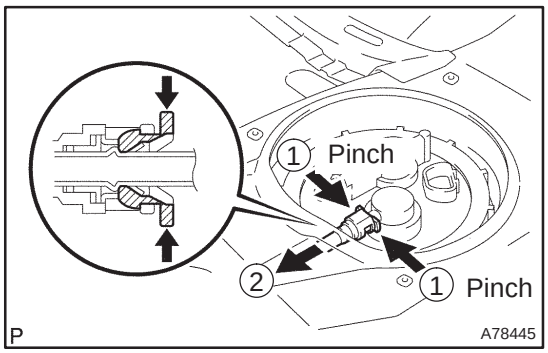

6. DISCONNECT FUEL EVAPORATION TUBE SUB–ASSY NO.2

(a) Pinch the fuel tube connector clip and pull out the fuel evaporation tube.

NOTICE:

- **Check if there is any dirt or mud around the connector before this operation and remove the dirt as necessary.**
- **Be careful of mud because the quick connector has an O–ring which seals the pipe and connector that can be contaminated.**
- **Do not use any tool in this operation.**
- **Do not bend or twist the nylon tube. Protect the connector by covering it with a vinyl or plastic bag.**
- **When the pipe and connector are stuck, push and pull the connector to release and pull the connector out carefully.**

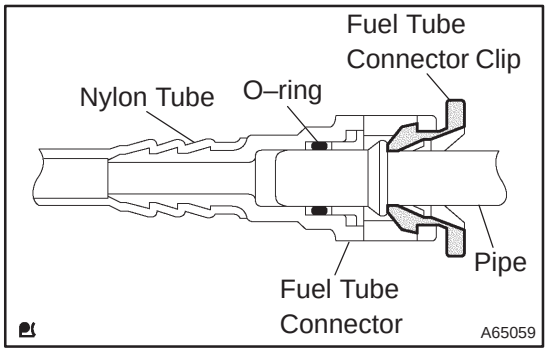

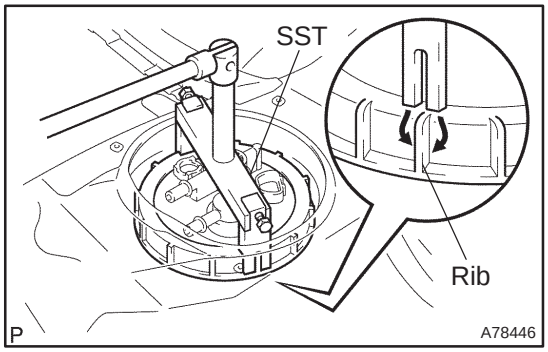

7. REMOVE FUEL SUCTION W/PUMP & GAGE TUBE ASSY

(a) Using SST, loosen the fuel pump gauge retainer.
SST 09808–14010

NOTICE:

Do not use other tools in this operation. Damage to the fuel pump gauge retainer and the fuel tank may result.

HINT:

A rib on the fuel pump gauge retainer can be fitted into a tip of the SST.

(b) Remove the fuel pump gauge retainer.

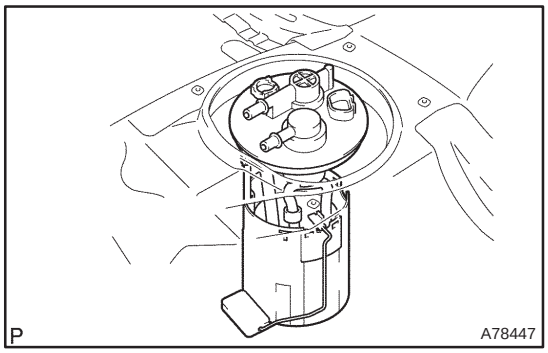

(c) Remove the fuel suction w/ pump & gage tube.

NOTICE:

Be careful that the arm of the fuel sender gage should not be bent.

(d) Remove the gasket from the tank.

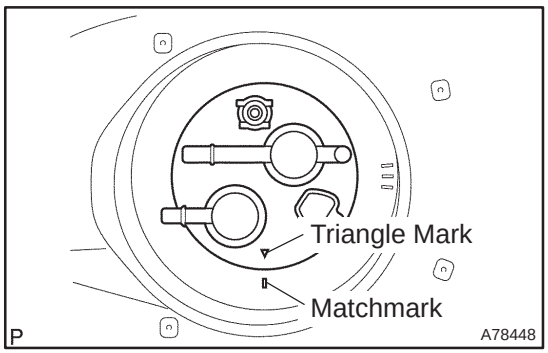

8. INSTALL FUEL SUCTION W/PUMP & GAGE TUBE ASSY

(a) Install a new gasket to the fuel tank.

(b) Install the fuel suction w/ pump & gage tube.

NOTICE:

Be careful that the arm of the fuel sender gage should not be bent.

(c) Align the triangle mark of the fuel suction w/ pump & gage tube with the matchmark location the fuel tank.

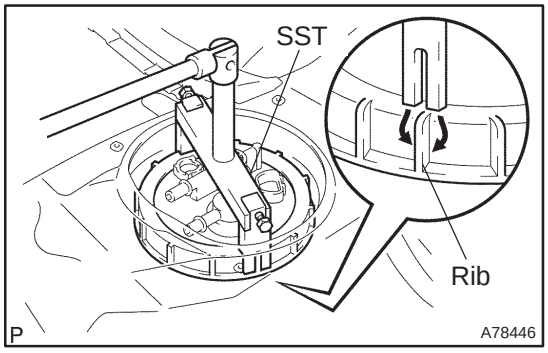

(d) Temporarily install the fuel pump gauge retainer.

(e) Using SST, tighten the fuel pump gauge retainer until the arrow mark is aligned with the center mark on the fuel tank.

SST 09808–14010

NOTICE:

Do not use other tools in this operation. Damage to the fuel pump gauge retainer and the fuel tank may result.

HINT:

A rib on the fuel pump gauge retainer can be fitted into a tip of the SST.

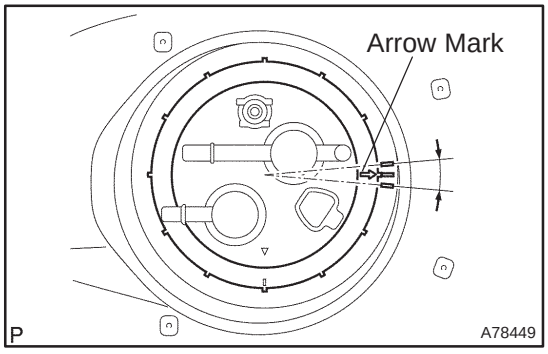

(f) Check that the arrow mark and center mark are aligned as shown in the illustration.

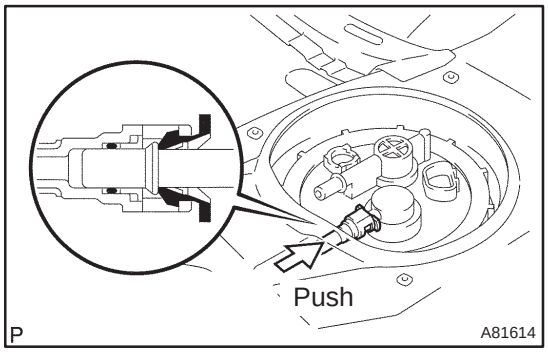

9. CONNECT FUEL EVAPORATION TUBE SUB–ASSY NO.2

(a) Push in the fuel tube connector to the pipe until it makes ”click” sound.

NOTICE:

- **Check if there is any damage or foreign objects on the connected part.**
- **After connecting, check if the fuel tube connector and the pipe are securely connected by pulling on them.**

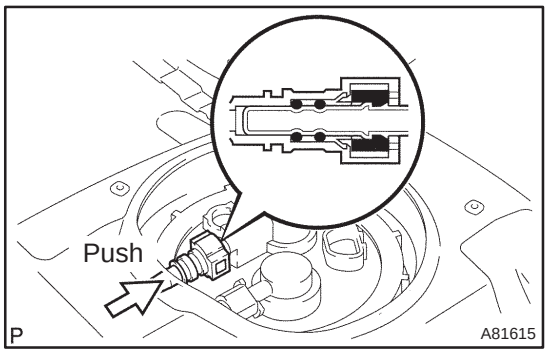

10. CONNECT FUEL TANK MAIN TUBE SUB–ASSY

(a) Push in the fuel tube connector to the pipe until it makes ”click” sound.

NOTICE:

- **Check if there is any damage or foreign objects on the connected part.**
- **After connecting, check if the fuel tube connector and the pipe are securely connected by pulling on them.**

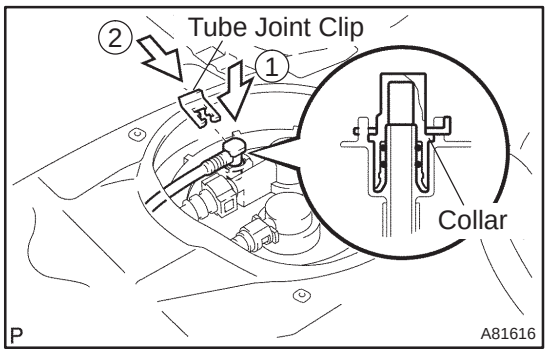

11. CONNECT FUEL TANK RETURN TUBE (1AZ–FSE ENGINE TYPE)

(a) Install in the fuel return tube with the tube joint clip.

NOTICE:

- **Check that there is no scratch or foreign objects on the connecting part.**
- **Check that the fuel tube joint is inserted securely.**
- **Check that the tube joint clip is on the collar of the fuel tube joint.**
- **After installing the tube joint clip, check that the fuel tube joint has not been pulled off.**

12. CHECK FOR FUEL LEAKS

HINT:

- 1ZZ–FE/3ZZ–FE: 11–5
- 1AZ–FE: 11–19
- 1AZ–FSE: 11–33

13. INSTALL REAR FLOOR SERVICE HOLE COVER

14. INSTALL REAR SEAT CUSHION ASSY (SEAT FIXED TYPE) (See page 72–32)

FUEL TANK ASSY (GASOLINE)

COMPONENTS

110U6–01

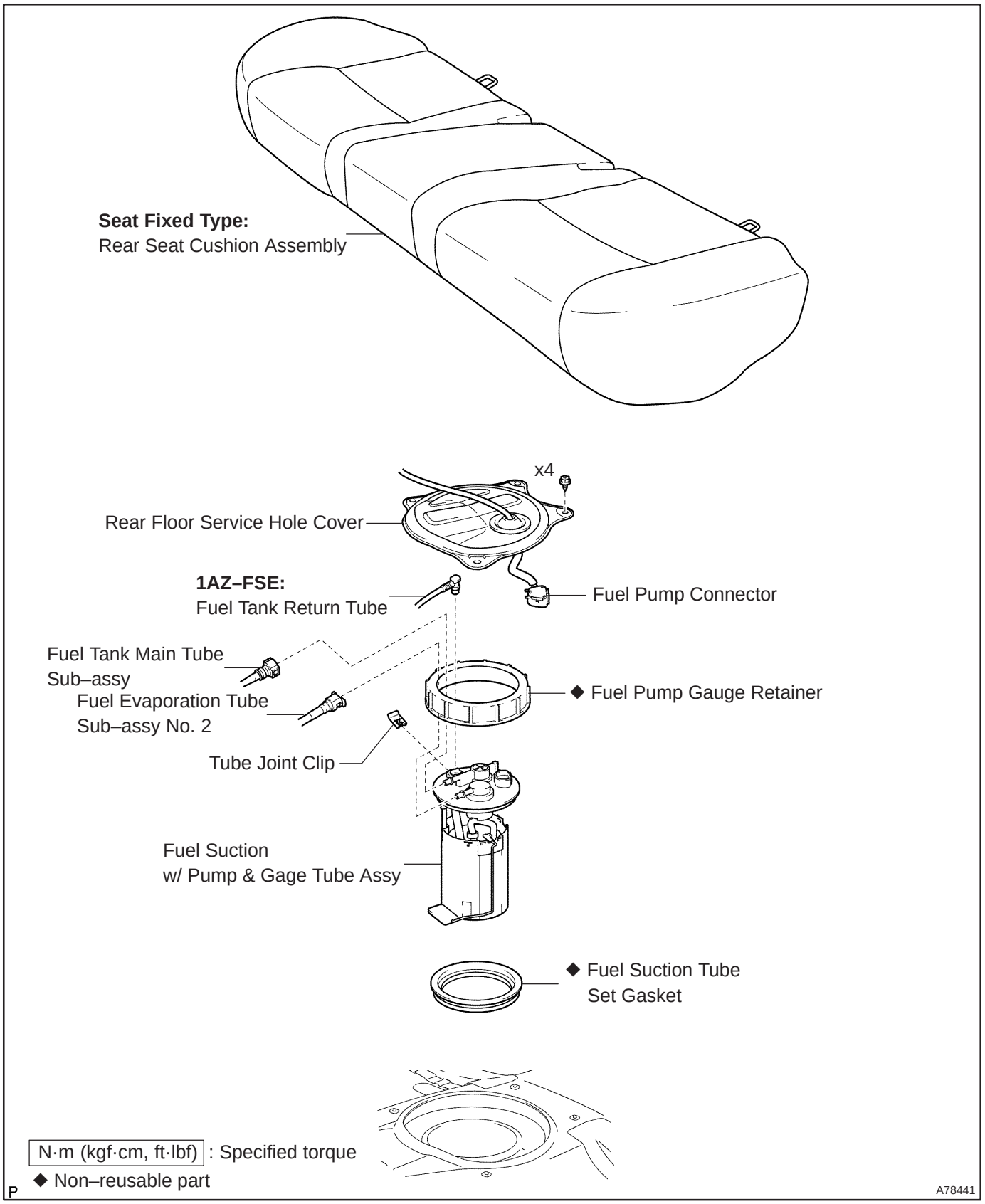

1ZZ–FE/3ZZ–FE:

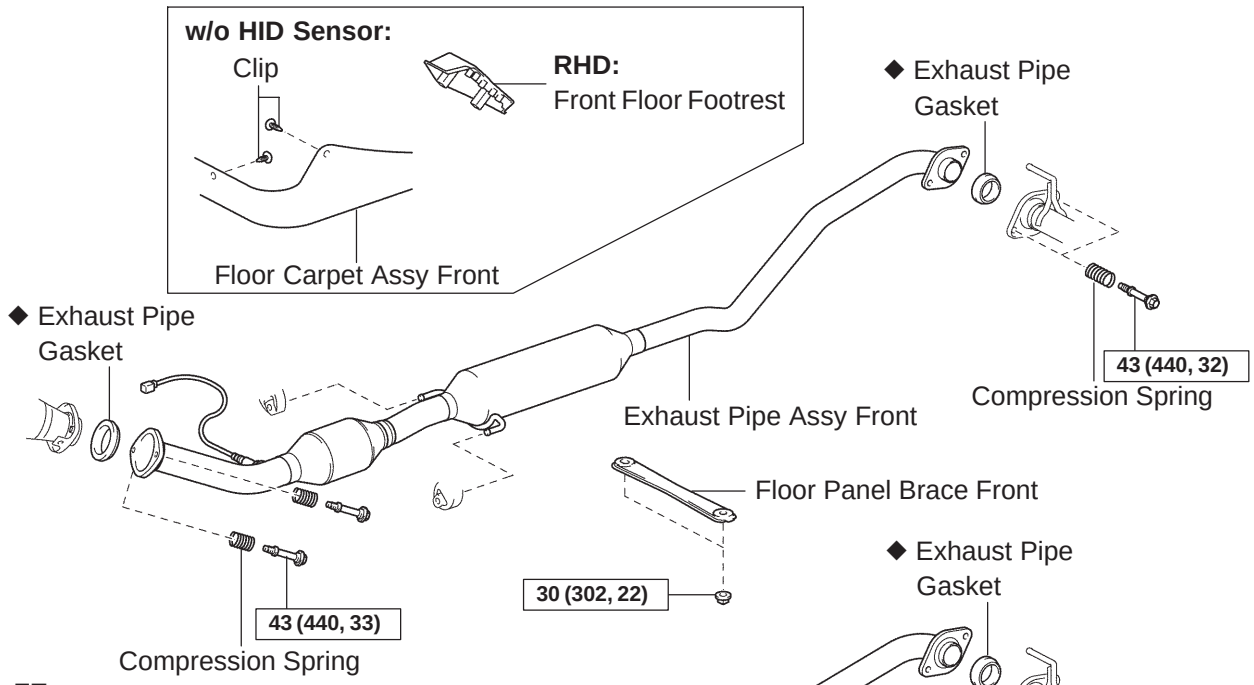

1AZ–FE:

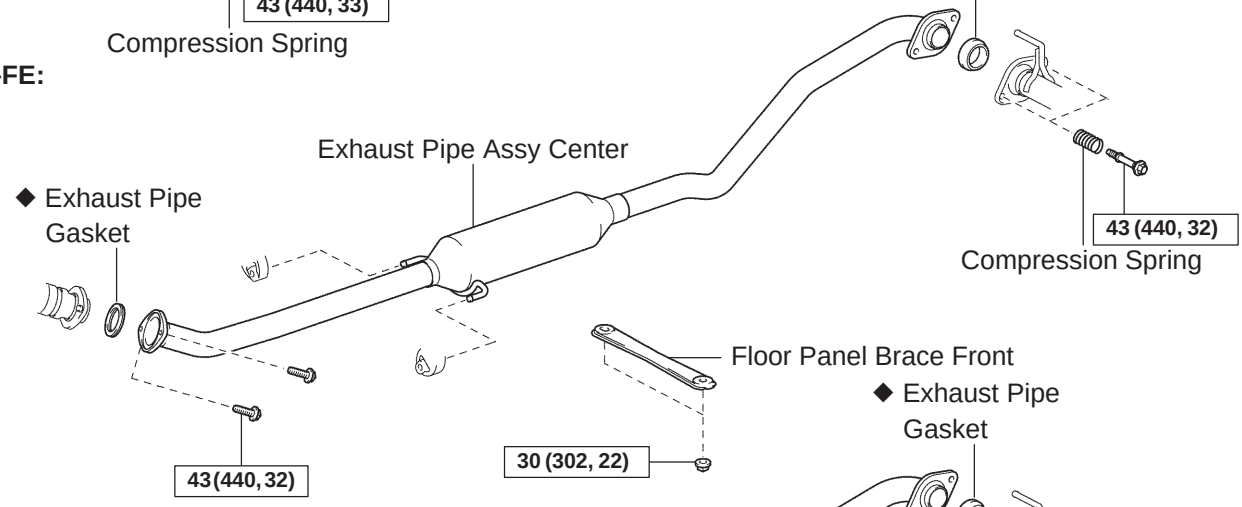

1AZ–FE (Leaded Gasoline)
1AZ–FSE:

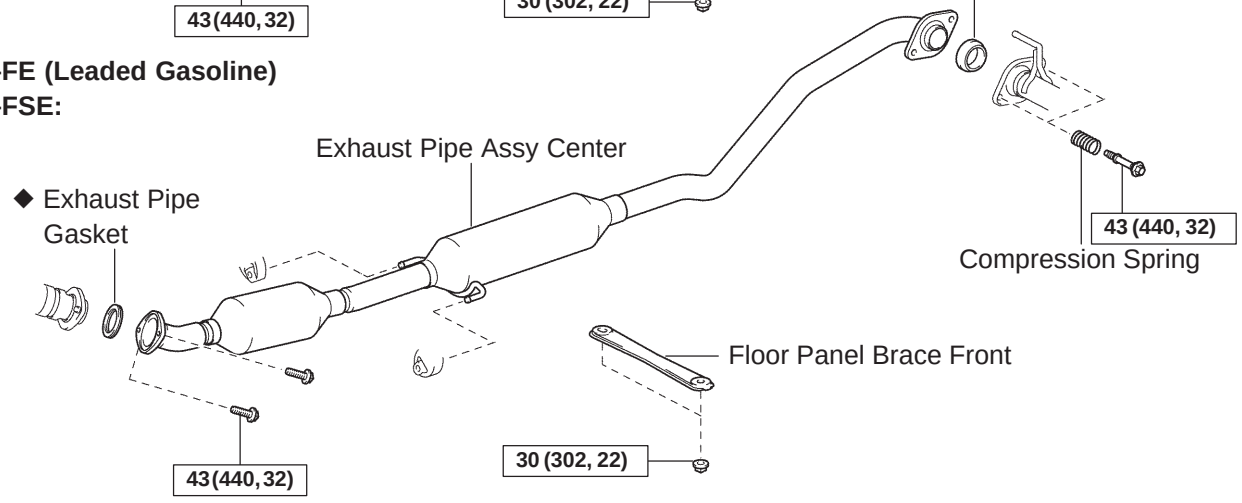

N·m (kgf·cm, ft·lbf) : Specified torque

◆ Non–reusable part

P

A78517

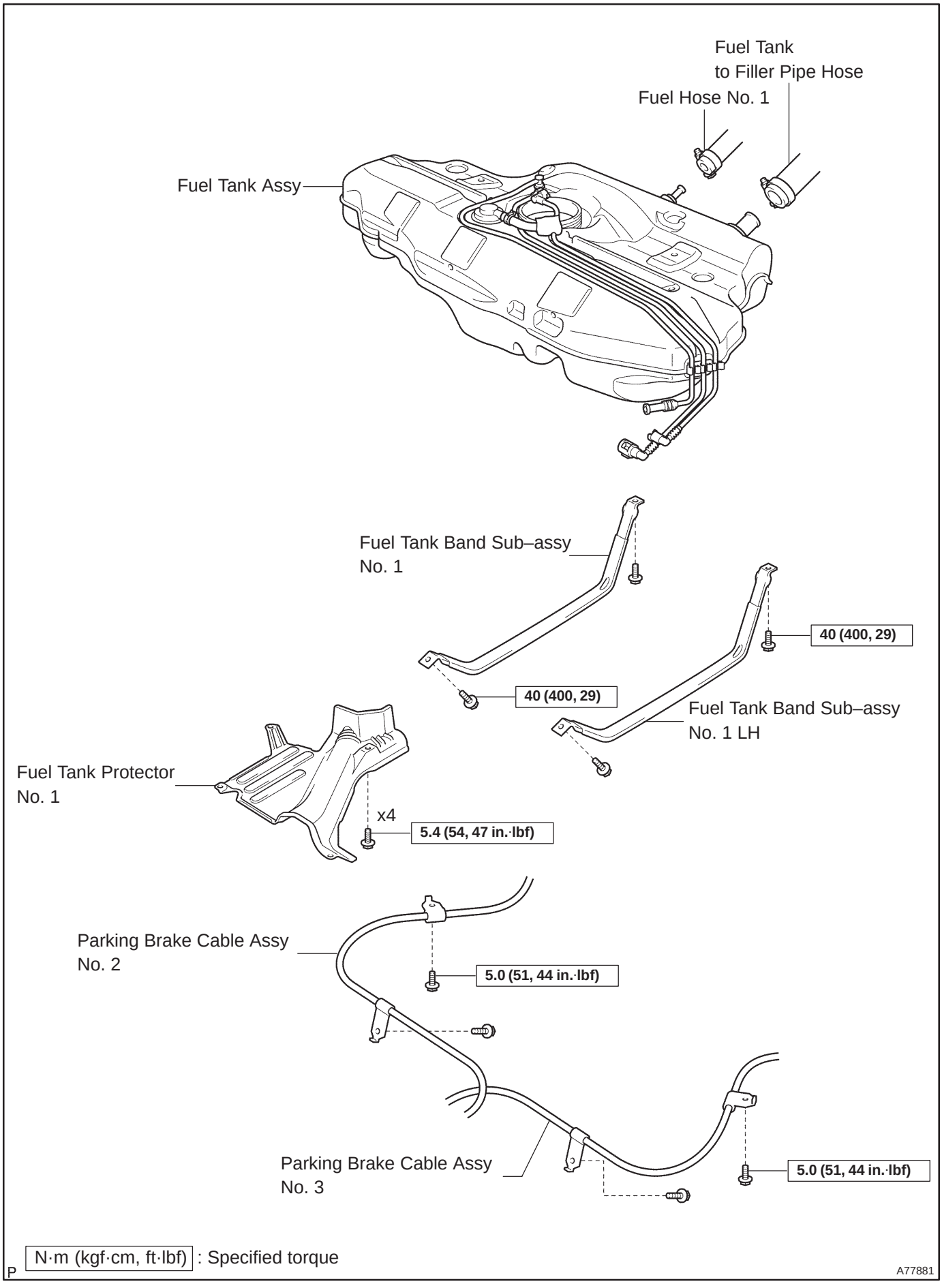
Fuel Tank
to Filler Pipe Hose
Fuel Hose No. 1
Fuel Tank Assy
Fuel Tank Band Sub–assy
No. 1
40 (400, 29)
40 (400, 29)
Fuel Tank Band Sub–assy
No. 1 LH
Fuel Tank Protector
No. 1
x4
5.4 (54, 47 in.·lbf)
Parking Brake Cable Assy
No. 2
5.0 (51, 44 in.·lbf)
Parking Brake Cable Assy
No. 3
5.0 (51, 44 in.·lbf)
N·m (kgf·cm, ft·lbf) : Specified torque
P
A77881

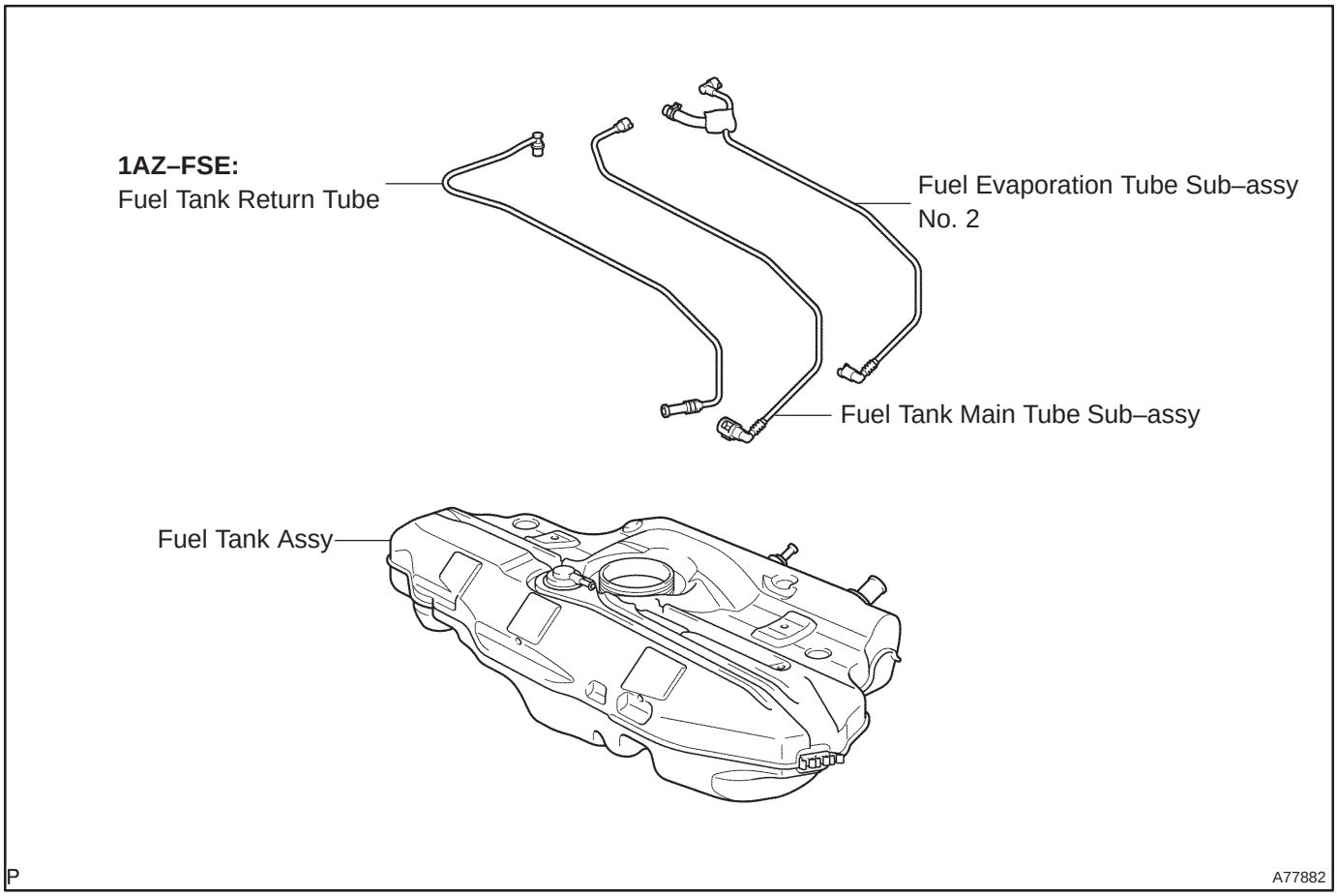
1AZ–FSE:
Fuel Tank Return Tube
Fuel Evaporation Tube Sub–assy No. 2
Fuel Tank Main Tube Sub–assy
Fuel Tank Assy
P
A77882

110U5–01

Removal & Installation and Disassembly & Reassembly

1. DISCHARGE FUEL SYSTEM PRESSURE

HINT:

- 1ZZ–FE/3ZZ–FE: 11–1
- 1AZ–FE: 11–15
- 1AZ–FSE: 11–30

2. REMOVE REAR SEAT CUSHION ASSY (SEAT FIXED TYPE) (See page 72–32)

3. REMOVE COVER, RR FLOOR SERVICE HOLE (See page 11–85)

4. DISCONNECT FUEL TANK RETURN TUBE (1AZ–FSE ENGINE TYPE) (See page 11–85)

5. DISCONNECT FUEL TANK MAIN TUBE SUB–ASSY (See page 11–85)

6. DISCONNECT FUEL EVAPORATION TUBE SUB–ASSY NO.2 (See page 11–85)

7. REMOVE FUEL SUCTION W/PUMP & GAGE TUBE ASSY (See page 11–85)

SST 09808–14010

8. DRAIN FUEL

9. REMOVE FRONT FLOOR FOOTREST (W/O HID SENSOR)

10. REMOVE FLOOR PANEL BRACE FRONT (See page 15–2)

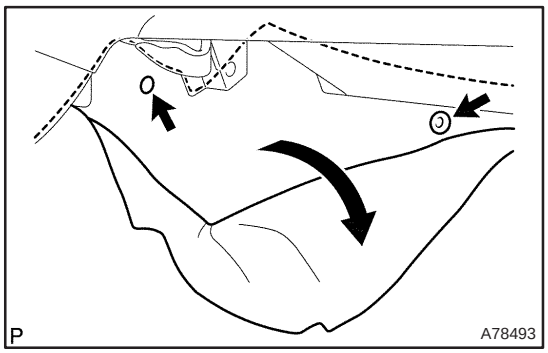

11. REMOVE EXHAUST PIPE ASSY CENTER (1ZZ–FE/3ZZ–FE ENGINE TYPE)

(a) Using a clip remover, remove the 2 clips. (w/o HID Sensor)

(b) Open the floor carpet. (w/o HID Sensor)

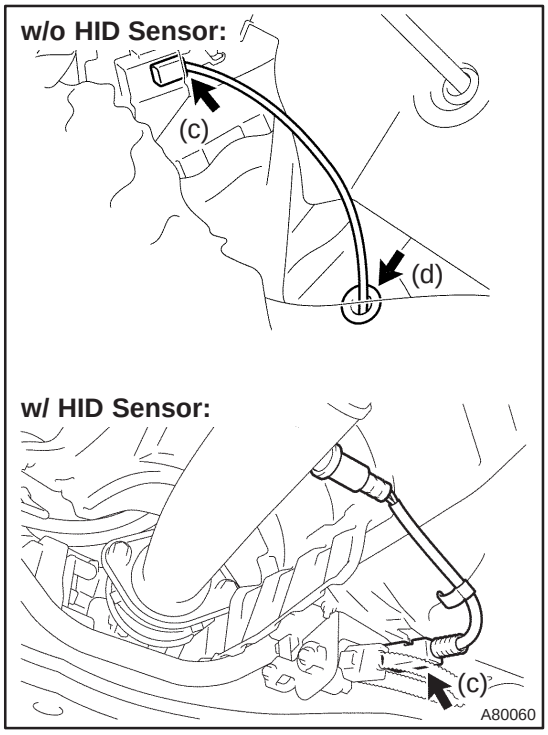

(c) Disconnect the heated oxygen sensor connector.

(d) Remove the grommet. (w/o HID Sensor)

(e) Remove the 4 bolts and 4 compression springs.
(f) Remove the exhaust pipe front from the 2 exhaust pipe supports.
(g) Remove each gasket from the exhaust manifold and the exhaust pipe front.

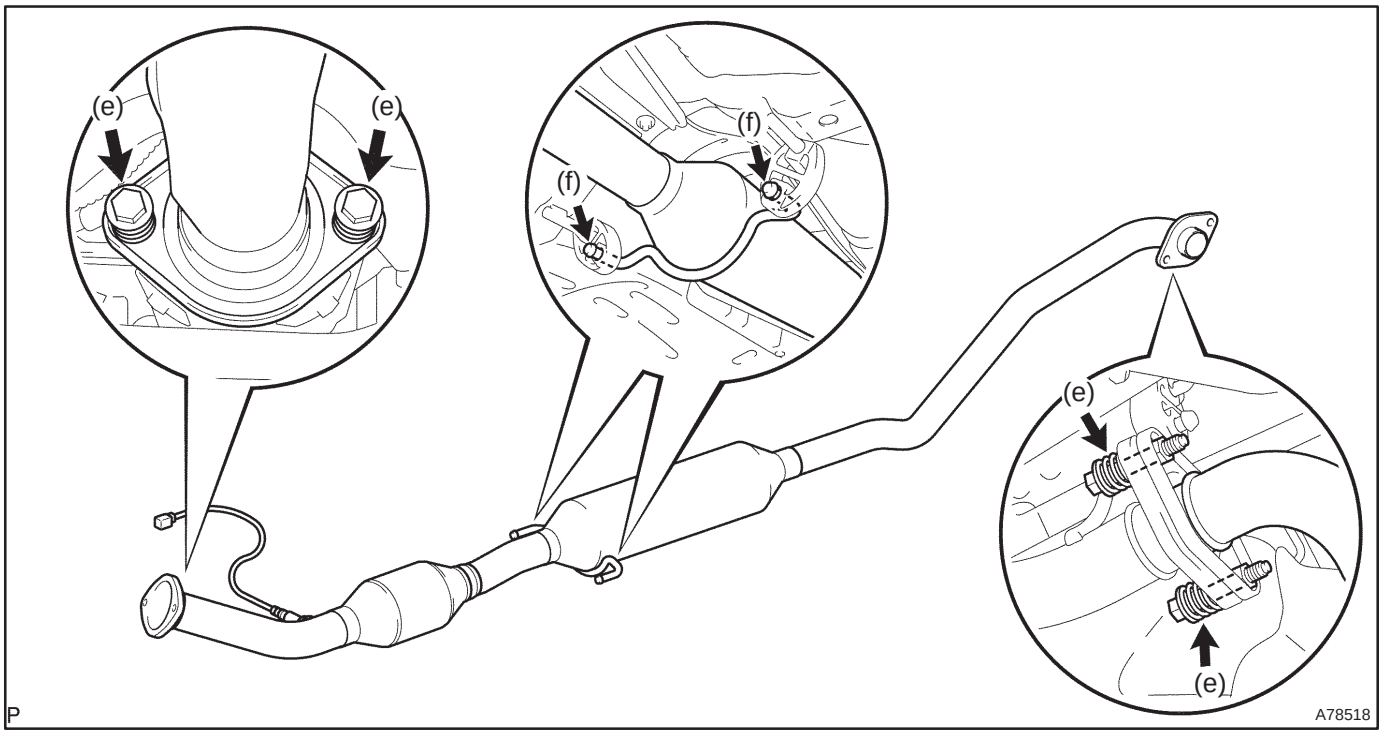

12. REMOVE EXHAUST PIPE ASSY CENTER (1AZ–FE/1AZ–FSE ENGINE TYPE)

(a) Remove the 4 bolts and 2 compression springs.

(b) Remove the exhaust pipe center and the gasket from the 2 exhaust pipe supports.

(c) Remove the gasket from the exhaust pipe center.

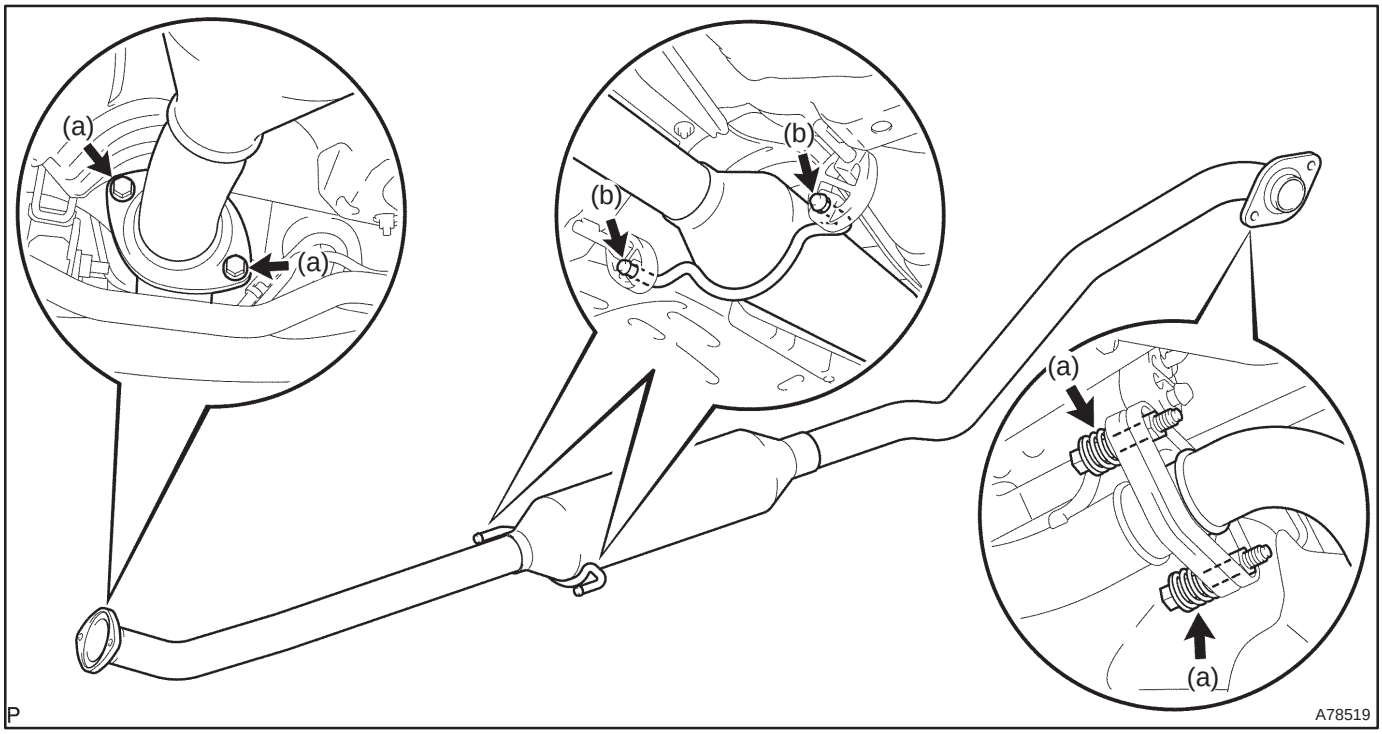

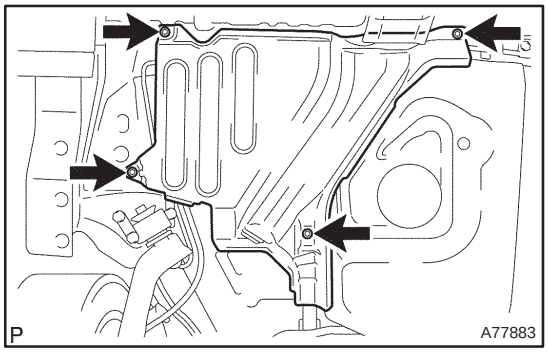

13. REMOVE FUEL TANK PROTECTOR NO.1

(a) Remove the 4 bolts, and then remove the fuel tank protector.

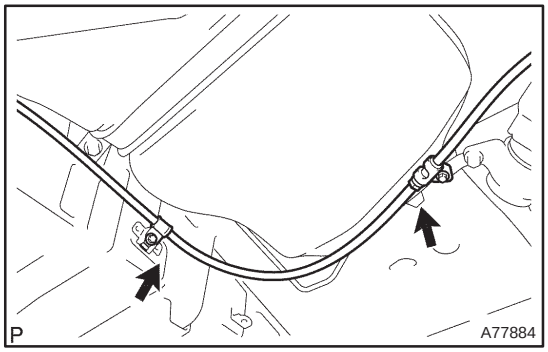

14. REMOVE PARKING BRAKE CABLE ASSY NO.2

(a) Remove the 2 set bolts of the parking brake cable.

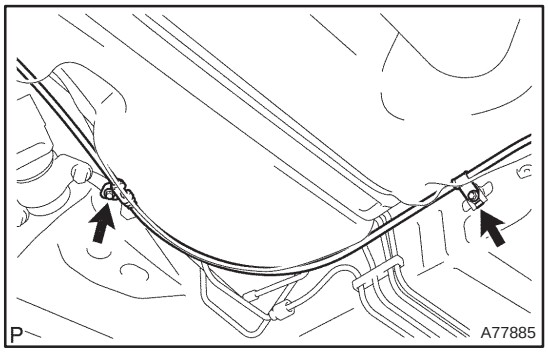

15. REMOVE PARKING BRAKE CABLE ASSY NO.3

(a) Remove the 2 set bolts of the parking brake cable.

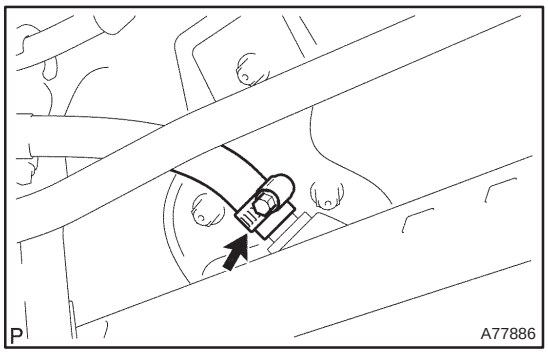

16. DISCONNECT BREATHER TUBE FUEL HOSE

(a) Loosen the hose clamp and disconnect the fuel tank breather hose.

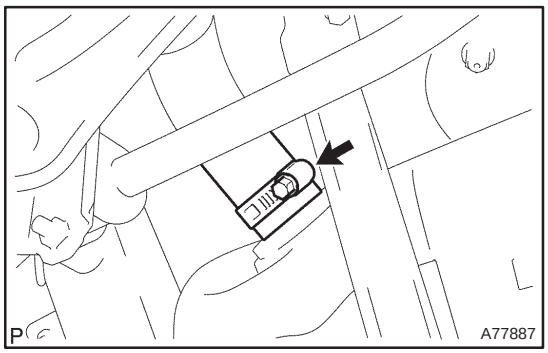

17. DISCONNECT FUEL TANK TO FILLER PIPE HOSE

(a) Loosen the hose clamp and disconnect the fuel tank to filler pipe hose.

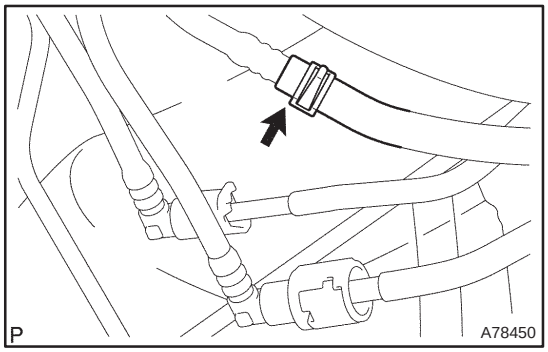

18. DISCONNECT FUEL TANK RETURN TUBE (1AZ–FSE ENGINE TYPE)

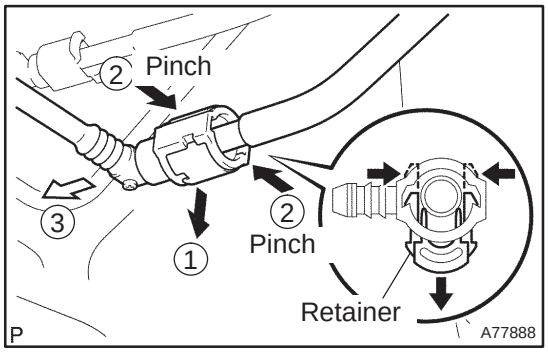

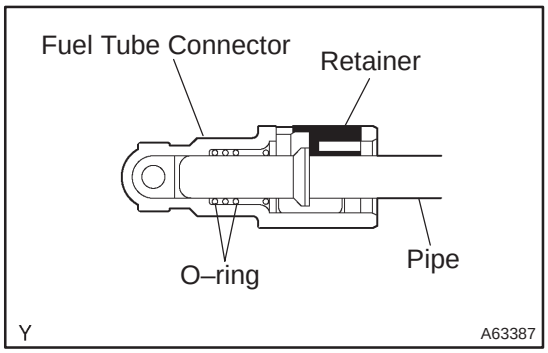

19. DISCONNECT FUEL TANK MAIN TUBE SUB–ASSY

(a) Pinch the tab of the retainer to remove the lock claws and pull down it as shown in the illustration.

(b) Pull out the fuel tank main tube.

NOTICE:

- **Check if there is any dirt or mud around the connector before this operation and remove the dirt as necessary.**
- **Be careful of mud because the quick connector has an O–ring which seals the pipe and the connector that can be contaminated.**
- **Do not use any tool in this operation.**
- **Do not bend or twist the nylon tube. Protect the connector by covering it with a vinyl or plastic bag.**
- **When the pipe and connector are stuck, push and pull the connector to release. Pull out the connector from the pipe.**

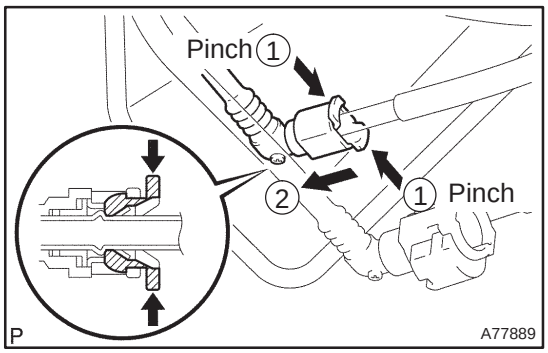

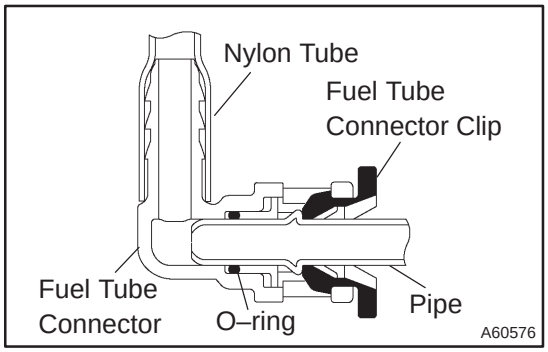

20. DISCONNECT FUEL EVAPORATION TUBE SUB–ASSY NO.2

(a) Pinch the fuel tube connector clip and pull out the fuel evaporation tube.

NOTICE:

- **Check if there is any dirt or mud around the connector before this operation and remove the dirt as necessary.**
- **Be careful of mud because the quick connector has an O–ring which seals the pipe and the connector that can be contaminated.**
- **Do not use any tool in this operation.**
- **Do not bend or twist the nylon tube. Protect the connector by covering it with a vinyl or plastic bag.**
- **When the pipe and connector are stuck, push and pull the connector to release. Pull out the connector from the pipe.**

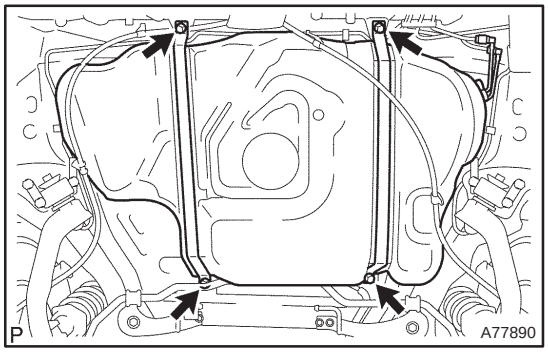

21. REMOVE FUEL TANK ASSY

(a) Set a transmission jack to the fuel tank.

(b) Remove the 4 bolts and the 2 fuel tank bands, and then remove the fuel tank.

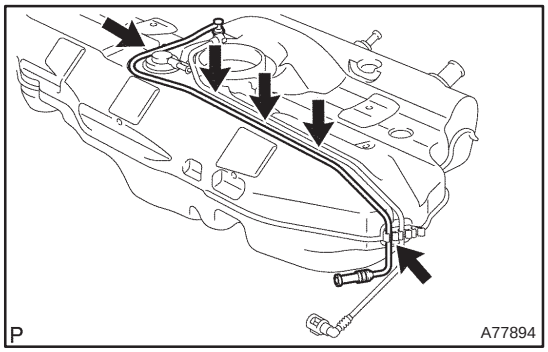

22. REMOVE FUEL TANK RETURN TUBE (1AZ–FSE ENGINE TYPE)

(a) Unfasten the 5 claws and remove the fuel tank return tube from the fuel tank.

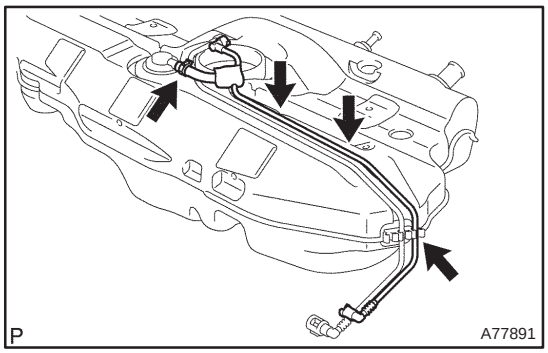

23. REMOVE FUEL EVAPORATION TUBE SUB–ASSY NO.2

(a) Unfasten the 4 claws and remove the fuel evaporation tube from the fuel tank.

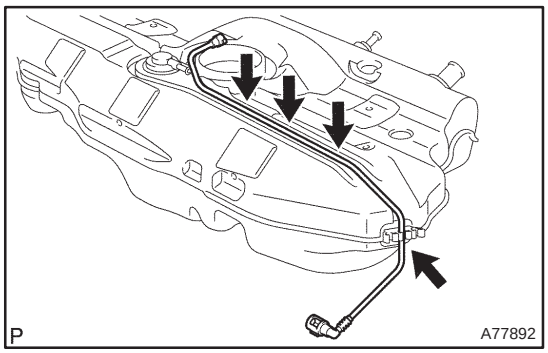

24. REMOVE FUEL TANK MAIN TUBE SUB–ASSY

(a) Unfasten the 4 claws and remove the fuel tank main tube from the fuel tank.

25. INSTALL FUEL TANK MAIN TUBE SUB–ASSY

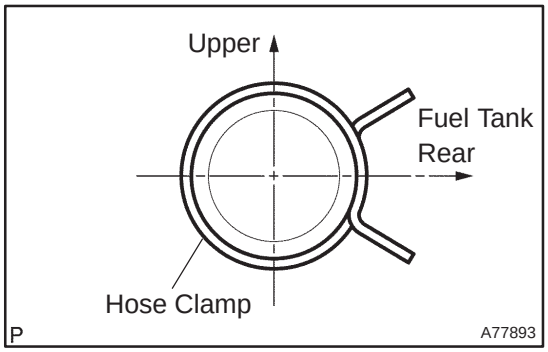

26. INSTALL FUEL EVAPORATION TUBE SUB–ASSY NO.2

(a) Install the hose clamp as shown in the illustration.

27. INSTALL FUEL TANK RETURN TUBE (1AZ–FSE ENGINE TYPE)

28. INSTALL FUEL TANK ASSY

Torque: 40 N·m (400 kgf·cm, 29 ft·lbf)

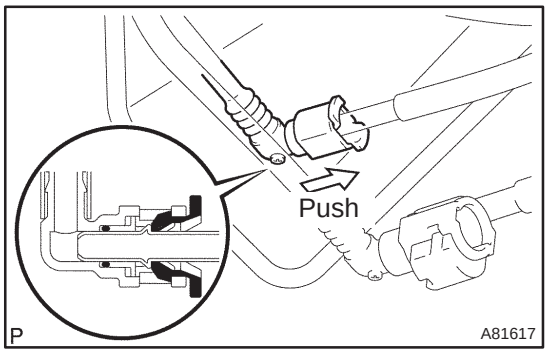

29. CONNECT FUEL EVAPORATION TUBE SUB–ASSY NO.2

(a) Push in the fuel tube connector to the pipe until it makes ”click” sound.

NOTICE:

- **Check if there is any damage or foreign objects on the connected part.**
- **After connecting, check if the fuel tube connector and the pipe are securely connected by pulling on them.**

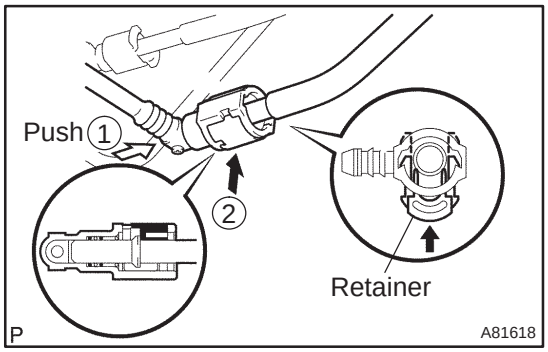

30. CONNECT FUEL TANK MAIN TUBE SUB–ASSY

(a) Push in the fuel tube connector to the pipe until it makes ”click” sound, and then push up the retainer to the claws lock.

NOTICE:

- **Check if there is any damage or foreign objects on the connected part.**
- **After connecting, check if the fuel tube connector and the pipe are securely connected by pulling on them.**

31. CONNECT FUEL TANK RETURN TUBE (1AZ–FSE ENGINE TYPE)

32. CONNECT FUEL TANK TO FILLER PIPE HOSE

33. CONNECT BREATHER TUBE FUEL HOSE

34. INSTALL PARKING BRAKE CABLE ASSY NO.3
Torque: 5.0 N·m (51 kgf·cm, 44 in.·lbf)

35. INSTALL PARKING BRAKE CABLE ASSY NO.2
Torque: 5.0 N·m (51 kgf·cm, 44 in.·lbf)

36. INSTALL FUEL TANK PROTECTOR NO.1
Torque: 5.4 N·m (55 kgf·cm, 48 in.·lbf)

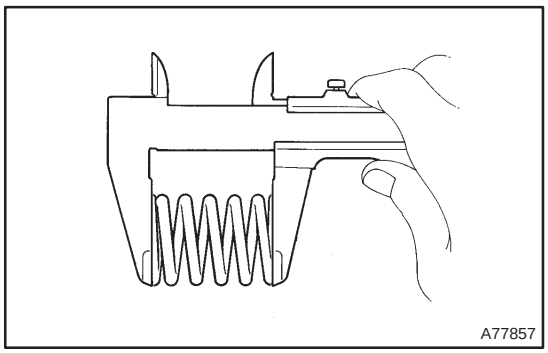

37. INSTALL EXHAUST PIPE ASSY CENTER (1ZZ–FE/3ZZ–FE ENGINE TYPE)

(a) Compression spring inspection

(1) Using vernier calipers, measure the free length of the compression spring.

Minimum length:
41.5 mm (1.634 in.) for front x manifold
38.5 mm (1.516 in.) for front x tail

If the free length is less than minimum, replace the compression spring.

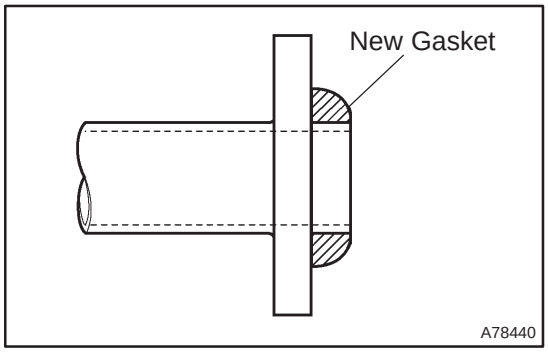

(b) Install each new gasket to the exhaust manifold and the exhaust pipe front as shown in the illustration.

(c) Install the exhaust pipe front to the 2 exhaust pipe supports

(d) Tighten the 4 compression springs and 4 bolts.
Torque: 43 N·m (440 kgf·cm, 32 ft·lbf)

(e) Install the grommet. (w/o HID Sensor)

(f) Connect the heated oxygen sensor connector.

(g) Install the floor carpet with the 2 clips. (w/o HID Sensor)

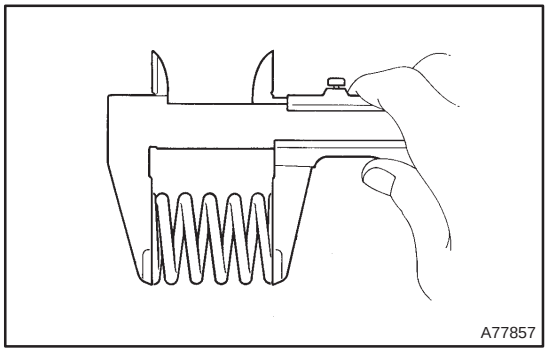

38. INSTALL EXHAUST PIPE ASSY CENTER (1AZ–FE/1AZ–FSE ENGINE TYPE)

(a) Compression spring inspection

(1) Using vernier calipers, measure the free length of the compression spring.

Minimum length: 38.5 mm (1.516 in.)

If the free length is less than minimum, replace the compression spring.

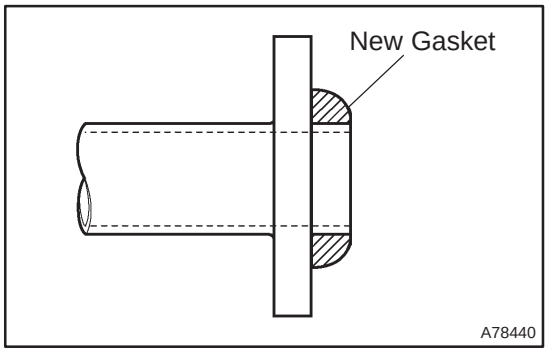

(b) Install a new gasket to the the exhaust pipe center (exhaust pipe tail side) as shown in the illustration.
(c) Install a new gasket (exhaust pipe front side) and the exhaust pipe center to the 2 exhaust pipe supports.
(d) Tighten the 2 compression springs and 4 bolts.
Torque: 43 N·m (440 kgf·cm, 32 ft·lbf)

39. ADD FUEL
40. INSTALL FUEL SUCTION W/PUMP & GAGE TUBE ASSY (See page 11–85)
SST 09808–14010
41. CONNECT FUEL EVAPORATION TUBE SUB–ASSY NO.2 (See page 11–85)
42. CONNECT FUEL TANK MAIN TUBE SUB–ASSY (See page 11–85)
43. CONNECT FUEL TANK RETURN TUBE (1AZ–FSE ENGINE TYPE) (See page 11–85)
44. CHECK FOR FUEL LEAKS
HINT:
- 1ZZ–FE/3ZZ–FE: 11–5
- 1AZ–FE: 11–19
- 1AZ–FSE: 11–33

45. CHECK FOR EXHAUST GAS LEAKS
46. INSTALL FLOOR PANEL BRACE FRONT (See page 15–2)
47. INSTALL REAR FLOOR SERVICE HOLE COVER
48. INSTALL REAR SEAT CUSHION ASSY (SEAT FIXED TYPE) (See page 72–32)
49. INSTALL FRONT FLOOR FOOTREST (W/O HID SENSOR)

FUEL TANK ASSY (DIESEL)

110UE–01

COMPONENTS

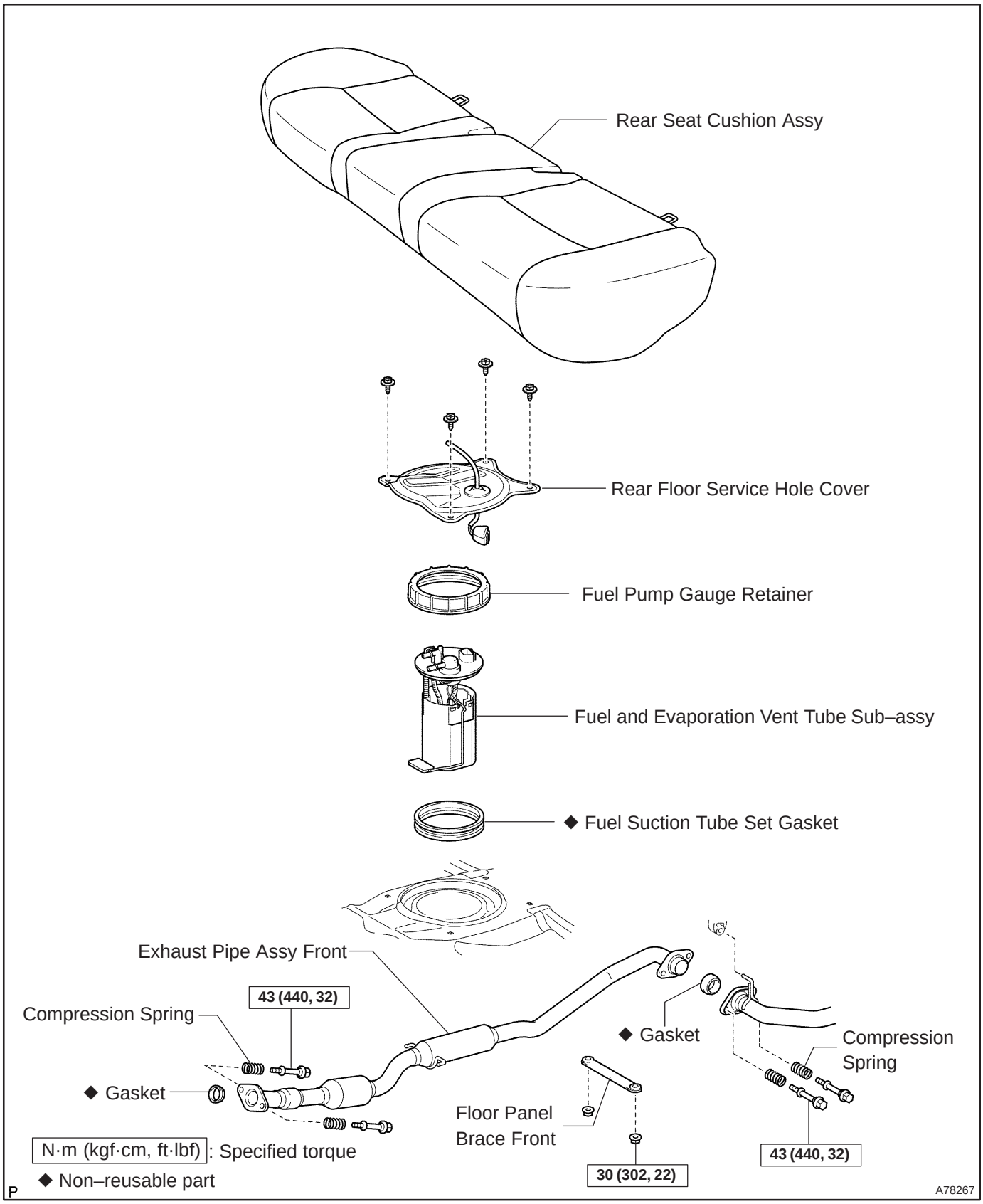

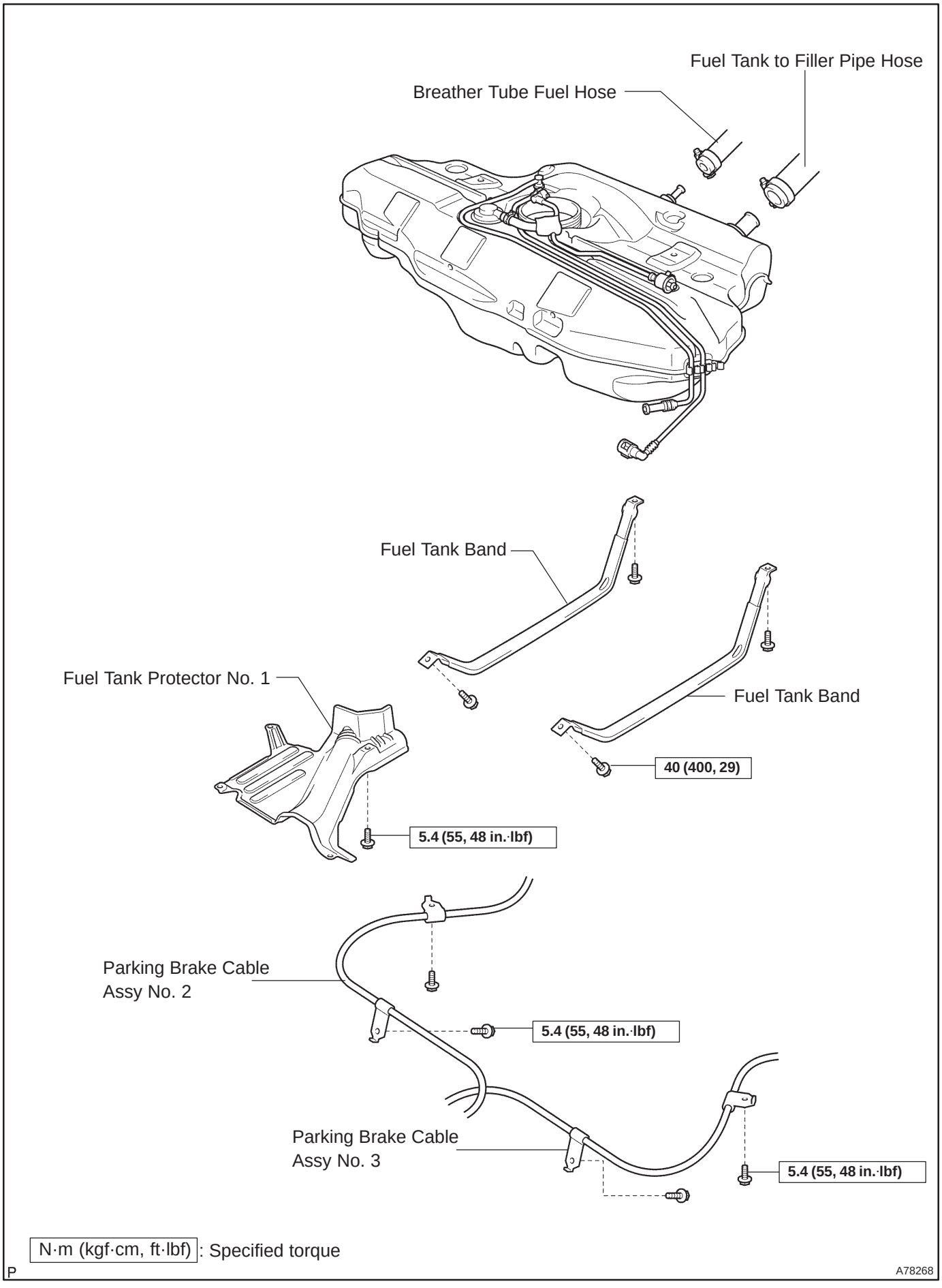
Fuel Tank to Filler Pipe Hose
Breather Tube Fuel Hose
Fuel Tank Band
Fuel Tank Band
Fuel Tank Protector No. 1
40 (400, 29)
5.4 (55, 48 in.·lbf)
Parking Brake Cable
Assy No. 2
5.4 (55, 48 in.·lbf)
Parking Brake Cable
Assy No. 3
5.4 (55, 48 in.·lbf)
N·m (kgf·cm, ft·lbf): Specified torque
P
A78268

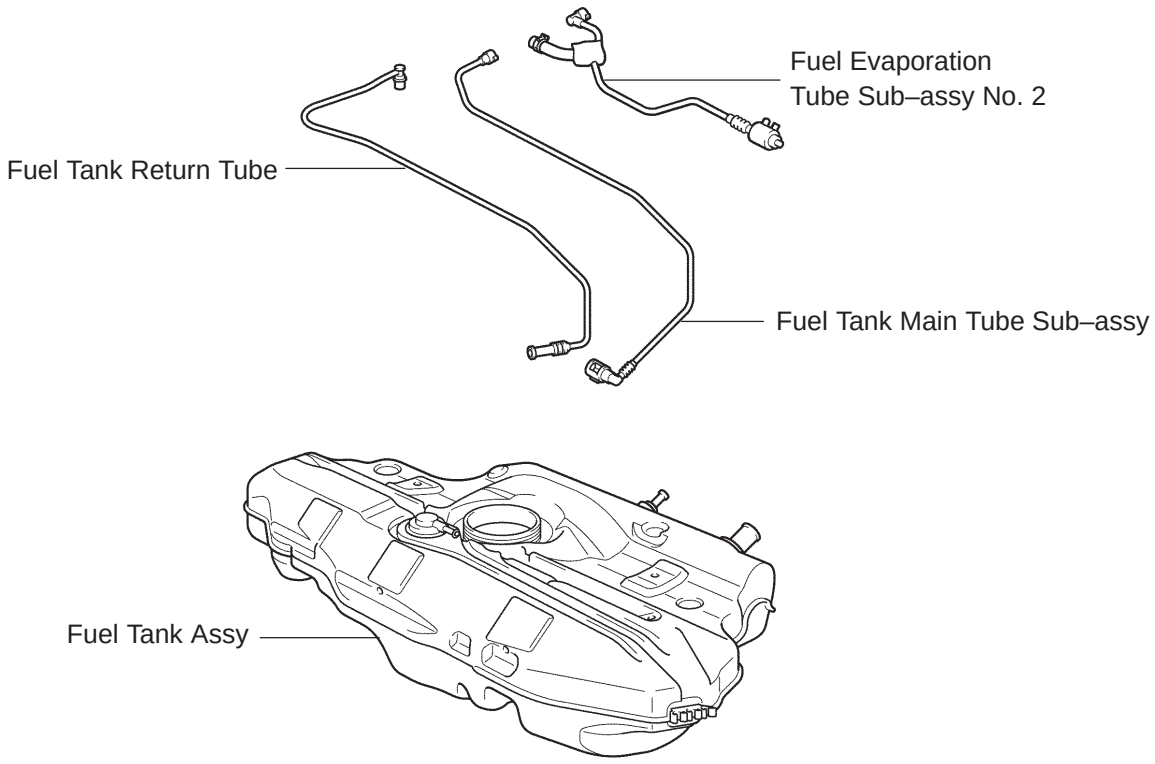
Fuel Evaporation
Tube Sub–assy No. 2
Fuel Tank Return Tube
Fuel Tank Main Tube Sub–assy
Fuel Tank Assy
P
A78269

110UF–01

Removal & Installation and Disassembly & Reassembly

1. REMOVE REAR SEAT CUSHION ASSY (See page 72–27)

2. REMOVE REAR FLOOR SERVICE HOLE COVER

(a) Remove the 4 screws and the rear floor service hole cover.

(b) Disconnect the connector.

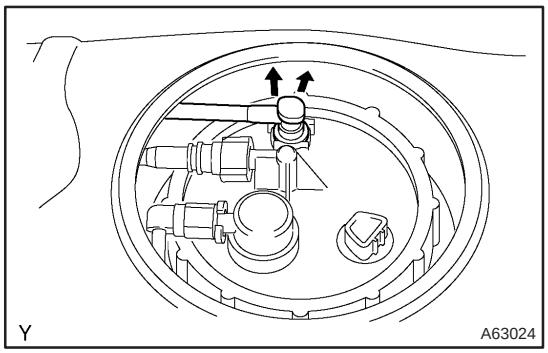

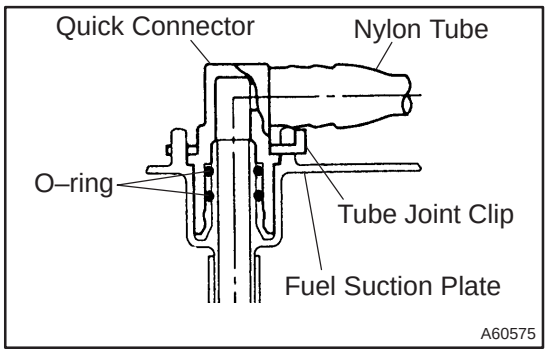

3. DISCONNECT FUEL TANK RETURN TUBE

(a) Remove the tube joint clip and pull out the fuel tank return tube.

NOTICE:

- **Check if there is any dirt or mud around the connector before this operation and remove the dirt as necessary.**
- **Be careful of mud because the quick connector has an O–ring which seals the pipe and the connector that can be contaminated.**
- **Do not use any tool in this operation.**
- **Do not bend or twist the nylon tube.**
- **Keep the plug free of foreign objects.**
- **To protect the tube, cover it with a vinyl or a plastic bag after checking.**

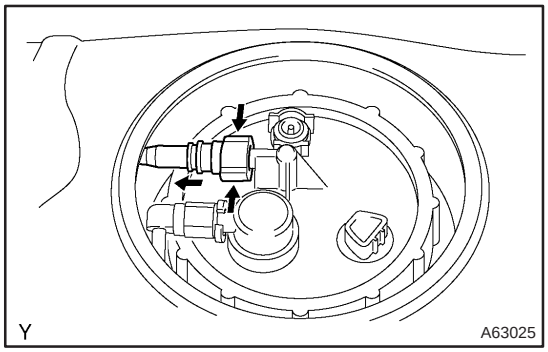

4. DISCONNECT FUEL TANK MAIN TUBE SUB–ASSY

(a) Pinch the tube connector then pull out the fuel tank main tube.

NOTICE:

- **Check if there is any dirt or mud around the connector before this operation and remove the dirt as necessary.**
- **Be careful of mud because the quick connector has an O–ring which seals the pipe and the connector that can be contaminated.**
- **Do not use any tool in this operation.**
- **Do not bend or twist the nylon tube.**
- **To protect the tube, cover it with a vinyl or a plastic bag after checking.**
- **When the connector and the pipe are stuck, push and pull the connector to release. Pull out the connector from the pipe carefully.**

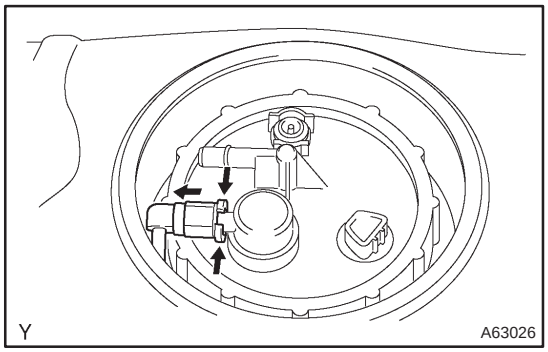

5. DISCONNECT FUEL EVAPORATION TUBE SUB–ASSY NO.2

(a) Pinch the quick connector then pull out the fuel evaporation tube sub–assy No. 2.

NOTICE:

- **Check if there is any dirt or mud around the connector before this operation and remove the dirt as necessary.**
- **Be careful of mud because the quick connector has an O–ring which seals the pipe and the connector that can be contaminated.**
- **Do not use any tool in this operation.**
- **Do not bend or twist the nylon tube.**
- **To protect the tube, cover it with a vinyl or a plastic bag after checking.**
- **When the connector and the pipe are stuck, push and pull the connector to release. Pull out the connector from the pipe carefully.**

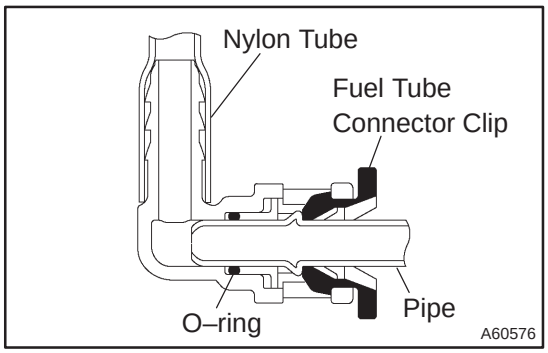

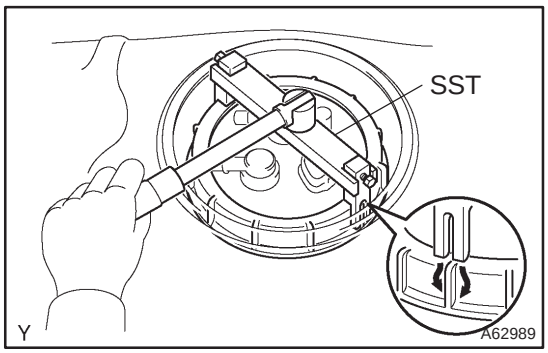

6. REMOVE FUEL AND EVAPORATION VENT TUBE SUB–ASSY

(a) Using SST, loosen the retainer.
SST 09808–14010

(b) Remove the retainer.

(c) Pull out the fuel pump assembly.

CAUTION:

Be careful that the arm of the sender gauge should not bent.

7. DRAIN FUEL

8. REMOVE FLOOR PANEL BRACE FRONT (See page 15–10)

9. REMOVE EXHAUST PIPE ASSY FRONT (See page 15–10)

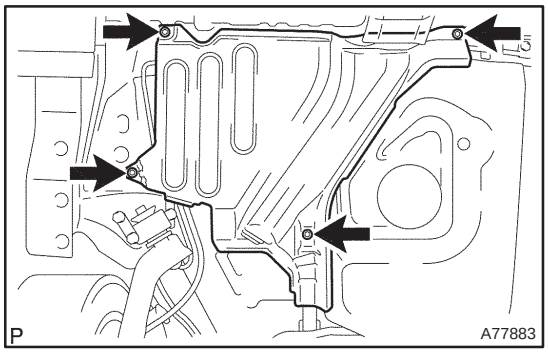

10. REMOVE FUEL TANK PROTECTOR NO.1

(a) Remove the 4 bolts and the fuel tank protector.

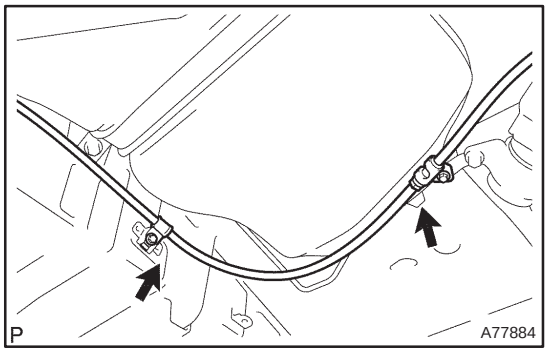

11. REMOVE PARKING BRAKE CABLE ASSY NO.2

(a) Remove the 2 set bolts of the parking brake cable.

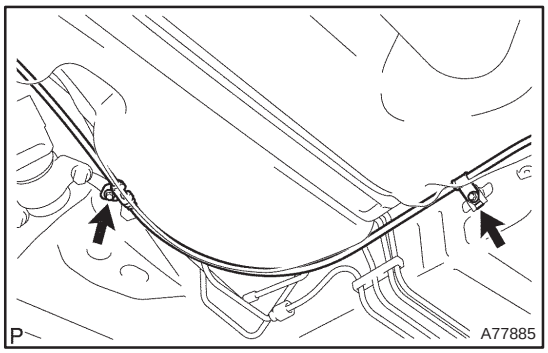

12. REMOVE PARKING BRAKE CABLE ASSY NO.3

(a) Remove the 2 set bolts of the parking brake cable.

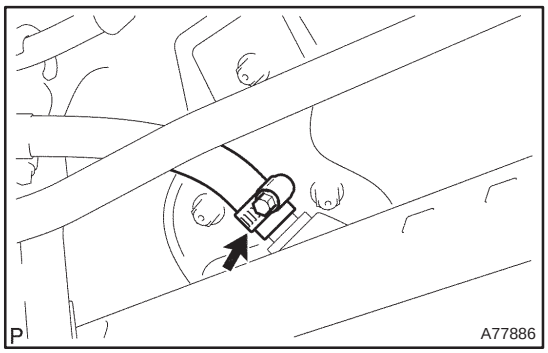

13. DISCONNECT BREATHER TUBE FUEL HOSE

(a) Loosen the hose clamp and disconnect the fuel tank breather hose.

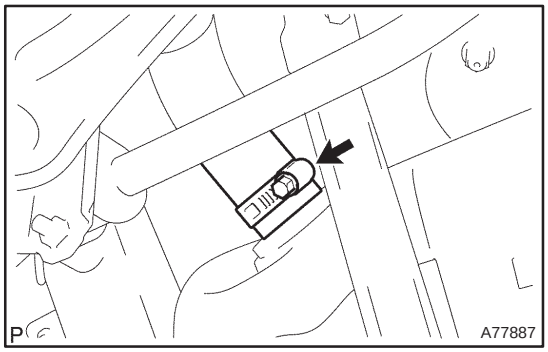

14. DISCONNECT FUEL TANK TO FILLER PIPE HOSE

(a) Loosen the hose clamp and disconnect the fuel tank to filler pipe hose.

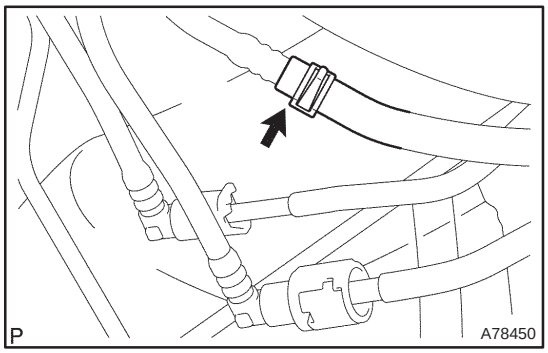

15. DISCONNECT FUEL TANK RETURN TUBE

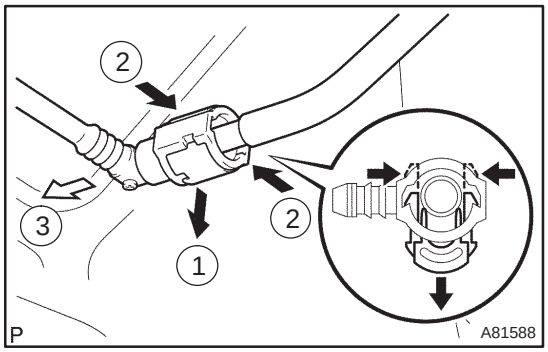

16. DISCONNECT FUEL TANK MAIN TUBE SUB–ASSY

(a) Pinch the tab of the retainer to remove the lock claws and pull down it as shown in the illustration.

(b) Pull out the fuel tank main tube.

NOTICE:

- **Check if there is any dirt or mud around the connector before this operation and remove the dirt as necessary.**
- **Be careful of mud because the quick connector has an O–ring which seals the pipe and the connector that can be contaminated.**
- **Do not use any tool in this operation.**
- **Do not bend or twist the nylon tube. Protect the connector by covering it with a vinyl or a plastic bag.**
- **When the pipe and connector are stuck, push and pull the connector to release. Pull out the connector from the pipe carefully.**

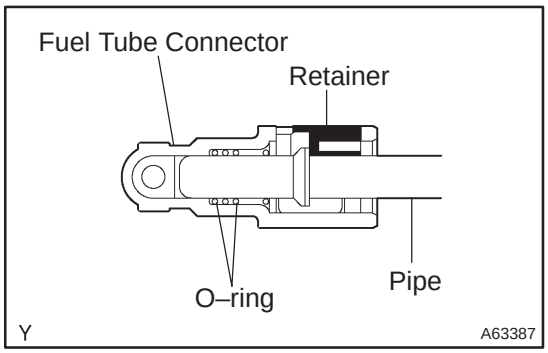

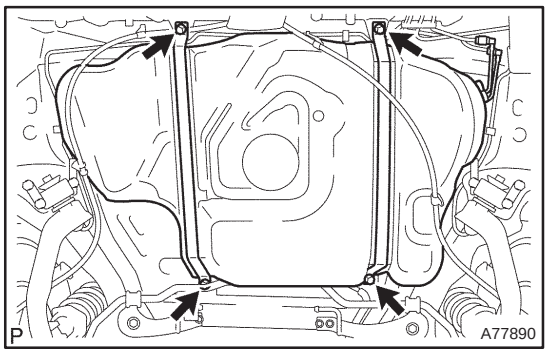

17. REMOVE FUEL TANK ASSY

(a) Set up a transmission jack under the fuel tank.

(b) Remove the 4 bolts and 2 fuel tank bands, and then remove the fuel tank.

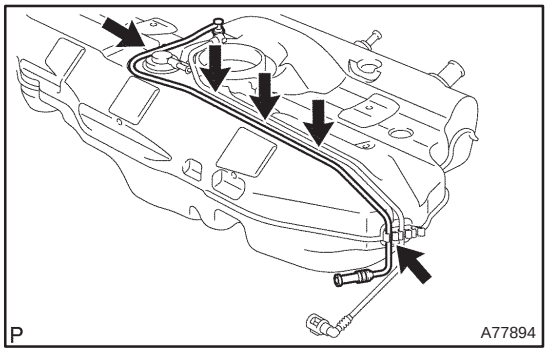

18. REMOVE FUEL TANK MAIN TUBE SUB–ASSY

(a) Unfasten the 5 claws, and remove the fuel tank return tube from the fuel tank.

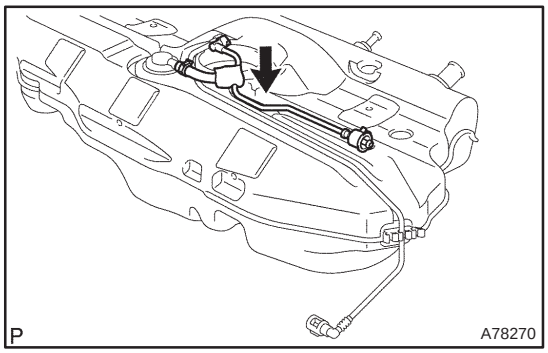

19. REMOVE FUEL EVAPORATION TUBE SUB–ASSY NO.2

(a) Unfasten the claw, and remove the fuel evaporation tube from the fuel tank.

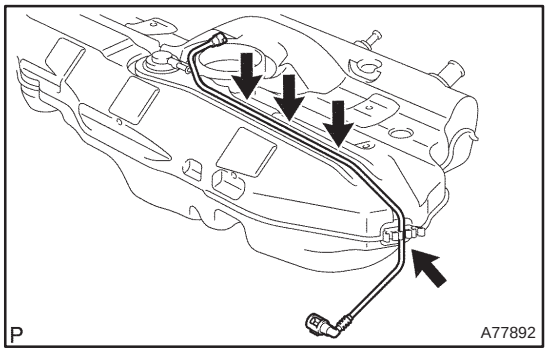

20. REMOVE FUEL TANK MAIN TUBE SUB–ASSY

(a) Unfasten the 4 claws, and remove the fuel tank main tube from the fuel tank.

21. INSTALL FUEL TANK MAIN TUBE SUB–ASSY

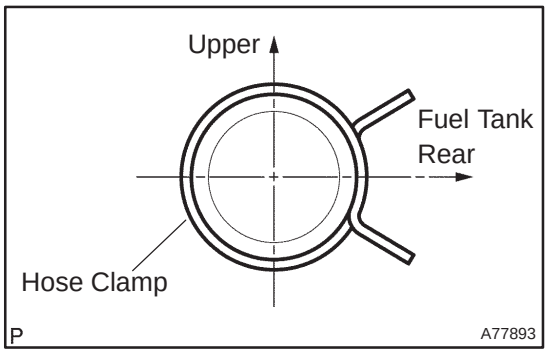

22. INSTALL FUEL EVAPORATION TUBE SUB–ASSY NO.2

(a) Install the hose clamp as shown in the illustration.

23. INSTALL FUEL TANK RETURN TUBE

24. INSTALL FUEL TANK ASSY

Torque: 40 N·m (400 kgf·cm, 29 ft·lbf)

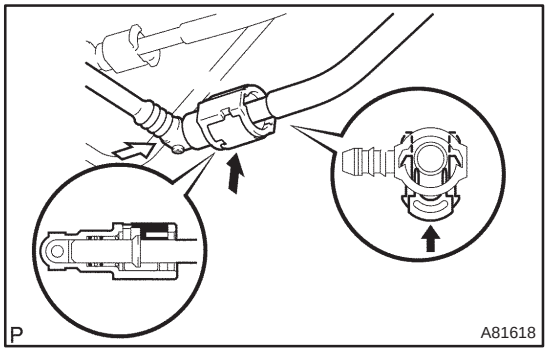

25. CONNECT FUEL TANK MAIN TUBE SUB–ASSY

(a) Push in the fuel tube connector to the pipe, and push up retainer to lock the claws.

NOTICE:

- **Check if there is any damage or foreign objects on the connected part.**
- **After connecting, check if the quick connector and the pipe are securely connected by pulling on them.**

26. CONNECT FUEL TANK RETURN TUBE

27. CONNECT FUEL TANK TO FILLER PIPE HOSE

28. CONNECT BREATHER TUBE FUEL HOSE

29. INSTALL PARKING BRAKE CABLE ASSY NO.3

Torque: 5.4 N·m (55 kgf·cm, 48 in.·lbf)

30. INSTALL PARKING BRAKE CABLE ASSY NO.2

Torque: 5.4 N·m (55 kgf·cm, 48 in.·lbf)

31. INSTALL FUEL TANK PROTECTOR NO.1

Torque: 5.4 N·m (55 kgf·cm, 48 in.·lbf)

32. INSTALL EXHAUST PIPE ASSY FRONT (See page 15–10)

33. ADD FUEL

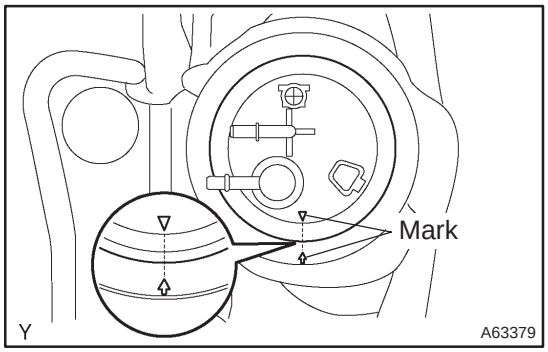

34. INSTALL FUEL AND EVAPORATION VENT TUBE SUB–ASSY

(a) Align the arrow marks of the fuel pump bracket and the fuel tank.

(b) Temporarily install the retainer.

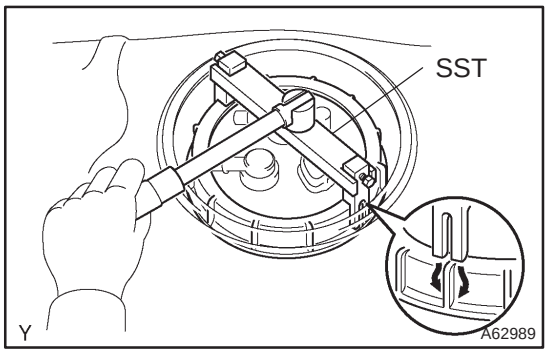

(c) Mount SST to the retainer.
SST 09808–14010

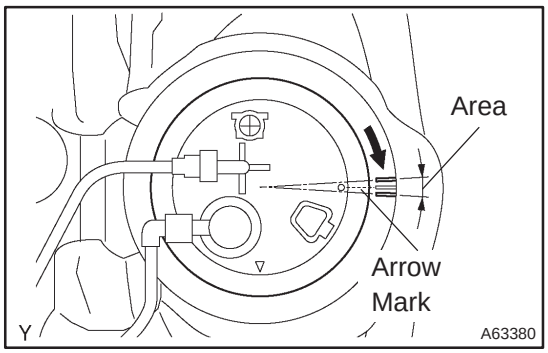

(d) Tighten the retainer until the arrow mark located on the retainer is positioned within the area shown in the illustration.

(e) Check that the arrow marks of the fuel pump bracket and fuel tank are aligned.

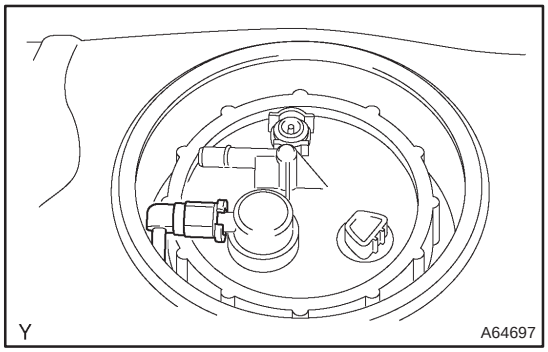

35. CONNECT FUEL EVAPORATION TUBE SUB–ASSY NO.2

(a) Push in the quick connector to the pipe until connector makes ”click” sound.

NOTICE:

- **Check if there is any damage or foreign objects on the connected part of the pipe.**
- **After connecting, check if the pipe and the connector are securely connected by pulling on them.**

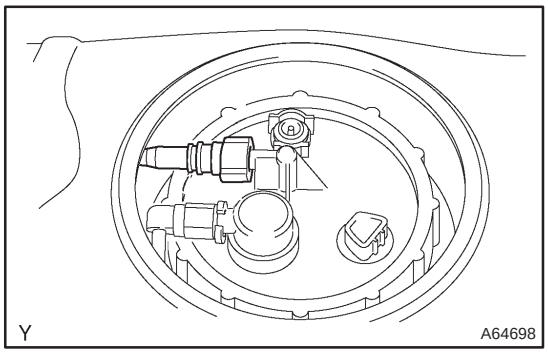

36. CONNECT FUEL TANK MAIN TUBE SUB–ASSY

(a) Push in the quick connector to the pipe until connector makes ”click” sound.

NOTICE:

- **Check if there is any damage or foreign objects on the connected part of the pipe.**
- **After connecting, check if the pipe and the connector are securely connected by pulling on them.**

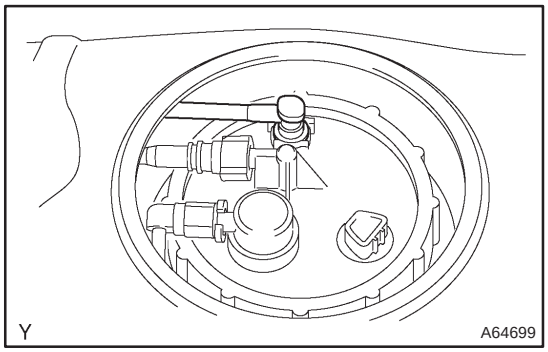

37. CONNECT FUEL TANK RETURN TUBE

(a) Connect the fuel tank return tube with the tube joint clip.

NOTICE:

- **Check that there is no scratch or foreign objects on the connecting parts.**
- **Check that the connector is inserted securely.**
- **Check that the clip of the tube joint is on the collar of the connector.**
- **After installing the tube joint clip, check that the connector is not pulled off.**

38. CHECK FOR FUEL LEAKS (See page 11–60)

39. CHECK FOR EXHAUST GAS LEAKS

40. INSTALL FLOOR PANEL BRACE FRONT (See page 15–10)

41. INSTALL REAR FLOOR SERVICE HOLE COVER

42. INSTALL REAR SEAT CUSHION ASSY (See page 72–27)

EMISSION CONTROL SYSTEM (1ZZ–FE/3ZZ–FE)

1209C–02

ON–VEHICLE INSPECTION

1. INSPECT AIR–FUEL RATIO COMPENSATION SYSTEM

HINT:

You can also check the system by choosing ”DATA MONITOR/ O_2 SENSOR OUTPUT VOLTAGE” on the monitor of the hand–held tester.

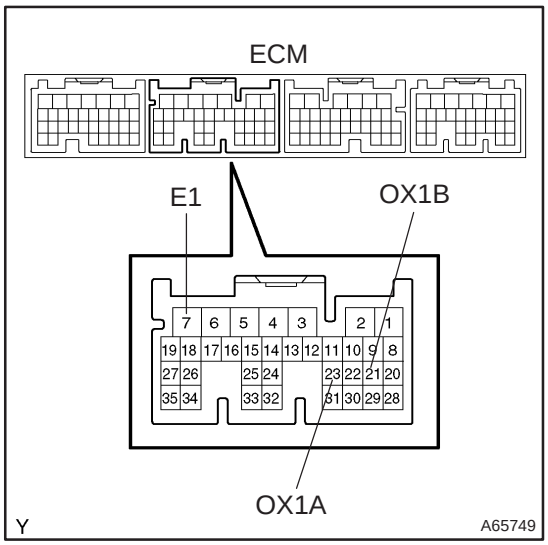

(a) Connect the hand–held tester to the terminals 21 (OX1B) and 7 (E1) and to terminals 23 (OX1A) and 7 (E1) of the ECM.

CAUTION:

Connect test leads from the back side of the connector with the ECM connected.

(b) Warm up the heated oxygen sensor with the engine speed at 2,500 rpm for approximately 2 minutes.

(c) Confirm that the voltage varies output between 0V to 1V with the engine speed at 2,500 rpm.

OK:

The voltage output varies more than 8 times in 10 seconds.

CAUTION:

- **Perform the check immediately after the warming up.**
- **If the voltage variation could not be verified, warm up the heated oxygen sensor again.**

2. INSPECT FUEL CUT OFF RPM

(a) Increase the engine speed to at least 3,500 rpm.

(b) Use a sound scope to check for injector operating sounds.

(c) Check that injector operating sounds stops momentarily and then resumes when the throttle lever is released.

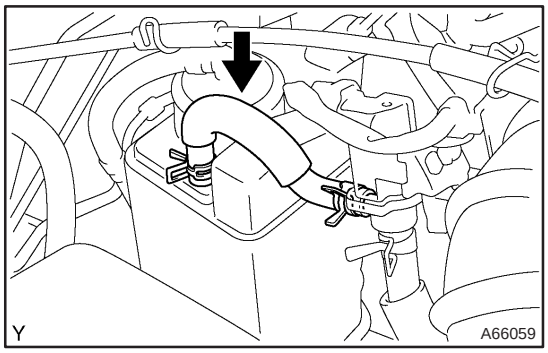

3. INSPECT EVAPORATIVE EMISSION CONTROL SYSTEM

(a) After starting the engine, disconnect the vacuum hose shown in the illustration.

(b) Check if vacuum occurs at the VSV port when choosing ”ACTIVE TEST” and ”PURGE VSV” according to the display on hand–held tester.

(c) Finish ”ACTIVE TEST”, then reconnect the vacuum.

(d) After entering to ”ECU DATA MONITOR” on the hand–held tester, choose ”PURGE VSV” to check the operation of the purge VSV.

(e) After driving the vehicle with a warm engine, confirm that the VSV turns from off to on.

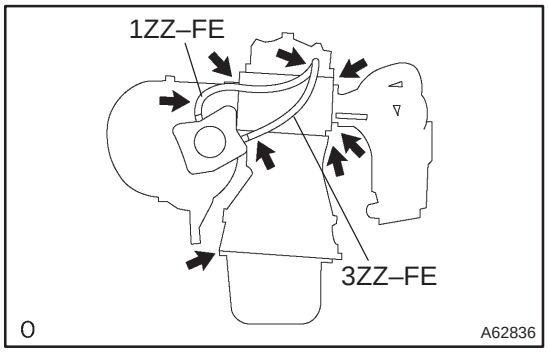

4. VISUALLY INSPECT HOSES, CONNECTIONS AND GASKETS

(a) Check for cracks, leaks or damage.

HINT:

Separation of the engine oil dipstick, oil filler cap, PCV hose, etc. may cause the engine to run improperly. Disconnection, looseness or cracks in the parts of the air induction system between the throttle body and cylinder head will allow air suction and cause the engine to run improperly.

INSPECTION

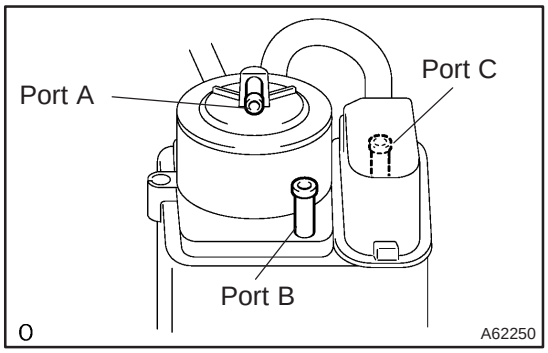

1. INSPECT CHARCOAL CANISTER ASSY

(a) Inspect charcoal canister operation.

(1) Check the charcoal canister operation according to the table below.

SST 09992–00242

Inspection:

Checking method	Result
Close ports B and C, then apply vacuum to port A	No leaks
Close port C, then apply vacuum to port A	Air flows from port B
Close port C, then blow air into port A	Air flows from port B
Blow air into port A	Air flows from ports B and C

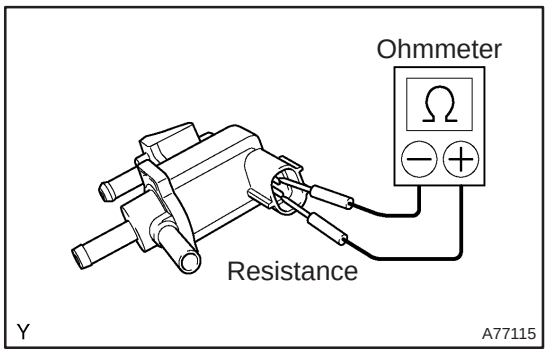

2. INSPECT VACUUM SWITCHING VALVE ASSY NO.1

(a) Inspect VSV for open circuit.

(1) Using an ohmmeter, measure resistance between the terminals.

Resistance: 26 to 30 Ω at 20°C (68°F)

If the resistance is not as specified, replace the VSV.

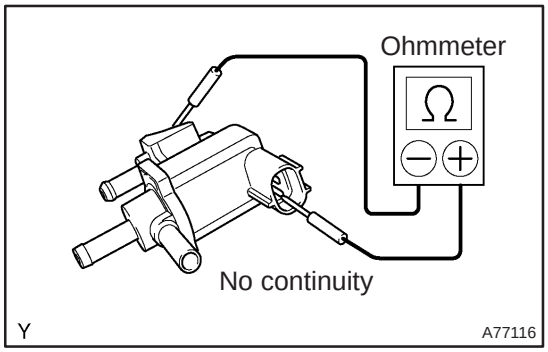

(b) Inspect the VSV for ground.

(1) Using an ohmmeter, check that there is no continuity between each terminal and the body.

If there is continuity, replace the VSV.

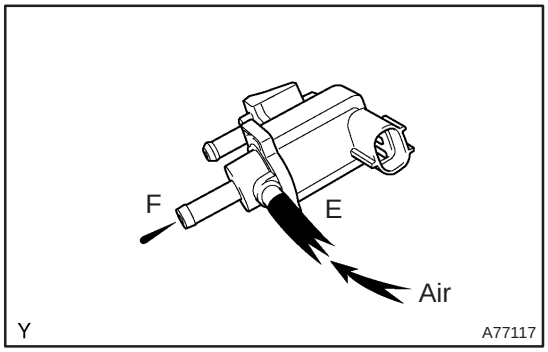

(c) Inspect the VSV operation.

(1) Check that air flows with a little difficulty from port E to port F.

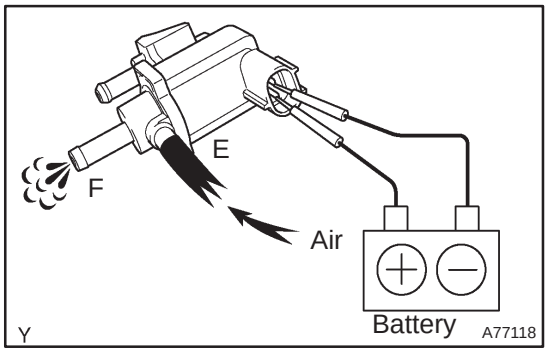

(2) Apply battery voltage across the terminals.
(3) Check that air flows from port E to port F.

If operation is not as specified, replace the VSV.

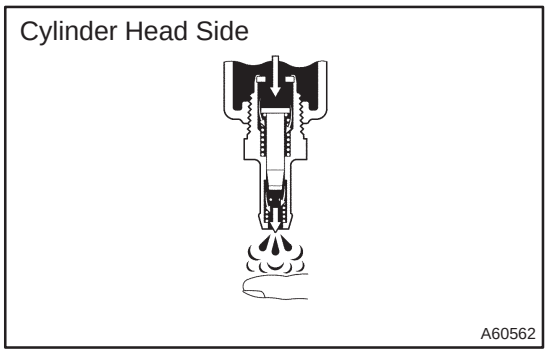

3. INSPECT VENTILATION VALVE SUB–ASSY

(a) Blow air into the cylinder head side, and check that air passes through easily.

CAUTION:

Do not suck air through the valve. If contains petroleum substances and is harmful.

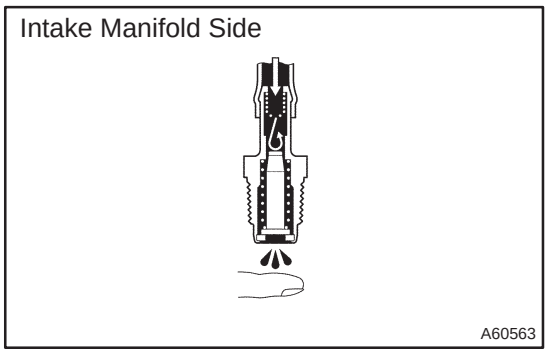

(b) Blow air into the intake manifold side, and check that air passes through with difficulty.

HINT:

If operation is not as specified, replace the PCV valve.

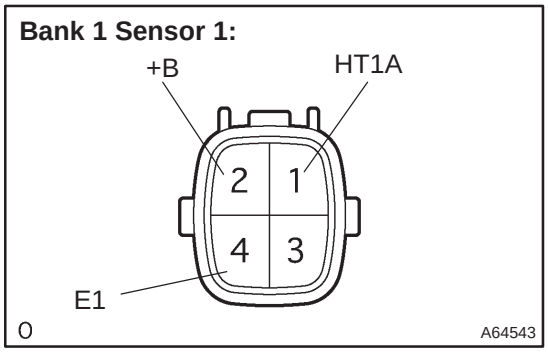

4. IINSPECT HEATED OXYGEN SENSOR

(a) Bank 1 Sensor 1:
(1) Using an ohmmeter, measure the resistance between the terminals.

Resistance:

Terminal No.	Resistance
1 (HT1A) – 2 (+B)	5 to 10 Ω at 20 °C (68 °F)
1 (HT1A) – 4 (E1)	No Continuity

If the resistance is not as specified, replace the sensor.

(b) Bank 1 Sensor 2:
(1) Using an ohmmeter, measure the resistance between the terminals.

Resistance:

Terminal No.	Resistance
1 (HT) – 2 (+B)	11 to 16 Ω at 20 °C (68 °F)
1 (HT) – 4 (E1)	No Continuity

If the resistance is not as specified, replace the sensor.

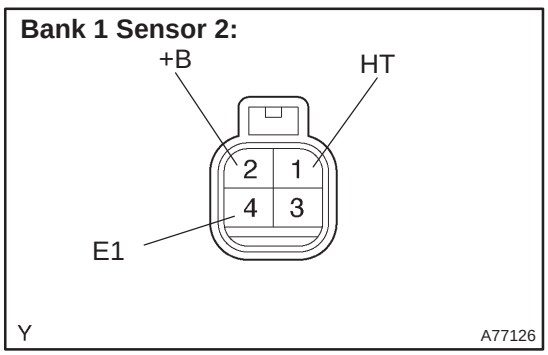

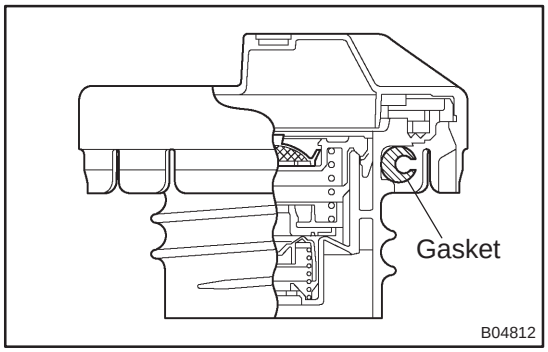

5. INSPECT FUEL TANK CAP ASSY

(a) Visually check if the cap or gasket is deformed or damaged.

EMISSION CONTROL SYSTEM (1AZ–FE)

1209E–02

ON–VEHICLE INSPECTION

1. INSPECT AIR–FUEL RATIO COMPENSATION SYSTEM

HINT:

You can also check the system by choosing ”DATA MONITOR/ O_2 SENSOR OUTPUT VOLTAGE” on the monitor of the hand–held tester.

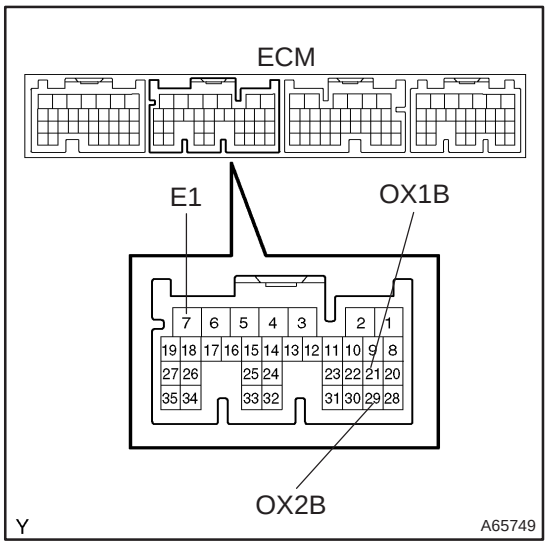

(a) Connect the hand–held tester to terminals 21 (OX1B) and 7 (E1) and to terminals 29 (OX2B) and 7 (E1) of the ECM.

CAUTION:

Connect test leads from the back side of the connector with the ECM connected.

(b) Warm up the heated oxygen sensor with the engine speed at 2,500 rpm for approximately 2 minutes.

(c) Confirm that the voltage output varies between 0V to 1V with the engine speed at 2,500 rpm.

OK:

The voltage output varies more than 8 times in 10 seconds.

CAUTION:

- **Perform the check immediately after the warming up.**
- **If the voltage variation could not be verified, warm up the heated oxygen sensor again.**

2. INSPECT FUEL CUT OFF RPM

(a) Increase the engine speed to at least 3,500 rpm.

(b) Use a sound scope to check for injector operating sounds.

(c) Check that injector operating sounds stops momentarily and then resumes when the throttle lever is released.

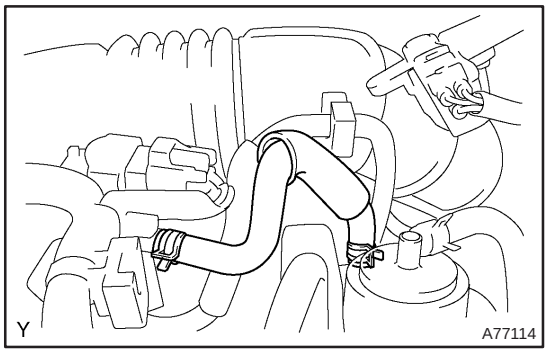

3. INSPECT EVAPORATIVE EMISSION CONTROL SYSTEM

(a) After starting the engine, disconnect the vacuum hose shown in the illustration.

(b) Check if vacuum occurs at the VSV port when choosing ”ACTIVE TEST” and ”PURGE VSV” according to the display on hand–held tester.

(c) Finish ”ACTIVE TEST”, then reconnect the vacuum hose.

(d) After entering to ”ECU DATA MONITOR” on the hand–held tester, choose ”PURGE VSV” to check the operation of the purge VSV.

(e) After driving the vehicle with a warm engine, confirm that the VSV turns from off to on.

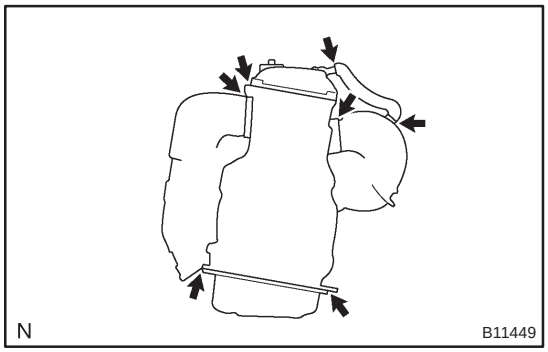

4. VISUALLY INSPECT HOSES, CONNECTIONS AND GASKETS

(a) Check for cracks, leaks or damage.

INSPECTION

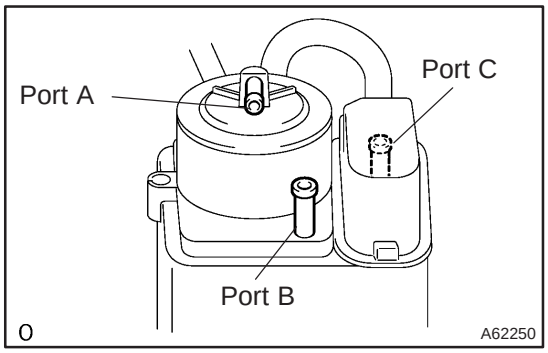

1. INSPECT CHARCOAL CANISTER ASSY

(a) Inspect charcoal canister operation.

(1) Check the charcoal canister operation according to the table below.

SST 09992–00242

Inspection:

Checking method	Result
Close ports B and C, then apply vacuum to port A	No leaks
Close port C, then apply vacuum to port A	Air flows from port B
Close port C, then blow air into port A	Air flows from port B
Blow air into port A	Air flows from ports B and C

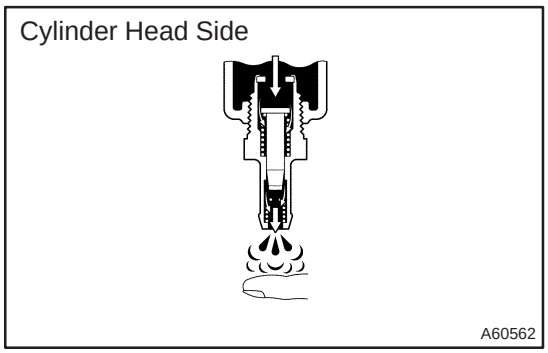

2. INSPECT VENTILATION VALVE SUB–ASSY

(a) Install clean hose to the PCV valve.

(b) Inspect the PCV valve operation.

(1) Blow air into the cylinder head side, and check that air passes through easily.

CAUTION:

Do not suck air through the valve. If contains petroleum substances and is harmful.

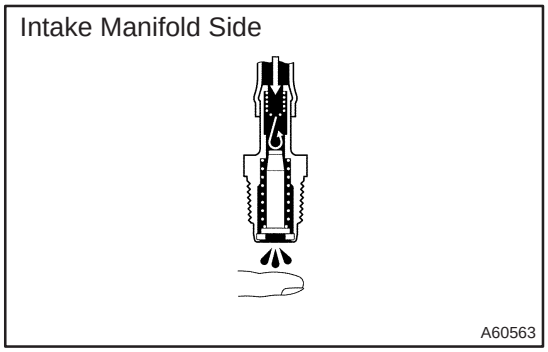

(2) Blow air into the intake manifold side, and check that air passes through with difficulty.

If operation is not as specified, replace the PCV valve.

(c) Remove clean hose from the PCV valve.

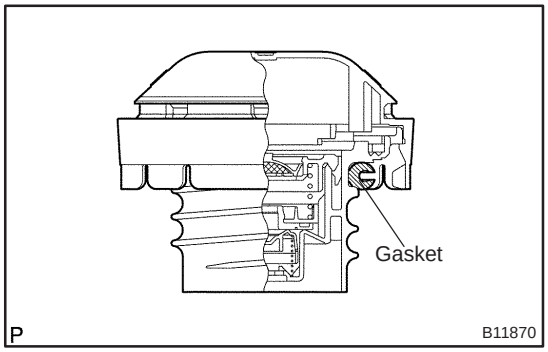

3. INSPECT FUEL TANK CAP ASSY

(a) Visually check if the cap or gasket is deformed or damaged.

If necessary, repair or replace the cap.

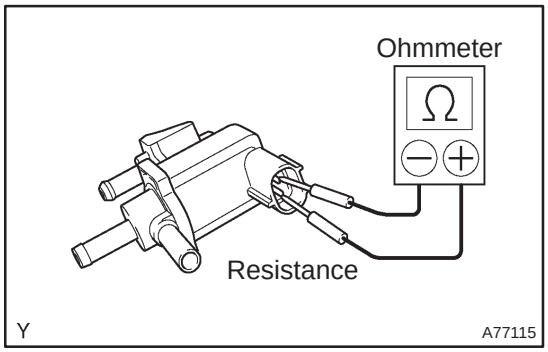

4. INSPECT VACUUM SWITCHING VALVE ASSY NO.1

(a) Inspect VSV for open circuit.

(1) Using an ohmmeter, measure resistance between the terminals.

Resistance: 26 to 30 Ω at 20°C (68°F)

If the resistance is not as specified, replace the VSV.

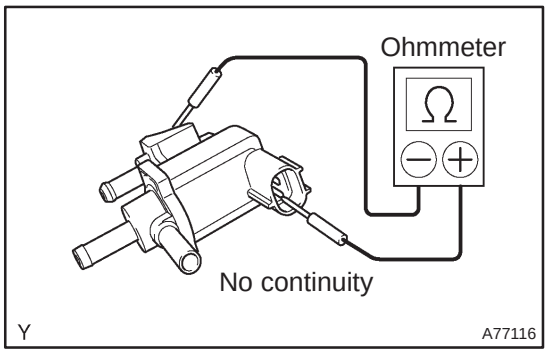

(b) Inspect the VSV for ground.

(1) Using an ohmmeter, check that there is no continuity between each terminal and the body.

If there is continuity, replace the VSV.

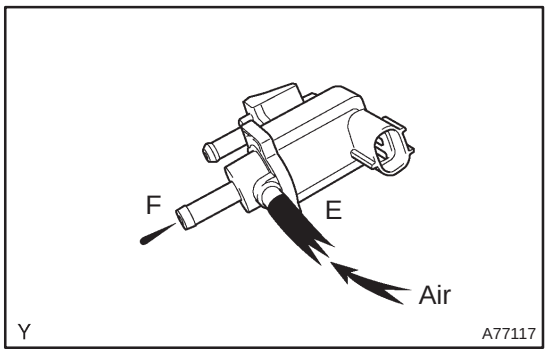

(c) Inspect the VSV operation.

(1) Check that air flows with a little difficulty from port E to port F.

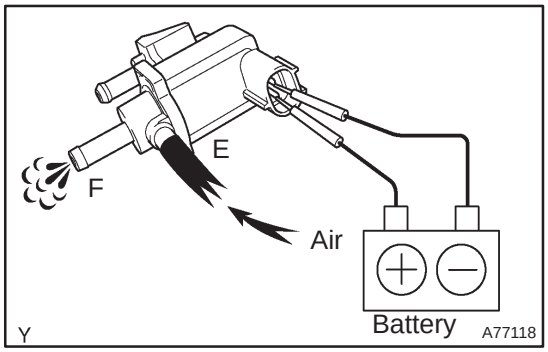

(2) Apply battery voltage across the terminals.

(3) Check that air flows from port E to port F.

If operation is not as specified, replace the VSV.

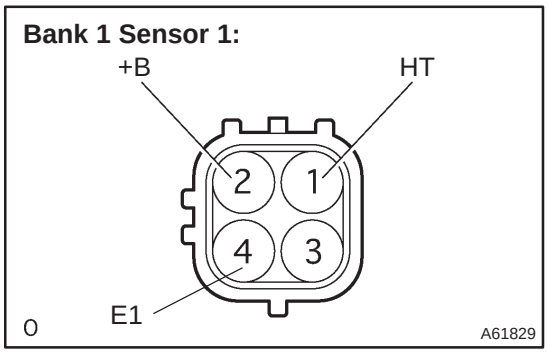

5. INSPECT AIR FUEL RATIO SENSOR

(a) Bank 1 Sensor 1:

(1) Using an ohmmeter, measure the resistance between the terminals.

Resistance:

Terminal No.	Resistance
1 (HT) – 2 (+B)	1.8 to 3.4 Ω at 20 °C (68 °F)
1 (HT) – (+B)	5.0 to 7.5 Ω at 500 °C (932 °F)
1 (HT) – 4 (E1)	No Continuity

If the resistance is not as specified, replace the sensor.

Bank 2 Sensor 1:

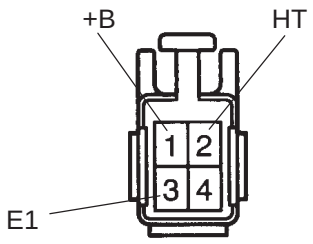

(b) Bank 2 Sensor 1:

(1) Using an ohmmeter, measure the resistance between the terminals.

Resistance:

Terminal No.	Resistance
1 (HT) – 2 (+B)	1.8 to 3.4 Ω at 20 °C (68 °F)
1 (HT) – 2 (+B)	5.0 to 7.5 Ω at 500 °C (932 °F)
1 (HT) – 4 (E1)	No Continuity

If the resistance is not as specified, replace the sensor.

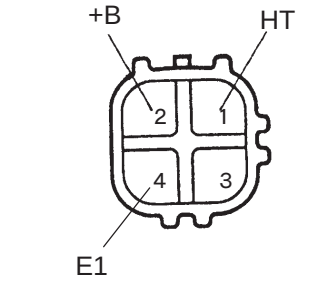

6. INSPECT HEATED OXYGEN SENSOR

(a) Using an ohmmeter, measure the resistance between the terminals.

Resistance:

Terminal No.	Resistance
1 (HT) – 2 (+B)	11 to 16 Ω at 20 °C (68 °F)
1 (HT) – 4 (E1)	No Continuity

If the resistance is not as specified, replace the sensor.

EMISSION CONTROL SYSTEM (1AZ–FSE)

1209G–02

ON–VEHICLE INSPECTION

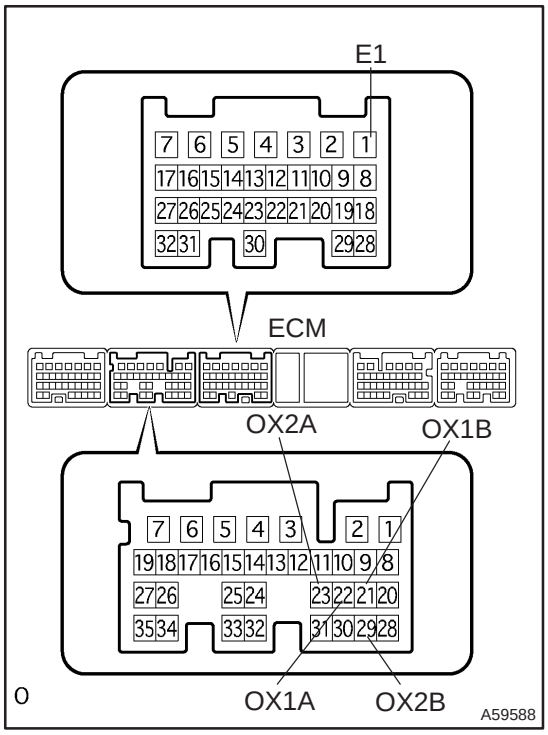

1. INSPECT AIR–FUEL RATIO COMPENSATION SYSTEM

HINT:

You can also check the system by choosing ”DATA MONITOR/ O_2 SENSOR OUTPUT VOLTAGE” on the monitor of the hand–held tester.

(a) Connect the hand–held tester to the following each pair of the ECM terminals:
  (1) Terminals 21 (OX1B) and 1 (E1)
  (2) Terminals 22 (OX1A) and 1 (E1)
  (3) Terminals 23 (OX2A) and 1 (E1)
  (4) Terminals 29 (OX2B) and 1 (E1)

CAUTION:

Connect test leads from the back side of the connector with the ECU connected.

(b) Warm up the heated oxygen sensor with the engine speed at 2,500 rpm for approximately 2 minutes.

(c) Confirm that the voltage output varies between 0V to 1V with the engine speed at 2,500 rpm.

OK:

The voltage output varies more than 8 times in 10 seconds.

CAUTION:

- **Perform the check immediately after the warming up.**
- **If the voltage variation could not be verified, warm up the heated oxygen sensor again.**

2. INSPECT FUEL CUT OFF RPM

(a) Increase the engine speed to at least 3,500 rpm.

(b) Use a sound scope to check for injector operating sounds.

(c) Check that the injector operating sounds stops momentarily and then resumes that when the throttle lever is released.

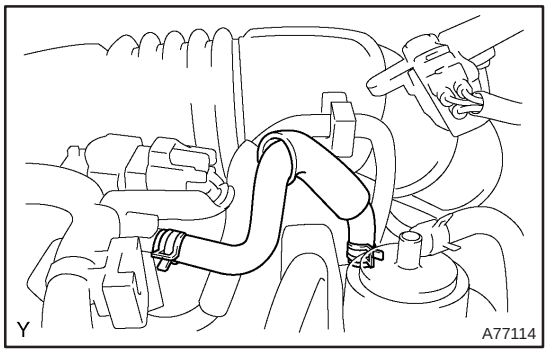

3. INSPECT EVAPORATIVE EMISSION CONTROL SYSTEM

(a) After starting the engine, disconnect the vacuum hose shown in the illustration.

(b) Check if vacuum occurs at the VSV port when choosing ”ACTIVE TEST” and ”PURGE VSV” according to the display on hand–held tester.

(c) Finish ”ACTIVE TEST”, then reconnect the vacuum hose.

(d) After entering to ”ECU DATA MONITOR” on the hand–held tester, choose ”PURGE VSV” to check the operation of the purge VSV.

(e) After driving the vehicle with a warm engine, confirm that the VSV turns from off on to.

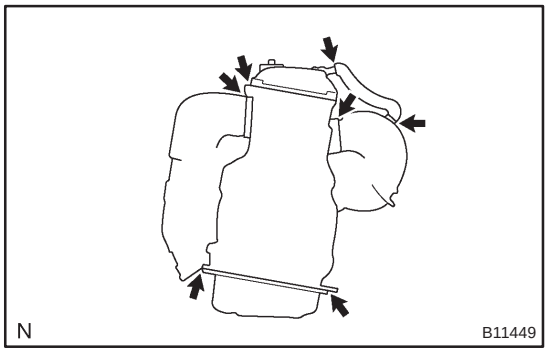

4. VISUALLY INSPECT HOSES, CONNECTIONS AND GASKETS

(a) Check for cracks, leaks or damage.

INSPECTION

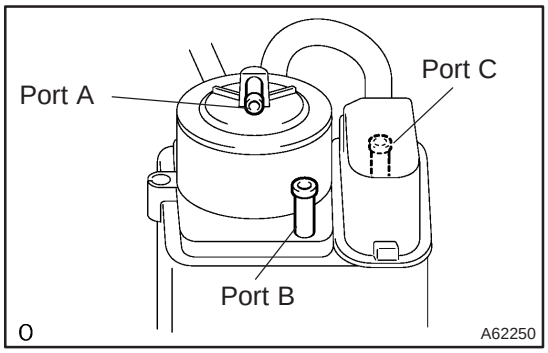

1. INSPECT CHARCOAL CANISTER ASSY

(a) Inspect charcoal canister operation.

(1) Check the charcoal canister operation according to the table below.

SST 09992–00242

Checking method	Result
Close ports B and C, then apply vacuum to port A	No leaks
Close port C, then apply vacuum to port A	Air flows from port B
Close port C, then blow air into port A	Air flows from port B
Blow air into port A	Air flows from ports B and C

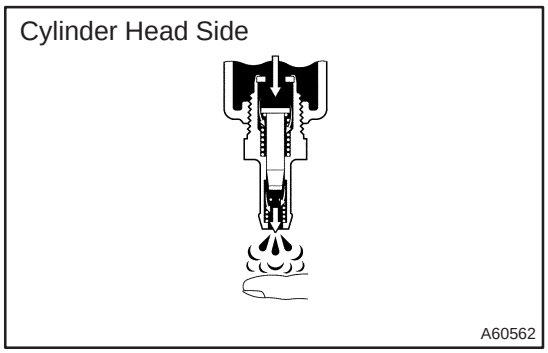

2. INSPECT VENTILATION VALVE SUB–ASSY

(a) Install clean hose to the PCV valve.

(b) Inspect the PCV valve operation.

(1) Blow air into the cylinder head side, and check that air passes through easily.

CAUTION:

Do not suck air through the valve. If contains petroleum substances and is harmful.

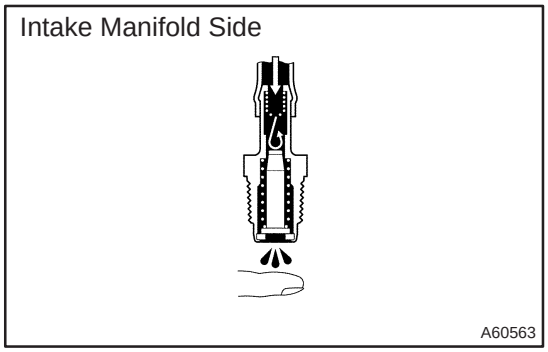

(2) Blow air into the intake manifold side, and check that air passes through with difficulty.

If operation is not as specified, replace the PCV valve.

(c) Remove clean hose from the PCV valve.

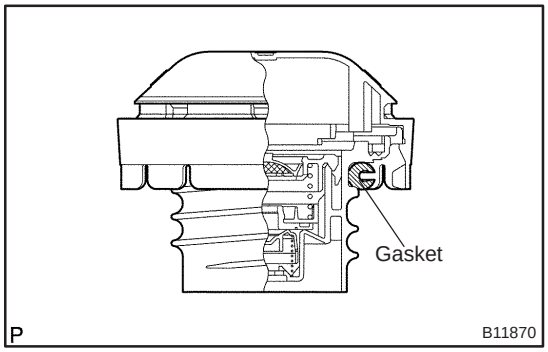

3. INSPECT FUEL TANK CAP ASSY

(a) Visually check if the cap or gasket is deformed or damaged.

If necessary, repair or replace the cap.

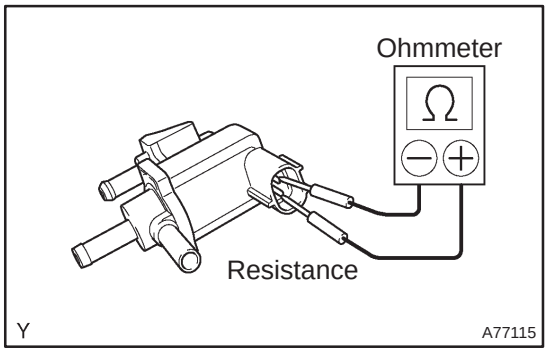

4. INSPECT VACUUM SWITCHING VALVE ASSY NO.1

(a) Inspect VSV for open circuit.

(1) Using an ohmmeter, measure resistance between the terminals.

Resistance: 26 to 30 Ω at 20°C (68°F)

If the resistance is not as specified, replace the VSV.

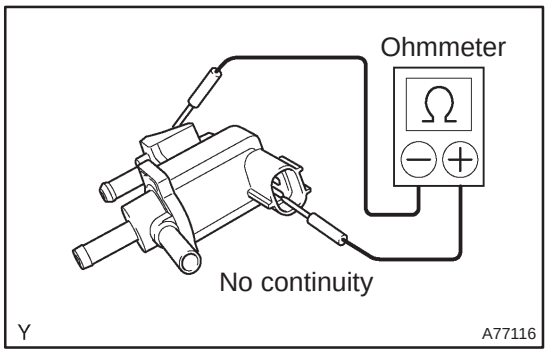

(b) Inspect the VSV for ground.

(1) Using an ohmmeter, check that there is no continuity between each terminal and the body.

If there is continuity, replace the VSV.

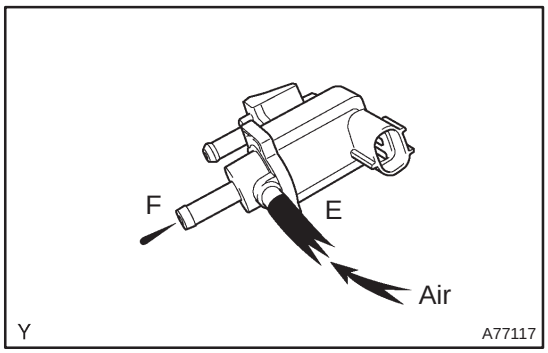

(c) Inspect the VSV operation.

(1) Check that air flows with a little difficulty from port E to port F.

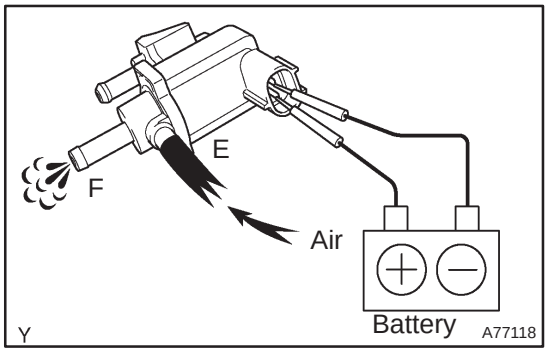

(2) Apply battery voltage across the terminals.

(3) Check that air flows from port E to port F.

If operation is not as specified, replace the VSV.

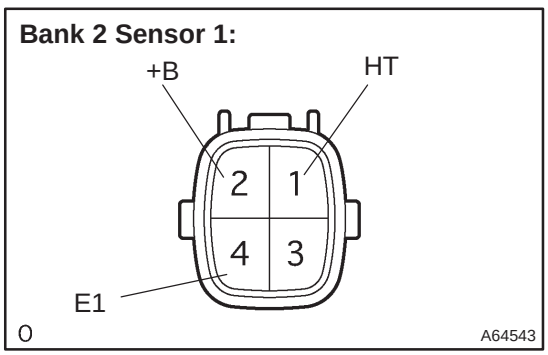

5. INSPECT HEATED OXYGEN SENSOR

(a) Bank 2 Sensor 1:

(1) Using an ohmmeter, measure the resistance between the terminals.

Resistance:

Terminal No.	Resistance
1 (HT) – 2 (+B)	11 to 16 Ω at 20 °C (68 °F)
1 (HT) – 4 (E1)	No Continuity

If the resistance is not as specified, replace the sensor.

Bank 2 Sensor 2:

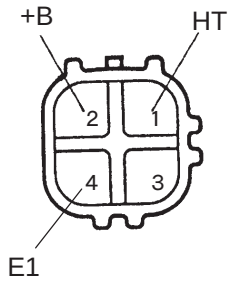

(b) Bank 2 Sensor 2:

(1) Using an ohmmeter, measure the resistance between the terminals.

Resistance:

Terminal No.	Resistance
1 (HT) – 2 (+B)	11 to 16 Ω at 20 °C (68 °F)
1 (HT) – 4 (E1)	No Continuity

If the resistance is not as specified, replace the sensor.

Bank 1 Sensor 1, 2:

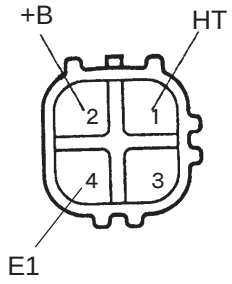

(c) Bank 1 Sensor 1, 2:

(1) Using an ohmmeter, measure the resistance between the terminals.

Resistance:

Terminal No.	Resistance
1 (HT) – 2 (+B)	11 to 16 Ω at 20 °C (68 °F)
1 (HT) – 4 (E1)	No Continuity

If the resistance is not as specified, replace the sensor.

EMISSION CONTROL SYSTEM (1CD–FTV)

1203V–03

ON–VEHICLE INSPECTION

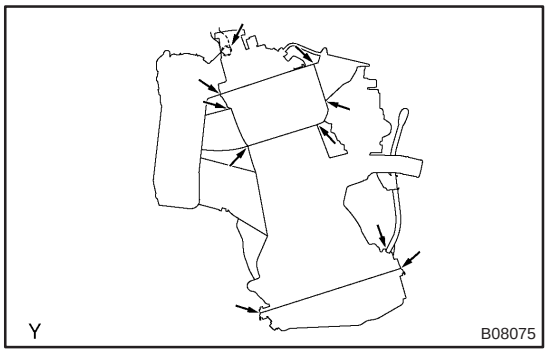

1. VISUALLY INSPECT HOSES, CONNECTIONS AND GASKETS

(a) Check for cracks, leak or damage.

HINT:

Separation of the engine oil dipstick, oil filler cap, PCV hose, etc. may cause the engine to run improperly. Disconnection, looseness or cracks in the parts of the air induction system between the throttle body and cylinder head will allow air suction and cause the engine to run improperly.

EGR SYSTEM (1CD–FTV)

1209I–02

ON–VEHICLE INSPECTION

HINT:

In a malfunction where the EGR system is always on, black smoke or white smoke may be emitted from the exhaust pipe. If this occurs, inspect the EGR system as well.

1. INSPECT SEATING OF EGR VALVE

(a) Start the engine and check that it starts and runs at idle.

2. INSPECT HOT ENGINE CONDITION (WHEN USING HAND–HELD TESTER)

(a) Connect the hand–held tester to the DLC3.

(b) Start the engine and run it at idle.

(c) Select the ACTIVE TEST mode on the hand–held tester.

HINT:

Refer to the hand–held tester operator's manual for further details.

(d) Warm up the engine, the coolant temperature should be above 75°C (109°F) and bellow 90°C (194°F).

(e) Check that the AFM reading is 5 ≦ ega ≦ 8 g/s with the engine idling.

(f) Operate the EGR valve with a hand–held tester. Regulate the valve opening angle to 0, and check that the AFM reading is 11 ≦ ega ≦ 17 g/s..

If the AFM reading is out of range in either (e) or (f), replace the EGR valve.

If the AFM is out of range in both (e) and (f), replace the air flow meter (air cleaner) and check the EGR valve operation again.

3. INSPECT HOT ENGINE CONDITION (WHEN NOT USING HAND–HELD TESTER)

(a) Install the vacuum gauge.

(1) Using a 3–way connector, connect a vacuum gauge to the hose between the intake manifold and the turbo pressure sensor.

(b) Warm up the engine, the coolant temperature should be above 75°C (109°F) and bellow 90°C (194°F).

(c) Check that the vacuum gauge indicates about more than 2.5 kPa (19 mmHg 0.7 in Hg).

(d) Stop the engine (IG OFF), remove the EGR valve connector, restart the engine, and check that load under idling is less than 2.5 kPa (19 mmHg 0.7 in Hg).

If the load pressure exceeds the above value, replace the EGR valve.

1209J–02

INSPECTION

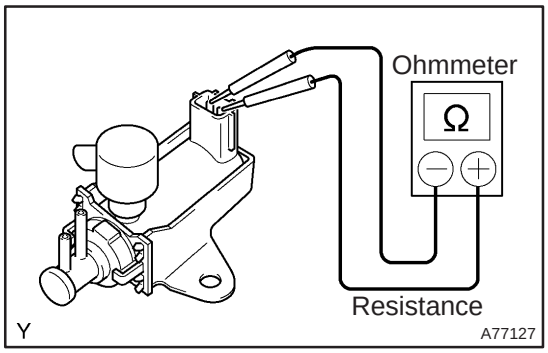

1. INSPECT VACUUM REGULATING VALVE ASSY

(a) Inspect E–VRV for open circuit

(1) Using an ohmmeter, measure resistance between the terminals.

Resistance:
10 to 14 Ω at 20˚C (68˚F)

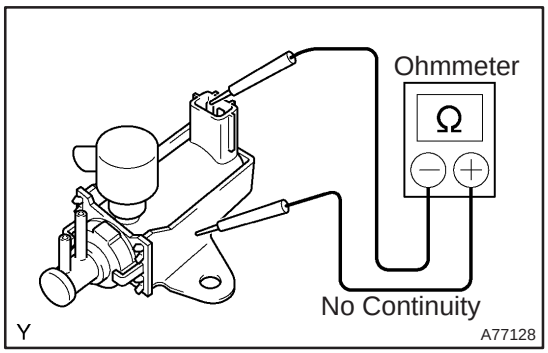

(b) Inspect E–VRV for ground

(1) Using an ohmmeter, check that there is no continuity between each terminal and the body.

Specified condition : No continuity

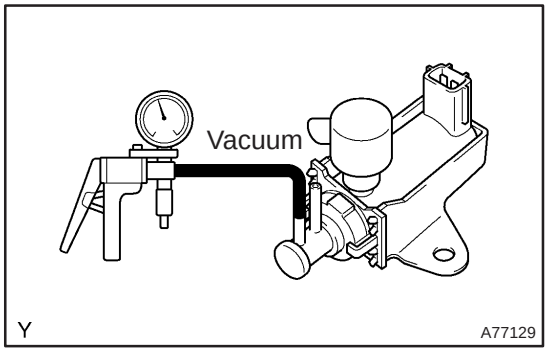

(c) Inspect E–VRV for air tightness

(1) Apply vacuum to the vacuum output port. Check that the needle of vacuum pump indicates an increase of 66.7 kPa (500 mmHg, 19.7 in.Hg) or more.

If the air tightness is not as specified, replace the E–VRV.

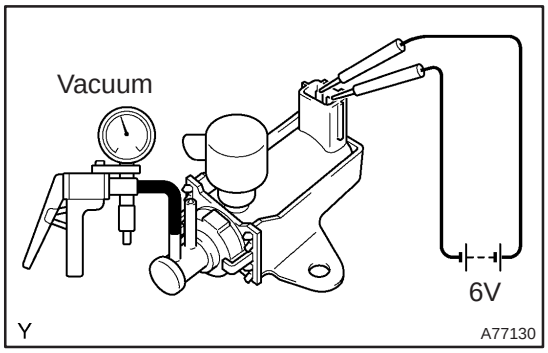

(d) Inspect E–VRV operation

(1) Apply about 4 dry batteries of 1.5V in series.

(2) Check that the need does not move when vacuum is applied to the vacuum outlet port.

If operation is not as specified, replace the E–VRV.

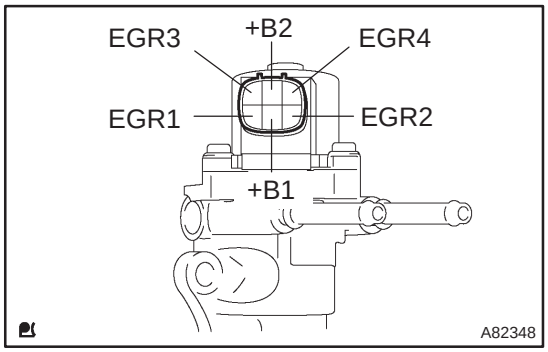

2. INSPECT EGR VALVE ASSY

(a) Using an ohmmeter, measure the resistance between the terminals.

Terminal	Resistance at 20 °C (68 °F)
+B1 – EGR1	19.6 ± 1.4 Ω
+B1 – EGR2	19.6 ± 1.4 Ω
+B2 – EGR3	19.6 ± 1.4 Ω
+B2 – EGR4	19.6 ± 1.4 Ω

INTAKE AIR CONTROL SYSTEM (1AZ–FSE)

1302G–03

ON–VEHICLE INSPECTION

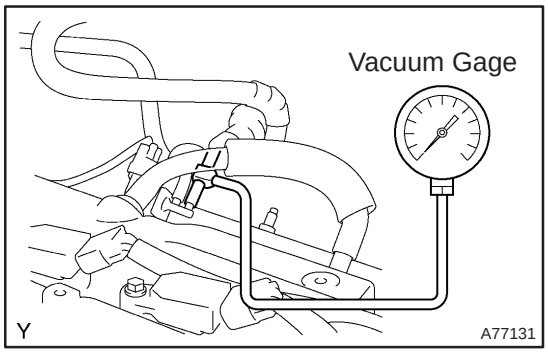

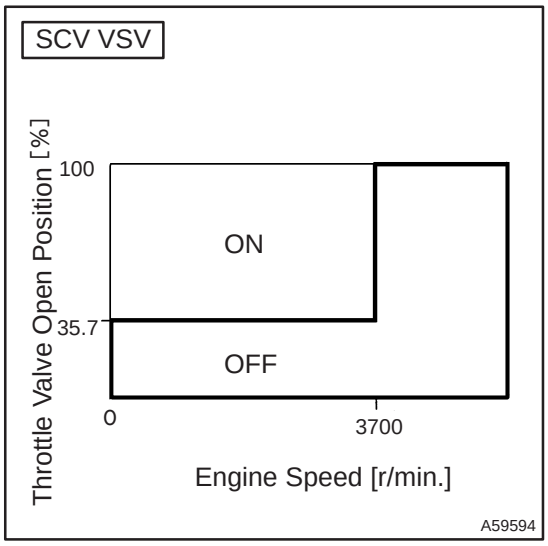

1. INSPECT INTAKE AIR CONTROL SYSTEM

(a) Using a 3–way connector, connect vacuum gauge to the actuator hose.

(b) Connect the hand–held tester to the DLC 3.

(c) Start the engine.

(d) Select the active test mode according to the message on the hand–held tester.

Vacuum:

VSV ON	Approx. 27 kPa (200 mm Hg, 7.9 in. Hg)
VSV OFF	0 kPa (0 mm Hg, 0 in. Hg.)

(e) Shift the transmission into the P range and control the accelerator pedal.

(f) Check the VSV operation using the hang–held tester.

HINT:

The value in the illustration is only for reference; the throttle valve may operate diversely depend on the engine running condition.

INSPECTION

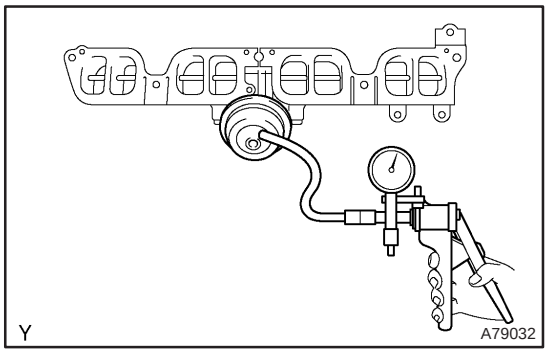

1. INSPECT INTAKE AIR CONTROL VALVE ASSY

(a) With 34.7 kPa (260 mm Hg, 10.2 in. Hg) of vacuum applied to the actuator, check that the actuator rod moves.

(b) One minute after applying the vacuum, check that the actuator rod does not return.

(c) If the operation is not as specified, replace the intake air control valve assembly.

NOTICE:

Do not touch the adjust screw.

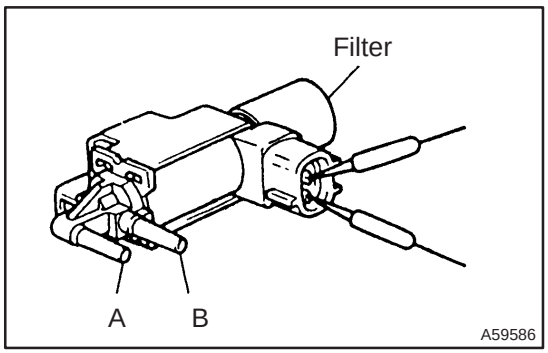

2. INSPECT VACUUM SWITCHING VALVE ASSY NO.1

(a) Using an ohmmeter, measure resistance between each terminal.

Resistance: 33 to 39 Ω at 20°C (68°F)

(b) Check that air flows form port B to the filter.

(c) Apply battery voltage across the terminals.

(d) Check that air flows from port B to port A.

TURBO CHARGER SYSTEM (1CD–FTV)

1302Y–03

PRECAUTION

1. MAINTENANCE PRECAUTION

(a) Do not stop the engine immediately after pulling a trailer, or after driving at a high speed, or uphill drive. Let the engine Idle for 20 to 120 seconds before turn the ignition switch OFF (According as the driving condition, the idling time varies).

(b) Avoid quick acceleration or quickly accelerating the engine RPM immediately after the starting a cold engine.

(c) If the turbocharger is found to be defective, it must be replaced. Also, inspect a source of the trouble including conditions of the turbocharger that having been used. Repair or replace the followings as necessary:
  (1) Engine oil (Level and quality)
  (2) Oil lines leading to the turbocharger

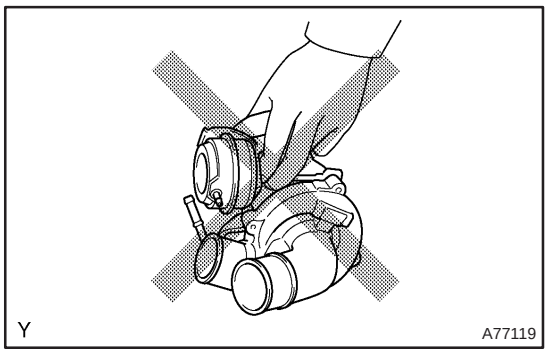

(d) Pay due attention when removing and reinstalling the turbocharger assembly. Do not drop, or do not give shock, or do not grasp easily–deformed assembly parts such as the actuator or push rod in removal and reinstallation.

(e) Before removal, cover both the intake and exhaust ports and the oil inlet to prevent dirt or foreign objects from being introduced.

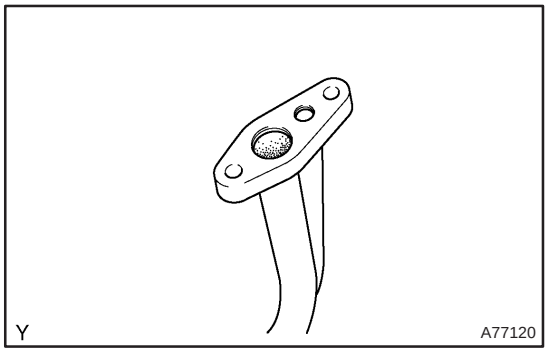

(f) If replacing the turbocharger, check for deposits in the oil pipe. If necessary, replace the oil pipe too.

(g) Thoroughly remove old gasket sticking to the lubrication oil pipe flange and the turbocharger oil flange.

(h) If replacing the bolt(s) or nut(s), must use Toyota genuine parts to prevent breakage or deformation.

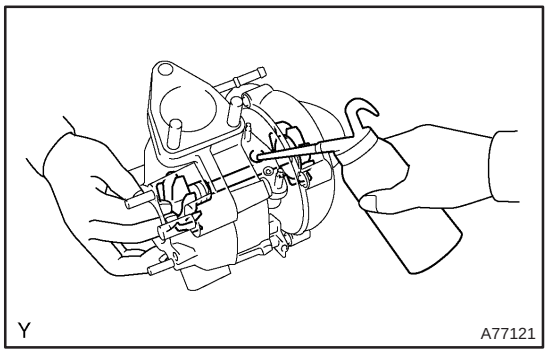

(i) If replacing the turbocharger, put 20 cm^3 (1.2 cu in.) of fresh oil into the turbocharger oil inlet hole and turn the turbine wheel by hand to spread oil to the bearing.

(j) If overhauling or replacing the engine, cut the fuel supply after reassembly and crank the engine for 30 seconds to feed oil throughout the engine then run the engine at idle for 60 seconds.

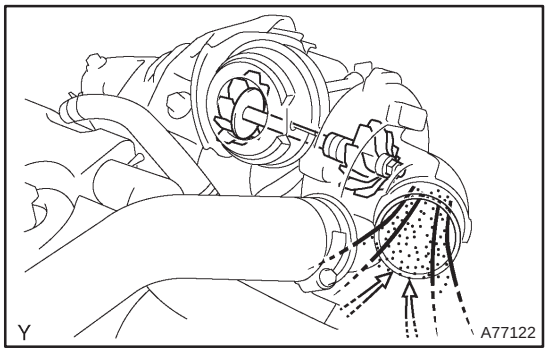

(k) Since the turbine wheels runs at an extremely high speed, if the engine is running without the air cleaner, case cover and hose, damage to the turbine wheel will result by introduced foreign particle.

1302Z–03

ON–VEHICLE INSPECTION

1. INSPECT INTAKE AIR SYSTEM

(a) Check for leakage or clogging between the air cleaner housing and turbocharger inlet and between the turbocharger outlet and cylinder head.
  (1) Clogged air cleaner...Clean or replace element
  (2) Hoses collapsed or deformed...Repair or replace
  (3) Leakage from connections...Check each connection and repair
  (4) Cracks in components...Check and replace

2. INSPECT EXHAUST SYSTEM

(a) Check for leakage or clogging between the cylinder head and turbocharger inlet and between the turbocharger outlet and exhaust pipe.
  (1) Deformed components...Repair or replace
  (2) Foreign material in passages...Remove
  (3) Leakage from components...Repair or replace
  (4) Cracks in components...Check and replace

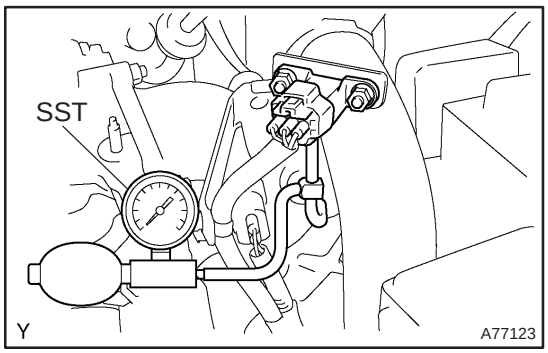

3. CHECK TURBOCHARGING PRESSURE

(a) Warm up the engine.

(b) Using a 3–way connector, connect SST (turbocharger pressure gauge) to the hose leading to the intake air connector.
  SST 09992 – 00242

(c) While depressing the clutch pedal, press the accelerator pedal down to the full. Measure the turbocharging pressure at maximum speed (5,100 to 5,250 rpm).
  Standard pressure:
  15 to 45 kPa (0.15 to 0.46 kgf/cm^2, 2.2 to 6.5 psi)

If the pressure is less than specification, check both the intake air and exhaust systems for leakage.

If there is no leakage, check if the actuator hose has disconnected. If not, check the turbocharger.

If the pressure is greater than specification, check if the actuator hose has disconnected or cracked. If not, check the turbocharger.

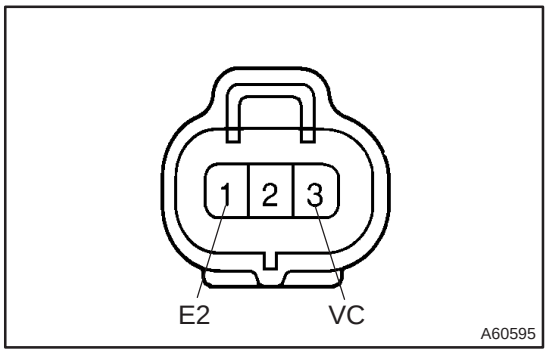

4. INSPECT TURBO PRESSURE SENSOR

(a) Inspect power source voltage
  (1) Disconnect the turbo pressure sensor connector.
  (2) Turn the ignition switch ON.
  (3) Using a voltmeter, measure the voltage between connector terminals 3 (VC) and 1 (E2) of the wiring harness side.
  Voltage: 4.5 to 5.5 V
  (4) Turn the ignition switch OFF.
  (5) Reconnect the turbo pressure sensor connector.

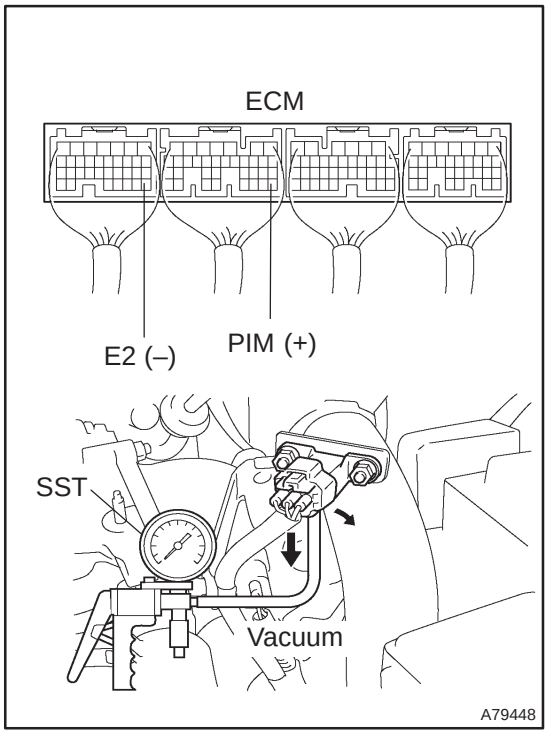

(b) Inspect supply power
(1) Turn the ignition switch ON.
(2) Disconnect the vacuum hose from the turbo pressure sensor.
(3) Connect a voltmeter to terminals 35 (PIM) and 28 (E2) of the ECM and measure the output voltage under atmospheric pressure.
(4) Apply vacuum to the turbo pressure sensor in 13.3 kPa (100 mmHg, 3.94 in.Hg) segments to 66.7 kPa (500 mmHg, 19.96 in.Hg).
(5) Measure the voltage decrease from step (3) above for each segment.

Voltage drop:

Apply Vacuum [kPa (mmHg, in.Hg)]	Voltage Decrease [V]
13.3 (100, 3.94)	0.1 to 0.3
26.7 (200, 7.87)	0.3 to 0.5
40.0 (300, 11.81)	0.5 to 0.7
57.3 (400, 15.75)	0.7 to 0.9
66.7 (500, 19.96)	0.9 to 1.0

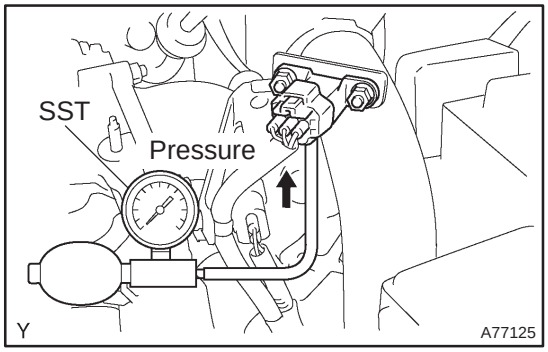

(6) Using SST (turbocharger pressure gauge), apply pressure to the turbo pressure sensor in 19.6 kPa (0.20 kgf/cm^2, 2.84 psi) segments to 98.0 kPa (1.00 kgf/cm^2, 14.2 psi).

SST 09992–00242

(7) Measure the voltage increase from step (3) above for each segment.

Voltage up:

Applied Pressure [kPa (kgf/cm^2, psi)]	Voltage Increase [V]
19.6 (0.20, 2.84)	0.1 to 0.4
39.2 (0.40, 5.69)	0.4 to 0.7
58.8 (0.60, 8.53)	0.7 to 1.0
78.5 (0.80, 11.4)	1.0 to 1.3
98.0 (1.00, 14.2)	1.3 to 1.6

INSPECTION

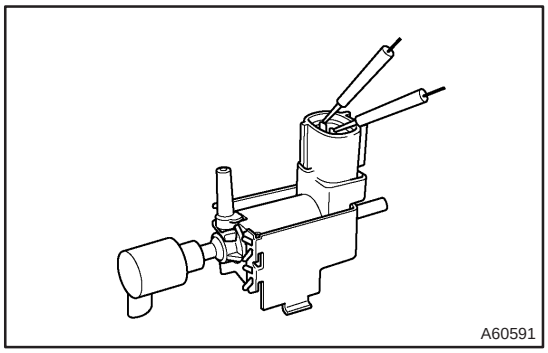

1. VACUUM SWITCHING VALVE ASSY NO.1

(a) Inspect VSV for open circuit.
(1) Using an ohmmeter, check that the there is continuity between the terminals.
Resistance: 37 – 44 Ω at 20°C (68°F)

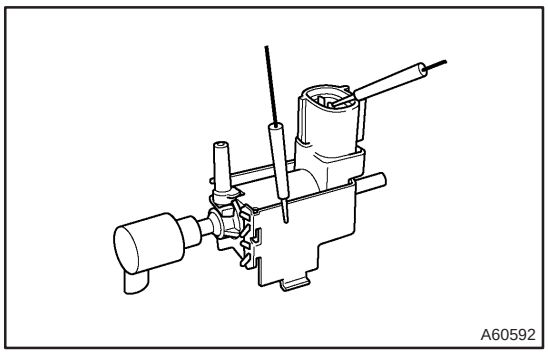

(b) Inspect VSV for ground.
(1) Using an ohmmeter, check that there is no continuity between each terminal and the body.
Specified condition: No continuity

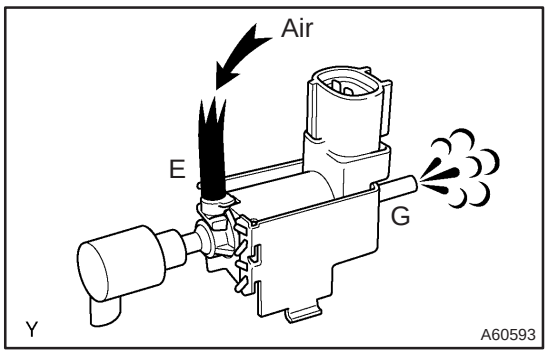

(c) Inspect VSV operation.
(1) Check that air flows from port E to G.

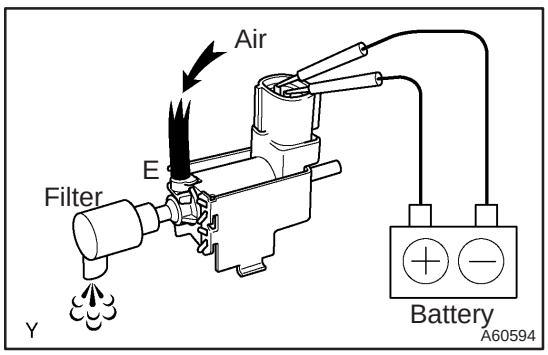

(2) Apply battery voltage across the terminals.
(3) Check that air flows from port E to filter.

TURBOCHARGER SUB–ASSY (1CD–FTV)

1306Y–01

COMPONENTS

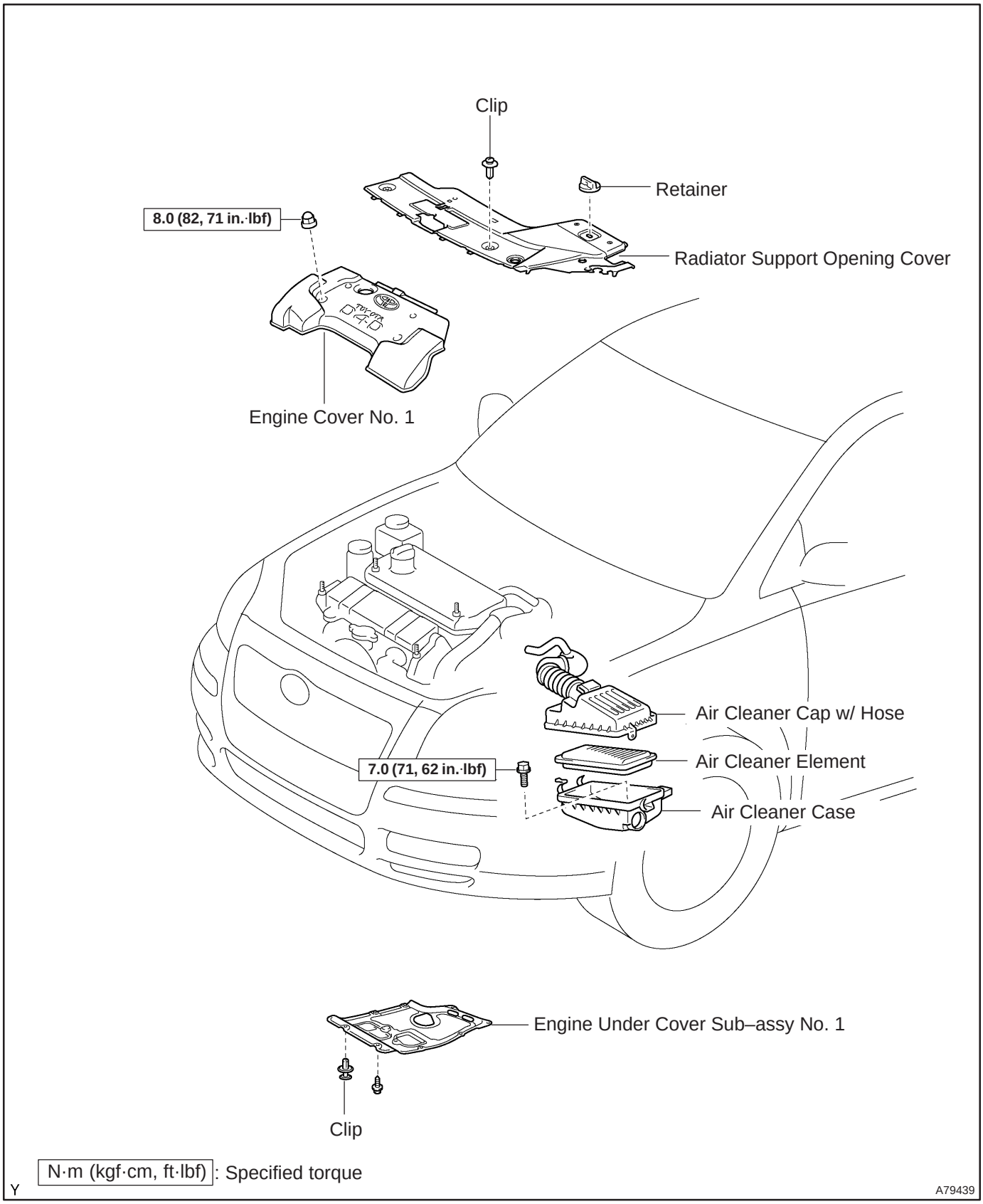

N·m (kgf·cm, ft·lbf): Specified torque

Y

A79439

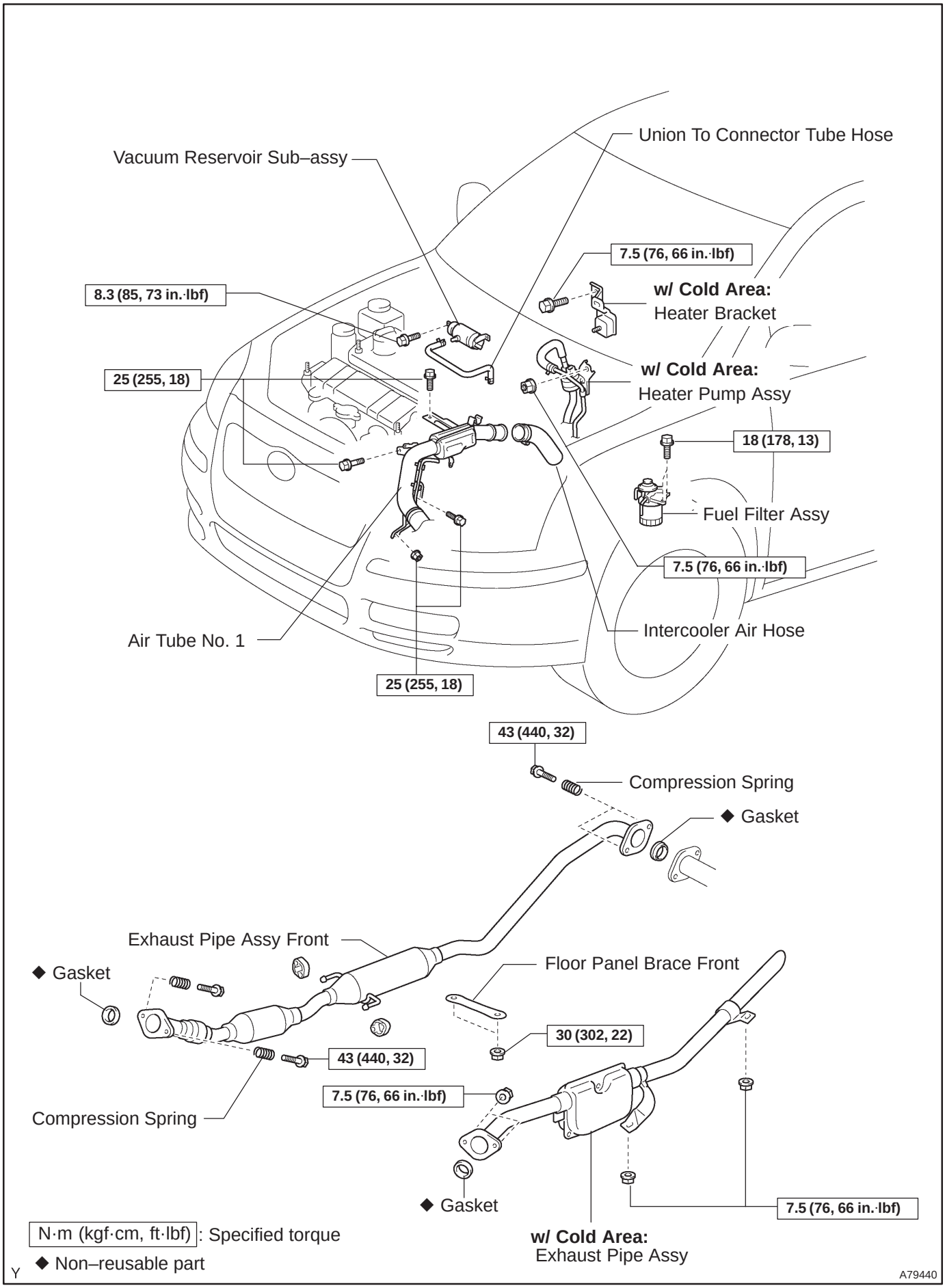
Union To Connector Tube Hose
Vacuum Reservoir Sub–assy
7.5 (76, 66 in.·lbf)
8.3 (85, 73 in.·lbf)
w/ Cold Area:
Heater Bracket
w/ Cold Area:
Heater Pump Assy
25 (255, 18)
18 (178, 13)
Fuel Filter Assy
7.5 (76, 66 in.·lbf)
Intercooler Air Hose
Air Tube No. 1
25 (255, 18)
43 (440, 32)
Compression Spring
◆ Gasket
Exhaust Pipe Assy Front
◆ Gasket
Floor Panel Brace Front
30 (302, 22)
43 (440, 32)
7.5 (76, 66 in.·lbf)
Compression Spring
◆ Gasket
7.5 (76, 66 in.·lbf)
w/ Cold Area:
Exhaust Pipe Assy
N·m (kgf·cm, ft·lbf): Specified torque
◆ Non–reusable part
Y
A79440

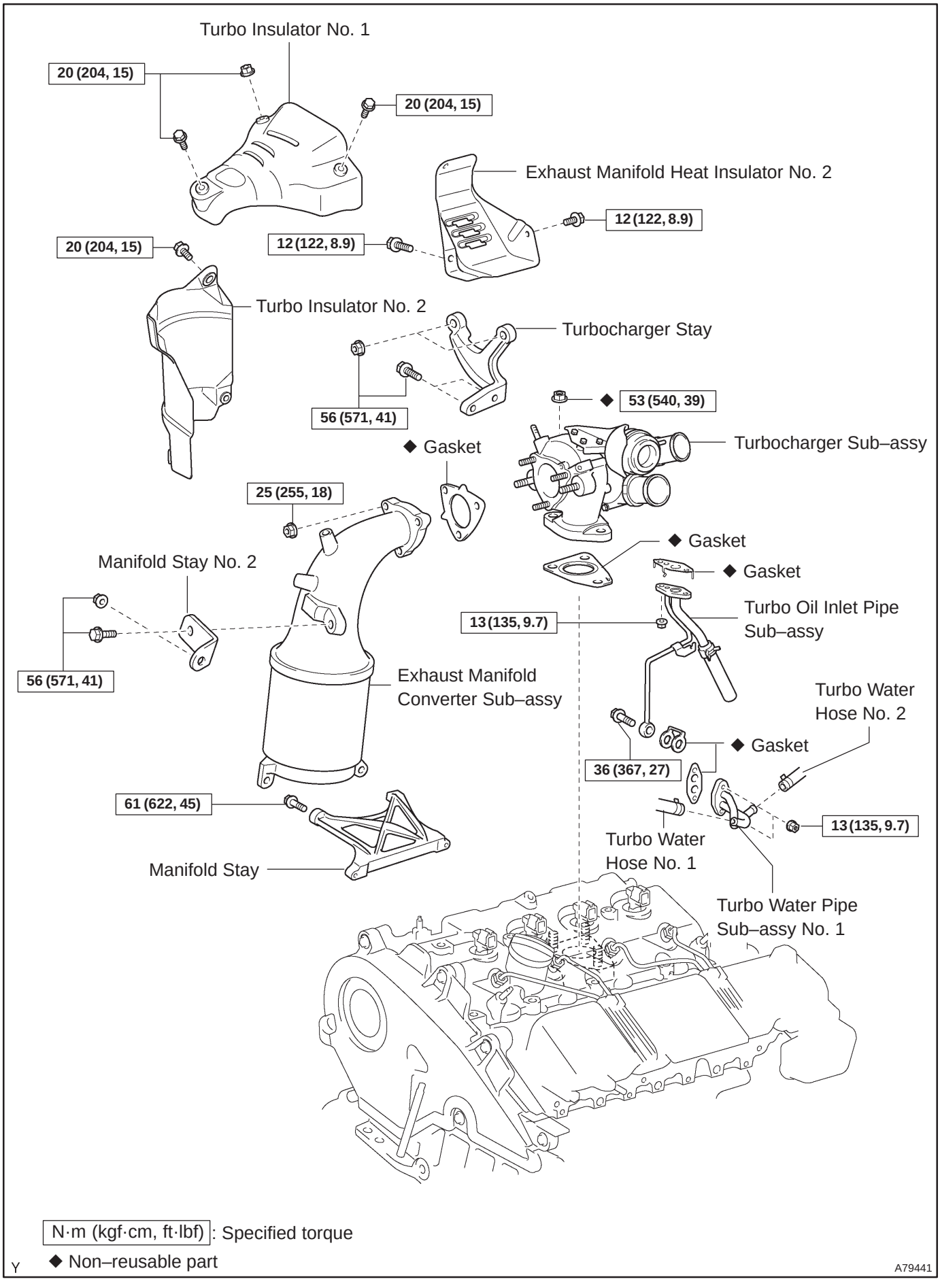
Turbo Insulator No. 1
20 (204, 15)
20 (204, 15)
Exhaust Manifold Heat Insulator No. 2
12 (122, 8.9)
20 (204, 15)
12 (122, 8.9)
Turbo Insulator No. 2
Turbocharger Stay
56 (571, 41)
◆ 53 (540, 39)
Turbocharger Sub–assy
◆ Gasket
25 (255, 18)
◆ Gasket
◆ Gasket
Manifold Stay No. 2
Turbo Oil Inlet Pipe Sub–assy
13 (135, 9.7)
56 (571, 41)
Exhaust Manifold Converter Sub–assy
Turbo Water Hose No. 2
◆ Gasket
36 (367, 27)
61 (622, 45)
13 (135, 9.7)
Turbo Water Hose No. 1
Manifold Stay
Turbo Water Pipe Sub–assy No. 1
N·m (kgf·cm, ft·lbf): Specified torque
◆ Non–reusable part
Y
A79441

REPLACEMENT

1. REMOVE ENGINE UNDER COVER SUB–ASSY NO.1

2. DRAIN ENGINE COOLANT (See page 16–44)

3. REMOVE RADIATOR SUPPORT OPENING COVER

4. REMOVE ENGINE COVER NO.1

(a) Remove the 5 nuts and the engine cover.

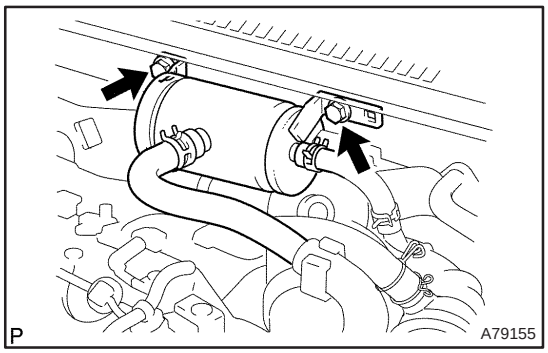

5. REMOVE VACUUM RESERVOIR SUB–ASSY

(a) Disconnect the 2 vacuum hoses and the connector.

(b) Remove the 2 bolts and the vacuum reservoir.

6. REMOVE AIR CLEANER ASSY

(a) Disconnect the PCV hose and the connector.

(b) Remove the air cleaner cap with the air cleaner hose.

(c) Remove the air cleaner filter element.

(d) Remove the 3 bolts and the air cleaner case.

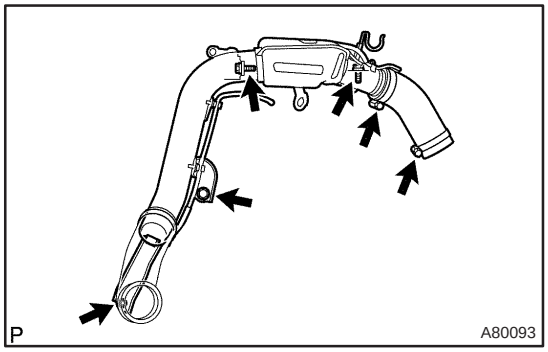

7. REMOVE INTERCOOLER AIR HOSE

(a) Remove the 3 bolts and nut, separate the air tube No.1.

(b) Loosen the hose clamp bolts and remove the air hose No.1.

8. REMOVE FUEL FILTER ASSY (See page 11–82)

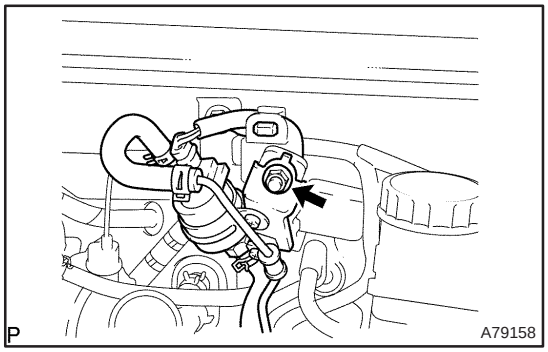

9. SEPARATE HEATER PUMP ASSY (W/ COLD AREA)

(a) Remove the nut and disconnect the connector.

(b) Separate the heater pump.

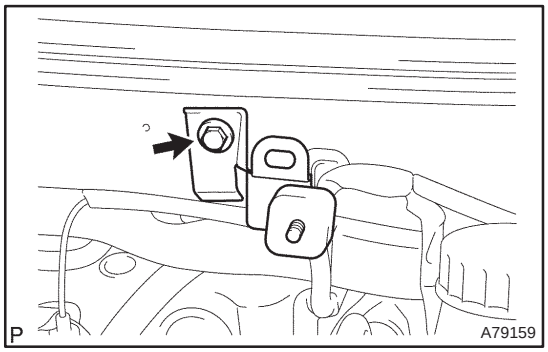

10. REMOVE HEATER BRACKET (W/ COLD AREA)

(a) Remove the bolt and the heater bracket.

11. REMOVE FLOOR PANEL BRACE FRONT (See page 15–10)

12. REMOVE EXHAUST PIPE ASSY FRONT (See page 15–10)

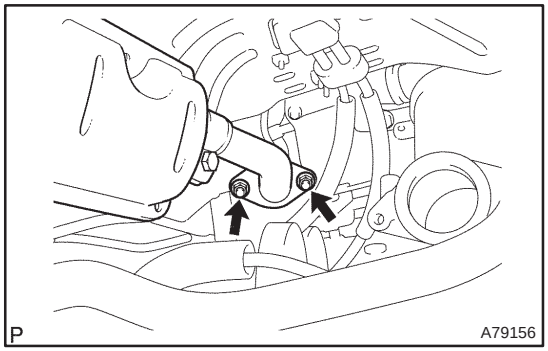

13. REMOVE EXHAUST PIPE ASSY (W/ COLD AREA)

(a) Remove the 2 nuts.

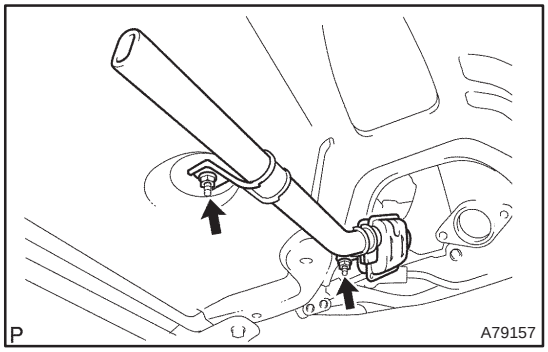

(b) Remove the 2 nuts and the exhaust pipe sub–assy.

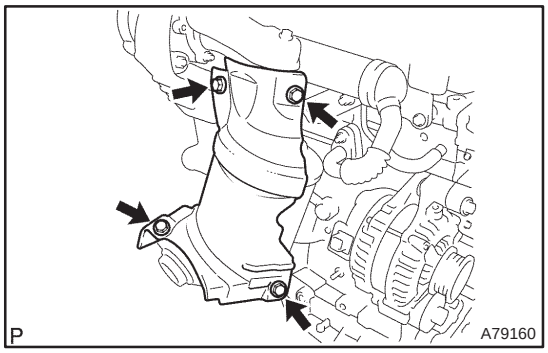

14. REMOVE TURBO INSULATOR NO.2

(a) Remove the 4 bolts and the turbo insulator.

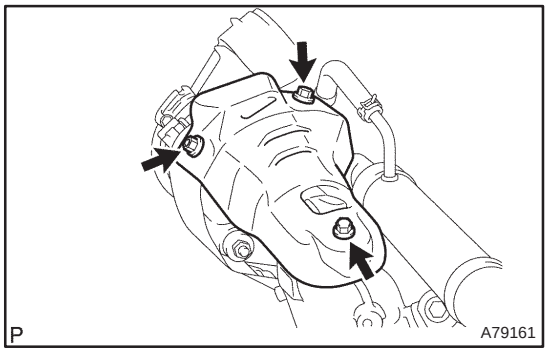

15. REMOVE TURBO INSULATOR NO.1

(a) Remove the 2 bolts and nut, and then remove the turbo insulator.

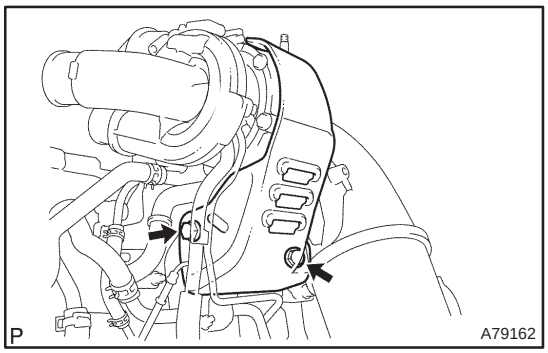

16. REMOVE EXHAUST MANIFOLD HEAT INSULATOR NO.2

(a) Remove the 2 bolts and the exhaust manifold heat insulator.

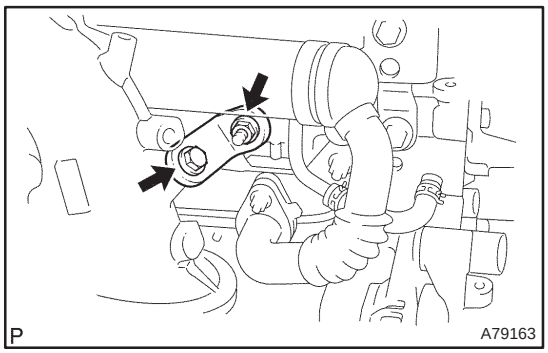

17. REMOVE MANIFOLD STAY NO.2

(a) Remove the bolt and nut and then remove the manifold stay.

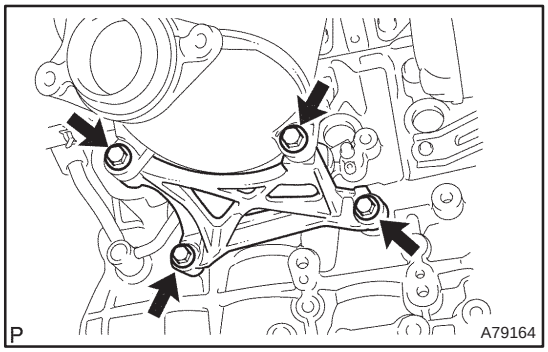

18. REMOVE MANIFOLD STAY

(a) Remove the 4 bolts and the manifold stay.

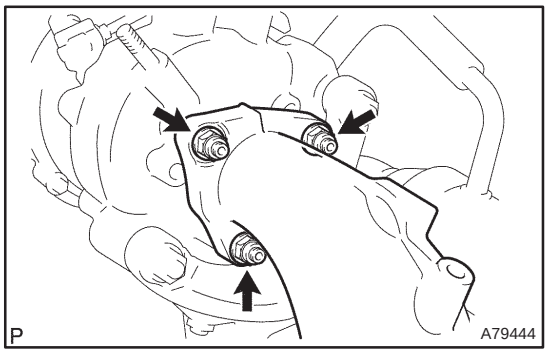

19. REMOVE EXHAUST MANIFOLD CONVERTER SUB–ASSY

(a) Remove the 3 nuts, the manifold converter and the gasket.

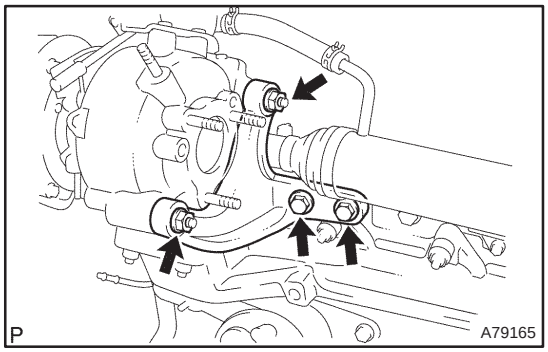

20. REMOVE TURBOCHARGER STAY

(a) Remove the 2 bolts and 2 nuts, and then remove the turbocharger stay.

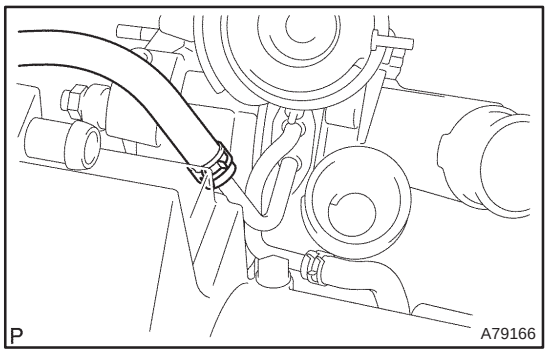

21. DISCONNECT TURBO WATER HOSE NO.1

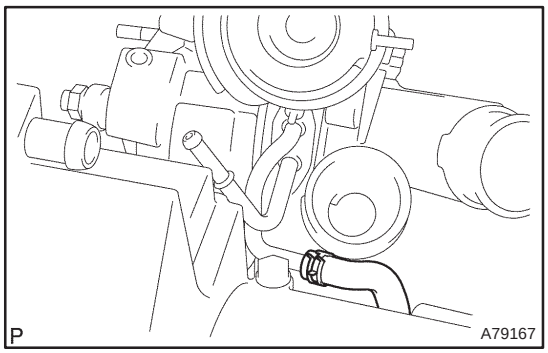

22. DISCONNECT TURBO WATER HOSE NO.2

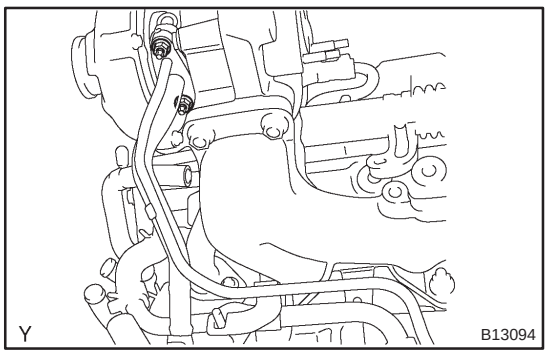

23. SEPARATE TURBO OIL INLET PIPE SUB–ASSY

(a) Remove the 2 nuts, the turbo oil pipe and the gasket.

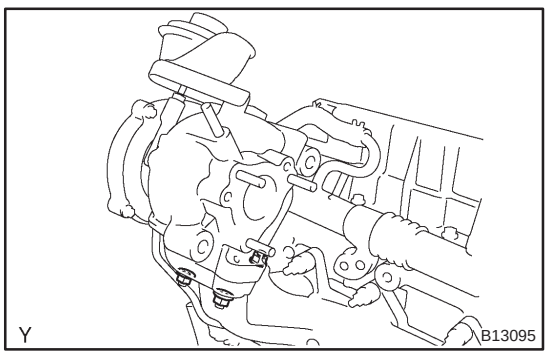

24. REMOVE TURBOCHARGER SUB–ASSY

(a) Remove the 3 nuts, the turbocharger and the gasket.

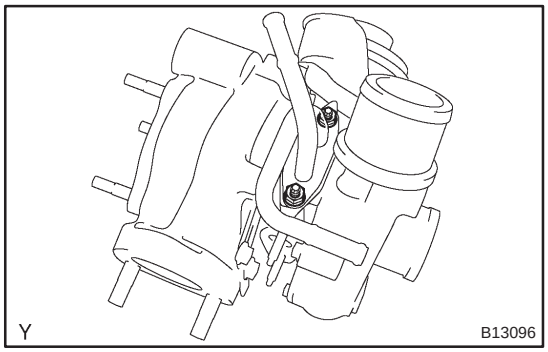

25. REMOVE TURBO WATER PIPE SUB–ASSY NO.1

(a) Remove the 2 nuts, the turbo water pipe and the gasket.

26. INSTALL TURBO WATER PIPE SUB–ASSY NO.1

(a) Install a new gasket and the turbo water pipe with the 2 nuts.
Torque: 13 N·m (135 kgf·cm, 9.7 ft·lbf)

27. INSTALL TURBOCHARGER SUB–ASSY

(a) Install a new gasket and the turbocharger with the 3 nuts.
Torque: 53 N·m (540 kgf·cm, 39 ft·lbf)

28. INSTALL TURBO OIL INLET PIPE SUB–ASSY

(a) Install a new gasket and the oil pipe with the 2 nuts.
Torque: 13 N·m (135 kgf·cm, 9.7 ft·lbf)

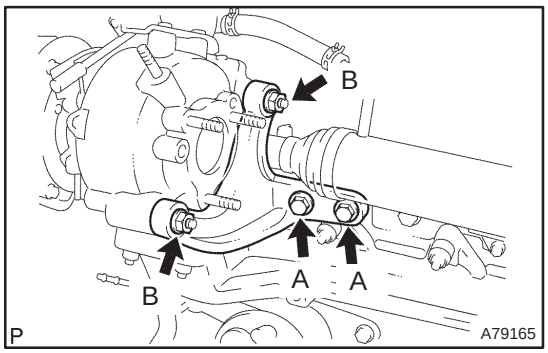

29. INSTALL TURBOCHARGER STAY

(a) Install the turbocharger stay, and temporarily tighten bolt A.

(b) Temporarily tighten nut B while pushing the cylinder head toward the turbocharger stay.
Torque: 8.0 N·m (82 kgf·cm, 71 in.·lbf)

(c) Tighten bolt A.
Torque: 56 N·m (571 kgf·cm, 41 ft·lbf)

(d) Tighten nut B.
Torque: 56 N·m (571 kgf·cm, 41 ft·lbf)

30. INSTALL EXHAUST MANIFOLD CONVERTER SUB–ASSY

(a) Install the manifold stay, and temporarily tighten the cylinder block side of the manifold stay.

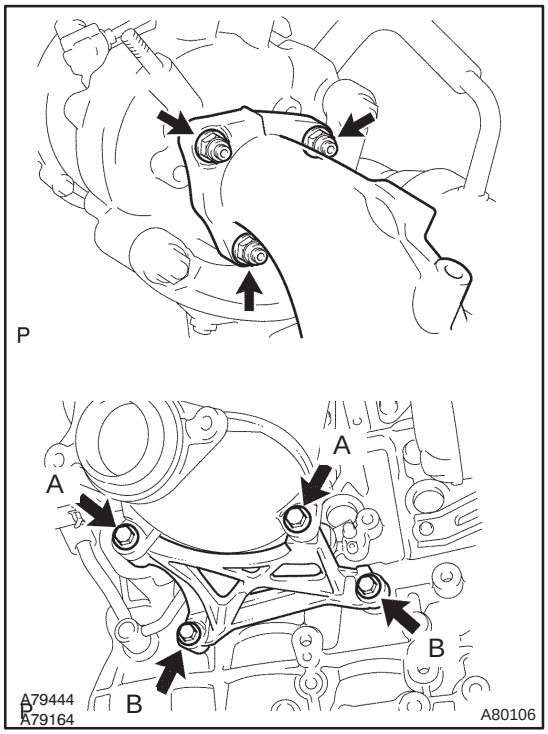

(b) Install a new gasket and the manifold converter, and temporarily tighten bolts A and bolts B while pushing the upper portion of the converter toward the turbocharger.
Torque: 8.0 N·m (82 kgf·cm, 71 in.·lbf)

(c) Tighten the 3 nuts.
Torque: 25 N·m (255 kgf·cm, 18 ft·lbf)

(d) Tighten bolts A.
Torque: 61 N·m (622 kgf·cm, 45 ft·lbf)

(e) Tighten bolts B.
Torque: 61 N·m (622 kgf·cm, 45 ft·lbf)

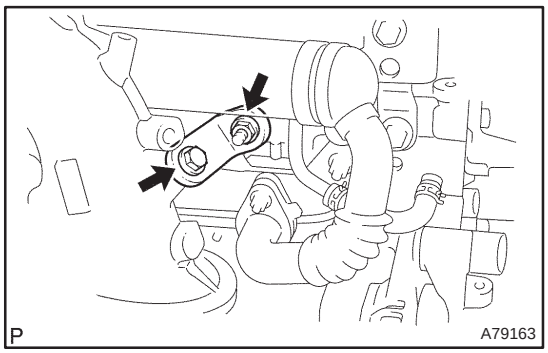

31. INSTALL MANIFOLD STAY NO.2

(a) Install the manifold stay No. 2, and temporarily tighten the bolt.

(b) Temporarily tighten the nut while pushing the manifold stay No. 2 toward the cylinder head.
Torque: 8.0 N·m (82 kgf·cm, 71 in.·lbf)

HINT:
No clearance between the stay and the cylinder head should be confirmed.

(c) Tighten the bolt.
Torque: 56 N·m (571 kgf·cm, 41 ft·lbf)

(d) Tighten the nut.
Torque: 56 N·m (571 kgf·cm, 41 ft·lbf)

32. INSTALL EXHAUST MANIFOLD HEAT INSULATOR NO.2
Torque: 12 N·m (122 kgf·cm, 8.9 ft·lbf)

33. INSTALL TURBO INSULATOR NO.1
Torque: 20 N·m (204 kgf·cm, 15 ft·lbf)

34. INSTALL TURBO INSULATOR NO.2
Torque: 20 N·m (204 kgf·cm, 15 ft·lbf)

35. INSTALL EXHAUST PIPE ASSY (W/ COLD AREA)
Torque: 7.5 N·m (76 kgf·cm, 66 in.·lbf)

36. INSTALL EXHAUST PIPE ASSY FRONT (See page 15–10)

37. INSTALL FLOOR PANEL BRACE FRONT (See page 15–10)

38. INSTALL HEATER BRACKET (W/ COLD AREA)
Torque: 7.5 N·m (76 kgf·cm, 66 in.·lbf)

39. INSTALL HEATER PUMP ASSY (W/ COLD AREA)
Torque: 7.5 N·m (76 kgf·cm, 66 in.·lbf)

40. INSTALL FUEL FILTER ASSY (See page 11–82)

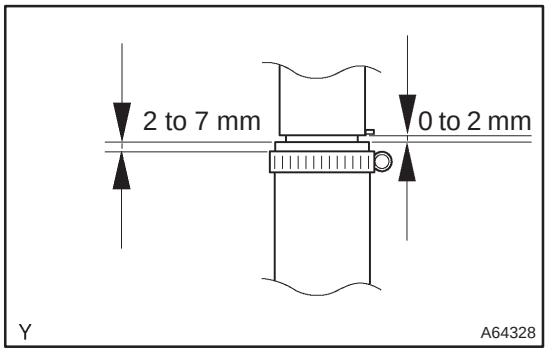

41. INSTALL INTERCOOLER AIR HOSE

(a) Install the air hose and hose clamps as shown in the illustration.

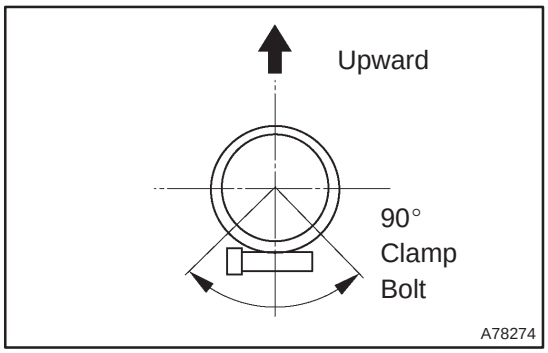

(b) Tighten the hose clamps as shown in the illustration.
Torque: 6.0 N·m (61 kgf·cm, 53 in.·lbf)

(c) Install the air tube No. 1 with the 3 bolts and nut.
Torque: 25 N·m (255 kgf·cm, 18 ft·lbf)

42. INSTALL AIR CLEANER ASSY
Torque: 7.0 N·m (71 kgf·cm, 62 in.·lbf)

43. INSTALL VACUUM RESERVOIR SUB–ASSY
Torque: 8.3 N·m (85 kgf·cm, 73 in.·lbf)

44. INSTALL ENGINE COVER NO.1
Torque: 8.0 N·m (82 kgf·cm, 71 in.·lbf)

45. ADD ENGINE COOLANT (See page 16–44)

46. CHECK ENGINE OIL LEVEL

47. CHECK FOR ENGINE COOLANT LEAKS (See page 16–44)

48. CHECK FOR ENGINE OIL LEAKS

49. CHECK FOR FUEL LEAKS (See page 11–60)

50. CHECK FOR EXHAUST GAS LEAKS

INTERCOOLER ASSY (1CD–FTV)

13070–01

REPLACEMENT

1. REMOVE FRONT BUMPER COVER (See page 76–3)

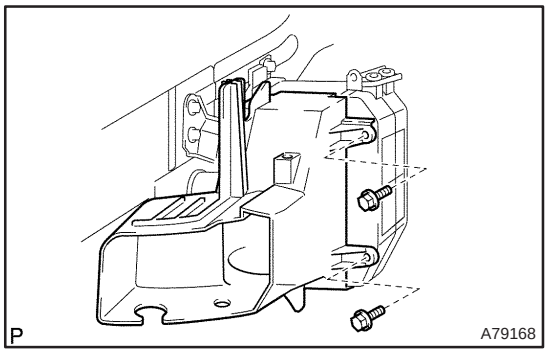

2. REMOVE INTERCOOLER COOLING AIR DUCT SUB–ASSY

(a) Remove the 2 bolts and the cooling air duct.

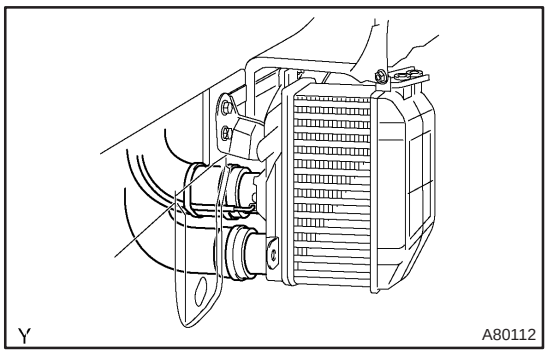

3. REMOVE INTERCOOLER ASSY

(a) Disconnect the vacuum hose, the air hose No. 2 and No. 3 from the intercooler.

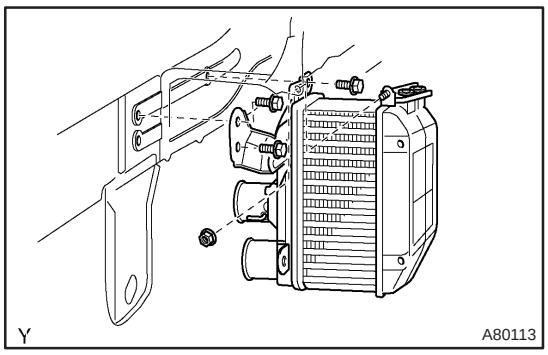

(b) Remove the 3 bolts and nut, and then detach the intercooler assy.

4. INSTALL INTERCOOLER ASSY

(a) Install the intercooler assembly with the 3 bolts and a new nut.

Torque: 7.0 N·m (71 kgf·cm, 62 in.·lbf)

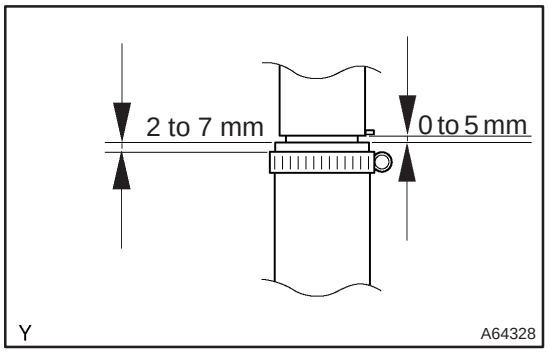

(b) Install the air hose and hose clamps as shown in the illustration.

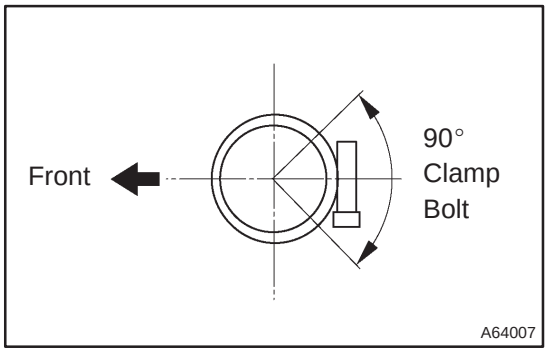

(c) Tighten the hose clamps as shown in the illustration.
Torque: 6.0 N·m (61 kgf·cm, 53 in.·lbf)

5. INSTALL INTERCOOLER COOLING AIR DUCT SUB–ASSY
Torque: 5.0 N·m (51 kgf·cm, 44 in.·lbf)

6. INSTALL FRONT BUMPER COVER (See page 76–3)

ENGINE (1ZZ–FE/3ZZ–FE)

140KR–02

INSPECTION

1. **INSPECT COOLANT (See page 16–1)**
2. **INSPECT ENGINE OIL (See page 17–1)**
3. **INSPECT BATTERY (See page 19–5)**
4. **INSPECT AIR CLEANER FILTER ELEMENT SUB–ASSY**
5. **INSPECT SPARK PLUG (See page 18–3)**
6. **INSPECT FAN AND GENERATOR V BELT**

HINT:

You don't need to check the belt deflection because auto tensioner is adopted.

7. **INSPECT IGNITION TIMING**

(a) Warm up engine.

(b) When using hand–held tester:

(1) Connect the hand–held tester to the DLC3.

(2) Enter DATA LIST MODE on the hand–held tester.

Ignition timing: 8 to 12°BTDC

HINT:

Please refer to the hand–held tester operator's manual if you need help to select DATA LIST.

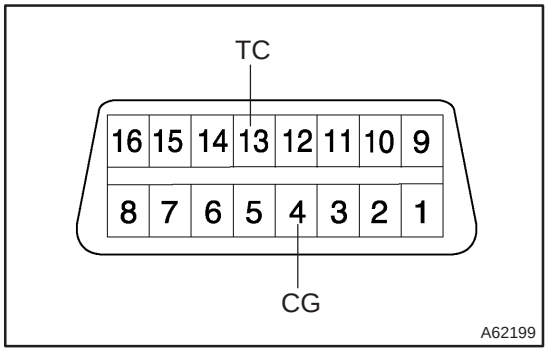

(c) When not using hand–held tester:

(1) Using SST, connect terminal 13 (TC) and 4 (CG) of the DLC3.

SST 09843–18040

NOTICE:

- **Make sure of the terminal numbers before connecting them. Connection with a wrong terminal can damage the engine.**
- **Turn OFF all electrical systems before connecting the terminals.**
- **Operate the inspection after the cooling fan motor is turned OFF**

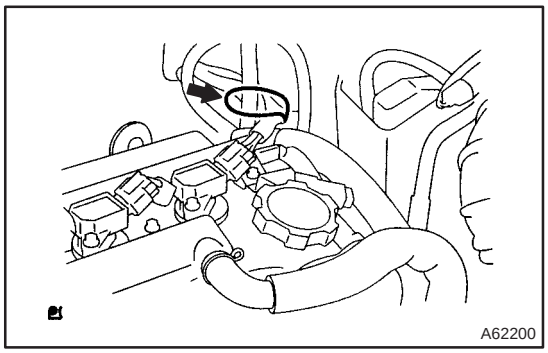

(2) Remove the 2 nuts, and 2 clips, and then remove the cylinder head cover.

(3) Pull out the wire harness as shown in the illustration.

(4) Connect the clip of the timing light to the engine.

NOTICE:

- **Use a timing light which detects the first signal.**
- **After checking, be sure to wrap the wire harness with tape.**

(5) Inspect ignition timing at idle.

Ignition timing: 8 to 12°BTDC

NOTICE:

When checking the ignition timing, shift the transmission to the neutral position.

HINT:

Run the engine at 1,000 to 1,300 rpm for 5 seconds, check that the engine rpm returns to the idle speed.

(6) Disconnect the terminal 13 (TC) and 4 (CG) of the DLC3.

(7) Inspect ignition timing at idle.

Ignition timing:

10 to 18 °BTDC (1ZZ–FE)

3.5 to 11.5 °BTDC (3ZZ–FE)

(8) Confirm that ignition timing to go advanced angle side when the engine rpm is increased.

(9) Remove the timing light.

(10) Install the cylinder head cover with the 2 nuts and 2 clips.

Torque: 7.0 N·m (71 kgf·cm, 62 in.·lbf)

8. INSPECT ENGINE IDLE SPEED

(a) Warm up engine.

(b) When using hand–held tester:

(1) Connect the hand–held tester to the DLC3.

HINT:

Please refer to the hand–held tester operator's manual if you need help to select DATA LIST.

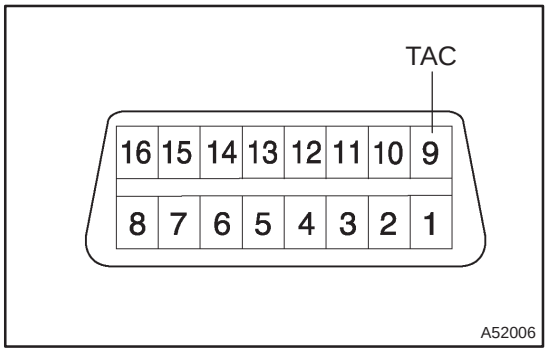

(c) When not using hand–held tester:

(1) Using SST, connect the tachometer test prove to terminal 9 (TAC) of DLC3.

SST 09843–18040

(d) Check the idle speed.

Idle speed: 600 to 700 rpm

NOTICE:

- **Check the idle speed with the cooling fan OFF.**
- **Switch off all accessories and air conditioning before connecting the test prove to the terminal.**

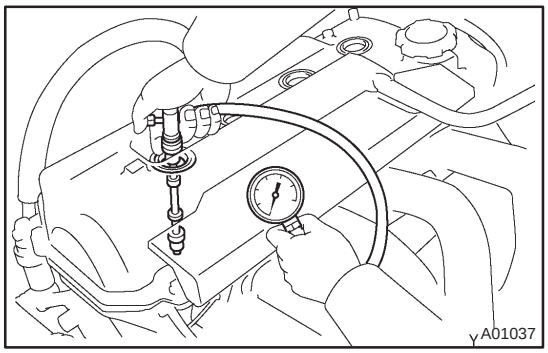

9. INSPECT COMPRESSION

(a) Warm up and stop the engine.

(b) Remove the ignition coil.

(c) Remove the spark plugs.

(d) Inspect cylinder compression pressure.

SST 09992–00500

(1) Insert a compression gauge into the spark plug hole.

(2) Fully open the throttle.

(3) While cranking the engine, measure the compression pressure.

Compression pressure :
1,300 kPa (13.3 kgf·cm^2, 189 psi)
Minimum pressure: 1,000 kPa (10.2 kgf·cm^2, 145 psi)
Difference between each cylinder:
100 kPa (1.0 kgf·cm^2, 14 psi)

NOTICE:

- **Always use a fully charged battery to obtain engine speed of 250 rpm or more.**
- **Check other cylinder's compression pressure in the same way.**
- **This measurement must be done in as short a time as possible.**

(4) If the cylinder compression in one or more cylinders is low, pour a small amount of engine oil into the cylinder through the spark plug hole and repeat steps (1) through (3) for the cylinders that have low compression.

HINT:

- If adding oil helps increase the compression, the piston rings and/or cylinder bore may be worn or damaged.
- If pressure stays low, a valve may be sticking or seating improperly, or there may be leakage past the gasket.

10. INSPECT CO/HC

(a) Start the engine.
(b) Run the engine at 2,500 rpm for approximately 180 seconds.
(c) Insert CO/HC meter testing probe at least 40 cm (1.3 ft) into the tailpipe during idling.
(d) Check CO/HC concentration at idle.

Idle CO concentration: 0 to 0.5 %
Idle HC concentration: Applicable local regulation

If the CO/HC concentration does not conform to specifications, perform troubleshooting in the order given below.

- Check heated oxygen sensor operation.
- See the table below for possible causes, and then inspect and repair the applicable causes if necessary.

CO	HC	Problems	Causes
Normal	High	Rough idle	1. Faulty ignitions: • Incorrect timing • Fouled, shorted or improperly gapped plugs 2. Incorrect valve clearance 3. Leaks in intake and exhaust valves 4. Leaks in cylinders
Low	High	Rough idle (Fluctuating HC reading)	1. Vacuum leaks: • PCV hoses • Intake manifold • Throttle body • ISC valve • Brake booster line 2. Lean mixture causing misfire
High	High	Rough idle (Black smoke form exhaust)	1. Restricted air filter 2. Plugged PCV valve 3. Faulty EFI systems: • Faulty pressure regulator • Defective water temperature sensor • Defective mass air flow meter • Faulty ECM • Faulty injectors • Faulty throttle position sensor

FAN AND GENERATOR V BELT (1ZZ–FE/3ZZ–FE)

141CD–01

REPLACEMENT

1. REMOVE RADIATOR SUPPORT OPENING COVER (See page 14–27)
2. REMOVE ENGINE ROOM COVER SIDE (See page 14–27)
3. REMOVE ENGINE UNDER COVER SUB–ASSY NO.1 (See page 14–27)

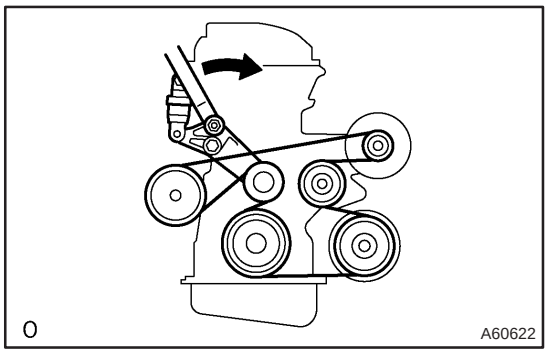

4. **REMOVE FAN AND GENERATOR V BELT**

(a) Turn the V–ribbed belt tensioner clockwise slowly and loosen it. Then, remove the fan and generator V belt and put back the V–ribbed belt tensioner carefully.

VALVE CLEARANCE (1ZZ–FE/3ZZ–FE)

141CE–01

ADJUSTMENT

1. REMOVE RADIATOR SUPPORT OPENING COVER (See page 14–27)
2. REMOVE ENGINE ROOM COVER SIDE (See page 14–27)

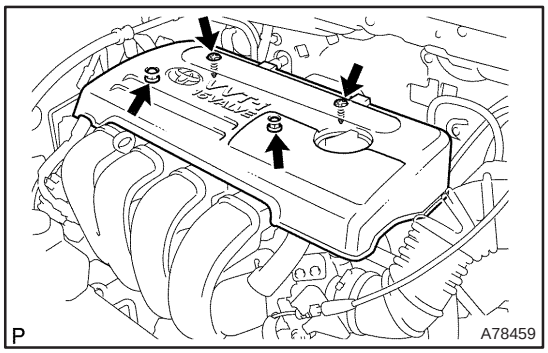

3. REMOVE CYLINDER HEAD COVER NO.2

(a) Remove the 2 nuts and 2 clips and detach cylinder head cover No.2.

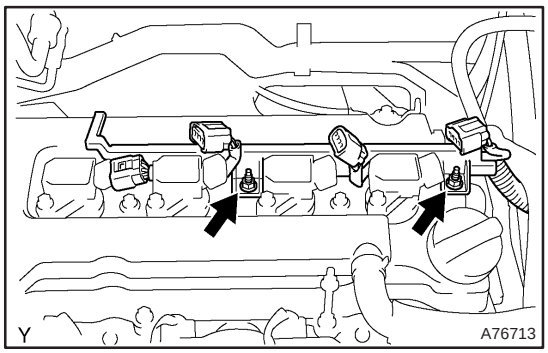

4. DISCONNECT IGNITION COIL ASSY

(a) Remove the 5 clamps from the 5 clamp brackets.
(b) Disconnect the 4 ignition coil connectors.
(c) Remove the 2 nuts which are used to secure the engine wire.

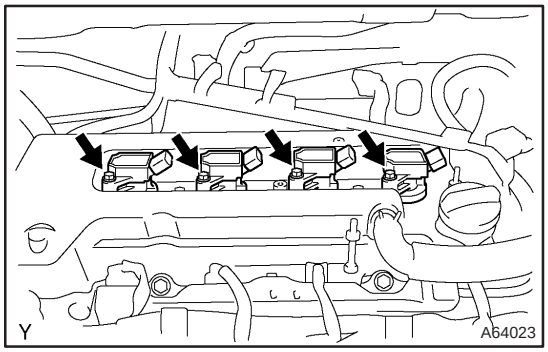

(d) Remove the 4 bolts and the 4 ignition coils.

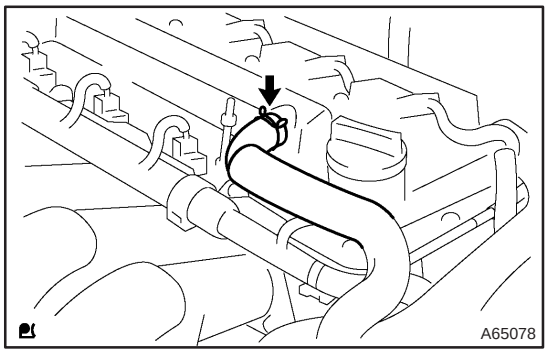

5. DISCONNECT VENTILATION HOSE

(a) Disconnect the ventilation hose from the cylinder head cover.

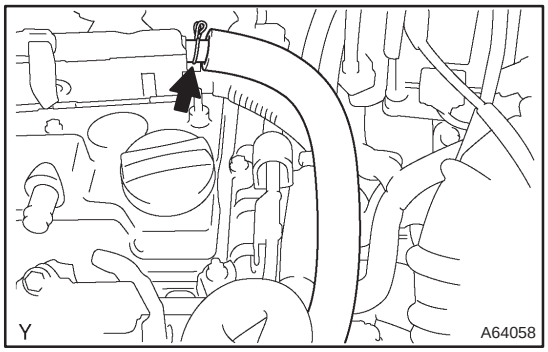

6. DISCONNECT VENTILATION HOSE NO.2

(a) Disconnect the ventilation hose from the cylinder head cover.

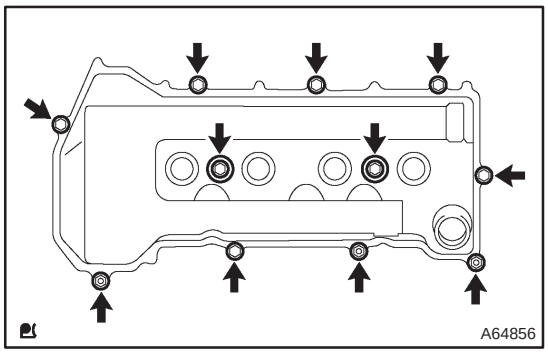

7. REMOVE CYLINDER HEAD COVER SUB–ASSY

(a) Remove the 9 bolts, 2 seal washers, 2 nuts, 3 clamp brackets and cylinder head cover.

8. REMOVE ENGINE UNDER COVER SUB–ASSY NO.1

9. REMOVE ENGINE UNDER COVER RH

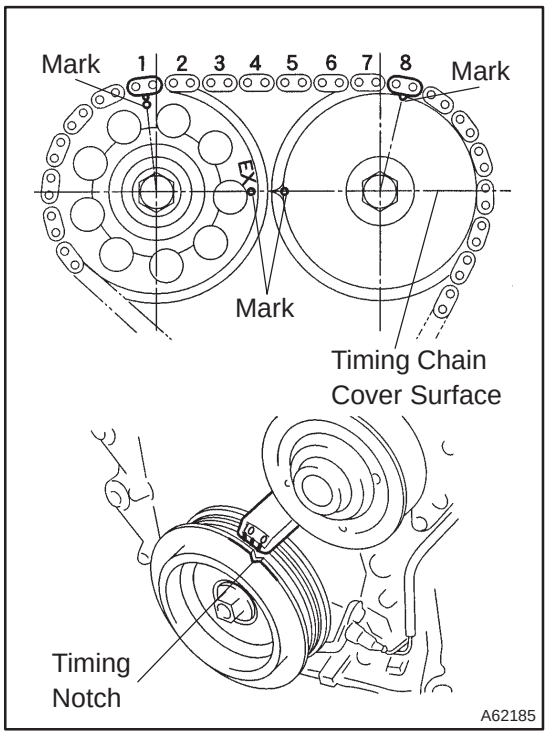

10. SET NO. 1 CYLINDER TO TDC/COMPRESSION

(a) Turn the crankshaft pulley, and align the timing notch with timing mark ”0” of the timing chain cover.

(b) Check that the point marks of the camshaft timing sprocket and VVT timing sprocket are in straight line on the timing chain cover surface as shown in the illustration.

HINT:

If not, turn the crankshaft 1 revolution (360°) and align the marks as above.

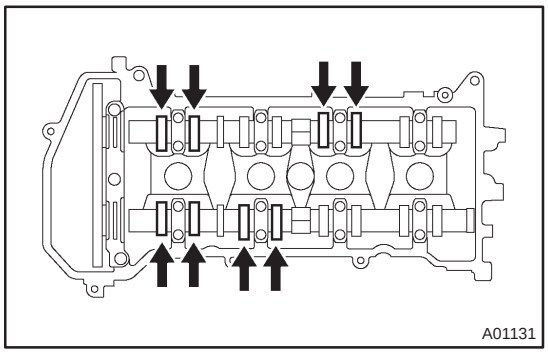

11. INSPECT VALVE CLEARANCE

(a) Check the valves indicated in the illustration.

(1) Using a feeler gauge, measure the clearance between the valve lifter and the camshaft.

(2) Record the out–of specification valve clearance measurements. They will be used later to determine the required replacement valve lifter.

Valve clearance (Cold):

Intake 0.15 to 0.25 mm (0.0059 to 0.0098 in.)

Exhaust 0.25 to 0.35 mm (0.0098 to 0.0138 in.)

(b) Turn the crankshaft 1 revolution (360 °) and set No. 4 cylinder to TDC/compression.

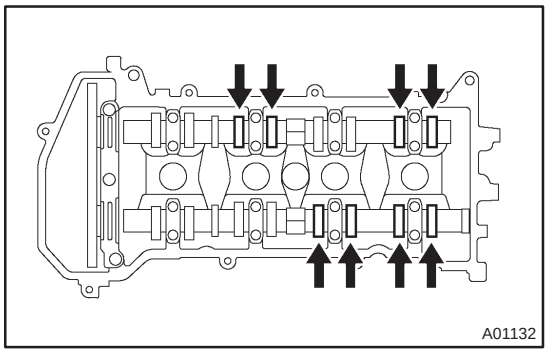

(c) Check the valves indicated in the illustration.
(1) Using a feeler gauge, measure the clearance between the valve lifter and camshaft.
(2) Record the out–of specification valve clearance measurements. They will be used later to determine the required replacement valve lifter.

Valve clearance (Cold):
Intake 0.15 to 0.25 mm (0.0059 to 0.0098 in.)
Exhaust 0.25 to 0.35 mm (0.0098 to 0.0138 in.)

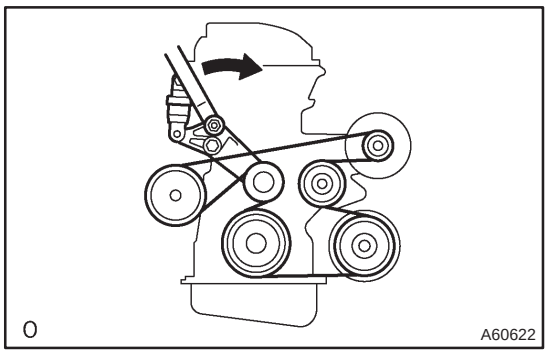

12. REMOVE FAN AND GENERATOR V BELT

(a) Turn the V–ribbed belt tensioner clockwise slowly and loosen it. Then, remove the fan and generator V belt and put back the V–ribbed belt tensioner carefully.

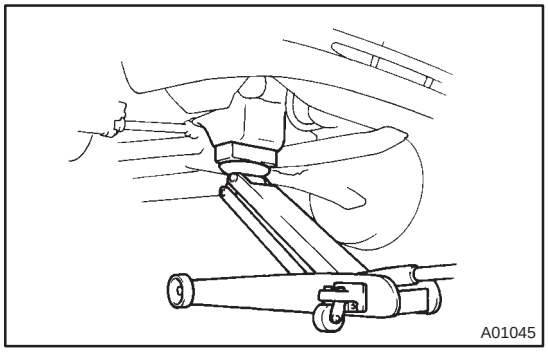

13. REMOVE ENGINE MOUNTING INSULATOR SUB–ASSY RH

(a) Place a wooden block on a jack underneath the engine. Remove the 4 bolts and 2 nuts and detach the engine mounting insulator RH.

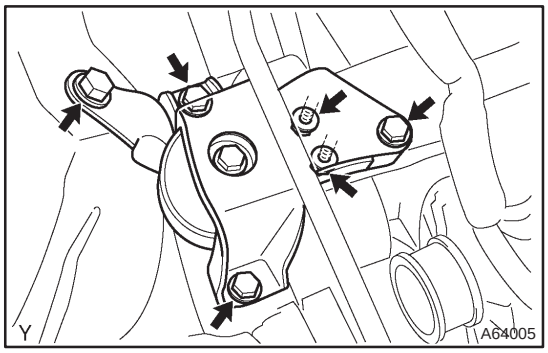

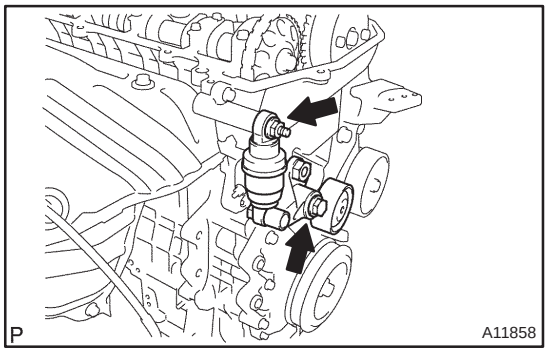

14. REMOVE V–RIBBED BELT TENSIONER ASSY

(a) Remove the bolt and nut, then remove the V–ribbed belt tensioner.

HINT:

Jack up and down to remove the bolt.

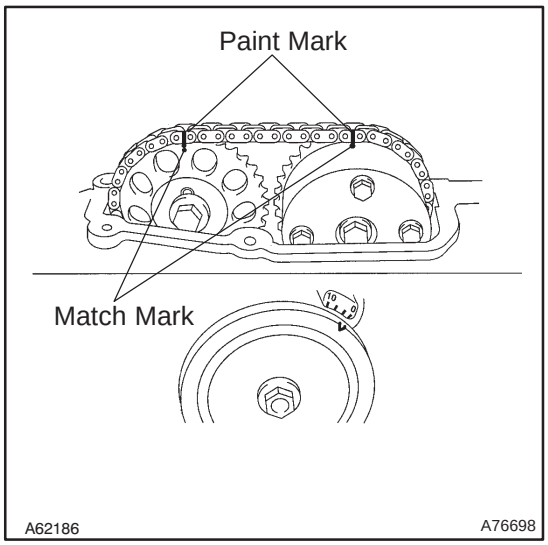

15. ADJUST VALVE CLEARANCE

NOTICE:

Be sure not to revolve the crankshaft without the chain tensioner.

(a) Set the No. 1 cylinder to the TDC/compression.

(b) Place match marks on the 2 camshaft sprockets and paint marks on the timing chain.

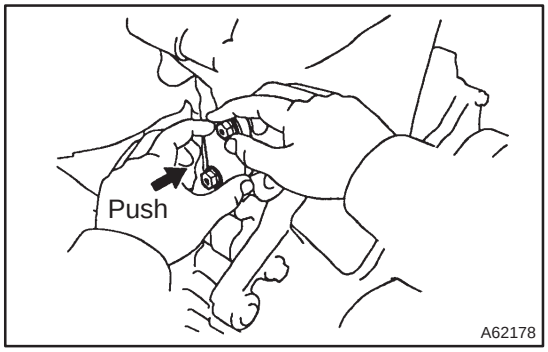

(c) Remove the 2 nuts and the chain tensioner.

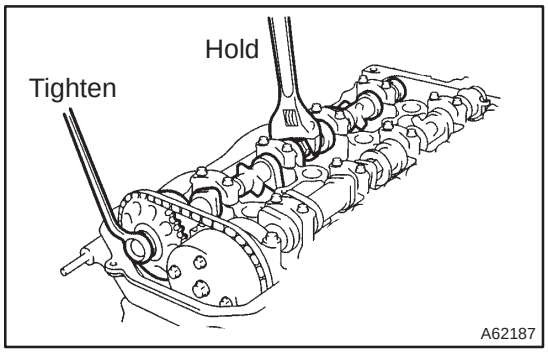

(d) Hold the camshaft with a wrench, loosen the camshaft timing gear set bolt.

NOTICE:

Be careful not to damage the valve lifter.

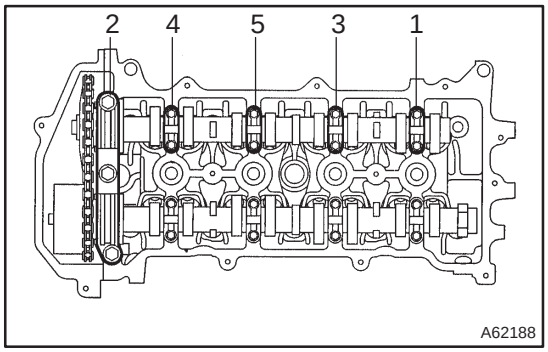

(e) Using several steps, loosen the camshaft bearing cap bolts on the No. 2 camshaft in the sequence shown in the illustration and remove the bearing caps.

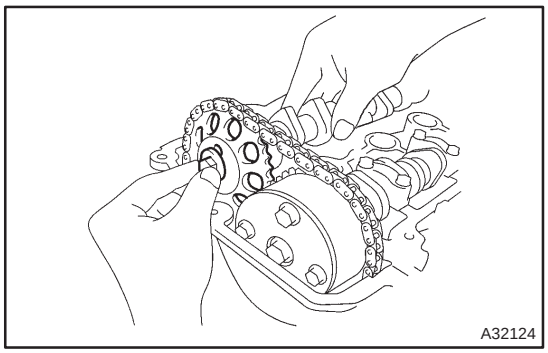

(f) Remove the camshaft timing gear as shown in the illustration.

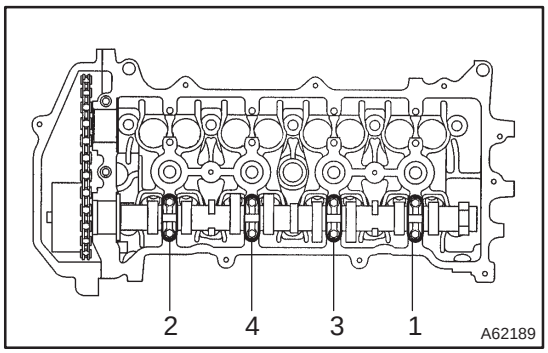

(g) Using several steps, loosen the camshaft bearing cap bolts on the camshaft in the sequence shown in the illustration and remove the bearing caps.

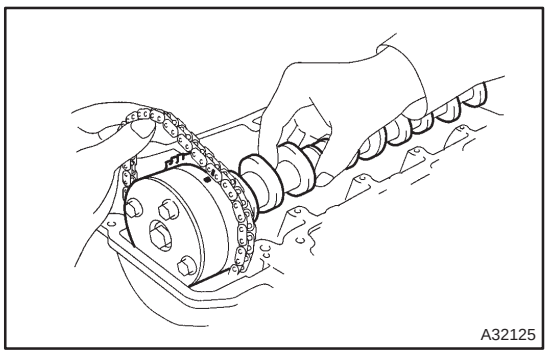

(h) Remove the camshaft while holding the timing chain.

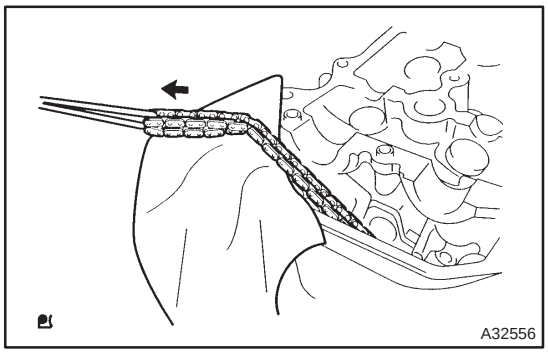

(i) Tie the timing chain with a string as shown in the illustration.

NOTICE:

Be careful not to drop anything inside the timing chain cover.

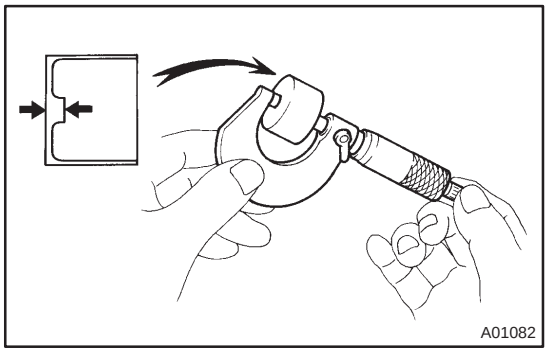

(j) Remove the valve lifters.

(k) Using a micrometer, measure the thickness of the removed lifter.

(l) Calculate the thickness of a new lifter so that the valve clearance comes within the specified value.

A	Thickness of new lifter
B	Thickness of used lifter
C	Measured valve clearance

Valve clearance:
Intake A = B + (C – 0.20 mm (0.0079 in.))
Exhaust A = B + (C – 0.30 mm (0.0118 in.))

Example (Intake):
Measure intake valve clearance = 0.40 mm (0.0158 in.)
0.40 mm (0.0158 in.) – 0.20 mm (0.0079 in.) = 0.20 mm (0.0079 in.)
(Measured – Specification = Excess clearance)
Used lifter measurement = 5.250 mm (0.2067 in.)
0.20 mm (0.0079 in.) + 5.250 mm (0.2067 in.) = 5.450 mm (0.2146 in.)
(Excess clearance + Used lifter = Ideal new lifter)
Closest new lifter = 5.460 mm (0.2150 in.)
Select No. 46 lifter

HINT:

- Select a new lifter with a thickness as close as possible to the calculated values.
- Lifter are available in 35 sizes in increments of 0.020 mm (0.0008 in.), from 5.060 mm (0.1992 in.) to 5.740 mm (0.2260 in.).
- Refer to new lifter thickness table on the next 2 pages.

1ZZ–FE, 3ZZ–FE: Valve Lifter Selection Chart (Intake)

Measured clearance mm (in.) \ Installed lifter thickness mm (in.)	5.060 (0.1992)	5.080 (0.2000)	5.100 (0.2008)	5.120 (0.2016)	5.140 (0.2024)	5.160 (0.2031)	5.180 (0.2039)	5.200 (0.2047)	5.210 (0.2051)	5.220 (0.2055)	5.230 (0.2059)	5.240 (0.2063)	5.250 (0.2067)	5.260 (0.2071)	5.270 (0.2075)	5.280 (0.2079)	5.290 (0.2083)	5.300 (0.2087)	5.310 (0.2091)	5.320 (0.2094)	5.330 (0.2098)	5.340 (0.2102)	5.350 (0.2106)	5.360 (0.2110)	5.370 (0.2114)	5.380 (0.2118)	5.390 (0.2122)	5.400 (0.2126)	5.410 (0.2130)	5.420 (0.2134)	5.430 (0.2138)	5.440 (0.2142)	5.450 (0.2146)	5.460 (0.2150)	5.470 (0.2154)	5.480 (0.2157)	5.490 (0.2161)	5.500 (0.2165)	5.510 (0.2169)	5.520 (0.2173)	5.530 (0.2177)	5.540 (0.2181)	5.550 (0.2185)	5.560 (0.2189)	5.570 (0.2193)	5.580 (0.2197)	5.590 (0.2201)	5.600 (0.2205)	5.620 (0.2213)	5.640 (0.2220)	5.660 (0.2228)	5.680 (0.2236)	5.700 (0.2244)	5.720 (0.2252)	5.740 (0.2260)
0.000 – 0.030 (0.0000 – 0.0012)									06	06	06	06	06	08	10	10	12	12	14	14	16	16	18	20	20	22	22	24	24	26	26	28	28	30	30	32	32	34	34	36	36	38	38	40	40	42	42	44	46	48	50	52	54	56
0.031 – 0.050 (0.0012 – 0.0020)							06	06	06	06	08	08	10	10	12	12	14	14	16	16	18	18	20	20	22	22	24	24	26	26	28	28	30	30	32	32	34	34	36	36	38	38	40	40	42	42	44	44	46	48	50	52	54	56	58
0.051 – 0.070 (0.0020 – 0.0028)						06	06	06	08	08	10	10	12	12	14	14	16	16	18	18	20	20	22	22	24	24	26	26	28	28	30	30	32	32	34	34	36	36	38	38	40	40	42	42	44	44	46	46	48	50	52	54	56	58	60
0.071 – 0.090 (0.0028 – 0.0035)					06	06	06	08	10	10	12	12	14	14	16	16	18	18	20	20	22	22	24	24	26	26	28	28	30	30	32	32	34	34	36	36	38	38	40	40	42	42	44	44	46	46	48	48	50	52	54	56	58	60	62
0.091 – 0.110 (0.0036 – 0.0043)				06	06	06	08	10	12	12	14	14	16	16	18	18	20	20	22	22	24	24	26	26	28	28	30	30	32	32	34	34	36	36	38	38	40	40	42	42	44	44	46	46	48	48	50	50	52	54	56	58	60	62	64
0.111 – 0.130 (0.0044 – 0.0051)			06	06	06	08	10	12	14	14	16	16	18	18	20	20	22	22	24	24	26	26	28	28	30	30	32	32	34	34	36	36	38	38	40	40	42	42	44	44	46	46	48	48	50	50	52	52	54	56	58	60	62	64	66
0.131 – 0.149 (0.0052 – 0.0059)		06	06	06	08	10	12	14	16	16	18	18	20	20	22	22	24	24	26	26	28	28	30	30	32	32	34	34	36	36	38	38	40	40	42	42	44	44	46	46	48	48	50	50	52	52	54	54	56	58	60	62	64	66	68
0.150 – 0.250 (0.0059 – 0.0098)																																																								
0.251 – 0.270 (0.0099 – 0.0106)	12	14	16	18	20	22	24	26	28	28	30	30	32	32	34	34	36	36	38	38	40	40	42	42	44	44	46	46	48	48	50	50	52	52	54	54	56	56	58	58	60	60	62	62	64	64	66	66	68	70	72	74	74	74
0.271 – 0.290 (0.0107 – 0.0114)	14	16	18	20	22	24	26	28	30	30	32	32	34	34	36	36	38	38	40	40	42	42	44	44	46	46	48	48	50	50	52	52	54	54	56	56	58	58	60	60	62	62	64	64	66	66	68	68	70	72	74	74	74	
0.291 – 0.310 (0.0115 – 0.0122)	16	18	20	22	24	26	28	30	32	32	34	34	36	36	38	38	40	40	42	42	44	44	46	46	48	48	50	50	52	52	54	54	56	56	58	58	60	60	62	62	64	64	66	66	68	68	70	70	72	74	74	74		
0.311 – 0.330 (0.0122 – 0.0130)	18	20	22	24	26	28	30	32	34	34	36	36	38	38	40	40	42	42	44	44	46	46	48	48	50	50	52	52	54	54	56	56	58	58	60	60	62	62	64	64	66	66	68	68	70	70	72	72	74	74	74			
0.331 – 0.350 (0.0130 – 0.0138)	20	22	24	26	28	30	32	34	36	36	38	38	40	40	42	42	44	44	46	46	48	48	50	50	52	52	54	54	56	56	58	58	60	60	62	62	64	64	66	66	68	68	70	70	72	72	74	74	74					
0.351 – 0.370 (0.0138 – 0.0146)	22	24	26	28	30	32	34	36	38	38	40	40	42	42	44	44	46	46	48	48	50	50	52	52	54	54	56	56	58	58	60	60	62	62	64	64	66	66	68	68	70	70	72	72	74	74	74	74						
0.371 – 0.390 (0.0146 – 0.0154)	24	26	28	30	32	34	36	38	40	40	42	42	44	44	46	46	48	48	50	50	52	52	54	54	56	56	58	58	60	60	62	62	64	64	66	66	68	68	70	70	72	72	74	74	74	74	74	74						
0.391 – 0.410 (0.0154 – 0.0161)	26	28	30	32	34	36	38	40	42	42	44	44	46	46	48	48	50	50	52	52	54	54	56	56	58	58	60	60	62	62	64	64	66	66	68	68	70	70	72	72	74	74	74	74	74	74	74							
0.411 – 0.430 (0.0162 – 0.0169)	28	30	32	34	36	38	40	42	44	44	46	46	48	48	50	50	52	52	54	54	56	56	58	58	60	60	62	62	64	64	66	66	68	68	70	70	72	72	74	74	74	74	74	74	74								
0.431 – 0.450 (0.0170 – 0.0177)	30	32	34	36	38	40	42	44	46	46	48	48	50	50	52	52	54	54	56	56	58	58	60	60	62	62	64	64	66	66	68	68	70	70	72	72	74	74	74	74	74	74												
0.451 – 0.470 (0.0178 – 0.0185)	32	34	36	38	40	42	44	46	48	48	50	50	52	52	54	54	56	56	58	58	60	60	62	62	64	64	66	66	68	68	70	70	72	72	74	74	74	74	74	74														
0.471 – 0.490 (0.0185 – 0.0193)	34	36	38	40	42	44	46	48	50	50	52	52	54	54	56	56	58	58	60	60	62	62	64	64	66	66	68	68	70	70	72	72	74	74	74	74	74	74																
0.491 – 0.510 (0.0193 – 0.0201)	36	38	40	42	44	46	48	50	52	52	54	54	56	56	58	58	60	60	62	62	64	64	66	66	68	68	70	70	72	72	74	74	74	74	74	74																		
0.511 – 0.530 (0.0201 – 0.0209)	38	40	42	44	46	48	50	52	54	54	56	56	58	58	60	60	62	62	64	64	66	66	68	68	70	70	72	72	74	74	74	74	74	74																			
0.531 – 0.550 (0.0209 – 0.0217)	40	42	44	46	48	50	52	54	56	56	58	58	60	60	62	62	64	64	66	66	68	68	70	70	72	72	74	74	74	74	74	74																				
0.551 – 0.570 (0.0217 – 0.0224)	42	44	46	48	50	52	54	56	58	58	60	60	62	62	64	64	66	66	68	68	70	70	72	72	74	74	74	74	74	74	74																					
0.571 – 0.590 (0.0225 – 0.0232)	44	46	48	50	52	54	56	58	60	60	62	62	64	64	66	66	68	68	70	70	72	72	74	74	74	74	74	74	74																						
0.591 – 0.610 (0.0233 – 0.0240)	46	48	50	52	54	56	58	60	62	62	64	64	66	66	68	68	70	70	72	72	74	74	74	74	74	74	74																						
0.611 – 0.630 (0.0241 – 0.0248)	48	50	52	54	56	58	60	62	64	64	66	66	68	68	70	70	72	72	74	74	74	74	74	74	74																						
0.631 – 0.650 (0.0248 – 0.0256)	50	52	54	56	58	60	62	64	66	66	68	68	70	70	72	72	74	74	74	74	74	74	74																						
0.651 – 0.670 (0.0256 – 0.0264)	52	54	56	58	60	62	64	66	68	68	70	70	72	72	74	74	74	74	74	74	74																						
0.671 – 0.690 (0.0264 – 0.0272)	54	56	58	60	62	64	66	68	70	70	72	72	74	74	74	74	74	74																									
0.691 – 0.710 (0.0272 – 0.0280)	56	58	60	62	64	66	68	70	72	72	74	74	74	74	74	74																									
0.711 – 0.730 (0.0280 – 0.0287)	58	60	62	64	66	68	70	72	74	74	74	74	74	74																									
0.731 – 0.750 (0.0288 – 0.0295)	60	62	64	66	68	70	72	74	74	74	74	74																											
0.751 – 0.770 (0.0296 – 0.0303)	62	64	66	68	70	72	74	74	74	74																											
0.771 – 0.790 (0.0304 – 0.0311)	64	66	68	70	72	74	74	74																													
0.791 – 0.810 (0.0311 – 0.0319)	66	68	70	72	74	74	74																														
0.811 – 0.830 (0.0319 – 0.0327)	68	70	72	74	74	74																															
0.831 – 0.850 (0.0327 – 0.0335)	70	72	74	74	74																																
0.851 – 0.870 (0.0335 – 0.0343)	72	74	74	74																																	
0.871 – 0.890 (0.0343 – 0.0350)	74	74	74																																		
0.891 – 0.910 (0.0351 – 0.0358)	74	74																																			
0.911 – 0.930 (0.0359 – 0.0366)	74																																				

Intake valve clearance (Cold):
0.15 – 0.25 mm (0.006 – 0.010 in.)

EXAMPLE: The 5.250 mm (0.2067 in.) lifter is installed, and the measured clearance is 0.400 mm (0.0157 in.).
Replace the 5.250 mm (0.2067 in.) lifter with a new No. 46 lifter.

New lifter thickness mm (in.)

Lifter No.	Thickness	Lifter No.	Thickness	Lifter No.	Thickness
06	5.060 (0.1992)	30	5.300 (0.2087)	54	5.540 (0.2181)
08	5.080 (0.2000)	32	5.320 (0.2094)	56	5.560 (0.2189)
10	5.100 (0.2008)	34	5.340 (0.2102)	58	5.580 (0.2197)
12	5.120 (0.2016)	36	5.360 (0.2110)	60	5.600 (0.2205)
14	5.140 (0.2024)	38	5.380 (0.2118)	62	5.620 (0.2213)
16	5.160 (0.2031)	40	5.400 (0.2126)	64	5.640 (0.2220)
18	5.180 (0.2039)	42	5.420 (0.2134)	66	5.660 (0.2228)
20	5.200 (0.2047)	44	5.440 (0.2142)	68	5.680 (0.2236)
22	5.220 (0.2055)	46	5.460 (0.2150)	70	5.700 (0.2244)
24	5.240 (0.2063)	48	5.480 (0.2157)	72	5.720 (0.2252)
26	5.260 (0.2071)	50	5.500 (0.2165)	74	5.740 (0.2260)
28	5.280 (0.2079)	52	5.520 (0.2173)		

A79322

1ZZ–FE, 3ZZ–FE: Valve Lifter Selection Chart (Exhaust)

Measured clearance mm (in.) \ Installed lifter thickness mm (in.)	5.060 (0.1992)	5.080 (0.2000)	5.100 (0.2008)	5.120 (0.2016)	5.140 (0.2024)	5.160 (0.2031)	5.180 (0.2039)	5.200 (0.2047)	5.210 (0.2051)	5.220 (0.2055)	5.230 (0.2059)	5.240 (0.2063)	5.250 (0.2067)	5.260 (0.2071)	5.270 (0.2075)	5.280 (0.2079)	5.290 (0.2083)	5.300 (0.2087)	5.310 (0.2091)	5.320 (0.2094)	5.330 (0.2098)	5.340 (0.2102)	5.350 (0.2106)	5.360 (0.2110)	5.370 (0.2114)	5.380 (0.2118)	5.390 (0.2122)	5.400 (0.2126)	5.410 (0.2130)	5.420 (0.2134)	5.430 (0.2138)	5.440 (0.2142)	5.450 (0.2146)	5.460 (0.2150)	5.470 (0.2154)	5.480 (0.2157)	5.490 (0.2161)	5.500 (0.2165)	5.510 (0.2169)	5.520 (0.2173)	5.530 (0.2177)	5.540 (0.2181)	5.550 (0.2185)	5.560 (0.2189)	5.570 (0.2193)	5.580 (0.2197)	5.590 (0.2201)	5.600 (0.2205)	5.620 (0.2213)	5.640 (0.2220)	5.660 (0.2228)	5.680 (0.2236)	5.700 (0.2244)	5.720 (0.2252)	5.740 (0.2260)
0.000 – 0.030 (0.0000 – 0.0012)																			06	06	06	06	08	08	10	10	12	12	14	14	16	16	18	18	20	20	22	22	24	24	26	26	28	28	30	30	32	32	34	36	38	40	42	44	46
0.031 – 0.050 (0.0012 – 0.0020)															06	06	06	06	06	06	08	08	10	10	12	12	14	14	16	16	18	18	20	20	22	22	24	24	26	26	28	28	30	30	32	32	34	34	36	38	40	42	44	46	48
0.051 – 0.070 (0.0020 – 0.0028)														06	06	06	06	08	08	10	10	12	12	14	14	16	16	18	18	20	20	22	22	24	24	26	26	28	28	30	30	32	32	34	34	36	36	38	40	42	44	46	48	50
0.071 – 0.090 (0.0028 – 0.0035)												06	06	06	06	06	08	08	10	10	12	12	14	14	16	16	18	18	20	20	22	22	24	24	26	26	28	28	30	30	32	32	34	34	36	36	38	38	40	42	44	46	48	50	52
0.091 – 0.110 (0.0036 – 0.0043)											06	06	06	06	08	08	10	10	12	12	14	14	16	16	18	18	20	20	22	22	24	24	26	26	28	28	30	30	32	32	34	34	36	36	38	38	40	40	42	44	46	48	50	52	54
0.111 – 0.130 (0.0044 – 0.0051)									06	06	06	06	08	08	10	10	12	12	14	14	16	16	18	18	20	20	22	22	24	24	26	26	28	28	30	30	32	32	34	34	36	36	38	38	40	40	42	42	44	46	48	50	52	54	56
0.131 – 0.150 (0.0052 – 0.0059)								06	06	06	08	08	10	10	12	12	14	14	16	16	18	18	20	20	22	22	24	24	26	26	28	28	30	30	32	32	34	34	36	36	38	38	40	40	42	42	44	44	46	48	50	52	54	56	58
0.151 – 0.170 (0.0059 – 0.0067)						06	06	06	08	08	10	10	12	12	14	14	16	16	18	18	20	20	22	22	24	24	26	26	28	28	30	30	32	32	34	34	36	36	38	38	40	40	42	42	44	44	46	46	48	50	52	54	56	58	60
0.171 – 0.190 (0.0067 – 0.0075)					06	06	06	08	10	10	12	12	14	14	16	16	18	18	20	20	22	22	24	24	26	26	28	28	30	30	32	32	34	34	36	36	38	38	40	40	42	42	44	44	46	46	48	48	50	52	54	56	58	60	62
0.191 – 0.210 (0.0075 – 0.0083)				06	06	06	08	10	12	12	14	14	16	16	18	18	20	20	22	22	24	24	26	26	28	28	30	30	32	32	34	34	36	36	38	38	40	40	42	42	44	44	46	46	48	48	50	50	52	54	56	58	60	62	64
0.211 – 0.230 (0.0083 – 0.0091)			06	06	06	08	10	12	14	14	16	16	18	18	20	20	22	22	24	24	26	26	28	28	30	30	32	32	34	34	36	36	38	38	40	40	42	42	44	44	46	46	48	48	50	50	52	52	54	56	58	60	62	64	66
0.231 – 0.249 (0.0091 – 0.0098)		06	06	06	08	10	12	14	16	16	18	18	20	20	22	22	24	24	26	26	28	28	30	30	32	32	34	34	36	36	38	38	40	40	42	42	44	44	46	46	48	48	50	50	52	52	54	54	56	58	60	62	64	66	68
0.250 – 0.350 (0.0098 – 0.0138)																																																										
0.351 – 0.370 (0.0138 – 0.0146)	12	14	16	18	20	22	24	26	28	28	30	30	32	32	34	34	36	36	38	38	40	40	42	42	44	44	46	46	48	48	50	50	52	52	54	54	56	56	58	58	60	60	62	62	64	64	66	66	68	70	72	74	74	74
0.371 – 0.390 (0.0146 – 0.0154)	14	16	18	20	22	24	26	28	30	30	32	32	34	34	36	36	38	38	40	40	42	42	44	44	46	46	48	48	50	50	52	52	54	54	56	56	58	58	60	60	62	62	64	64	66	66	68	68	70	72	74	74	74	
0.391 – 0.410 (0.0154 – 0.0161)	16	18	20	22	24	26	28	30	32	32	34	34	36	36	38	38	40	40	42	42	44	44	46	46	48	48	50	50	52	52	54	54	56	56	58	58	60	60	62	62	64	64	66	66	68	68	70	70	72	74	74	74		
0.411 – 0.430 (0.0162 – 0.0169)	18	20	22	24	26	28	30	32	34	34	36	36	38	38	40	40	42	42	44	44	46	46	48	48	50	50	52	52	54	54	56	56	58	58	60	60	62	62	64	64	66	66	68	68	70	70	72	72	74	74	74			
0.431 – 0.450 (0.0170 – 0.0177)	20	22	24	26	28	30	32	34	36	36	38	38	40	40	42	42	44	44	46	46	48	48	50	50	52	52	54	54	56	56	58	58	60	60	62	62	64	64	66	66	68	68	70	70	72	72	74	74	74	74				
0.451 – 0.470 (0.0178 – 0.0185)	22	24	26	28	30	32	34	36	38	38	40	40	42	42	44	44	46	46	48	48	50	50	52	52	54	54	56	56	58	58	60	60	62	62	64	64	66	66	68	68	70	70	72	72	74	74	74	74						
0.471 – 0.490 (0.0185 – 0.0193)	24	26	28	30	32	34	36	38	40	40	42	42	44	44	46	46	48	48	50	50	52	52	54	54	56	56	58	58	60	60	62	62	64	64	66	66	68	68	70	70	72	72	74	74	74	74	74	74						
0.491 – 0.510 (0.0193 – 0.0201)	26	28	30	32	34	36	38	40	42	42	44	44	46	46	48	48	50	50	52	52	54	54	56	56	58	58	60	60	62	62	64	64	66	66	68	68	70	70	72	72	74	74	74	74	74	74								
0.511 – 0.530 (0.0201 – 0.0209)	28	30	32	34	36	38	40	42	44	44	46	46	48	48	50	50	52	52	54	54	56	56	58	58	60	60	62	62	64	64	66	66	68	68	70	70	72	72	74	74	74	74	74	74										
0.531 – 0.550 (0.0209 – 0.0217)	30	32	34	36	38	40	42	44	46	46	48	48	50	50	52	52	54	54	56	56	58	58	60	60	62	62	64	64	66	66	68	68	70	70	72	72	74	74	74	74	74	74												
0.551 – 0.570 (0.0217 – 0.0224)	32	34	36	38	40	42	44	46	48	48	50	50	52	52	54	54	56	56	58	58	60	60	62	62	64	64	66	66	68	68	70	70	72	72	74	74	74	74	74	74														
0.571 – 0.590 (0.0225 – 0.0232)	34	36	38	40	42	44	46	48	50	50	52	52	54	54	56	56	58	58	60	60	62	62	64	64	66	66	68	68	70	70	72	72	74	74	74	74	74	74																
0.591 – 0.610 (0.0233 – 0.0240)	36	38	40	42	44	46	48	50	52	52	54	54	56	56	58	58	60	60	62	62	64	64	66	66	68	68	70	70	72	72	74	74	74	74	74	74																		
0.611 – 0.630 (0.0241 – 0.0248)	38	40	42	44	46	48	50	52	54	54	56	56	58	58	60	60	62	62	64	64	66	66	68	68	70	70	72	72	74	74	74	74	74	74																				
0.631 – 0.650 (0.0248 – 0.0256)	40	42	44	46	48	50	52	54	56	56	58	58	60	60	62	62	64	64	66	66	68	68	70	70	72	72	74	74	74	74	74	74																						
0.651 – 0.670 (0.0256 – 0.0264)	42	44	46	48	50	52	54	56	58	58	60	60	62	62	64	64	66	66	68	68	70	70	72	72	74	74	74	74	74	74																								
0.671 – 0.690 (0.0264 – 0.0272)	44	46	48	50	52	54	56	58	60	60	62	62	64	64	66	66	68	68	70	70	72	72	74	74	74	74	74	74																									
0.691 – 0.710 (0.0272 – 0.0280)	46	48	50	52	54	56	58	60	62	62	64	64	66	66	68	68	70	70	72	72	74	74	74	74	74	74																									
0.711 – 0.730 (0.0280 – 0.0287)	48	50	52	54	56	58	60	62	64	64	66	66	68	68	70	70	72	72	74	74	74	74	74	74																									
0.731 – 0.750 (0.0288 – 0.0295)	50	52	54	56	58	60	62	64	66	66	68	68	70	70	72	72	74	74	74	74	74	74																									
0.751 – 0.770 (0.0296 – 0.0303)	52	54	56	58	60	62	64	66	68	68	70	70	72	72	74	74	74	74	74	74																									
0.771 – 0.790 (0.0304 – 0.0311)	54	56	58	60	62	64	66	68	70	70	72	72	74	74	74	74	74	74																											
0.791 – 0.810 (0.0311 – 0.0319)	56	58	60	62	64	66	68	70	72	72	74	74	74	74	74	74																											
0.811 – 0.830 (0.0319 – 0.0327)	58	60	62	64	66	68	70	72	74	74	74	74	74	74																											
0.831 – 0.850 (0.0327 – 0.0335)	60	62	64	66	68	70	72	74	74	74	74	74																											
0.851 – 0.870 (0.0335 – 0.0343)	62	64	66	68	70	72	74	74	74	74																											
0.871 – 0.890 (0.0343 – 0.0350)	64	66	68	70	72	74	74	74																													
0.891 – 0.910 (0.0351 – 0.0358)	66	68	70	72	74	74	74																														
0.911 – 0.930 (0.0359 – 0.0366)	68	70	72	74	74	74																															
0.931 – 0.950 (0.0367 – 0.0374)	70	72	74	74	74																																
0.951 – 0.970 (0.0374 – 0.0382)	72	74	74	74																																	
0.971 – 0.990 (0.0382 – 0.0390)	74	74	74																																		
0.991 – 1.010 (0.0390 – 0.0398)	74	74																																			
1.011 – 1.030 (0.0398 – 0.0406)	74																																				

Exhaust valve clearance (Cold):

0.25 – 0.35 mm (0.010 – 0.014 in.)

EXAMPLE: The 5.340 mm (0.2102 in.) lifter is installed, and the measured clearance is 0.440 mm (0.0173 in.).
Replace the 5.340 mm (0.2102 in.) lifter with a new No. 48 lifter.

New lifter thickness mm (in.)

Lifter No.	Thickness	Lifter No.	Thickness	Lifter No.	Thickness
06	5.060 (0.1992)	30	5.300 (0.2087)	54	5.540 (0.2181)
08	5.080 (0.2000)	32	5.320 (0.2094)	56	5.560 (0.2189)
10	5.100 (0.2008)	34	5.340 (0.2102)	58	5.580 (0.2197)
12	5.120 (0.2016)	36	5.360 (0.2110)	60	5.600 (0.2205)
14	5.140 (0.2024)	38	5.380 (0.2118)	62	5.620 (0.2213)
16	5.160 (0.2031)	40	5.400 (0.2126)	64	5.640 (0.2220)
18	5.180 (0.2039)	42	5.420 (0.2134)	66	5.660 (0.2228)
20	5.200 (0.2047)	44	5.440 (0.2142)	68	5.680 (0.2236)
22	5.220 (0.2055)	46	5.460 (0.2150)	70	5.700 (0.2244)
24	5.240 (0.2063)	48	5.480 (0.2157)	72	5.720 (0.2252)
26	5.260 (0.2071)	50	5.500 (0.2165)	74	5.740 (0.2260)
28	5.280 (0.2079)	52	5.520 (0.2173)		

A79323

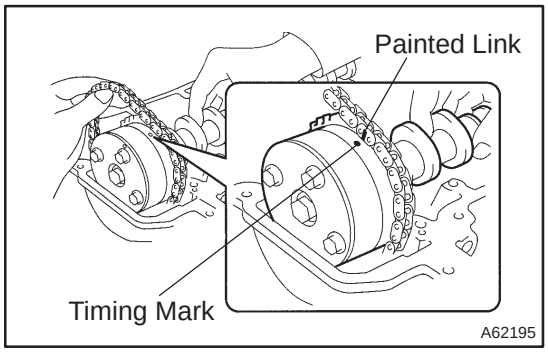

(m) Install the timing chain on the camshaft timing gear with the painted links aligned with the timing marks on the camshaft timing sprocket as shown in the illustration.

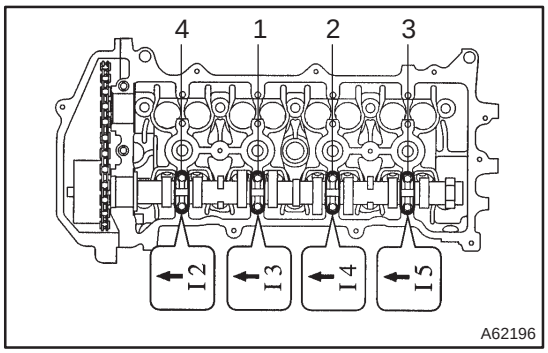

(n) Examine the front marks and numbers and tighten the bolts in the sequence shown in the illustration.
Torque: 13 N·m (133 kgf·cm, 10 ft·lbf)

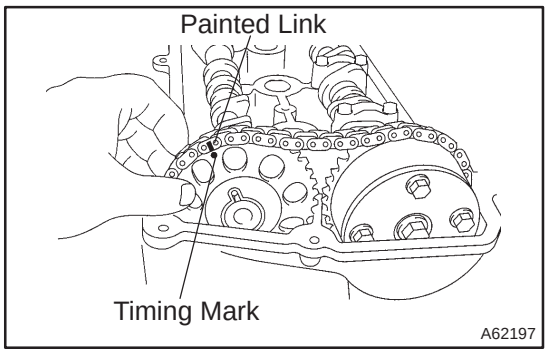

(o) Put the camshaft No.2 on the cylinder head with the painted links of the chain aligned with the timing mark on the camshaft timing sprocket.

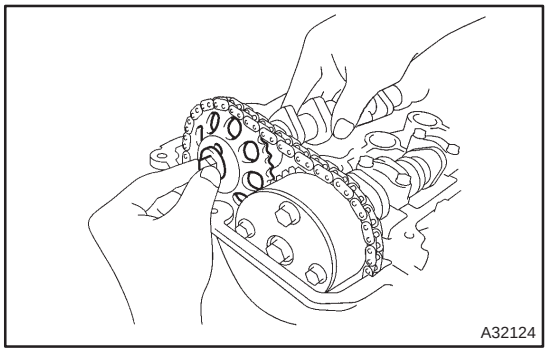

(p) Tighten the camshaft timing gear set bolt temporarily.

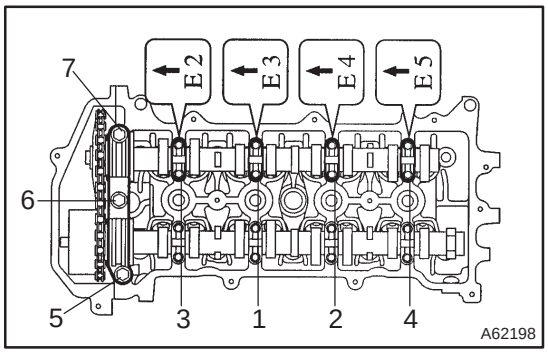

(q) Examine the front marks and numbers and tighten the bolts in the sequence shown in the illustration.
Torque: 13 N·m (133 kgf·cm, 10 ft·lbf)

(r) Install the bearing cap No. 1.
Torque: 23 N·m (235 kgf·cm, 17 ft·lbf)

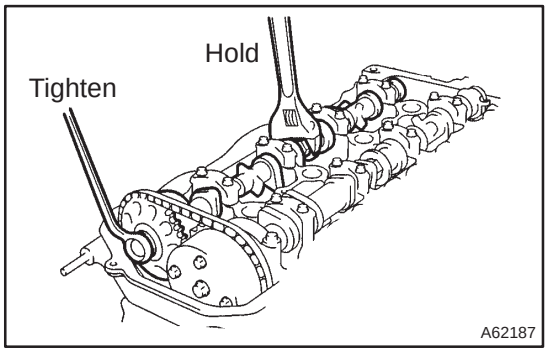

(s) Hold the camshaft with a wrench, tighten the camshaft timing gear set bolt.

Torque: 54 N·m (551 kgf·cm, 40 ft·lbf)

NOTICE:

Be careful not damage the valve lifter.

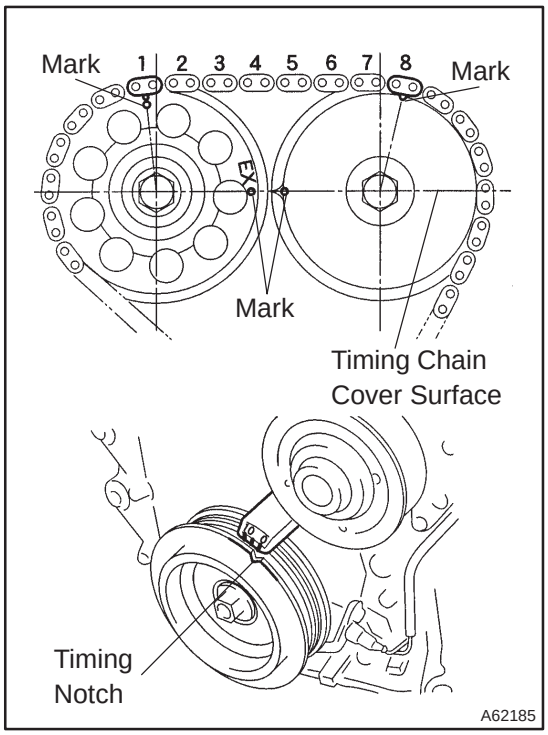

(t) Check the match marks on the 2 camshaft sprockets are aligned with each other and aligned with the painted links of the timing chain as shown in the illustration. Also, check the timing notch is aligned with the timing mark ”0” of the chain cover.

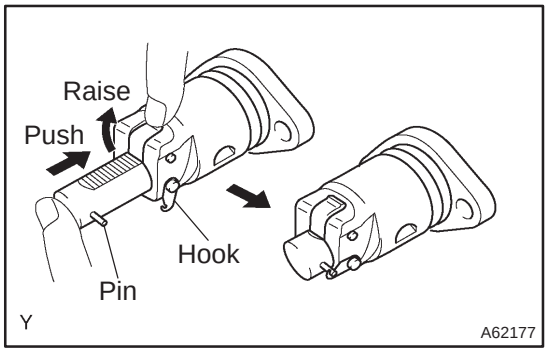

(u) Install chain tensioner.

(1) Check that the O–ring is clean, and set the hook as shown in the illustration.

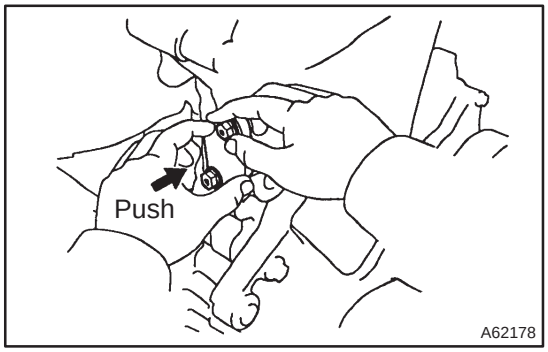

(2) Apply engine oil to the chain tensioner and install it with the 2 nuts.

Torque: 9.0 N·m (92 kgf·cm, 80 in·lbf)

NOTICE:

If the hook released the plunger during installation, re–hook the plunger by the hook to fixit.

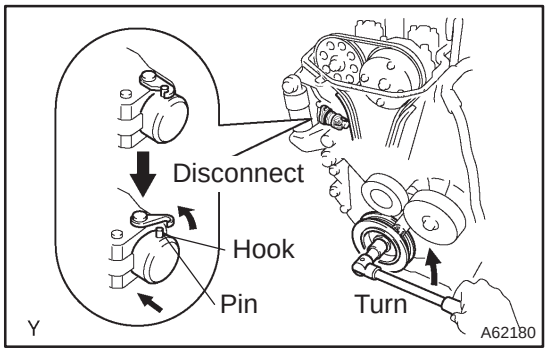

(3) Turn the crankshaft counterclockwise, and take the hook off the knock pin to release the plunger.

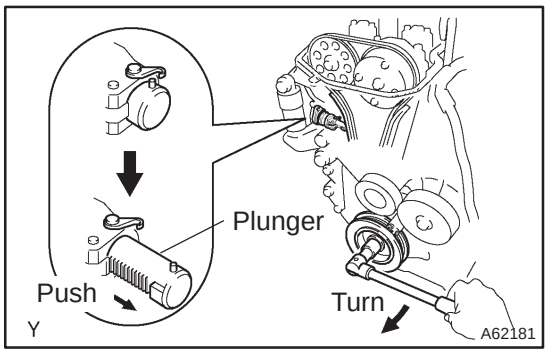

(4) Turn the crankshaft clockwise, and check that the plunger is extended.

HINT:
If the plunger does not be extended, press the slipper into the chain tensioner using a screwdriver so that the hook is took off from the knock pin and let the plunger can be extended.

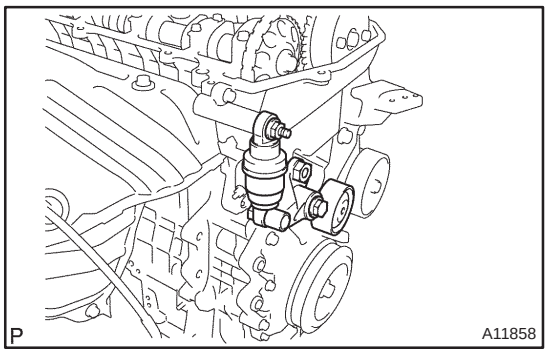

16. INSTALL V–RIBBED BELT TENSIONER ASSY

(a) Install the V–ribbed belt tensioner with the nut and bolt.
Torque:
29 N·m (296 kgf·cm, 21 ft·lbf) for Nut
69 N·m (704 kgf·cm, 51 ft·lbf) for Bolt

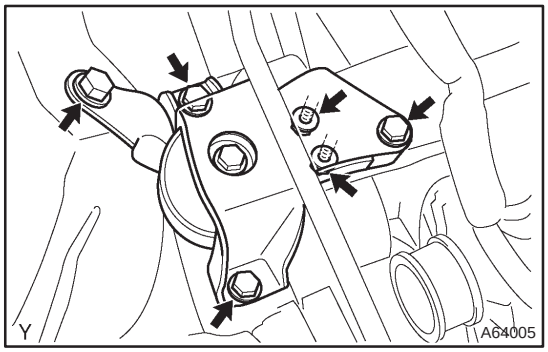

17. INSTALL ENGINE MOUNTING INSULATOR SUB–ASSY RH

(a) Install the engine mounting insulator with the 4 bolts and 2 nuts.
Torque: 52 N·m (530 kgf·cm, 38 ft·lbf)

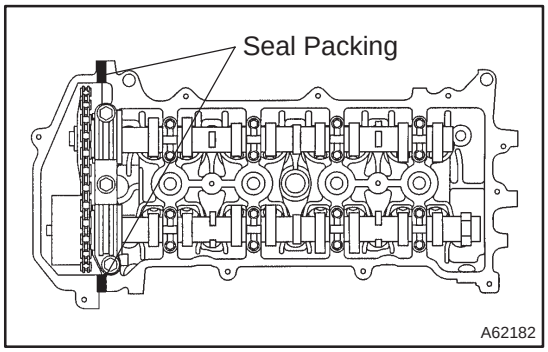

18. INSTALL CYLINDER HEAD COVER SUB–ASSY

(a) Remove any old packing (FIPG) material.

(b) Apply seal packing to the 2 locations as shown in the illustration.

Seal packing: Part No. 08826–00080 or equivalent

NOTICE:

- **Remove any oil from the contact surface.**
- **Install the cylinder head cover within 3 minutes after applying seal packing.**
- **Do not expose the seal to engine oil 2 hours after installing.**

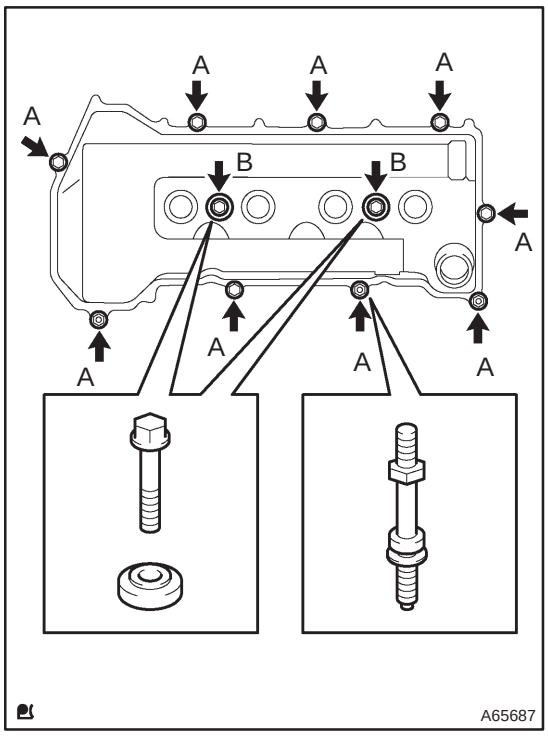

(c) Install the cylinder head cover and cable bracket with the 9 bolts, 2 seal washers and 2 nuts. Tighten the bolts and nuts uniformly in the several steps.

Torque:
11 N·m (112 kgf·cm, 8 ft·lbf) for A
9.0 N·m (92 kgf·cm, 80 in·lbf) for B

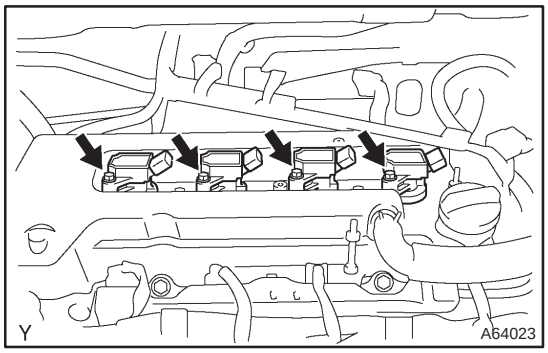

19. INSTALL IGNITION COIL ASSY

(a) Install the 4 ignition coils with the 4 bolts.

Torque: 9.0 N·m (92 kgf·cm, 80 in.·lbf)

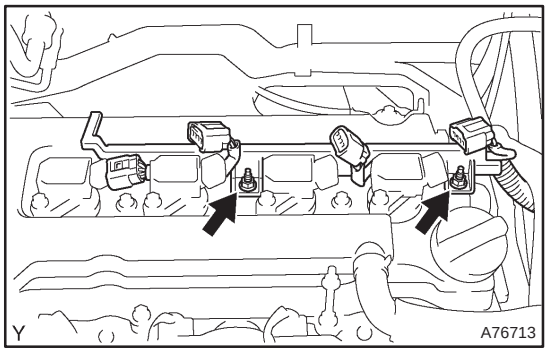

(b) Install the engine wire with the 2 nuts.
Torque: 9.0 N·m (92 kgf·cm, 80 in.·lbf)

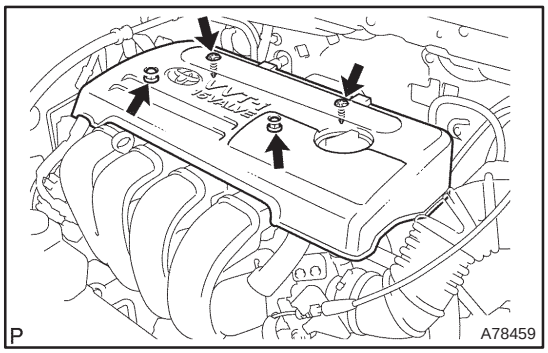

20. INSTALL CYLINDER HEAD COVER NO.2

(a) Install the cylinder head cover with the 2 nuts and 2 clips.
Torque: 7.0 N·m (71 kgf·cm, 62 in.·lbf)

21. CHECK FOR ENGINE OIL LEAKS

PARTIAL ENGINE ASSY (1ZZ–FE/3ZZ–FE)

141CF–01

COMPONENTS

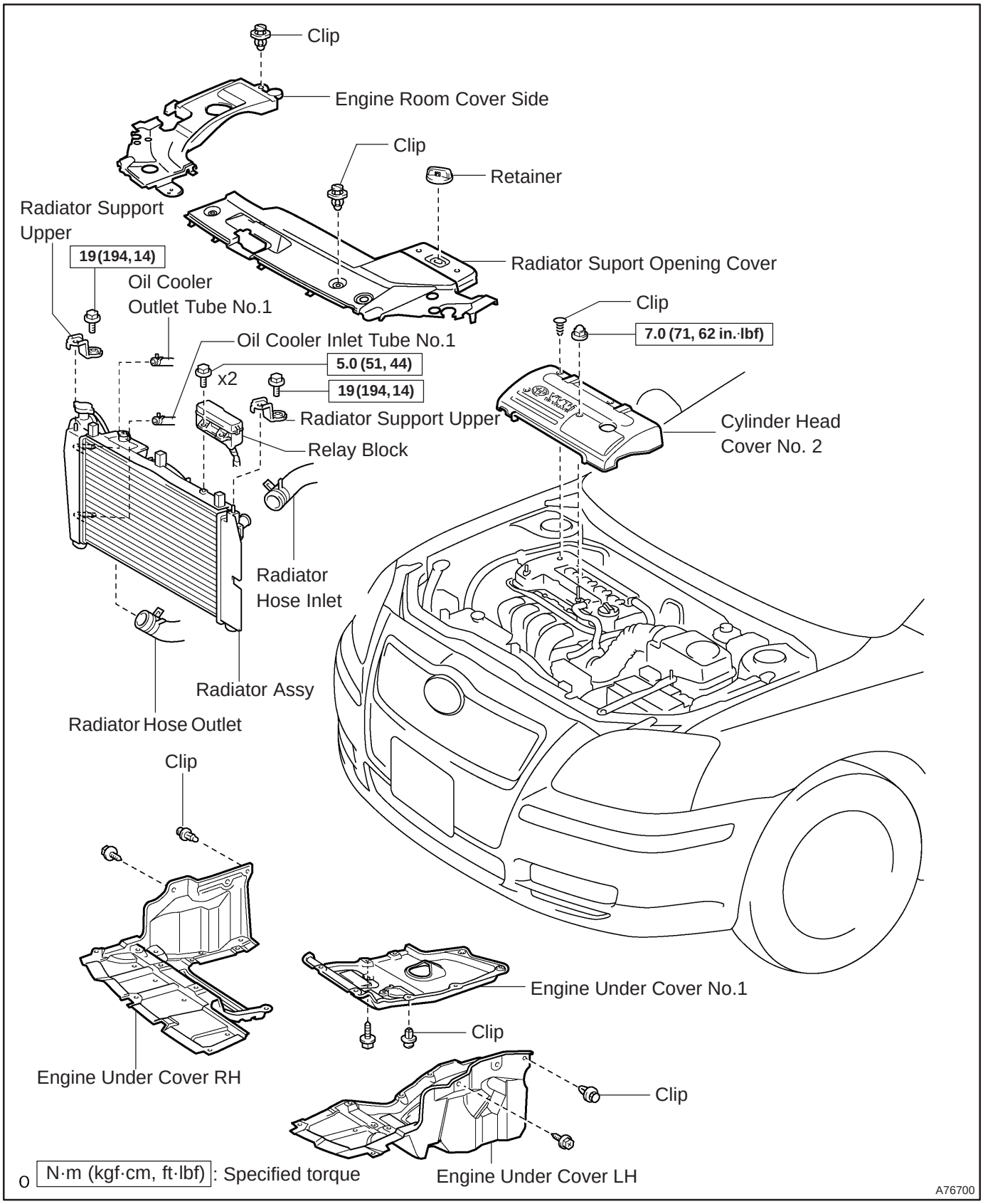

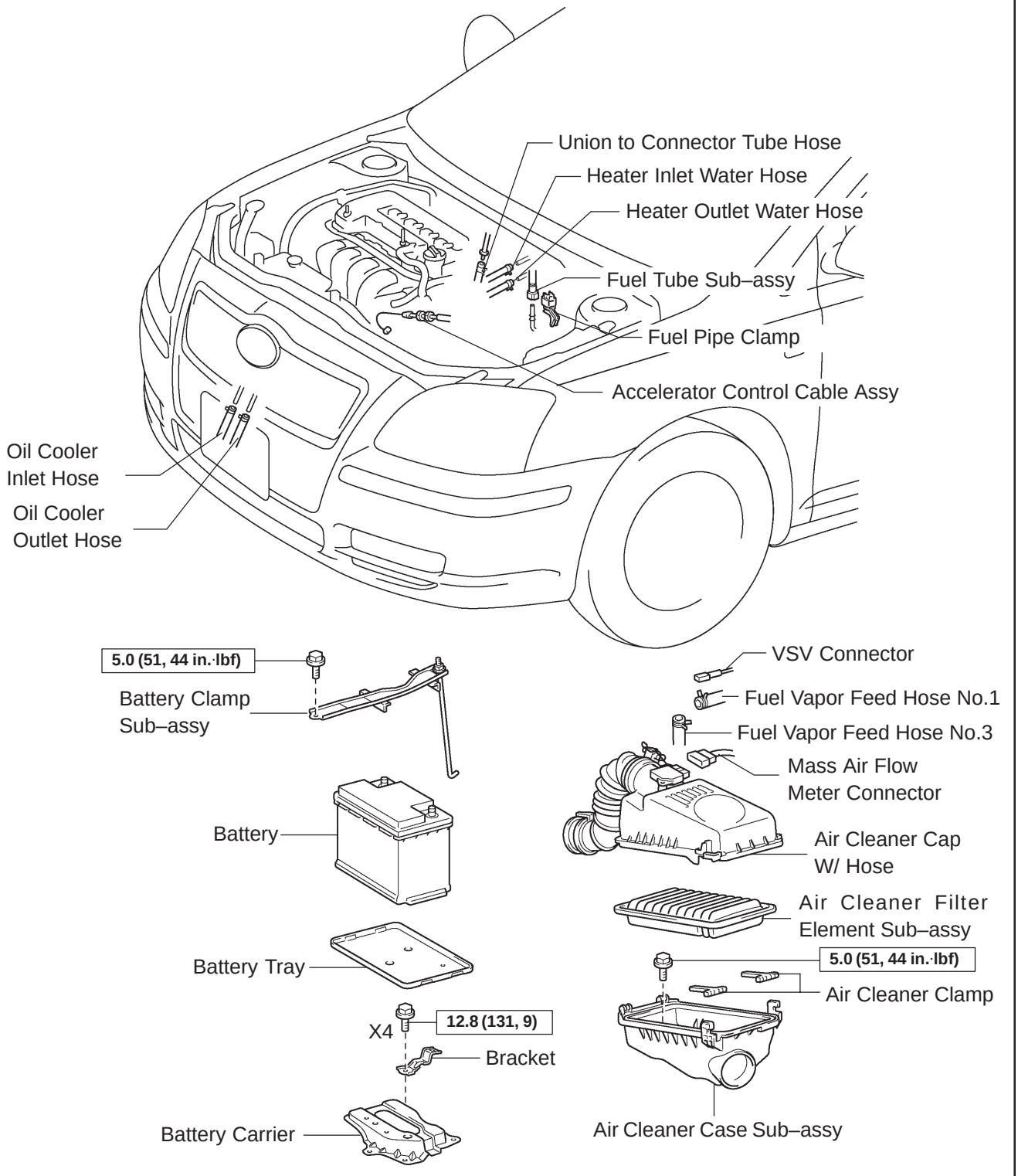

o N·m (kgf·cm, ft·lbf): Specified torque

A76702

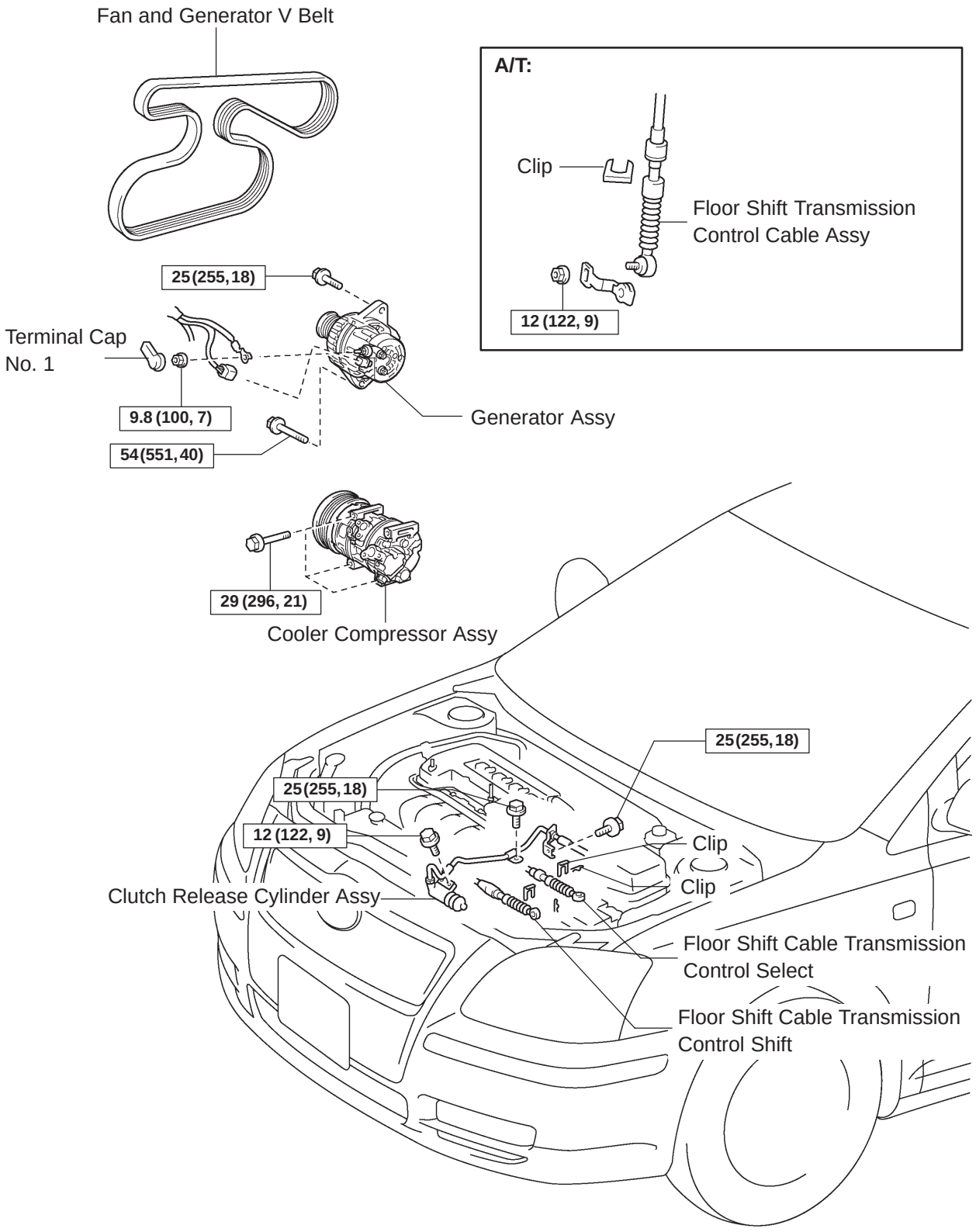

o N·m (kgf·cm, ft·lbf) : Specified torque

A76703

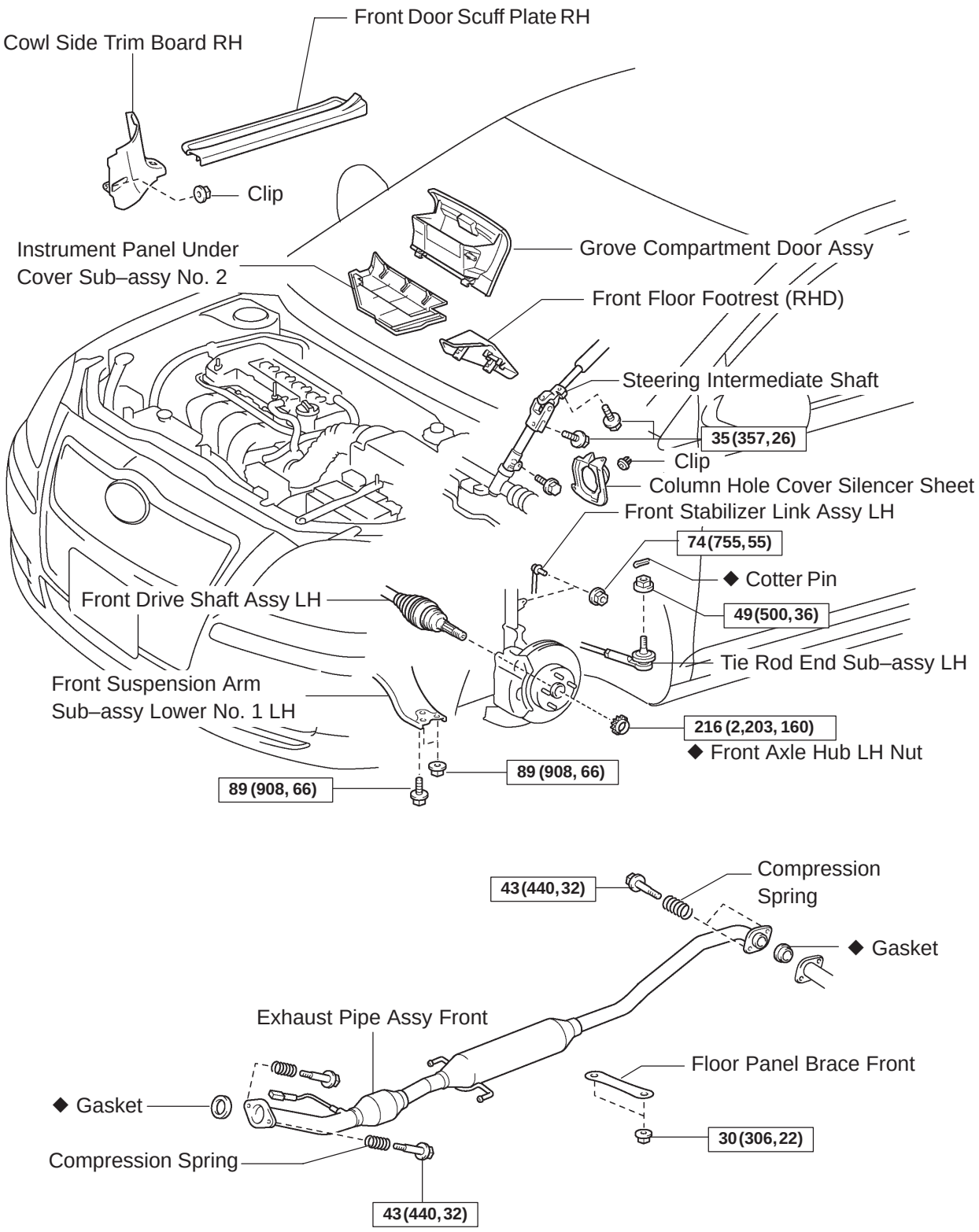

N·m (kgf·cm, ft·lbf) : Specified torque

◆ Non–reusable part

A76704

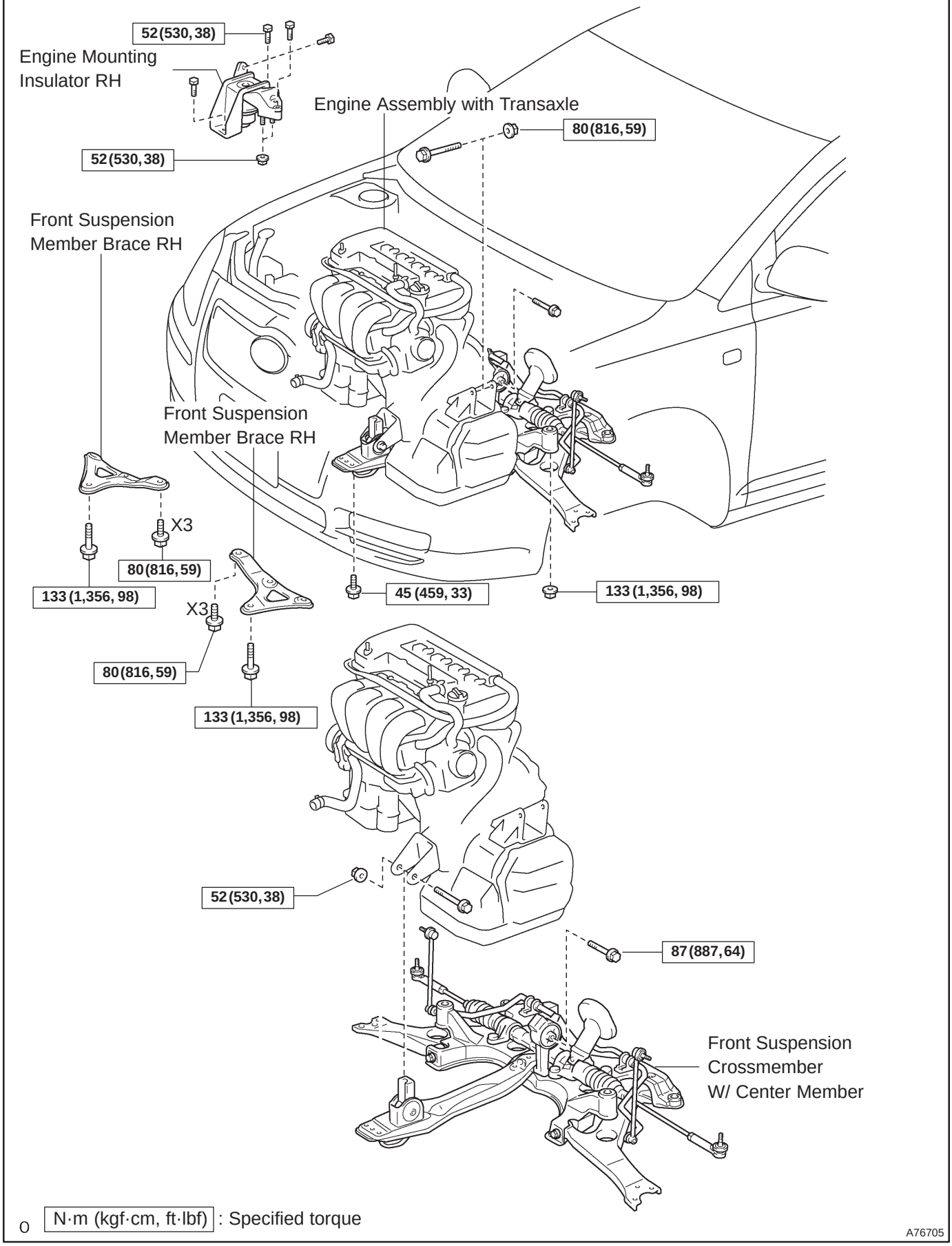
52 (530, 38)
Engine Mounting
Insulator RH
52 (530, 38)
Engine Assembly with Transaxle
80 (816, 59)
Front Suspension
Member Brace RH
Front Suspension
Member Brace RH
X3
80 (816, 59)
133 (1,356, 98)
X3
80 (816, 59)
133 (1,356, 98)
45 (459, 33)
133 (1,356, 98)
52 (530, 38)
87 (887, 64)
Front Suspension
Crossmember
W/ Center Member
o N·m (kgf·cm, ft·lbf) : Specified torque
A76705

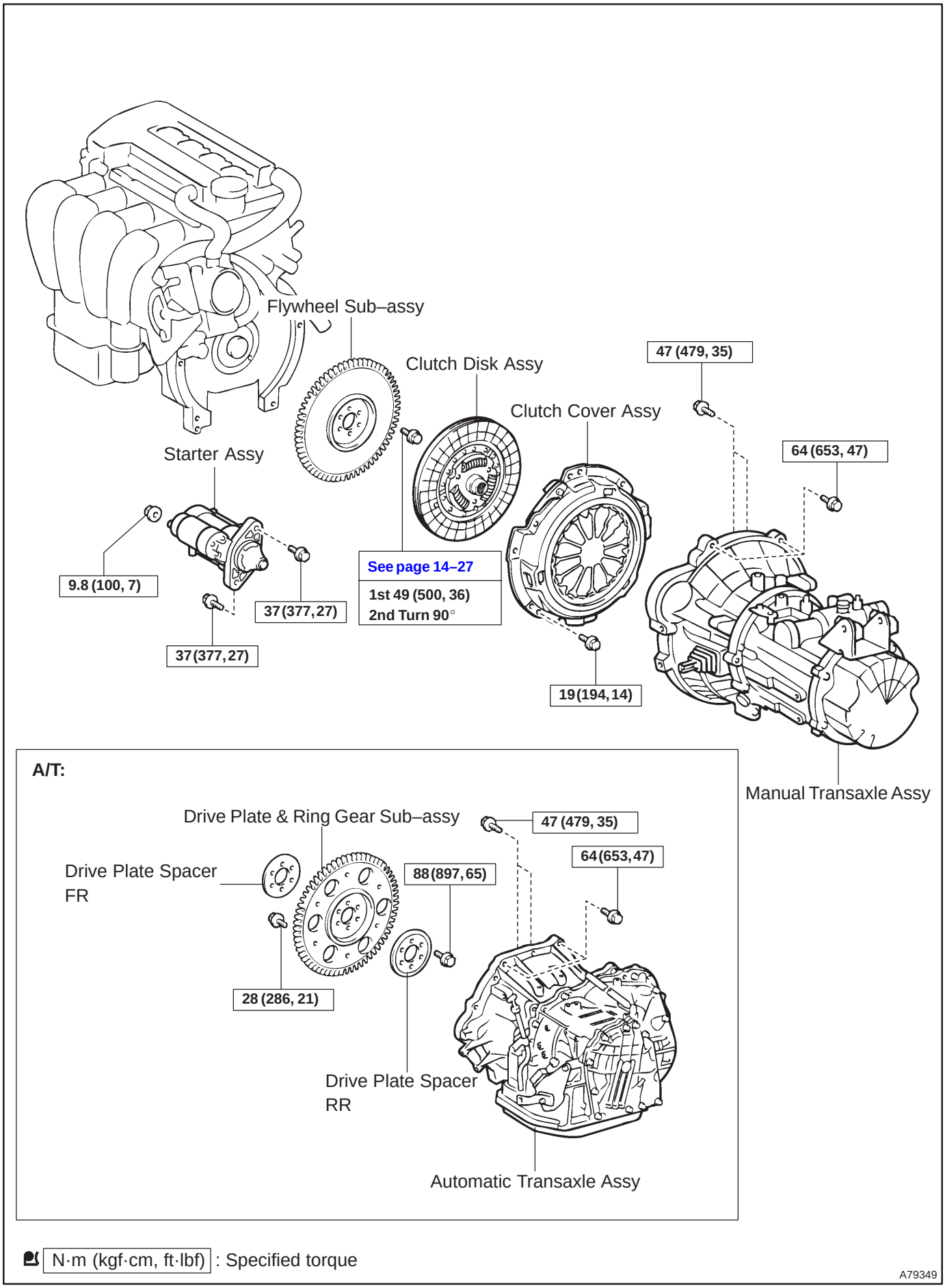
Flywheel Sub–assy
Clutch Disk Assy
Clutch Cover Assy
47 (479, 35)
64 (653, 47)
Starter Assy
9.8 (100, 7)
37 (377, 27)
37 (377, 27)
See page 14–27
1st 49 (500, 36)
2nd Turn 90°
19 (194, 14)
Manual Transaxle Assy
A/T:
Drive Plate & Ring Gear Sub–assy
47 (479, 35)
64 (653, 47)
Drive Plate Spacer
FR
88 (897, 65)
28 (286, 21)
Drive Plate Spacer
RR
Automatic Transaxle Assy
N·m (kgf·cm, ft·lbf) : Specified torque
A79349

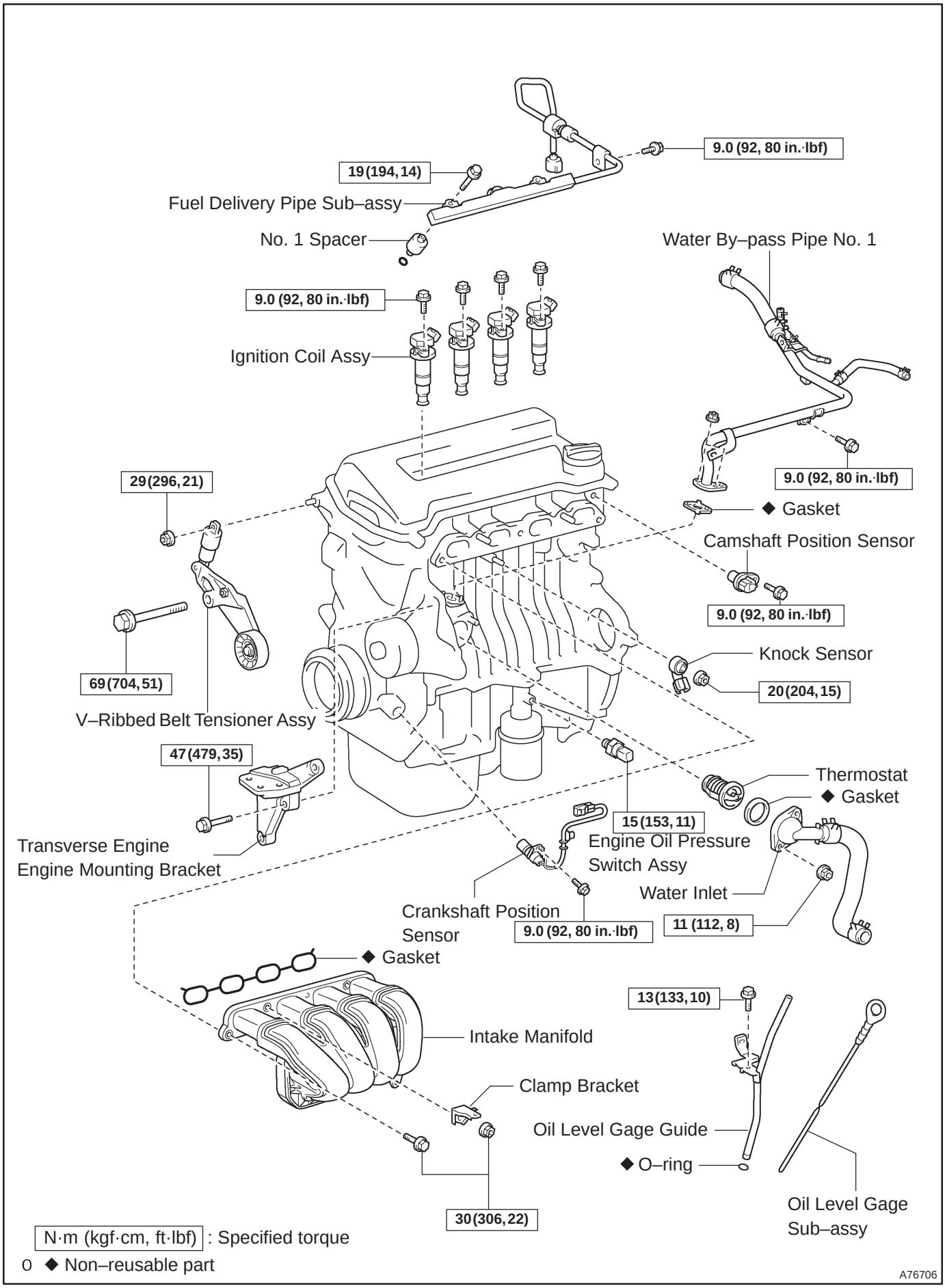
9.0 (92, 80 in.·lbf)
19 (194, 14)
Fuel Delivery Pipe Sub–assy
No. 1 Spacer
Water By–pass Pipe No. 1
9.0 (92, 80 in.·lbf)
Ignition Coil Assy
9.0 (92, 80 in.·lbf)
29 (296, 21)
◆ Gasket
Camshaft Position Sensor
9.0 (92, 80 in.·lbf)
Knock Sensor
20 (204, 15)
69 (704, 51)
V–Ribbed Belt Tensioner Assy
47 (479, 35)
Thermostat
◆ Gasket
15 (153, 11)
Engine Oil Pressure Switch Assy
Transverse Engine Engine Mounting Bracket
Water Inlet
11 (112, 8)
Crankshaft Position Sensor
9.0 (92, 80 in.·lbf)
◆ Gasket
13 (133, 10)
Intake Manifold
Clamp Bracket
Oil Level Gage Guide
◆ O–ring
30 (306, 22)
Oil Level Gage Sub–assy
N·m (kgf·cm, ft·lbf) : Specified torque
o ◆ Non–reusable part
A76706

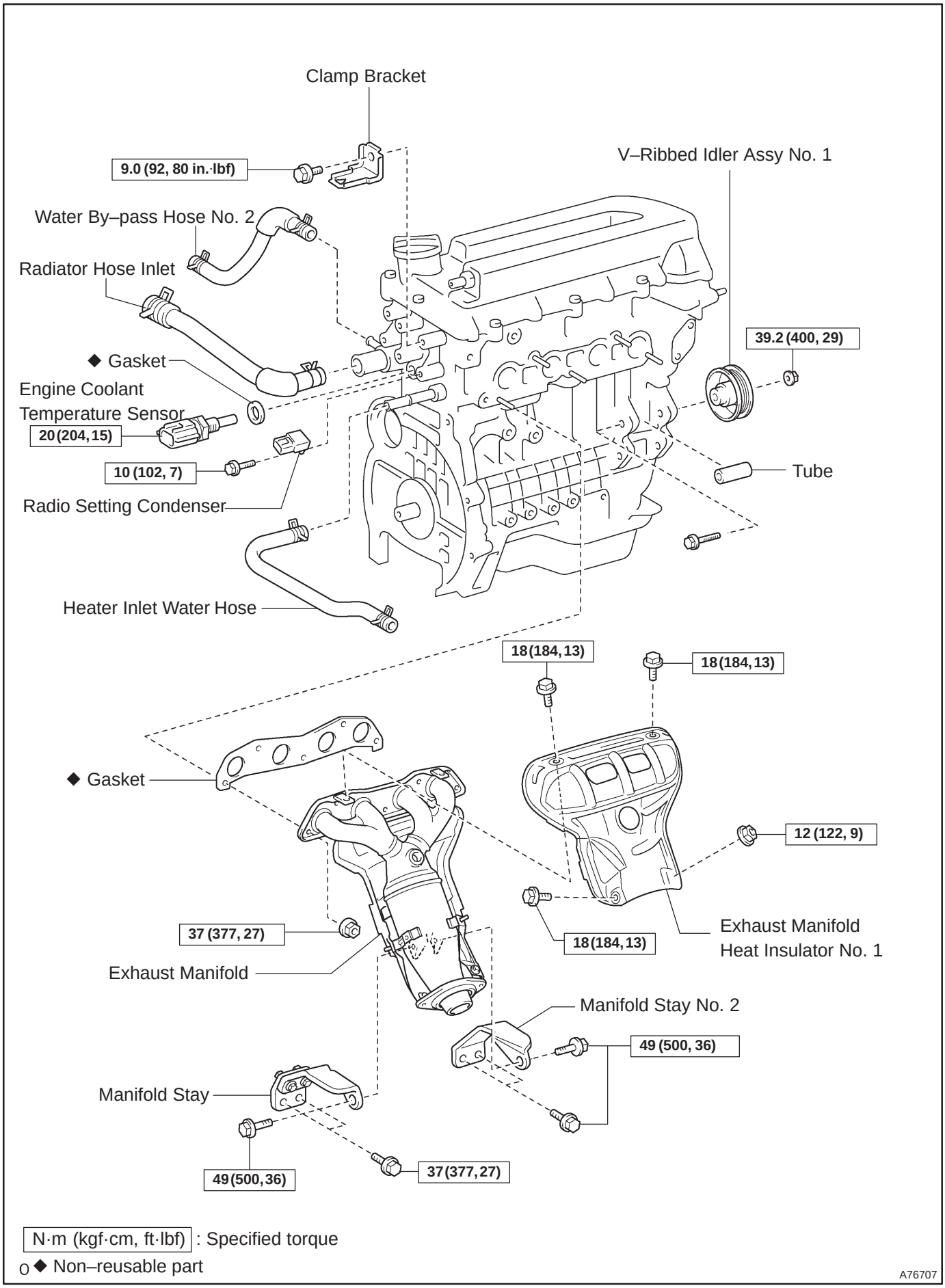
Clamp Bracket
9.0 (92, 80 in.·lbf)
V–Ribbed Idler Assy No. 1
Water By–pass Hose No. 2
Radiator Hose Inlet
◆ Gasket
Engine Coolant Temperature Sensor
20 (204, 15)
10 (102, 7)
Radio Setting Condenser
39.2 (400, 29)
Tube
Heater Inlet Water Hose
18 (184, 13)
18 (184, 13)
◆ Gasket
12 (122, 9)
37 (377, 27)
Exhaust Manifold
18 (184, 13)
Exhaust Manifold Heat Insulator No. 1
Manifold Stay No. 2
49 (500, 36)
Manifold Stay
49 (500, 36)
37 (377, 27)
N·m (kgf·cm, ft·lbf) : Specified torque
◆ Non–reusable part
A76707

REPLACEMENT

1. DISCHARGE FUEL SYSTEM PRESSURE (See page 11–1)

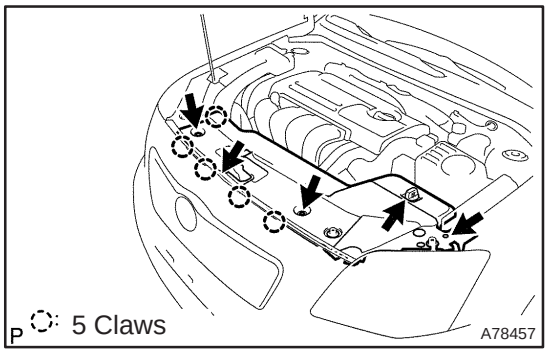

2. REMOVE RADIATOR SUPPORT OPENING COVER

(a) Remove the retainer and the 4 clips.

(b) Unfasten the 5 claws, and remove the radiator support opening cover.

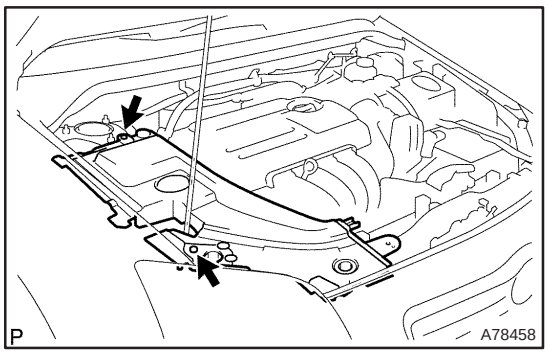

3. REMOVE ENGINE ROOM COVER SIDE

(a) Remove the 2 clips and the engine room cover side.

4. REMOVE FRONT WHEELS

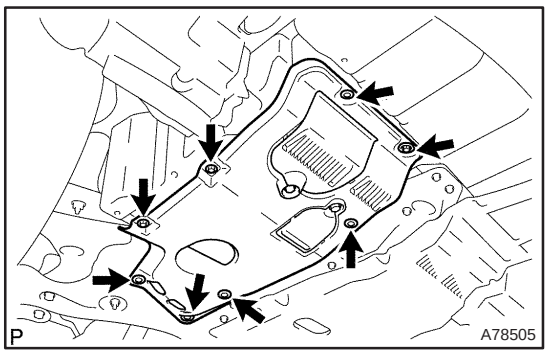

5. REMOVE ENGINE UNDER COVER SUB–ASSY NO.1

(a) Remove the 5 clips, 2 screws, bolt and detach the engine under cover.

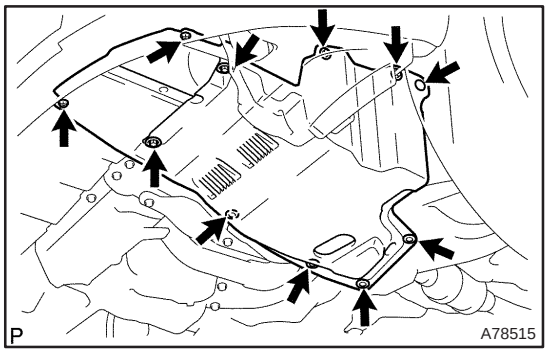

6. REMOVE ENGINE UNDER COVER LH

(a) Remove the 6 screws and 5 clips, then detach the engine under cover.

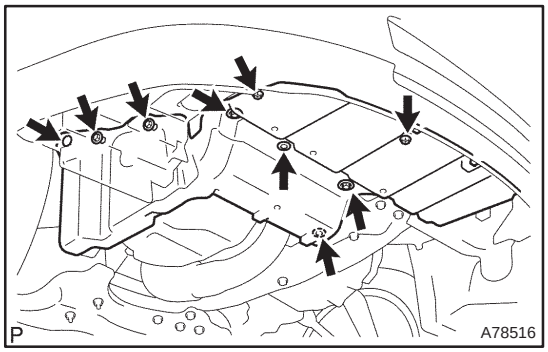

7. REMOVE ENGINE UNDER COVER RH

(a) Remove the 6 screws and 3 clips, then detach the engine under cover.

8. DRAIN ENGINE COOLANT (See page 16–7)

9. DRAIN ENGINE OIL

(a) Install a new gasket and the drain plug after draining engine oil.
Torque: 37 N·m (377 kgf·cm, 27 ft·lbf)

10. DRAIN MANUAL TRANSAXLE OIL (M/T TRANSAXLE) (See page 41–15)

11. DRAIN AUTOMATIC TRANSAXLE FLUID (A/T TRANSAXLE) (See page 40–42)

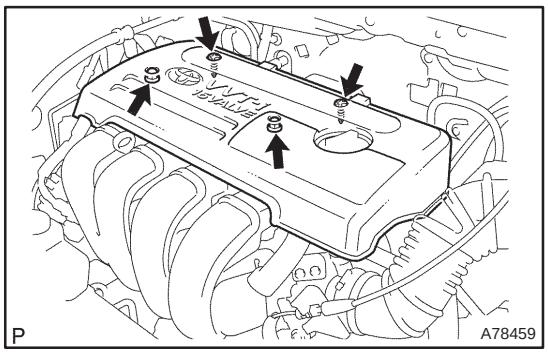

12. REMOVE CYLINDER HEAD COVER NO.2

(a) Remove the 2 nuts and 2 clips, then detach cylinder head cover No.2.

13. REMOVE AIR CLEANER ASSEMBLY WITH HOSE (See page 10–9 or 10–15)

14. REMOVE AIR CLEANER FILTER ELEMENT SUB–ASSY

15. REMOVE AIR CLEANER CASE SUB–ASSY

(a) Remove the 3 bolts and the air cleaner case.

16. DISCONNECT RADIATOR HOSE INLET

(a) Disconnect the radiator hose inlet from the radiator.

17. DISCONNECT RADIATOR HOSE OUTLET

(a) Disconnect the radiator hose outlet from the radiator.

18. DISCONNECT OIL COOLER INLET TUBE NO.1 (A/T TRANSAXLE)

(a) Disconnect the oil cooler inlet tube from the radiator.

19. DISCONNECT OIL COOLER OUTLET TUBE NO.1 (A/T TRANSAXLE)

(a) Disconnect the oil cooler outlet tube from the radiator.

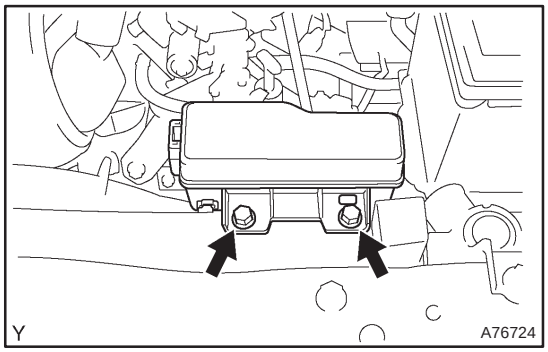

20. REMOVE RADIATOR ASSY

(a) Remove the 2 bolts and the relay block.

(b) Disconnect the connector and the 2 harness clamps.

(c) Remove the 2 bolts, the 2 radiator support upper and the radiator.

21. REMOVE BATTERY

22. REMOVE BATTERY TRAY

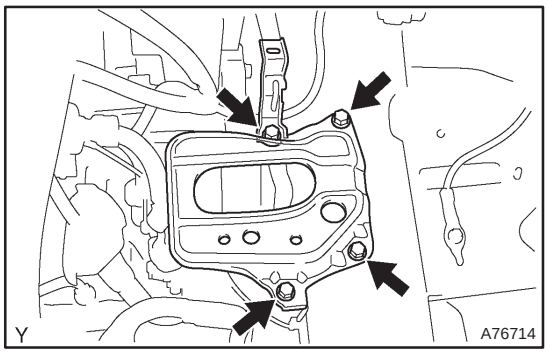

23. REMOVE BATTERY CARRIER

(a) Remove the 4 bolts, the battery carrier and the bracket.

24. REMOVE EFI FUEL PIPE CLAMP (See page 11–11)

25. DISCONNECT FUEL TUBE SUB–ASSY (See page 11–11)

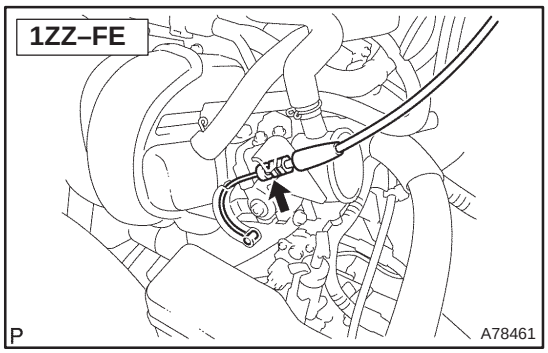

26. SEPARATE ACCELERATOR CONTROL CABLE ASSY

(a) Loosen the nut and separate the accelerator control cable.

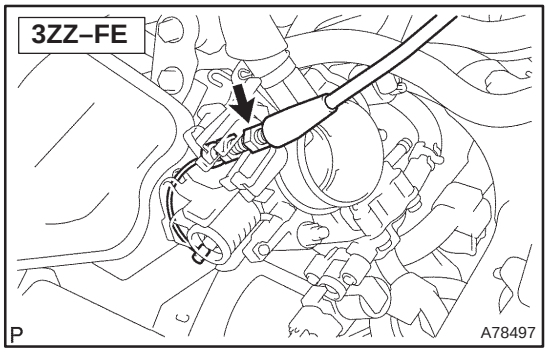

27. DISCONNECT UNION TO CONNECTOR TUBE HOSE

(a) Disconnect the union to connector tube hose.

28. DISCONNECT HEATER INLET WATER HOSE

(a) Disconnect the heater inlet water hose from the heater core inlet tube.

29. DISCONNECT HEATER OUTLET WATER HOSE

(a) Disconnect the heater outlet water hose from the heater core outlet tube.

30. DISCONNECT OIL COOLER INLET HOSE (A/T TRANSAXLE)

(a) Disconnect the oil cooler inlet hose from the automatic transaxle.

31. DISCONNECT OIL COOLER OUTLET HOSE (A/T TRANSAXLE)

(a) Disconnect the oil cooler outlet hose from the automatic transaxle.

32. SEPARATE FLOOR SHIFT CABLE TRANSMISSION CONTROL SELECT (M/T TRANSAXLE) (See page 41–15)

33. SEPARATE FLOOR SHIFT CABLE TRANSMISSION CONTROL SHIFT (M/T TRANSAXLE) (See page 41–15)

34. SEPARATE FLOOR SHIFT CABLE TRANSMISSION CONTROL SHIFT (A/T TRANSAXLE) (See page 40–11)

35. SEPARATE CLUTCH RELEASE CYLINDER ASSY (M/T TRANSAXLE) (See page 41–15)

36. REMOVE GLOVE COMPARTMENT DOOR ASSY (See page 71–11)

37. REMOVE INSTRUMENT PANEL UNDER COVER SUB–ASSY NO.2

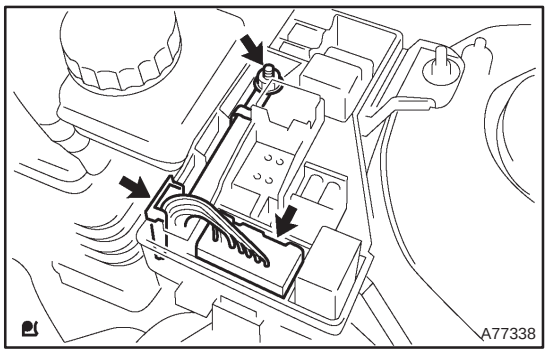

38. DISCONNECT ENGINE WIRE

(a) Disconnect the engine wire from the ECM and junction block.

(b) Pull out the engine wire.

(c) Remove the engine room relay block No.2 cover.

(d) Remove a nut and disconnect a connector as shown in the illustration.

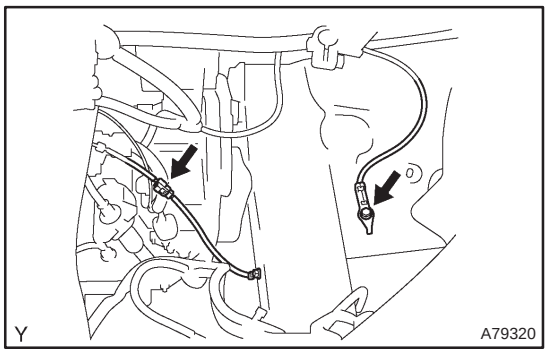

(e) Remove the bolt and disconnect the ground terminal.

(f) Disconnect the ground terminal connector.

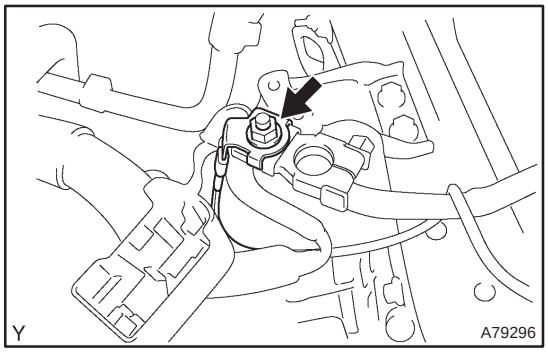

(g) Remove the nut and disconnect the battery terminal B.

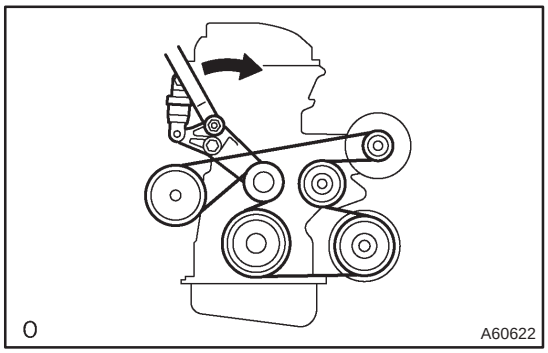

39. REMOVE FAN AND GENERATOR V BELT

(a) Turn the V–ribbed belt tensioner clockwise slowly and loosen it. Then, remove the fan and generator V belt and put back the V–ribbed belt tensioner carefully.

40. REMOVE GENERATOR ASSY (See page 19–7)

41. SEPARATE COMPRESSOR AND MAGNETIC CLUTCH (W/ AIR CONDITIONING)

HINT:

- Secure the compressor and hoses off to the side instead of discharging the A/C system.
- 1ZZ–FE (See page 55–74)
- 3ZZ–FE (See page 55–70)

42. REMOVE COLUMN HOLE COVER SILENCER SHEET

(a) Remove the 2 clips and the column hole cover silencer sheet.

43. SEPARATE STEERING INTERMEDIATE SHAFT (See page 50–9)

44. REMOVE FRONT DOOR SCUFF PLATE RH (See page 71–11)

45. REMOVE COWL SIDE TRIM BOARD RH (See page 71–11)

46. REMOVE FRONT FLOOR FOOTREST

47. REMOVE FLOOR PANEL BRACE FRONT

(a) Remove the 2 nuts and the floor panel brace front.

48. REMOVE EXHAUST PIPE ASSY FRONT (See page 15–2)

49. REMOVE FRONT AXLE HUB LH NUT (See page 30–6)

SST 09930–00010

50. REMOVE FRONT AXLE HUB RH NUT

SST 09930–00010

HINT:

Perform the same procedure as above on the opposite side.

51. SEPARATE TIE ROD END SUB–ASSY LH (See page 30–6)

SST 09628–62011

52. SEPARATE TIE ROD END SUB–ASSY RH

SST 09628–62011

HINT:

Perform the same procedure as above on the opposite side.

53. SEPARATE FRONT STABILIZER LINK ASSY LH (See page 30–6)

54. SEPARATE FRONT STABILIZER LINK ASSY RH

HINT:

Perform the same procedure as above on the opposite side.

55. SEPARATE FRONT SUSPENSION ARM SUB–ASSY LOWER NO.1 LH (See page 30–6)

56. SEPARATE FRONT SUSPENSION ARM SUB–ASSY LOWER NO.1 RH

HINT:

Perform the same procedure as above on the opposite side.

57. SEPARATE FRONT AXLE ASSY LH (See page 30–6)

58. SEPARATE FRONT AXLE ASSY RH

HINT:

Perform the same procedure as above on the opposite side.

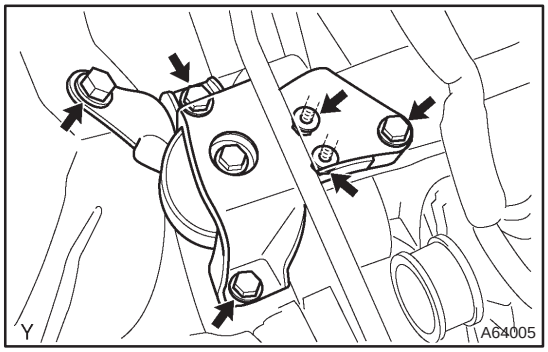

59. REMOVE ENGINE ASSEMBLY WITH TRANSAXLE

(a) Set the engine lifter.

(b) Remove the 4 bolts and 2 nuts, and detach the engine mounting insulator.

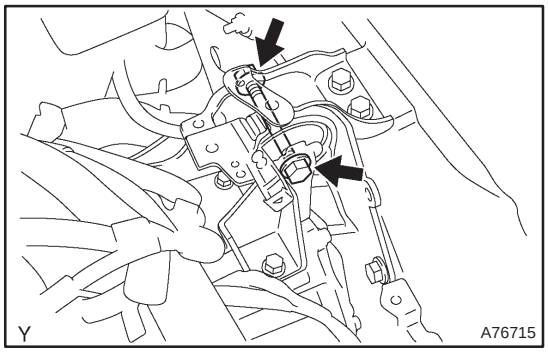

(c) Remove the through bolt and nut, detach the engine mounting insulator from the vehicle.

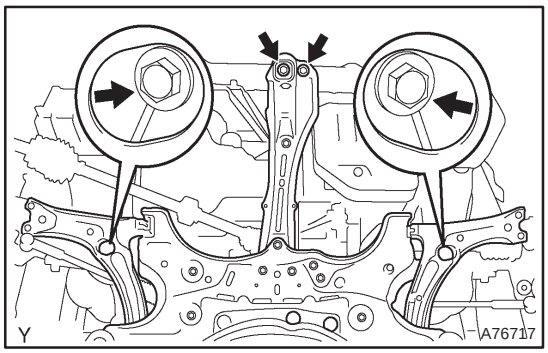

(d) Remove the 2 bolts and 2 nuts as shown in the illustration.

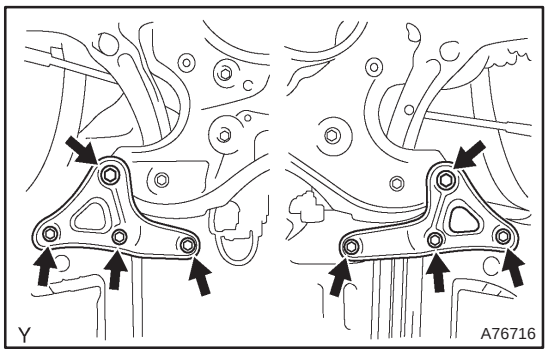

(e) Remove the 8 bolts and the front suspension member brace rear RH and LH.

(f) Carefully remove the engine with transaxle from the engine compartment.

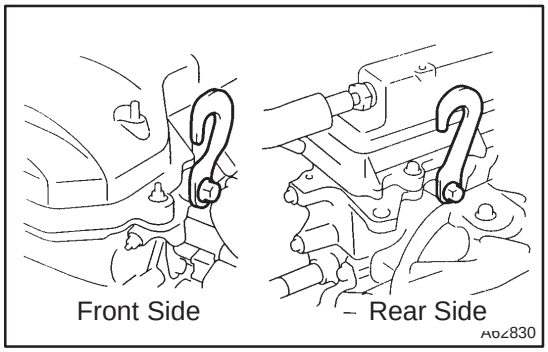

(g) Install the engine hanger No. 1 (12281–15040) and the bolt (91512–B1016).

Torque: 38 N·m (387 kgf·cm, 28 ft·lbf)

(h) Install the engine hanger (12281–22021) and the bolt (91512–B1016).

Torque: 38 N·m (387 kgf·cm, 28 ft·lbf)

HINT:

Securely install the front engine hanger (12281–22021) and the rear engine hanger No. 1 (12281–15040) to the engine assembly.

(i) Attach the engine sling and hang the engine with the chain block.

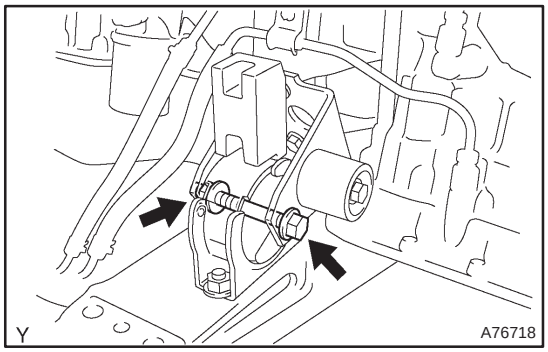

60. REMOVE FRONT SUSPENSION CROSSMEMBER W/CENTER MEMBER

(a) Remove the through bolt and nut, detach the engine mounting insulator FR from the engine mounting bracket.

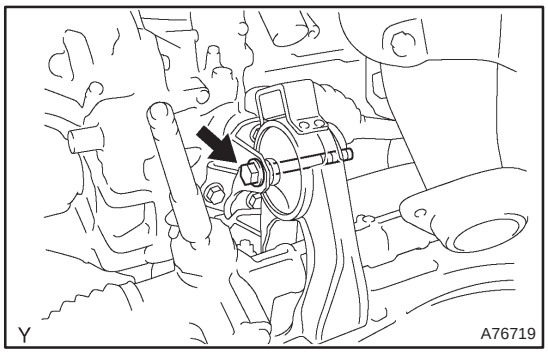

(b) Remove the through bolt, detach the engine mounting insulator RR from the suspension crossmember.

(c) Separate the engine and the transaxle assembly from the suspension crossmember and the engine mounting member.

61. REMOVE STARTER ASSY (See page 19–3)

62. REMOVE MANUAL TRANSAXLE ASSY (M/T TRANSAXLE) (See page 41–15)

63. REMOVE AUTOMATIC TRANSAXLE ASSY (A/T TRANSAXLE) (See page 40–11)

64. REMOVE CLUTCH COVER ASSY (M/T TRANSAXLE) (See page 42–26)

65. REMOVE CLUTCH DISC ASSY (M/T TRANSAXLE) (See page 42–26)

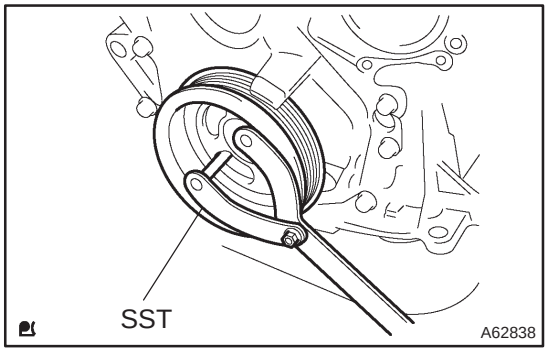

66. REMOVE FLYWHEEL SUB–ASSY (M/T TRANSAXLE)

(a) Hold the crankshaft with SST, remove the 8 bolts and the flywheel.

SST 09960–10010 (09962–01000, 09963–01000)

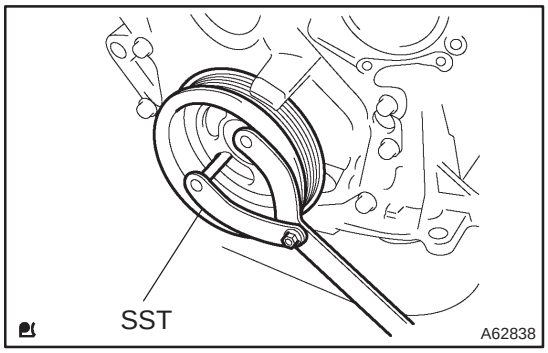

67. REMOVE DRIVE PLATE & RING GEAR SUB–ASSY (A/T TRANSAXLE)

(a) Hold the crankshaft with SST, remove the 8 bolts and the drive plate & ring gear.

SST 09960–10010 (09962–01000, 09963–01000)

68. REMOVE IGNITION COIL ASSY

(a) Disconnect the 4 ignition coil connectors.

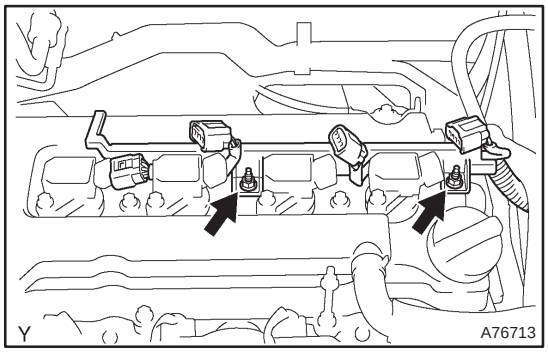

(b) Remove the 2 nuts which are used to secure the engine wire.

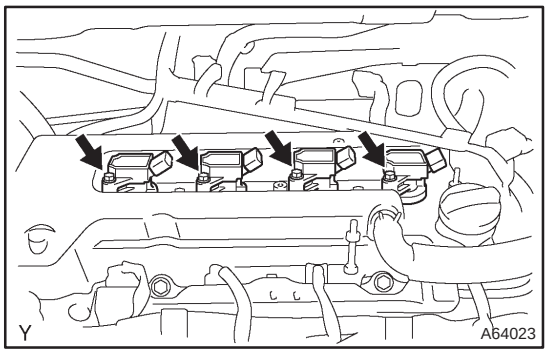

(c) Remove the 4 bolts and the 4 ignition coils.

69. REMOVE FUEL DELIVERY PIPE SUB–ASSY
(See page 11–11)

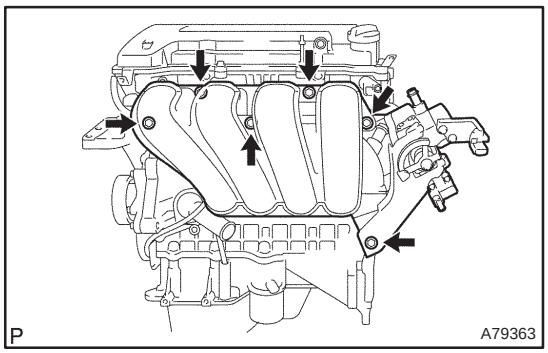

70. REMOVE INTAKE MANIFOLD

(a) Disconnect the 2 water hoses from the throttle body.
(b) Disconnect the ventilation hose and the ventilation hose No. 2 from the cylinder head cover.
(c) Disconnect the vacuum hose from the water by–pass pipe No. 1.
(d) Remove the 4 bolts, 2 nuts and 2 wire brackets,then remove the intake manifold and the throttle body assembly.
(e) Remove the gasket from the intake manifold and the throttle body assembly.

71. REMOVE OIL LEVEL GAGE SUB–ASSY

(a) Remove the oil level gage from the oil level gage guide.

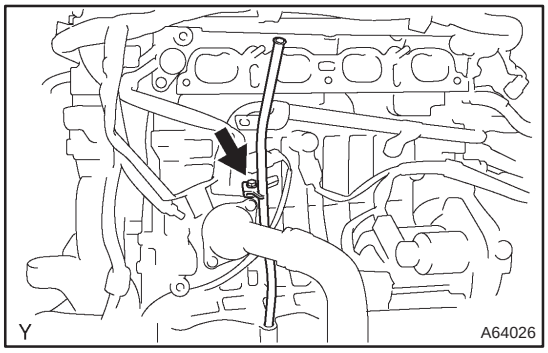

72. REMOVE OIL LEVEL GAGE GUIDE

(a) Disconnect the crank shaft position sensor cramp.
(b) Remove the bolt and the oil level gage guide.

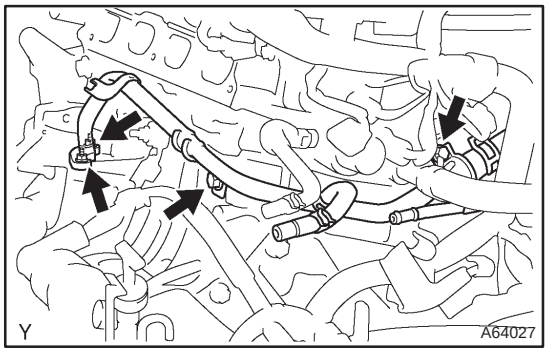

73. REMOVE WATER BY–PASS PIPE NO.1

(a) Disconnect the knock sensor cramp.

(b) Remove the 2 bolts and 2 nuts, then detach the water by–pass pipe and the gasket.

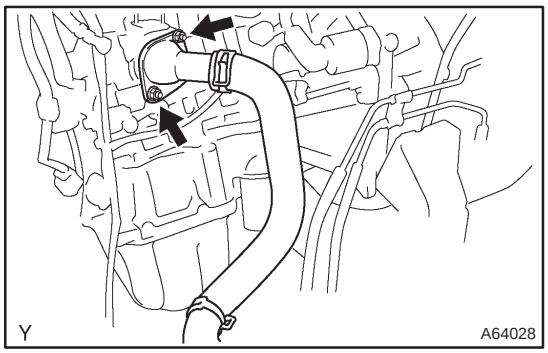

74. REMOVE WATER INLET

(a) Remove the 2 nuts and the water inlet.

75. REMOVE THERMOSTAT

76. REMOVE ENGINE OIL PRESSURE SWITCH ASSY (See page 17–1)

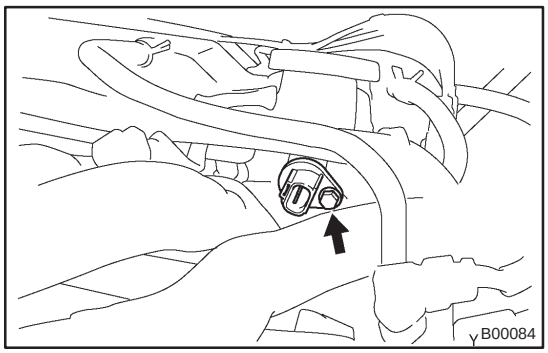

77. REMOVE CAMSHAFT POSITION SENSOR

(a) Remove the bolt and the camshaft position sensor.

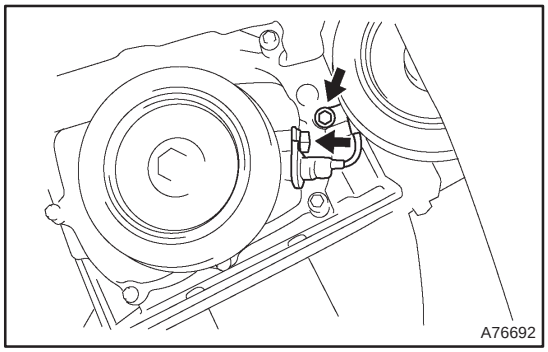

78. REMOVE CRANKSHAFT POSITION SENSOR

(a) Remove the 2 bolts and the crankshaft position sensor.

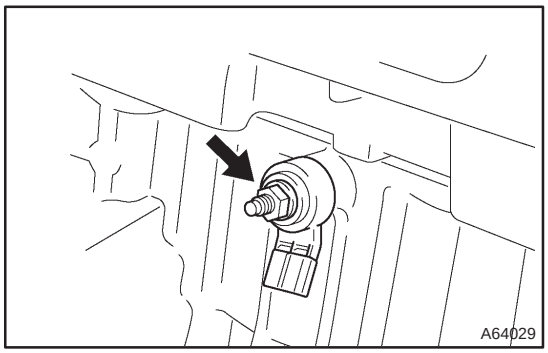

79. REMOVE KNOCK SENSOR

(a) Remove the nut and the knock sensor.

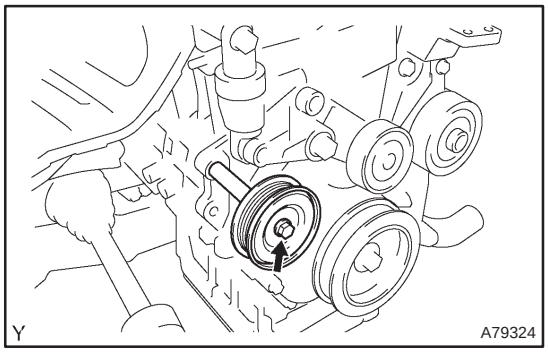

80. REMOVE V–RIBBED IDLER ASSY NO.1

(a) Remove the nut, bolt, tube and the idler.

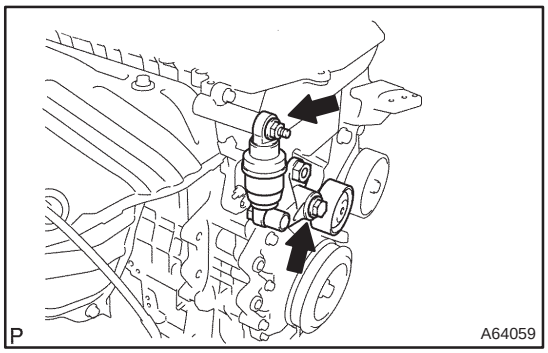

81. REMOVE V–RIBBED BELT TENSIONER ASSY

(a) Remove the bolts, nut and the V–ribbed belt tensioner.

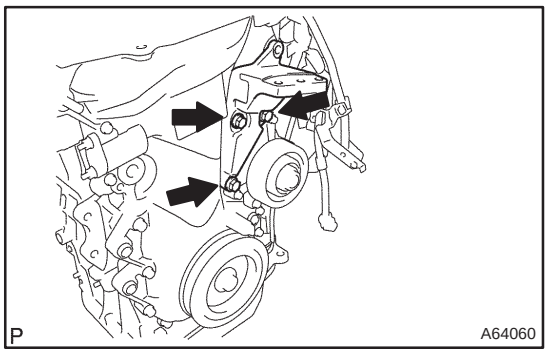

82. REMOVE TRANSVERSE ENGINE ENGINE MOUNTING BRACKET

(a) Remove the 3 bolts and the transverse engine mounting bracket.

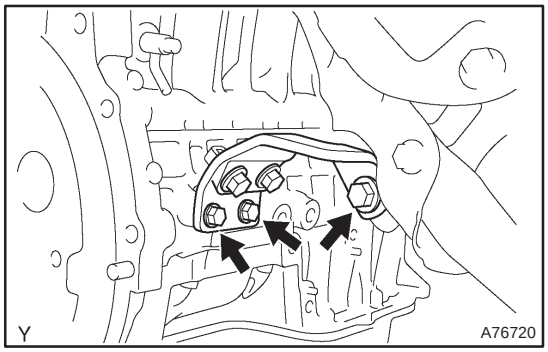

83. REMOVE MANIFOLD STAY

(a) Remove the 3 bolts and the manifold stay.

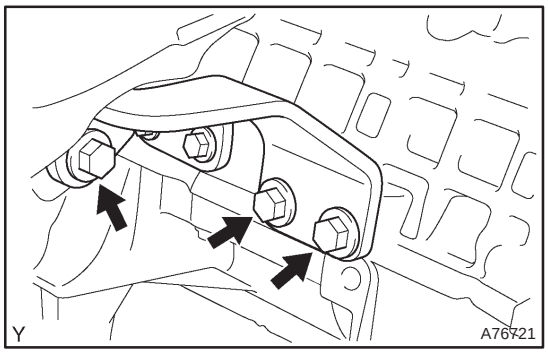

84. REMOVE MANIFOLD STAY NO.2

(a) Remove the 3 bolts and the manifold stay.

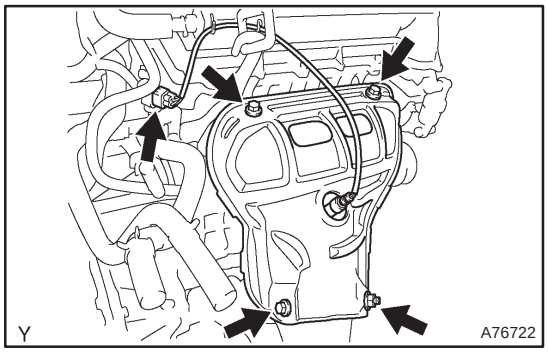

85. REMOVE EXHAUST MANIFOLD HEAT INSULATOR NO.1

(a) Disconnect the heated oxygen sensor connector.

(b) Remove the 3 bolts and the nut, and then remove the exhaust manifold heat insulator.

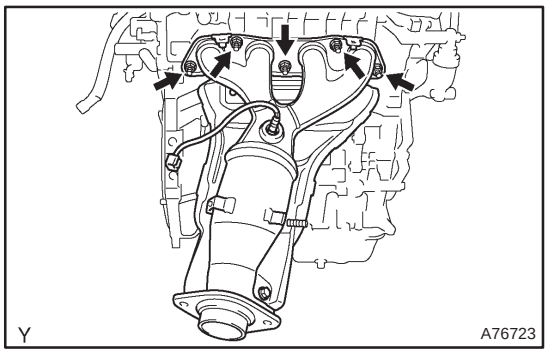

86. REMOVE EXHAUST MANIFOLD

(a) Remove the 5 nuts, then remove the exhaust manifold and the gasket.

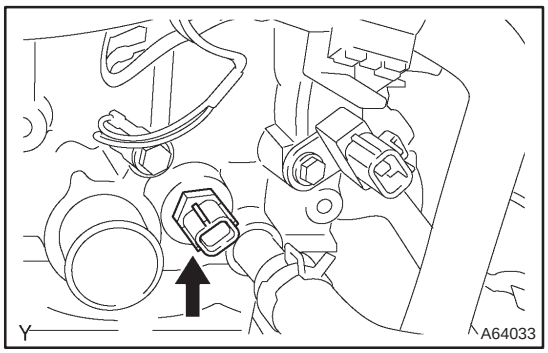

87. REMOVE ENGINE COOLANT TEMPERATURE SENSOR

(a) Using SST, remove the engine coolant temperature sensor.

SST 09817–33190

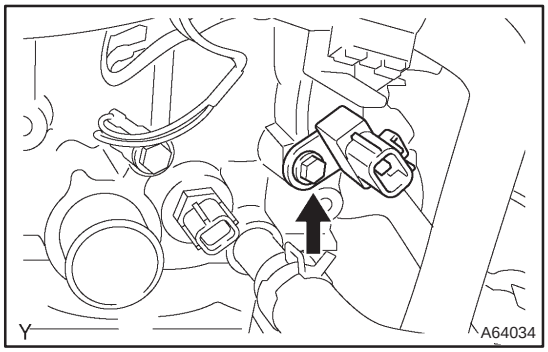

88. REMOVE RADIO SETTING CONDENSER

(a) Remove the bolt and the condenser.

89. REMOVE WATER BY–PASS HOSE NO.2

90. REMOVE RADIATOR HOSE INLET

91. REMOVE HEATER INLET WATER HOSE

92. REPLACE PARTIAL ENGINE ASSY

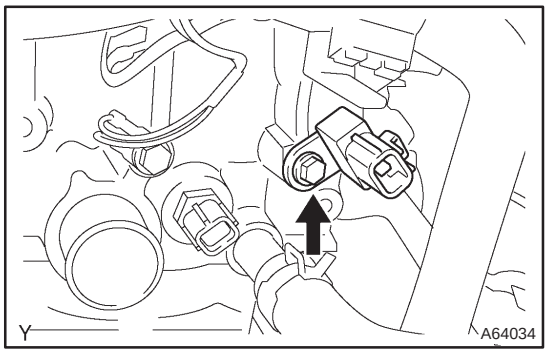

93. INSTALL RADIO SETTING CONDENSER

(a) Install the condenser with the bolt.

Torque: 10 N·m (102 kgf·cm, 7 ft·lbf)

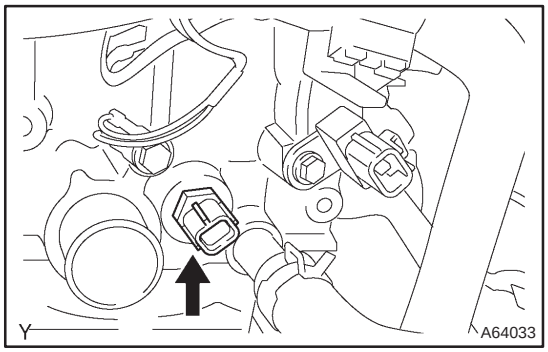

94. INSTALL ENGINE COOLANT TEMPERATURE SENSOR

(a) Install a new gasket to the engine coolant temperature sensor.

(b) Using SST, install the engine coolant temperature sensor.
SST 09817–33190
Torque: 20 N·m (204 kgf·cm, 15 ft·lbf)

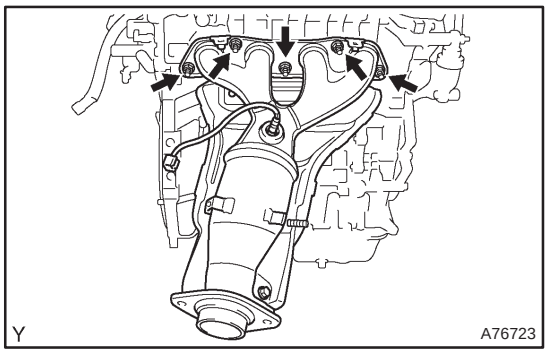

95. INSTALL EXHAUST MANIFOLD

(a) Install a new gasket and the exhaust manifold with the 5 nuts.
Torque: 37 N·m (377 kgf·cm, 27 ft·lbf)

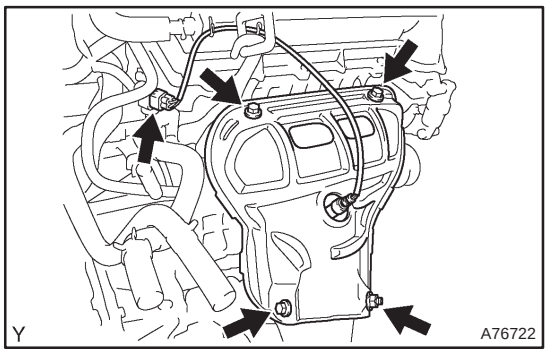

96. INSTALL EXHAUST MANIFOLD HEAT INSULATOR NO.1

(a) Install the exhaust manifold heat insulator,then install the 3 bolts and nut.
Torque:
18 N·m (184 kgf·cm, 13 ft·lbf) for Bolt
12 N·m (122 kgf·cm, 9 ft·lbf) for Nut

(b) Connect the heated oxygen sensor connector.

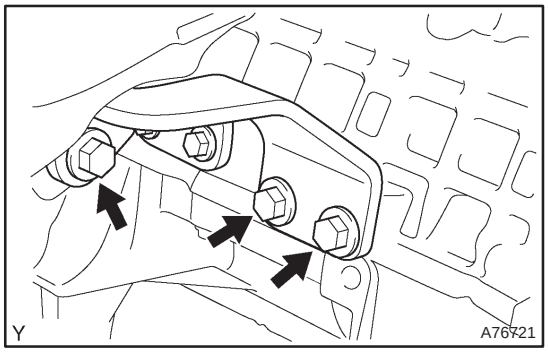

97. INSTALL MANIFOLD STAY NO.2

(a) Install the manifold stay with the 3 bolts.
Torque: 49 N·m (500 kgf·cm, 36 ft·lbf)

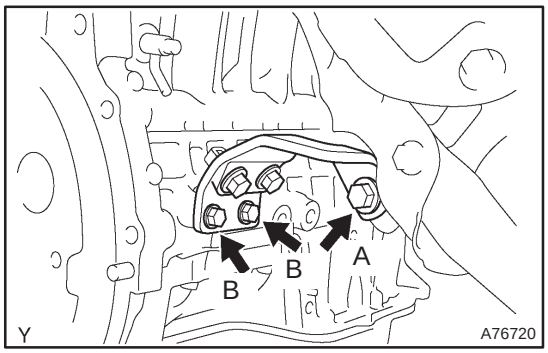

98. INSTALL MANIFOLD STAY

(a) Install the manifold stay with the 3 bolts.
Torque:
49 N·m (500 kgf·cm, 36 ft·lbf) for A
37 N·m (377 kgf·cm, 27 ft·lbf) for B

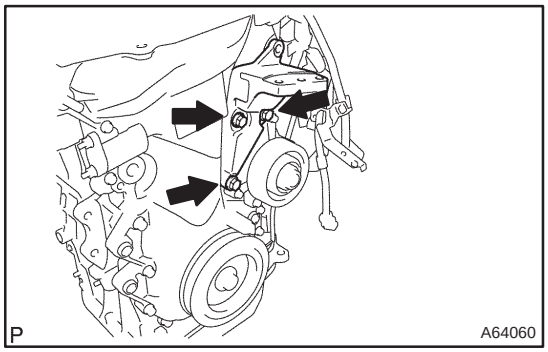

99. INSTALL TRANSVERSE ENGINE ENGINE MOUNTING BRACKET

(a) Install the transverse engine mounting bracket with the bolts.
Torque: 47 N·m (479 kgf·cm, 35 ft·lbf)

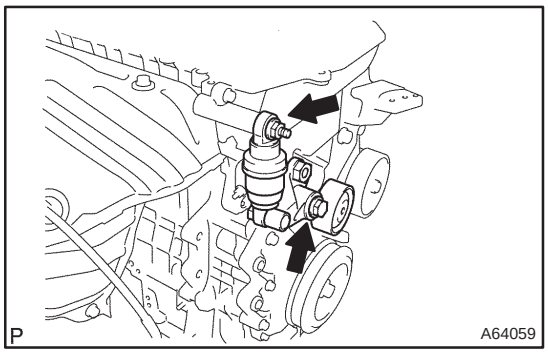

100. INSTALL V–RIBBED BELT TENSIONER ASSY

(a) Install the V–ribbed belt tensioner with the bolt and nut.
Torque:
29 N·m (296 kgf·cm, 21 ft·lbf) for Nut
69 N·m (704 kgf·cm, 51 ft·lbf) for Bolt

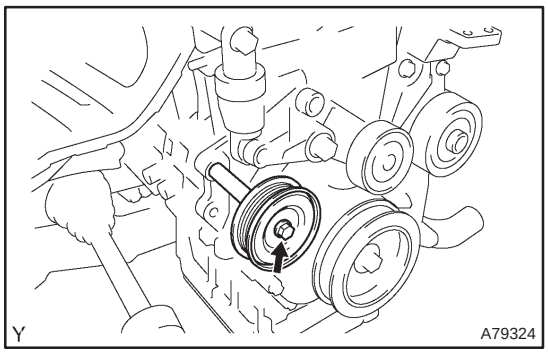

101. INSTALL V–RIBBED IDLER ASSY NO.1

(a) Install the tube and idler with the nut and bolt.
Torque: 39.2 N·m (400 kgf·cm, 29 ft·lbf)

102. INSTALL KNOCK SENSOR (See page 10–17)

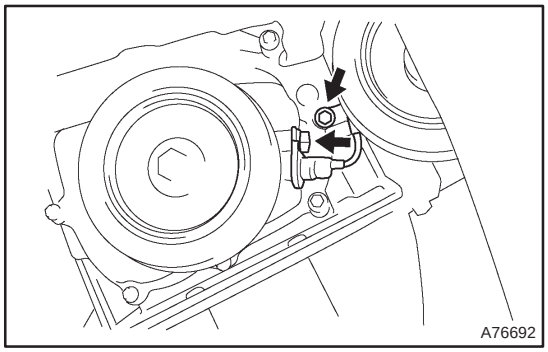

103. INSTALL CRANKSHAFT POSITION SENSOR

(a) Apply a light coat of engine oil to the O–ring on the crankshaft position sensor.

(b) Install the crankshaft position sensor with the 2 bolts.
Torque: 9.0 N·m (92 kgf·cm, 80 in.·lbf)

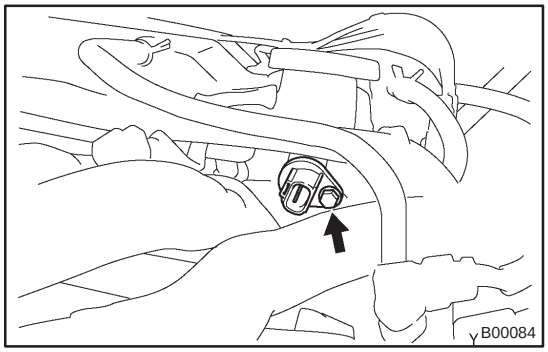

104. INSTALL CAMSHAFT POSITION SENSOR

(a) Apply a light coat of engine oil to the O–ring on the camshaft position sensor.

(b) Install the camshaft position sensor with the bolt.
Torque: 9.0 N·m (92 kgf·cm, 80 in.·lbf)

105. INSTALL ENGINE OIL PRESSURE SWITCH ASSY (See page 17–1)
Adhesive: Part No.08833 – 00080, THREE BOND 1344.

106. INSTALL THERMOSTAT (See page 16–9)

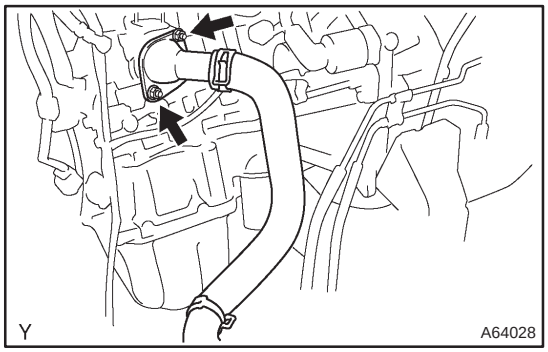

107. INSTALL WATER INLET

(a) Install the water inlet with the 2 nuts.
Torque: 11 N·m (112 kgf·cm, 8 ft·lbf)

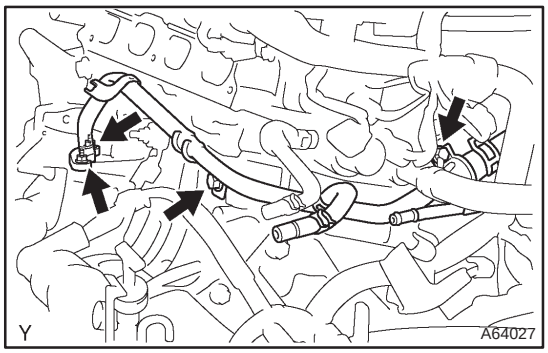

108. INSTALL WATER BY–PASS PIPE NO.1

(a) Install a new gasket and water by–pass pipe with the 2 nuts and 2 bolts.
Torque: 9.0 N·m (92 kgf·cm, 80 in.·lbf)

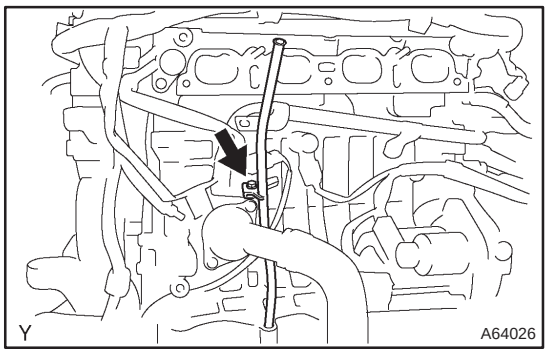

109. INSTALL OIL LEVEL GAGE GUIDE

(a) Apply a light coat of engine oil a new O–ring and install it to the oil level gage guide.
(b) Install the oil level gage guide with the bolt.
Torque: 13 N·m (133 kgf·cm, 10 ft·lbf)

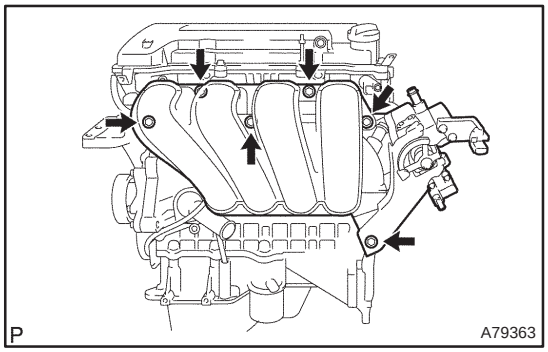

110. INSTALL INTAKE MANIFOLD

(a) Install a new gasket to the intake manifold.
(b) Install the intake manifold and 2 clamp brackets with the 2 nuts and 4 bolts.
Torque: 30 N·m (306 kgf·cm, 22 ft·lbf)

111. INSTALL FUEL DELIVERY PIPE SUB–ASSY
(See page 11–11)

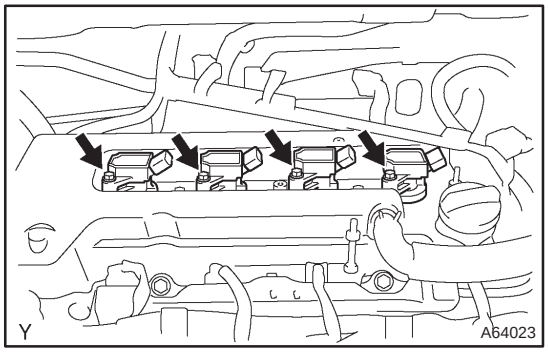

112. INSTALL IGNITION COIL ASSY

(a) Install the 4 ignition coils with the 4 bolts.
Torque: 9.0 N·m (92 kgf·cm, 80 in.·lbf)

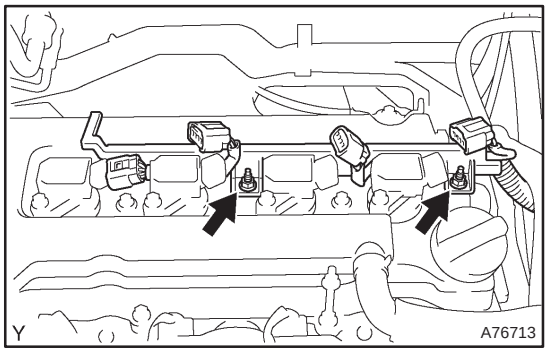

(b) Install the engine wire with the 2 nuts.
Torque: 9.0 N·m (92 kgf·cm, 80 in.·lbf)

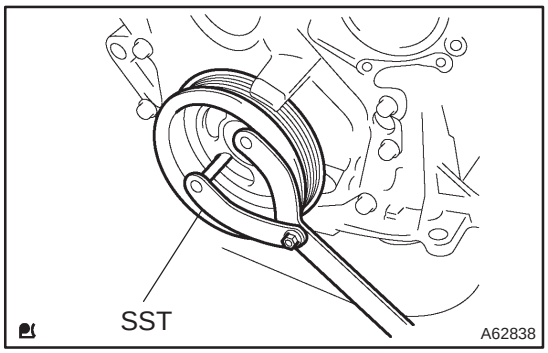

113. INSTALL FLYWHEEL SUB–ASSY (M/T TRANSAXLE)

(a) Hold the crankshaft with SST.
SST 09960–10010 (09962–01000, 09963–01000)

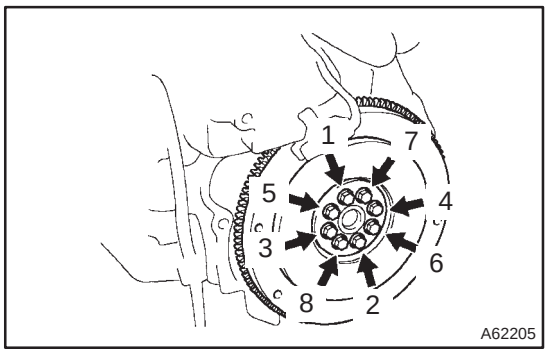

(b) Clean the bolt and bolt hole.
(c) Apply adhesive to the bolts.
Adhesive:
Part No. 09330–00070, THREE BOND or equivalent.
(d) Using several steps, install and tighten the 8 bolts uniformly in the sequence shown in the illustration.
Torque: 49 N·m (500 kgf·cm, 36 ft·lbf)

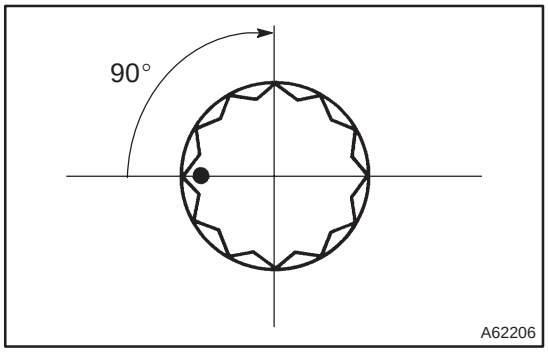

(e) Mark each bolt head with paint.
(f) Retighten the bolts by an additional 90° in the same sequence as step (d).
(g) Check that the paint marks are at 90° angle about the original position.

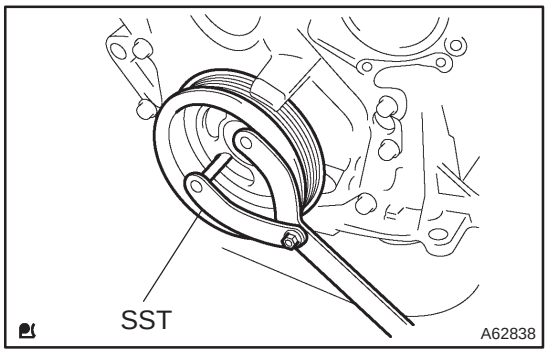

114. INSTALL DRIVE PLATE & RING GEAR SUB–ASSY (A/T TRANSAXLE)

(a) Hold the crankshaft with SST.
SST 09960–10010 (09962–01000, 09963–01000)

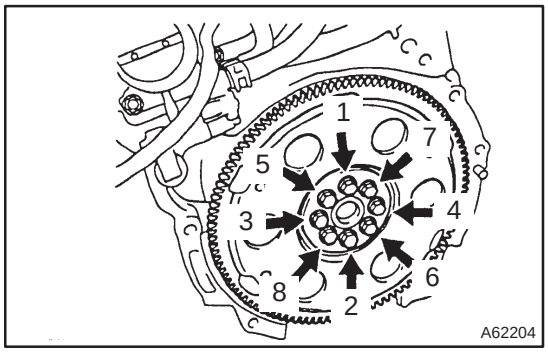

(b) Clean the bolt and bolt hole.
(c) Apply adhesive to the bolts.
Adhesive:
Part No. 09330–00070, THREE BOND or equivalent.
(d) Using several steps, install and tighten the 8 bolts uniformly in the sequence shown in the illustration.
Torque: 88 N·m (897 kgf·cm, 65 ft·lbf)

115. INSTALL CLUTCH DISC ASSY (M/T TRANSAXLE) (See page 42–26)
SST 09301–00210
116. INSTALL CLUTCH COVER ASSY (M/T TRANSAXLE) (See page 42–26)
SST 09301–00210
117. INSTALL MANUAL TRANSAXLE ASSY (M/T TRANSAXLE) (See page 41–15)
118. INSTALL AUTOMATIC TRANSAXLE ASSY (A/T TRANSAXLE) (See page 40–11)
119. INSTALL STARTER ASSY (See page 19–3)

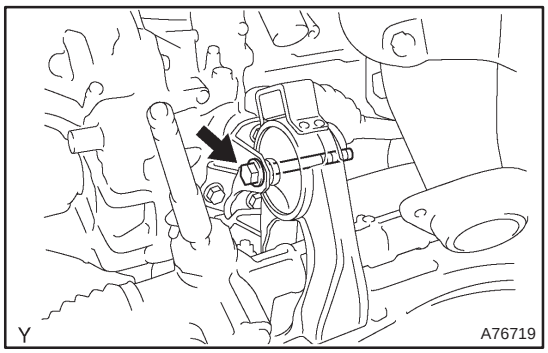

120. INSTALL FRONT SUSPENSION CROSSMEMBER W/CENTER MEMBER
(a) Attach the engine and transaxle assembly to the suspension crossmember and the engine mounting member.
(b) Install the bolt which is used to secure the rear engine mounting bracket to the mounting insulator.
Torque: 87 N·m (887 kgf·cm, 64 ft·lbf)

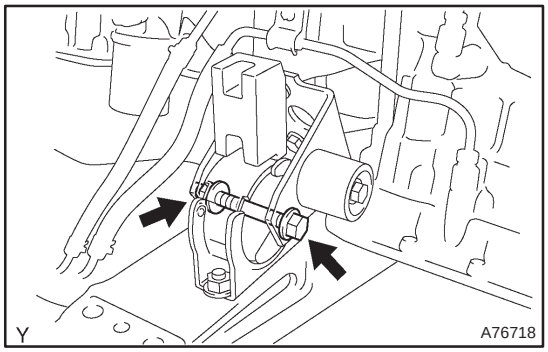

(c) Install the bolt which is used to secure the front engine mounting bracket to the mounting insulator.
Torque: 52 N·m (530 kgf·cm, 38 ft·lbf)
121. INSTALL ENGINE ASSEMBLY WITH TRANSAXLE
SST 09670–00010
(a) Set the engine assembly with transaxle on the engine lifter.

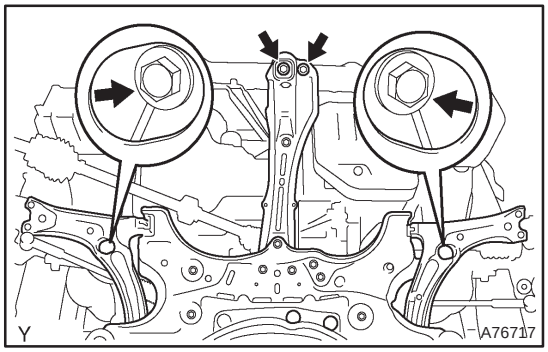

(b) Temporarily install the suspension crossmember with the 2 bolts and 2 nuts.
(c) Install the engine mounting insulator LH.
Torque: 80 N·m (816 kgf·cm, 59 ft·lbf)
(d) Install the engine mounting insulator RH.
Torque: 52 N·m (530 kgf·cm, 38 ft·lbf)

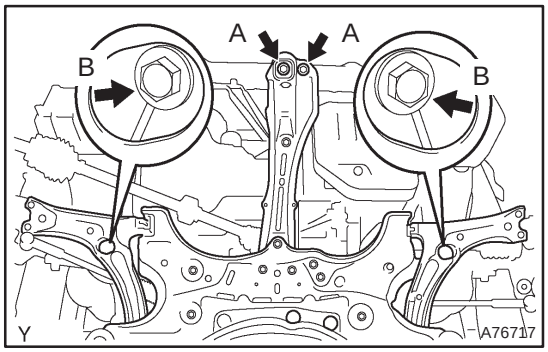

(e) Tighten the 2 bolts and 2 nuts.
Torque:
45 N·m (459 kgf·cm, 33 ft·lbf) for Bolt A
133 N·m (1,356 kgf·cm, 98 ft·lbf) for Nut B

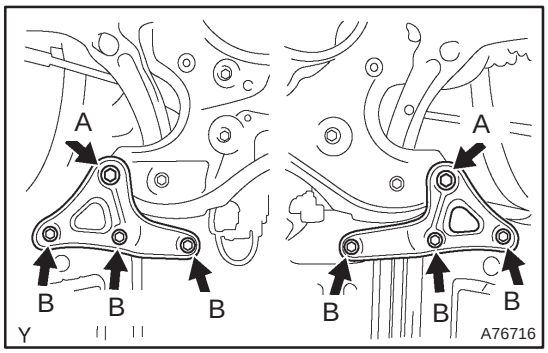

(f) Install the front suspension member brace LH and RH with the 8 bolts.
Torque:
133 N·m (1,356 kgf·cm, 98 ft·lbf) for Bolt A
80 N·m (816 kgf·cm, 59 ft·lbf) for Bolt B

NOTICE:
When installing the crossmember, check that the positioning holes on the crossmember and on the vehicle are aligned with each other.

122. INSTALL FRONT SUSPENSION ARM SUB–ASSY LOWER NO.1 LH (See page 30–6)
123. INSTALL FRONT SUSPENSION ARM SUB–ASSY LOWER NO.1 RH
HINT:
Perform the same procedure as above on the opposite side.
124. INSTALL FRONT STABILIZER LINK ASSY LH (See page 30–6)
125. INSTALL FRONT STABILIZER LINK ASSY RH
HINT:
Perform the same procedure as above on the opposite side.
126. INSTALL TIE ROD END SUB–ASSY LH (See page 30–6)
127. INSTALL TIE ROD END SUB–ASSY RH
HINT:
Perform the same procedure as above on the opposite side.
128. INSTALL FRONT AXLE HUB LH NUT (See page 30–6)
129. INSTALL FRONT AXLE HUB RH NUT
HINT:
Perform the same procedure as above on the opposite side.
130. INSTALL EXHAUST PIPE ASSY FRONT (See page 15–2)
131. INSTALL FLOOR PANEL BRACE FRONT
Torque: 30 N·m (306 kgf·cm, 22 ft·lbf)
132. INSTALL STEERING INTERMEDIATE SHAFT (See page 50–9)
133. INSTALL GENERATOR ASSY (See page 19–7)
134. INSTALL COMPRESSOR AND MAGNETIC CLUTCH (W/ AIR CONDITIONING)
HINT:
- 1ZZ–FE (See page 55–74)
- 3ZZ–FE (See page 55–70)

135. INSTALL CLUTCH RELEASE CYLINDER ASSY (M/T TRANSAXLE)
(See page 41–15)
136. INSTALL FLOOR SHIFT CABLE TRANSMISSION CONTROL SHIFT (A/T TRANSAXLE)
(See page 40–11)

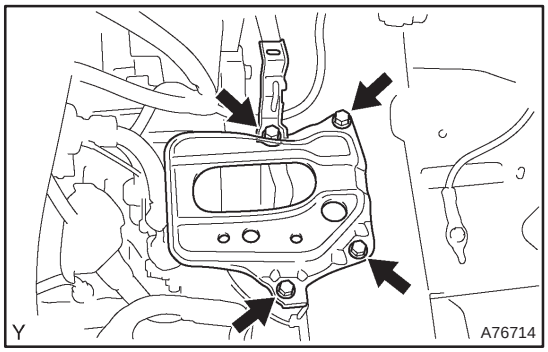

137. INSTALL BATTERY CARRIER

(a) Install the battery carrier and bracket with the 4 bolts.
Torque: 12.8 N·m (131 kgf·cm, 9 ft·lbf)

138. INSTALL BATTERY
Torque: 5.0 N·m (51 kgf·cm, 44 in.·lbf)

139. INSTALL RADIATOR SUPPORT NO.1

(a) Install the 2 radiator supports with the 2 bolts.
Torque: 19 N·m (194 kgf·cm, 14 ft·lbf)

140. INSTALL ACCELERATOR CONTROL CABLE ASSY (1ZZ–FE ENGINE TYPE) (See page 10–9)

141. INSTALL ACCELERATOR CONTROL CABLE ASSY (3ZZ–FE ENGINE TYPE) (See page 10–15)

142. INSTALL AIR CLEANER CASE SUB–ASSY

(a) Install the air cleaner case with the 3 bolts.
Torque: 5.0 N·m (51 kgf·cm, 44 in.·lbf)

143. INSTALL AIR CLEANER ASSEMBLY WITH HOSE (See page 10–9 or 10–15)

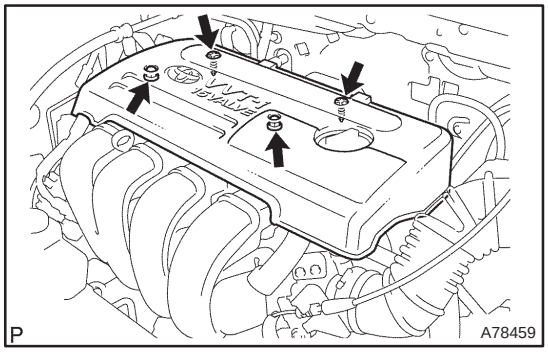

144. INSTALL CYLINDER HEAD COVER NO.2

(a) Install the cylinder head cover with the 2 nuts and 2 clips.
Torque: 7.0 N·m (71 kgf·cm, 62 in.·lbf)

145. INSTALL FRONT WHEELS
Torque: 103 N·m (1,050 kgf·cm, 76 ft·lbf)

146. ADD AUTOMATIC TRANSAXLE FLUID (A/T TRANSAXLE)

147. ADD ENGINE OIL

148. ADD ENGINE COOLANT (See page 16–7)

149. CHECK FOR ENGINE OIL LEAKS

150. CHECK FOR ENGINE COOLANT LEAKS (See page 16–7)

151. CHECK FOR FUEL LEAKS

152. CHECK FOR EXHAUST GAS LEAKS

153. CHECK IDLE SPEED AND IGNITION TIMING (See page 14–1)
SST 09843–18040

154. INSPECT CO/HC (See page 14–1)

155. INSPECT AND ADJUST FRONT WHEEL ALIGNMENT (See page 26–6)

156. CHECK ABS SPEED SENSOR SIGNAL

CHAIN SUB–ASSY (1ZZ–FE/3ZZ–FE)

141CH–01

COMPONENTS

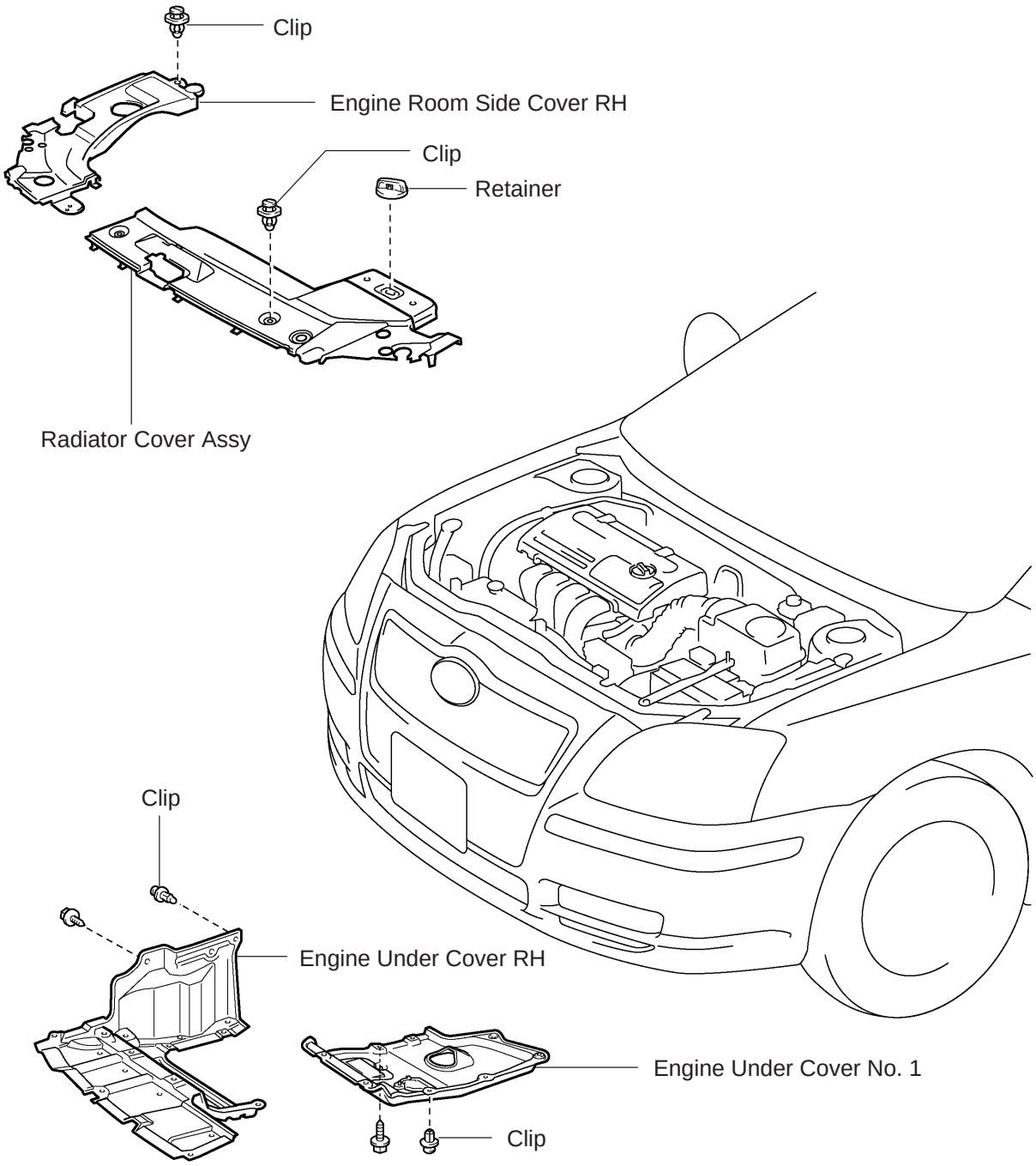

A79321

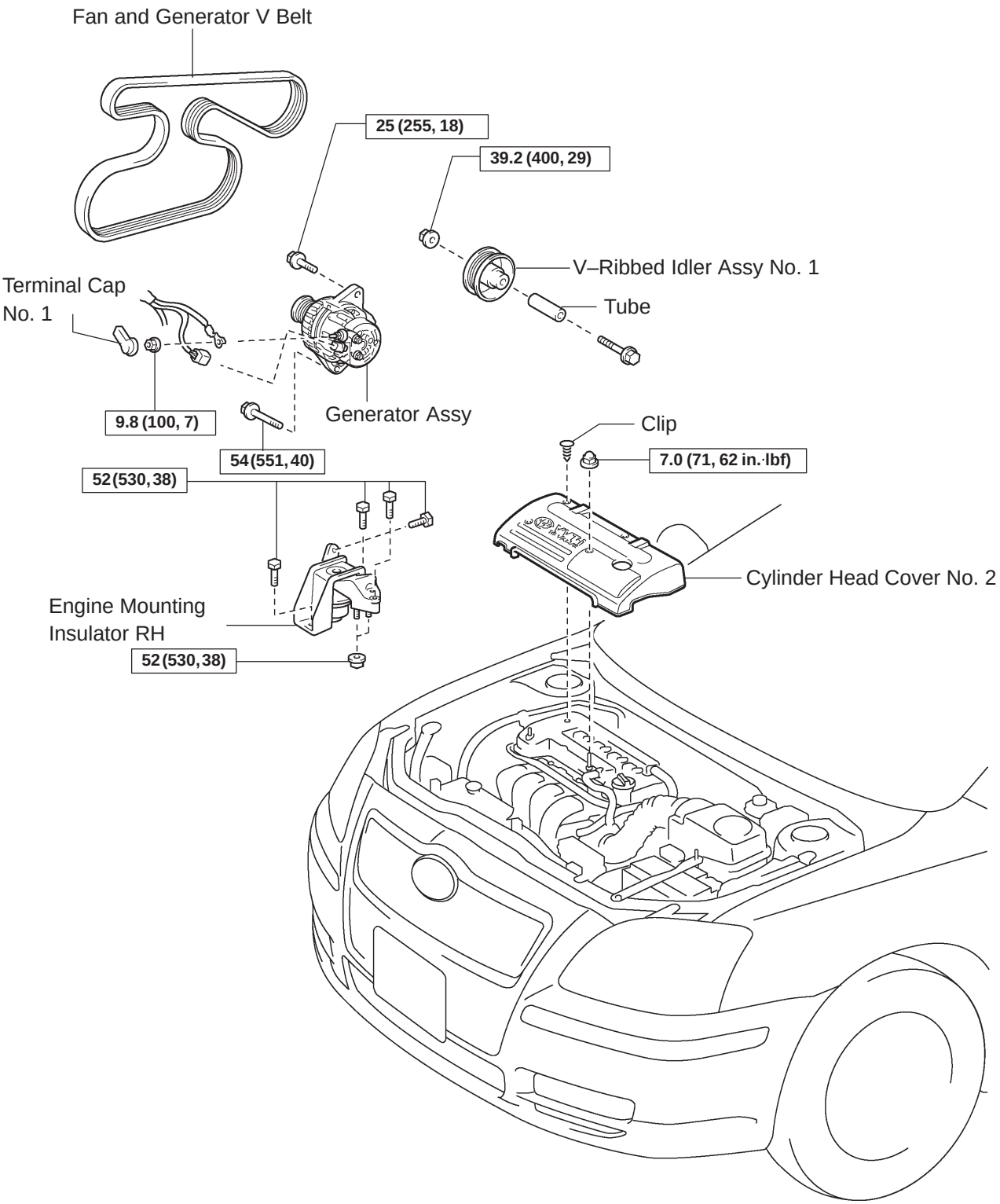

o N·m (kgf·cm, ft·lbf) : Specified torque

A76708

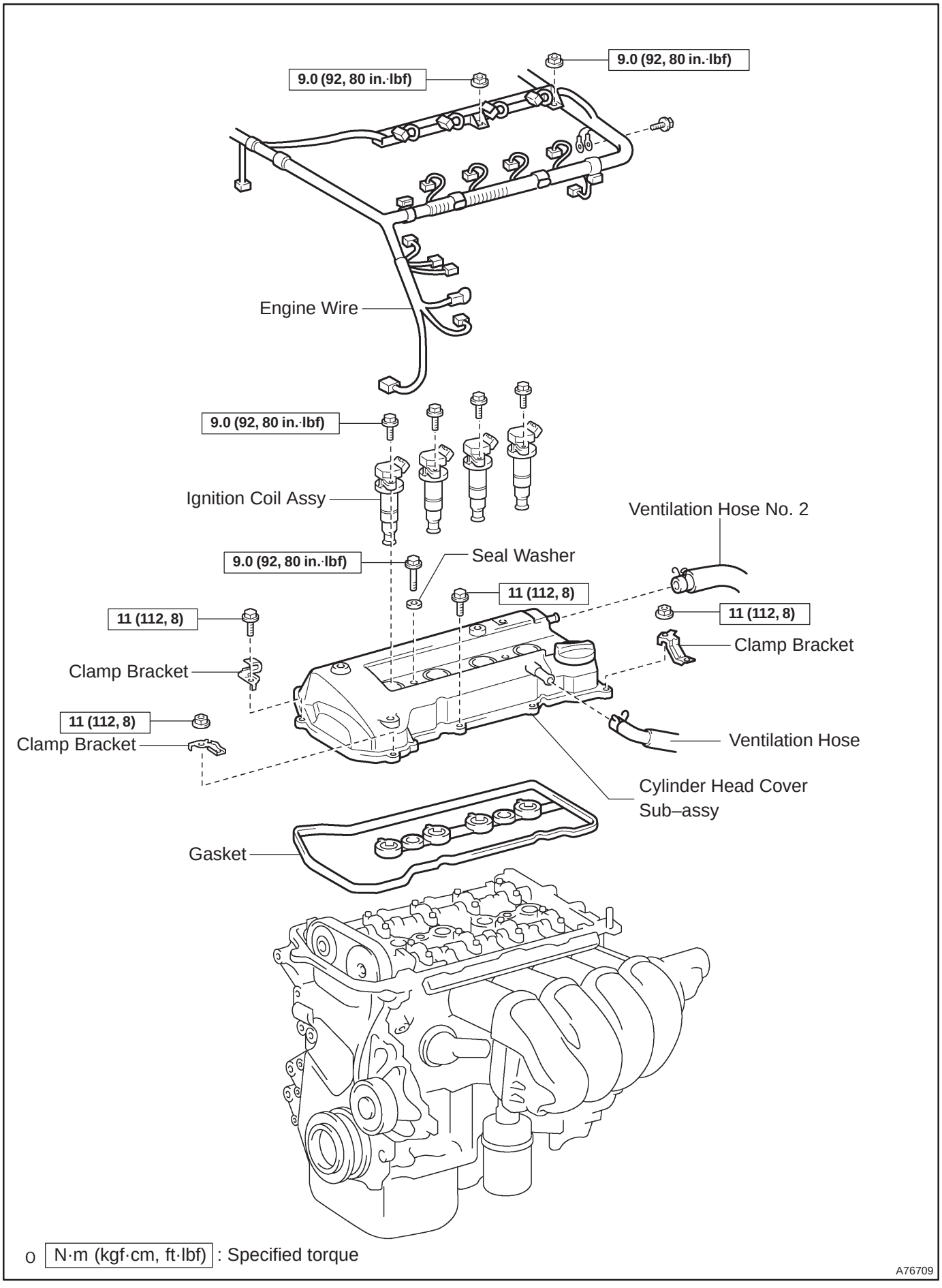
9.0 (92, 80 in.·lbf)
9.0 (92, 80 in.·lbf)
Engine Wire
9.0 (92, 80 in.·lbf)
Ignition Coil Assy
Ventilation Hose No. 2
9.0 (92, 80 in.·lbf)
Seal Washer
11 (112, 8)
11 (112, 8)
11 (112, 8)
Clamp Bracket
Clamp Bracket
11 (112, 8)
Clamp Bracket
Ventilation Hose
Cylinder Head Cover Sub–assy
Gasket
o N·m (kgf·cm, ft·lbf) : Specified torque
A76709

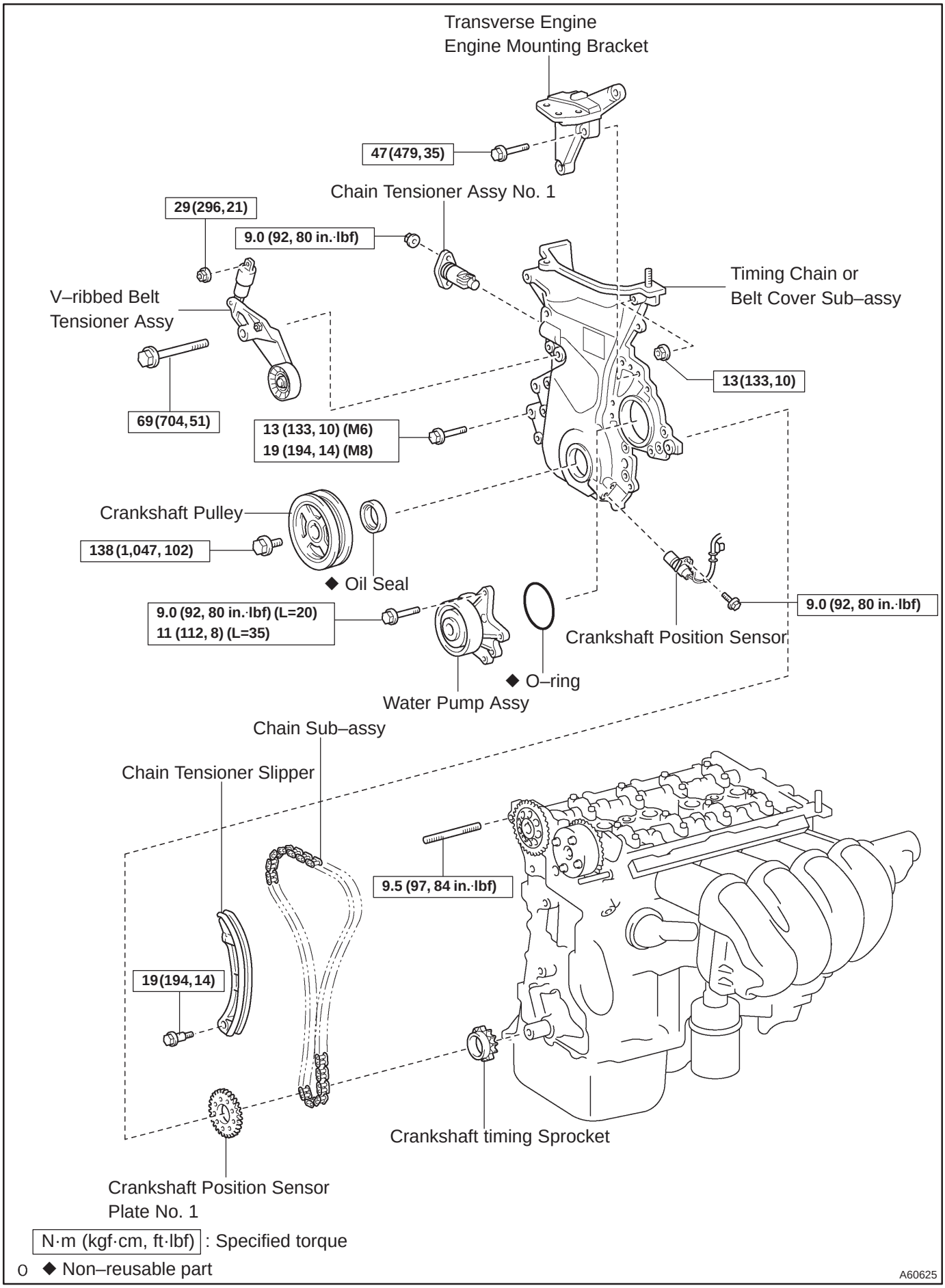
Transverse Engine
Engine Mounting Bracket
47 (479, 35)
Chain Tensioner Assy No. 1
29 (296, 21)
9.0 (92, 80 in.·lbf)
V–ribbed Belt
Tensioner Assy
Timing Chain or
Belt Cover Sub–assy
13 (133, 10)
69 (704, 51)
13 (133, 10) (M6)
19 (194, 14) (M8)
Crankshaft Pulley
138 (1,047, 102)
◆ Oil Seal
9.0 (92, 80 in.·lbf) (L=20)
11 (112, 8) (L=35)
9.0 (92, 80 in.·lbf)
Crankshaft Position Sensor
◆ O–ring
Water Pump Assy
Chain Sub–assy
Chain Tensioner Slipper
9.5 (97, 84 in.·lbf)
19 (194, 14)
Crankshaft timing Sprocket
Crankshaft Position Sensor
Plate No. 1
N·m (kgf·cm, ft·lbf) : Specified torque
◆ Non–reusable part
A60625

REPLACEMENT

1. REMOVE RADIATOR SUPPORT OPENING COVER (See page 14–27)
2. REMOVE ENGINE ROOM COVER SIDE (See page 14–27)
3. REMOVE FRONT WHEEL RH
4. REMOVE ENGINE UNDER COVER SUB–ASSY NO.1 (See page 14–27)
5. REMOVE ENGINE UNDER COVER RH (See page 14–27)
6. DRAIN ENGINE COOLANT (See page 16–7)

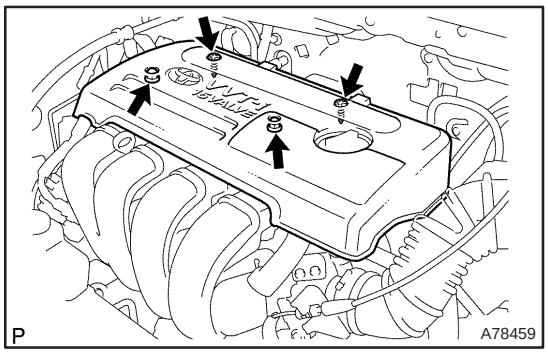

7. REMOVE CYLINDER HEAD COVER NO.2

(a) Remove the 2 nuts and 2 clips and detach the cylinder head cover No.2.

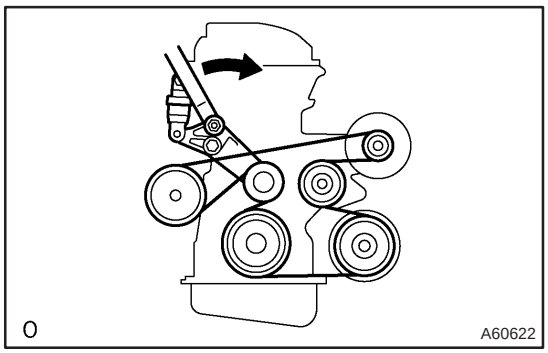

8. REMOVE FAN AND GENERATOR V BELT

(a) Turn the V–ribbed belt tensioner clockwise slowly and loosen it. Then, remove the fan and generator V belt and put back the V–ribbed belt tensioner carefully.

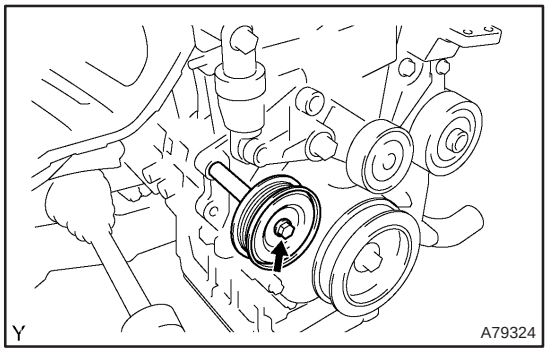

9. REMOVE V–RIBBED IDLER ASSY NO.1

(a) Remove the nut, bolt, tube and idler.

10. REMOVE GENERATOR ASSY (See page 19–7)

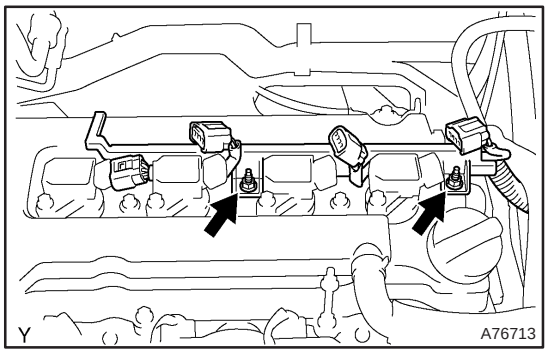

11. REMOVE IGNITION COIL ASSY

(a) Remove the 5 clamps from the 5 clamp brackets.

(b) Disconnect the 4 ignition coil connectors.

(c) Remove the 2 nuts which are used to secure the engine wire.

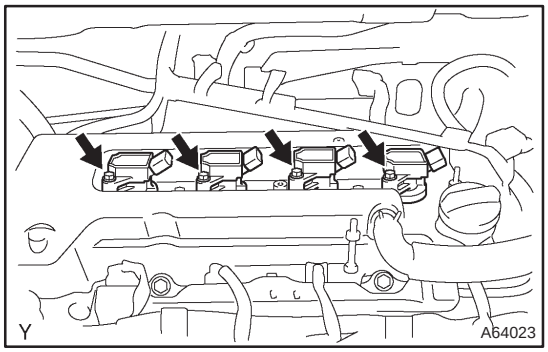

(d) Remove the 4 bolts and the 4 ignition coils.

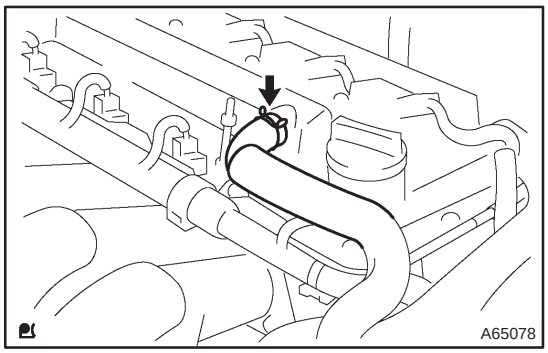

12. DISCONNECT VENTILATION HOSE

(a) Disconnect the ventilation hose from the cylinder head cover.

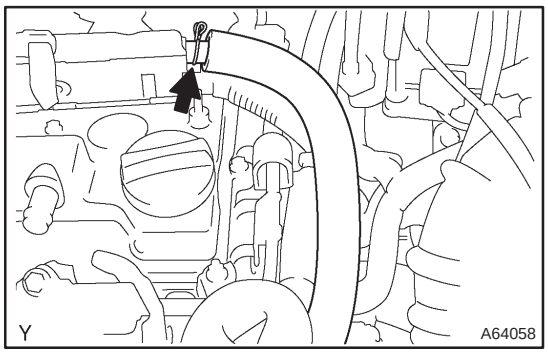

13. DISCONNECT VENTILATION HOSE NO.2

(a) Disconnect the ventilation hose from the cylinder head cover.

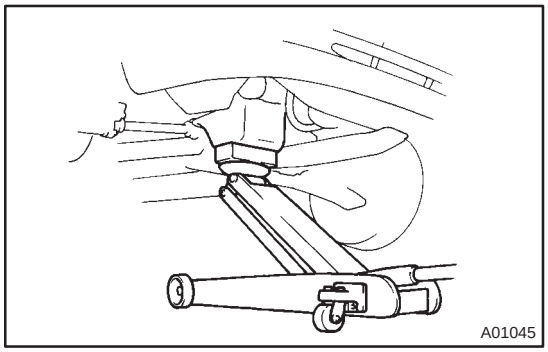

14. REMOVE ENGINE MOUNTING INSULATOR SUB–ASSY RH

(a) Place a wooden block on a jack underneath the engine. Remove the 4 bolts and 2 nuts and detach the engine mounting insulator RH.

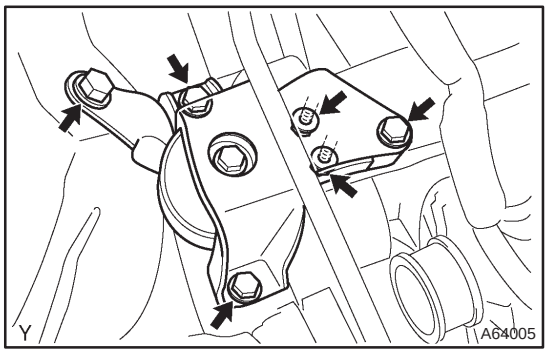

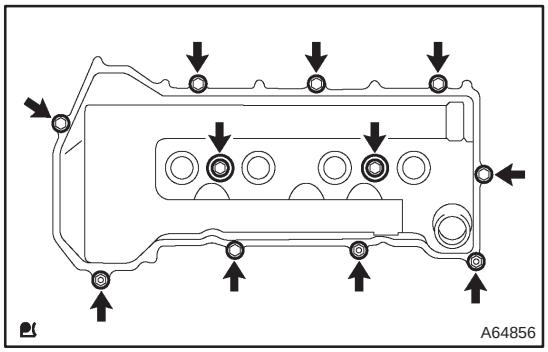

15. REMOVE CYLINDER HEAD COVER SUB–ASSY

(a) Remove the 9 bolts, 2 seal washers, 2 nuts and 3 clamp brackets and detach the cylinder head cover.

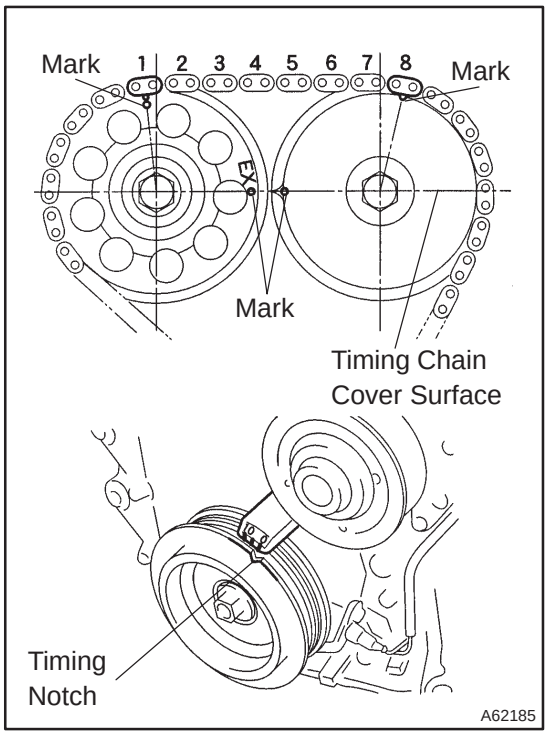

16. SET NO. 1 CYLINDER TO TDC/COMPRESSION

(a) Turn the crankshaft pulley to align the timing notch with timing mark ”0” of the timing chain cover.

(b) Check that the point marks of the camshaft timing sprocket and VVT timing sprocket are in straight line on the timing chain cover surface as shown in the illustration.

HINT:

If not, turn the crankshaft 1 revolution (360°) and align the marks as above.

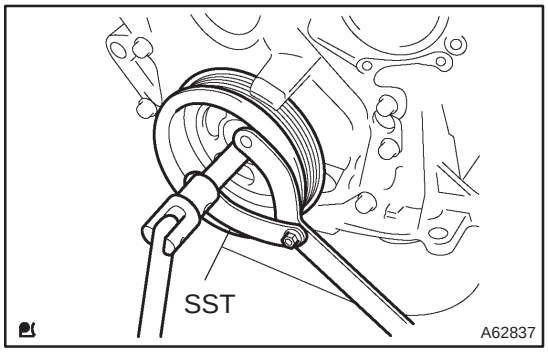

17. REMOVE CRANKSHAFT PULLEY

(a) Using SST, remove the pulley bolt.

SST 09960–10010 (09962–01000, 09963–01000)

(b) Remove the crankshaft pulley from the crankshaft.

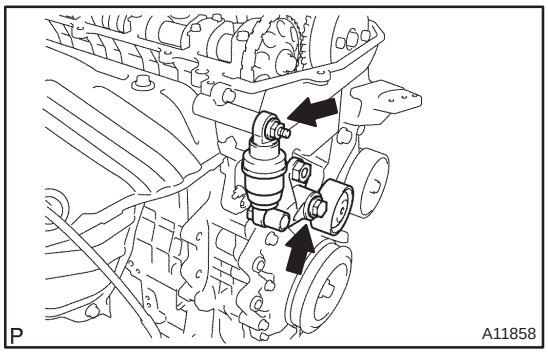

18. REMOVE V–RIBBED BELT TENSIONER ASSY

(a) Remove the bolt and nut and detach V–ribbed belt tensioner.

HINT:

Jack up and down to remove the bolt.

19. REMOVE WATER PUMP ASSY (See page 16–9)

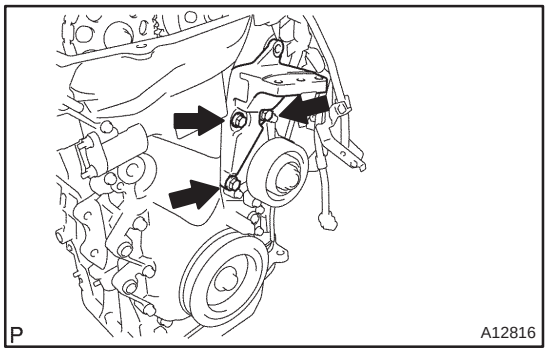

20. REMOVE TRANSVERSE ENGINE ENGINE MOUNTING BRACKET

(a) Remove the 3 bolts and the transverse engine engine mounting bracket.

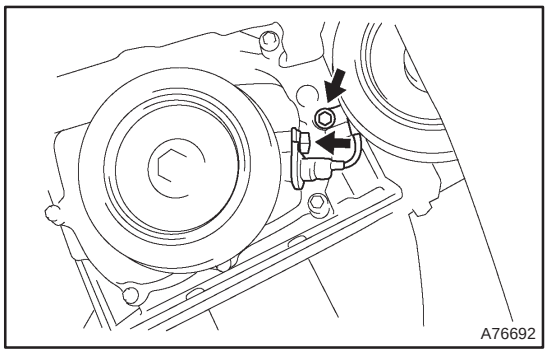

21. REMOVE CRANKSHAFT POSITION SENSOR

(a) Remove the 2 bolts which are used to secure the crankshaft position sensor.

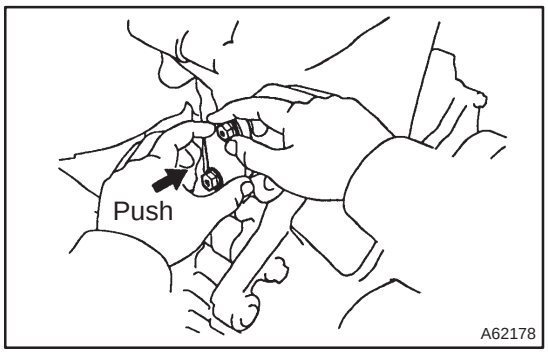

22. REMOVE CHAIN TENSIONER ASSY NO.1

(a) Remove the 2 nuts and the chain tensioner.

NOTICE:

Do not revolve the crankshaft without the chain tensioner.

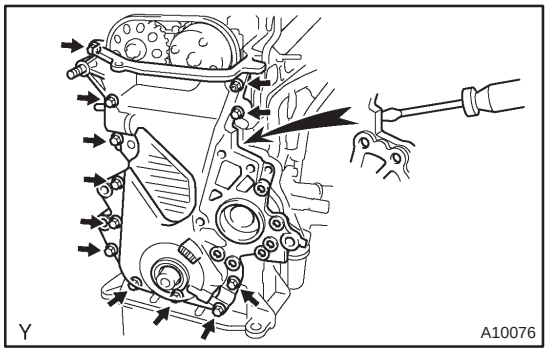

23. REMOVE TIMING CHAIN OR BELT COVER SUB–ASSY

(a) Remove the 11 bolts and nuts.

(b) Using a torx wrench socket (E8), remove the stud bolt.

(c) Remove the timing chain cover by prying between the cylinder head and the cylinder block with a screwdriver.

NOTICE:

Be careful not to damage the timing chain cover, the cylinder head and the cylinder block.

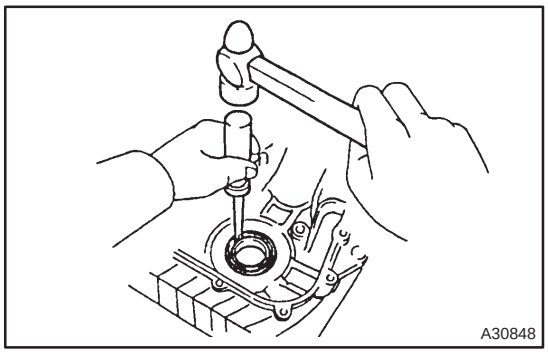

24. REMOVE TIMING GEAR COVER OIL SEAL

(a) Using a screwdriver, remove the oil seal.

25. REMOVE CRANKSHAFT POSITION SENSOR PLATE NO.1

26. REMOVE CHAIN TENSIONER SLIPPER

(a) Remove the bolt and the chain tensioner slipper.

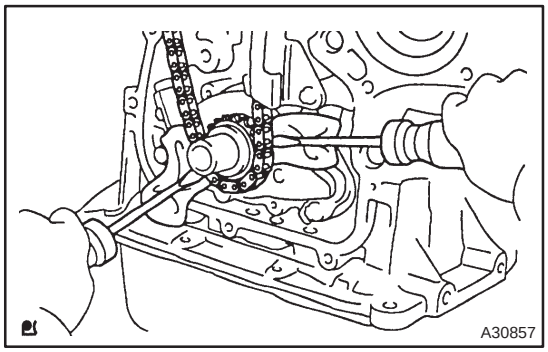

27. REMOVE CHAIN SUB–ASSY

(a) Remove the timing chain with the crankshaft timing gear by plying it using screwdrivers as shown in the illustration.

NOTICE:

- **Put shop rag to protect the engine.**
- **In case of revolving the camshafts with the chain off the sprockets, turn the crankshaft 1/4 revolution counterclockwise for valves not to touch the pistons.**

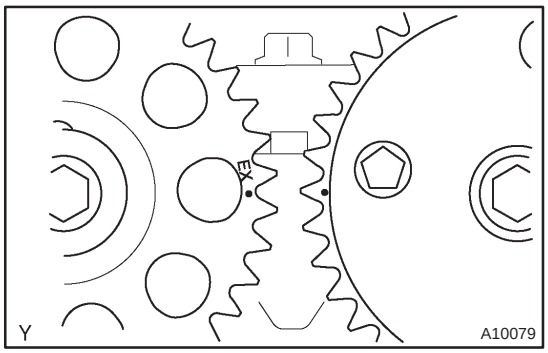

28. INSTALL CHAIN SUB–ASSY

(a) Set No. 1 cylinder to TDC/compression.

(1) Turn the camshafts with a wrench and align the point marks of the camshaft timing sprockets.

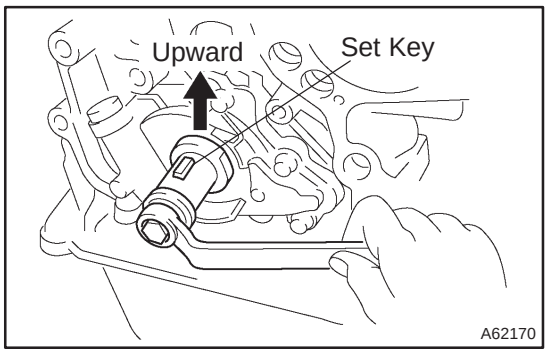

(2) Using a crankshaft pulley bolt, turn the crankshaft and set the set key on the crankshaft upward.

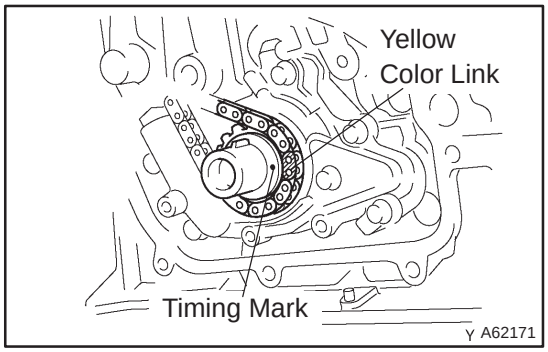

(b) Install the timing chain to the crankshaft timing sprocket with the yellow color link aligned with the timing mark on the crankshaft timing sprocket.

HINT:

Three yellow color links are on the chain.

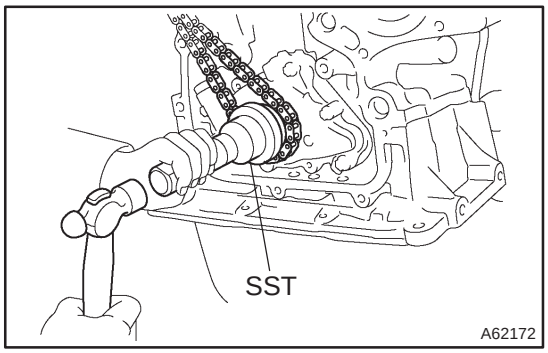

(c) Using SST, install the crankshaft timing sprocket.

SST 09223–22010

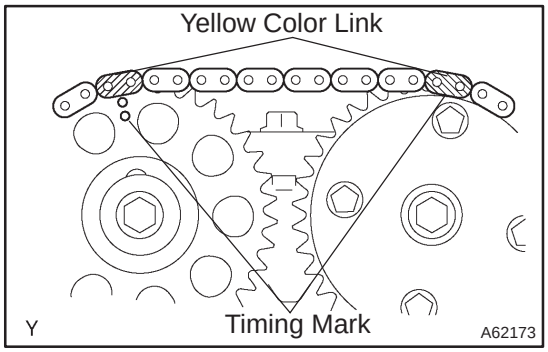

(d) Install the timing chain to the camshaft timing sprockets with the yellow color links aligned with the timing marks on the camshaft timing sprockets.

29. INSTALL CHAIN TENSIONER SLIPPER

(a) Install the chain tensioner slipper with the bolt.
Torque: 19 N·m (194 kgf·cm, 14 ft·lbf)

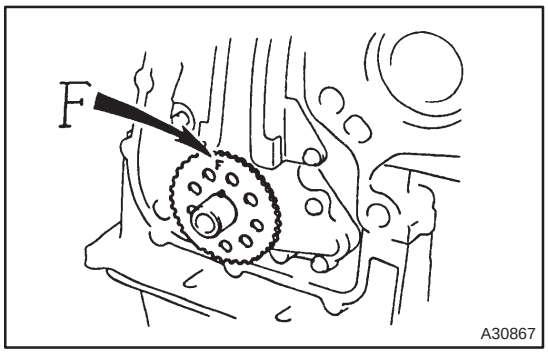

30. INSTALL CRANKSHAFT POSITION SENSOR PLATE NO.1

(a) Install the plate with the ”F” mark facing outward.

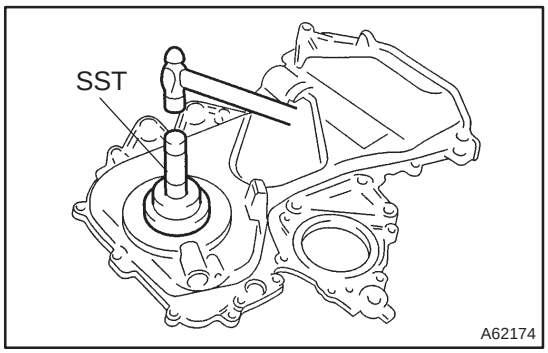

31. INSTALL TIMING GEAR COVER OIL SEAL

(a) Apply MP grease to a new oil seal lip.

(b) Using SST, tap in the oil seal until its surface is flush with the timing chain cover edge.
SST 09223–22010

NOTICE:
Keep the lip free of foreign objects.

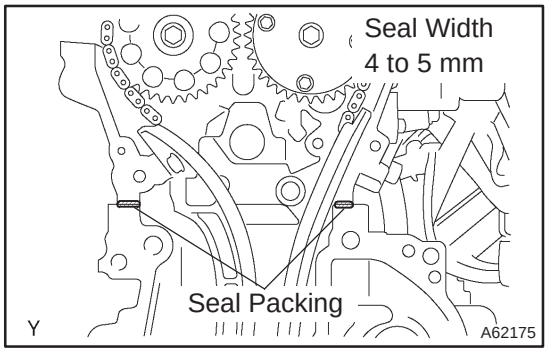

32. INSTALL TIMING CHAIN OR BELT COVER SUB–ASSY

(a) Remove any old packing (FIPG) material from the contact surface.

(b) Apply a continuous bead of seal packing (Diameter 3.5 mm to 4.5 mm (0.1379 to 0.177 in.)) as shown in the illustration.

Seal packing:

Water pump part part No. 08826–00100 or equivalent

Other part part No. 08826–00080 or equivalent.

NOTICE:

- **Remove any oil from the contact surface.**
- **Install the oil pan within 3 minutes after applying seal packing.**
- **Do not expose the seal to engine oil within 2 hours after installing.**

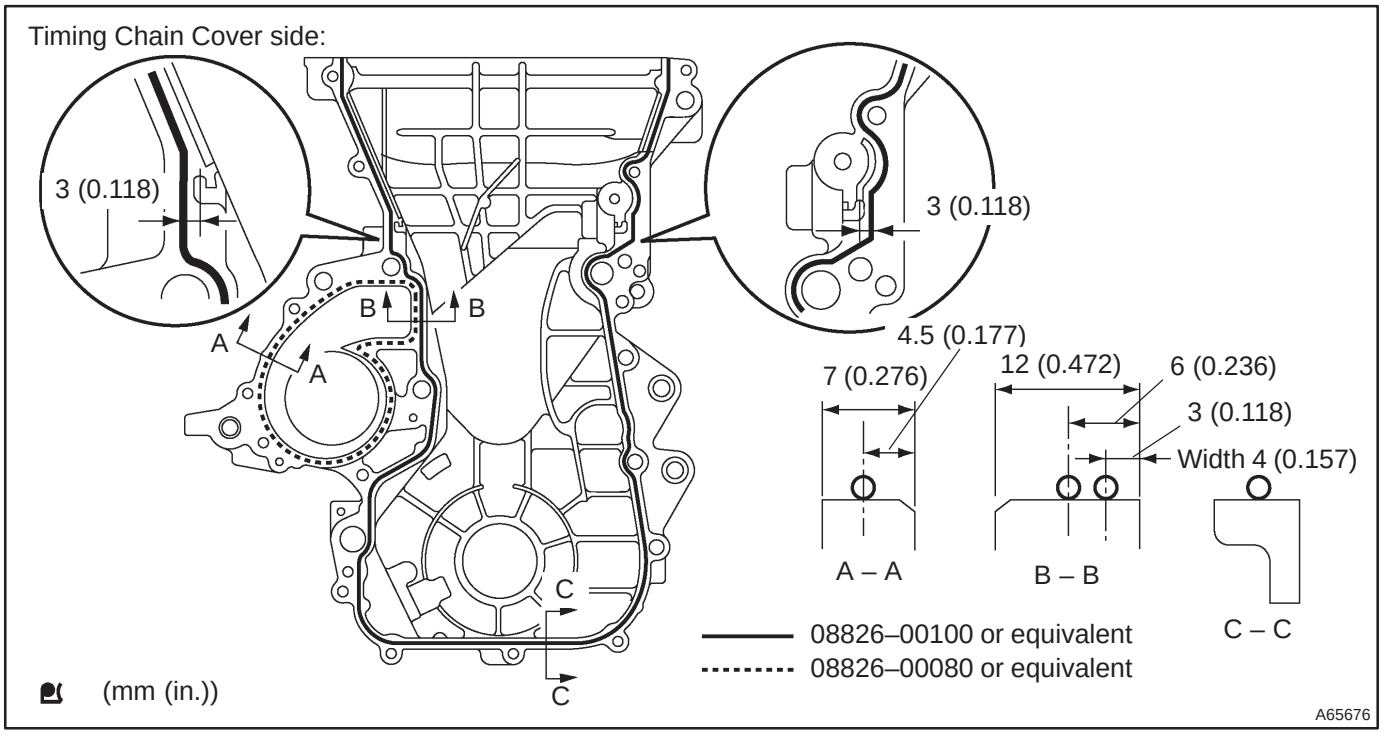

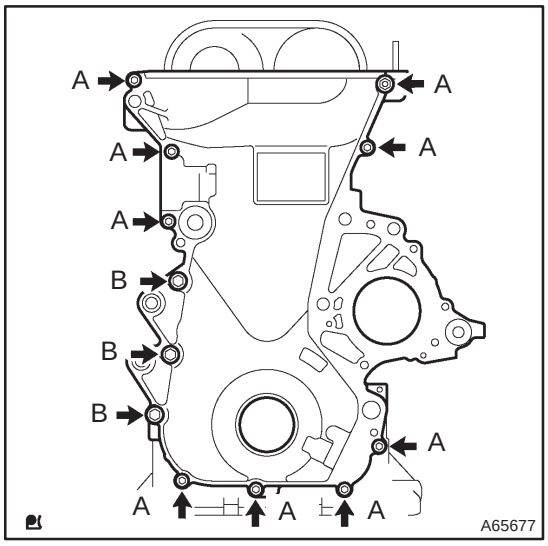

(c) Install the timing chain cover with the 11 bolts and nut.

Torque:

13 N·m (133 kgf·cm, 10 ft·lbf) for A

19 N·m (194 kgf·cm, 14 ft·lbf) for B

(d) Using a torx wrench socket (E8), install the stud bolt.

Torque: 9.5 N·m (97 kgf·cm, 84 in.·lbf)

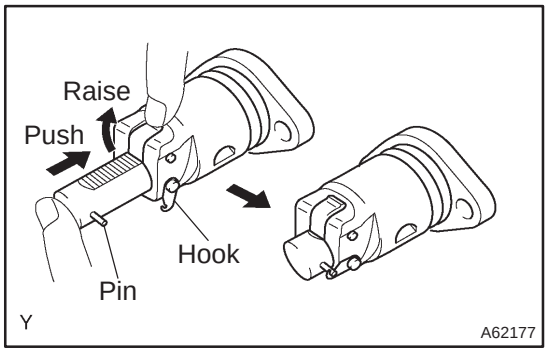

33. INSTALL CHAIN TENSIONER ASSY NO.1

(a) Check that the O–ring is clean, and set the hook as shown in the illustration.

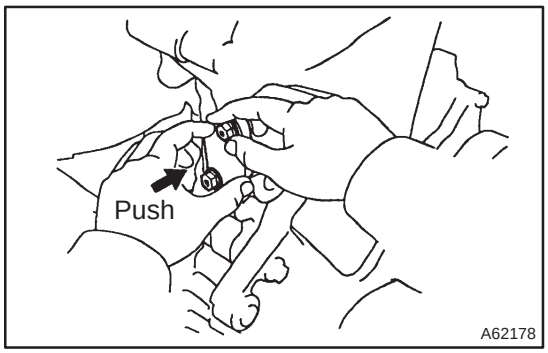

(b) Apply engine oil to the chain tensioner and install it with the 2 nuts.

Torque: 9.0 N·m (92 kgf·cm, 80 in.·lbf)

NOTICE:

If the hook released the plunger during installation, re–hook the plunger by the hook to fix it.

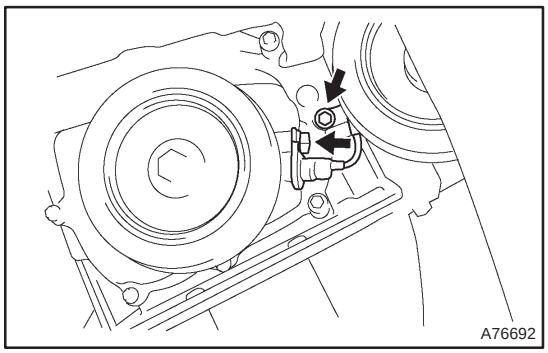

34. INSTALL CRANKSHAFT POSITION SENSOR

(a) Apply a coat of the engine oil to the O–ring of the crankshaft position sensor.

(b) Install the crankshaft position sensor with the 2 bolts.

Torque: 9.0 N·m (92 kgf·cm, 80 in.·lbf)

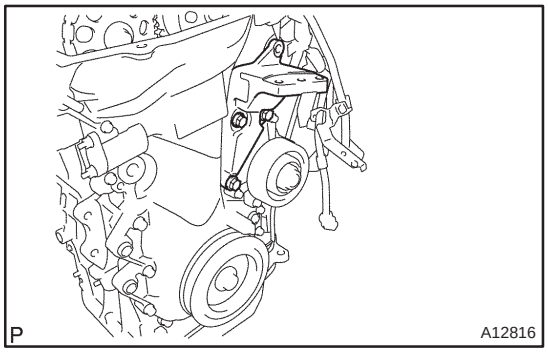

35. INSTALL TRANSVERSE ENGINE ENGINE MOUNTING BRACKET

(a) Install the transverse engine engine mounting bracket with the 3 bolts.

Torque: 47 N·m (479 kgf·cm, 35 ft·lbf)

36. INSTALL WATER PUMP ASSY (See page 16–9)

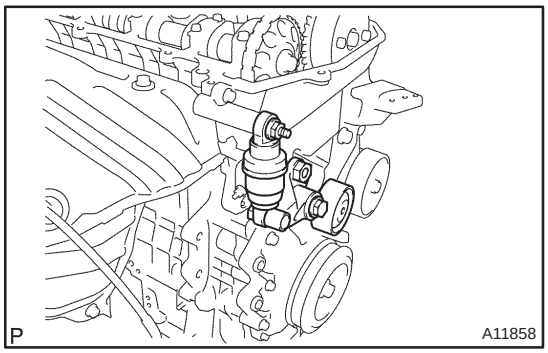

37. INSTALL V–RIBBED BELT TENSIONER ASSY

(a) Install the V–ribbed belt tensioner with the nut and bolt.

Torque:

29 N·m (296 kgf·cm, 21 ft·lbf) for Nut

69 N·m (704 kgf·cm, 51 ft·lbf) for Bolt

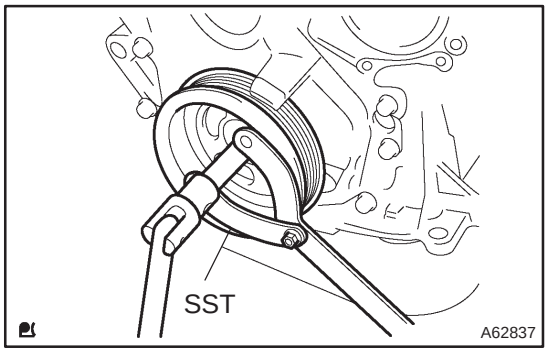

38. INSTALL CRANKSHAFT PULLEY

(a) Align the keyway of the pulley with the key located on the crankshaft, and slide the pulley into place.

(b) Using SST, install the crankshaft pulley bolt.
SST 09960–10010 (09962–01000, 09963–01000)
Torque: 138 N·m (1,407 kgf·cm, 102 ft·lbf)

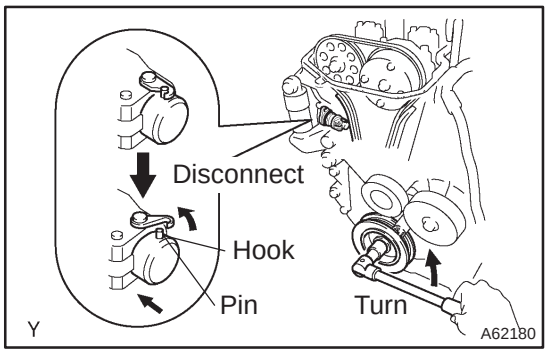

(c) Turn the crankshaft counterclockwise, and take the hook off the knock pin to release the plunger.

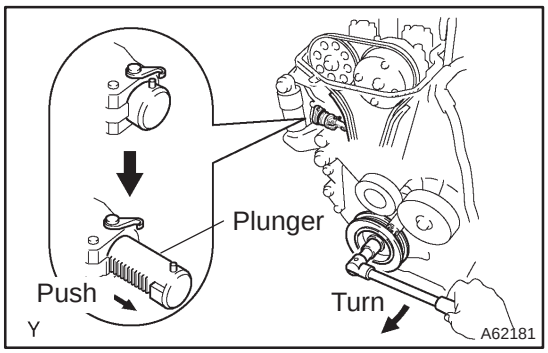

(d) Turn the crankshaft clockwise, and check that the plunger is extended.

HINT:
If the plunger does not be extended, press the slipper into the chain tensioner using a screwdriver so that the hook is took off from the knock pin and let the plunger can be extended.

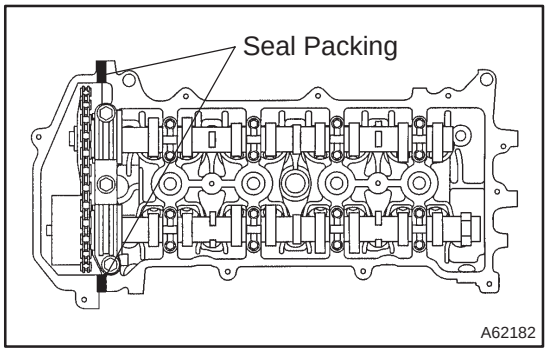

39. INSTALL CYLINDER HEAD COVER SUB–ASSY

(a) Remove any old pacing (FIPG) material.

(b) Apply seal packing to the 2 locations as shown in the illustration.
Seal packing: Part No. 08826–00080 or equivalent

NOTICE:

- **Remove any oil from the contact surface.**
- **Install the cylinder head cover within 3 minutes after applying seal packing.**
- **Do not expose the seal to engine oil 2 hours after installing.**

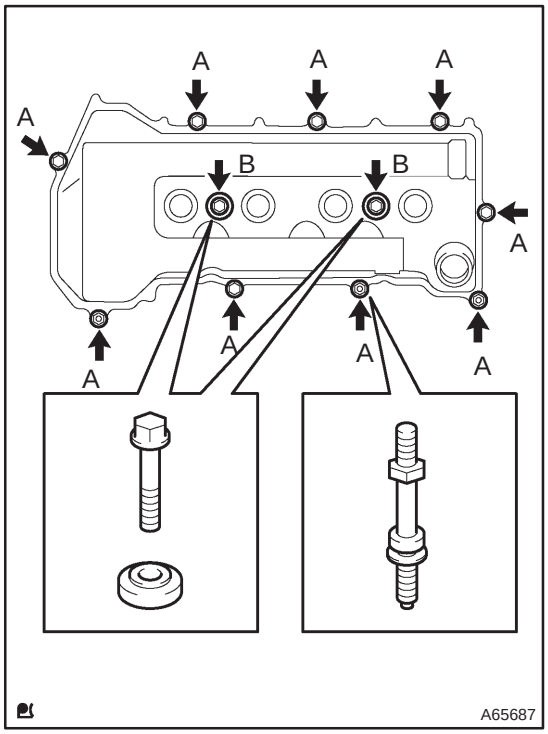

(c) Install the cylinder head cover and 3 cable brackets with the 9 bolts, 2 seal washers and 2 nuts. Tighten the bolts and nuts uniformly in the several steps.
Torque:
11 N·m (112 kgf·cm, 8 ft·lbf) for A
9.0 N·m (92 kgf·cm, 80 in.·lbf) for B

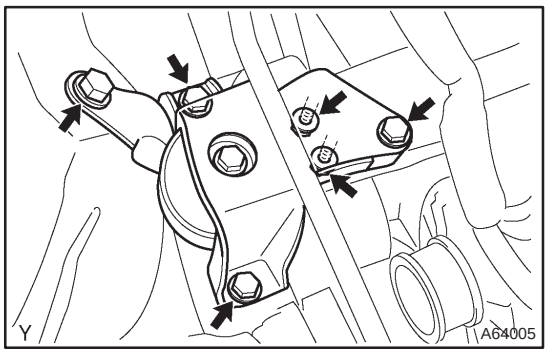

40. INSTALL ENGINE MOUNTING INSULATOR SUB–ASSY RH

(a) Install the engine mounting insulator with the 4 bolts and 2 nuts.
Torque: 52 N·m (530 kgf·cm, 38 ft·lbf)

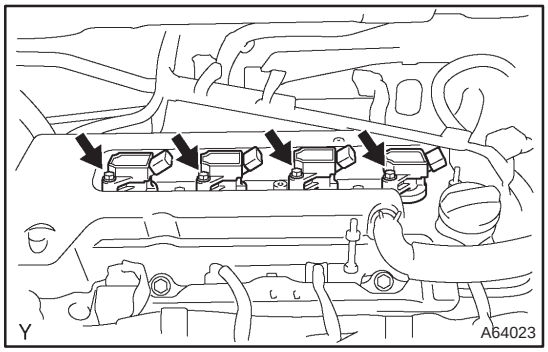

41. INSTALL IGNITION COIL ASSY

(a) Install the 4 ignition coils with the 4 bolts.
Torque: 9.0 N·m (92 kgf·cm, 80 in.·lbf)

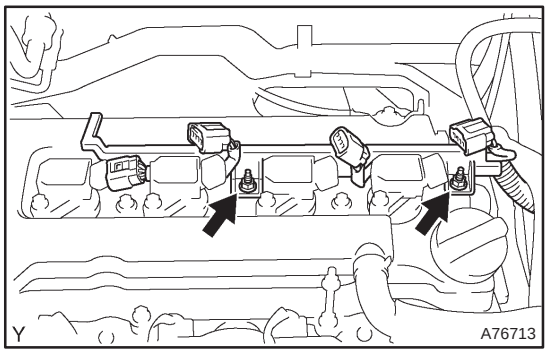

(b) Install the engine wire with the 2 nuts.
Torque: 9.0 N·m (92 kgf·cm, 80 in.·lbf)

42. INSTALL GENERATOR ASSY (See page 19–7)

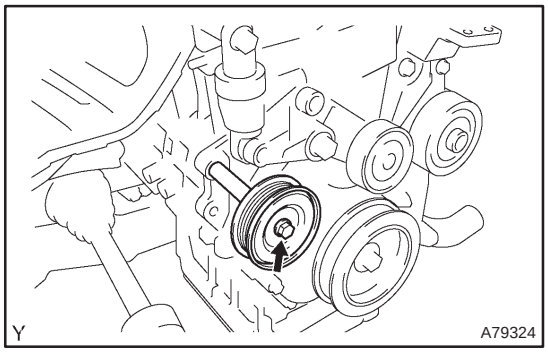

43. INSTALL V–RIBBED IDLER ASSY NO.1

(a) Install the tube and idler with the nut and bolt.
Torque: 39.2 N·m (400 kgf·cm, 29 ft·lbf)

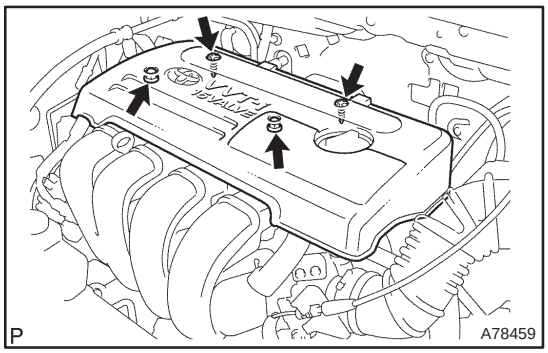

44. INSTALL CYLINDER HEAD COVER NO.2

(a) Install the cylinder head cover with the 2 nuts and 2 clips.
Torque: 7.0 N·m (71 kgf·cm, 62 in.·lbf)

45. INSTALL FRONT WHEEL RH
Torque: 103 N·m (1,050 kgf·cm, 76 ft·lbf)

46. ADD ENGINE COOLANT (See page 16–7)

47. CHECK FOR ENGINE COOLANT LEAKS (See page 16–7)

48. CHECK FOR ENGINE OIL LEAKS

CAMSHAFT (1ZZ–FE/3ZZ–FE)

141CJ–01

COMPONENTS

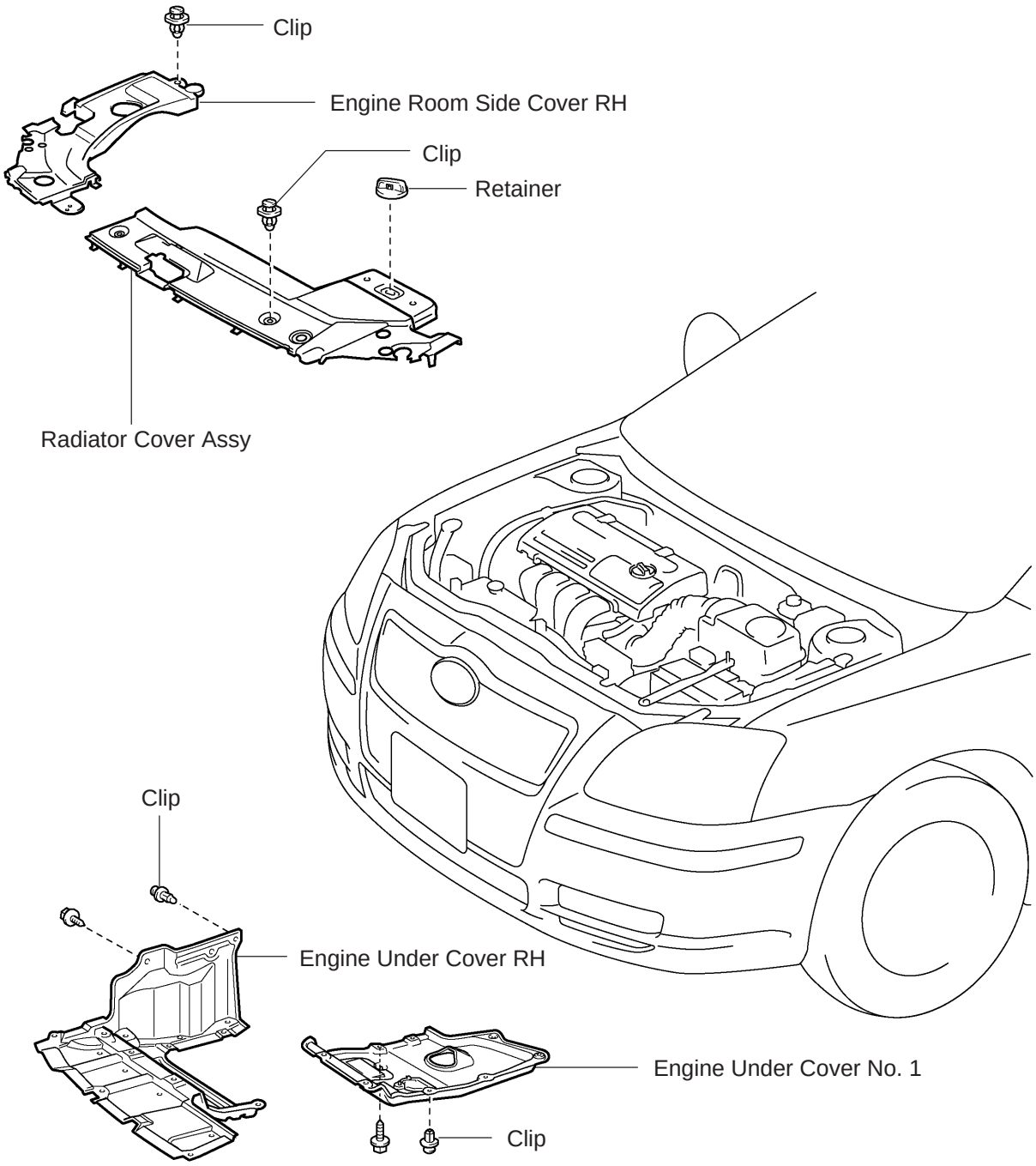

O

A79321

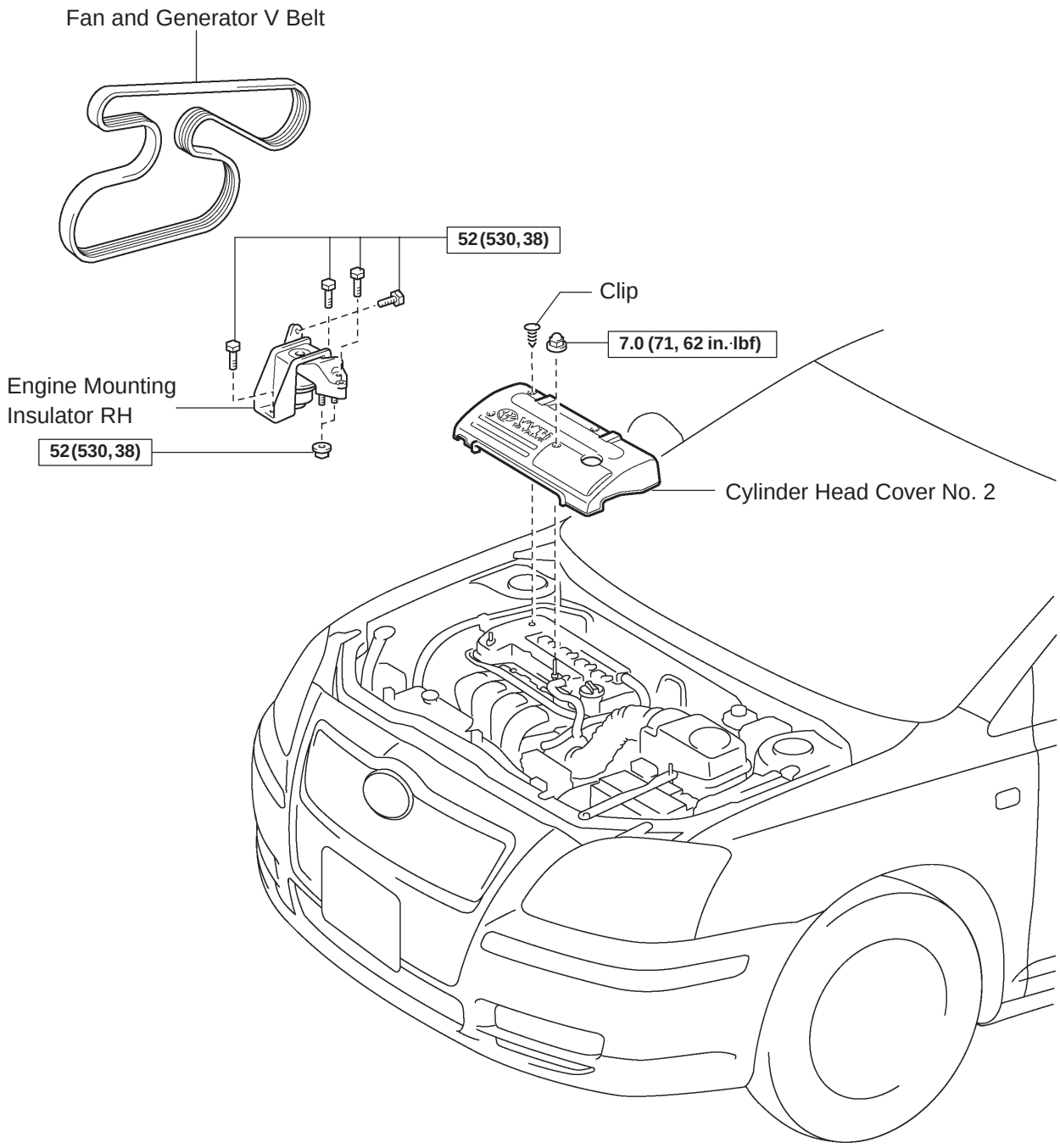

O N·m (kgf·cm, ft·lbf) : Specified torque

A76710

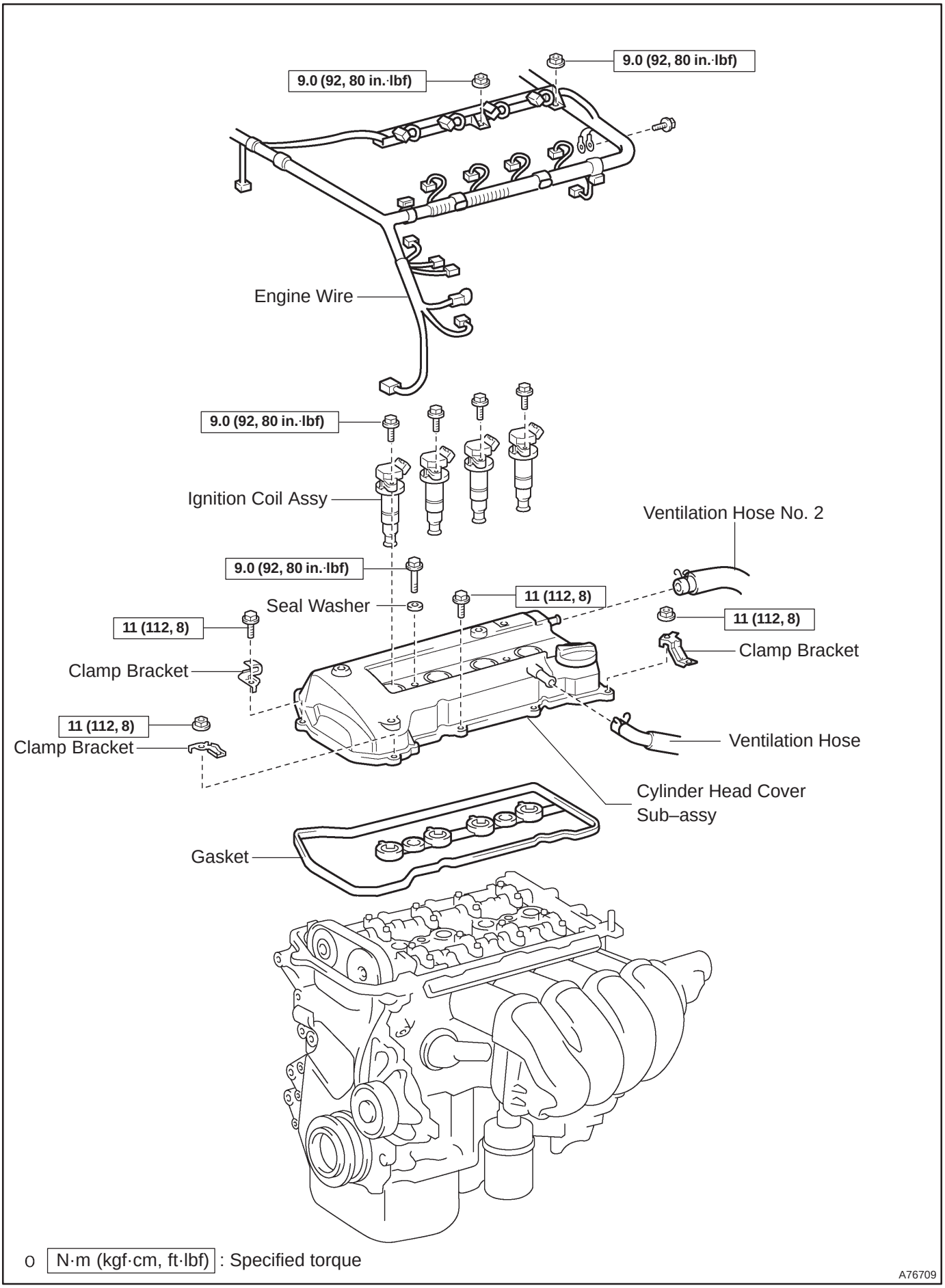
9.0 (92, 80 in.·lbf)
9.0 (92, 80 in.·lbf)
Engine Wire
9.0 (92, 80 in.·lbf)
Ignition Coil Assy
Ventilation Hose No. 2
9.0 (92, 80 in.·lbf)
11 (112, 8)
Seal Washer
11 (112, 8)
11 (112, 8)
Clamp Bracket
Clamp Bracket
11 (112, 8)
Clamp Bracket
Ventilation Hose
Cylinder Head Cover Sub–assy
Gasket
o N·m (kgf·cm, ft·lbf) : Specified torque
A76709

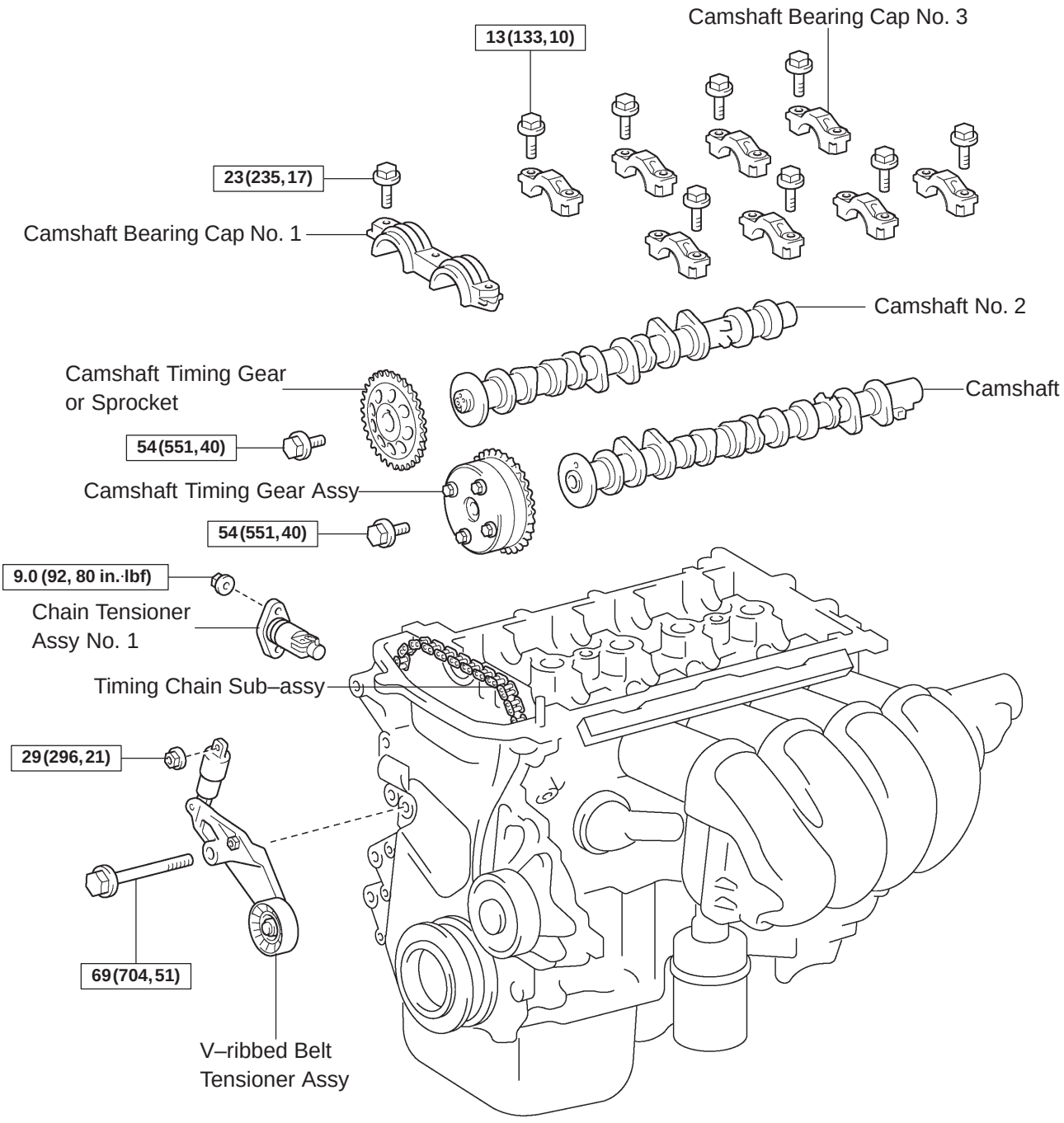

N·m (kgf·cm, ft·lbf) : Specified torque

A64006

141CK–01

REPLACEMENT

1. REMOVE RADIATOR SUPPORT OPENING COVER (See page 14–27)
2. REMOVE ENGINE UNDER COVER RH (See page 14–27)

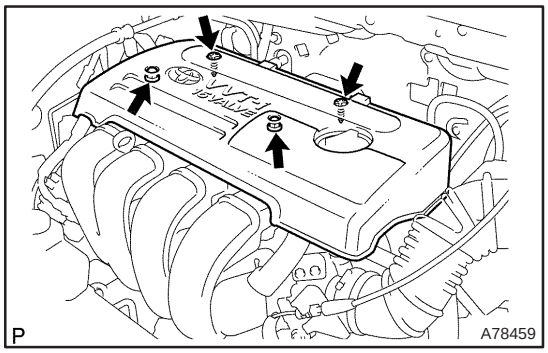

3. REMOVE CYLINDER HEAD COVER NO.2

(a) Remove and the 2 screw and 2 clips and detach the engine under cover No.2.

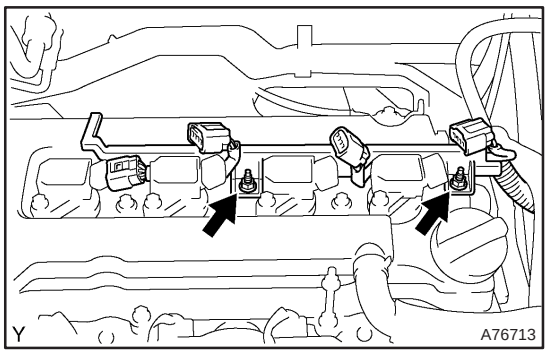

4. DISCONNECT COIL, IGNITION

(a) Remove the 5 clamps from the 5 clamp brackets.
(b) Disconnect the 4 ignition coil connectors.
(c) Remove the 2 nuts which are used to secure the engine wire.

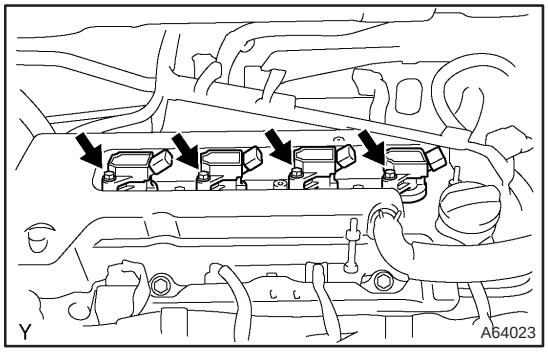

(d) Remove the 4 bolts and the 4 ignition coils.

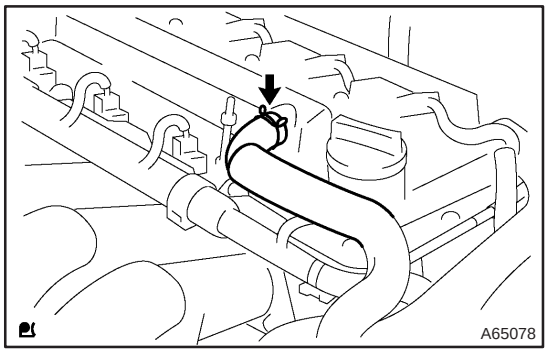

5. DISCONNECT VENTILATION HOSE

(a) Disconnect the ventilation hose from the cylinder head cover.

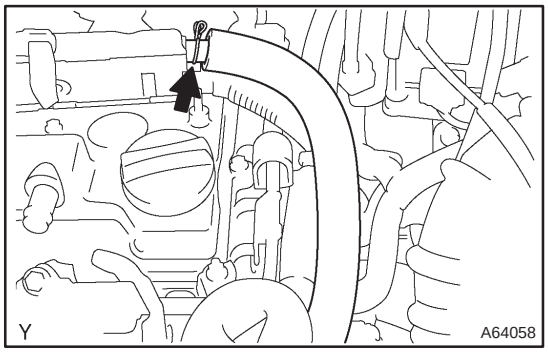

6. DISCONNECT VENTILATION HOSE NO.2

(a) Disconnect the ventilation hose from the cylinder head cover.

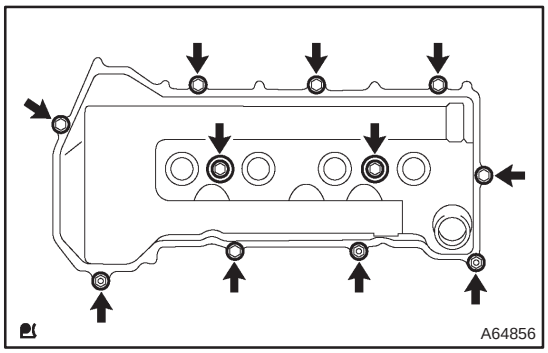

7. REMOVE CYLINDER HEAD COVER SUB–ASSY

(a) Remove the 9 bolts, 2 seal washers, 2 nuts, and 3 clamp brackets.

(b) Remove the cylinder head cover.

8. REMOVE ENGINE UNDER COVER SUB–ASSY NO.1 (See page 14–27)

9. REMOVE ENGINE ROOM COVER SIDE (See page 14–27)

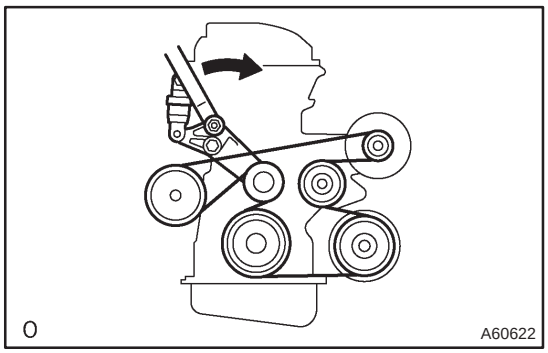

10. REMOVE FAN AND GENERATOR V BELT

(a) Turn the V–ribbed belt tensioner clockwise slowly and loosen it. Then, remove the fan and generator V belt and put back the V–ribbed belt tensioner carefully.

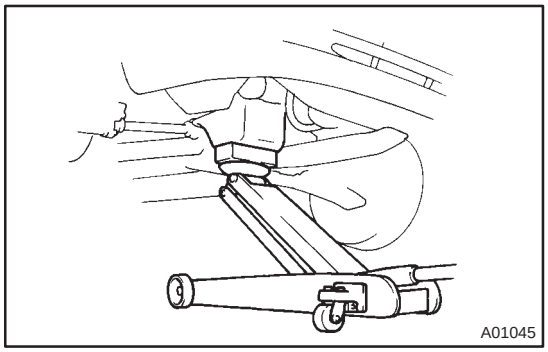

11. REMOVE ENGINE MOUNTING INSULATOR SUB–ASSY RH

(a) Place a wooden block on a jack underneath the engine. Remove the 4 bolts and 2 nuts and detach the engine mounting insulator RH.

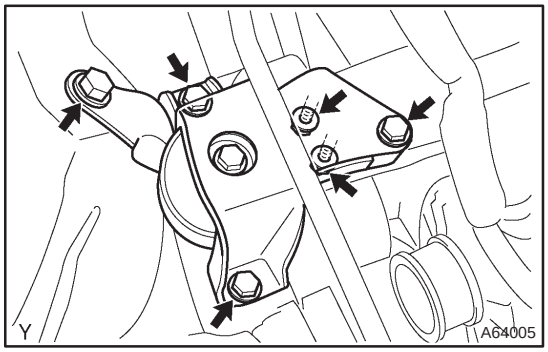

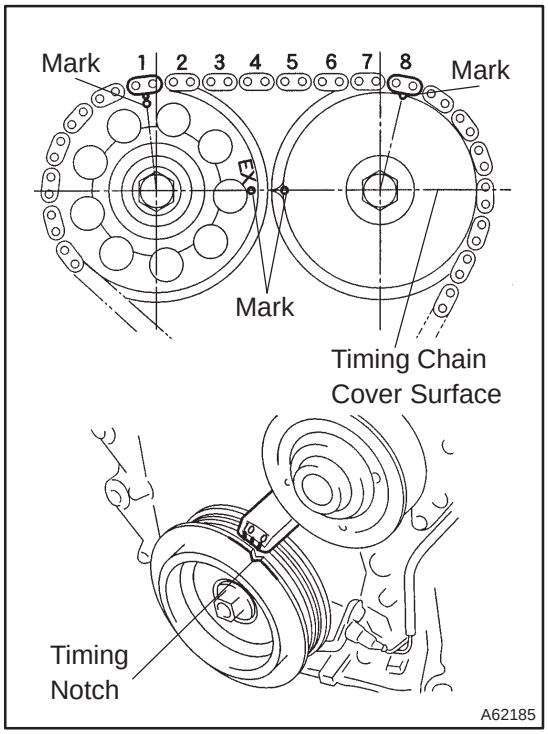

12. SET NO. 1 CYLINDER TO TDC/COMPRESSION

(a) Turn the crankshaft pulley to align the timing notch with timing mark ”0” of the timing chain cover.

(b) Check that the point marks of the camshaft timing sprocket and VVT timing sprocket are in straight line on the timing chain cover surface as shown in the illustration.

HINT:

If not, turn the crankshaft 1 revolution (360°) and align the marks as above.

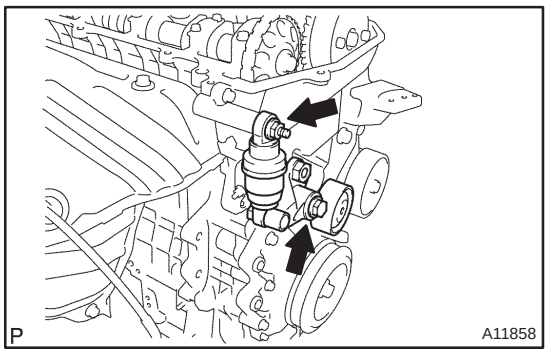

13. REMOVE V–RIBBED BELT TENSIONER ASSY

(a) Remove the bolt and nut, then remove the V–ribbed belt tensioner.

HINT:

Jack up and down to remove the bolt.

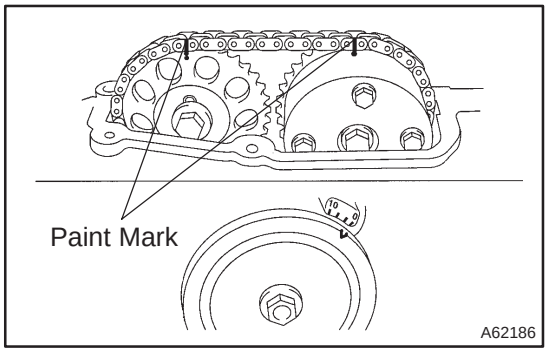

14. REMOVE CAMSHAFT

NOTICE:

Do not revolve the crankshaft without the chain tensioner.

(a) Set the No. 1 cylinder to the TDC/compression.

(b) Place match marks on the timing chain and the camshaft timing sprockets.

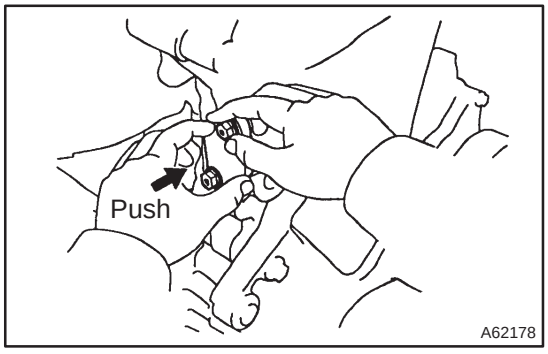

(c) Remove the 2 nuts and the chain tensioner.

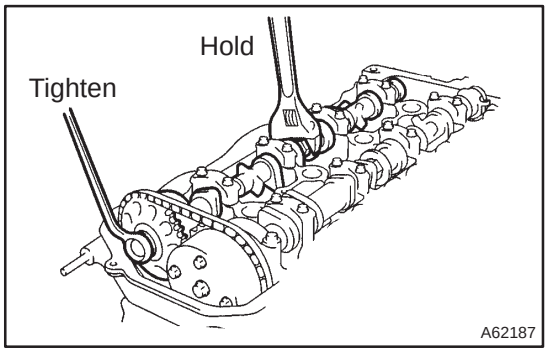

(d) Hold the camshaft with a wrench, loosen the camshaft timing gear set bolt.

NOTICE:

Be careful not to damage the valve lifter.

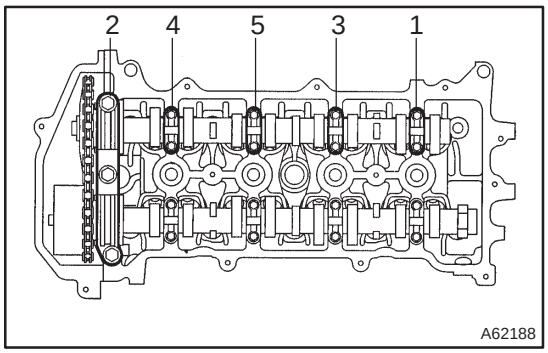

(e) Using several steps, loosen the camshaft bearing cap bolts on No. 2 camshaft in the sequence shown in the illustration. Remove the bearing caps.

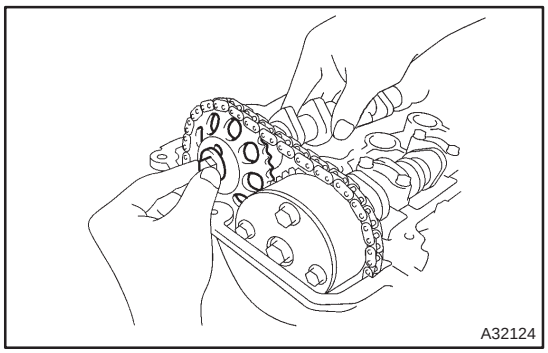

(f) Remove the camshaft timing gear as shown in the illustration.

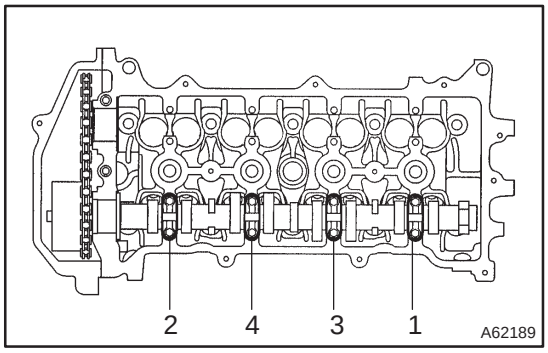

(g) Using several steps, loosen the camshaft bearing cap bolts on camshaft in the sequence shown in the illustration. Remove the bearing caps.

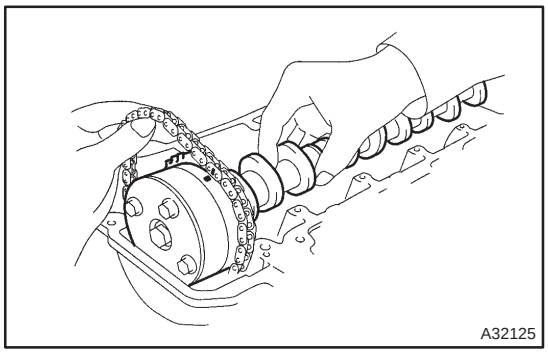

(h) Remove the camshaft as holding the timing chain.

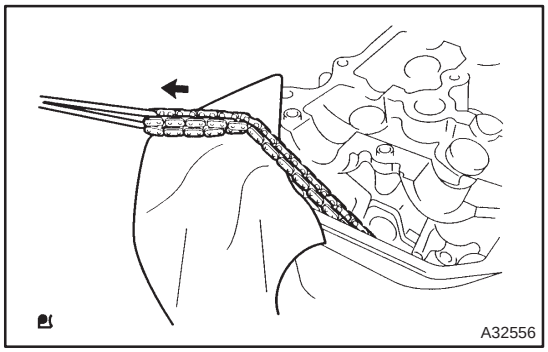

(i) Tie the timing chain with a string as shown in the illustration.

NOTICE:

Be careful not to drop anything inside the timing chain cover.

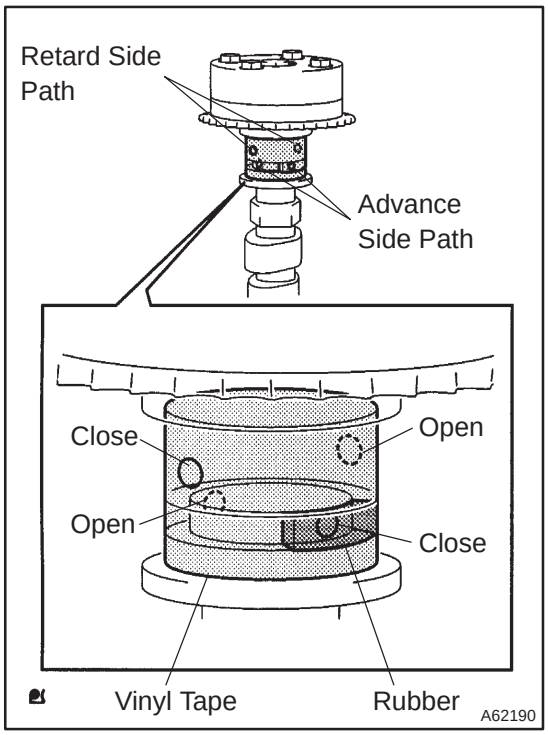

15. INSPECT CAMSHAFT TIMING GEAR ASSY

(a) Check the lock of camshaft timing gear.

(1) Clamp the camshaft in a vice, and confirm the camshaft timing gear is locked.

NOTICE:

Be careful not to damage the camshaft.

(b) Release lock pin.

(1) Cover 4 oil paths of the cam journal with vinyl tape as shown in the illustration.

HINT:

The one of the 2 glooves on the cam journal is for retards (upper) and the rest is for advances (lower). Each groove has the 2 oil paths. Plug one of the oil paths for each groove with rubber pieces before wrapping the cam journal with the tape.

(2) Punctuate the tape for the advance oil path and for the retard oil path in the opposite side from the advance as shown in the illustration.

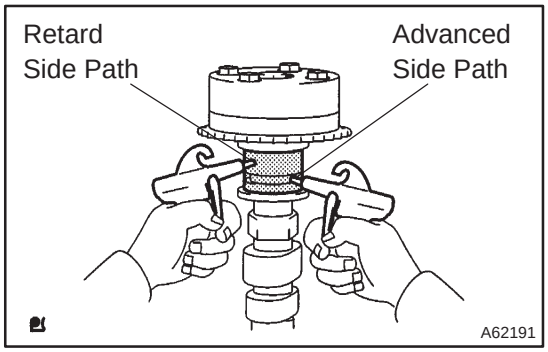

(3) Put air pressure into two broken paths (the advance side path and the retard side path) with about 150 kPa {1.5 kgf·cm}.

CAUTION:

Cover the pathes with shop rag to avoid oil splashing.

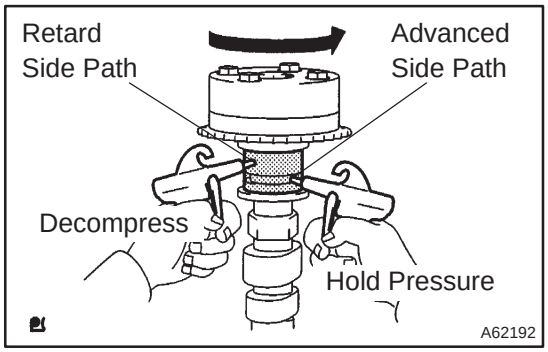

(4) Confirm if the camshaft timing gear assembly revolves in the timing advance direction when weakening the air pressure of the timing retard path.

HINT:

When the lock pin is released, the camshaft timing gear revolves in the advance direction.

(5) When the camshaft timing gear comes to the most advanced position, take out the air pressure of the timing retard side path, and then take out that of timing advance side path.

CAUTION:

Camshaft timing assembly gear occasionally shifts to the retard side abruptly, if the air compression of the advanced side path is released first. It often causes the breakage of the lock pin.

(c) Check smooth revolution

(1) Revolve the camshaft timing gear assembly within the movable range [20° (40°CA)] except for the most retarded position several times, and check the smooth revolution.

CAUTION:

Be sure to perform this check by hand, instead of air pressure.

(d) Check the lock in the most retarded position.

(1) Confirm that the camshaft timing gear assembly is locked at the most retarded position.

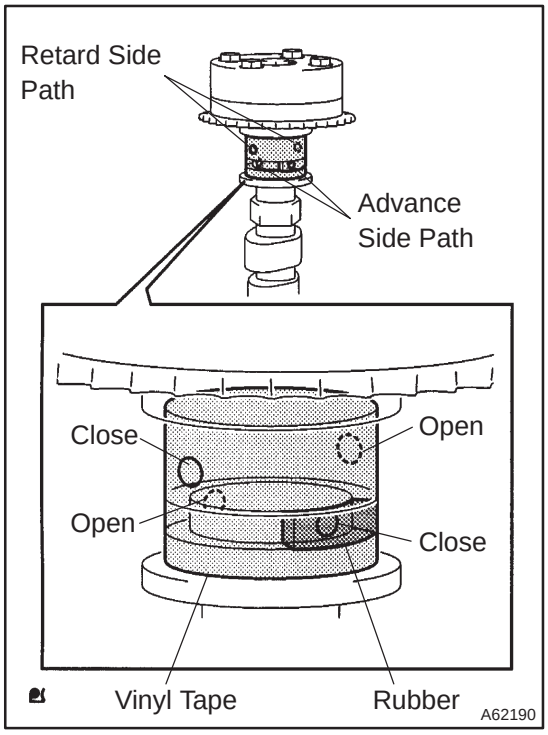

16. REMOVE CAMSHAFT TIMING GEAR ASSY

(a) Clamp the camshaft in a vice, and confirm that the gear is locked.

CAUTION:

Be careful not to damage the camshaft.

(b) Cover 4 oil paths of cam journal with vinyl tape as shown in the illustration.

HINT:

The one of the 2 glooves on the cam journal is for retards (upper) and the rest is for advances (lower). Each groove has the 2 oil paths. Plug one of the oil paths for each groove with rubber pieces before wrapping the cam journal with the tape.

(1) Punctuate the tape for the advance oil path and for the retard oil path in the opposite side from the advance as shown in the illustration.

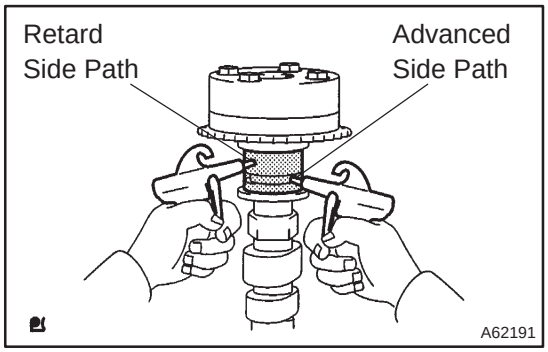

(c) Put air pressure into two broken paths (the advance side path and the retard side path) with about 150 kPa {1.5 kgf·cm}.

CAUTION:

Cover the paths with shop rag to avoid oil splashing.

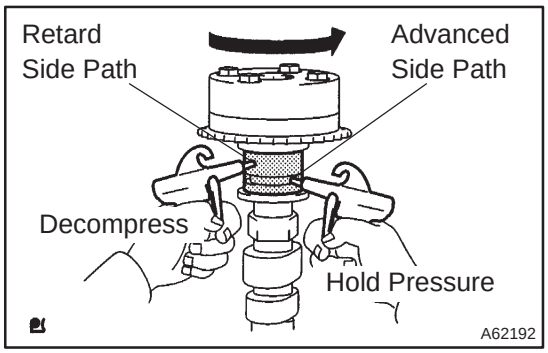

(d) Confirm if the camshaft timing gear assembly revolves in the timing advance direction when weakening the air pressure of the timing retard path.

HINT:

When the lock pin is released, the camshaft timing gear revolves in the advance direction.

(e) When the camshaft timing gear comes to the most advanced position, take out the air pressure of the timing retard side path, next, take out that of timing advance side path.

CAUTION:

Camshaft timing gear assembly occasionally shifts to the retard side abruptly, if the air compression of the advanced side path is released first. It often causes the breakage of the lock pin.

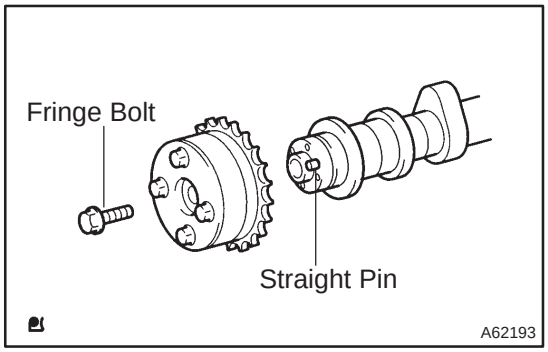

(f) Remove the fringe bolt of camshaft timing gear assembly.

NOTICE:

- **Be sure not to remove the other 4 bolts.**
- **In case of reusing the camshaft timing gear, release the straight pin lock first, and then install the gear.**

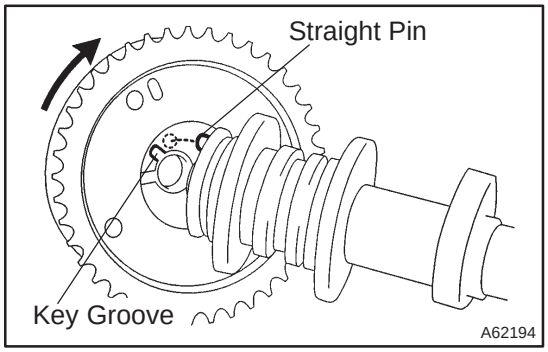

17. INSTALL CAMSHAFT TIMING GEAR ASSY

(a) Put the camshaft timing gear assembly and the camshaft together with the straight pin off the key groove.

(b) Turn the camshaft timing gear assembly clockwise (as shown in the illustration) while pushing it lightly against the camshaft. Push further at the position where the pin gets into the groove.

CAUTION:

Be sure not to turn the camshaft timing gear to the retard angle side (to the right angle).

(c) Check that there is no clearance between the gear's fringe and the camshaft.

(d) Tighten the fringe bolt with the camshaft timing gear fixed.
Torque: 54 N·m (551 kgf·cm 40 ft·lbf)

(e) Check that the camshaft timing gear assembly can move to the retard angle side (the right angle) and is locked at the most retarded position.

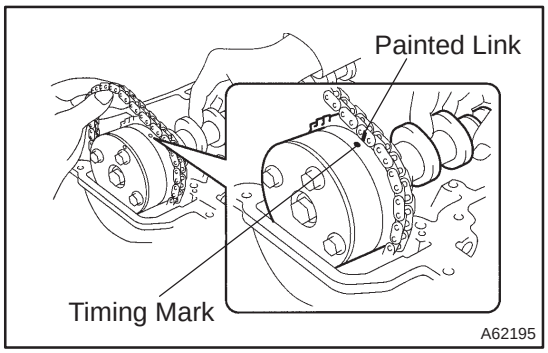

18. INSTALL CAMSHAFT

(a) Install the timing chain on the camshaft timing gear with the painted links aligned with the timing marks on the camshaft timing gear as shown in the illustration.

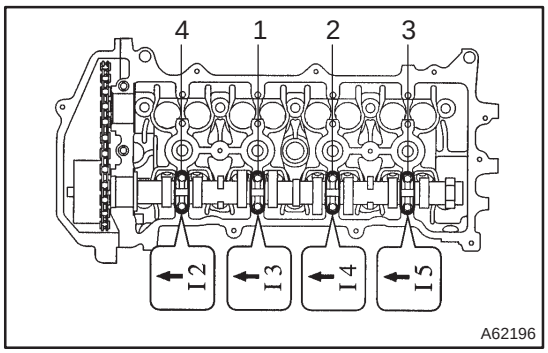

(b) Examine the front marks and numbers and tighten the bolts in the sequence shown in the illustration.
Torque: 13 N·m (133 kgf·cm, 10 ft·lbf)

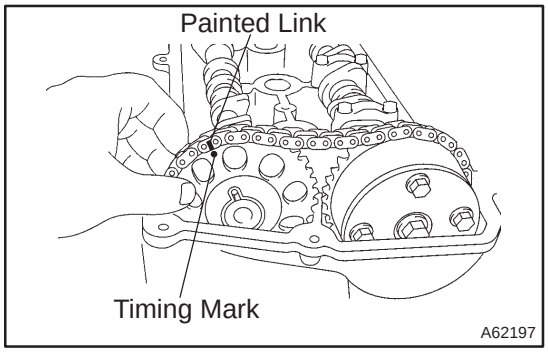

(c) Put the camshaft No.2 on the cylinder head with the painted links of the chain aligned with the timing mark on the camshaft timing gear.

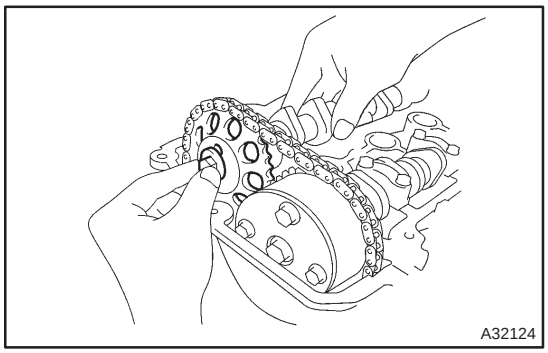

(d) Tighten the camshaft timing gear set bolt temporarily.

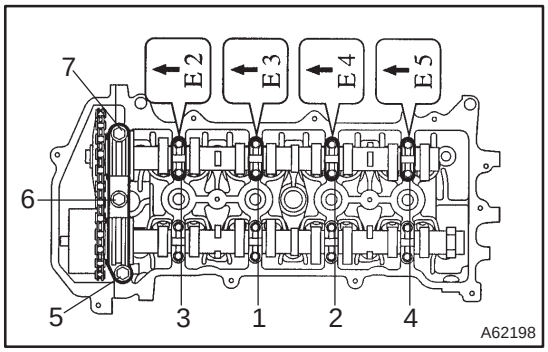

(e) Examine the front marks and numbers and tighten the bolts in the sequence shown in the illustration.
Torque: 13 N·m (133 kgf·cm, 10 ft·lbf)

(f) Install the bearing cap No. 1.
Torque: 23 N·m (235 kgf·cm, 17 ft·lbf)

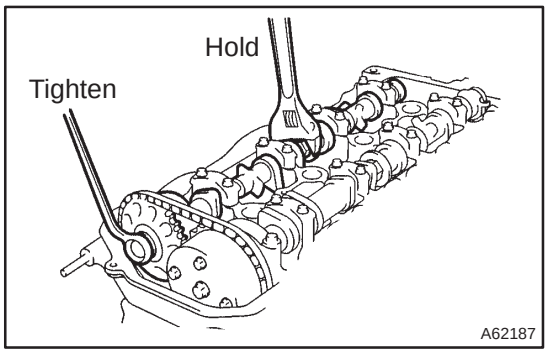

(g) Hold the camshaft with a wrench, tighten the camshaft timing gear set bolt.
Torque: 54 N·m (551 kgf·cm, 40 ft·lbf)

NOTICE:
Be careful not to damage the valve lifter.

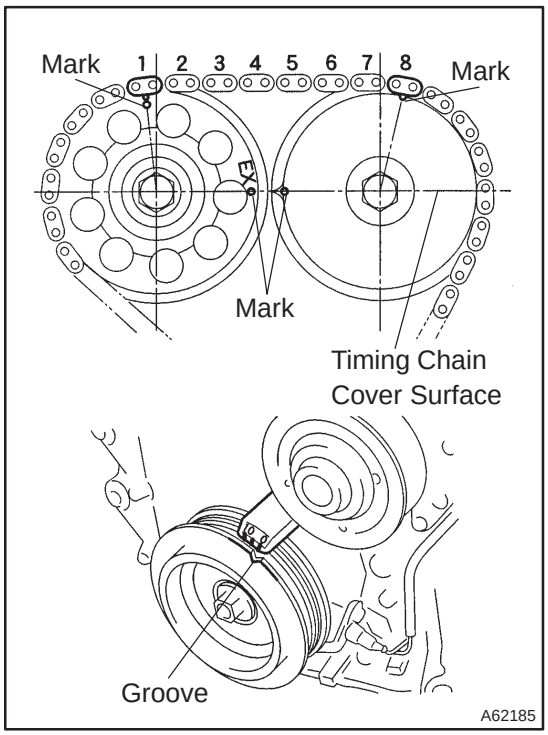

(h) Check that the match marks on the 2 camshaft sprockets are aligned with each other and are aligned with the painted links of the timing chain as shown in the illustration. Also, check the timing notch is aligned with the timing mark ”0” of the chain cover.

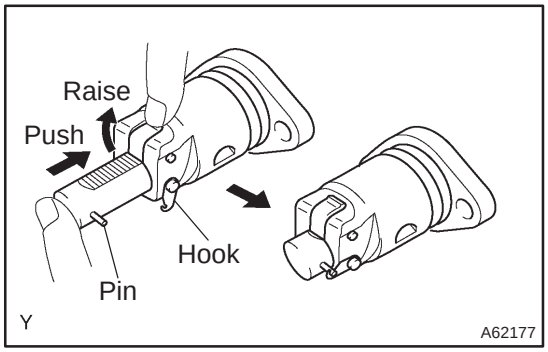

(i) Install chain tensioner.
(1) Check that the O–ring is clean, and set the hook as shown in the illustration.

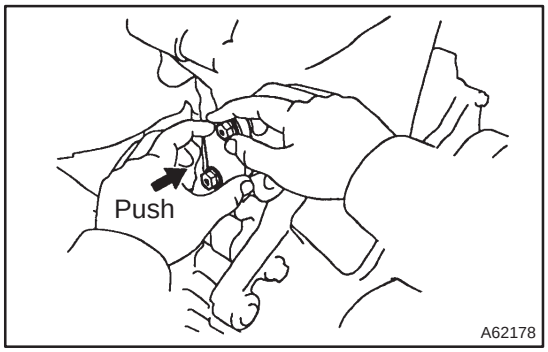

(2) Apply engine oil to the chain tensioner and install it with the 2 nuts.

Torque: 9.0 N·m (92 kgf·cm, 80 in·lbf)

NOTICE:

If the hook released the plunger during installation, re–hook the plunger by the hook to fix it.

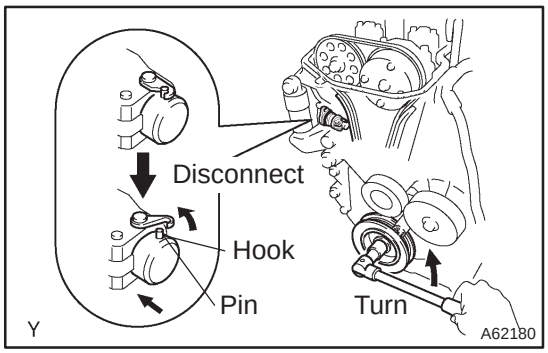

(3) Turn the crankshaft counter clockwise, and take the hook off the knock pin to release the plunger.

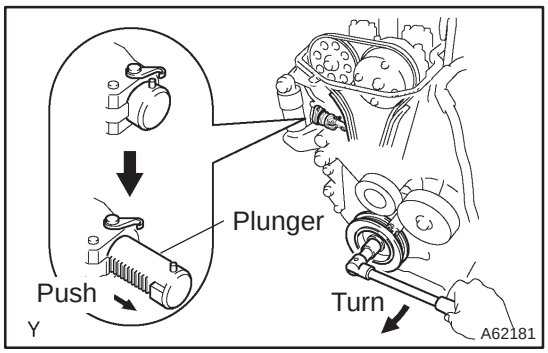

(4) Turn the crankshaft clockwise, and check that the plunger is extended.

HINT:

If the plunger does not be extended, press the slipper into the chain tensioner using a screwdriver so that the hook is took off from the knock pin and let the plunger can be extended.

19. ADJUST VALVE CLEARANCE (See page 14–6)

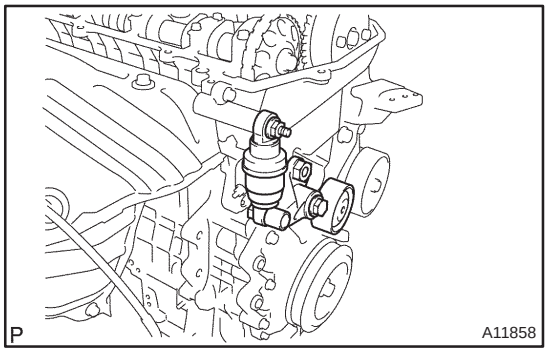

20. INSTALL V–RIBBED BELT TENSIONER ASSY

(a) Install the V–ribbed belt tensioner with the nut and bolt.

Torque:

29 N·m (296 kgf·cm, 21 ft·lbf) for Nut

69 N·m (704 kgf·cm, 51 ft·lbf) for Bolt

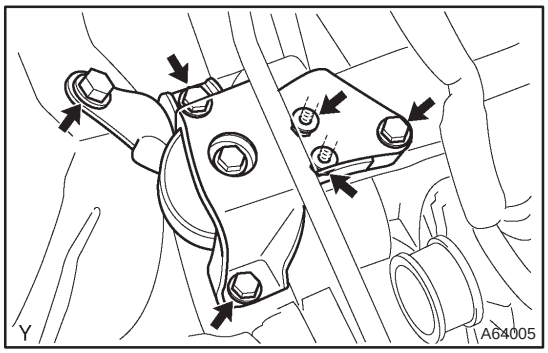

21. INSTALL ENGINE MOUNTING INSULATOR SUB–ASSY RH

(a) Install the engine mounting insulator with the 4 bolts and 2 nuts.

Torque: 52 N·m (530 kgf·cm, 38 ft·lbf)

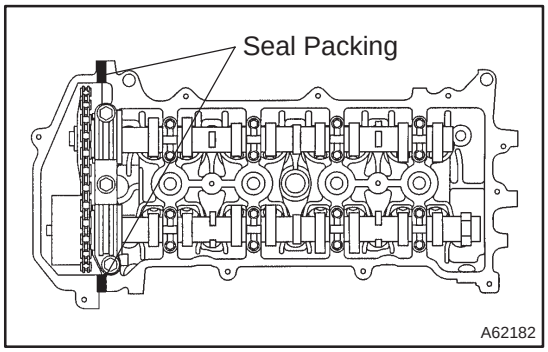

22. INSTALL CYLINDER HEAD COVER SUB–ASSY

(a) Remove any old packing (FIPG) material.

(b) Apply seal packing to the 2 locations as shown in the illustration.

Seal packing: Part No. 08826–00080 or equivalent

NOTICE:

- **Remove any oil from the contact surface.**
- **Install the cylinder head cover within 3 minutes after applying seal packing.**
- **Do not expose the seal to engine oil 2 hours after installing.**

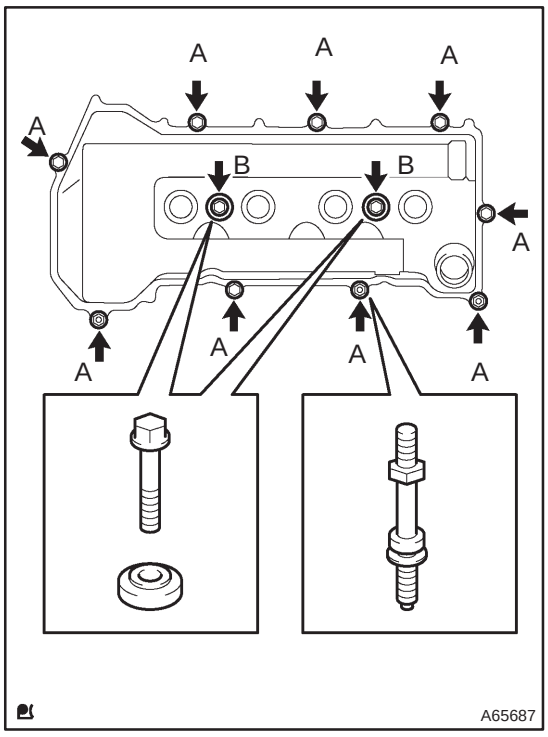

(c) Install the cylinder head cover and 3 cable brackets with the 9 bolts, 2 seal washers and 2 nuts. Tighten the bolts and nuts uniformly in the several steps.

Torque:
11 N·m (112 kgf·cm, 8 ft·lbf) for A
9.0 N·m (92 kgf·cm, 80 in·lbf) for B

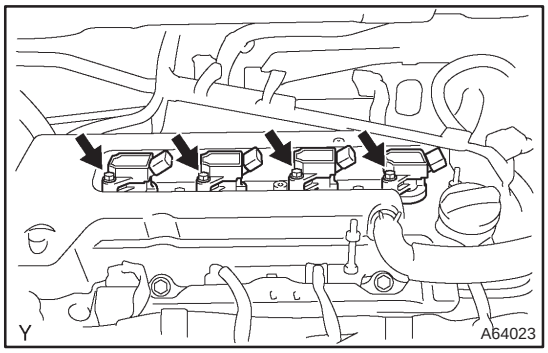

23. INSTALL IGNITION COIL ASSY

(a) Install the 4 ignition coils with the 4 bolts.

Torque: 9.0 N·m (92 kgf·cm, 80 in.·lbf)

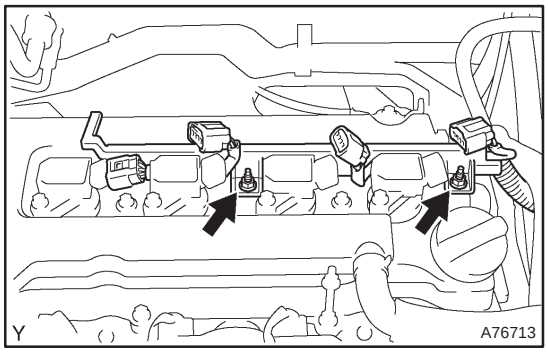

(b) Install the engine wire with the 2 nuts.
Torque: 9.0 N·m (92 kgf·cm, 80 in.·lbf)

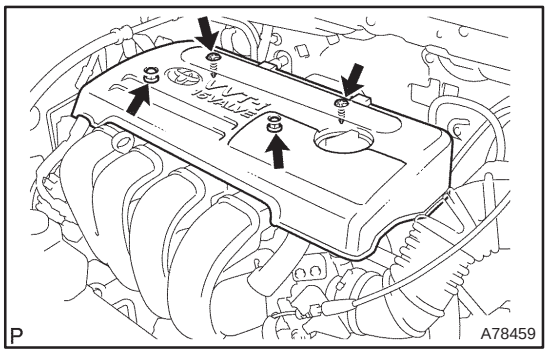

24. INSTALL CYLINDER HEAD COVER NO.2

(a) Install the cylinder head cover with the 2 nuts and 2 clips.
Torque: 7.0 N·m (71 kgf·cm, 62 in.·lbf)

25. CHECK FOR ENGINE OIL LEAKS

CYLINDER HEAD GASKET (1ZZ–FE/3ZZ–FE)

141CL–01

COMPONENTS

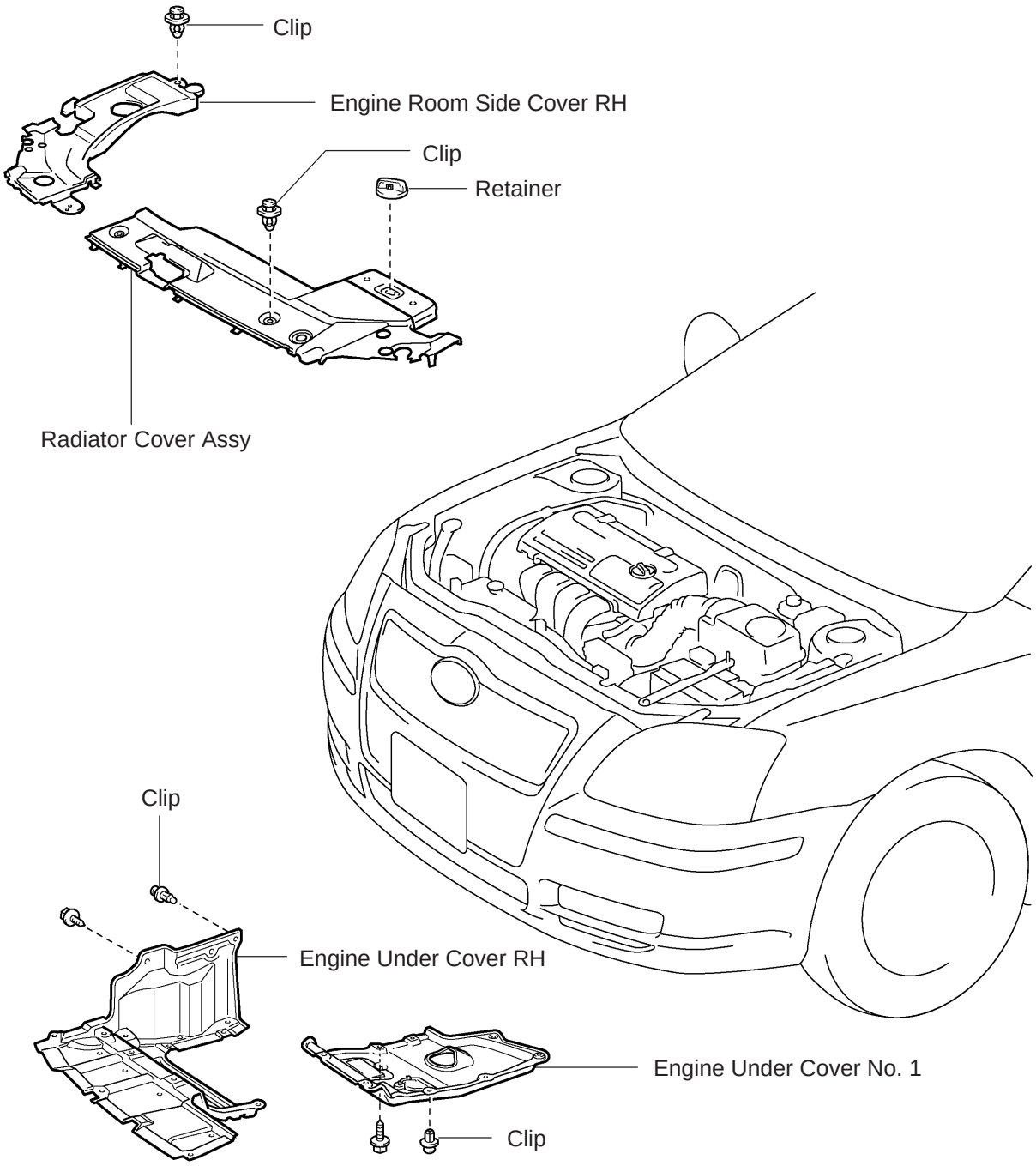

O

A79321

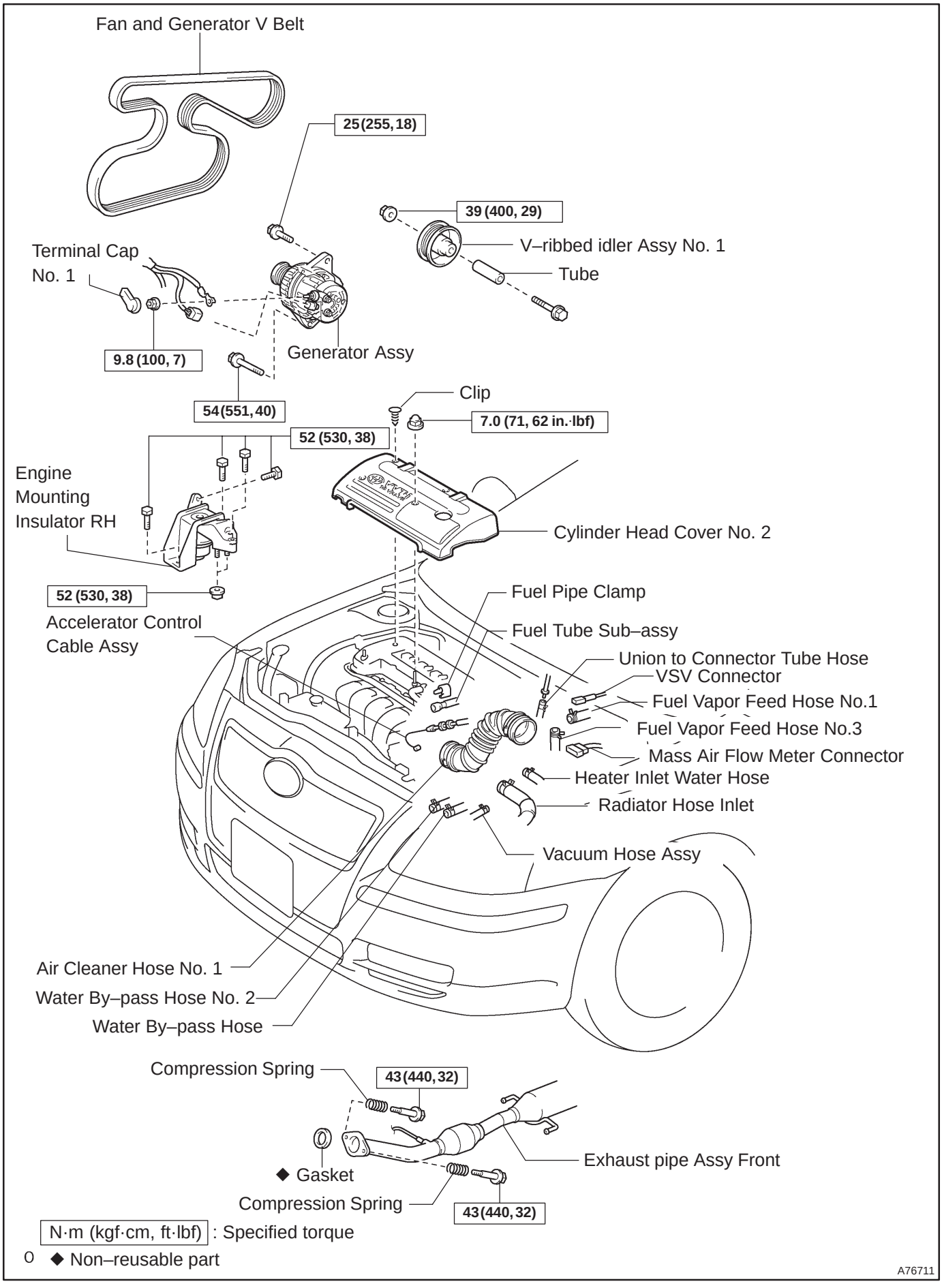
Fan and Generator V Belt
25 (255, 18)
39 (400, 29)
V–ribbed idler Assy No. 1
Tube
Terminal Cap No. 1
9.8 (100, 7)
Generator Assy
54 (551, 40)
Clip
7.0 (71, 62 in.·lbf)
52 (530, 38)
Engine Mounting Insulator RH
Cylinder Head Cover No. 2
52 (530, 38)
Accelerator Control Cable Assy
Fuel Pipe Clamp
Fuel Tube Sub–assy
Union to Connector Tube Hose
VSV Connector
Fuel Vapor Feed Hose No.1
Fuel Vapor Feed Hose No.3
Mass Air Flow Meter Connector
Heater Inlet Water Hose
Radiator Hose Inlet
Vacuum Hose Assy
Air Cleaner Hose No. 1
Water By–pass Hose No. 2
Water By–pass Hose
Compression Spring
43 (440, 32)
Exhaust pipe Assy Front
◆ Gasket
Compression Spring
43 (440, 32)
N·m (kgf·cm, ft·lbf) : Specified torque
◆ Non–reusable part
A76711

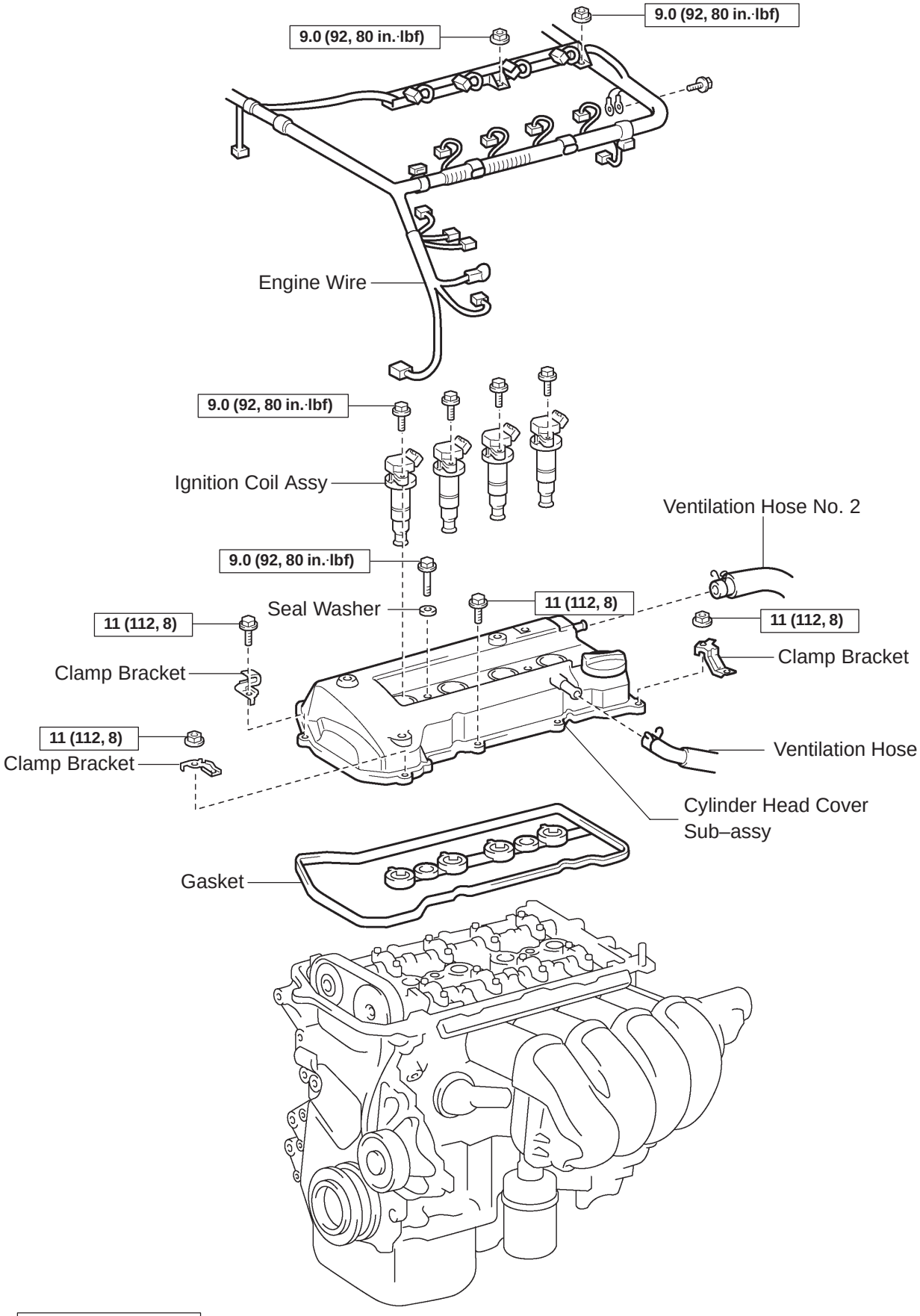
9.0 (92, 80 in.·lbf)
9.0 (92, 80 in.·lbf)
Engine Wire
9.0 (92, 80 in.·lbf)
Ignition Coil Assy
Ventilation Hose No. 2
9.0 (92, 80 in.·lbf)
Seal Washer
11 (112, 8)
11 (112, 8)
11 (112, 8)
Clamp Bracket
Clamp Bracket
11 (112, 8)
Clamp Bracket
Ventilation Hose
Cylinder Head Cover Sub–assy
Gasket
o N·m (kgf·cm, ft·lbf) : Specified torque
A76709

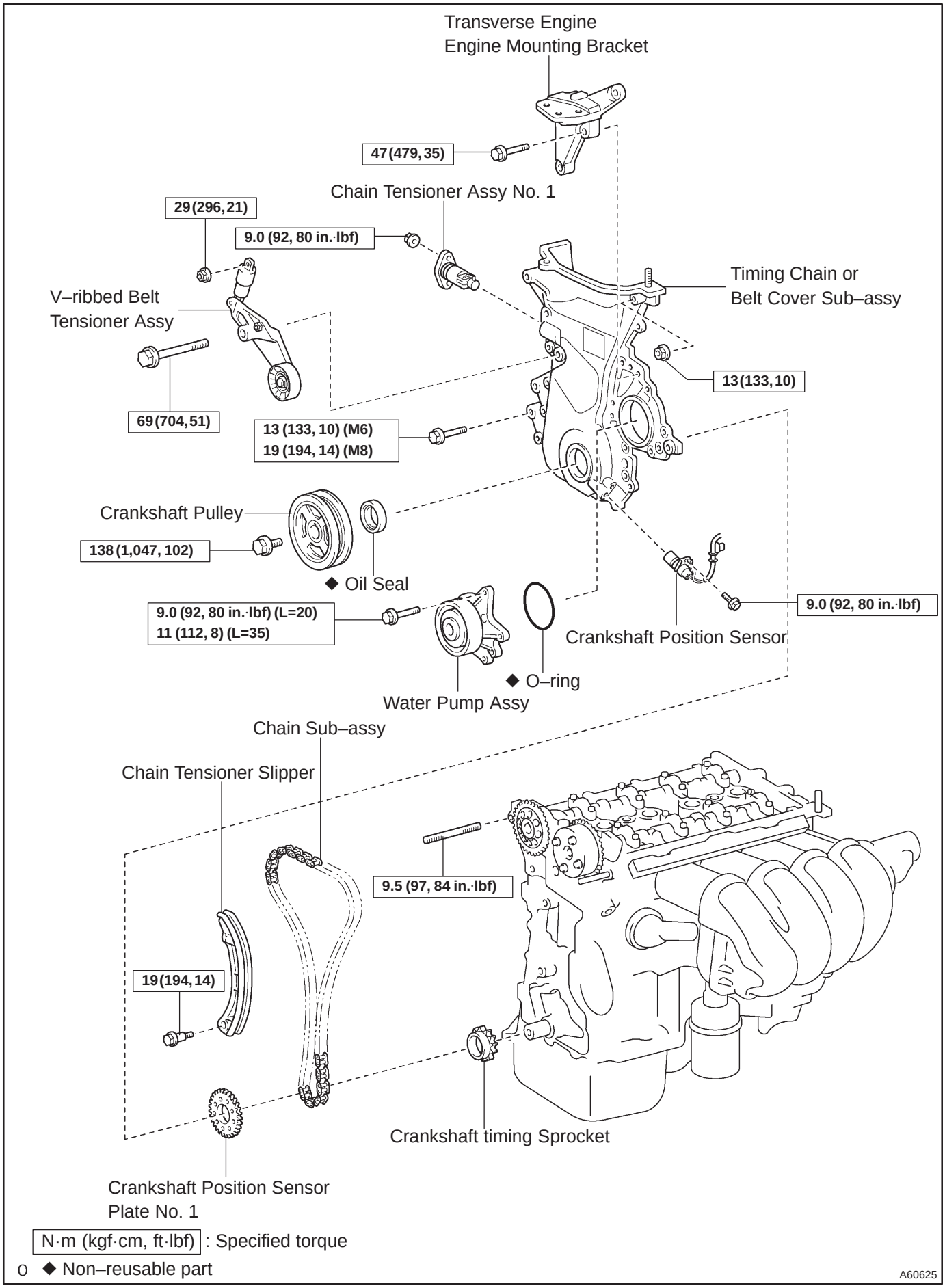

N·m (kgf·cm, ft·lbf) : Specified torque

o ◆ Non–reusable part

A60625

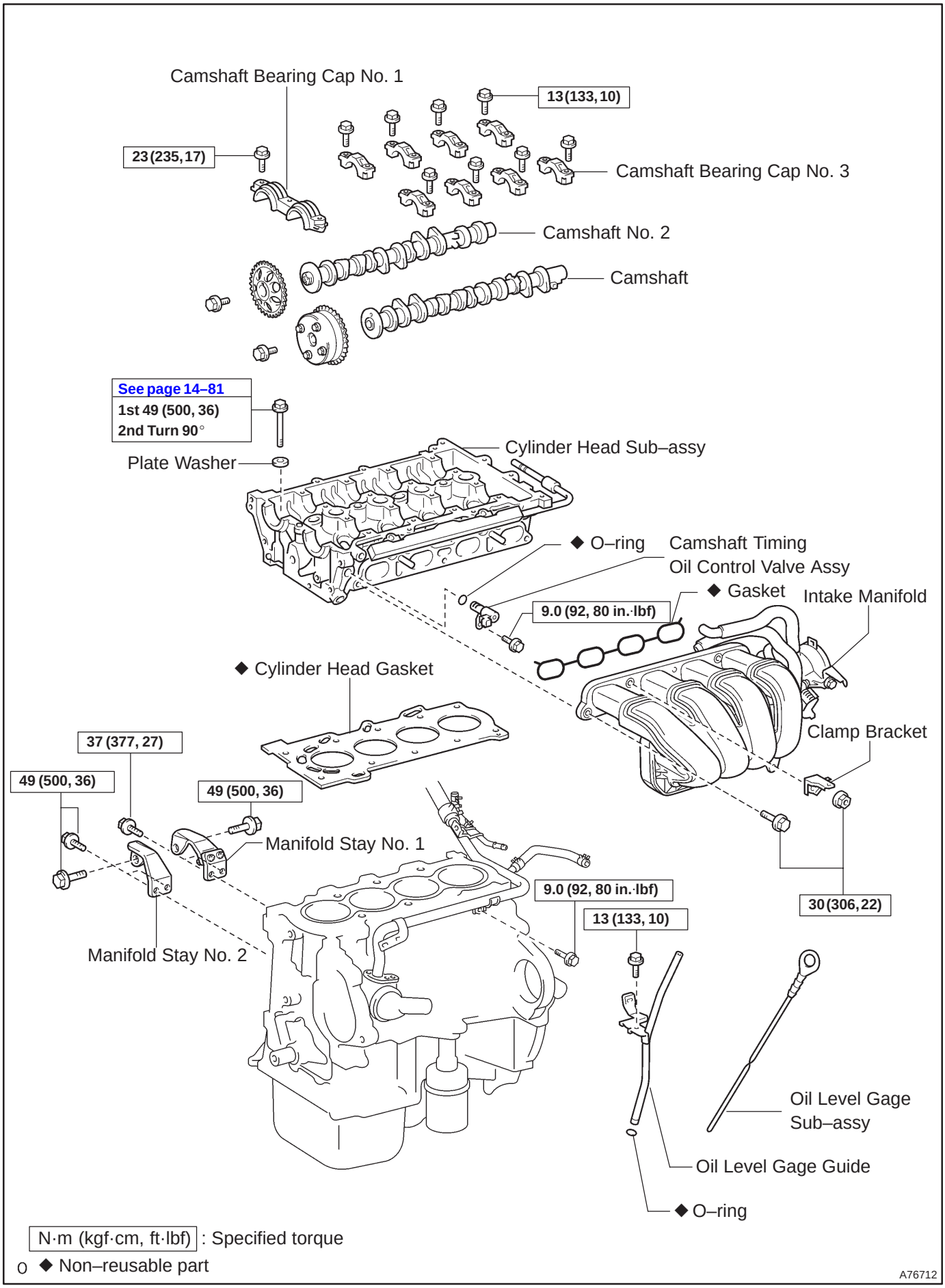
Camshaft Bearing Cap No. 1
13 (133, 10)
23 (235, 17)
Camshaft Bearing Cap No. 3
Camshaft No. 2
Camshaft
See page 14–81
1st 49 (500, 36)
2nd Turn 90°
Plate Washer
Cylinder Head Sub–assy
◆ O–ring
Camshaft Timing Oil Control Valve Assy
◆ Gasket
Intake Manifold
9.0 (92, 80 in.·lbf)
◆ Cylinder Head Gasket
Clamp Bracket
37 (377, 27)
49 (500, 36)
49 (500, 36)
Manifold Stay No. 1
9.0 (92, 80 in.·lbf)
13 (133, 10)
30 (306, 22)
Manifold Stay No. 2
Oil Level Gage Sub–assy
Oil Level Gage Guide
◆ O–ring
N·m (kgf·cm, ft·lbf) : Specified torque
◆ Non–reusable part
A76712

REPLACEMENT

1. **DISCHARGE FUEL SYSTEM PRESSURE (See page 11–1)**
2. **REMOVE RADIATOR SUPPORT OPENING COVER (See page 14–27)**
3. **REMOVE ENGINE ROOM COVER SIDE (See page 14–27)**
4. **REMOVE FRONT WHEEL RH**
5. **REMOVE ENGINE UNDER COVER SUB–ASSY NO.1 (See page 14–27)**
6. **REMOVE ENGINE UNDER COVER RH (See page 14–27)**
7. **DRAIN ENGINE COOLANT (See page 16–7)**

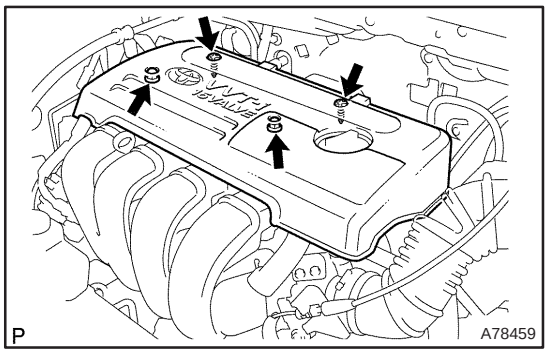

8. **REMOVE CYLINDER HEAD COVER NO.2**

(a) Remove the 2 nuts and 2 clips and detach the cylinder head cover No.2.

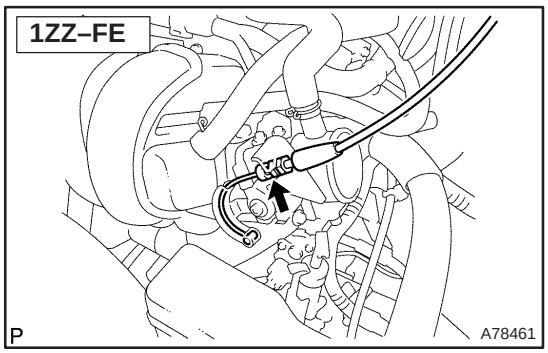

9. **SEPARATE ACCELERATOR CONTROL CABLE ASSY**

(a) Loosen the nut and separate the accelerator control cable.

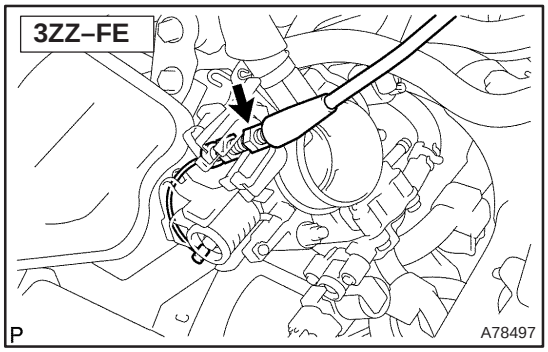

10. **REMOVE AIR CLEANER HOSE NO.1**

(a) Disconnect the VSV connector.
(b) Disconnect the fuel vapor feed No. 1 hose from the VSV.
(c) Disconnect the fuel vapor feed hose from the VSV.
(d) Loosen the 2 air cleaner hose clamp bolts and remove the air cleaner hose.

11. **DISCONNECT WATER BY–PASS HOSE**

(a) Disconnect the water by–pass hose from the throttle body.

12. **DISCONNECT WATER BY–PASS HOSE NO.2**

(a) Disconnect the water by–pass hose from the throttle body.

13. **REMOVE EFI FUEL PIPE CLAMP (See page 11–11)**

14. DISCONNECT FUEL TUBE SUB–ASSY (See page 11–11)
SST 09268–21010

15. DISCONNECT UNION TO CONNECTOR TUBE HOSE

(a) Disconnect the union to connector tube hose from the hose to hose tube.

16. DISCONNECT RADIATOR HOSE INLET

(a) Disconnect radiator hose inlet from the cylinder head.

17. DISCONNECT HEATER INLET WATER HOSE

(a) Disconnect the heater inlet water hose from the cylinder head.

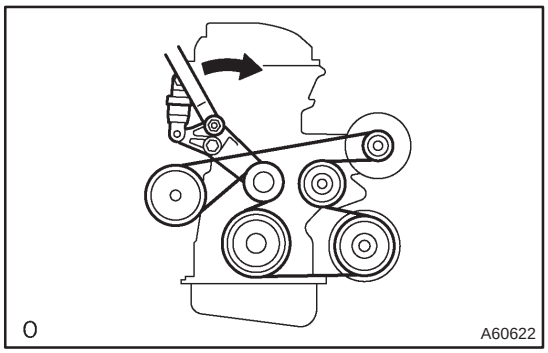

18. REMOVE FAN AND GENERATOR V BELT

(a) Turn the V–ribbed belt tensioner clockwise slowly and loosen it. Remove the fan and generator V belt and put back the V–ribbed belt tensioner carefully.

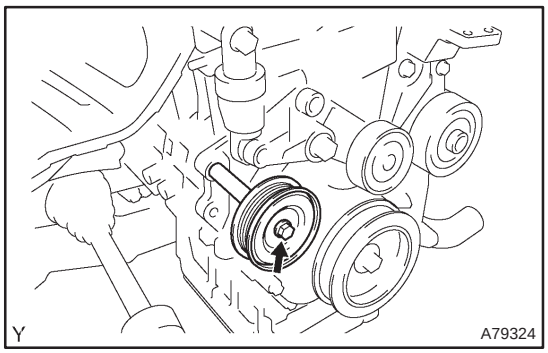

19. REMOVE V–RIBBED IDLER ASSY NO.1

(a) Remove the nut, bolt, tube and idler.

20. REMOVE GENERATOR ASSY (See page 19–7)

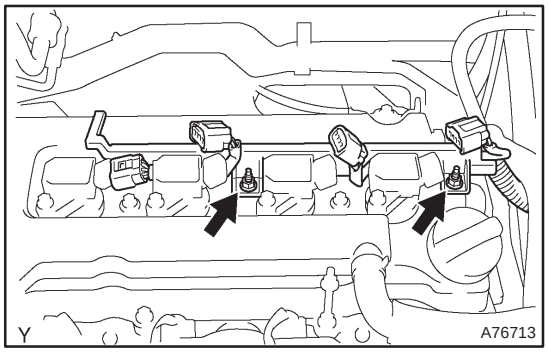

21. DISCONNECT IGNITION COIL ASSY

(a) Remove the 5 clamps from the 5 clamp brackets.

(b) Disconnect the 4 ignition coil connectors.

(c) Remove the 2 nuts which are used to secure the engine wire.

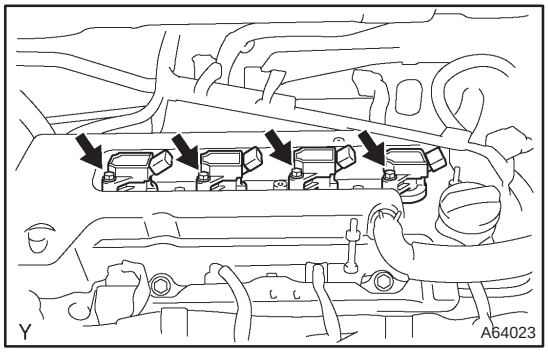

(d) Remove the 4 bolts and the 4 ignition coils.

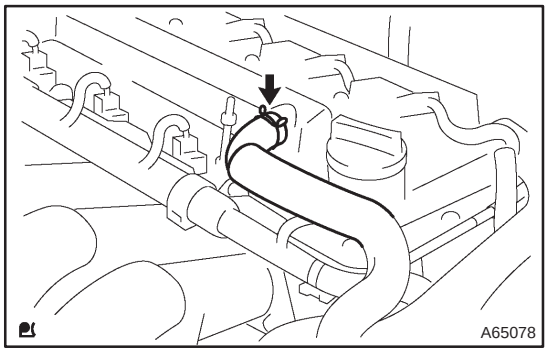

22. DISCONNECT VENTILATION HOSE

(a) Disconnect the ventilation hose from the cylinder head cover.

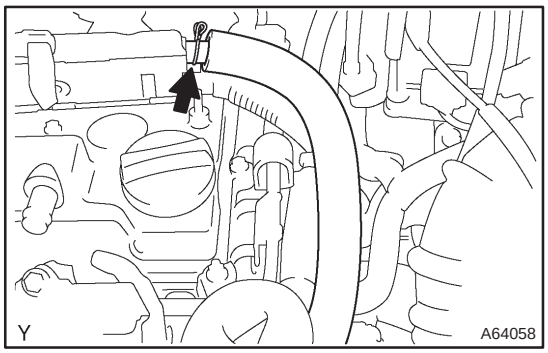

23. DISCONNECT VENTILATION HOSE NO.2

(a) Disconnect the ventilation hose from the cylinder head cover.

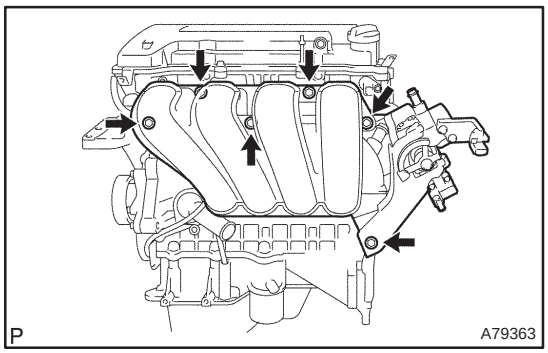

24. REMOVE INTAKE MANIFOLD

(a) Disconnect the 2 water hoses from the throttle body.
(b) Disconnect the ventilation hose and ventilation hose No. 2 from the cylinder head cover.
(c) Disconnect the vacuum hose from the water by–pass pipe No. 1.
(d) Remove the 4 bolts, 2 nuts and 2 wire brackets.
(e) Remove the intake manifold and the throttle body assembly.
(f) Remove the gasket from the intake manifold and the throttle body assembly.

25. REMOVE OIL LEVEL GAGE SUB–ASSY

(a) Remove the oil level gage from the oil level gage guide.

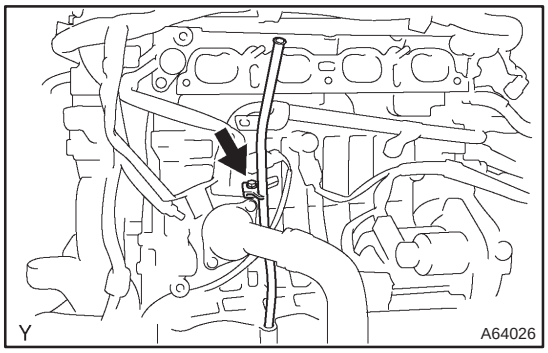

26. REMOVE OIL LEVEL GAGE GUIDE

(a) Disconnect the crankshaft position sensor cramp.
(b) Remove the bolt and the oil level gage guide.

27. SEPARATE WATER BY–PASS PIPE NO.1

(a) Remove the 2 bolts which are used to secure the water by–pass pipe.

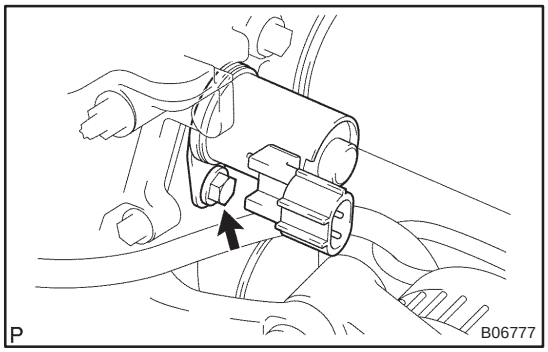

28. REMOVE CAMSHAFT TIMING OIL CONTROL VALVE ASSY

(a) Remove the bolt and the camshaft timing oil control valve.

29. SEPARATE EXHAUST PIPE ASSY FRONT

(a) Remove the 2 bolts and 2 compression springs which are used to secure the front side of exhaust pipe.

(b) Remove the gasket.

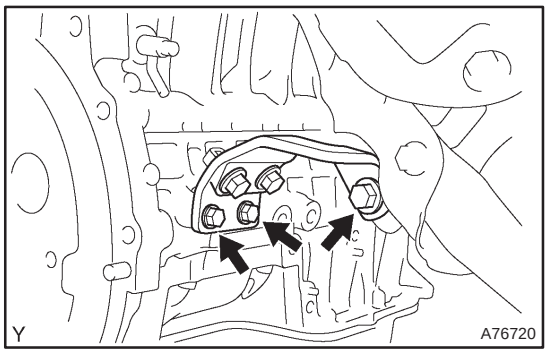

30. REMOVE MANIFOLD STAY

(a) Remove the 3 bolts and the manifold stay.

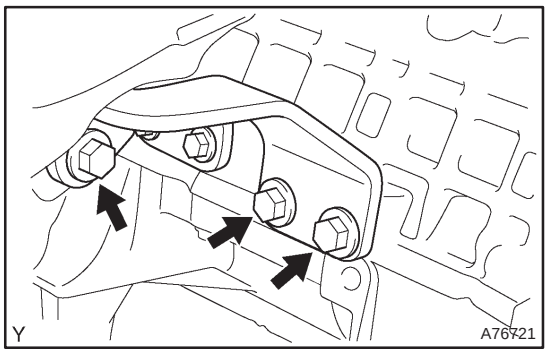

31. REMOVE MANIFOLD STAY NO.2

(a) Remove the 3 bolts and the manifold stay No. 2.

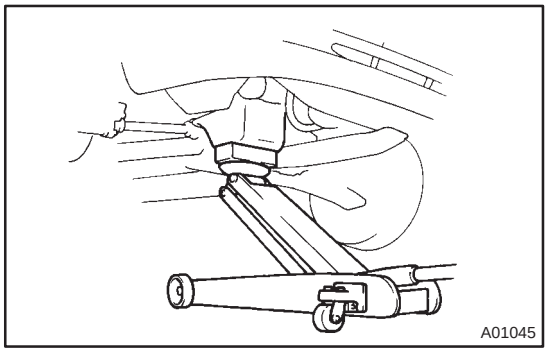

32. REMOVE ENGINE MOUNTING INSULATOR SUB–ASSY RH

(a) Place a wooden block on a jack underneath the engine. Remove the 4 bolts and 2 nuts and detach the engine mounting insulator RH.

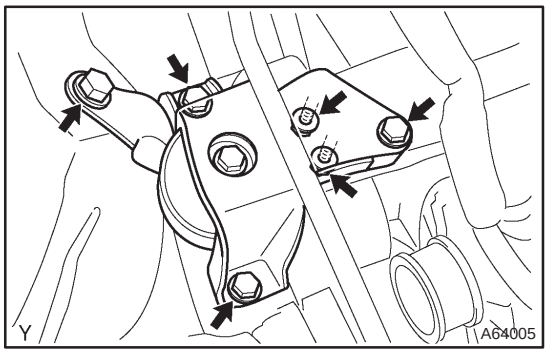

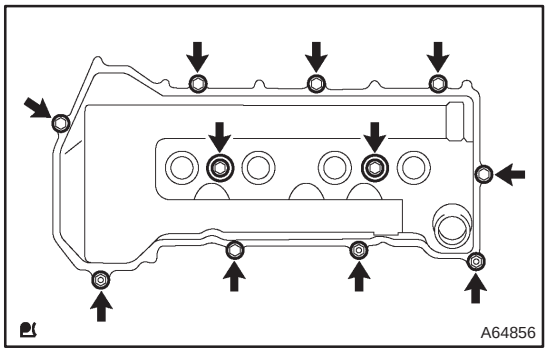

33. REMOVE CYLINDER HEAD COVER SUB–ASSY

(a) Remove the 9 bolts, 2 seal washers, 2 nuts and 3 clamp brackets.

(b) Remove the cylinder head cover.

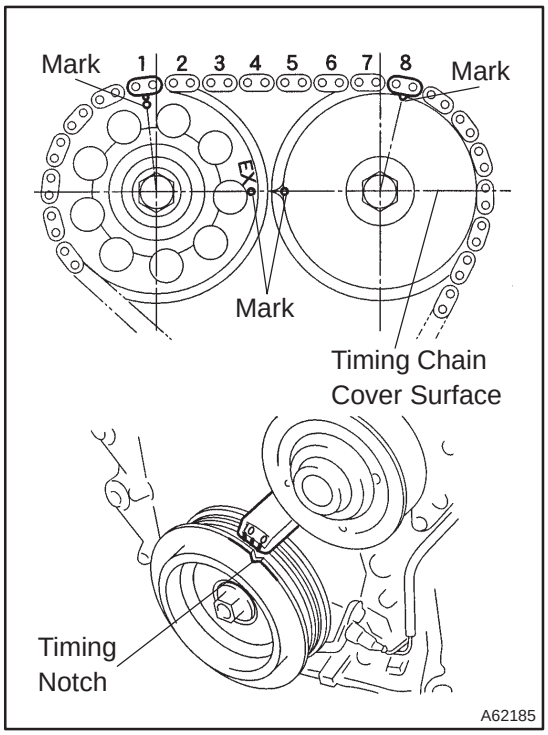

34. SET NO. 1 CYLINDER TO TDC/COMPRESSION

(a) Turn the crankshaft pulley to align the timing notch with the timing mark ”0” of the timing chain cover.

(b) Check that the point marks of the camshaft timing sprocket and VVT timing sprocket are in straight line on the timing chain cover surface as shown in the illustration.

HINT:

If not, turn the crankshaft 1 revolution (360°) and align the marks as above.

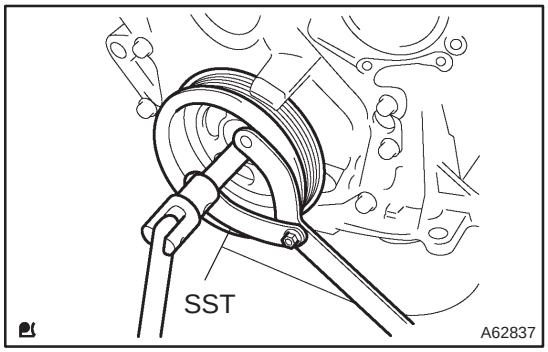

35. REMOVE CRANKSHAFT PULLEY

(a) Using SST, remove the pulley bolt.

SST 09960–10010 (09962–01000, 09963–01000)

(b) Remove the crankshaft pulley from the crankshaft.

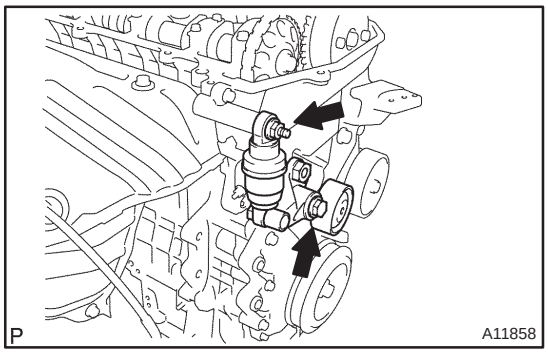

36. REMOVE V–RIBBED BELT TENSIONER ASSY

(a) Remove the bolt and nut and detach the V–ribbed belt tensioner.

HINT:

Jack up and down to remove the bolt.

37. REMOVE WATER PUMP ASSY (See page 16–9)

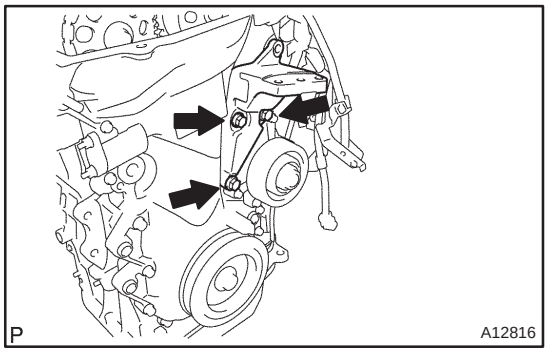

38. REMOVE TRANSVERSE ENGINE ENGINE MOUNTING BRACKET

(a) Remove the 3 bolts and the transverse engine engine mounting bracket.

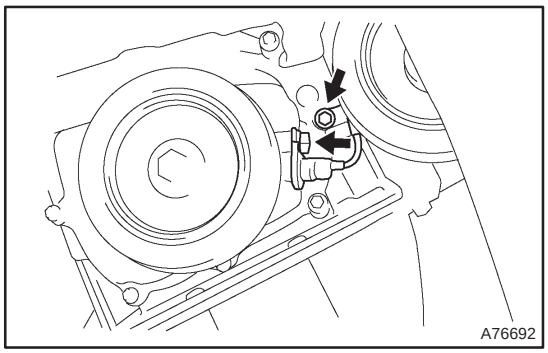

39. REMOVE CRANKSHAFT POSITION SENSOR

(a) Remove the 2 bolts which are used to secure the crankshaft position sensor.

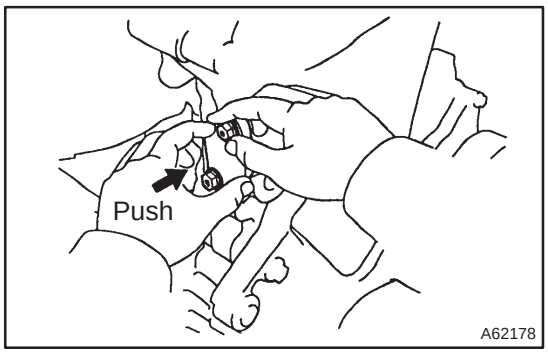

40. REMOVE CHAIN TENSIONER ASSY NO.1

(a) Remove the 2 nuts and the chain tensioner.

NOTICE:

Do not revolve the crankshaft without the chain tensioner.

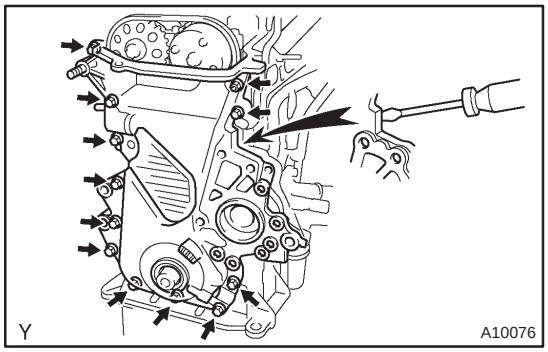

41. REMOVE TIMING CHAIN OR BELT COVER SUB–ASSY

(a) Remove the 11 bolts and nuts.

(b) Using a torx wrench socket (E8), remove the stud bolt.

(c) Remove the timing chain cover by prying between the cylinder head and the cylinder block with a screwdriver.

NOTICE:

Be careful not to damage the timing chain cover, the cylinder head and the cylinder block.

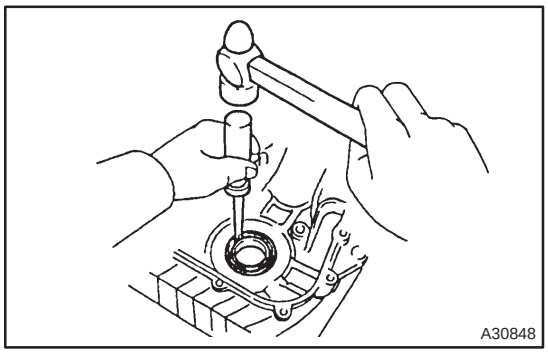

42. REMOVE TIMING GEAR COVER OIL SEAL

(a) Using a screwdriver, remove the oil seal.

43. REMOVE CRANKSHAFT POSITION SENSOR PLATE NO.1

44. REMOVE CHAIN TENSIONER SLIPPER

(a) Remove the bolt and the chain tensioner slipper.

45. REMOVE CHAIN VIBRATION DAMPER NO.1

(a) Remove the 2 bolt and the chain vibration damper.

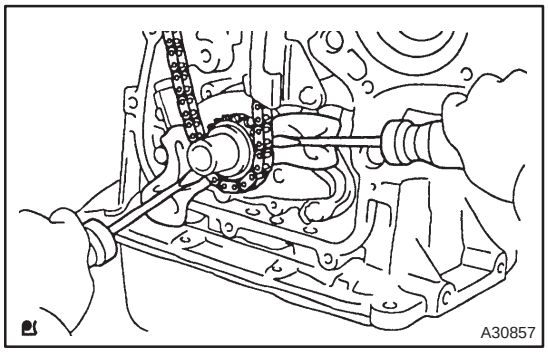

46. REMOVE CHAIN SUB–ASSY

(a) Remove the timing chain by prying the crankshaft timing gear using screwdrivers as shown in the illustration.

NOTICE:

- **Put shop rag to protect the engine.**
- **In case of revolving the camshafts with the chain off the sprockets, turn the crankshaft 1/4 revolution counterclockwise to prevent the valves from touching the pistons.**

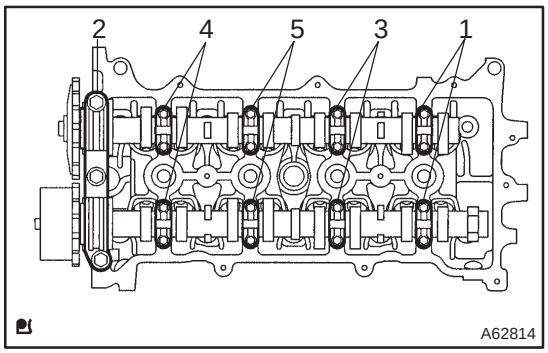

47. REMOVE CAMSHAFT

(a) Using several steps, loosen and remove the 19 bearing cap bolts uniformly in the sequence shown in the illustration. Remove the 9 bearing caps, and both the intake and exhaust camshafts.

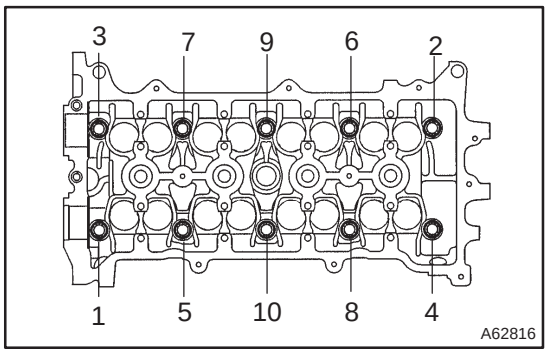

48. REMOVE CYLINDER HEAD SUB–ASSY

(a) Using several steps, loosen and remove the 10 cylinder head bolts with a 10 mm hexagon wrench uniformly in the sequence shown in the illustration. Remove the 10 cylinder head bolts and 10 plate washers.

(b) Remove the cylinder head.

49. REMOVE CYLINDER HEAD GASKET

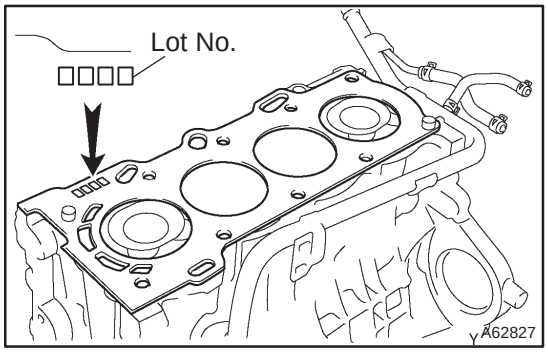

50. INSTALL CYLINDER HEAD GASKET

(a) Place a new cylinder head gasket on the cylinder block with the Lot No. stamp facing upward.

NOTICE:

- **Pay attention to the mounting orientation.**
- **Place the cylinder head on the gasket gently in order not to damage the gasket with the bottom part of the head.**

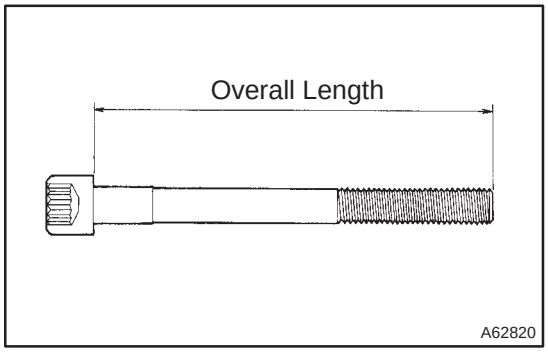

51. INSPECT CYLINDER HEAD SET BOLT

(a) Using a vernier calipers, measure the length of cylinder head bolt from the seat to the end.

Standard length: 146.8 to 148.2 mm (5.780 to 5.835 in.)
Maximum length: 148.5 mm (5.846 in.)

If the length exceeds the maximum, replace the bolt.

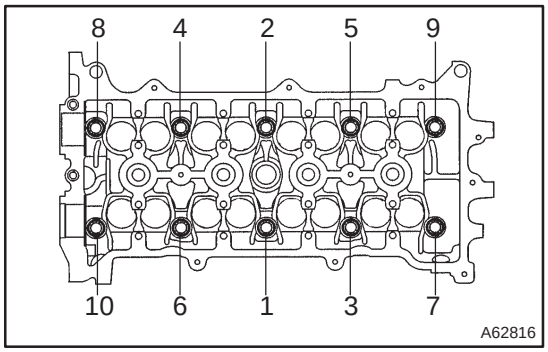

52. INSTALL CYLINDER HEAD SUB–ASSY

HINT:

The cylinder head bolts are tightened in 2 successive steps.

(a) Apply a light coat of engine oil on the threads of the cylinder head bolts.

(b) Using several steps, install and tighten the 10 cylinder head bolts and plate washers with a 10 mm hexagon wrench uniformly in the sequence shown in the illustration.

Torque: 49 N·m (500 kgf·cm, 36 ft·lbf)

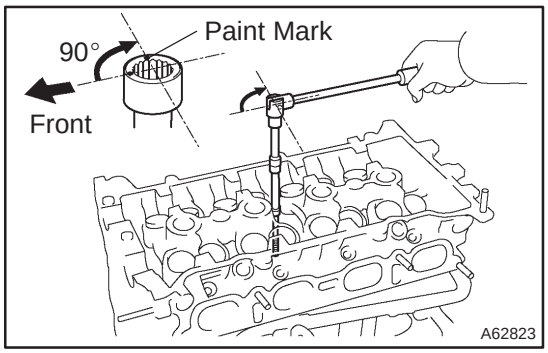

(c) Mark the front of the cylinder head bolt with paint.

(d) Retighten the cylinder head bolts 90° in the same sequence as step (b).

(e) Check that the paint mark of each bolt is at 90° angle to the front.

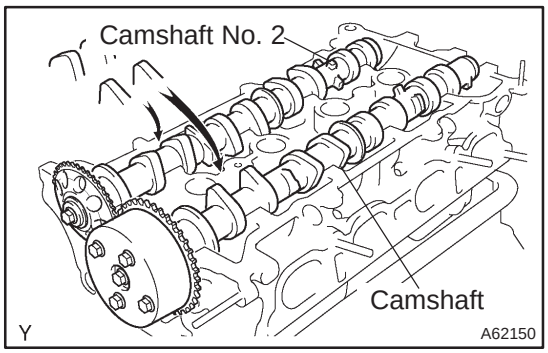

53. INSTALL CAMSHAFT

(a) Apply a light coat of engine oil on the camshaft journals.

(b) Place the 2 camshafts on the cylinder head as shown in the illustration.

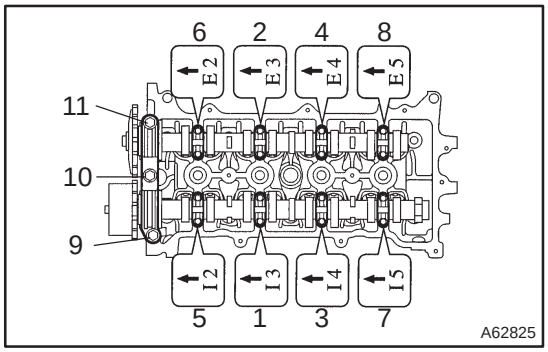

(c) Examine the front marks and numbers and tighten the bolts in the sequence shown in the illustration.

Torque:

23 N·m (235 kgf·cm, 17 ft·lbf) for Bearing cap No. 1

13 N·m (133 kgf·cm, 10 ft·lbf) for Bearing cap No. 3

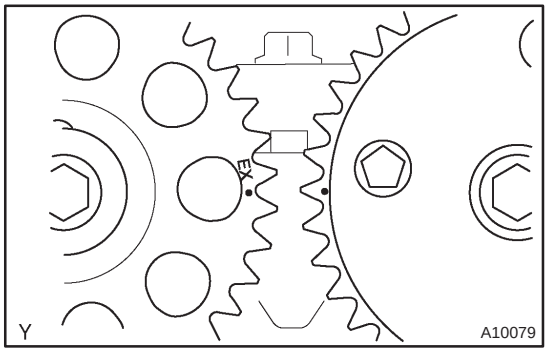

54. INSTALL CHAIN SUB–ASSY

(a) Set No. 1 cylinder to TDC/compression.

(1) Turn the camshafts using a wrench to align the timing marks of the 2 camshaft timing sprockets.

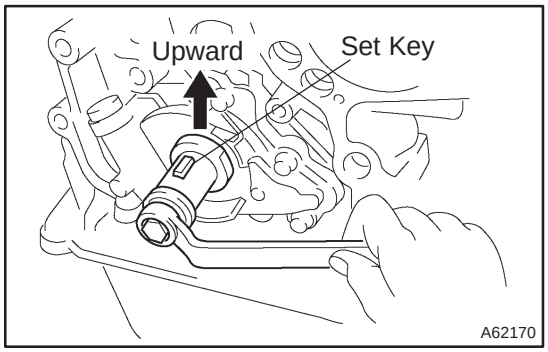

(2) Using a crankshaft pulley bolt, turn the crankshaft and set the set key on the crankshaft upward.

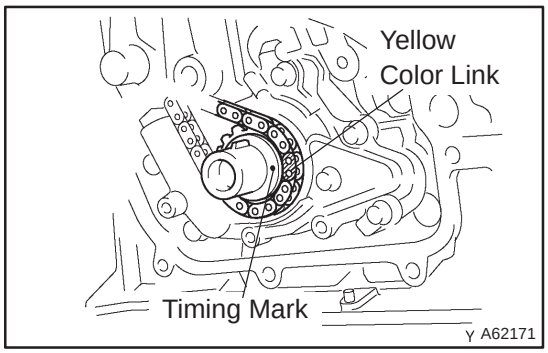

(b) Install the timing chain on the crankshaft timing sprocket with the yellow color link and the timing mark on the crankshaft timing sprocket aligned.

HINT:
Three yellow color links are on the chain.

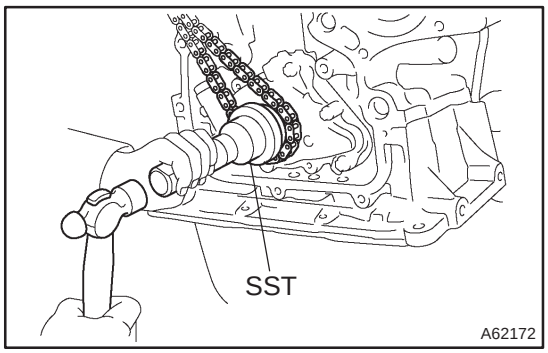

(c) Using SST, install the crankshaft timing sprocket.
SST 09223–22010

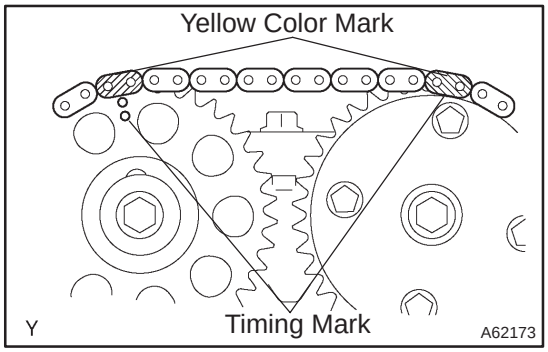

(d) Install the timing chain to the camshaft timing sprockets with the yellow color links and the timing marks on the camshaft timing sprockets aligned.

55. INSTALL CHAIN VIBRATION DAMPER NO.1

(a) Install chain vibration damper with the 2 bolts.
Torque: 9.0 N·m (92 kgf·cm, 80 in.·lbf)

56. INSTALL CHAIN TENSIONER SLIPPER

(a) Install the chain tensioner slipper with the bolt.
Torque: 19 N·m (194 kgf·cm, 14 ft·lbf)

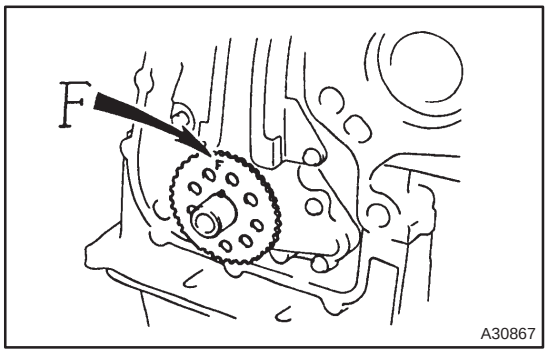

57. INSTALL CRANKSHAFT POSITION SENSOR PLATE NO.1

(a) Install the plate with the ”F” mark facing forward.

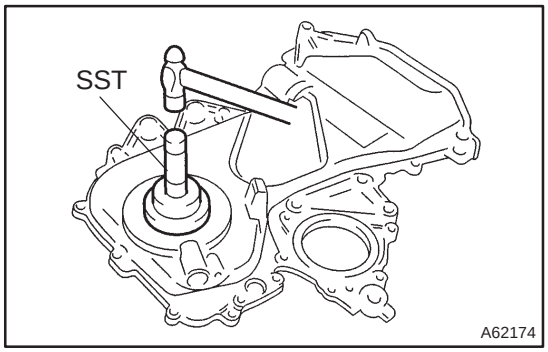

58. INSTALL TIMING GEAR COVER OIL SEAL

(a) Apply MP grease to a new oil seal lip.

(b) Using SST, tap in the oil seal until its surface is flush with the timing chain cover edge.

SST 09223–22010

NOTICE:

Keep the lip free of foreign objects.

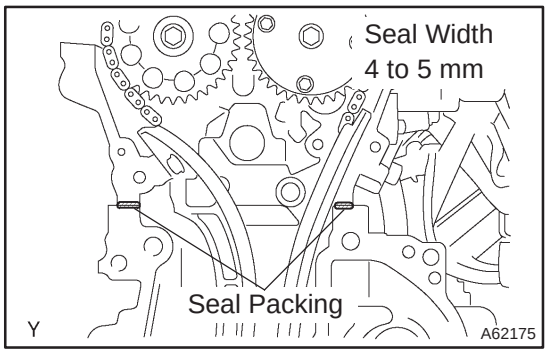

59. INSTALL TIMING CHAIN OR BELT COVER SUB–ASSY

(a) Remove any old packing material (FIPG) from the contact surface.

(b) Apply a continuous bead of seal packing (Diameter 3.5 mm to 4.5 mm (0.1379 to 0.177 in.)) as shown in the illustration.

Seal packing:

Water pump part part No. 08826–00100 or equivalent

Other part part No. 08826–00080 or equivalent.

NOTICE:

- **Remove any oil from the contact surface.**
- **Install the oil pan within 3 minutes after applying seal packing.**
- **Do not expose the seal to engine oil within 2 hours after installing.**

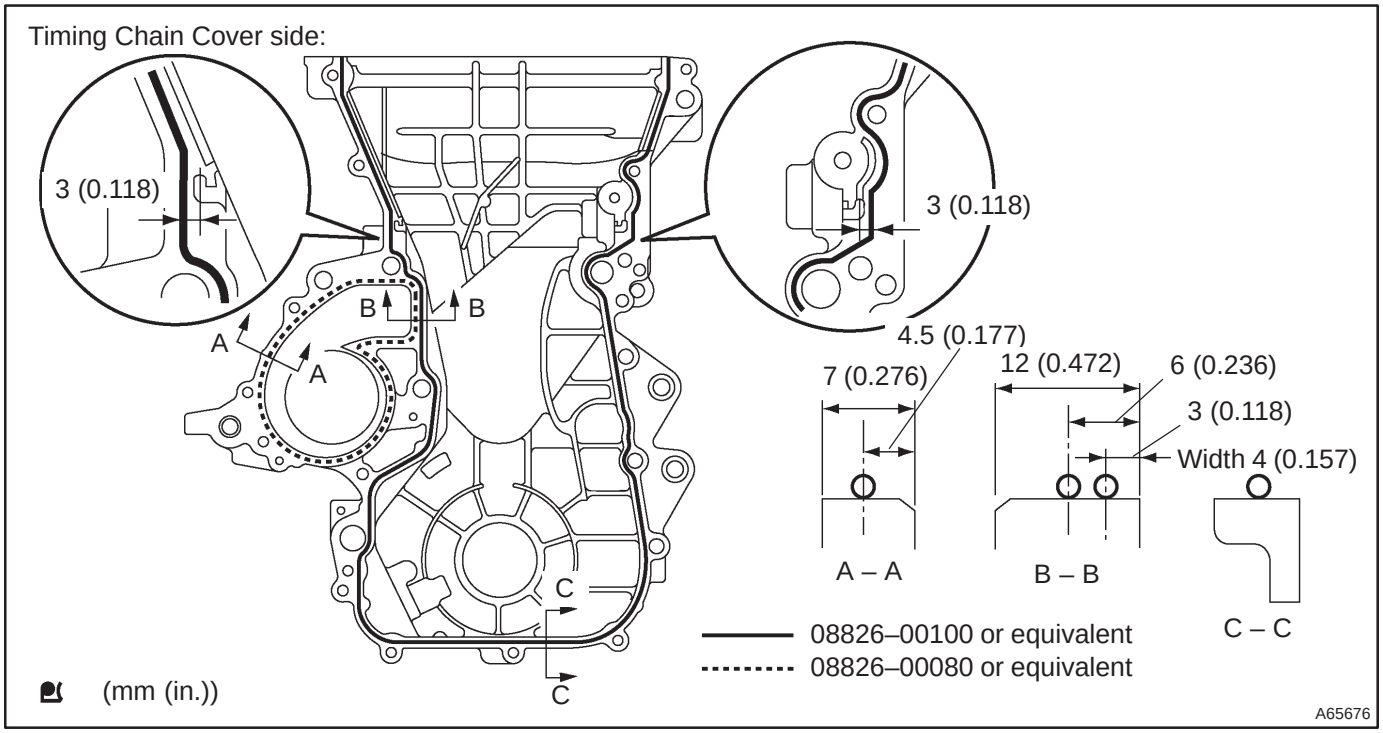

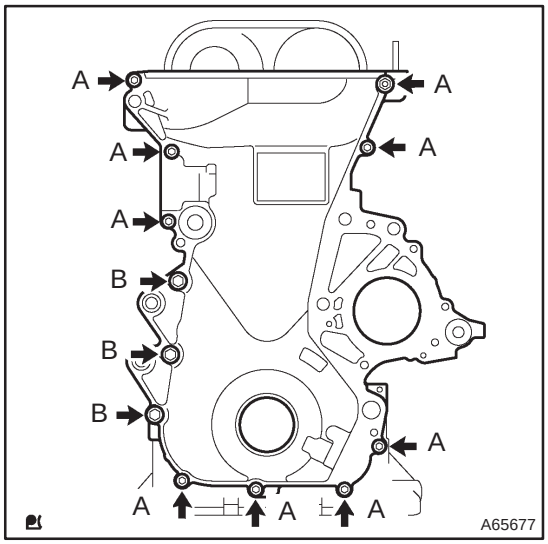

(c) Install the timing chain cover with the 11 bolts and nut.
Torque:
13 N·m (133 kgf·cm, 10 ft·lbf) for A
19 N·m (194 kgf·cm, 14 ft·lbf) for B

(d) Using a torx wrench socket (E8), install the stud bolt.
Torque: 9.5 N·m (97 kgf·cm, 84 in.·lbf)

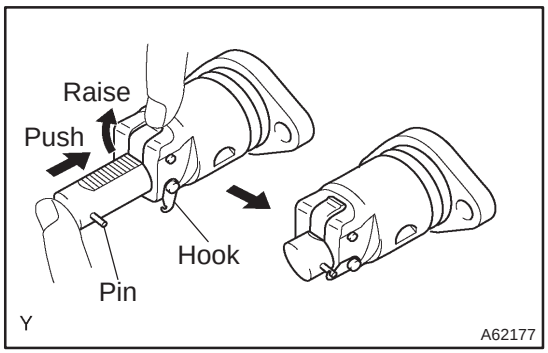

60. INSTALL CHAIN TENSIONER ASSY NO.1

(a) Check that the O–ring is clean, and set the hook as shown in the illustration.

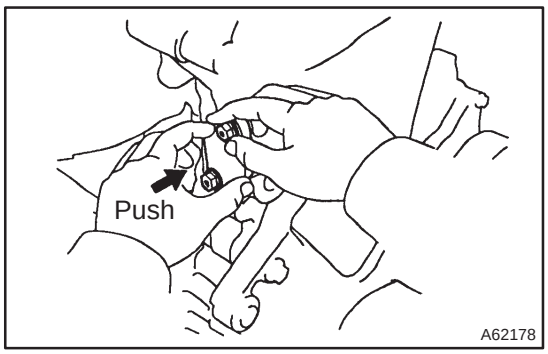

(b) Apply engine oil to the chain tensioner and install it with the 2 nuts.
Torque: 9.0 N·m (92 kgf·cm, 80 in.·lbf)

NOTICE:
If the hook released the plunger during installation, re–hook the plunger by the hook to fix it.

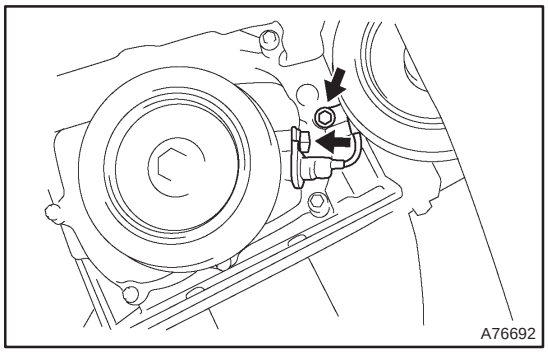

61. INSTALL CRANKSHAFT POSITION SENSOR

(a) Apply a light coat of the engine oil to the O–ring on the crankshaft position sensor.

(b) Install the crankshaft position sensor with the 2 bolts.
Torque: 9.0 N·m (92 kgf·cm, 80 in.·lbf)

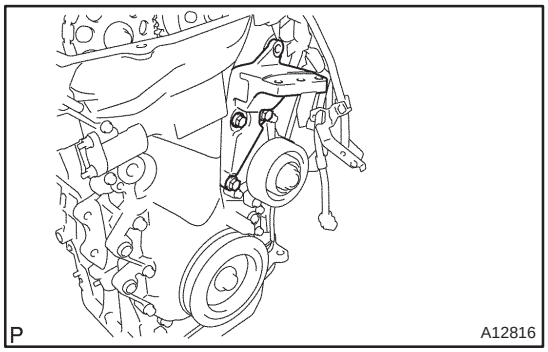

62. INSTALL TRANSVERSE ENGINE ENGINE MOUNTING BRACKET

(a) Install the transverse engine engine mounting bracket with the 3 bolts.

Torque: 47 N·m (479 kgf·cm, 35 ft·lbf)

63. INSTALL WATER PUMP ASSY (See page 16–9)

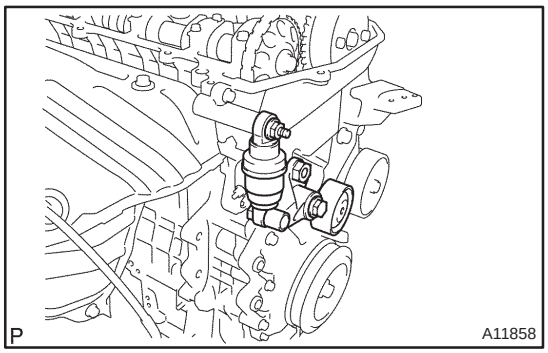

64. INSTALL V–RIBBED BELT TENSIONER ASSY

(a) Install the V–ribbed belt tensioner with the nut and bolt.

Torque:
29 N·m (296 kgf·cm, 21 ft·lbf) for Nut
69 N·m (704 kgf·cm, 51 ft·lbf) for Bolt

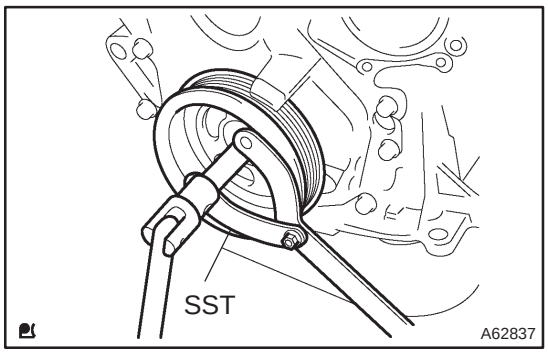

65. INSTALL CRANKSHAFT PULLEY

(a) Align the keyway of the pulley with the key located on the crankshaft and slide the pulley into place.

(b) Using SST, install the crankshaft pulley bolt.

SST 09960–10010 (09962–01000, 09963–01000)

Torque: 138 N·m (1,407 kgf·cm, 102 ft·lbf)

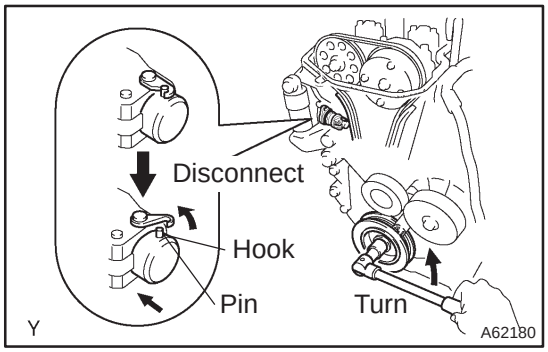

(c) Turn the crankshaft counterclockwise and take the hook off the knock pin to release the plunger.

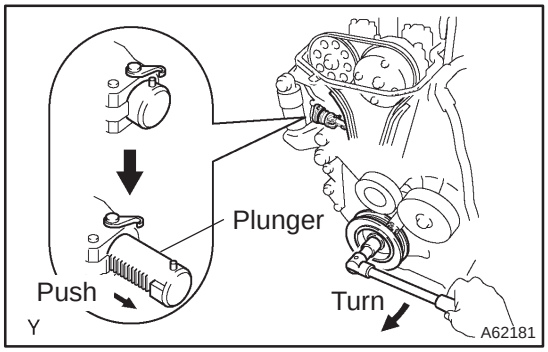

(d) Turn the crankshaft clockwise, and check that the plunger is extended.

HINT:

If the plunger does not be extended, press the slipper into the chain tensioner using a screwdriver so that the hook is took off from the knock pin and let the plunger can be extended.

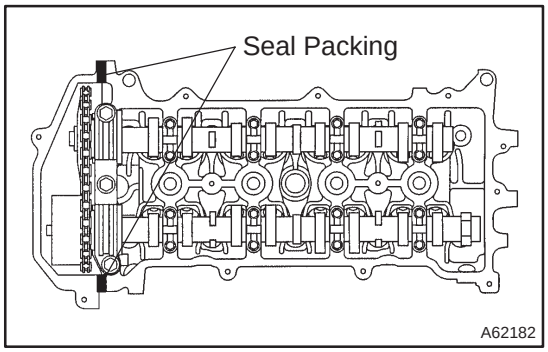

66. INSTALL CYLINDER HEAD COVER SUB–ASSY

(a) Remove any old packing (FIPG) material.

(b) Apply seal packing to the 2 locations as shown in the illustration.

Seal packing: Part No. 08826–00080 or equivalent

NOTICE:

- **Remove any oil from the contact surface.**
- **Install the cylinder head cover within 3 minutes after applying seal packing.**
- **Do not expose the seal to engine oil 2 hours after installing.**

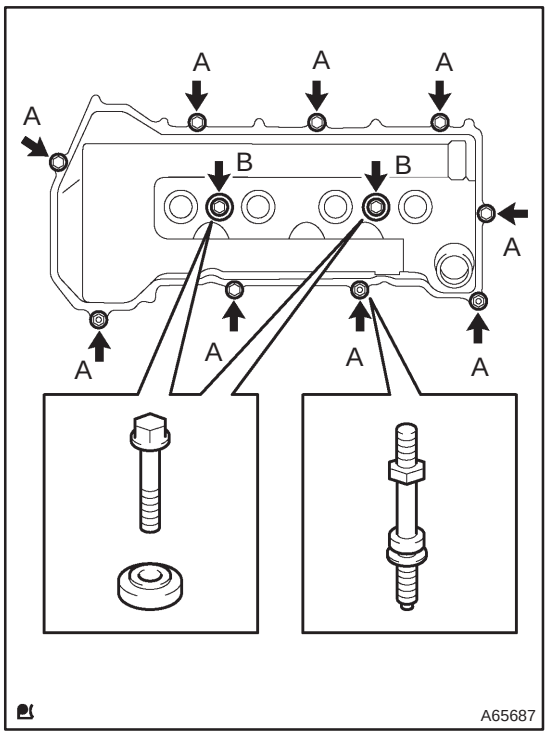

(c) Install the cylinder head cover and 3 cable brackets with the 9 bolts, 2 seal washers and 2 nuts. Tighten the bolts and nuts uniformly in the several steps.

Torque:
11 N·m (112 kgf·cm, 8 ft·lbf) for A
9.0 N·m (92 kgf·cm, 80 in.·lbf) for B

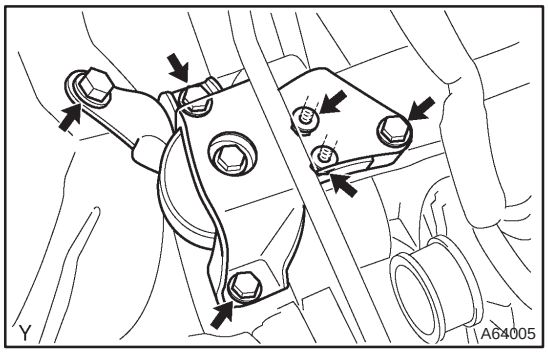

67. INSTALL ENGINE MOUNTING INSULATOR SUB–ASSY RH

(a) Install the engine mounting insulator with the 4 bolts and 2 nuts.

Torque: 52 N·m (530 kgf·cm, 38 ft·lbf)

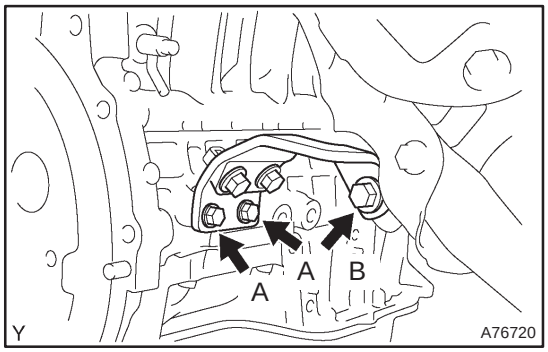

68. INSTALL MANIFOLD STAY

(a) Install the manifold stay with the 3 bolts.
Torque:
37 N·m (377 kgf·cm, 27 ft·lbf) for Bolt A
49 N·m (500 kgf·cm, 36 ft·lbf) for Bolt B

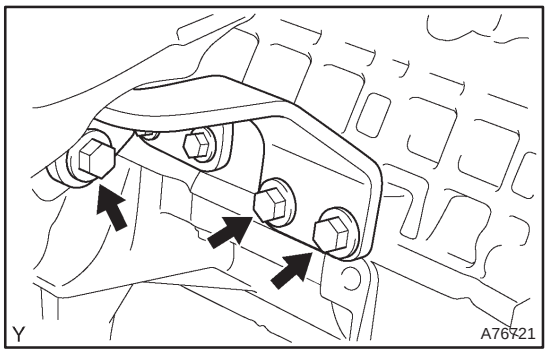

69. INSTALL MANIFOLD STAY NO.2

(a) Install the manifold stay with the 3 bolts.
Torque: 49 N·m (500 kgf·cm, 36 ft·lbf)

70. INSTALL EXHAUST PIPE ASSY FRONT
(See page 15–2)

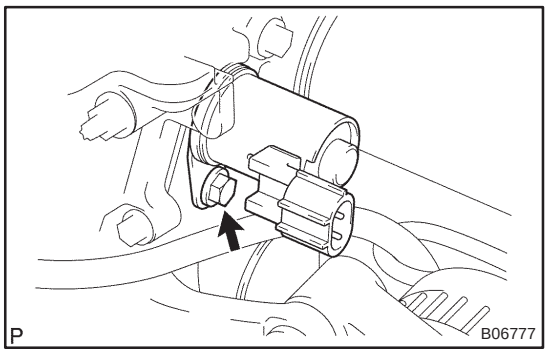

71. INSTALL CAMSHAFT TIMING OIL CONTROL VALVE ASSY

(a) Apply a light coat of engine oil on a new O–ring, and install it to the camshaft timing oil control valve.
(b) Install the camshaft timing oil control valve with the bolt.
Torque: 9.0 N·m (92 kgf·cm, 80 in.·lbf)

72. INSTALL WATER BY–PASS PIPE NO.1

(a) Install a new gasket and water by–pass pipe with the 2 nuts and 2 bolts.
Torque: 9.0 N·m (92 kgf·cm, 80 in.·lbf)

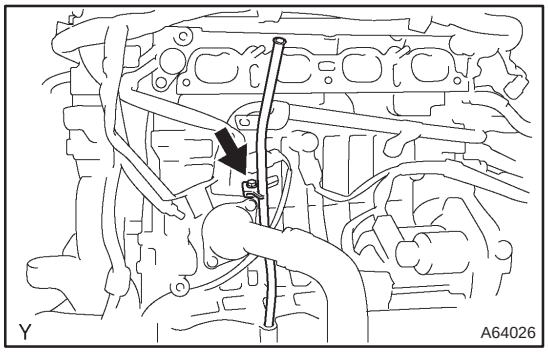

73. INSTALL OIL LEVEL GAGE GUIDE

(a) Apply a light coat of engine oil on a new O–ring, and install it to the oil level gage guide.
(b) Install the oil level gage guide with the bolt.
Torque: 13 N·m (133 kgf·cm, 10 ft·lbf)

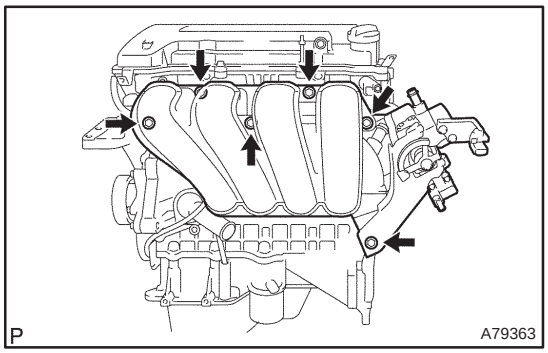

74. INSTALL INTAKE MANIFOLD

(a) Install a new gasket to the intake manifold.
(b) Install the intake manifold and the throttle body assembly with the 2 brackets, 4 bolts and 2 nuts.
Torque: 30 N·m (306 kgf·cm, 22 ft·lbf)
(c) Connect the 2 vacuum hoses to the intake manifold.
(d) Connect the 2 water hoses to the throttle body.

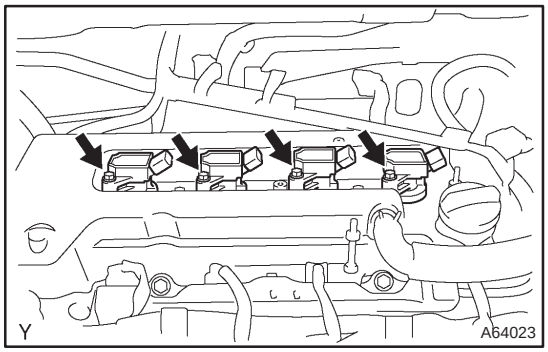

75. INSTALL IGNITION COIL ASSY

(a) Install the 4 ignition coils with the 4 bolts.
Torque: 9.0 N·m (92 kgf·cm, 80 in.·lbf)

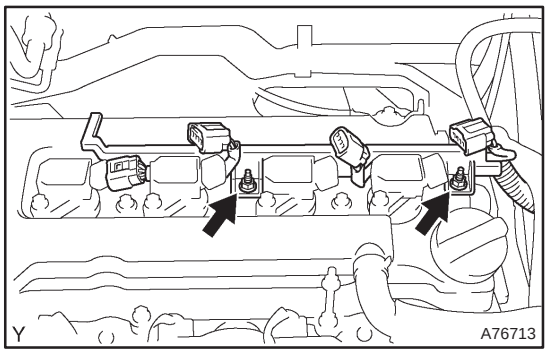

(b) Install the engine wire with the 2 nuts.
Torque: 9.0 N·m (92 kgf·cm, 80 in.·lbf)

76. INSTALL GENERATOR ASSY (See page 19–7)

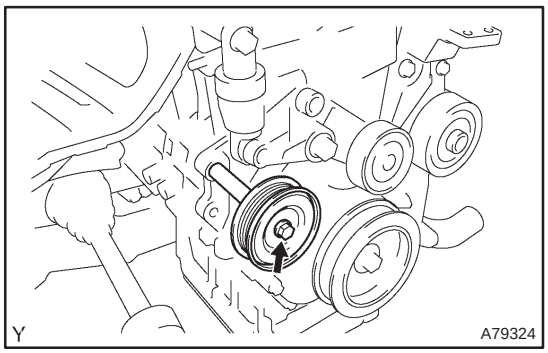

77. INSTALL V–RIBBED IDLER ASSY NO.1

(a) Install the tube and idler with the nut and bolt.
Torque: 39.2 N·m (400 kgf·cm, 29 ft·lbf)

78. INSTALL ACCELERATOR CONTROL CABLE ASSY (1ZZ–FE ENGINE TYPE) (See page 10–9)

79. INSTALL ACCELERATOR CONTROL CABLE ASSY (3ZZ–FE ENGINE TYPE) (See page 10–15)

80. INSTALL AIR CLEANER HOSE NO.1
Torque: 1.5 N·m (15 kgf·cm, 13 in.·lbf)

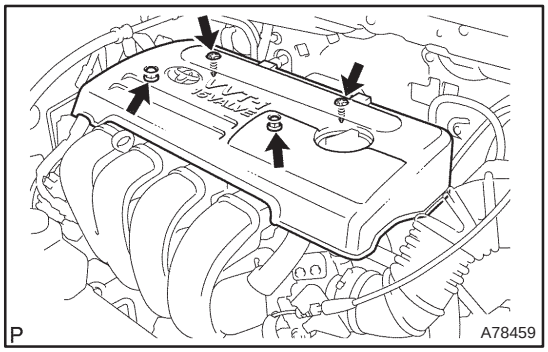

81. INSTALL CYLINDER HEAD COVER NO.2

(a) Install the cylinder head cover with the 2 nuts and 2 clips.
Torque: 7.0 N·m (71 kgf·cm, 62 in.·lbf)

82. INSTALL FRONT WHEEL RH
Torque: 103 N·m (1,050 kgf·cm, 76 ft·lbf)

83. ADD ENGINE COOLANT (See page 16–7)

84. INSPECT COMPRESSION (See page 14–1)
SST 09992–00500

85. INSPECT CO/HC (See page 14–1)

86. INSPECT IGNITION TIMING (See page 14–1)
SST 09843–18040

87. CHECK FOR ENGINE COOLANT LEAKS (See page 16–7)

88. CHECK FOR ENGINE OIL LEAKS

TIMING GEAR COVER OIL SEAL (1ZZ–FE/3ZZ–FE)

141CN–01

REPLACEMENT

1. REMOVE FRONT WHEEL RH (See page 14–27)
2. REMOVE ENGINE UNDER COVER SUB–ASSY NO.1 (See page 14–27)
3. REMOVE ENGINE UNDER COVER RH (See page 14–27)
4. REMOVE RADIATOR SUPPORT OPENING COVER (See page 14–27)
5. REMOVE ENGINE ROOM COVER SIDE (See page 14–27)

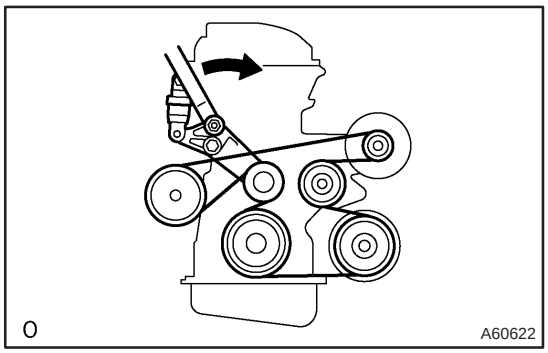

6. REMOVE FAN AND GENERATOR V BELT

(a) Turn the V–ribbed belt tensioner clockwise slowly and loosen it. Then, remove the fan and generator V belt and put back the V–ribbed belt tensioner carefully.

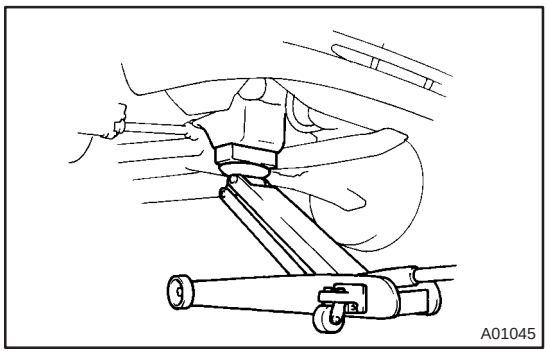

7. REMOVE ENGINE MOUNTING INSULATOR SUB–ASSY RH

(a) Place a wooden block on a jack underneath the engine. Remove the 4 bolts and 2 nuts and detach the engine mounting insulator RH.

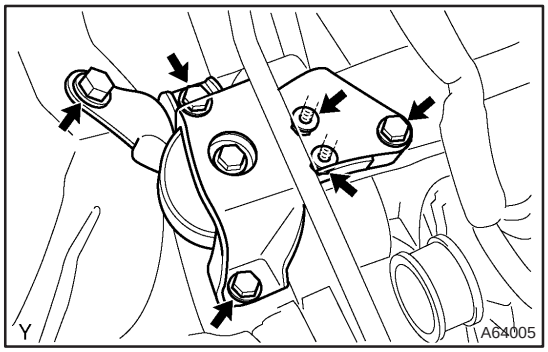

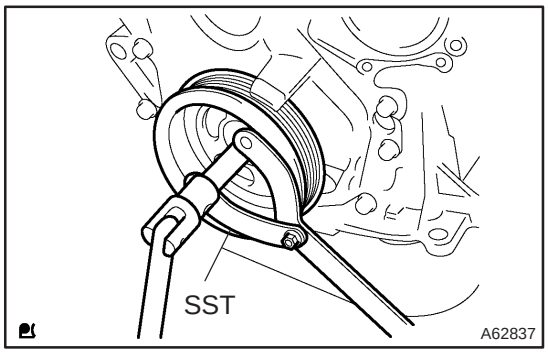

8. REMOVE CRANKSHAFT PULLEY

(a) Using SST, remove the crankshaft pulley bolt.
SST 09960–10010 (09962–01000, 09963–01000)

(b) Remove the crankshaft pulley from the crankshaft.

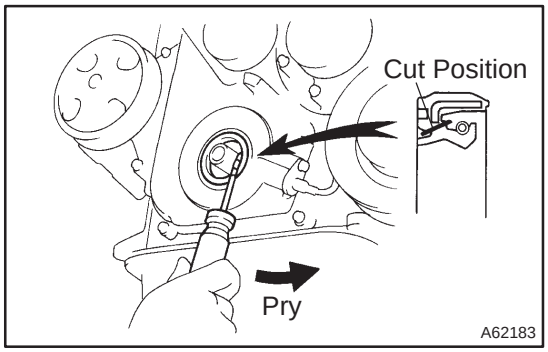

9. REMOVE TIMING GEAR COVER OIL SEAL

(a) Using a knife, cut off the oil seal lip.

(b) Using a screwdriver with the tip wrapped in tape, pry out the oil seal.

NOTICE:

After the removal, check if the crankshaft is not damaged. If it is damaged, smooth the surface with 400–grit sandpaper.

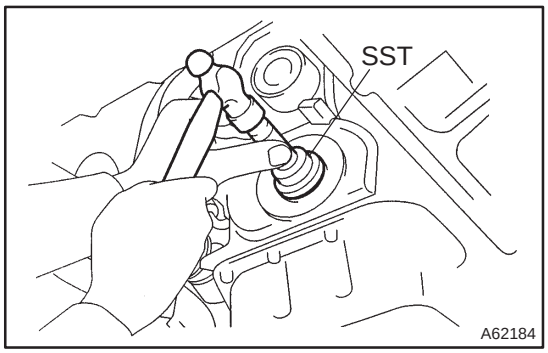

10. INSTALL TIMING GEAR COVER OIL SEAL

(a) Apply MP grease to a new oil seal lip.

NOTICE:

Keep the lip free of foreign objects.

(b) Using SST, tap in the oil seal until its surface is flush with the timing chain cover edge.

SST 09223–22010

NOTICE:

Wipe off extra grease on the crankshaft.

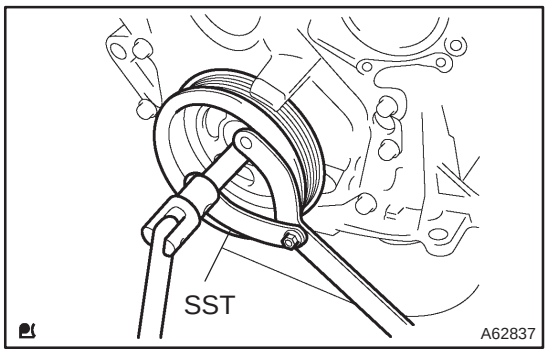

11. INSTALL CRANKSHAFT PULLEY

(a) Align the keyway of the pulley with the key located on the crankshaft and slide the pulley into place.

(b) Using SST, install the crankshaft pulley bolt.

SST 09960–10010 (09962–01000, 09963–01000)

Torque: 138 N·m (1,407 kgf·cm, 102 ft·lbf)

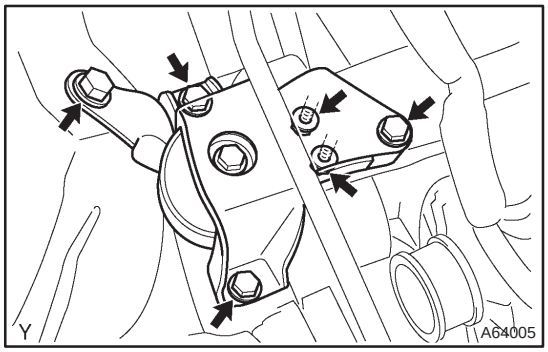

12. INSTALL ENGINE MOUNTING INSULATOR SUB–ASSY RH

(a) Install the engine mounting insulator with the 4 bolts and 2 nuts.

Torque: 52 N·m (530 kgf·cm, 38 ft·lbf)

13. INSTALL FRONT WHEEL RH

Torque: 103 N·m (1,050 kgf·cm, 76 ft·lbf)

14. CHECK FOR ENGINE OIL LEAKS

ENGINE REAR OIL SEAL (1ZZ–FE/3ZZ–FE)

141CO–01

REPLACEMENT

1. REMOVE MANUAL TRANSAXLE ASSY (M/T TRANSAXLE) (See page 41–15)
2. REMOVE AUTOMATIC TRANSAXLE ASSY (A/T TRANSAXLE) (See page 40–11)
3. REMOVE CLUTCH COVER ASSY (M/T TRANSAXLE) (See page 42–26)
4. REMOVE CLUTCH DISC ASSY (M/T TRANSAXLE) (See page 42–26)

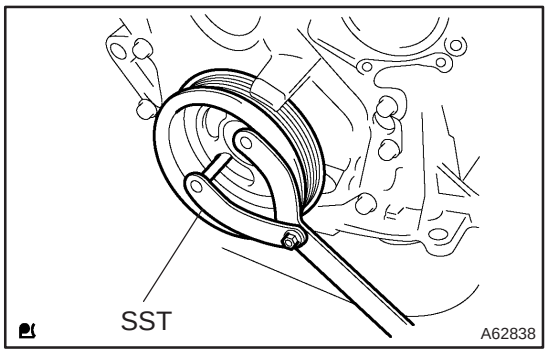

5. REMOVE FLYWHEEL SUB–ASSY (M/T TRANSAXLE)

(a) Hold the crankshaft with SST, remove the 8 bolts and the flywheel.

SST 09960–10010 (09962–01000, 09963–01000)

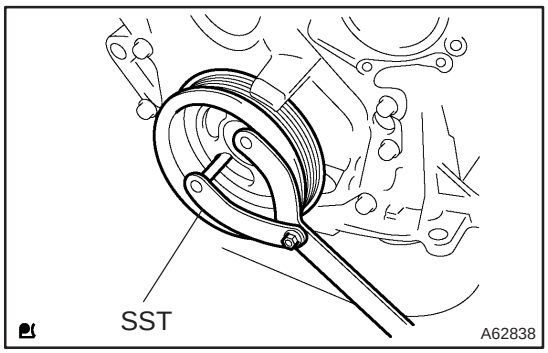

6. REMOVE DRIVE PLATE & RING GEAR SUB–ASSY (A/T TRANSAXLE)

(a) Hold the crankshaft with SST, remove the 8 bolts and the drive plate & ring gear.

SST 09960–10010 (09962–01000, 09963–01000)

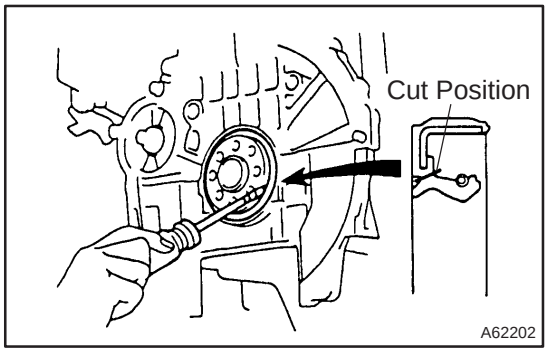

7. REMOVE ENGINE REAR OIL SEAL

(a) Using a knife, cut off the oil seal lip.

(b) Using a screwdriver with the tip wrapped in tape, pry out the oil seal.

NOTICE:

After the removal, check if the crankshaft is not damaged. If it is damaged, smooth the surface with 400–grid sandpaper.

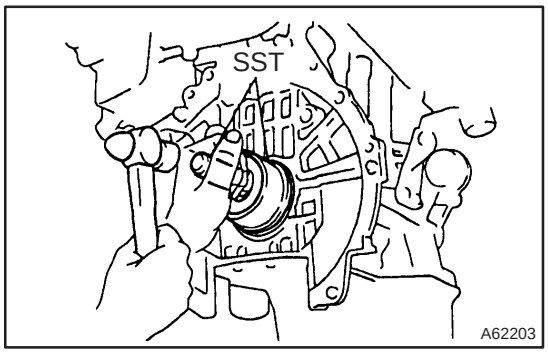

8. INSTALL ENGINE REAR OIL SEAL

(a) Apply MP grease to a new oil seal lip.

NOTICE:

Keep the lip off foreign materials.

(b) Using SST, tap in the oil seal until its surface is flush with the rear oil seal retainer edge.

SST 09223–15020, 09950–70010 (09951–07100)

NOTICE:

Wipe off extra grease on the crankshaft.

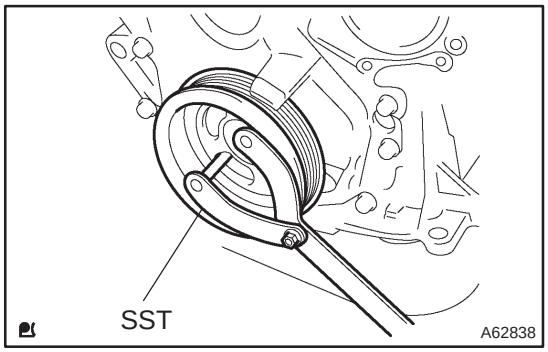

9. INSTALL FLYWHEEL SUB–ASSY (M/T TRANSAXLE)

(a) Fix the crankshaft with SST.
SST 09960–10010 (09962–01000, 09963–01000)

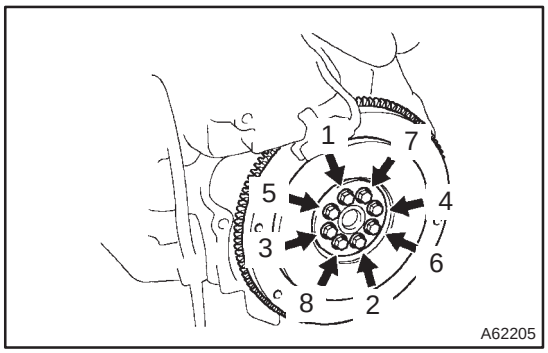

(b) Clean the bolt and bolt hole.
(c) Apply adhesive to the bolts.
Adhesive:
Part No. 09330–00070, THREE BOND or equivalent.
(d) Using several steps, Install and tighten the 8 bolts uniformly in the sequence shown in the illustration.
Torque: 49 N·m (500 kgf·cm, 36 ft·lbf)

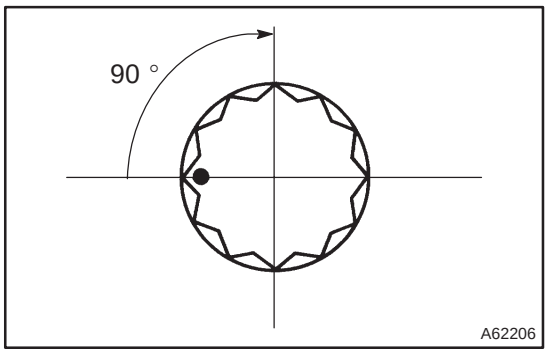

(e) Mark the bolts with paint as shown in the illustration.
(f) Retighten the bolts by an additional 90° in the same sequence as step (d).
(g) Check that the paint marks of each bolt are at 90° angle from the original position.

10. INSTALL CLUTCH DISC ASSY (M/T TRANSAXLE) **(See page 42–26)**

11. INSTALL CLUTCH COVER ASSY (M/T TRANSAXLE) **(See page 42–26)**

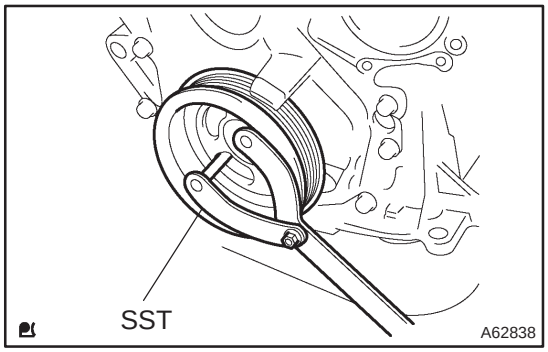

12. INSTALL DRIVE PLATE & RING GEAR SUB–ASSY (A/T TRANSAXLE)

(a) Fix the crankshaft with SST.
SST 09960–10010 (09962–01000, 09963–01000)

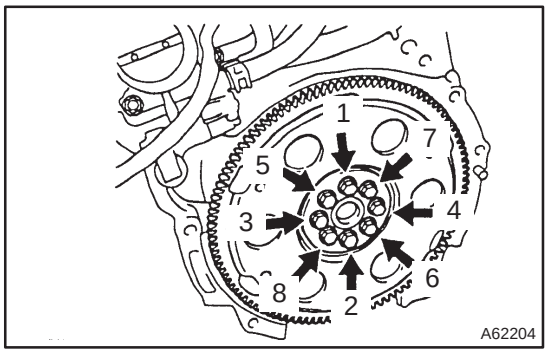

(b) Clean the bolt and bolt hole.
(c) Apply adhesive to the bolts.
Adhesive:
Part No. 09330–00070, THREE BOND or equivalent.
(d) Using several steps, install and tighten the 8 bolts uniformly in the sequence shown in the illustration.
(e) Fix the crankshaft with SST.
Torque: 88 N·m (897 kgf·cm, 65 ft·lbf)

13. INSTALL MANUAL TRANSAXLE ASSY (M/T TRANSAXLE) (See page 41–15)
14. INSTALL AUTOMATIC TRANSAXLE ASSY (A/T TRANSAXLE) (See page 40–11)

ENGINE (1AZ–FE)

140D1–02

INSPECTION

1. **INSPECT COOLANT (See page 16–13)**
2. **INSPECT ENGINE OIL (See page 17–6)**
3. **INSPECT BATTERY**
   Standard specific gravity: 1.25 to 1.29 at 20°C (68°F)
4. **INSPECT AIR CLEANER FILTER ELEMENT SUB–ASSY**
5. **INSPECT SPARK PLUG (See page 18–9)**
6. **INSPECT V–RIBBED BELT**
7. **INSPECT IGNITION TIMING**

(a) Warm up engine.

(b) When using hand–held tester:

(1) Connect the hand–held tester to the DLC3.

(2) Enter DATA LIST MODE on the hand–held tester.

Ignition timing: 8 to 12° BTDC

HINT:

Please refer to the hand–held tester operator's manual if you need help to select DATA LIST.

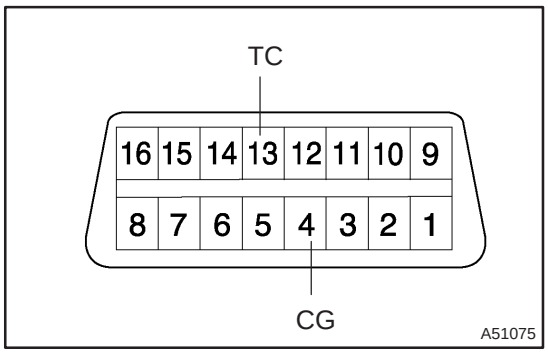

(c) When not using hand–held tester:

(1) Using SST, connect terminals 13 (TC) and 4 (CG) of DLC3.

SST 09843–18040

NOTICE:

- **Make sure of the terminal numbers before connecting them. Connection with a wrong terminal can damage the engine.**
- **Turn OFF all electrical systems before connecting the terminals.**
- **Operate the inspection after the cooling fan motor is turned OFF.**

(2) Remove the cylinder head cover No.2.

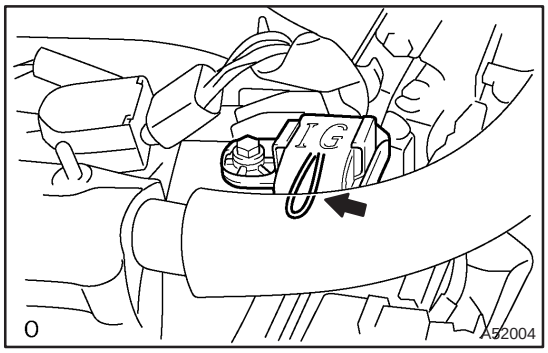

(3) Pull out the wire harness as shown in the illustration. Connect the clip of the timing light to the engine.

NOTICE:

- **Use a timing light which detects the first signal.**
- **After checking, be sure to wrap the wire harness with tape.**

(4) Inspect ignition timing at idle.

Ignition timing: 8 to 12° BTDC

NOTICE:

When checking the ignition timing, shift the transmission to the neutral position.

HINT:

Run the engine at 1,000 to 1,300 rpm for 5 seconds, check that the engine rpm returns to the idle speed.

(5) Disconnect terminals 13 (TC) and 4 (CG) of DLC3.
(6) Inspect ignition timing at idle.
Ignition timing: 5 to 15° BTDC
(7) Confirm that ignition timing to go advanced angle side when the engine rpm is increased.
(8) Remove the timing light.

8. INSPECT ENGINE IDLE SPEED

(a) Warm up engine.
(b) When using hand–held tester:
(1) Connect the hand–held tester to the DLC3.
Idle speed: 650 to 750 rpm

NOTICE:

- **Check the idle speed with the cooling fan OFF.**
- **Switch off all accessories and air conditioning before connecting the test prove to the terminal.**

HINT:
Please refer to the hand–held tester operator's manual if you need help to select DATA LIST.

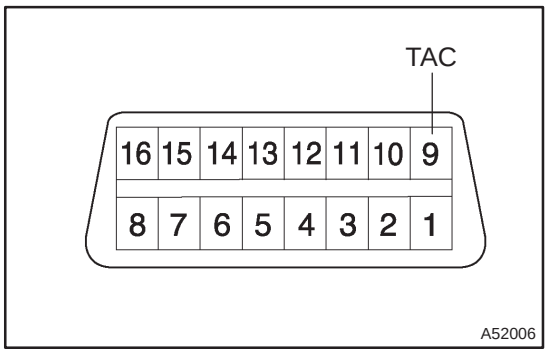

(c) When not using hand–held tester.
(1) Using SST, connect the tachometer test prove to terminal 9 (TAC) of DLC3.
SST 09843–18040
(2) Check the idle speed.
Idle speed: 650 to 750 rpm

9. INSPECT COMPRESSION

(a) Warm up and stop the engine.
(b) Disconnect the injector connectors.
(c) Remove the ignition coil.
(d) Remove the spark plugs.
(e) Inspect cylinder compression pressure.
SST 09992–00500
(1) Insert a compression gauge into the spark plug hole.
(2) Fully open the throttle.

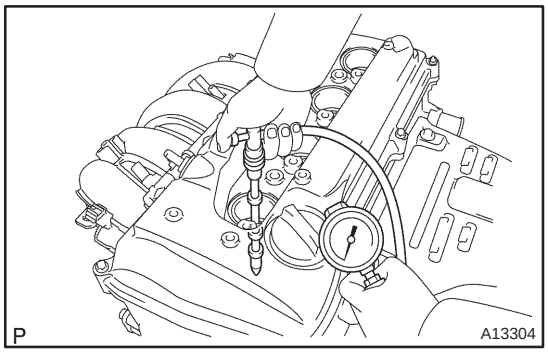

(3) While cranking the engine, measure the compression pressure.

Compression pressure:
1,300 kPa (13.3 kgf/cm^2, 189 psi)
Minimum pressure:
1000 kPa (10.2 kgf/cm^2, 145 psi)
Difference between each cylinder:
100 kPa (1.0 kgf/cm^2, 14 psi)

NOTICE:

- **Always use a fully charged battery to obtain engine speed of 250 rpm or more.**
- **Check other cylinder's compression pressure in the same way.**
- **This measurement must be done in as short a time as possible.**

(4) If the cylinder compression is low, pour a small amount of engine oil into the cylinder through the spark plug hole and inspect again.

HINT:

- If adding oil increases the compression, the piston rings and/or cylinder bore may be worn or damaged.
- If pressure stays low, a valve may be sticking or seating improperly, or there may be leakage past the gasket.

10. INSPECT CO/HC

(a) Start the engine.
(b) Run the engine at 2,500 rpm for approximately 180 seconds.
(c) Insert CO/HC meter testing probe at least 40 cm (1.3 ft) into the tailpipe during idling.
(d) Check CO/HC concentration at idle.
Idle CO concentration: 0 to 0.5 %
Idle HC concentration: Applicable local regulation
(e) If the CO/HC concentration does not conform to specifications, perform troubleshooting in the order given below.
(1) Check heated oxygen sensor operation. (See page 12–6)
(2) See the table below for possible causes, and then inspect and repair the applicable causes if necessary.

CO	HC	Problems	Causes
Normal	High	Rough idle	1. Faulty ignitions: • Incorrect timing • Fouled, shorted or improperly gapped plugs 2. Incorrect valve clearance 3. Leaks in intake and exhaust valves 4. Leaks in cylinders
Low	High	Rough idle (Fluctuating HC reading)	1. Vacuum leaks: • PCV hoses • Intake manifold • Throttle body • ISC valve • Brake booster line 2. Lean mixture causing misfire
High	High	Rough idle (Black smoke from exhaust)	1. Restricted air filter 2. Plugged PCV valve 3. Faulty EFI systems: • Faulty pressure regulator • Defective water temperature sensor • Defective mass air flow meter • Faulty ECM • Faulty injectors • Faulty throttle position sensor

FAN AND GENERATOR V BELT (1AZ–FE)

141B5–01

REPLACEMENT

1. REMOVE RADIATOR SUPPORT OPENING COVER

2. REMOVE ENGINE ROOM COVER SIDE

3. REMOVE ENGINE UNDER COVER RH

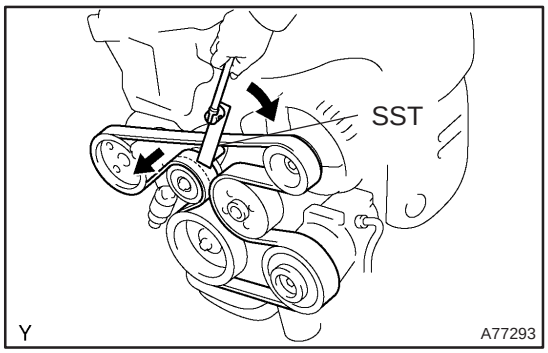

4. REMOVE FAN AND GENERATOR V BELT

(a) Using SST, loosen the V–ribbed belt tensioner arm clockwise, and remove the fan and generator V belt.
SST 09249–63010

5. INSTALL FAN AND GENERATOR V BELT

(a) Using SST, loosen the V–ribbed belt tensioner arm clockwise, and install the fan and generator V belt.
SST 09249–63010

VALVE CLEARANCE (1AZ–FE)

141B6–01

ADJUSTMENT

1. REMOVE RADIATOR SUPPORT OPENING COVER

2. REMOVE ENGINE ROOM COVER SIDE

3. REMOVE ENGINE UNDER COVER RH

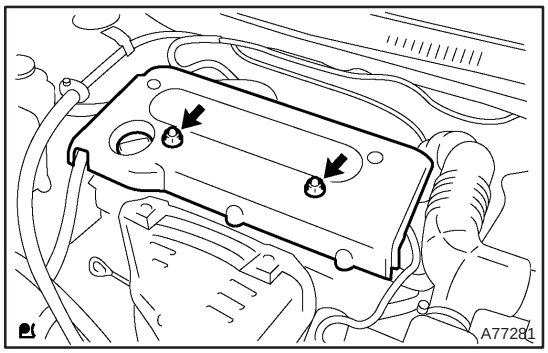

4. REMOVE ENGINE COVER SUB–ASSY NO.1

(a) Remove 2 nuts and the engine cover No. 1.

5. REMOVE IGNITION COIL ASSY

(a) Remove 4 bolts and the ignition coils.

6. REMOVE CYLINDER HEAD COVER SUB–ASSY (See page 14–171)

7. SET NO. 1 CYLINDER TO TDC/COMPRESSION (See page 14–171)

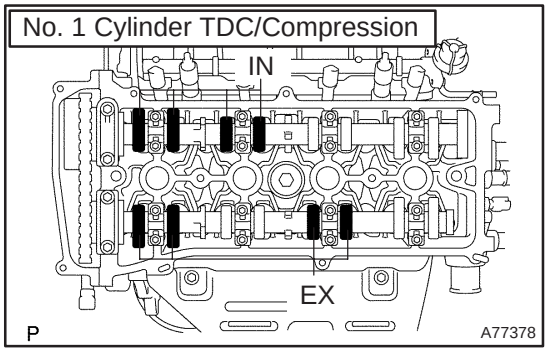

8. INSPECT VALVE CLEARANCE

HINT:

Inspect and adjust the valve clearance when the engine is cold.

(a) Check only the valve indicated in the illustration.

(1) Using a feeler gauge, measure the clearance between the valve lifter and camshaft.

(2) Record the out–of specification valve clearance measurements. They will be used later to determine the required replacement adjusting shim.

Valve clearance (Cold):

Intake 0.19 to 0.29 mm (0.0075 to 0.0114 in.)

Exhaust 0.30 to 0.40 mm (0.0118 to 0.0157 in.)

(b) Turn the crankshaft clockwise 1 revolution (360°) and set No. 4 cylinder to TDC/compression.

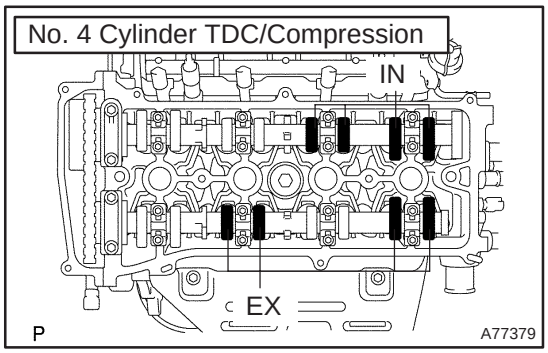

(c) Check only the valve indicated in the illustration.

(1) Using a feeler gauge, measure the clearance between the valve lifter and camshaft.

(2) Record the out–of specification valve clearance measurements. They will be used later to determine the required replacement adjusting shim.

Valve clearance (Cold):

Intake 0.19 to 0.29 mm (0.0075 to 0.0114 in.)

Exhaust 0.30 to 0.40 mm (0.0118 to 0.0157 in.)

9. ADJUST VALVE CLEARANCE

NOTICE:

Be sure not to turn the crankshaft without the chain tensioner.

(a) Set the No. 1 cylinder to TDC/compression. (See page 14–171)

(b) Remove the chain tensioner. (See page 14–171)

(c) Remove the camshafts. (See page 14–171)

(d) Tie the timing chain with a string.

NOTICE:

Be careful not to drop anything inside the timing chain cover.

(e) Remove the valve lifters.

(f) Using a micrometer, measure the thickness of the removed lifter.

(g) Calculate the thickness of a new lifter so that the valve clearance comes within the specified valve.

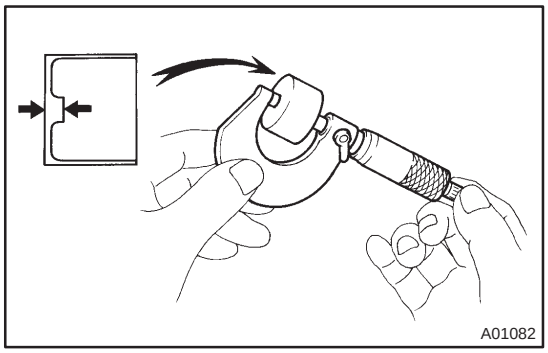

A	Thickness of new lifter
B	Thickness of used lifter
C	Measured valve clearance

Valve clearance:

Intake: A = B + (C – 0.24 mm (0.0094 in.))

Exhaust: A = B + (C – 0.35 mm (0.0138 in.))

EXAMPLE: (Intake)
Measure valve clearance = 0.44 mm (0.0173 in.)
0.44 mm (0.0173 in.) – 0.24 mm (0.0094 in.) = 0.20 mm (0.0079 in.)
(Measured – Specification = Excess clearance)
Used shim measurement = 5.30 mm (0.2087 in.)
0.20 mm (0.0079 in.) + 5.30 mm (0.2087 in.) = 5.50 mm (0.2165 in.)
(Excess clearance + Used shim = Ideal new shim)
Closest new shim = 5.50 mm (0.2165 in.) = Shim No. ”50”

HINT:

- Select a new lifter with a thickness as close as possible to the calculated valves.
- Lifter are available in 35 sizes in increments of 0.020 mm (0.0008 in.), from 5.060 mm (0.1992 in.) to 5.740 mm (0.2260 in.).

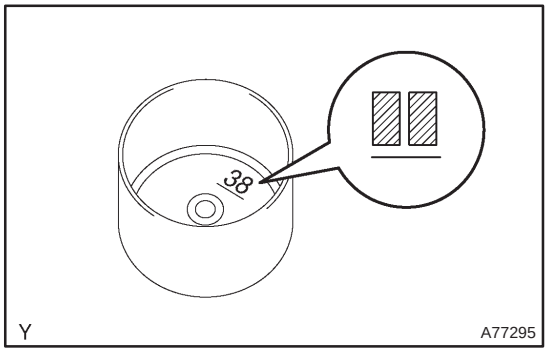

- Identification number inside the valve lifter shows the value of the 2 decimal places. (The illustration shows 5.380 mm (0.2118 in.))
- Refer to the New Lifter Thickness table on the next 2 pages.

Valve Lifter Selection Chart (Intake)

Measure clearance mm (in.) \ Installed lifter thickness mm (in.)	5.060 (0.1992)	5.080 (0.2000)	5.100 (0.2008)	5.120 (0.2016)	5.140 (0.2024)	5.160 (0.2031)	5.180 (0.2039)	5.200 (0.2047)	5.210 (0.2051)	5.220 (0.2055)	5.230 (0.2059)	5.240 (0.2063)	5.250 (0.2067)	5.260 (0.2071)	5.270 (0.2075)	5.280 (0.2079)	5.290 (0.2083)	5.300 (0.2087)	5.310 (0.2091)	5.320 (0.2094)	5.330 (0.2098)	5.340 (0.2102)	5.350 (0.2106)	5.360 (0.2110)	5.370 (0.2114)	5.380 (0.2118)	5.390 (0.2122)	5.400 (0.2126)	5.410 (0.2130)	5.420 (0.2134)	5.430 (0.2138)	5.440 (0.2142)	5.450 (0.2146)	5.460 (0.2150)	5.470 (0.2154)	5.480 (0.2157)	5.490 (0.2161)	5.500 (0.2165)	5.510 (0.2169)	5.520 (0.2173)	5.530 (0.2177)	5.540 (0.2181)	5.550 (0.2185)	5.560 (0.2189)	5.570 (0.2193)	5.580 (0.2197)	5.590 (0.2201)	5.600 (0.2205)	5.620 (0.2213)	5.640 (0.2220)	5.660 (0.2228)	5.680 (0.2236)	5.700 (0.2244)	5.720 (0.2252)	5.740 (0.2260)
0.000–0.030 (0.0000–0.0012)													06	06	08	08	10	10	12	12	14	14	16	16	18	18	20	20	22	22	24	24	26	26	28	28	30	30	32	32	34	34	36	36	38	38	40	40	42	42	44	46	48	50	52	54
0.031–0.050 (0.0012–0.0020)									06	06	06	08	08	10	10	12	12	14	14	16	16	18	18	20	20	22	22	24	24	26	26	28	28	30	30	32	32	34	34	36	36	38	38	40	40	42	42	44	46	48	50	52	54	56	58
0.051–0.070 (0.0020–0.0028)								06	08	08	08	10	10	12	12	14	14	16	16	18	18	20	20	22	22	24	24	26	26	28	28	30	30	32	32	34	34	36	36	38	38	40	40	42	42	44	44	46	48	50	52	54	56	58	60
0.071–0.090 (0.0028–0.0035)							06	08	10	10	10	12	12	14	14	16	16	18	18	20	20	22	22	24	24	26	26	28	28	30	30	32	32	34	34	36	36	38	38	40	40	42	42	44	44	46	46	48	50	52	54	56	58	60	62
0.091–0.110 (0.0036–0.0043)						06	08	10	12	12	12	14	14	16	16	18	18	20	20	22	22	24	24	26	26	28	28	30	30	32	32	34	34	36	36	38	38	40	40	42	42	44	44	46	46	48	48	50	52	54	56	58	60	62	64
0.111–0.130 (0.0044–0.0051)					06	08	10	12	14	14	14	16	16	18	18	20	20	22	22	24	24	26	26	28	28	30	30	32	32	34	34	36	36	38	38	40	40	42	42	44	44	46	46	48	48	50	50	52	54	56	58	60	62	64	66
0.131–0.150 (0.0052–0.0059)				06	08	10	12	14	16	16	16	18	18	20	20	22	22	24	24	26	26	28	28	30	30	32	32	34	34	36	36	38	38	40	40	42	42	44	44	46	46	48	48	50	50	52	52	54	56	58	60	62	64	66	68
0.151–0.170 (0.0059–0.0067)			06	08	10	12	14	16	18	18	18	20	20	22	22	24	24	26	26	28	28	30	30	32	32	34	34	36	36	38	38	40	40	42	42	44	44	46	46	48	48	50	50	52	52	54	54	56	58	60	62	64	66	68	70
0.171–0.189 (0.0067–0.0074)		06	08	10	12	14	16	18	20	20	20	22	22	24	24	26	26	28	28	30	30	32	32	34	34	36	36	38	38	40	40	42	42	44	44	46	46	48	48	50	50	52	52	54	54	56	56	58	60	62	64	66	68	70	72
0.190–0.290 (0.0075–0.0114)																																																										
0.291–0.310 (0.0115–0.0122)	12	14	16	18	20	22	24	26	28	28	30	30	32	32	34	34	36	36	38	38	40	40	42	42	44	44	46	46	48	48	50	50	52	52	54	54	56	56	58	58	60	60	62	62	64	64	66	66	68	70	72	74	74	74
0.311–0.330 (0.0122–0.0130)	14	16	18	20	22	24	26	28	30	30	32	32	34	34	36	36	38	38	40	40	42	42	44	44	46	46	48	48	50	50	52	52	54	54	56	56	58	58	60	60	62	62	64	64	66	66	68	68	70	72	74	74	74	
0.331–0.350 (0.0130–0.0138)	16	18	20	22	24	26	28	30	32	32	34	34	36	36	38	38	40	40	42	42	44	44	46	46	48	48	50	50	52	52	54	54	56	56	58	58	60	60	62	62	64	64	66	66	68	68	70	70	72	74	74	74		
0.351–0.370 (0.0138–0.0146)	18	20	22	24	26	28	30	32	34	34	36	36	38	38	40	40	42	42	44	44	46	46	48	48	50	50	52	52	54	54	56	56	58	58	60	60	62	62	64	64	66	66	68	68	70	70	72	72	74	74	74			
0.371–0.390 (0.0146–0.0154)	20	22	24	26	28	30	32	34	36	36	38	38	40	40	42	42	44	44	46	46	48	48	50	50	52	52	54	54	56	56	58	58	60	60	62	62	64	64	66	66	68	68	70	70	72	72	74	74	74	74				
0.391–0.410 (0.0154–0.0161)	22	24	26	28	30	32	34	36	38	38	40	40	42	42	44	44	46	46	48	48	50	50	52	52	54	54	56	56	58	58	60	60	62	62	64	64	66	66	68	68	70	70	72	72	74	74	74	74	74					
0.411–0.430 (0.0162–0.0169)	24	26	28	30	32	34	36	38	40	40	42	42	44	44	46	46	48	48	50	50	52	52	54	54	56	56	58	58	60	60	62	62	64	64	66	66	68	68	70	70	72	72	74	74	74	74								
0.431–0.450 (0.0170–0.0177)	26	28	30	32	34	36	38	40	42	42	44	44	46	46	48	48	50	50	52	52	54	54	56	56	58	58	60	60	62	62	64	64	66	66	68	68	70	70	72	72	74	74	74	74	74									
0.451–0.470 (0.0178–0.0185)	28	30	32	34	36	38	40	42	44	44	46	46	48	48	50	50	52	52	54	54	56	56	58	58	60	60	62	62	64	64	66	66	68	68	70	70	72	72	74	74	74	74												
0.471–0.490 (0.0185–0.0193)	30	32	34	36	38	40	42	44	46	46	48	48	50	50	52	52	54	54	56	56	58	58	60	60	62	62	64	64	66	66	68	68	70	70	72	72	74	74	74	74														
0.491–0.510 (0.0193–0.0201)	32	34	36	38	40	42	44	46	48	48	50	50	52	52	54	54	56	56	58	58	60	60	62	62	64	64	66	66	68	68	70	70	72	72	74	74	74	74																
0.511–0.530 (0.0201–0.0209)	34	36	38	40	42	44	46	48	50	50	52	52	54	54	56	56	58	58	60	60	62	62	64	64	66	66	68	68	70	70	72	72	74	74	74	74																		
0.531–0.550 (0.0209–0.0217)	36	38	40	42	44	46	48	50	52	52	54	54	56	56	58	58	60	60	62	62	64	64	66	66	68	68	70	70	72	72	74	74	74	74																				
0.551–0.570 (0.0217–0.0224)	38	40	42	44	46	48	50	52	54	54	56	56	58	58	60	60	62	62	64	64	66	66	68	68	70	70	72	72	74	74	74	74																						
0.571–0.590 (0.0225–0.0232)	40	42	44	46	48	50	52	54	56	56	58	58	60	60	62	62	64	64	66	66	68	68	70	70	72	72	74	74	74	74																								
0.591–0.610 (0.0233–0.0240)	42	44	46	48	50	52	54	56	58	58	60	60	62	62	64	64	66	66	68	68	70	70	72	72	74	74	74	74																										
0.611–0.630 (0.0241–0.0248)	44	46	48	50	52	54	56	58	60	60	62	62	64	64	66	66	68	68	70	70	72	72	74	74	74	74																										
0.631–0.650 (0.0248–0.0256)	46	48	50	52	54	56	58	60	62	62	64	64	66	66	68	68	70	70	72	72	74	74	74	74																										
0.651–0.670 (0.0256–0.0264)	48	50	52	54	56	58	60	62	64	64	66	66	68	68	70	70	72	72	74	74	74	74																										
0.671–0.690 (0.0264–0.0272)	50	52	54	56	58	60	62	64	66	66	68	68	70	70	72	72	74	74	74	74																										
0.691–0.710 (0.0272–0.0280)	52	54	56	58	60	62	64	66	68	68	70	70	72	72	74	74	74	74																										
0.711–0.730 (0.0280–0.0287)	54	56	58	60	62	64	66	68	70	70	72	72	74	74	74	74																										
0.731–0.750 (0.0288–0.0295)	56	58	60	62	64	66	68	70	72	72	74	74	74	74																										
0.751–0.770 (0.0296–0.0303)	58	60	62	64	66	68	70	72	74	74	74	74																										
0.771–0.790 (0.0304–0.0311)	60	62	64	66	68	70	72	74	74	74																										
0.791–0.810 (0.0311–0.0319)	62	64	66	68	70	72	74																													
0.811–0.830 (0.0319–0.0327)	64	66	68	70	72	74																														
0.831–0.850 (0.0327–0.0335)	66	68	70	72	74																															
0.851–0.870 (0.0335–0.0343)	68	70	72	74																																
0.871–0.890 (0.0343–0.0350)	70	72	74																																	
0.891–0.910 (0.0351–0.0358)	72	74																																		
0.911–0.930 (0.0359–0.0366)	74																																			

Intake valve clearance (Cold):
0.19 to 0.29 mm (0.008 to 0.011 in.)

EXAMPLE:

The 5.250 mm (0.2067 in.) lifter is installed, and the measured clearance is 0.400 mm (0.0157 in.).

Replace the 5.250 mm (0.2067 in.) lifter with a new No. 42 lifter.

New Lifter Thickness mm (in.)

Lifter No.	Thickness	Lifter No.	Thickness	Lifter No.	Thickness
06	5.060 (0.1992)	30	5.300 (0.2087)	54	5.540 (0.2181)
08	5.080 (0.2000)	32	5.320 (0.2094)	56	5.560 (0.2189)
10	5.100 (0.2008)	34	5.340 (0.2102)	58	5.580 (0.2197)
12	5.120 (0.2016)	36	5.360 (0.2110)	60	5.600 (0.2205)
14	5.140 (0.2024)	38	5.380 (0.2118)	62	5.620 (0.2213)
16	5.160 (0.2031)	40	5.400 (0.2126)	64	5.640 (0.2220)
18	5.180 (0.2039)	42	5.420 (0.2134)	66	5.660 (0.2228)
20	5.200 (0.2047)	44	5.440 (0.2142)	68	5.680 (0.2236)
22	5.220 (0.2055)	46	5.460 (0.2150)	70	5.700 (0.2244)
24	5.240 (0.2063)	48	5.480 (0.2157)	72	5.720 (0.2252)
26	5.260 (0.2071)	50	5.500 (0.2165)	74	5.740 (0.2260)
28	5.280 (0.2079)	52	5.520 (0.2173)		

A77296

Valve Lifter Selection Chart (Exhaust)

Measure clearance mm (in.) \ Installed lifter thickness mm (in.)	5.060 (0.1992)	5.080 (0.2000)	5.100 (0.2008)	5.120 (0.2016)	5.140 (0.2024)	5.160 (0.2031)	5.180 (0.2039)	5.200 (0.2047)	5.210 (0.2051)	5.220 (0.2055)	5.230 (0.2059)	5.240 (0.2063)	5.250 (0.2067)	5.260 (0.2071)	5.270 (0.2075)	5.280 (0.2079)	5.290 (0.2083)	5.300 (0.2087)	5.310 (0.2091)	5.320 (0.2094)	5.330 (0.2098)	5.340 (0.2102)	5.350 (0.2106)	5.360 (0.2110)	5.370 (0.2114)	5.380 (0.2118)	5.390 (0.2122)	5.400 (0.2126)	5.410 (0.2130)	5.420 (0.2134)	5.430 (0.2138)	5.440 (0.2142)	5.450 (0.2146)	5.460 (0.2150)	5.470 (0.2154)	5.480 (0.2157)	5.490 (0.2161)	5.500 (0.2165)	5.510 (0.2169)	5.520 (0.2173)	5.530 (0.2177)	5.540 (0.2181)	5.550 (0.2185)	5.560 (0.2189)	5.570 (0.2193)	5.580 (0.2197)	5.590 (0.2201)	5.600 (0.2205)	5.620 (0.2213)	5.640 (0.2220)	5.660 (0.2228)	5.680 (0.2236)	5.700 (0.2244)	5.720 (0.2252)	5.740 (0.2260)
0.000–0.030 (0.0000–0.0012)																							06	06	08	08	10	12	12	14	14	16	16	18	18	20	20	22	22	24	24	26	26	28	28	30	30	32	32	34	36	38	40	42	44
0.031–0.050 (0.0012–0.0020)																						06	06	08	08	10	10	12	12	14	14	16	16	18	18	20	20	22	22	24	24	26	26	28	28	30	30	32	32	34	36	38	40	42	44	46
0.051–0.070 (0.0020–0.0028)																					06	06	08	08	10	10	12	12	14	14	16	16	18	18	20	20	22	22	24	24	26	26	28	28	30	30	32	32	34	34	36	38	40	42	44	46	48
0.071–0.090 (0.0028–0.0035)																				06	06	08	08	10	10	12	12	14	14	16	16	18	18	20	20	22	22	24	24	26	26	28	28	30	30	32	32	34	34	36	36	38	40	42	44	46	48	50
0.091–0.110 (0.0036–0.0043)																	06	06	08	08	10	10	12	12	14	14	16	16	18	18	20	20	22	22	24	24	26	26	28	28	30	30	32	32	34	34	36	36	38	38	40	42	44	46	48	50	52
0.111–0.130 (0.0044–0.0051)														06	06	08	08	10	10	12	12	14	14	16	16	18	18	20	20	22	22	24	24	26	26	28	28	30	30	32	32	34	34	36	36	38	38	40	42	44	46	48	50	52	54
0.131–0.150 (0.0052–0.0059)													06	06	08	08	10	10	12	12	14	14	16	16	18	18	20	20	22	22	24	24	26	26	28	28	30	30	32	32	34	34	36	36	38	38	40	40	42	44	46	48	50	52	54	56
0.151–0.170 (0.0059–0.0067)												06	06	08	08	10	10	12	12	14	14	16	16	18	18	20	20	22	22	24	24	26	26	28	28	30	30	32	32	34	34	36	36	38	38	40	40	42	44	46	48	50	52	54	56	58
0.171–0.190 (0.0067–0.0075)											06	06	08	08	10	10	12	12	14	14	16	16	18	18	20	20	22	22	24	24	26	26	28	28	30	30	32	32	34	34	36	36	38	38	40	40	42	42	44	46	48	50	52	54	56	58	60
0.191–0.210 (0.0075–0.0083)											06	08	08	10	10	12	12	14	14	16	16	18	18	20	20	22	22	24	24	26	26	28	28	30	30	32	32	34	34	36	36	38	38	40	40	42	42	44	46	48	50	52	54	56	58	60	62
0.211–0.230 (0.0083–0.0091)											06	08	10	12	12	14	14	16	16	18	18	20	20	22	22	24	24	26	26	28	28	30	30	32	32	34	34	36	36	38	38	40	40	42	42	44	44	46	48	50	52	54	56	58	60	62	64
0.231–0.250 (0.0091–0.0098)											06	08	10	12	14	14	16	18	18	20	20	22	22	24	24	26	26	28	28	30	30	32	32	34	34	36	36	38	38	40	40	42	42	44	44	46	46	48	48	50	50	52	54	56	58	60	62	64	66
0.251–0.270 (0.0099–0.0106)											06	08	10	12	14	16	16	18	18	20	20	22	22	24	24	26	26	28	28	30	30	32	32	34	34	36	36	38	38	40	40	42	42	44	44	46	46	48	48	50	50	52	54	56	58	60	62	64	66	68
0.271–0.290 (0.0107–0.0114)											06	08	10	12	14	16	18	18	20	20	22	22	24	24	26	26	28	28	30	30	32	32	34	34	36	36	38	38	40	40	42	42	44	44	46	46	48	48	50	50	52	54	56	58	60	62	64	66	68	70
0.291–0.299 (0.0115–0.0118)											06	08	10	12	14	16	18	20	20	22	22	24	24	26	26	28	28	30	30	32	32	34	34	36	36	38	38	40	40	42	42	44	44	46	46	48	48	50	50	52	52	54	56	58	60	62	64	66	68	70	72
0.300–0.400 (0.0118–0.0157)																		

(h) Install the camshafts. (See page 14–171)
(i) Install the chain tensioner. (See page 14–171)

10. INSTALL CYLINDER HEAD COVER SUB–ASSY (See page 14–171)
11. INSTALL IGNITION COIL ASSY
Torque: 9.0 N·m (92 kgf·cm, 80 in.·lbf)
12. CHECK FOR ENGINE OIL LEAKS
13. INSTALL ENGINE COVER SUB–ASSY NO.1
Torque: 7.0 N·m (71 kgf·cm, 62 in.·lbf)

PARTIAL ENGINE ASSY (1AZ–FE)

141B9–01

COMPONENTSCOMPONENTS

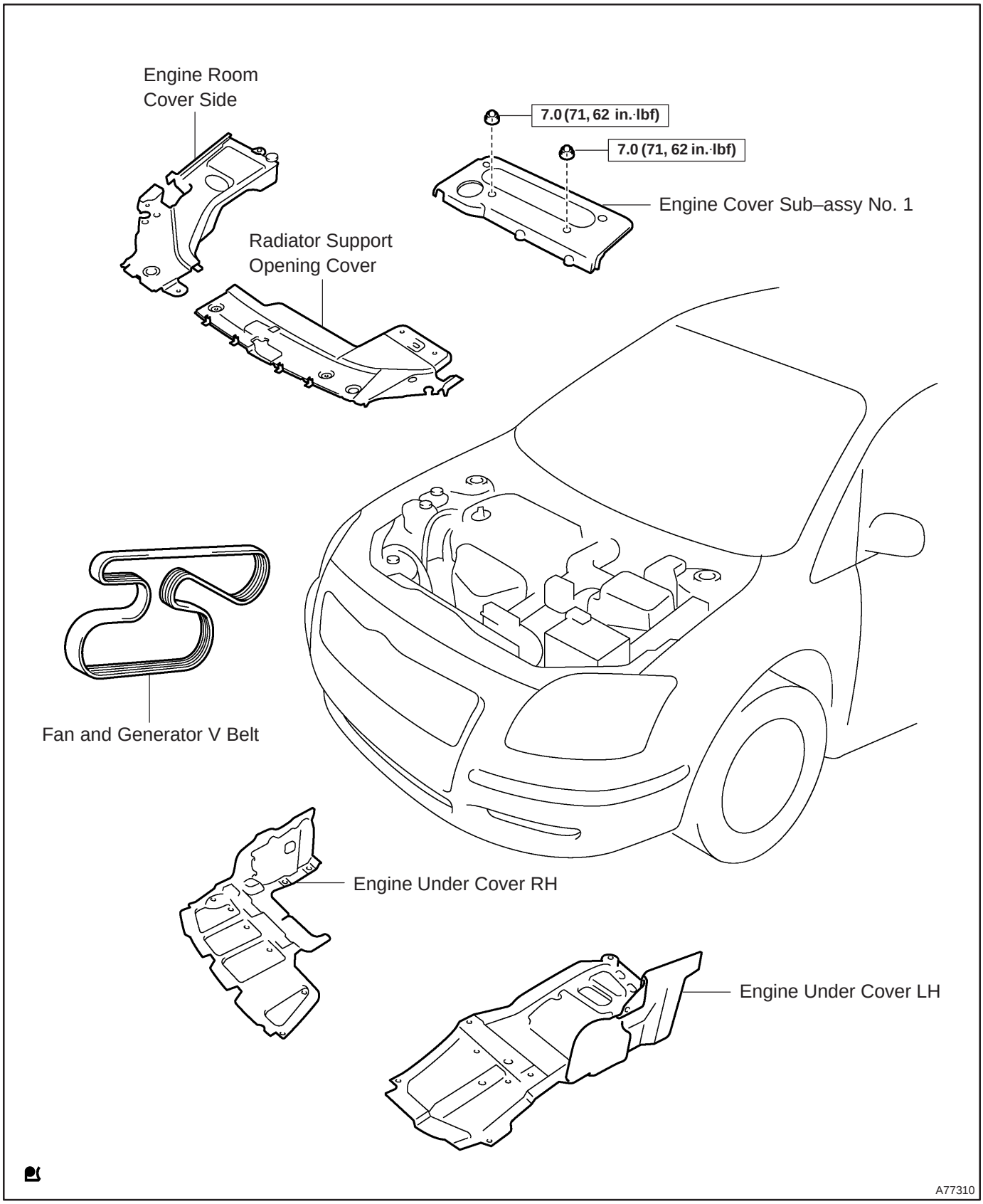

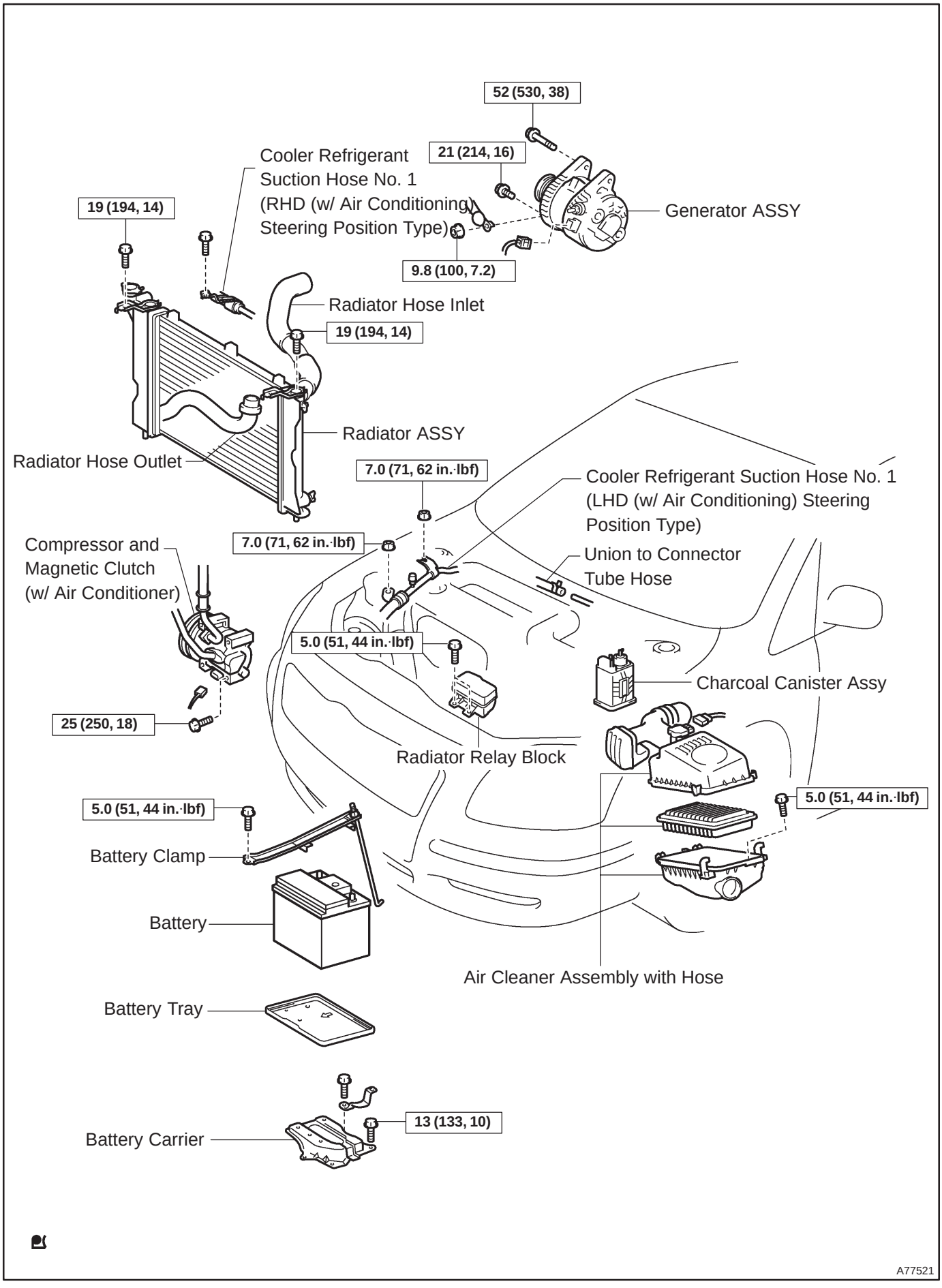
52 (530, 38)
21 (214, 16)
Cooler Refrigerant Suction Hose No. 1 (RHD (w/ Air Conditioning) Steering Position Type)
Generator ASSY
19 (194, 14)
9.8 (100, 7.2)
Radiator Hose Inlet
19 (194, 14)
Radiator ASSY
Radiator Hose Outlet
7.0 (71, 62 in.·lbf)
Cooler Refrigerant Suction Hose No. 1 (LHD (w/ Air Conditioning) Steering Position Type)
7.0 (71, 62 in.·lbf)
Compressor and Magnetic Clutch (w/ Air Conditioner)
Union to Connector Tube Hose
5.0 (51, 44 in.·lbf)
Charcoal Canister Assy
25 (250, 18)
Radiator Relay Block
5.0 (51, 44 in.·lbf)
5.0 (51, 44 in.·lbf)
Battery Clamp
Battery
Air Cleaner Assembly with Hose
Battery Tray
13 (133, 10)
Battery Carrier
A77521

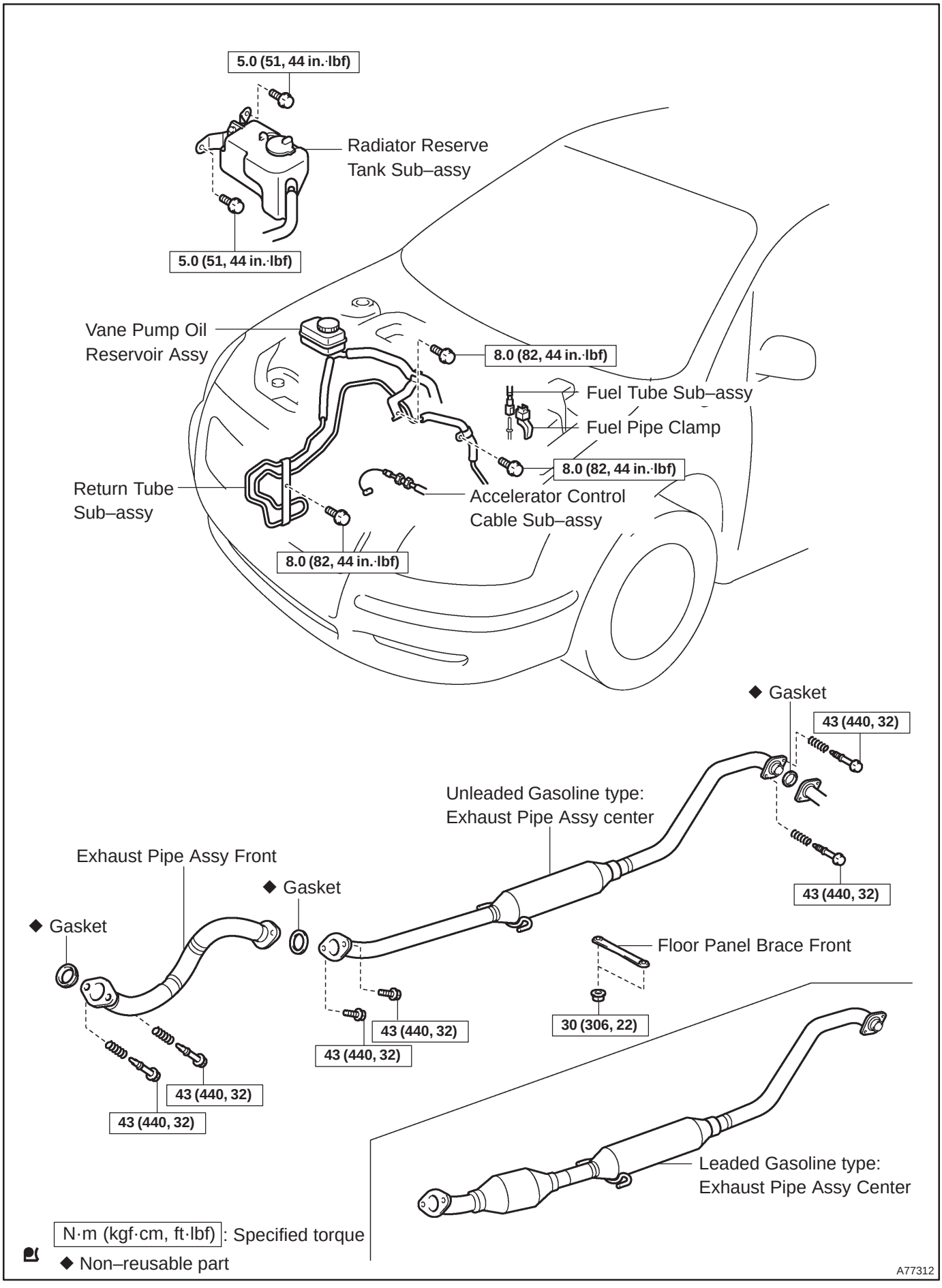
5.0 (51, 44 in.·lbf)
Radiator Reserve Tank Sub–assy
5.0 (51, 44 in.·lbf)
Vane Pump Oil Reservoir Assy
8.0 (82, 44 in.·lbf)
Fuel Tube Sub–assy
Fuel Pipe Clamp
8.0 (82, 44 in.·lbf)
Return Tube Sub–assy
Accelerator Control Cable Sub–assy
8.0 (82, 44 in.·lbf)
◆ Gasket
43 (440, 32)
Unleaded Gasoline type: Exhaust Pipe Assy center
Exhaust Pipe Assy Front
◆ Gasket
◆ Gasket
43 (440, 32)
Floor Panel Brace Front
30 (306, 22)
43 (440, 32)
43 (440, 32)
43 (440, 32)
43 (440, 32)
Leaded Gasoline type: Exhaust Pipe Assy Center
N·m (kgf·cm, ft·lbf): Specified torque
◆ Non–reusable part
A77312

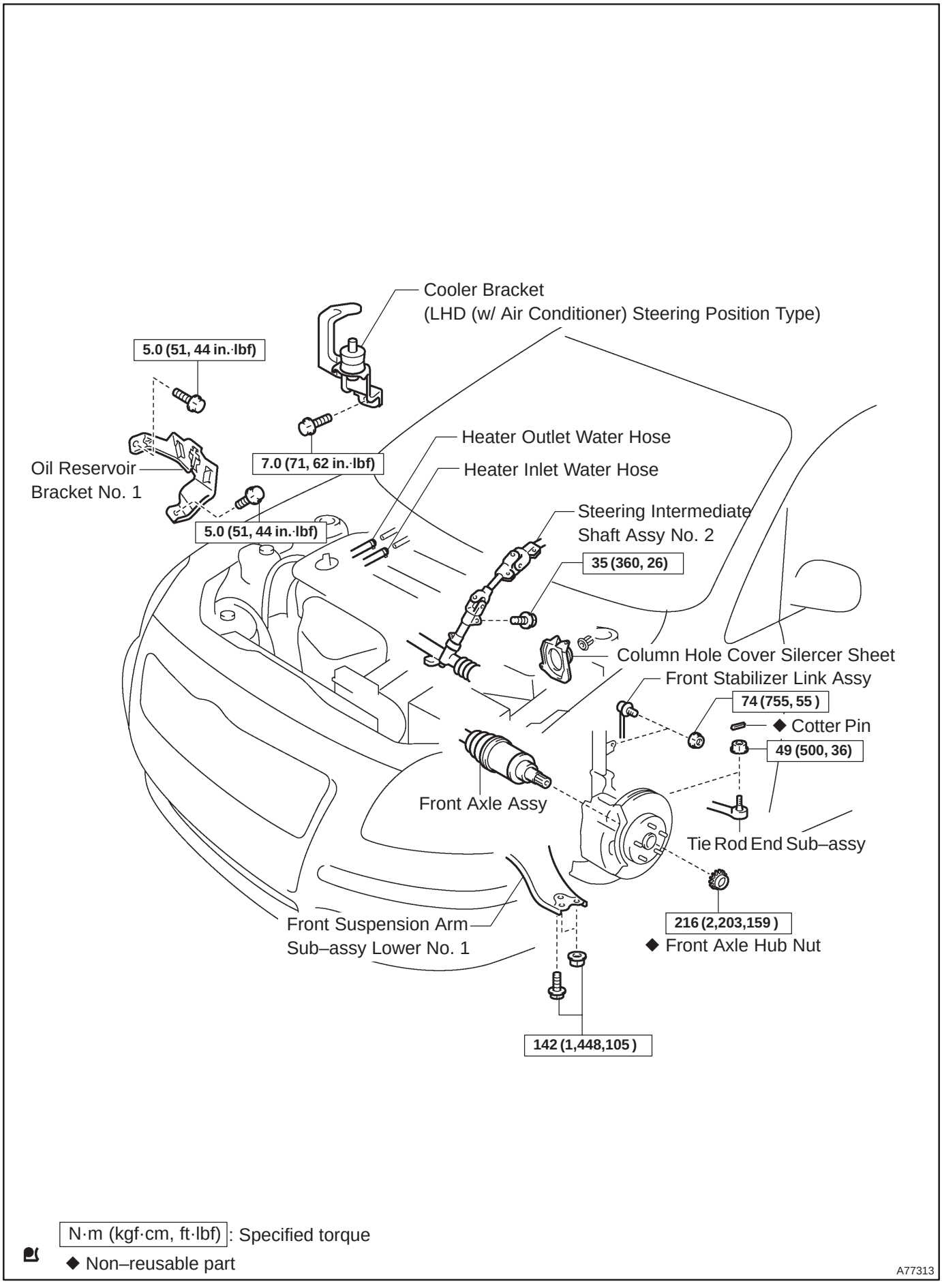
Cooler Bracket
(LHD (w/ Air Conditioner) Steering Position Type)
5.0 (51, 44 in.·lbf)
7.0 (71, 62 in.·lbf)
Heater Outlet Water Hose
Heater Inlet Water Hose
Oil Reservoir
Bracket No. 1
5.0 (51, 44 in.·lbf)
Steering Intermediate
Shaft Assy No. 2
35 (360, 26)
Column Hole Cover Silercer Sheet
Front Stabilizer Link Assy
74 (755, 55)
◆ Cotter Pin
49 (500, 36)
Front Axle Assy
Tie Rod End Sub–assy
Front Suspension Arm
Sub–assy Lower No. 1
216 (2,203,159)
◆ Front Axle Hub Nut
142 (1,448,105)
N·m (kgf·cm, ft·lbf): Specified torque
◆ Non–reusable part
A77313

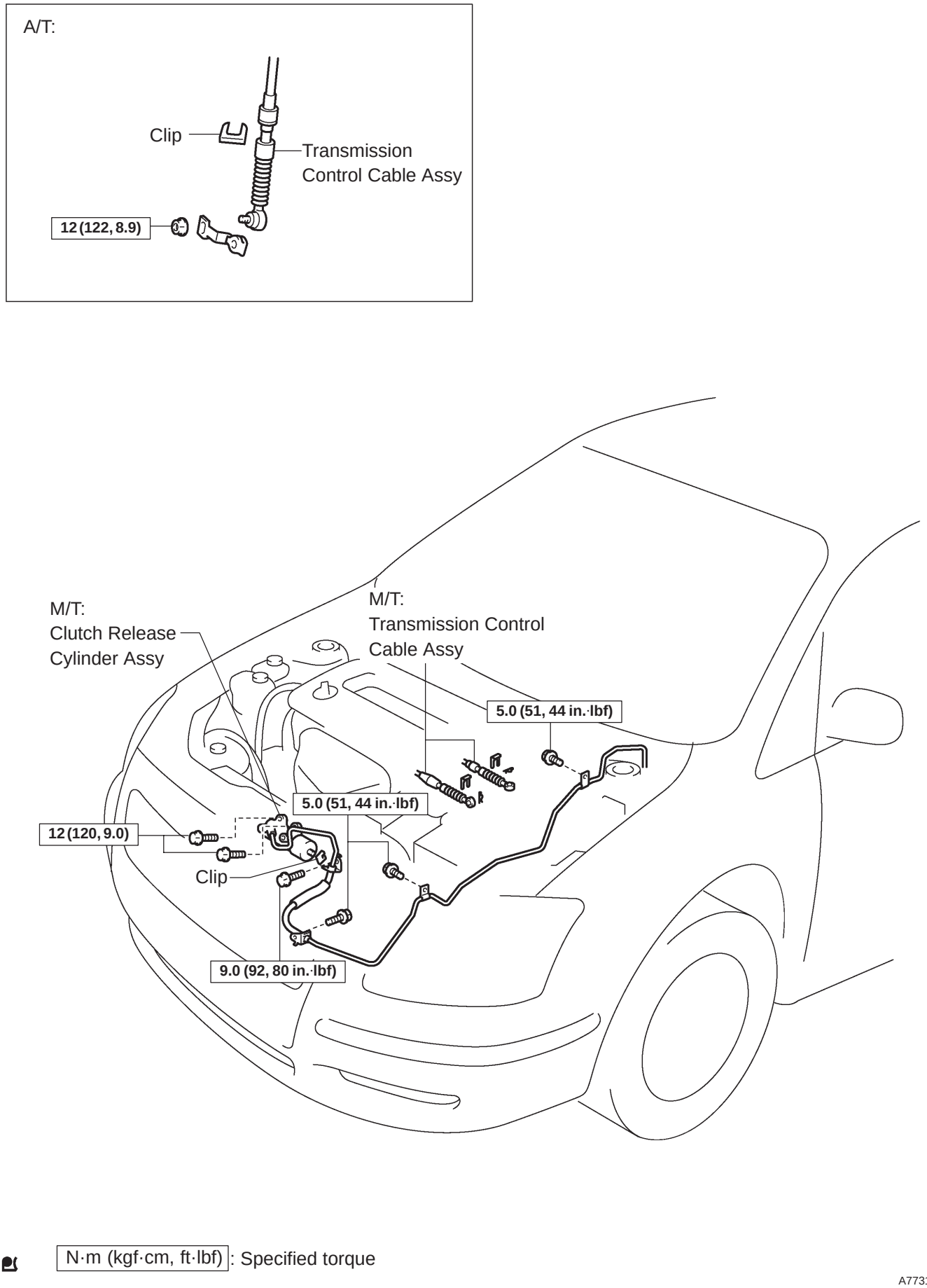
A/T:
Clip
Transmission Control Cable Assy
12 (122, 8.9)
M/T:
Clutch Release Cylinder Assy
M/T:
Transmission Control Cable Assy
5.0 (51, 44 in.·lbf)
5.0 (51, 44 in.·lbf)
12 (120, 9.0)
Clip
9.0 (92, 80 in.·lbf)
N·m (kgf·cm, ft·lbf): Specified torque
A77314

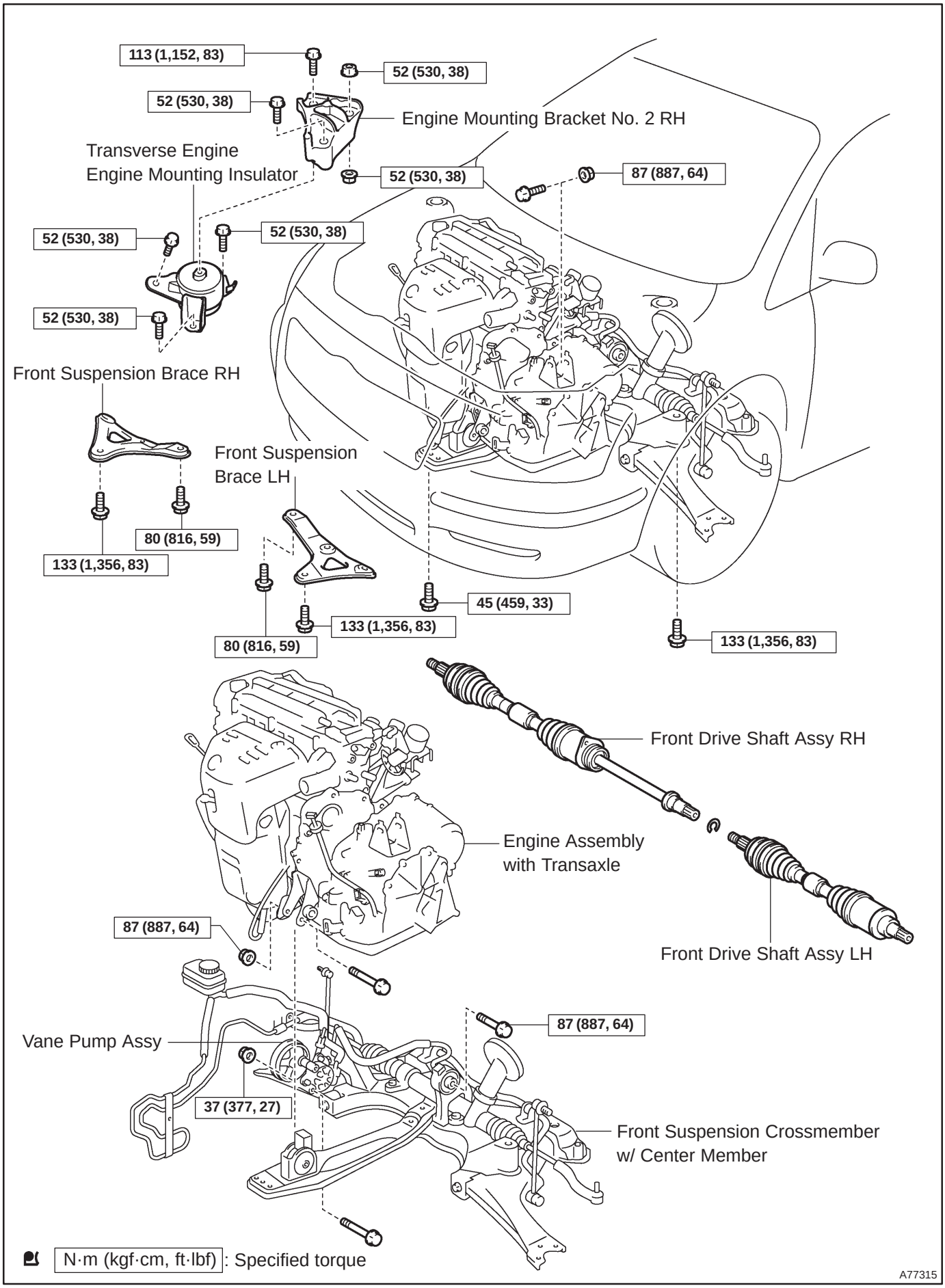
113 (1,152, 83)
52 (530, 38)
52 (530, 38)
Engine Mounting Bracket No. 2 RH
Transverse Engine
Engine Mounting Insulator
52 (530, 38)
87 (887, 64)
52 (530, 38)
52 (530, 38)
52 (530, 38)
Front Suspension Brace RH
Front Suspension
Brace LH
80 (816, 59)
133 (1,356, 83)
45 (459, 33)
133 (1,356, 83)
80 (816, 59)
133 (1,356, 83)
Front Drive Shaft Assy RH
Engine Assembly
with Transaxle
Front Drive Shaft Assy LH
87 (887, 64)
87 (887, 64)
Vane Pump Assy
37 (377, 27)
Front Suspension Crossmember
w/ Center Member
N·m (kgf·cm, ft·lbf): Specified torque
A77315

M/T:

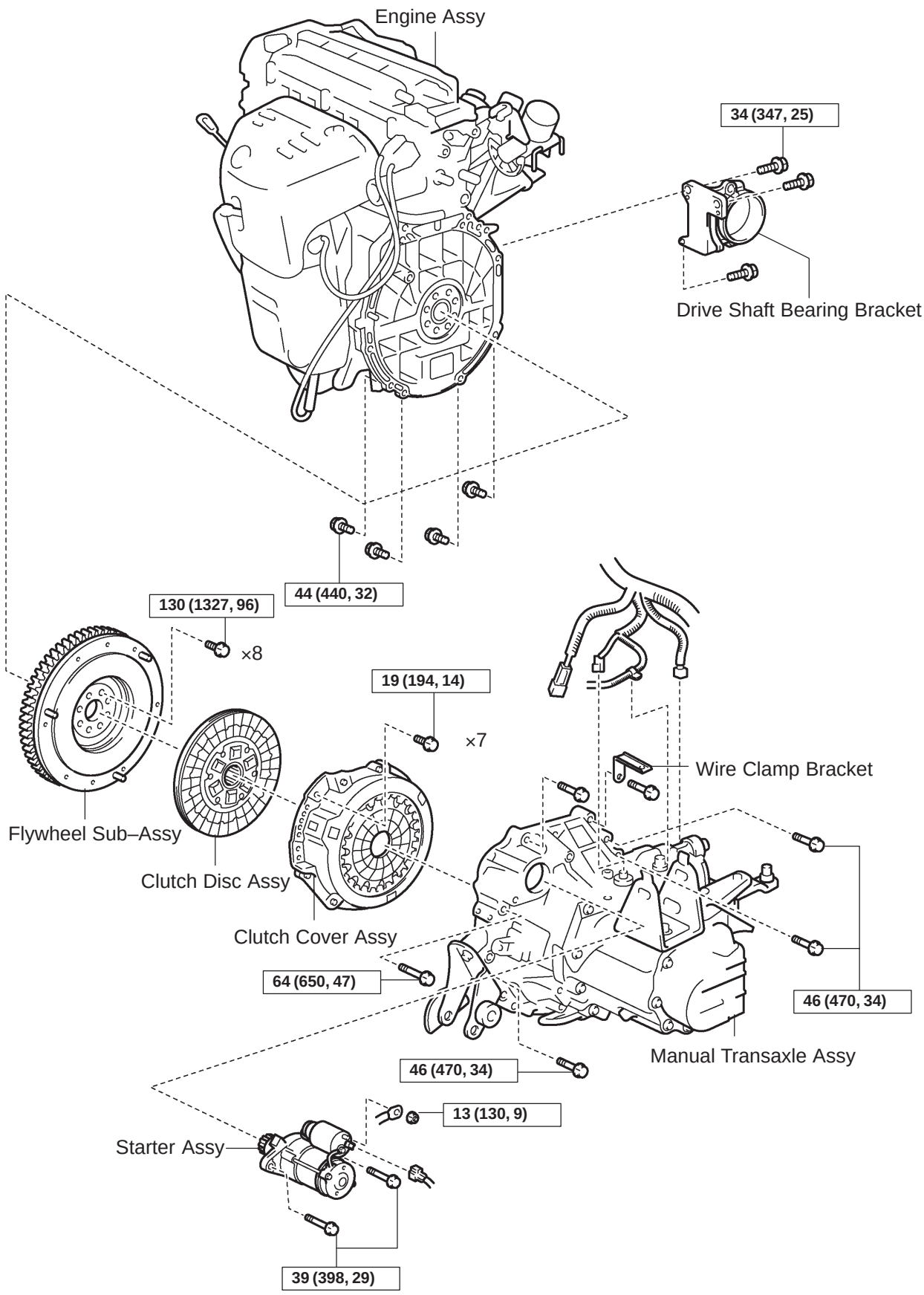

N·m (kgf·cm, ft·lbf): Specified torque

A77497

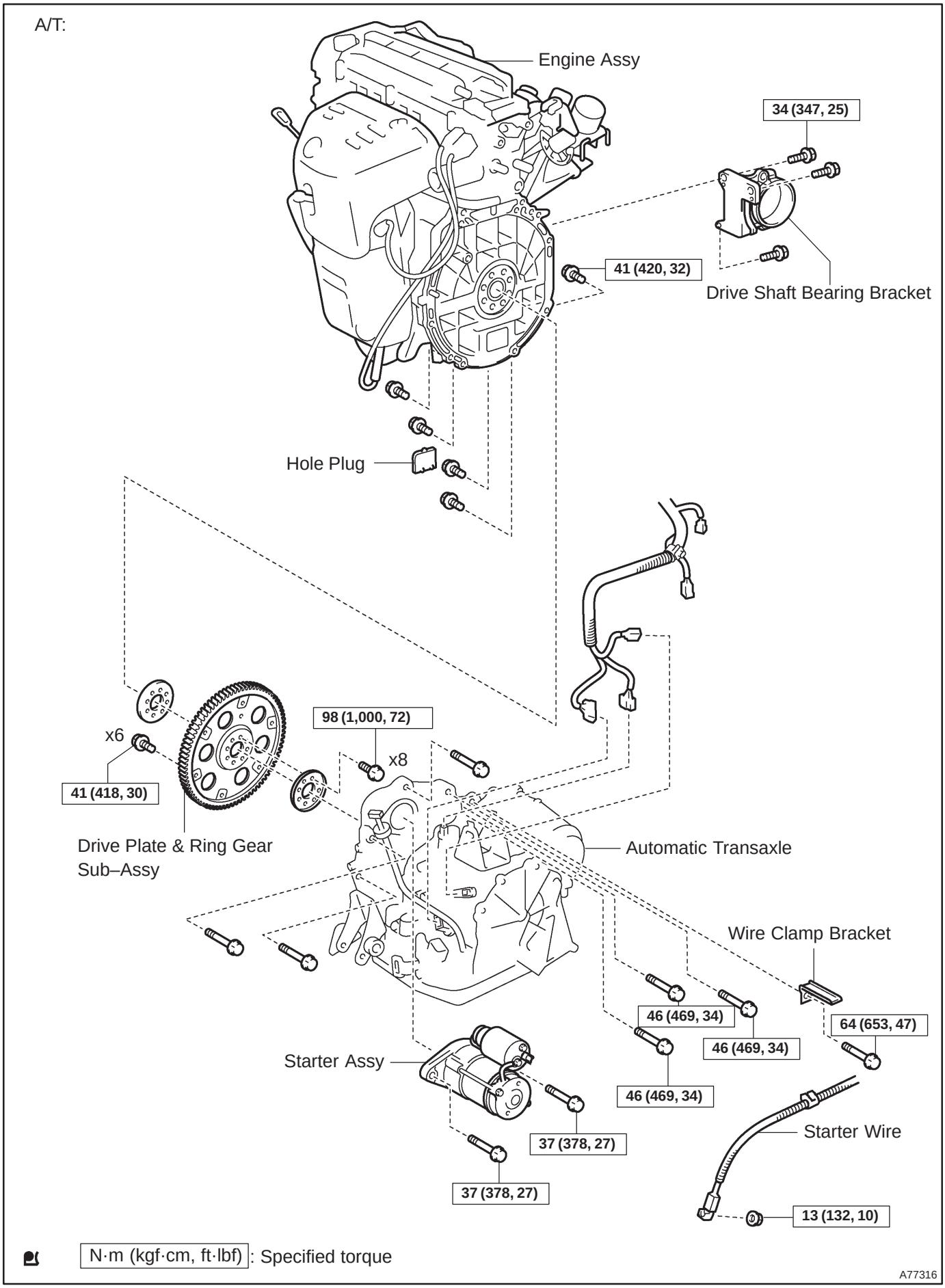
A/T:
Engine Assy
34 (347, 25)
41 (420, 32)
Drive Shaft Bearing Bracket
Hole Plug
98 (1,000, 72)
x6
x8
41 (418, 30)
Drive Plate & Ring Gear Sub–Assy
Automatic Transaxle
Wire Clamp Bracket
46 (469, 34)
46 (469, 34)
64 (653, 47)
46 (469, 34)
Starter Assy
37 (378, 27)
37 (378, 27)
Starter Wire
13 (132, 10)
N·m (kgf·cm, ft·lbf): Specified torque
A77316

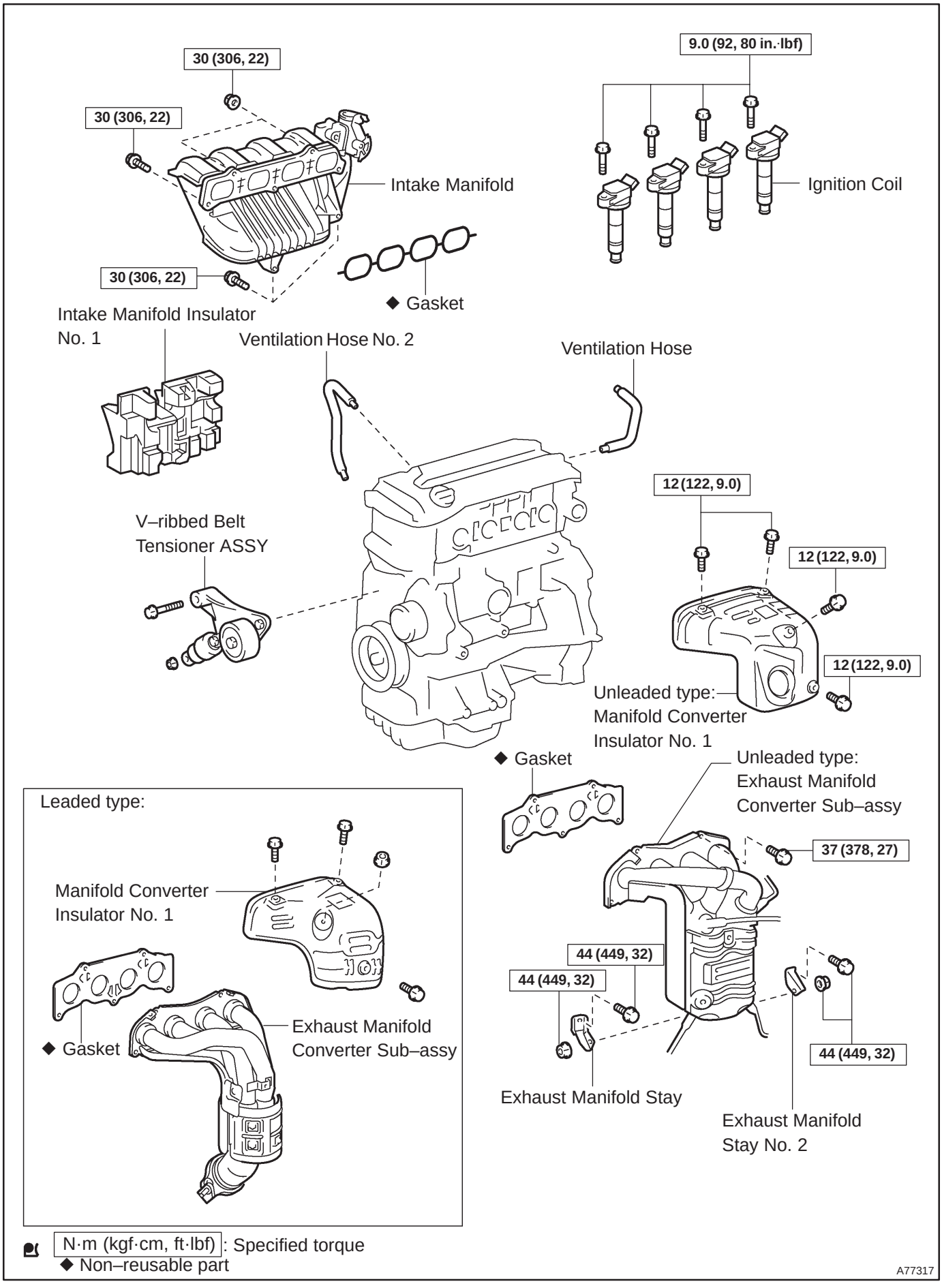
30 (306, 22)
30 (306, 22)
30 (306, 22)
Intake Manifold
◆ Gasket
9.0 (92, 80 in.·lbf)
Ignition Coil
Intake Manifold Insulator No. 1
Ventilation Hose No. 2
Ventilation Hose
V–ribbed Belt Tensioner ASSY
12 (122, 9.0)
12 (122, 9.0)
12 (122, 9.0)
Unleaded type:
Manifold Converter Insulator No. 1
◆ Gasket
Unleaded type:
Exhaust Manifold Converter Sub–assy
37 (378, 27)
44 (449, 32)
44 (449, 32)
44 (449, 32)
Exhaust Manifold Stay
Exhaust Manifold Stay No. 2
Leaded type:
Manifold Converter Insulator No. 1
◆ Gasket
Exhaust Manifold Converter Sub–assy
N·m (kgf·cm, ft·lbf): Specified torque
◆ Non–reusable part
A77317

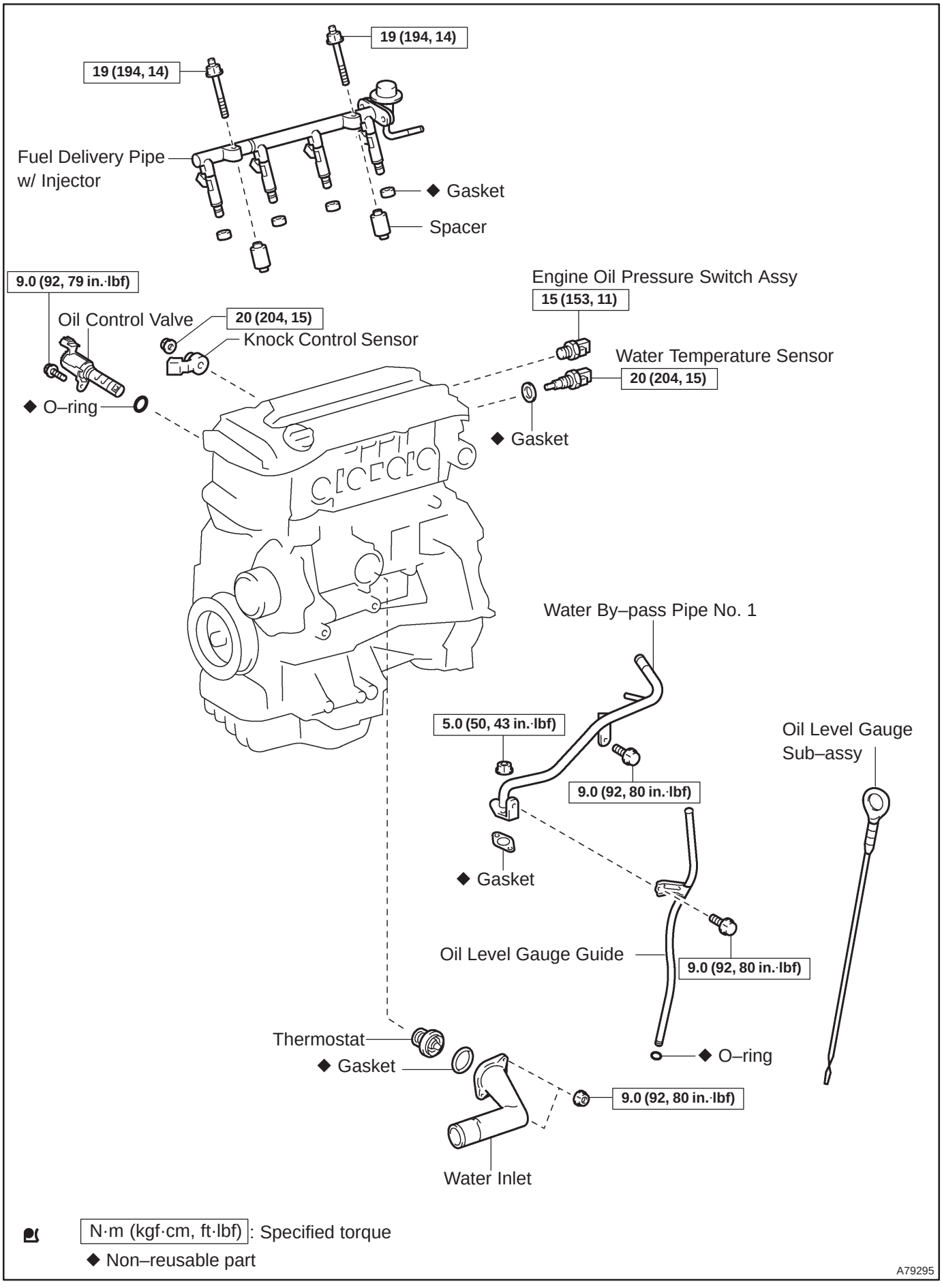
19 (194, 14)
19 (194, 14)
Fuel Delivery Pipe w/ Injector
◆ Gasket
Spacer
9.0 (92, 79 in.·lbf)
Oil Control Valve
20 (204, 15)
Knock Control Sensor
Engine Oil Pressure Switch Assy
15 (153, 11)
Water Temperature Sensor
20 (204, 15)
◆ O–ring
◆ Gasket
Water By–pass Pipe No. 1
5.0 (50, 43 in.·lbf)
9.0 (92, 80 in.·lbf)
Oil Level Gauge Sub–assy
◆ Gasket
Oil Level Gauge Guide
9.0 (92, 80 in.·lbf)
Thermostat
◆ Gasket
◆ O–ring
9.0 (92, 80 in.·lbf)
Water Inlet
N·m (kgf·cm, ft·lbf): Specified torque
◆ Non–reusable part
A79295

141BF–01

REPLACEMENT

1. DISCHARGE FUEL SYSTEM PRESSURE (See page 11–19)
2. REMOVE FRONT WHEELS
3. REMOVE RADIATOR SUPPORT OPENING COVER
4. REMOVE ENGINE ROOM COVER SIDE
5. REMOVE ENGINE UNDER COVER RH
6. REMOVE ENGINE UNDER COVER LH
7. DRAIN COOLANT (See page 16–19)
8. DRAIN ENGINE OIL
(a) Install a new gasket and the drain plug after draining engine oil.
Torque: 25 N·m (255 kgf·cm, 18 ft·lbf)
9. DRAIN MANUAL TRANSAXLE OIL (M/T TRANSAXLE)
Torque: 49 N·m (500 kgf·cm, 36 ft·lbf)
10. DRAIN AUTOMATIC TRANSAXLE FLUID (A/T TRANSAXLE) (See page 40–2)

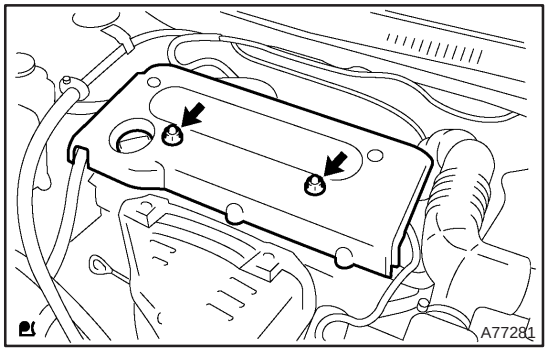

11. REMOVE ENGINE COVER SUB–ASSY NO.1
(a) Remove 2 nuts and the cylinder head cover No. 1.

12. DISCONNECT RADIATOR HOSE INLET
13. DISCONNECT RADIATOR HOSE OUTLET

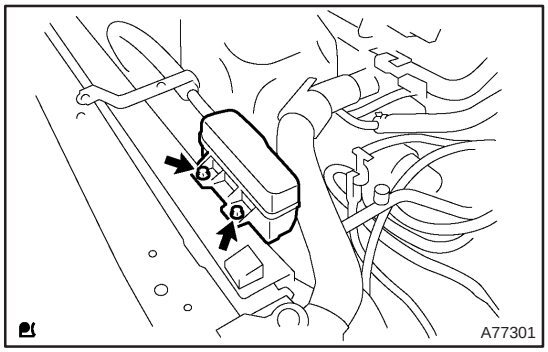

14. SEPARATE RADIATOR RELAY BLOCK
(a) Remove 2 bolts and separate the radiator relay block.

15. SEPARATE COOLER REFRIGERANT SUCTION HOSE NO.1 (RHD(W/ AIR CONDITIONER) STEERING POSITION TYPE)
(a) Remove a bolt and separate the suction hose No. 1.
16. REMOVE RADIATOR ASSY (See page 16–24)
17. REMOVE FAN AND GENERATOR V BELT (See page 14–105)
18. REMOVE GENERATOR ASSY (See page 19–20)
19. REMOVE COMPRESSOR AND MAGNETIC CLUTCH (W/ AIR CONDITIONING)
(a) Remove 4 bolts and separate the compressor and magnetic clutch.
HINT:
Secure the hoses off to the side instead of detaching.

20. REMOVE BATTERY

21. REMOVE AIR CLEANER ASSEMBLY WITH HOSE

(a) Disconnect 2 connectors.
(b) Disconnect the air cleaner hose from the throttle body.

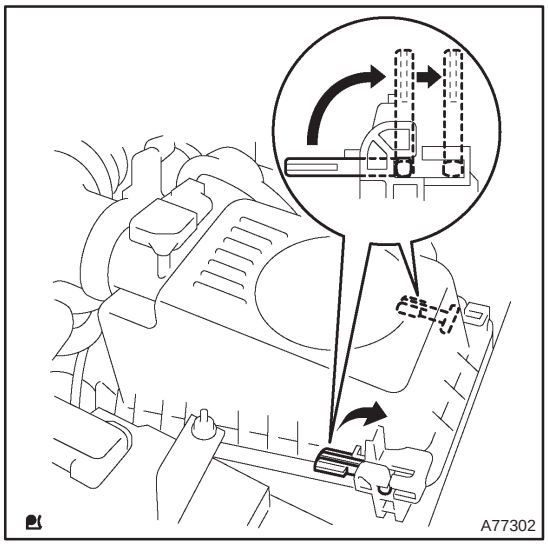

(c) Raise a clamp up, and slide it toward the air cleaner cap, then remove the air cleaner cap from its case.
(d) Remove the air cleaner element.
(e) Remove 4 bolts and the air cleaner case.

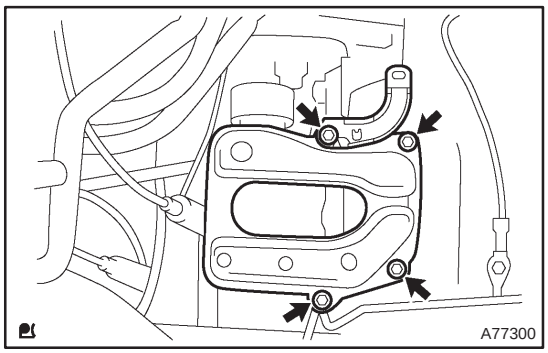

22. REMOVE BATTERY CARRIER

(a) Remove 4 bolts and the battery carrier.

23. REMOVE RADIATOR RESERVE TANK SUB–ASSY

(a) Remove 2 bolts and the radiator reserve tank.

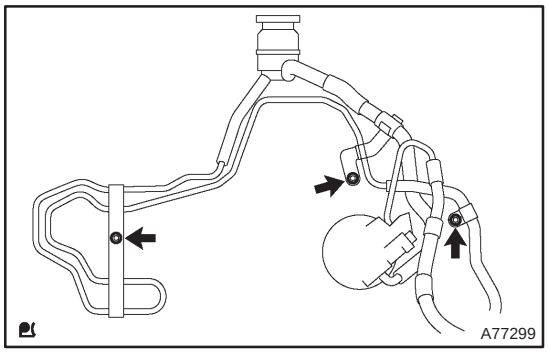

24. SEPARATE RETURN TUBE SUB–ASSY

(a) Remove 3 bolts as shown in the illustration.

25. SEPARATE VANE PUMP OIL RESERVOIR ASSY

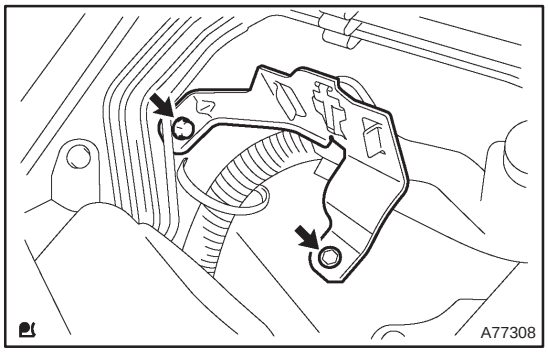

26. REMOVE OIL RESERVOIR BRACKET NO.1

(a) Remove 2 bolts and the oil reservoir bracket No. 1.

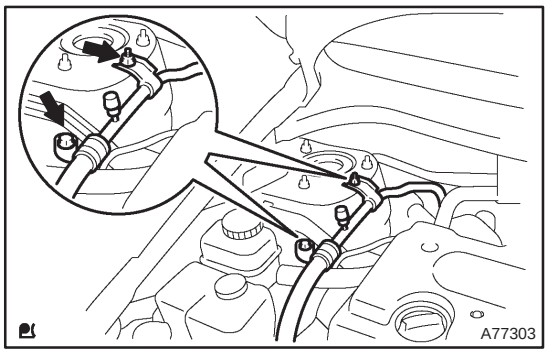

27. SEPARATE COOLER REFRIGERANT SUCTION HOSE NO.1 (LHD(W/ AIR CONDITIONER) STEERING POSITION TYPE)

(a) Remove 2 nuts and separate the suction hose.

28. REMOVE ENGINE SERVICE COVER BRACKET RH (W/O AIR CONDITIONING)

(a) Remove a bolt and the service cover bracket RH.

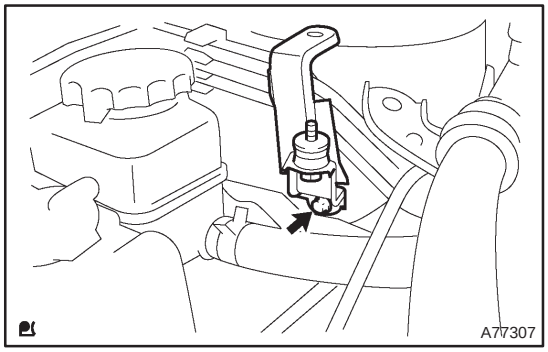

29. REMOVE COOLER BRACKET (LHD(W/ AIR CONDITIONER) STEERING POSITION TYPE)

(a) Remove the 2 nuts and separate the cooler bracket.

30. REMOVE ENGINE SERVICE COVER BRACKET RH (RHD(W/ AIR CONDITIONER) STEERING POSITION TYPE)

(a) Remove the bolt and the service cover bracket RH.

31. DISCONNECT HEATER INLET WATER HOSE (W/ AIR CONDITIONING)

32. DISCONNECT HEATER OUTLET WATER HOSE (W/ AIR CONDITIONING)

33. REMOVE CHARCOAL CANISTER ASSY

34. DISCONNECT FUEL TUBE SUB–ASSY (See page 11–15)

35. DISCONNECT UNION TO CONNECTOR TUBE HOSE

36. REMOVE FLOOR PANEL BRACE FRONT (See page 15–7)

37. REMOVE EXHAUST PIPE ASSY CENTER (See page 15–7)

38. REMOVE EXHAUST PIPE ASSY FRONT (See page 15–7)

39. REMOVE FRONT AXLE HUB LH NUT (See page 30–6)

SST 09330–00030

40. REMOVE FRONT AXLE HUB RH NUT

SST 09330–00030

HINT:

Perform the same procedure as above on the opposite side.

41. SEPARATE TIE ROD END SUB–ASSY LH (See page 51–36)

42. SEPARATE TIE ROD END SUB–ASSY RH

HINT:

Perform the same procedure as above on the opposite side.

43. SEPARATE FRONT STABILIZER LINK ASSY LH (See page 26–26)

44. SEPARATE FRONT STABILIZER LINK ASSY RH

HINT:

Perform the same procedure as above on the opposite side.

45. SEPARATE FRONT SUSPENSION ARM SUB–ASSY LOWER NO.1 LH (M/T TRANSAXLE) (See page 26–21)

46. SEPARATE FRONT SUSPENSION ARM SUB–ASSY LOWER NO.1 LH (A/T TRANSAXLE) (See page 26–16)

47. SEPARATE FRONT SUSPENSION ARM SUB–ASSY LOWER NO.1 RH (M/T TRANSAXLE)

HINT:

Perform the same procedure as above on the opposite side.

48. SEPARATE FRONT SUSPENSION ARM SUB–ASSY LOWER NO.1 RH (A/T TRANSAXLE)

HINT:

Perform the same procedure as above on the opposite side.

49. SEPARATE FRONT AXLE ASSY LH (See page 30–6)

50. SEPARATE FRONT AXLE ASSY RH (See page 30–6)

HINT:

Perform the same procedure as above on the opposite side.

51. SEPARATE CLUTCH RELEASE CYLINDER ASSY (M/T TRANSAXLE)

(a) Remove 7 bolts as shown in the illustration.

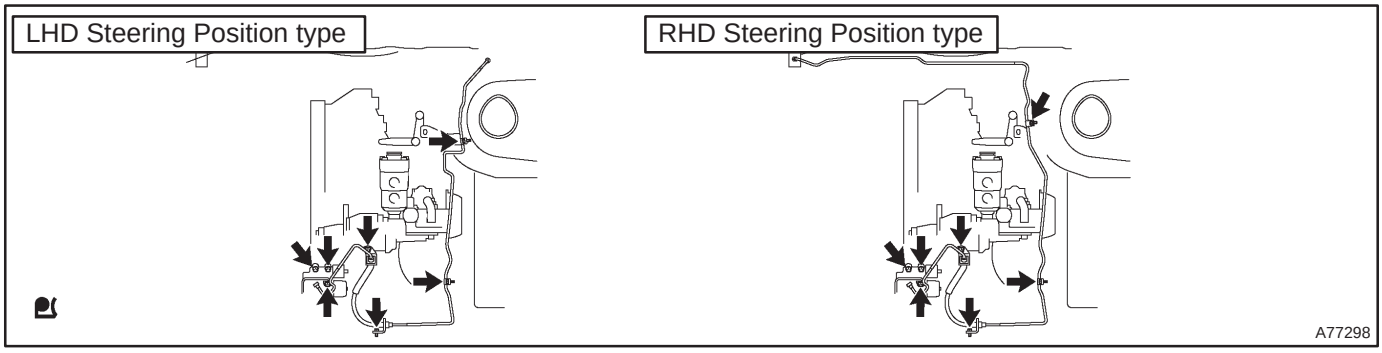

52. SEPARATE TRANSMISSION CONTROL CABLE ASSY (M/T TRANSAXLE) (See page 41–24)

53. SEPARATE TRANSMISSION CONTROL CABLE ASSY (A/T TRANSAXLE) (See page 40–25)

54. SEPARATE ACCELERATOR CONTROL CABLE ASSY

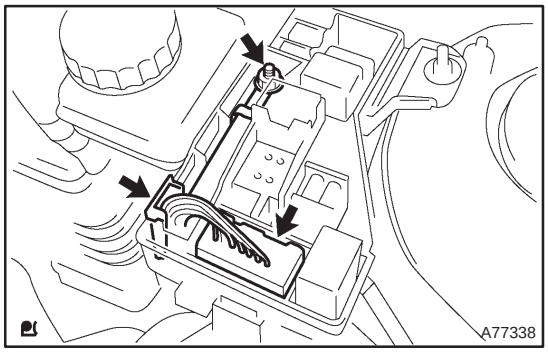

55. SEPARATE ENGINE ROOM RELAY BLOCK NO.2

(a) Remove the nut and disconnect the connector as shown in the illustration.

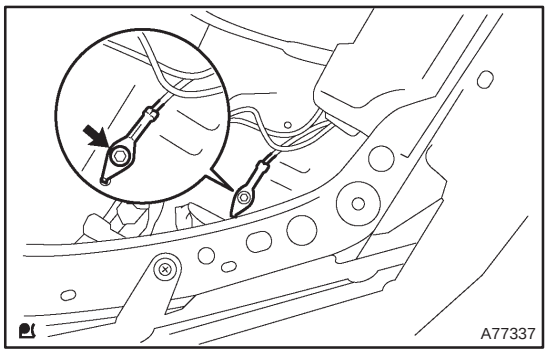

56. SEPARATE ENGINE WIRE

(a) Remove the bolt and separate the grand terminal.

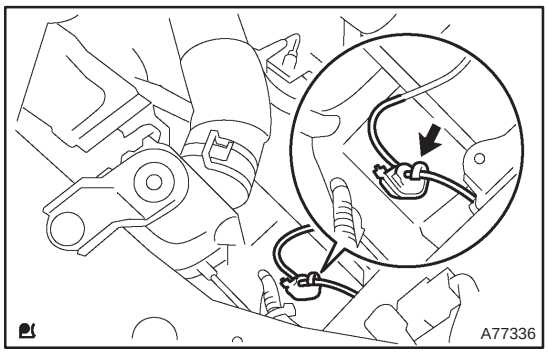

(b) Separate the grand terminal connector.
(c) Remove the glove compartment door panel.
(d) Separate the engine wire.

57. SEPARATE STEERING INTERMEDIATE SHAFT ASSY NO.2 (See page 50–9)

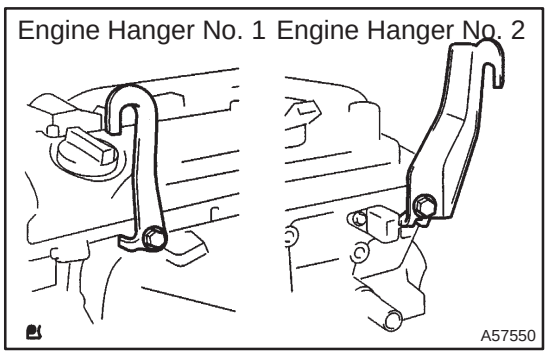

58. INSTALL ENGINE HANGERS

(a) Install the engine hanger No. 1 (12281–28010, 28020, 28030) with the bolt (91512–61020).
Torque: 38 N·m (387 kgf·cm, 28 ft·lbf)
(b) Install the engine hanger No. 2 (12282–28010, 28020, 28030) with the bolt (91512–61020).
Torque: 38 N·m (387 kgf·cm, 28 ft·lbf)

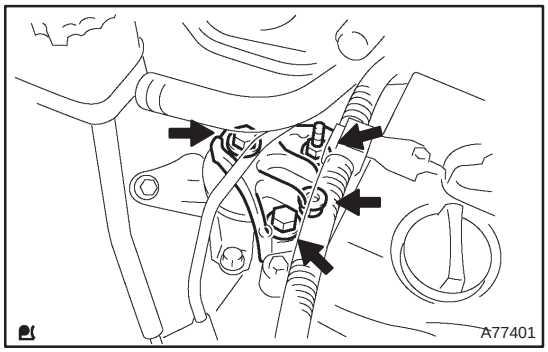

59. REMOVE ENGINE MOUNTING BRACKET NO.2 RH

(a) Set the engine lifter.

(b) Remove 2 bolts and 2 nuts, and then remove the mounting bracket No. 2.

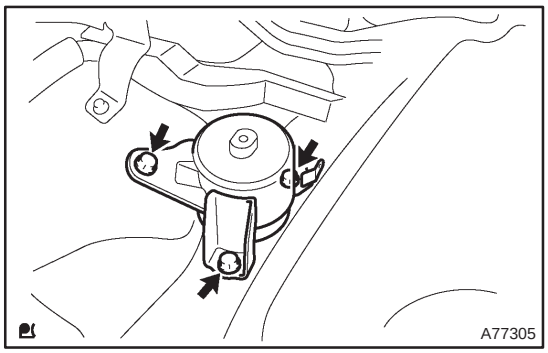

60. REMOVE TRANSVERSE ENGINE ENGINE MOUNTING INSULATOR

(a) Remove 3 bolts and the engine mounting insulator.

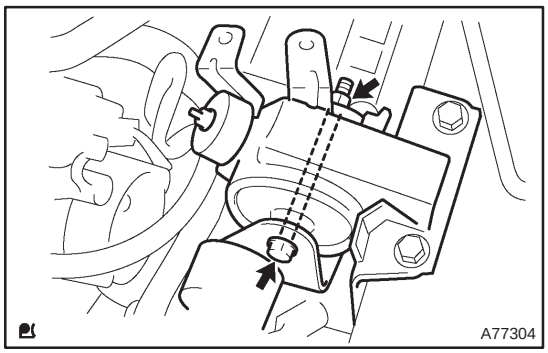

61. REMOVE TRANSVERSE ENGINE ENGINE MOUNTING INSULATOR

(a) Remove the through bolt and nut, and then detach the engine mounting insulator.

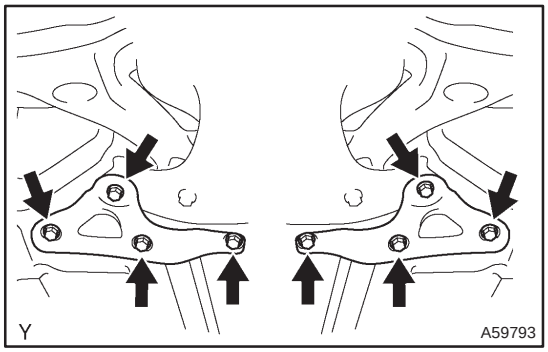

62. REMOVE ENGINE ASSEMBLY WITH TRANSAXLE

(a) Remove the8 bolts and the front suspension member braces.

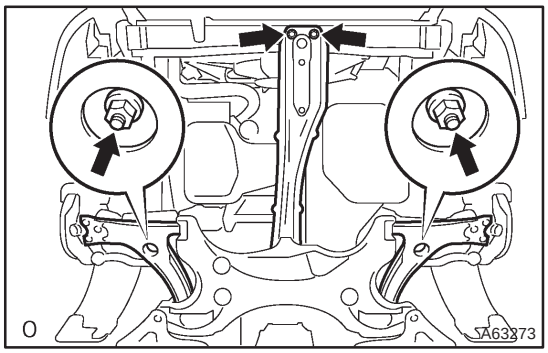

(b) Remove the 2 bolts and 2 nuts shown in the illustration.

(c) Carefully remove the engine assembly with transaxle from the vehicle.

63. SEPARATE VANE PUMP ASSY

(a) Disconnect the PS oil pressure switch connector.

(b) Remove the 2 bolts and separate the vane pump from the engine.

64. REMOVE STARTER ASSY (See page 19–12)

65. REMOVE FRONT SUSPENSION CROSSMEMBER W/CENTER MEMBER

(a) Remove the through bolt and nut from the engine mounting insulator FR.

(b) Remove the through bolt and nut from the engine mounting insulator RR.

66. REMOVE FRONT DRIVE SHAFT ASSY LH (See page 30–6)

67. REMOVE FRONT DRIVE SHAFT ASSY RH (See page 30–6)

68. REMOVE MANUAL TRANSAXLE ASSY (M/T TRANSAXLE) (See page 41–24)

69. REMOVE AUTOMATIC TRANSAXLE ASSY (A/T TRANSAXLE) (See page 40–25)

70. REMOVE CLUTCH COVER ASSY (M/T TRANSAXLE) (See page 42–26)

71. REMOVE CLUTCH DISC ASSY (M/T TRANSAXLE) (See page 42–26)

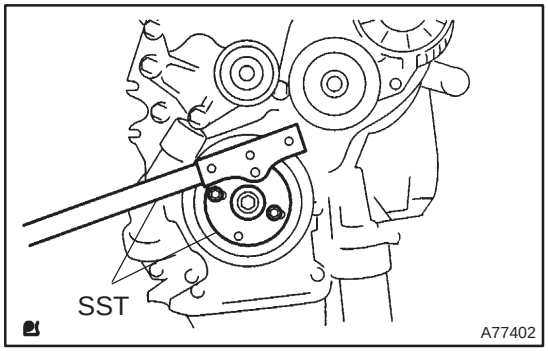

72. REMOVE DRIVE PLATE AND RING GEAR OR FLYWHEEL

(a) Using SST, fix the crankshaft pulley and remove the drive plate and ring gear or flywheel.

SST 09213–54015 (91651–60855), 09330–00021

73. REMOVE CAMSHAFT TIMING OIL CONTROL VALVE ASSY (W/ VVT–i)

(a) Remove a bolt, O–ring and the camshaft timing oil control valve.

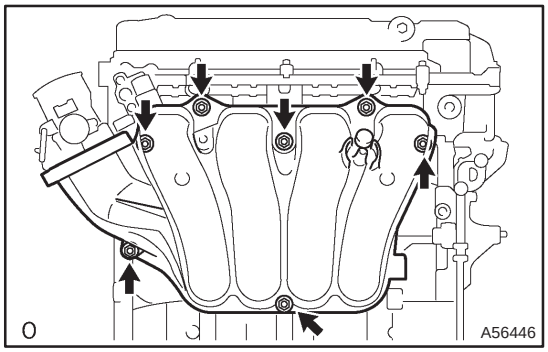

74. REMOVE INTAKE MANIFOLD

(a) Remove the 5 bolts and 2 nuts, and then remove the intake manifold.

75. REMOVE VENTILATION HOSE

76. REMOVE VENTILATION HOSE NO.2

77. REMOVE ENGINE WIRE

78. REMOVE INTAKE MANIFOLD INSULATOR NO.1

79. REMOVE OIL LEVEL GAGE SUB–ASSY

80. REMOVE OIL LEVEL GAGE GUIDE

81. REMOVE MANIFOLD CONVERTER INSULATOR NO.1

(a) Remove the 4 bolts and the manifold converter insulator No. 1.

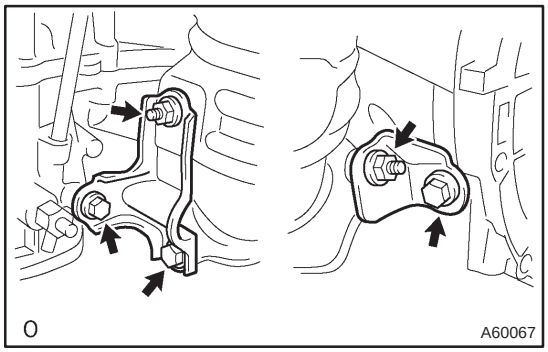

82. REMOVE EXHAUST MANIFOLD CONVERTER SUB–ASSY

(a) Remove the 3 bolts and 2 nuts, and then detach the No. 1 and No. 2 exhaust manifold stays.

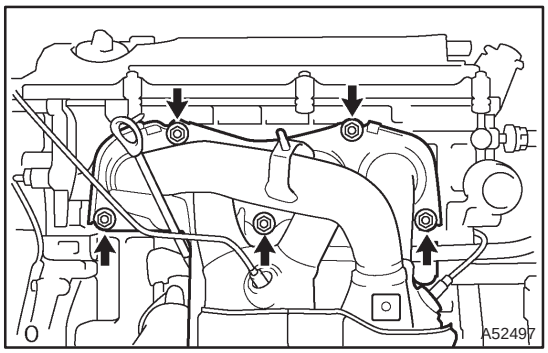

(b) Remove the 5 nuts, and then remove the exhaust manifold converter and gasket.

83. REMOVE WATER INLET

(a) Remove the 2 nuts and the water inlet.

84. REMOVE THERMOSTAT

85. REMOVE IGNITION COIL ASSY

(a) Remove the 4 bolts and the 4 ignition coils.

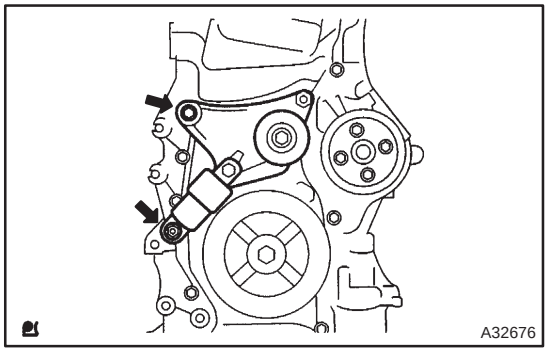

86. REMOVE V–RIBBED BELT TENSIONER ASSY

(a) Remove the bolt and nut, and then remove the V–ribbed belt tensioner.

87. REMOVE DRIVE SHAFT BEARING BRACKET

(a) Remove the 3 bolts and the drive shaft bearing bracket.

88. REMOVE FUEL DELIVERY PIPE W/INJECTOR (See page 11–26)

89. REMOVE WATER BY–PASS PIPE NO.1

(a) Remove the bolt and 2 nuts, and then detach the water by–pass pipe No. 1.

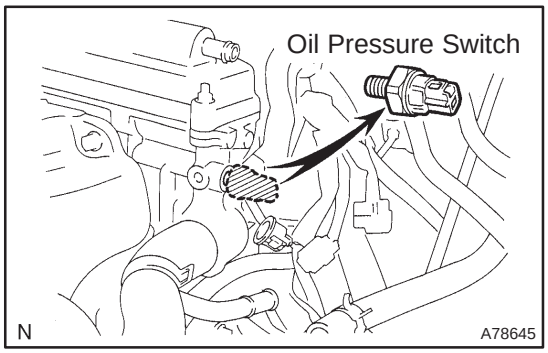

90. REMOVE ENGINE OIL PRESSURE SWITCH ASSY

(a) Using SST, remove the engine oil pressure switch.
SST 09268–46021

91. REMOVE KNOCK SENSOR

(a) Remove the nut and the knock sensor.

92. REMOVE ENGINE COOLANT TEMPERATURE SENSOR

(a) Using SST, remove the engine coolant temperature sensor.
SST 09817–33190

93. REPLACE PARTIAL ENGINE ASSY

94. INSTALL ENGINE COOLANT TEMPERATURE SENSOR

(a) Install a new gasket to the engine coolant temperature sensor.

(b) Install the engine coolant temperature sensor.
Torque: 20 N·m (208 kgf·cm, 15 ft·lbf)
SST 09817–33190

95. INSTALL KNOCK SENSOR
Torque: 20 N·m (208 kgf·cm, 15 ft·lbf)

96. INSTALL ENGINE OIL PRESSURE SWITCH ASSY

(a) Clean the threads of the oil pressure switch, apply adhesive there.
Adhesive: Part No. 08833–00080 THREE BOND 1344 or equivalent

(b) Install the oil pressure switch.
Torque: 15 N·m (153 kgf·cm, 11 ft·lbf)

97. INSTALL WATER BY–PASS PIPE NO.1

(a) Install a new gasket and the water by–pass pipe No. 1 with the bolt and 2 nuts.
Torque: 9.0 N·m (92 kgf·cm, 80 in.·lbf)

98. INSTALL FUEL DELIVERY PIPE W/INJECTOR (See page 11–26)

99. INSTALL DRIVE SHAFT BEARING BRACKET
Torque: 54 N·m (551 kgf·cm, 40 ft·lbf)

100. INSTALL V–RIBBED BELT TENSIONER ASSY
Torque: 60 N·m (607 kgf·cm, 44 ft·lbf)

101. INSTALL IGNITION COIL ASSY
Torque: 9.0 N·m (92 kgf·cm, 80 in.·lbf)

102. INSTALL THERMOSTAT (See page 16–23)

103. INSTALL WATER INLET
Torque: 9.0 N·m (92 kgf·cm, 80 in.·lbf)

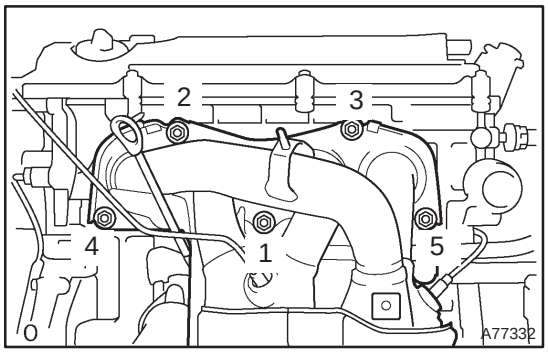

104. INSTALL EXHAUST MANIFOLD CONVERTER SUB–ASSY

(a) Install a new gasket and the exhaust manifold converter with the 5 nuts.
Torque: 37 N·m (378 kgf·cm, 27 ft·lbf)

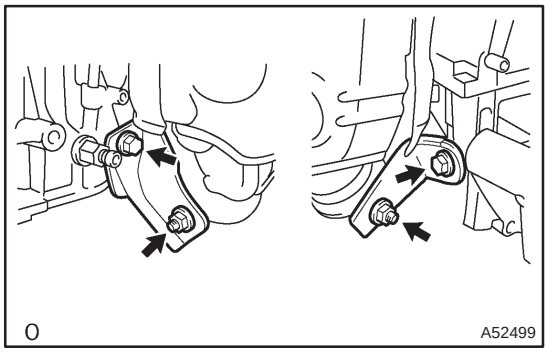

(b) Install the No. 1 and No. 2 exhaust manifold stays with the 2 bolts and 2 nuts.
Torque: 44 N·m (449 kgf·cm, 32 ft·lbf)

105. INSTALL MANIFOLD CONVERTER INSULATOR NO.1
Torque: 12 N·m (122 kgf·cm, 9.0 ft·lbf)

106. INSTALL OIL LEVEL GAGE GUIDE

(a) Apply a light coat of engine oil to the O–ring, install it to the oil level gauge guide.
(b) Install the oil level gauge and guide with the bolt.
Torque: 9.0 N·m (92 kgf·cm, 80 in.·lbf)

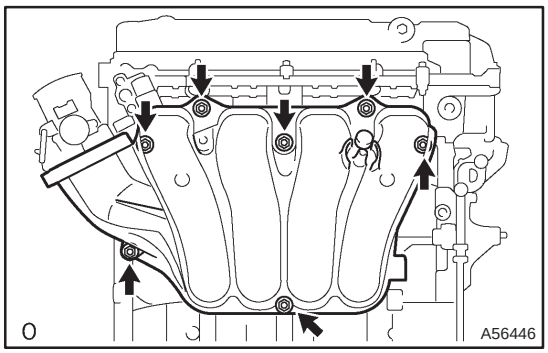

107. INSTALL INTAKE MANIFOLD

(a) Install a new gasket and the intake manifold with the 5 bolts and 2 nuts.
Torque: 30 N·m (306 kgf·cm, 22 ft·lbf)

108. INSTALL CAMSHAFT TIMING OIL CONTROL VALVE ASSY (W/ VVT–i)

(a) Apply light coat of engine oil to the new O–ring and install it to the camshaft timing oil control valve.
(b) Install the camshaft oil control valve with the bolt.
Torque: 9.0 N·m (92 kgf·cm, 79 in.·lbf)

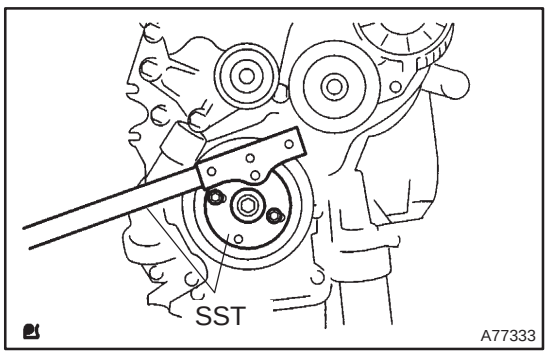

109. INSTALL DRIVE PLATE AND RING GEAR OR FLYWHEEL

(a) Hold the crankshaft with SST.
SST 09213–54015 (91651–60855), 09330–00021
Adhesive:
Part No. 08833–00070, THREE BOND or equivalent

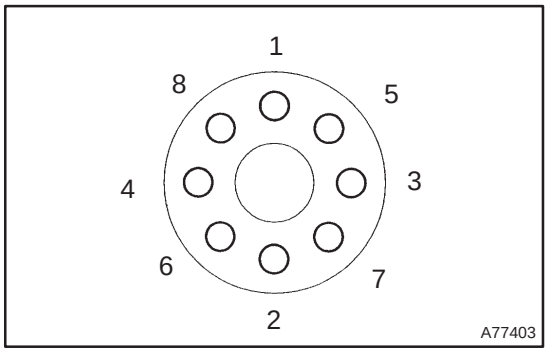

(b) Install the drive plate. (A/T)
(1) Clean the bolt and bolt hole.
(2) Apply adhesive to the bolts.
(3) Using several steps, install and tighten the 8 bolts uniformly in the sequence shown in the illustration.
Torque: 98 N·m (1,000 kgf·cm, 72 ft·lbf)

(c) Install the flywheel. (M/T)
(1) Clean the bolt hole.
(2) Using several steps, install and tighten the 8 bolts uniformly in the sequence shown in the illustration.
Torque: 130 N·m (1,327 kgf·cm, 96 ft·lbf)

NOTICE:
Do not reuse the flywheel bolt.

110. INSTALL CLUTCH DISC ASSY (M/T TRANSAXLE) (See page 42–26)
111. INSTALL CLUTCH COVER ASSY (M/T TRANSAXLE) (See page 42–26)
112. INSTALL MANUAL TRANSAXLE ASSY (M/T TRANSAXLE) (See page 41–24)
113. INSTALL AUTOMATIC TRANSAXLE ASSY (A/T TRANSAXLE) (See page 40–25)
114. INSTALL FRONT DRIVE SHAFT ASSY LH (See page 30–6)
115. INSTALL FRONT DRIVE SHAFT ASSY RH (See page 30–6)
116. INSTALL FRONT SUSPENSION CROSSMEMBER W/CENTER MEMBER
(a) Install the engine mounting insulator FR with the through bolt and nut.
Torque: 87 N·m (887 kgf·cm, 64 ft·lbf)
(b) Install the engine mounting insulator RR with the through bolt and nut.
Torque: 87 N·m (887 kgf·cm, 64 ft·lbf)
117. INSTALL STARTER ASSY (See page 19–12)
118. INSTALL VANE PUMP ASSY
Torque: 37 N·m (370 kgf·cm, 27 ft·lbf)

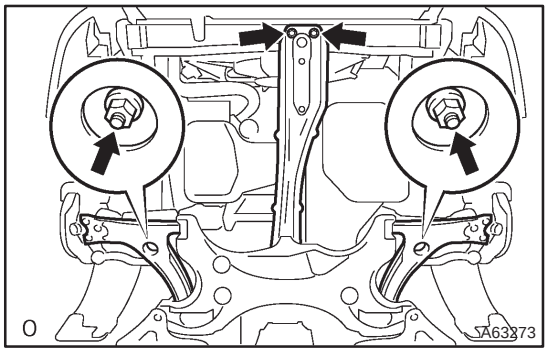

119. INSTALL ENGINE ASSEMBLY WITH TRANSAXLE
(a) Install the 2 bolts and 2 nuts as shown in the illustration.
Torque:
Bolt 45 N·m (459 kgf·cm, 33 ft·lbf)
Nut 133 N·m (1,356 kgf·cm, 98 ft·lbf)

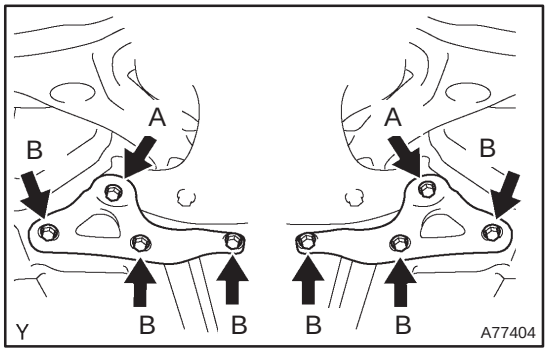

(b) Install the front suspension member braces with the 8 bolts.
Torque:
Bolt A 133 N·m (1,356 kgf·cm, 98 ft·lbf)
Bolt B 80 N·m (816 kgf·cm, 59 ft·lbf)

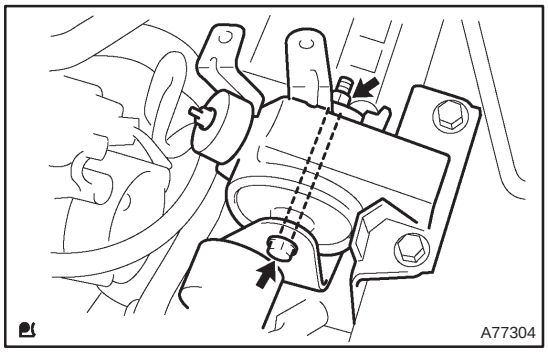

120. INSTALL TRANSVERSE ENGINE ENGINE MOUNTING INSULATOR
Torque: 87 N·m (887 kgf·cm, 64 ft·lbf)

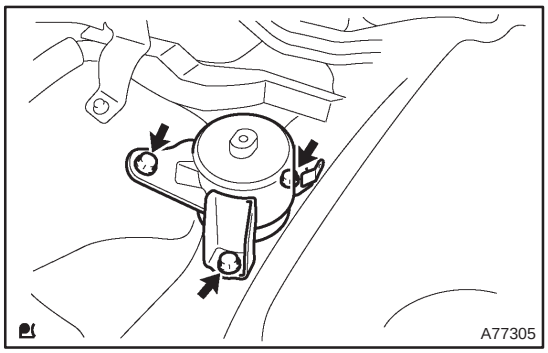

121. INSTALL TRANSVERSE ENGINE ENGINE MOUNTING INSULATOR
Torque: 52 N·m (530 kgf·cm, 38 ft·lbf)

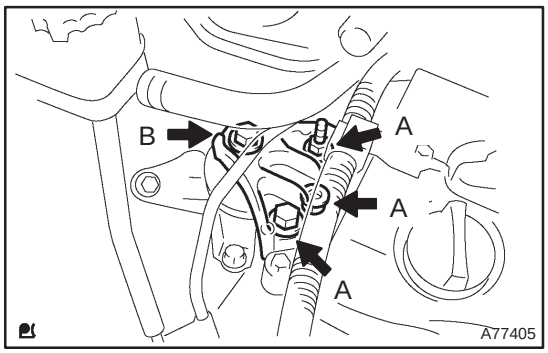

122. INSTALL ENGINE MOUNTING BRACKET NO.2 RH
Torque:
A 52 N·m (530 kgf·cm, 38 ft·lbf)
B 113 N·m (1,152 kgf·cm, 83 ft·lbf)

123. REMOVE ENGINE HANGERS
124. INSTALL STEERING INTERMEDIATE SHAFT ASSY NO.2 (See page 50–9)
125. INSTALL TRANSMISSION CONTROL CABLE ASSY (M/T TRANSAXLE) (See page 41–24)
126. INSTALL TRANSMISSION CONTROL CABLE ASSY (A/T TRANSAXLE) (See page 40–25)
127. INSTALL CLUTCH RELEASE CYLINDER ASSY (M/T TRANSAXLE)

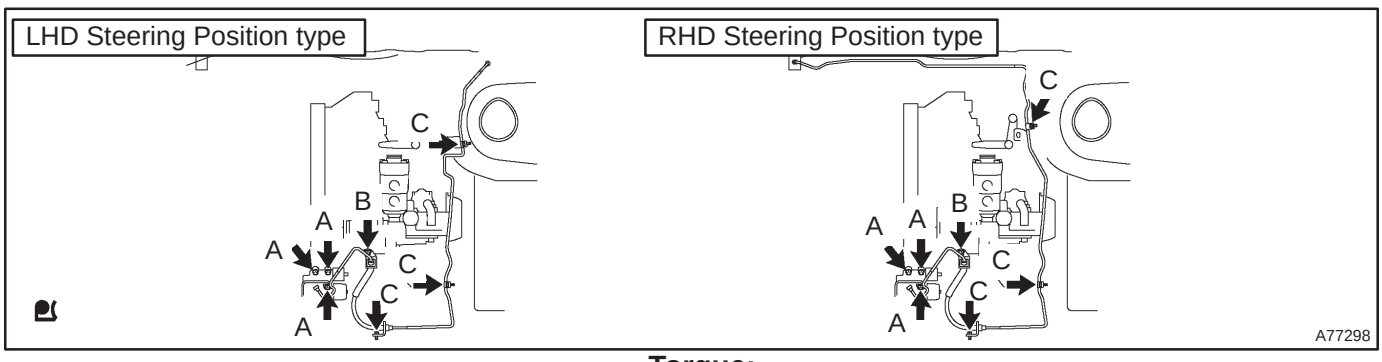

Torque:
Bolt A 12 N·m (122 kgf·cm, 89 ft·lbf)
Bolt B 9.0 N·m (92 kgf·cm, 79 in.·lbf)
Bolt C 5.0 N·m (51 kgf·cm, 44 in.·lbf)

128. INSTALL FRONT AXLE ASSY LH
Torque: 294 N·m (3,000 kgf·cm, 217 ft·lbf)
129. INSTALL FRONT AXLE ASSY RH
Torque: 294 N·m (3,000 kgf·cm, 217 ft·lbf)
130. INSTALL FRONT SUSPENSION ARM SUB–ASSY LOWER NO.1 LH (M/T TRANSAXLE)
Torque: 142 N·m (1,448 kgf·cm, 104 ft·lbf)
131. INSTALL FRONT SUSPENSION ARM SUB–ASSY LOWER NO.1 LH (A/T TRANSAXLE)
Torque: 142 N·m (1,448 kgf·cm, 104 ft·lbf)
132. INSTALL FRONT SUSPENSION ARM SUB–ASSY LOWER NO.1 RH (M/T TRANSAXLE)
Torque: 142 N·m (1,448 kgf·cm, 104 ft·lbf)
133. INSTALL FRONT SUSPENSION ARM SUB–ASSY LOWER NO.1 RH (A/T TRANSAXLE)
Torque: 142 N·m (1,448 kgf·cm, 104 ft·lbf)
134. INSTALL FRONT STABILIZER LINK ASSY LH
Torque: 74 N·m (755 kgf·cm, 55 ft·lbf)
135. INSTALL FRONT STABILIZER LINK ASSY RH
Torque: 74 N·m (755 kgf·cm, 55 ft·lbf)
136. INSTALL TIE ROD END SUB–ASSY LH (See page 51–36)
137. INSTALL TIE ROD END SUB–ASSY RH
HINT:
Perform the same procedure as above on the opposite side.
138. INSTALL FRONT AXLE HUB LH NUT (See page 30–6)
139. INSTALL FRONT AXLE HUB RH NUT
HINT:
Perform the same procedure as above on the opposite side.
140. INSTALL EXHAUST PIPE ASSY FRONT (See page 15–7)
141. INSTALL EXHAUST PIPE ASSY CENTER (See page 15–7)
142. INSTALL FLOOR PANEL BRACE FRONT
Torque: 30 N·m (306 kgf·cm, 22 ft·lbf)
143. INSTALL ENGINE SERVICE COVER BRACKET RH (W/O AIR CONDITIONING)
Torque: 9.0 N·m (92 kgf·cm, 80 in.·lbf)
144. INSTALL COOLER BRACKET (LHD(W/ AIR CONDITIONER) STEERING POSITION TYPE)
Torque: 9.0 N·m (92 kgf·cm, 80 in.·lbf)
145. INSTALL ENGINE SERVICE COVER BRACKET RH (RHD(W/ AIR CONDITIONER) STEERING POSITION TYPE)
Torque: 9.0 N·m (92 kgf·cm, 80 in.·lbf)
146. INSTALL COOLER REFRIGERANT SUCTION HOSE NO.1 (LHD(W/ AIR CONDITIONER) STEERING POSITION TYPE)
147. INSTALL OIL RESERVOIR BRACKET NO.1
Torque: 8.0 N·m (82 kgf·cm, 71 in.·lbf)
148. INSTALL RETURN TUBE SUB–ASSY
Torque: 8.0 N·m (82 kgf·cm, 71 in.·lbf)
149. INSTALL RADIATOR RESERVE TANK SUB–ASSY
Torque: 5.0 N·m (51 kgf·cm, 44 in.·lbf)
150. INSTALL BATTERY CARRIER
151. INSTALL AIR CLEANER ASSEMBLY WITH HOSE
Torque: 5.0 N·m (51 kgf·cm, 44 in.·lbf)
152. INSTALL COMPRESSOR AND MAGNETIC CLUTCH (W/ AIR CONDITIONING)
Torque: 25 N·m (255 kgf·cm, 18 in.·lbf)
153. INSTALL GENERATOR ASSY (See page 19–20)
154. INSTALL FAN AND GENERATOR V BELT (See page 14–105)

155. INSTALL RADIATOR ASSY (See page 16–24)
156. INSTALL RADIATOR RELAY BLOCK
Torque: 5.0 N·m (51 kgf·cm, 44 in.·lbf)
157. INSTALL ENGINE COVER SUB–ASSY NO.1
Torque: 7.0 N·m (71 kgf·cm, 62 in.·lbf)
158. ADD MANUAL TRANSAXLE OIL (M/T TRANSAXLE)
159. ADD AUTOMATIC TRANSAXLE FLUID (A/T TRANSAXLE)
160. ADD ENGINE OIL
161. ADD COOLANT (See page 16–19)
162. ADD POWER STEERING FLUID
163. BLEED POWER STEERING FLUID
164. CHECK FOR ENGINE OIL LEAKS
165. CHECK FOR ENGINE COOLANT LEAKS (See page 16–13)
166. CHECK FOR FUEL LEAKS (See page 11–15)
167. INSTALL FRONT WHEELS
Torque: 103 N·m (1,050 kgf·cm, 76 ft·lbf)
168. ADJUST FRONT WHEEL ALIGNMENT (See page 26–6)
169. INSPECT CHECK IDLE SPEED AND IGNITION TIMING (See page 14–101)
170. INSPECT CO/HC (See page 14–101)
171. CHECK ABS SPEED SENSOR SIGNAL

CHAIN SUB–ASSY (1AZ–FE)

COMPONENTS

141B7–01

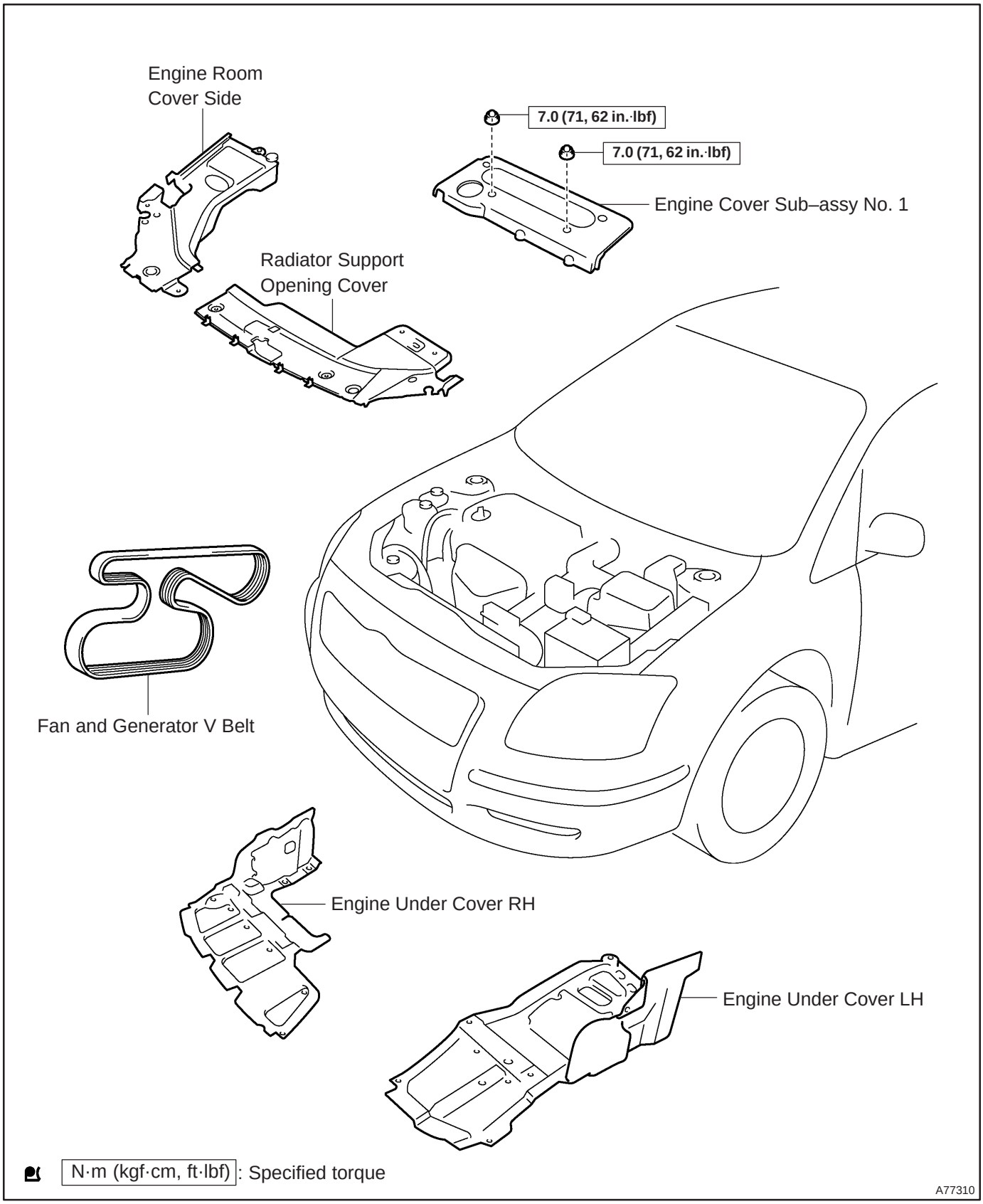

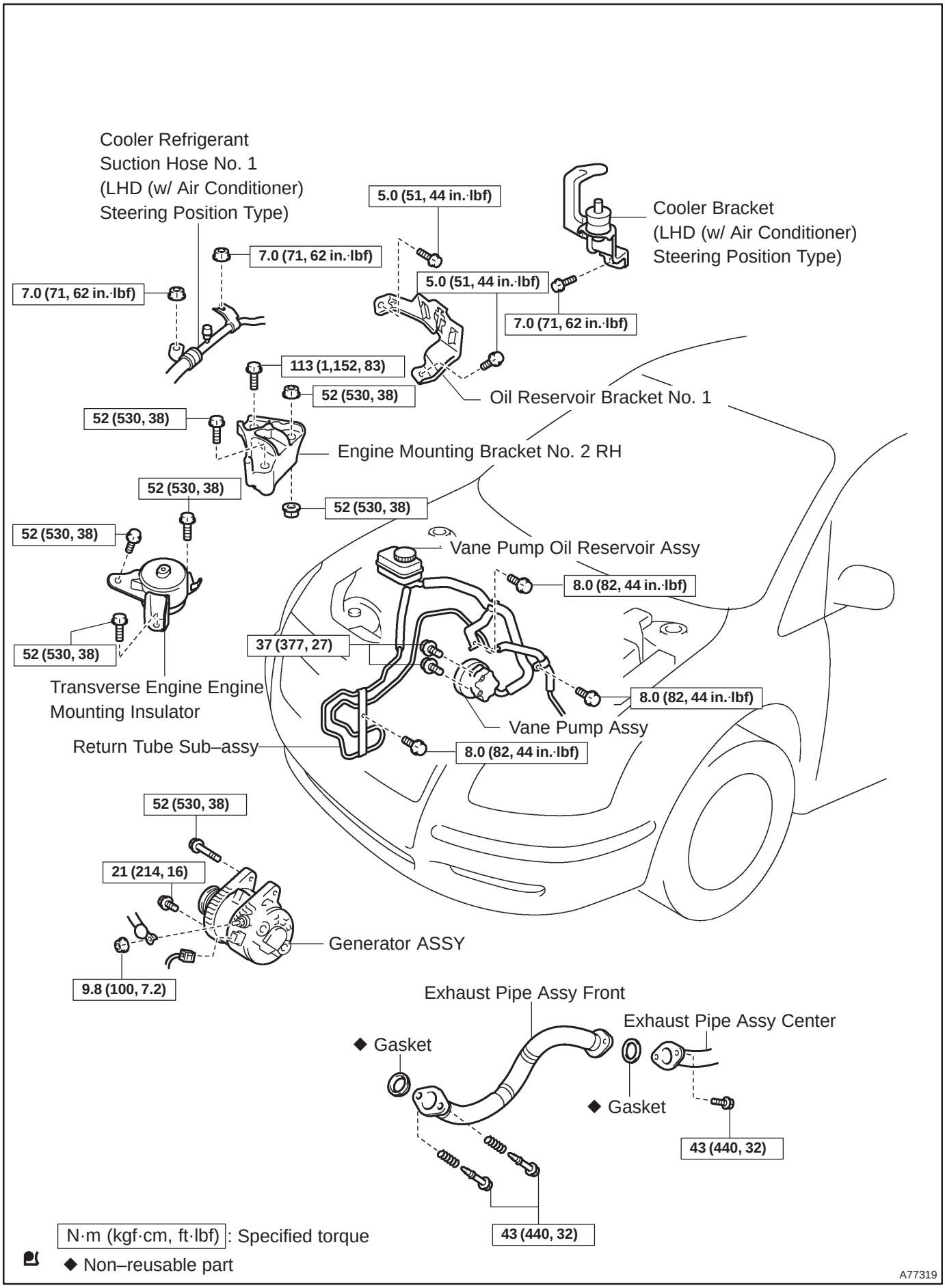
Cooler Refrigerant
Suction Hose No. 1
(LHD (w/ Air Conditioner)
Steering Position Type)
5.0 (51, 44 in.·lbf)
Cooler Bracket
(LHD (w/ Air Conditioner)
Steering Position Type)
7.0 (71, 62 in.·lbf)
7.0 (71, 62 in.·lbf)
5.0 (51, 44 in.·lbf)
7.0 (71, 62 in.·lbf)
113 (1,152, 83)
52 (530, 38)
Oil Reservoir Bracket No. 1
52 (530, 38)
Engine Mounting Bracket No. 2 RH
52 (530, 38)
52 (530, 38)
52 (530, 38)
Vane Pump Oil Reservoir Assy
8.0 (82, 44 in.·lbf)
37 (377, 27)
52 (530, 38)
Transverse Engine Engine
Mounting Insulator
8.0 (82, 44 in.·lbf)
Vane Pump Assy
Return Tube Sub–assy
8.0 (82, 44 in.·lbf)
52 (530, 38)
21 (214, 16)
Generator ASSY
9.8 (100, 7.2)
Exhaust Pipe Assy Front
Exhaust Pipe Assy Center
◆ Gasket
◆ Gasket
43 (440, 32)
43 (440, 32)
N·m (kgf·cm, ft·lbf): Specified torque
◆ Non–reusable part
A77319

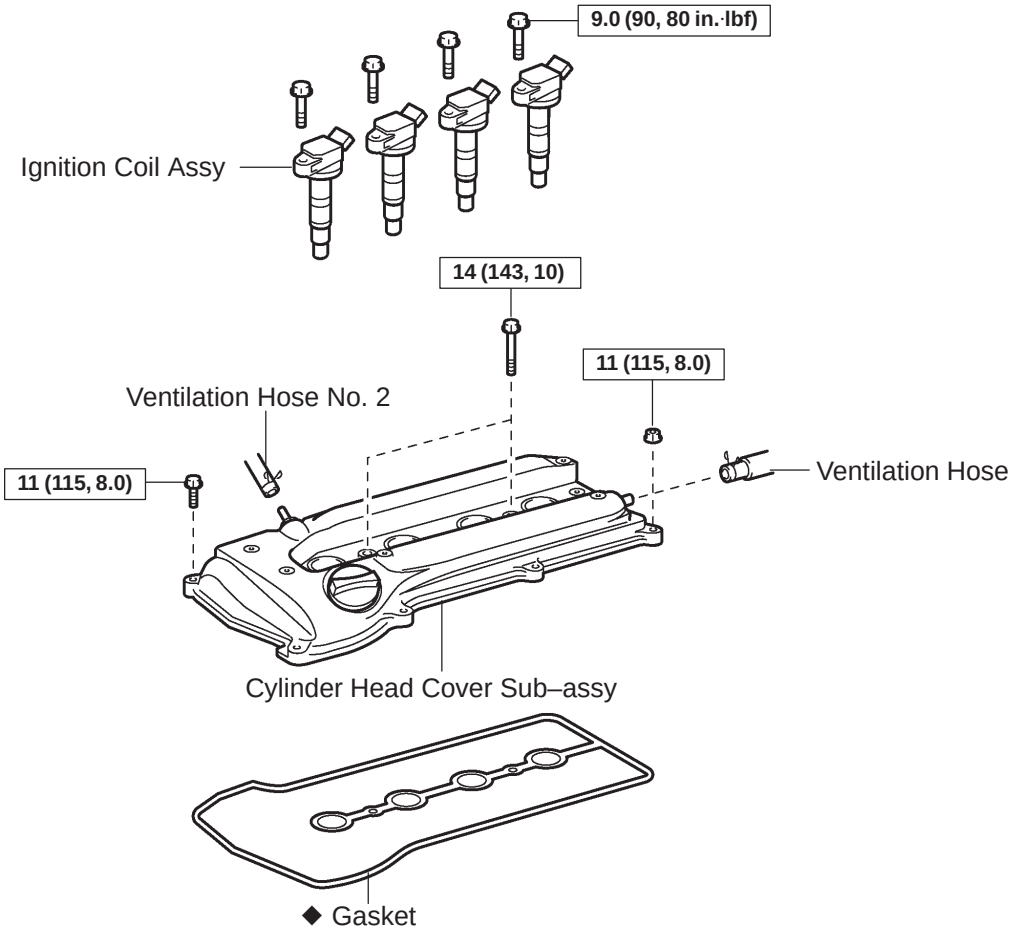

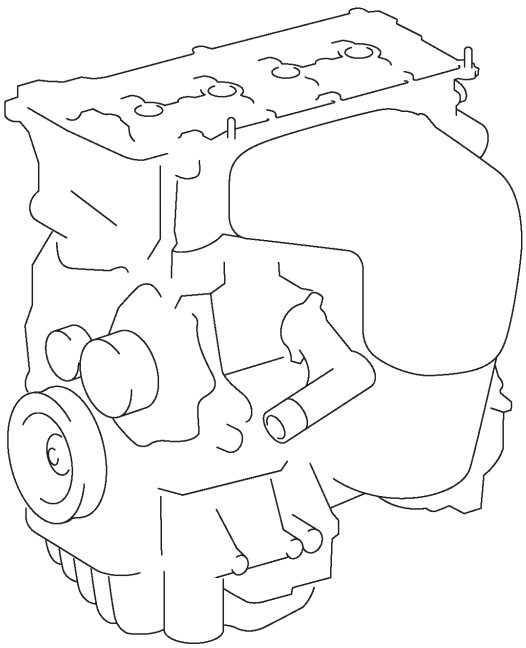

N·m (kgf·cm, ft·lbf): Specified torque

◆ Non–reusable part

A77320

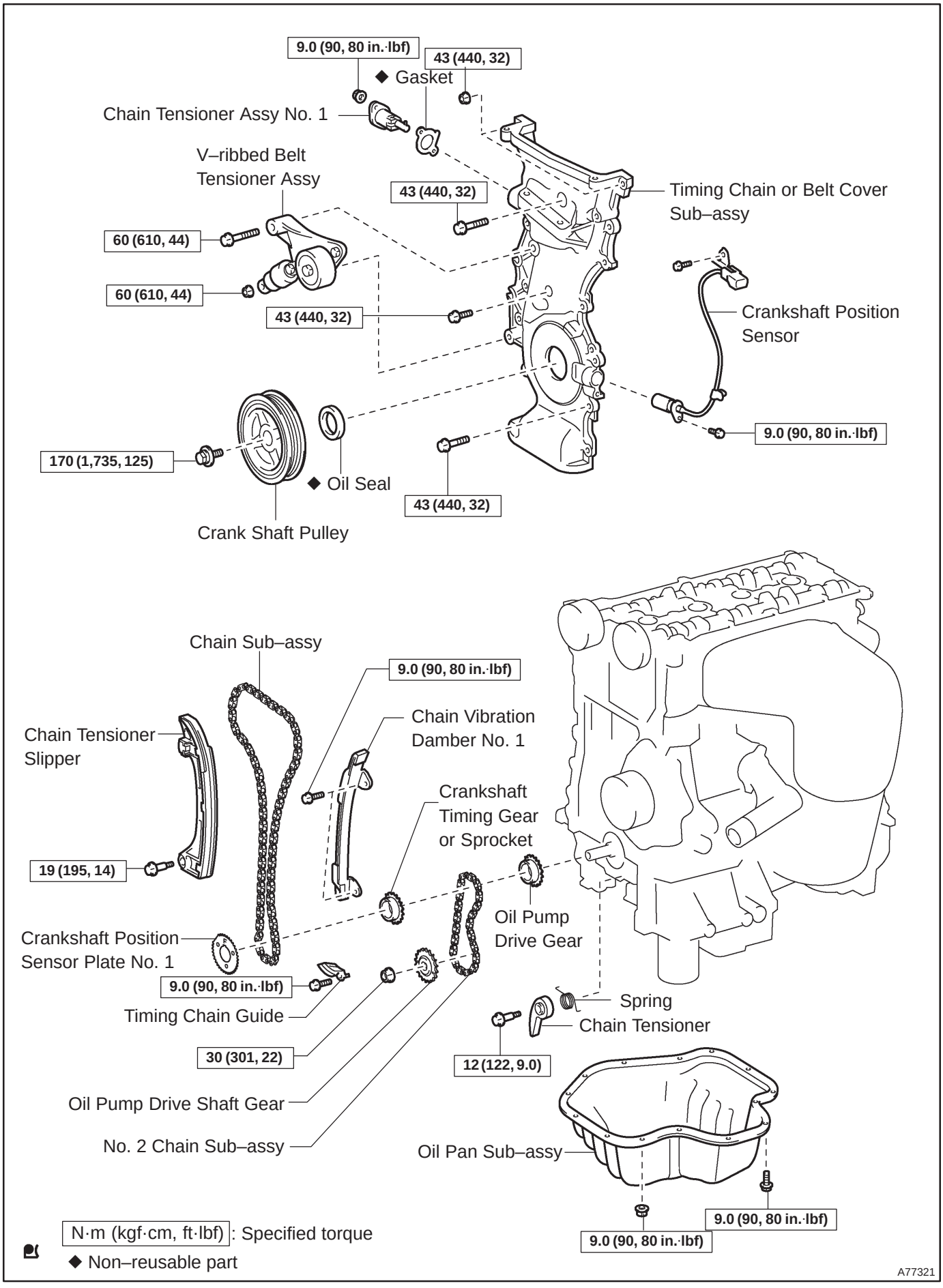
9.0 (90, 80 in.·lbf)
43 (440, 32)
◆ Gasket
Chain Tensioner Assy No. 1
V–ribbed Belt Tensioner Assy
43 (440, 32)
Timing Chain or Belt Cover Sub–assy
60 (610, 44)
60 (610, 44)
43 (440, 32)
Crankshaft Position Sensor
9.0 (90, 80 in.·lbf)
170 (1,735, 125)
◆ Oil Seal
43 (440, 32)
Crank Shaft Pulley
Chain Sub–assy
9.0 (90, 80 in.·lbf)
Chain Vibration Damber No. 1
Chain Tensioner Slipper
Crankshaft Timing Gear or Sprocket
19 (195, 14)
Oil Pump Drive Gear
Crankshaft Position Sensor Plate No. 1
9.0 (90, 80 in.·lbf)
Spring
Timing Chain Guide
Chain Tensioner
30 (301, 22)
12 (122, 9.0)
Oil Pump Drive Shaft Gear
No. 2 Chain Sub–assy
Oil Pan Sub–assy
9.0 (90, 80 in.·lbf)
9.0 (90, 80 in.·lbf)
N·m (kgf·cm, ft·lbf): Specified torque
◆ Non–reusable part
A77321

141B8–01

REPLACEMENT

1. **REMOVE FRONT WHEEL RH**
2. **REMOVE RADIATOR SUPPORT OPENING COVER**
3. **REMOVE ENGINE ROOM COVER SIDE**
4. **REMOVE ENGINE UNDER COVER RH**
5. **REMOVE ENGINE UNDER COVER LH**
6. **DRAIN ENGINE OIL**

(a) Install a new gasket and the drain plug after draining the engine oil.
Torque: 25 N·m (255 kgf·cm, 18 ft·lbf)

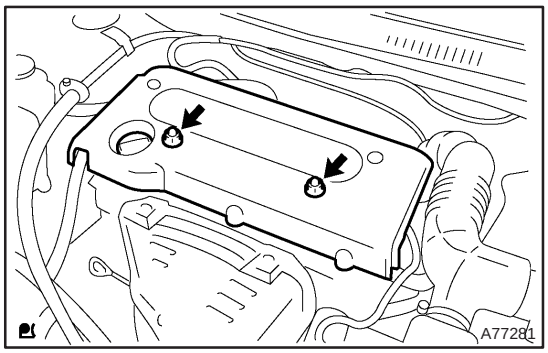

7. **REMOVE ENGINE COVER SUB–ASSY NO.1**

(a) Remove the 2 nuts and the engine cover No. 1.

8. **REMOVE FAN AND GENERATOR V BELT (See page 14–105)**
SST 09249–63010
9. **REMOVE GENERATOR ASSY (See page 19–20)**
10. **REMOVE EXHAUST PIPE ASSY FRONT (See page 15–7)**

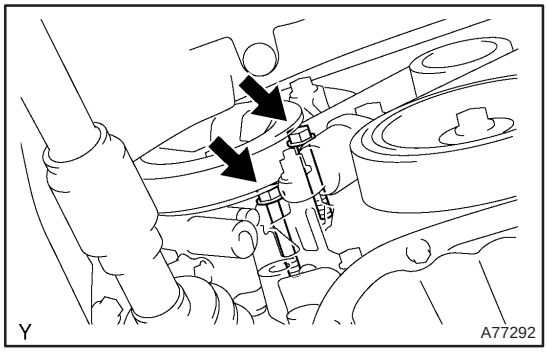

11. **SEPARATE VANE PUMP ASSY**

(a) Remove the 2 through bolts and separate the vane pump.

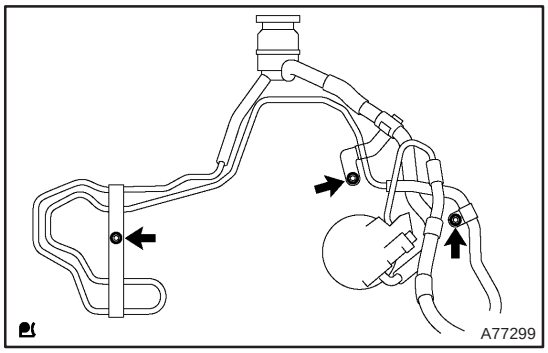

12. **SEPARATE RETURN TUBE SUB–ASSY**

(a) Remove 3 bolts and separate the return tube as shown in the illustration.

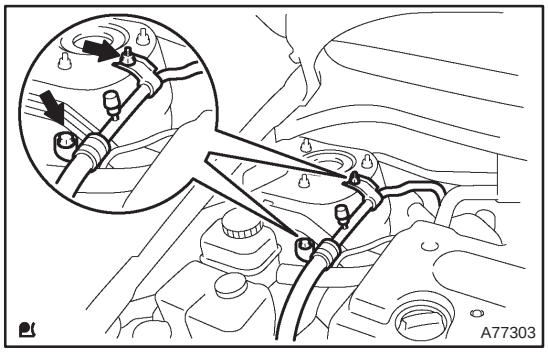

13. SEPARATE COOLER REFRIGERANT SUCTION HOSE NO.1 (LHD(W/ AIR CONDITIONER) STEERING POSITION TYPE)

(a) Remove the 2 nuts and separate the suction hose.

14. SEPARATE VANE PUMP OIL RESERVOIR ASSY

NOTICE:

Do not disconnect the 2 hoses.

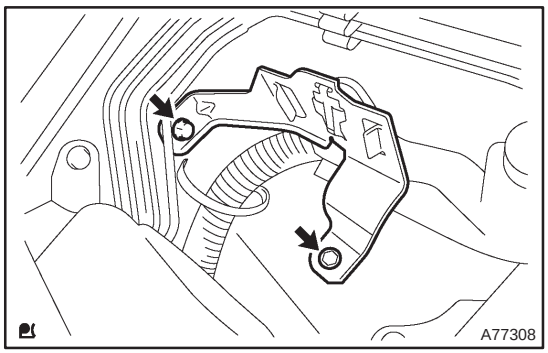

15. REMOVE OIL RESERVOIR BRACKET NO.1

(a) Remove the 2 bolts and the oil pump reservoir bracket No. 1.

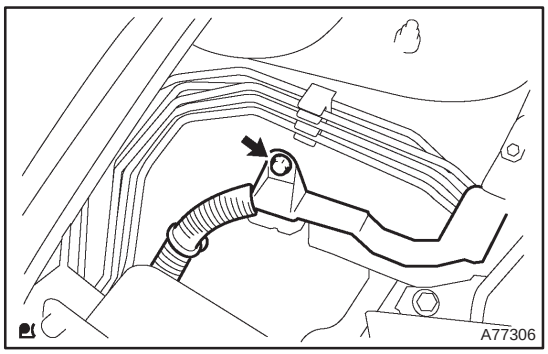

16. SEPARATE ENGINE WIRE

(a) Remove the bolt and separate the clamp and engine wire.

17. REMOVE ENGINE SERVICE COVER BRACKET RH (W/O AIR CONDITIONING)

(a) Remove the bolt and the engine service cover bracket RH.

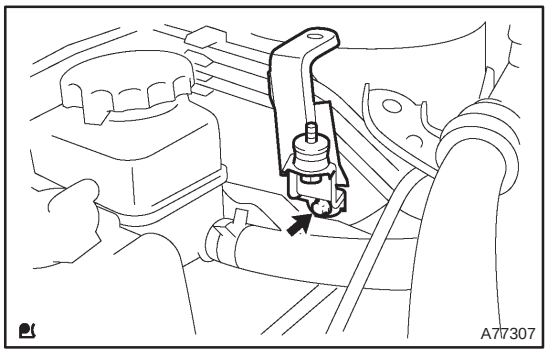

18. REMOVE COOLER BRACKET (LHD(W/ AIR CONDITIONER) STEERING POSITION TYPE)

(a) Remove the bolt and cooler bracket.

19. REMOVE ENGINE SERVICE COVER BRACKET RH (RHD(W/ AIR CONDITIONER) STEERING POSITION TYPE)

(a) Remove the bolt and the engine service cover bracket RH.

20. REMOVE IGNITION COIL ASSY

(a) Remove the 4 bolts and 4 ignition coils.

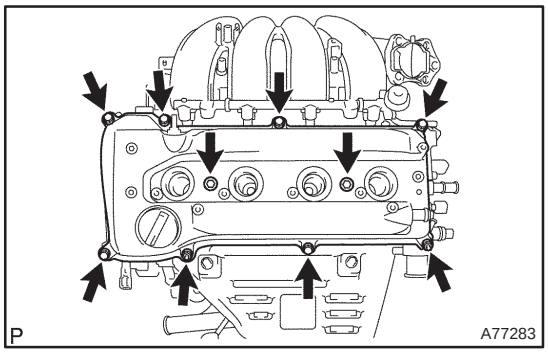

21. REMOVE CYLINDER HEAD COVER SUB–ASSY

(a) Disconnect the 2 PCV hoses from the cylinder head cover.

(b) Remove the 8 bolts and 2 nuts, and then remove the cylinder head cover and gasket.

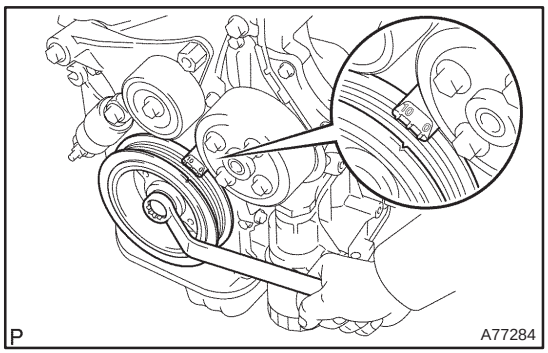

22. SET NO. 1 CYLINDER TO TDC/COMPRESSION

(a) Turn the crankshaft pulley, and align its timing notch with timing mark 0 of the timing chain cover.

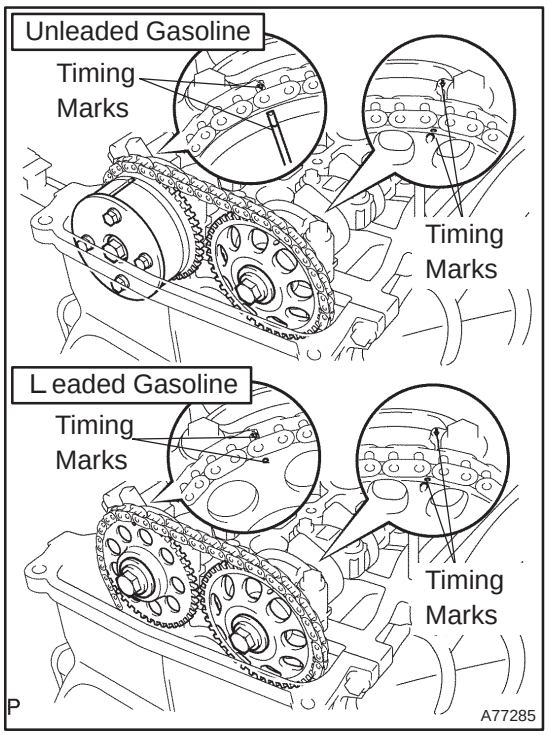

(b) Check that the timing marks of the camshaft timing gear are aligned with the timing marks located on the No. 1 and No. 2 bearing caps as shown in the illustration.

If not, turn the crankshaft 1 revolution (360°) and align the marks as above.

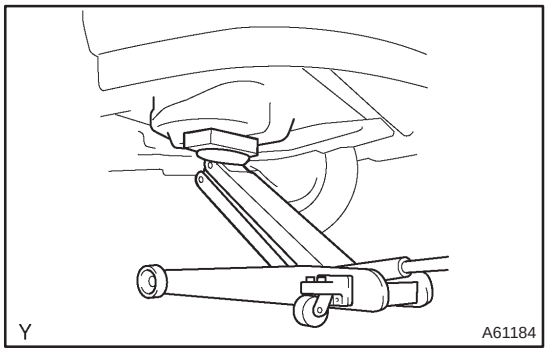

23. REMOVE ENGINE MOUNTING BRACKET NO.2 RH

(a) Place the jack underneath the engine, and put a wooden block on the jack.

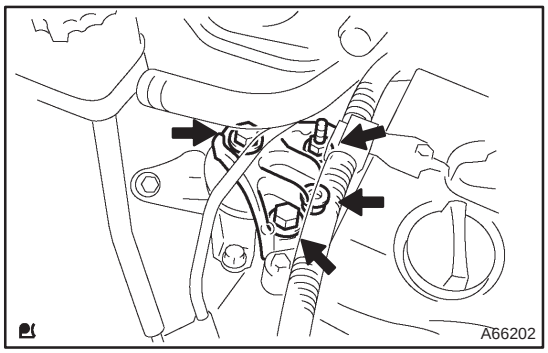

(b) Remove the 2 bolts and 2 nuts, and then detach the mounting bracket No. 2 RH.

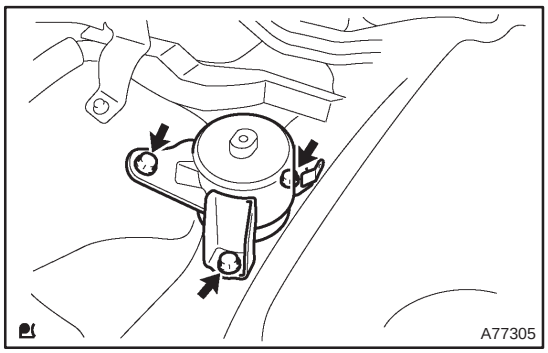

24. REMOVE TRANSVERSE ENGINE ENGINE MOUNTING INSULATOR

(a) Remove the 3 bolts and the engine mounting insulator.

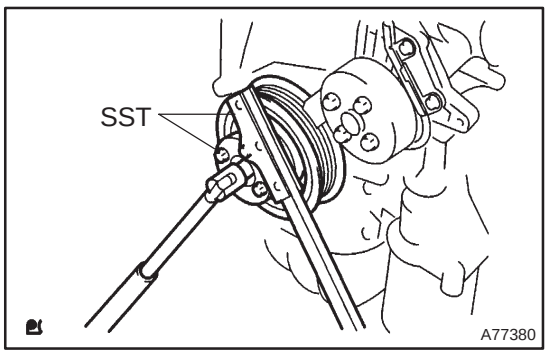

25. REMOVE CRANKSHAFT PULLEY

(a) Using SST, fix the crankshaft pulley and loosen a crankshaft pulley bolt.

SST 09213–54015 (91651–60855), 09330–00021

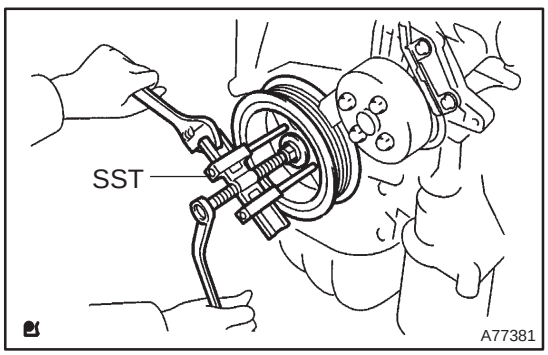

(b) Using a crankshaft pulley bolt and SST, remove the crankshaft pulley.

SST 09950–50013 (09951–05010, 09952–05010, 09953–05020, 09954–05021)

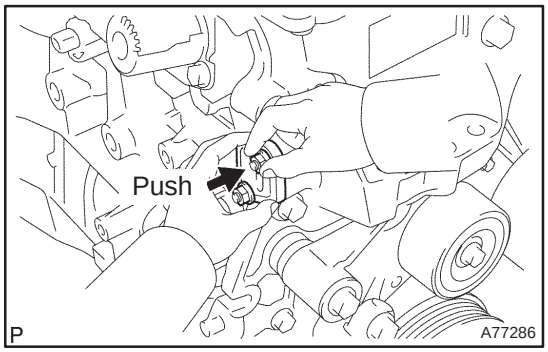

26. REMOVE CHAIN TENSIONER ASSY NO.1

(a) Remove the 2 nuts, the chain tensioner No. 1 and gasket.

NOTICE:

Do not turn the crankshaft.

27. REMOVE CRANKSHAFT POSITION SENSOR

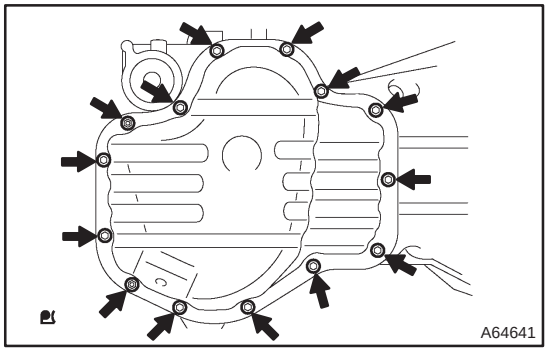

28. REMOVE OIL PAN SUB–ASSY

(a) Remove the 12 bolts and 2 nuts.

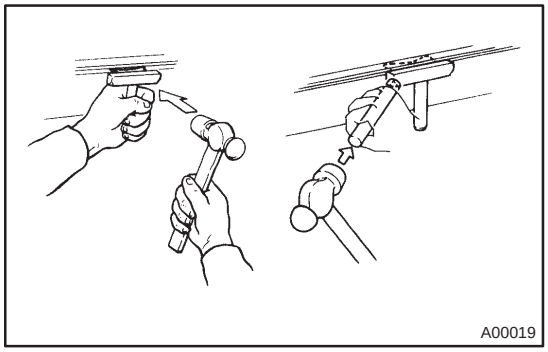

(b) Insert the blade of SST between the crank case, timing chain cover and oil pan, cut off applied sealer and remove the oil pan.

SST 09032–00100

NOTICE:

Be careful not to damage the contact surface of the timing chain cover, crank case and oil pan.

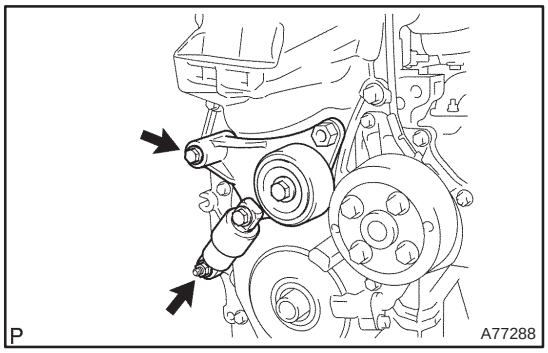

29. REMOVE V–RIBBED BELT TENSIONER ASSY

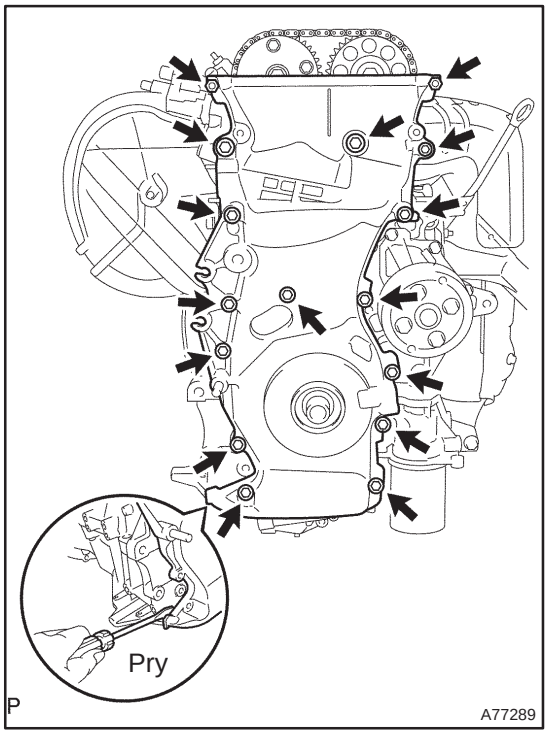

30. REMOVE TIMING CHAIN OR BELT COVER SUB–ASSY

(a) Remove the 14 bolts and 2 nuts.

(b) Using a screwdriver, pry between the timing chain cover and cylinder head or cylinder block.

(c) Remove the timing chain cover.

NOTICE:

Be careful not to damage the contact surface of the timing chain cover, cylinder head and cylinder block.

31. REMOVE CRANKSHAFT POSITION SENSOR PLATE NO.1

32. REMOVE CHAIN TENSIONER SLIPPER

(a) Remove the 2 bolts and the chain tensioner slipper.

33. REMOVE CHAIN VIBRATION DAMPER NO.1

(a) Remove the bolt and the chain vibration damper No. 1

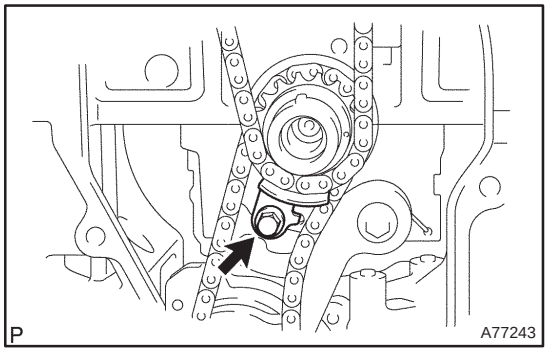

34. REMOVE TIMING CHAIN GUIDE

(a) Remove the bolt and the timing chain guide.

35. REMOVE CHAIN SUB–ASSY

36. REMOVE CRANKSHAFT TIMING GEAR OR SPROCKET

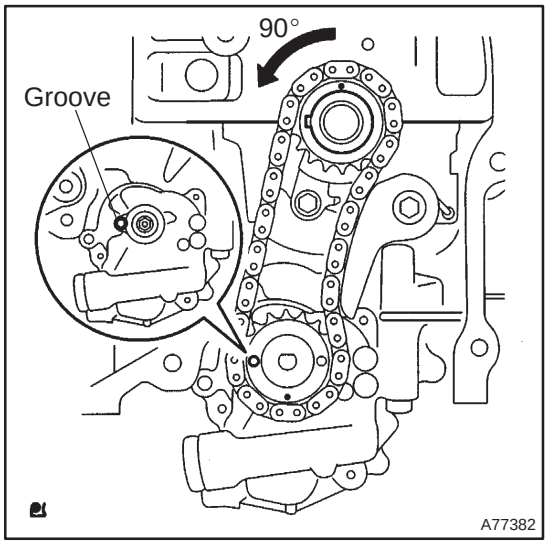

37. REMOVE NO.2 CHAIN SUB–ASSY

(a) Turn the crankshaft counterclockwise 90°, and align an adjusting hole of the oil pump drive shaft gear with the groove of the oil pump.

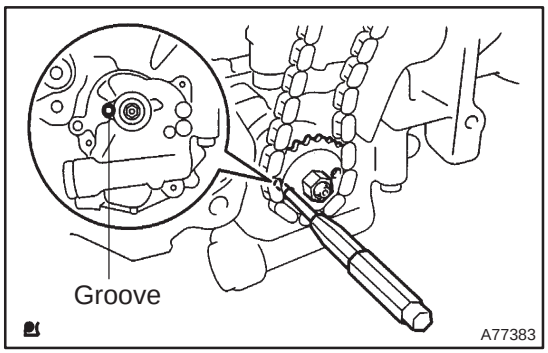

(b) Put a 4 mm diameter bar in the adjusting hole of the oil pump drive shaft gear to lock in position, and remove the nut.

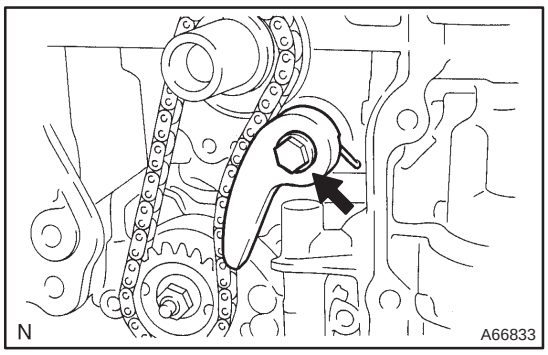

(c) Remove the bolt, and then remove the chain tensioner and spring.

(d) Remove the oil pump drive shaft gear and chain No. 2.

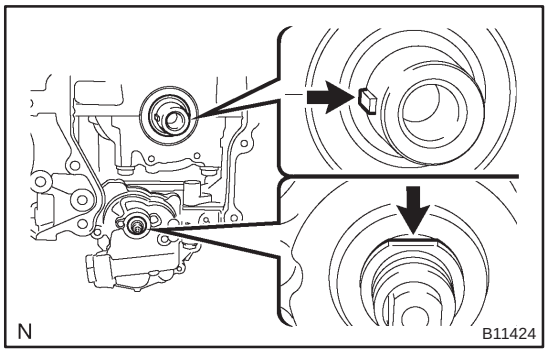

38. INSTALL NO.2 CHAIN SUB–ASSY

(a) Set the crankshaft key to the left side position.

(b) Orient the flat portion of the drive shaft upward.

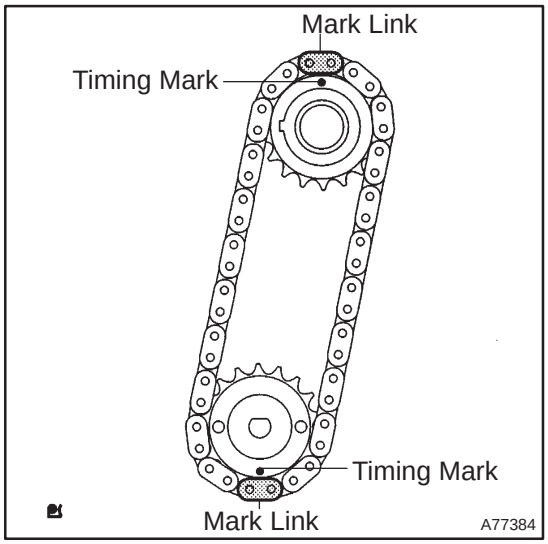

(c) Align the mark links (yellow colored links) with the timing marks of each gear as shown in the illustration.

(d) Install the gears to the crankshaft and oil pump shaft with the chain wrapped.

(e) Temporarily tighten the oil pump drive shaft gear with the nut.

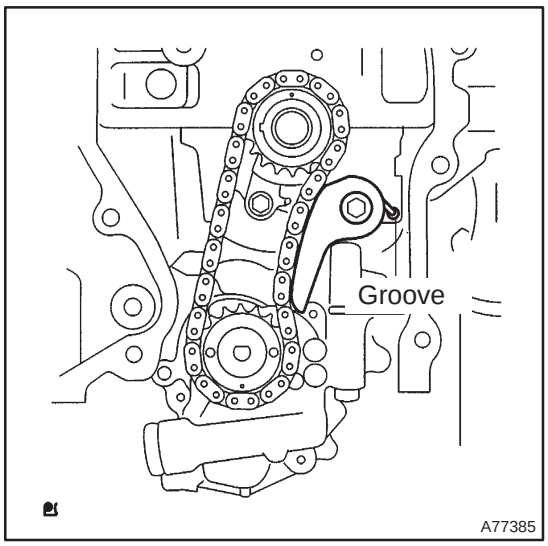

(f) Insert the damper spring into the adjusting hole, and install the chain tensioner plate with the bolt.
Torque: 12 N·m (122 kgf·cm, 9.0 ft·lbf)

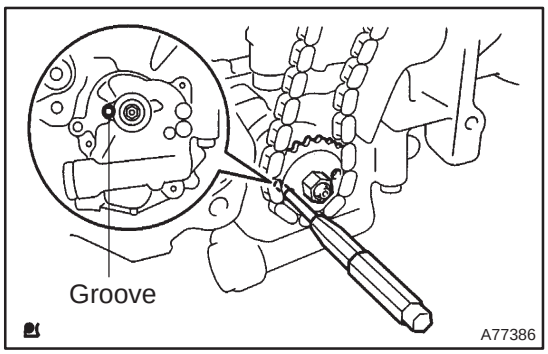

(g) Align an adjusting hole of the sprocket with the groove of the oil pump.

(h) Insert a 4 mm diameter bar into the adjusting hole of the sprocket to lock in position, and tighten the nut.
Torque: 30 N·m (301 kgf·cm, 22 ft·lbf)

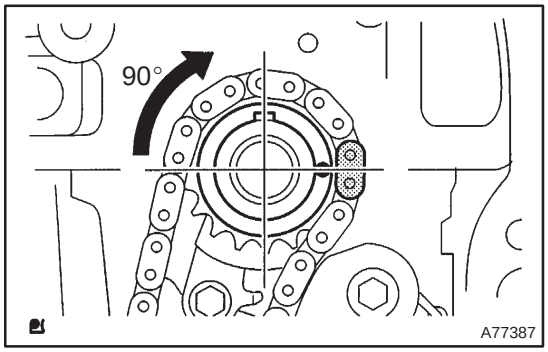

(i) Rotate the crankshaft clockwise 90°, and position the crankshaft key upward.

39. INSTALL CRANKSHAFT TIMING GEAR OR SPROCKET

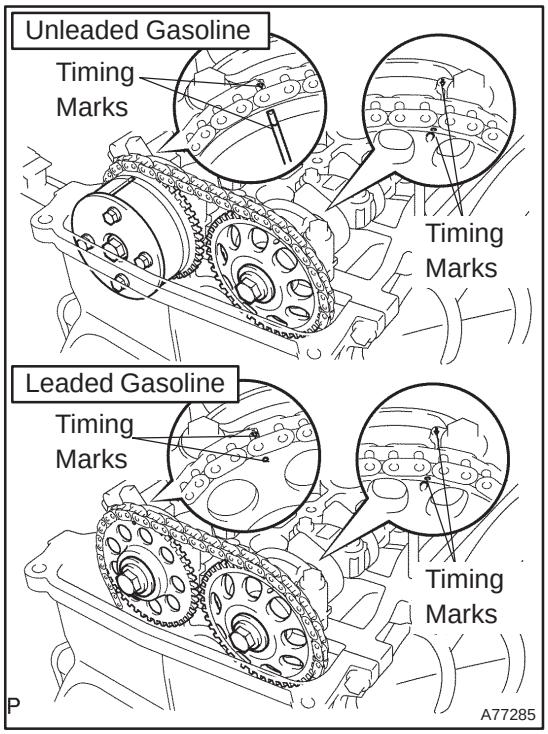

40. SET NO. 1 CYLINDER TO TDC/COMPRESSION

(a) Turn the camshafts with a wrench on the hexagonal lobe, and align the timing marks of the camshaft timing gear with each timing mark located on the No. 1 and No. 2 bearing caps as shown in the illustration.

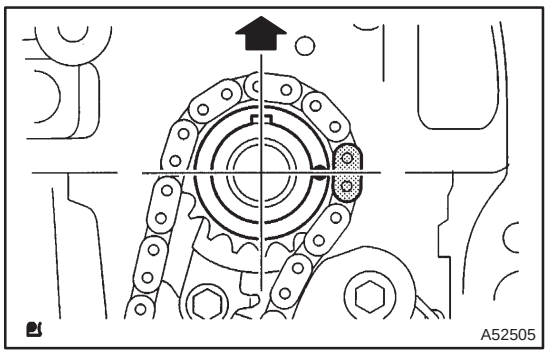

(b) Using the crankshaft pulley bolt, turn the crankshaft and position the key on the crankshaft upward.

41. INSTALL CHAIN VIBRATION DAMPER NO.1

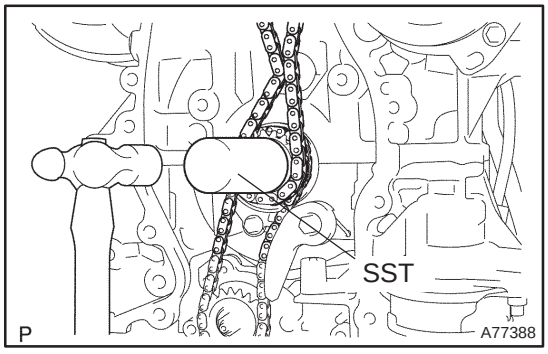

42. INSTALL CHAIN SUB–ASSY

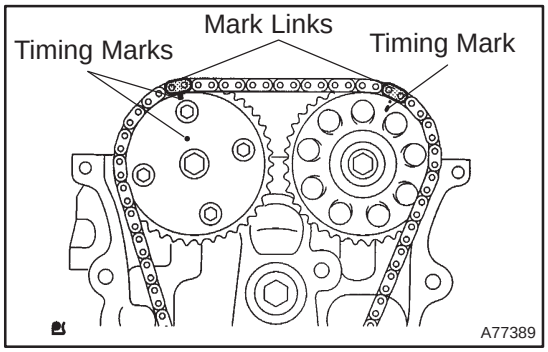

(a) Align the mark links (gold or yellow colored links) with each timing mark located on the camshaft timing gears, and install the chain.

43. INSTALL TIMING CHAIN GUIDE
Torque: 9.0 N·m (92 kgf·cm, 80 in.·lbf)

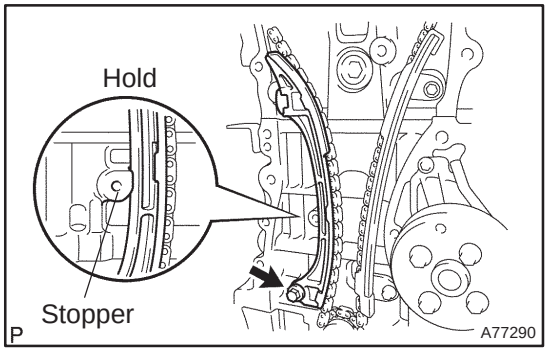

44. INSTALL CHAIN TENSIONER SLIPPER
(a) Install the chain tensioner slipper with the bolt.
Torque: 19 N·m (195 kgf·cm, 14 ft·lbf)
(b) Check that the chain tensioner slipper is hold on the cylinder block stopper.

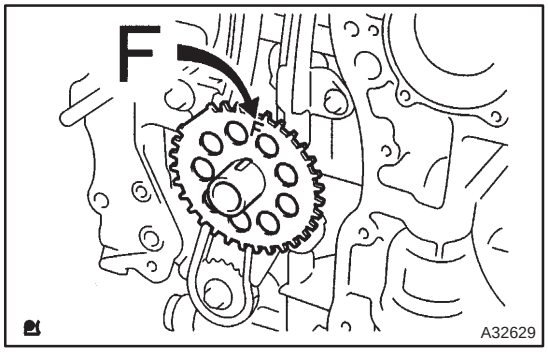

45. INSTALL CRANKSHAFT POSITION SENSOR PLATE NO.1
(a) Install the plate with the ”F” mark facing forward.

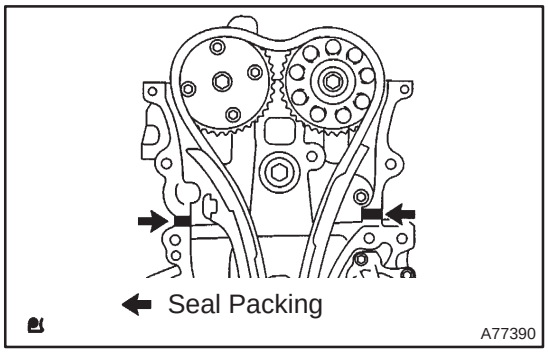

46. INSTALL TIMING CHAIN OR BELT COVER SUB–ASSY
NOTICE:
- **Remove any oil from the contact surface.**
- **Install the chain cover within 3 minutes after applying seal packing.**
- **Do not start the engine within 2 hours after installing.**

(a) Remove any old packing (FIPG) material and be careful not to drop any oil on the contact surfaces of the timing chain cover.
(b) Apply a continuous bead (Diameter 2 mm (0.09 in.)) of seal packing as shown in the illustration.
Seal packing: Part No. 08826 – 00080 or equivalent.

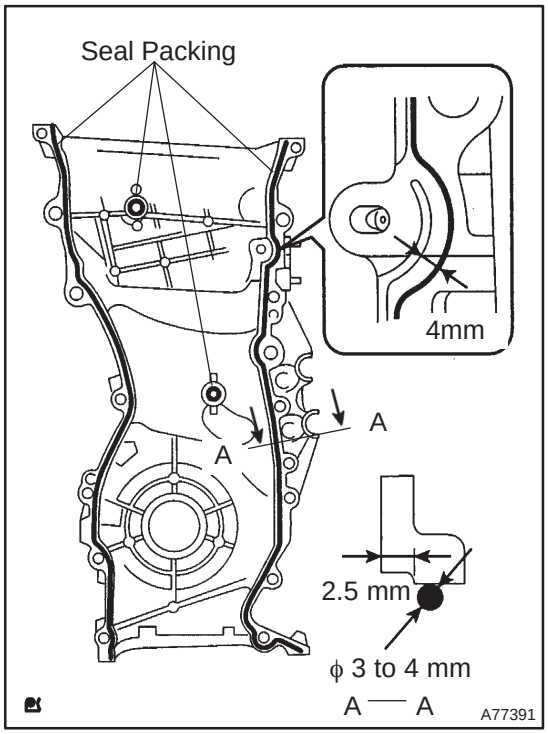

(c) Apply a continuous bead (Diameter 3 to 4 mm (0.118 to 0.157 in.)) of seal packing as shown in the illustration.
Seal packing: Part No. 08826 – 00080 or equivalent

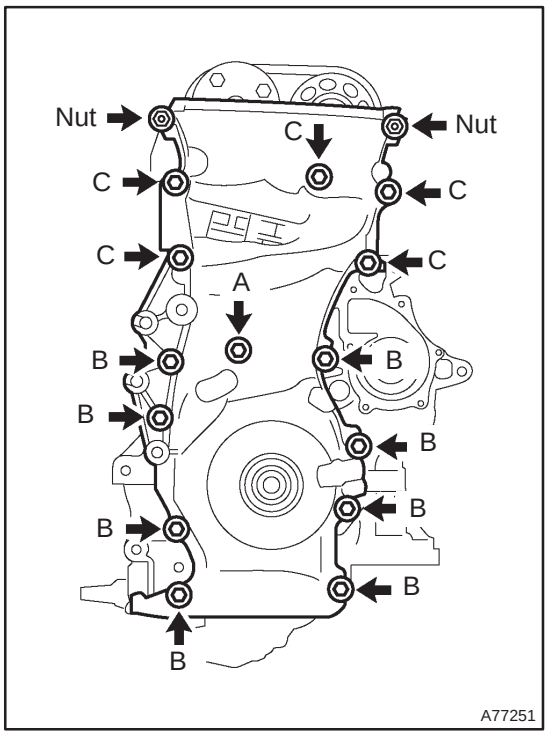

(d) Install the timing chain cover with the 14 bolts and 2 nuts.
Torque:
Bolt A 9.0 N·m (92 kgf·cm, 80 in.·lbf)
Bolt B 21 N·m (214 kgf·cm, 15 ft·lbf)
Bolt C 43 N·m (438 kgf·cm, 32 ft·lbf)
Nut 9.0 N·m (92 kgf·cm, 80 in.·lbf)

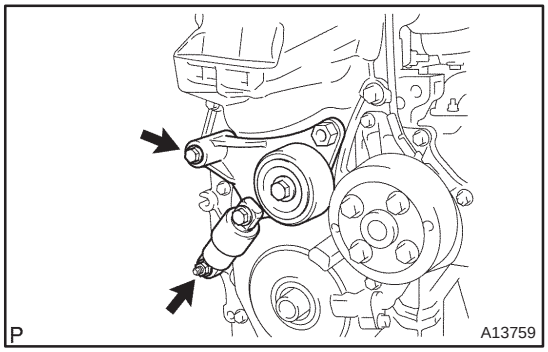

47. INSTALL V–RIBBED BELT TENSIONER ASSY

(a) Install the V–ribbed belt tensioner with the bolt and nut.
Torque: 60 N·m (610 kgf·cm, 44 ft·lbf)

NOTICE:

As the drive tensioner should be fastened together with the timing chain cover, so be sure install it within 15 minutes after the timing chain cover is installed.

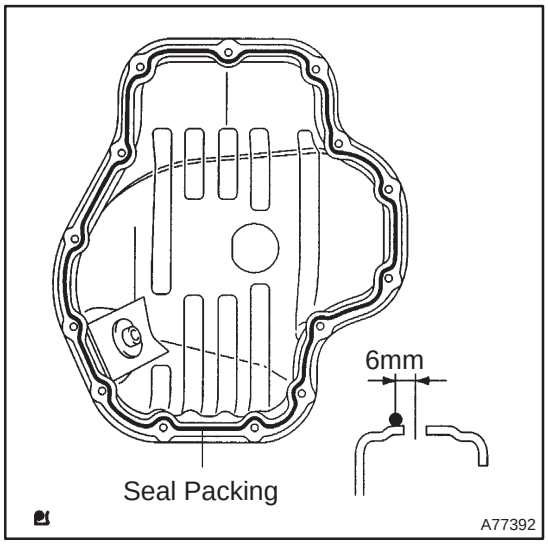

48. INSTALL OIL PAN SUB–ASSY

NOTICE:

- **Remove any oil from the contact surface.**
- **Install the oil pan within 3 minutes after applying seal packing.**
- **Do not start the engine within 2 hours after installing.**

(a) Remove any old packing (FIPG) material and be careful not to drop any oil on the contact surface of the cylinder block and oil pan.

(b) Apply a continuous bead (Diameter 3 mm to 4 mm (0.157 in.)) of seal packing as shown in the illustration, and install the oil pan.
Seal packing: part No. 08826 – 00080 or equivalent

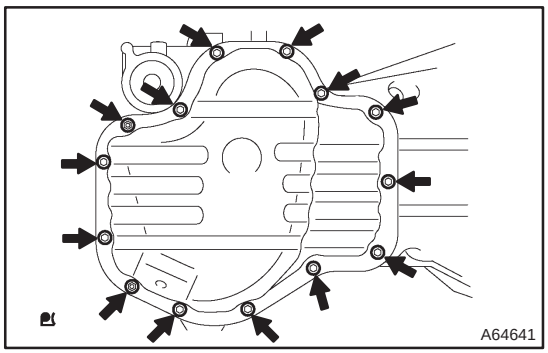

(c) Install the oil pan with the 12 bolts and 2 nuts.
Torque: 9.0 N·m (92 kgf·cm, 80 in.·lbf)

49. INSTALL CRANKSHAFT POSITION SENSOR

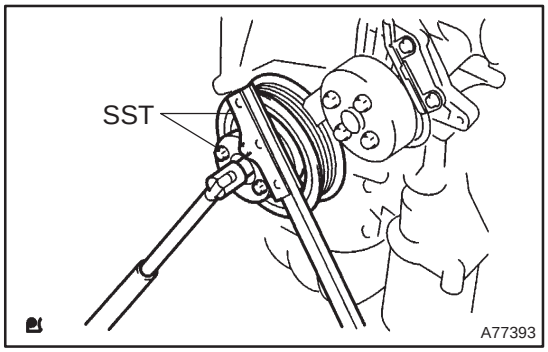

50. INSTALL CRANKSHAFT PULLEY

(a) Using SST, tighten the set bolt.
SST 09213–54015 (91651–60855), 09330–00021
Torque: 170 N·m (1,733 kgf·cm, 125 ft·lbf)

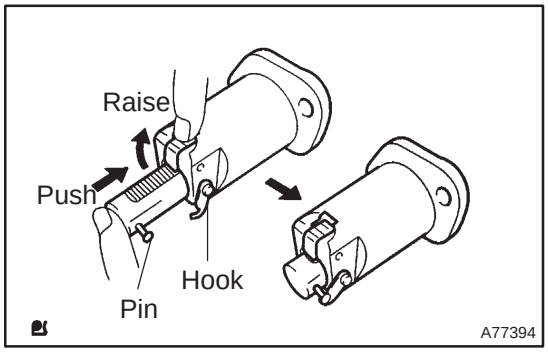

51. INSTALL CHAIN TENSIONER ASSY NO.1

(a) Release the ratchet pawl, fully push in the plunger and apply the hook to the pin so that the plunger is located in position.

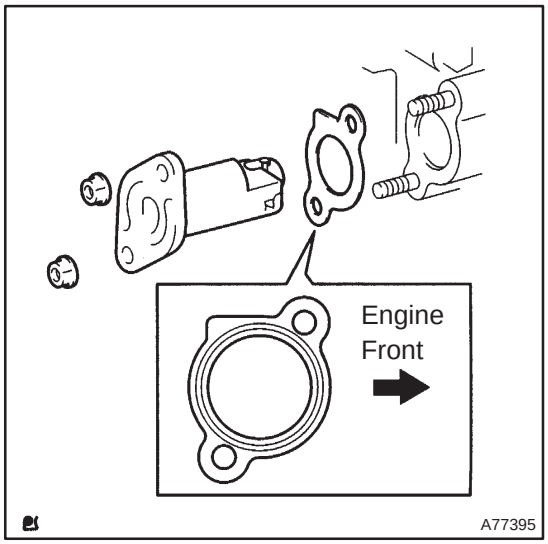

(b) Install a new gasket chain tensioner with the 2 nuts.
Torque: 9.0 N·m (92 kgf·cm, 80 in.·lbf)

NOTICE:
If the hook is released wile inserting, apply the hook again, and insert the chain tensioner.

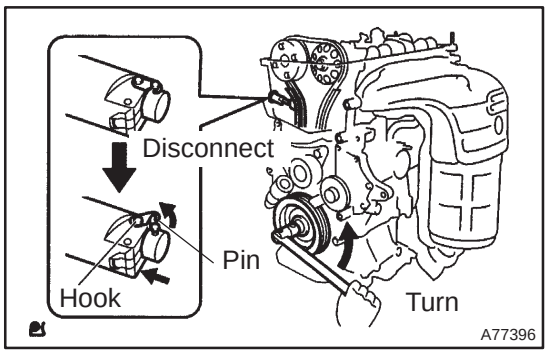

(c) Turn the crankshaft counterclockwise, and check that the hook is disengaged from the plunger knock pin.

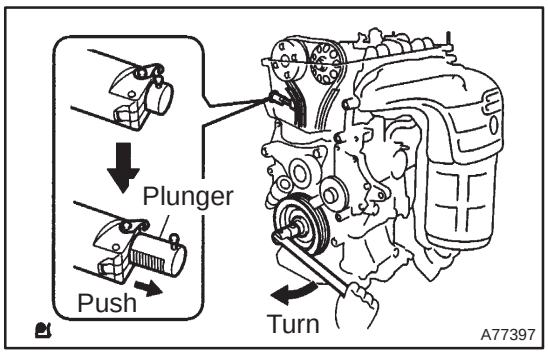

(d) Turn the crankshaft clockwise, and check that the plunger is extended.

52. INSTALL TRANSVERSE ENGINE ENGINE MOUNTING INSULATOR
Torque: 52 N·m (530 kgf·cm, 38 ft·lbf)

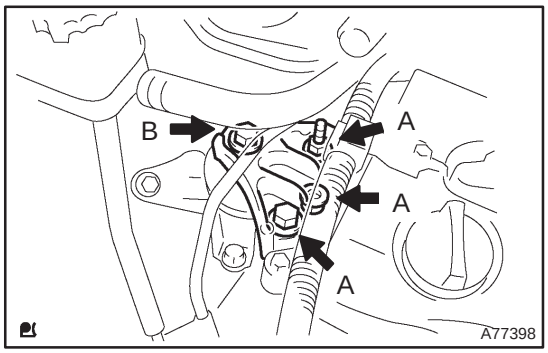

53. INSTALL ENGINE MOUNTING BRACKET NO.2 RH
Torque:
A 52 N·m (530 kgf·cm, 38 ft·lbf)
B 113 N·m (1,152 kgf·cm, 83 ft·lbf)

54. INSTALL CYLINDER HEAD COVER SUB–ASSY

(a) Remove any old seal packing (FIPG) material.

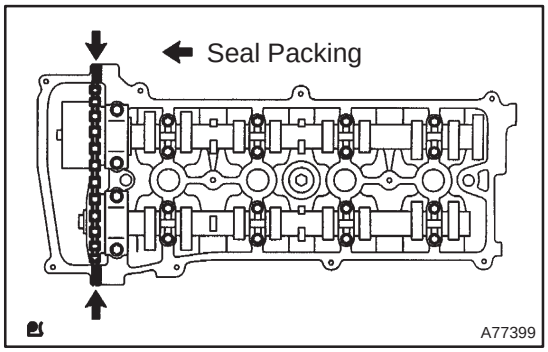

(b) Apply seal packing to the 2 locations as shown in the illustration.

Seal Packing: Part No. 08826–00080 or equivalent

NOTICE:

- **Remove any oil from the contact surface.**
- **Install the cylinder head cover within 5 minutes after applying seal packing.**
- **Do not expose the seal to engine oil 2 hours after installing.**

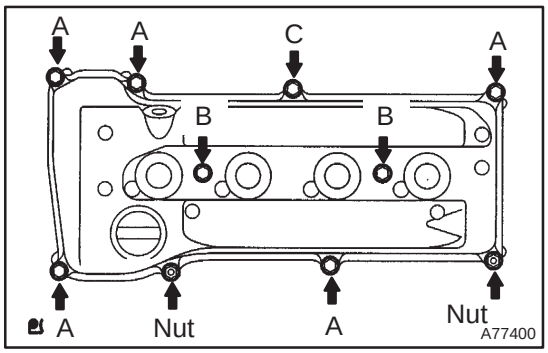

(c) install the cylinder head cover with the 8 bolts and 2 nuts.

Torque:
Bolt A 11 N·m (112 kgf·cm, 8 ft·lbf)
Bolt B 14 N·m (143 kgf·cm, 10 ft·lbf)
Bolt C 21 N·m (214 kgf·cm, 15 ft·lbf)
Nut 11 N·m (112 kgf·cm, 8 ft·lbf)

55. **INSTALL ENGINE SERVICE COVER BRACKET RH (W/O AIR CONDITIONING)**
    Torque: 9.0 N·m (92 kgf·cm, 80 in.·lbf)
56. **INSTALL COOLER BRACKET (LHD(W/ AIR CONDITIONER) STEERING POSITION TYPE)**
    Torque: 9.0 N·m (92 kgf·cm, 80 in.·lbf)
57. **INSTALL ENGINE SERVICE COVER BRACKET RH (RHD(W/ AIR CONDITIONER) STEERING POSITION TYPE)**
    Torque: 9.0 N·m (92 kgf·cm, 80 in.·lbf)
58. **INSTALL ENGINE WIRE**
    Torque: 7.0 N·m (71 kgf·cm, 62 in.·lbf)
59. **INSTALL OIL RESERVOIR BRACKET NO.1**
    Torque: 8.0 N·m (82 kgf·cm, 71 in.·lbf)
60. **INSTALL COOLER REFRIGERANT SUCTION HOSE NO.1 (LHD(W/ AIR CONDITIONER) STEERING POSITION TYPE)**
61. **INSTALL RETURN TUBE SUB–ASSY**
    Torque: 8.0 N·m (82 kgf·cm, 71 in.·lbf)
62. **INSTALL IGNITION COIL ASSY**
    Torque: 9.0 N·m (92 kgf·cm, 80 in.·lbf)
63. **INSTALL VANE PUMP ASSY**
    Torque: 37 N·m (377 kgf·cm, 27 ft·lbf)
64. **INSTALL EXHAUST PIPE ASSY FRONT (See page 15–7)**
65. **INSTALL GENERATOR ASSY (See page 19–20)**
66. **INSTALL FAN AND GENERATOR V BELT (See page 14–105)**
    SST 09249–63010
67. **ADD ENGINE OIL**
68. **CHECK FOR ENGINE OIL LEAKS**
69. **INSTALL ENGINE COVER SUB–ASSY NO.1**
    Torque: 7.0 N·m (71 kgf·cm, 62 in.·lbf)
70. **INSTALL FRONT WHEEL RH**
    Torque: 103 N·m (1,050 kgf·cm, 76 ft·lbf)

CYLINDER HEAD GASKET (1AZ–FE)

141BA–01

COMPONENTS

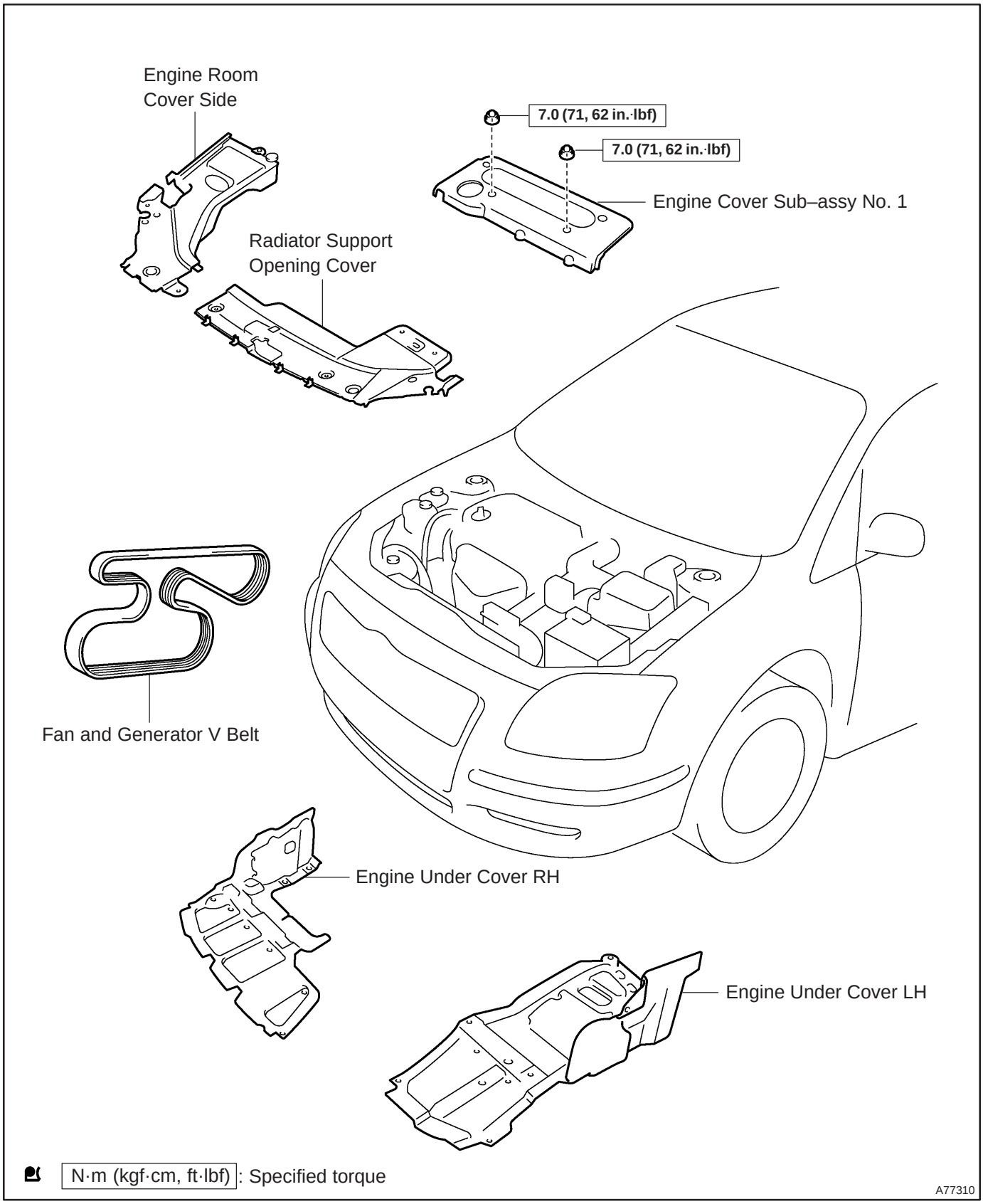

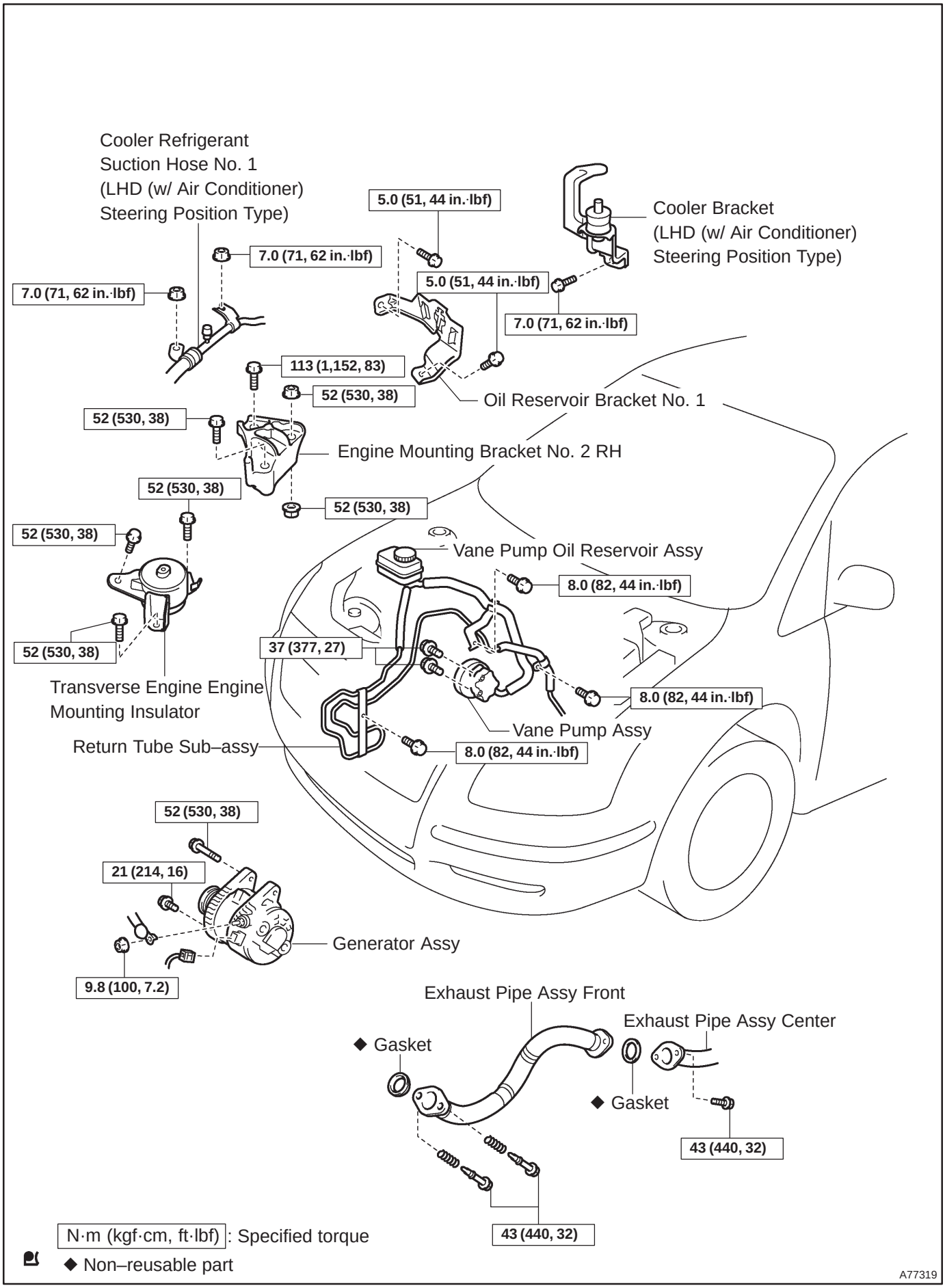
Cooler Refrigerant Suction Hose No. 1 (LHD (w/ Air Conditioner) Steering Position Type)
5.0 (51, 44 in.·lbf)
Cooler Bracket (LHD (w/ Air Conditioner) Steering Position Type)
7.0 (71, 62 in.·lbf)
7.0 (71, 62 in.·lbf)
5.0 (51, 44 in.·lbf)
7.0 (71, 62 in.·lbf)
113 (1,152, 83)
52 (530, 38)
Oil Reservoir Bracket No. 1
52 (530, 38)
Engine Mounting Bracket No. 2 RH
52 (530, 38)
52 (530, 38)
52 (530, 38)
Vane Pump Oil Reservoir Assy
8.0 (82, 44 in.·lbf)
52 (530, 38)
37 (377, 27)
Transverse Engine Engine Mounting Insulator
8.0 (82, 44 in.·lbf)
Vane Pump Assy
Return Tube Sub–assy
8.0 (82, 44 in.·lbf)
52 (530, 38)
21 (214, 16)
Generator Assy
9.8 (100, 7.2)
Exhaust Pipe Assy Front
Exhaust Pipe Assy Center
◆ Gasket
◆ Gasket
43 (440, 32)
43 (440, 32)
N·m (kgf·cm, ft·lbf): Specified torque
◆ Non–reusable part
A77319

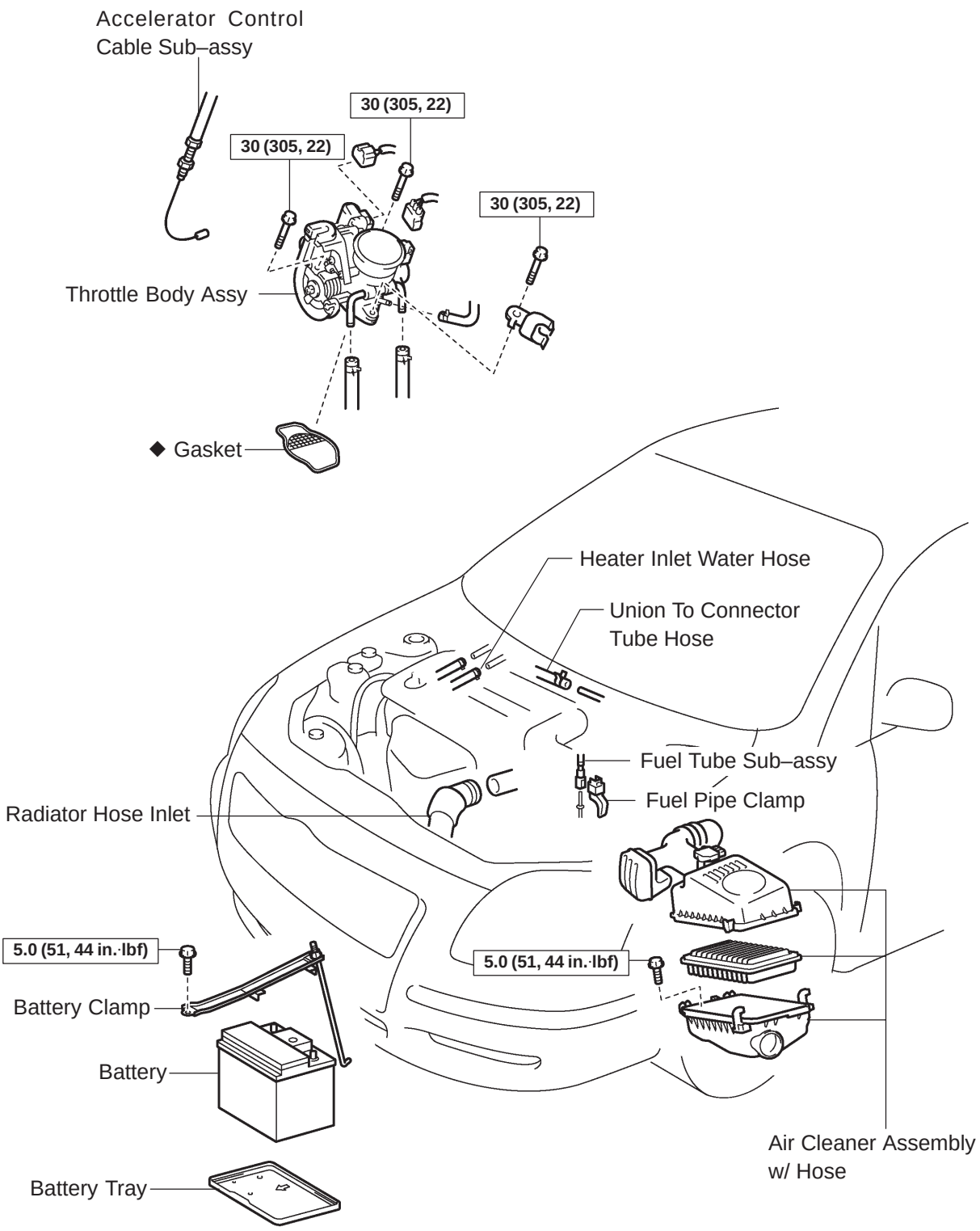

N·m (kgf·cm, ft·lbf): Specified torque

◆ Non–reusable part

A77325

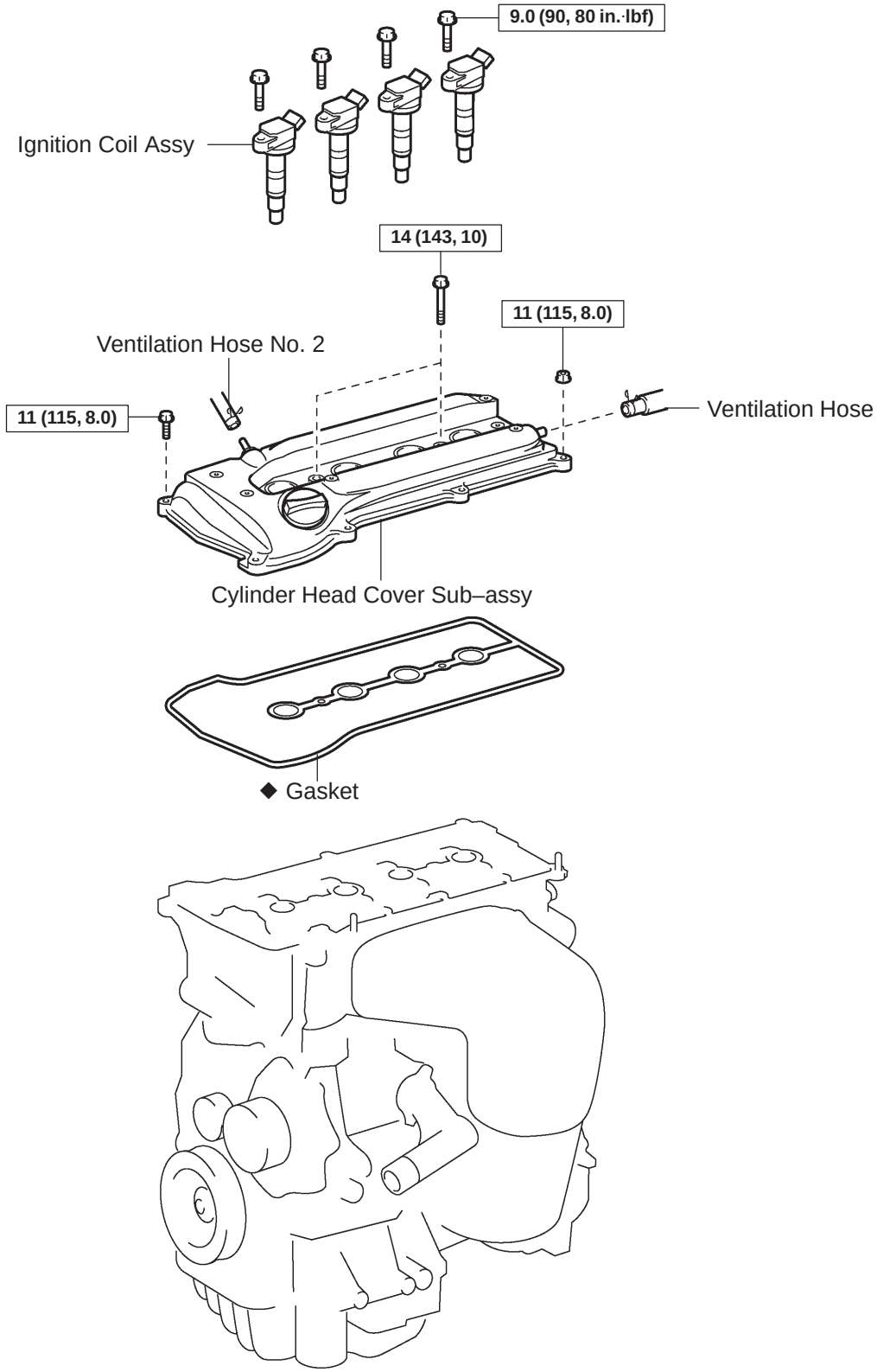

N·m (kgf·cm, ft·lbf): Specified torque

◆ Non–reusable part

A77320

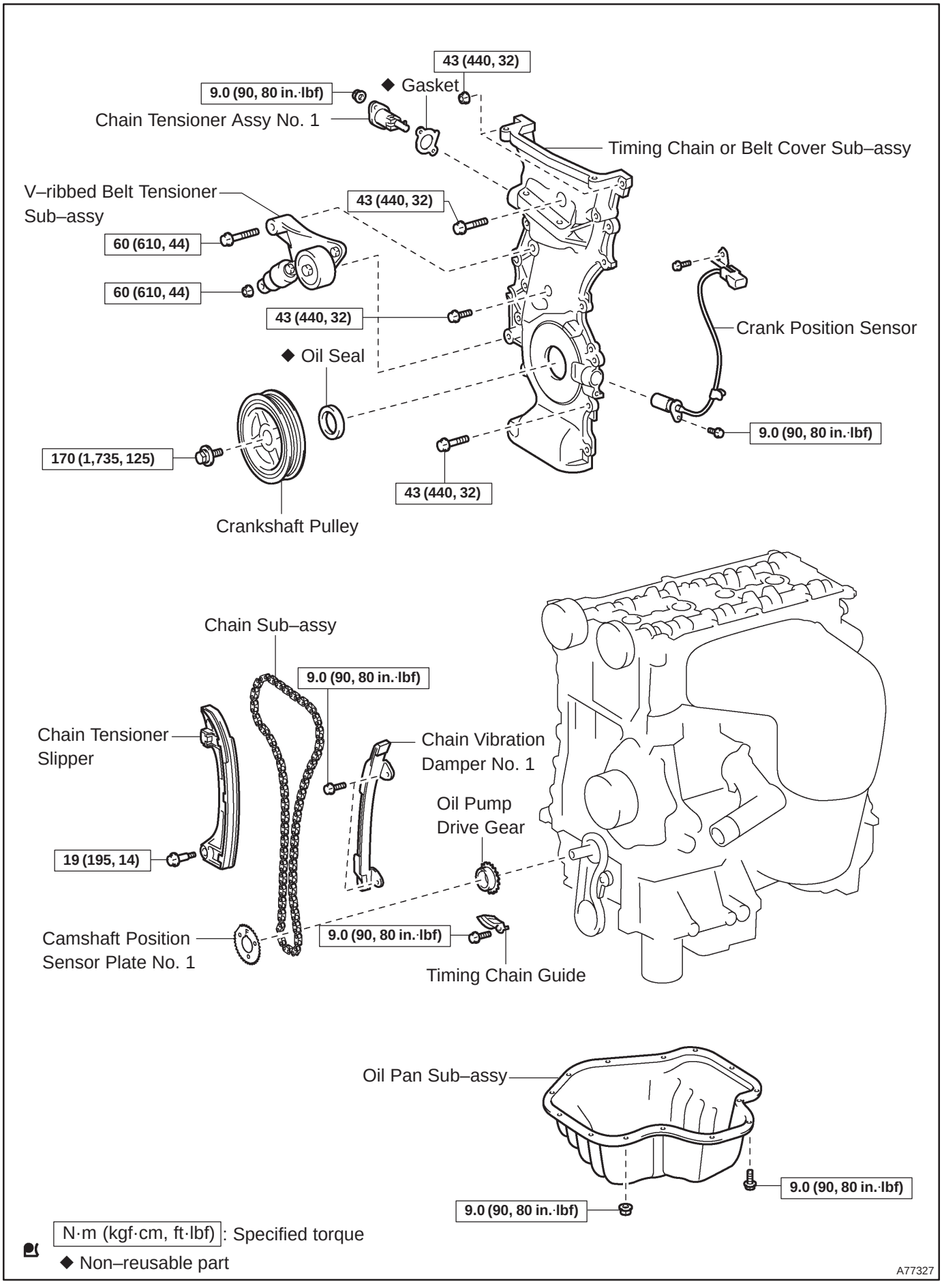
43 (440, 32)
◆ Gasket
9.0 (90, 80 in.·lbf)
Chain Tensioner Assy No. 1
Timing Chain or Belt Cover Sub–assy
V–ribbed Belt Tensioner Sub–assy
43 (440, 32)
60 (610, 44)
60 (610, 44)
43 (440, 32)
Crank Position Sensor
◆ Oil Seal
9.0 (90, 80 in.·lbf)
170 (1,735, 125)
43 (440, 32)
Crankshaft Pulley
Chain Sub–assy
9.0 (90, 80 in.·lbf)
Chain Tensioner Slipper
Chain Vibration Damper No. 1
Oil Pump Drive Gear
19 (195, 14)
Camshaft Position Sensor Plate No. 1
9.0 (90, 80 in.·lbf)
Timing Chain Guide
Oil Pan Sub–assy
9.0 (90, 80 in.·lbf)
9.0 (90, 80 in.·lbf)
N·m (kgf·cm, ft·lbf): Specified torque
◆ Non–reusable part
A77327

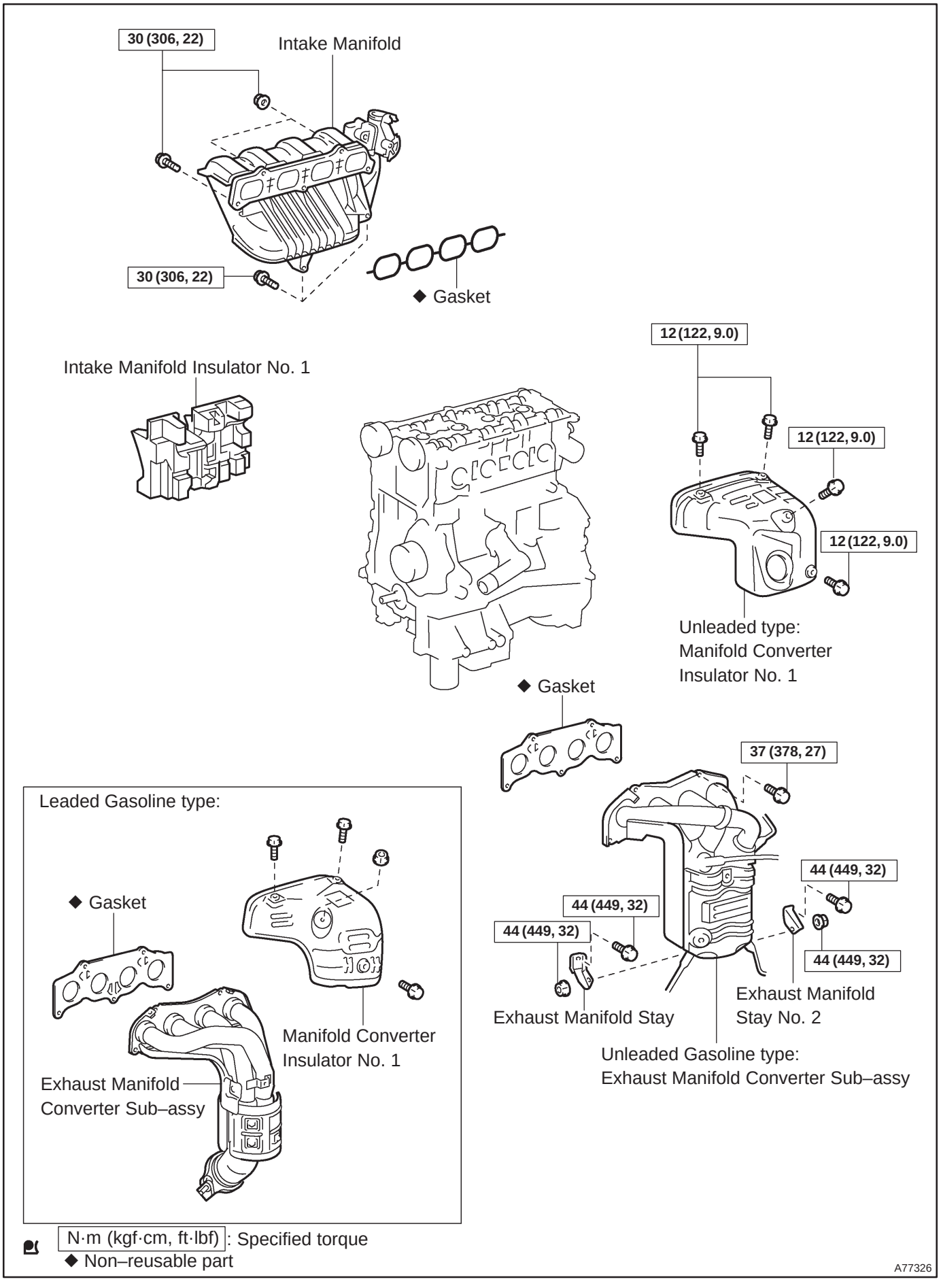
30 (306, 22)
Intake Manifold
30 (306, 22)
◆ Gasket
Intake Manifold Insulator No. 1
12 (122, 9.0)
12 (122, 9.0)
12 (122, 9.0)
Unleaded type:
Manifold Converter
Insulator No. 1
◆ Gasket
37 (378, 27)
44 (449, 32)
44 (449, 32)
44 (449, 32)
44 (449, 32)
Exhaust Manifold Stay
Exhaust Manifold
Stay No. 2
Unleaded Gasoline type:
Exhaust Manifold Converter Sub–assy
Leaded Gasoline type:
◆ Gasket
Manifold Converter
Insulator No. 1
Exhaust Manifold
Converter Sub–assy
N·m (kgf·cm, ft·lbf): Specified torque
◆ Non–reusable part
A77326

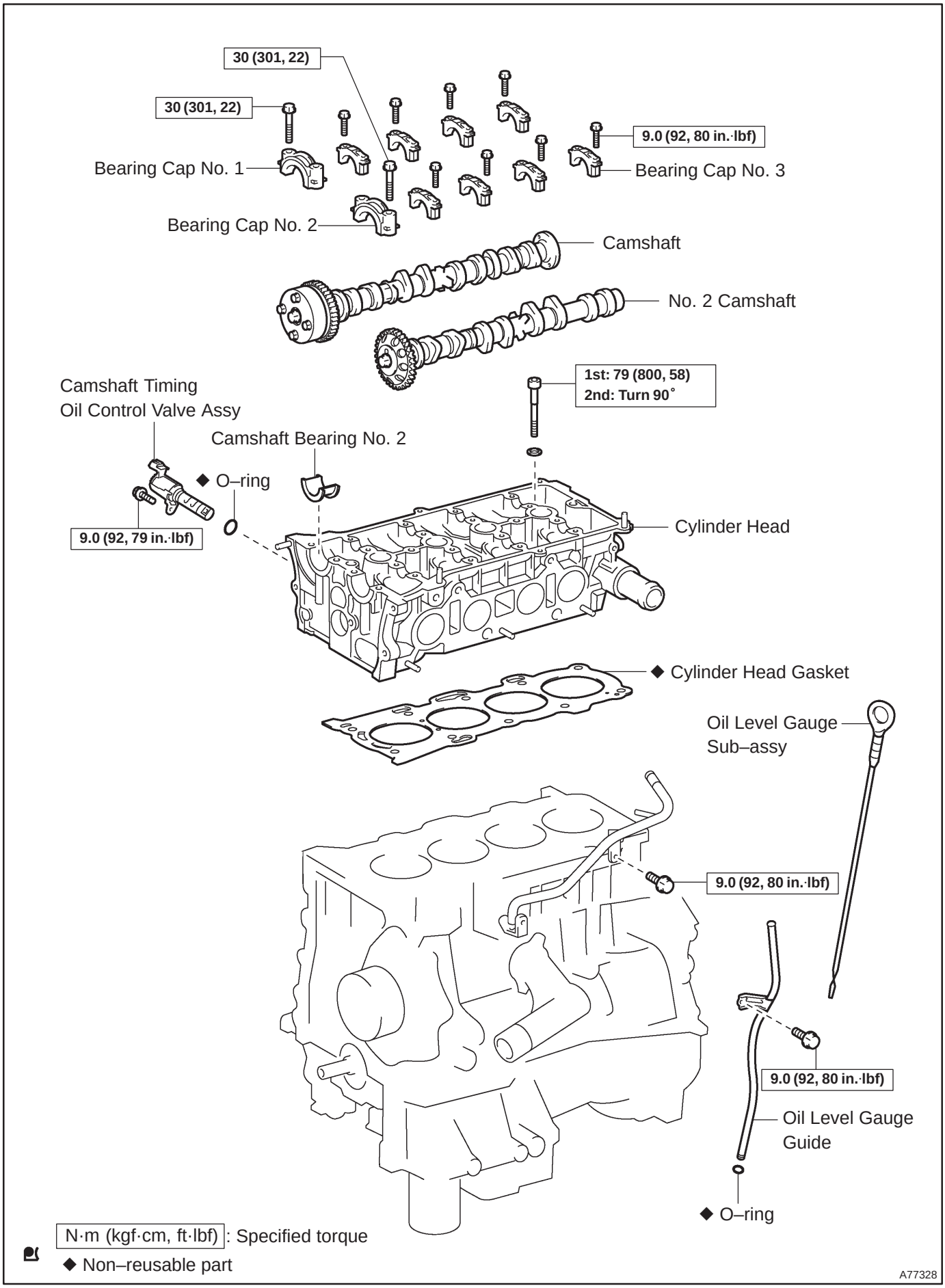
30 (301, 22)
30 (301, 22)
9.0 (92, 80 in.·lbf)
Bearing Cap No. 1
Bearing Cap No. 3
Bearing Cap No. 2
Camshaft
No. 2 Camshaft
1st: 79 (800, 58)
2nd: Turn 90°
Camshaft Timing
Oil Control Valve Assy
Camshaft Bearing No. 2
◆ O–ring
9.0 (92, 79 in.·lbf)
Cylinder Head
◆ Cylinder Head Gasket
Oil Level Gauge
Sub–assy
9.0 (92, 80 in.·lbf)
9.0 (92, 80 in.·lbf)
Oil Level Gauge
Guide
◆ O–ring
N·m (kgf·cm, ft·lbf): Specified torque
◆ Non–reusable part
A77328

141BB–01

REPLACEMENT

1. **DISCHARGE FUEL SYSTEM PRESSURE (See page 11–15)**
2. **REMOVE FRONT WHEEL RH**
3. **REMOVE RADIATOR SUPPORT OPENING COVER**
4. **REMOVE ENGINE ROOM COVER SIDE**
5. **REMOVE ENGINE UNDER COVER RH**
6. **REMOVE ENGINE UNDER COVER LH**
7. **DRAIN COOLANT (See page 16–19)**
8. **DRAIN ENGINE OIL**

(a) Install a new gasket and the drain plug after draining engine oil.
Torque: 25 N·m (255 kgf·cm, 18 ft·lbf)

9. **REMOVE ENGINE COVER SUB–ASSY NO.1 (See page 14–121)**
10. **REMOVE FAN AND GENERATOR V BELT (See page 14–105)**
SST 09249–63010
11. **REMOVE GENERATOR ASSY (See page 19–20)**
12. **REMOVE EXHAUST PIPE ASSY FRONT (See page 15–7)**

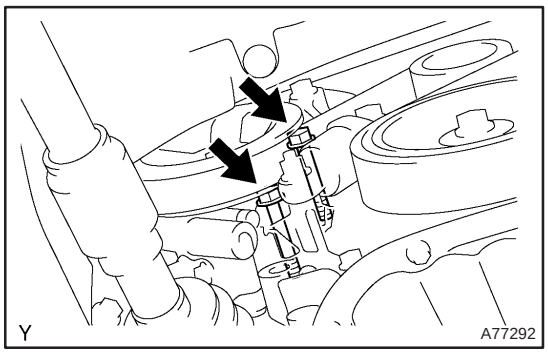

13. **SEPARATE VANE PUMP ASSY**

(a) Remove the 2 bolts and separate the vane pump.

14. **REMOVE IGNITION COIL ASSY**

(a) Remove the 4 bolts and 4 ignition coils.

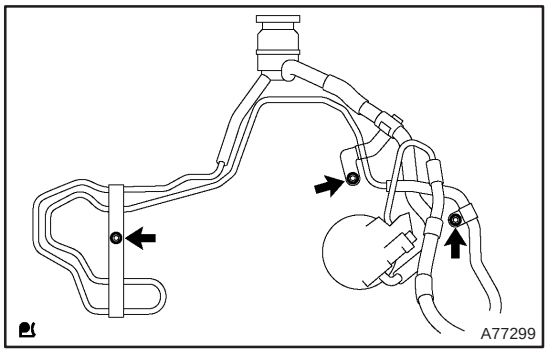

15. **SEPARATE RETURN TUBE SUB–ASSY**

(a) Remove the 3 bolts and separate the return tube as shown in the illustration.

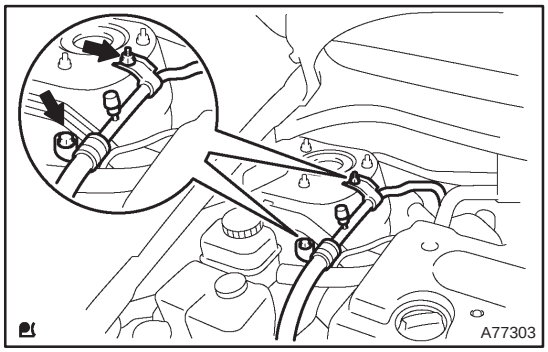

16. SEPARATE COOLER REFRIGERANT SUCTION HOSE NO.1 (LHD(W/ AIR CONDITIONER) STEERING POSITION TYPE)

(a) Remove the 2 nuts and separate the suction hose.

17. SEPARATE VANE PUMP OIL RESERVOIR ASSY

NOTICE:

Do not disconnect the 2 hoses.

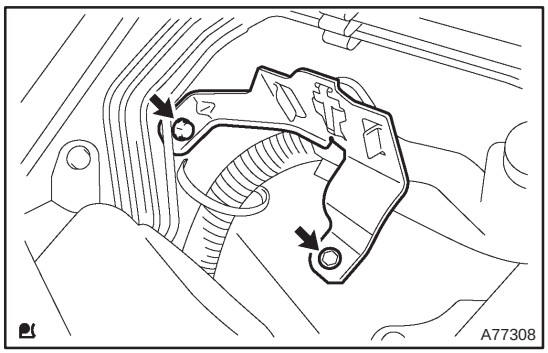

18. REMOVE OIL RESERVOIR BRACKET NO.1

(a) Remove the 2 bolts and the oil reservoir bracket No. 1.

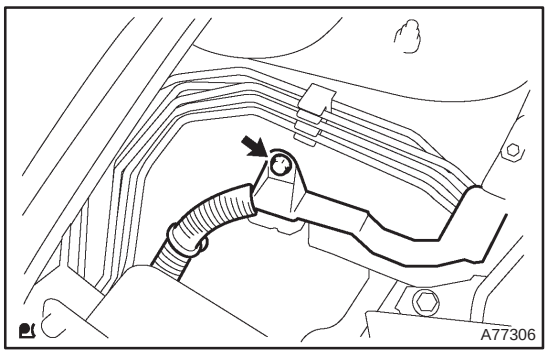

19. SEPARATE ENGINE WIRE

(a) Remove the bolt and separate the clamp and the engine wire.

20. REMOVE ENGINE SERVICE COVER BRACKET RH (W/O AIR CONDITIONING)

(a) Remove the bolt and the engine service cover bracket RH.

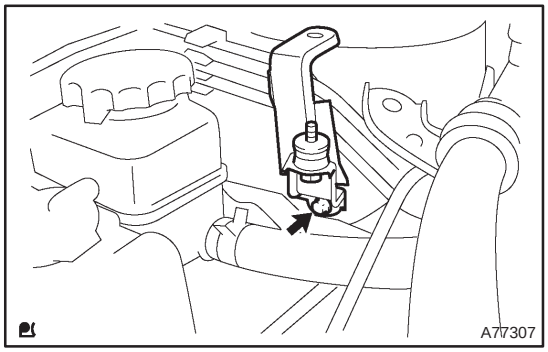

21. REMOVE COOLER BRACKET (LHD(W/ AIR CONDITIONER) STEERING POSITION TYPE)

(a) Remove the bolt and the cooler hose bracket.

22. REMOVE ENGINE SERVICE COVER BRACKET RH (RHD(W/ AIR CONDITIONER) STEERING POSITION TYPE)

(a) Remove the bolt and the engine service cover bracket RH.

23. REMOVE CYLINDER HEAD COVER SUB–ASSY (See page 14–139)

24. SET NO. 1 CYLINDER TO TDC/COMPRESSION (See page 14–139)

25. REMOVE ENGINE MOUNTING BRACKET NO.2 RH (See page 14–139)

26. REMOVE TRANSVERSE ENGINE ENGINE MOUNTING INSULATOR (See page 14–139)

27. REMOVE CRANKSHAFT PULLEY (See page 14–139)

SST 09213–54015 (91651–60855), 09330–00021, 09950–50013 (09951–05010, 09952–05010, 09953–05020, 09954–05021)

28. REMOVE CHAIN TENSIONER ASSY NO.1 (See page 14–139)

29. REMOVE CRANKSHAFT POSITION SENSOR (See page 18–17)

30. REMOVE OIL PAN SUB–ASSY (See page 14–139)

SST 09032–00100

31. REMOVE V–RIBBED BELT TENSIONER ASSY (See page 14–139)

32. REMOVE TIMING CHAIN OR BELT COVER SUB–ASSY (See page 14–139)

33. REMOVE CRANKSHAFT POSITION SENSOR PLATE NO.1

34. REMOVE CHAIN TENSIONER SLIPPER

35. REMOVE CHAIN VIBRATION DAMPER NO.1

36. REMOVE TIMING CHAIN GUIDE (See page 14–139)

37. REMOVE CHAIN SUB–ASSY

38. REMOVE BATTERY

39. REMOVE AIR CLEANER ASSEMBLY WITH HOSE

(a) Disconnect the 2 connectors.

(b) Disconnect the air cleaner hose from the throttle body.

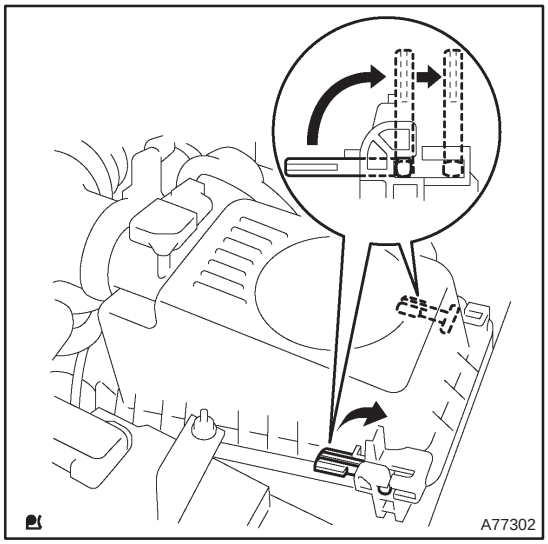

(c) Raise a clamp up, and slide it toward the air cleaner cap, then remove the air cleaner cap from its case.

(d) Remove the air cleaner element.

(e) Remove the 4 bolts and the air cleaner case.

40. DISCONNECT RADIATOR HOSE INLET

41. DISCONNECT UNION TO CONNECTOR TUBE HOSE

42. DISCONNECT HEATER INLET WATER HOSE (W/ AIR CONDITIONING)

43. SEPARATE FUEL TUBE SUB–ASSY (See page 11–26)

44. SEPARATE ENGINE WIRE

45. REMOVE THROTTLE BODY ASSY (See page 10–26)

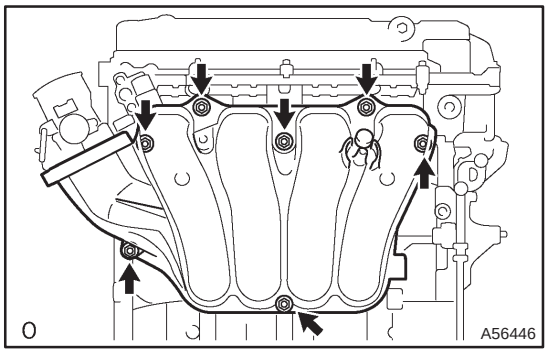

46. REMOVE INTAKE MANIFOLD

(a) Remove the 5 bolts and 2 nuts, then remove the intake manifold and gasket.

47. REMOVE INTAKE MANIFOLD INSULATOR NO.1

48. REMOVE MANIFOLD CONVERTER INSULATOR NO.1

(a) Disconnect the oxygen sensor connector.

(b) Remove the 2 bolts and nut, and then remove the manifold heat insulator.

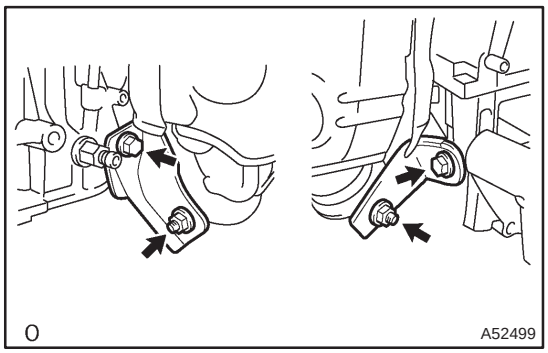

49. REMOVE EXHAUST MANIFOLD CONVERTER SUB–ASSY

(a) Remove the 2 bolts and 2 nuts, then detach the No. 1 and No. 2 exhaust manifold stay.

(b) Disconnect the 3 oxygen sensor connectors.

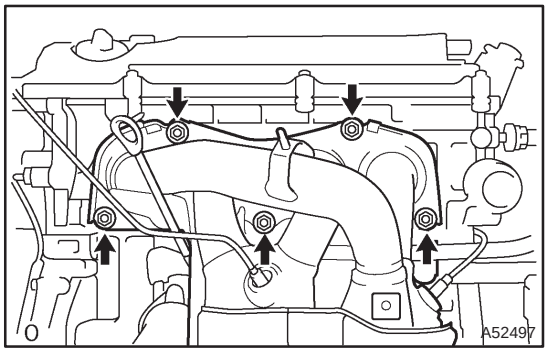

(c) Remove the 5 nuts, the exhaust manifold and gasket.

50. REMOVE NO.2 CAMSHAFT (See page 14–171)

51. REMOVE CAMSHAFT (See page 14–171)

52. REMOVE CAMSHAFT TIMING OIL CONTROL VALVE ASSY (W/ VVT–i)

(a) Remove the bolt and the oil control valve.

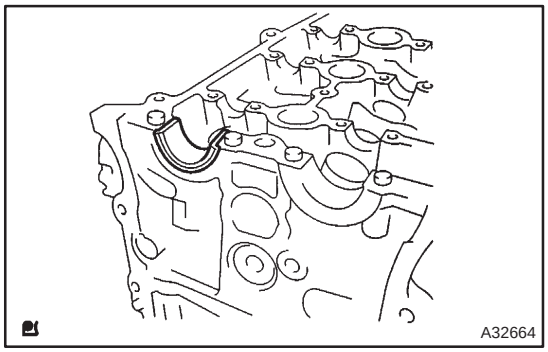

53. REMOVE CAMSHAFT BEARING NO.2

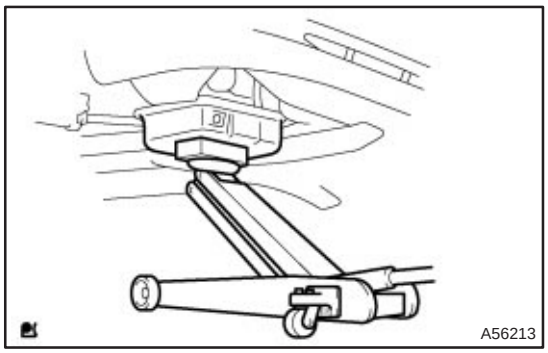

54. SUPPORT ENGINE ASSEMBLY WITH TRANSAXLE

(a) Install the oil pan sub–assy.
(b) Set the jack under the engine assembly w/ transaxle, and place a wooden block on the jack.
(c) Remove the chain block and sling devise.

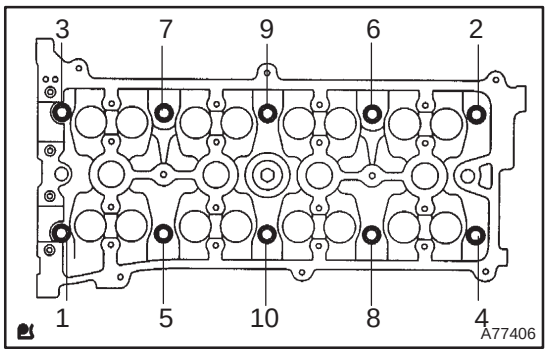

55. REMOVE CYLINDER HEAD SUB–ASSY

(a) Using several steps, loosen the 10 cylinder head bolts, with 10 mm bi–hexagon wrench uniformly in the sequence shown in the illustration.
(b) Remove the 10 cylinder head bolts and plate washers.

NOTICE:

- **Be careful not to drop washers into the cylinder head.**
- **Head warpage or cranking could result from removing bolts and installing in incorrect order.**

56. REMOVE CYLINDER HEAD GASKET

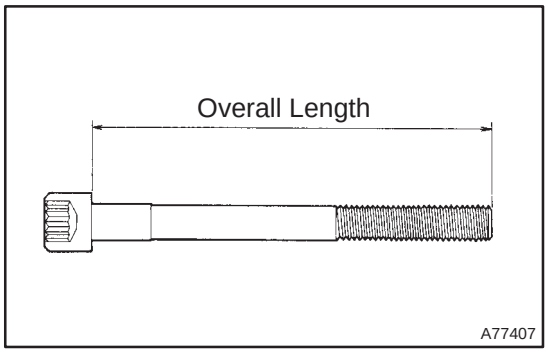

57. INSPECT CYLINDER HEAD SET BOLT

(a) Using a vernier calipers, measure the length of the cylinder head set bolts from the seat to the end.
Standard bolt length:
161.3 to 162.3 mm (6.350 to 6.390 in.)
Maximum bolt length: 164.2 mm (6.465 in.)

If the length is greater than maximum, replace the cylinder head set bolts.

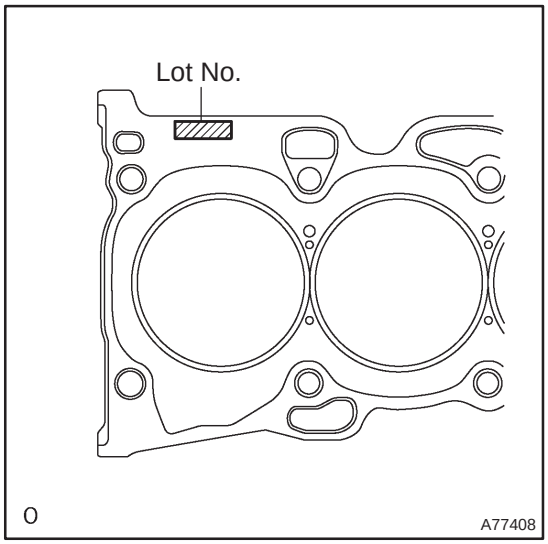

58. INSTALL CYLINDER HEAD GASKET

(a) Place a new cylinder head gasket on the cylinder block surface with the Lot No. stamp upward.

NOTICE:

- **Remove any oil from contact surface.**
- **Be careful of the installation direction.**
- **Place the cylinder head gently in order not to damage the gasket with the bottom part of the head.**

59. INSTALL CYLINDER HEAD SUB–ASSY

HINT:

The cylinder head set bolts are tightened in 2 successive steps.

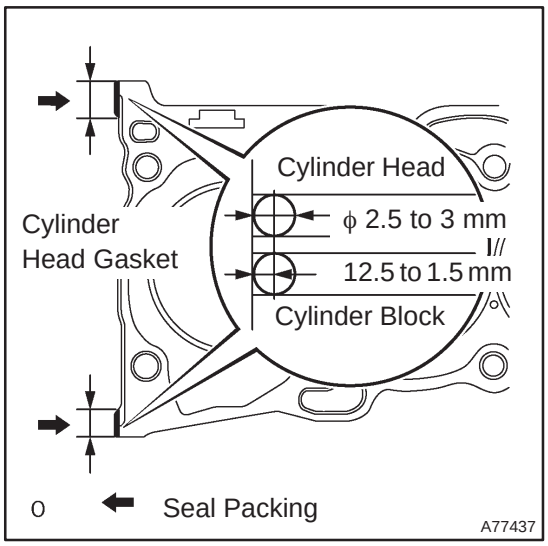

(a) Apply a continuous bead (Diameter 2.5 to 3 mm (0.098 to 0.118 in.)) of seal packing as shown in the illustration.

Seal packing: Part No. 08826–00080 or equivalent

NOTICE:

- **Remove any oil from contact surface.**
- **Install the cylinder head within 3 minutes after applying seal packing.**
- **After installing the cylinder head, cylinder head bolts must be tightened within 15 minutes.**
- **Do not start the engine within 2 hours after installing.**

(b) Apply a light coat of engine oil on the threads of the cylinder head bolts.

(c) Install the bolts and plate washers to the cylinder head.

NOTICE:

Do not drop the washers into the cylinder head.

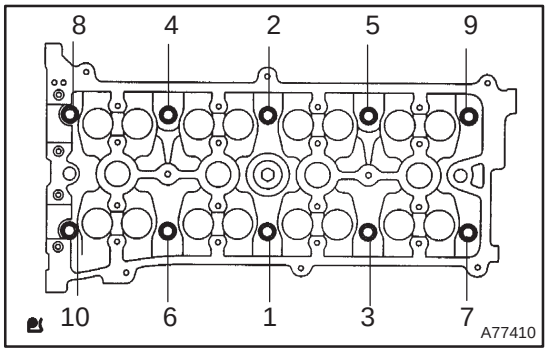

(d) Using several steps, install and tighten the 10 cylinder head bolts and plate washers with a 10 mm bi–hexagon wrench uniformly, in the sequence shown in the illustration.

Torque: 79 N·m (806 kgf·cm, 58 ft·lbf)

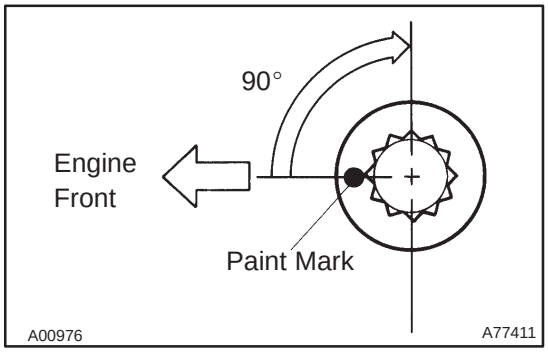

(e) Mark the front side of the cylinder head set bolts with paint.

(f) Retighten the cylinder head set bolts by 90° in the same sequence as step (A).

(g) Check that each paint mark is now at a 90° angle to the front.

60. INSTALL CAMSHAFT TIMING OIL CONTROL VALVE ASSY (W/ VVT–i)

(a) Install a light coat of the engine oil to the new O–ring and install it to the oil control valve.

(b) Install the oil control valve with the bolt.
Torque: 9.0 N·m (92 kgf·cm, 79 in.·lbf)

61. INSTALL CAMSHAFT (See page 14–171)

62. INSTALL NO.2 CAMSHAFT (See page 14–171)

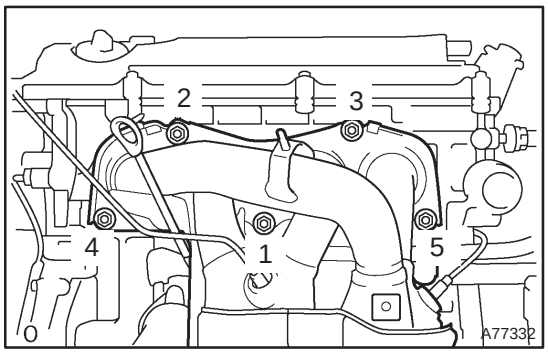

63. INSTALL EXHAUST MANIFOLD CONVERTER SUB–ASSY

(a) Install a new gasket and the exhaust manifold with the 5 nuts.
Torque: 37 N·m (378 kgf·cm, 27 ft·lbf)

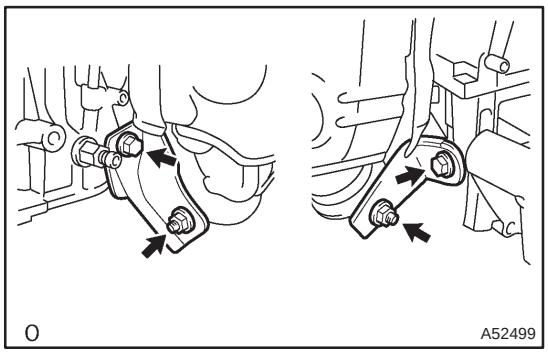

(b) Install the No. 1 and No. 2 exhaust manifold stay with the 2 bolts and 2 nuts.
Torque: 44 N·m (449 kgf·cm, 32 ft·lbf)

64. INSTALL EXHAUST MANIFOLD HEAT INSULATOR NO.1
Torque: 12 N·m (122 kgf·cm, 9.0 ft·lbf)

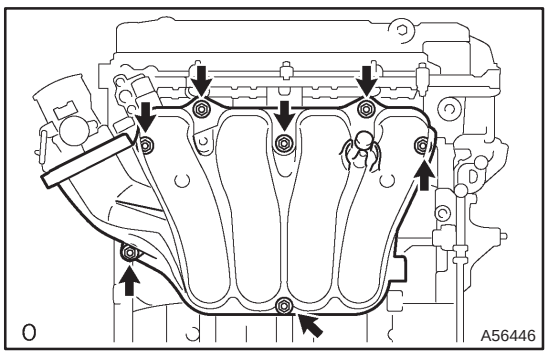

65. INSTALL INTAKE MANIFOLD

(a) Install a new gasket and the intake manifold with the 5 bolts and 2 nuts.
Torque: 30 N·m (306 kgf·cm, 22 ft·lbf)

66. INSTALL THROTTLE BODY ASSY (See page 10–26)

67. INSTALL FUEL TUBE SUB–ASSY (See page 11–19)

68. INSTALL AIR CLEANER ASSEMBLY WITH HOSE
Torque: 5.0 N·m (51 kgf·cm, 44 in.·lbf)

69. **INSTALL CHAIN VIBRATION DAMPER NO.1**
    Torque: 9.0 N·m (92 kgf·cm, 80 in.·lbf)
70. **INSTALL CHAIN SUB–ASSY (See page 14–139)**
71. **INSTALL TIMING CHAIN GUIDE**
    Torque: 9.0 N·m (92 kgf·cm, 80 in.·lbf)
72. **INSTALL CHAIN TENSIONER SLIPPER**
    Torque: 19 N·m (195 kgf·cm, 15 ft·lbf)
73. **INSTALL CRANKSHAFT POSITION SENSOR PLATE NO.1 (See page 14–171)**
74. **INSTALL TIMING CHAIN OR BELT COVER SUB–ASSY (See page 14–139)**
75. **INSTALL V–RIBBED BELT TENSIONER ASSY (See page 14–139)**
76. **INSTALL OIL PAN SUB–ASSY (See page 14–139)**
77. **INSTALL CRANKSHAFT POSITION SENSOR (See page 18–17)**
78. **INSTALL CRANKSHAFT PULLEY (See page 14–139)**
    SST 09213–54015 (91651–60855), 09330–00021
79. **INSTALL CHAIN TENSIONER ASSY NO.1 (See page 14–139)**
80. **INSTALL TRANSVERSE ENGINE ENGINE MOUNTING INSULATOR**
    Torque: 52 N·m (530 kgf·cm, 38 ft·lbf)
81. **INSTALL ENGINE MOUNTING BRACKET NO.2 RH (See page 14–139)**
82. **INSTALL CYLINDER HEAD COVER SUB–ASSY (See page 14–139)**
83. **INSTALL ENGINE SERVICE COVER BRACKET RH (W/O AIR CONDITIONING)**
    Torque: 9.0 N·m (92 kgf·cm, 80 in.·lbf)
84. **INSTALL COOLER BRACKET (LHD(W/ AIR CONDITIONER) STEERING POSITION TYPE)**
    Torque: 9.0 N·m (92 kgf·cm, 80 in.·lbf)
85. **INSTALL ENGINE SERVICE COVER BRACKET RH (RHD(W/ AIR CONDITIONER) STEERING POSITION TYPE)**
    Torque: 9.0 N·m (92 kgf·cm, 80 in.·lbf)
86. **INSTALL ENGINE WIRE**
87. **INSTALL OIL RESERVOIR BRACKET NO.1**
    Torque: 8.0 N·m (82 kgf·cm, 71 in.·lbf)
88. **INSTALL COOLER REFRIGERANT SUCTION HOSE NO.1 (LHD(W/ AIR CONDITIONER) STEERING POSITION TYPE)**
89. **INSTALL RETURN TUBE SUB–ASSY**
    Torque: 8.0 N·m (82 kgf·cm, 71 in.·lbf)
90. **INSTALL IGNITION COIL ASSY**
    Torque: 9.0 N·m (92 kgf·cm, 80 in.·lbf)
91. **INSTALL ENGINE COVER SUB–ASSY NO.1**
    Torque: 7.0 N·m (71 kgf·cm, 62 in.·lbf)
92. **INSTALL VANE PUMP ASSY**
    Torque: 37 N·m (377 kgf·cm, 27 ft·lbf)
93. **INSTALL EXHAUST PIPE ASSY FRONT (See page 15–7)**
94. **INSTALL GENERATOR ASSY (See page 19–20)**
95. **INSTALL FAN AND GENERATOR V BELT (See page 14–105)**
    SST 09249–63010
96. **ADD COOLANT (See page 16–19)**
97. **ADD ENGINE OIL**
98. **CHECK FOR ENGINE COOLANT LEAKS (See page 16–13)**
99. **CHECK FOR ENGINE OIL LEAKS**
100. **CHECK FOR FUEL LEAKS**
101. **INSTALL FRONT WHEEL RH**
     Torque: 103 N·m (1,050 kgf·cm, 76 ft·lbf)

CAMSHAFT (1AZ–FE)

141BG–01

COMPONENTS

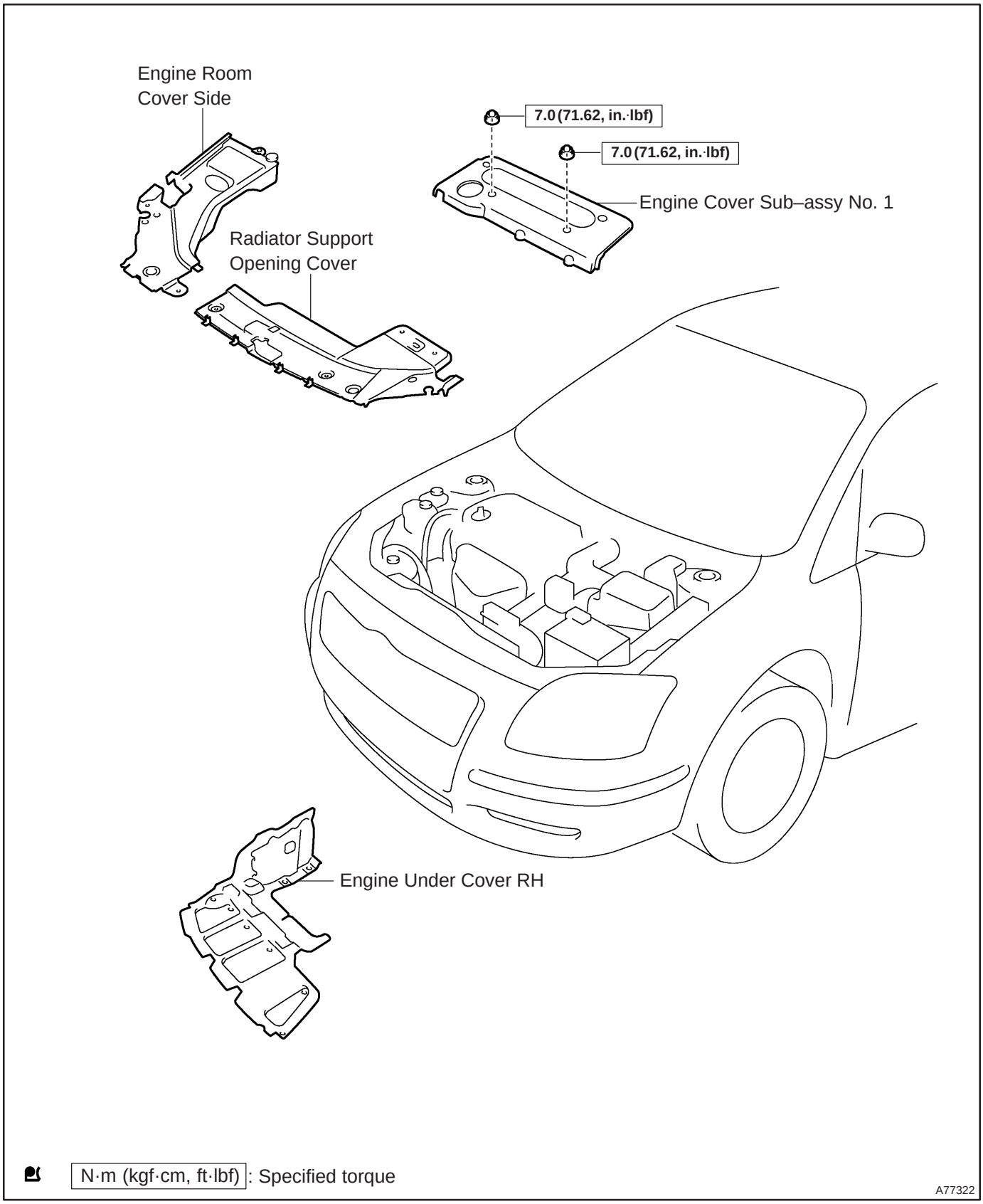

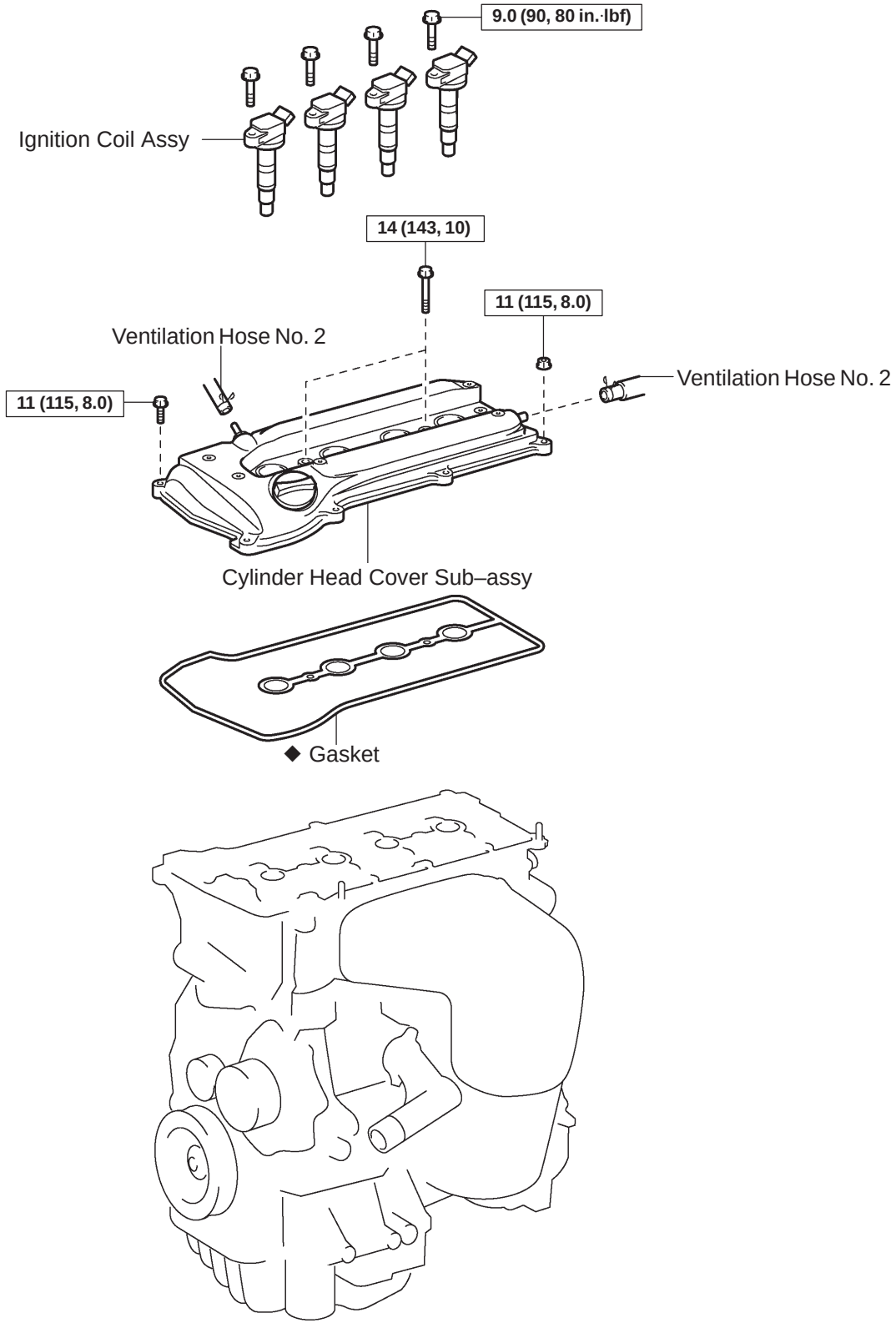

N·m (kgf·cm, ft·lbf): Specified torque

◆ Non–reusable part

A77320

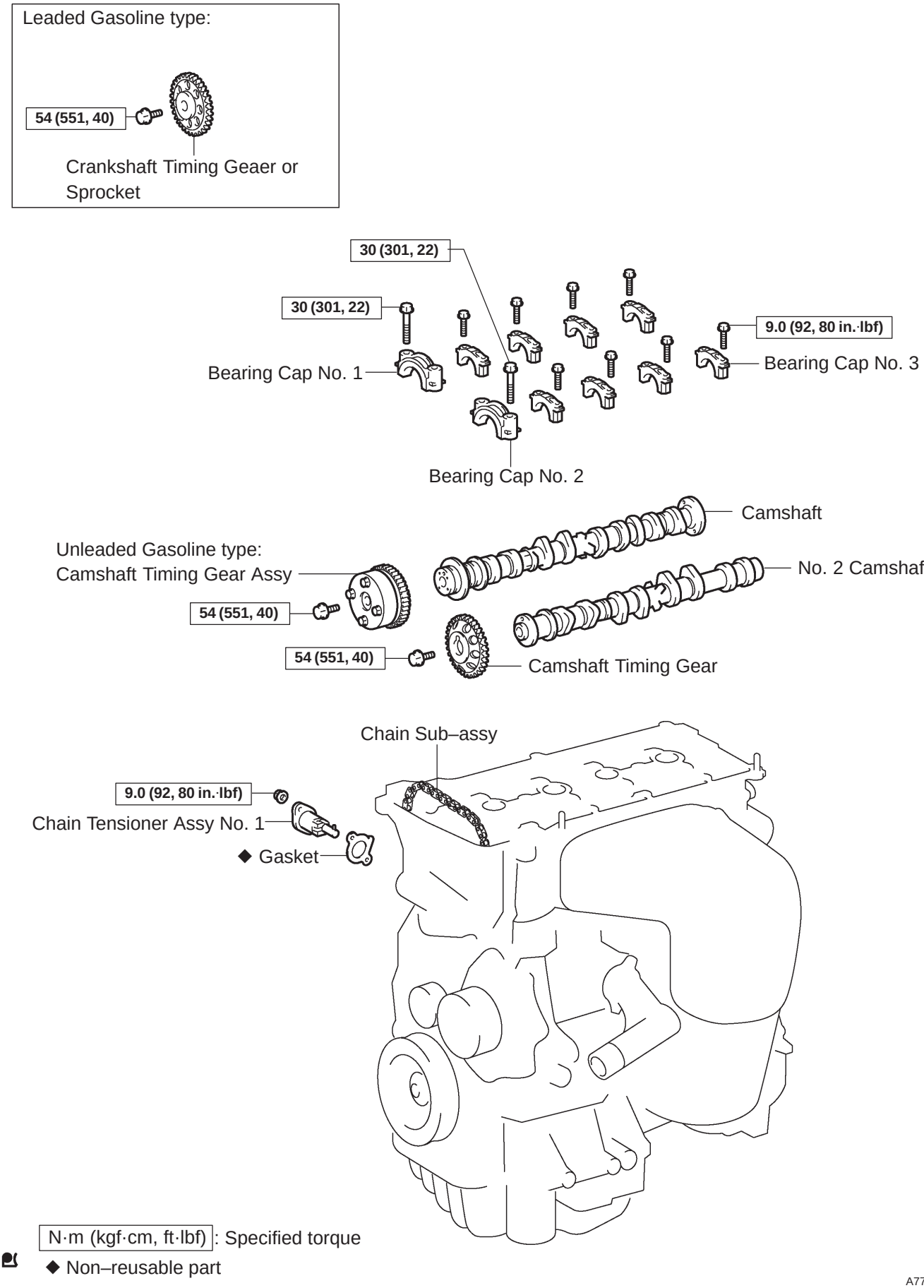
Leaded Gasoline type:
54 (551, 40)
Crankshaft Timing Geaer or Sprocket
30 (301, 22)
30 (301, 22)
9.0 (92, 80 in.·lbf)
Bearing Cap No. 1
Bearing Cap No. 3
Bearing Cap No. 2
Camshaft
No. 2 Camshaft
Unleaded Gasoline type:
Camshaft Timing Gear Assy
54 (551, 40)
54 (551, 40)
Camshaft Timing Gear
Chain Sub–assy
9.0 (92, 80 in.·lbf)
Chain Tensioner Assy No. 1
◆ Gasket
N·m (kgf·cm, ft·lbf): Specified torque
◆ Non–reusable part
A77323

141BK–01

REPLACEMENT

1. REMOVE RADIATOR SUPPORT OPENING COVER

2. REMOVE ENGINE ROOM COVER SIDE

3. REMOVE ENGINE UNDER COVER RH

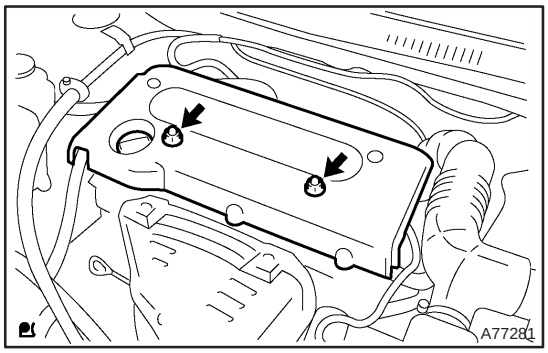

4. REMOVE ENGINE COVER SUB–ASSY NO.1

(a) Remove the 2 nuts and the engine cover No. 1.

5. REMOVE IGNITION COIL ASSY

(a) Remove 4 bolts and the ignition coils.

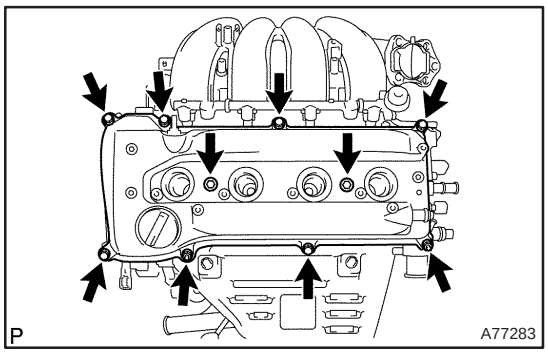

6. REMOVE CYLINDER HEAD COVER SUB–ASSY

(a) Disconnect the 2 PCV hoses from the cylinder head cover.

(b) Remove the 8 bolts and 2 nuts, and then remove the cylinder head cover and gasket.

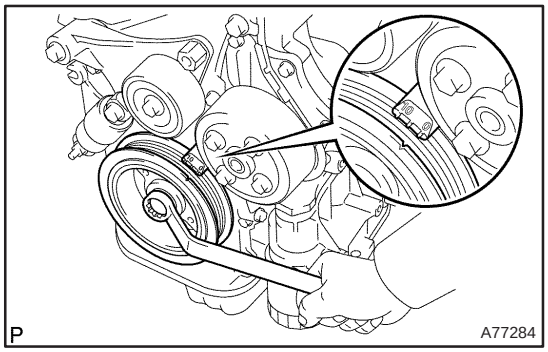

7. SET NO. 1 CYLINDER TO TDC/COMPRESSION

(a) Turn the crankshaft pulley, and align its timing notch with timing mark 0 of the timing chain cover.

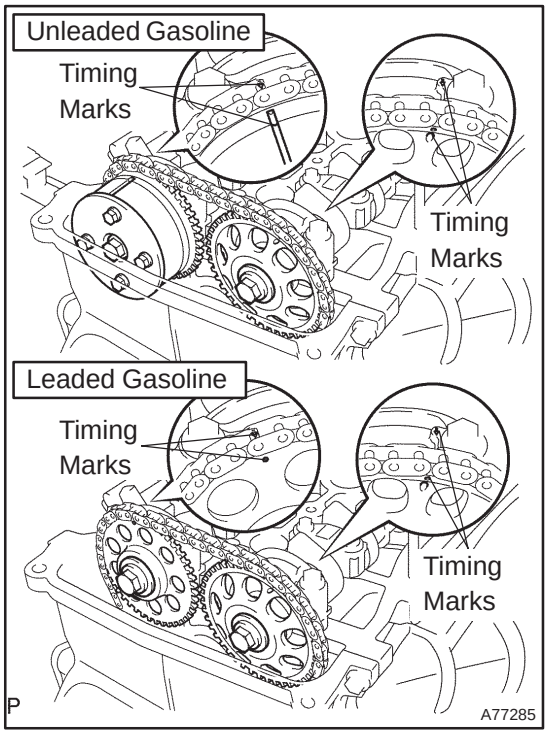

(b) Check that each timing mark of the camshaft timing gears is aligned with each timing mark located on the No. 1 and No. 2 bearing caps as shown in the illustration.

If not, turn the crankshaft 1 revolution (360°) and align the marks as above.

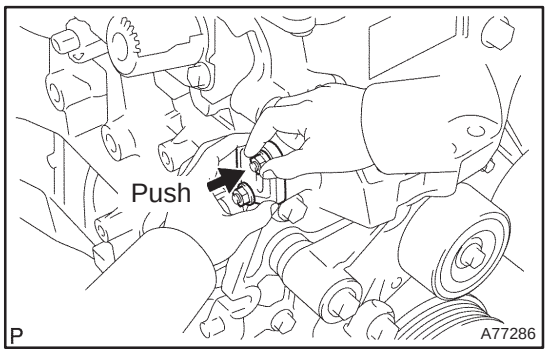

8. REMOVE CHAIN TENSIONER ASSY NO.1

(a) Remove the 2 nuts, then remove the chain tensioner and a gasket.

NOTICE:

Do not turn the crankshaft.

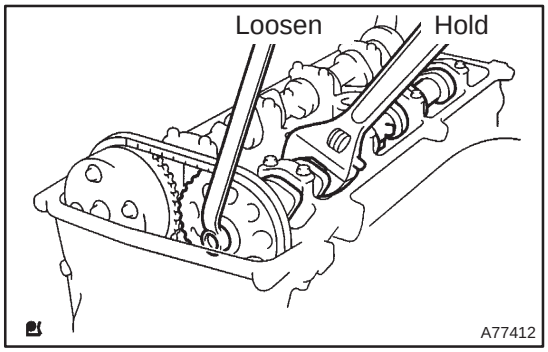

9. REMOVE NO.2 CAMSHAFT

(a) Hold the No. 2 camshaft with a wrench on the hexagonal lobe, and loosen the camshaft timing gear set bolt.

NOTICE:

Be careful not to damage the cylinder head and valve lifter with the wrench.

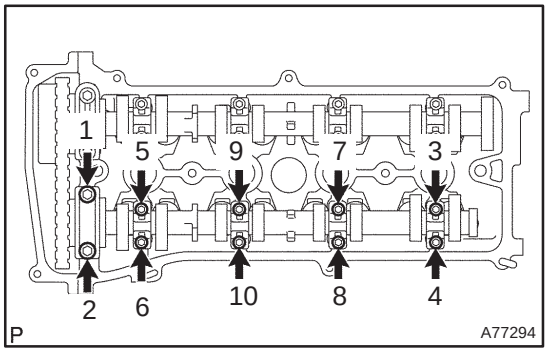

(b) Using several steps, loosen and remove the 10 camshaft bearing cap bolts uniformly in the sequence shown in the illustration.

(c) Remove the 5 camshaft bearing caps.

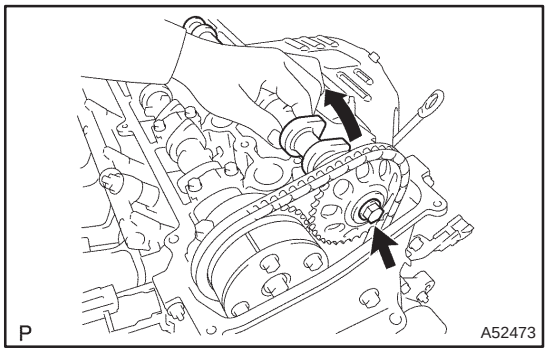

(d) Raising the No. 2 camshaft, remove the set bolt.
(e) Remove the camshaft timing gear from the No. 2 camshaft with the timing chain wrapped.
(f) Remove the camshaft timing gear from the timing chain.

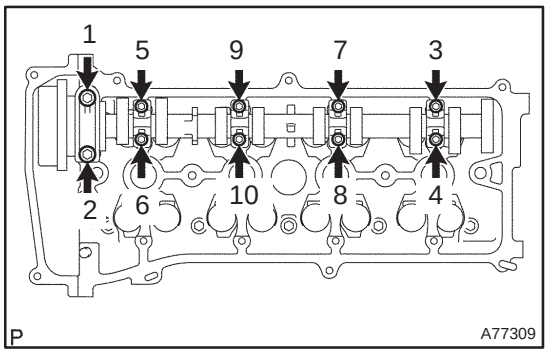

10. REMOVE CAMSHAFT

(a) Using several steps, loosen and remove the 10 camshaft bearing cap bolts uniformly in the sequence shown in the illustration.
(b) Remove the 5 camshaft bearings.
(c) Remove the camshaft.

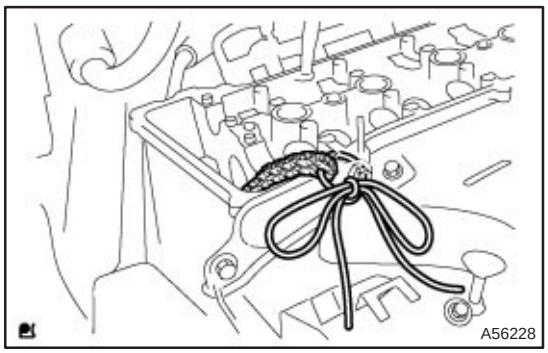

(d) Tie the timing chain as shown in the illustration.

NOTICE:

- **Be careful not to drop anything inside the timing chain cover.**
- **Do not expose the chain to water, and prevents dust.**

11. REMOVE CAMSHAFT TIMING GEAR OR SPROCKET (LEADED GASOLINE)

(a) Clamp the camshaft in a vise and remove the bolt and the camshaft timing gear.

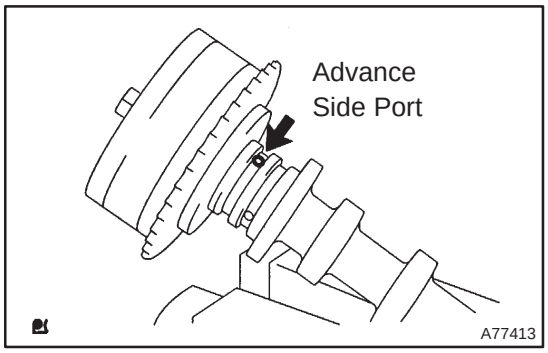

12. REMOVE CAMSHAFT TIMING GEAR ASSY (UNLEADED GASOLINE)

(a) Fix the camshaft with a vise, and make sure the camshaft timing gear does not rotate.
(b) Cover all the oil ports with vinyl tape except an advance side port shown in the illustration.

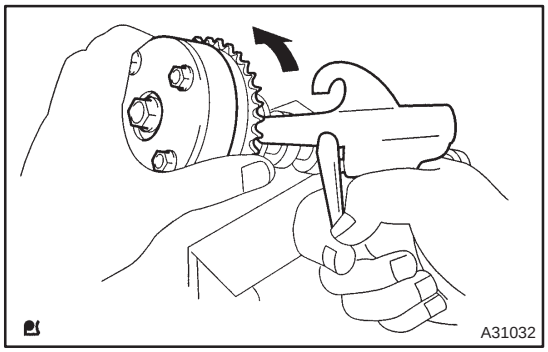

(c) Put air pressure into the oil port with 150 kpa (1.5 kgf/cm^2 21 psi), and turn the camshaft timing gear to the advance direction (counterclockwise) by hand.

CAUTION:

Cover the paths with shop rag to avoid oil splashing.

HINT:

Depending on the air pressure, the camshaft timing gear will turn to the advance angle side without applying force by hand. Also, under the condition that the pressure can be hardly applied because of the air leakage from the port, there may be the case that the lock pin could be hardly released.

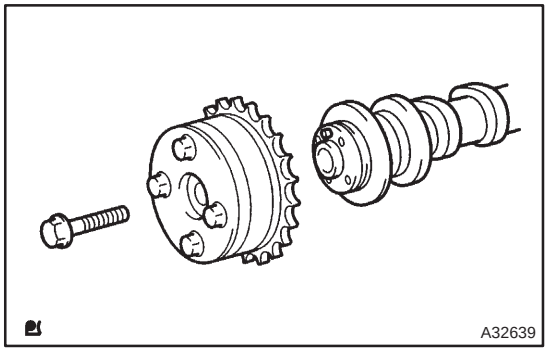

(d) Remove the fringe bolt of camshaft timing gear.

NOTICE:

- **Be sure not to remove the other 4 bolts.**
- **If reusing the camshaft timing gear, release the straight pin lock first, and then install the gear.**

13. INSTALL CAMSHAFT TIMING GEAR OR SPROCKET (LEADED GASOLINE)
Torque: 54 N·m (551 kgf·cm, 40 ft·lbf)

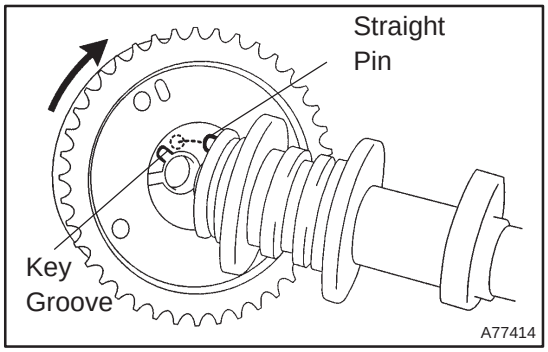

14. INSTALL CAMSHAFT TIMING GEAR ASSY (UNLEADED GASOLINE)

(a) Put the camshaft timing gear and the camshaft together with the straight pin off the key groove.

(b) Turn the camshaft timing gear assembly to the left direction (as shown in the illustration) while lightly pushing it toward the camshaft. Push further at the position where the pin gets into the groove.

NOTICE:

Be sure not to turn the camshaft timing gear to the retard angle side (to the right direction).

(c) Check that there is no clearance between the gear's fringe and the camshaft.

(d) Tighten the fringe bolt with the camshaft timing gear fixed.
Torque: 54 N·m (551 kgf·cm, 40 ft·lbf)

(e) Check that the camshaft timing gear can move to the retard angle side (to the right direction), and is locked at the most retarded position.

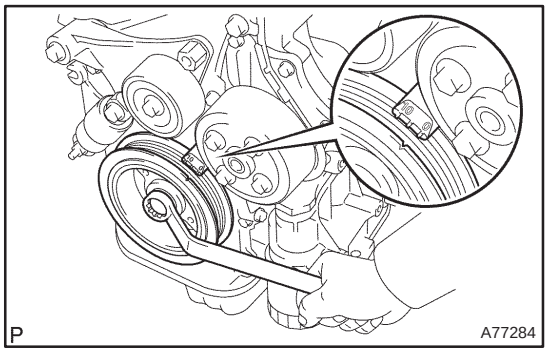

15. INSTALL CAMSHAFT

(a) Turn the crankshaft pulley, and align its groove with timing mark 0 of the timing chain cover.

(b) Install the timing chain on the camshaft timing gear, with the painted links aligned with the timing marks on the camshaft timing gear.

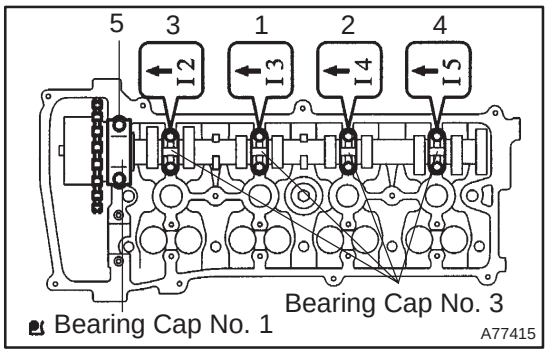

(c) Examine the front marks and numbers and tighten the bolts in the sequence shown in the illustration.

Torque:
Bearing cap No. 1 30 N·m (301 kgf·cm, 22 ft·lbf)
Bearing cap No. 3 9.0 N·m (92 kgf·cm, 80 in.·lbf)

16. INSTALL NO.2 CAMSHAFT

(a) Put the No. 2 camshaft on the cylinder head with the painted links of the chain aligned with the timing mark on the camshaft timing gear.

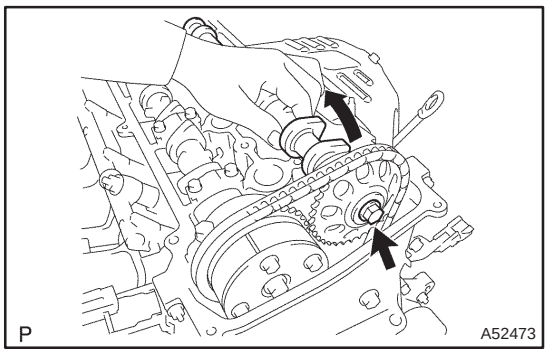

(b) Raising the No. 2 camshaft, tighten the set bolt temporarily.

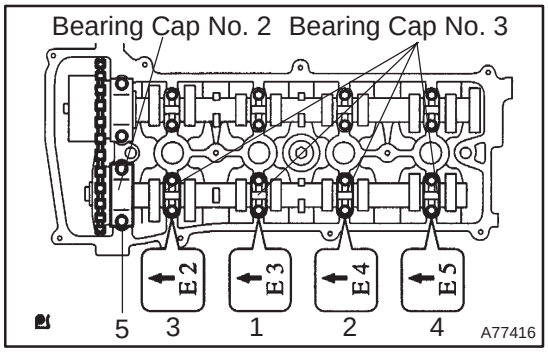

(c) Examine the from marks and numbers and tighten the bolts in the sequence shown in the illustration.

Torque:
Bearing cap No. 2 30 N·m (301 kgf·cm, 22 ft·lbf)
Bearing cap No. 3 9.0 N·m (92 kgf·cm, 80 in.·lbf)

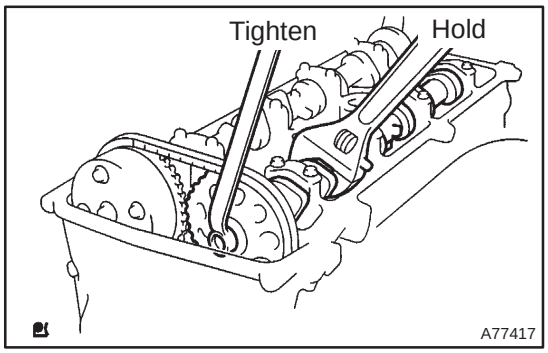

(d) Hold the camshaft with a wrench on the hexagonal lobe, and tighten the camshaft timing gear set bolt.

Torque: 54 N·m (551 kgf·cm, 40 ft·lbf)

NOTICE:

Be careful not to damage the cylinder head and valve lifter.

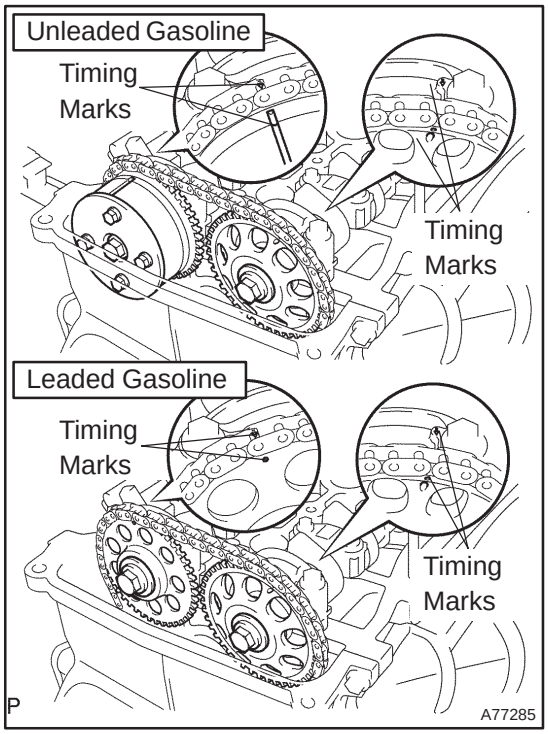

(e) Check that the match marks on the timing chain and the camshaft timing gears are positioned as shown in the illustration.

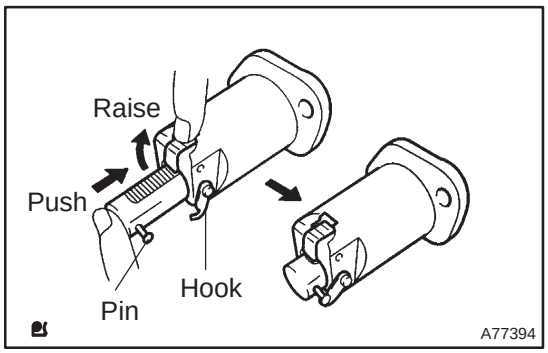

17. INSTALL CHAIN TENSIONER ASSY NO.1

(a) Release the ratchet pawl, fully push in the plunger and apply the hook to the pin so that the plunger is locked in position.

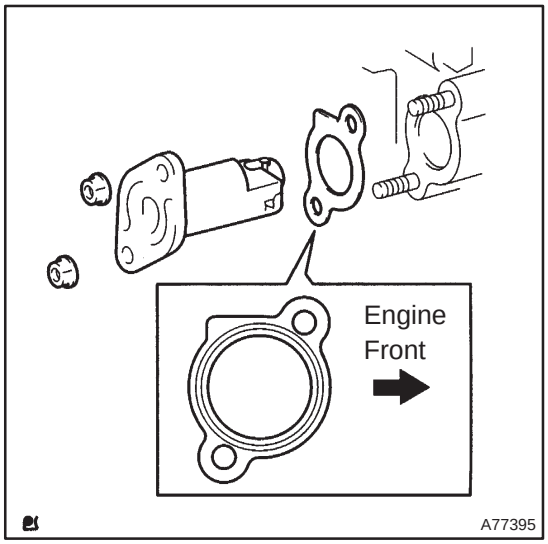

(b) Install a new gasket and the chain tensioner No. 1 with the 2 nuts.

Torque: 9.0 N·m (92 kgf·cm, 80 in.·lbf)

NOTICE:

If the hook is disengaged while installing, apply the hook again, and then resume the installation.

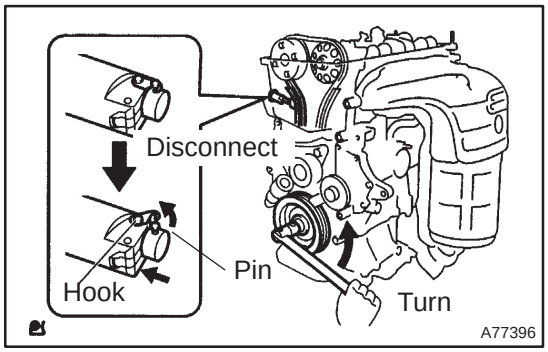

(c) Turn the crankshaft counterclockwise, and check that the pin is disengaged from the hook.

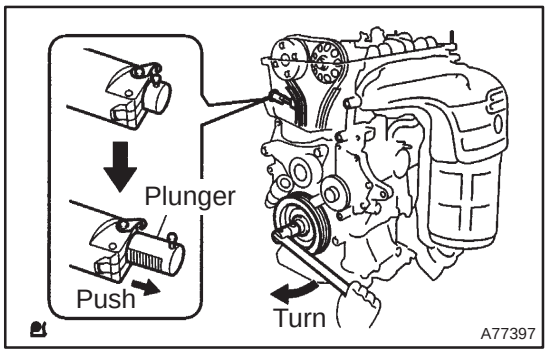

(d) Turn the crankshaft clockwise, and check the plunger is extended.

18. INSTALL CYLINDER HEAD COVER SUB–ASSY

(a) Remove any old seal packing (FIPG) material.

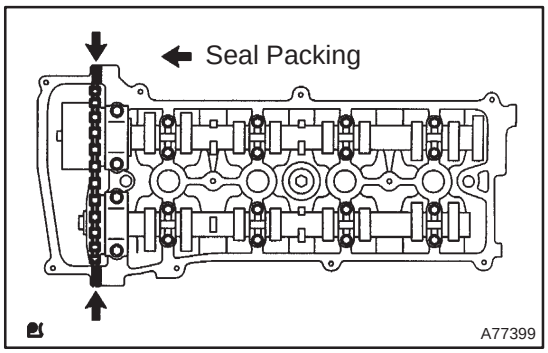

(b) Apply seal packing to the 2 locations as shown in the illustration.

Seal Packing: Part No. 08826–00080 or equivalent

NOTICE:

- **Remove any oil from the contact surface.**
- **Install the cylinder head cover within 5 minutes after applying seal packing.**
- **Do not expose the seal to engine oil 2 hours after installing.**

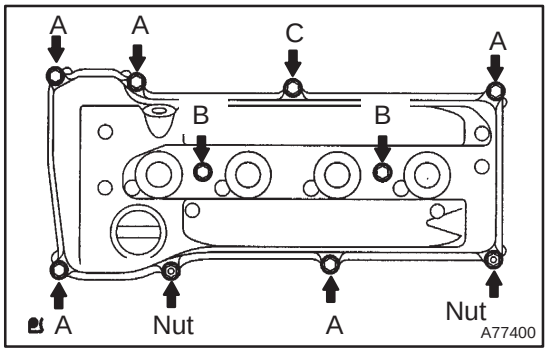

(c) Install the cylinder head cover with the 8 bolts and 2 nuts.

Torque:
Bolt A 11 N·m (112 kgf·cm, 8.0 ft·lbf)
Bolt B 14 N·m (143 kgf·cm, 10 ft·lbf)
Bolt C 21 N·m (214 kgf·cm, 15 ft·lbf)
Nut 11 N·m (112 kgf·cm, 8.0 ft·lbf)

19. INSTALL IGNITION COIL ASSY
Torque: 9.0 N·m (92 kgf·cm, 80 in.·lbf)

20. CHECK FOR ENGINE OIL LEAKS

21. INSTALL ENGINE COVER SUB–ASSY NO.1
Torque: 7.0 N·m (71 kgf·cm, 62 in.·lbf)

TIMING GEAR CASE OR TIMING CHAIN CASE OIL SEAL (1AZ–FE)

141BH–01

REPLACEMENT

1. REMOVE FRONT WHEEL RH
2. REMOVE RADIATOR SUPPORT OPENING COVER
3. REMOVE ENGINE ROOM COVER SIDE
4. REMOVE ENGINE UNDER COVER RH

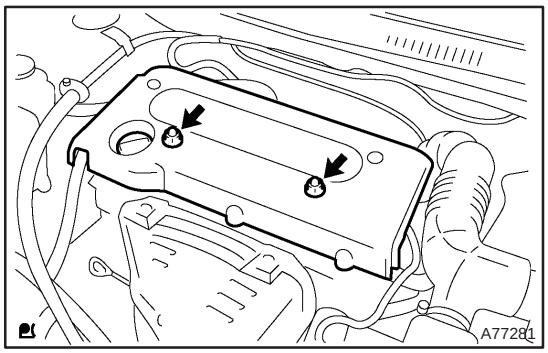

5. REMOVE ENGINE COVER SUB–ASSY NO.1

(a) Remove the 2 nuts and the engine cover No. 1.

6. REMOVE FAN AND GENERATOR V BELT (See page 14–105)

SST 09249–63010

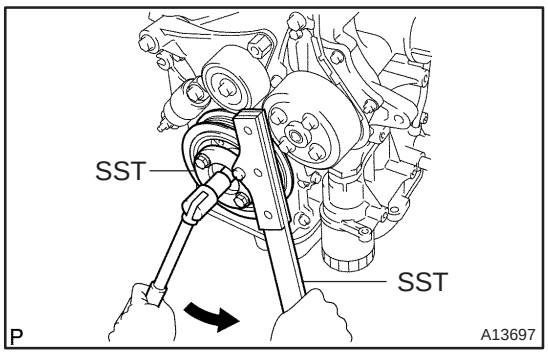

7. REMOVE CRANKSHAFT PULLEY

(a) Using SST, loosen the pulley bolt.

SST 09213–54015 (91651–60855), 09330–00021,

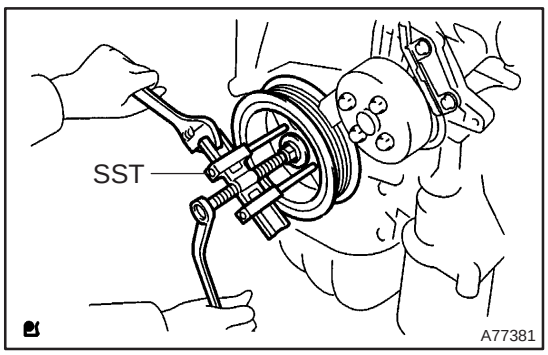

(b) Using SST, remove the crankshaft pulley.

SST 09950–50013 (09951–05010, 09952–05010, 09953–05020, 09954–05021)

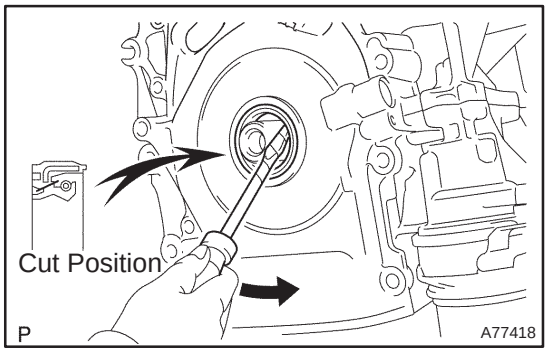

8. REMOVE TIMING GEAR CASE OR TIMING CHAIN CASE OIL SEAL

(a) Using a screwdriver with tip wrapped in the tape, pry out the oil seal.

HINT:

After removal, check if the crankshaft is not damaged.

If it is damaged, smooth the surface with 400–grit sandpaper.

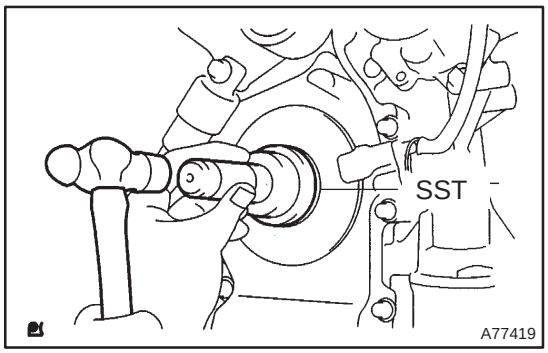

9. INSTALL TIMING GEAR CASE OR TIMING CHAIN CASE OIL SEAL

(a) Apply MP grease to a new oil seal lip.

NOTICE:

Keep the lip off foreign materials.

(b) Using SST and a hammer, tap in the oil seal until its surface is flush with the rear oil seal retainer edge.

SST 09223–22010

NOTICE:

Wipe off extra grease on the crankshaft.

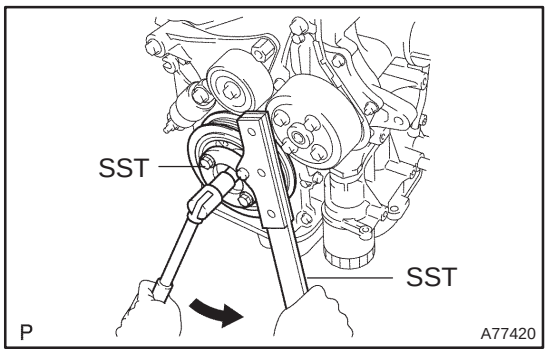

10. INSTALL CRANKSHAFT PULLEY

(a) Align the pulley set key with the key groove of the pulley.

(b) Using SST, install the pulley bolt.

SST 09213–54015 (91651–60855), 09330–00021

Torque: 170 N·m (1,733 kgf·cm, 125 ft·lbf)

11. INSTALL FAN AND GENERATOR V BELT (See page 14–105)

SST 09249–63010

12. INSTALL ENGINE COVER SUB–ASSY NO.1

Torque: 7.0 N·m (71 kgf·cm, 62 in.·lbf)

13. INSTALL FRONT WHEEL RH

Torque: 103 N·m (1,050 kgf·cm, 76 ft·lbf)

14. CHECK FOR ENGINE OIL LEAKS

ENGINE REAR OIL SEAL (1AZ–FE)

141BI–01

REPLACEMENT

1. **REMOVE MANUAL TRANSAXLE ASSY (M/T TRANSAXLE) (See page 41–24)**
2. **REMOVE AUTOMATIC TRANSAXLE ASSY (A/T TRANSAXLE) (See page 40–25)**
3. **REMOVE CLUTCH COVER ASSY (M/T TRANSAXLE) (See page 42–26)**
4. **REMOVE DRIVE PLATE AND RING GEAR OR FLYWHEEL (See page 14–121)**
   SST 09213–54015 (91651–60855), 09330–00021

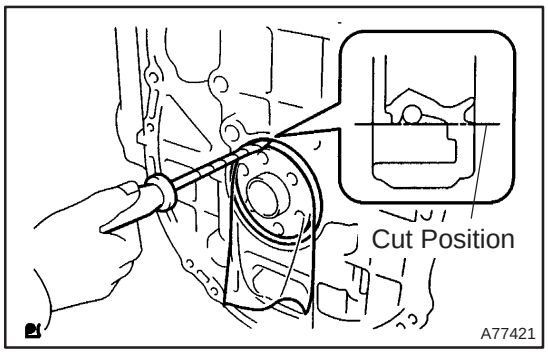

5. **REMOVE ENGINE REAR OIL SEAL**
   (a) Using a knife, cut off the engine rear oil seal lip.
   (b) Using a screwdriver with the tip wrapped in tape, pry out the engine rear oil seal.

HINT:
After the removal, check if the crankshaft is not damaged.
If is damaged, smooth the surface with 400–grit sandpaper.

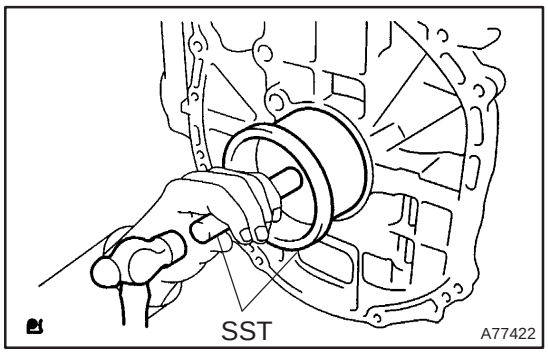

6. **INSTALL ENGINE REAR OIL SEAL**
   (a) Apply MP grease to a new engine rear oil seal lip.

NOTICE:
Keep the lip off foreign materials.

   (b) Using SST and a hammer, tap in the engine rear oil seal until its surface is flush with the engine rear oil seal retainer edge.
   SST 09223–15030, 09950–70010 (09951–07100)

NOTICE:
Wipe off extra grease on the crankshaft.

7. **INSTALL DRIVE PLATE AND RING GEAR OR FLYWHEEL (See page 14–121)**
   SST 09213–54015 (91651–60855), 09330–00021
8. **INSTALL CLUTCH COVER ASSY (M/T TRANSAXLE) (See page 42–26)**
9. **INSTALL MANUAL TRANSAXLE ASSY (M/T TRANSAXLE) (See page 41–24)**
10. **INSTALL AUTOMATIC TRANSAXLE ASSY (A/T TRANSAXLE) (See page 40–25)**

ENGINE (1AZ–FSE)

141CP–01

INSPECTION

1. **INSPECT COOLANT (See page 16–25)**
2. **INSPECT ENGINE OIL(See page 17–13)**
3. **INSPECT BATTERY**
   Standard specific gravity: 1.25 to 1.29 at 20°C (68°F)
4. **INSPECT AIR CLEANER FILTER ELEMENT SUB–ASSY**
5. **INSPECT SPARK PLUG (See page 18–14)**
6. **INSPECT V–RIBBED BELT**

7. INSPECT IGNITION TIMING

(a) Warm up engine.

(b) When using hand–held tester:

(1) Connect the hand–held tester to the DLC3.

(2) Enter DATA LIST MODE on the hand–held tester.

Ignition timing: 8 to 12° BTDC

HINT:

Please refer to the hand–held tester operator's manual if you need help to select DATA LIST.

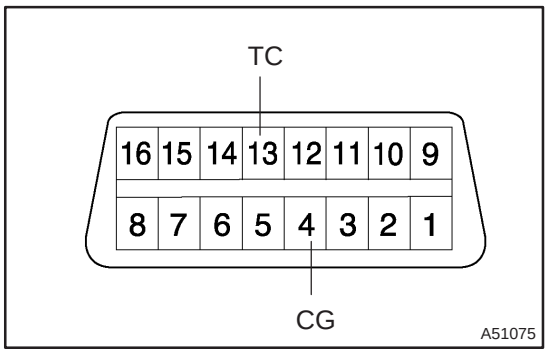

(c) When not using hand–held tester:

(1) Using SST, connect terminals 13 (TC) and 4 (CG) of DLC3.

SST 09843–18040, 09843–18020

NOTICE:

- **Make sure of the terminal numbers before connecting them. Connection with a wrong terminal can damage the engine.**
- **Turn OFF all electrical systems before connecting the terminals.**
- **Operate the inspection after the cooling fan motor is turned OFF**

(2) Remove the cylinder head cover No.2.

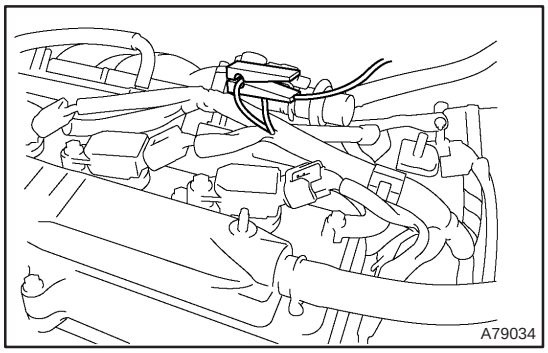

(3) Pull out the wire harness as shown in the illustration. Connect the clip of the timing light to the engine.

NOTICE:

- **Use a timing light which detects the first signal.**
- **After checking, be sure to wrap the wire harness with tape.**

(4) Inspect ignition timing at idle.

Ignition timing: 8 to 12° BTDC

NOTICE:

When checking the ignition timing, shift the transmission to the neutral position.

HINT:

Run the engine at 1,000 to 1,300 rpm for 5 seconds, check that the engine rpm returns to the idle speed.

(5) Disconnect terminals 13 (TC) and 4 (CG) of DLC3.

(6) Inspect ignition timing at idle.

Ignition timing: 5 to 23° BTDC

(7) Confirm that ignition timing to go advanced angle side when the engine rpm is increased.

(8) Remove the timing light.

8. INSPECT ENGINE IDLE SPEED

(a) Warm up engine.

(b) When using hand–held tester:

(1) Connect the hand–held tester to the DLC3.

Idle speed: 625 to 725 rpm

NOTICE:

- **Check the idle speed with the cooling fan OFF.**
- **Switch off all accessories and air conditioning before connecting the test prove to the terminal.**

HINT:

Please refer to the hand–held tester operator's manual if you need help to select DATA LIST.

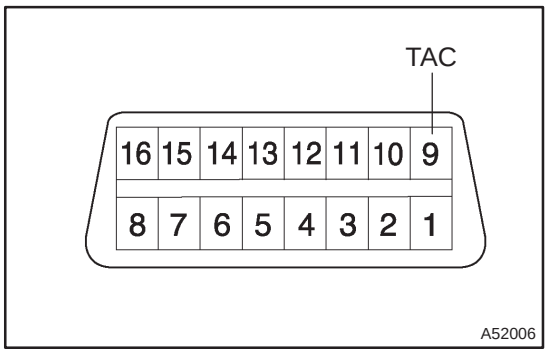

(c) When not using hand–held tester:

(1) Using SST, connect the tachometer test prove to terminal 9 (TAC) of DLC3.

SST 09843–18040

(2) Check the idle speed.

Idle speed: 625 to 725 rpm

9. INSPECT COMPRESSION

(a) Warm up and stop the engine.

(b) Disconnect the injector connectors.

(c) Remove the ignition coil.

(d) Remove the spark plugs.

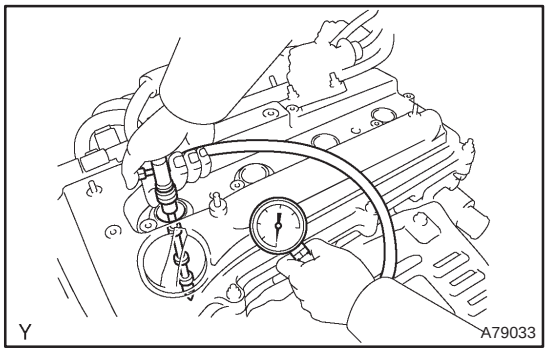

(e) Inspect cylinder compression pressure.
SST 09992–00500
(1) Insert a compression gauge into the spark plug hole.
(2) Fully open the throttle.
(3) While cranking the engine, measure the compression pressure.
Compression pressure:
1,300 kPa (13.3 kgf/cm^2, 189 psi)
Minimum pressure:
1000 kPa (10.2 kgf/cm^2, 145 psi)
Difference between each cylinder:
100 kPa (1.0 kgf/cm^2, 14 psi)

NOTICE:
- **Always use a fully charged battery to obtain engine speed of 250 rpm or more.**
- **Check other cylinder's compression pressure in the same way.**
- **This measurement must be done in as short a time as possible.**

(4) If the cylinder compression is low, pour a small amount of engine oil into the cylinder through the spark plug hole and inspect again.

HINT:
- If adding oil increases the compression, the piston rings and/or cylinder bore may be worn or damaged.
- If pressure stays low, a valve may be sticking or seating improperly, or there may be leakage past the gasket.

10. INSPECT CO/HC

(a) Start the engine.
(b) Run the engine at 2,500 rpm for approximately 180 seconds.
(c) Insert CO/HC meter testing probe at least 40 cm (1.3 ft) into the tailpipe during idling.
(d) Check CO/HC concentration at idle.
Idle CO concentration: 0 to 0.5 %
Idle HC concentration: Applicable local regulation
(e) If the CO/HC concentration does not conform to specifications, perform troubleshooting in the order given below.
(1) Check heated oxygen sensor operation. (See page 12–6)
(2) See the table below for possible causes, and then inspect and repair the applicable causes if necessary.

CO	HC	Problems	Causes
Normal	High	Rough idle	1. Faulty ignitions: • Incorrect timing • Fouled, shorted or improperly gapped plugs 2. Incorrect valve clearance 3. Leaks in intake and exhaust valves 4. Leaks in cylinders
Low	High	Rough idle (Fluctuating HC reading)	1. Vacuum leaks: • PCV hoses • Intake manifold • Throttle body • ISC valve • Brake booster line 2. Lean mixture causing misfire
High	High	Rough idle (Black smoke from exhaust)	1. Restricted air filter 2. Plugged PCV valve 3. Faulty EFI systems: • Faulty pressure regulator • Defective water temperature sensor • Defective mass air flow meter • Faulty ECM • Faulty injectors • Faulty throttle position sensor

FAN AND GENERATOR V BELT (1AZ–FSE)

141BJ–01

REPLACEMENT

1. REMOVE RADIATOR SUPPORT OPENING COVER

2. REMOVE ENGINE ROOM COVER SIDE

3. REMOVE ENGINE UNDER COVER RH

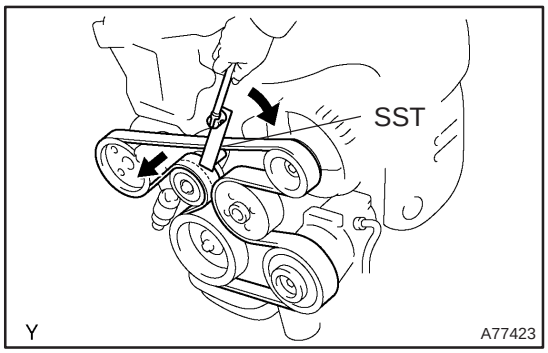

4. REMOVE FAN AND GENERATOR V BELT

(a) Using SST, loosen the V–ribbed belt tensioner arm clockwise, and remove the fan and generator V belt.
SST 09249–63010

5. INSTALL FAN AND GENERATOR V BELT

(a) Using SST, loosen the V–ribbed belt tensioner arm clockwise, and install the fan and generator V belt.
SST 09249–63010

VALVE CLEARANCE (1AZ–FSE)

141BL–01

ADJUSTMENT

1. **DISCHARGE FUEL SYSTEM PRESSURE (See page 11–33)**
2. **REMOVE RADIATOR SUPPORT OPENING COVER**
3. **REMOVE ENGINE ROOM COVER SIDE**
4. **REMOVE ENGINE UNDER COVER RH**

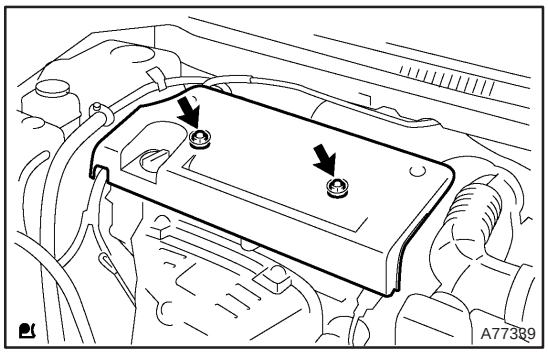

5. **REMOVE ENGINE COVER SUB–ASSY NO.1**

(a) Remove the 2 nuts and the engine cover No. 1.

6. **REMOVE FUEL PRESSURE PULSATION DAMPER ASSY**
7. **REMOVE FUEL TUBE SUB–ASSY (See page 11–33)**
8. **REMOVE FUEL PIPE SUB–ASSY NO.1 (See page 11–52)**

SST 09023–12900

9. **REMOVE IGNITION COIL ASSY**

(a) Remove the 4 bolts and the ignition coils.

10. **REMOVE CYLINDER HEAD COVER SUB–ASSY (See page 14–240)**
11. **SET NO. 1 CYLINDER TO TDC/COMPRESSION (See page 14–240)**

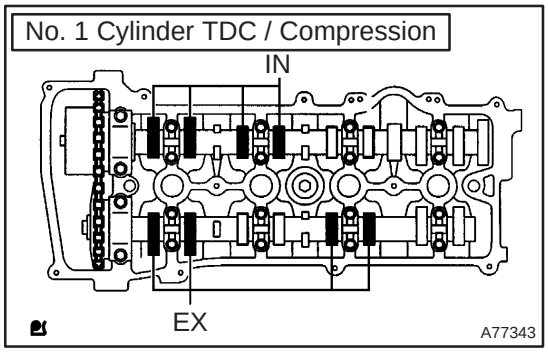

12. **INSPECT VALVE CLEARANCE**

HINT:

Inspect and adjust the valve clearance when the engine is cold.

(a) Check only the valve indicated in the illustration.

(1) Using a feeler gauge, measure the clearance between the valve lifter and the camshaft.

(2) Record the out–of specification valve clearance measurements. They will be used later to determine the required replacement adjusting shim.

Valve clearance (Cold):

Intake 0.19 to 0.29 mm (0.0075 to 0.0114 in.)

Exhaust 0.30 to 0.40 mm (0.0118 to 0.0157 in.)

(b) Turn the crankshaft clockwise 1 revolution (360°) and set No. 4 cylinder to TDC/compression.

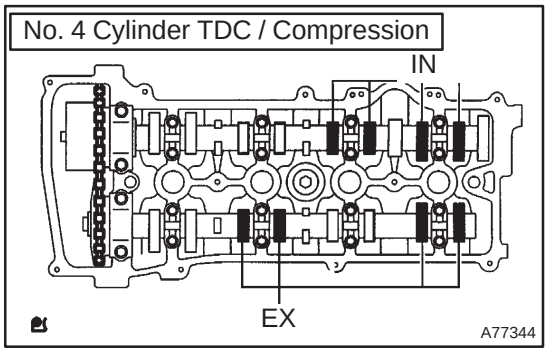

(c) Check only the valve indicated in the illustration.
(1) Using a feeler gauge, measure the clearance between the valve lifter and the camshaft.
(2) Record the out–of specification valve clearance measurements. They will be used later to determine the required replacement adjusting shim.

Valve clearance (Cold):
Intake 0.19 to 0.29 mm (0.0075 to 0.0114 in.)
Exhaust 0.30 to 0.40 mm (0.0118 to 0.0157 in.)

13. ADJUST VALVE CLEARANCE

NOTICE:

Be sure not to turn the crankshaft without the chain tensioner.

(a) Set the No. 1 cylinder to TDC/compression. (See page 14–240)
(b) Remove the chain tensioner. (See page 14–240)
(c) Remove the camshafts. (See page 14–240)
(d) Tie the timing chain with a string.

NOTICE:

Be careful not to drop anything inside the timing chain cover.

(e) Remove the valve lifters.

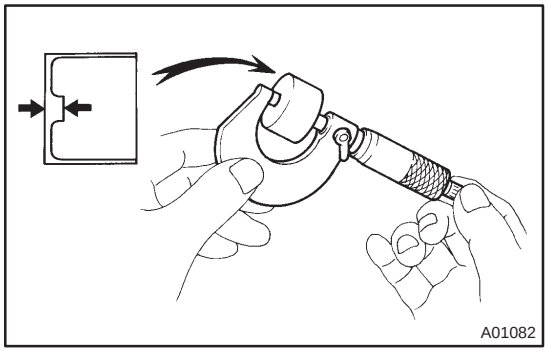

(f) Using a micrometer, measure the thickness of the removed lifter.
(g) Calculate the thickness of a new lifter so that the valve clearance comes within the specified valve.

A	Thickness of new lifter
B	Thickness of used lifter
C	Measured valve clearance

Valve clearance:
Intake: A = B + (C – 0.24 mm (0.0094 in.))
Exhaust: A = B + (C – 0.35 mm (0.0138 in.))

EXAMPLE: (Intake)
Measure valve clearance = 0.44 mm (0.0173 in.)
0.44 mm (0.0173 in.) – 0.24 mm (0.0094 in.) = 0.20 mm (0.0079 in.)
(Measured – Specification = Excess clearance)
Used shim measurement = 5.30 mm (0.2087 in.)
0.20 mm (0.0079 in.) + 5.30 mm (0.2087 in.) = 5.50 mm (0.2165 in.)
(Excess clearance + Used shim = Ideal new shim)
Closest new shim = 5.50 mm (0.2165 in.) = Shim No. ”50”

HINT:

- Select a new lifter with a thickness as close as possible to the calculated valves.
- Lifter are available in 35 sizes in increments of 0.020 mm (0.0008 in.), from 5.060 mm (0.1992 in.) to 5.740 mm (0.2260 in.).

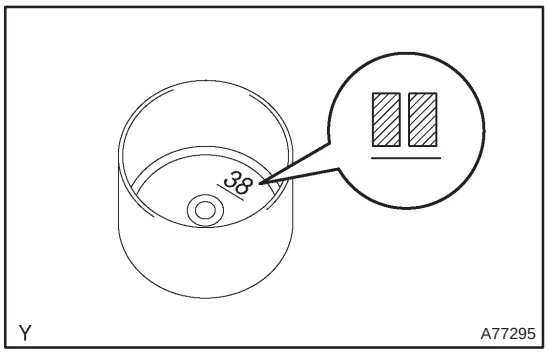

- Identification number inside the valve lifter shows the value of the 2 decimal places. (The illustration shows 5.380 mm (0.2118 in.))
- Refer to the New Lifter Thickness table on the next 2 pages.

Valve Lifter Selection Chart (Intake)

Measure clearance mm (in.) \ Installed lifter thickness mm (in.)	5.060 (0.1992)	5.080 (0.2000)	5.100 (0.2008)	5.120 (0.2016)	5.140 (0.2024)	5.160 (0.2031)	5.180 (0.2039)	5.200 (0.2047)	5.210 (0.2051)	5.220 (0.2055)	5.230 (0.2059)	5.240 (0.2063)	5.250 (0.2067)	5.260 (0.2071)	5.270 (0.2075)	5.280 (0.2079)	5.290 (0.2083)	5.300 (0.2087)	5.310 (0.2091)	5.320 (0.2094)	5.330 (0.2098)	5.340 (0.2102)	5.350 (0.2106)	5.360 (0.2110)	5.370 (0.2114)	5.380 (0.2118)	5.390 (0.2122)	5.400 (0.2126)	5.410 (0.2130)	5.420 (0.2134)	5.430 (0.2138)	5.440 (0.2142)	5.450 (0.2146)	5.460 (0.2150)	5.470 (0.2154)	5.480 (0.2157)	5.490 (0.2161)	5.500 (0.2165)	5.510 (0.2169)	5.520 (0.2173)	5.530 (0.2177)	5.540 (0.2181)	5.550 (0.2185)	5.560 (0.2189)	5.570 (0.2193)	5.580 (0.2197)	5.590 (0.2201)	5.600 (0.2205)	5.620 (0.2213)	5.640 (0.2220)	5.660 (0.2228)	5.680 (0.2236)	5.700 (0.2244)	5.720 (0.2252)	5.740 (0.2260)
0.000–0.030 (0.0000–0.0012)													06	06	08	08	10	10	12	12	14	14	16	16	18	18	20	20	22	22	24	24	26	26	28	28	30	30	32	32	34	34	36	36	38	38	40	40	42	42	44	46	48	50	52	54
0.031–0.050 (0.0012–0.0020)									06	06	06	08	08	10	10	12	12	14	14	16	16	18	18	20	20	22	22	24	24	26	26	28	28	30	30	32	32	34	34	36	36	38	38	40	40	42	42	44	46	48	50	52	54	56	58
0.051–0.070 (0.0020–0.0028)								06	08	08	08	10	10	12	12	14	14	16	16	18	18	20	20	22	22	24	24	26	26	28	28	30	30	32	32	34	34	36	36	38	38	40	40	42	42	44	44	46	48	50	52	54	56	58	60
0.071–0.090 (0.0028–0.0035)							06	08	10	10	10	12	12	14	14	16	16	18	18	20	20	22	22	24	24	26	26	28	28	30	30	32	32	34	34	36	36	38	38	40	40	42	42	44	44	46	46	48	50	52	54	56	58	60	62
0.091–0.110 (0.0036–0.0043)						06	08	10	12	12	12	14	14	16	16	18	18	20	20	22	22	24	24	26	26	28	28	30	30	32	32	34	34	36	36	38	38	40	40	42	42	44	44	46	46	48	48	50	52	54	56	58	60	62	64
0.111–0.130 (0.0044–0.0051)					06	08	10	12	14	14	14	16	16	18	18	20	20	22	22	24	24	26	26	28	28	30	30	32	32	34	34	36	36	38	38	40	40	42	42	44	44	46	46	48	48	50	50	52	54	56	58	60	62	64	66
0.131–0.150 (0.0052–0.0059)				06	08	10	12	14	16	16	16	18	18	20	20	22	22	24	24	26	26	28	28	30	30	32	32	34	34	36	36	38	38	40	40	42	42	44	44	46	46	48	48	50	50	52	52	54	56	58	60	62	64	66	68
0.151–0.170 (0.0059–0.0067)			06	08	10	12	14	16	18	18	18	20	20	22	22	24	24	26	26	28	28	30	30	32	32	34	34	36	36	38	38	40	40	42	42	44	44	46	46	48	48	50	50	52	52	54	54	56	58	60	62	64	66	68	70
0.171–0.189 (0.0067–0.0074)		06	08	10	12	14	16	18	20	20	20	22	22	24	24	26	26	28	28	30	30	32	32	34	34	36	36	38	38	40	40	42	42	44	44	46	46	48	48	50	50	52	52	54	54	56	56	58	60	62	64	66	68	70	72
0.190–0.290 (0.0075–0.0114)																																																										
0.291–0.310 (0.0115–0.0122)	12	14	16	18	20	22	24	26	28	28	30	30	32	32	34	34	36	36	38	38	40	40	42	42	44	44	46	46	48	48	50	50	52	52	54	54	56	56	58	58	60	60	62	62	64	64	66	66	68	70	72	74	74	74
0.311–0.330 (0.0122–0.0130)	14	16	18	20	22	24	26	28	30	30	32	32	34	34	36	36	38	38	40	40	42	42	44	44	46	46	48	48	50	50	52	52	54	54	56	56	58	58	60	60	62	62	64	64	66	66	68	68	70	72	74	74	74	
0.331–0.350 (0.0130–0.0138)	16	18	20	22	24	26	28	30	32	32	34	34	36	36	38	38	40	40	42	42	44	44	46	46	48	48	50	50	52	52	54	54	56	56	58	58	60	60	62	62	64	64	66	66	68	68	70	70	72	74	74	74		
0.351–0.370 (0.0138–0.0146)	18	20	22	24	26	28	30	32	34	34	36	36	38	38	40	40	42	42	44	44	46	46	48	48	50	50	52	52	54	54	56	56	58	58	60	60	62	62	64	64	66	66	68	68	70	70	72	72	74	74	74			
0.371–0.390 (0.0146–0.0154)	20	22	24	26	28	30	32	34	36	36	38	38	40	40	42	42	44	44	46	46	48	48	50	50	52	52	54	54	56	56	58	58	60	60	62	62	64	64	66	66	68	68	70	70	72	72	74	74	74					
0.391–0.410 (0.0154–0.0161)	22	24	26	28	30	32	34	36	38	38	40	40	42	42	44	44	46	46	48	48	50	50	52	52	54	54	56	56	58	58	60	60	62	62	64	64	66	66	68	68	70	70	72	72	74	74	74	74						
0.411–0.430 (0.0162–0.0169)	24	26	28	30	32	34	36	38	40	40	42	42	44	44	46	46	48	48	50	50	52	52	54	54	56	56	58	58	60	60	62	62	64	64	66	66	68	68	70	70	72	72	74	74	74	74								
0.431–0.450 (0.0170–0.0177)	26	28	30	32	34	36	38	40	42	42	44	44	46	46	48	48	50	50	52	52	54	54	56	56	58	58	60	60	62	62	64	64	66	66	68	68	70	70	72	72	74	74	74	74										
0.451–0.470 (0.0178–0.0185)	28	30	32	34	36	38	40	42	44	44	46	46	48	48	50	50	52	52	54	54	56	56	58	58	60	60	62	62	64	64	66	66	68	68	70	70	72	72	74	74	74	74												
0.471–0.490 (0.0185–0.0193)	30	32	34	36	38	40	42	44	46	46	48	48	50	50	52	52	54	54	56	56	58	58	60	60	62	62	64	64	66	66	68	68	70	70	72	72	74	74	74	74														
0.491–0.510 (0.0193–0.0201)	32	34	36	38	40	42	44	46	48	48	50	50	52	52	54	54	56	56	58	58	60	60	62	62	64	64	66	66	68	68	70	70	72	72	74	74	74	74																
0.511–0.530 (0.0201–0.0209)	34	36	38	40	42	44	46	48	50	50	52	52	54	54	56	56	58	58	60	60	62	62	64	64	66	66	68	68	70	70	72	72	74	74	74	74																		
0.531–0.550 (0.0209–0.0217)	36	38	40	42	44	46	48	50	52	52	54	54	56	56	58	58	60	60	62	62	64	64	66	66	68	68	70	70	72	72	74	74	74	74																				
0.551–0.570 (0.0217–0.0224)	38	40	42	44	46	48	50	52	54	54	56	56	58	58	60	60	62	62	64	64	66	66	68	68	70	70	72	72	74	74	74	74																						
0.571–0.590 (0.0225–0.0232)	40	42	44	46	48	50	52	54	56	56	58	58	60	60	62	62	64	64	66	66	68	68	70	70	72	72	74	74	74	74																								
0.591–0.610 (0.0233–0.0240)	42	44	46	48	50	52	54	56	58	58	60	60	62	62	64	64	66	66	68	68	70	70	72	72	74	74	74	74																									
0.611–0.630 (0.0241–0.0248)	44	46	48	50	52	54	56	58	60	60	62	62	64	64	66	66	68	68	70	70	72	72	74	74	74	74																										
0.631–0.650 (0.0248–0.0256)	46	48	50	52	54	56	58	60	62	62	64	64	66	66	68	68	70	70	72	72	74	74	74	74																												
0.651–0.670 (0.0256–0.0264)	48	50	52	54	56	58	60	62	64	64	66	66	68	68	70	70	72	72	74	74	74	74																														
0.671–0.690 (0.0264–0.0272)	50	52	54	56	58	60	62	64	66	66	68	68	70	70	72	72	74	74	74	74																																
0.691–0.710 (0.0272–0.0280)	52	54	56	58	60	62	64	66	68	68	70	70	72	72	74	74	74	74																																		
0.711–0.730 (0.0280–0.0287)	54	56	58	60	62	64	66	68	70	70	72	72	74	74	74	74																																				
0.731–0.750 (0.0288–0.0295)	56	58	60	62	64	66	68	70	72	72	74	74	74	74																																						
0.751–0.770 (0.0296–0.0303)	58	60	62	64	66	68	70	72	74	74	74	74																																						
0.771–0.790 (0.0304–0.0311)	60	62	64	66	68	70	72	74	74	74																																								
0.791–0.810 (0.0311–0.0319)	62	64	66	68	70	72	74																																										
0.811–0.830 (0.0319–0.0327)	64	66	68	70	72	74																																										
0.831–0.850 (0.0327–0.0335)	66	68	70	72	74																																										
0.851–0.870 (0.0335–0.0343)	68	70	72	74																																										
0.871–0.890 (0.0343–0.0350)	70	72	74																																										
0.891–0.910 (0.0351–0.0358)	72	74																																										
0.911–0.930 (0.0359–0.0366)	74																																										

Intake valve clearance (Cold):
0.19 to 0.29 mm (0.008 to 0.011 in.)

EXAMPLE:

The 5.250 mm (0.2067 in.) lifter is installed, and the measured clearance is 0.400 mm (0.0157 in.).

Replace the 5.250 mm (0.2067 in.) lifter with a new No. 44 lifter.

New Lifter Thickness mm (in.)

Lifter No.	Thickness	Lifter No.	Thickness	Lifter No.	Thickness
06	5.060 (0.1992)	30	5.300 (0.2087)	54	5.540 (0.2181)
08	5.080 (0.2000)	32	5.320 (0.2094)	56	5.560 (0.2189)
10	5.100 (0.2008)	34	5.340 (0.2102)	58	5.580 (0.2197)
12	5.120 (0.2016)	36	5.360 (0.2110)	60	5.600 (0.2205)
14	5.140 (0.2024)	38	5.380 (0.2118)	62	5.620 (0.2213)
16	5.160 (0.2031)	40	5.400 (0.2126)	64	5.640 (0.2220)
18	5.180 (0.2039)	42	5.420 (0.2134)	66	5.660 (0.2228)
20	5.200 (0.2047)	44	5.440 (0.2142)	68	5.680 (0.2236)
22	5.220 (0.2055)	46	5.460 (0.2150)	70	5.700 (0.2244)
24	5.240 (0.2063)	48	5.480 (0.2157)	72	5.720 (0.2252)
26	5.260 (0.2071)	50	5.500 (0.2165)	74	5.740 (0.2260)
28	5.280 (0.2079)	52	5.520 (0.2173)		

A77296

Valve Lifter Selection Chart (Exhaust)

Measure clearance mm (in.) \ Installed lifter thickness mm (in.)	5.060 (0.1992)	5.080 (0.2000)	5.100 (0.2008)	5.120 (0.2016)	5.140 (0.2024)	5.160 (0.2031)	5.180 (0.2039)	5.200 (0.2047)	5.210 (0.2051)	5.220 (0.2055)	5.230 (0.2059)	5.240 (0.2063)	5.250 (0.2067)	5.260 (0.2071)	5.270 (0.2075)	5.280 (0.2079)	5.290 (0.2083)	5.300 (0.2087)	5.310 (0.2091)	5.320 (0.2094)	5.330 (0.2098)	5.340 (0.2102)	5.350 (0.2106)	5.360 (0.2110)	5.370 (0.2114)	5.380 (0.2118)	5.390 (0.2122)	5.400 (0.2126)	5.410 (0.2130)	5.420 (0.2134)	5.430 (0.2138)	5.440 (0.2142)	5.450 (0.2146)	5.460 (0.2150)	5.470 (0.2154)	5.480 (0.2157)	5.490 (0.2161)	5.500 (0.2165)	5.510 (0.2169)	5.520 (0.2173)	5.530 (0.2177)	5.540 (0.2181)	5.550 (0.2185)	5.560 (0.2189)	5.570 (0.2193)	5.580 (0.2197)	5.590 (0.2201)	5.600 (0.2205)	5.620 (0.2213)	5.640 (0.2220)	5.660 (0.2228)	5.680 (0.2236)	5.700 (0.2244)	5.720 (0.2252)	5.740 (0.2260)
0.000–0.030 (0.0000–0.0012)																							06	06	08	08	10	10	12	12	14	14	16	16	18	18	20	20	22	22	24	24	26	26	28	28	30	30	32	34	36	38	40	42	44
0.031–0.050 (0.0012–0.0020)																					06	06	08	08	10	10	12	12	14	14	16	16	18	18	20	20	22	22	24	24	26	26	28	28	30	30	32	32	34	36	38	40	42	44	46
0.051–0.070 (0.0020–0.0028)																			06	06	08	08	10	10	12	12	14	14	16	16	18	18	20	20	22	22	24	24	26	26	28	28	30	30	32	32	34	34	36	38	40	42	44	46	48
0.071–0.090 (0.0028–0.0035)																	06	06	08	08	10	10	12	12	14	14	16	16	18	18	20	20	22	22	24	24	26	26	28	28	30	30	32	32	34	34	36	38	40	42	44	46	48	50
0.091–0.110 (0.0036–0.0043)															06	06	08	08	10	10	12	12	14	14	16	16	18	18	20	20	22	22	24	24	26	26	28	28	30	30	32	32	34	34	36	36	38	38	40	42	44	46	48	50	52
0.111–0.130 (0.0044–0.0051)												06	06	08	08	10	10	12	12	14	14	16	16	18	18	20	20	22	22	24	24	26	26	28	28	30	30	32	32	34	34	36	36	38	38	40	40	42	44	46	48	50	52	54
0.131–0.150 (0.0052–0.0059)										06	06	08	08	10	10	12	12	14	14	16	16	18	18	20	20	22	22	24	24	26	26	28	28	30	30	32	32	34	34	36	36	38	38	40	40	42	42	44	46	48	50	52	54	56
0.151–0.170 (0.0059–0.0067)									06	06	08	08	10	10	12	12	14	14	16	16	18	18	20	20	22	22	24	24	26	26	28	28	30	30	32	32	34	34	36	36	38	38	40	40	42	42	44	44	46	48	50	52	54	56	58
0.171–0.190 (0.0067–0.0075)								06	08	08	10	10	12	12	14	14	16	16	18	18	20	20	22	22	24	24	26	26	28	28	30	30	32	32	34	34	36	36	38	38	40	40	42	42	44	44	46	46	48	50	52	54	56	58	60
0.191–0.210 (0.0075–0.0083)							06	08	10	10	12	12	14	14	16	16	18	18	20	20	22	22	24	24	26	26	28	28	30	30	32	32	34	34	36	36	38	38	40	40	42	42	44	44	46	46	48	48	50	52	54	56	58	60	62
0.211–0.230 (0.0083–0.0091)						06	08	10	12	12	14	14	16	16	18	18	20	20	22	22	24	24	26	26	28	28	30	30	32	32	34	34	36	36	38	38	40	40	42	42	44	44	46	46	48	48	50	50	52	54	56	58	60	62	64
0.231–0.250 (0.0091–0.0098)					06	08	10	12	14	14	16	16	18	18	20	20	22	22	24	24	26	26	28	28	30	30	32	32	34	34	36	36	38	38	40	40	42	42	44	44	46	46	48	48	50	50	52	52	54	56	58	60	62	64	66
0.251–0.270 (0.0099–0.0106)				06	08	10	12	14	16	16	18	18	20	20	22	22	24	24	26	26	28	28	30	30	32	32	34	34	36	36	38	38	40	40	42	42	44	44	46	46	48	48	50	50	52	52	54	54	56	58	60	62	64	66	68
0.271–0.290 (0.0107–0.0114)			06	08	10	12	14	16	18	18	20	20	22	22	24	24	26	26	28	28	30	30	32	32	34	34	36	36	38	38	40	40	42	42	44	44	46	46	48	48	50	50	52	52	54	54	56	56	58	60	62	64	66	68	70
0.291–0.299 (0.0115–0.0118)		06	08	10	12	14	16	18	20	20	22	22	24	24	26	26	28	28	30	30	32	32	34	34	36	36	38	38	40	40	42	42	44	44	46	46	48	48	50	50	52	52	54	54	56	56	58	58	60	62	64	66	68	70	72
0.300–0.400 (0.0118–0.0157)																																																								
0.401–0.420 (0.0158–0.0165)	12	14	16	18	20	22	24	26	26	28	28	30	30	32	32	34	34	36	36	38	38	40	40	42	42	44	44	46	46	48	48	50	50	52	52	54	54	56	56	58	58	60	60	62	62	64	64	66	68	70	72	74	74	74
0.421–0.440 (0.0166–0.0173)	14	16	18	20	22	24	26	28	28	30	30	32	32	34	34	36	36	38	38	40	40	42	42	44	44	46	46	48	48	50	50	52	52	54	54	56	56	58	58	60	60	62	62	64	64	66	66	68	70	72	74	74	74
0.441–0.460 (0.0174–0.0181)	16	18	20	22	24	26	28	30	30	32	32	34	34	36	36	38	38	40	40	42	42	44	44	46	46	48	48	50	50	52	52	54	54	56	56	58	58	60	60	62	62	64	64	66	66	68	68	70	72	74	74	74		
0.461–0.480 (0.0181–0.0189)	18	20	22	24	26	28	30	32	32	34	34	36	36	38	38	40	40	42	42	44	44	46	46	48	48	50	50	52	52	54	54	56	56	58	58	60	60	62	62	64	64	66	66	68	68	70	70	72	74	74	74			
0.481–0.500 (0.0189–0.0197)	20	22	24	26	28	30	32	34	34	36	36	38	38	40	40	42	42	44	44	46	46	48	48	50	50	52	52	54	54	56	56	58	58	60	60	62	62	64	64	66	66	68	68	70	70	72	72	74	74	74				
0.501–0.520 (0.0197–0.0205)	22	24	26	28	30	32	34	36	36	38	38	40	40	42	42	44	44	46	46	48	48	50	50	52	52	54	54	56	56	58	58	60	60	62	62	64	64	66	66	68	68	70	70	72	72	74	74	74	74					
0.521–0.540 (0.0205–0.0213)	24	26	28	30	32	34	36	38	38	40	40	42	42	44	44	46	46	48	48	50	50	52	52	54	54	56	56	58	58	60	60	62	62	64	64	66	66	68	68	70	70	72	72	74	74	76	76	74						
0.541–0.560 (0.0213–0.0220)	26	28	30	32	34	36	38	40	40	42	42	44	44	46	46	48	48	50	50	52	52	54	54	56	56	58	58	60	60	62	62	64	64	66	66	68	68	70	70	72	72	74	74	74	74	74	74							
0.561–0.580 (0.0221–0.0228)	28	30	32	34	36	38	40	42	42	44	44	46	46	48	48	50	50	52	52	54	54	56	56	58	58	60	60	62	62	64	64	66	66	68	68	70	70	72	72	74	74	74	74	74	74	74								
0.581–0.600 (0.0229–0.0236)	30	32	34	36	38	40	42	44	44	46	46	48	48	50	50	52	52	54	54	56	56	58	58	60	60	62	62	64	64	66	66	68	68	70	70	72	72	74	74	74	74	74	74	74										
0.601–0.620 (0.0237–0.0244)	32	34	36	38	40	42	44	46	46	48	48	50	50	52	52	54	54	56	56	58	58	60	60	62	62	64	64	66	66	68	68	70	70	72	72	74	74	74	74	74	74													
0.621–0.640 (0.0244–0.0252)	34	36	38	40	42	44	46	48	48	50	50	52	52	54	54	56	56	58	58	60	60	62	62	64	64	66	66	68	68	70	70	72	72	74	74	74	74	74	74															
0.641–0.660 (0.0252–0.0260)	36	38	40	42	44	46	48	50	50	52	52	54	54	56	56	58	58	60	60	62	62	64	64	66	66	68	68	70	70	72	72	74	74	74	74	74	74																	
0.661–0.680 (0.0260–0.0268)	38	40	42	44	46	48	50	52	52	54	54	56	56	58	58	60	60	62	62	64	64	66	66	68	68	70	70	72	72	74	74	74	74	74	74																			
0.681–0.700 (0.0268–0.0276)	40	42	44	46	48	50	52	54	54	56	56	58	58	60	60	62	62	64	64	66	66	68	68	70	70	72	72	74	74	74	74	74	74																				
0.701–0.720 (0.0276–0.0283)	42	44	46	48	50	52	54	56	56	58	58	60	60	62	62	64	64	66	66	68	68	70	70	72	72	74	74	74	74	74	74																					
0.721–0.740 (0.0284–0.0291)	44	46	48	50	52	54	56	58	58	60	60	62	62	64	64	66	66	68	68	70	70	72	72	74	74	74	74	74	74																						
0.741–0.760 (0.0292–0.0299)	46	48	50	52	54	56	58	60	60	62	62	64	64	66	66	68	68	70	70	72	72	74	74	74	74	74	74																						
0.761–0.780 (0.0300–0.0307)	48	50	52	54	56	58	60	62	62	64	64	66	66	68	68	70	70	72	72	74	74	74	74	74	74																						
0.781–0.800 (0.0307–0.0315)	50	52	54	56	58	60	62	64	64	66	66	68	68	70	70	72	72	74	74	74	74	74	74																						
0.801–0.820 (0.0315–0.0323)	52	54	56	58	60	62	64	66	66	68	68	70	70	72	72	74	74	74	74	74	74																						
0.821–0.840 (0.0323–0.0331)	54	56	58	60	62	64	66	68	68	70	70	72	72	74	74	74	74	74	74																								
0.841–0.860 (0.0331–0.0339)	56	58	60	62	64	66	68	70	70	72	72	74	74	74	74	74	74																										
0.861–0.880 (0.0339–0.0346)	58	60	62	64	66	68	70	72	72	74	74	74	74	74	74																												
0.881–0.900 (0.0347–0.0354)	60	62	64	66	68	70	72	74	74	74	74	74	74																														
0.901–0.920 (0.0355–0.0362)	62	64	66	68	70	72	74	74	74	74	74																																
0.921–0.940 (0.0363–0.0370)	64	66	68	70	72	74	74	74	74																																		
0.941–0.960 (0.0370–0.0378)	66	68	70	72	74	74	74																																				
0.961–0.980 (0.0378–0.0386)	68	70	72	74	74	74																																					
0.981–1.000 (0.0386–0.0394)	70	72	74	74	74																																						
1.001–1.020 (0.0394–0.0402)	72	74	74	74																																							
1.021–1.040 (0.0402–0.0409)	74	74	74																																								
1.041–1.060 (0.0410–0.0417)	74	74																																									
1.061–1.080 (0.0418–0.0425)	74																																										

Exhaust valve clearance (Cold):
0.30 to 0.40 mm (0.0118 to 0.0157 in.)

EXAMPLE:

The 5.340 mm (0.2102 in.) lifter is installed, and the measured clearance is 0.440 mm (0.0173 in.).

Replace the 5.340 mm (0.2102 in.) lifter with a new No. 44 lifter.

New lifter thickness mm (in.)

Lifter No.	Thickness	Lifter No.	Thickness	Lifter No.	Thickness
06	5.060 (0.1992)	30	5.300 (0.2087)	54	5.540 (0.2181)
08	5.080 (0.2000)	32	5.320 (0.2094)	56	5.560 (0.2189)
10	5.100 (0.2008)	34	5.340 (0.2102)	58	5.580 (0.2197)
12	5.120 (0.2016)	36	5.360 (0.2110)	60	5.600 (0.2205)
14	5.140 (0.2024)	38	5.380 (0.2118)	62	5.620 (0.2213)
16	5.160 (0.2031)	40	5.400 (0.2126)	64	5.640 (0.2220)
18	5.180 (0.2039)	42	5.420 (0.2134)	66	5.660 (0.2228)
20	5.200 (0.2047)	44	5.440 (0.2142)	68	5.680 (0.2236)
22	5.220 (0.2055)	46	5.460 (0.2150)	70	5.700 (0.2244)
24	5.240 (0.2063)	48	5.480 (0.2157)	72	5.720 (0.2252)
26	5.260 (0.2071)	50	5.500 (0.2165)	74	5.740 (0.2260)
28	5.280 (0.2079)	52	5.520 (0.2173)		

P

A77297

(h) Install the camshafts. (See page 14–240)
(i) Install the chain tensioner. (See page 14–240)

14. INSTALL CYLINDER HEAD COVER SUB–ASSY (See page 14–240)
15. INSTALL IGNITION COIL ASSY
Torque: 9.0 N·m (92 kgf·cm, 80 in.·lbf)
16. INSTALL FUEL PIPE SUB–ASSY NO.1 (See page 11–52)
SST 09023–12900
17. INSTALL FUEL TUBE SUB–ASSY (See page 11–33)
18. INSTALL FUEL PRESSURE PULSATION DAMPER ASSY (See page 11–52)
19. CHECK FOR ENGINE OIL LEAKS
20. CHECK FOR FUEL LEAKS (See page 11–33)
21. INSTALL ENGINE COVER SUB–ASSY NO.1
Torque: 7.0 N·m (71 kgf·cm, 62 in.·lbf)

PARTIAL ENGINE ASSY (1AZ–FSE)

141BE–01

COMPONENTS

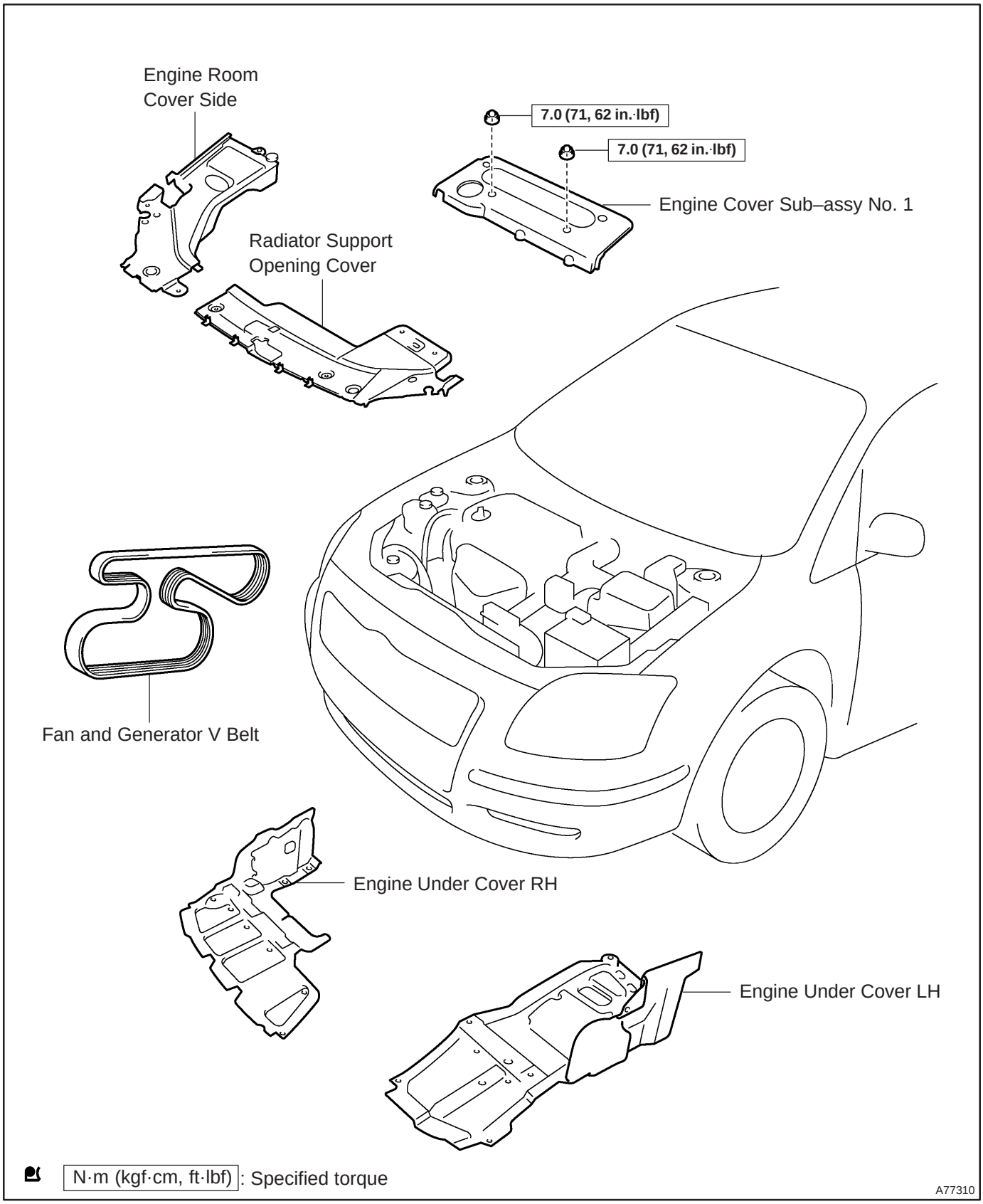

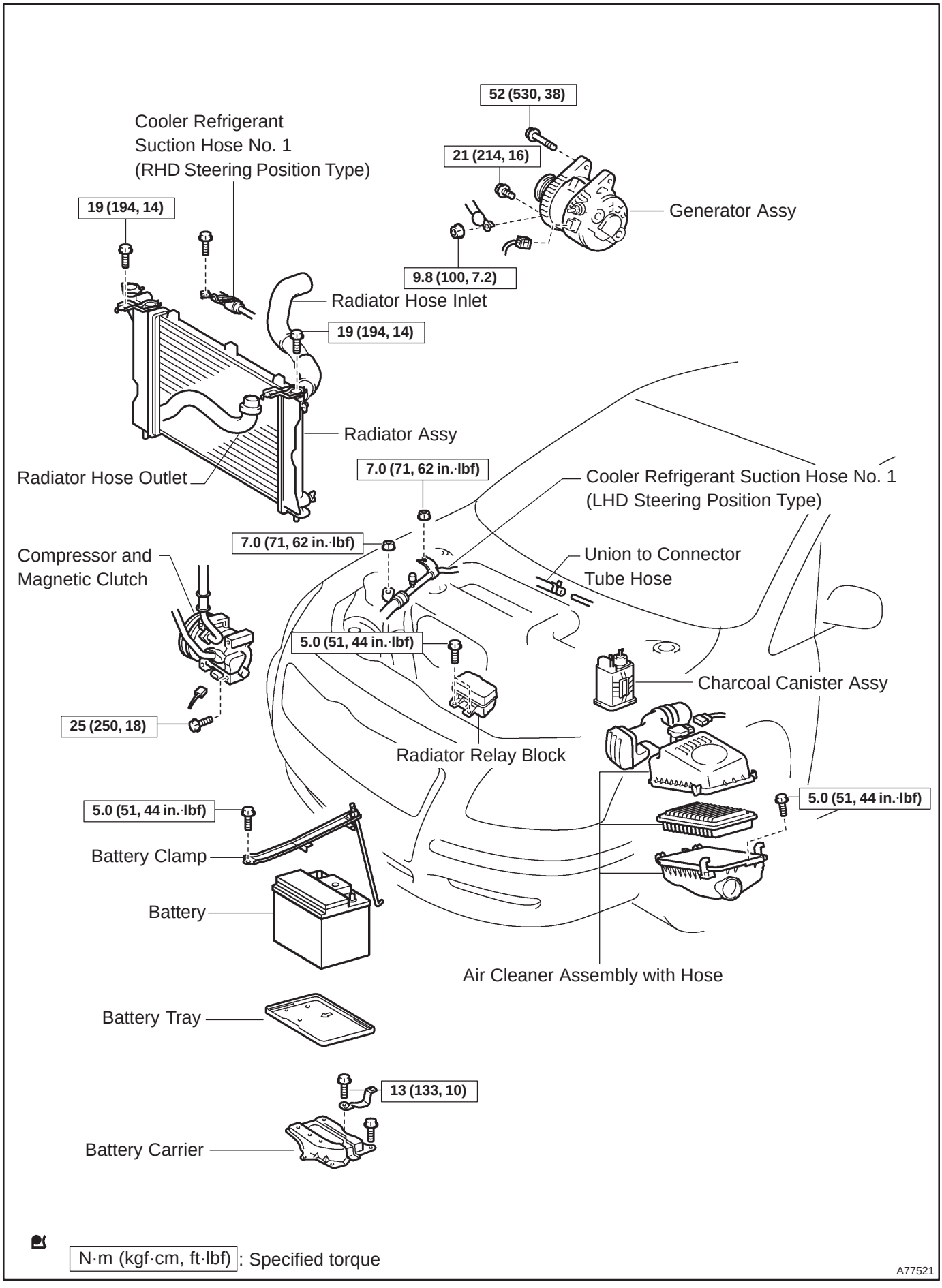
52 (530, 38)
21 (214, 16)
Generator Assy
9.8 (100, 7.2)
Cooler Refrigerant
Suction Hose No. 1
(RHD Steering Position Type)
19 (194, 14)
Radiator Hose Inlet
19 (194, 14)
Radiator Assy
Radiator Hose Outlet
7.0 (71, 62 in.·lbf)
Cooler Refrigerant Suction Hose No. 1
(LHD Steering Position Type)
7.0 (71, 62 in.·lbf)
Compressor and
Magnetic Clutch
Union to Connector
Tube Hose
5.0 (51, 44 in.·lbf)
Charcoal Canister Assy
25 (250, 18)
Radiator Relay Block
5.0 (51, 44 in.·lbf)
5.0 (51, 44 in.·lbf)
Battery Clamp
Battery
Air Cleaner Assembly with Hose
Battery Tray
13 (133, 10)
Battery Carrier
N·m (kgf·cm, ft·lbf): Specified torque
A77521

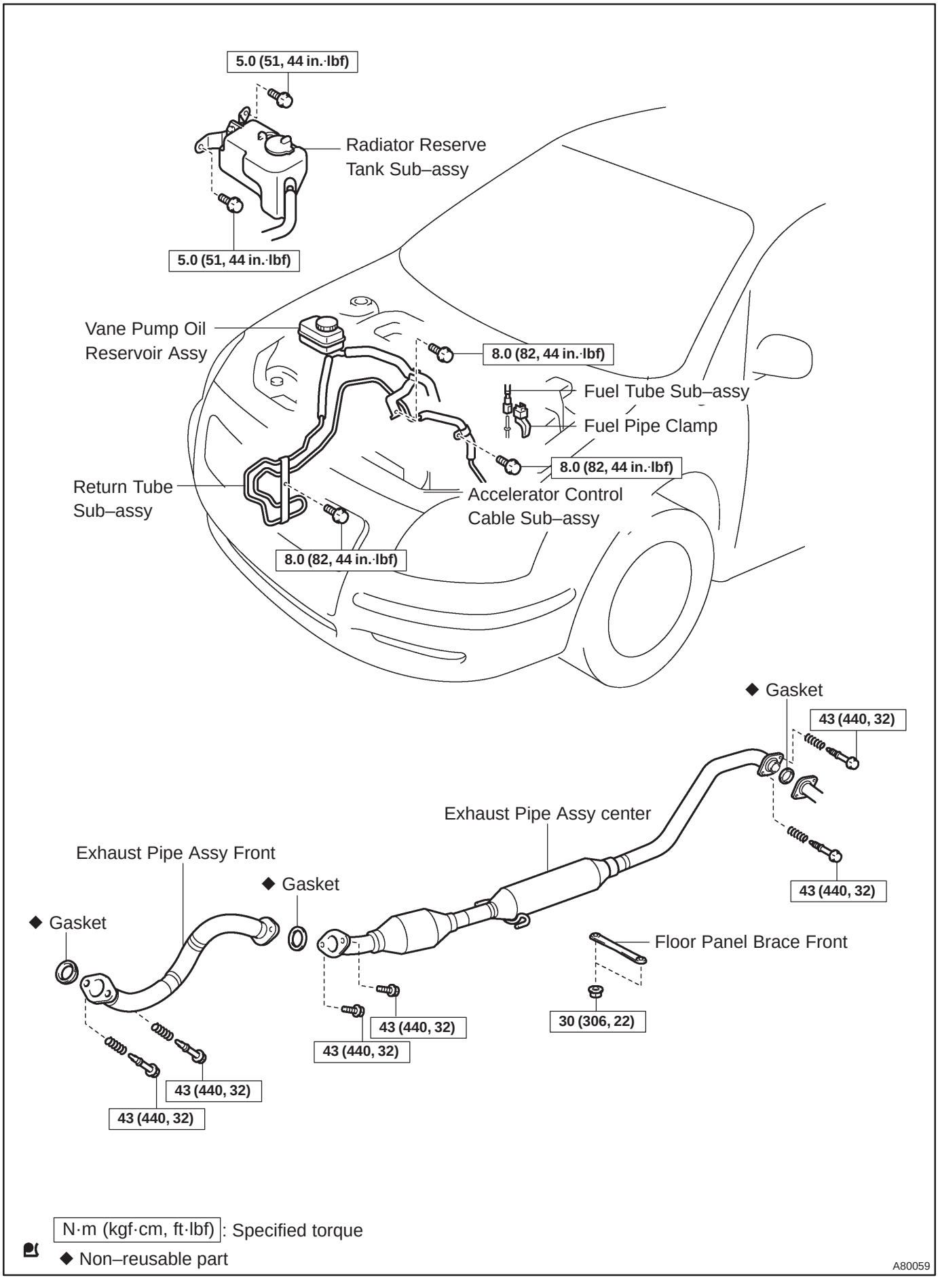
5.0 (51, 44 in.·lbf)
Radiator Reserve Tank Sub–assy
5.0 (51, 44 in.·lbf)
Vane Pump Oil Reservoir Assy
8.0 (82, 44 in.·lbf)
Fuel Tube Sub–assy
Fuel Pipe Clamp
8.0 (82, 44 in.·lbf)
Return Tube Sub–assy
Accelerator Control Cable Sub–assy
8.0 (82, 44 in.·lbf)
◆ Gasket
43 (440, 32)
Exhaust Pipe Assy center
Exhaust Pipe Assy Front
◆ Gasket
43 (440, 32)
◆ Gasket
Floor Panel Brace Front
43 (440, 32)
43 (440, 32)
30 (306, 22)
43 (440, 32)
43 (440, 32)
N·m (kgf·cm, ft·lbf): Specified torque
◆ Non–reusable part
A80059

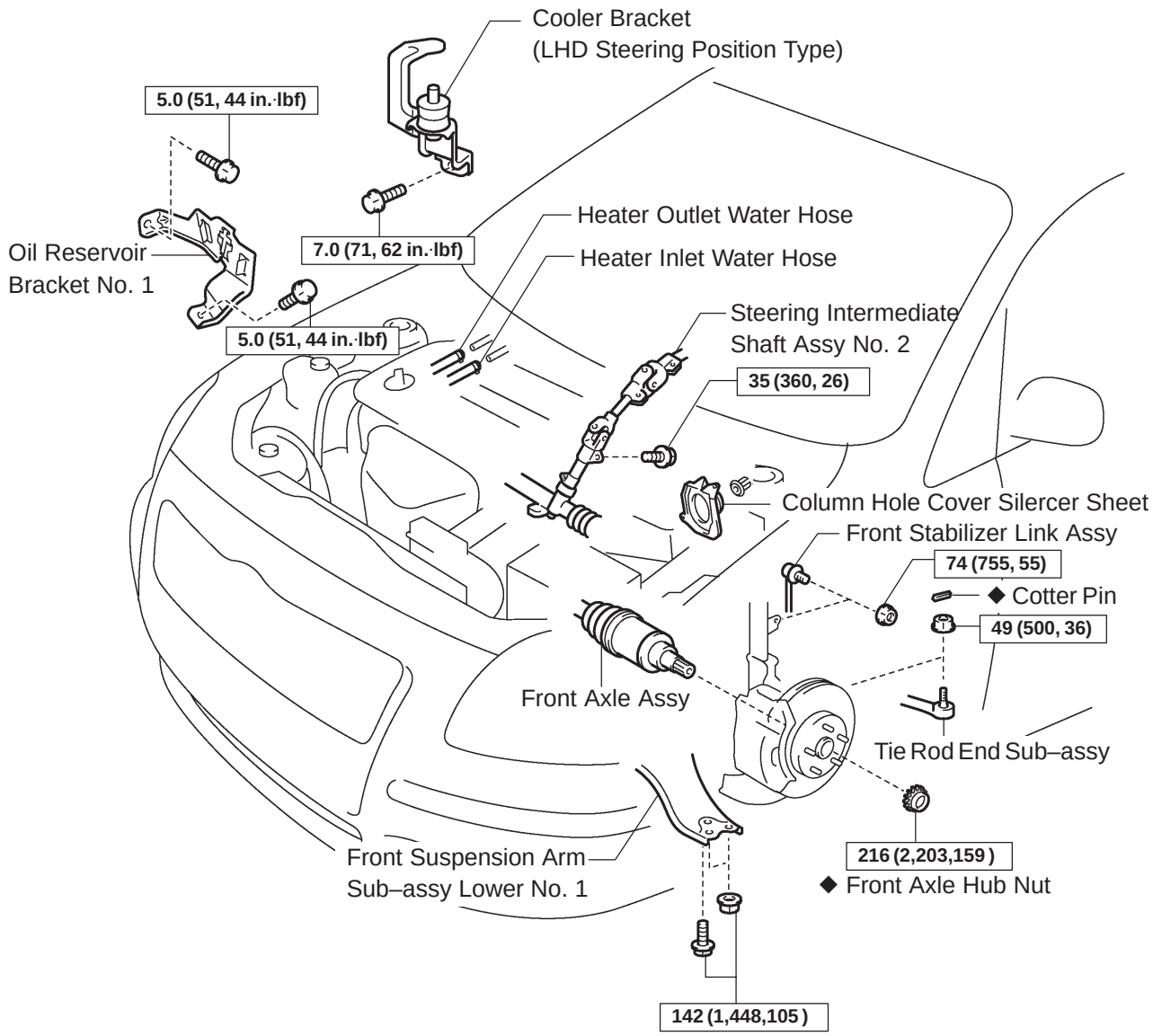

N·m (kgf·cm, ft·lbf): Specified torque

◆ Non–reusable part

A77313

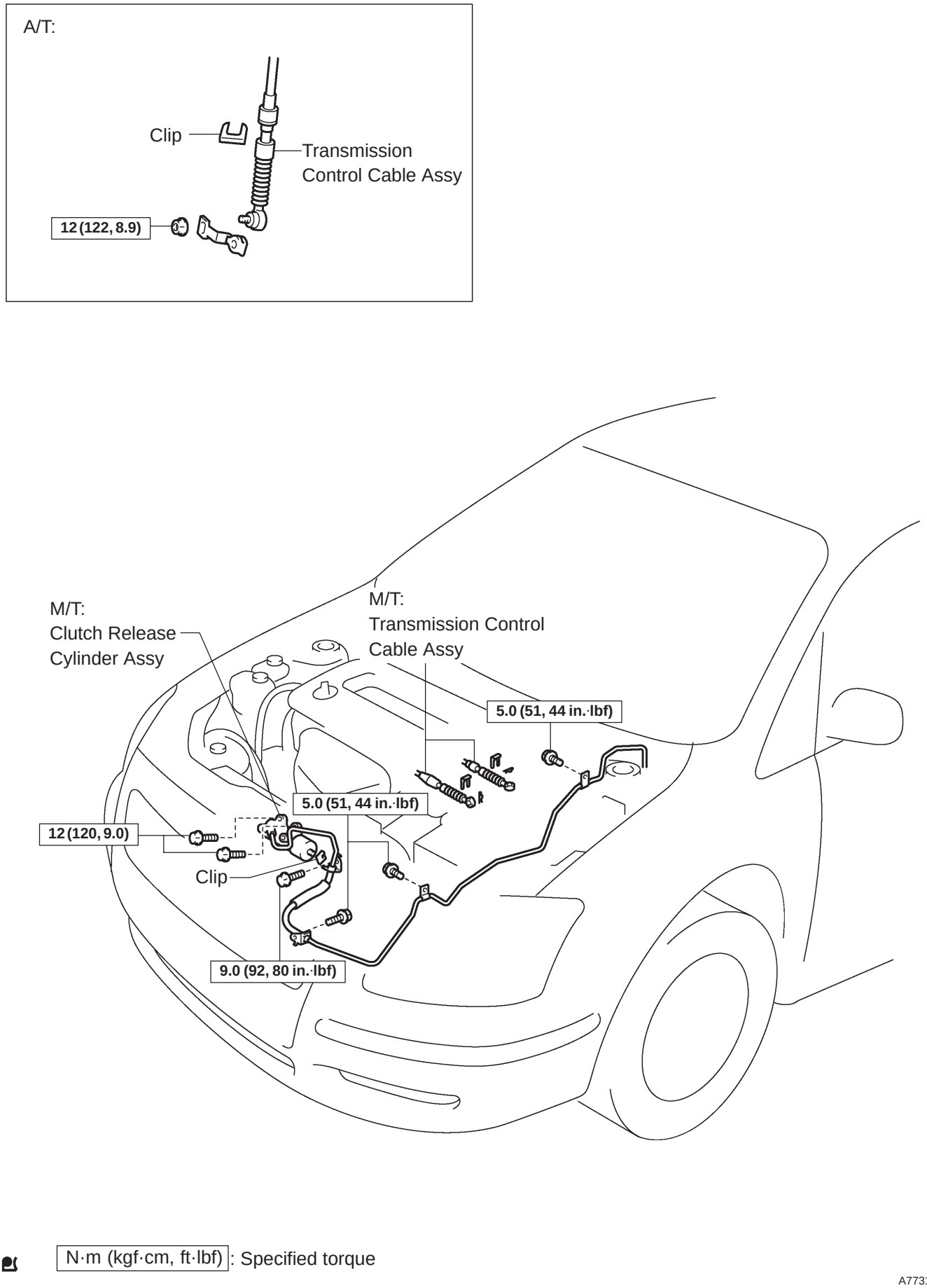
A/T:
Clip
Transmission Control Cable Assy
12 (122, 8.9)
M/T:
Clutch Release Cylinder Assy
M/T:
Transmission Control Cable Assy
5.0 (51, 44 in.·lbf)
5.0 (51, 44 in.·lbf)
12 (120, 9.0)
Clip
9.0 (92, 80 in.·lbf)
N·m (kgf·cm, ft·lbf): Specified torque
A77314

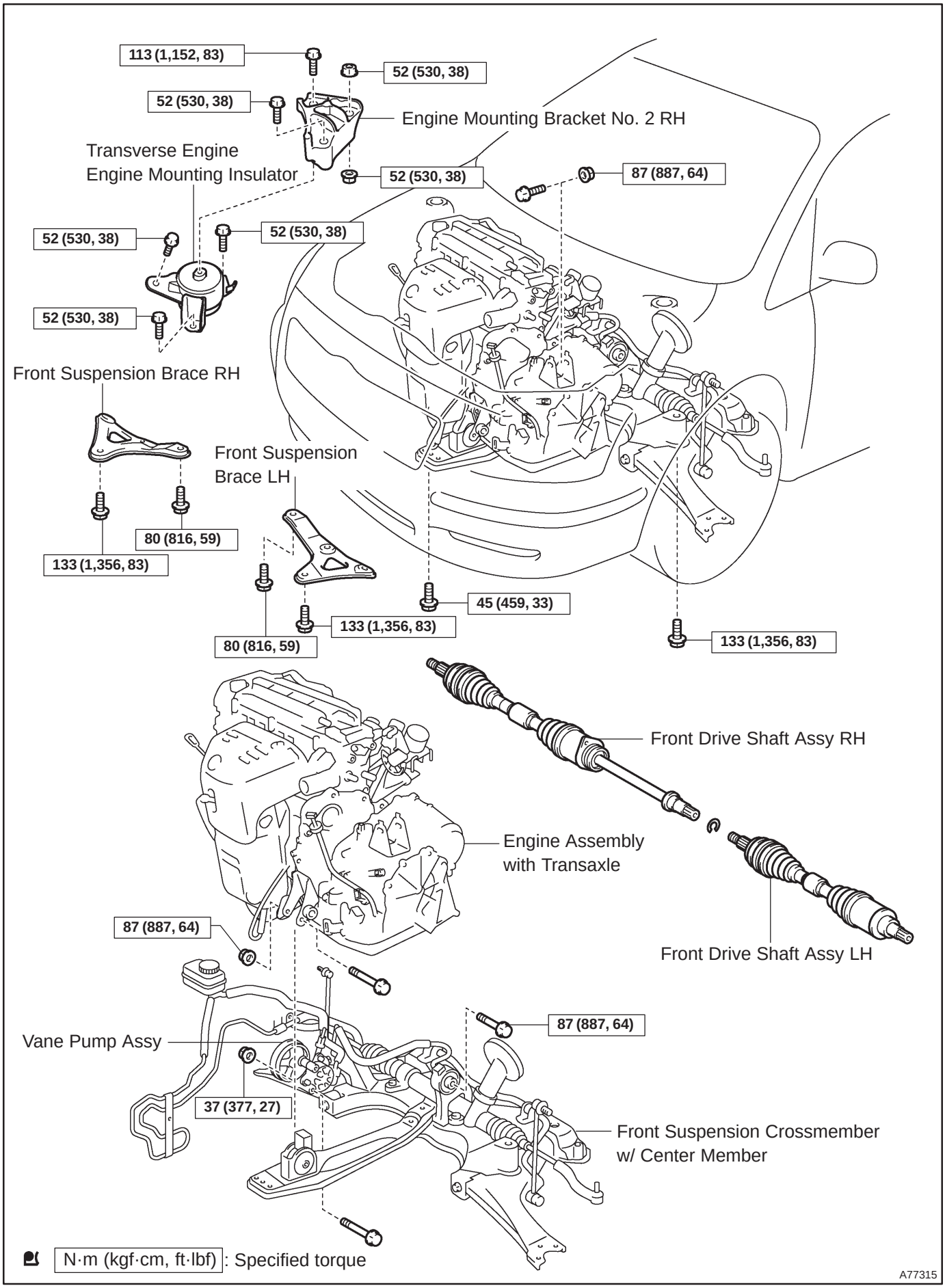
113 (1,152, 83)
52 (530, 38)
52 (530, 38)
Engine Mounting Bracket No. 2 RH
Transverse Engine
Engine Mounting Insulator
52 (530, 38)
87 (887, 64)
52 (530, 38)
52 (530, 38)
52 (530, 38)
Front Suspension Brace RH
Front Suspension
Brace LH
80 (816, 59)
133 (1,356, 83)
45 (459, 33)
133 (1,356, 83)
80 (816, 59)
133 (1,356, 83)
Front Drive Shaft Assy RH
Engine Assembly
with Transaxle
Front Drive Shaft Assy LH
87 (887, 64)
87 (887, 64)
Vane Pump Assy
37 (377, 27)
Front Suspension Crossmember
w/ Center Member
N·m (kgf·cm, ft·lbf): Specified torque
A77315

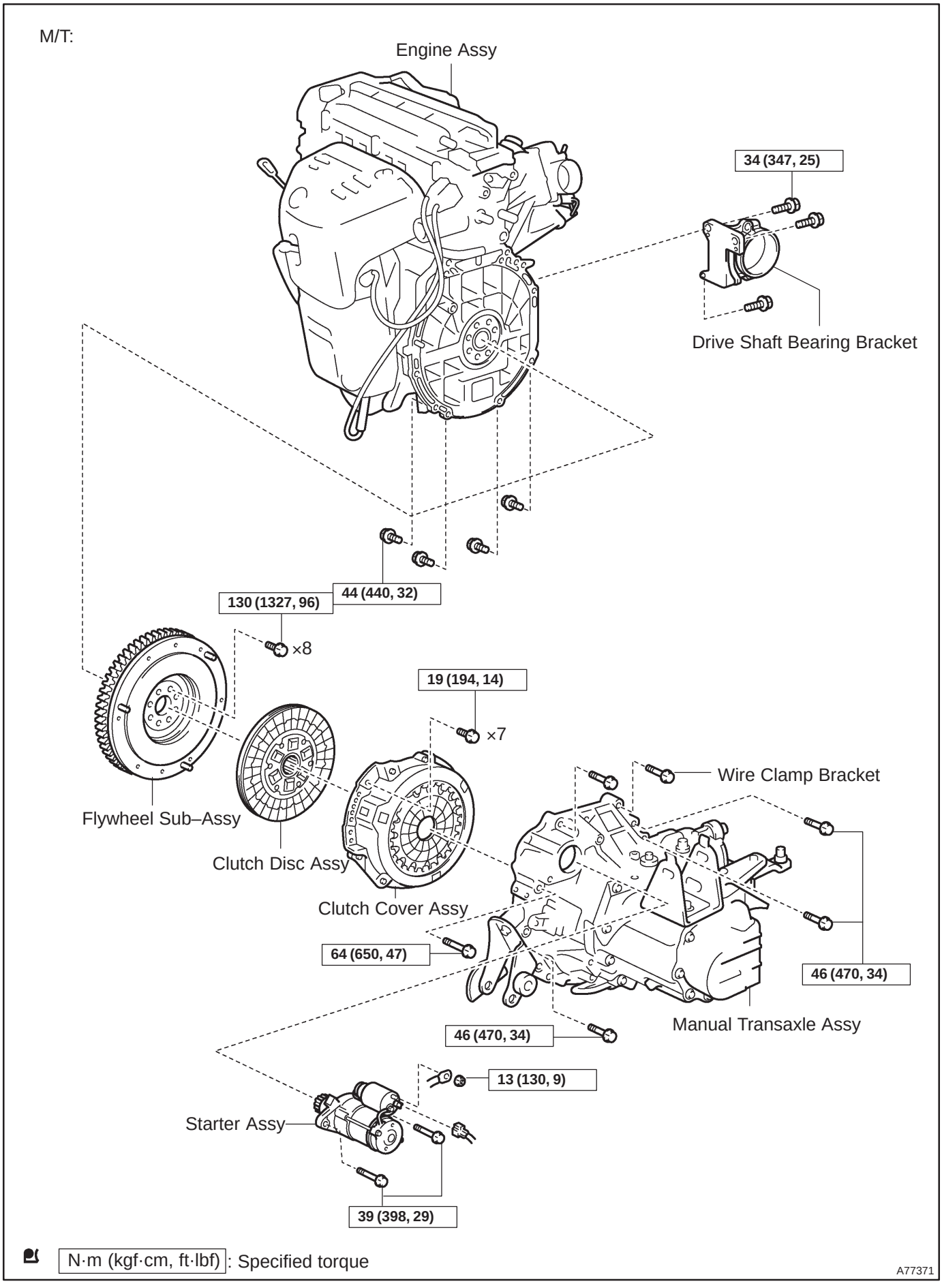
M/T:
Engine Assy
34 (347, 25)
Drive Shaft Bearing Bracket
130 (1327, 96)
44 (440, 32)
×8
19 (194, 14)
×7
Flywheel Sub–Assy
Clutch Disc Assy
Clutch Cover Assy
Wire Clamp Bracket
64 (650, 47)
46 (470, 34)
Manual Transaxle Assy
46 (470, 34)
13 (130, 9)
Starter Assy
39 (398, 29)
N·m (kgf·cm, ft·lbf): Specified torque
A77371

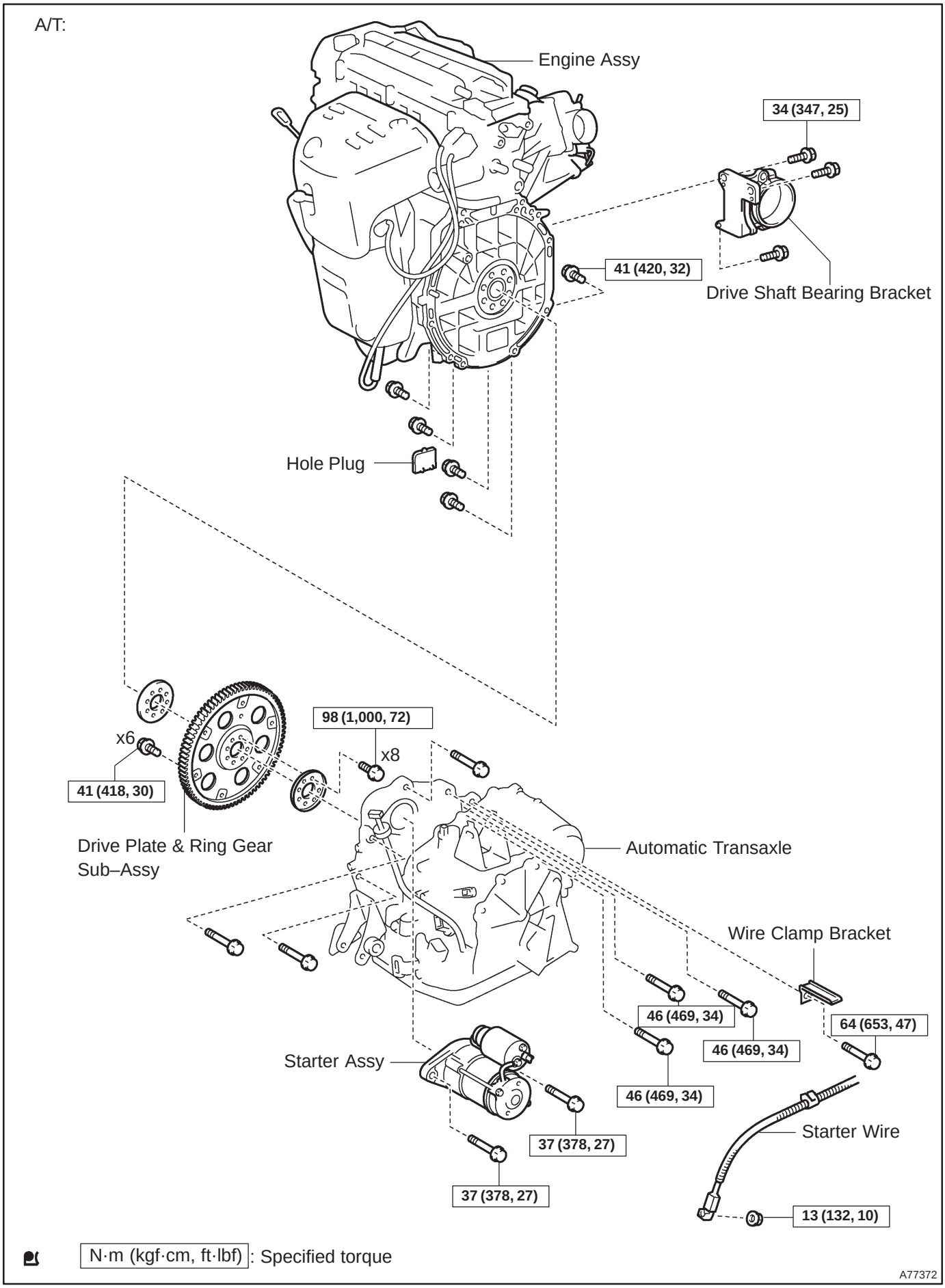
A/T:
Engine Assy
34 (347, 25)
41 (420, 32)
Drive Shaft Bearing Bracket
Hole Plug
98 (1,000, 72)
x6
x8
41 (418, 30)
Drive Plate & Ring Gear Sub–Assy
Automatic Transaxle
Wire Clamp Bracket
46 (469, 34)
46 (469, 34)
64 (653, 47)
Starter Assy
46 (469, 34)
37 (378, 27)
Starter Wire
37 (378, 27)
13 (132, 10)
N·m (kgf·cm, ft·lbf): Specified torque
A77372

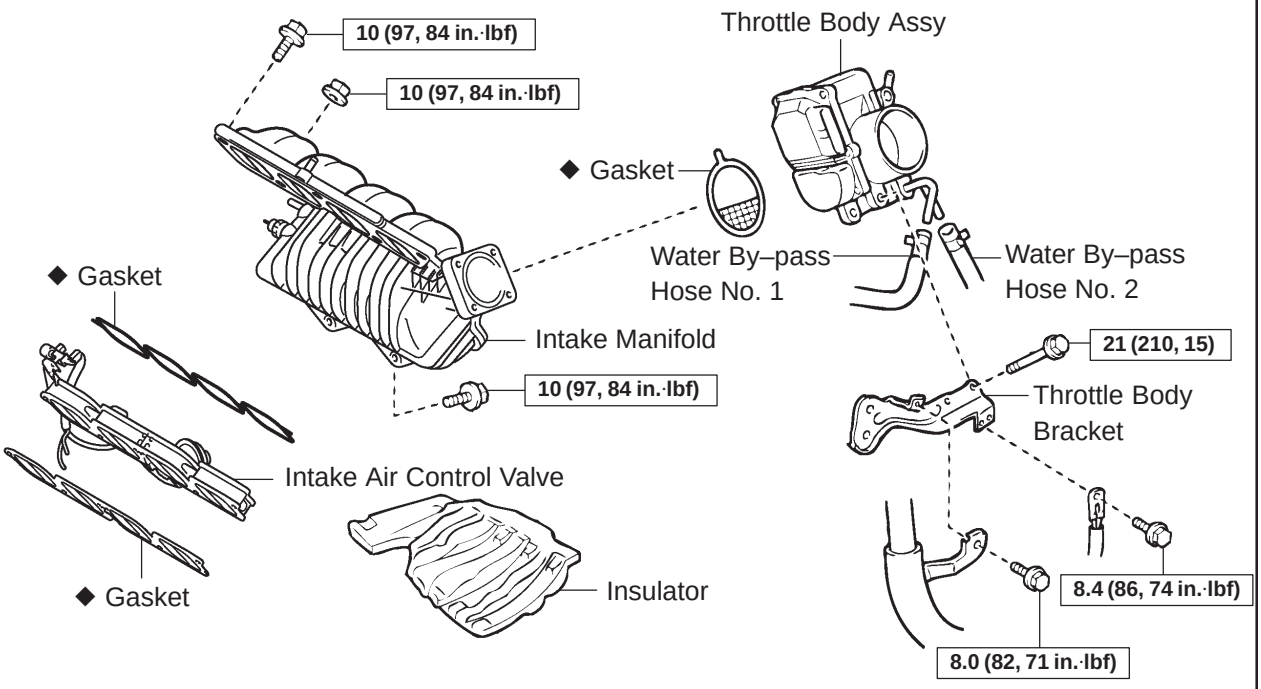

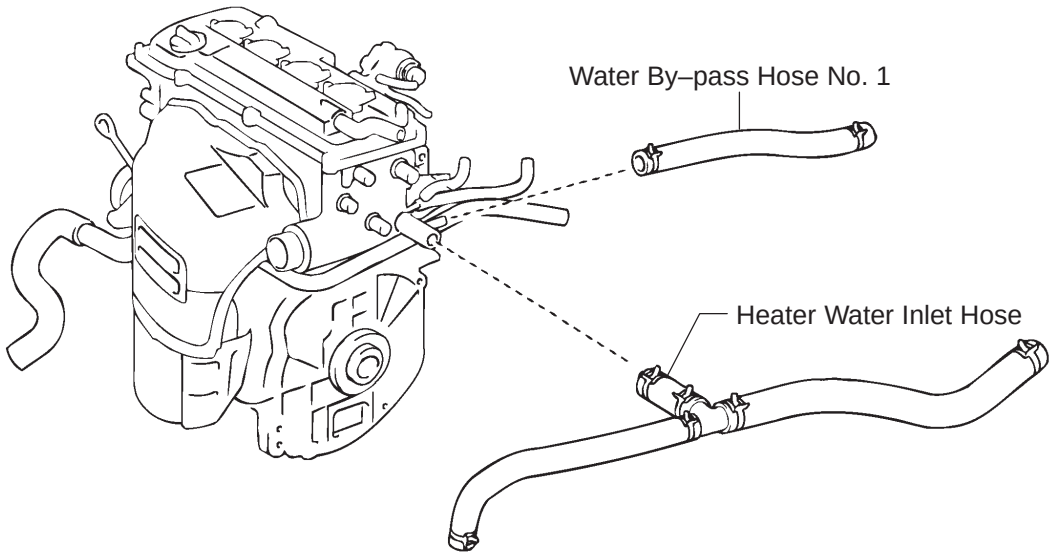

N·m (kgf·cm, ft·lbf): Specified torque

◆ Non–reusable part

A77369

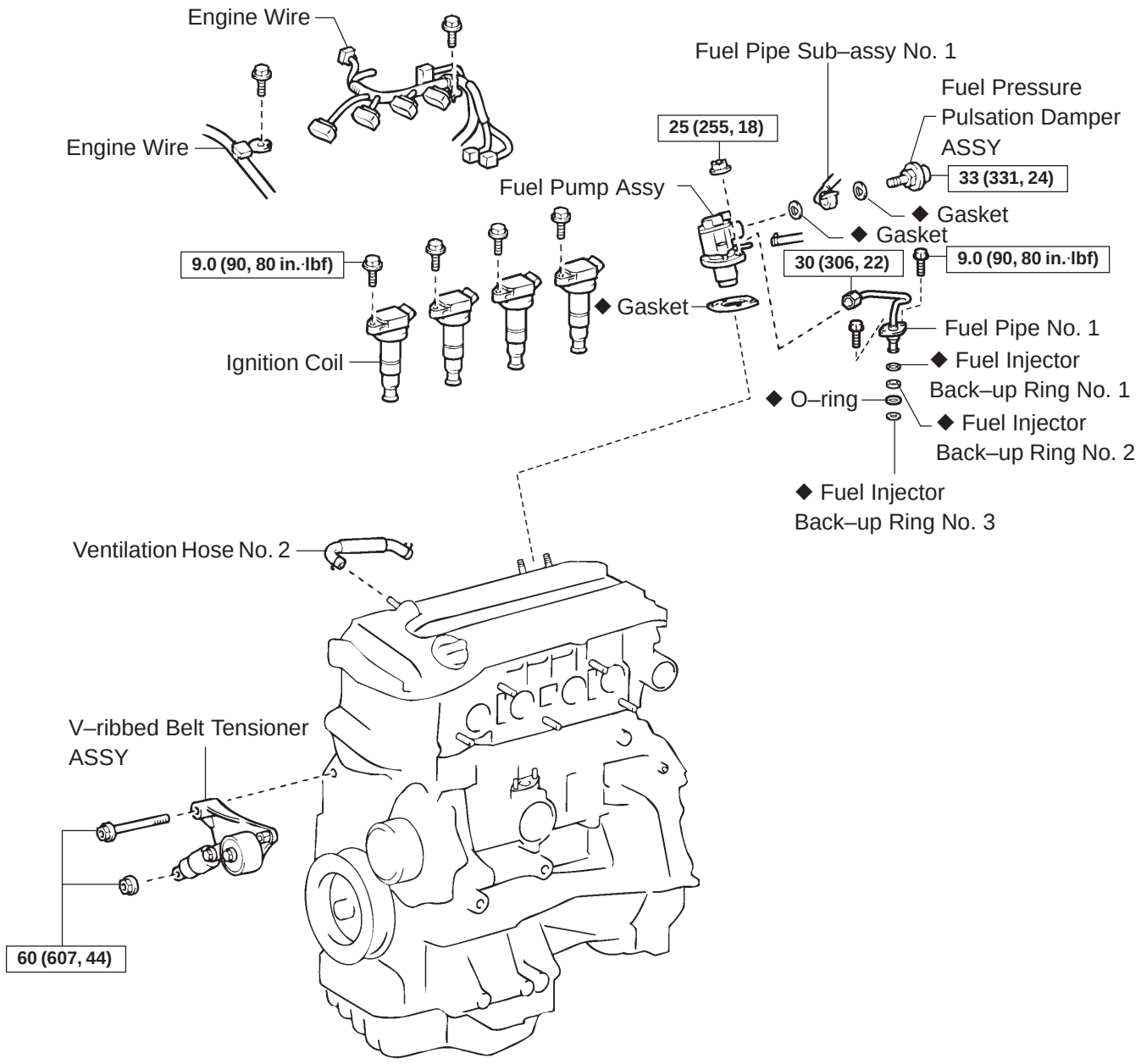

N·m (kgf·cm, ft·lbf): Specified torque

◆ Non–reusable part

A77498

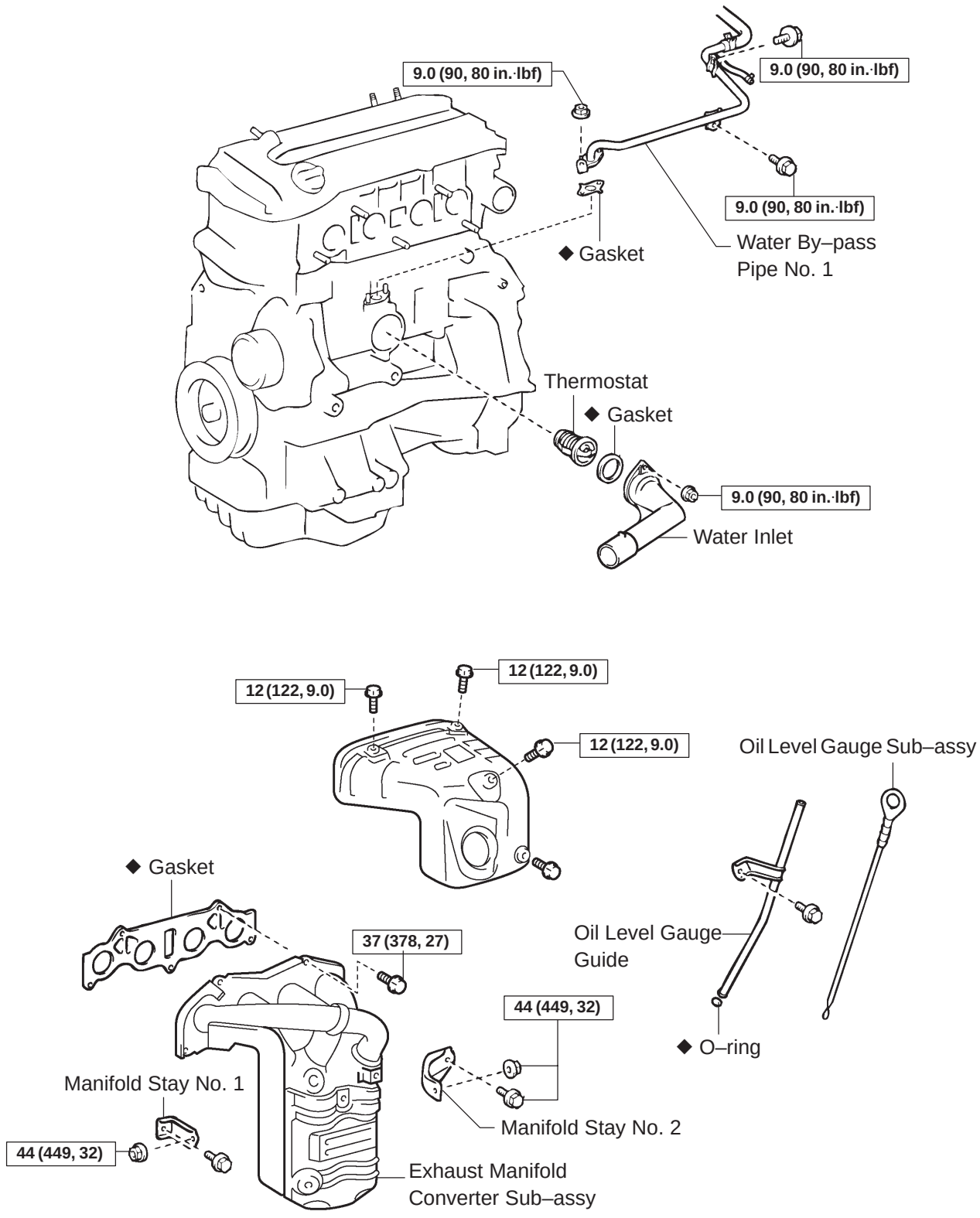

N·m (kgf·cm, ft·lbf): Specified torque

◆ Non–reusable part

A77499

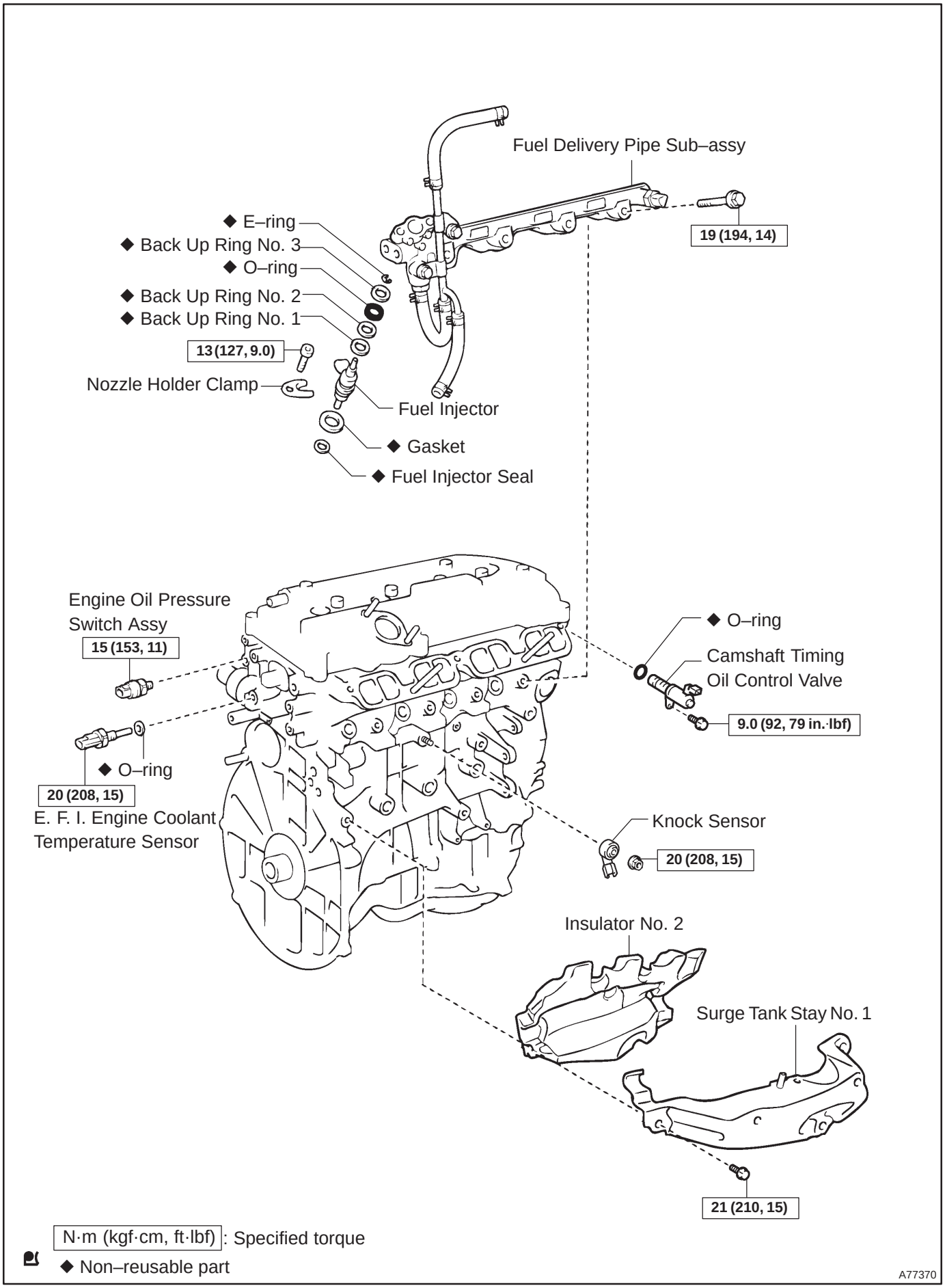
Fuel Delivery Pipe Sub–assy
19 (194, 14)
◆ E–ring
◆ Back Up Ring No. 3
◆ O–ring
◆ Back Up Ring No. 2
◆ Back Up Ring No. 1
13 (127, 9.0)
Nozzle Holder Clamp
Fuel Injector
◆ Gasket
◆ Fuel Injector Seal
Engine Oil Pressure Switch Assy
15 (153, 11)
◆ O–ring
20 (208, 15)
E. F. I. Engine Coolant Temperature Sensor
◆ O–ring
Camshaft Timing Oil Control Valve
9.0 (92, 79 in.·lbf)
Knock Sensor
20 (208, 15)
Insulator No. 2
Surge Tank Stay No. 1
21 (210, 15)
N·m (kgf·cm, ft·lbf): Specified torque
◆ Non–reusable part
A77370

141BM–01

REPLACEMENT

1. **DISCHARGE FUEL SYSTEM PRESSURE (See page 11–33)**
2. **REMOVE FRONT WHEELS**
3. **REMOVE RADIATOR SUPPORT OPENING COVER**
4. **REMOVE ENGINE ROOM COVER SIDE**
5. **REMOVE ENGINE UNDER COVER RH**
6. **REMOVE ENGINE UNDER COVER LH**
7. **DRAIN COOLANT (See page 16–31)**
8. **DRAIN ENGINE OIL**

(a) Install a new gasket and the drain plug after draining engine oil.
Torque: 25 N·m (255 kgf·cm, 18 ft·lbf)

9. **DRAIN MANUAL TRANSAXLE OIL (M/T TRANSAXLE)**
Torque: 49 N·m (500 kgf·cm, 36 ft·lbf)
10. **DRAIN AUTOMATIC TRANSAXLE FLUID (A/T TRANSAXLE) (See page 40–2)**

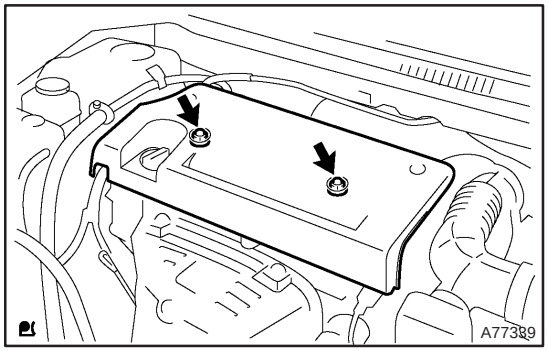

11. **REMOVE ENGINE COVER SUB–ASSY NO.1**

(a) Remove the 2 nuts and the cylinder head cover No. 1.

12. **DISCONNECT RADIATOR HOSE INLET**
13. **DISCONNECT RADIATOR HOSE OUTLET**

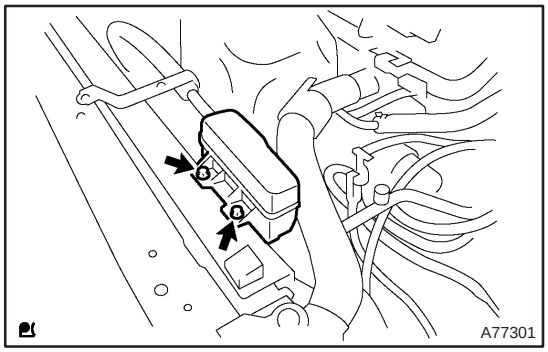

14. **SEPARATE RADIATOR RELAY BLOCK**

(a) Remove the 2 bolts and separate the radiator relay block.

15. **SEPARATE COOLER REFRIGERANT SUCTION HOSE NO.1 (RHD STEERING POSITION TYPE)**

(a) Remove the bolt and separate the suction hose No. 1.

16. **REMOVE RADIATOR ASSY (See page 16–36)**
17. **REMOVE FAN AND GENERATOR V BELT (See page 14–185)**
18. **REMOVE GENERATOR ASSY (See page 19–20)**
19. **REMOVE COMPRESSOR AND MAGNETIC CLUTCH**

(a) Remove the 4 bolts and separate the compressor and magnetic clutch.

HINT:

Secure the hoses off to the side instead of detaching.

20. **REMOVE BATTERY**

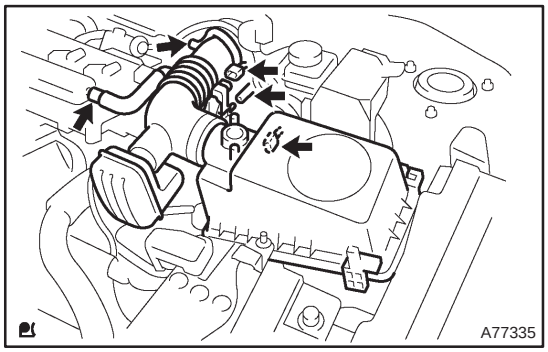

21. REMOVE AIR CLEANER ASSEMBLY WITH HOSE

(a) Disconnect the 2 connectors.
(b) Disconnect the 2 vacuum hoses.
(c) Disconnect the ventilation hose.
(d) Disconnect the air cleaner hose from the throttle body.

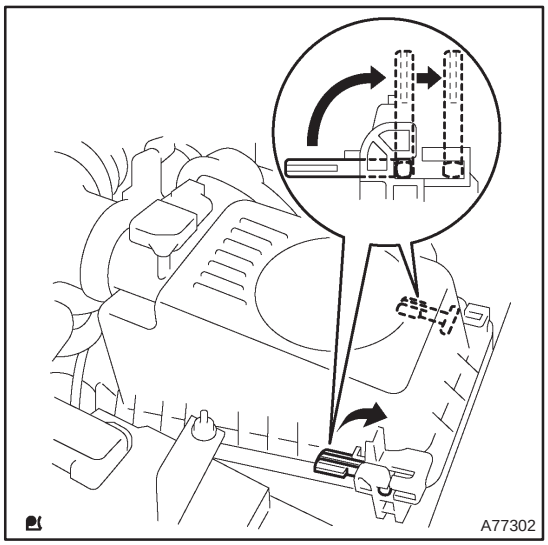

(e) Raise a clamp up, and slide it toward the air cleaner cap, then remove the air cleaner cap from its case.
(f) Remove the air cleaner element.
(g) Remove the 4 bolts and the air cleaner case.

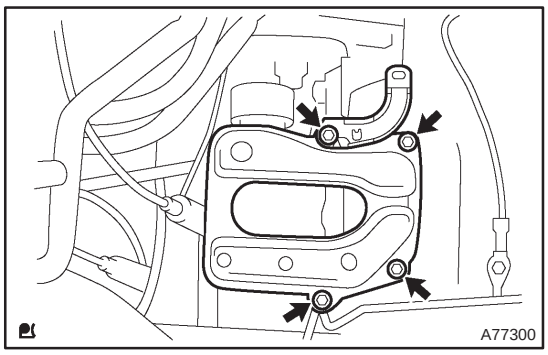

22. REMOVE BATTERY CARRIER

(a) Remove the 4 bolts and the battery carrier.

23. REMOVE RADIATOR RESERVE TANK SUB–ASSY

(a) Remove the 2 bolts and the radiator reserve tank.

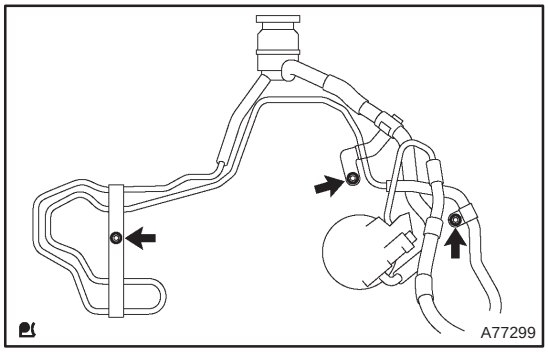

24. SEPARATE RETURN TUBE SUB–ASSY

(a) Remove the 3 bolts shown in the illustration.

25. SEPARATE VANE PUMP OIL RESERVOIR ASSY

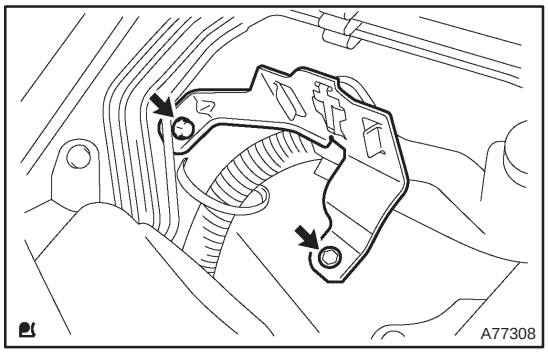

26. REMOVE OIL RESERVOIR BRACKET NO.1

(a) Remove the 2 bolts and the oil reservoir bracket No. 1.

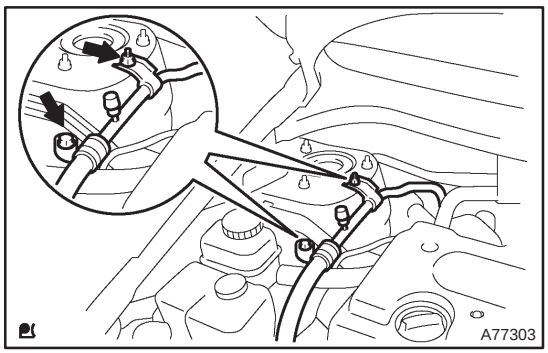

27. SEPARATE COOLER REFRIGERANT SUCTION HOSE NO.1 (LHD STEERING POSITION TYPE)

(a) Remove the 2 nuts and separate the suction hose.

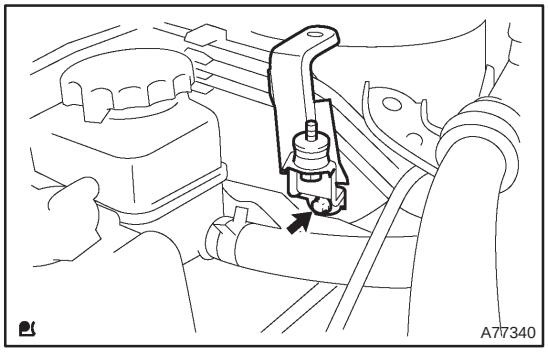

28. REMOVE COOLER BRACKET (LHD STEERING POSITION TYPE)

(a) Remove the nut and separate the cooler bracket.

29. REMOVE ENGINE SERVICE COVER BRACKET RH (RHD STEERING POSITION TYPE)

(a) Remove the bolt and the service cover bracket RH.

30. DISCONNECT HEATER INLET WATER HOSE

31. DISCONNECT HEATER OUTLET WATER HOSE

32. REMOVE CHARCOAL CANISTER ASSY

33. DISCONNECT FUEL TUBE SUB–ASSY (See page 11–30)

34. DISCONNECT UNION TO CONNECTOR TUBE HOSE

35. REMOVE FLOOR PANEL BRACE FRONT (See page 15–7)

36. REMOVE EXHAUST PIPE ASSY CENTER (See page 15–7)

37. REMOVE EXHAUST PIPE ASSY FRONT (See page 15–7)

38. REMOVE FRONT AXLE HUB LH NUT (See page 30–6)

SST 09330–00030

39. REMOVE FRONT AXLE HUB RH NUT

SST 09330–00030

HINT:

Perform the same procedure as above on the opposite side.

40. SEPARATE TIE ROD END SUB–ASSY LH (See page 51–36)

41. SEPARATE TIE ROD END SUB–ASSY RH

HINT:

Perform the same procedure as above on the opposite side.

42. SEPARATE FRONT STABILIZER LINK ASSY LH (See page 26–26)

43. SEPARATE FRONT STABILIZER LINK ASSY RH

HINT:

Perform the same procedure as above on the opposite side.

44. SEPARATE FRONT SUSPENSION ARM SUB–ASSY LOWER NO.1 LH (M/T TRANSAXLE) (See page 26–21)

45. SEPARATE FRONT SUSPENSION ARM SUB–ASSY LOWER NO.1 LH (A/T TRANSAXLE) (See page 26–16)

46. SEPARATE FRONT SUSPENSION ARM SUB–ASSY LOWER NO.1 RH (M/T TRANSAXLE)

HINT:

Perform the same procedure as above on the opposite side.

47. SEPARATE FRONT SUSPENSION ARM SUB–ASSY LOWER NO.1 RH (A/T TRANSAXLE)

HINT:

Perform the same procedure as above on the opposite side.

48. SEPARATE FRONT AXLE ASSY LH (See page 30–6)

49. SEPARATE FRONT AXLE ASSY RH (See page 30–6)

HINT:

Perform the same procedure as above on the opposite side.

50. SEPARATE CLUTCH RELEASE CYLINDER ASSY (M/T TRANSAXLE)

(a) Remove the 7 bolts shown in the illustration.

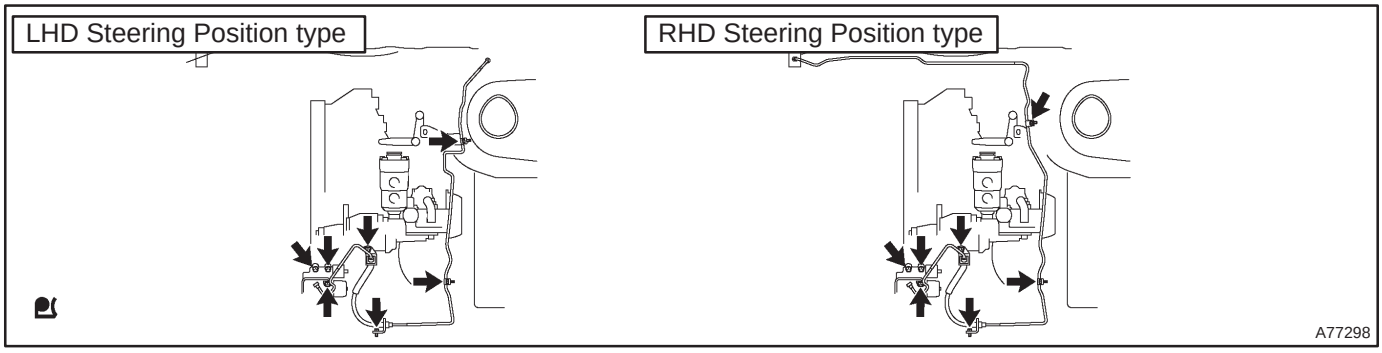

51. SEPARATE TRANSMISSION CONTROL CABLE ASSY (M/T TRANSAXLE) (See page 41–24)

52. SEPARATE TRANSMISSION CONTROL CABLE ASSY (A/T TRANSAXLE) (See page 40–25)

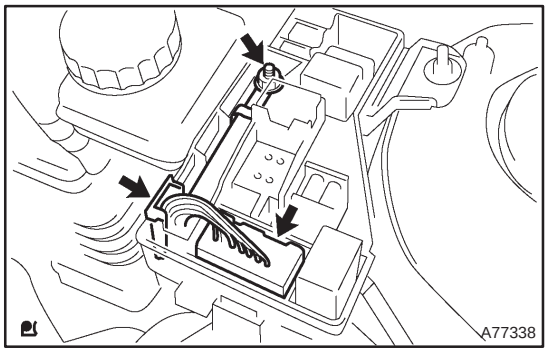

53. SEPARATE ENGINE ROOM RELAY BLOCK NO.2

(a) Remove the nut and disconnect the connector shown in the illustration.

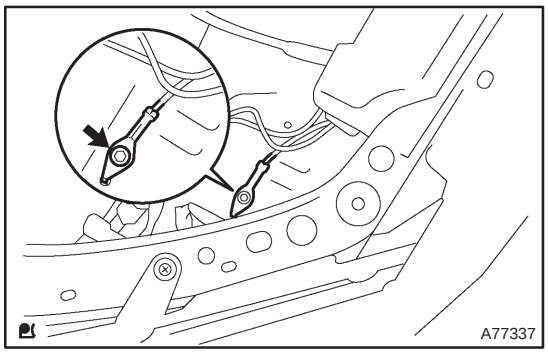

54. SEPARATE ENGINE WIRE

(a) Remove the bolt and separate the grand terminal.

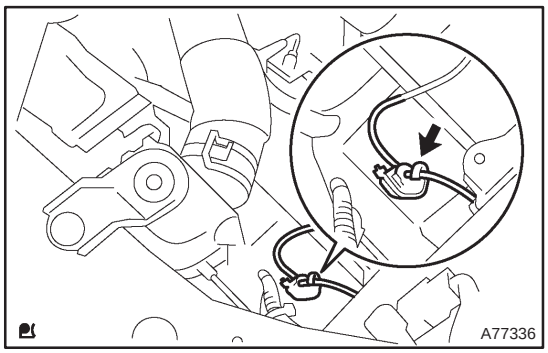

(b) Separate the grand terminal connector.
(c) Remove the glove compartment door panel.
(d) Separate the engine wire.

55. SEPARATE STEERING INTERMEDIATE SHAFT ASSY NO.2 (See page 50–9)

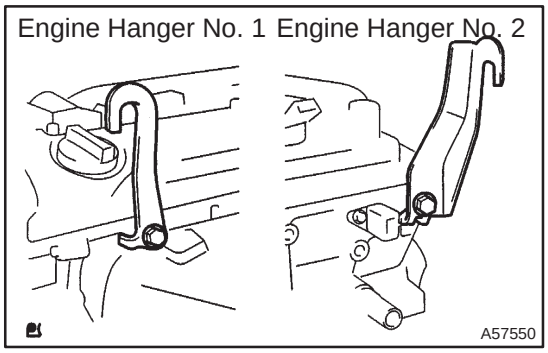

56. INSTALL ENGINE HANGERS

(a) Install the engine hanger No. 1 (12281–28010, 28020, 28030) with the bolt (91512–61020).
Torque: 38 N·m (387 kgf·cm, 28 ft·lbf)

(b) Install the engine hanger No. 2 (12282–28010, 28020, 28030) with the bolt (91512–61020).
Torque: 38 N·m (387 kgf·cm, 28 ft·lbf)

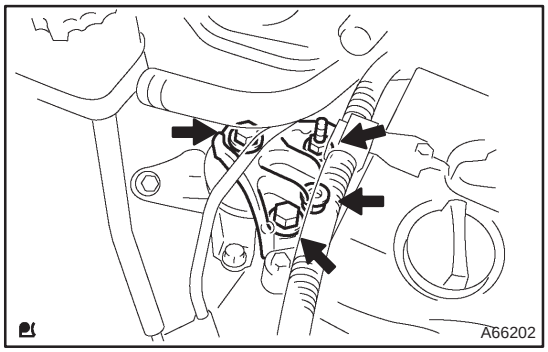

57. REMOVE ENGINE MOUNTING BRACKET NO.2 RH

(a) Set the engine lifter.

(b) Remove the 2 bolts and 2 nuts, and then detach the mounting bracket No. 2.

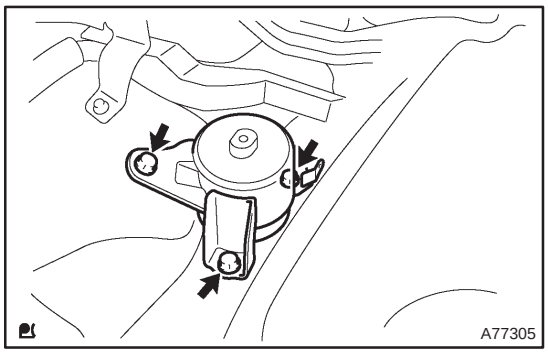

58. REMOVE TRANSVERSE ENGINE ENGINE MOUNTING INSULATOR

(a) Remove the 3 bolts and the engine mounting insulator.

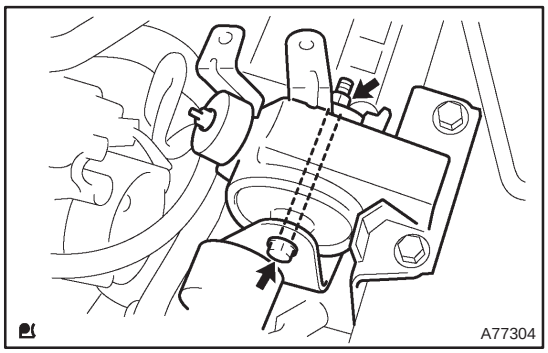

59. REMOVE TRANSVERSE ENGINE ENGINE MOUNTING INSULATOR

(a) Remove the through bolt and nut, and then detach the engine mounting insulator.

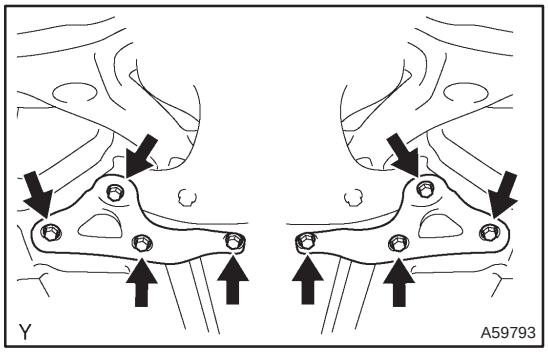

60. REMOVE ENGINE ASSEMBLY WITH TRANSAXLE

(a) Remove the 8 bolts and the front suspension member braces.

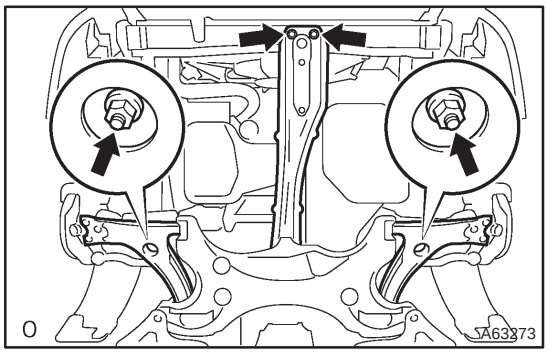

(b) Remove the 2 bolts and 2 nuts shown in the illustration.

(c) Carefully remove the engine assembly with transaxle from the vehicle.

61. SEPARATE VANE PUMP ASSY
(a) Disconnect the PS oil pressure switch connector.
(b) Remove the 2 bolts and separate the vane pump from the engine.
62. REMOVE STARTER ASSY (See page 19–12)
63. REMOVE FRONT SUSPENSION CROSSMEMBER W/CENTER MEMBER
(a) Remove the through bolt and nut from the engine mounting insulator FR.
(b) Remove the through bolt and nut from the engine mounting insulator RR.
64. REMOVE FRONT DRIVE SHAFT ASSY LH (See page 30–6)
65. REMOVE FRONT DRIVE SHAFT ASSY RH (See page 30–6)
66. REMOVE MANUAL TRANSAXLE ASSY (M/T TRANSAXLE) (See page 41–24)
67. REMOVE AUTOMATIC TRANSAXLE ASSY (A/T TRANSAXLE) (See page 40–25)
68. REMOVE CLUTCH COVER ASSY (M/T TRANSAXLE) (See page 42–26)
69. REMOVE CLUTCH DISC ASSY (M/T TRANSAXLE) (See page 42–26)

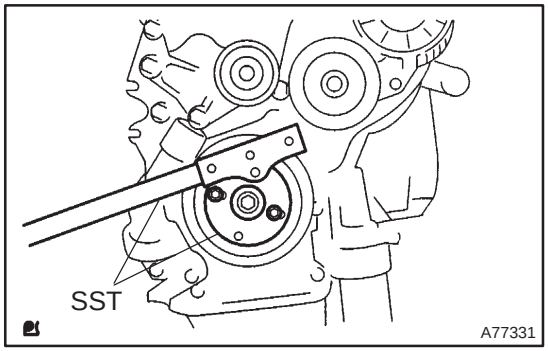

70. REMOVE DRIVE PLATE AND RING GEAR OR FLYWHEEL
(a) Using SST, fix the crankshaft pulley and remove the drive plate and ring gear or flywheel.
SST 09213–54015 (91651–60855), 09330–00021

71. REMOVE CAMSHAFT TIMING OIL CONTROL VALVE ASSY
(a) Remove the bolt, O–ring and the camshaft timing oil control valve.
72. REMOVE THROTTLE BODY BRACKET
(a) Separate the engine wire.
(b) Remove the 4 bolts and the throttle body bracket.
73. REMOVE THROTTLE BODY ASSY (See page 10–44)
74. REMOVE FUEL PRESSURE PULSATION DAMPER ASSY
75. DISCONNECT FUEL TUBE SUB–ASSY
76. REMOVE FUEL PIPE SUB–ASSY NO.1 (See page 11–52)
77. REMOVE FUEL PUMP ASSY (See page 11–52)
78. REMOVE WATER BY–PASS HOSE

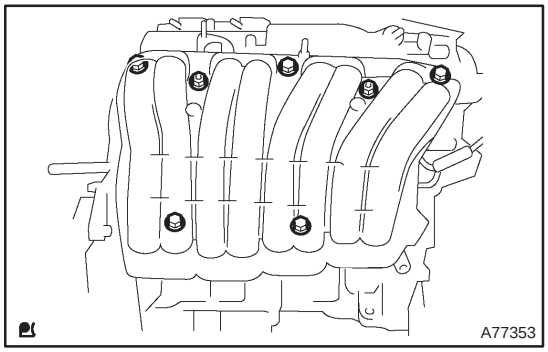

79. REMOVE INTAKE MANIFOLD
(a) Remove the 5 bolts and 2 nuts.
(b) Remove the intake manifold and the insulator.

80. REMOVE INTAKE AIR CONTROL VALVE ASSY

(a) Remove the intake air control valve and a gasket.

81. REMOVE SURGE TANK STAY NO.1

(a) Remove the 3 bolts and the surge tank stay.

82. REMOVE INTAKE MANIFOLD INSULATOR NO.2

83. REMOVE NOZZLE HOLDER CLAMP

84. REMOVE FUEL DELIVERY PIPE SUB–ASSY (See page 11–42)

85. REMOVE FUEL INJECTOR ASSY (See page 11–42)

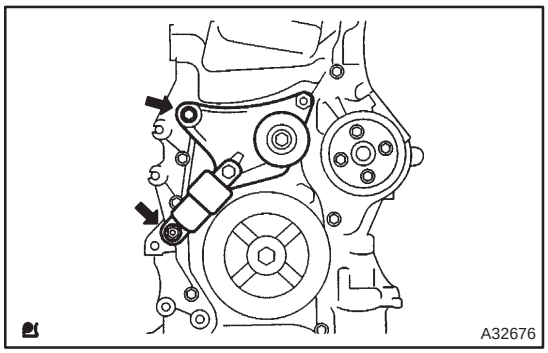

86. REMOVE V–RIBBED BELT TENSIONER ASSY

(a) Remove the bolt and nut, and then detach the V–ribbed belt tensioner.

87. REMOVE IGNITION COIL ASSY

(a) Remove the 4 bolts and the ignition coils.

88. REMOVE EXHAUST MANIFOLD HEAT INSULATOR NO.1

(a) Remove the 3 bolts and the exhaust manifold heat insulator.

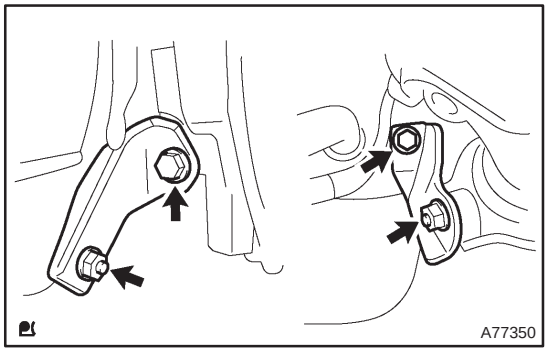

89. REMOVE EXHAUST MANIFOLD CONVERTER SUB–ASSY

(a) Remove the 2 bolts and 2 nuts, then detach the No. 1 and No. 2 exhaust manifold stay.

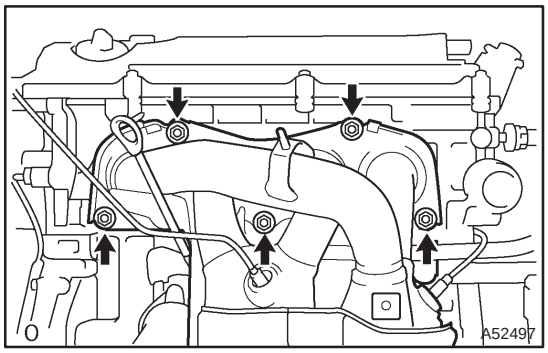

(b) Remove the 5 nuts, the exhaust manifold converter and gasket.

90. REMOVE OIL LEVEL GAGE SUB–ASSY

91. REMOVE OIL LEVEL GAGE GUIDE

92. REMOVE WATER INLET

(a) Remove the 2 nuts and the water inlet.

93. REMOVE THERMOSTAT

94. REMOVE WATER BY–PASS PIPE NO.1

(a) Remove the 2 bolts and 2 nuts.

(b) Remove the water by–pass pipe No. 1 and a gasket.

95. REMOVE KNOCK SENSOR

(a) Remove the nut and the knock sensor.

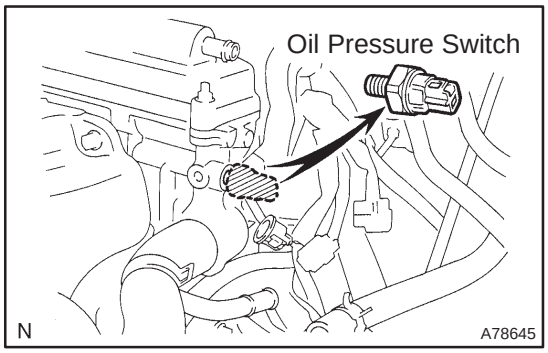

96. REMOVE ENGINE OIL PRESSURE SWITCH ASSY

(a) Using SST, remove the engine oil pressure switch.
SST 09268–46021

97. REMOVE E.F.I. ENGINE COOLANT TEMPERATURE SENSOR

(a) Using a SST, remove the coolant temperature sensor
SST 09817–33190

98. REPLACE PARTIAL ENGINE ASSY

99. INSTALL E.F.I. ENGINE COOLANT TEMPERATURE SENSOR

(a) Install a new gasket to the engine coolant temperature sensor.

(b) Using SST, install the engine coolant temperature sensor.
SST 09817–33190
Torque: 20 N·m (208 kgf·cm, 15 ft·lbf)

100. INSTALL ENGINE OIL PRESSURE SWITCH ASSY

(a) Clean the threads of the oil pressure switch, apply adhesive there.
Adhesive: Part No. 08833 – 00080 THREE BOND 1344 or equivalent.

(b) Install the oil pressure switch.
Torque: 15 N·m (153 kgf·cm, 11 ft·lbf)
SST 09268–46021

101. INSTALL KNOCK SENSOR
Torque: 20 N·m (208 kgf·cm, 15 ft·lbf)

102. INSTALL WATER BY–PASS PIPE NO.1

(a) Install the water by–pass pipe No. 1 and a new gasket.

(b) Install the 2 bolts and 2 nuts.
Torque: 9.0 N·m (92 kgf·cm, 80 in.·lbf)

103. INSTALL THERMOSTAT (See page 16–35)

104. INSTALL WATER INLET
Torque: 9.0 N·m (92 kgf·cm, 80 in.·lbf)

105. INSTALL OIL LEVEL GAGE GUIDE

(a) Apply a light coat of engine oil to the O–ring, install it to the oil level gauge guide.

(b) Install the oil level gauge and guide with the bolt.
Torque: 9.0 N·m (92 kgf·cm, 80 in.·lbf)

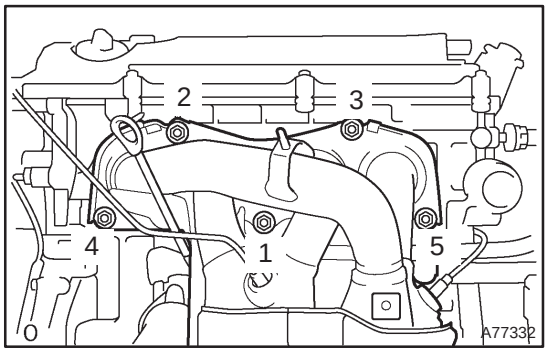

106. INSTALL EXHAUST MANIFOLD CONVERTER SUB–ASSY

(a) Install a new gasket and the exhaust manifold converter with the 5 nuts.
Torque: 37 N·m (378 kgf·cm, 27 ft·lbf)

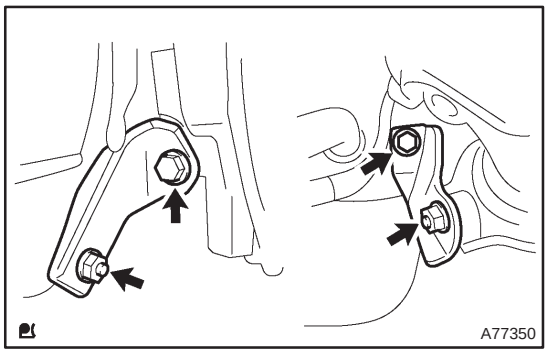

(b) Install the No. 1 and No. 2 exhaust manifold stays with the 2 bolts and 2 nuts.
Torque: 44 N·m (449 kgf·cm, 32 ft·lbf)

107. INSTALL EXHAUST MANIFOLD HEAT INSULATOR NO.1
Torque: 12 N·m (122 kgf·cm, 9.0 ft·lbf)

108. INSTALL V–RIBBED BELT TENSIONER ASSY
Torque: 60 N·m (607 kgf·cm, 44 ft·lbf)

109. INSTALL IGNITION COIL ASSY
Torque: 9.0 N·m (92 kgf·cm, 80 in.·lbf)

110. INSTALL FUEL INJECTOR ASSY (See page 11–42)

111. INSTALL FUEL DELIVERY PIPE SUB–ASSY (See page 11–42)

112. INSTALL NOZZLE HOLDER CLAMP (See page 11–42)

113. INSTALL SURGE TANK STAY NO.1

(a) Install the surge tank stay with insulator No. 2.
Torque: 21 N·m (210 kgf·cm, 15 ft·lbf)

114. INSTALL INTAKE MANIFOLD

(a) Install a new gasket on the cylinder head.

(b) Install the intake manifold with the 5 bolts and 2 nuts.
Torque: 30 N·m (306 kgf·cm, 22 ft·lbf)

115. INSTALL FUEL PUMP ASSY (See page 11–52)

116. INSTALL FUEL PIPE SUB–ASSY NO.1 (See page 11–52)
SST 09023–12900

117. INSTALL FUEL PRESSURE PULSATION DAMPER ASSY (See page 11–49)

118. INSTALL THROTTLE BODY ASSY (See page 10–44)

119. INSTALL THROTTLE BODY BRACKET
Torque: 21 N·m (210 kgf·cm, 15 ft·lbf)

120. INSTALL CAMSHAFT TIMING OIL CONTROL VALVE ASSY

(a) Apply a light coat of engine oil to the new O–ring and install it to the camshaft timing oil control valve.

(b) Install the camshaft oil control valve with the bolt.
Torque: 9.0 N·m (92 kgf·cm, 79 in.·lbf)

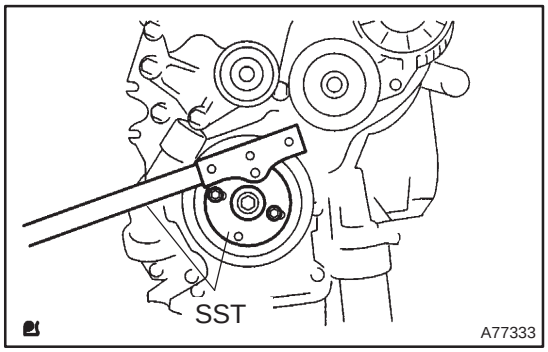

121. INSTALL DRIVE PLATE AND RING GEAR OR FLYWHEEL

(a) Hold the crankshaft with SST.
SST 09213–54015 (91651–60855), 09330–00021
Adhesive:
Part No. 08833–00070, THREE BOND or equivalent

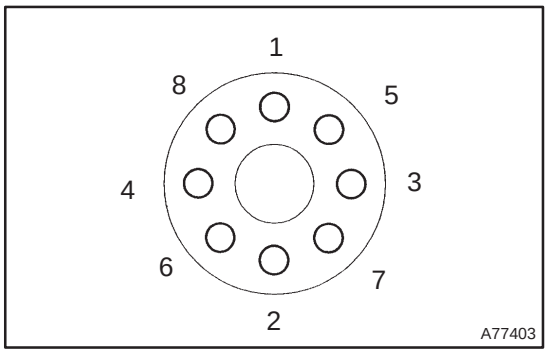

(b) Install the drive plate. (A/T)
(1) Clean the bolt and bolt hole.
(2) Apply adhesive to the bolts.
(3) Using several steps, install and tighten the 8 bolts uniformly in the sequence shown in the illustration.
Torque: 98 N·m (1,000 kgf·cm, 72 ft·lbf)

(c) Install the flywheel. (M/T)
(1) Clean the bolt hole.
(2) Using several steps, install and tighten the 8 bolts uniformly in the sequence shown in the illustration.
Torque: 130 N·m (1,327 kgf·cm, 96 ft·lbf)

NOTICE:
Do not reuse the flywheel bolt.

122. INSTALL CLUTCH DISC ASSY (M/T TRANSAXLE) (See page 42–26)
123. INSTALL CLUTCH COVER ASSY (M/T TRANSAXLE) (See page 42–26)
124. INSTALL MANUAL TRANSAXLE ASSY (M/T TRANSAXLE) (See page 41–24)
125. INSTALL AUTOMATIC TRANSAXLE ASSY (A/T TRANSAXLE) (See page 40–25)
126. INSTALL FRONT DRIVE SHAFT ASSY LH (See page 30–6)
127. INSTALL FRONT DRIVE SHAFT ASSY RH (See page 30–6)
128. INSTALL FRONT SUSPENSION CROSSMEMBER W/CENTER MEMBER
(a) Install the engine mounting insulator FR with the through bolt and nut.
Torque: 87 N·m (887 kgf·cm, 64 ft·lbf)
(b) Install the engine mounting insulator RR with the through bolt and nut.
Torque: 87 N·m (887 kgf·cm, 64 ft·lbf)
129. INSTALL STARTER ASSY (See page 19–12)
130. INSTALL VANE PUMP ASSY
Torque: 37 N·m (370 kgf·cm, 27 ft·lbf)

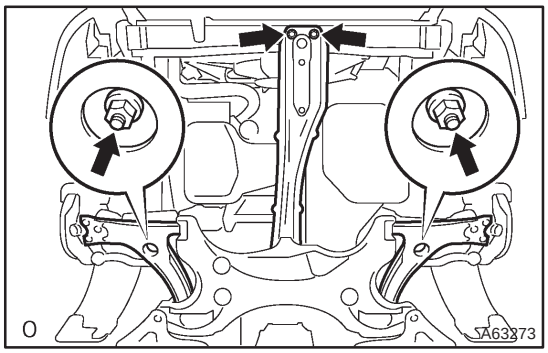

131. INSTALL ENGINE ASSEMBLY WITH TRANSAXLE
(a) Install the 2 bolts and 2 nuts as shown in the illustration.
Torque:
Bolt 45 N·m (459 kgf·cm, 33 ft·lbf)
Nut 133 N·m (1,356 kgf·cm, 98 ft·lbf)

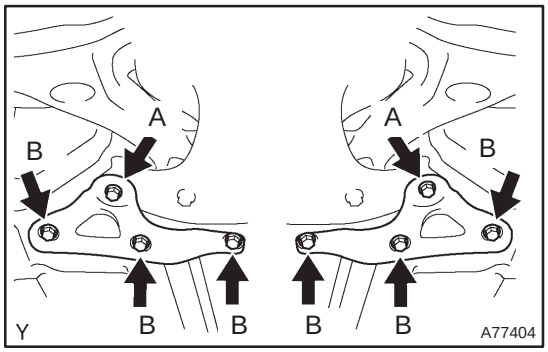

(b) Install the front suspension member braces with the 8 bolts.

Torque:
Bolt A 133 N·m (1,356 kgf·cm, 98 ft·lbf)
Bolt B 80 N·m (816 kgf·cm, 59 ft·lbf)

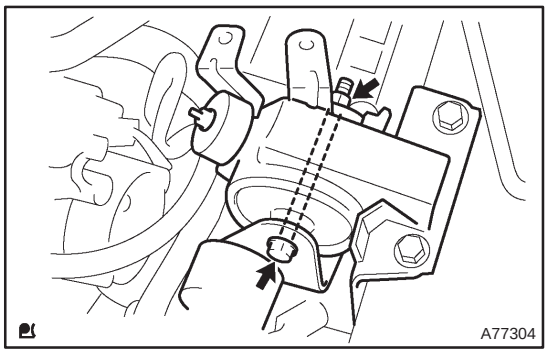

132. INSTALL TRANSVERSE ENGINE ENGINE MOUNTING INSULATOR
Torque: 87 N·m (887 kgf·cm, 64 ft·lbf)

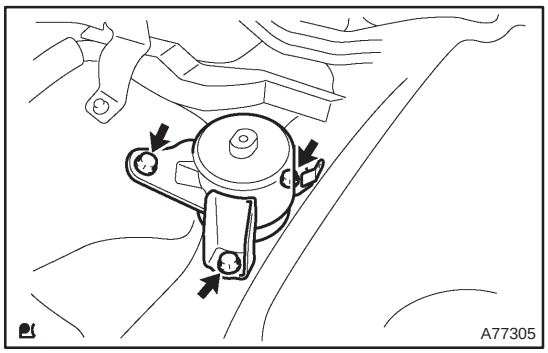

133. INSTALL TRANSVERSE ENGINE ENGINE MOUNTING INSULATOR
Torque: 52 N·m (530 kgf·cm, 38 ft·lbf)

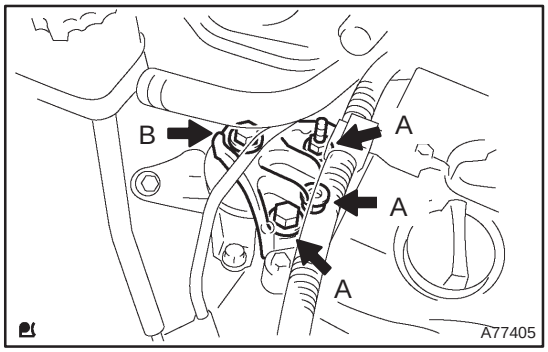

134. INSTALL ENGINE MOUNTING BRACKET NO.2 RH
Torque:
A 52 N·m (530 kgf·cm, 38 ft·lbf)
B 113 N·m (1,152 kgf·cm, 83 ft·lbf)

135. REMOVE ENGINE HANGERS
136. INSTALL STEERING INTERMEDIATE SHAFT ASSY NO.2 (See page 50–9)
137. INSTALL TRANSMISSION CONTROL CABLE ASSY (M/T TRANSAXLE) (See page 41–24)
138. INSTALL TRANSMISSION CONTROL CABLE ASSY (A/T TRANSAXLE) (See page 40–25)

139. INSTALL CLUTCH RELEASE CYLINDER ASSY (M/T TRANSAXLE)

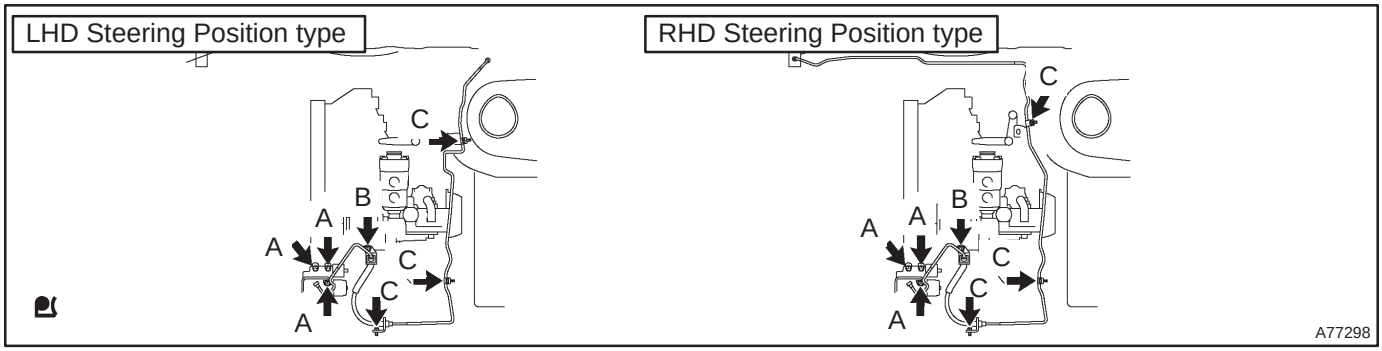

Torque:
Bolt A 12 N·m (122 kgf·cm, 89 ft·lbf)
Bolt B 9.0 N·m (92 kgf·cm, 79 in.·lbf)
Bolt C 5.0 N·m (51 kgf·cm, 44 in.·lbf)

140. INSTALL FRONT AXLE ASSY LH
Torque: 294 N·m (3,000 kgf·cm, 217 ft·lbf)
141. INSTALL FRONT AXLE ASSY RH
Torque: 294 N·m (3,000 kgf·cm, 217 ft·lbf)
142. INSTALL FRONT SUSPENSION ARM SUB–ASSY LOWER NO.1 LH (M/T TRANSAXLE)
Torque: 142 N·m (1,448 kgf·cm, 104 ft·lbf)
143. INSTALL FRONT SUSPENSION ARM SUB–ASSY LOWER NO.1 LH (A/T TRANSAXLE)
Torque: 142 N·m (1,448 kgf·cm, 104 ft·lbf)
144. INSTALL FRONT SUSPENSION ARM SUB–ASSY LOWER NO.1 RH (M/T TRANSAXLE)
Torque: 142 N·m (1,448 kgf·cm, 104 ft·lbf)
145. INSTALL FRONT SUSPENSION ARM SUB–ASSY LOWER NO.1 RH (A/T TRANSAXLE)
Torque: 142 N·m (1,448 kgf·cm, 104 ft·lbf)
146. INSTALL FRONT STABILIZER LINK ASSY LH
Torque: 74 N·m (755 kgf·cm, 55 ft·lbf)
147. INSTALL FRONT STABILIZER LINK ASSY RH
Torque: 74 N·m (755 kgf·cm, 55 ft·lbf)
148. INSTALL TIE ROD END SUB–ASSY LH (See page 51–36)
149. INSTALL TIE ROD END SUB–ASSY RH
HINT:
Perform the same procedure as above on the opposite side.
150. INSTALL FRONT AXLE HUB LH NUT (See page 30–6)
151. INSTALL FRONT AXLE HUB RH NUT
HINT:
Perform the same procedure as above on the opposite side.
152. INSTALL EXHAUST PIPE ASSY FRONT (See page 15–7)
153. INSTALL EXHAUST PIPE ASSY CENTER (See page 15–7)
154. INSTALL FLOOR PANEL BRACE FRONT
Torque: 30 N·m (306 kgf·cm, 22 ft·lbf)
155. INSTALL COOLER BRACKET (LHD STEERING POSITION TYPE)
Torque: 9.0 N·m (92 kgf·cm, 80 in.·lbf)
156. INSTALL ENGINE SERVICE COVER BRACKET RH (RHD STEERING POSITION TYPE)
Torque: 9.0 N·m (92 kgf·cm, 80 in.·lbf)
157. INSTALL COOLER REFRIGERANT SUCTION HOSE NO.1 (LHD STEERING POSITION TYPE)
Torque: 9.0 N·m (92 kgf·cm, 80 in.·lbf)

158. INSTALL OIL RESERVOIR BRACKET NO.1
Torque: 8.0 N·m (82 kgf·cm, 71 in.·lbf)
159. INSTALL RETURN TUBE SUB–ASSY
Torque: 8.0 N·m (82 kgf·cm, 71 in.·lbf)
160. INSTALL RADIATOR RESERVE TANK SUB–ASSY
Torque: 5.0 N·m (51 kgf·cm, 44 in.·lbf)
161. INSTALL BATTERY CARRIER
162. INSTALL AIR CLEANER ASSEMBLY WITH HOSE
Torque: 5.0 N·m (51 kgf·cm, 44 in.·lbf)
163. INSTALL COMPRESSOR AND MAGNETIC CLUTCH
Torque: 25 N·m (255 kgf·cm, 18 in.·lbf)
164. INSTALL GENERATOR ASSY (See page 19–20)
165. INSTALL FAN AND GENERATOR V BELT (See page 14–185)
166. INSTALL RADIATOR ASSY (See page 16–36)
167. INSTALL RADIATOR RELAY BLOCK
Torque: 5.0 N·m (51 kgf·cm, 44 in.·lbf)
168. INSTALL ENGINE COVER SUB–ASSY NO.1
Torque: 7.0 N·m (71 kgf·cm, 62 in.·lbf)
169. ADD MANUAL TRANSAXLE OIL (M/T TRANSAXLE)
170. ADD AUTOMATIC TRANSAXLE FLUID (A/T TRANSAXLE)
171. ADD ENGINE OIL
172. ADD COOLANT (See page 16–31)
173. ADD POWER STEERING FLUID (See page 51–4)
174. BLEED POWER STEERING FLUID
175. CHECK FOR ENGINE OIL LEAKS
176. CHECK FOR ENGINE COOLANT LEAKS (See page 16–25)
177. CHECK FOR FUEL LEAKS (See page 11–30)
178. INSTALL FRONT WHEELS
Torque: 103 N·m (1,050 kgf·cm, 76 ft·lbf)
179. ADJUST FRONT WHEEL ALIGNMENT (See page 26–6)
180. INSPECT CHECK IDLE SPEED AND IGNITION TIMING (See page 14–204)
181. INSPECT CO/HC
182. CHECK ABS SPEED SENSOR SIGNAL

CHAIN SUB–ASSY (1AZ–FSE)

141BC–01

COMPONENTS

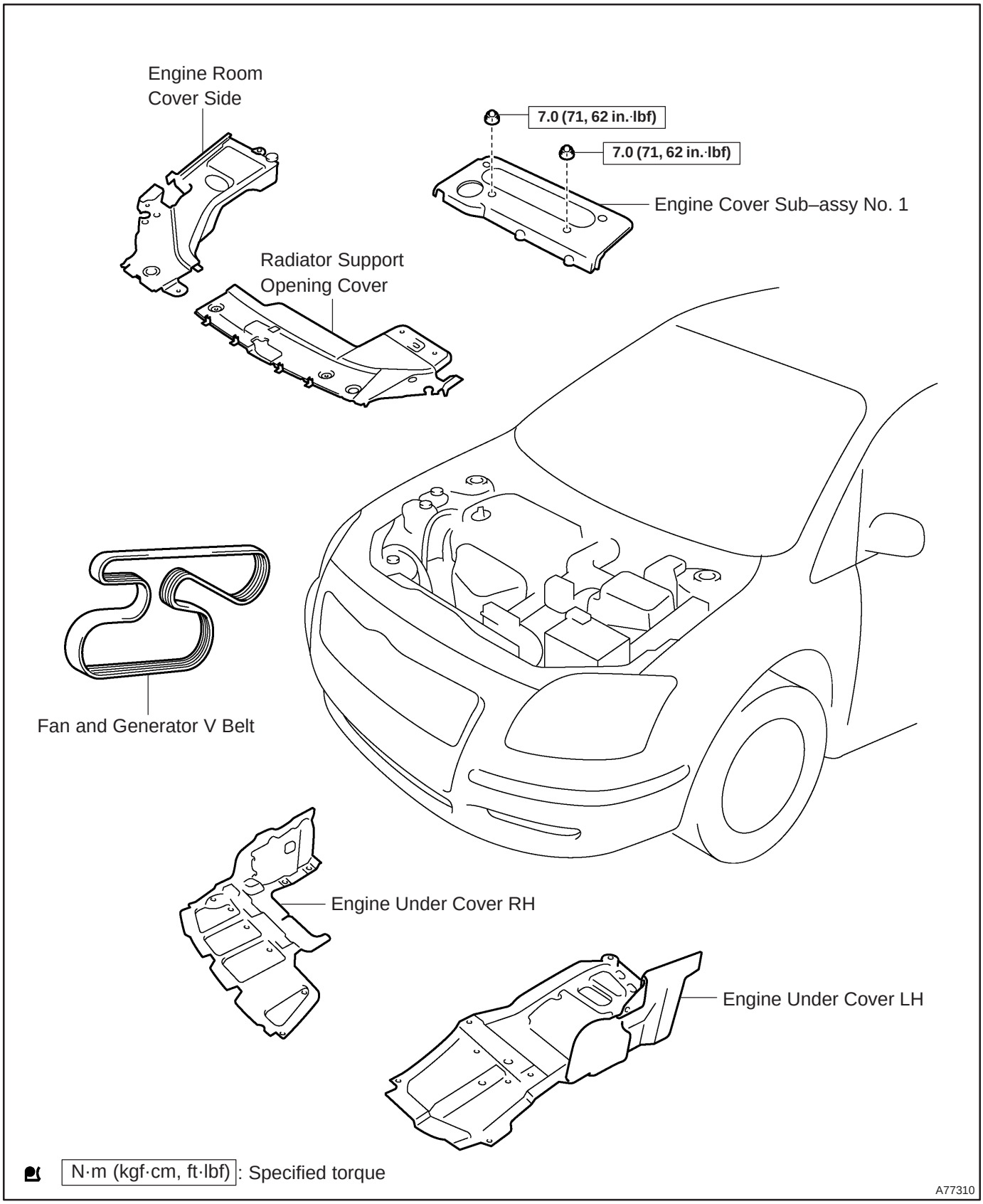

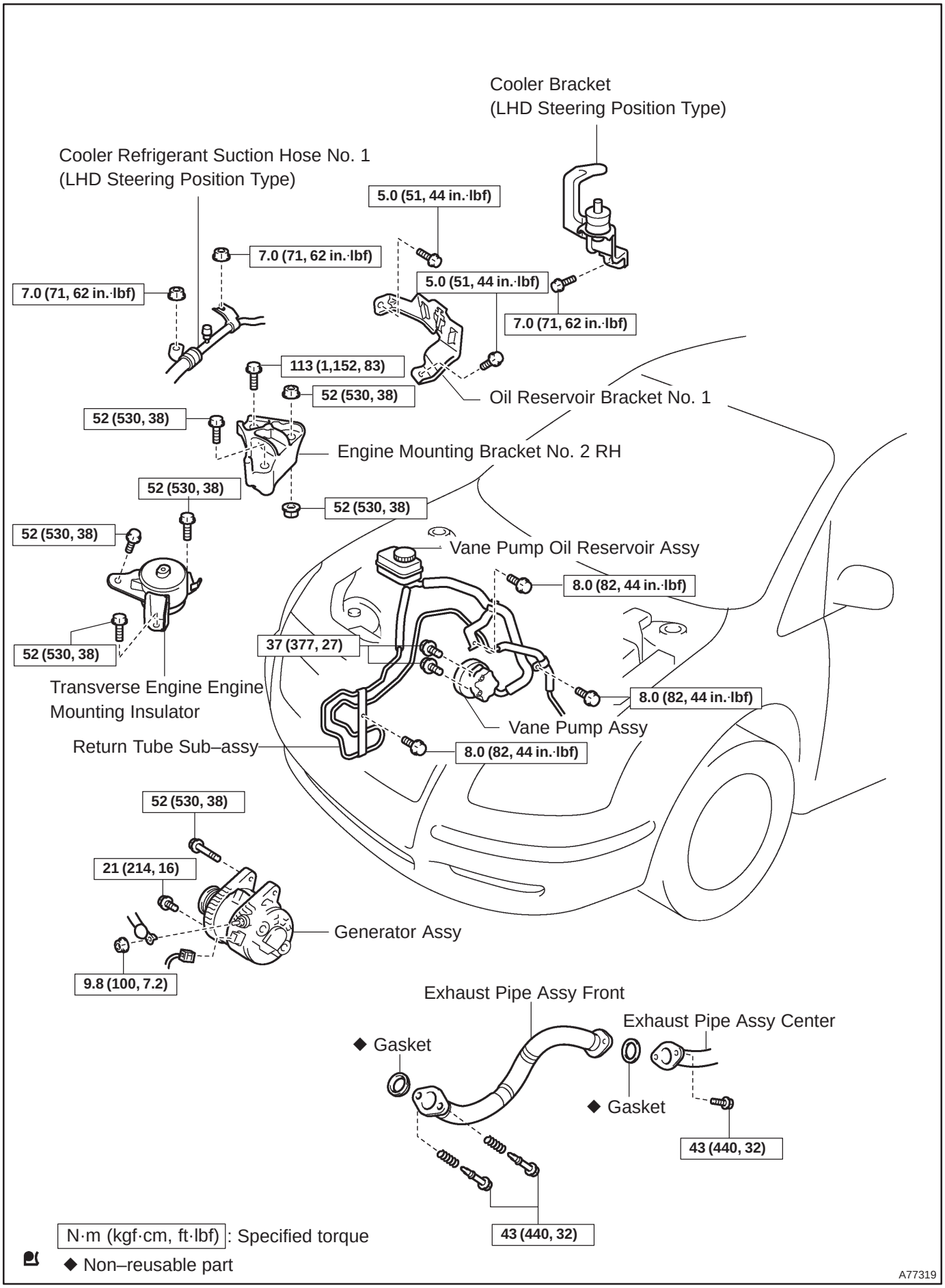
Cooler Bracket
(LHD Steering Position Type)
Cooler Refrigerant Suction Hose No. 1
(LHD Steering Position Type)
5.0 (51, 44 in.·lbf)
7.0 (71, 62 in.·lbf)
7.0 (71, 62 in.·lbf)
5.0 (51, 44 in.·lbf)
7.0 (71, 62 in.·lbf)
113 (1,152, 83)
52 (530, 38)
Oil Reservoir Bracket No. 1
52 (530, 38)
Engine Mounting Bracket No. 2 RH
52 (530, 38)
52 (530, 38)
52 (530, 38)
Vane Pump Oil Reservoir Assy
8.0 (82, 44 in.·lbf)
37 (377, 27)
52 (530, 38)
Transverse Engine Engine
Mounting Insulator
8.0 (82, 44 in.·lbf)
Vane Pump Assy
Return Tube Sub–assy
8.0 (82, 44 in.·lbf)
52 (530, 38)
21 (214, 16)
Generator Assy
9.8 (100, 7.2)
Exhaust Pipe Assy Front
Exhaust Pipe Assy Center
◆ Gasket
◆ Gasket
43 (440, 32)
43 (440, 32)
N·m (kgf·cm, ft·lbf): Specified torque
◆ Non–reusable part
A77319

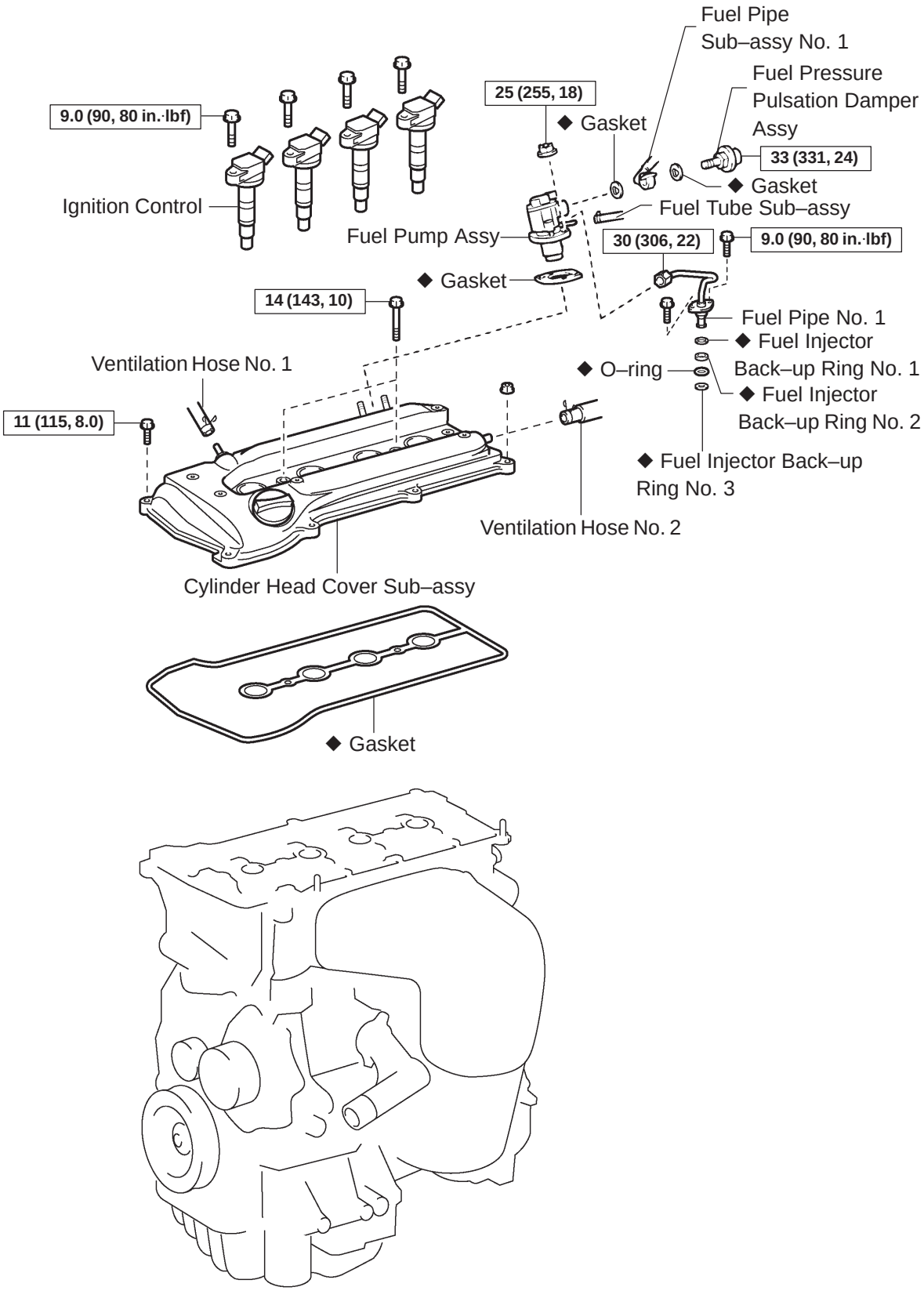

N·m (kgf·cm, ft·lbf): Specified torque

◆ Non–reusable part

A77374

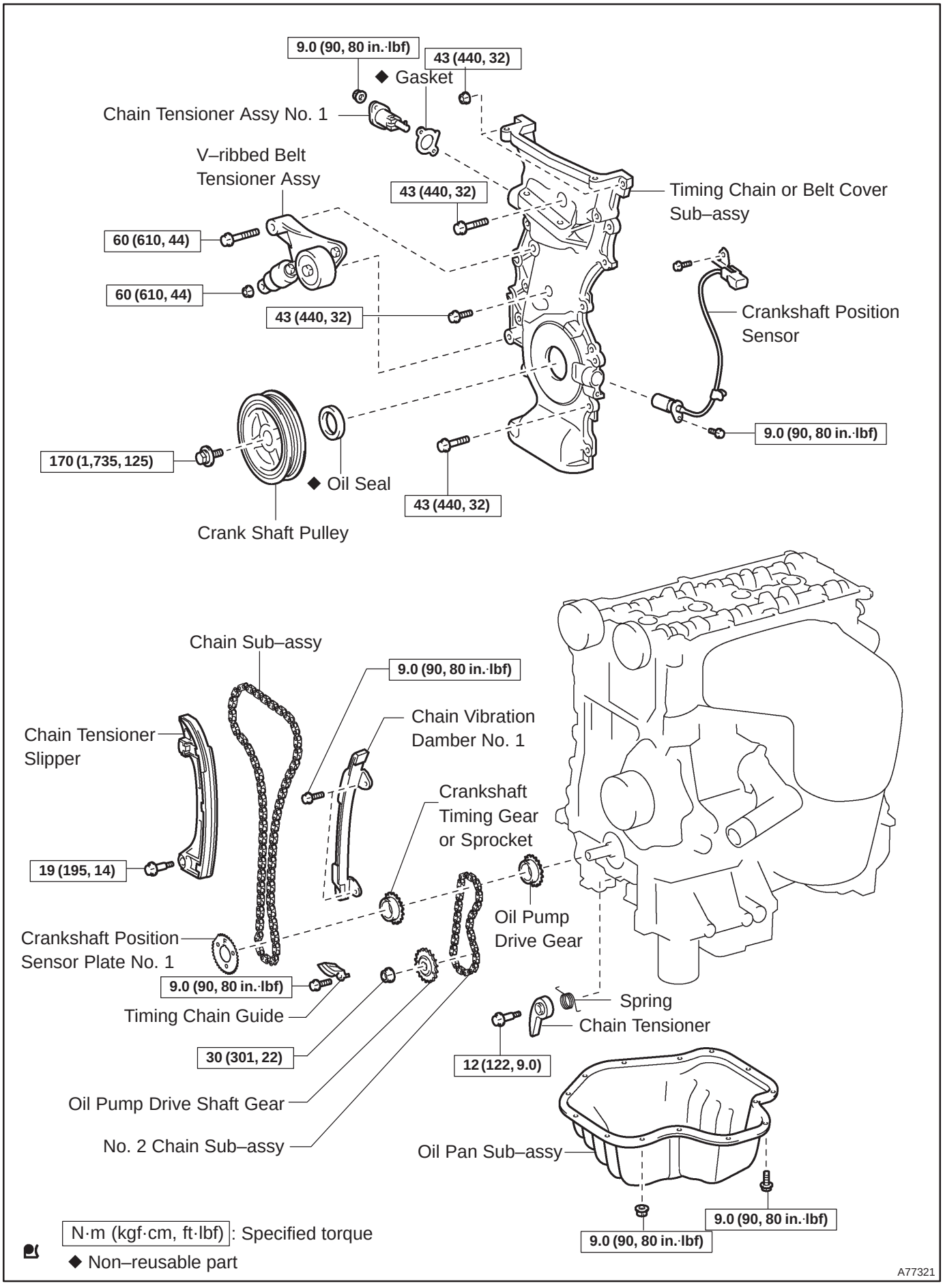
9.0 (90, 80 in.·lbf)
43 (440, 32)
◆ Gasket
Chain Tensioner Assy No. 1
V–ribbed Belt Tensioner Assy
43 (440, 32)
Timing Chain or Belt Cover Sub–assy
60 (610, 44)
60 (610, 44)
43 (440, 32)
Crankshaft Position Sensor
9.0 (90, 80 in.·lbf)
170 (1,735, 125)
◆ Oil Seal
43 (440, 32)
Crank Shaft Pulley
Chain Sub–assy
9.0 (90, 80 in.·lbf)
Chain Vibration Damber No. 1
Chain Tensioner Slipper
Crankshaft Timing Gear or Sprocket
19 (195, 14)
Oil Pump Drive Gear
Crankshaft Position Sensor Plate No. 1
9.0 (90, 80 in.·lbf)
Spring
Timing Chain Guide
Chain Tensioner
30 (301, 22)
12 (122, 9.0)
Oil Pump Drive Shaft Gear
No. 2 Chain Sub–assy
Oil Pan Sub–assy
9.0 (90, 80 in.·lbf)
9.0 (90, 80 in.·lbf)
N·m (kgf·cm, ft·lbf): Specified torque
◆ Non–reusable part
A77321

141BD–01

REPLACEMENT

1. **DISCHARGE FUEL SYSTEM PRESSURE (See page 11–30)**
2. **REMOVE FRONT WHEEL RH**
3. **REMOVE RADIATOR SUPPORT OPENING COVER**
4. **REMOVE ENGINE ROOM COVER SIDE**
5. **REMOVE ENGINE UNDER COVER RH**
6. **REMOVE ENGINE UNDER COVER LH**
7. **DRAIN ENGINE OIL**

(a) Install a new gasket and the drain plug after draining engine oil.
Torque: 25 N·m (255 kgf·cm, 18 ft·lbf)

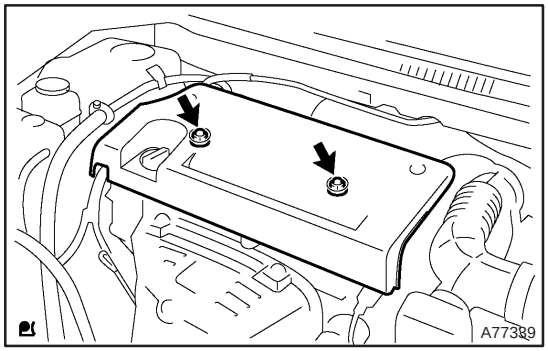

8. **REMOVE ENGINE COVER SUB–ASSY NO.1**

(a) Remove the 2 nuts and the engine cover No. 1.

9. **REMOVE FUEL PRESSURE PULSATION DAMPER ASSY**
10. **DISCONNECT FUEL TUBE SUB–ASSY (See page 11–33)**
11. **SEPARATE FUEL PIPE SUB–ASSY NO.1 (See page 11–52)**
    SST 09023–12900
12. **REMOVE FUEL PUMP ASSY (See page 11–52)**
13. **REMOVE FAN AND GENERATOR V BELT (See page 14–185)**
    SST 09249–63010
14. **REMOVE GENERATOR ASSY (See page 19–20)**
15. **REMOVE EXHAUST PIPE ASSY FRONT (See page 15–7)**

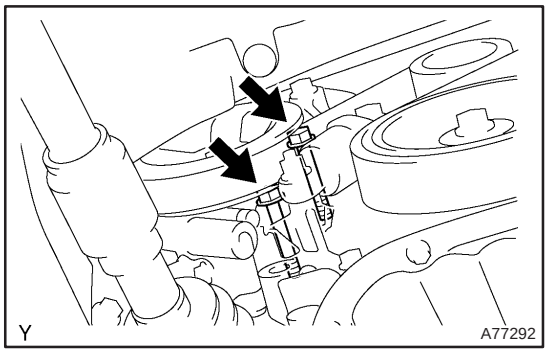

16. **SEPARATE VANE PUMP ASSY**

(a) Remove the 2 through bolts and separate the vane pump.

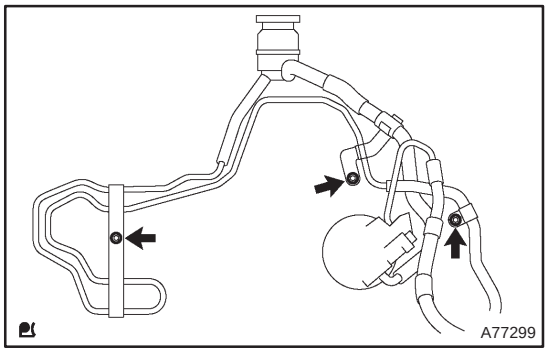

17. SEPARATE RETURN TUBE SUB–ASSY

(a) Remove the 3 bolts and separate the return tube as shown in the illustration.

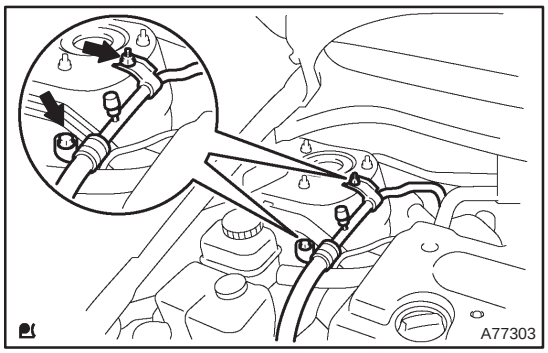

18. SEPARATE COOLER REFRIGERANT SUCTION HOSE NO.1 (LHD STEERING POSITION TYPE)

(a) Remove the 2 nuts and separate the Cooler refrigerant Suction hose No. 1.

19. SEPARATE VANE PUMP OIL RESERVOIR ASSY

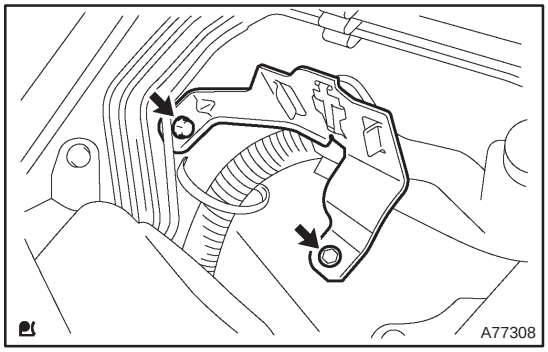

20. REMOVE OIL RESERVOIR BRACKET NO.1

(a) Remove the 2 bolts and the oil pump reservoir bracket No. 1.

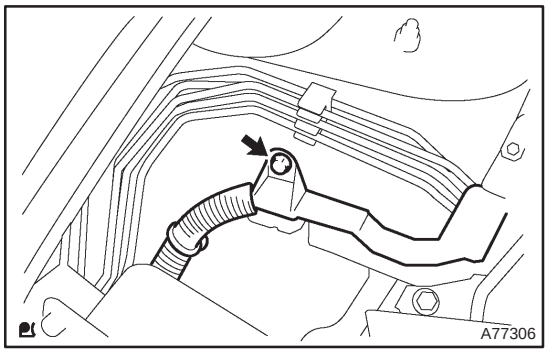

21. SEPARATE ENGINE WIRE

(a) Remove the bolt and separate the clamp and engine wire.

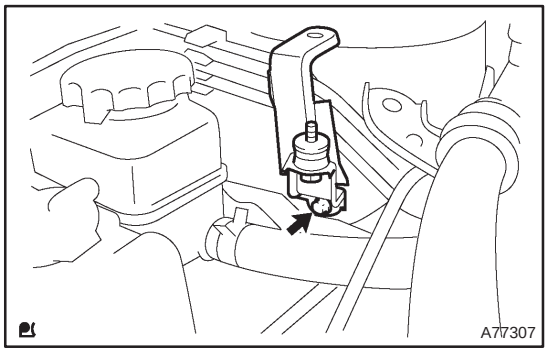

22. REMOVE COOLER BRACKET (LHD STEERING POSITION TYPE)

(a) Remove the bolt and cooler bracket.

23. REMOVE ENGINE SERVICE COVER BRACKET RH (RHD STEERING POSITION TYPE)

(a) Remove the bolt and the engine service cover bracket RH.

24. REMOVE IGNITION COIL ASSY

(a) Remove the 4 bolts and 4 ignition coils.

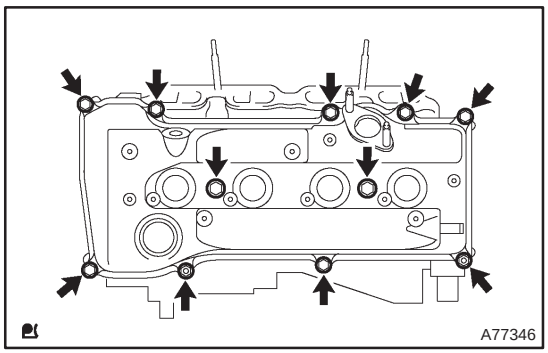

25. REMOVE CYLINDER HEAD COVER SUB–ASSY

(a) Disconnect the 2 PCV hoses from the cylinder head cover.

(b) Remove the 9 bolts and 2 nuts, then remove the cylinder head cover and gasket.

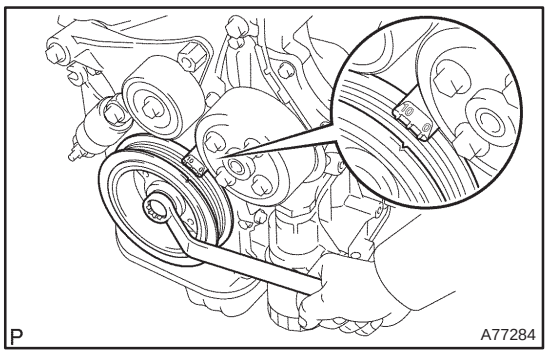

26. SET NO. 1 CYLINDER TO TDC/COMPRESSION

(a) Turn the crankshaft pulley, and align its groove with timing mark 0 of the timing chain cover.

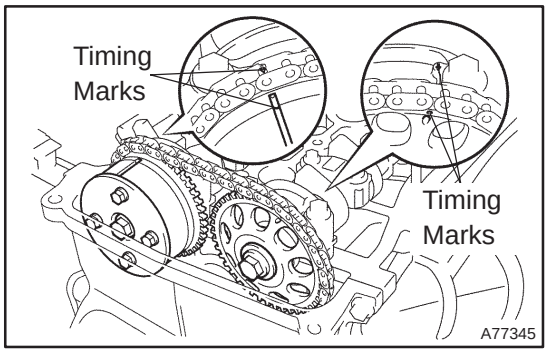

(b) Check that each timing mark of the camshaft timing gears is aligned with the timing marks of the No. 1 and No. 2 bearing caps as shown in the illustration.

If not, turn the crankshaft 1 revolution (360°) and align the marks as above.

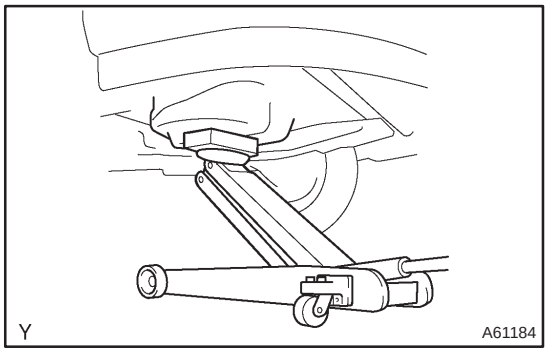

27. REMOVE ENGINE MOUNTING BRACKET NO.2 RH

(a) Set the jack underneath the engine, and place a wooden block on the jack.

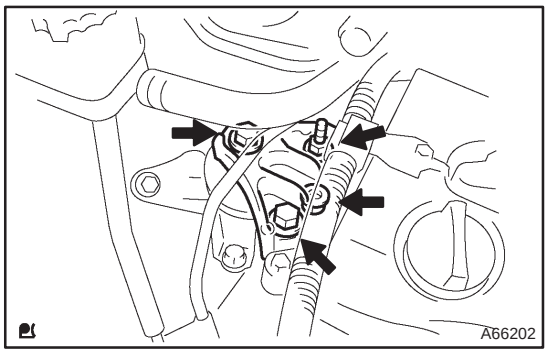

(b) Remove the 2 bolts and 2 nuts, and then detach the mounting bracket No. 2 RH.

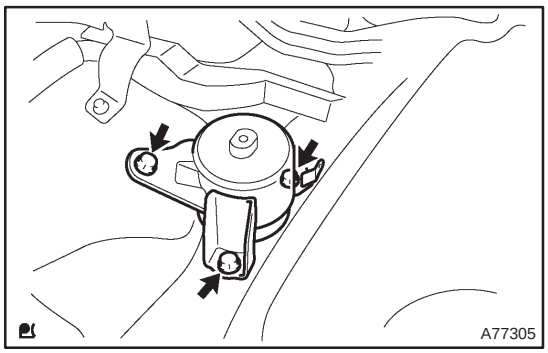

28. REMOVE TRANSVERSE ENGINE ENGINE MOUNTING INSULATOR

(a) Remove the 3 bolts and the engine mounting insulator.

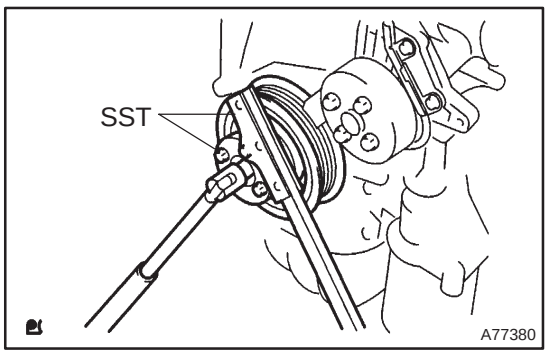

29. REMOVE CRANKSHAFT PULLEY

(a) Using SST, fix the crankshaft pulley and loosen a crankshaft pulley bolt.

SST 09213–54015 (91651–60855), 09330–00021

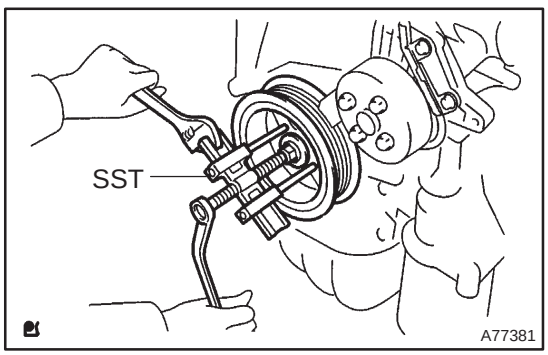

(b) Using a crankshaft pulley bolt and SST, remove the crankshaft pulley.

SST 09950–50013 (09951–05010, 09952–05010, 09953–05020, 09954–05021)

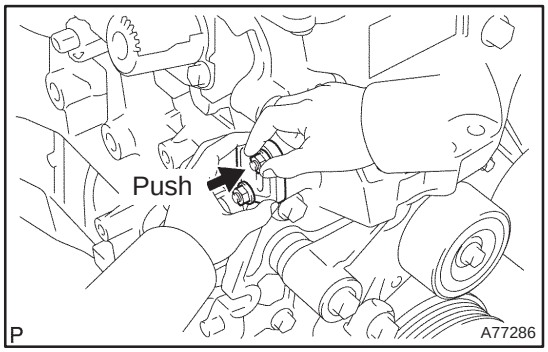

30. REMOVE CHAIN TENSIONER ASSY NO.1

(a) Remove the 2 nuts, the chain tensioner No. 1 and gasket.

NOTICE:

Do not turn the crankshaft.

31. REMOVE CRANKSHAFT POSITION SENSOR (See page 18–17)

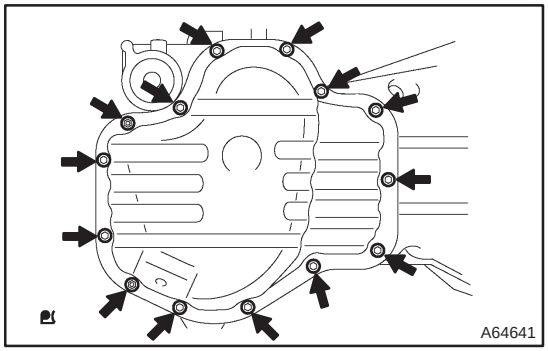

32. REMOVE OIL PAN SUB–ASSY

(a) Remove the 12 bolts and 2 nuts.

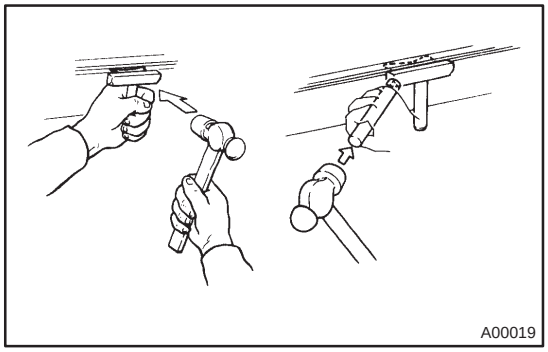

(b) Insert the blade of SST between the crank case, timing chain cover and oil pan, cut off applied sealer and remove the oil pan.

SST 09032–00100

NOTICE:

Be careful not to damage the contact surface of the timing chain cover, crank case and oil pan.

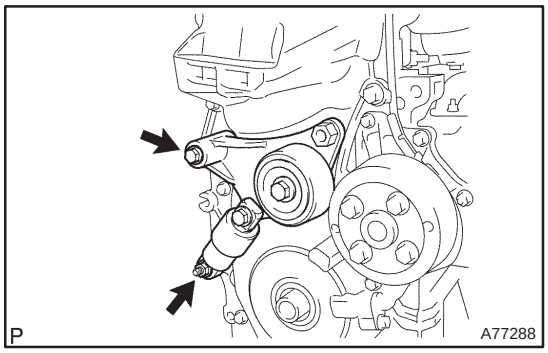

33. REMOVE V–RIBBED BELT TENSIONER ASSY

(a) Remove the bolt and nut, and then remove the V–ribbed belt tensioner.

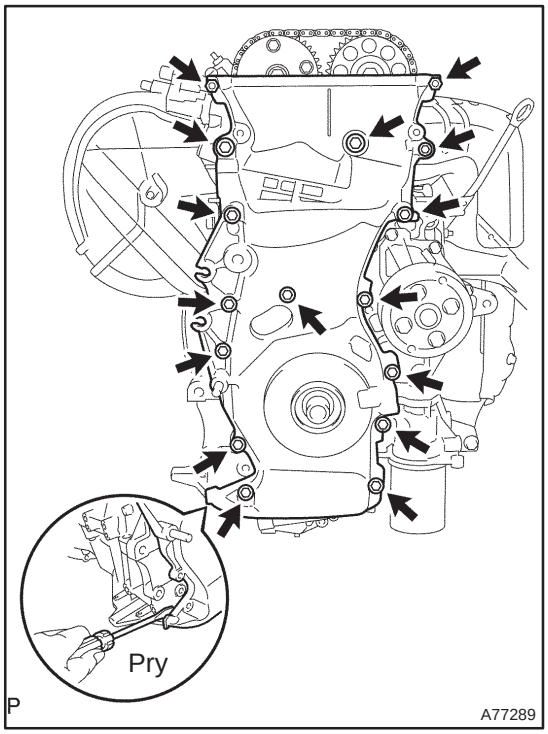

34. REMOVE TIMING CHAIN OR BELT COVER SUB–ASSY

(a) Remove the 14 bolts and 2 nuts.

(b) Using a screwdriver, pry between the timing chain cover and cylinder head or cylinder block.

(c) Remove the timing chain cover.

NOTICE:

Be careful not to damage the contact surface of the timing chain cover, cylinder head and cylinder block.

35. REMOVE CRANKSHAFT POSITION SENSOR PLATE NO.1

36. REMOVE CHAIN TENSIONER SLIPPER

(a) Remove the 2 bolts and the chain tensioner slipper.

37. REMOVE CHAIN VIBRATION DAMPER NO.1

(a) Remove the bolt and the chain vibration damper No. 1

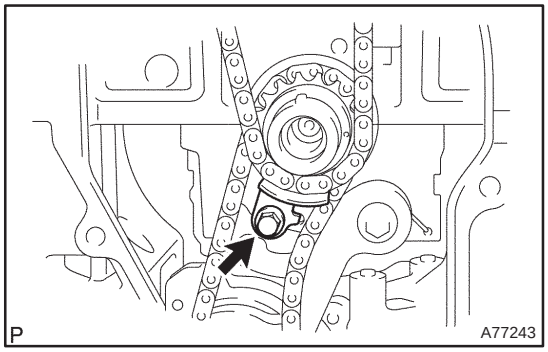

38. REMOVE TIMING CHAIN GUIDE

(a) Remove the bolt and the timing chain guide.

39. REMOVE CHAIN SUB–ASSY

40. REMOVE CRANKSHAFT TIMING GEAR OR SPROCKET

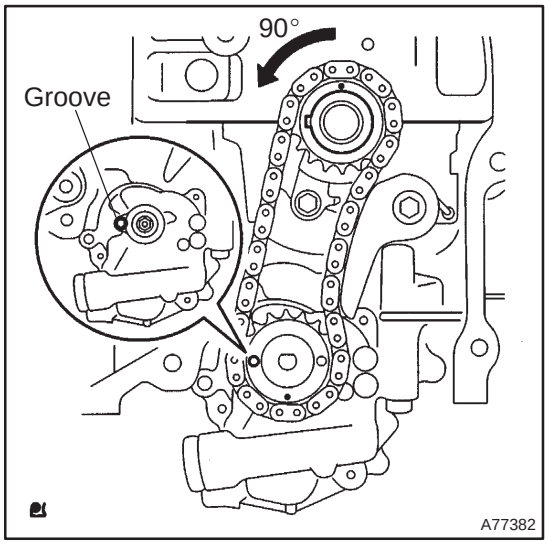

41. REMOVE NO.2 CHAIN SUB–ASSY

(a) Turn the crankshaft counterclockwise 90°, and align an adjusting hole of the oil pump drive shaft gear with the groove of the oil pump.

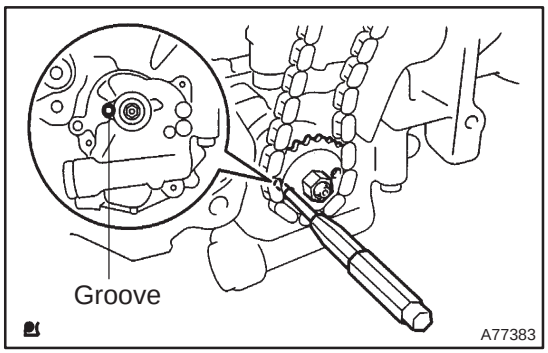

(b) Put a 4 mm diameter bar in the adjusting hole of the oil pump drive shaft gear to lock in position, and remove the nut.

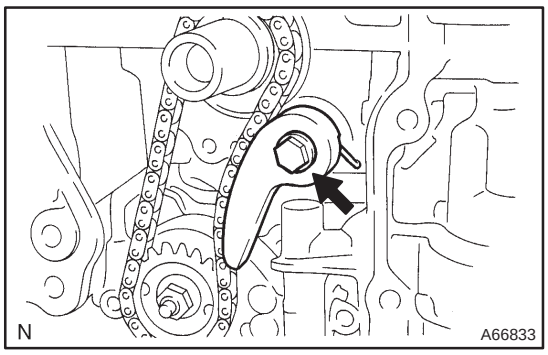

(c) Remove the bolt, and then remove the chain tensioner and spring.

(d) Remove the oil pump drive shaft gear and chain No. 2.

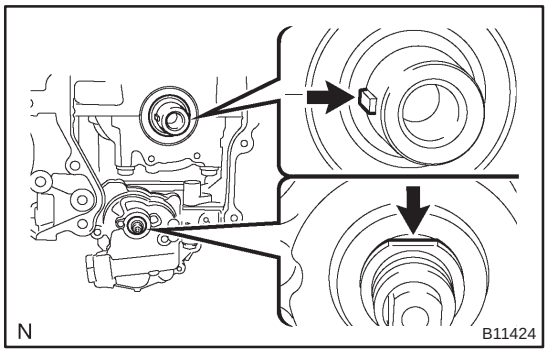

42. INSTALL NO.2 CHAIN SUB–ASSY

(a) Set the crankshaft key to the left side position.

(b) Position the flat portion of the drive shaft upward.

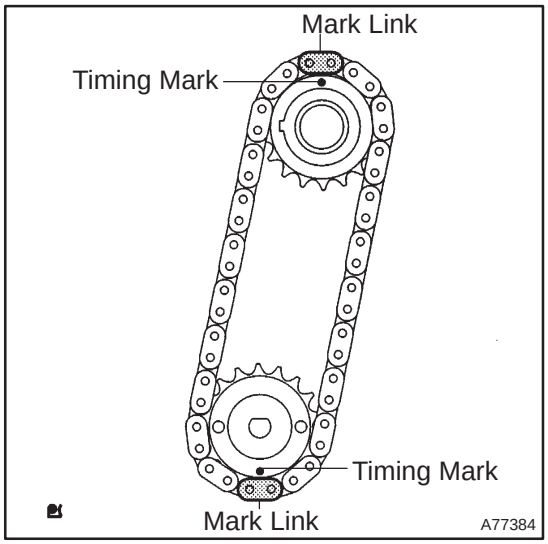

(c) Align the mark links (yellow colored links) with the timing marks of each gear as shown in the illustration.

(d) Install the gears to the crankshaft and oil pump shaft with the chain wrapped.

(e) Temporarily tighten the oil pump drive shaft gear with the nut.

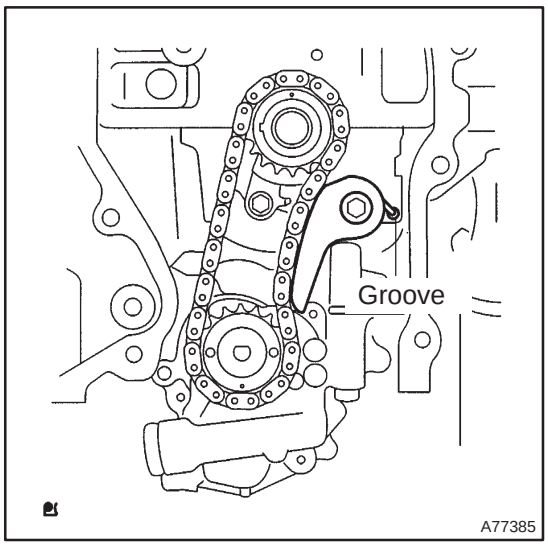

(f) Insert the damper spring into the adjusting hole, and install the chain tensioner plate by the bolt.
Torque: 12 N·m (122 kgf·cm, 9.0 ft·lbf)

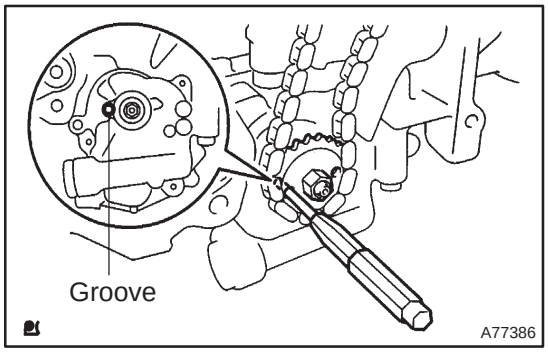

(g) Align an adjusting hole of the sprocket with the groove of the oil pump.

(h) Insert a 4 mm diameter bar into the adjusting hole of the sprocket to lock in position, and tighten the nut.
Torque: 30 N·m (301 kgf·cm, 22 ft·lbf)

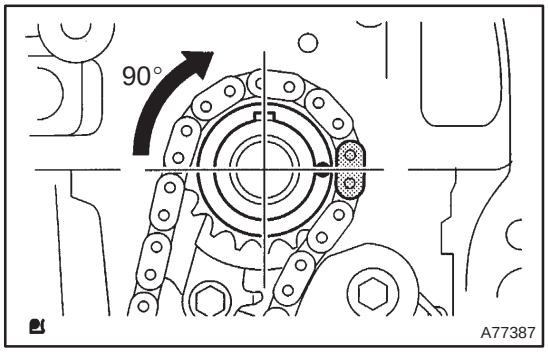

(i) Rotate the crankshaft clockwise 90°, and position the crankshaft key upward.

43. INSTALL CRANKSHAFT TIMING GEAR OR SPROCKET

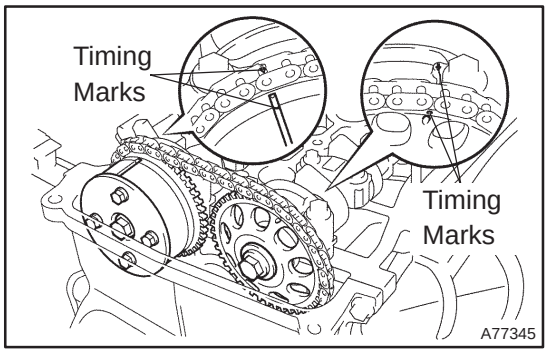

44. SET NO. 1 CYLINDER TO TDC/COMPRESSION

(a) Turn the camshafts with a wrench on the hexagonal lobe, and align the timing marks of the camshaft timing gear with each timing mark located on the No. 1 and No. 2 bearing caps as shown in the illustration.

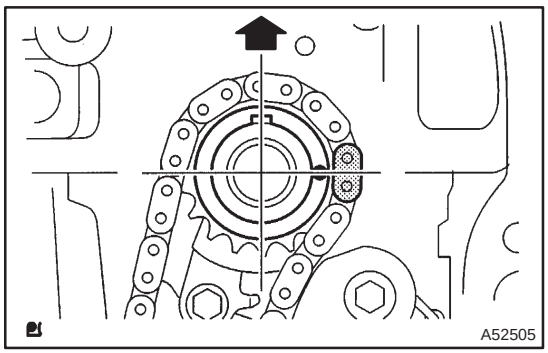

(b) Using the crankshaft pulley bolt, turn the crankshaft and position the key on the crankshaft upward.

45. INSTALL CHAIN VIBRATION DAMPER NO.1
Torque: 9.0 N·m (92 kgf·cm, 80 in.·lbf)

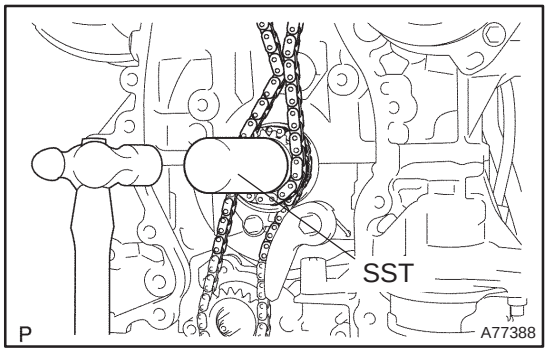

46. INSTALL CHAIN SUB–ASSY

(a) Using SST, install the sprocket.

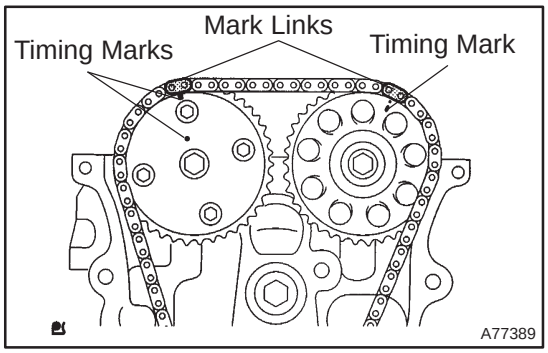

(b) Align the mark links (gold or yellow colored links) with each timing mark located on the camshaft timing gears, and install the chain.

47. INSTALL TIMING CHAIN GUIDE
Torque: 9.0 N·m (92 kgf·cm, 80 in.·lbf)

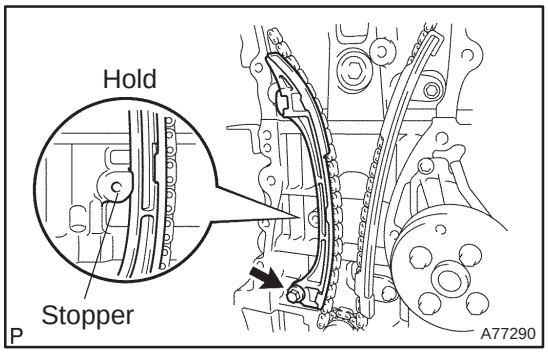

48. INSTALL CHAIN TENSIONER SLIPPER
(a) Install the chain tensioner slipper with bolt.
Torque: 19 N·m (195 kgf·cm, 14 ft·lbf)
(b) Check that the chain tensioner slipper is held on the cylinder block stopper.

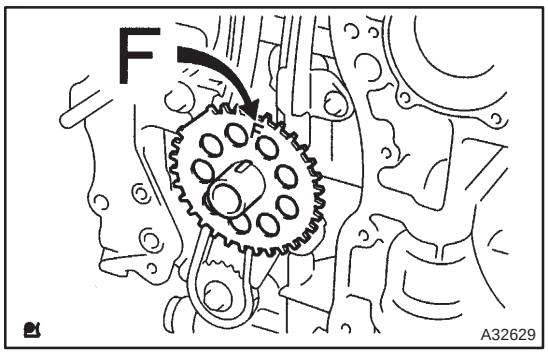

49. INSTALL CRANKSHAFT POSITION SENSOR PLATE NO.1
(a) Install the plate with the ”F” mark facing forward.

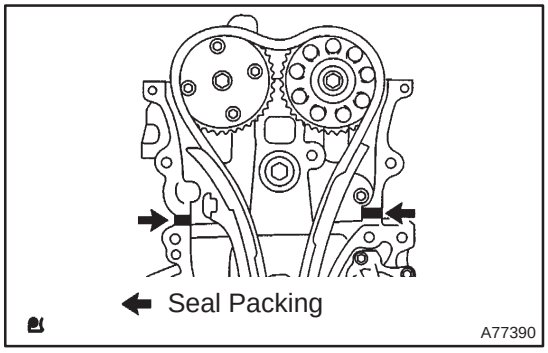

50. INSTALL TIMING CHAIN OR BELT COVER SUB–ASSY
NOTICE:
- **Remove any oil from the contact surface.**
- **Install the chain cover within 3 minutes after applying seal packing.**
- **Do not start the engine within 2 hours after installing.**

(a) Remove any old packing (FIPG) material and be careful not to drop any oil on the contact surfaces of the timing chain cover.
(b) Apply a continuous bead (Diameter 2 mm (0.09 in.)) of seal packing as shown in the illustration.
Seal packing: Part No. 08826 – 00080 or equivalent.

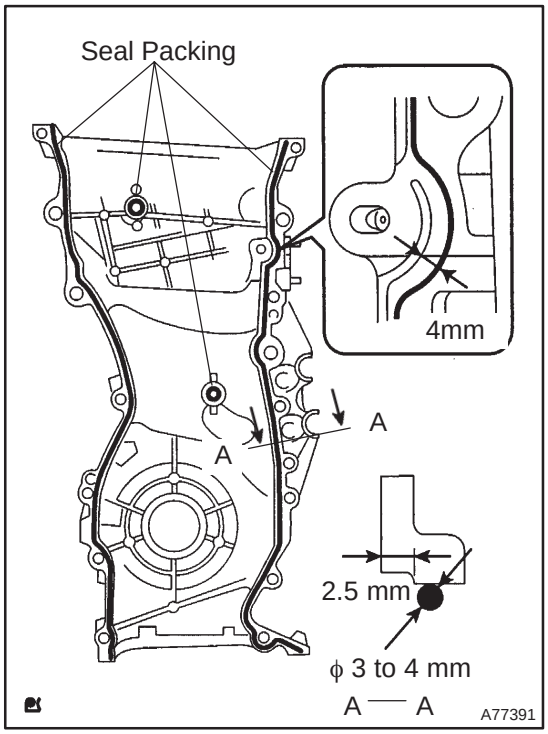

(c) Apply a continuous bead (Diameter 3 to 4 mm (0.118 to 0.157 in.)) of seal packing as shown in the illustration.
Seal packing: Part No. 08826 – 00080 or equivalent

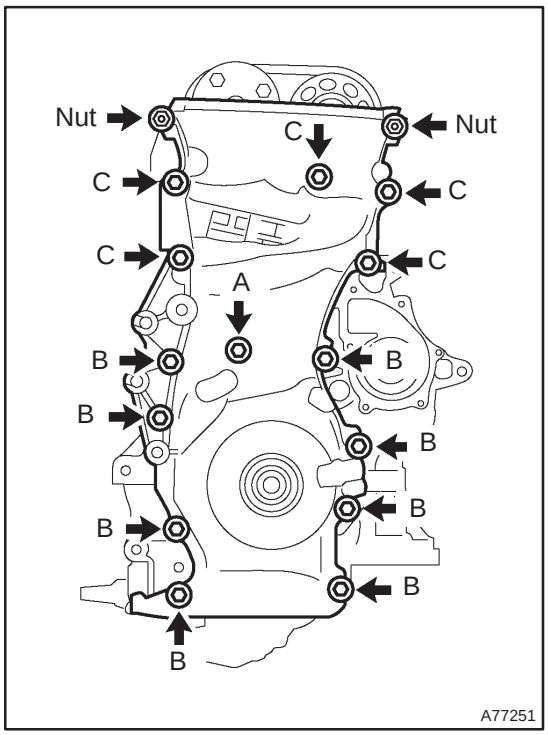

(d) Install the timing chain cover with the 14 bolts and 2 nuts.
Torque:
Bolt A 9.0 N·m (92 kgf·cm, 80 in.·lbf)
Bolt B 21 N·m (214 kgf·cm, 15 ft·lbf)
Bolt C 43 N·m (438 kgf·cm, 32 ft·lbf)
Nut 9.0 N·m (92 kgf·cm, 80 in.·lbf)

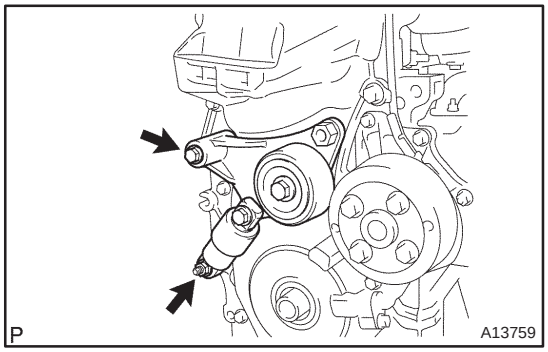

51. INSTALL V–RIBBED BELT TENSIONER ASSY

(a) Install the V–ribbed belt tensioner with the bolt and nut.
Torque: 60 N·m (610 kgf·cm, 44 ft·lbf)

NOTICE:

As the drive tensioner should be fastened together with the timing chain cover, so be sure install it within 15 minutes after the timing chain cover is installed.

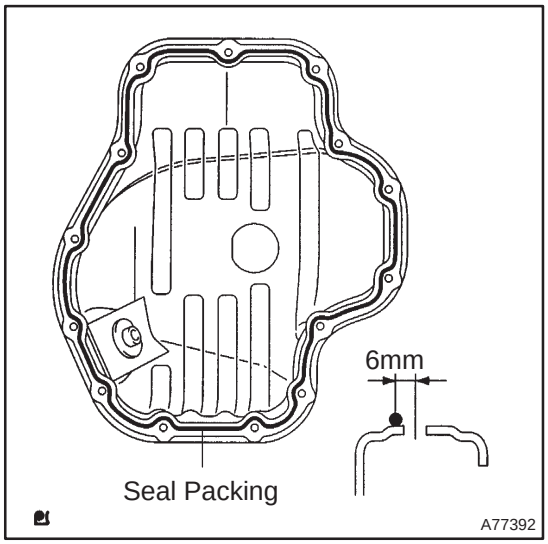

52. INSTALL OIL PAN SUB–ASSY

NOTICE:

- **Remove any oil from the contact surface.**
- **Install the oil pan within 3 minutes after applying seal packing.**
- **Do not start the engine within 2 hours after installing.**

(a) Remove any old packing (FIPG) material and be careful not to drop any oil on the contact surface of the cylinder block and oil pan.

(b) Apply a continuous bead (Diameter 3 mm to 4 mm (0.157 in.)) of seal packing as shown in the illustration, and install the oil pan.

Seal packing: part No. 08826 – 00080 or equivalent

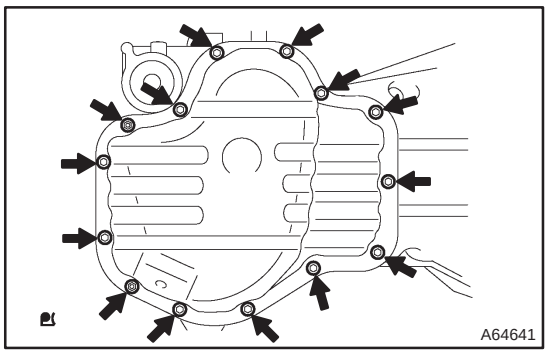

(c) Install the oil pan with the 12 bolts and 2 nuts.

Torque: 9.0 N·m (92 kgf·cm, 80 in.·lbf)

53. INSTALL CRANKSHAFT POSITION SENSOR (See page 18–17)

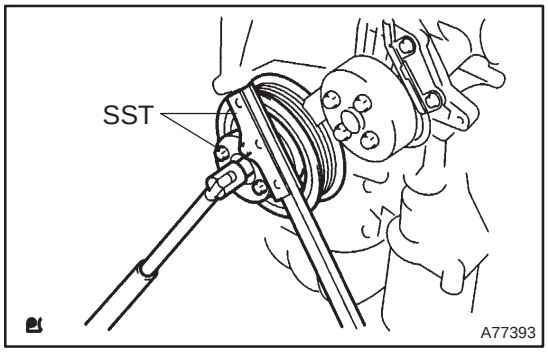

54. INSTALL CRANKSHAFT PULLEY

(a) Using SST, tighten the set bolt.

SST 09213–54015 (91651–60855), 09330–00021

Torque: 170 N·m (1,733 kgf·cm, 125 ft·lbf)

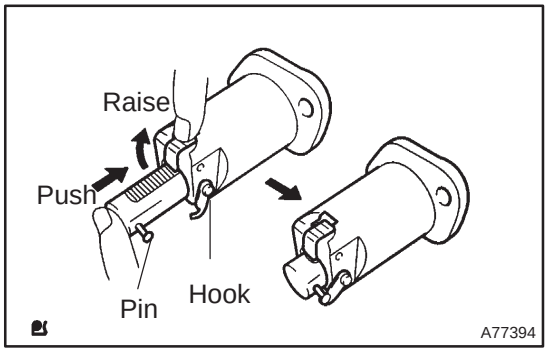

55. INSTALL CHAIN TENSIONER ASSY NO.1

(a) Release the ratchet pawl, fully push in the plunger and apply the hook to the pin so that the plunger is located in position.

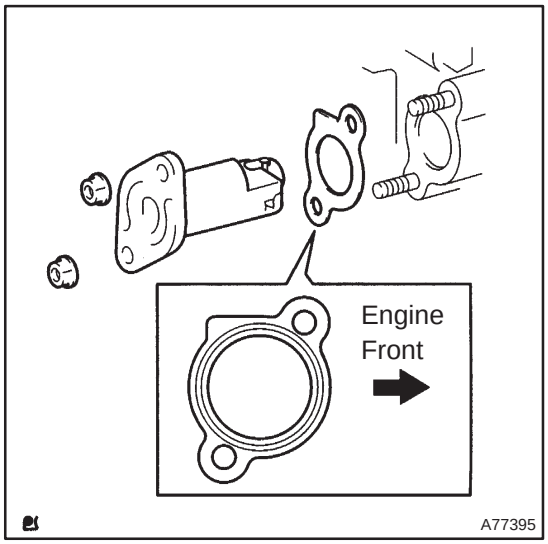

(b) Install a new gasket chain tensioner with the 2 nuts.
Torque: 9.0 N·m (92 kgf·cm, 80 in.·lbf)

NOTICE:
If the hook is released wile inserting, apply the hook again, and insert the chain tensioner.

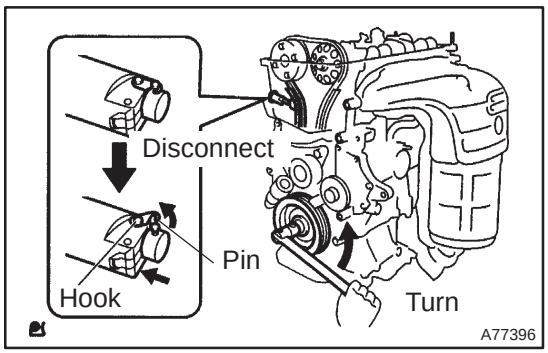

(c) Turn the crankshaft counterclockwise, and check that the hook is disengaged from the plunger knock pin.

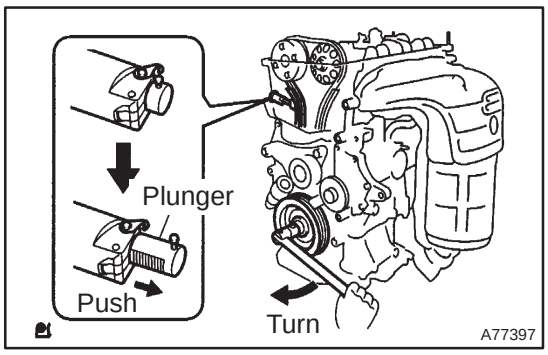

(d) Turn the crankshaft clockwise, and check that the plunger is extended.

56. INSTALL TRANSVERSE ENGINE ENGINE MOUNTING INSULATOR
Torque: 52 N·m (530 kgf·cm, 38 ft·lbf)

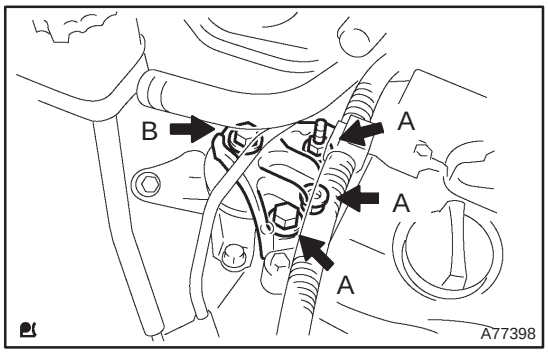

57. INSTALL ENGINE MOUNTING BRACKET NO.2 RH
Torque:
A 52 N·m (530 kgf·cm, 38 ft·lbf)
B 113 N·m (1,152 kgf·cm, 83 ft·lbf)

58. INSTALL CYLINDER HEAD COVER SUB–ASSY

(a) Remove any old seal packing (FIPG) material.

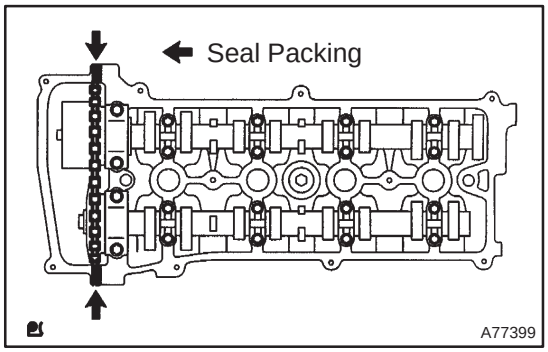

(b) Apply seal packing to the 2 locations as shown in the illustration.

Seal Packing: Part No. 08826–00080 or equivalent

NOTICE:

- **Remove any oil from the contact surface.**
- **Install the cylinder head cover within 5 minutes after applying seal packing.**
- **Do not expose the seal to engine oil 2 hours after installing.**

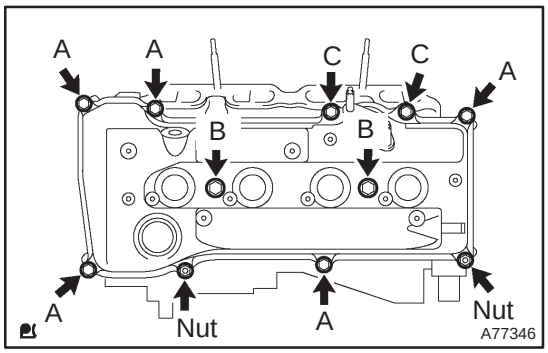

(c) install the cylinder head cover with the 9 bolts and 2 nuts.

Torque:

Nut 11 N·m (112 kgf·cm, 8 ft·lbf)
Bolt A 11 N·m (112 kgf·cm, 8 ft·lbf)
Bolt B 14 N·m (143 kgf·cm, 10 ft·lbf)
Bolt C 21 N·m (214 kgf·cm, 16 ft·lbf)

59. INSTALL COOLER BRACKET (LHD STEERING POSITION TYPE)
Torque: 9.0 N·m (92 kgf·cm, 80 in.·lbf)
60. INSTALL ENGINE SERVICE COVER BRACKET RH (RHD STEERING POSITION TYPE)
Torque: 9.0 N·m (92 kgf·cm, 80 in.·lbf)
61. INSTALL ENGINE WIRE
Torque: 7.0 N·m (71 kgf·cm, 62 in.·lbf)
62. INSTALL OIL RESERVOIR BRACKET NO.1
Torque: 8.0 N·m (82 kgf·cm, 71 in.·lbf)
63. INSTALL COOLER REFRIGERANT SUCTION HOSE NO.1 (LHD STEERING POSITION TYPE)
64. INSTALL RETURN TUBE SUB–ASSY
Torque: 8.0 N·m (82 kgf·cm, 71 in.·lbf)
65. INSTALL IGNITION COIL ASSY
Torque: 9.0 N·m (92 kgf·cm, 80 in.·lbf)
66. INSTALL VANE PUMP ASSY
Torque: 37 N·m (377 kgf·cm, 27 ft·lbf)
67. INSTALL EXHAUST PIPE ASSY FRONT (See page 15–7)
68. INSTALL GENERATOR ASSY (See page 19–20)
69. INSTALL FAN AND GENERATOR V BELT (See page 14–185)
SST 09249–63010
70. INSTALL FUEL PUMP ASSY (See page 11–52)
71. INSTALL FUEL PIPE SUB–ASSY NO.1 (See page 11–52)
SST 09023–12900
72. INSTALL FUEL TUBE SUB–ASSY (See page 11–30)
73. INSTALL FUEL PRESSURE PULSATION DAMPER ASSY (See page 11–52)
74. ADD ENGINE OIL
75. CHECK FOR ENGINE OIL LEAKS
76. CHECK FOR FUEL LEAKS

77. INSTALL ENGINE COVER SUB–ASSY NO.1
Torque: 7.0 N·m (71 kgf·cm, 62 in.·lbf)

78. INSTALL FRONT WHEEL RH
Torque: 103 N·m (1,050 kgf·cm, 76 ft·lbf)

CAMSHAFT (1AZ–FSE)

COMPONENTS

141BP–01

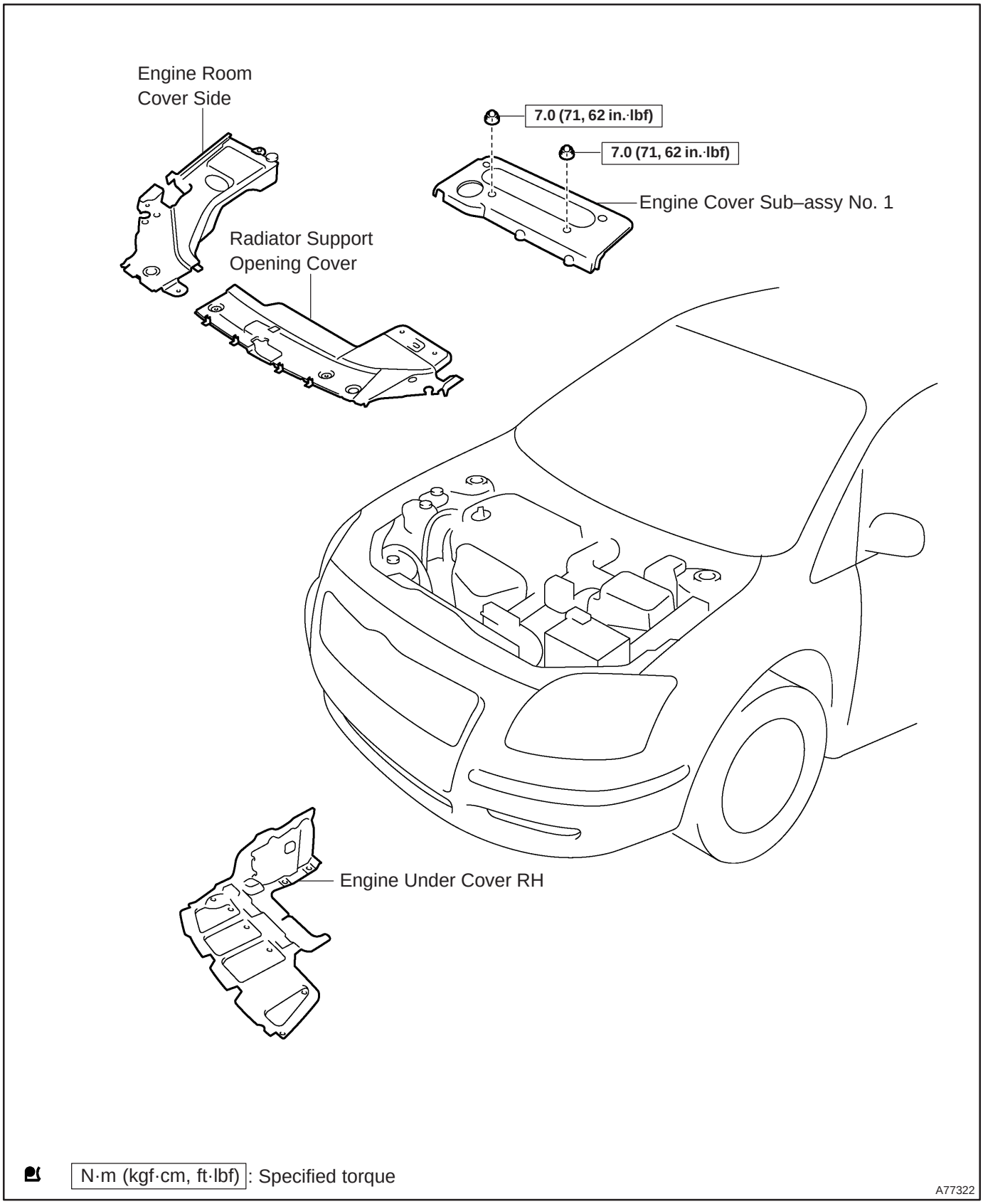

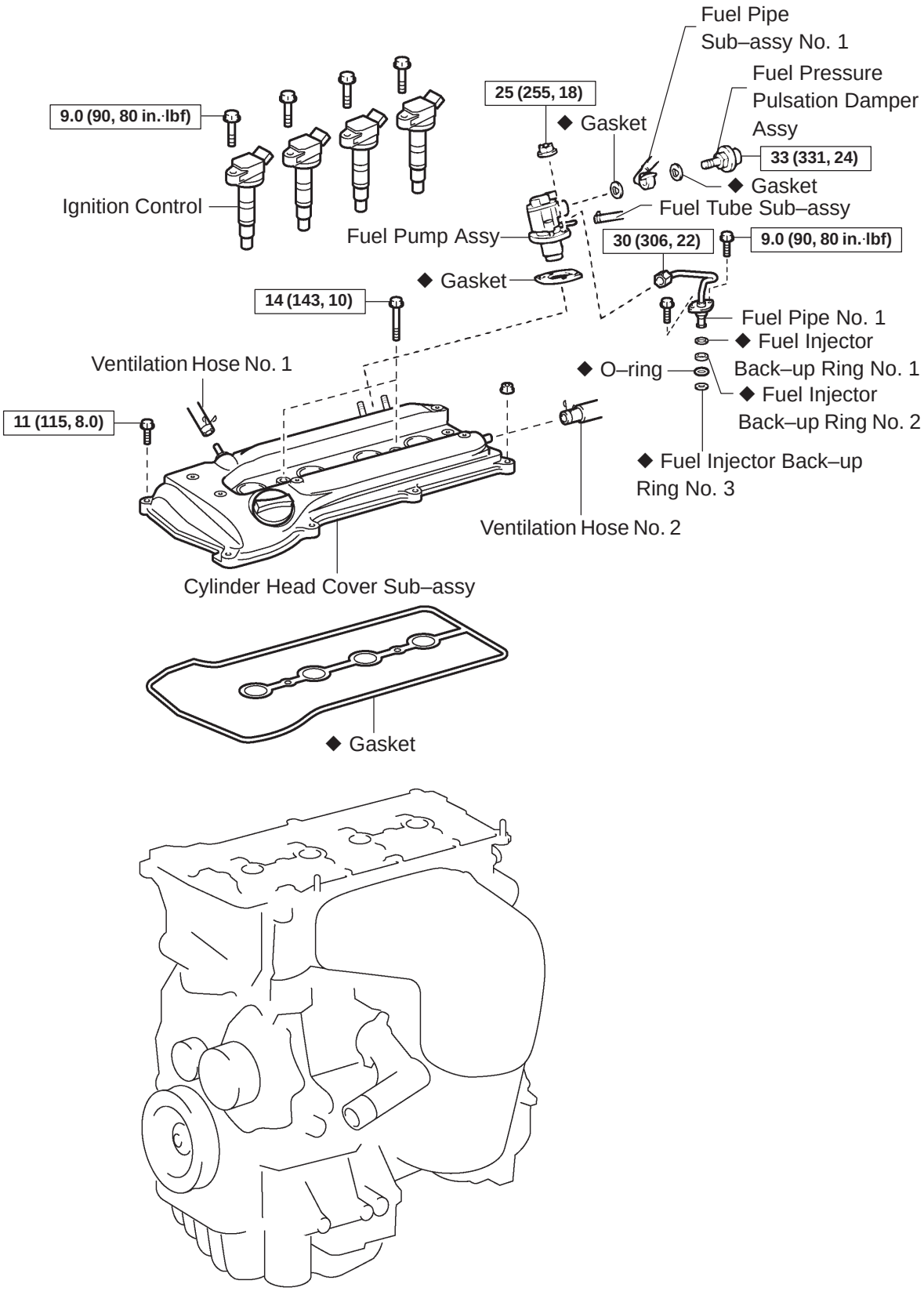

N·m (kgf·cm, ft·lbf): Specified torque

◆ Non–reusable part

A77374

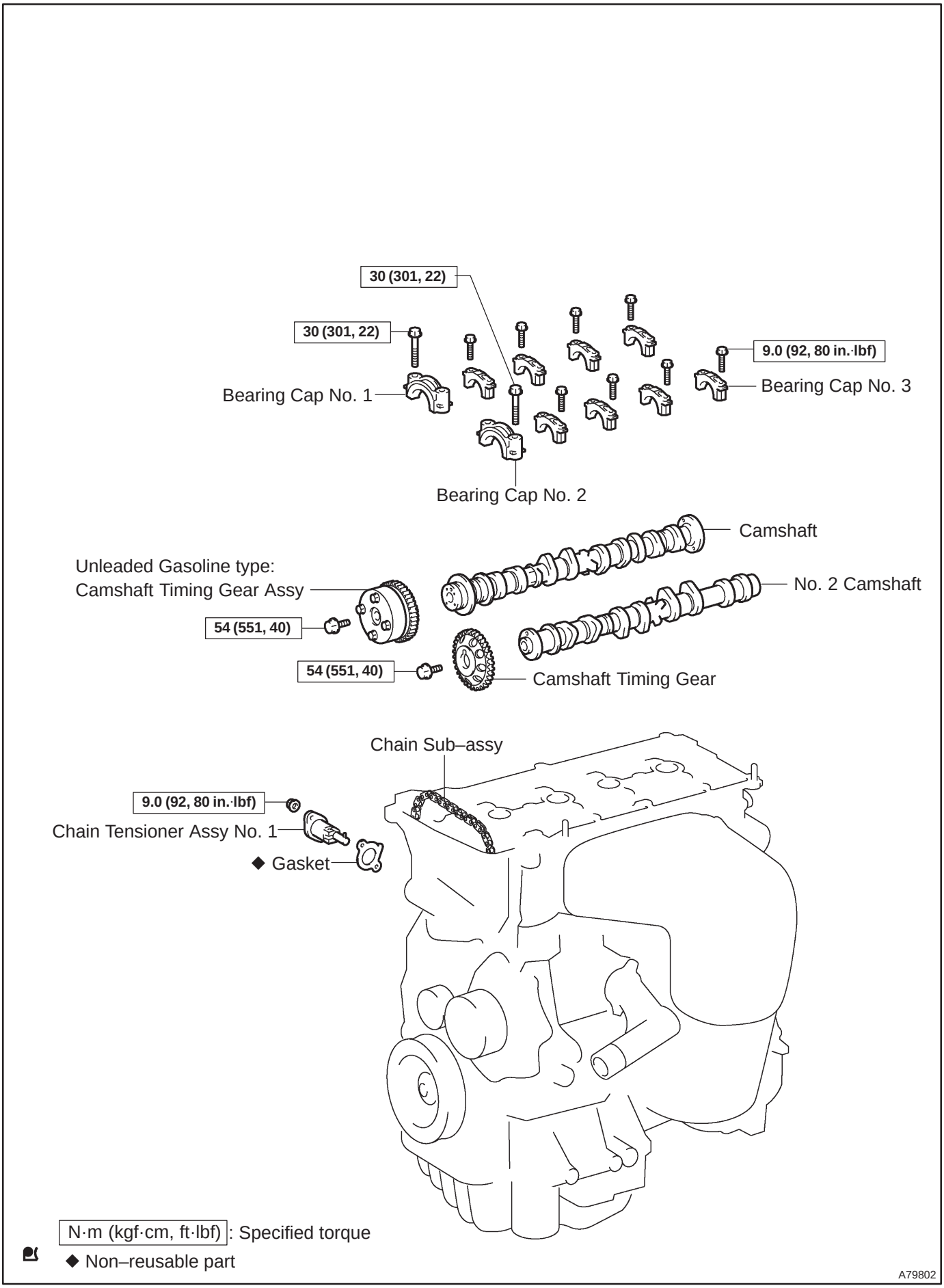
30 (301, 22)
30 (301, 22)
9.0 (92, 80 in.·lbf)
Bearing Cap No. 1
Bearing Cap No. 3
Bearing Cap No. 2
Camshaft
No. 2 Camshaft
Unleaded Gasoline type:
Camshaft Timing Gear Assy
54 (551, 40)
54 (551, 40)
Camshaft Timing Gear
Chain Sub–assy
9.0 (92, 80 in.·lbf)
Chain Tensioner Assy No. 1
◆ Gasket
N·m (kgf·cm, ft·lbf): Specified torque
◆ Non–reusable part
A79802

141BQ–01

REPLACEMENT

1. **DISCHARGE FUEL SYSTEM PRESSURE (See page 11–30)**
2. **REMOVE RADIATOR SUPPORT OPENING COVER**
3. **REMOVE ENGINE ROOM COVER SIDE**
4. **REMOVE ENGINE UNDER COVER RH**

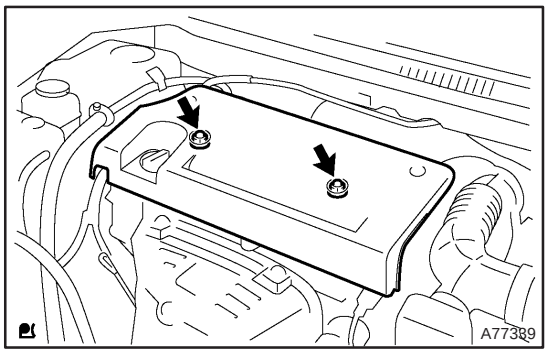

5. **REMOVE ENGINE COVER SUB–ASSY NO.1**

(a) Remove the 2 nuts and the engine cover No. 1.

6. **REMOVE IGNITION COIL ASSY**

(a) Remove the 4 bolts and the ignition coils.

7. **REMOVE FUEL PRESSURE PULSATION DAMPER ASSY**
8. **REMOVE FUEL TUBE SUB–ASSY (See page 11–33)**
9. **REMOVE FUEL PIPE SUB–ASSY NO.1 (See page 11–52)**

SST 09023–12900

10. **REMOVE FUEL PUMP ASSY (See page 11–52)**
11. **REMOVE CYLINDER HEAD COVER SUB–ASSY (See page 14–222)**

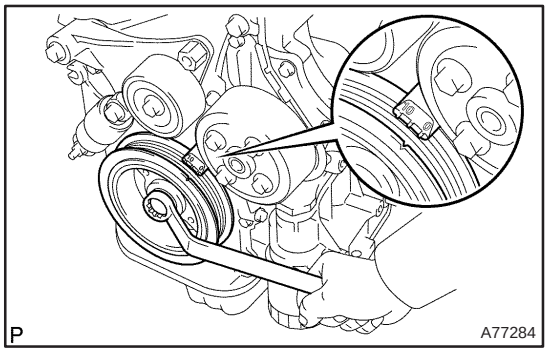

12. **SET NO. 1 CYLINDER TO TDC/COMPRESSION**

(a) Turn the crankshaft pulley, and align its groove with timing mark 0 of the timing chain cover.

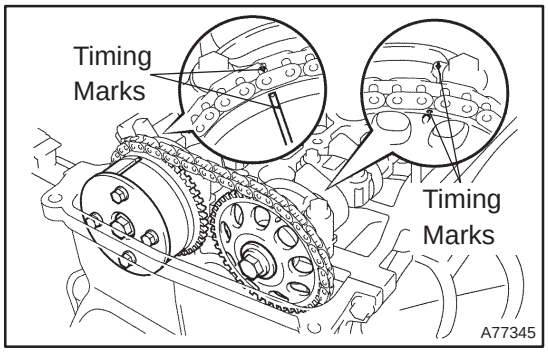

(b) Check that each timing mark of the camshaft timing gears is aligned with each timing mark located on the No. 1 and No. 2 bearing caps as shown in the illustration.

If not, turn the crankshaft 1 revolution (360°) and align the marks as above.

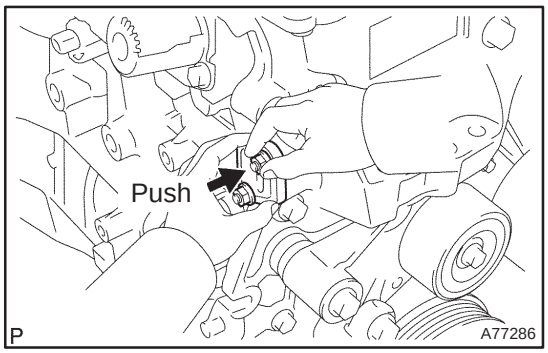

13. REMOVE CHAIN TENSIONER ASSY NO.1

(a) Remove the 2 nuts, the chain tensioner and a gasket.

NOTICE:

Do not turn the crankshaft.

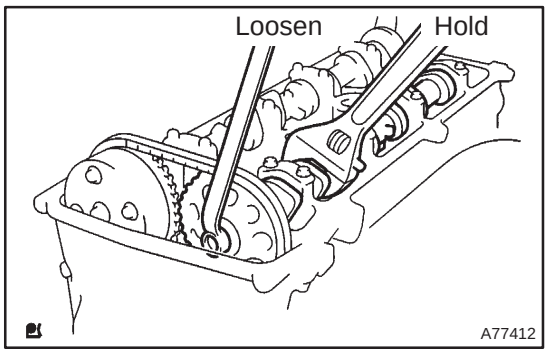

14. REMOVE NO.2 CAMSHAFT

(a) Hold the No. 2 camshaft with a wrench on the hexagonal lobe, and loosen the camshaft timing gear set bolt.

NOTICE:

Be careful not to damage the cylinder head and valve lifter with the wrench.

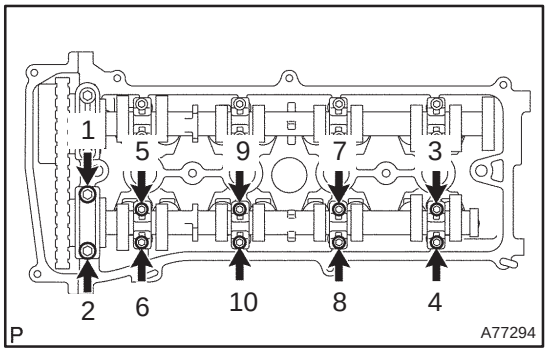

(b) Using several steps, loosen and remove the 10 camshaft bearing cap bolts uniformly in the sequence shown in the illustration.

(c) Remove the 5 camshaft bearing caps.

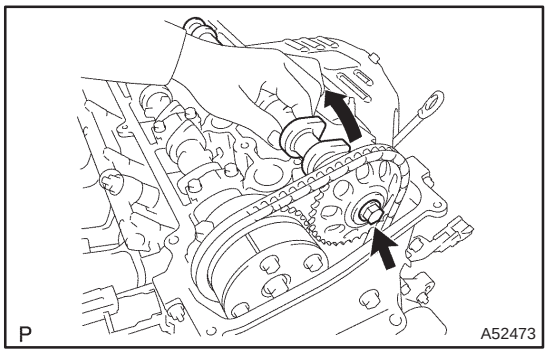

(d) Raising the No. 2 camshaft, remove the set bolt.

(e) Remove the camshaft timing gear from the No. 2 camshaft with with the timing chain wrapped.

(f) Remove the camshaft timing gear from the timing chain.

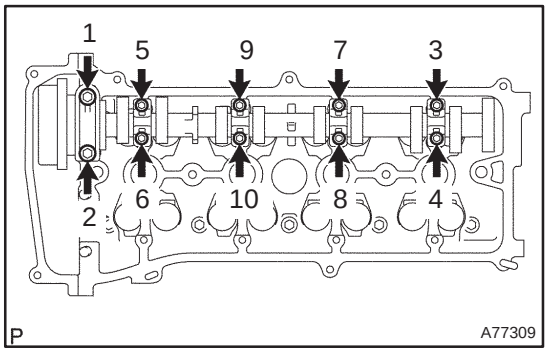

15. REMOVE CAMSHAFT

(a) Using several steps, loosen and remove the 10 camshaft bearing cap bolts uniformly in the sequence shown in the illustration.

(b) Remove 5 camshaft bearings.

(c) Remove the camshaft.

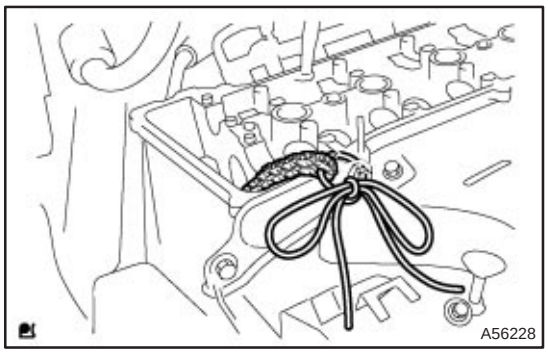

(d) Tie the timing chain as shown in the illustration.

NOTICE:

- **Be careful not to drop anything inside the timing chain cover.**
- **Do not expose the chain to water, and prevents dust.**

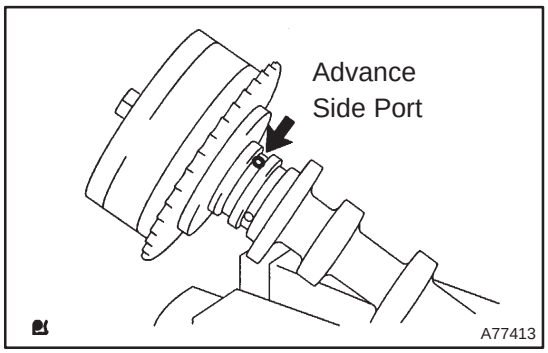

16. REMOVE CAMSHAFT TIMING GEAR ASSY

(a) Clamp the camshaft in a vise, and make sure the camshaft timing gear does not rotate.

(b) Cover all the oil ports with vinyl tape except an advance side port shown in the illustration.

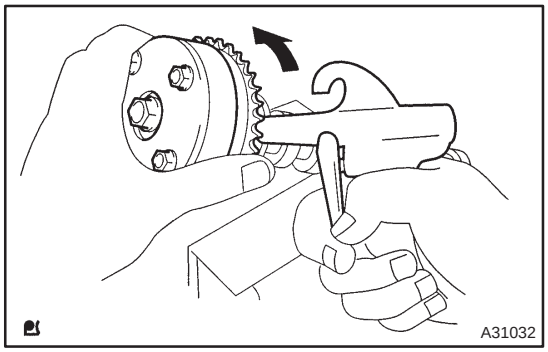

(c) Put air pressure into the oil port with 150 kpa (1.5 kgf/cm^2 21 psi), and turn the camshaft timing gear to the advance direction (counterclockwise) by hand.

CAUTION:

Cover the ports with shop rag to avoid oil splashing.

HINT:

Depending on the air pressure, the camshaft timing gear will turn to the advance angle side without applying force by hand. Also, under the condition that the pressure can be hardly applied because of the air leakage from the port, there may be the case that the lock pin could be hardly released.

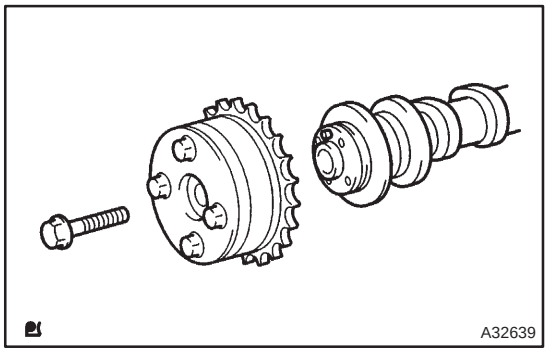

(d) Remove a fringe bolt of camshaft timing gear.

NOTICE:

- **Be sure not to remove the other 4 bolts.**
- **If reusing the camshaft timing gear, release the straight pin lock first, and then install the gear.**

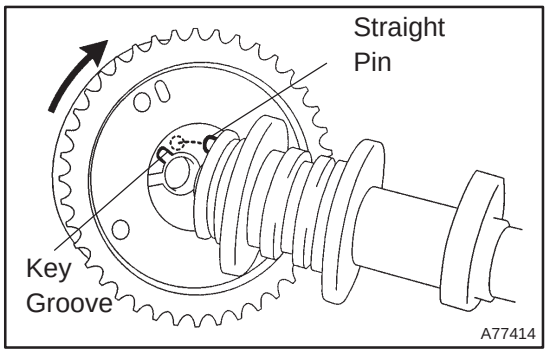

17. INSTALL CAMSHAFT TIMING GEAR ASSY

(a) Put the camshaft timing gear and the camshaft together with the straight pin off the key groove.

(b) Turn the camshaft timing gear assembly to the left direction (as shown in the illustration) while lightly pushing it toward the camshaft. Push further at the position where the pin gets into the groove.

NOTICE:

Be sure not to turn the camshaft timing gear to the retard angle side (to the right direction).

(c) Check that there is no clearance between the gear's fringe and the camshaft.

(d) Tighten the fringe bolt with the camshaft timing gear fixed.
Torque: 54 N·m (551 kgf·cm, 40 ft·lbf)

(e) Check that the camshaft timing gear can move to the retard angle side (to the right direction), and is locked at the most retarded position.

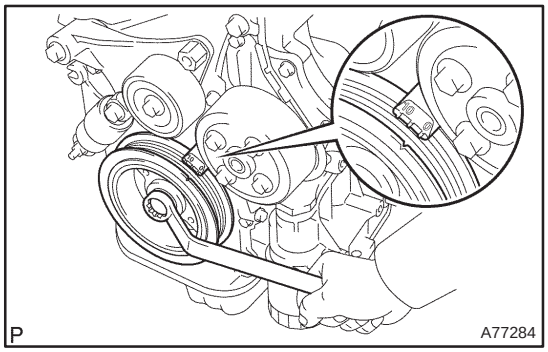

18. INSTALL CAMSHAFT

(a) Turn the crankshaft pulley, and align its groove with timing mark 0 of the timing chain cover.

(b) Install the timing chain on the camshaft timing gear, with the painted links aligned with the timing marks on the camshaft timing gear.

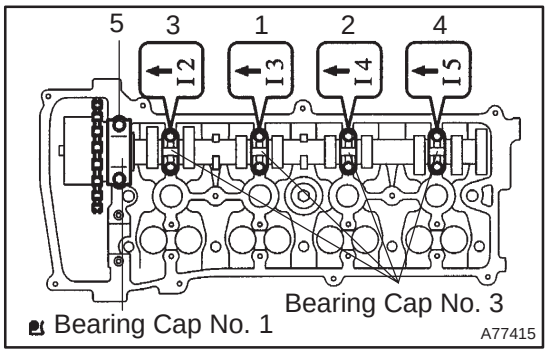

(c) Examine the front marks and numbers and tighten the bolts in the order shown in the illustration.
Torque:
Bearing cap No. 1 30 N·m (301 kgf·cm, 22 ft·lbf)
Bearing cap No. 3 9.0 N·m (92 kgf·cm, 80 in.·lbf)

19. INSTALL NO.2 CAMSHAFT

(a) Put the No. 2 camshaft on the cylinder head with the painted links of chain aligned with the timing mark on the camshaft timing gear.

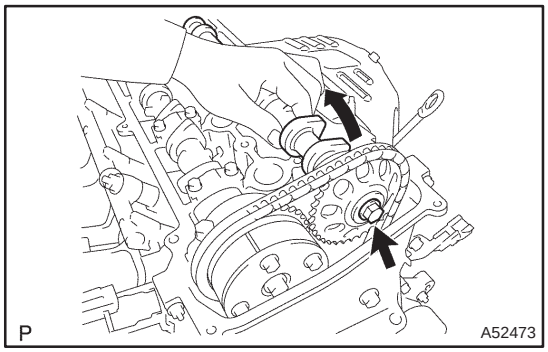

(b) Raising the No. 2 camshaft, tighten the set bolt temporarily.

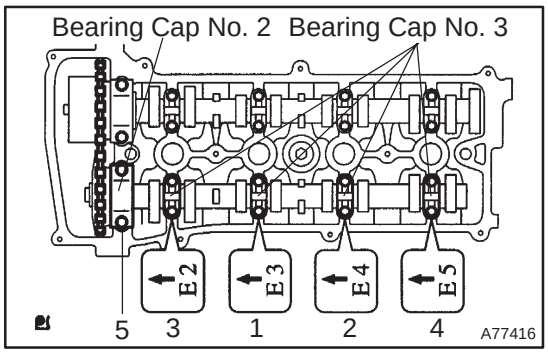

(c) Examine the from marks and numbers and tighten the bolts in the sequence shown in the illustration.
Torque:
Bearing cap No. 2 30 N·m (301 kgf·cm, 22 ft·lbf)
Bearing cap No. 3 9.0 N·m (92 kgf·cm, 80 in.·lbf)

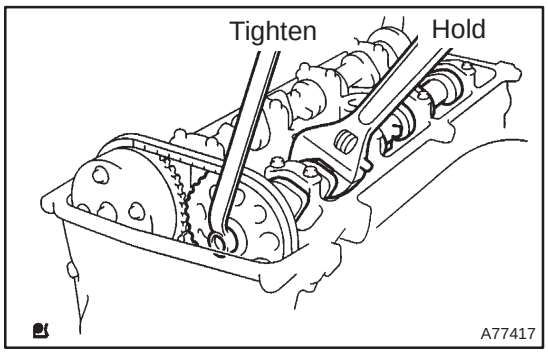

(d) Hold the camshaft with a wrench on the hexagonal lobe, and tighten the camshaft timing gear set bolt.
Torque: 54 N·m (551 kgf·cm, 40 ft·lbf)

NOTICE:
Be careful not to damage the cylinder head and valve lifter.

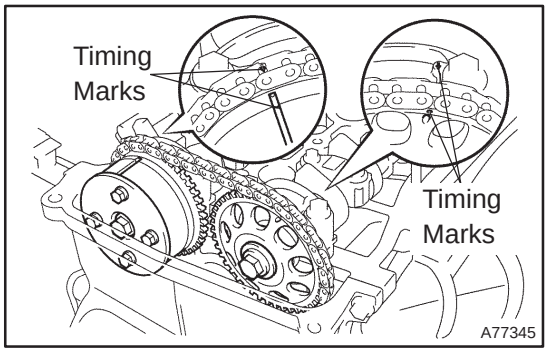

(e) Check that the match marks on the timing chain and the camshaft timing gears are positioned as shown in the illustration

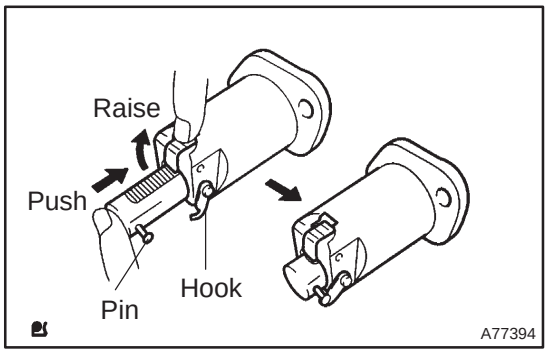

20. INSTALL CHAIN TENSIONER ASSY NO.1

(a) Release the ratchet pawl, fully push in the plunger and apply the hook to the pin so that the plunger is locked in position.

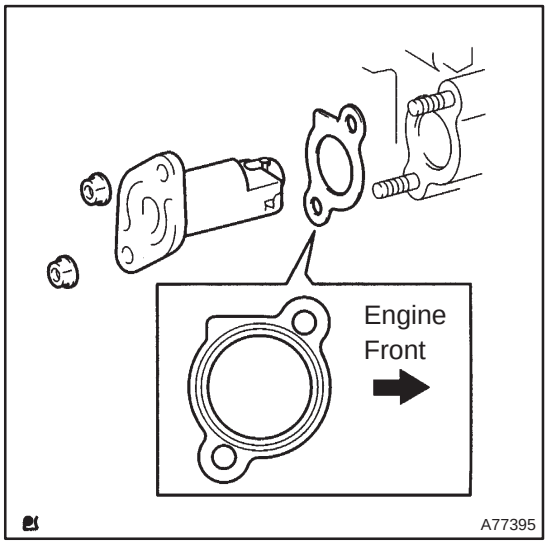

(b) Install a new gasket chain tensioner No. 1 with 2 nuts.
Torque: 9.0 N·m (92 kgf·cm, 80 in.·lbf)

NOTICE:
If the hook is disengaged while installing, apply the hook again, and then resume the installation.

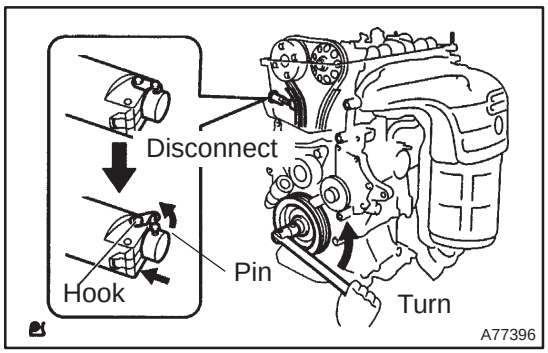

(c) Turn the crankshaft counterclockwise, and check that the pin is disengaged from the hook.

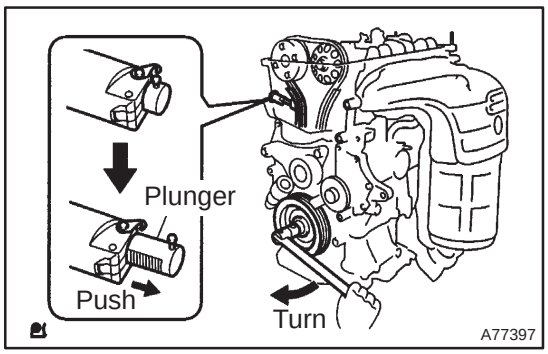

(d) Turn the crankshaft clockwise, and check the plunger is extended.

21. **INSTALL CYLINDER HEAD COVER SUB–ASSY (See page 14–222)**
22. **INSTALL FUEL PUMP ASSY (See page 11–52)**
23. **INSTALL FUEL PIPE SUB–ASSY NO.1 (See page 11–52)**
    SST 09023–12900
24. **INSTALL FUEL TUBE SUB–ASSY (See page 11–30)**
25. **INSTALL FUEL PRESSURE PULSATION DAMPER ASSY (See page 11–52)**
26. **INSTALL IGNITION COIL ASSY**
    Torque: 9.0 N·m (92 kgf·cm, 80 in.·lbf)
27. **CHECK FOR ENGINE OIL LEAKS**
28. **INSTALL ENGINE COVER SUB–ASSY NO.1**
    Torque: 7.0 N·m (71 kgf·cm, 62 in.·lbf)

CYLINDER HEAD GASKET (1AZ–FSE)

141BN–01

COMPONENTS

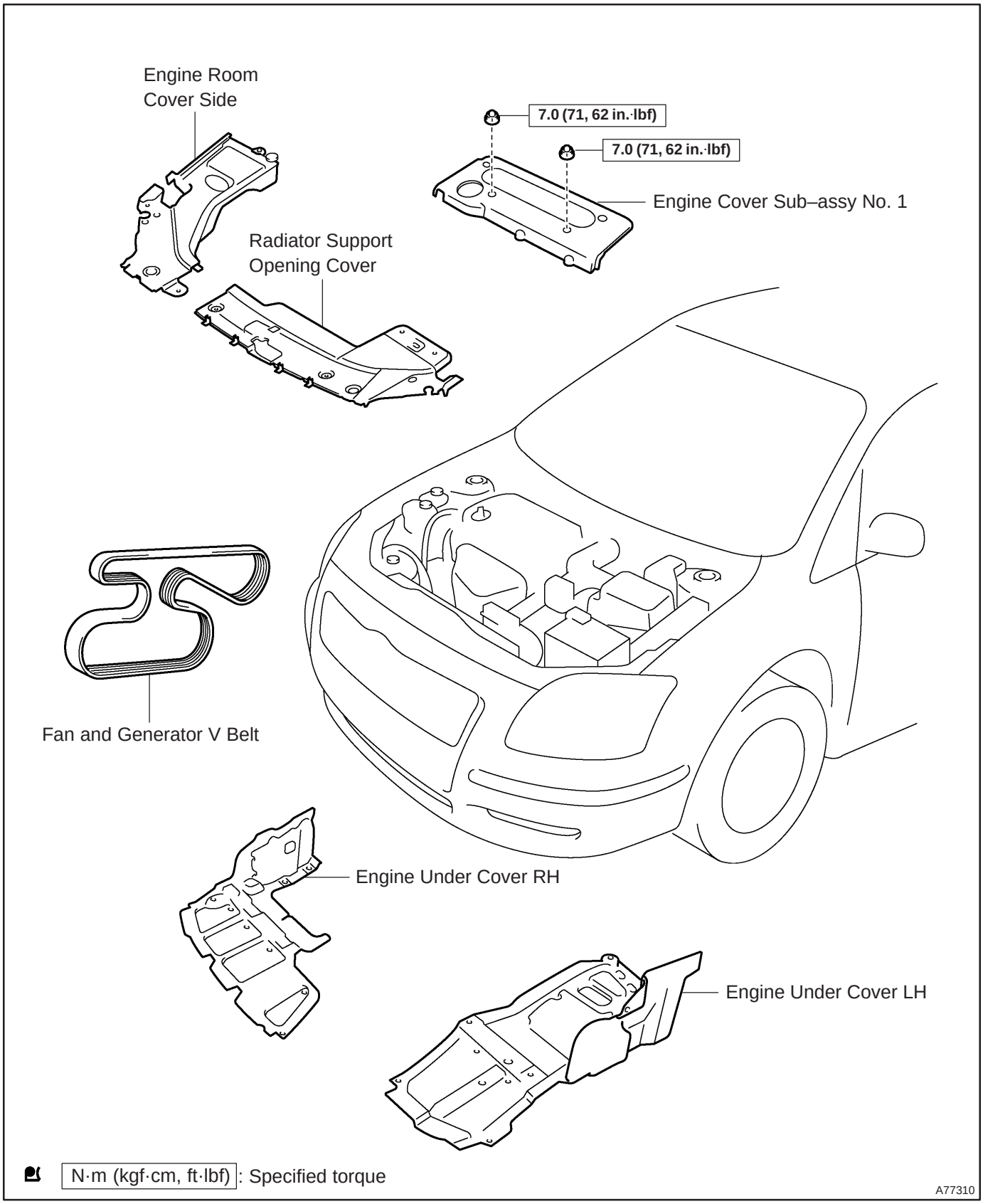

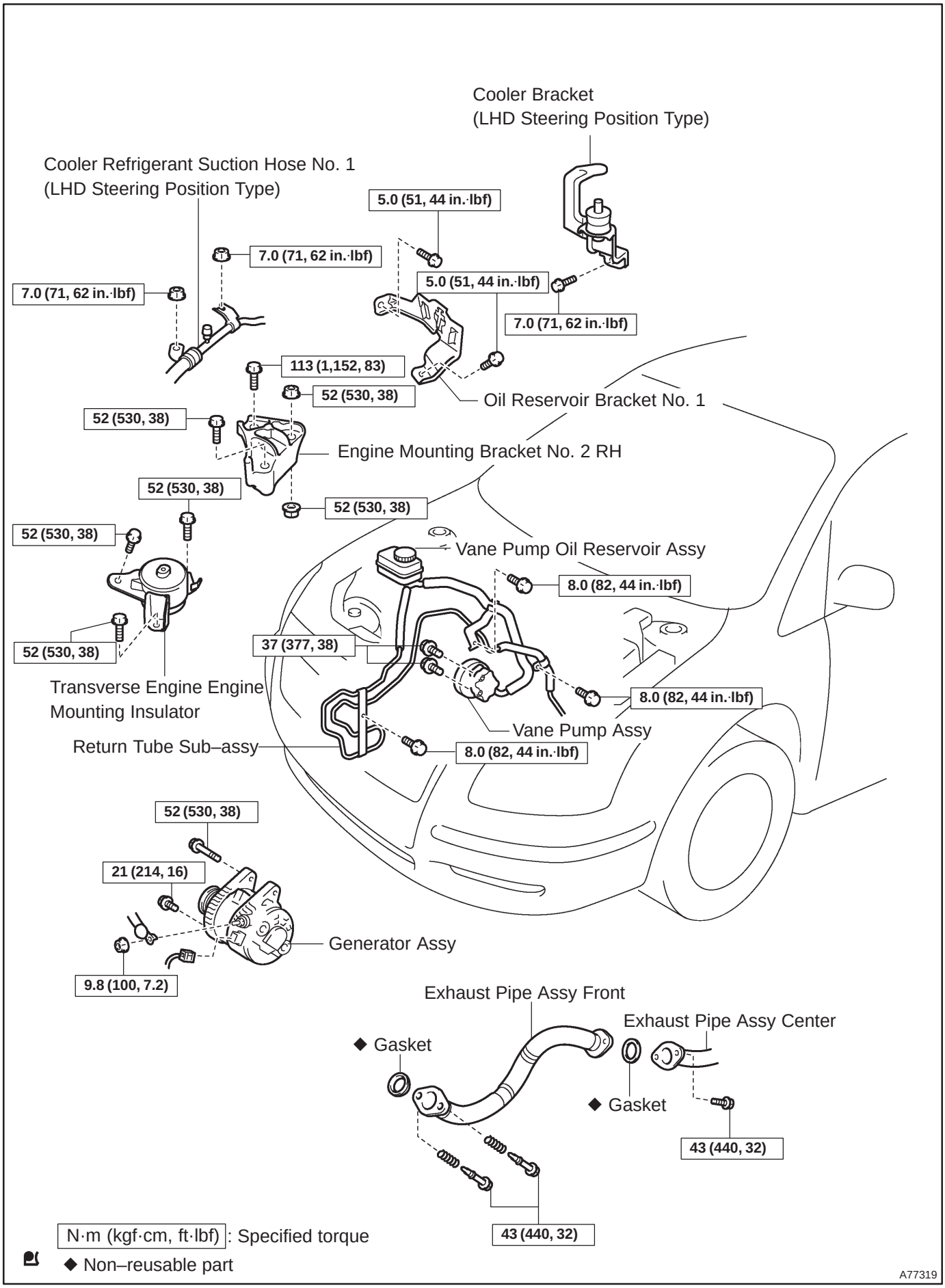
Cooler Bracket
(LHD Steering Position Type)
Cooler Refrigerant Suction Hose No. 1
(LHD Steering Position Type)
5.0 (51, 44 in.·lbf)
7.0 (71, 62 in.·lbf)
7.0 (71, 62 in.·lbf)
5.0 (51, 44 in.·lbf)
7.0 (71, 62 in.·lbf)
113 (1,152, 83)
52 (530, 38)
Oil Reservoir Bracket No. 1
52 (530, 38)
Engine Mounting Bracket No. 2 RH
52 (530, 38)
52 (530, 38)
52 (530, 38)
Vane Pump Oil Reservoir Assy
8.0 (82, 44 in.·lbf)
52 (530, 38)
37 (377, 38)
Transverse Engine Engine
Mounting Insulator
8.0 (82, 44 in.·lbf)
Vane Pump Assy
Return Tube Sub–assy
8.0 (82, 44 in.·lbf)
52 (530, 38)
21 (214, 16)
Generator Assy
9.8 (100, 7.2)
Exhaust Pipe Assy Front
Exhaust Pipe Assy Center
◆ Gasket
◆ Gasket
43 (440, 32)
43 (440, 32)
N·m (kgf·cm, ft·lbf): Specified torque
◆ Non–reusable part
A77319

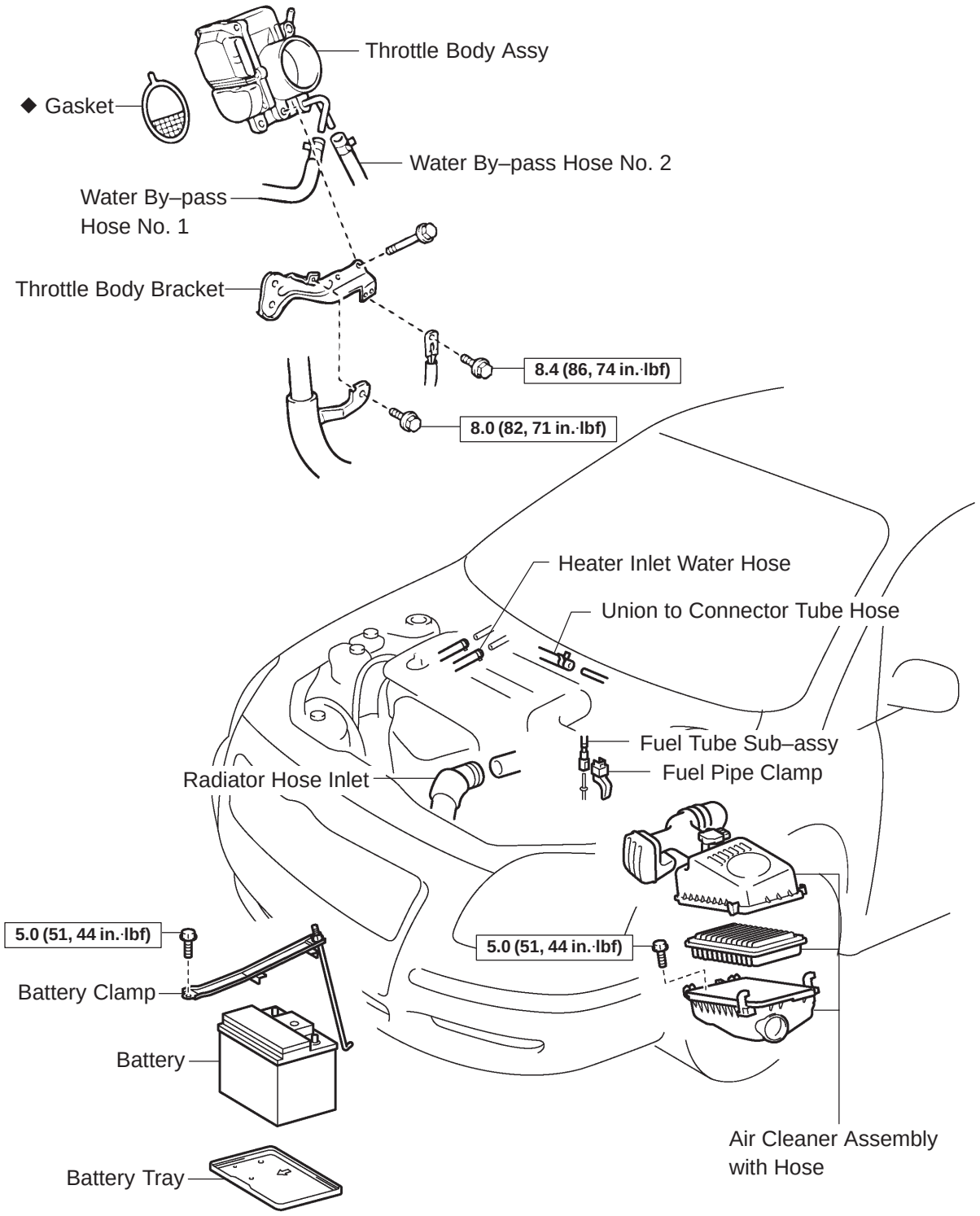

N·m (kgf·cm, ft·lbf): Specified torque

◆ Non–reusable part

A77373

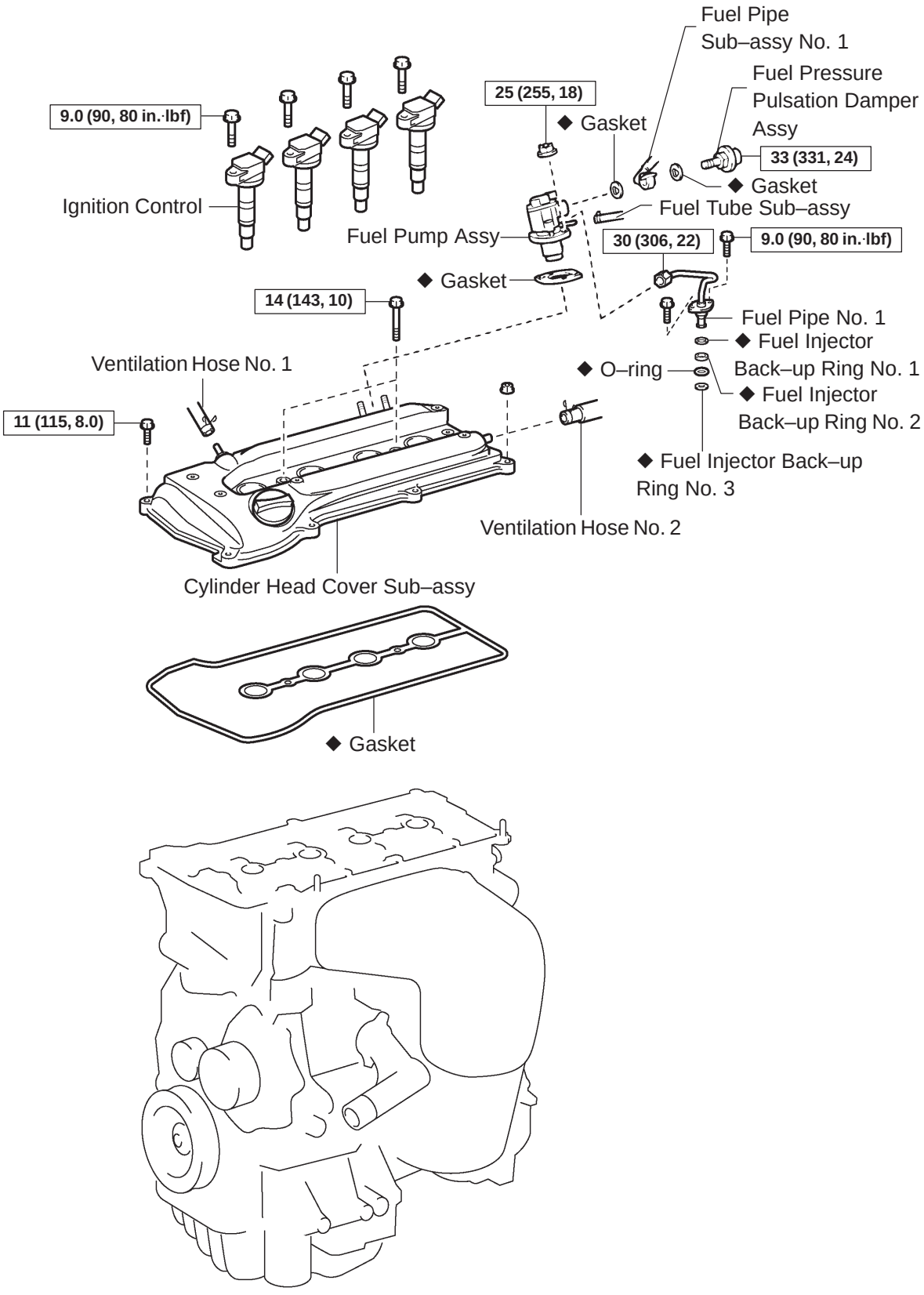

N·m (kgf·cm, ft·lbf) : Specified torque

◆ Non–reusable part

A77374

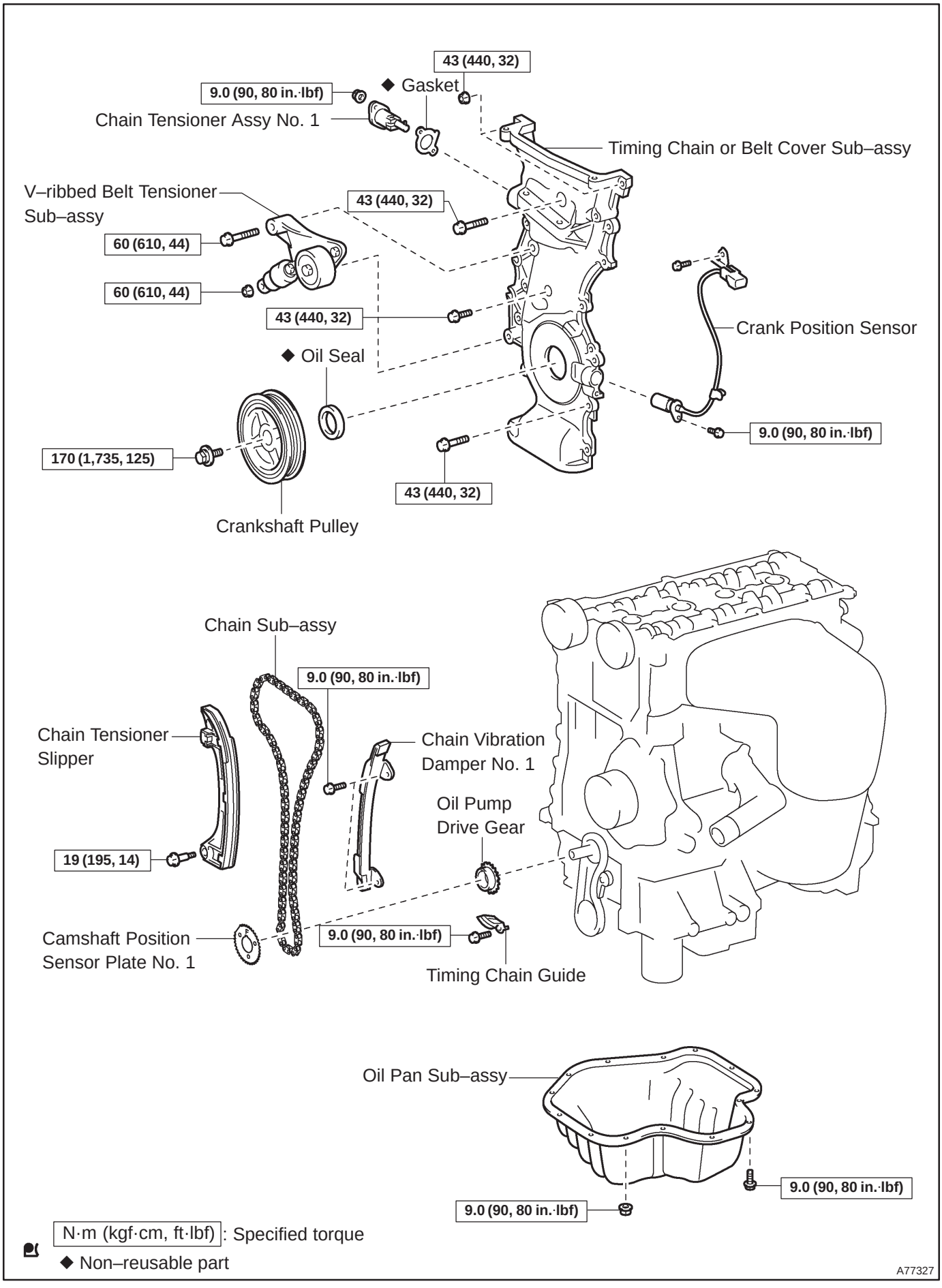
43 (440, 32)
9.0 (90, 80 in.·lbf)
◆ Gasket
Chain Tensioner Assy No. 1
Timing Chain or Belt Cover Sub–assy
V–ribbed Belt Tensioner Sub–assy
43 (440, 32)
60 (610, 44)
60 (610, 44)
43 (440, 32)
Crank Position Sensor
◆ Oil Seal
9.0 (90, 80 in.·lbf)
170 (1,735, 125)
43 (440, 32)
Crankshaft Pulley
Chain Sub–assy
9.0 (90, 80 in.·lbf)
Chain Tensioner Slipper
Chain Vibration Damper No. 1
Oil Pump Drive Gear
19 (195, 14)
Camshaft Position Sensor Plate No. 1
9.0 (90, 80 in.·lbf)
Timing Chain Guide
Oil Pan Sub–assy
9.0 (90, 80 in.·lbf)
9.0 (90, 80 in.·lbf)
N·m (kgf·cm, ft·lbf): Specified torque
◆ Non–reusable part
A77327

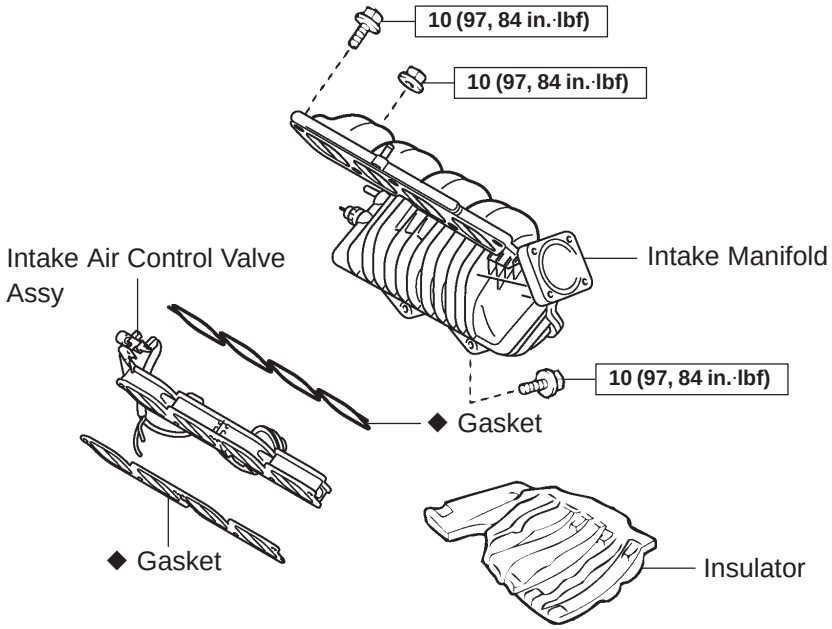

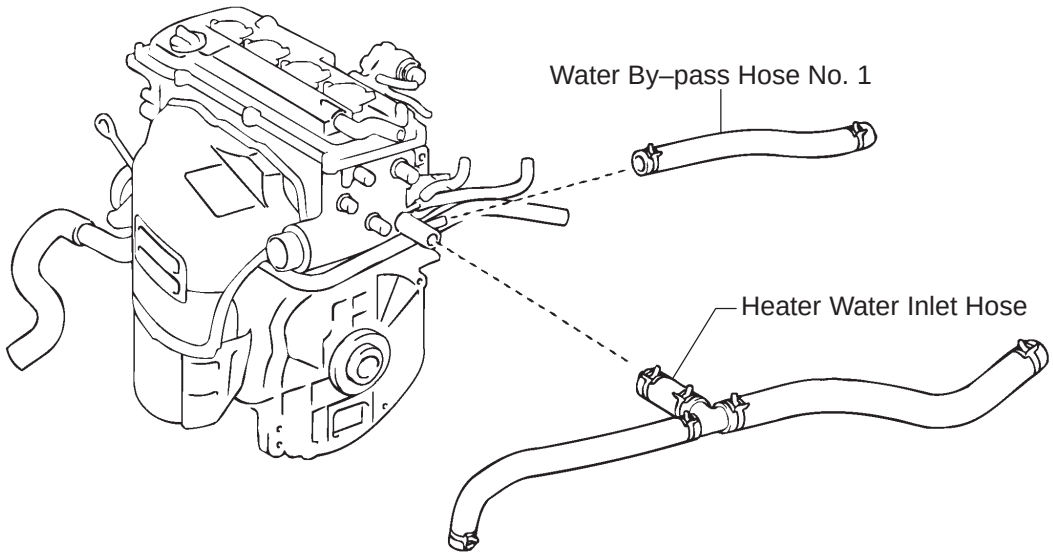

N·m (kgf·cm, ft·lbf) : Specified torque

◆ Non–reusable part

A79801

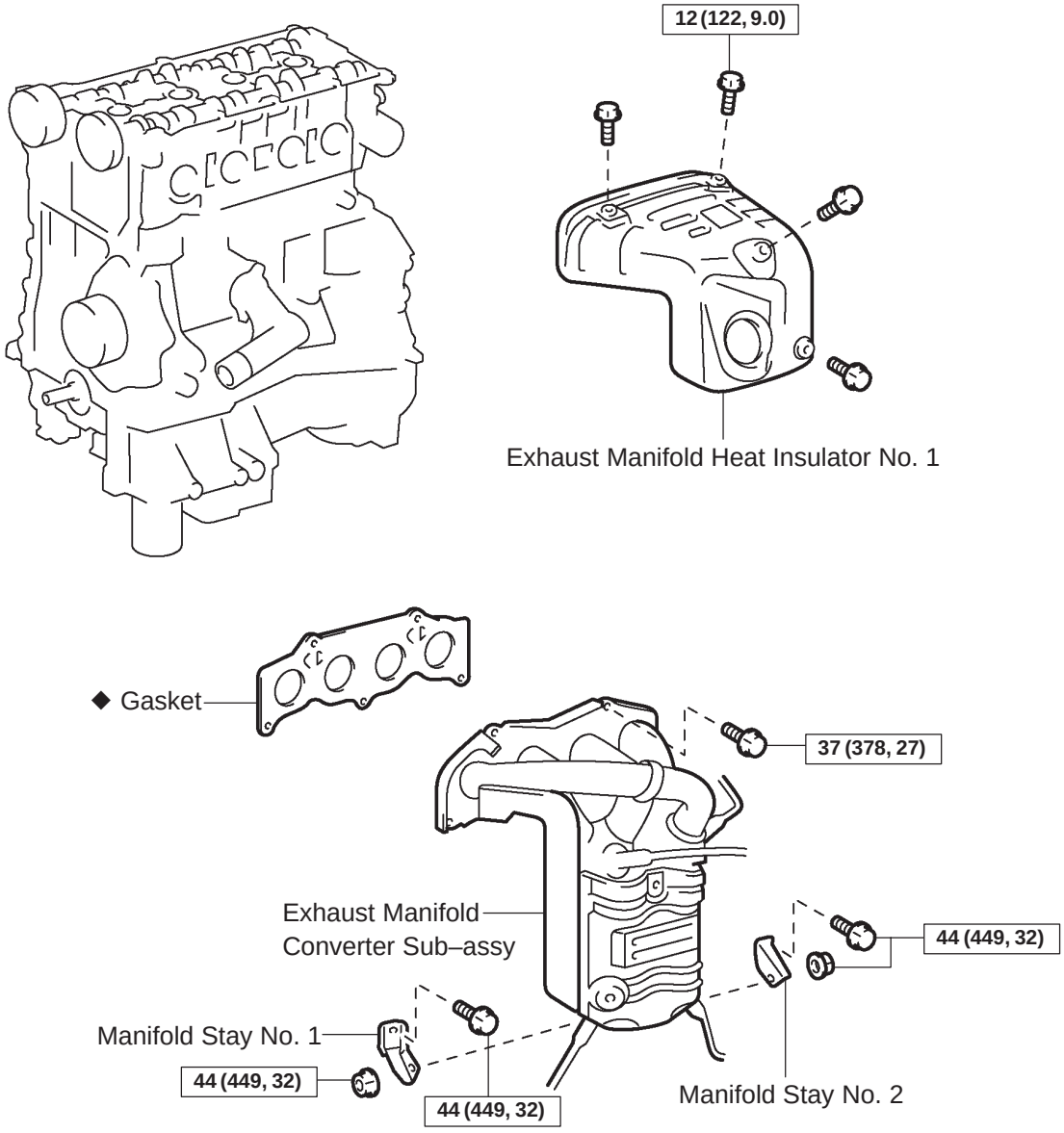

N·m (kgf·cm, ft·lbf): Specified torque

◆ Non–reusable part

A79688

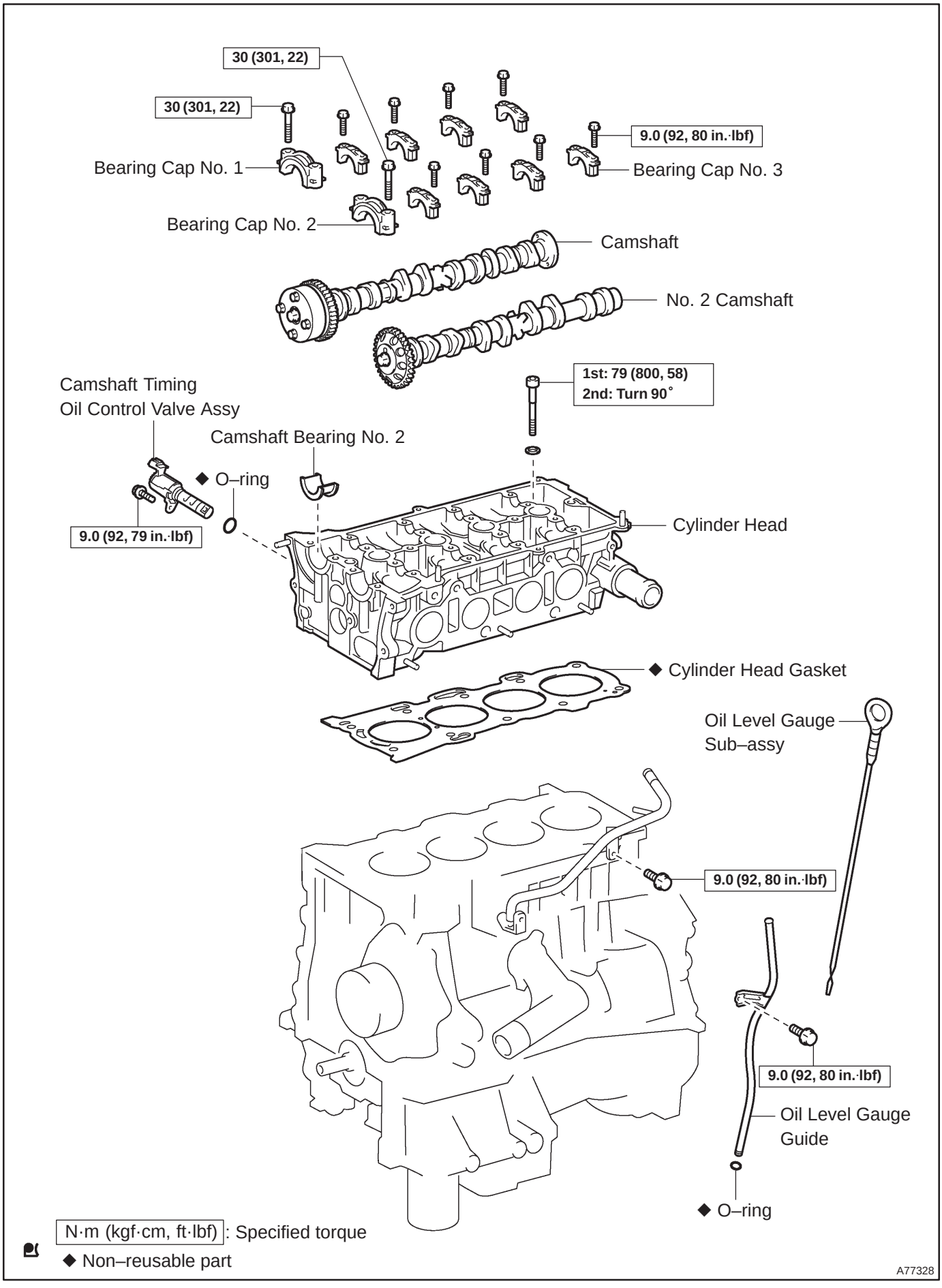
30 (301, 22)
30 (301, 22)
9.0 (92, 80 in.·lbf)
Bearing Cap No. 1
Bearing Cap No. 3
Bearing Cap No. 2
Camshaft
No. 2 Camshaft
1st: 79 (800, 58)
2nd: Turn 90°
Camshaft Timing
Oil Control Valve Assy
Camshaft Bearing No. 2
◆ O–ring
9.0 (92, 79 in.·lbf)
Cylinder Head
◆ Cylinder Head Gasket
Oil Level Gauge
Sub–assy
9.0 (92, 80 in.·lbf)
9.0 (92, 80 in.·lbf)
Oil Level Gauge
Guide
◆ O–ring
N·m (kgf·cm, ft·lbf): Specified torque
◆ Non–reusable part
A77328

141BO–01

REPLACEMENT

1. **DISCHARGE FUEL SYSTEM PRESSURE (See page 11–15)**
2. **REMOVE FRONT WHEEL RH**
3. **REMOVE RADIATOR SUPPORT OPENING COVER**
4. **REMOVE ENGINE ROOM COVER SIDE**
5. **REMOVE ENGINE UNDER COVER RH**
6. **REMOVE ENGINE UNDER COVER LH**
7. **DRAIN COOLANT (See page 16–19)**
8. **DRAIN ENGINE OIL**

(a) Install a new gasket and the drain plug after draining engine oil.
Torque: 25 N·m (255 kgf·cm, 18 ft·lbf)

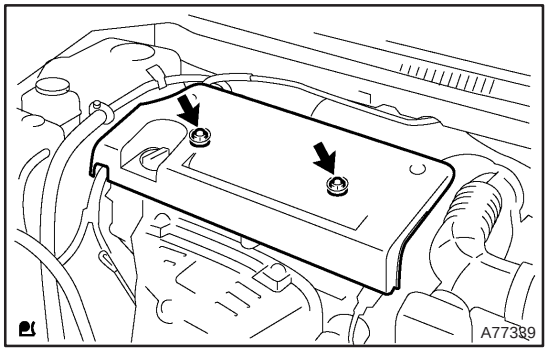

9. **REMOVE ENGINE COVER SUB–ASSY NO.1**

(a) Remove the 2 nuts and the engine cover No. 1.

10. **REMOVE FUEL PRESSURE PULSATION DAMPER ASSY**
11. **SEPARATE FUEL TUBE SUB–ASSY (See page 11–33)**
12. **REMOVE FUEL PIPE SUB–ASSY NO.1 (See page 11–52)**
    SST 09023–12900
13. **REMOVE FUEL PUMP ASSY (See page 11–52)**
14. **REMOVE FAN AND GENERATOR V BELT (See page 14–185)**
    SST 09249–63010
15. **REMOVE GENERATOR ASSY (See page 19–20)**
16. **REMOVE EXHAUST PIPE ASSY FRONT (See page 15–7)**

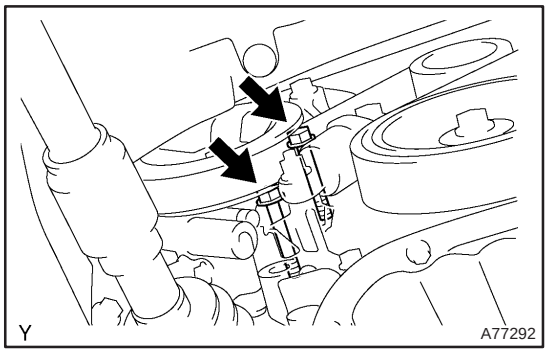

17. **SEPARATE VANE PUMP ASSY**

(a) Remove the 2 bolts and separate the vane pump.

18. **REMOVE IGNITION COIL ASSY**

(a) Remove the 4 bolts and 4 ignition coils.

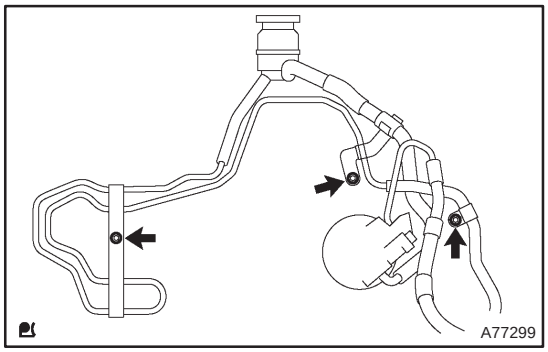

19. SEPARATE RETURN TUBE SUB–ASSY

(a) Remove the 3 bolts and separate the return tube shown in the illustration.

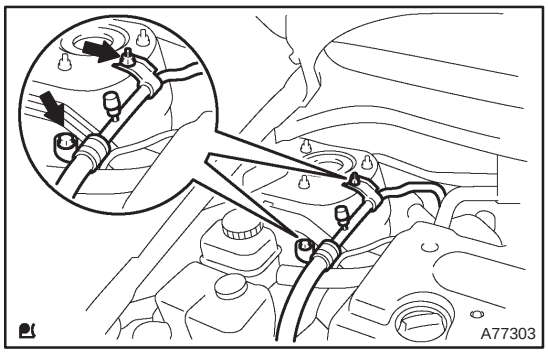

20. SEPARATE COOLER REFRIGERANT SUCTION HOSE NO.1 (LHD STEERING POSITION TYPE)

(a) Remove the 2 nuts and separate the suction hose.

21. SEPARATE VANE PUMP OIL RESERVOIR ASSY

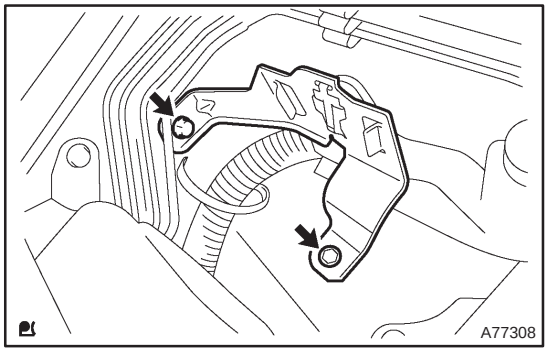

22. REMOVE OIL RESERVOIR BRACKET NO.1

(a) Remove the 2 bolts and the oil reservoir bracket No. 1.

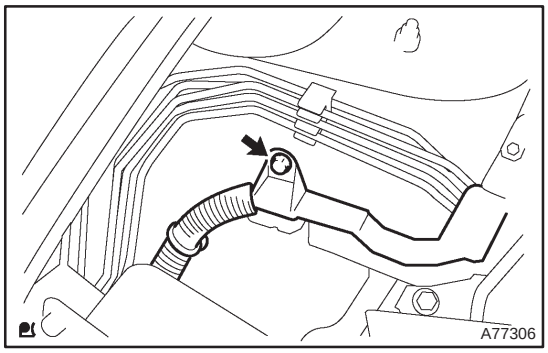

23. SEPARATE ENGINE WIRE

(a) Remove the bolt and separate a clamp and the engine wire.

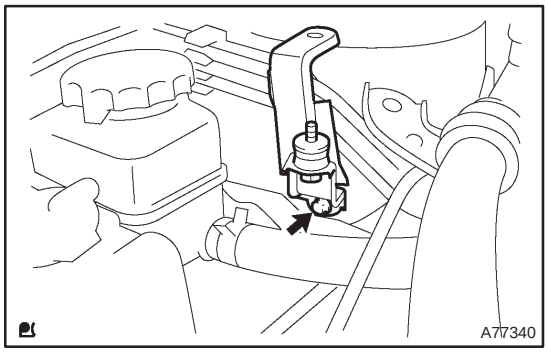

24. REMOVE COOLER BRACKET (LHD STEERING POSITION TYPE)

(a) Remove the bolt and the cooler bracket.

25. REMOVE ENGINE SERVICE COVER BRACKET RH (RHD STEERING POSITION TYPE)

(a) Remove the bolt and the engine service cover bracket RH.

26. REMOVE CYLINDER HEAD COVER SUB–ASSY (See page 14–222)

27. SET NO. 1 CYLINDER TO TDC/COMPRESSION (See page 14–222)

28. REMOVE ENGINE MOUNTING BRACKET NO.2 RH (See page 14–222)

29. REMOVE TRANSVERSE ENGINE ENGINE MOUNTING INSULATOR (See page 14–222)

30. REMOVE CRANKSHAFT PULLEY (See page 14–222)

SST 09213–54015 (91651–60855), 09330–00021, 09950–50013 (09951–05010, 09952–05010, 09953–05020, 09954–05021)

31. REMOVE CHAIN TENSIONER ASSY NO.1 (See page 14–222)

32. REMOVE CRANKSHAFT POSITION SENSOR (See page 18–17)

33. REMOVE OIL PAN SUB–ASSY (See page 14–222)

SST 09032–00100

34. REMOVE V–RIBBED BELT TENSIONER ASSY (See page 14–222)

35. REMOVE TIMING CHAIN OR BELT COVER SUB–ASSY (See page 14–222)

36. REMOVE CRANKSHAFT POSITION SENSOR PLATE NO.1 (See page 14–222)

37. REMOVE CHAIN TENSIONER SLIPPER

38. REMOVE CHAIN VIBRATION DAMPER NO.1

39. REMOVE TIMING CHAIN GUIDE (See page 14–222)

40. REMOVE CHAIN SUB–ASSY

41. REMOVE BATTERY

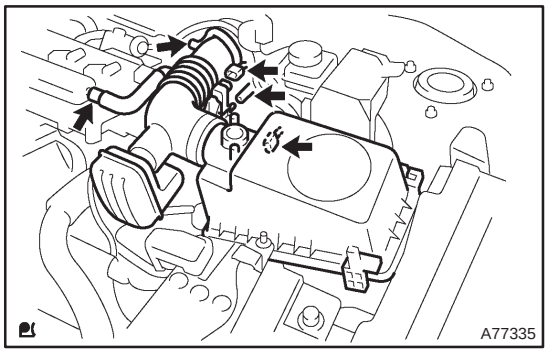

42. REMOVE AIR CLEANER ASSEMBLY WITH HOSE

(a) Disconnect the 2 connectors.

(b) Disconnect the 2 vacuum hoses.

(c) Disconnect the ventilation hose.

(d) Disconnect the air cleaner hose from the throttle body.

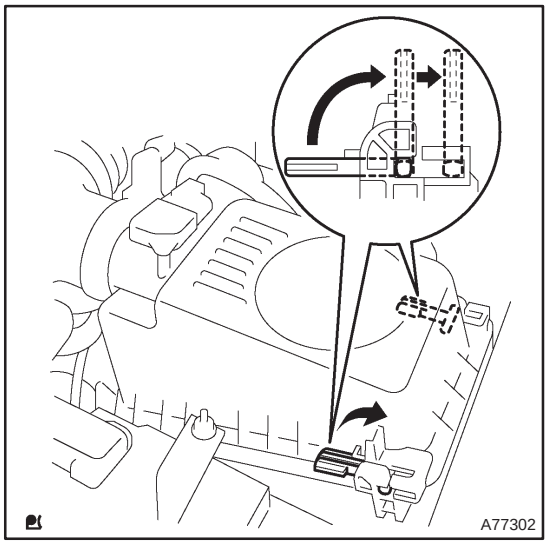

(e) Raise a clamp up, and slide it toward the air cleaner cap, then remove the air cleaner cap from its case.
(f) Remove the air cleaner element.
(g) Remove the 4 bolts and the air cleaner case.

43. DISCONNECT RADIATOR HOSE INLET
44. DISCONNECT UNION TO CONNECTOR TUBE HOSE
45. DISCONNECT HEATER INLET WATER HOSE
46. SEPARATE FUEL TUBE SUB–ASSY
47. SEPARATE ENGINE WIRE
48. REMOVE THROTTLE BODY ASSY (See page 10–44)
49. REMOVE CHARCOAL CANISTER ASSY

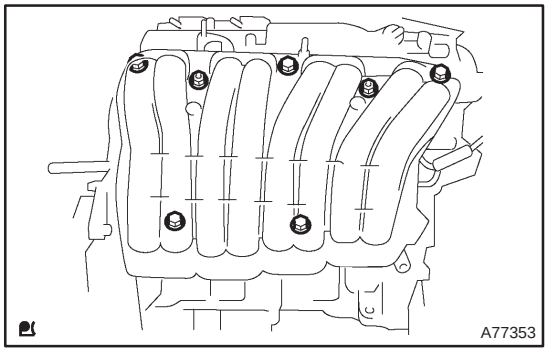

50. REMOVE INTAKE MANIFOLD
(a) Remove the 5 bolts and 2 nuts.
(b) Disconnect the 2 vacuum hoses.
(c) Remove the 2 stud bolts.
(d) Remove the intake manifold and insulator.

51. REMOVE INTAKE AIR CONTROL VALVE ASSY
(a) Remove the intake air control valve and gasket.
52. REMOVE MANIFOLD CONVERTER INSULATOR NO.1
(a) Disconnect the oxygen sensor connector.
(b) Remove the 2 bolts and nut, and then remove the manifold insulator.

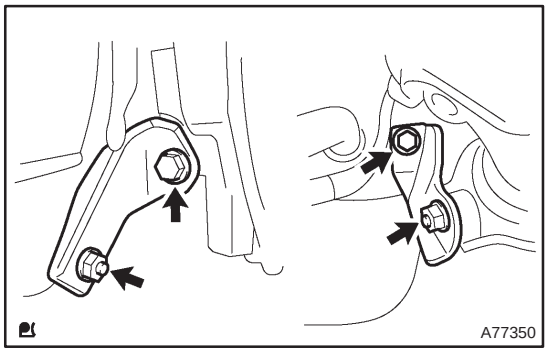

53. REMOVE EXHAUST MANIFOLD CONVERTER SUB–ASSY

(a) Remove the 2 bolts and 2 nuts, and then detach the No. 1 and No. 2 exhaust manifold stay.

(b) Disconnect the 3 oxygen sensor connectors.

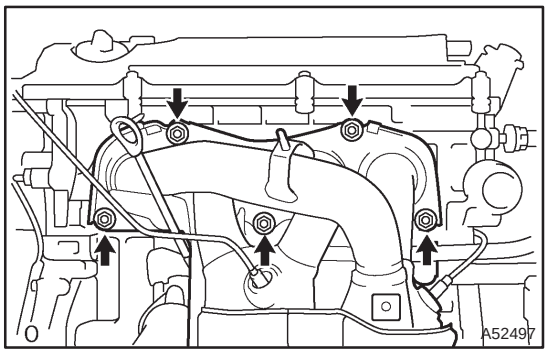

(c) Remove the 5 nuts, the exhaust manifold and gasket.

54. REMOVE NO.2 CAMSHAFT (See page 14–240)

55. REMOVE CAMSHAFT (See page 14–240)

56. REMOVE CAMSHAFT TIMING OIL CONTROL VALVE ASSY

(a) Remove the bolt and the oil control valve.

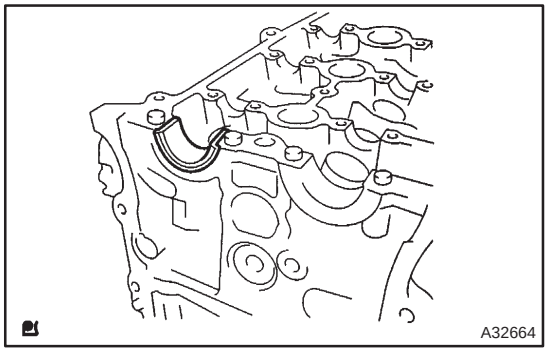

57. REMOVE CAMSHAFT BEARING NO.2

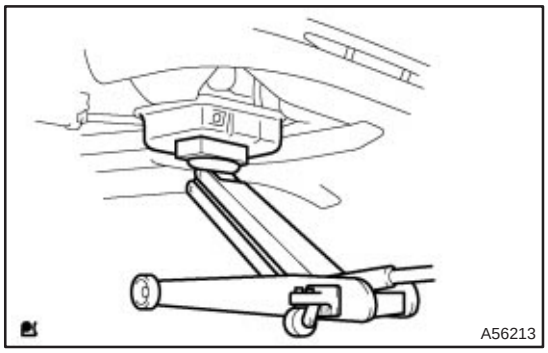

58. SUPPORT ENGINE ASSEMBLY WITH TRANSAXLE

(a) Install the oil pan sub–assy.

(b) Set the jack under the engine assembly w/ transaxle, and place a wooden block on the jack.

(c) Remove the chain block and sling devise.

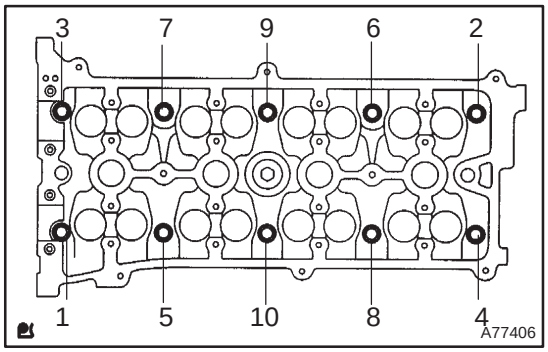

59. REMOVE CYLINDER HEAD SUB–ASSY

(a) Using several steps, loosen the 10 cylinder head bolts, with 10 mm bi–hexagon wrench uniformly in the sequence shown in the illustration.

(b) Remove 10 cylinder head bolts and plate washers.

NOTICE:

- **Be careful not to drop washers into the cylinder head.**
- **Head warpage or cranking could result from removing bolts and installing incorrect order.**

60. REMOVE CYLINDER HEAD GASKET

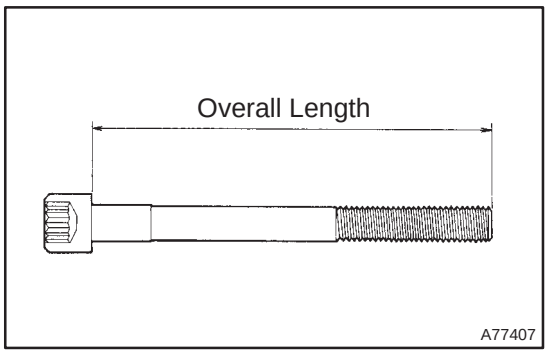

61. INSPECT CYLINDER HEAD SET BOLT

(a) Using a vernier calipers, measure the length of the cylinder head set bolts from the seat to the end.

Standard bolt length:
161.3 to 162.3 mm (6.350 to 6.390 in.)
Maximum bolt length: 164.2 mm (6.465 in.)

If the length is greater than maximum, replace the cylinder head set bolts.

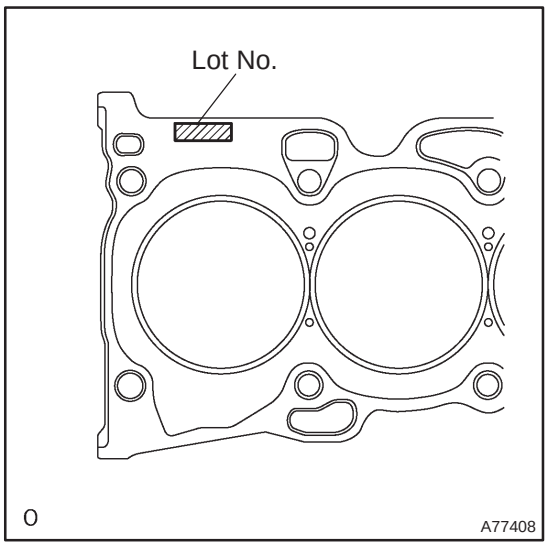

62. INSTALL CYLINDER HEAD GASKET

(a) Place a new cylinder head gasket on the cylinder block surface with the Lot No. stamp upward.

NOTICE:

- **Remove any oil from contact surface.**
- **Be careful of the installation direction.**
- **Place the cylinder head gently in order not to damage the gasket with the bottom part of the head.**

63. INSTALL CYLINDER HEAD SUB–ASSY

HINT:

The cylinder head set bolts are tightened in 2 successive steps.

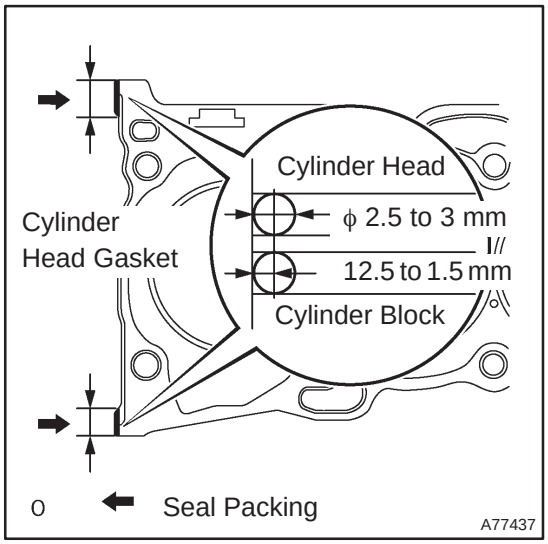

(a) Apply a continuous bead (Diameter 2.5 to 3 mm (0.098 to 0.118 in.)) of seal packing as shown in the illustration.
Seal packing: Part No. 08826–00080 or equivalent

NOTICE:

- **Remove any oil from contact surface.**
- **Install the cylinder head within 3 minutes after applying seal packing.**
- **After installing the cylinder head, cylinder head bolts must be tightened within 15 minutes.**
- **Do not start the engine within 2 hours after installing.**

(b) Apply a light coat of engine oil on the threads of the cylinder head bolts.

(c) Install bolts and plate washers to the cylinder head.

NOTICE:

Do not drop the washers into the cylinder head.

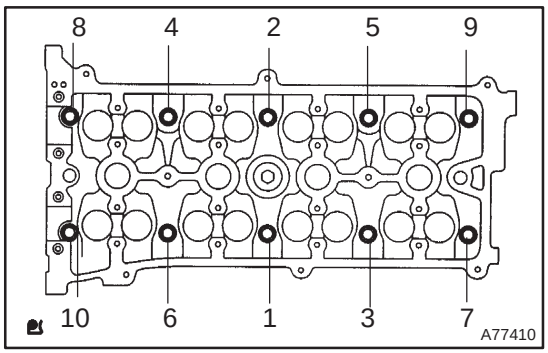

(d) Using several steps, install and tighten the 10 cylinder head bolts and plate washers with a 10 mm bi–hexagon wrench uniformly, in the sequence shown in the illustration.
Torque: 79 N·m (806 kgf·cm, 58 ft·lbf)

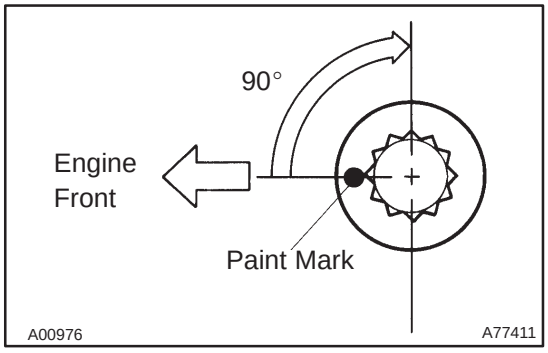

(e) Mark the front side of the cylinder head set bolts with paint.

(f) Retighten the cylinder head set bolts by 90° in the same sequence as a step (d).

(g) Check that each paint mark is now at a 90° angle to the front.

64. INSTALL CAMSHAFT TIMING OIL CONTROL VALVE ASSY

(a) Install a light coat of the engine oil to the new O–ring and install it to the oil control valve.

(b) Install the oil control valve with the bolt.
Torque: 9.0 N·m (92 kgf·cm, 79 in.·lbf)

65. INSTALL CAMSHAFT (See page 14–240)

66. INSTALL NO.2 CAMSHAFT (See page 14–240)

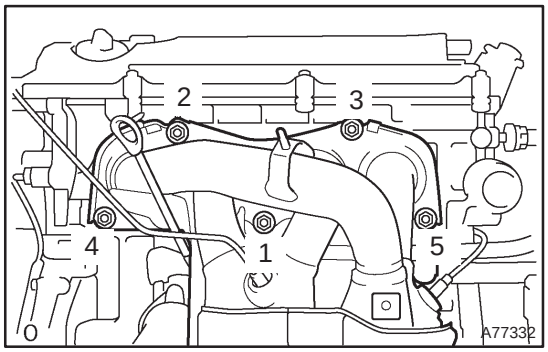

67. INSTALL EXHAUST MANIFOLD CONVERTER SUB–ASSY

(a) Install a new gasket and the exhaust manifold with the 5 nuts.
Torque: 37 N·m (378 kgf·cm, 27 ft·lbf)

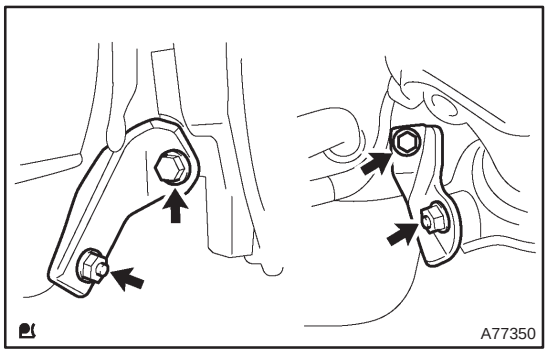

(b) Install the No. 1 and No. 2 exhaust manifold stays with the 2 bolts and 2 nuts.
Torque: 44 N·m (449 kgf·cm, 32 ft·lbf)

68. INSTALL EXHAUST MANIFOLD HEAT INSULATOR NO.1
Torque: 12 N·m (122 kgf·cm, 9.0 ft·lbf)

69. INSTALL INTAKE AIR CONTROL VALVE ASSY

(a) Install a new gasket and the intake air control valve.

70. INSTALL INTAKE MANIFOLD

(a) Install the 2 stud bolts.
Torque: 10 N·m (97 kgf·cm, 84 in.·lbf)

(b) Install the intake manifold and insulator with the 5 bolts and 2 nuts.
Torque: 30 N·m (306 kgf·cm, 22 ft·lbf)

71. INSTALL THROTTLE BODY ASSY (See page 10–44)

72. INSTALL AIR CLEANER ASSEMBLY WITH HOSE
Torque: 5.0 N·m (51 kgf·cm, 44 in.·lbf)

73. INSTALL CHAIN VIBRATION DAMPER NO.1
Torque: 9.0 N·m (92 kgf·cm, 80 in.·lbf)

74. INSTALL CHAIN SUB–ASSY (See page 14–222)

75. INSTALL TIMING CHAIN GUIDE
Torque: 9.0 N·m (92 kgf·cm, 80 in.·lbf)

76. INSTALL CHAIN TENSIONER SLIPPER
Torque: 19 N·m (195 kgf·cm, 15 ft·lbf)

77. INSTALL CRANKSHAFT POSITION SENSOR PLATE NO.1 (See page 14–240)

78. INSTALL TIMING CHAIN OR BELT COVER SUB–ASSY (See page 14–222)

79. INSTALL V–RIBBED BELT TENSIONER ASSY (See page 14–222)

80. INSTALL OIL PAN SUB–ASSY (See page 14–222)

81. INSTALL CRANKSHAFT POSITION SENSOR (See page 18–17)

82. INSTALL CRANKSHAFT PULLEY (See page 14–222)
SST 09213–54015 (91651–60855), 09330–00021

83. INSTALL CHAIN TENSIONER ASSY NO.1 (See page 14–222)

84. INSTALL TRANSVERSE ENGINE ENGINE MOUNTING INSULATOR
Torque: 52 N·m (530 kgf·cm, 38 ft·lbf)

85. INSTALL ENGINE MOUNTING BRACKET NO.2 RH (See page 14–222)

86. INSTALL CYLINDER HEAD COVER SUB–ASSY (See page 14–222)
87. INSTALL COOLER BRACKET (LHD STEERING POSITION TYPE)
Torque: 9.0 N·m (92 kgf·cm, 80 in.·lbf)
88. INSTALL ENGINE SERVICE COVER BRACKET RH (RHD STEERING POSITION TYPE)
Torque: 9.0 N·m (92 kgf·cm, 80 in.·lbf)
89. INSTALL OIL RESERVOIR BRACKET NO.1
Torque: 8.0 N·m (82 kgf·cm, 71 in.·lbf)
90. INSTALL COOLER REFRIGERANT SUCTION HOSE NO.1 (LHD STEERING POSITION TYPE)
91. INSTALL RETURN TUBE SUB–ASSY
Torque: 8.0 N·m (82 kgf·cm, 71 in.·lbf)
92. INSTALL IGNITION COIL ASSY
Torque: 9.0 N·m (92 kgf·cm, 80 in.·lbf)
93. INSTALL FUEL PUMP ASSY (See page 11–52)
94. INSTALL FUEL PIPE SUB–ASSY NO.1 (See page 11–52)
SST 09023–12900
95. INSTALL FUEL TUBE SUB–ASSY (See page 11–33)
96. INSTALL FUEL PRESSURE PULSATION DAMPER ASSY (See page 11–52)
97. INSTALL ENGINE COVER SUB–ASSY NO.1
Torque: 7.0 N·m (71 kgf·cm, 62 in.·lbf)
98. INSTALL VANE PUMP ASSY
Torque: 37 N·m (377 kgf·cm, 27 ft·lbf)
99. INSTALL EXHAUST PIPE ASSY FRONT (See page 15–7)
100. INSTALL GENERATOR ASSY (See page 19–20)
101. INSTALL FAN AND GENERATOR V BELT (See page 14–185)
SST 09249–63010
102. ADD COOLANT (See page 16–31)
103. ADD ENGINE OIL
104. CHECK FOR ENGINE COOLANT LEAKS (See page 16–25)
105. CHECK FOR ENGINE OIL LEAKS
106. CHECK FOR FUEL LEAKS
107. INSTALL FRONT WHEEL RH
Torque: 103 N·m (1,050 kgf·cm, 76 ft·lbf)

TIMING GEAR CASE OR TIMING CHAIN CASE OIL SEAL (1AZ–FSE)

141BR–01

REPLACEMENT

1. REMOVE FRONT WHEEL RH
2. REMOVE RADIATOR SUPPORT OPENING COVER
3. REMOVE ENGINE ROOM COVER SIDE
4. REMOVE ENGINE UNDER COVER RH

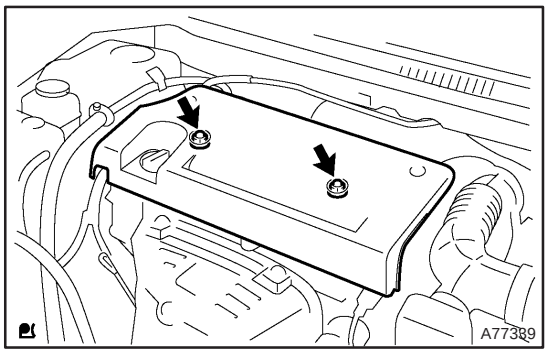

5. REMOVE ENGINE COVER SUB–ASSY NO.1

(a) Remove the 2 nuts and the engine cover No. 1.

6. REMOVE FAN AND GENERATOR V BELT (See page 14–185)

SST 09249–63010

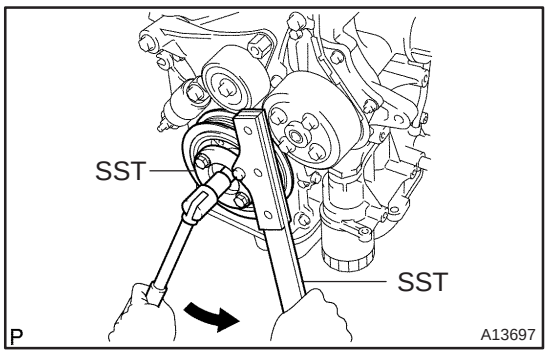

7. REMOVE CRANKSHAFT PULLEY

(a) Using SST, loosen the pulley bolt.

SST 09213–54015 (91651–60855), 09330–00021

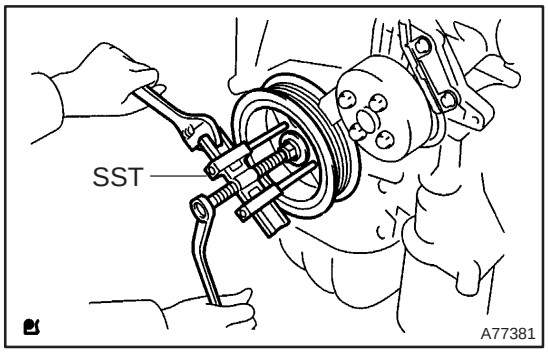

(b) Using SST, remove the crankshaft pulley.

SST 09950–50013 (09951–05010, 09952–05010, 09953–05020, 09954–05021)

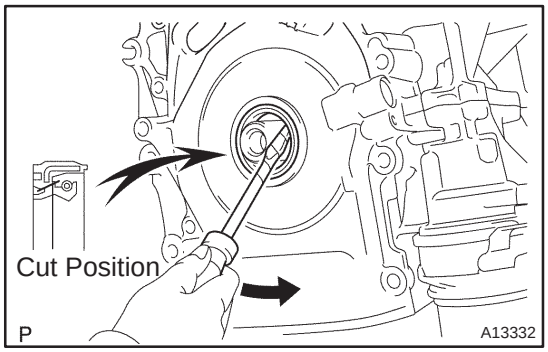

8. REMOVE TIMING GEAR CASE OR TIMING CHAIN CASE OIL SEAL

(a) Using a screwdriver with tip wrapped in the tape, pry out the oil seal.

HINT:

After removal, check if the crankshaft is not damaged.

If it is damaged, smooth the surface with 400–grit sandpaper.

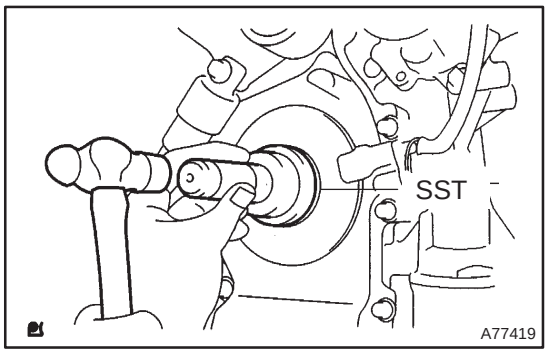

9. INSTALL TIMING GEAR CASE OR TIMING CHAIN CASE OIL SEAL

(a) Apply MP grease to a new oil seal lip.

NOTICE:

Keep the lip off foreign materials.

(b) Using SST and a hammer, tap in the oil seal until its surface is flush with the rear oil seal retainer edge.

SST 09223–22010

NOTICE:

Wipe off extra grease on the crankshaft.

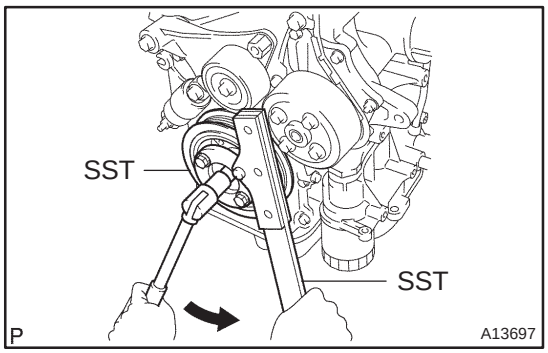

10. INSTALL CRANKSHAFT PULLEY

(a) Align the pulley set key with the key groove of the pulley.

(b) Using SST, install the pulley bolt.

SST 09213–54015 (91651–60855), 09330–00021

Torque: 170 N·m (1,733 kgf·cm, 125 ft·lbf)

11. INSTALL FAN AND GENERATOR V BELT (See page 14–185)

SST 09249–63010

12. INSTALL ENGINE COVER SUB–ASSY NO.1

Torque: 7.0 N·m (71 kgf·cm, 62 in.·lbf)

13. INSTALL FRONT WHEEL RH

Torque: 103 N·m (1,050 kgf·cm, 76 ft·lbf)

14. CHECK FOR ENGINE OIL LEAKS

ENGINE REAR OIL SEAL (1AZ–FSE)

141BS–01

REPLACEMENT

1. **REMOVE MANUAL TRANSAXLE ASSY (M/T TRANSAXLE) (See page 41–24)**
2. **REMOVE AUTOMATIC TRANSAXLE ASSY (A/T TRANSAXLE) (See page 40–25)**
3. **REMOVE CLUTCH COVER ASSY (M/T TRANSAXLE) (See page 42–26)**
4. **REMOVE DRIVE PLATE AND RING GEAR OR FLYWHEEL (See page 14–204)**
   SST 09213–54015 (91651–60855), 09330–00021

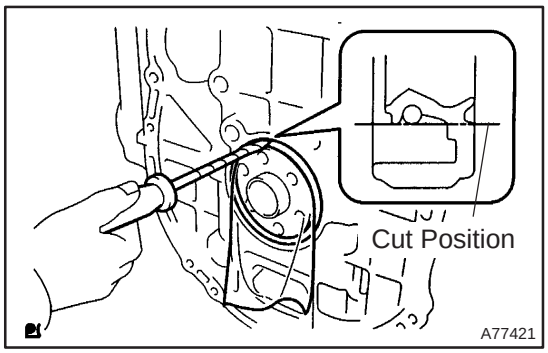

5. **REMOVE ENGINE REAR OIL SEAL**
   (a) Using a knife, cut off the engine rear oil seal lip.
   (b) Using a screwdriver with the tip wrapped in tape, pry out the engine rear oil seal.

HINT:
After the removal, check if the crankshaft is not damaged.
If is damaged, smooth the surface with 400–grit sandpaper.

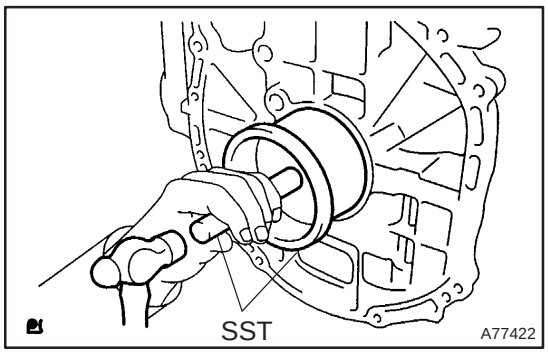

6. **INSTALL ENGINE REAR OIL SEAL**
   (a) Apply MP grease to a new engine rear oil seal lip.

NOTICE:
Keep the lip off foreign materials.

   (b) Using SST and a hammer, tap in the engine rear oil seal until its surface is flush with the engine rear oil seal retainer edge.
   SST 09223–15030, 09950–70010 (09951–07100)

NOTICE:
Wipe off extra grease on the crankshaft.

7. **INSTALL DRIVE PLATE AND RING GEAR OR FLYWHEEL (See page 14–204)**
   SST 09213–54015 (91651–60855), 09330–00021
8. **INSTALL CLUTCH COVER ASSY (M/T TRANSAXLE) (See page 42–26)**
9. **INSTALL MANUAL TRANSAXLE ASSY (M/T TRANSAXLE) (See page 41–24)**
10. **INSTALL AUTOMATIC TRANSAXLE ASSY (A/T TRANSAXLE) (See page 40–25)**

ENGINE (1CD–FTV)

140DD–03

INSPECTION

1. INSPECT COOLANT (See page 16–37)
2. INSPECT ENGINE OIL (See page 17–20)
3. INSPECT BATTERY (See page 19–26)
4. INSPECT AIR CLEANER FILTER ELEMENT SUB–ASSY

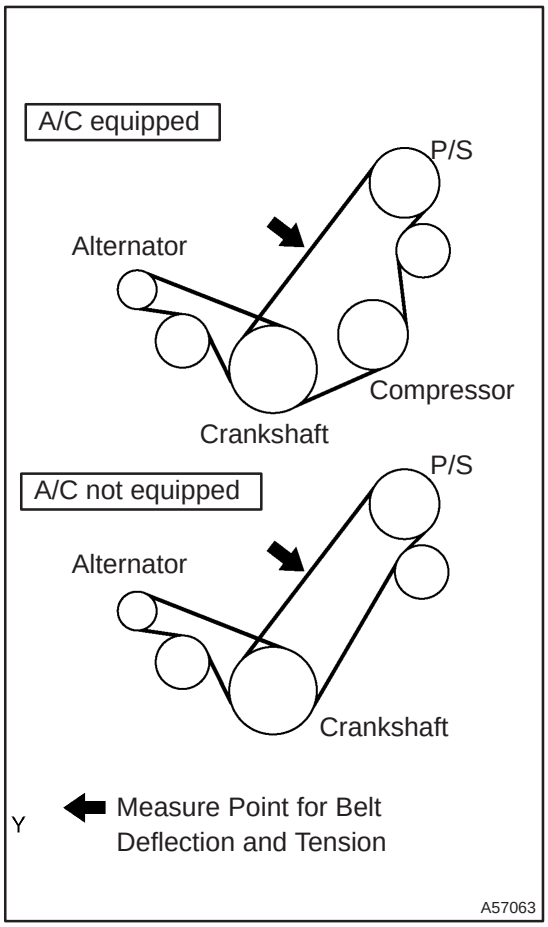

5. INSPECT DRIVE BELT

(a) Inspect vane pump V belt.

(1) Measure the belt deflection

Pressing force: 98 N·m (10 kgf 22 lbf)

	New belt mm (in.)	Used belt mm (in.)
A/C equipped	9.5 to 11.5 (0.37 to 0.45)	12.5 to 15.5 (0.49 to 0.61)
A/C not equipped	10 to 12 (0.39 to 0.47)	14 to 17 (0.55 to 0.67)

(2) Measure the belt tension

	New belt N (kgf, lbf)	Used belt N (kgf, lbf)
A/C equipped	519 to 755 (53 to 77, 117 to 170)	196 to 392 (20 to 40, 44 to 88)
A/C not equipped	686 to 784 (70 to 80, 154 to 176)	294 to 441 (30 to 45, 66 to 99)

NOTICE:

- **Check the drive belt deflection at the specified point.**
- **When installing a new belt, set its tension value as specified.**
- **When inspecting the belt which is used over 5 minutes, apply the specifications of "Used Belt."**
- **When reinstalling the belt which is used over 5 minutes, adjust its deflection and tension to the medium value in each specification of "Used Belt."**
- **V–ribbed belt tension and deflection should be checked after 2 revolutions of engine cranking.**
- **When using a belt tension gauge, confirm the accuracy by using a master gauge first.**

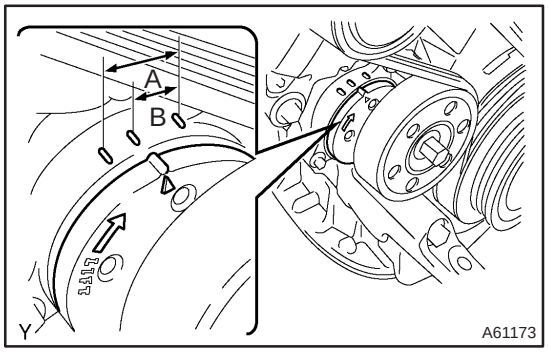

(b) Inspect generator V belt.

(1) Check that the tension indicator is within range A on the auto tensioner scale.

If the tension is not within the A range, replace the belt with a new one.

HINT:

When replacing the drive belt with a new one, the belt tension should be within the B range.

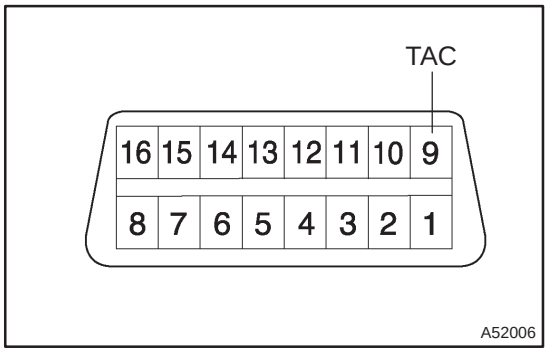

6. INSPECT ENGINE IDLE SPEED

(a) Using SST, connect a tachometer test prove to terminal 9 (TAC) of DLC3.
SST 09843–18040

(b) Check the idle speed.
Idle speed: 750 to 850 rpm

NOTICE:

- **Check the idle speed with the cooling fan OFF.**
- **Switch off all accessories and air conditioning before connecting the test prove to the terminal.**

7. INSPECT MAXIMUM SPEED

(a) Start the engine.

(b) Depress the accelerator pedal to the limit.

(c) Check the maximum speed.
Maximum speed: 5,100 to 5,250 rpm

8. INSPECT COMPRESSION

(a) Warm up the engine to normal operating temperature, and stop the engine.

(b) Remove the glow plugs. (See page 19–33)

(c) Disconnect the injector connectors.

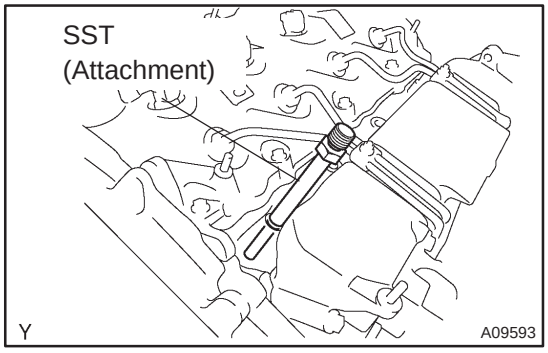

(d) Inspect cylinder compression pressure.
(1) Install SST (attachment) to the glow plug hole.
SST 09992–00025 (09992–00121)
Torque: 12 N·m (125 kgf·cm, 95 ft·lbf)

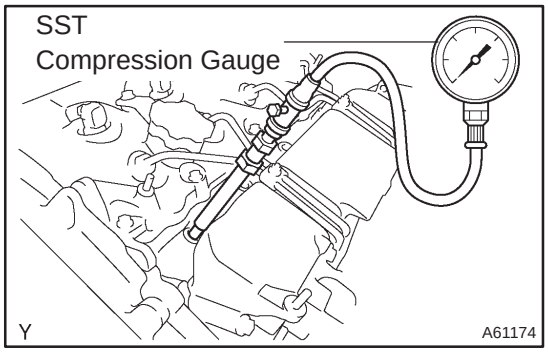

(2) Connect SST (compression gauge) to the SST (attachment).

SST 09992–00025 (09992–00211)

(3) Fully open the throttle valve, and start the engine.

(4) While cranking the engine, measure the compression pressure.

NOTICE:

- **Always use a fully charged battery to obtain engine speed of 250 rpm or more.**
- **Check other cylinder compression pressure in the same way.**
- **This measurement must be done in as short a time as possible.**

Compression pressure:
2,628 kPa (26.8 kgf/cm^2, 381 psi) or more
Minimum pressure:
2,157 kPa (22.0 kgf/cm^2, 312 psi) or more
Difference between each cylinder:
490 kPa (5.0 kgf/cm^2, 71 psi) or less

(5) If the cylinder compression is low, pour a small amount of engine oil into the cylinder through the glow plug hole and inspect again.

HINT:

- If adding oil raises the compression, there are chances of the piston rings and/or cylinder bore wear or damage.
- If pressure stays low, a valve may be sticking or seating improperly, or there may be leakage past the gasket.

DRIVE BELT (1CD–FTV)

141C1–01

REPLACEMENT

1. REMOVE RADIATOR SUPPORT OPENING COVER
2. REMOVE ENGINE ROOM COVER SIDE
3. REMOVE ENGINE UNDER COVER RH

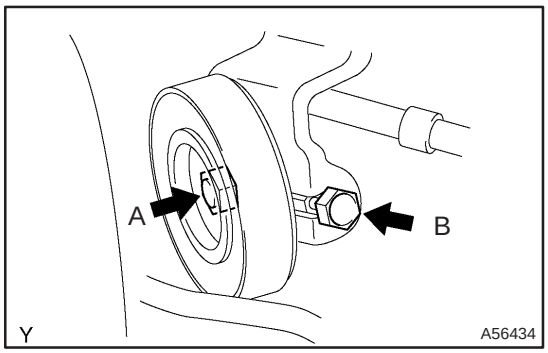

4. REMOVE V (COOLER COMPRESSOR TO CRANKSHAFT PULLEY) BELT NO.1

(a) Loosen nut A and bolt B.

(b) Remove the V–ribbed belt.

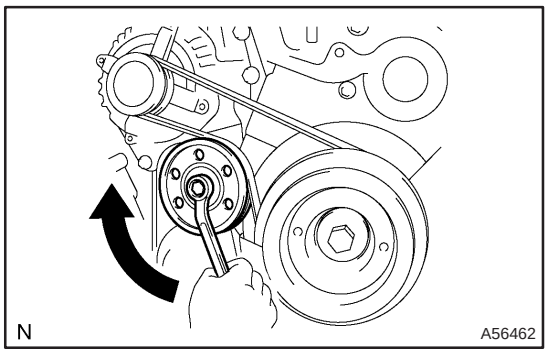

5. REMOVE GENERATOR V BELT

(a) Turn the V–ribbed belt tensioner assy clockwise slowly, and remove the V–ribbed belt.

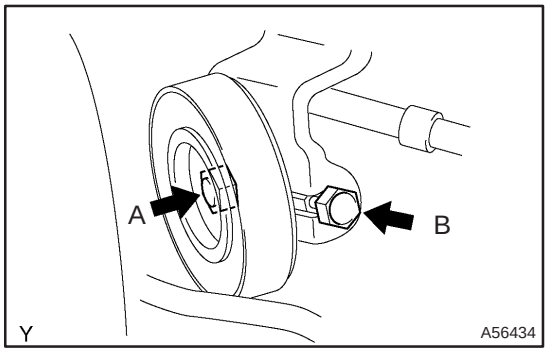

6. ADJUST V (COOLER COMPRESSOR TO CRANKSHAFT PULLEY) BELT NO.1

(a) Install the V–ribbed belt.

(b) Tighten bolt B and adjust the drive belt tension. (See page 14–266)

(c) Tighten nut A.

Torque: 38 N·m (390 kgf·cm, 28 ft·lbf)

VALVE CLEARANCE (1CD–FTV)

141C2–01

ADJUSTMENT

NOTICE:

- **Before removing the injection pipes, clean them up with a soft brush and compressed air.**
- **After removing the injection pipe, cover the supply pump, the common rail and the injector mounting area of the cylinder head cover with vinyl tape to prevent dust from being introduced.**
- **After removing the cylinder head cover, protect the injector inlet with a vinyl or a plastic bag to prevent foreign objects from being introduced.**

HINT:

Inspect and adjust the valve clearance when the engine is cold.

1. REMOVE RADIATOR SUPPORT OPENING COVER

2. REMOVE FRONT WHEEL RH

3. REMOVE ENGINE UNDER COVER RH

4. DRAIN ENGINE COOLANT (See page 16–44)

5. REMOVE ENGINE COVER NO.1

(a) Remove the 5 nuts and the engine cover.

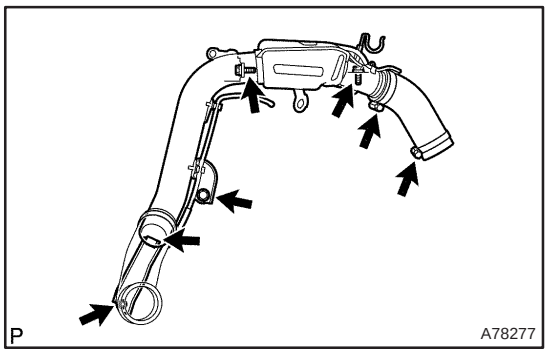

6. REMOVE AIR TUBE NO.1

(a) Disconnect the vacuum hoses and the connectors.

(b) Loosen the hose clamps.

(c) Remove the 3 bolts and nut, and then detach the air tube No. 1.

7. REMOVE TIMING BELT NO.2 COVER (See page 14–307)

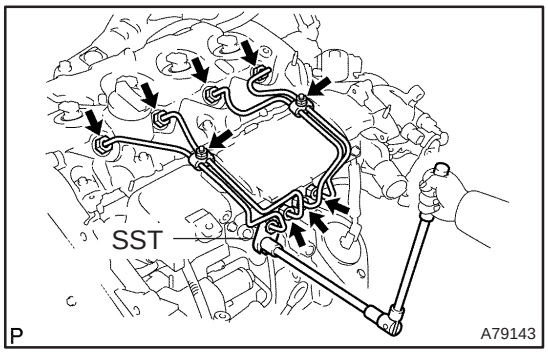

8. REMOVE INJECTION PIPE SUB–ASSY NO.1

(a) Remove the 2 nuts and 2 upper infection pipe clamps from the intake manifold.

(b) Using SST, remove the injection pipe from the common rail side.

SST 09023–12700

(c) Using SST, remove the injection pipe from the injector side.

SST 09023–12700

(d) After removing the fuel pipe, to prevent dust or foreign objects from being introduced, cover the common rail with vinyl tape and protect the injector inlet with a vinyl or a plastic bag.

9. REMOVE INJECTION PIPE SUB–ASSY NO.2

SST 09023–12700

HINT:

Perform the same procedures as injection pipe No. 1.

10. REMOVE INJECTION PIPE SUB–ASSY NO.3

SST 09023–12700

HINT:

Perform the same procedures as injection pipe No. 1.

11. REMOVE INJECTION PIPE SUB–ASSY NO.4

SST 09023–12700

HINT:

Perform the same procedures as injection pipe No. 1.

12. REMOVE CYLINDER HEAD COVER SUB–ASSY (See page 11–60)

13. REMOVE NOZZLE LEAKAGE PIPE ASSY (See page 11–60)

14. REMOVE INJECTOR ASSY (See page 11–60)

HINT:

Since each injector assembly has characteristic fuel injecting behavior, store them in correct order so that they can be returned to the original locations when re–assembling.

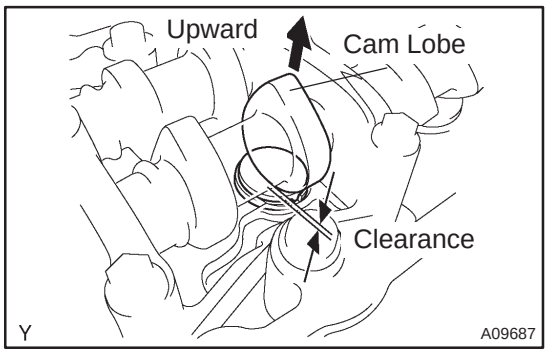

15. INSPECT VALVE CLEARANCE

(a) Turn the crankshaft so that the cam lobe located over the inspecting valve faces upward.

(b) Using a feeler gauge, measure the clearance between the valve lifter and the camshaft.

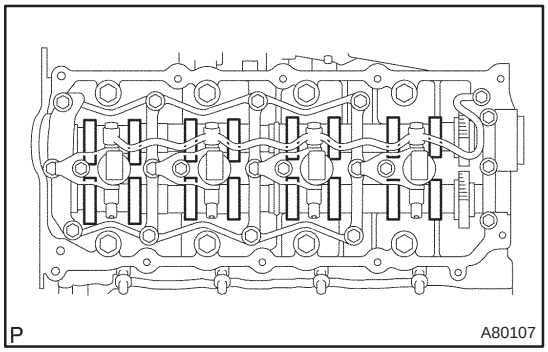

(c) Measure the clearance at 16 places.

(d) Record the out–of specification valve clearance measurements. They will be used later to determine the required replacement adjusting shim.

Valve clearance (Cold):

Intake	0.20 to 0.30 mm (0.008 to 0.012 in.)
Exhaust	0.35 to 0.45 mm (0.014 to 0.018 in.)

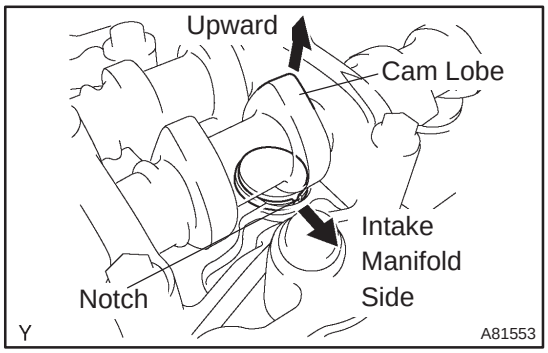

16. ADJUST VALVE CLEARANCE

(a) Remove the adjusting shim.

(1) Turn the crankshaft so that the cam lobe located over the adjusting valve faces upward.

(2) Position the notch of the valve lifter toward the intake manifold side.

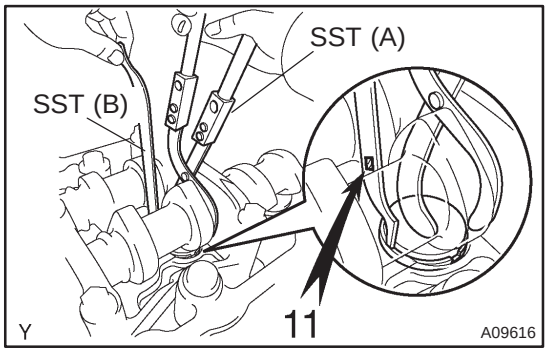

(3) Using SST (A), press down the valve lifter and place SST (B) between the camshaft and valve lifter. Remove SST (A).

SST 09248–55050 (09248–05510, 09248–05520)

HINT:
Apply SST (B) which marked ”11”.

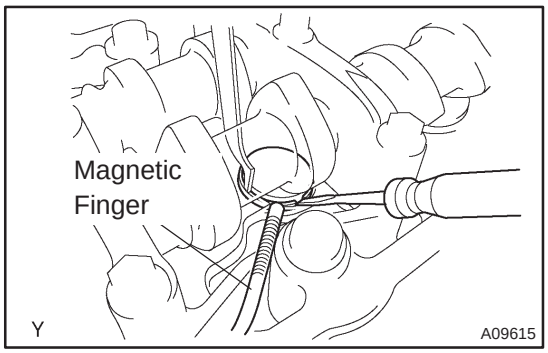

(4) Remove the adjusting shim with a small screwdriver and a magnetic finger.

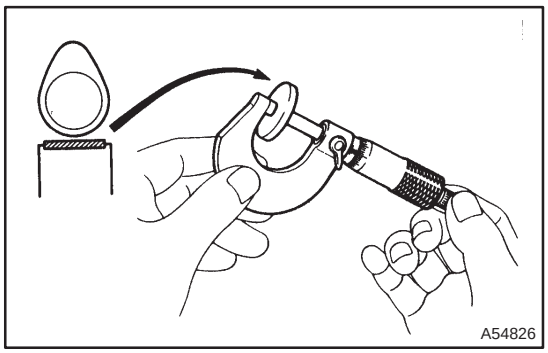

(b) Determine the replacement adjusting shim size using the following formula or the matrix attached to the end of this section.

(1) Using a micrometer, measure the thickness of the removed shim.

(2) Calculate the thickness of a new shim so that the valve clearance comes within specified value.

HINT:
T ..... Thickness of removed adjusting shim
A ..... Measured valve clearance
N ..... Thickness of new adjusting shim
Intake: N = T + (A – 0.25 mm (0.010 in.))
Exhaust: N = T + (A – 0.40 mm (0.016 in.))

(3) Select a new shim with a thickness as close as possible to the calculated value.

EXAMPLE (Intake):
Measured valve clearance = 0.45 mm (0.0177 in.)
0.45 mm (0.0177 in.) – 0.25 mm (0.0098 in.) = 0.20 mm (0.0078 in.)
(Measured – Specification = Excess clearance)
Used shim measurement = 2.80 mm (0.1102 in.)
0.20 mm (0.0078 in.) + 2.80 mm (0.1102 in.) = 3.00 mm (0.1181 in.)
(Excess clearance + Used shim = Ideal new shim)
Closest new shim = 3.00 mm (0.1181 in.)
Select No. 21 Shim

HINT:
Shims are available in 17 sizes in increments of 0.05 mm (0.0020 in.), from 2.50 mm (0.0984 in.) to 3.30 mm (0.1299 in.).

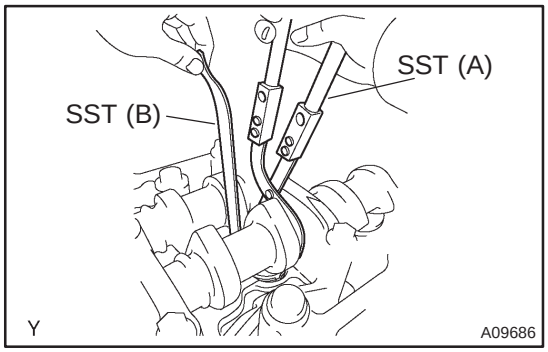

(c) Install a new adjusting shim.
(1) Place a new adjusting shim on the valve lifter.
(2) Using SST (A), press down the valve lifter and remove SST (B).
SST 09248–55050 (09248–05510, 09248–05520)

(d) Recheck the valve clearance.
SST 09248–55050 (09248–05510, 09248–05520)

17. INSTALL INJECTOR ASSY (See page 11–60)

18. INSTALL NOZZLE LEAKAGE PIPE ASSY (See page 11–60)
SST 09992–00242

19. INSTALL CYLINDER HEAD COVER SUB–ASSY (See page 11–60)

20. INSTALL INJECTION PIPE SUB–ASSY NO.1 (See page 11–60)

NOTICE:
When assembling the pipes, perform the operation with the engine cold under room temperature.

(a) Remove the vinyl or the plastic bag from the injector and vinyl tape from the common rail.

(b) Temporarily install the injection pipe.

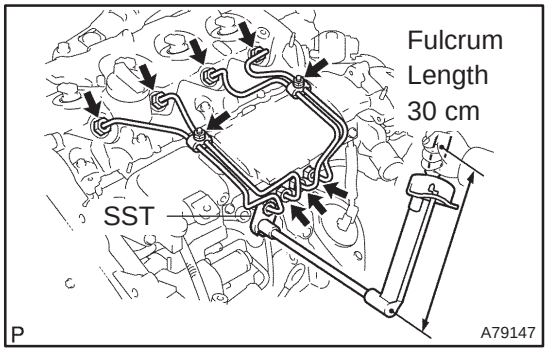

(c) Using SST, tighten the nut of the injection pipe to the common rail side.
SST 09023–12700
Torque:
42 N·m (428 kgf·cm, 31 ft·lbf) for a used pipe using SST
46 N·m (469 kgf·cm, 34 ft·lbf) for a used pipe not using SST
31 N·m (316 kgf·cm, 23 ft·lbf) for a new pipe using SST
34 N·m (347 kgf·cm, 25 ft·lbf) for a new pipe not using SST

HINT:
- Use a torque wrench with a fulcrum length of 30 cm (11.81 in.)
- Check if the used pipe has deflection or is installed properly after injection pipe is reassembled. If there is deflection or if it can not be installed properly, replace the used pipe with a new pipe.

(d) Using SST, tighten the nut of the injection pipe to the injector side.
SST 09023–12700
Torque:
42 N·m (428 kgf·cm, 31 ft·lbf) for a used pipe using SST
46 N·m (469 kgf·cm, 34 ft·lbf) for a used pipe not using SST
31 N·m (316 kgf·cm, 23 ft·lbf) for a new pipe using SST
34 N·m (347 kgf·cm, 25 ft·lbf) for a new pipe not using SST

HINT:
- Use a torque wrench with a fulcrum length of 30 cm (11.81 in.)
- Check if the used pipe has deflection or is installed properly after injection pipe is reassembled. If there is deflection or if it can not be installed properly, replace the used pipe with a new pipe.

(e) Install the 2 upper injection pipe clamps with the 2 nuts.
Torque: 5.0 N·m (51 kgf·cm, 44 in.·lbf)

21. INSTALL INJECTION PIPE SUB–ASSY NO.2
SST 09023–12700

HINT:
Perform the same procedures as injection pipe No. 1.

22. INSTALL INJECTION PIPE SUB–ASSY NO.3
SST 09023–12700

HINT:
Perform the same procedures as injection pipe No. 1.

23. INSTALL INJECTION PIPE SUB–ASSY NO.4
SST 09023–12700

HINT:
Perform the same procedures as injection pipe No. 1.

24. INSTALL TIMING BELT NO.2 COVER (See page 11–60)

25. INSTALL AIR TUBE NO.1
Torque: 25 N·m (255 kgf·cm, 18 ft·lbf)

26. INSTALL ENGINE COVER NO.1
Torque: 8.0 N·m (82 kgf·cm, 71 in.·lbf)

27. INSTALL FRONT WHEEL RH
Torque: 103 N·m (1,050 kgf·cm, 76 ft·lbf)

28. ADD ENGINE COOLANT (See page 16–44)

29. CHECK FOR ENGINE COOLANT LEAKS (See page 16–44)

30. CHECK FOR FUEL LEAKS (See page 11–60)

Adjusting Shim Selection Chart (Intake)

Measured clearance mm (in.) \ Installed shim thickness mm (in.)	2.500 (0.0984)	2.525 (0.0994)	2.550 (0.1004)	2.575 (0.1014)	2.600 (0.1024)	2.625 (0.1033)	2.650 (0.1043)	2.675 (0.1053)	2.700 (0.1063)	2.725 (0.1073)	2.750 (0.1083)	2.775 (0.1093)	2.800 (0.1102)	2.825 (0.1112)	2.850 (0.1122)	2.875 (0.1132)	2.900 (0.1142)	2.925 (0.1152)	2.950 (0.1161)	2.975 (0.1171)	3.000 (0.1181)	3.025 (0.1191)	3.050 (0.1201)	3.075 (0.1211)	3.100 (0.1220)	3.125 (0.1230)	3.150 (0.1240)	3.175 (0.1250)	3.200 (0.1260)	3.225 (0.1270)	3.250 (0.1280)	3.275 (0.1289)	3.300 (0.1299)
0.000 ~ 0.020 (0.0000 ~ 0.0008)									01	01	01	03	03	05	05	07	07	09	09	11	11	13	13	15	15	17	17	19	19	21	21	23	23
0.021 ~ 0.040 (0.0008 ~ 0.0016)									01	01	03	03	05	05	07	07	09	09	11	11	13	13	15	15	17	17	19	19	21	21	23	23	25
0.041 ~ 0.060 (0.0016 ~ 0.0024)								01	01	03	03	05	05	07	07	09	09	11	11	13	13	15	15	17	17	19	19	21	21	23	23	25	25
0.061 ~ 0.080 (0.0024 ~ 0.0031)							01	01	01	03	03	05	05	07	07	09	09	11	11	13	13	15	15	17	17	19	19	21	21	23	23	25	25
0.081 ~ 0.100 (0.0032 ~ 0.0039)						01	01	01	03	03	05	05	07	07	09	09	11	11	13	13	15	15	17	17	19	19	21	21	23	23	25	25	27
0.101 ~ 0.120 (0.0040 ~ 0.0047)					01	01	01	03	03	05	05	07	07	09	09	11	11	13	13	15	15	17	17	19	19	21	21	23	23	25	25	27	27
0.121 ~ 0.140 (0.0048 ~ 0.0055)					01	01	03	03	05	05	07	07	09	09	11	11	13	13	15	15	17	17	19	19	21	21	23	23	25	25	27	27	29
0.141 ~ 0.160 (0.0056 ~ 0.0063)				01	01	03	03	05	05	07	07	09	09	11	11	13	13	15	15	17	17	19	19	21	21	23	23	25	25	27	27	29	29
0.161 ~ 0.180 (0.0063 ~ 0.0071)			01	01	01	03	03	05	05	07	07	09	09	11	11	13	13	15	15	17	17	19	19	21	21	23	23	25	25	27	27	29	29
0.181 ~ 0.199 (0.0071 ~ 0.0078)		01	01	01	03	03	05	05	07	07	09	09	11	11	13	13	15	15	17	17	19	19	21	21	23	23	25	25	27	27	29	29	31
0.200 ~ 0.300 (0.0079 ~ 0.0118)																																	
0.301 ~ 0.320 (0.0119 ~ 0.0126)	03	05	05	07	07	09	09	11	11	13	13	15	15	17	17	19	19	21	21	23	23	25	25	27	27	29	29	31	31	33	33	33	
0.321 ~ 0.340 (0.0126 ~ 0.0134)	05	05	07	07	09	09	11	11	13	13	15	15	17	17	19	19	21	21	23	23	25	25	27	27	29	29	31	31	33	33	33		
0.341 ~ 0.360 (0.0134 ~ 0.0142)	05	07	07	09	09	11	11	13	13	15	15	17	17	19	19	21	21	23	23	25	25	27	27	29	29	31	31	33	33	33			
0.361 ~ 0.380 (0.0142 ~ 0.0150)	05	07	07	09	09	11	11	13	13	15	15	17	17	19	19	21	21	23	23	25	25	27	27	29	29	31	31	33	33				
0.381 ~ 0.400 (0.0150 ~ 0.0157)	07	07	09	09	11	11	13	13	15	15	17	17	19	19	21	21	23	23	25	25	27	27	29	29	31	31	33	33	33				
0.401 ~ 0.420 (0.0158 ~ 0.0165)	07	09	09	11	11	13	13	15	15	17	17	19	19	21	21	23	23	25	25	27	27	29	29	31	31	33	33	33					
0.421 ~ 0.440 (0.0166 ~ 0.0173)	09	09	11	11	13	13	15	15	17	17	19	19	21	21	23	23	25	25	27	27	29	29	31	31	33	33	33						
0.441 ~ 0.460 (0.0174 ~ 0.0181)	09	11	11	13	13	15	15	17	17	19	19	21	21	23	23	25	25	27	27	29	29	31	31	33	33	33							
0.461 ~ 0.480 (0.0181 ~ 0.0189)	09	11	11	13	13	15	15	17	17	19	19	21	21	23	23	25	25	27	27	29	29	31	31	33	33								
0.481 ~ 0.500 (0.0189 ~ 0.0197)	11	11	13	13	15	15	17	17	19	19	21	21	23	23	25	25	27	27	29	29	31	31	33	33	33								
0.501 ~ 0.520 (0.0197 ~ 0.0205)	11	13	13	15	15	17	17	19	19	21	21	23	23	25	25	27	27	29	29	31	31	33	33	33									
0.521 ~ 0.540 (0.0205 ~ 0.0213)	13	13	15	15	17	17	19	19	21	21	23	23	25	25	27	27	29	29	31	31	33	33	33										
0.541 ~ 0.560 (0.0213 ~ 0.0220)	13	15	15	17	17	19	19	21	21	23	23	25	25	27	27	29	29	31	31	33	33	33											
0.561 ~ 0.580 (0.0221 ~ 0.0228)	13	15	15	17	17	19	19	21	21	23	23	25	25	27	27	29	29	31	31	33	33												
0.581 ~ 0.600 (0.0229 ~ 0.0236)	15	15	17	17	19	19	21	21	23	23	25	25	27	27	29	29	31	31	33	33	33												
0.601 ~ 0.620 (0.0237 ~ 0.0244)	15	17	17	19	19	21	21	23	23	25	25	27	27	29	29	31	31	33	33	33													
0.621 ~ 0.640 (0.0244 ~ 0.0252)	17	17	19	19	21	21	23	23	25	25	27	27	29	29	31	31	33	33	33														
0.641 ~ 0.660 (0.0252 ~ 0.0260)	17	19	19	21	21	23	23	25	25	27	27	29	29	31	31	33	33	33															
0.661 ~ 0.680 (0.0260 ~ 0.0268)	17	19	19	21	21	23	23	25	25	27	27	29	29	31	31	33	33																
0.681 ~ 0.700 (0.0268 ~ 0.0276)	19	19	21	21	23	23	25	25	27	27	29	29	31	31	33	33	33																
0.701 ~ 0.720 (0.0276 ~ 0.0283)	19	21	21	23	23	25	25	27	27	29	29	31	31	33	33	33																	
0.721 ~ 0.740 (0.0284 ~ 0.0291)	21	21	23	23	25	25	27	27	29	29	31	31	33	33	33																		
0.741 ~ 0.760 (0.0292 ~ 0.0299)	21	23	23	25	25	27	27	29	29	31	31	33	33	33																			
0.761 ~ 0.780 (0.0300 ~ 0.0307)	21	23	23	25	25	27	27	29	29	31	31	33	33																				
0.781 ~ 0.800 (0.0307 ~ 0.0315)	23	23	25	25	27	27	29	29	31	31	33	33	33																				
0.801 ~ 0.820 (0.0315 ~ 0.0323)	23	25	25	27	27	29	29	31	31	33	33	33																					
0.821 ~ 0.840 (0.0323 ~ 0.0331)	25	25	27	27	29	29	31	31	33	33	33																						
0.841 ~ 0.860 (0.0331 ~ 0.0339)	25	27	27	29	29	31	31	33	33	33																							
0.861 ~ 0.880 (0.0339 ~ 0.0346)	25	27	27	29	29	31	31	33	33																								
0.881 ~ 0.900 (0.0347 ~ 0.0354)	27	27	29	29	31	31	33	33	33																								
0.901 ~ 0.920 (0.0355 ~ 0.0362)	27	29	29	31	31	33	33	33																									
0.921 ~ 0.940 (0.0363 ~ 0.0370)	29	29	31	31	33	33	33																										
0.941 ~ 0.960 (0.0370 ~ 0.0378)	29	31	31	33	33	33																											
0.961 ~ 0.980 (0.0378 ~ 0.0386)	29	31	31	33	33																												
0.981 ~ 1.000 (0.0386 ~ 0.0394)	31	31	33	33	33																												
1.001 ~ 1.020 (0.0394 ~ 0.0402)	31	33	33	33																													
1.121 ~ 1.040 (0.0402 ~ 0.0409)	33	33	33																														
1.041 ~ 1.060 (0.0410 ~ 0.0417)	33	33																															
1.161 ~ 1.080 (0.0418 ~ 0.0425)	33																																
1.081 ~ 1.100 (0.0426 ~ 0.0433)	33																																

New shim thickness mm (in.)

Shim No.	Thickness	Shim No.	Thickness
01	2.500 (0.0984)	19	2.950 (0.1161)
03	2.550 (0.1004)	21	3.000 (0.1181)
05	2.600 (0.1024)	23	3.050 (0.1201)
07	2.650 (0.1043)	25	3.100 (0.1220)
09	2.700 (0.1063)	27	3.150 (0.1240)
11	2.750 (0.1083)	29	3.200 (0.1260)
13	2.800 (0.1102)	31	3.250 (0.1280)
15	2.850 (0.1122)	33	3.300 (0.1299)
17	2.900 (0.1142)		

Intake valve clearance (Cold):

0.20 – 0.30 mm (0.008 – 0.012 in.)

EXAMPLE: The 2.800 mm (0.1102 in.) shim is installed, and the measured clearance is 0.450 mm (0.0177 in.). Replace the 2.800 mm (0.1102 in.) shim with a new No.21 shim.

Y

A57526

Adjusting Shim Selection Chart (Exhaust)

Measured clearance mm (in.) \ Installed shim thickness mm (in.)	2.500 (0.0984)	2.525 (0.0994)	2.550 (0.1004)	2.575 (0.1014)	2.600 (0.1024)	2.625 (0.1033)	2.650 (0.1043)	2.675 (0.1053)	2.700 (0.1063)	2.725 (0.1073)	2.750 (0.1073)	2.775 (0.1093)	2.800 (0.1102)	2.825 (0.1112)	2.850 (0.1122)	2.875 (0.1132)	2.900 (0.1142)	2.925 (0.1152)	2.950 (0.1161)	2.975 (0.1171)	3.000 (0.1181)	3.025 (0.1191)	3.050 (0.1201)	3.075 (0.1211)	3.100 (0.1220)	3.125 (0.1230)	3.150 (0.1240)	3.175 (0.1250)	3.200 (0.1260)	3.225 (0.1270)	3.250 (0.1280)	3.275 (0.1289)	3.300 (0.1299)
0.000 ~ 0.020 (0.0000 ~ 0.0008)															01	01	01	03	03	05	05	07	07	09	09	11	11	13	13	15	15	17	17
0.021 ~ 0.040 (0.0008 ~ 0.0016)															01	01	03	03	05	05	07	07	09	09	11	11	13	13	15	15	17	17	19	
0.041 ~ 0.060 (0.0016 ~ 0.0024)														01	01	03	03	05	05	07	07	09	09	11	11	13	13	15	15	17	17	19	19		
0.061 ~ 0.080 (0.0024 ~ 0.0031)													01	01	01	03	03	05	05	07	07	09	09	11	11	13	13	15	15	17	17	19	19		
0.081 ~ 0.100 (0.0032 ~ 0.0039)												01	01	01	03	03	05	05	07	07	09	09	11	11	13	13	15	15	17	17	19	19	21	
0.101 ~ 0.120 (0.0040 ~ 0.0047)											01	01	01	03	03	05	05	07	07	09	09	11	11	13	13	15	15	17	17	19	19	21	21	
0.121 ~ 0.140 (0.0048 ~ 0.0055)											01	01	03	03	05	05	07	07	09	09	11	11	13	13	15	15	17	17	19	19	21	21	23	
0.141 ~ 0.160 (0.0056 ~ 0.0063)										01	01	03	03	05	05	07	07	09	09	11	11	13	13	15	15	17	17	19	19	21	21	23	23	
0.161 ~ 0.180 (0.0063 ~ 0.0071)									01	01	01	03	03	05	05	07	07	09	09	11	11	13	13	15	15	17	17	19	19	21	21	23	23	
0.181 ~ 0.200 (0.0071 ~ 0.0079)								01	01	01	03	03	05	05	07	07	09	09	11	11	13	13	15	15	17	17	19	19	21	21	23	23	25	
0.201 ~ 0.220 (0.0079 ~ 0.0087)							01	01	01	03	03	05	05	07	07	09	09	11	11	13	13	15	15	17	17	19	19	21	21	23	23	25	25	
0.221 ~ 0.240 (0.0087 ~ 0.0094)							01	01	01	03	03	05	05	07	07	09	09	11	11	13	13	15	15	17	17	19	19	21	21	23	23	25	25	
0.241 ~ 0.260 (0.0095 ~ 0.0102)						01	01	01	03	03	05	05	07	07	09	09	11	11	13	13	15	15	17	17	19	19	21	21	23	23	25	25	27	
0.261 ~ 0.280 (0.0103 ~ 0.0110)					01	01	01	03	03	05	05	07	07	09	09	11	11	13	13	15	15	17	17	19	19	21	21	23	23	25	25	27	27	
0.281 ~ 0.300 (0.0111 ~ 0.0118)				01	01	01	03	03	05	05	07	07	09	09	11	11	13	13	15	15	17	17	19	19	21	21	23	23	25	25	27	27	29	
0.301 ~ 0.320 (0.0119 ~ 0.0126)			01	01	01	03	03	05	05	07	07	09	09	11	11	13	13	15	15	17	17	19	19	21	21	23	23	25	25	27	27	29	29	
0.321 ~ 0.340 (0.0126 ~ 0.0134)			01	01	01	03	03	05	05	07	07	09	09	11	11	13	13	15	15	17	17	19	19	21	21	23	23	25	25	27	27	29	29	
0.341 ~ 0.349 (0.0134 ~ 0.0137)		01	01	01	03	03	05	05	07	07	09	09	11	11	13	13	15	15	17	17	19	19	21	21	23	23	25	25	27	27	29	29	31	
0.350 ~ 0.450 (0.0138 ~ 0.0177)																																		
0.451 ~ 0.460 (0.0178 ~ 0.0181)	03	05	05	07	07	09	09	11	11	13	13	15	15	17	17	19	19	21	21	23	23	25	25	27	27	29	29	31	31	33	33	33		
0.461 ~ 0.480 (0.0181 ~ 0.0189)	05	05	07	07	09	09	11	11	13	13	15	15	17	17	19	19	21	21	23	23	25	25	27	27	29	29	31	31	33	33	33			
0.481 ~ 0.500 (0.0189 ~ 0.0197)	05	07	07	09	09	11	11	13	13	15	15	17	17	19	19	21	21	23	23	25	25	27	27	29	29	31	31	33	33	33	33			
0.501 ~ 0.520 (0.0197 ~ 0.0205)	05	07	07	09	09	11	11	13	13	15	15	17	17	19	19	21	21	23	23	25	25	27	27	29	29	31	31	33	33	33				
0.521 ~ 0.540 (0.0205 ~ 0.0213)	07	07	09	09	11	11	13	13	15	15	17	17	19	19	21	21	23	23	25	25	27	27	29	29	31	31	33	33	33					
0.541 ~ 0.560 (0.0213 ~ 0.0220)	07	09	09	11	11	13	13	15	15	17	17	19	19	21	21	23	23	25	25	27	27	29	29	31	31	33	33	33						
0.561 ~ 0.580 (0.0221 ~ 0.0228)	09	09	11	11	13	13	15	15	17	17	19	19	21	21	23	23	25	25	27	27	29	29	31	31	33	33	33							
0.581 ~ 0.600 (0.0229 ~ 0.0236)	09	11	11	13	13	15	15	17	17	19	19	21	21	23	23	25	25	27	27	29	29	31	31	33	33	33	33							
0.601 ~ 0.620 (0.0237 ~ 0.0244)	09	11	11	13	13	15	15	17	17	19	19	21	21	23	23	25	25	27	27	29	29	31	31	33	33	33								
0.621 ~ 0.640 (0.0244 ~ 0.0252)	11	11	13	13	15	15	17	17	19	19	21	21	23	23	25	25	27	27	29	29	31	31	33	33	33									
0.641 ~ 0.660 (0.0252 ~ 0.0260)	11	13	13	15	15	17	17	19	19	21	21	23	23	25	25	27	27	29	29	31	31	33	33	33										
0.661 ~ 0.680 (0.0260 ~ 0.0268)	13	13	15	15	17	17	19	19	21	21	23	23	25	25	27	27	29	29	31	31	33	33	33											
0.681 ~ 0.700 (0.0268 ~ 0.0276)	13	15	15	17	17	19	19	21	21	23	23	25	25	27	27	29	29	31	31	33	33	33	33											
0.701 ~ 0.720 (0.0276 ~ 0.0283)	13	15	15	17	17	19	19	21	21	23	23	25	25	27	27	29	29	31	31	33	33	33												
0.721 ~ 0.740 (0.0284 ~ 0.0291)	15	15	17	17	19	19	21	21	23	23	25	25	27	27	29	29	31	31	33	33	33													
0.741 ~ 0.760 (0.0292 ~ 0.0299)	15	17	17	19	19	21	21	23	23	25	25	27	27	29	29	31	31	33	33	33														
0.761 ~ 0.780 (0.0300 ~ 0.0307)	17	17	19	19	21	21	23	23	25	25	27	27	29	29	31	31	33	33	33															
0.781 ~ 0.800 (0.0307 ~ 0.0315)	17	19	19	21	21	23	23	25	25	27	27	29	29	31	31	33	33	33	33															
0.801 ~ 0.820 (0.0315 ~ 0.0323)	17	19	19	21	21	23	23	25	25	27	27	29	29	31	31	33	33	33																
0.821 ~ 0.840 (0.0323 ~ 0.0331)	19	19	21	21	23	23	25	25	27	27	29	29	31	31	33	33	33																	
0.841 ~ 0.860 (0.0331 ~ 0.0339)	19	21	21	23	23	25	25	27	27	29	29	31	31	33	33	33																		
0.861 ~ 0.880 (0.0339 ~ 0.0346)	21	21	23	23	25	25	27	27	29	29	31	31	33	33	33																			
0.881 ~ 0.900 (0.0347 ~ 0.0354)	21	23	23	25	25	27	27	29	29	31	31	33	33	33	33																			
0.901 ~ 0.920 (0.0355 ~ 0.0362)	21	23	23	25	25	27	27	29	29	31	31	33	33	33																				
0.921 ~ 0.940 (0.0363 ~ 0.0370)	23	23	25	25	27	27	29	29	31	31	33	33	33																					
0.941 ~ 0.960 (0.0370 ~ 0.0378)	23	25	25	27	27	29	29	31	31	33	33	33																						
0.961 ~ 0.980 (0.0378 ~ 0.0386)	25	25	27	27	29	29	31	31	33	33	33																							
0.981 ~ 1.000 (0.0386 ~ 0.0394)	25	27	27	29	29	31	31	33	33	33	33																							
1.001 ~ 1.020 (0.0394 ~ 0.0402)	25	27	27	29	29	31	31	33	33	33																								
1.021 ~ 1.040 (0.0402 ~ 0.0409)	27	27	29	29	31	31	33	33	33																									
1.041 ~ 1.060 (0.0410 ~ 0.0417)	27	29	29	31	31	33	33	33																										
1.061 ~ 1.080 (0.0418 ~ 0.0425)	29	29	31	31	33	33	33																											
1.081 ~ 1.100 (0.0426 ~ 0.0433)	29	31	31	33	33	33	33																											
1.101 ~ 1.120 (0.0433 ~ 0.0441)	29	31	31	33	33	33																												
1.121 ~ 1.140 (0.0441 ~ 0.0449)	31	31	33	33	33																													
1.141 ~ 1.160 (0.0449 ~ 0.0457)	31	33	33	33																														
1.161 ~ 1.180 (0.0457 ~ 0.0465)	33	33	33																															
1.181 ~ 1.200 (0.0465 ~ 0.0472)	33	33	33																															
1.201 ~ 1.220 (0.0473 ~ 0.0480)	33	33																																
1.221 ~ 1.240 (0.0481 ~ 0.0488)	33																																	

New shim thickness mm (in.)

Shim No.	Thickness	Shim No.	Thickness
01	2.500 (0.0984)	19	2.950 (0.1161)
03	2.550 (0.1004)	21	3.000 (0.1181)
05	2.600 (0.1024)	23	3.050 (0.1201)
07	2.650 (0.1043)	25	3.100 (0.1220)
09	2.700 (0.1063)	27	3.150 (0.1240)
11	2.750 (0.1083)	29	3.200 (0.1260)
13	2.800 (0.1102)	31	3.250 (0.1280)
15	2.850 (0.1122)	33	3.300 (0.1299)
17	2.900 (0.1142)		

Exhaust valve clearance (Cold):

0.35 – 0.45 mm (0.014 – 0.018 in.)

EXAMPLE: The 2.800 mm (0.1102 in.) shim is installed, and the measured clearance is 0.590 mm (0.0232 in.). Replace the 2.800 mm (0.1102 in.) shim with a new No.21 shim.

Y

A57527

PARTIAL ENGINE ASSY (1CD–FTV)

141C3–01

COMPONENTS

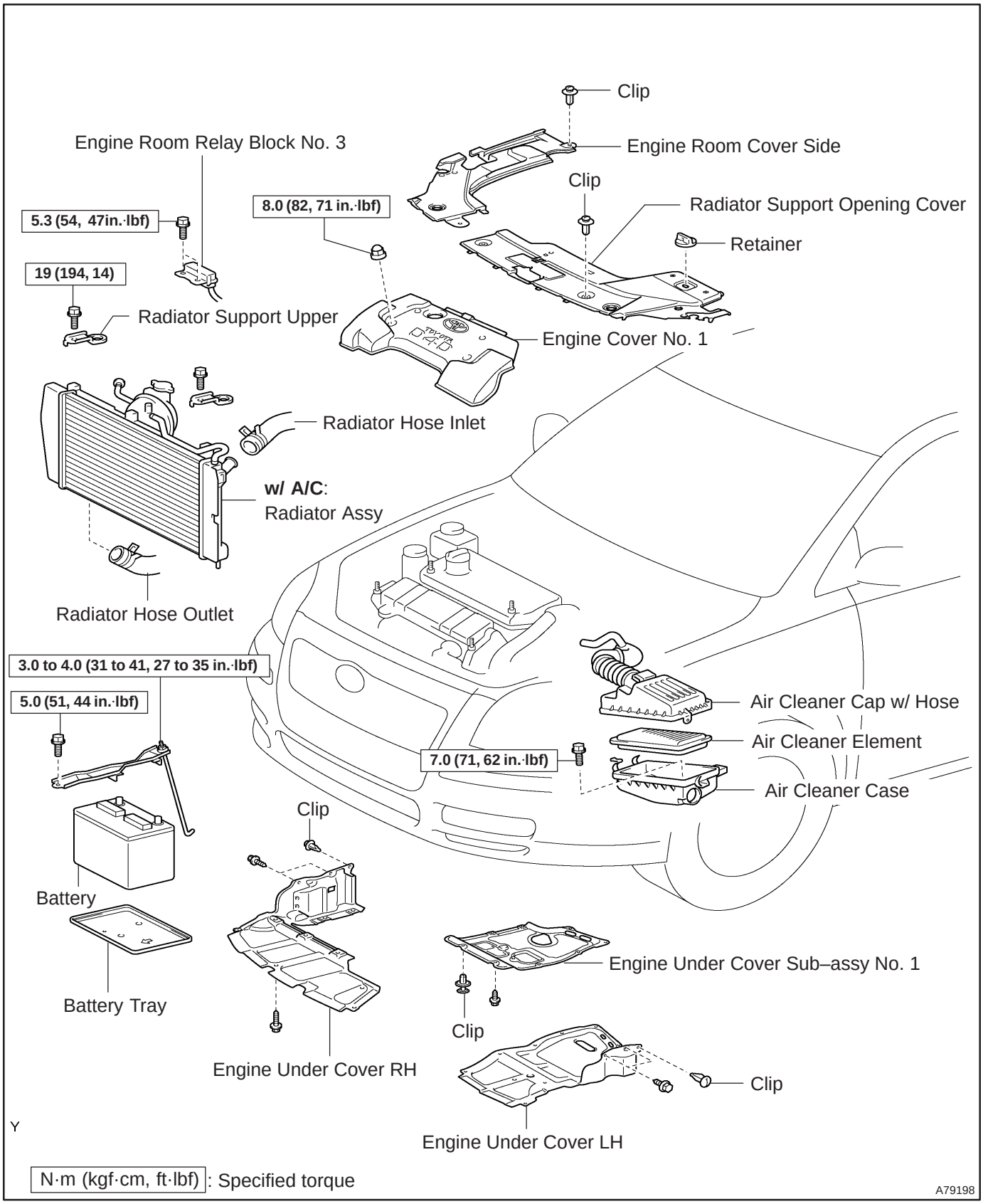

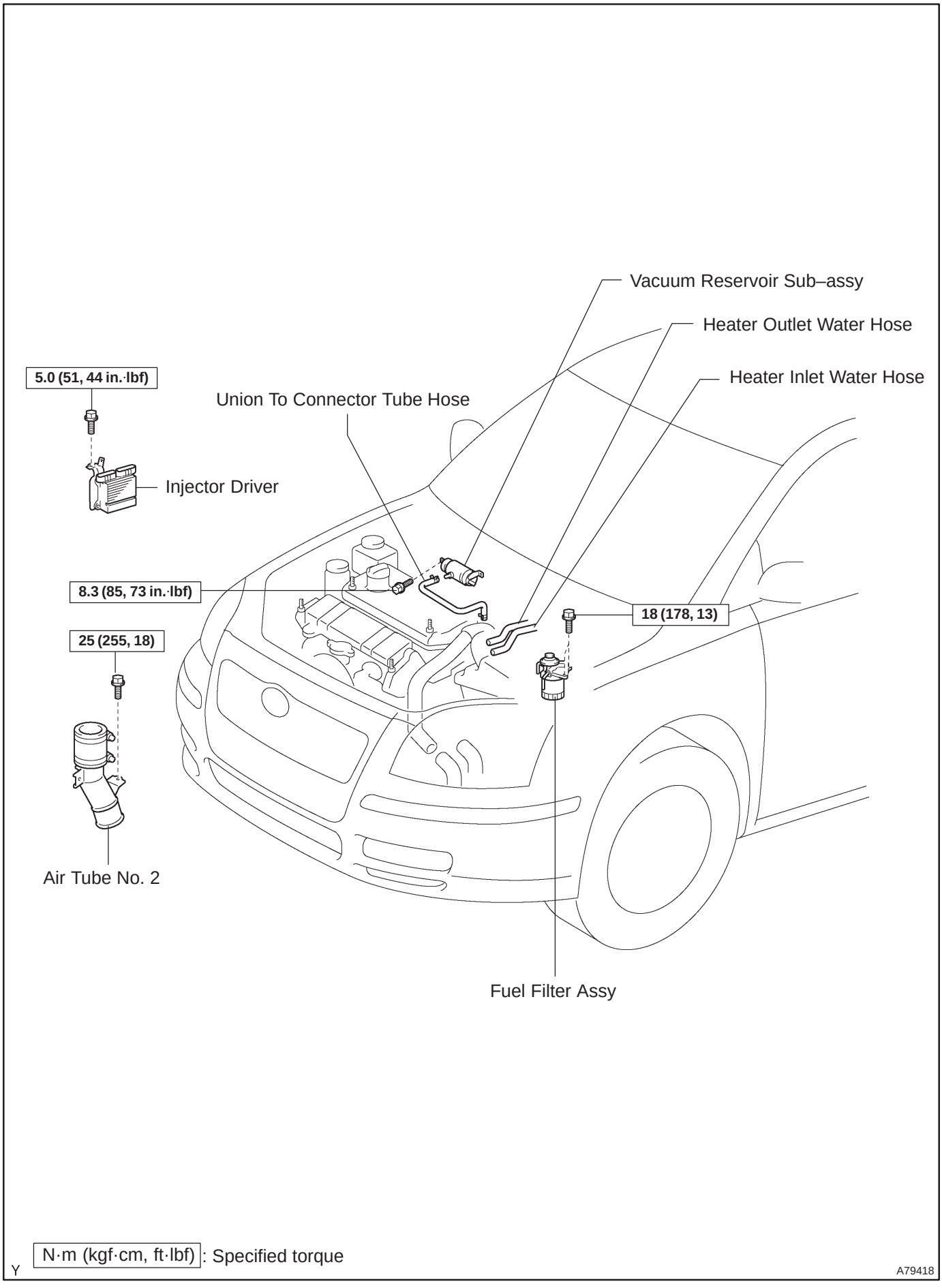
Vacuum Reservoir Sub–assy
Heater Outlet Water Hose
Heater Inlet Water Hose
5.0 (51, 44 in.·lbf)
Union To Connector Tube Hose
Injector Driver
8.3 (85, 73 in.·lbf)
18 (178, 13)
25 (255, 18)
Air Tube No. 2
Fuel Filter Assy
N·m (kgf·cm, ft·lbf): Specified torque
Y
A79418

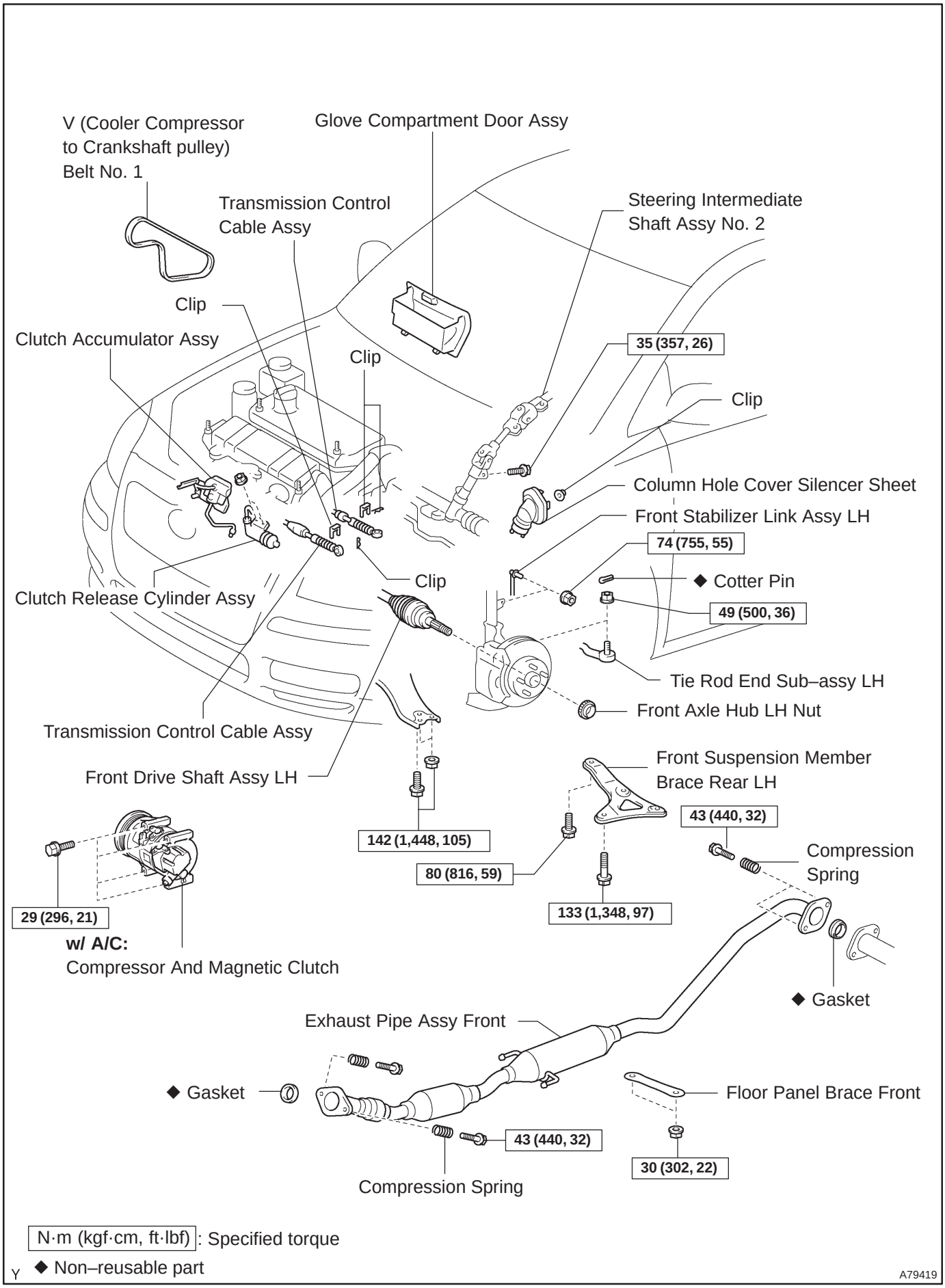
V (Cooler Compressor to Crankshaft pulley) Belt No. 1
Glove Compartment Door Assy
Transmission Control Cable Assy
Steering Intermediate Shaft Assy No. 2
Clip
Clutch Accumulator Assy
Clip
35 (357, 26)
Clip
Column Hole Cover Silencer Sheet
Front Stabilizer Link Assy LH
74 (755, 55)
◆ Cotter Pin
Clip
49 (500, 36)
Clutch Release Cylinder Assy
Tie Rod End Sub–assy LH
Front Axle Hub LH Nut
Transmission Control Cable Assy
Front Drive Shaft Assy LH
Front Suspension Member Brace Rear LH
43 (440, 32)
Compression Spring
142 (1,448, 105)
80 (816, 59)
133 (1,348, 97)
29 (296, 21)
w/ A/C:
Compressor And Magnetic Clutch
◆ Gasket
Exhaust Pipe Assy Front
◆ Gasket
Floor Panel Brace Front
43 (440, 32)
30 (302, 22)
Compression Spring
N·m (kgf·cm, ft·lbf): Specified torque
◆ Non–reusable part
A79419

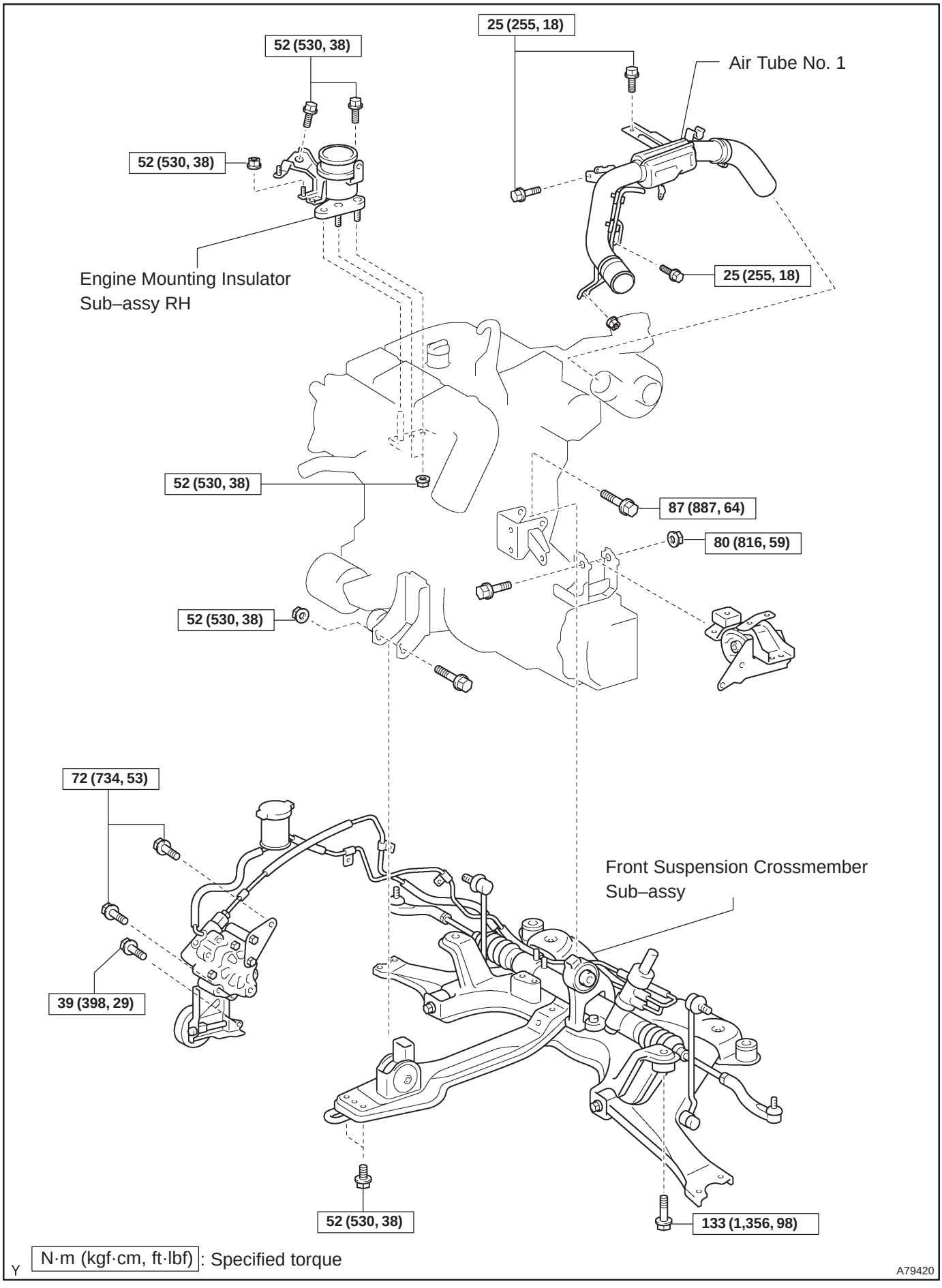
25 (255, 18)
52 (530, 38)
Air Tube No. 1
52 (530, 38)
Engine Mounting Insulator
Sub–assy RH
25 (255, 18)
52 (530, 38)
87 (887, 64)
80 (816, 59)
52 (530, 38)
72 (734, 53)
Front Suspension Crossmember
Sub–assy
39 (398, 29)
52 (530, 38)
133 (1,356, 98)
Y N·m (kgf·cm, ft·lbf): Specified torque
A79420

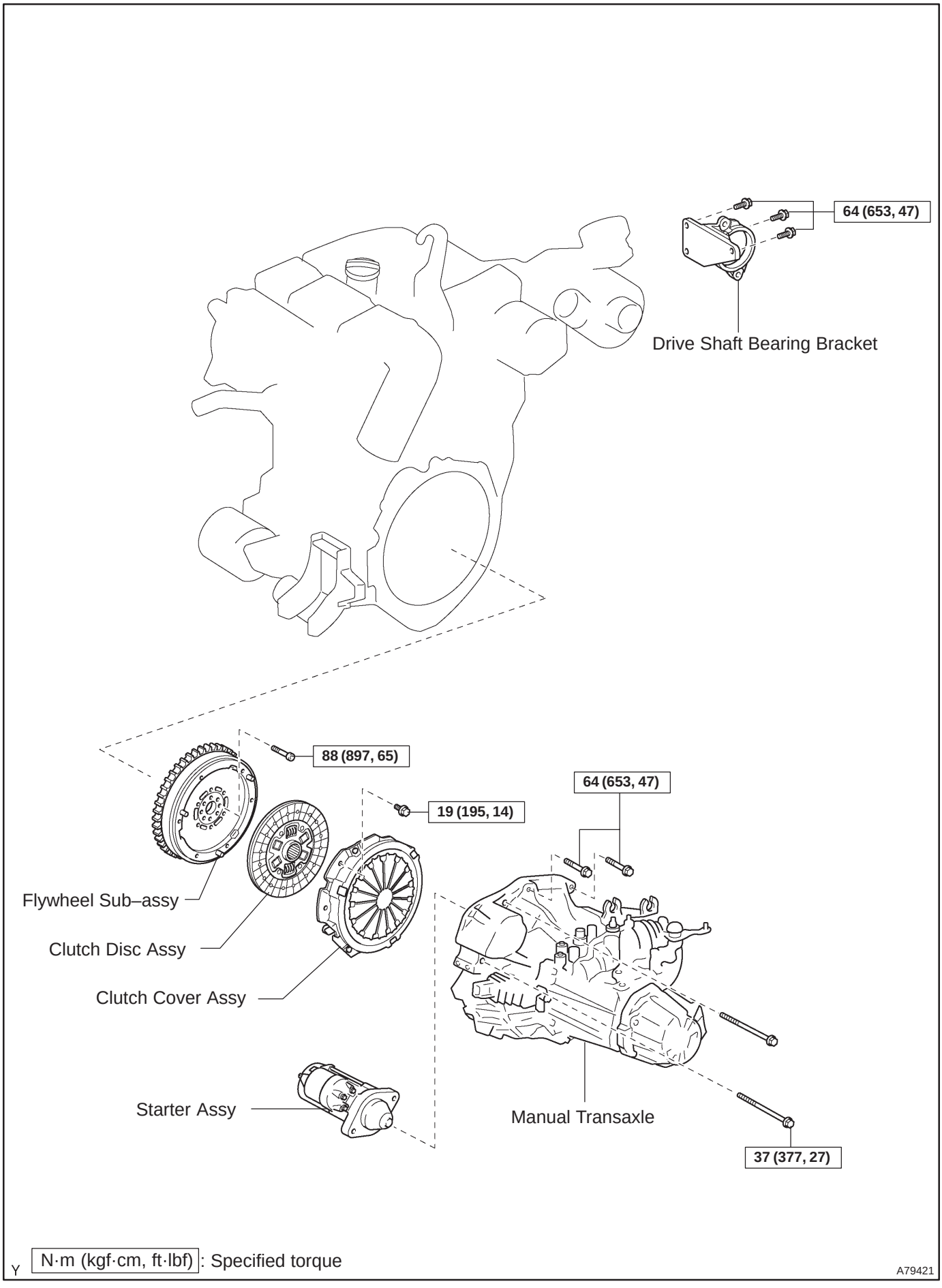
64 (653, 47)
Drive Shaft Bearing Bracket
88 (897, 65)
19 (195, 14)
64 (653, 47)
Flywheel Sub–assy
Clutch Disc Assy
Clutch Cover Assy
Starter Assy
Manual Transaxle
37 (377, 27)
Y N·m (kgf·cm, ft·lbf): Specified torque
A79421

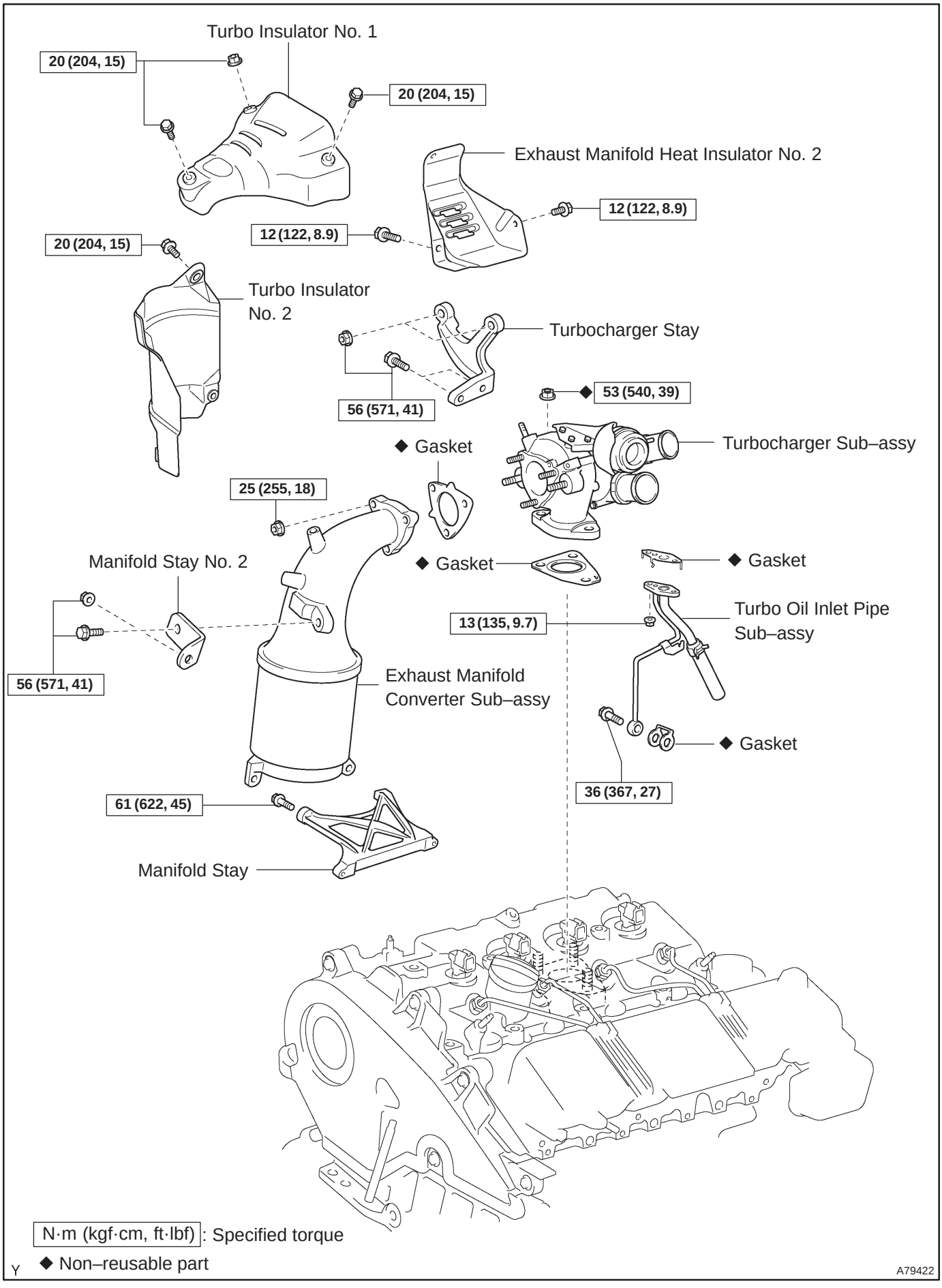
Turbo Insulator No. 1
20 (204, 15)
20 (204, 15)
Exhaust Manifold Heat Insulator No. 2
12 (122, 8.9)
12 (122, 8.9)
20 (204, 15)
Turbo Insulator No. 2
Turbocharger Stay
56 (571, 41)
◆ 53 (540, 39)
Turbocharger Sub–assy
◆ Gasket
25 (255, 18)
◆ Gasket
◆ Gasket
Manifold Stay No. 2
13 (135, 9.7)
Turbo Oil Inlet Pipe Sub–assy
56 (571, 41)
Exhaust Manifold Converter Sub–assy
◆ Gasket
36 (367, 27)
61 (622, 45)
Manifold Stay
N·m (kgf·cm, ft·lbf): Specified torque
◆ Non–reusable part
A79422

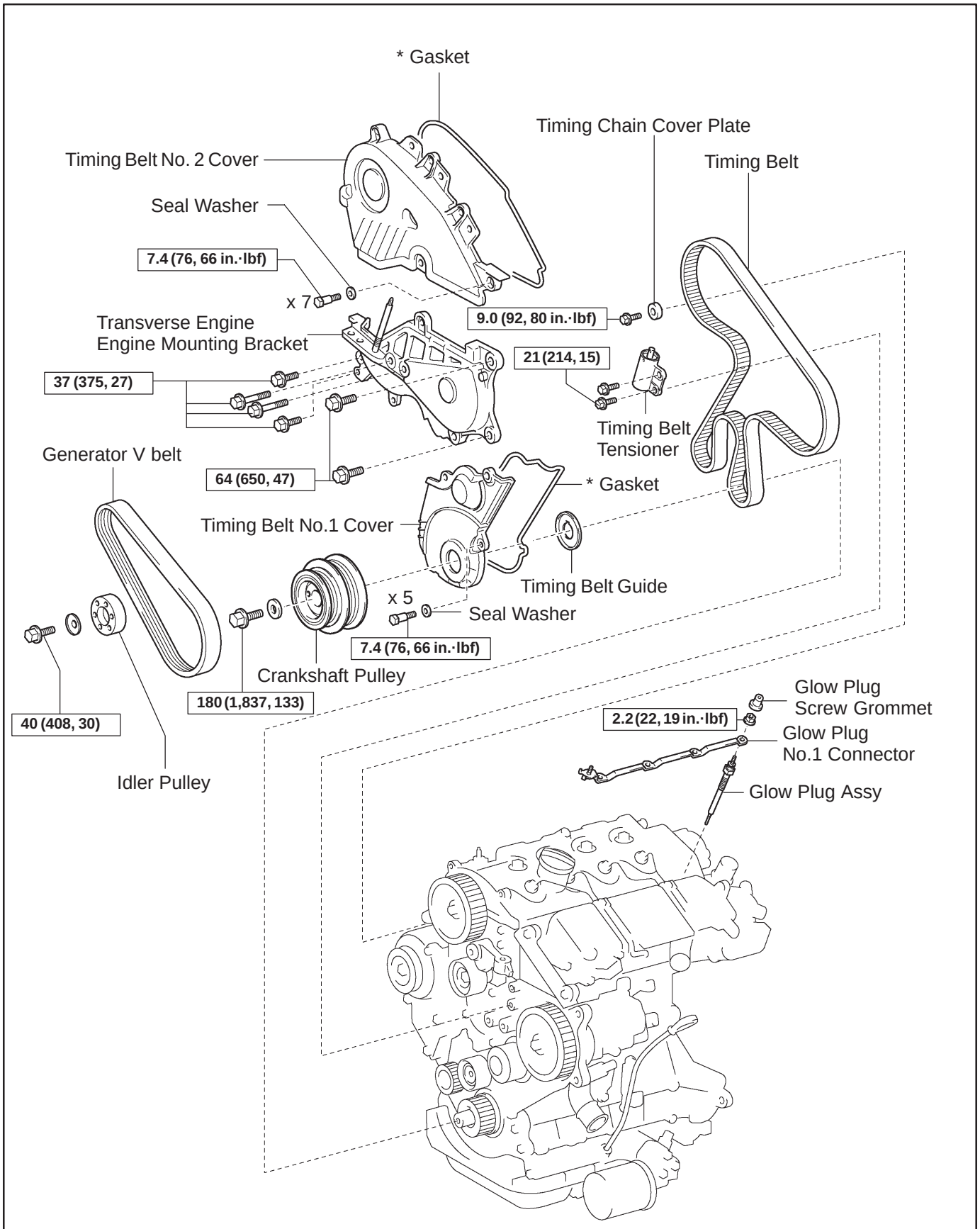

N·m (kgf·cm, ft·lbf) : Specified torque

* Replace only if damaged

Y

A61211

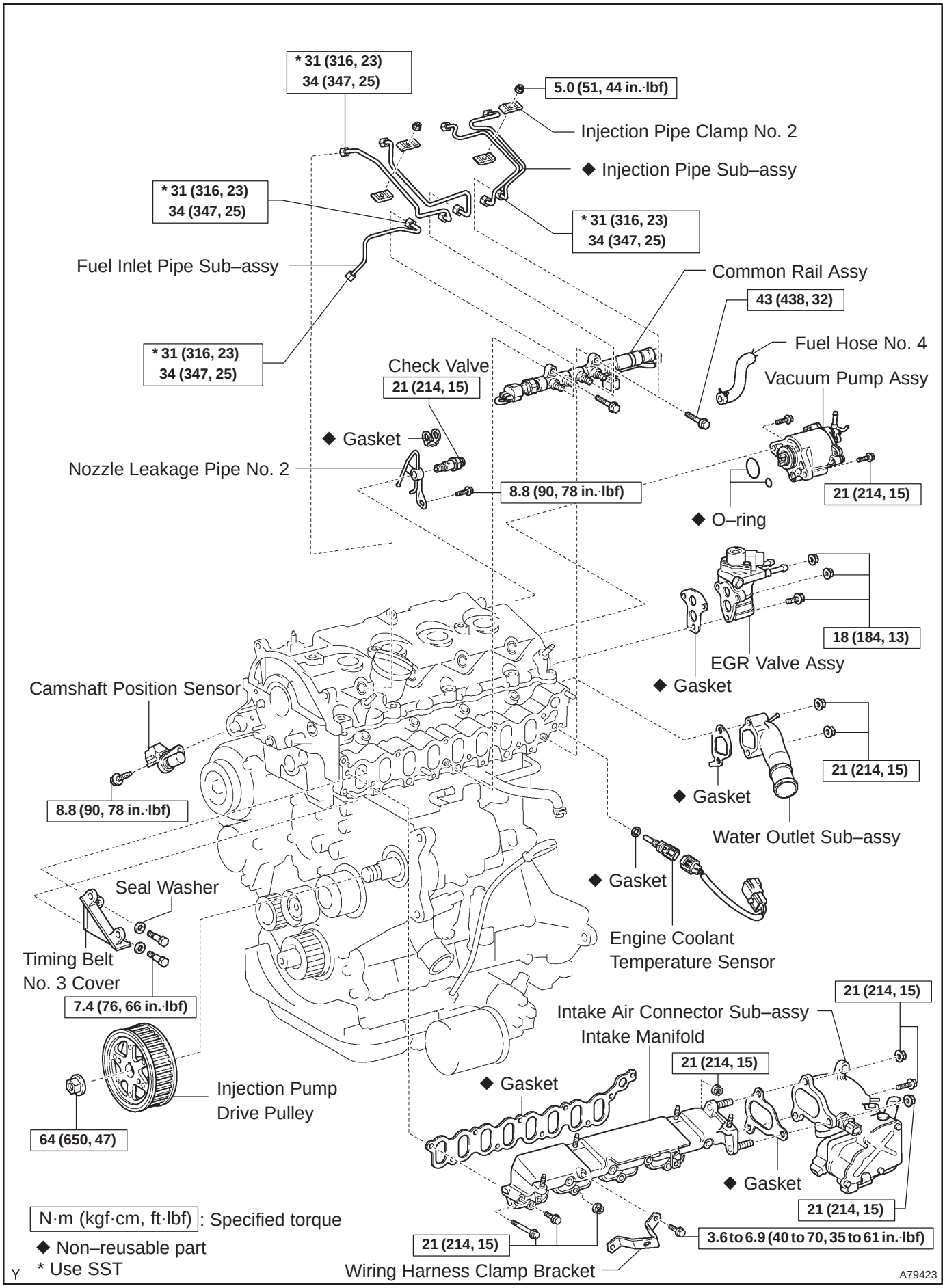
* 31 (316, 23)
34 (347, 25)
5.0 (51, 44 in.·lbf)
Injection Pipe Clamp No. 2
◆ Injection Pipe Sub–assy
* 31 (316, 23)
34 (347, 25)
* 31 (316, 23)
34 (347, 25)
Fuel Inlet Pipe Sub–assy
Common Rail Assy
43 (438, 32)
Fuel Hose No. 4
* 31 (316, 23)
34 (347, 25)
Check Valve
21 (214, 15)
Vacuum Pump Assy
◆ Gasket
Nozzle Leakage Pipe No. 2
8.8 (90, 78 in.·lbf)
21 (214, 15)
◆ O–ring
18 (184, 13)
EGR Valve Assy
◆ Gasket
Camshaft Position Sensor
21 (214, 15)
8.8 (90, 78 in.·lbf)
◆ Gasket
Water Outlet Sub–assy
◆ Gasket
Seal Washer
Engine Coolant
Temperature Sensor
Timing Belt
No. 3 Cover
7.4 (76, 66 in.·lbf)
21 (214, 15)
Intake Air Connector Sub–assy
Intake Manifold
21 (214, 15)
Injection Pump
Drive Pulley
◆ Gasket
64 (650, 47)
◆ Gasket
21 (214, 15)
N·m (kgf·cm, ft·lbf): Specified torque
◆ Non–reusable part
* Use SST
21 (214, 15)
3.6 to 6.9 (40 to 70, 35 to 61 in.·lbf)
Wiring Harness Clamp Bracket
A79423

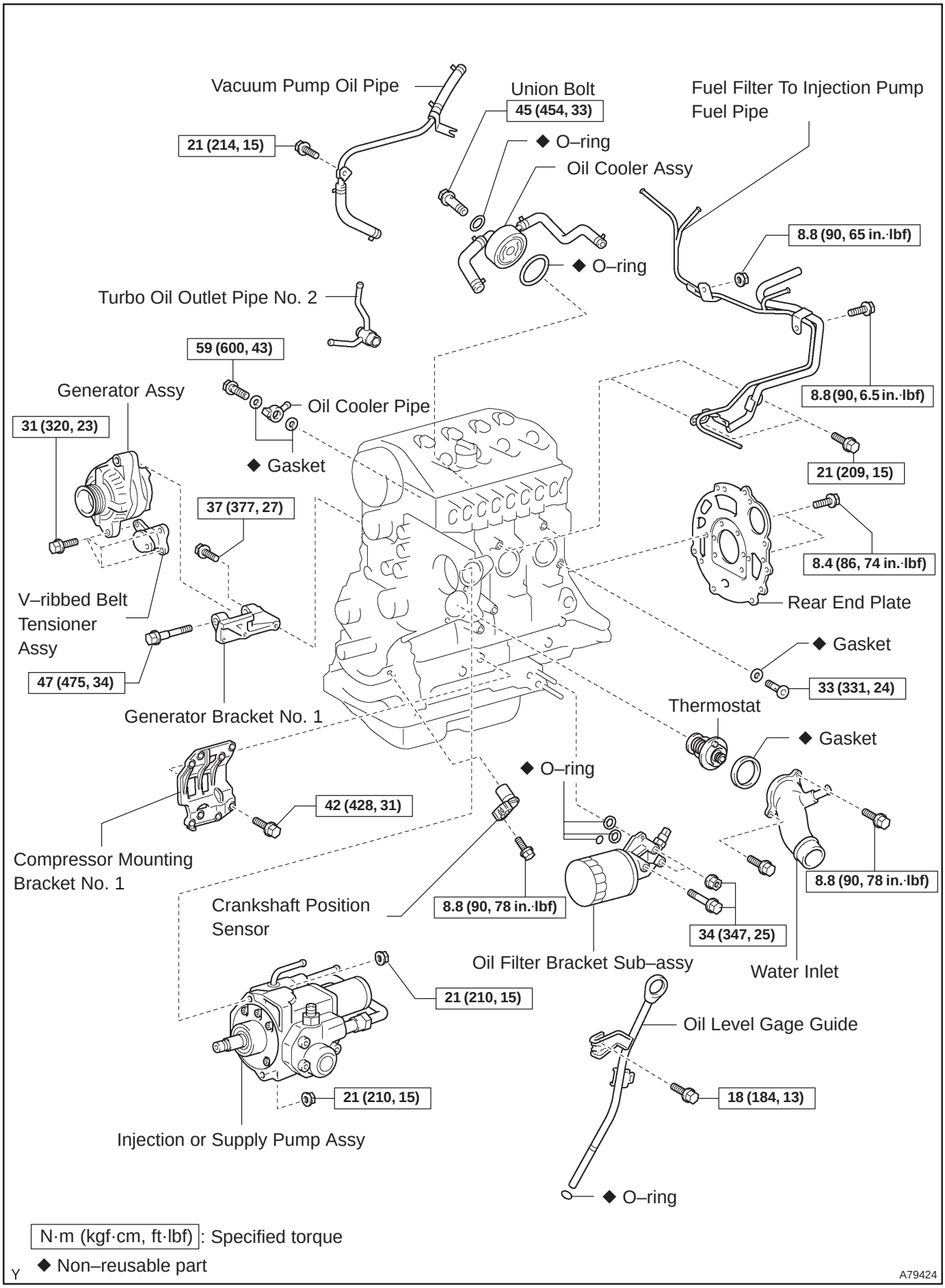
Vacuum Pump Oil Pipe
21 (214, 15)
Union Bolt
45 (454, 33)
◆ O–ring
Oil Cooler Assy
◆ O–ring
Fuel Filter To Injection Pump Fuel Pipe
8.8 (90, 65 in.·lbf)
Turbo Oil Outlet Pipe No. 2
59 (600, 43)
Oil Cooler Pipe
◆ Gasket
8.8 (90, 6.5 in.·lbf)
21 (209, 15)
Generator Assy
31 (320, 23)
37 (377, 27)
8.4 (86, 74 in.·lbf)
Rear End Plate
V–ribbed Belt Tensioner Assy
47 (475, 34)
◆ Gasket
33 (331, 24)
Generator Bracket No. 1
Thermostat
◆ Gasket
◆ O–ring
42 (428, 31)
Compressor Mounting Bracket No. 1
8.8 (90, 78 in.·lbf)
Crankshaft Position Sensor
8.8 (90, 78 in.·lbf)
34 (347, 25)
Oil Filter Bracket Sub–assy
Water Inlet
21 (210, 15)
Oil Level Gage Guide
21 (210, 15)
18 (184, 13)
Injection or Supply Pump Assy
◆ O–ring
N·m (kgf·cm, ft·lbf): Specified torque
◆ Non–reusable part
Y
A79424

141C4–01

REPLACEMENT

1. REMOVE FRONT WHEELS
2. REMOVE ENGINE UNDER COVER LH
3. REMOVE ENGINE UNDER COVER SUB–ASSY NO.1
4. REMOVE ENGINE UNDER COVER RH
5. REMOVE RADIATOR SUPPORT OPENING COVER
6. REMOVE ENGINE ROOM COVER SIDE
7. DRAIN ENGINE COOLANT (See page 16–44)
8. DRAIN ENGINE OIL (See page 14–342)
9. DRAIN MANUAL TRANSAXLE OIL
Torque: 49 N·m (500 kgf·cm, 36 ft·lbf)
10. REMOVE ENGINE COVER NO.1
(a) Remove the 5 nuts and the engine cover.
11. REMOVE BATTERY
12. REMOVE AIR CLEANER ASSY
(a) Disconnect the connector.
(b) Remove the air cleaner cap together with the air cleaner hose.
(c) Remove the air cleaner filter element.
(d) Remove the 3 bolts and the air cleaner case.
13. DISCONNECT UNION TO CONNECTOR TUBE HOSE
14. REMOVE FUEL FILTER ASSY
(a) Disconnect the 2 fuel hose from the fuel filter (STD).
(b) Disconnect the 3 fuel hose from the fuel filter (COLD).
(c) Disconnect the connector (STD).
(d) Disconnect the 2 connectors (COLD).
(e) Remove the 2 bolts and the fuel filter.
15. REMOVE RADIATOR HOSE INLET
16. REMOVE RADIATOR HOSE OUTLET
17. DISCONNECT WATER BY–PASS HOSE NO.2
18. REMOVE ENGINE ROOM RELAY BLOCK NO.3
(a) Remove the 2 bolts and the engine room relay block.
19. REMOVE RADIATOR ASSY (W/ AIR CONDITIONING) (See page 16–51)
20. DISCONNECT HEATER INLET WATER HOSE
21. DISCONNECT HEATER OUTLET WATER HOSE
22. DISCONNECT FUEL HOSE NO.2

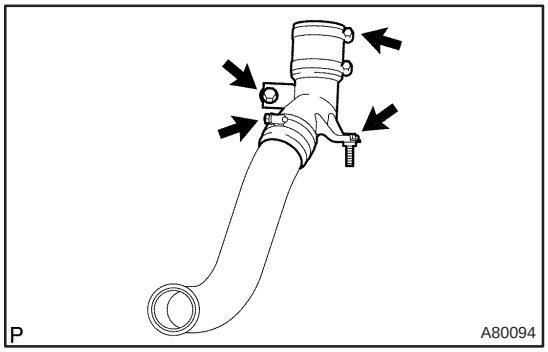

23. REMOVE AIR TUBE NO.2
(a) Loosen the hose clamp and disconnect the air hose No. 3.
(b) Remove the 2 bolts and the air tube No. 2.

24. SEPARATE TRANSMISSION CONTROL CABLE ASSY

(a) Remove the 2 clips and 2 washers, separate the control cable assy.

25. REMOVE INJECTOR DRIVER

(a) Remove the 2 nuts which is used to secure the injector driver.

(b) Disconnect the injector driver connector and the harness clamp.

(c) Remove the injector driver.

26. DISCONNECT ENGINE WIRE

(a) Remove the glove compartment door.

(b) Disconnect the engine wire from the ECM and the junction block.

(c) Pull out the engine wire.

(d) Disconnect the engine wire from engine room junction block.

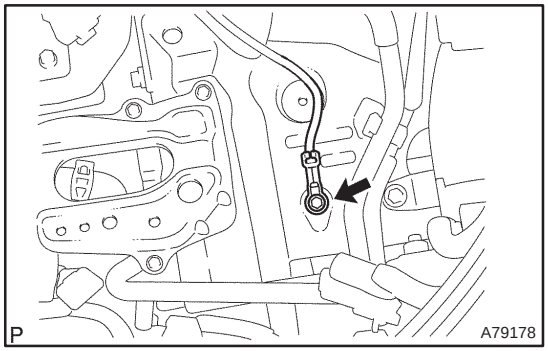

(e) Remove the bolt and disconnect the wire harness from the body.

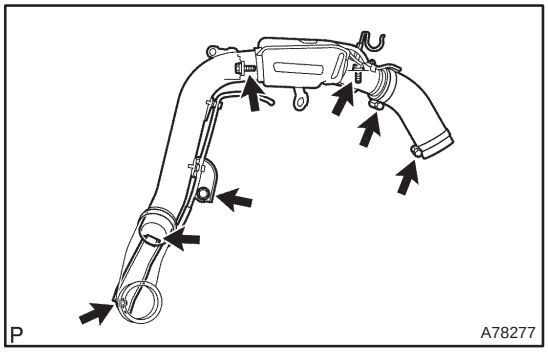

27. REMOVE AIR TUBE NO.1

(a) Loosen the hose clamps.

(b) Remove the 2 bolts and nut, and then detach the air tube No. 1.

28. REMOVE CLUTCH ACCUMULATOR ASSY (See page 42–17)

SST 09023–00100

29. REMOVE CLUTCH RELEASE CYLINDER ASSY (See page 42–17)

30. REMOVE V (COOLER COMPRESSOR TO CRANKSHAFT PULLEY) BELT NO.1 (See page 14–269)

31. SEPARATE COMPRESSOR AND MAGNETIC CLUTCH (W/ AIR CONDITIONING) (See page 55–86)

HINT:

Secure the hoses off to the side instead of detaching.

32. REMOVE FLOOR PANEL BRACE FRONT (See page 15–10)

33. REMOVE EXHAUST PIPE ASSY FRONT (See page 15–10)

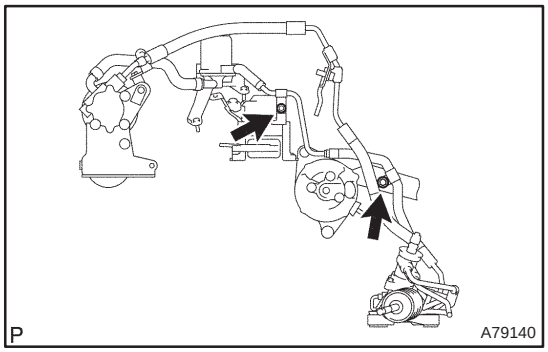

34. SEPARATE RETURN TUBE SUB–ASSY

(a) Remove the 2 clamp bolts and separate the return tube sub–assy.

35. SEPARATE VANE PUMP OIL RESERVOIR ASSY

36. REMOVE FRONT AXLE HUB LH NUT (See page 30–6)

SST 09930–00010

HINT:

Perform the same procedure as above on the opposite side.

37. SEPARATE TIE ROD END SUB–ASSY LH (See page 30–6)

SST 09628–62011

HINT:

Perform the same procedure as above on the opposite side.

38. SEPARATE FRONT STABILIZER LINK ASSY LH (See page 26–26)

HINT:

Perform the same procedure as above on the opposite side.

39. REMOVE COLUMN HOLE COVER SILENCER SHEET

(a) Remove the 2 clips and the column hole cover silencer sheet.

40. REMOVE STEERING INTERMEDIATE SHAFT ASSY NO.2 (See page 51–36)

41. SEPARATE FRONT SUSPENSION ARM SUB–ASSY LOWER NO.1 LH (See page 26–21)

HINT:

Perform the same procedure as above on the opposite side.

42. SEPARATE FRONT DRIVE SHAFT ASSY LH (See page 30–6)

HINT:

Perform the same procedure as above on the opposite side.

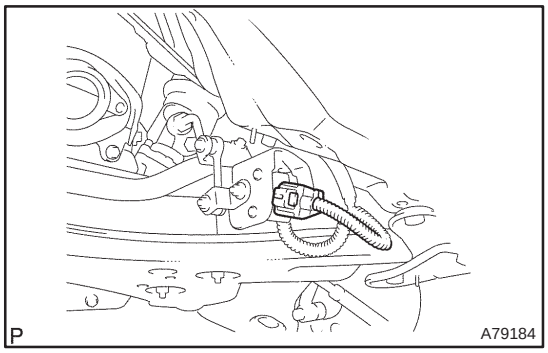

43. REMOVE ENGINE ASSEMBLY WITH TRANSAXLE

(a) Disconnect the height control sensor connector (w/ Discharge head lamp).

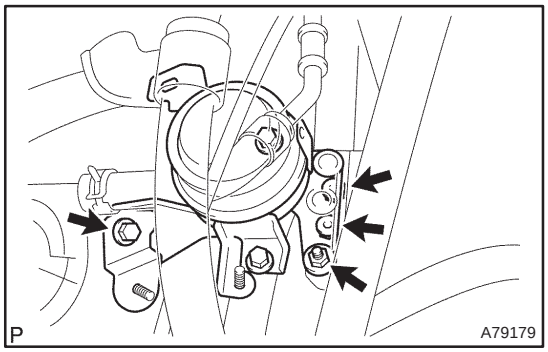

(b) Set the engine lifter.
(c) Remove the 3 bolts, 3 nuts and the engine mounting insulator sub–assy RH.

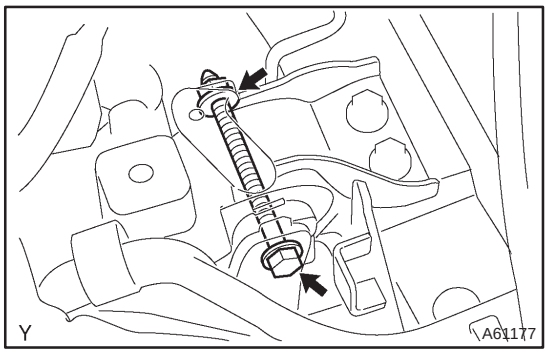

(d) Remove the through bolt and nut, detach the engine mounting insulator LH from the vehicle.

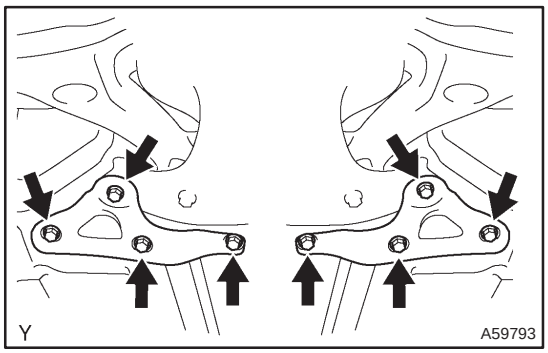

(e) Remove the 8 bolts and the front suspension member brace rear RH and LH.

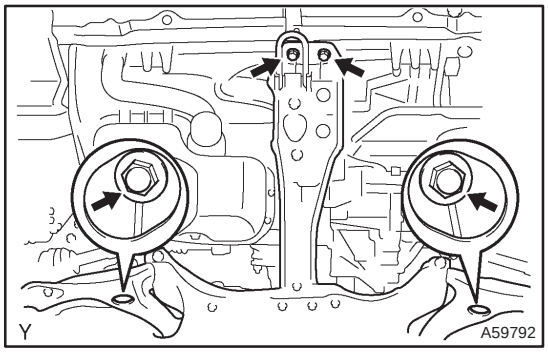

(f) Remove the 2 bolts and 2 nuts.
(g) Carefully remove the engine with transaxle from the vehicle.

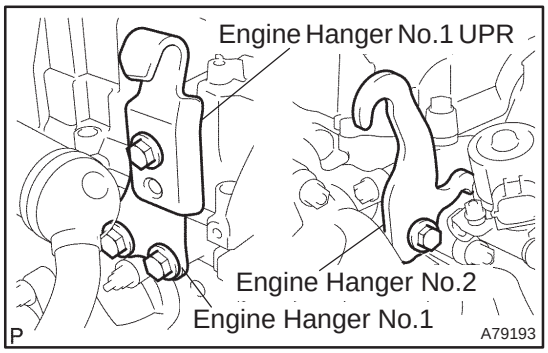

(h) Install the 2 engine hangers with the 2 bolts.
Part No.:
No. 1 engine hanger UPR (yellow) 12284–27020
No. 1 engine hanger UPR (black) 12284–27030
No. 1 engine hanger 12281–27050
No. 2 engine hanger (yellow) 12282–27060
No. 2 engine hanger (black) 12282–27070
Bolt 91642–81025
Torque: 37 N·m (377 kgf·cm, 27 ft·lbf)

(i) Attach the engine sling and hang the engine with the chain block.

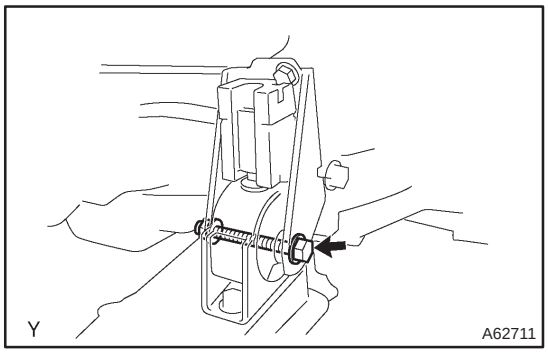

44. REMOVE FRONT SUSPENSION CROSSMEMBER SUB–ASSY

(a) Remove the through bolt and nut, detach the engine mounting insulator FR from the engine mounting bracket.

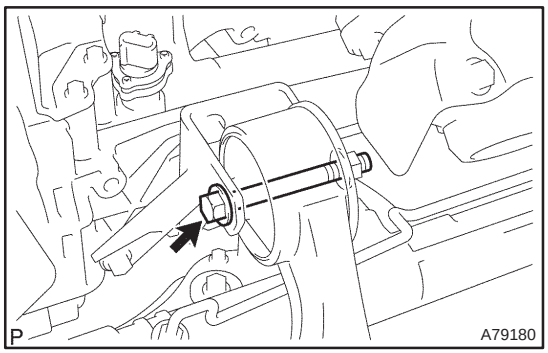

(b) Remove the through bolt, detach the engine mounting insulator RR from the suspension crossmember.

(c) Separate the engine and transaxle assembly from the suspension crossmember and engine mounting member.

45. REMOVE STARTER ASSY (See page 19–24)

46. REMOVE MANUAL TRANSAXLE (See page 41–33)

47. REMOVE CLUTCH DISC ASSY (See page 42–26)

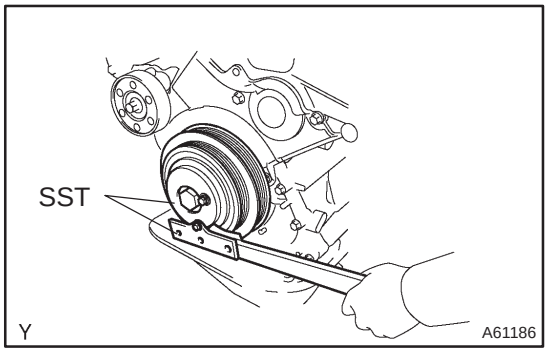

48. REMOVE FLYWHEEL SUB–ASSY

(a) Hold the crank shaft with SST.
SST 09213–54015 (90105–08076), 09330–00021

(b) Using a torx socket wrench (T55), remove the 8 torx screws and the flywheel.

49. REMOVE REAR END PLATE

(a) Remove the 2 bolts and the rear end plate.

50. REMOVE DRIVE SHAFT BEARING BRACKET

51. REMOVE ENGINE MOUNTING BRACKET FR

52. REMOVE ENGINE MOUNTING BRACKET RR

53. REMOVE GLOW PLUG ASSY (See page 19–33)

54. REMOVE GENERATOR V BELT (See page 14–269)

55. REMOVE CRANKSHAFT PULLEY (See page 14–307)

SST 09213–54015 (90105–08076), 09330–00021, 09950–50013 (09951–05010, 09952–05010, 09953–05020, 09954–05031)

56. REMOVE IDLER PULLEY SUB–ASSY (See page 14–307)
57. REMOVE TIMING BELT NO.2 COVER (See page 14–307)
58. REMOVE TIMING BELT NO.1 COVER (See page 14–307)
59. REMOVE TIMING BELT GUIDE
60. REMOVE TRANSVERSE ENGINE ENGINE MOUNTING BRACKET (See page 14–307)
61. SET NO. 1 CYLINDER TO TDC/COMPRESSION (See page 14–307)
62. REMOVE TIMING BELT (See page 14–307)

HINT:

If re–use the timing belt, draw an arrow which indicates the engine revolution direction on the belt and put match marks on the pulleys and the belt before removing. This operation will be very helpful when re–installing the timing belt.

63. REMOVE GENERATOR ASSY
64. REMOVE GENERATOR BRACKET NO.1
(a) Remove the 2 bolts and the generator bracket.
65. REMOVE V–RIBBED BELT TENSIONER ASSY

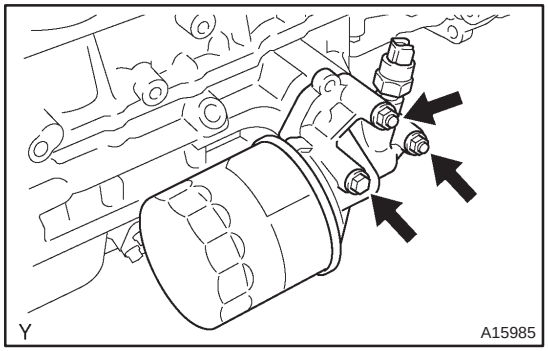

66. REMOVE OIL FILTER BRACKET SUB–ASSY
(a) Remove the bolt and 2 nuts, and then remove the oil filter bracket and the gasket.

67. REMOVE TURBO INSULATOR NO.2 (See page 13–11)
68. REMOVE TURBO INSULATOR NO.1 (See page 13–11)
69. REMOVE EXHAUST MANIFOLD HEAT INSULATOR NO.2 (See page 13–11)
70. REMOVE MANIFOLD STAY NO.2 (See page 13–11)
71. REMOVE MANIFOLD STAY (See page 13–11)
72. REMOVE EXHAUST MANIFOLD CONVERTER SUB–ASSY (See page 13–11)
73. REMOVE TURBOCHARGER STAY (See page 13–11)
74. DISCONNECT TURBO WATER HOSE NO.1 (See page 13–11)
75. DISCONNECT TURBO WATER HOSE NO.2 (See page 13–11)
76. SEPARATE TURBO OIL INLET PIPE SUB–ASSY (See page 13–11)
77. REMOVE TURBO OIL OUTLET PIPE NO.2 (See page 13–11)
78. REMOVE TURBOCHARGER SUB–ASSY (See page 13–11)

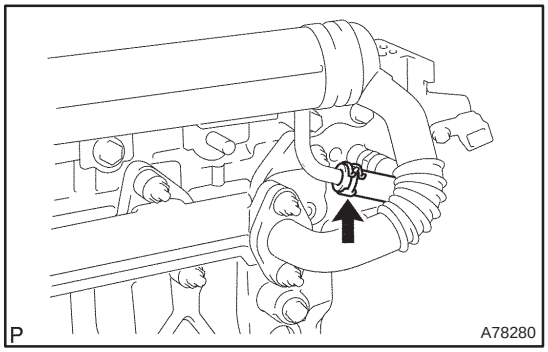

79. DISCONNECT WATER BY–PASS HOSE NO.3

80. REMOVE EGR PIPE SUB–ASSY NO.1

(a) Remove the bolt and 4 nut, and then detach the EGR pipe and the 2 gaskets.

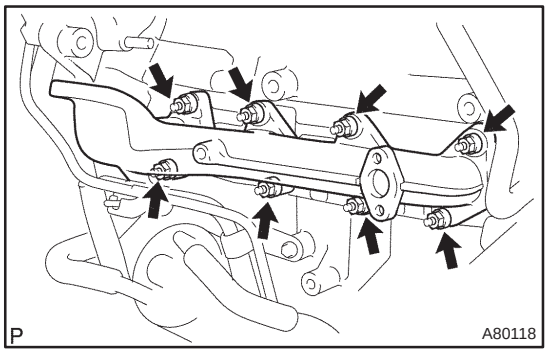

81. REMOVE EXHAUST MANIFOLD

(a) Remove the 8 nuts, the exhaust manifold and the gasket.

82. REMOVE OIL COOLER ASSY (See page 17–32)

83. REMOVE WATER OUTLET SUB–ASSY

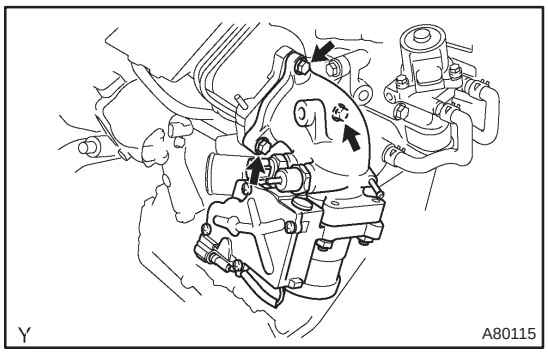

84. REMOVE INTAKE AIR CONNECTOR SUB–ASSY

(a) Remove the bolt and 2 nuts, and then remove the intake air connector and the gasket.

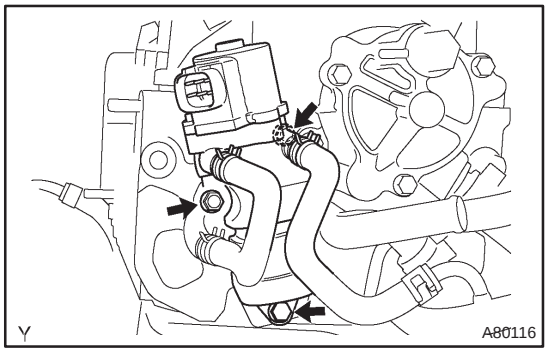

85. REMOVE EGR VALVE ASSY

(a) Remove the bolt and 2 nuts, and then remove the EGR valve and the gasket.

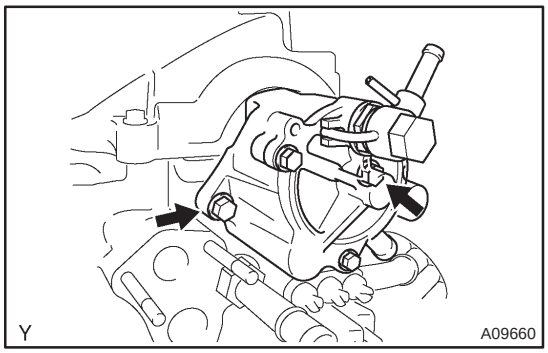

86. REMOVE VACUUM PUMP ASSY

(a) Remove the 2 bolts, the vacuum pump and the 2 O–rings.

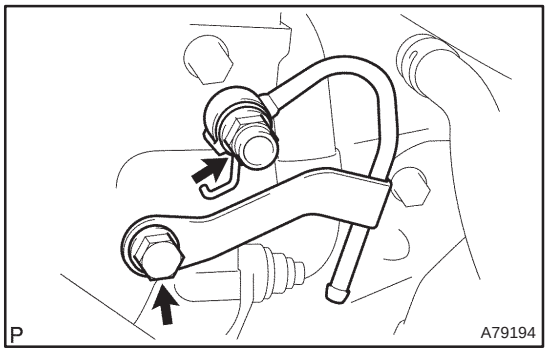

87. REMOVE NOZZLE LEAKAGE PIPE NO.2

(a) Remove the check valve and bolt, and then detach the leakage pipe and the gasket.

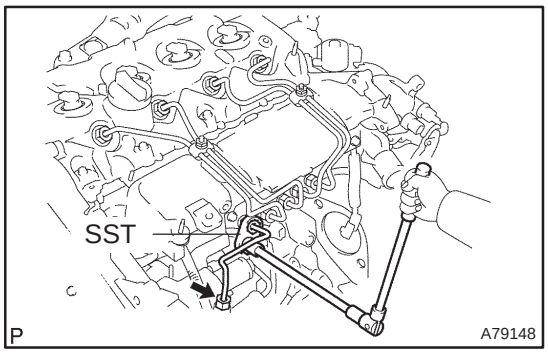

88. REMOVE FUEL INLET PIPE SUB–ASSY

(a) Using SST, remove the fuel inlet pipe from the common rail side.
SST 09023–12700

(b) Using SST, remove the fuel inlet pipe from the pump side.
SST 09023–12700

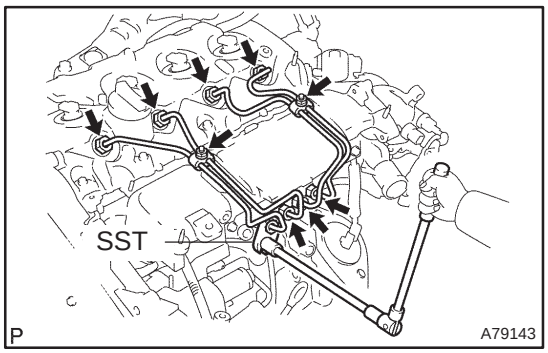

89. REMOVE INJECTION PIPE SUB–ASSY NO.1

(a) Remove the 2 nuts and 2 upper infection pipe clamps from the intake manifold.

(b) Using SST, remove the injection pipe from the common rail side.
SST 09023–12700

(c) Using SST, remove the injection pipe from the injector side.
SST 09023–12700

(d) After removing the fuel pipe, to prevent dust or foreign objects being introduces, cover the common rail with vinyl tape and protect the injector inlet with a vinyl or a plastic bag.

(e) Remove the 2 lower injection pipe clamps from the intake manifold.

90. REMOVE INJECTION PIPE SUB–ASSY NO.2

SST 09023–12700

HINT:

Perform the same procedures as injection pipe No. 1.

91. REMOVE INJECTION PIPE SUB–ASSY NO.3

SST 09023–12700

HINT:

Perform the same procedures as injection pipe No. 1.

92. REMOVE INJECTION PIPE SUB–ASSY NO.4

SST 09023–12700

HINT:

Perform the same procedures as injection pipe No. 1.

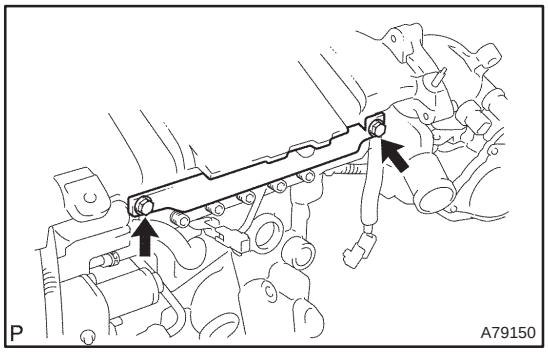

93. REMOVE INTAKE MANIFOLD INSULATOR NO.1

(a) Remove the 2 bolts and the intake manifold insulator.

94. REMOVE COMMON RAIL ASSY (See page 11–78)

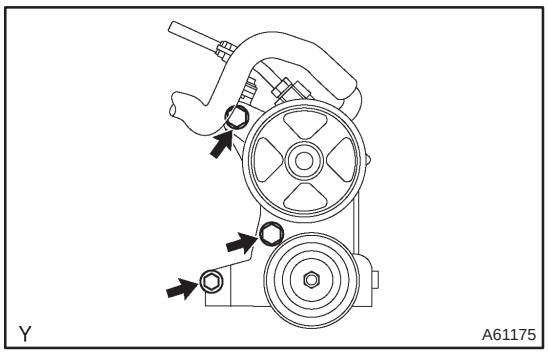

95. REMOVE POWER STEERING IDLE PULLEY BRACKET

(a) Remove the 3 bolts and the idle pulley bracket.

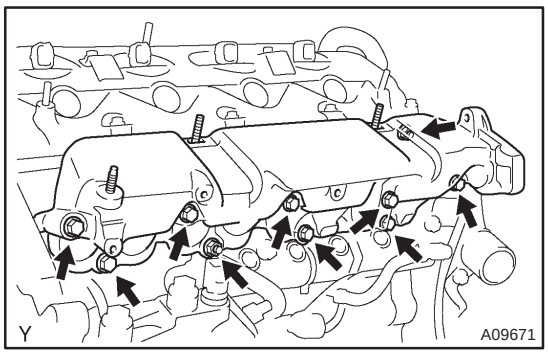

96. REMOVE INTAKE MANIFOLD

(a) Remove the 2 bolts and the wiring harness clamp bracket.

(b) Remove the 8 bolts and 2 nuts, and then remove the intake manifold and the gasket.

97. REMOVE INJECTION PUMP DRIVE PULLEY (See page 11–69)

SST 09960–10010 (09962–01000, 09963–01000)

98. REMOVE TIMING BELT NO.3 COVER

(a) Remove the 2 bolts and 2 seal washers, and then remove the timing belt cover.

99. REMOVE OIL LEVEL GAGE GUIDE (See page 17–22)

100. REMOVE INJECTION OR SUPPLY PUMP ASSY (See page 11–69)

101. REMOVE COMPRESSOR MOUNTING BRACKET NO.1

(a) Remove the 4 bolts and the compressor mounting bracket.

102. REMOVE WATER INLET

(a) Remove the 2 bolts and the water inlet.

103. REMOVE THERMOSTAT

104. REMOVE OIL COOLER PIPE

(a) Remove the union bolt, the oil cooler pipe and the gasket.

105. REMOVE FUEL FILTER TO INJECTION PUMP FUEL PIPE

(a) Remove the 3 bolts and nut, and then detach the fuel pipe.

106. REMOVE CRANKSHAFT POSITION SENSOR

(a) Remove the bolt and the crankshaft position sensor.

107. REMOVE CAMSHAFT POSITION SENSOR

(a) Remove the bolt and the camshaft position sensor.

108. REMOVE ENGINE COOLANT TEMPERATURE SENSOR

109. REPLACE PARTIAL ENGINE ASSY

110. INSTALL ENGINE COOLANT TEMPERATURE SENSOR
Torque: 20 N·m (204 kgf·cm, 15 ft·lbf)

111. INSTALL CAMSHAFT POSITION SENSOR
Torque: 8.8 N·m (90 kgf·cm, 78 in.·lbf)

112. INSTALL CRANKSHAFT POSITION SENSOR
Torque: 8.8 N·m (90 kgf·cm, 78 in.·lbf)

113. INSTALL FUEL FILTER TO INJECTION PUMP FUEL PIPE
Torque:
8.8 N·m (90 kgf·cm, 78 ft·lbf) for M6 and Nut
21 N·m (209 kgf·cm, 15 ft·lbf) for M8

114. INSTALL OIL COOLER PIPE

(a) Install 2 new gaskets and the oil cooler pipe with the union bolt.
Torque: 59 N·m (600 kgf·cm, 43 ft·lbf)

115. INSTALL THERMOSTAT (See page 16–50)

116. INSTALL WATER INLET (See page 16–50)

117. INSTALL COMPRESSOR MOUNTING BRACKET NO.1
Torque: 42 N·m (428 kgf·cm, 31 ft·lbf)

118. INSTALL INJECTION OR SUPPLY PUMP ASSY
Torque: 21 N·m (214 kgf·cm, 15 ft·lbf)

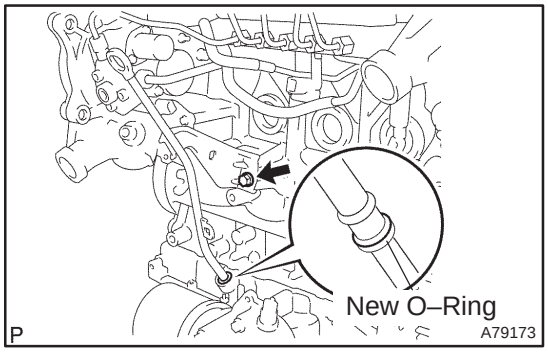

119. INSTALL OIL LEVEL GAGE GUIDE

(a) Install a new O–ring to the oil level gage guide.

(b) Apply engine oil to the O–ring.

(c) Push in the oil level gage guide end into the guide hole of the No. 1 oil pan.

(d) Install the oil level gage guide with the bolt.
Torque: 18 N·m (184 kgf·cm, 13 ft·lbf)

(e) Apply engine oil to the O–ring on the oil level gage.

(f) Install the oil level gage.

120. INSTALL TIMING BELT NO.3 COVER
Torque: 7.4 N·m (75 kgf·cm, 65 in.·lbf)

121. INSTALL INJECTION PUMP DRIVE PULLEY (See page 11–69)
SST 09960–10010 (09962–01000, 09963–01000)

122. INSTALL INTAKE MANIFOLD

(a) Install a new gasket and the intake manifold with the 8 bolts and 2 nuts.
Torque: 21 N·m (214 kgf·cm, 15 ft·lbf)

(b) Install the wiring harness clamp bracket with the 2 bolts.
Torque: 3.9 to 6.9 N·m (40 to 70 kgf·cm, 35 to 61 in.·lbf)

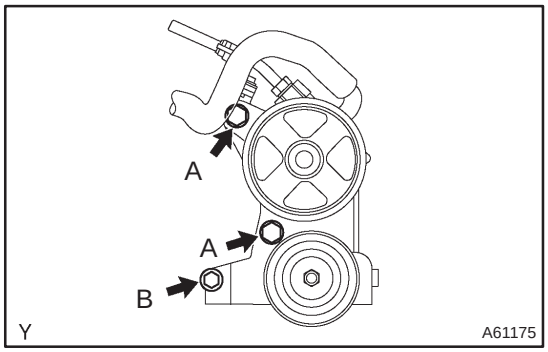

123. INSTALL POWER STEERING IDLE PULLEY BRACKET

(a) Install the idle w/ bracket pulley with the 3 bolts.
Torque:
72 N·m (734 kgf·cm, 53 ft·lbf) for bolt A
39 N·m (398 kgf·cm, 29 ft·lbf) for bolt B

124. INSTALL COMMON RAIL ASSY (See page 11–78)

125. INSTALL INTAKE MANIFOLD INSULATOR NO.1
Torque: 5.0 N·m (51 kgf·cm, 44 in.·lbf)

126. INSTALL INJECTION PIPE SUB–ASSY NO.1

NOTICE:

- **In case of having the injectors replaced, must replace the injection pipes, too.**
- **When assembling the pipes, perform the operation with the engine cold under room temperature.**

(a) Install the 2 lower injection pipe clamps to the intake manifold.

(b) Temporarily install the injection pipe.

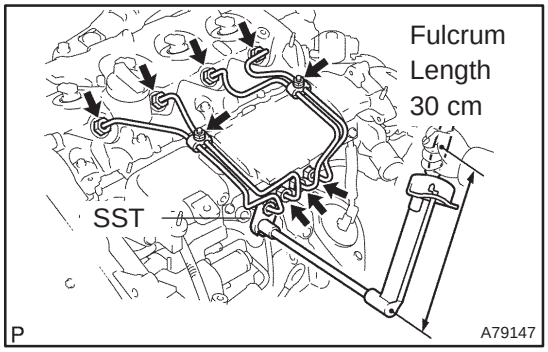

(c) Using SST, tighten the nut of the injection pipe to the common rail side.
SST 09023–12700
Torque:
42 N·m (428 kgf·cm, 31 ft·lbf) for a used pipe using SST
46 N·m (469 kgf·cm, 34 ft·lbf) for a used pipe not using SST
31 N·m (316 kgf·cm, 23 ft·lbf) for a new pipe using SST
34 N·m (347 kgf·cm, 25 ft·lbf) for a new pipe not using SST

HINT:

- Use a torque wrench with a fulcrum length of 30 cm (11.81 in.)
- Check if the used pipe has deflection or is installed properly after injection pipe is reassembled. If there is deflection or if it can not be installed properly, replace the used pipe with a new pipe.

(d) Using SST, tighten the nut of the injection pipe to the injector side.
SST 09023–12700
Torque:
42 N·m (428 kgf·cm, 31 ft·lbf) for a used pipe using SST
46 N·m (469 kgf·cm, 34 ft·lbf) for a used pipe not using SST
31 N·m (316 kgf·cm, 23 ft·lbf) for a new pipe using SST
34 N·m (347 kgf·cm, 25 ft·lbf) for a new pipe not using SST

HINT:
- Use a torque wrench with a fulcrum length of 30 cm (11.81 in.)
- Check if the used pipe has deflection or is installed properly after injection pipe is reassembled. If there is deflection or if it can not be installed properly, replace the used pipe with a new pipe.

(e) Install the 2 upper injection pipe clamps with the 2 nuts.
Torque: 5.0 N·m (51 kgf·cm, 44 in.·lbf)

127. INSTALL INJECTION PIPE SUB–ASSY NO.2
SST 09023–12700

HINT:
Perform the same procedures as injection pipe No. 1.

128. INSTALL INJECTION PIPE SUB–ASSY NO.3
SST 09023–12700

HINT:
Perform the same procedures as injection pipe No. 1.

129. INSTALL INJECTION PIPE SUB–ASSY NO.4
SST 09023–12700

HINT:
Perform the same procedures as injection pipe No. 1.

130. INSTALL FUEL INLET PIPE SUB–ASSY
NOTICE:
When assembling the pipe, perform the operation with the engine cold under room temperature.

(a) Temporarily install the inlet pipe.

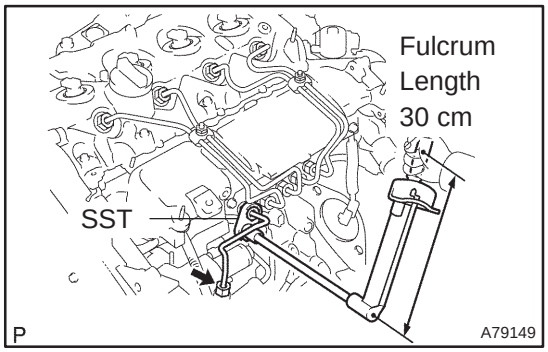

(b) Using SST, tighten the nut of the fuel inlet pipe to the common rail side.
SST 09023–12700
Torque:
42 N·m (428 kgf·cm, 31 ft·lbf) for a used pipe using SST
46 N·m (469 kgf·cm, 34 ft·lbf) for a used pipe not using SST
31 N·m (316 kgf·cm, 23 ft·lbf) for a new pipe using SST
34 N·m (347 kgf·cm, 25 ft·lbf) for a new pipe not using SST

HINT:
- Use a torque wrench with a fulcrum length of 30 cm (11.81 in.)
- Check if the used pipe has deflection or is installed properly after inlet pipe is reassembled. If there is deflection or if it can not be installed properly, replace the used pipe with a new pipe.

(c) Using SST, tighten the nut of the fuel inlet pipe to the pump side.
SST 09023–12700
Torque:
42 N·m (428 kgf·cm, 31 ft·lbf) for a used pipe using SST
46 N·m (469 kgf·cm, 34 ft·lbf) for a used pipe not using SST
31 N·m (316 kgf·cm, 23 ft·lbf) for a new pipe using SST
34 N·m (347 kgf·cm, 25 ft·lbf) for a new pipe not using SST

HINT:
- Use a torque wrench with a fulcrum length of 30 cm (11.81 in.)
- Check if the used pipe has deflection or is installed properly after inlet pipe is reassembled. If there is deflection or if it can not be installed properly, replace the used pipe with a new pipe.

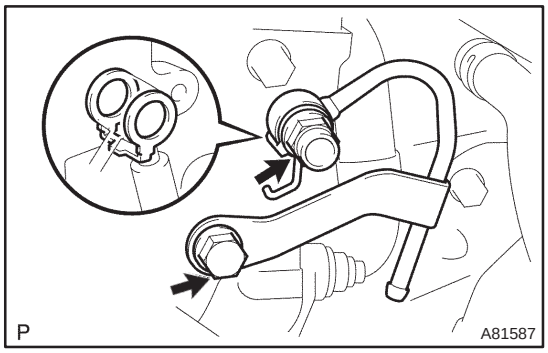

131. INSTALL NOZZLE LEAKAGE PIPE NO.2

(a) Install a new gasket and the leakage pipe with the check valve.
Torque:
21 N·m (214 kgf·cm, 15 ft·lbf) for check valve
8.8 N·m (90 kgf·cm, 78 in.·lbf) for bolt

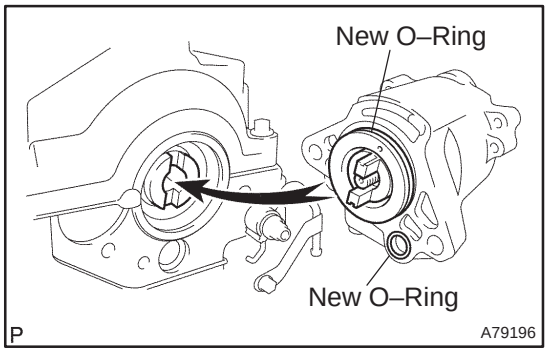

132. INSTALL VACUUM PUMP ASSY

(a) Install 2 new O–rings to the vacuum pump.

(b) Align the key of the vacuum pump with the keyway of the exhaust camshaft, insert the vacuum pump into place. Secure the pump with the 2 bolts.

Torque: 21 N·m (214 kgf·cm, 15 ft·lbf)

133. INSTALL EGR VALVE ASSY

(a) Install a new gasket and the EGR valve with the bolt and 2 nuts.

Torque: 18 N·m (184 kgf·cm, 13 ft·lbf)

134. INSTALL INTAKE AIR CONNECTOR SUB–ASSY

(a) Install a new gasket and the intake air connector with diesel throttle body with the bolt and 2 nuts.

Torque: 21 N·m (214 kgf·cm, 15 ft·lbf)

135. INSTALL WATER OUTLET SUB–ASSY

(a) Install a new gasket and the water outlet with the 2 bolts.

Torque: 21 N·m (214 kgf·cm, 15 ft·lbf)

136. INSTALL OIL COOLER ASSY (See page 17–32)

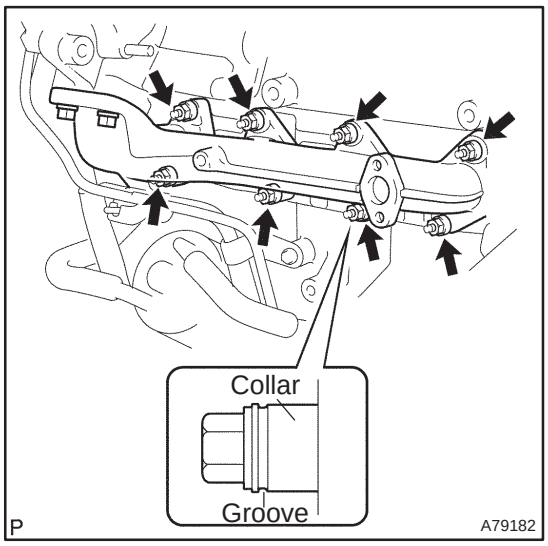

137. INSTALL EXHAUST MANIFOLD

(a) Install a new gasket, the exhaust manifold and the 8 collars with new 8 nuts.

Torque: 47 N·m (479 kgf·cm, 35 ft·lbf)

HINT:

When installing the collars, pay attention to the mounting orientation. Ring groove of the collar should be outside. Refer to the illustration on the left.

138. INSTALL EGR PIPE SUB–ASSY NO.1

(a) Install 2 new gaskets and the EGR pipe with the bolt and 4 new nuts.

Torque:
37 N·m (375 kgf·cm, 27 ft·lbf) for bolt
25 N·m (250 kgf·cm, 18 ft·lbf) for nut

139. INSTALL TURBOCHARGER SUB–ASSY (See page 13–11)

140. INSTALL TURBO OIL INLET PIPE SUB–ASSY (See page 13–11)

141. INSTALL TURBOCHARGER STAY (See page 13–11)

142. INSTALL EXHAUST MANIFOLD CONVERTER SUB–ASSY (See page 13–11)

143. INSTALL MANIFOLD STAY NO.2 (See page 13–11)

144. INSTALL EXHAUST MANIFOLD HEAT INSULATOR NO.2 (See page 13–11)

145. INSTALL TURBO INSULATOR NO.1 (See page 13–11)

146. INSTALL TURBO INSULATOR NO.2 (See page 13–11)

147. INSTALL OIL FILTER BRACKET SUB–ASSY

(a) Install a new gasket and oil filter bracket with the bolt and 2 nuts.
Torque: 34 N·m (347 kgf·cm, 25 ft·lbf)

148. INSTALL V–RIBBED BELT TENSIONER ASSY
Torque: 31 N·m (316 kgf·cm, 23 ft·lbf)

149. INSTALL GENERATOR BRACKET NO.1
Torque: 37 N·m (377 kgf·cm, 27 ft·lbf)

150. INSTALL GENERATOR ASSY (See page 19–29)

151. SET NO. 1 CYLINDER TO TDC/COMPRESSION (See page 14–307)
SST 09960–10010 (09962–01000, 09963–01000)

152. INSTALL TIMING BELT (See page 14–307)

153. CHECK VALVE TIMING (See page 14–307)

154. INSTALL TRANSVERSE ENGINE ENGINE MOUNTING BRACKET (See page 14–307)

155. INSTALL TIMING BELT GUIDE (See page 14–307)

156. INSTALL TIMING BELT NO.1 COVER (See page 14–307)

157. INSTALL TIMING BELT NO.2 COVER (See page 14–307)

158. INSTALL IDLER PULLEY SUB–ASSY
Torque: 40 N·m (408 kgf·cm, 30 ft·lbf)

159. INSTALL CRANKSHAFT PULLEY (See page 14–307)
SST 09213–54015 (90105–08076), 09330–00021

160. INSTALL GLOW PLUG ASSY (See page 19–33)

161. INSTALL ENGINE MOUNTING BRACKET RR
Torque: 64 N·m (653 kgf·cm, 47 ft·lbf)

162. INSTALL ENGINE MOUNTING BRACKET FR
Torque: 64 N·m (653 kgf·cm, 47 ft·lbf)

163. INSTALL DRIVE SHAFT BEARING BRACKET
Torque: 64 N·m (653 kgf·cm, 47 ft·lbf)

164. INSTALL REAR END PLATE
Torque: 8.4 N·m (86 kgf·cm, 74 in.·lbf)

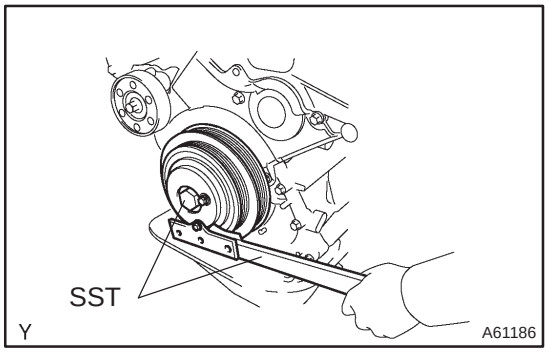

165. INSTALL FLYWHEEL SUB–ASSY

(a) Using SST, hold the crankshaft.
SST 09213–54015 (90105–08076), 09330–00021

(b) Clean the bolts and its bolt holes.

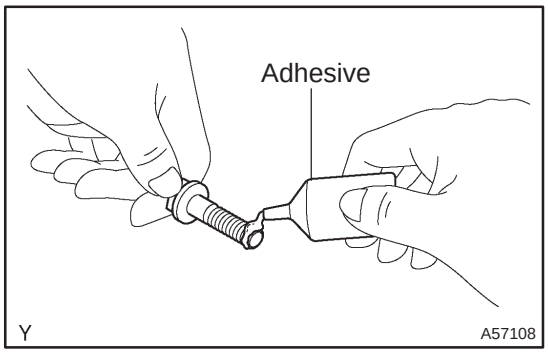

(c) Apply adhesive to 2 or 3 threads of the bolt end.
Adhesive: Part No. 08833–00070, THREE BOND 1324 or equivalent

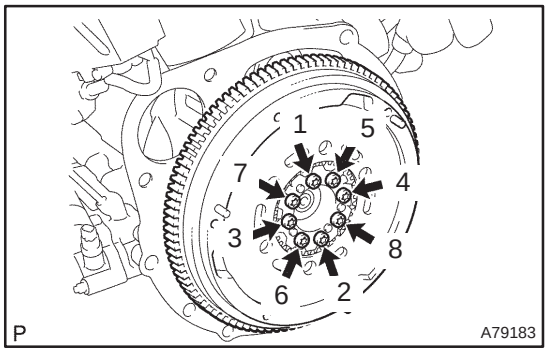

(d) Using several steps, install and tighten the 8 screws with a torx socket wrench (T55) uniformly in the sequence shown in the illustration.
Torque: 71 N·m (720 kgf·cm, 52 ft·lbf)

166. INSTALL CLUTCH DISC ASSY (See page 42–26)
SST 09301–00210

167. INSTALL MANUAL TRANSAXLE (See page 41–33)

168. INSTALL STARTER ASSY (See page 19–24)

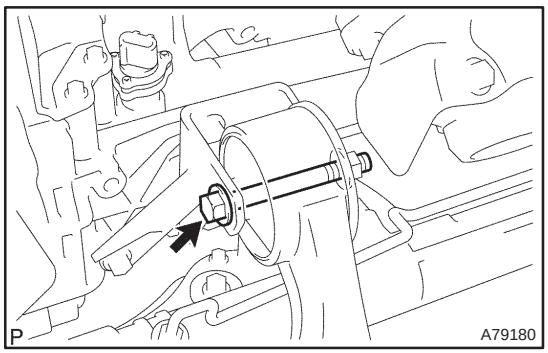

169. INSTALL FRONT SUSPENSION CROSSMEMBER SUB–ASSY

(a) Attach the engine and the transaxle assembly to the suspension crossmember and engine mounting member.

(b) Install the bolt which is used to secure the rear engine mounting bracket to the mounting insulator.
Torque: 87 N·m (887 kgf·cm, 64 ft·lbf)

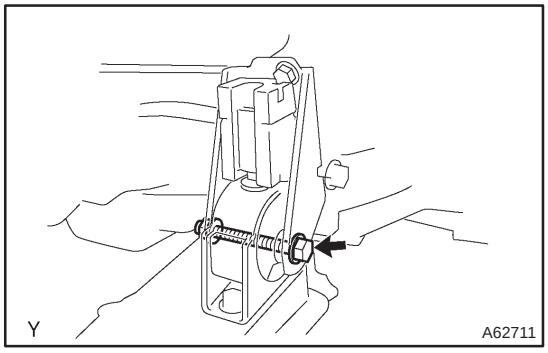

(c) Install the bolt which is used to secure the front engine mounting bracket to the mounting insulator.
Torque: 52 N·m (530 kgf·cm, 38 ft·lbf)

170. INSTALL ENGINE ASSEMBLY WITH TRANSAXLE

(a) Set the engine assembly with transaxle on the engine lifter.

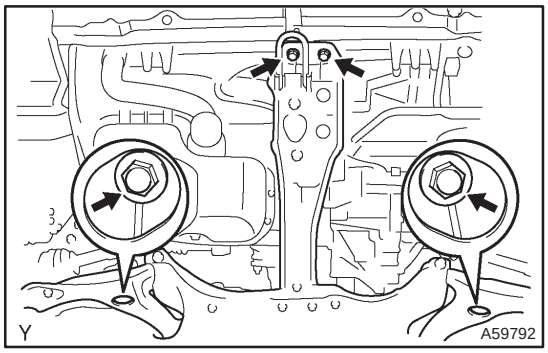

(b) Temporarily, install the suspension crossmember with the 2 bolts and 2 nuts.

(c) Install the engine mounting insulator LH.
Torque: 80 N·m (816 kgf·cm, 59 ft·lbf)

(d) Install the engine mounting insulator RH.
Torque: 52 N·m (530 kgf·cm, 38 ft·lbf)

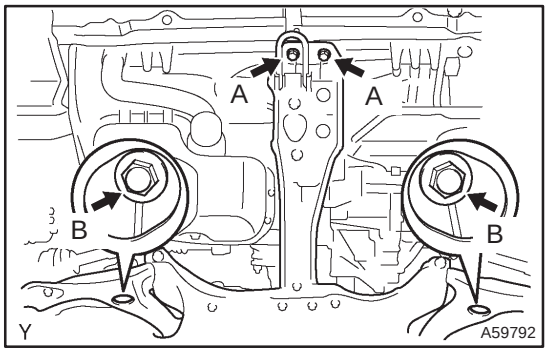

(e) Install the front suspension crossmember with the 2 bolts and 2 nuts.
Torque:
45 N·m (459 kgf·cm, 33 ft·lbf) for bolt A
133 N·m (1,356 kgf·cm, 98 ft·lbf) for nut B

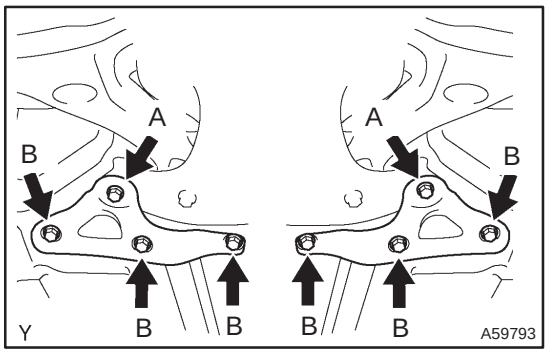

(f) Install the front suspension member brace LH and RH with the 8 bolts.
Torque:
133 N·m (1,356 kgf·cm, 98 ft·lbf) for bolt A
80 N·m (816 kgf·cm, 59 ft·lbf) for nut B

NOTICE:
After installing the crossmember, check that the positioning holes on the crossmember and the vehicle are aligned.

171. INSTALL FRONT DRIVE SHAFT ASSY LH (See page 30–6)
HINT:
Perform the same procedure as above on the opposite side.
172. INSTALL FRONT SUSPENSION ARM SUB–ASSY LOWER NO.1 LH (See page 26–21)
HINT:
Perform the same procedure as above on the opposite side.
173. INSTALL STEERING INTERMEDIATE SHAFT ASSY NO.2 (See page 51–36)
174. INSTALL FRONT STABILIZER LINK ASSY LH (See page 26–26)
HINT:
Perform the same procedure as above on the opposite side.
SST 99999–70037
175. INSTALL TIE ROD END SUB–ASSY LH (See page 30–6)
HINT:
Perform the same procedure as above on the opposite side.
176. INSTALL FRONT AXLE HUB LH NUT (See page 30–6)
HINT:
Perform the same procedure as above on the opposite side.
177. INSTALL RETURN TUBE SUB–ASSY
Torque: 8.0 N·m (82 kgf·cm, 71 in.·lbf)
178. INSTALL EXHAUST PIPE ASSY FRONT (See page 15–10)
179. INSTALL FLOOR PANEL BRACE FRONT (See page 15–10)
180. INSTALL COMPRESSOR AND MAGNETIC CLUTCH (W/ AIR CONDITIONING) (See page 55–86)
181. ADJUST V (COOLER COMPRESSOR TO CRANKSHAFT PULLEY) BELT NO.1 (See page 14–269)
182. INSTALL CLUTCH RELEASE CYLINDER ASSY (See page 42–17)
183. INSTALL CLUTCH ACCUMULATOR ASSY (See page 42–17)
SST 09023–00100

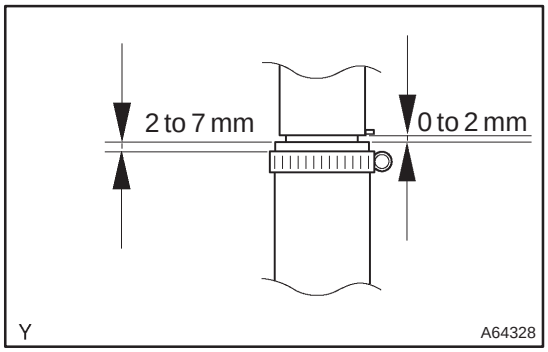

184. INSTALL AIR TUBE NO.1

(a) Install the new air hose No. 1 and new hose clamp as shown in the illustration.

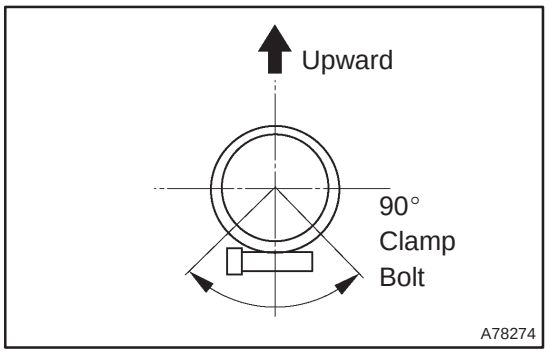

(b) Tighten the hose clamp as shown in the illustration.
Torque: 6.0 N·m (61 kgf·cm, 53 in.·lbf)

(c) Install the air tube No. 1 with the 3 bolts and nut.
Torque: 25 N·m (255 kgf·cm, 18 ft·lbf)

185. INSTALL INJECTOR DRIVER
Torque: 5.0 N·m (51 kgf·cm, 44 in.·lbf)

186. CONNECT ENGINE WIRE
Torque: 8.4 N·m (85 kgf·cm, 74 in.·lbf)

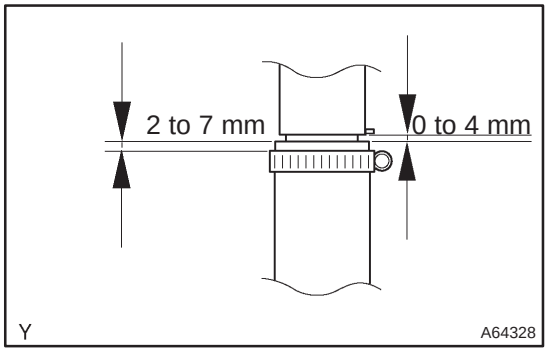

187. INSTALL AIR TUBE NO.2

(a) Install the air hose and hose clamps as shown in the illustration.

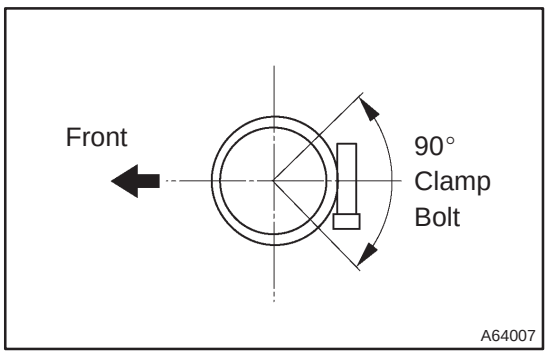

(b) Tighten the hose clamps as shown in the illustration.
Torque: 6.0 N·m (61 kgf·cm, 53 ft·lbf)

(c) Install the 2 bolts and the air tube No.2 assy.
Torque: 25 N·m (255 kgf·cm, 18 ft·lbf)

188. INSTALL RADIATOR ASSY (W/ AIR CONDITIONING) (See page 16–51)

189. INSTALL ENGINE ROOM RELAY BLOCK NO.3
Torque: 5.3 N·m (54 kgf·cm, 46 in.·lbf)

190. INSTALL FUEL FILTER ASSY
Torque: 18 N·m (178 kgf·cm, 13 ft·lbf)

191. INSTALL AIR CLEANER ASSY
     Torque: 7.0 N·m (71 kgf·cm, 62 in.·lbf)
192. INSTALL ENGINE COVER NO.1
     Torque: 8.0 N·m (82 kgf·cm, 71 in.·lbf)
193. BLEED CLUTCH PIPE LINE (See page 42–17)
194. INSTALL FRONT WHEELS
     Torque: 103 N·m (1,050 kgf·cm, 76 ft·lbf)
195. ADD MANUAL TRANSAXLE OIL
196. ADD ENGINE OIL
197. ADD ENGINE COOLANT (See page 16–44)
198. CHECK CLUTCH FLUID LEAKAGE
199. CHECK FLUID LEVEL IN RESERVOIR
200. CHECK BRAKE FLUID LEAKAGE
201. CHECK FOR ENGINE OIL LEAKS
202. CHECK FOR FUEL LEAKS (See page 11–60)
203. CHECK FOR ENGINE COOLANT LEAKS (See page 16–44)
204. CHECK FOR EXHAUST GAS LEAKS
205. INSPECT AND ADJUST FRONT WHEEL ALIGNMENT (See page 26–6)
206. INSPECT ENGINE IDLE SPEED (See page 14–266)
207. CHECK ABS SPEED SENSOR SIGNAL (See page 05–756)

TIMING BELT (1CD–FTV)

COMPONENTS

141C5–01

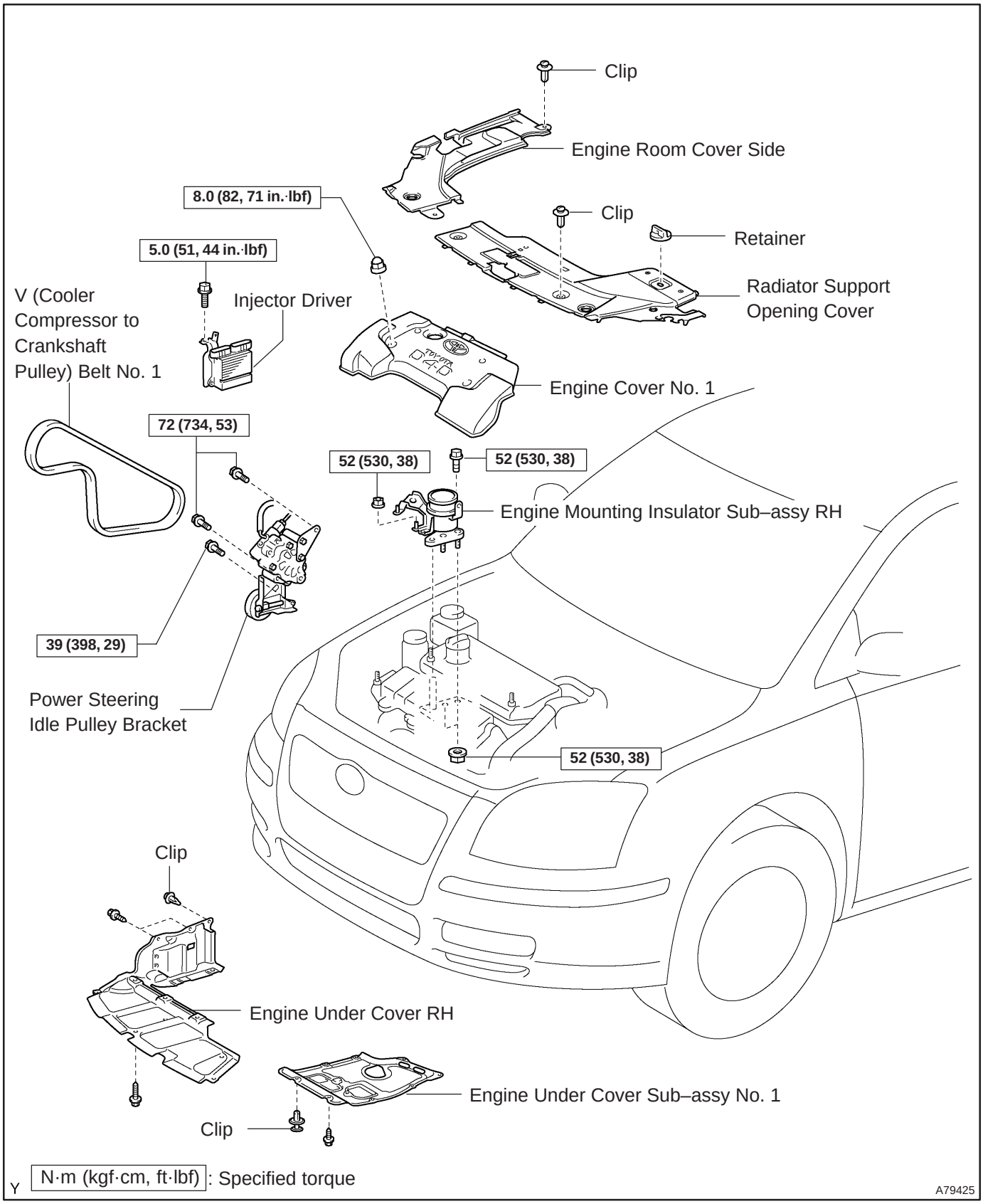

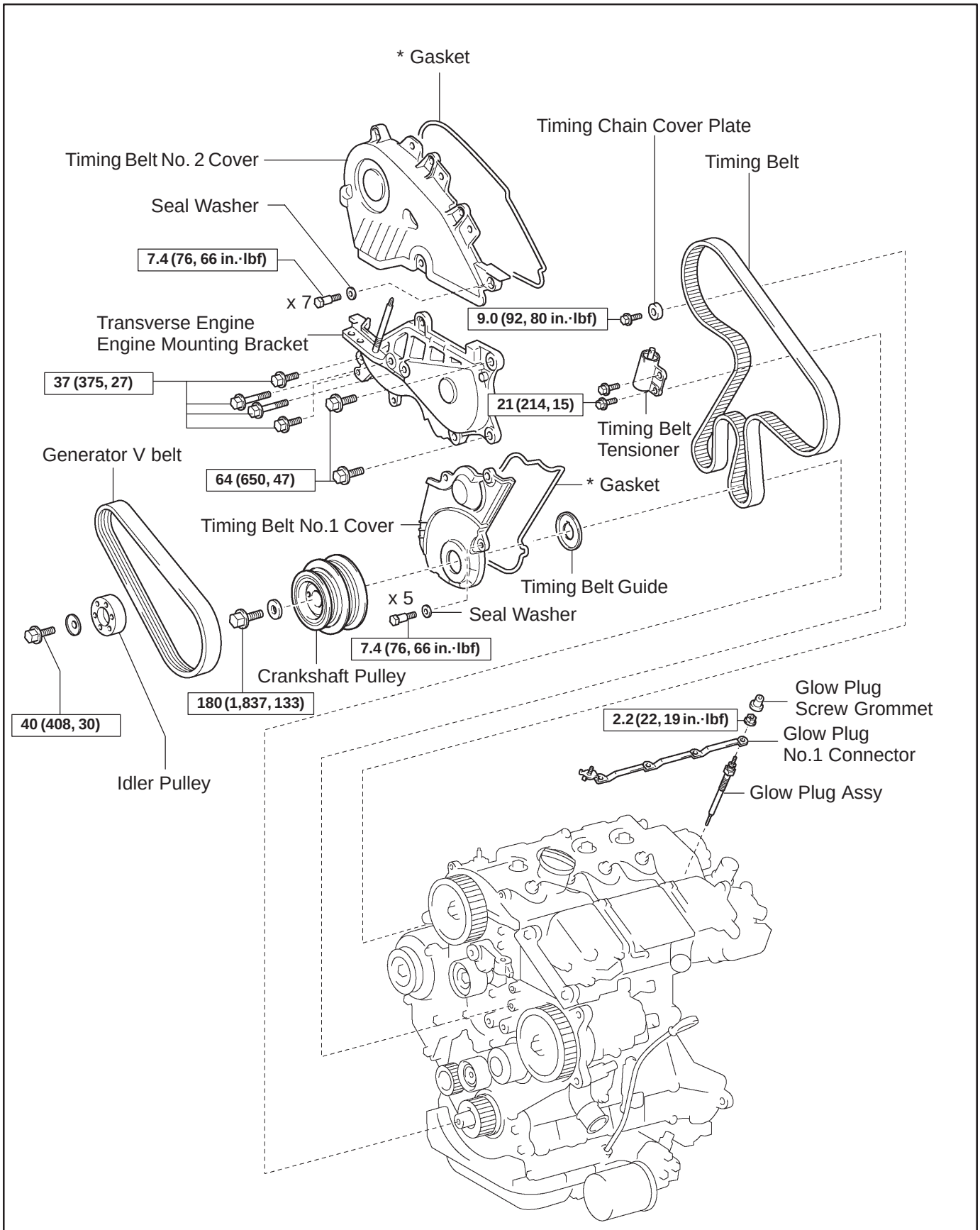

N·m (kgf·cm, ft·lbf) : Specified torque

* Replace only if damaged

Y

A61211

141C6–01

REPLACEMENT

1. **REMOVE FRONT WHEEL RH**
2. **REMOVE ENGINE UNDER COVER SUB–ASSY NO.1**
3. **REMOVE ENGINE UNDER COVER RH**
4. **REMOVE RADIATOR SUPPORT OPENING COVER**
5. **REMOVE ENGINE ROOM COVER SIDE**
6. **REMOVE ENGINE COVER NO.1**

(a) Remove the 5 nuts and the engine cover.

7. **REMOVE INJECTOR DRIVER (See page 14–286)**
8. **REMOVE V (COOLER COMPRESSOR TO CRANKSHAFT PULLEY) BELT NO.1 (See page 14–269)**
9. **REMOVE GENERATOR V BELT (See page 14–269)**
10. **SEPARATE POWER STEERING IDLE PULLEY BRACKET (See page 14–286)**

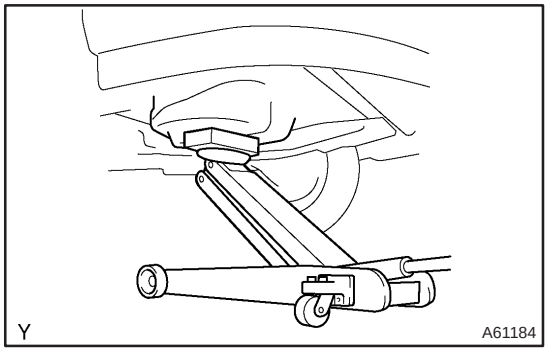

11. **REMOVE ENGINE MOUNTING INSULATOR SUB–ASSY RH**

(a) Place a wooden block on a jack underneath the engine.

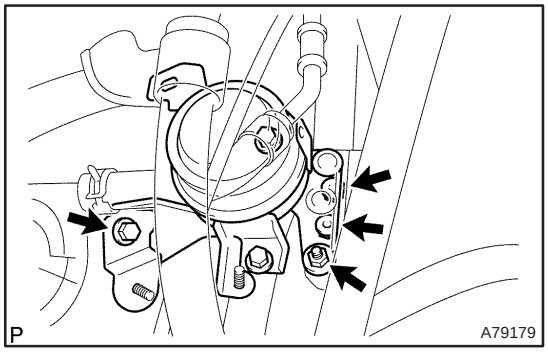

(b) Remove the 3 bolts and 3 nuts, and then detach the engine mounting insulator sub assy RH.

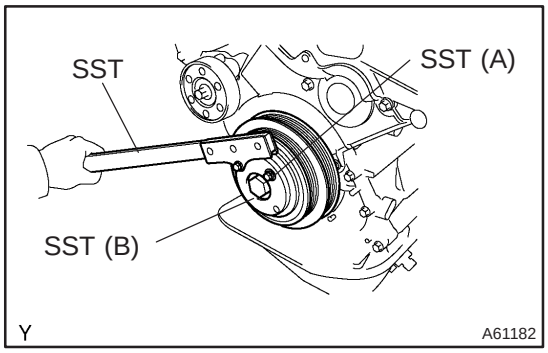

12. **REMOVE CRANKSHAFT PULLEY**

(a) Using SSTs, remove the pulley bolt.

SST 09213–54015 (90105–08076), 09330–00021

HINT:

When using SST (A) (90105–08076), a plate washer (5 mm or 0.20 in.) must be inserted between SST (A) and SST (B).

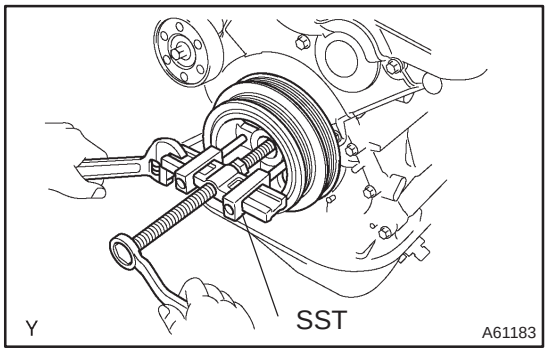

(b) Using SST, remove the pulley.
SST 09950–50013 (09951–05010, 09952–05010, 09953–05020, 09954–05031)

13. REMOVE IDLER PULLEY SUB–ASSY

(a) Remove the bolt and washer, and then remove the pulley.

14. REMOVE TIMING BELT NO.2 COVER

(a) Remove the 7 bolts and 7 seal washers, and then remove the timing belt cover.

15. REMOVE TIMING BELT NO.1 COVER

(a) Remove the 5 bolts and 5 seal washers, and then remove the timing belt cover.

16. REMOVE TIMING BELT GUIDE

17. REMOVE TRANSVERSE ENGINE ENGINE MOUNTING BRACKET

(a) Remove the 6 bolts and the engine mounting bracket.

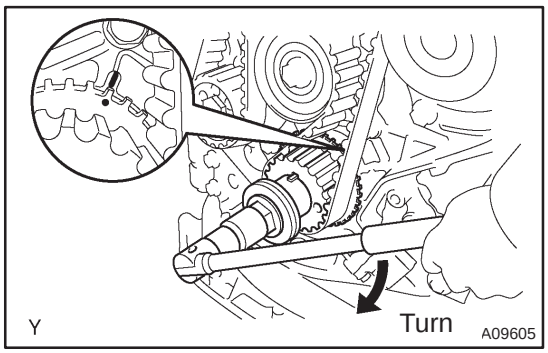

18. SET NO. 1 CYLINDER TO TDC/COMPRESSION

(a) Using the crankshaft pulley bolt, align the dot mark of the crankshaft timing pulley with the TDC mark of the oil pump by turning the crankshaft.

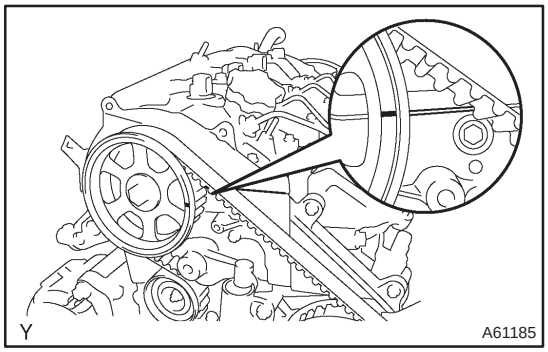

(b) Check that the timing mark of the camshaft timing pulley is aligned with a joint of the cylinder head and the cylinder head cover.

If not, revolve the crankshaft 1 revolution (360˚) to align the mark.

19. REMOVE TIMING CHAIN COVER PLATE

(a) Remove the bolt and the timing chain cover plate.

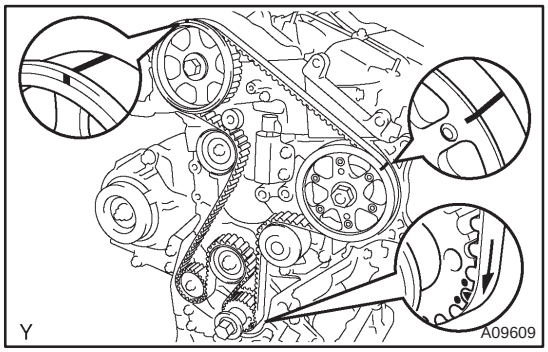

20. REMOVE TIMING BELT

HINT:

If re–use the timing belt, draw an arrow on the belt which indicates the engine revolution direction and put match marks on the pulleys and the belt before removing. This operation will be very helpful when re–installing the timing belt.

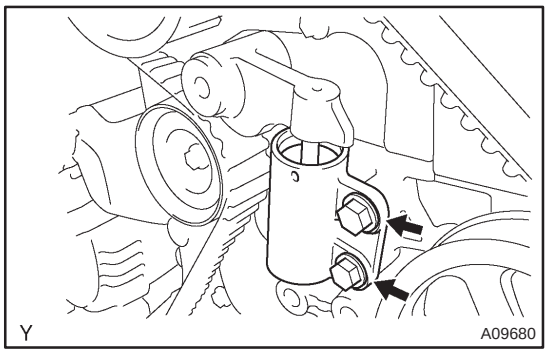

(a) Alternately loosen the 2 bolts to remove the timing belt tensioner.

(b) Remove the timing belt.

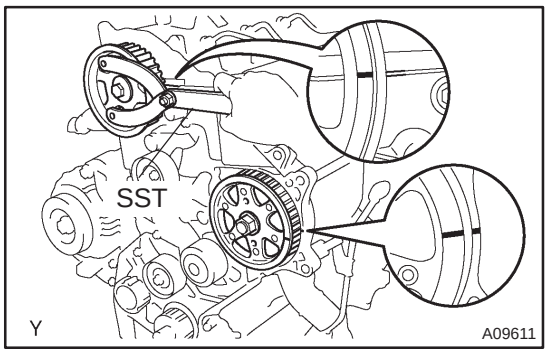

21. SET NO. 1 CYLINDER TO TDC/COMPRESSION

(a) Using SST, set the pulleys of the camshaft and the injection pump so that each timing mark of the pulleys is aligned with its timing mark on the cylinder head assembly and the water pump assembly.

SST 09960–10010 (09962–01000, 09963–01000)

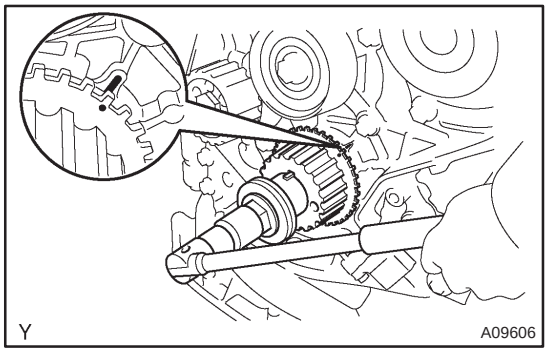

(b) Using the crankshaft pulley bolt, align the dot mark of the crankshaft timing pulley with the TDC mark of the oil pump by turning the crankshaft.

NOTICE:

Take great care, when turning the camshaft and crankshaft. Since the valve head and the piston head are sensitive, damage to them may result when the piston head contacts with the valve heads.

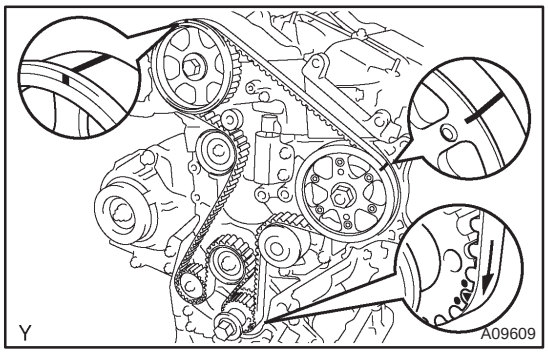

22. INSTALL TIMING BELT

NOTICE:

The engine should be cold.

(a) Remove any oil or water on each pulley and keep them clean.

NOTICE:

Do not use any cleaning agent.

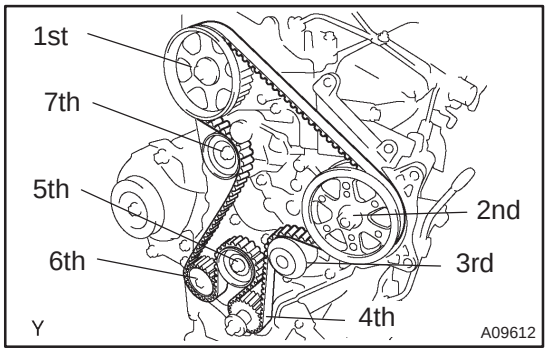

(b) Install the timing belt in the following order:
1. Camshaft timing pulley
2. Supply pump drive pulley
3. Water pump pulley
4. Crankshaft timing pulley
5. No. 2 idler pulley
6. Oil pump pulley
7. No. 1 idler pulley

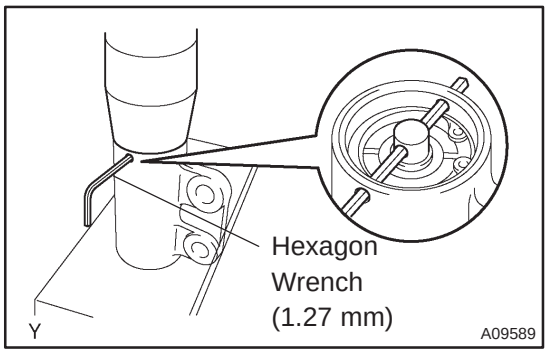

(c) Install the timing belt tensioner.
(1) Using a press, slowly press in the push rod with pressure 981 to 9,807 N (100 to 1,000 kgf, 200 to 2,205 lbf).
(2) Align the holes of the push rod and the housing, insert hexagon wrench (1.27 mm) through the holes to keep the setting position of the push rod.
(3) Release the press.

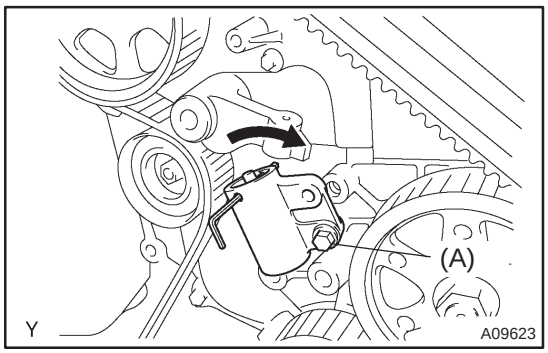

(4) Temporarily install the tensioner with bolt (A).
(5) Turn the tensioner clockwise and temporarily install the other bolt.

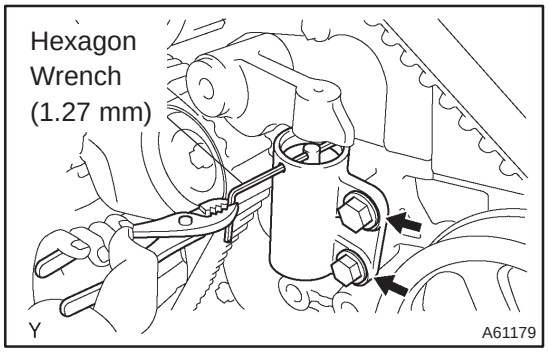

(6) Alternately tighten the 2 bolts.
Torque: 21 N·m (214 kgf·cm, 15 ft·lbf)
(7) Remove the hexagon wrench from the tensioner.

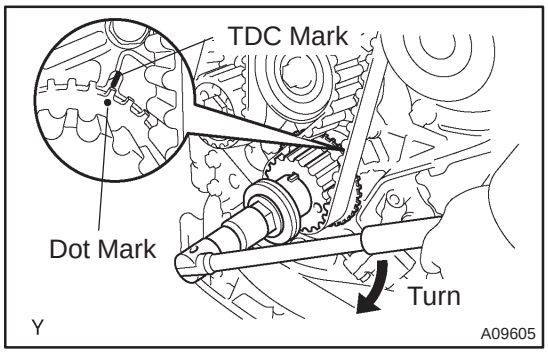

23. CHECK VALVE TIMING

(a) Slowly turn the crankshaft 2 complete revolutions (720°) from TDC to TDC.

NOTICE:

Always turn the crankshaft clockwise.

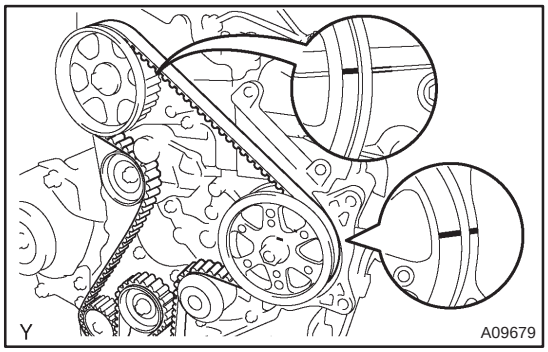

(b) Check that each timing mark of the pulleys is aligning with the timing marks of the engine assembly as shown in the illustration.

If the timing marks are not aligned, remove the timing belt and reinstall it.

(c) Remove the crankshaft pulley bolt.

24. INSTALL TIMING CHAIN COVER PLATE
Torque: 9.0 N·m (92 kgf·cm, 80 in.·lbf)

25. INSTALL TRANSVERSE ENGINE ENGINE MOUNTING BRACKET
Torque:
37 N·m (375 kgf·cm, 27 ft·lbf) for 14 mm head bolt
64 N·m (650 kgf·cm, 47 ft·lbf) for 17 mm head bolt

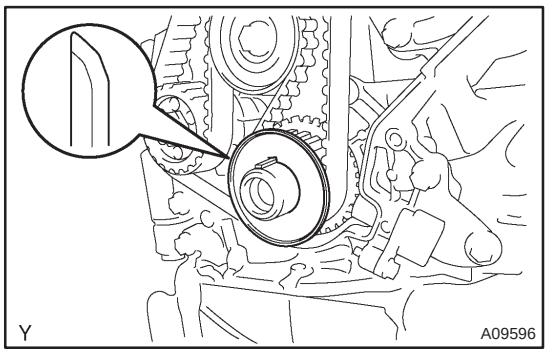

26. INSTALL TIMING BELT GUIDE

(a) Install the belt guide, facing the cap side outward.

27. INSTALL TIMING BELT NO.1 COVER

(a) Check the timing belt cover gasket for cracks or deteriorations etc.

If the gasket has cracks or has deteriorated, replace it by the following steps:

(1) Using a screwdriver and gasket scraper, remove all the old gaskets.

(2) Thoroughly clean all components to remove all the loose material.

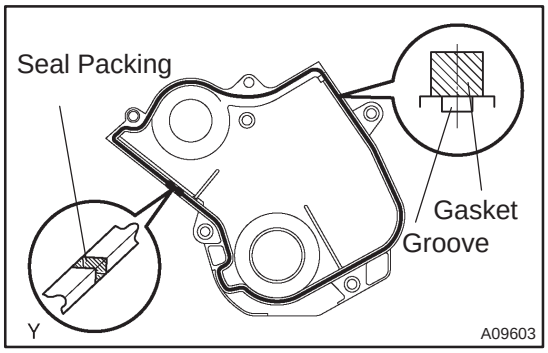

(3) Remove the backing paper from a new gasket and affix the gasket to the timing belt cover as shown in the illustration.

NOTICE:

- **Affix the gasket at the center of the groove.**
- **At the corners, try to keep the gasket thickness uniform.**

(4) After installing the gasket, press it down so that the adhesive firmly sticks to the timing belt cover.

(5) If there is a gap where the end of the gasket meets, use seal packing to close the gap.

Seal packing: Part No. 08826–00080 or equivalent

(b) Install the No. 1 timing belt cover and the gasket with the 5 bolts and 5 seal washers.
Torque: 7.4 N·m (75 kgf·cm, 65 in.·lbf)

(c) After installing the belt cover, check that there is no peelings of the gasket.

28. INSTALL TIMING BELT NO.2 COVER

(a) Check the timing belt cover gasket for cracks or deteriorations etc.

If the gasket has cracks or has deteriorated, replace it by the following steps:

(1) Using a screwdriver and gasket scraper, remove all the old gasket.

(2) Thoroughly clean all components to remove all the loose material.

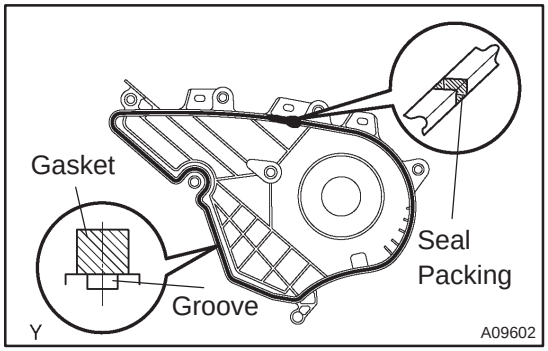

(3) Remove the backing paper from a new gasket and affix the gasket to the timing belt cover as shown in the illustration.

NOTICE:

- **Affix the gasket at the center of the groove.**
- **At the corners, try to keep the gasket thickness uniform.**

(4) After installing the gasket, press it down so that the adhesive firmly sticks to the timing belt cover.

(5) If there is a gap where the end of the gasket meets, use a seal packing to close the gap.
Seal packing: Part No. 08826–00080 or equivalent

(b) Install the No. 2 timing belt cover and the gasket with the 7 bolts and 7 seal washers.
Torque: 7.4 N·m (75 kgf·cm, 65 in.·lbf)

29. INSTALL IDLER PULLEY SUB–ASSY
Torque: 40 N·m (408 kgf·cm, 30 ft·lbf)

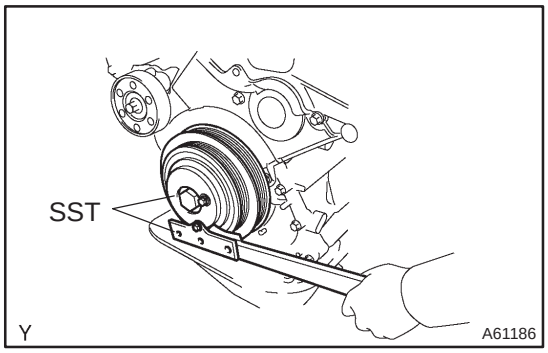

30. INSTALL CRANKSHAFT PULLEY

(a) Align the keyway of the pulley with the key located on the crankshaft, slide the pulley into place.

(b) Using SST, install the pulley bolt.
SST 09213–54015 (90105–08076), 09330–00021
Torque: 180 N·m (1,835 kgf·cm, 133 ft·lbf)

HINT:
When using a bolt (91651–60855), a plate washer (5 mm or 0.20 in.) must be inserted between the pulley bolt and SST.

31. INSTALL ENGINE MOUNTING INSULATOR SUB–ASSY RH
Torque:52 N·m (530 kgf·cm, 38 ft·lbf)

32. INSTALL POWER STEERING IDLE PULLEY BRACKET (See page 14–286)

33. ADJUST V (COOLER COMPRESSOR TO CRANKSHAFT PULLEY) BELT NO.1 (See page 14–269)

34. INSTALL INJECTOR DRIVER (See page 14–286)

35. INSTALL ENGINE COVER NO.1
Torque: 8.0 N·m (82 kgf·cm, 71 in.·lbf)

36. INSTALL FRONT WHEEL RH
Torque: 103 N·m (1,050 kgf·cm, 76 ft·lbf)

CAMSHAFT (1CD–FTV)

COMPONENTS

141C7–01

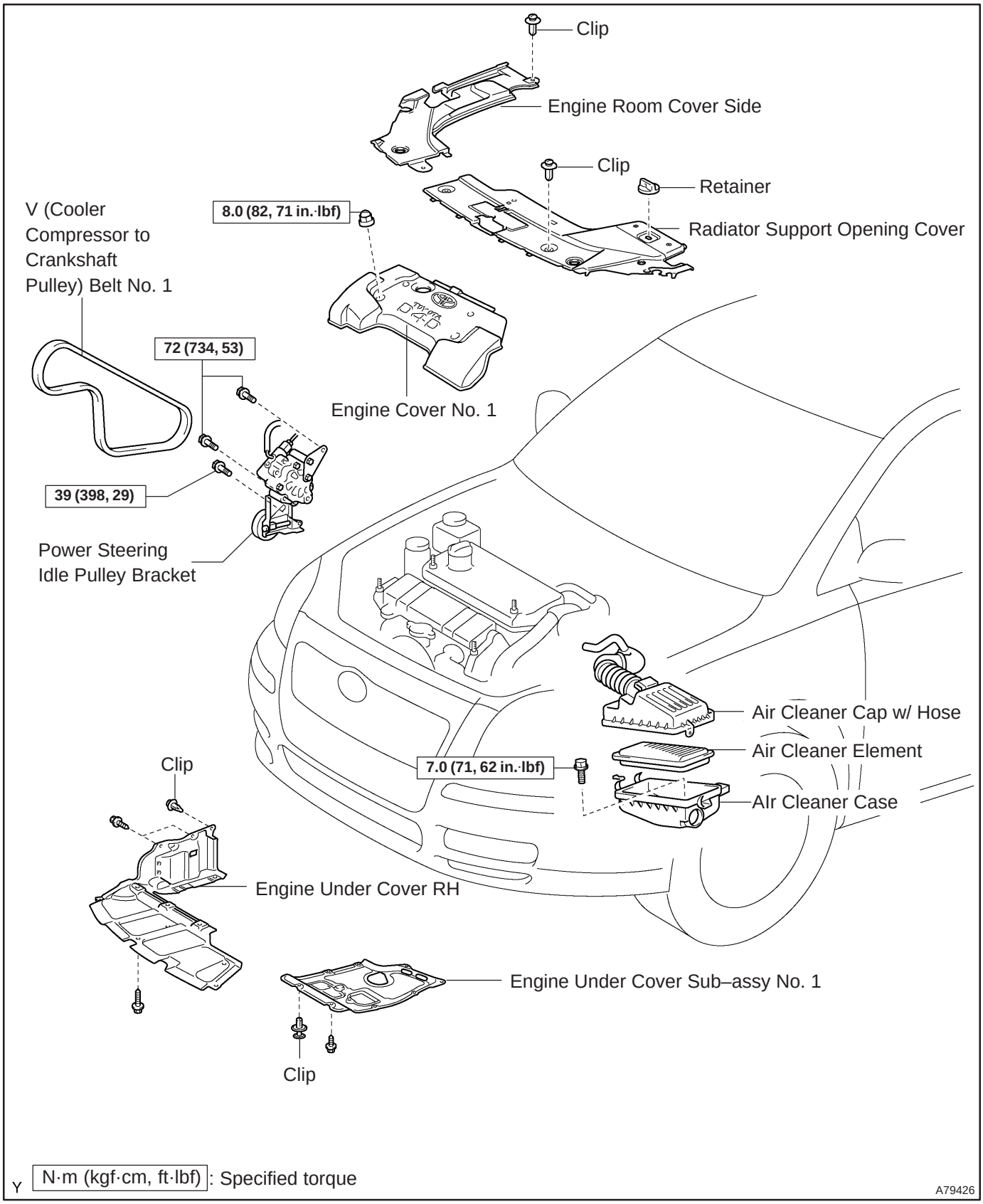

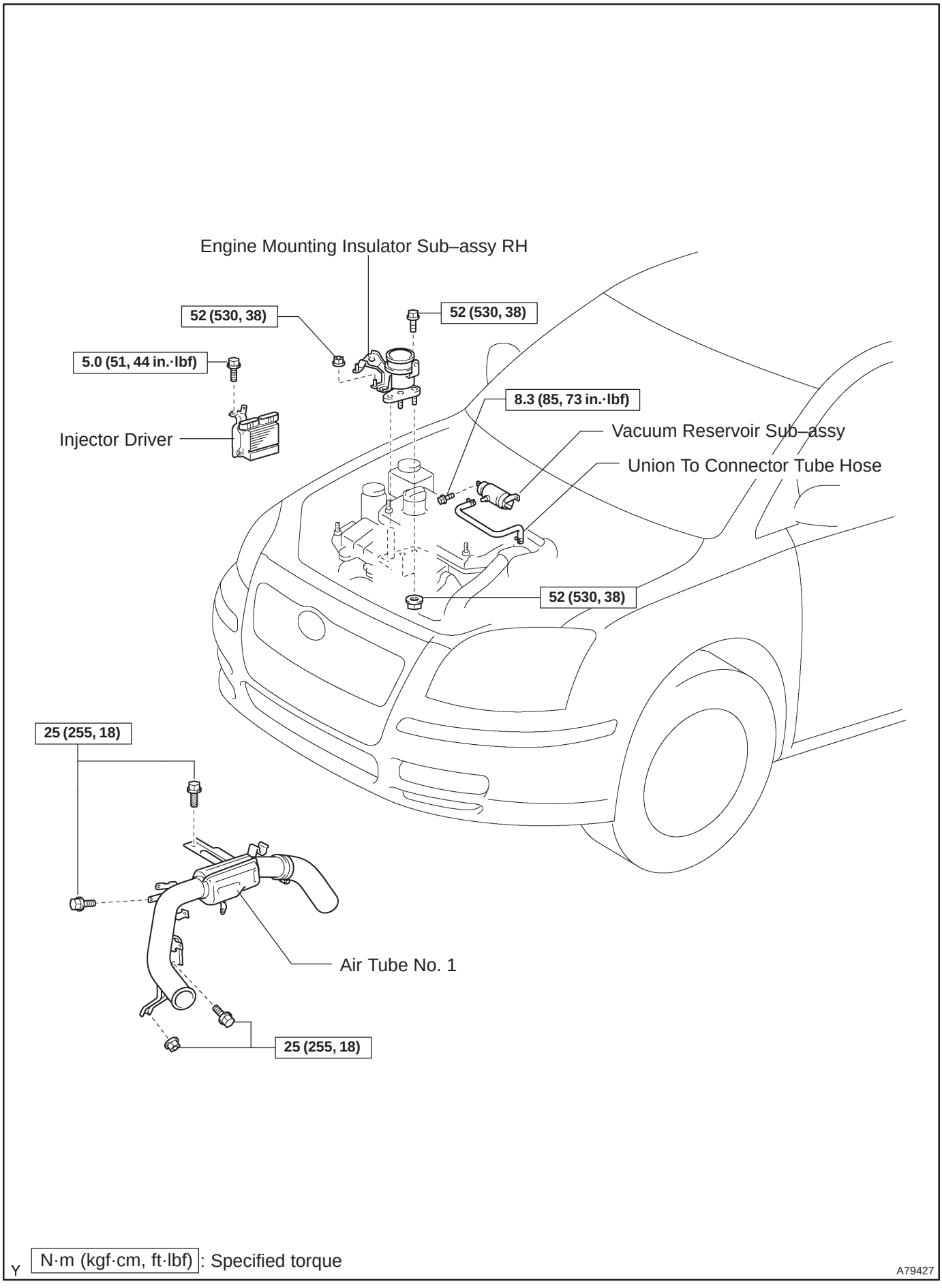
Engine Mounting Insulator Sub–assy RH
52 (530, 38)
52 (530, 38)
5.0 (51, 44 in.·lbf)
8.3 (85, 73 in.·lbf)
Injector Driver
Vacuum Reservoir Sub–assy
Union To Connector Tube Hose
52 (530, 38)
25 (255, 18)
Air Tube No. 1
25 (255, 18)
Y N·m (kgf·cm, ft·lbf): Specified torque
A79427

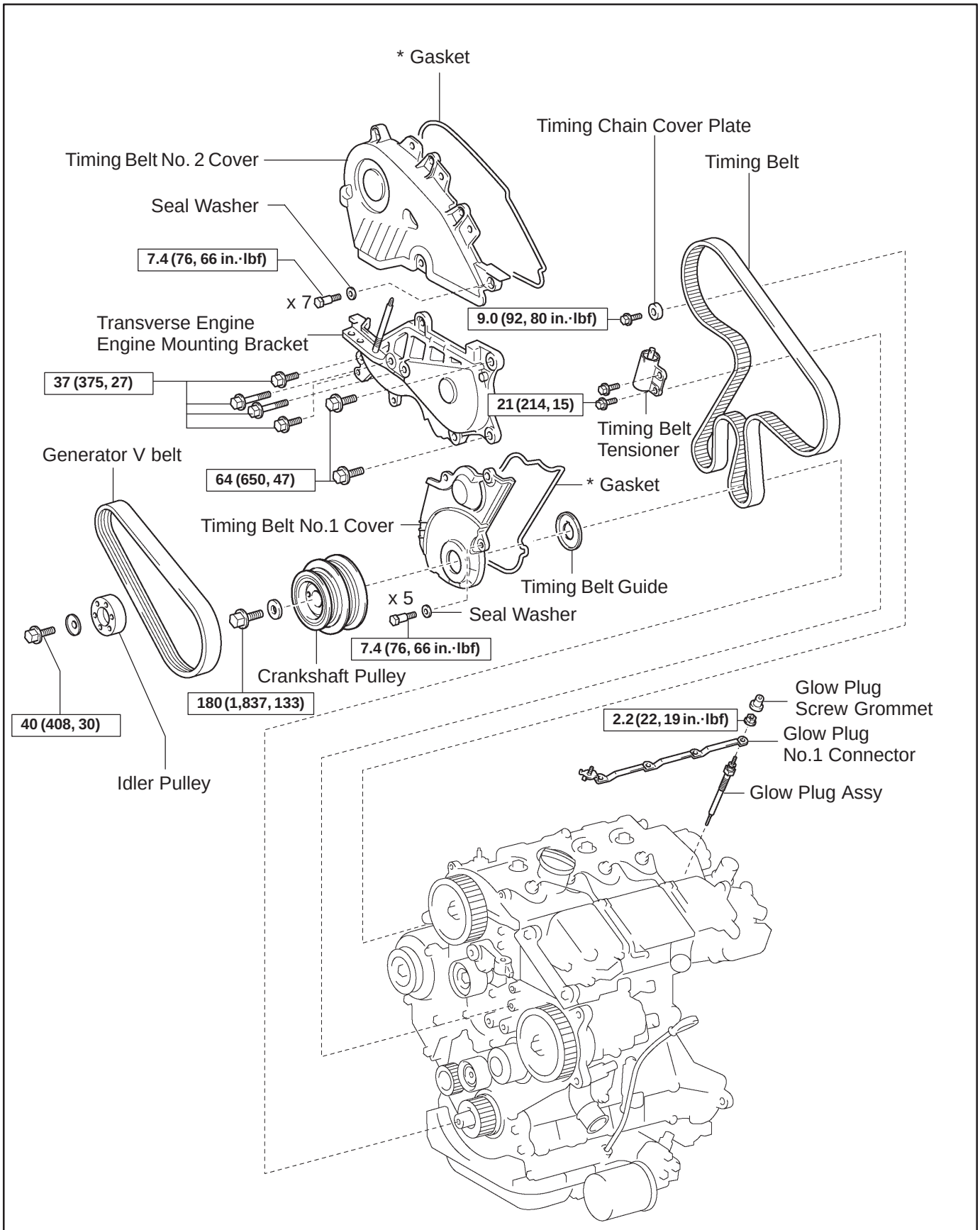
* Gasket
Timing Chain Cover Plate
Timing Belt No. 2 Cover
Timing Belt
Seal Washer
7.4 (76, 66 in.·lbf)
x 7
9.0 (92, 80 in.·lbf)
Transverse Engine
Engine Mounting Bracket
37 (375, 27)
21 (214, 15)
Timing Belt
Tensioner
Generator V belt
64 (650, 47)
* Gasket
Timing Belt No.1 Cover
Timing Belt Guide
x 5
Seal Washer
7.4 (76, 66 in.·lbf)
Crankshaft Pulley
180 (1,837, 133)
40 (408, 30)
Idler Pulley
Glow Plug
Screw Grommet
2.2 (22, 19 in.·lbf)
Glow Plug
No.1 Connector
Glow Plug Assy
N·m (kgf·cm, ft·lbf) : Specified torque
* Replace only if damaged
Y
A61211

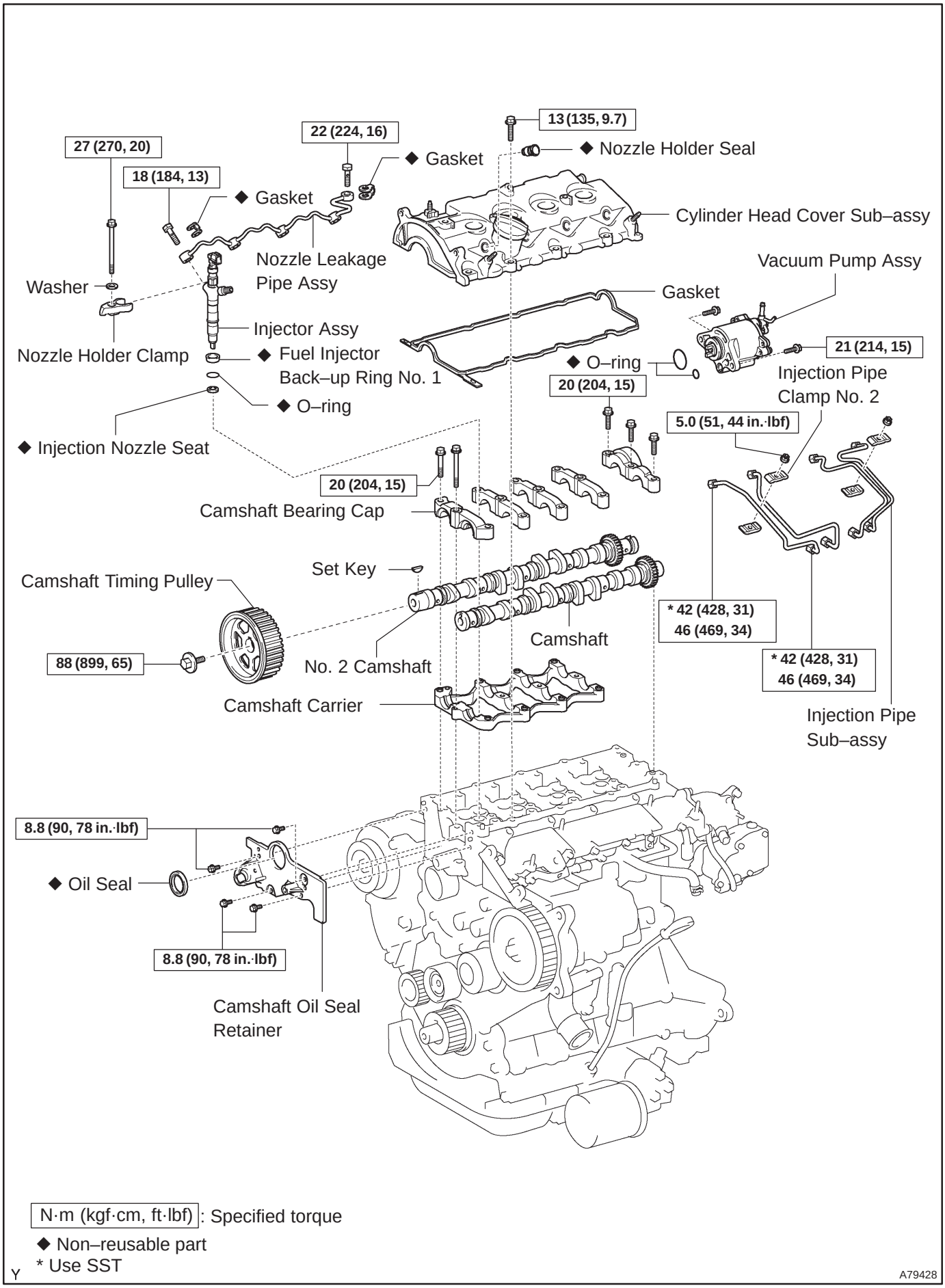
13 (135, 9.7)
◆ Nozzle Holder Seal
22 (224, 16)
◆ Gasket
27 (270, 20)
18 (184, 13)
◆ Gasket
Cylinder Head Cover Sub–assy
Nozzle Leakage Pipe Assy
Vacuum Pump Assy
Washer
Gasket
Injector Assy
Nozzle Holder Clamp
◆ Fuel Injector Back–up Ring No. 1
◆ O–ring
21 (214, 15)
Injection Pipe Clamp No. 2
20 (204, 15)
◆ O–ring
◆ Injection Nozzle Seat
5.0 (51, 44 in.·lbf)
20 (204, 15)
Camshaft Bearing Cap
Set Key
Camshaft Timing Pulley
* 42 (428, 31)
46 (469, 34)
Camshaft
88 (899, 65)
No. 2 Camshaft
* 42 (428, 31)
46 (469, 34)
Camshaft Carrier
Injection Pipe Sub–assy
8.8 (90, 78 in.·lbf)
◆ Oil Seal
8.8 (90, 78 in.·lbf)
Camshaft Oil Seal Retainer
N·m (kgf·cm, ft·lbf): Specified torque
◆ Non–reusable part
* Use SST
Y
A79428

141C8–01

REPLACEMENT

1. **REMOVE FRONT WHEEL RH**
2. **REMOVE ENGINE UNDER COVER SUB–ASSY NO.1**
3. **ENGINE UNDER COVER RH**
4. **REMOVE RADIATOR SUPPORT OPENING COVER**
5. **REMOVE ENGINE ROOM COVER SIDE**
6. **REMOVE ENGINE COVER NO.1**

(a) Remove the 5 nuts and the engine cover.

7. **REMOVE AIR CLEANER ASSY (See page 11–60)**
8. **REMOVE VACUUM RESERVOIR SUB–ASSY**

(a) Disconnect the 2 vacuum hoses and the connector.
(b) Remove the 2 bolts and the vacuum reservoir.

9. **REMOVE AIR TUBE NO.1 (See page 14–270)**
10. **REMOVE INJECTOR DRIVER (See page 14–286)**
11. **REMOVE V (COOLER COMPRESSOR TO CRANKSHAFT PULLEY) BELT NO.1 (See page 14–269)**
12. **REMOVE GENERATOR V BELT (See page 14–269)**
13. **SEPARATE POWER STEERING IDLE PULLEY BRACKET (See page 14–286)**
14. **REMOVE ENGINE MOUNTING INSULATOR SUB–ASSY RH (See page 14–307)**
15. **REMOVE CRANKSHAFT PULLEY (See page 14–307)**

SST 09213–54015 (90105–08076), 09330–00021, 09950–50013 (09951–05010, 09952–05010, 09953–05020, 09954–05031)

16. **REMOVE IDLER PULLEY SUB–ASSY (See page 14–307)**
17. **REMOVE TIMING BELT NO.2 COVER (See page 14–307)**
18. **REMOVE TIMING BELT NO.1 COVER (See page 14–307)**
19. **REMOVE TIMING BELT GUIDE**
20. **REMOVE TRANSVERSE ENGINE ENGINE MOUNTING BRACKET (See page 14–307)**
21. **SET NO. 1 CYLINDER TO TDC/COMPRESSION (See page 14–307)**
22. **REMOVE TIMING CHAIN COVER PLATE (See page 14–307)**
23. **REMOVE TIMING BELT (See page 14–307)**
24. **REMOVE CAMSHAFT POSITION SENSOR (See page 10–63)**

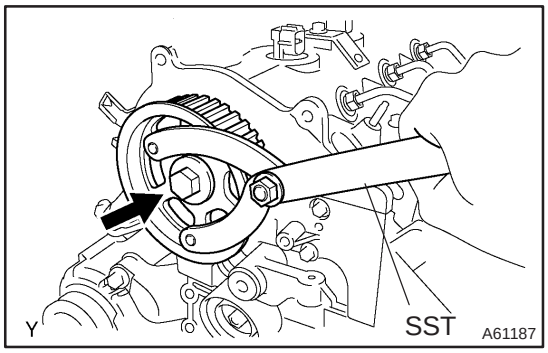

25. **REMOVE CAMSHAFT TIMING PULLEY**

(a) Using SST, remove the pulley bolt.
SST 09960–10010 (09962–01000, 09963–01000)
(b) Remove the timing pulley.

HINT:
Using a plastic–faced hammer, tap out the pulley.

(c) Remove the set key.

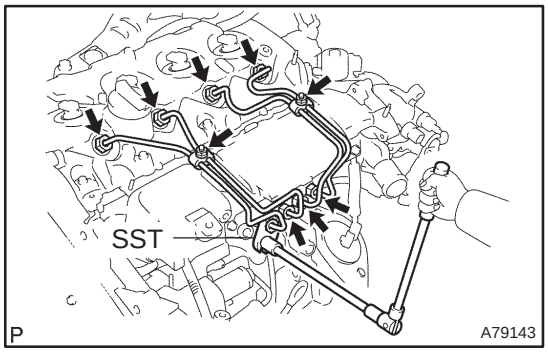

26. REMOVE INJECTION PIPE SUB–ASSY NO.1 (See page 11–60)

(a) Remove the 2 nuts and 2 upper infection pipe clamps from the intake manifold.

(b) Using SST, remove the injection pipe from the common rail side.
SST 09023–12700

(c) Using SST, remove the injection pipe from the injector side.
SST 09023–12700

(d) After removing the fuel pipe, to prevent dust or foreign objects from being introduced, cover the common rail with vinyl tape and protect the injector inlet with a vinyl or a plastic bag.

27. REMOVE INJECTION PIPE SUB–ASSY NO.2 (See page 11–60)
SST 09023–12700

HINT:
Perform the same procedures as injection pipe No. 1.

28. REMOVE INJECTION PIPE SUB–ASSY NO.3 (See page 11–60)
SST 09023–12700

HINT:
Perform the same procedures as injection pipe No. 1.

29. REMOVE INJECTION PIPE SUB–ASSY NO.4 (See page 11–60)
SST 09023–12700

HINT:
Perform the same procedures as injection pipe No. 1.

30. REMOVE VACUUM PUMP ASSY

(a) Remove vacuum hose.

(b) Remove vacuum pump oil hose.

(c) Remove the 2 bolts and the vacuum pump assembly.

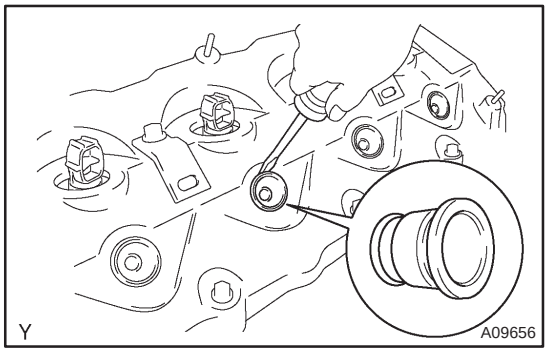

31. REMOVE NOZZLE HOLDER SEAL

(a) Using a screwdriver, pry out the 4 nozzle holder seals.

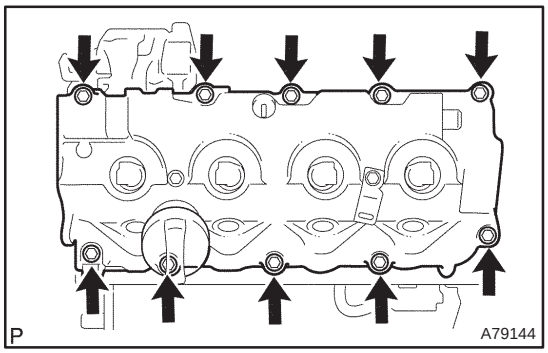

32. REMOVE CYLINDER HEAD COVER SUB–ASSY

(a) Remove the 10 bolts, the cylinder head cover and the gasket.

33. REMOVE NOZZLE LEAKAGE PIPE ASSY (See page 11–60)

34. REMOVE INJECTOR ASSY (See page 11–60)

HINT:

Since each injector assembly has a characteristic fuel injecting behavior, store them in correct order so that they can be returned to the original locations when re–assembling.

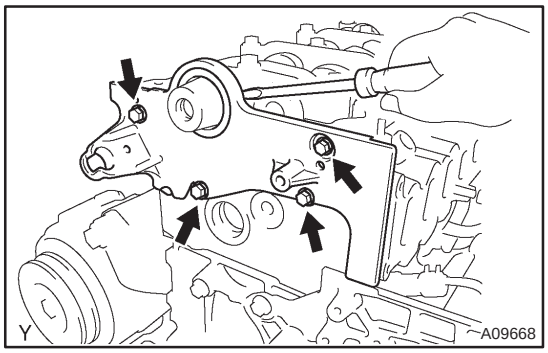

35. REMOVE CAMSHAFT OIL SEAL RETAINER

(a) Remove the 4 bolts.

(b) Using a screwdriver, remove the oil seal retainer by prying between the oil seal retainer and the camshaft bearing cap.

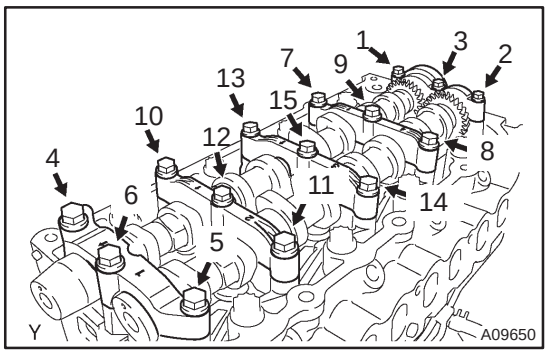

36. REMOVE CAMSHAFT

(a) Using several steps, loosen and remove the 15 bearing cap bolts uniformly in the sequence shown in the illustration.

(b) Remove the 5 bearing caps and the camshaft sub–assy.

37. REMOVE NO.2 CAMSHAFT

(a) Remove the camshaft sub–assy and the camshaft carrier.

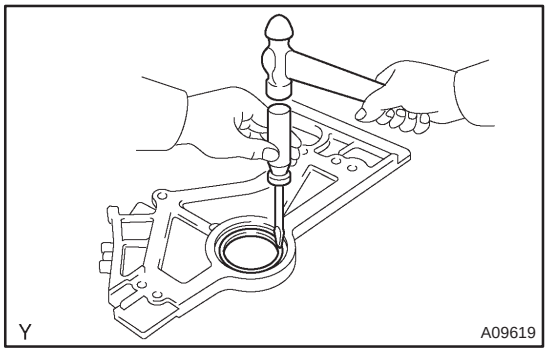

38. REMOVE CAMSHAFT OIL SEAL

(a) Using a screwdriver and a hammer, tap out the oil seal.

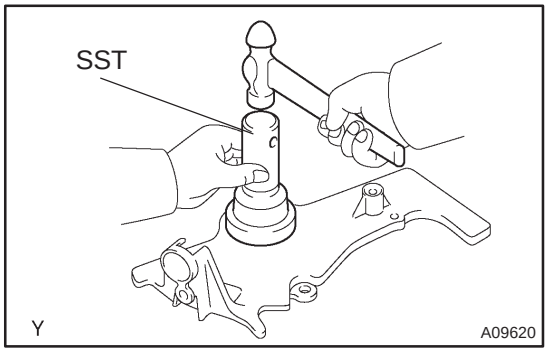

39. INSTALL CAMSHAFT OIL SEAL

(a) Using SST and a hammer, tap in a new oil seal until its surface is flush with the camshaft oil seal retainer edge.

SST 09223–46011

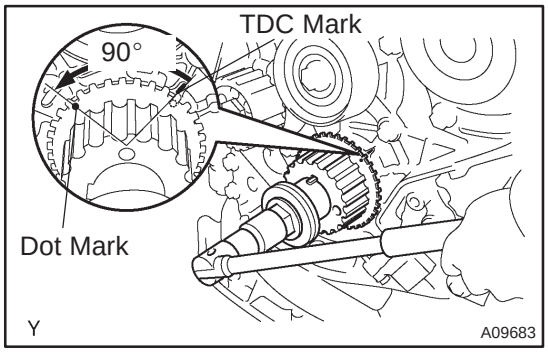

40. SET NO. 1 CYLINDER TO TDC/COMPRESSION

(a) Using the crankshaft pulley bolt, turn the crankshaft to set the dot mark of the crankshaft timing pulley at the position of 90° BTDC.

NOTICE:

If the timing belt is disengaged, having the crankshaft timing pulley at wrong angle can cause the piston head and valve head to come into contact with each other.

41. INSTALL CAMSHAFT

NOTICE:

Since the thrust clearance of the camshaft is small, the camshaft must be kept level while it is being installed. If the camshaft is not kept level, damage to the cylinder head or the camshaft may result. To avoid this, the following procedures should be carried out.

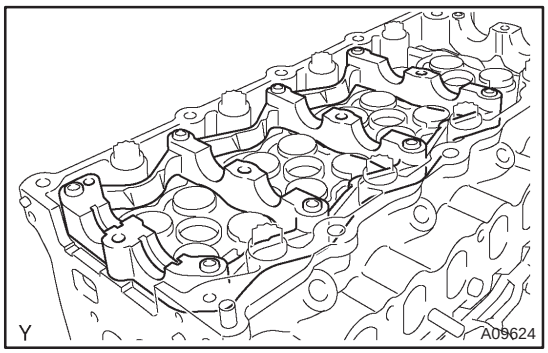

(a) Place the camshaft carrier on the cylinder head.

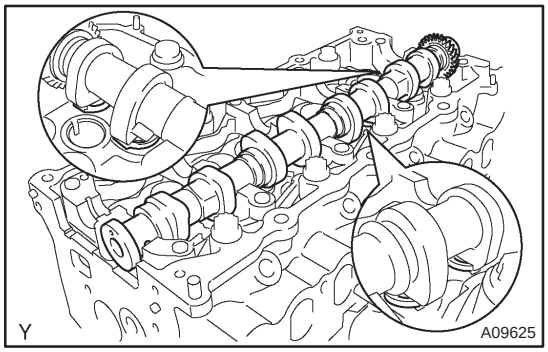

(b) Install the camshaft sub–assy No. 1.

(c) Apply engine oil to the cam and gear of the camshaft, and the journal of the camshaft carrier.

(d) Place the intake camshaft on the camshaft carrier as shown in the illustration so that the No. 3 and No. 4 of cylinder cam lobes face downward.

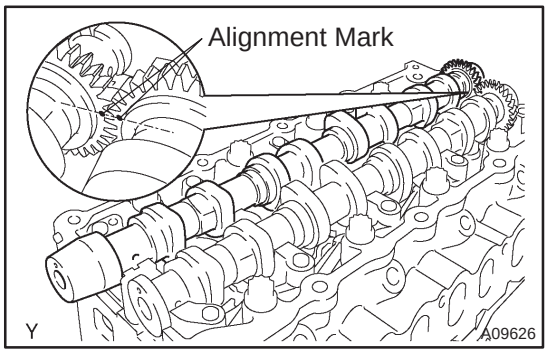

42. INSTALL NO.2 CAMSHAFT

(a) Install the camshaft sub–assy No. 2.

(b) Apply engine oil to the cam and gear of the camshaft, and the journal of the camshaft carrier.

(c) Engage the exhaust camshaft gear and the intake camshaft gear by aligning the alignment marks on each gear.

(d) Roll down the exhaust camshaft onto the bearing journals while engaging gears with each other.

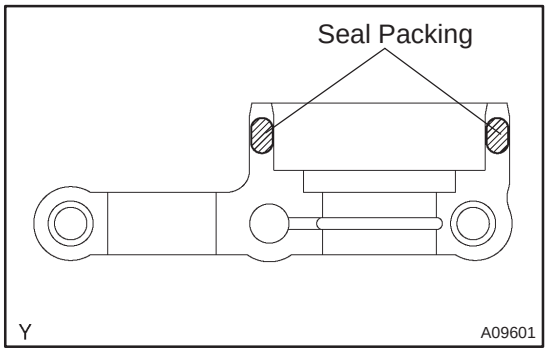

(e) Install the camshaft bearing caps.
(1) Remove any oil packing (FIPG) material from the No. 5 camshaft bearing cap.
(2) Apply seal packing to the No. 5 camshaft bearing cap as shown in the illustration.

Seal packing: Part No. 08826–00080 or equivalent

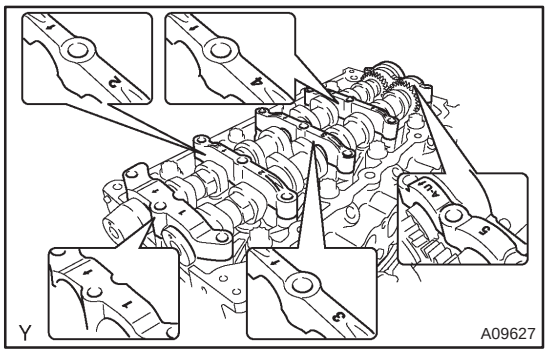

(3) Place the 5 bearing caps in their proper locations.

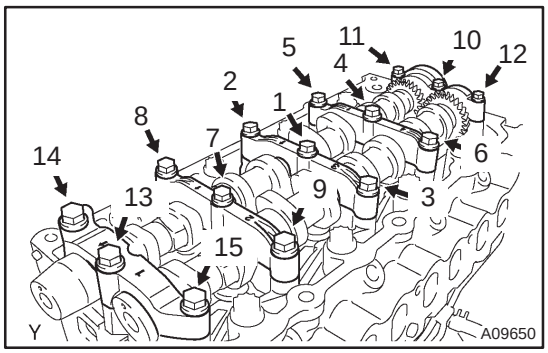

(4) Using several steps, install and tighten the 15 bearing cap bolts uniformly in the sequence shown in the illustration.

Torque: 20 N·m (204 kgf·cm, 15 ft·lbf)

43. INSPECT VALVE CLEARANCE (See page 14–270)

44. ADJUST VALVE CLEARANCE (See page 14–270)

45. INSTALL CAMSHAFT OIL SEAL RETAINER

(a) Remove any old packing (FIPG) material and be careful not to drop any oil on the contact surfaces of the oil seal retainer and the cylinder block.
(1) Thoroughly clean all components to remove all the loose material.
(2) Using non–residue solvent, clean both sealing surfaces.

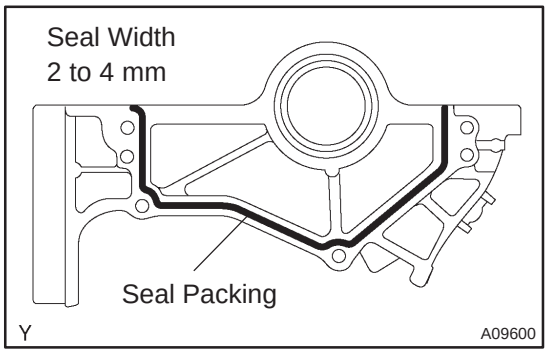

(b) Apply seal packing to the oil seal retainer as shown in the illustration.

Seal packing: Part No. 08826–00080 or equivalent

(1) Install a nozzle that has been cut to a 2 to 4 mm (0.08 to 0.16 in.) opening.
(2) Parts must be assembled within 15 minutes of application. Otherwise the material must be removed and reapplied.
(3) Immediately remove nozzle from the tube and reinstall the cap.

(c) Install the oil seal retainer with the 4 bolts. Tighten the 4 bolts uniformly in several steps.
Torque: 8.8 N·m (90 kgf·cm, 78 in.·lbf)

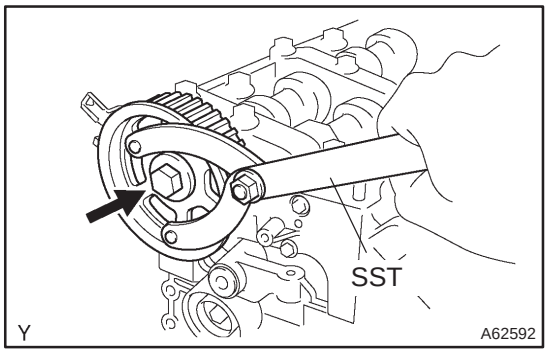

46. INSTALL CAMSHAFT TIMING PULLEY
(a) Install the pulley set key to the groove of the camshaft.
(b) Align the keyway of the timing pulley with the key located on the camshaft, slide the pulley into place.
(c) Using SST, install the pulley bolt.
SST 09960–10010 (09962–01000, 09963–01000)
Torque: 88 N·m (899 kgf·cm, 65 ft·lbf)

47. INSTALL CAMSHAFT POSITION SENSOR (See page 10–63)
48. INSTALL INJECTOR ASSY (See page 11–60)
49. INSTALL NOZZLE LEAKAGE PIPE ASSY (See page 11–60)
SST 09992–00242

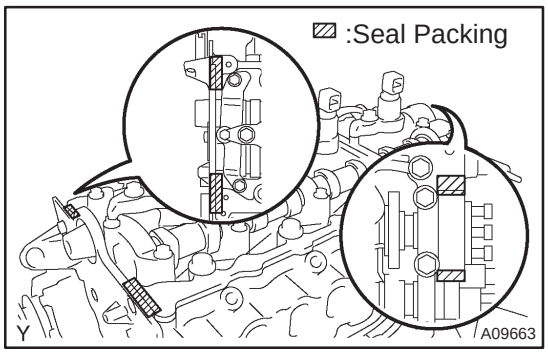

50. INSTALL CYLINDER HEAD COVER SUB–ASSY
(a) Remove any old packing (FIPG) material.
(b) Apply seal packing to the cylinder head.
Seal packing: Part No. 08826–00080 or equivalent
(c) Install the gasket to the cylinder head cover.
(d) Install the cylinder head cover with the 10 bolts.
Torque: 13 N·m (135 kgf·cm, 9.7 ft·lbf)

51. INSTALL NOZZLE HOLDER SEAL
(a) Install 4 new nozzle holder seals.
52. INSTALL VACUUM PUMP ASSY
Torque: 21 N·m (214 kgf·cm, 15 ft·lbf)

53. INSTALL INJECTION PIPE SUB–ASSY NO.1 (See page 11–60)
NOTICE:
When assembling the pipes, perform the operation with the engine cold under room temperature.
(a) Remove the vinyl or the plastic bag from the injector and vinyl tape from the common rail.
(b) Temporarily install the injection pipe.

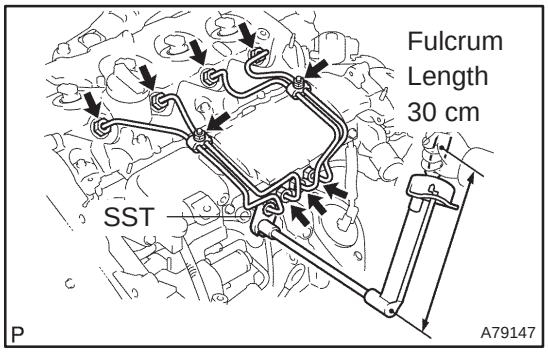

(c) Using SST, tighten the nut of the injection pipe to the common rail side.
SST 09023–12700
Torque:
42 N·m (428 kgf·cm, 31 ft·lbf) for a used pipe using SST
46 N·m (469 kgf·cm, 34 ft·lbf) for a used pipe not using SST
31 N·m (316 kgf·cm, 23 ft·lbf) for a new pipe using SST
34 N·m (347 kgf·cm, 25 ft·lbf) for a new pipe not using SST

HINT:
- Use a torque wrench with a fulcrum length of 30 cm (11.81 in.)
- Check if the used pipe has deflection or is installed properly after injection pipe is reassembled. If there is deflection or if it can not be installed properly, replace the used pipe with a new pipe.

(d) Using SST, tighten the nut of the injection pipe to the injector side.
SST 09023–12700
Torque:
42 N·m (428 kgf·cm, 31 ft·lbf) for a used pipe using SST
46 N·m (469 kgf·cm, 34 ft·lbf) for a used pipe not using SST
31 N·m (316 kgf·cm, 23 ft·lbf) for a new pipe using SST
34 N·m (347 kgf·cm, 25 ft·lbf) for a new pipe not using SST

HINT:
- Use a torque wrench with a fulcrum length of 30 cm (11.81 in.)
- Check if the used pipe has deflection or is installed properly after injection pipe is reassembled. If there is deflection or if it can not be installed properly, replace the used pipe with a new pipe.

(e) Install the 2 upper injection pipe clamps with the 2 nuts.
Torque: 5.0 N·m (51 kgf·cm, 44 in.·lbf)

54. INSTALL INJECTION PIPE SUB–ASSY NO.2
SST 09023–12700

HINT:
Perform the same procedures as injection pipe No. 1.

55. INSTALL INJECTION PIPE SUB–ASSY NO.3
SST 09023–12700

HINT:
Perform the same procedures as injection pipe No. 1.

56. INSTALL INJECTION PIPE SUB–ASSY NO.4
SST 09023–12700

HINT:
Perform the same procedures as injection pipe No. 1.

57. INSTALL TIMING BELT (See page 14–307)

58. CHECK VALVE TIMING (See page 14–307)

59. **INSTALL TIMING CHAIN COVER PLATE (See page 14–307)**
60. **INSTALL TRANSVERSE ENGINE ENGINE MOUNTING BRACKET (See page 14–307)**
61. **INSTALL TIMING BELT GUIDE (See page 14–307)**
62. **INSTALL TIMING BELT NO.1 COVER (See page 14–307)**
63. **INSTALL TIMING BELT NO.2 COVER (See page 14–307)**
64. **INSTALL IDLER PULLEY SUB–ASSY (See page 14–307)**
65. **INSTALL CRANKSHAFT PULLEY (See page 14–307)**
    SST 09213–54015 (90105–08076), 09330–00021
66. **INSTALL ENGINE MOUNTING INSULATOR SUB–ASSY RH (See page 14–307)**
67. **INSTALL POWER STEERING IDLE PULLEY BRACKET (See page 14–286)**
68. **ADJUST V (COOLER COMPRESSOR TO CRANKSHAFT PULLEY) BELT NO.1 (See page 14–269)**
69. **INSTALL INJECTOR DRIVER (See page 14–286)**
70. **INSTALL AIR TUBE NO.1 (See page 14–270)**
71. **INSTALL VACUUM RESERVOIR SUB–ASSY**
    Torque: 8.3 N·m (85 kgf·cm, 73 in.·lbf)
72. **INSTALL AIR CLEANER ASSY (See page 14–286)**
73. **INSTALL ENGINE COVER NO.1**
    Torque: 8.0 N·m (82 kgf·cm, 71 in.·lbf)
74. **INSTALL FRONT WHEEL RH**
    Torque: 103 N·m (1,050 kgf·cm, 76 ft·lbf)
75. **CHECK FOR FUEL LEAKS (See page 11–60)**

CYLINDER HEAD GASKET (1CD–FTV)

141C9–01

COMPONENTS

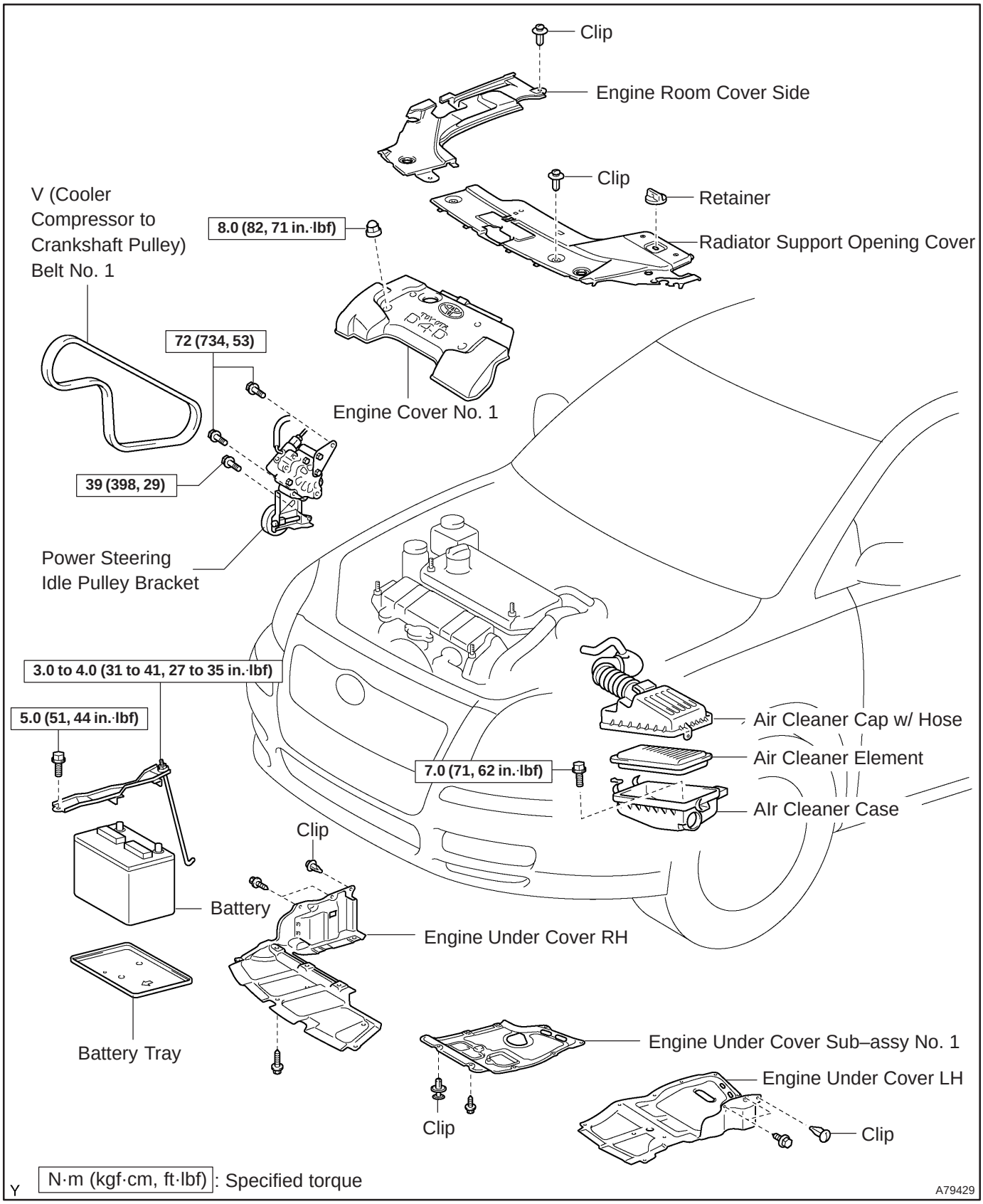

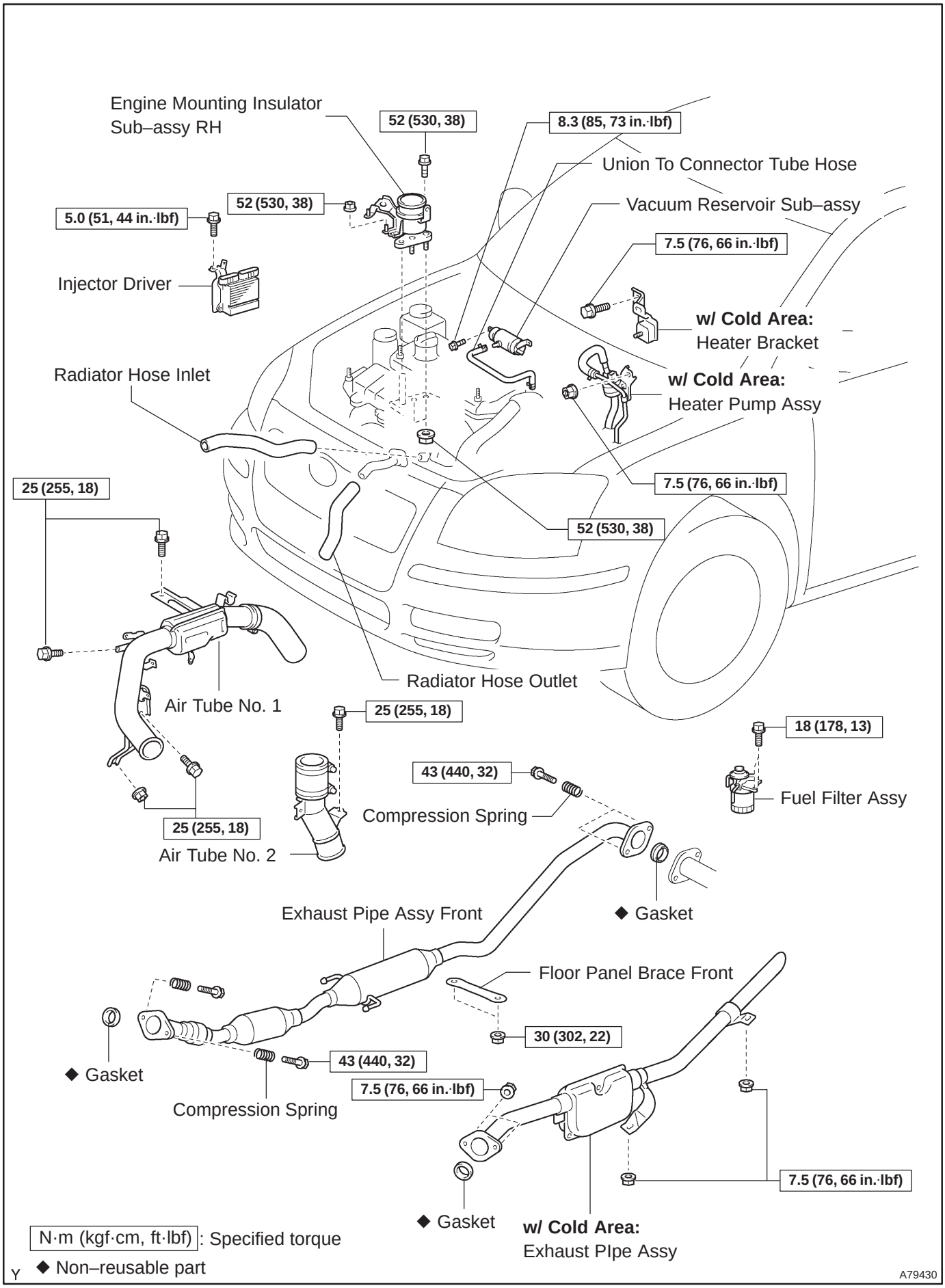
Engine Mounting Insulator Sub–assy RH
52 (530, 38)
8.3 (85, 73 in.·lbf)
Union To Connector Tube Hose
52 (530, 38)
5.0 (51, 44 in.·lbf)
Vacuum Reservoir Sub–assy
7.5 (76, 66 in.·lbf)
Injector Driver
w/ Cold Area:
Heater Bracket
Radiator Hose Inlet
w/ Cold Area:
Heater Pump Assy
25 (255, 18)
7.5 (76, 66 in.·lbf)
52 (530, 38)
Radiator Hose Outlet
Air Tube No. 1
25 (255, 18)
18 (178, 13)
43 (440, 32)
Compression Spring
Fuel Filter Assy
25 (255, 18)
Air Tube No. 2
Exhaust Pipe Assy Front
◆ Gasket
Floor Panel Brace Front
30 (302, 22)
◆ Gasket
43 (440, 32)
7.5 (76, 66 in.·lbf)
Compression Spring
7.5 (76, 66 in.·lbf)
◆ Gasket
w/ Cold Area:
Exhaust PIpe Assy
N·m (kgf·cm, ft·lbf): Specified torque
◆ Non–reusable part
A79430

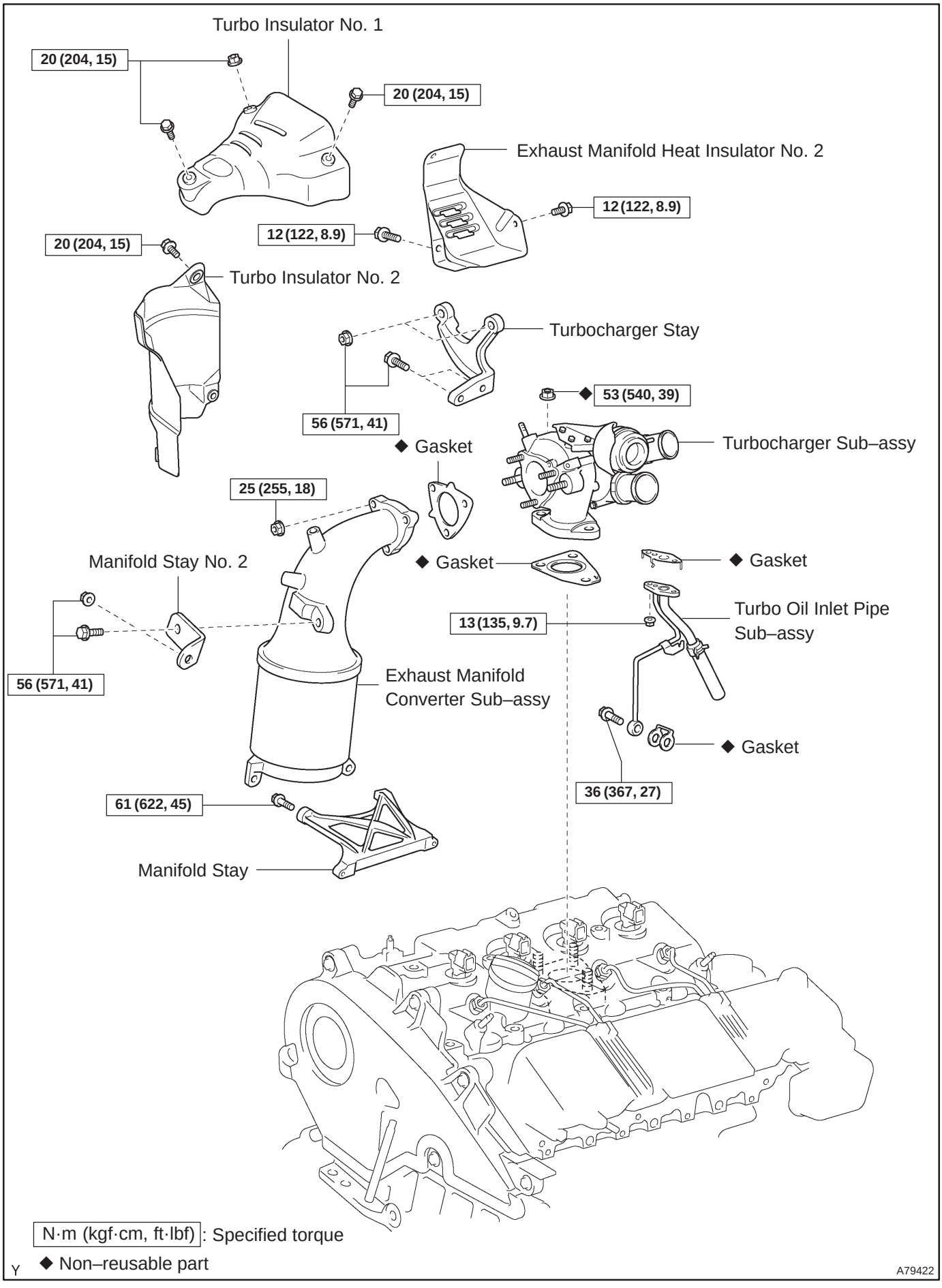
Turbo Insulator No. 1
20 (204, 15)
20 (204, 15)
Exhaust Manifold Heat Insulator No. 2
12 (122, 8.9)
12 (122, 8.9)
20 (204, 15)
Turbo Insulator No. 2
Turbocharger Stay
56 (571, 41)
◆ 53 (540, 39)
Turbocharger Sub–assy
◆ Gasket
25 (255, 18)
Manifold Stay No. 2
◆ Gasket
◆ Gasket
Turbo Oil Inlet Pipe Sub–assy
13 (135, 9.7)
56 (571, 41)
Exhaust Manifold Converter Sub–assy
◆ Gasket
36 (367, 27)
61 (622, 45)
Manifold Stay
N·m (kgf·cm, ft·lbf): Specified torque
◆ Non–reusable part
A79422

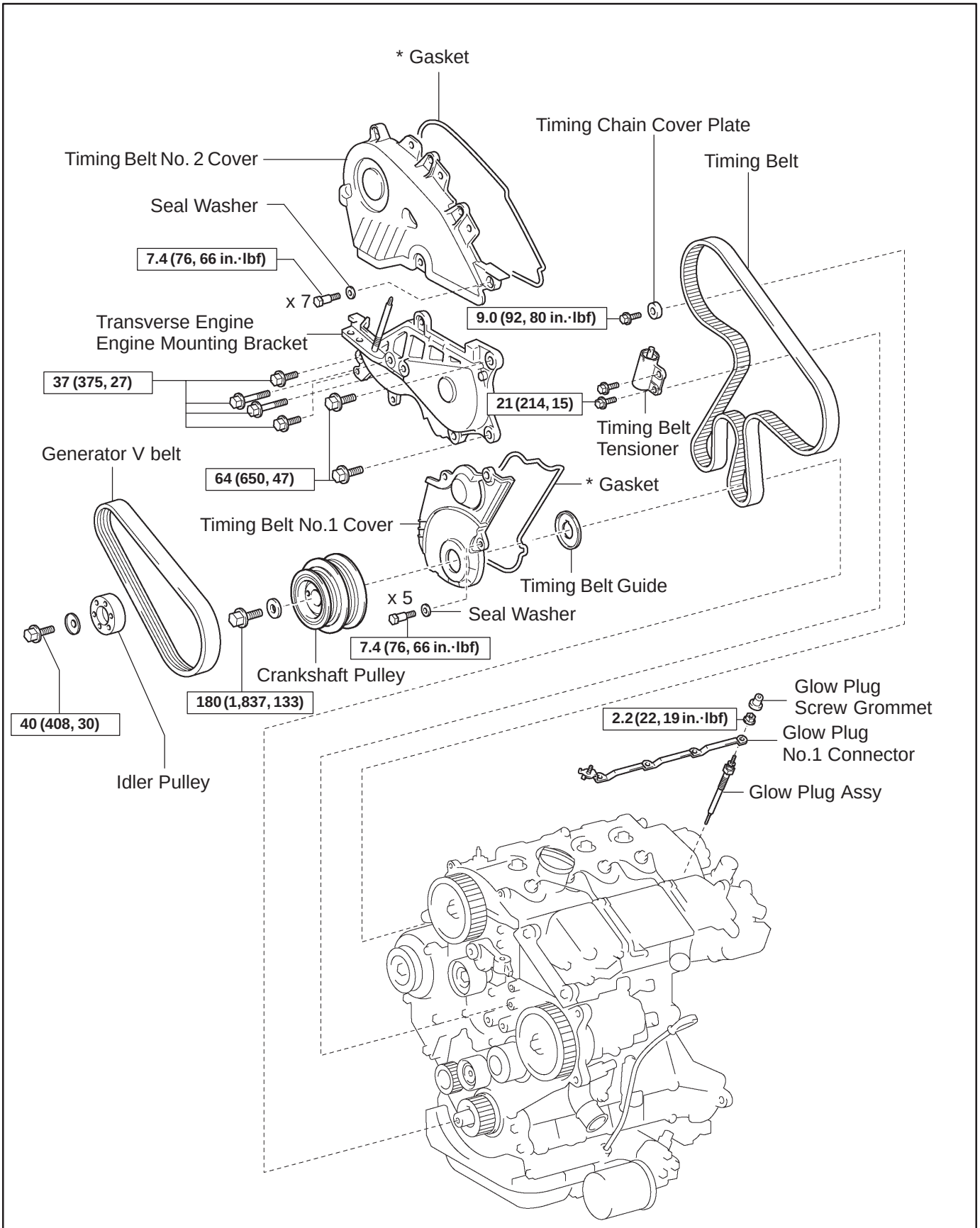

N·m (kgf·cm, ft·lbf) : Specified torque

* Replace only if damaged

A61211

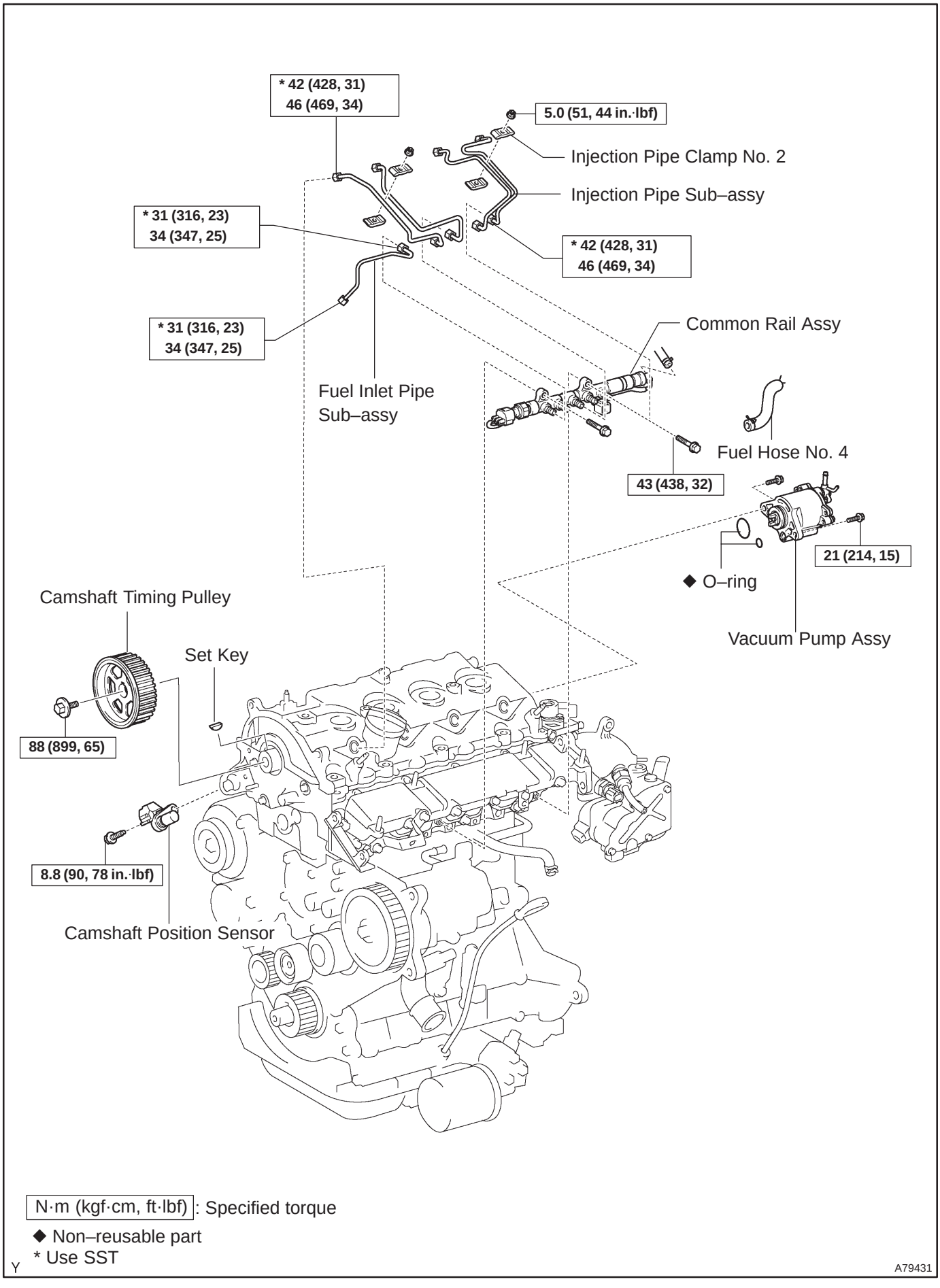

N·m (kgf·cm, ft·lbf): Specified torque

◆ Non–reusable part

* Use SST

Y

A79431

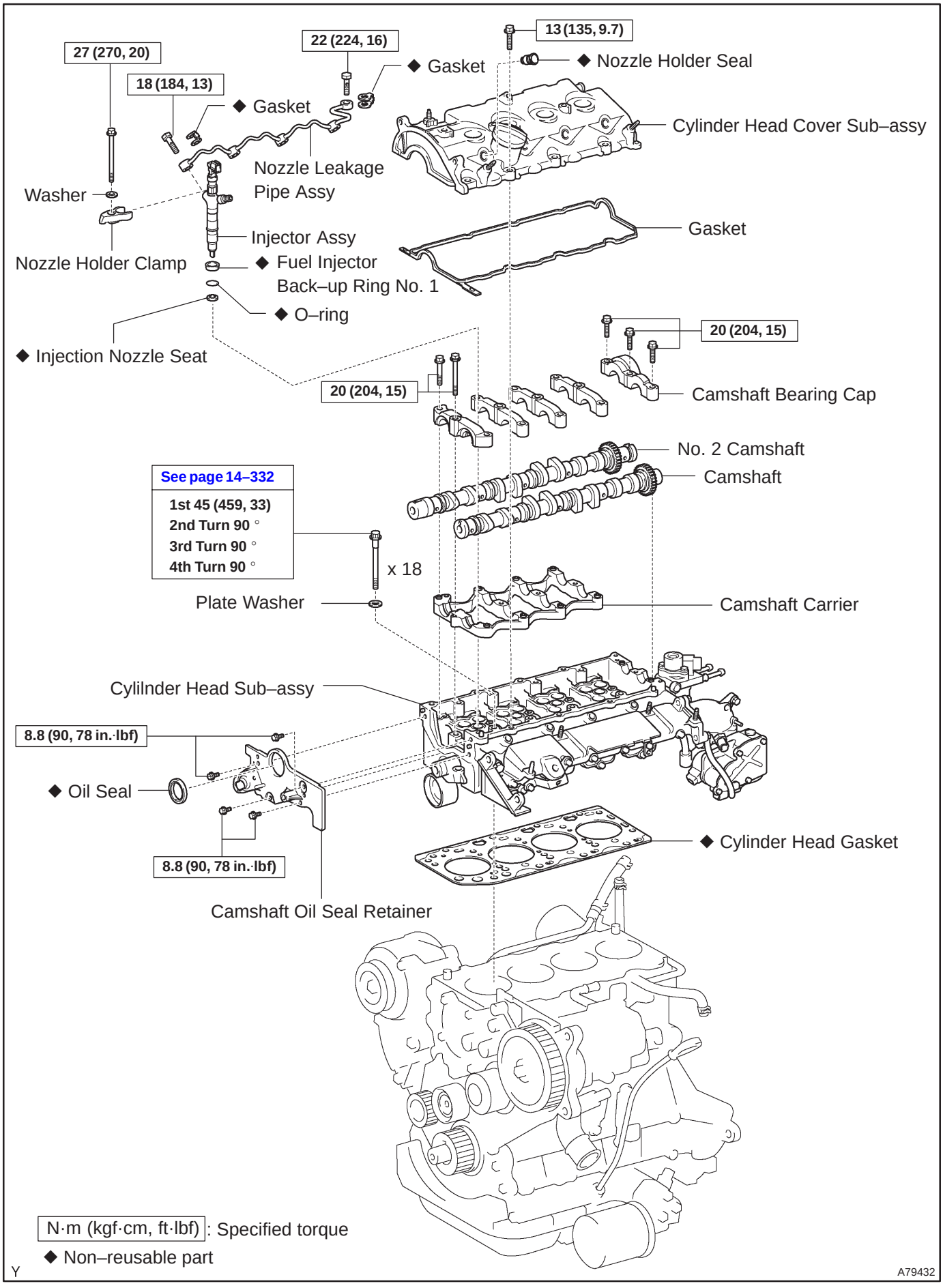
27 (270, 20)
18 (184, 13)
22 (224, 16)
◆ Gasket
◆ Gasket
13 (135, 9.7)
◆ Nozzle Holder Seal
Cylinder Head Cover Sub–assy
Nozzle Leakage Pipe Assy
Washer
Injector Assy
Nozzle Holder Clamp
◆ Fuel Injector Back–up Ring No. 1
◆ O–ring
◆ Injection Nozzle Seat
Gasket
20 (204, 15)
20 (204, 15)
Camshaft Bearing Cap
No. 2 Camshaft
Camshaft
See page 14–332
1st 45 (459, 33)
2nd Turn 90 °
3rd Turn 90 °
4th Turn 90 °
x 18
Plate Washer
Camshaft Carrier
Cylilnder Head Sub–assy
8.8 (90, 78 in.·lbf)
◆ Oil Seal
8.8 (90, 78 in.·lbf)
◆ Cylinder Head Gasket
Camshaft Oil Seal Retainer
N·m (kgf·cm, ft·lbf): Specified torque
◆ Non–reusable part
Y
A79432

141CA–01

REPLACEMENT

1. **REMOVE FRONT WHEEL RH**
2. **REMOVE ENGINE UNDER COVER LH**
3. **REMOVE ENGINE UNDER COVER SUB–ASSY NO.1**
4. **REMOVE ENGINE UNDER COVER RH**
5. **DRAIN ENGINE COOLANT (See page 16–44)**
6. **DRAIN ENGINE OIL (See page 14–342)**
7. **REMOVE RADIATOR SUPPORT OPENING COVER**
8. **REMOVE ENGINE ROOM COVER SIDE**
9. **REMOVE ENGINE COVER NO.1**

(a) Remove the 5 nuts and the engine cover.

10. **REMOVE VACUUM RESERVOIR SUB–ASSY (See page 13–11)**
11. **REMOVE AIR CLEANER ASSY (See page 14–286)**
12. **REMOVE BATTERY**
13. **REMOVE AIR TUBE NO.2 (See page 14–286)**
14. **REMOVE AIR TUBE NO.1 (See page 14–270)**
15. **REMOVE INJECTOR DRIVER (See page 14–286)**
16. **REMOVE V (COOLER COMPRESSOR TO CRANKSHAFT PULLEY) BELT NO.1 (See page 14–269)**
17. **REMOVE GENERATOR V BELT (See page 14–269)**
18. **SEPARATE POWER STEERING IDLE PULLEY BRACKET (See page 14–286)**
19. **REMOVE ENGINE MOUNTING INSULATOR SUB–ASSY RH (See page 14–307)**
20. **REMOVE CRANKSHAFT PULLEY (See page 14–307)**

    SST 09213–54015 (90105–08076), 09330–00021, 09950–50013 (09951–05010, 09952–05010, 09953–05020, 09954–05031)

21. **REMOVE IDLER PULLEY SUB–ASSY (See page 14–307)**
22. **REMOVE TIMING BELT NO.2 COVER (See page 14–307)**
23. **REMOVE TIMING BELT NO.1 COVER (See page 14–307)**
24. **REMOVE TIMING BELT GUIDE**
25. **REMOVE TRANSVERSE ENGINE ENGINE MOUNTING BRACKET (See page 14–307)**
26. **SET NO. 1 CYLINDER TO TDC/COMPRESSION (See page 14–307)**
27. **REMOVE TIMING CHAIN COVER PLATE (See page 14–307)**
28. **REMOVE TIMING BELT (See page 14–307)**

HINT:

If re–using the timing belt, draw a direction arrow on the timing belt (in direction of engine revolution), and place matchmarks on the pulleys and the timing belt.

29. **REMOVE FUEL FILTER ASSY (See page 11–82)**
30. **REMOVE HEATER PUMP ASSY (W/ COLD AREA) (See page 13–11)**
31. **REMOVE HEATER BRACKET (W/ COLD AREA) (See page 13–11)**
32. **REMOVE FLOOR PANEL BRACE FRONT (See page 15–10)**
33. **REMOVE EXHAUST PIPE ASSY FRONT (See page 15–10)**
34. **REMOVE EXHAUST PIPE ASSY (W/ COLD AREA) (See page 13–11)**
35. **DISCONNECT RADIATOR HOSE INLET**
36. **DISCONNECT HEATER INLET WATER HOSE**
37. **DISCONNECT HEATER OUTLET WATER HOSE**
38. **DISCONNECT FUEL PIPE TO FUEL TUBE FUEL HOSE**
39. **DISCONNECT OIL COOLER HOSE**
40. **REMOVE TURBO INSULATOR NO.2 (See page 13–11)**
41. **REMOVE TURBO INSULATOR NO.1 (See page 13–11)**

42. REMOVE EXHAUST MANIFOLD HEAT INSULATOR NO.2 (See page 13–11)
43. REMOVE MANIFOLD STAY NO.2 (See page 13–11)
44. REMOVE MANIFOLD STAY (See page 13–11)
45. REMOVE EXHAUST MANIFOLD CONVERTER SUB–ASSY (See page 13–11)
46. REMOVE TURBOCHARGER STAY (See page 13–11)
47. REMOVE TURBO WATER HOSE NO.1 (See page 13–11)
48. REMOVE TURBO WATER HOSE NO.2 (See page 13–11)
49. SEPARATE TURBO OIL INLET PIPE SUB–ASSY (See page 13–11)
50. REMOVE TURBOCHARGER SUB–ASSY (See page 13–11)
51. REMOVE CAMSHAFT POSITION SENSOR (See page 10–63)
52. REMOVE CAMSHAFT TIMING PULLEY (See page 14–318)
SST 09960–10010 (09962–01000, 09963–01000)

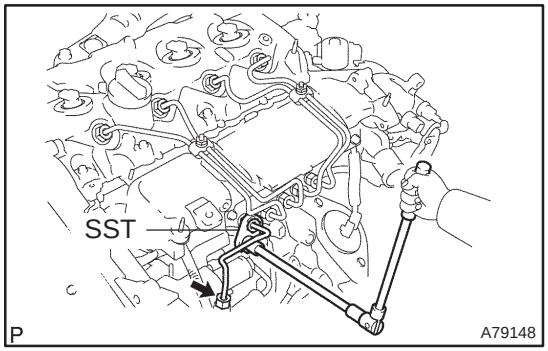

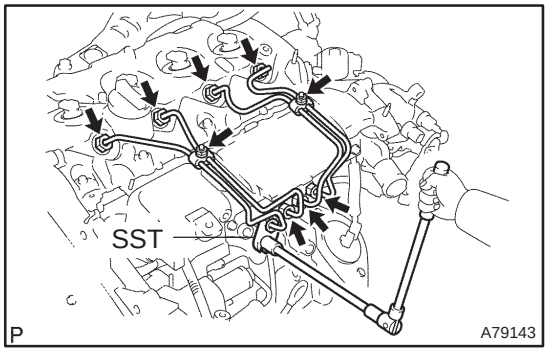

53. REMOVE FUEL INLET PIPE SUB–ASSY
(a) Using SST, remove the fuel inlet pipe from the common rail side.
SST 09023–12700
(b) Using SST, remove the fuel inlet pipe from the pump side.
SST 09023–12700

NOTICE:
After removing the fuel pipe, cover the common rail and the injector mounting holes with vinyl tape to prevent dust from being introduced.

54. REMOVE INJECTION PIPE SUB–ASSY NO.1 (See page 11–60)
SST 09023–12700
(a) Remove the 2 nuts and 2 upper infection pipe clamps from the intake manifold.
(b) Using SST, remove the injection pipe from the common rail side.
SST 09023–12700
(c) Using SST, remove the injection pipe from the injector side.
SST 09023–12700
(d) After removing the fuel pipe, to prevent dust or foreign objects from being introduced, cover the common rail with vinyl tape and protect the injector inlet with a vinyl or a plastic bag.

55. REMOVE INJECTION PIPE SUB–ASSY NO.2
SST 09023–12700
HINT:
Perform the same procedures as injection pipe No. 1.

56. REMOVE INJECTION PIPE SUB–ASSY NO.3
SST 09023–12700
HINT:
Perform the same procedures as injection pipe No. 1.

57. REMOVE INJECTION PIPE SUB–ASSY NO.4

SST 09023–12700

HINT:

Perform the same procedures as injection pipe No. 1.

58. REMOVE VACUUM PUMP ASSY (See page 14–318)

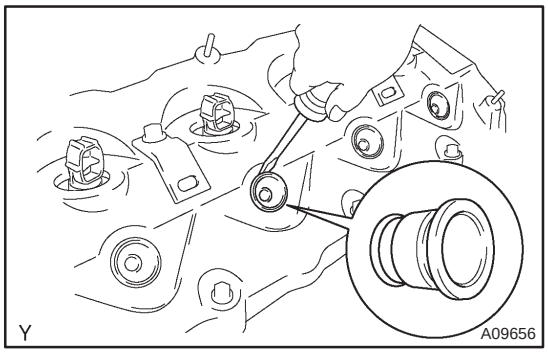

59. REMOVE NOZZLE HOLDER SEAL

(a) Using a screwdriver, pry out the 4 nozzle holder seals.

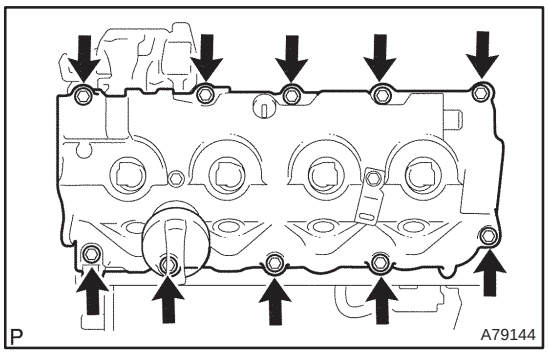

60. REMOVE CYLINDER HEAD COVER SUB–ASSY

(a) Remove the 10 bolts, the cylinder head cover and the gasket.

61. REMOVE NOZZLE LEAKAGE PIPE ASSY (See page 11–60)

62. REMOVE INJECTOR ASSY (See page 11–60)

HINT:

Since each injector assembly has a characteristic fuel injecting behavior, store them in correct order so that they can be returned to the original locations when re–assembling.

63. REMOVE CAMSHAFT OIL SEAL RETAINER (See page 14–318)

64. REMOVE NO.2 CAMSHAFT (See page 14–318)

65. REMOVE CAMSHAFT (See page 14–318)

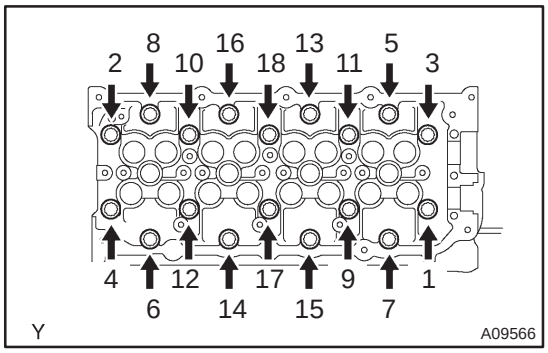

66. REMOVE CYLINDER HEAD SUB–ASSY

(a) Using several steps, loosen the 18 cylinder head bolts uniformly in the sequence shown in the illustration. Remove the 18 cylinder head bolts and the plate washers.

NOTICE:

Cylinder head warpage or cracking could result from removing bolts in incorrect order.

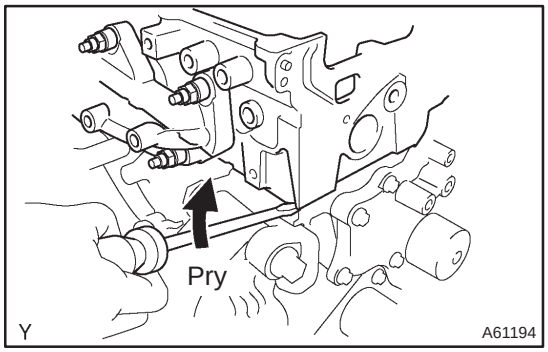

(b) Lift the cylinder head from the dowels on the cylinder block, and place the cylinder head on wooden blocks on a work bench.

NOTICE:

Be careful not to damage the contact surfaces of the cylinder head and cylinder block.

HINT:

If the cylinder head is lift off, pry between the cylinder head and cylinder block with a screwdriver.

67. REMOVE CYLINDER HEAD GASKET

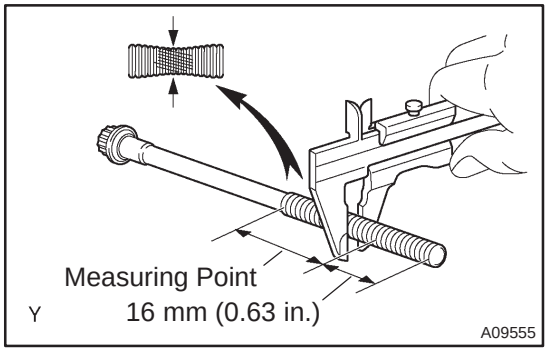

68. INSPECT CYLINDER HEAD SET BOLT

(a) Using vernier calipers, measure the tension portion diameter of the bolts.

Standard outside diameter:

10.75 to 11.00 mm (0.4232 to 0.4331 in.)

Minimum outside diameter: 10.40 mm (0.4094 in.)

If the diameter is less than minimum, replace the bolt.

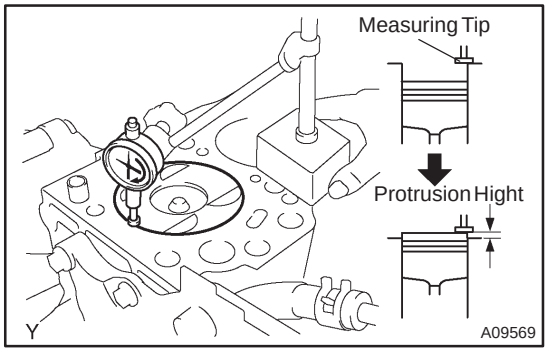

69. INSTALL CYLINDER HEAD GASKET

(a) Measure protrusion height of the piston heads.

(1) Clean the cylinder block with solvent.

(2) Set the piston to be measured to slightly before TDC.

(3) Place a dial indicator on the cylinder block, and calibrate the dial indicator at 0 mm (0 in.).

HINT:

- Place measuring tip of the dial indicator as shown in the illustration.
- Make sure that the measuring tip is square to the cylinder block gasket and the piston head when measuring.

(4) Find the most overhung position of the piston head by slowly turning the crankshaft clockwise and counterclockwise.

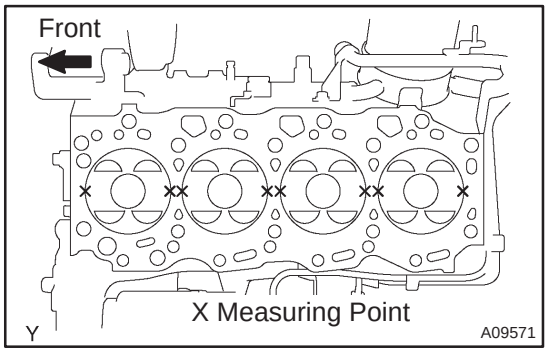

(5) Measure a protrusion height of the piston head for each cylinder at 2 places as shown in the illustration. (Total of 8 measurements.)

(6) Record the highest protrusion height from the 2 measurements at each cylinder.

(b) Select new cylinder head gasket.

HINT:

There are 5 sizes of new cylinder head gaskets, marked ”A”, ”B”, ”C”, ”D”, or ”E”.

New cylinder head gasket thickness:

A	0.85 to 0.95 mm (0.0335 to 0.0374 in.)
B	0.90 to 1.00 mm (0.0354 to 0.0394 in.)
C	0.95 to 1.05 mm (0.0374 to 0.0413 in.)
D	1.00 to 1.10 mm (0.0394 to 0.0433 in.)
E	1.05 to 1.15 mm (0.0413 to 0.0453 in.)

(1) Find the highest protrusion height among the 4 measurement records. It is used to select a new cylinder head gasket.

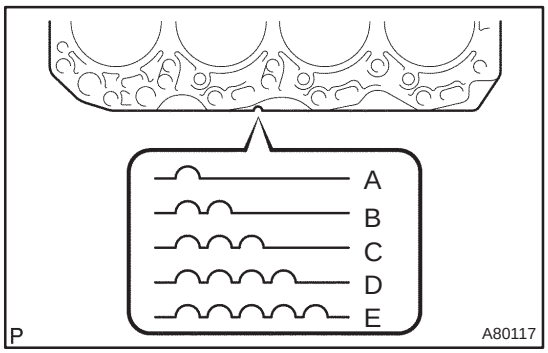

(2) Select the new gasket among A to E using the matrix below.

New gasket matrix:

Piston protrusion mm (in.)	Gasket size
0.165 to 0.220 (0.0065 to 0.0087)	A
0.220 to 0.270 (0.0087 to 0.0106)	B
0.270 to 0.320 (0.0106 to 0.0126)	C
0.320 to 0.370 (0.0126 to 0.0146)	D
0.370 to 0.425 (0.0146 to 0.0167)	E

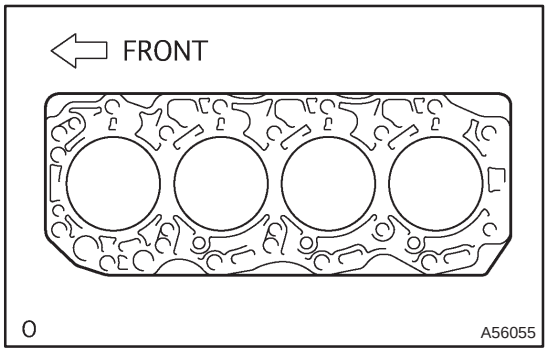

(c) Place new cylinder head gasket on the cylinder block.

NOTICE:

Pay attention to mounting orientation.

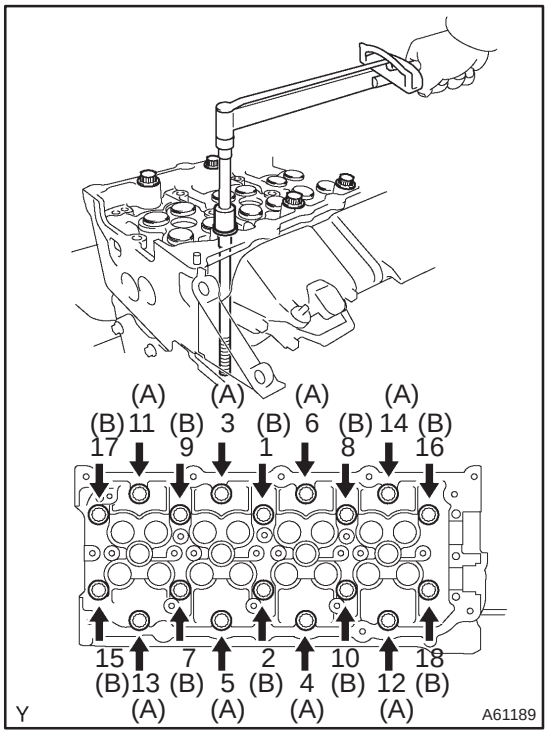

70. INSTALL CYLINDER HEAD SUB–ASSY

HINT:

- The cylinder head bolts are tightened in 4 successive steps (steps (c), (e), (f) and (g)).
- If the cylinder head bolt is broken or deformed, replace it with a new bolt.

(a) Apply a light coat of engine oil on the threads of the cylinder head bolts and the plate washers.

(b) Install the plate washer to the cylinder head bolt.

(c) Using several steps, install and tighten the 18 cylinder head bolts uniformly in the sequence shown in the illustration.

Torque: 45 N·m (459 kgf·cm, 33 ft·lbf)

HINT:

See the table below for the bolt length.

Bolt Type	Bolt Length
(A)	160mm (6.30 in.)
(B)	104mm (4.09 in.)

If the cylinder head bolt does not meet the torque specification, replace the cylinder head bolt with a new bolt.

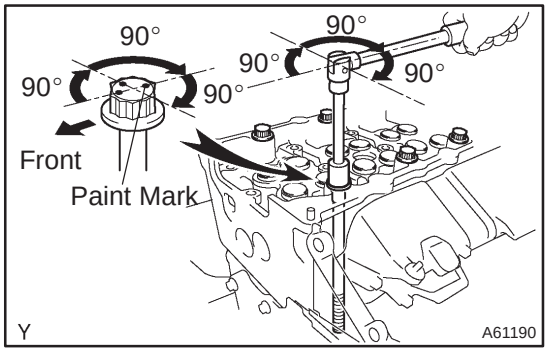

(d) Mark the front of the cylinder head bolt with paint.

(e) Retighten the cylinder head bolts by 90° in the same sequence as step (c).

(f) Retighten the cylinder head bolts by additional 90° in the same sequence as step (c).

(g) Retighten the cylinder head bolts by one more additional 90° in the same sequence as step (c).

(h) Check that each painted mark is now at the intake manifold side.

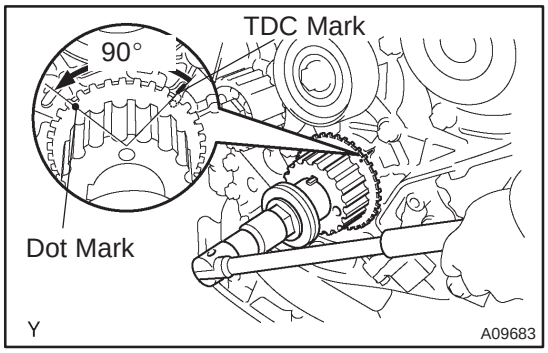

71. SET NO. 1 CYLINDER TO TDC/COMPRESSION

(a) Using the crankshaft pulley bolt, turn the crankshaft to set the dot mark of the crankshaft timing pulley at the position of 90 ° BTDC.

NOTICE:

If the timing belt is disengaged, having the crankshaft timing pulley at wrong angle can cause the piston head and valve head to come into contact with each other.

72. INSTALL CAMSHAFT (See page 14–318)

73. INSTALL NO.2 CAMSHAFT (See page 14–318)

74. REMOVE CAMSHAFT OIL SEAL (See page 14–318)

75. INSTALL CAMSHAFT OIL SEAL (See page 14–318)

SST 09223–46011

76. INSTALL CAMSHAFT OIL SEAL RETAINER (See page 14–318)

77. INSTALL CAMSHAFT TIMING PULLEY (See page 14–318)

SST 09960–10010 (09962–01000, 09963–01000)

78. INSTALL CAMSHAFT POSITION SENSOR (See page 10–64)

79. INSTALL INJECTOR ASSY (See page 11–60)

80. INSTALL NOZZLE LEAKAGE PIPE ASSY (See page 11–60)

SST 09992–00242

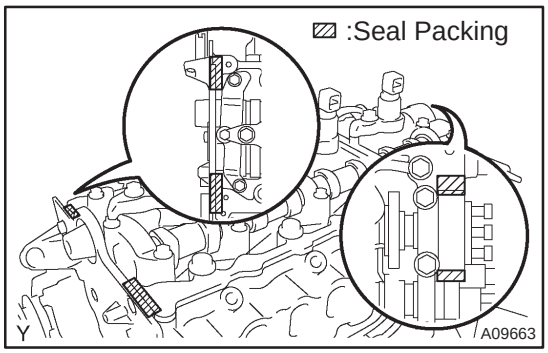

81. INSTALL CYLINDER HEAD COVER SUB–ASSY

(a) Remove any old packing (FIPG) material.

(b) Apply seal packing to the cylinder head.

Seal packing: Part No. 08826–00080 or equivalent

(c) Install the gasket to the head cover.

(d) Install the cylinder head cover with the 10 bolts.

Torque: 13 N·m (135 kgf·cm, 9.7 ft·lbf)

82. INSTALL NOZZLE HOLDER SEAL

(a) Install 4 new nozzle holder seals.

83. INSTALL VACUUM PUMP ASSY (See page 14–318)

84. INSTALL INJECTION PIPE SUB–ASSY NO.1 (See page 11–60)

NOTICE:

When assembling the pipes, perform the operation with the engine cold under room temperature.

(a) Remove the vinyl or the plastic bag from the injector and vinyl tape from the common rail.

(b) Temporarily install the injection pipe.

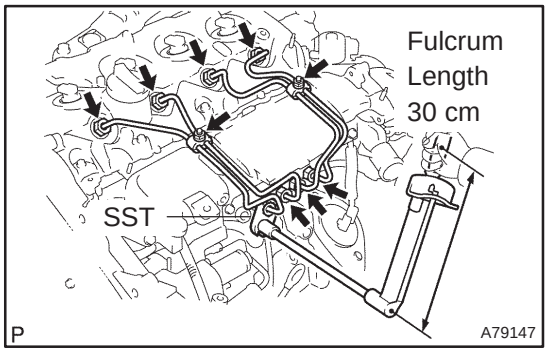

(c) Using SST, tighten the nut of the injection pipe to the common rail side.
SST 09023–12700
Torque:
42 N·m (428 kgf·cm, 31 ft·lbf) for a used pipe using SST
46 N·m (469 kgf·cm, 34 ft·lbf) for a used pipe not using SST
31 N·m (316 kgf·cm, 23 ft·lbf) for a new pipe using SST
34 N·m (347 kgf·cm, 25 ft·lbf) for a new pipe not using SST

HINT:
- Use a torque wrench with a fulcrum length of 30 cm (11.81 in.)
- Check if the used pipe has deflection or is installed properly after injection pipe is reassembled. If there is deflection or if it can not be installed properly, replace the used pipe with a new pipe.

(d) Using SST, tighten the nut of the injection pipe to the injector side.
SST 09023–12700
Torque:
42 N·m (428 kgf·cm, 31 ft·lbf) for a used pipe using SST
46 N·m (469 kgf·cm, 34 ft·lbf) for a used pipe not using SST
31 N·m (316 kgf·cm, 23 ft·lbf) for a new pipe using SST
34 N·m (347 kgf·cm, 25 ft·lbf) for a new pipe not using SST

HINT:
- Use a torque wrench with a fulcrum length of 30 cm (11.81 in.)
- Check if the used pipe has deflection or is installed properly after injection pipe is reassembled. If there is deflection or if it can not be installed properly, replace the used pipe with a new pipe.

(e) Install the 2 upper injection pipe clamps with the 2 nuts.
Torque: 5.0 N·m (51 kgf·cm, 44 in.·lbf)

85. INSTALL INJECTION PIPE SUB–ASSY NO.2
SST 09023–12700

HINT:
Perform the same procedures as injection pipe No. 1.

86. INSTALL INJECTION PIPE SUB–ASSY NO.3
SST 09023–12700

HINT:
Perform the same procedures as injection pipe No. 1.

87. INSTALL INJECTION PIPE SUB–ASSY NO.4
SST 09023–12700

HINT:
Perform the same procedures as injection pipe No. 1.

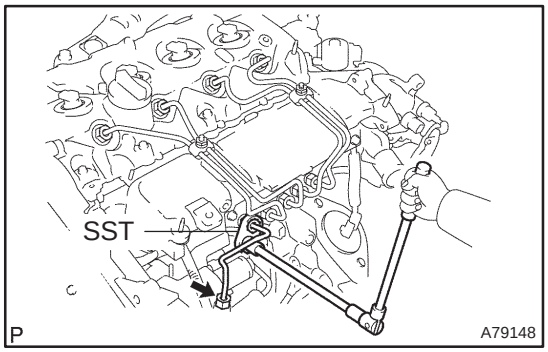

88. INSTALL FUEL INLET PIPE SUB–ASSY

NOTICE:

- **In case of having the cylinder head gasket replaced, must replace fuel inlet pipe, too.**
- **When assembling the pipe, perform the operation with the engine cold under room temperature.**

(a) Temporarily install the new fuel inlet pipe.

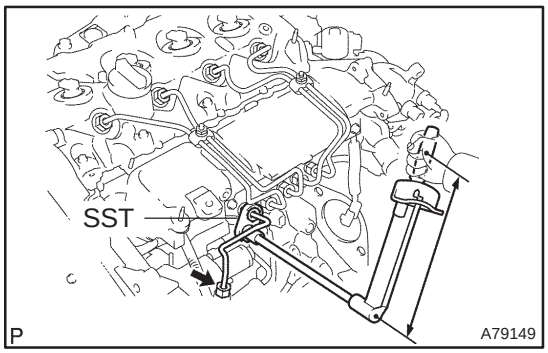

(b) Using SST, tighten the nut of the fuel inlet pipe to the common rail side.

SST 09023–12700

Torque:

42 N·m (428 kgf·cm, 31 ft·lbf) for a used pipe using SST
46 N·m (469 kgf·cm, 34 ft·lbf) for a used pipe not using SST
31 N·m (316 kgf·cm, 23 ft·lbf) for a new pipe using SST
34 N·m (347 kgf·cm, 25 ft·lbf) for a new pipe not using SST

HINT:

- Use a torque wrench with a fulcrum length of 30 cm (11.81 in.)
- Check if the used pipe has deflection or is installed properly after inlet pipe is reassembled. If there is deflection or if it can not be installed properly, replace the used pipe with a new pipe.

(c) Using SST, tighten the nut of the fuel inlet pipe to the pump side.

SST 09023–12700

Torque:

42 N·m (428 kgf·cm, 31 ft·lbf) for a used pipe using SST
46 N·m (469 kgf·cm, 34 ft·lbf) for a used pipe not using SST
31 N·m (316 kgf·cm, 23 ft·lbf) for a new pipe using SST
34 N·m (347 kgf·cm, 25 ft·lbf) for a new pipe not using SST

HINT:

- Use a torque wrench with a fulcrum length of 30 cm (11.81 in.)
- Check if the used pipe has deflection or is installed properly after inlet pipe is reassembled. If there is deflection or if it can not be installed properly, replace the used pipe with a new pipe.

89. INSTALL TURBOCHARGER SUB–ASSY (See page 13–11)
90. INSTALL TURBO OIL INLET PIPE SUB–ASSY (See page 13–11)
91. INSTALL TURBOCHARGER STAY (See page 13–11)
92. INSTALL EXHAUST MANIFOLD CONVERTER SUB–ASSY (See page 13–11)
93. INSTALL MANIFOLD STAY NO.2 (See page 13–11)
94. INSTALL EXHAUST MANIFOLD HEAT INSULATOR NO.2 (See page 13–11)

95. **INSTALL TURBO INSULATOR NO.1 (See page 13–11)**
96. **INSTALL TURBO INSULATOR NO.2 (See page 13–11)**
97. **INSTALL EXHAUST PIPE ASSY (W/ COLD AREA) (See page 13–11)**
98. **INSTALL EXHAUST PIPE ASSY FRONT (See page 15–10)**
99. **INSTALL FLOOR PANEL BRACE FRONT (See page 15–10)**
100. **INSTALL HEATER BRACKET (W/ COLD AREA) (See page 13–11)**
101. **INSTALL HEATER PUMP ASSY (W/ COLD AREA) (See page 13–11)**
102. **INSTALL FUEL FILTER ASSY (See page 11–82)**
103. **SET NO. 1 CYLINDER TO TDC/COMPRESSION (See page 14–307)**
    SST 09960–10010 (09962–01000, 09963–01000)
104. **INSTALL TIMING BELT (See page 14–307)**
105. **CHECK VALVE TIMING (See page 14–307)**
106. **TIMING CHAIN COVER PLATE (See page 14–307)**
107. **INSTALL TRANSVERSE ENGINE ENGINE MOUNTING BRACKET (See page 14–307)**
108. **INSTALL TIMING BELT GUIDE (See page 14–307)**
109. **INSTALL TIMING BELT NO.1 COVER (See page 14–307)**
110. **INSTALL TIMING BELT NO.2 COVER (See page 14–307)**
111. **INSTALL IDLER PULLEY SUB–ASSY (See page 14–307)**
112. **INSTALL CRANKSHAFT PULLEY (See page 14–307)**
    SST 09213–54015 (90105–08076), 09330–00021
113. **INSTALL ENGINE MOUNTING INSULATOR SUB–ASSY RH (See page 14–307)**
114. **INSTALL POWER STEERING IDLE PULLEY BRACKET (See page 14–307)**
115. **ADJUST V (COOLER COMPRESSOR TO CRANKSHAFT PULLEY) BELT NO.1 (See page 14–269)**
116. **INSTALL INJECTOR DRIVER (See page 14–286)**
117. **INSTALL AIR TUBE NO.1 (See page 14–270)**
118. **INSTALL AIR TUBE NO.2 (See page 14–286)**
119. **INSTALL AIR CLEANER ASSY (See page 14–286)**
120. **INSTALL VACUUM RESERVOIR SUB–ASSY (See page 13–11)**
121. **INSTALL ENGINE COVER NO.1**
    Torque: 8.0 N·m (82 kgf·cm, 71 in.·lbf)
122. **INSTALL FRONT WHEEL RH**
    Torque: 103 N·m (1,050 kgf·cm, 76 ft·lbf)
123. **ADD ENGINE OIL**
124. **ADD ENGINE COOLANT (See page 16–44)**
125. **CHECK FOR FUEL LEAKS (See page 11–60)**
126. **CHECK FOR ENGINE OIL LEAKS**
127. **CHECK FOR ENGINE COOLANT LEAKS (See page 16–44)**
128. **CHECK FOR EXHAUST GAS LEAKS**

CRANKSHAFT SEAL (1CD–FTV)

141CB–01

REPLACEMENT

1. DRAIN ENGINE OIL

(a) Install a new gasket and the drain plug after draining engine oil.
Torque: 34 N·m (350 kgf·cm, 25 ft·lbf)

2. REMOVE FRONT WHEEL RH

3. REMOVE ENGINE UNDER COVER RH

4. REMOVE RADIATOR SUPPORT OPENING COVER

5. REMOVE ENGINE ROOM COVER SIDE

6. REMOVE ENGINE COVER NO.1

(a) Remove the 5 nuts and the engine cover.

7. REMOVE INJECTOR DRIVER (See page 14–286)

8. REMOVE V (COOLER COMPRESSOR TO CRANKSHAFT PULLEY) BELT NO.1 (See page 14–269)

9. REMOVE GENERATOR V BELT (See page 14–269)

10. REMOVE POWER STEERING IDLE PULLEY BRACKET (See page 14–286)

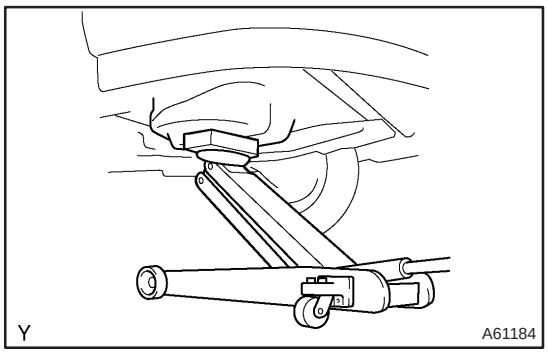

11. REMOVE ENGINE MOUNTING INSULATOR SUB–ASSY RH

(a) Place a wooden block on a jack underneath the engine.

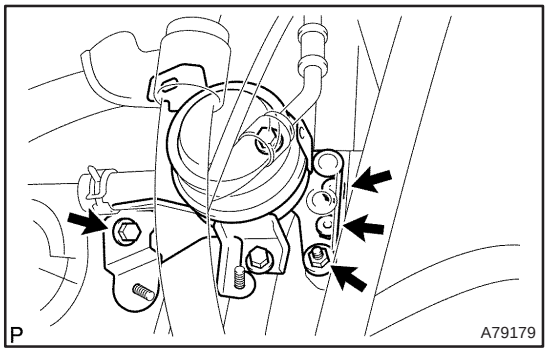

(b) Remove the 3 bolts and 3 nuts, and then detach the engine mounting insulator sub assy.

12. REMOVE CRANKSHAFT PULLEY (See page 14–307)
SST 09213–54015 (90105–08076), 09330–00021, 09950–50013 (09951–05010, 09952–05010, 09953–05020, 09954–05031)

13. REMOVE IDLER PULLEY SUB–ASSY (See page 14–307)

14. REMOVE TIMING BELT NO.2 COVER (See page 14–307)

15. REMOVE TIMING BELT NO.1 COVER (See page 14–307)

16. REMOVE TIMING BELT GUIDE

17. REMOVE TRANSVERSE ENGINE ENGINE MOUNTING BRACKET (See page 14–307)

18. SET NO. 1 CYLINDER TO TDC/COMPRESSION (See page 14–307)

19. REMOVE TIMING CHAIN COVER PLATE (See page 14–307)

20. REMOVE TIMING BELT (See page 14–307)

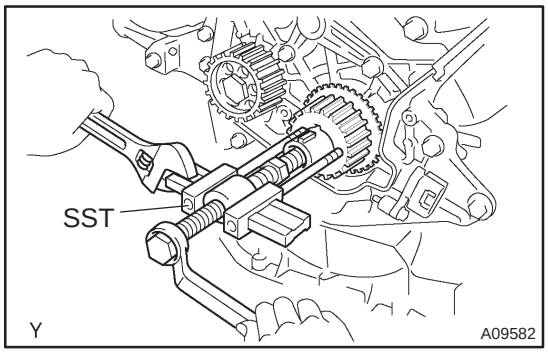

21. REMOVE CRANKSHAFT TIMING PULLEY

(a) If the timing pulley cannot be removed by hand, use SST to remove the pulley.
SST 09950–50013 (09951–05010, 09952–05010, 09953–05010, 09953–05020, 09954–05021)

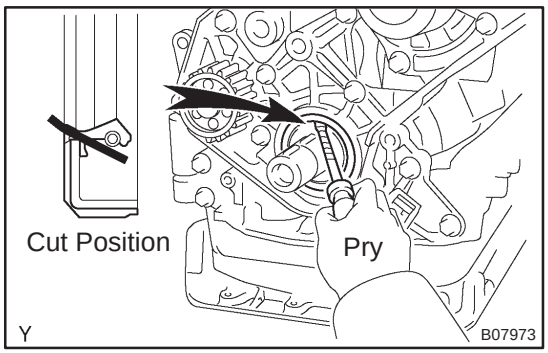

22. REMOVE CRANKSHAFT SEAL

(a) Using a knife, cut off the oil seal lip.
(b) Using a screwdriver, pry out the oil seal.

NOTICE:
Be careful not to damage the crankshaft. Warp tip of the screwdriver with tape.

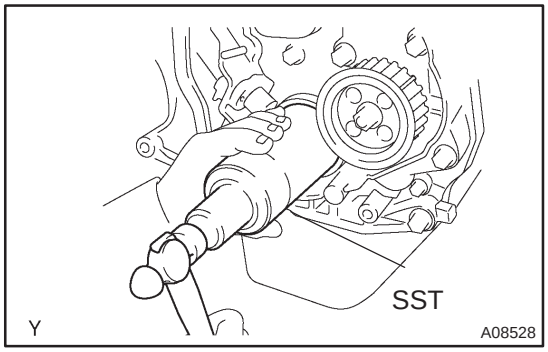

23. INSTALL CRANKSHAFT SEAL

(a) Using SST and a hammer, tap in the oil seal until its surface is flush with the oil pump edge.
SST 09316–60011 (09316–00011)

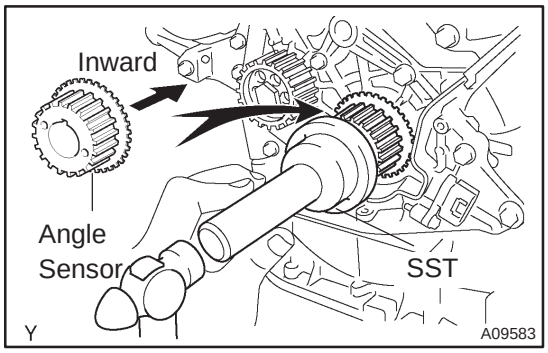

24. INSTALL CRANKSHAFT TIMING PULLEY

(a) Align the keyway of the timing pulley with the key located on the crankshaft, slide the pulley into place.
(b) Using SST and a hammer, tap in the timing pulley with the angle sensor facing inward.
SST 09223–46011

25. SET NO. 1 CYLINDER TO TDC/COMPRESSION (See page 14–307)
SST 09960–10010 (09962–01000, 09963–01000)

26. INSTALL TIMING BELT (See page 14–307)

27. CHECK VALVE TIMING (See page 14–307)

28. INSTALL TIMING CHAIN COVER PLATE (See page 14–307)

29. **INSTALL TRANSVERSE ENGINE ENGINE MOUNTING BRACKET (See page 14–307)**
30. **INSTALL TIMING BELT GUIDE (See page 14–307)**
31. **INSTALL TIMING BELT NO.1 COVER (See page 14–307)**
32. **INSTALL TIMING BELT NO.2 COVER (See page 14–307)**
33. **INSTALL IDLER PULLEY SUB–ASSY (See page 14–307)**
34. **INSTALL CRANKSHAFT PULLEY (See page 14–307)**
    SST 09213–54015 (90105–08076), 09330–00021
35. **INSTALL ENGINE MOUNTING INSULATOR SUB–ASSY RH (See page 14–307)**
36. **INSTALL POWER STEERING IDLE PULLEY BRACKET (See page 14–286)**
37. **ADJUST V (COOLER COMPRESSOR TO CRANKSHAFT PULLEY) BELT NO.1 (See page 14–269)**
38. **INSTALL INJECTOR DRIVER (See page 14–286)**
39. **INSTALL ENGINE COVER NO.1**
    Torque: 8.0 N·m (82 kgf·cm, 71 in.·lbf)
40. **INSTALL FRONT WHEEL RH**
    Torque: 103 N·m (1,050 kgf·cm, 76 ft·lbf)
41. **ADD ENGINE OIL**
42. **CHECK FOR ENGINE OIL LEAKS**

ENGINE REAR OIL SEAL (1CD–FTV)

141CC–01

REPLACEMENT

1. **REMOVE MANUAL TRANSAXLE ASSY (See page 41–33)**
   SST 09930–00010, 09628–62011, 09520–01010, 09520–24010 (09520–32040)
2. **REMOVE CLUTCH COVER ASSY (See page 42–26)**
3. **REMOVE CLUTCH DISC ASSY (See page 42–26)**

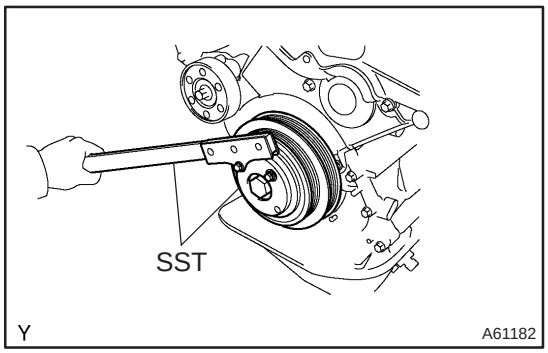

4. **REMOVE FLYWHEEL SUB–ASSY**
(a) Hold the crankshaft with SST.
SST 09213–54015 (90105–08076), 09330–00021
(b) Using a torx socket wrench (T55), remove the 8 torx screws and the flywheel.

5. **REMOVE REAR END PLATE**
(a) Remove the 2 bolts and the rear end plate.

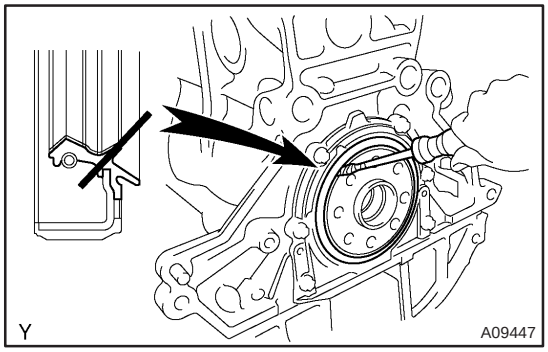

6. **REMOVE ENGINE REAR OIL SEAL**
(a) Using a knife, cut off the oil seal lip.
(b) Using a screwdriver, pry out the oil seal.

NOTICE:
After the removal, check if the crankshaft is not damaged. If it is damaged, smooth the surface with 400–grit sandpaper.

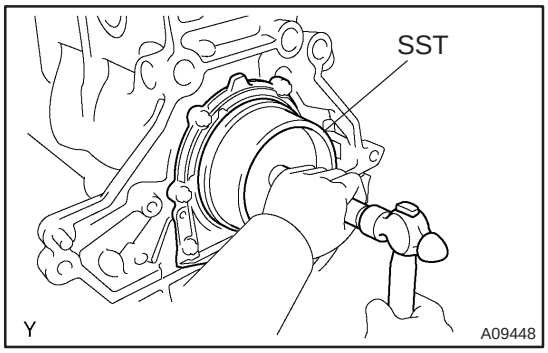

7. **INSTALL ENGINE REAR OIL SEAL**
(a) Apply MP grease to a new oil seal lip.

NOTICE:
Keep the lip free of foreign objects.

(b) Using SST and a hammer, tap in the oil seal until its surface is flush with the rear oil seal retainer edge.
SST 09223–15030, 09950–70010 (09951–07100)

NOTICE:
Wipe off extra grease on the crankshaft.

8. **INSTALL REAR END PLATE**
Torque: 8.4 N·m (86 kgf·cm, 74 in.·lbf)

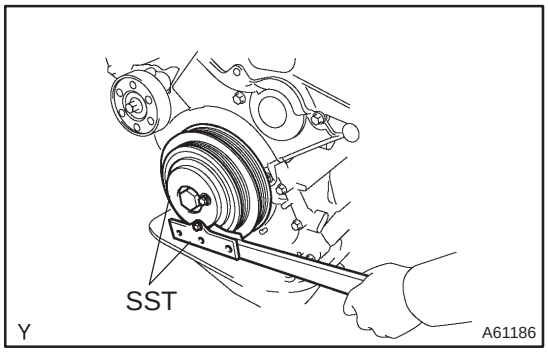

9. INSTALL FLYWHEEL SUB–ASSY

(a) Hold the crankshaft with SST.
SST 09213–54015 (90105–08076), 09330–00021

(b) Clean the bolt and the bolt hole.

(c) Apply Adhesive to the bolts.
Adhesive:
Part No. 08833–00070, THREE BOND or equivalent

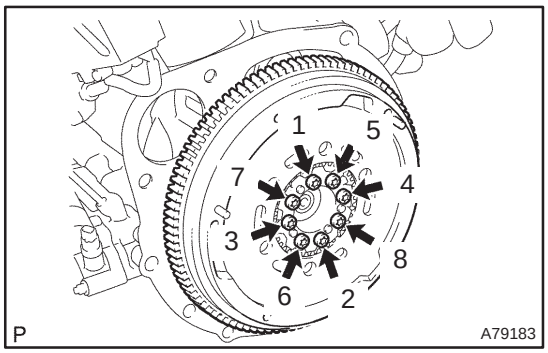

(d) Using several steps, install and tighten the 8 screws with a torx socket wrench (T55) uniformly in the sequence shown in the illustration.
Torque: 71 N·m (720 kgf·cm, 52 ft·lbf)

10. INSTALL CLUTCH DISC ASSY (See page 42–26)
SST 09301–00220

11. INSTALL CLUTCH COVER ASSY (See page 42–26)

12. INSTALL MANUAL TRANSAXLE ASSY (See page 41–33)
SST 09670–00010

EXHAUST PIPE ASSY (1ZZ–FE/3ZZ–FE)

1509S–01

COMPONENTS

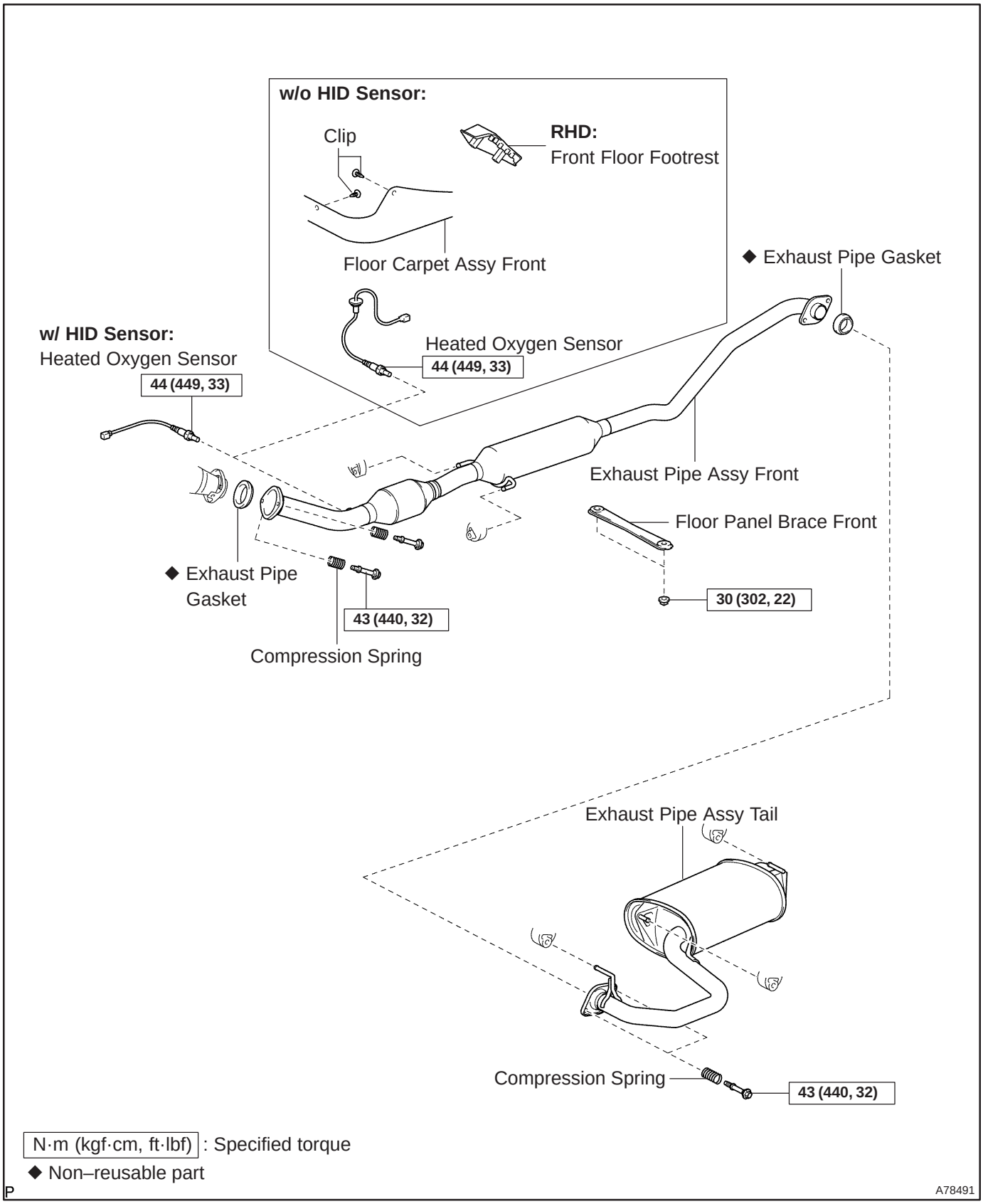

N·m (kgf·cm, ft·lbf) : Specified torque

◆ Non–reusable part

P

A78491

1509T–01

Removal & Installation and Disassembly & Reassembly

1. REMOVE FRONT FLOOR FOOTREST (W/O HID SENSOR) (See page 76–32)

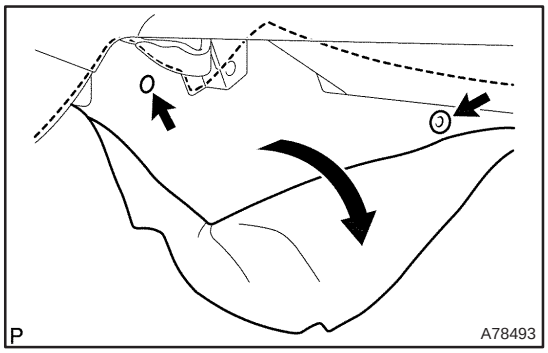

2. REMOVE HEATED OXYGEN SENSOR (W/O HID SENSOR)

(a) Using a clip remover, remove the 2 clips.

(b) Open the floor carpet.

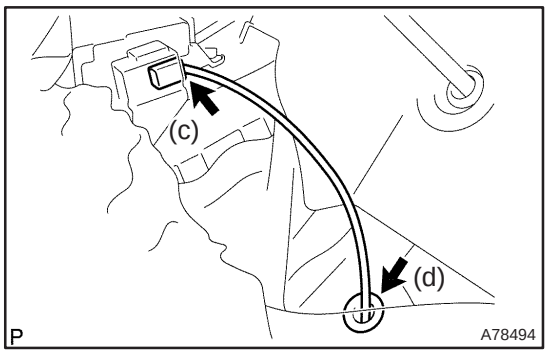

(c) Disconnect the heated oxygen sensor connector.

(d) Remove the grommet.

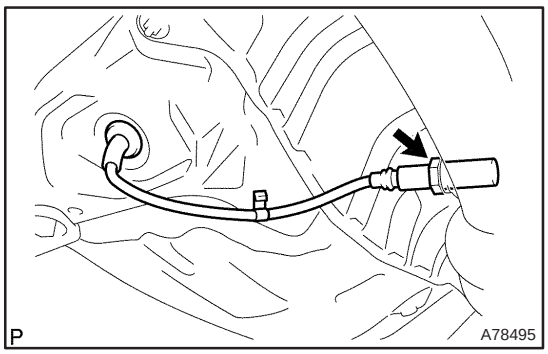

(e) Remove the heated oxygen sensor.

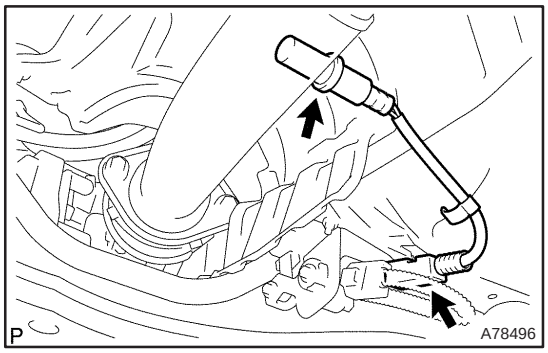

3. REMOVE HEATED OXYGEN SENSOR (W/ HID SENSOR)

(a) Disconnect the heated oxygen sensor connector.

(b) Remove the heated oxygen sensor.

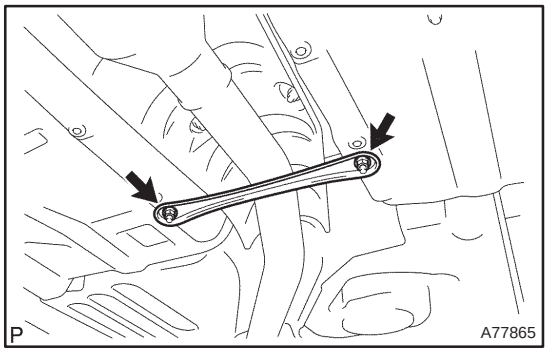

4. REMOVE FLOOR PANEL BRACE FRONT

(a) Remove the 2 nuts, and then remove the floor panel brace front.

5. REMOVE EXHAUST PIPE ASSY TAIL

(a) Remove the 2 bolts and 2 compression springs.

(b) Remove the exhaust pipe tail from the 3 exhaust pipe supports.

(c) Remove the gasket from the exhaust pipe front.

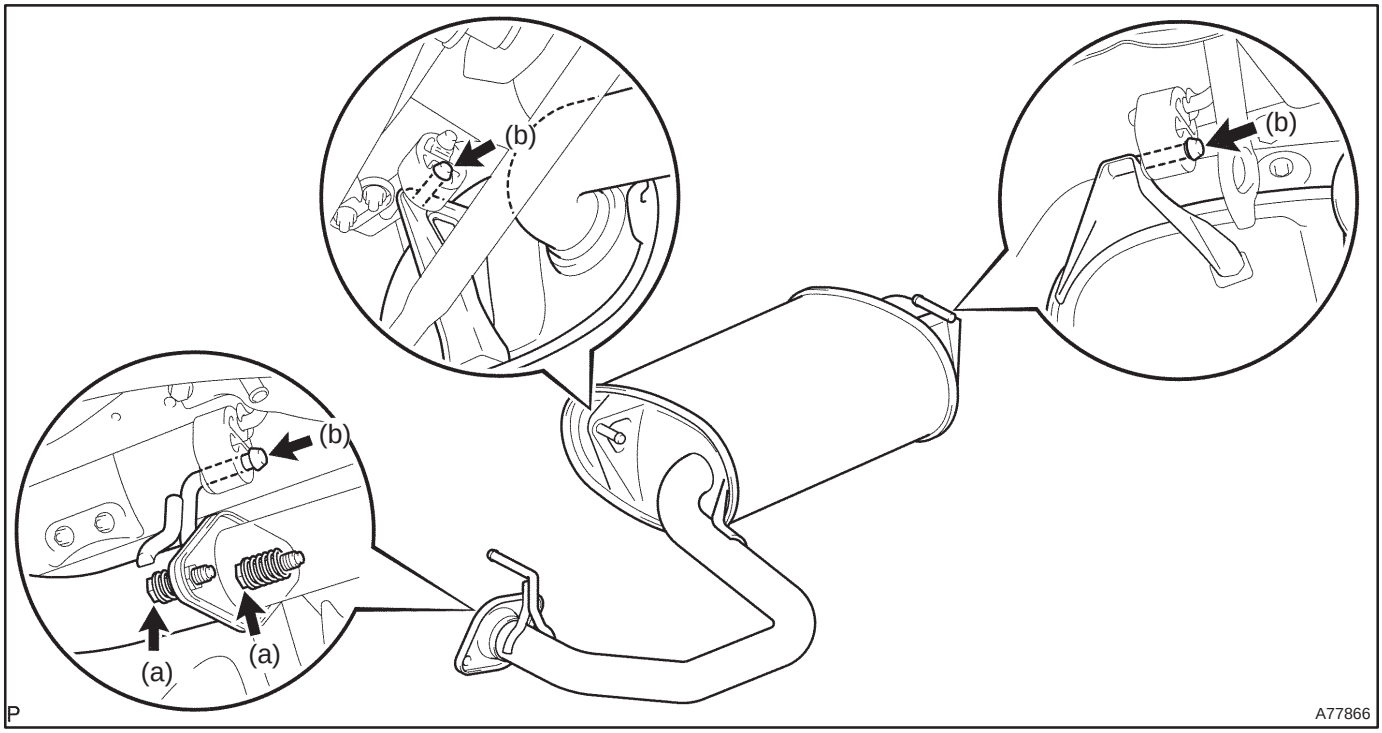

6. REMOVE EXHAUST PIPE ASSY FRONT

(a) Remove the 2 bolts and 2 compression springs.

(b) Remove the exhaust pipe front from the 2 exhaust pipe supports.

(c) Remove the gasket from the exhaust manifold.

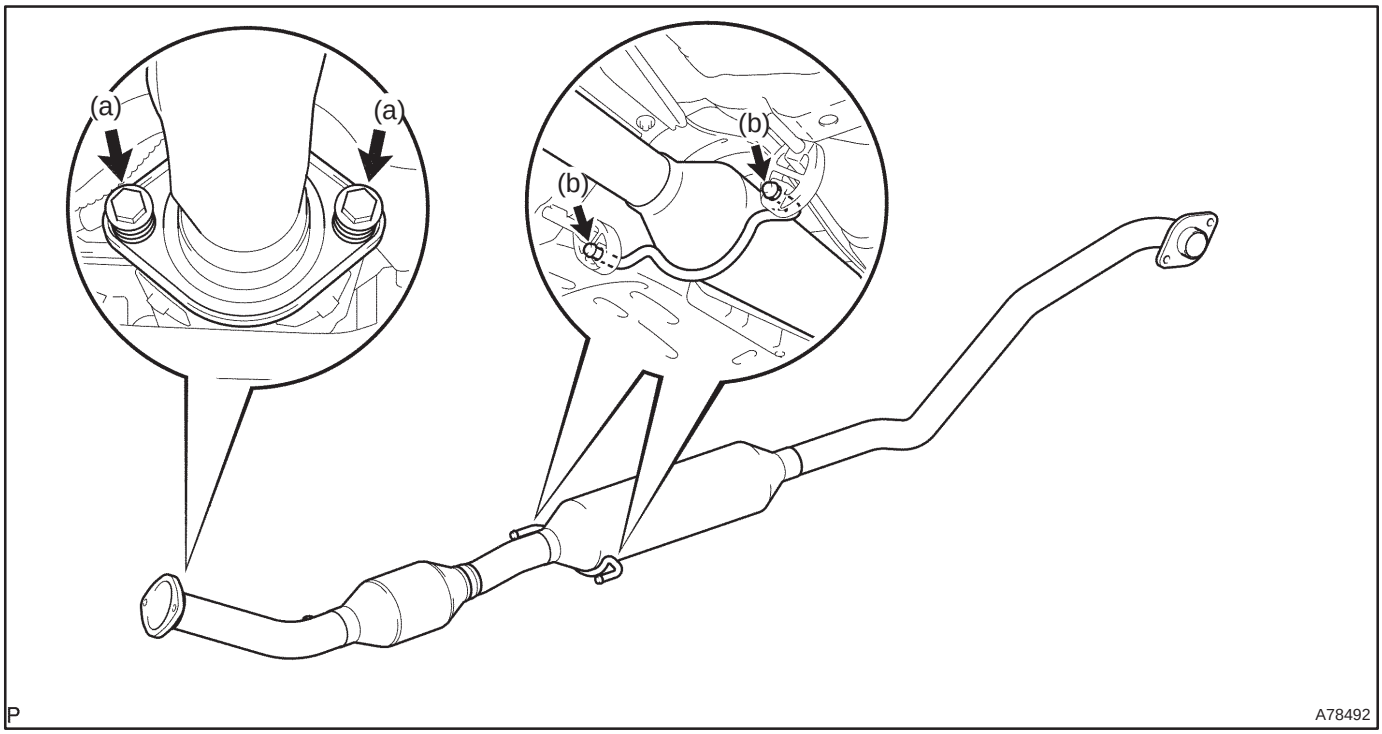

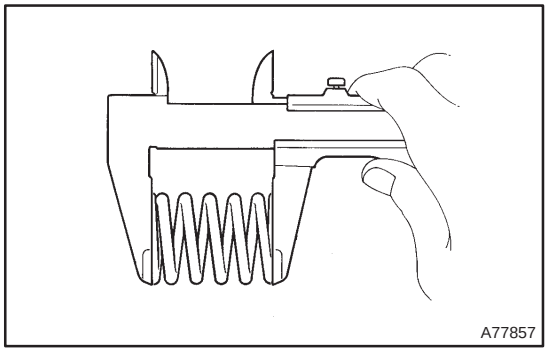

7. INSTALL EXHAUST PIPE ASSY FRONT

(a) Compression spring inspection

(1) Using vernier calipers, measure the free length of the compression spring.

Minimum length: 41.5 mm (1.634 in.)

If the free length is less than minimum, replace the compression spring.

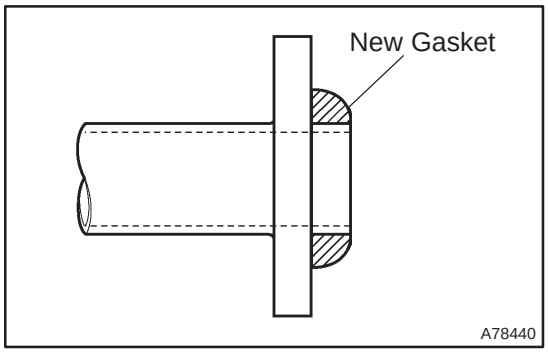

(b) Install a new gasket to the exhaust manifold as shown in the illustration.

(c) Install the exhaust pipe front to the 2 exhaust pipe supports.

(d) Tighten the 2 compression springs and 2 bolts.

Torque: 43 N·m (440 kgf·cm, 32 ft·lbf)

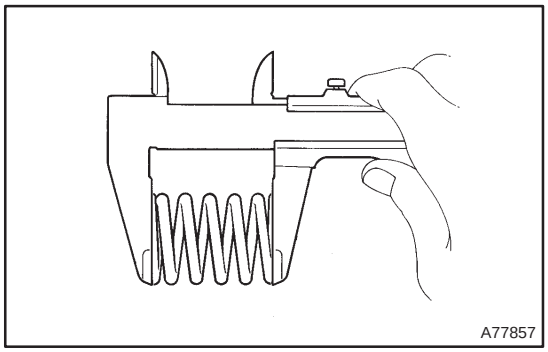

8. INSTALL EXHAUST PIPE ASSY TAIL

(a) Compression spring inspection

(1) Using vernier calipers, measure the free length of the compression spring.

Minimum length: 38.5 mm (1.516 in.)

If the free length is less than minimum, replace the compression spring.

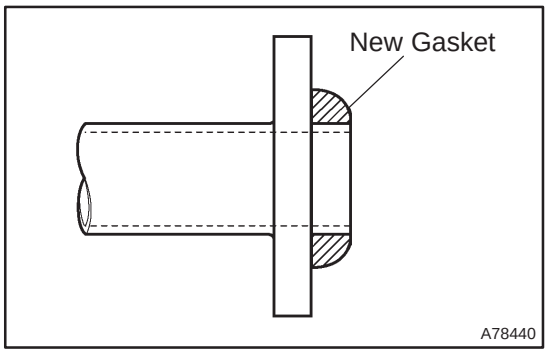

(b) Install a new gasket to the exhaust pipe front as shown in the illustration.

(c) Install the exhaust pipe tail to the 3 exhaust pipe supports.

(d) Tighten the 2 compression springs and 2 bolts.

Torque: 43 N·m (440 kgf·cm, 32 ft·lbf)

9. INSTALL HEATED OXYGEN SENSOR (W/O HID SENSOR)
Torque: 44 N·m (449 kgf·cm, 33 ft·lbf)

10. INSTALL HEATED OXYGEN SENSOR (W/ HID SENSOR)
Torque: 44 N·m (449 kgf·cm, 33 ft·lbf)

11. CHECK FOR EXHAUST GAS LEAKS

12. INSTALL FLOOR PANEL BRACE FRONT
Torque: 30 N·m (302 kgf·cm, 22 ft·lbf)

13. INSTALL FRONT FLOOR FOOTREST (W/O HID SENSOR)

EXHAUST PIPE ASSY (1AZ–FE/1AZ–FSE)

1509U–01

COMPONENTS

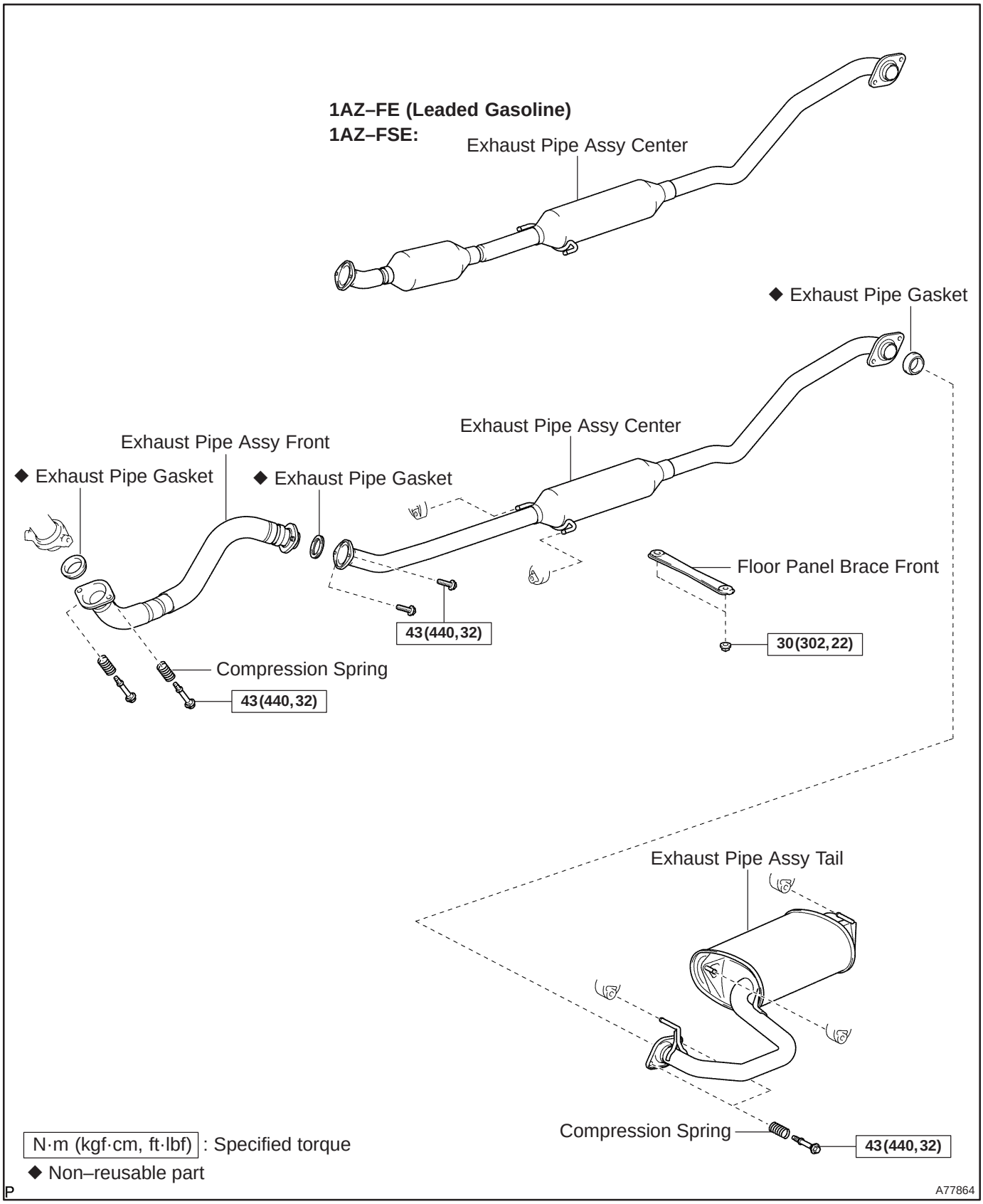

1509V–01

Removal & Installation and Disassembly & Reassembly

1. **REMOVE FLOOR PANEL BRACE FRONT (See page 15–2)**
2. **REMOVE EXHAUST PIPE ASSY TAIL (See page 15–2)**
3. **REMOVE EXHAUST PIPE ASSY CENTER**

(a) Remove the 2 bolts.

(b) Remove the exhaust pipe center and the gasket from the 2 exhaust pipe supports.

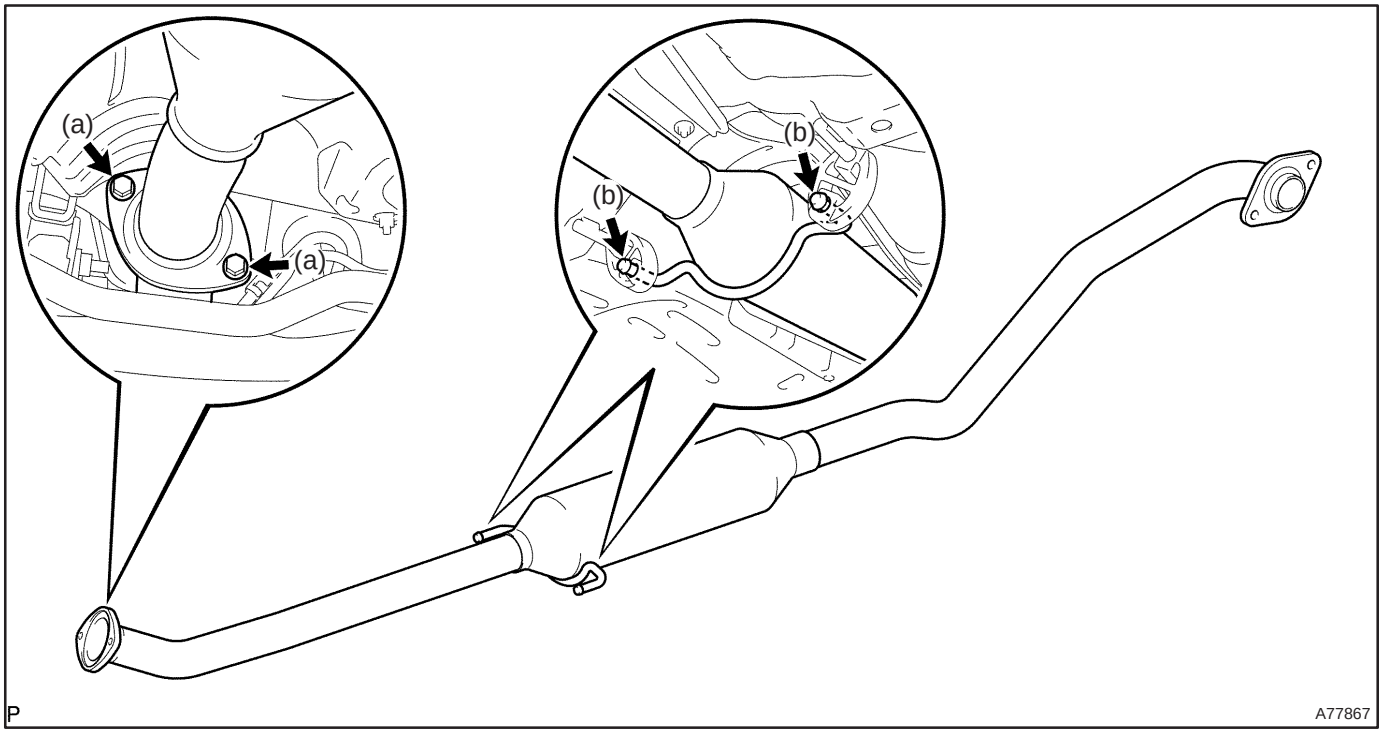

4. **REMOVE EXHAUST PIPE ASSY FRONT**

(a) Remove the 2 bolts and 2 compression springs, and then remove the exhaust pipe front.

(b) Remove the gasket from the exhaust manifold.

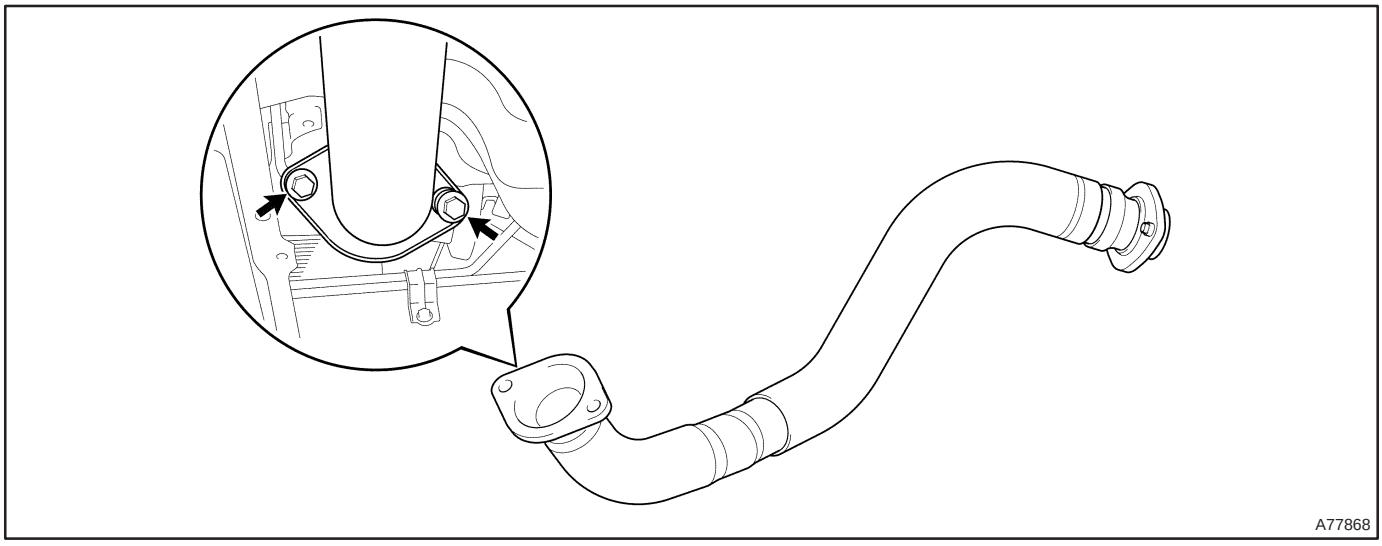

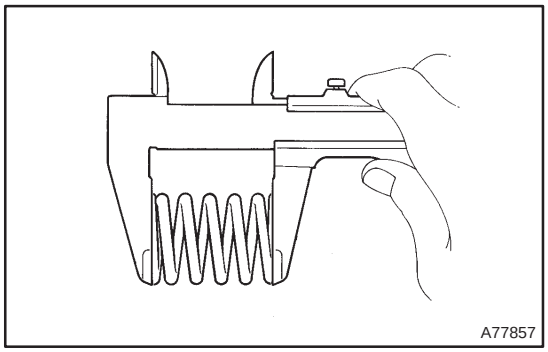

5. INSTALL EXHAUST PIPE ASSY FRONT

(a) Compression spring inspection

(1) Using vernier calipers, measure the free length of the compression spring.

Minimum length: 41.5 mm (1.634 in.)

If the free length is less than minimum, replace the compression spring.

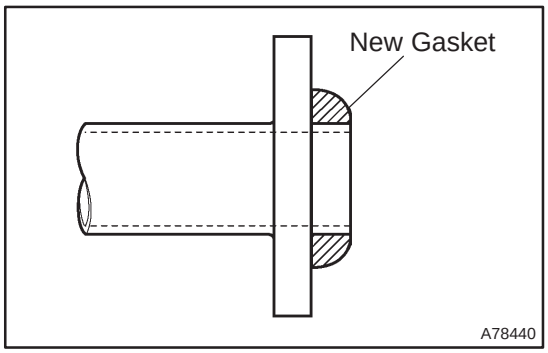

(b) Install a new gasket to the exhaust manifold as shown in the illustration.

(c) Install the exhaust pipe front with the 2 compression springs and 2 bolts.

Torque: 43 N·m (440 kgf·cm, 32 ft·lbf)

6. INSTALL EXHAUST PIPE ASSY CENTER

(a) Install a new gasket and the exhaust pipe center to the 2 exhaust pipe supports.

(b) Tighten the 2 bolts.

Torque: 43 N·m (440 kgf·cm, 32 ft·lbf)

7. INSTALL EXHAUST PIPE ASSY TAIL (See page 15–2)

8. CHECK FOR EXHAUST GAS LEAKS

9. INSTALL FLOOR PANEL BRACE FRONT (See page 15–2)

EXHAUST PIPE ASSY (1CD–FTV)

1509W–01

COMPONENTS

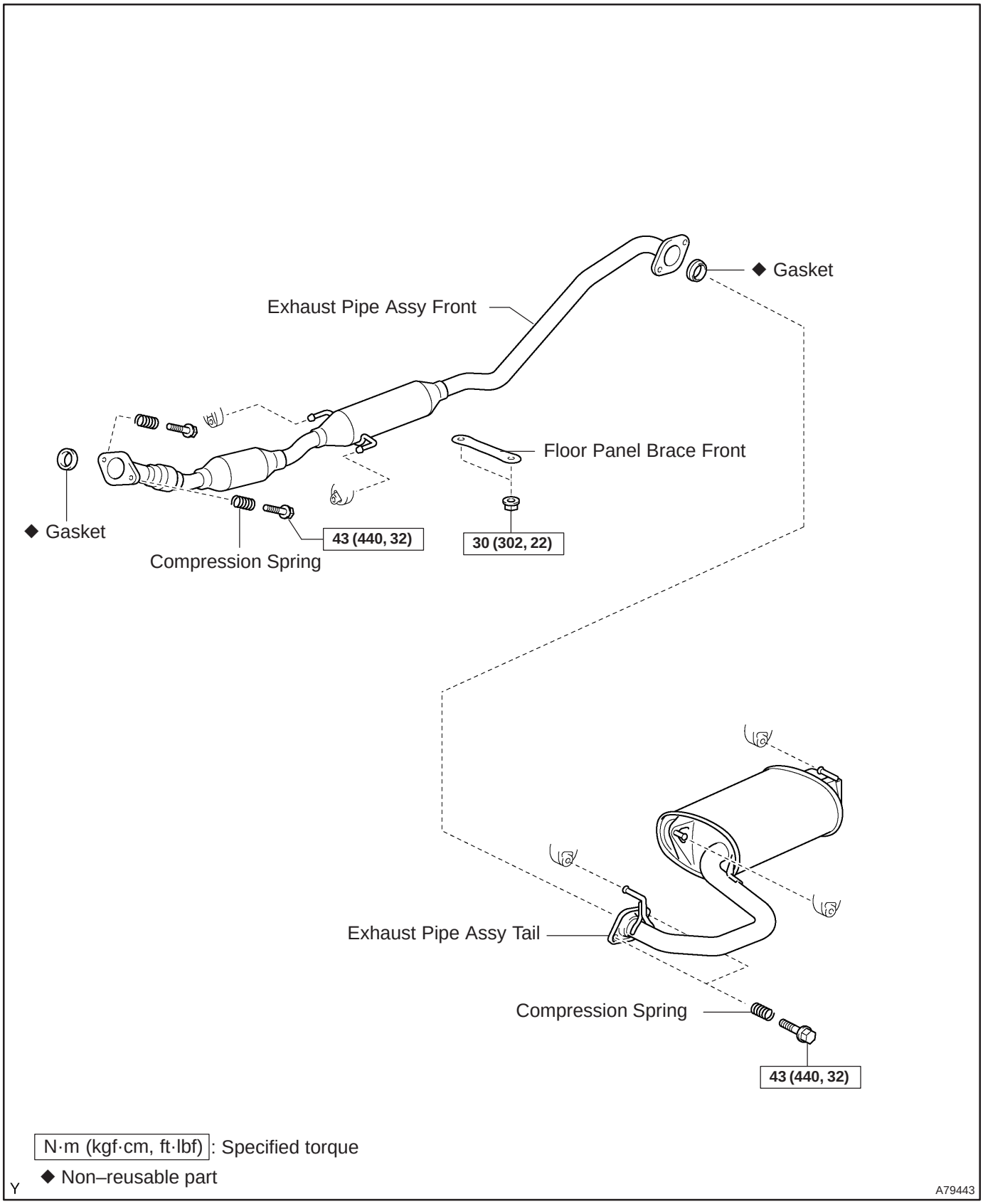

N·m (kgf·cm, ft·lbf): Specified torque

◆ Non–reusable part

Y

A79443

1509X–01

Removal & Installation and Disassembly & Reassembly

1. REMOVE FLOOR PANEL BRACE FRONT

(a) Remove the 2 nuts and the floor panel brace front.

2. REMOVE EXHAUST PIPE ASSY TAIL

(a) Remove the 2 bolts and 2 compression springs.

(b) Disconnect the 3 exhaust pipe supports and remove the exhaust pipe tail.

(c) Remove the gasket from the exhaust pipe tail.

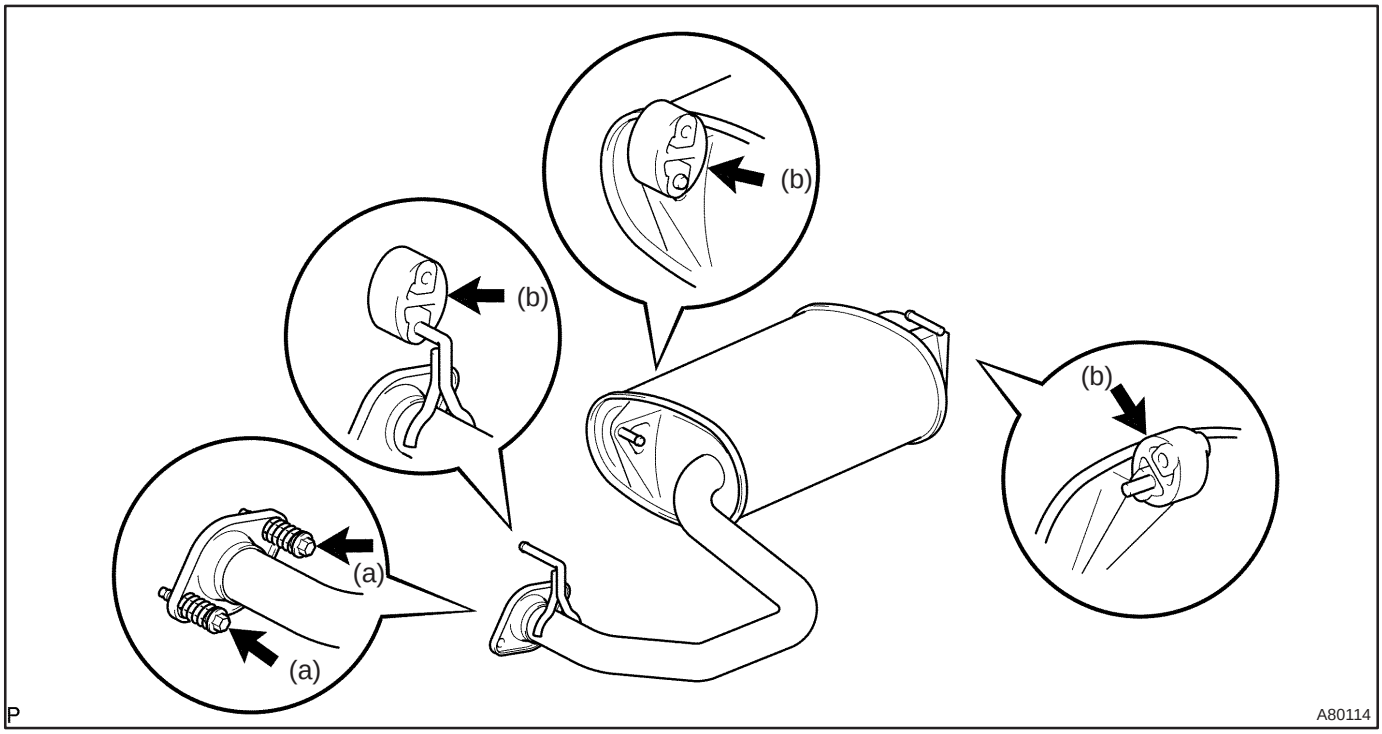

3. REMOVE EXHAUST PIPE ASSY FRONT

(a) Remove the 2 bolts and 2 compression springs.

(b) Disconnect the 2 exhaust pipe supports and remove the exhaust pipe front.

(c) Remove the gasket from the manifold converter.

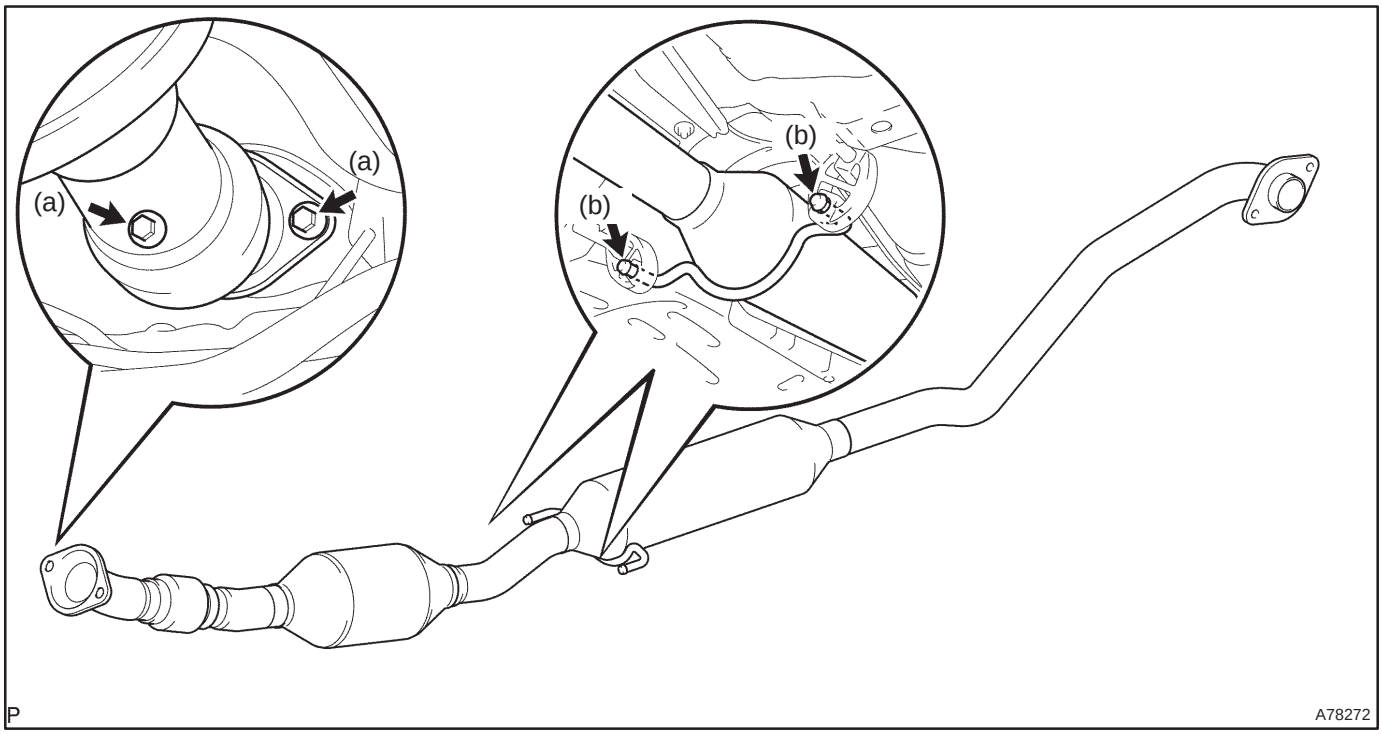

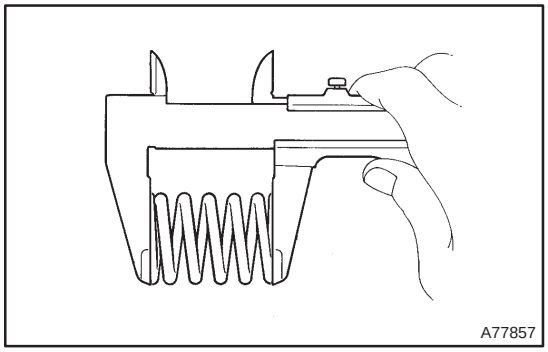

4. INSTALL EXHAUST PIPE ASSY FRONT

(a) Using vernier calipers, measure the free length of the compression spring.

Minimum Length: 41.5 mm (1.634 in.)

If the minimum length is less than minimum, replace the compression spring.

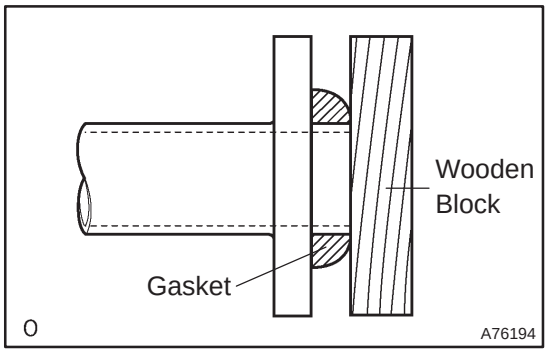

(b) Using a plastic hammer and a wooden block, tap in a new gasket until its surface is flush with the exhaust manifold.

NOTICE:

- **Tap in the gasket in the correct direction.**
- **Do not reuse the removed gasket.**
- **Be sure not to push in the gasket when installing the exhaust pipe.**

(c) Connect the 2 exhaust pipe supports and install the exhaust pipe front with the 2 compression springs and 2 bolts.

Torque: 43 N·m (440 kgf·cm, 32 ft·lbf)

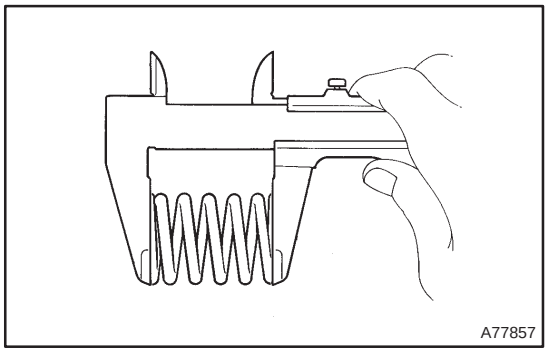

5. INSTALL EXHAUST PIPE ASSY TAIL

(a) Using vernier calipers, measure the free length of the compression spring.

Minimum Length: 38.5 mm (1.515 in.)

If the minimum length is less than minimum, replace the compression spring.

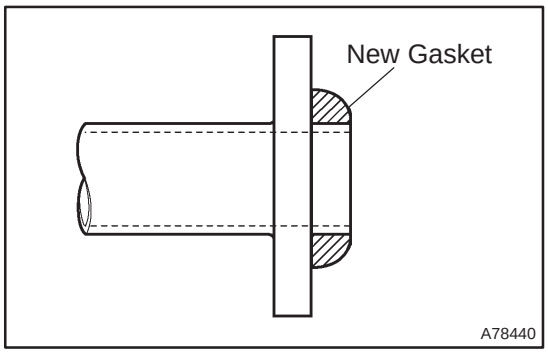

(b) Install a new gasket to the pipe front converter as shown in the illustration.

(c) Connect the 3 exhaust pipe supports and install the exhaust pipe tail with the 2 compression springs and 2 bolts.

Torque: 43 N·m (440 kgf·cm, 32 ft·lbf)

6. CHECK FOR EXHAUST GAS LEAKS

7. INSTALL FLOOR PANEL BRACE FRONT

Torque: 30 N·m (302 kgf·cm, 22 ft·lbf)

COOLING SYSTEM (1ZZ–FE/3ZZ–FE)

160N4–01

ON–VEHICLE INSPECTION

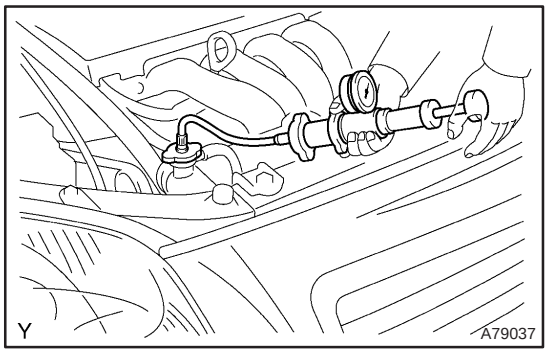

1. INSPECT COOLING SYSTEM FOR LEAKS

CAUTION:

To avoid the danger of being burned, do not remove the radiator cap while the engine and radiator are still hot. Thermal expansion will cause hot engine coolant and steam to blow out from the radiator.

(a) Remove the radiator support opening cover.
(b) Remove the engine room cover side.
(c) Fill the radiator with coolant and attach a radiator cap tester.
(d) Warm up the engine.
(e) Pump it to 118 kPa (1.2 kgf/cm^2, 17.1 psi), and check that the pressure does not drop.

If the pressure drops, check the hoses, radiator and water pump for leaks. If there are no signs or traces of external coolant leaks, check the heater core, cylinder block and head.

(f) Reinstall the engine room cover side.
(g) Reinstall the radiator support opening cover.

2. CHECK ENGINE COOLANT LEVEL AT RESERVOIR

(a) The engine coolant level should be between the ”LOW” and ”FULL” lines, when the engine is cold.

If low, check for leaks and add ”Toyota Long Life Coolant” or equivalent up to the ”FULL” line.

3. CHECK ENGINE COOLANT QUALITY

(a) Remove the radiator cap.

CAUTION:

To avoid the danger of being burned, do not remove the radiator cap while the engine and radiator are still hot. Thermal expansion will cause hot engine coolant and steam to blow out from the radiator.

(b) Check if there is any excessive deposits of rust or scale around the radiator cap and radiator filler hole; the coolant should be free from oil.

If excessively dirty, replace the coolant.

(c) Reinstall the radiator cap.

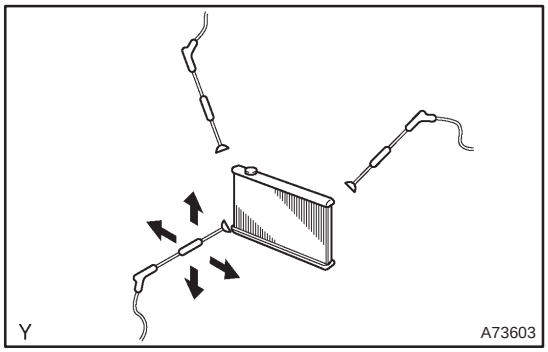

4. INSPECT FINS BLOCKAGE

(a) If fins are clogged, wash them with water or a steam cleaner and dry with compressed air.

NOTICE:

- **If the distance between the steam cleaner and the core is too close, there is a possibility of damaging the fins, so keep the following injection distance.**

Injection Pressures kPa (kgf/cm^2, psi)	Injection Distance mm (in.)
2,942 to 4,903 (30 to 50, 427 to 711)	300 (11.811)
4,903 to 7,845 (50 to 80, 711 to 1,138)	500 (19.685)

- **If the fins are bent, straighten them with a screwdriver or pliers.**
- **Be careful not pour water directly onto electronic components.**

160N5–01

INSPECTION

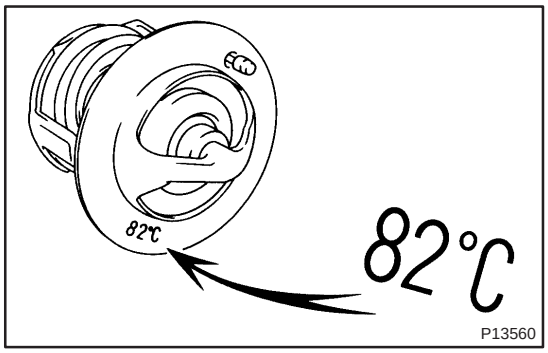

P13560

1. INSPECT THERMOSTAT

HINT:

The valve opening temperature is inscribed on the thermostat.

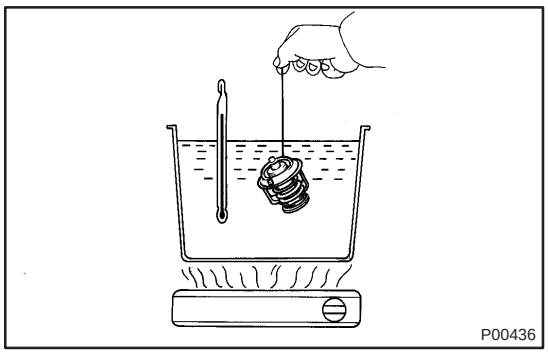
P00436

(a) Immerse the thermostat in water and gradually heat the water.

(b) Check the valve opening temperature.

Valve opening temperature:
80 to 84°C (176 to 183°F)

If the valve opening temperature is not as specified, replace the thermostat.

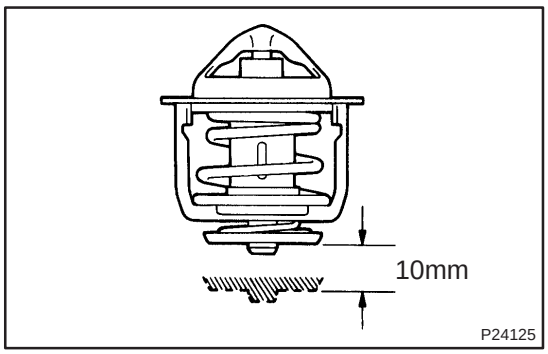

P24125

(c) Check the valve lift.

Valve lift: 10 mm (0.39 in.) or more at 95°C (203°F)

If the valve lift is not as specified, replace the thermostat.

(d) Check that the valve is fully closed when the thermostat is at low temperatures (below 77°C (171°F)).

If not closed, replace the thermostat.

2. INSPECT RADIATOR CAP SUB–ASSY

NOTICE:

- **If the radiator cap is contaminatied, rinse it with water.**
- **Before using a radiator cap tester, wet the relief valve and the pressure valve with engine coolant or water.**
- **When performing following steps (a) and (b), keep the tester at an angle of over 30° above horizontal.**

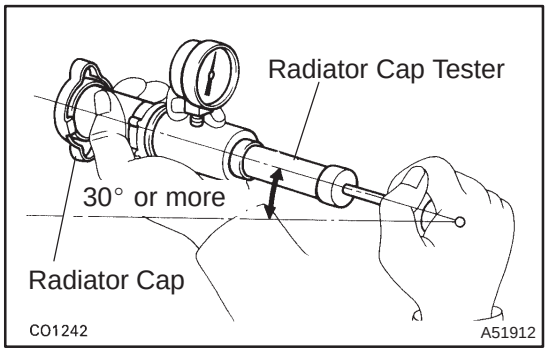

(a) Using a radiator cap tester, slowly pump the tester and check that air is coming from the vacuum valve.

Pump speed: 1 push / 3 seconds or more

NOTICE:

Push the pump at a constant speed.

If air is not coming from the vacuum valve, replace the radiator cap.

(b) Pump the tester and measure the relief valve opening pressure.

NOTICE:

The following pump speed is for the first pump only (in order to close the vacuum valve). After the first pump, the pump speed can be reduced.

Pump speed: 1 push within 1 second

Standard opening pressure:

74 to 103 kPa (0.75 to 1.05 kgf/cm^2, 10.7 to 14.9 psi)

Minimum opening pressure:

59 kPa (0.6 kgf/cm^2, 8.6 psi)

If the opening pressure is less than minimum, replace the radiator cap.

HINT:

Use the tester's maximum reading as the opening pressure.

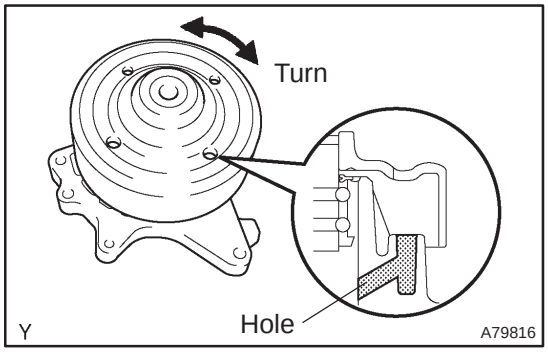

3. INSPECT WATER PUMP ASSY

(a) Visually check the drain hole for coolant leakage.

If leakage is found, replace the water pump.

(b) Turn the pulley, and check that the water pump bearing moves smoothly and does not make noise.

If necessary, replace the water pump.

COOLING FAN SYSTEM (1ZZ–FE/3ZZ–FE)

1600R–14

ON–VEHICLE INSPECTION

HINT:

It is normal that the cooling fan sometime rotates when the ignition switch is turned from ACC to ON.

1. CHECK COOLING FAN OPERATION WITH LOW TEMPERATURE (Below 94.5°C (202°F))

(a) Turn the ignition switch ON.

(b) Check that the cooling fan stops.

If not, check the cooling fan relay and engine coolant temperature sensor, and check if there is its connector disconnection or circuit open between them.

(c) Disconnect the engine coolant temperature sensor connector.

(d) Check that the cooling fan rotates.

If not, check the fuses, cooling fan relay, ECM and cooling fan, and check for short in a circuit between the cooling fan relay and the engine coolant temperature sensor.

(e) Reconnect the engine coolant temperature sensor connector.

2. CHECK COOLING FAN OPERATION WITH HIGH TEMPERATURE (Above 96°C (205°F))

(a) Start the engine, and raise coolant temperature to above 96°C (205°F).

HINT:

Coolant temperature is detected by the engine coolant temperature sensor on the water outlet.

(b) Check that the cooling fan rotates.

If not, replace the engine coolant temperature sensor.

3. INSPECT COOLING FAN

(a) Disconnect the cooling fan connector.

(b) Connect battery and ammeter to the connector.

(c) Check that the cooling fan rotates smoothly, and check the reading on the ammeter.

Standard amperage: Approximately. 8 to 12 A at 20°C (68°F)

(d) Reconnect the cooling fan connector.

INSPECTION

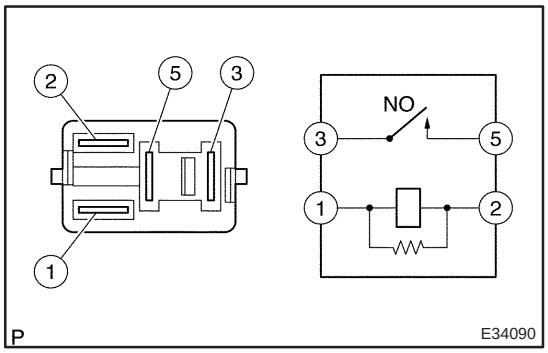

1. INSPECT COOLING FAN RELAY

(a) Continuity inspection.

(1) Using an ohmmeter, check for continuity between each terminal.

Specified condition:

Terminal No.	Specified condition
1 – 2	Continuity
3 – 5	No continuity
	Continuity (Apply battery voltage terminals 1 and 2)

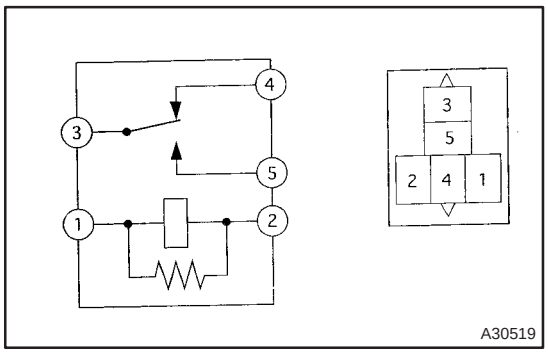

2. INSPECT COOLING FAN RELAY NO.2

(a) Continuity inspection.

(1) Using an ohmmeter, check for continuity between each terminal.

Specified condition:

Terminal No.	Specified condition
1 – 2 3 – 4	Continuity
3 – 5	No continuity
	Continuity (Apply battery boltage terminals 1 and 2)

3. INSPECT COOLING FAN RESISTOR

(a) Using an ohmmeter, measure the resistance between the terminals.

Resistance: 1.17 to 1.43 Ω at 20 °C (68 °F)

ENGINE COOLANT (1ZZ–FE/3ZZ–FE)

160MH–01

REPLACEMENT

1. DRAIN ENGINE COOLANT

CAUTION:
To avoid the danger of being burned, do not remove the radiator cap while the engine and radiator are still hot.
Thermal expansion will cause hot engine coolant and steam to blow out from the radiator.

(a) Remove the radiator cap.

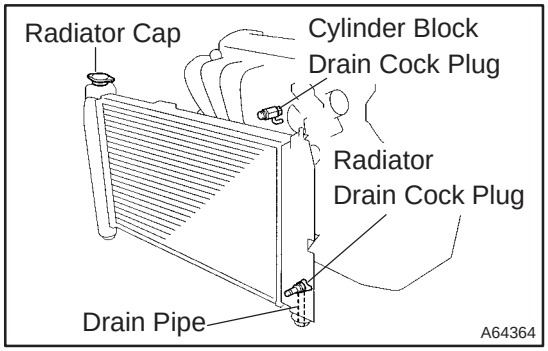

(b) Loosen the radiator drain cock plug and the cylinder block drain cock plug, and drain engine coolant.
(c) Close the radiator drain cock plug.
(d) Close the cylinder block drain plug.
Torque: 13 N·m (130 kgf·cm, 9 ft·lbf) for engine

2. ADD ENGINE COOLANT

(a) Tighten the radiator drain plug, and pour coolant into radiator until it overflows.
Capacity:

Transmission type	Steering	Coolant Capacity [liters (US gts, lmp. gts)]
M/T	LHD	5.8 (6.1, 5.1)
M/T	RHD	5.9 (6.2, 5.2)
A/T	LHD	5.7 (6.0, 5.0)
A/T	RHD	5.8 (6.1, 5.1)

NOTICE:
- **Do not use an alcohol type coolant or plain water alone.**
- **The coolant should be mixed with plain water (preferably demineralized water or distilled water).**

HINT:
- Use of improper coolants may damage engine cooling system.
- Use ”Toyota Long Life Coolant” or equivalent and mix it with plain water according to the manufacturer’s instruction.
- Using of coolant with includes more than 50 % (freezing protection down to –35°C (–31°F)) or 60 % (freezing protection down to –50°C (–58°F)) of ethylene–glycol is recommended but not more than 70 %.
- Press the radiator inlet and outlet hose several times by hand.
- If the coolant level gets lower, pour coolant.

(b) Reinstall the radiator cap.
(c) Pour engine coolant into the reservoir tank until it reaches full line.

(d) Warm up the engine until the thermostat valve begins to open.

HINT:

Press the radiator inlet and outlet hose several times by hand during the warming up.

(e) Stop the engine and wait until the coolant temperature gets cold. Then remove the radiator cap to check the coolant level.
- If the level gets lower, perform the procedures from (a) through (e) again.
- If the level does not gets lower, fill the reservoir tank with engine coolant.

3. CHECK FOR ENGINE COOLANT LEAKS (See page 16–1)

WATER PUMP ASSY (1ZZ–FE/3ZZ–FE)

160MI–01

REPLACEMENT

1. REMOVE RADIATOR SUPPORT OPENING COVER (See page 14–27)
2. REMOVE ENGINE ROOM COVER SIDE (See page 14–27)
3. REMOVE ENGINE UNDER COVER SUB–ASSY NO.1 (See page 14–27)
4. REMOVE ENGINE UNDER COVER RH (See page 14–27)
5. DRAIN ENGINE COOLANT (See page 16–1)
6. REMOVE FAN AND GENERATOR V BELT (See page 14–5)
7. REMOVE GENERATOR ASSY (See page 19–7)

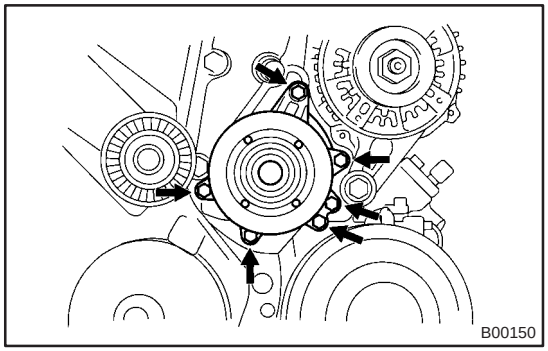

8. REMOVE WATER PUMP ASSY

(a) Remove the 6 bolts, the water pump and the O–ring.

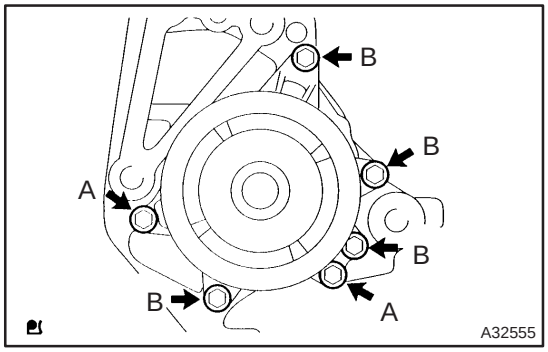

9. INSTALL WATER PUMP ASSY

(a) Place a new O–ring on the timing chain cover.

(b) Install the water pump with the 6 bolts.

Torque:
9.0 N·m (92 kgf·cm, 80 in·lbf) for Bolt A
11 N·m (113 kgf·cm, 8 ft·lbf) for Bolt B

10. INSTALL GENERATOR ASSY (See page 19–7)
11. ADD ENGINE COOLANT (See page 16–7)
12. CHECK FOR ENGINE COOLANT LEAKS (See page 16–1)

THERMOSTAT (1ZZ–FE/3ZZ–FE)

160MJ–01

REPLACEMENT

1. **REMOVE RADIATOR SUPPORT OPENING COVER (See page 14–27)**
2. **ENGINE ROOM COVER SIDE (See page 14–27)**
3. **REMOVE ENGINE UNDER COVER SUB–ASSY NO.1 (See page 14–27)**
4. **DRAIN ENGINE COOLANT (See page 16–1)**
5. **REMOVE FAN AND GENERATOR V BELT (See page 14–5)**
6. **REMOVE GENERATOR ASSY (See page 19–7)**
7. **REMOVE WATER INLET**

(a) Remove the 2 nuts and the water inlet.

8. **REMOVE THERMOSTAT**

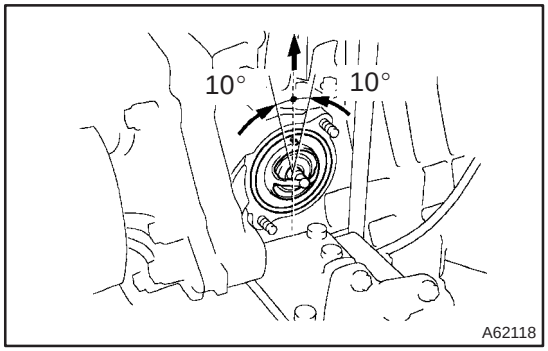

9. **INSTALL THERMOSTAT**

(a) Install a new gasket to the thermostat.

(b) Install the thermostat with the jiggle valve upward as shown in the illustration.

10. **INSTALL WATER INLET**

(a) Install the water inlet with the 2 nuts.

Torque: 11 N·m (112 kgf·cm, 8 ft·lbf)

11. **INSTALL GENERATOR ASSY (See page 19–7)**
12. **ADD ENGINE COOLANT (See page 16–7)**
13. **CHECK FOR ENGINE COOLANT LEAKS (See page 16–1)**

RADIATOR ASSY (1ZZ–FE/3ZZ–FE)

160MK–01

REPLACEMENT

1. REMOVE RADIATOR SUPPORT OPENING COVER (See page 14–27)
2. REMOVE ENGINE ROOM COVER SIDE (See page 14–27)
3. ENGINE UNDER COVER SUB–ASSY NO.1 (See page 14–27)
4. DRAIN ENGINE COOLANT (See page 16–1)
5. DISCONNECT RADIATOR HOSE INLET
(a) Disconnect the radiator hose inlet from the radiator.
6. DISCONNECT RADIATOR HOSE OUTLET
(a) Disconnect the radiator hose outlet from the radiator.
7. DISCONNECT OIL COOLER INLET TUBE NO.1 (A/T TRANSAXLE)
(a) Disconnect the oil cooler inlet tube from the radiator.
8. DISCONNECT OIL COOLER OUTLET TUBE NO.1 (A/T TRANSAXLE)
(a) Disconnect the oil cooler outlet tube from the radiator.

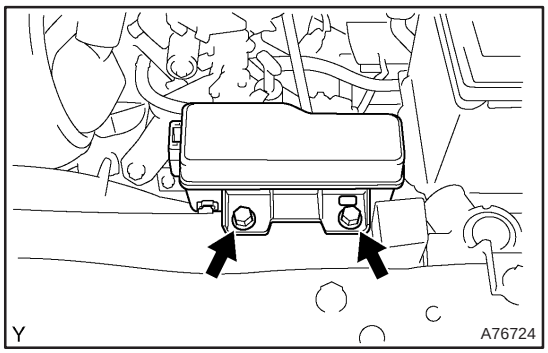

9. REMOVE RADIATOR ASSY
(a) Disconnect the fan connector and the 2 harness clamps.
(b) Remove the 2 bolts and the relay block.
(c) Remove the 2 bolts, the 2 radiator support upper and the radiator.
(d) Remove the 2 support radiator LWRs from the radiator.

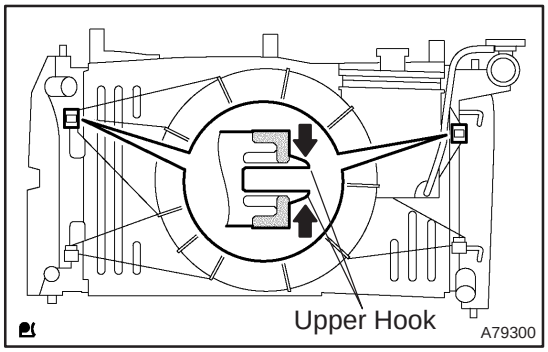

(e) Pinch and push each upper hook on the fan shroud to release and remove the fan shroud from the radiator.

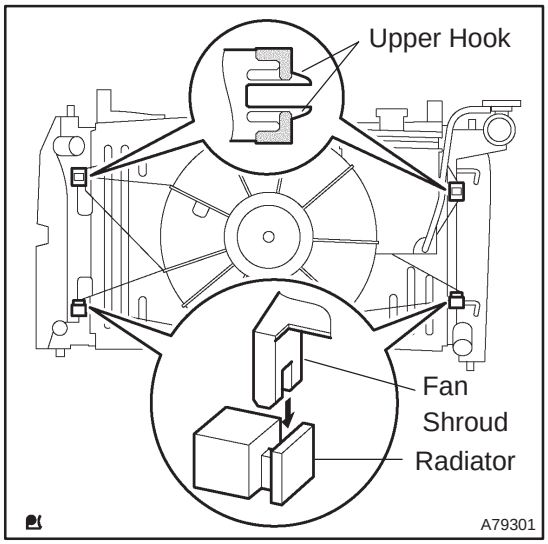

10. INSTALL RADIATOR ASSY

(a) Align the 2 keyways of the fan shroud with the 2 keys located on the lower bottom of the radiator and fit them.

(b) Install the fan should to the radiator with the 2 upper hooks. You can hear ”click” sounds when the hooks are securely fitted.

(c) Install the 2 support radiator LWRs to the radiator.

(d) Install the radiator with the 2 bolts and 2 radiator support uppers.

Torque: 19 N·m (194 kgf·cm, 14 ft·lbf)

(e) Install the relay block with the 2 bolts.

(f) Connect the fan connector and 2 harness clamps.

11. ADD ENGINE COOLANT (See page 16–7)

12. CHECK FOR ENGINE COOLANT LEAKS (See page 16–1)

COOLING SYSTEM (1AZ–FE)

ON–VEHICLE INSPECTION

160N1–01

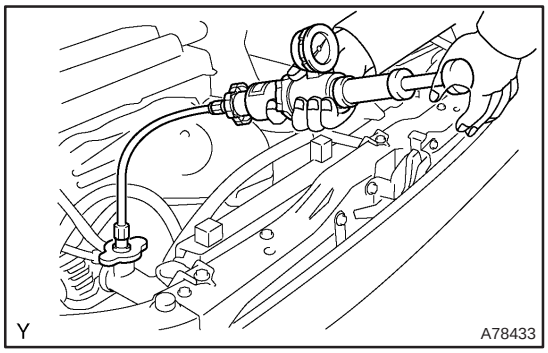

1. INSPECT COOLING SYSTEM FOR LEAKS

CAUTION:

To avoid the danger of being burned, do not remove the radiator cap while the engine and radiator are still hot. Thermal expansion will cause hot engine coolant and steam to blow out from the radiator.

(a) Remove the radiator support opening cover.
(b) Remove the engine room cover side.
(c) Fill the radiator with coolant and attach a radiator cap tester.
(d) Warm up the engine.
(e) Pump it to 137 kPa (1.4 kgf/cm^2, 19.9 psi), and check that the pressure does not drop.

If the pressure drops, check the hoses, radiator and water pump for leaks. If there are no signs or traces of external coolant leaks, check the heater core, cylinder block and head.

(f) Reinstall the engine room cover side.
(g) Reinstall the radiator support opening cover.

2. CHECK ENGINE COOLANT LEVEL AT RESERVOIR

(a) The engine coolant should be between the ”LOW” and ”FULL” lines, when the engine is cold.

If low, check for leaks and add ”Toyota Long Life Coolant” or equivalent up to the ”FULL” line.

3. CHECK ENGINE COOLANT QUALITY

(a) Remove the radiator cap.

CAUTION:

To avoid the danger of being burned, do not remove the radiator cap while the engine and radiator are still hot. Thermal expansion will cause hot engine coolant and steam to blow out from the radiator.

(b) Check if there is any excessive deposits of rust or scale around the radiator cap and radiator filler hole; the coolant should be free from oil.

If excessively dirty, replace the coolant.

(c) Reinstall the radiator cap.

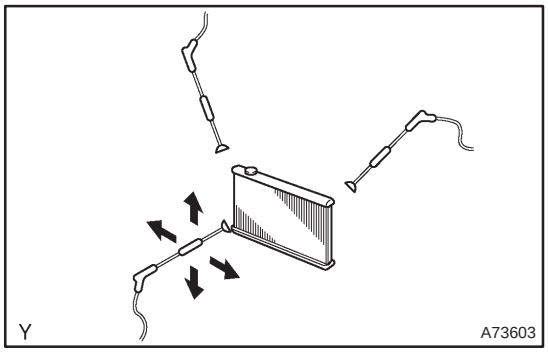

4. INSPECT FINS BLOCKAGE

(a) If fins are clogged, wash them with water or a steam cleaner and dry with compressed air.

NOTICE:

- **If the distance between the steam cleaner and the core is too close, there is a possibility of damaging the fins, so keep the following injection distance.**

Injection Pressures kPa (kgf/cm^2, psi)	Injection Distance mm (in.)
2,942 to 4,903 (30 to 50, 427 to 711)	300 (11.811)
4,903 to 7,845 (50 to 80, 711 to 1,138)	500 (19.685)

- **If the fins are bent, straighten them with a screwdriver or pliers.**
- **Be careful not pour water directly onto electronic components.**

INSPECTION

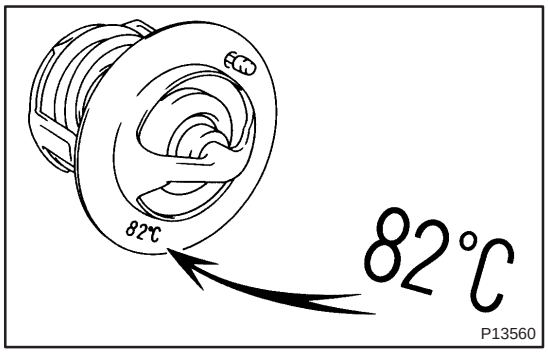

1. INSPECT THERMOSTAT

HINT:

The thermostat is numbered with the valve opening temperature.

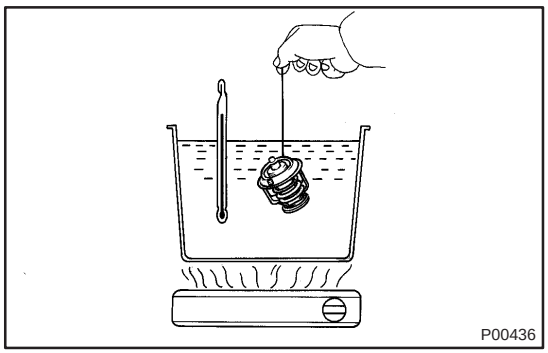

(a) Immerse the thermostat in water and gradually heat the water.

(b) Check the valve opening temperature of the thermostat.
Valve opening temperature:
80 to 84°C (176 to 183°F)

If the valve opening temperature is not as specified, replace the thermostat.

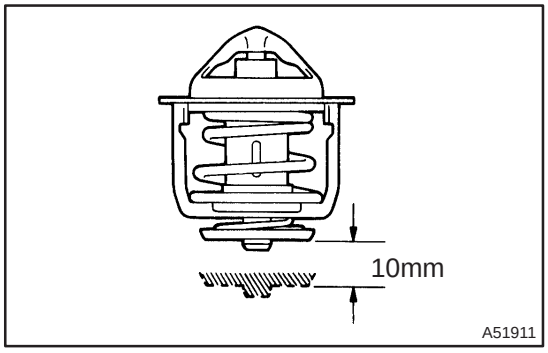

(c) Check the valve lift.
Valve lift: 10 mm (0.394 in.) or more at 95°C (203°F)

If the valve lift is not as specified, replace the thermostat.

(d) Check that the valve is fully closed when the thermostat is at low temperatures (below 77°C (171°F)).

If not closed, replace the thermostat.

2. INSPECT RADIATOR CAP SUB–ASSY

NOTICE:

- **If the radiator cap is contaminatied, rinse it with water.**
- **Before using a radiator cap tester, wet the relief valve and the pressure valve with engine coolant or water.**
- **When performing following steps (a) and (b), keep the tester at an angle of over 30° above horizontal.**

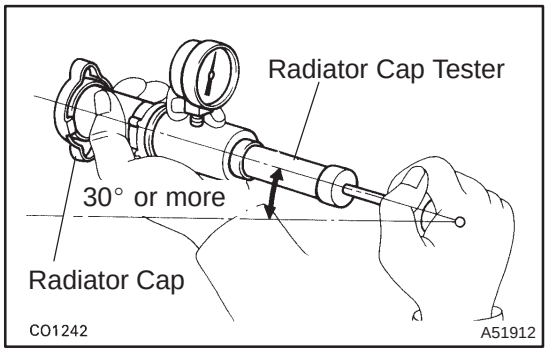

(a) Using a radiator cap tester, slowly pump the tester and check that air is coming from the vacuum valve.

Pump speed: 1 push / 3 seconds or more

NOTICE:

Push the pump at a constant speed.

If air is not coming from the vacuum valve, replace the radiator cap.

(b) Pump the tester and measure the relief valve opening pressure.

NOTICE:

The following pump speed is for the first pump only (in order to close the vacuum valve). After the first pump, the pump speed can be reduced.

Pump speed: 1 push within 1 second

Standard opening pressure:

93 to 122 kPa (0.95 to 1.25 kgf/cm^2, 13.4 to 17.6 psi)

Minimum opening pressure:

78 kPa (0.8 kgf/cm^2, 11.2 psi)

If the opening pressure is less than minimum, replace the radiator cap.

HINT:

Use the tester's maximum reading as the opening pressure.

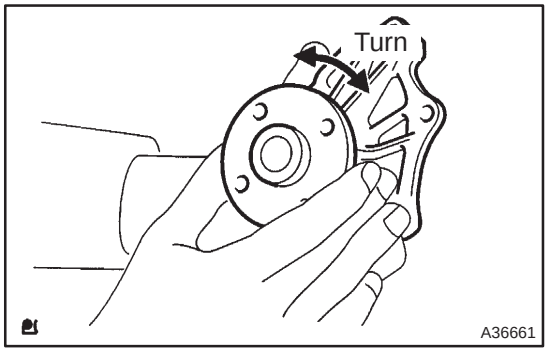

3. INSPECT WATER PUMP ASSY

(a) Visually check the drain hole for coolant leakage.

If leakage is found, replace the water pump.

(b) Turn the pulley, and check that the water pump bearing moves smoothly and does not make noise.

If necessary, replace the water pump.

COOLING FAN SYSTEM (1AZ–FE)

1600R–13

ON–VEHICLE INSPECTION

HINT:

It is normal that the cooling fan sometime rotates when the ignition switch is turned from ACC to ON.

1. CHECK COOLING FAN OPERATION WITH LOW TEMPERATURE (Below 77°C (171°F))

(a) Turn the ignition switch ON.

(b) Check that the cooling fan stops.

If not, check the cooling fan relay and engine coolant temperature sensor, and check for disconnection of connectors or wire break between the cooling fan relay and engine coolant temperature sensor.

(c) Disconnect the engine coolant temperature sensor connector.

(d) Check that the cooling fan rotates.

If not, check the fuses, cooling fan relay, ECM and cooling fan, and check for a short circuit between the cooling fan relay and engine coolant temperature sensor.

(e) Reconnect the engine coolant temperature sensor connector.

2. CHECK COOLING FAN OPERATION WITH HIGH TEMPERATURE (Above 95.5°C (204°F))

(a) Start the engine, and raise coolant temperature to above 95.5°C (204°F).

HINT:

Coolant temperature is the detected value by the engine coolant temperature sensor on the water outlet.

(b) Check that the cooling fan rotates.

If not, replace the engine coolant temperature sensor.

3. INSPECT COOLING FAN

(a) Disconnect the cooling fan connector.

(b) Connect battery and ammeter to the cooling fan connector.

(c) Check that the cooling fan rotates smoothly, and check the reading on the ammeter.

Standard amperage:
5.2 to 8.2 A at 20°C (68°F) (M/T)
8.3 to 11.3 A at 20°C (68°F) (A/T)

(d) Reconnect the cooling fan connector.

4. INSPECT COOLING FAN No.2 (With Air Conditioner)

(a) Disconnect the cooling fan connector.

(b) Connect battery and ammeter to the cooling fan connector.

(c) Check that the cooling fan rotates smoothly, and check the reading on the ammeter.

Standard amperage:
5.2 to 8.2 A at 20°C (68°F) (M/T)
8.3 to 11.3 A at 20°C (68°F) (A/T)

(d) Reconnect the cooling fan connector.

160N3–01

INSPECTION

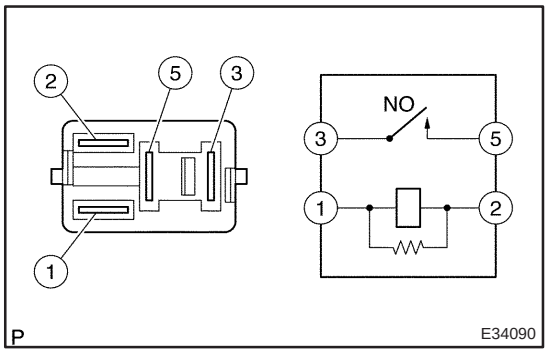

1. INSPECT COOLING FAN RELAY

(a) Continuity inspection.

(1) Using an ohmmeter, check for continuity between each terminal.

Specified condition:

Terminal No.	Specified condition
1 – 2	Continuity
3 – 5	No continuity
	Continuity (Apply battery voltage terminals 1 and 2)

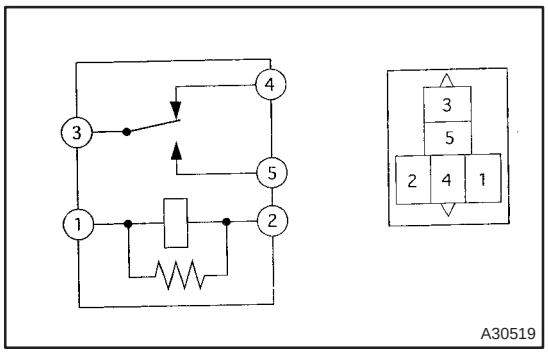

2. INSPECT COOLING FAN RELAY NO.2

(a) Continuity inspection.

(1) Using an ohmmeter, check for continuity between each terminal.

Specified condition:

Terminal No.	Specified condition
1 – 2 3 – 4	Continuity
3 – 5	No continuity
	Continuity (Apply battery voltage terminals 1 and 2)

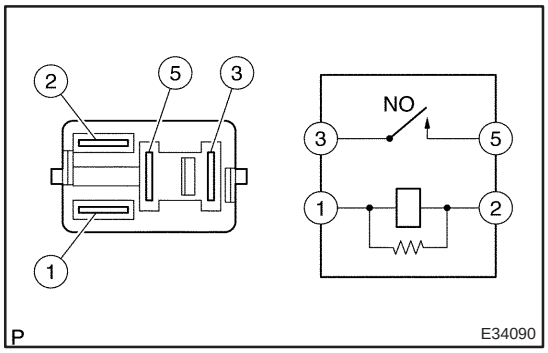

3. INSPECT COOLING FAN RELAY NO.3

(a) Continuity inspection.

(1) Using an ohmmeter, check for continuity between each terminal.

Specified condition:

Terminal No.	Specified condition
1 – 2	Continuity
3 – 5	No continuity
	Continuity (Apply battery voltage terminals 1 and 2)

ENGINE COOLANT (1AZ–FE)

160MV–01

REPLACEMENT

1. DRAIN ENGINE COOLANT

CAUTION:

To avoid the danger of being burned, do not remove the radiator cap while the engine and radiator are still hot, as fluid and steam can be blown out under pressure.

(a) Remove the radiator cap.

(b) Loosen the radiator plug and drain the coolant.

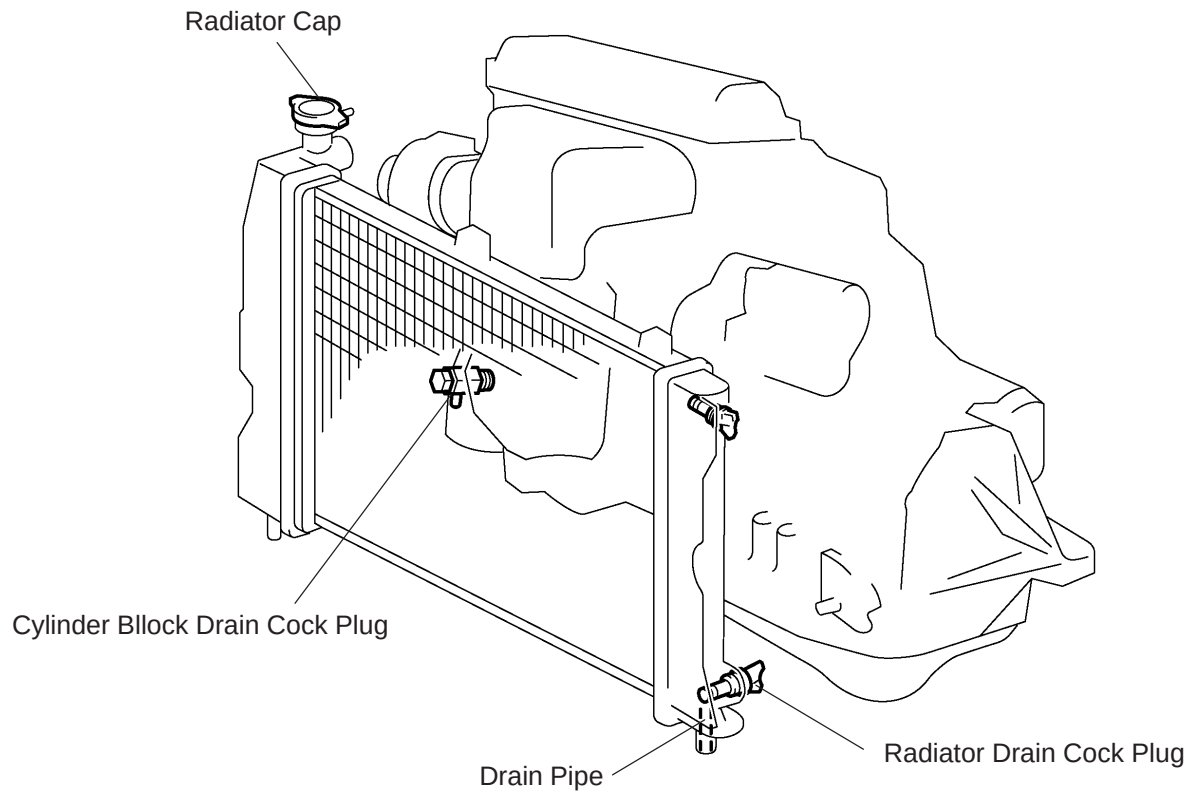

2. ADD ENGINE COOLANT

(a) Tighten the radiator drain plug, and pour coolant into radiator until it overflows.
Capacity:

Transmission type	Steering	Coolant Capacity [liters (US gts, lmp. gts)]
M/T	LHD	6.0 (6.3, 5.3)
M/T	RHD	6.1 (6.4, 5.4)
A/T	LHD	6.3 (6.7, 5.5)
A/T	RHD	6.4 (6.8, 5.6)

NOTICE:

- **Do not use an alcohol type coolant or plain water alone.**
- **The coolant should be mixed with plain water (preferably demineralized water or distilled water).**

HINT:

- Use of improper coolants may damage engine cooling system.
- Use ”Toyota Long Life Coolant” or equivalent and mix it with plain water according to the manufacturer’s directions.
- Using of coolant with includes more than 50 % (freezing protection down to –35°C (–31°F)) or 60 % (freezing protection down to –50°C (–58°F)) of ethylene–glycol is recommended but not more than 70 %.
- Press the radiator inlet and outlet hose several times with hard.
- If the coolant level gets lower, pour coolant.

(b) Reinstall the radiator cap.

(c) Pour engine coolant into the reservoir tank until it reaches full line.

(d) Warm up the engine until the thermostat valve begins to open.

HINT:

Press the radiator inlet and outlet hose several times with hard during the warming up.

(e) Stop the engine and wait until the coolant temp. Gets cold. Then remove the radiator cap to check the coolant level.

HINT:

- If the level gets lower, perform the procedures above again.
- If the level does not gets lower, adjust the reservoir tank coolant level.

3. CHECK FOR ENGINE COOLANT LEAKS **(See page 16–13)**

WATER PUMP ASSY (1AZ–FE)

160MW–01

REPLACEMENT

1. **DRAIN COOLANT (See page 16–19)**
2. **REMOVE RADIATOR SUPPORT OPENING COVER**
3. **REMOVE ENGINE ROOM COVER SIDE**
4. **REMOVE ENGINE UNDER COVER RH**
5. **REMOVE FAN AND GENERATOR V BELT (See page 14–105)**
   SST 09249–63010
6. **REMOVE GENERATOR ASSY (See page 19–20)**

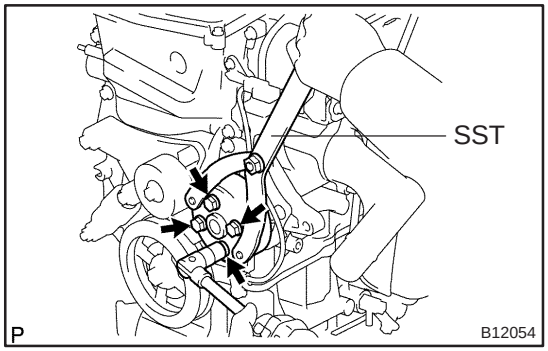

7. REMOVE WATER PUMP PULLEY

(a) Using SST, remove 4 bolts and pump pulley.
SST 09960–10010 (09962–01000, 09963–00700)

(b) Disconnect the crankshaft position sensor wire clamp from the water pump.

(c) Disconnect the crankshaft position sensor wire from the clamp on the water pump.

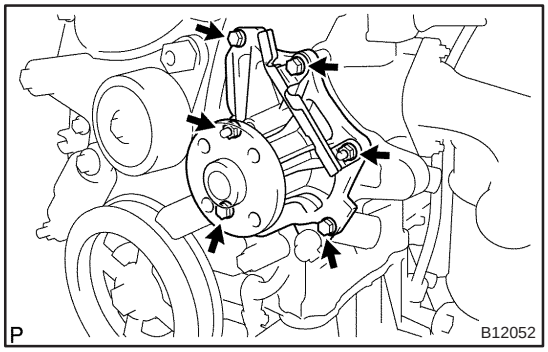

8. REMOVE WATER PUMP ASSY

(a) Remove 4 bolts, 2 nuts, wire clamp and water pump.

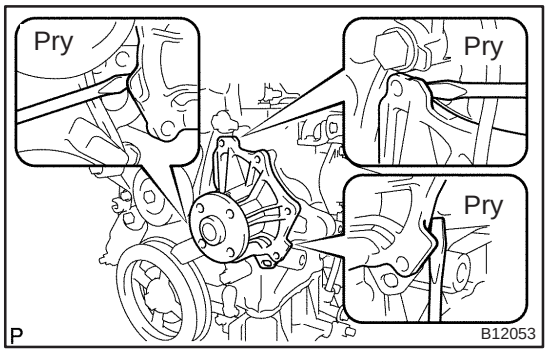

(b) Using a screwdriver, pry between the water pump and cylinder block, and remove the water pump.

NOTICE:

Be careful not to damage the contact surface of the water pump and cylinder block.

9. INSTALL WATER PUMP ASSY

(a) Remove any old packing (FIPG) material from the contact surface.

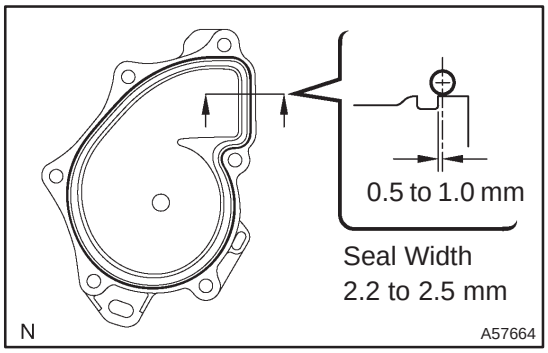

(b) Apply seal packing to the water pump as shown in the illustration.

Seal packing: Part No. 08826 – 00100 or equivalent

- Install a nozzle that has been cut to a 2.2 to 2.5 mm (0.09 to 0.10 in.) opening.
- Parts must be assembled within 5 minutes of application. Otherwise the material must be removed and reapplied.
- Immediately remove nozzle from the tube and reinstall cap.

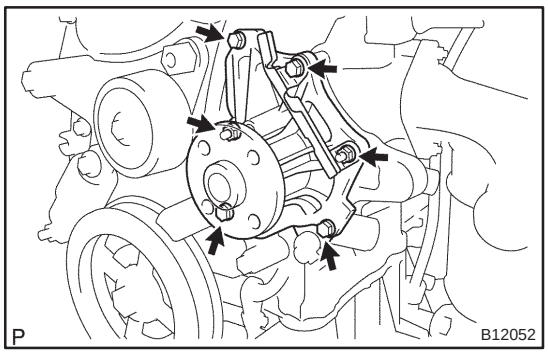

(c) Install the water pump and wire clamp with 4 bolts and 2 nuts.

Torque: 9.0 N·m (90 kgf·cm, 80 in.·lbf)

(d) Install the crankshaft position sensor wire harness clamp to the water pump.

(e) Install the crankshaft position sensor wire to the wire clamp on the water pump.

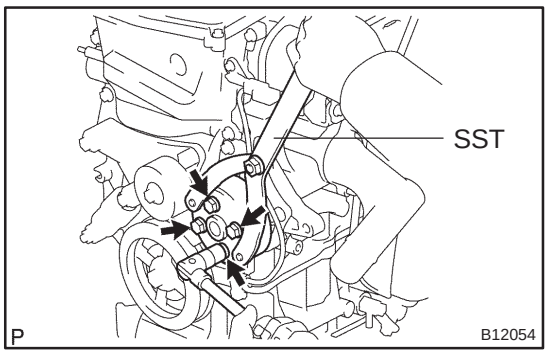

10. INSTALL WATER PUMP PULLEY

(a) Using SST, install the pump pulley with 4 bolts.

SST 09960–10010 (09962–01000, 09963–00700)

Torque: 26 N·m (265 kgf·cm, 19 ft·lbf)

11. INSTALL GENERATOR ASSY (See page 19–20)

12. INSTALL FAN AND GENERATOR V BELT (See page 14–105)

SST 09249–63010

13. ADD COOLANT (See page 16–19)

14. INSPECT CHECK FOR ENGINE COOLANT LEAKS (See page 16–17)

THERMOSTAT (1AZ–FE)

160MT–01

REPLACEMENT

1. **DRAIN COOLANT(See page 16–19)**
2. **REMOVE RADIATOR SUPPORT OPENING COVER**
3. **REMOVE ENGINE ROOM COVER SIDE**
4. **REMOVE ENGINE UNDER COVER RH**
5. **REMOVE FAN AND GENERATOR V BELT (See page 14–105)**
   SST 09249–63010
6. **REMOVE GENERATOR ASSY (See page 19–20)**

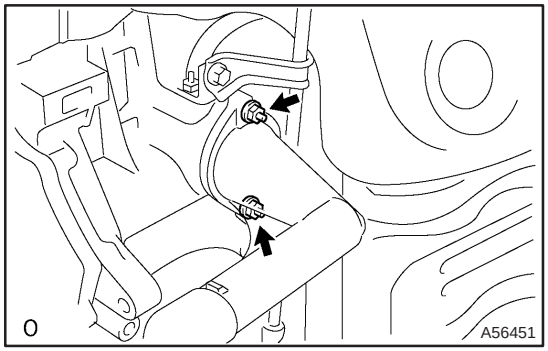

7. **REMOVE WATER INLET**
(a) Remove 2 nuts, and disconnect the water inlet from the cylinder block.

8. **REMOVE THERMOSTAT**

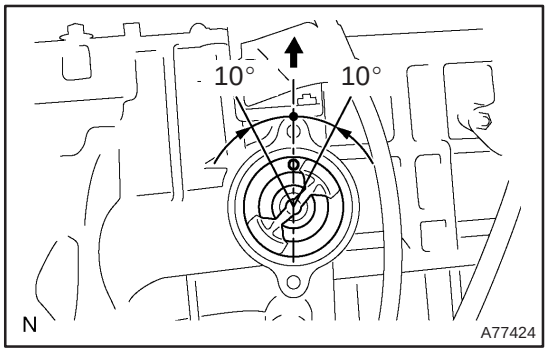

9. **INSTALL THERMOSTAT**
(a) Install a new gasket to the thermostat.
(b) Install the thermostat with the jiggle valve upward.
HINT:
The jiggle valve may be set within 10° on either side of the prescribed position.

10. **INSTALL WATER INLET**
(a) Install the water inlet with 2 nuts.
Torque: 9.0 N·m (92 kgf·cm, 7 in.·lbf)
11. **INSTALL GENERATOR ASSY (See page 19–20)**
12. **INSTALL FAN AND GENERATOR V BELT (See page 14–105)**
SST 09249–63010
13. **ADD COOLANT (See page 16–19)**
14. **INSPECT CHECK FOR ENGINE COOLANT LEAKS (See page 16–13)**

RADIATOR ASSY (1AZ–FE)

160MX–01

REPLACEMENT

1. DRAIN COOLANT (See page 16–19)
2. REMOVE RADIATOR SUPPORT OPENING COVER
3. REMOVE ENGINE ROOM COVER SIDE
4. REMOVE ENGINE UNDER COVER RH
5. DISCONNECT RADIATOR HOSE INLET
6. DISCONNECT RADIATOR HOSE OUTLET
7. REMOVE RADIATOR SUPPORT UPPER
(a) Disconnect the fan w/ motor wire harness, connector and the horn connector.
(b) Remove 4 bolts, the nut and the radiator support.
8. REMOVE RADIATOR ASSY
(a) Remove 2 upper support, and radiator assembly
9. REMOVE RADIATOR SUPPORT LOWER
10. REMOVE FAN ASSY W/MOTOR
(a) Remove 6 bolts and fan w/motor.
11. INSTALL FAN ASSY W/MOTOR
12. INSTALL RADIATOR SUPPORT LOWER
13. INSTALL RADIATOR ASSY
14. INSTALL RADIATOR SUPPORT UPPER
(a) Install radiator support with 2 bolts.
Torque: 19 N·m (194 kgf·cm, 14 ft·lbf)
15. ADD COOLANT (See page 16–19)
16. INSPECT CHECK FOR ENGINE COOLANT LEAKS (See page 16–13)

COOLING SYSTEM (1AZ–FSE)

160MY–01

ON–VEHICLE INSPECTION

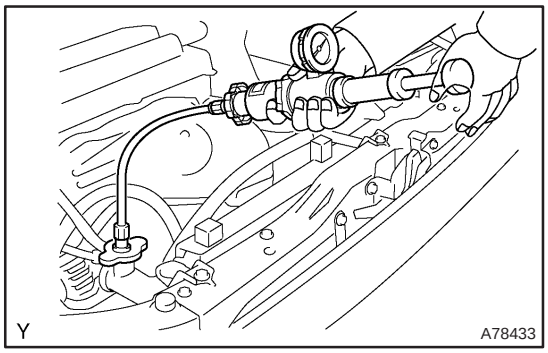

1. INSPECT COOLING SYSTEM FOR LEAKS

CAUTION:

To avoid the danger of being burned, do not remove the radiator cap while the engine and radiator are still hot. Thermal expansion will cause hot engine coolant and steam to blow out from the radiator.

(a) Remove the radiator support opening cover.
(b) Remove the engine room cover side.
(c) Fill the radiator with coolant and attach a radiator cap tester.
(d) Warm up the engine.
(e) Pump it to 118 kPa (1.2 kgf/cm^2, 17.1 psi), and check that the pressure does not drop.

If the pressure drops, check the hoses, radiator and water pump for leaks. If there are no signs or traces of external coolant leaks, check the heater core, cylinder block and head.

(f) Reinstall the engine room cover side.
(g) Reinstall the radiator support opening cover.

2. CHECK ENGINE COOLANT LEVEL AT RESERVOIR

(a) The engine coolant should be between the ”LOW” and ”FULL” lines, when the engine is cold.

If low, check for leaks and add ”Toyota Long Life Coolant” or equivalent up to the ”FULL” line.

3. CHECK ENGINE COOLANT QUALITY

(a) Remove the radiator cap.

CAUTION:

To avoid the danger of being burned, do not remove the radiator cap while the engine and radiator are still hot. Thermal expansion will cause hot engine coolant and steam to blow out from the radiator.

(b) Check if there is any excessive deposits of rust or scale around the radiator cap and radiator filler hole; the coolant should be free from oil.

If excessively dirty, replace the coolant.

(c) Reinstall the radiator cap.

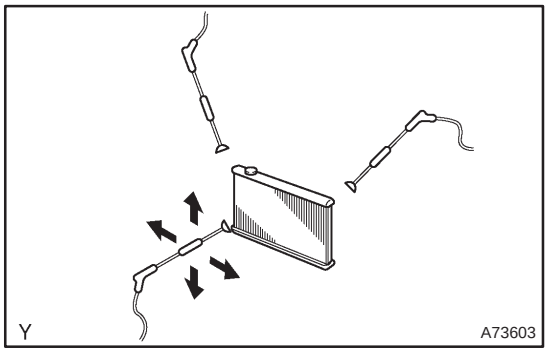

4. INSPECT FINS BLOCKAGE

(a) If fins are clogged, wash them with water or a steam cleaner and dry with compressed air.

NOTICE:

- **If the distance between the steam cleaner and the core is too close, there is a possibility of damaging the fins, so keep the following injection distance.**

Injection Pressures kPa (kgf/cm^2, psi)	Injection Distance mm (in.)
2,942 to 4,903 (30 to 50, 427 to 711)	300 (11.811)
4,903 to 7,845 (50 to 80, 711 to 1,138)	500 (19.685)

- **If the fins are bent, straighten them with a screwdriver or pliers.**
- **Be careful not pour water directly onto electronic components.**

INSPECTION

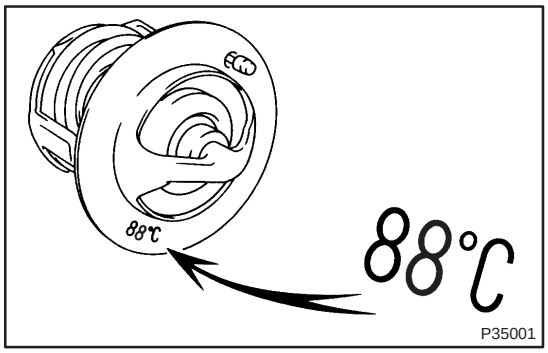

1. INSPECT THERMOSTAT

HINT:

The thermostat is numbered with the valve opening temperature.

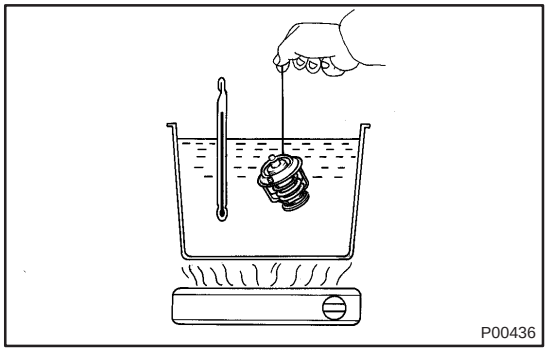

(a) Immerse the thermostat in water an gradually heat the water.

(b) Check the valve opening temperature of the thermostat.
Valve opening temperature:
86 to 90°C (187 to 198°F)

If the valve opening temperature is not as specified, replace the thermostat.

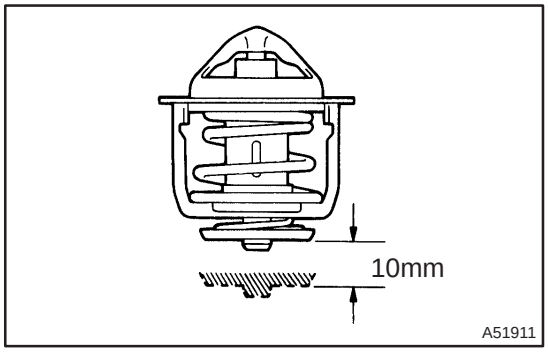

(c) Check the valve lift.
Valve lift: 10 mm (0.394 in.) or more at 100°C (212°F)

If the valve lift is not as specified, replace the thermostat.

(d) Check that the valve is fully closed when the thermostat is at low temperatures (below 83°C (181°F)).

If not closed, replace the thermostat.

2. INSPECT RADIATOR CAP SUB–ASSY

NOTICE:

- **If the radiator cap is contaminatied, rinse it with water.**
- **Before using a radiator cap tester, wet the relief valve and the pressure valve with engine coolant or water.**
- **When performing following steps (a) and (b), keep the tester at an angle of over 30° above horizontal.**

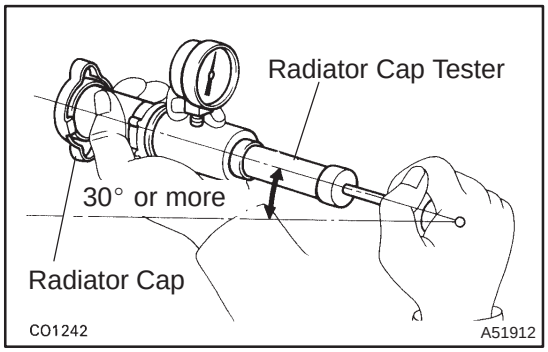

(a) Using a radiator cap tester, slowly pump the tester and check that air is coming from the vacuum valve.

Pump speed: 1 push / 3 seconds or more

NOTICE:

Push the pump at a constant speed.

If air is not coming from the vacuum valve, replace the radiator cap.

(b) Pump the tester and measure the relief valve opening pressure.

NOTICE:

The following pump speed is for the first pump only (in order to close the vacuum valve). After the first pump, the pump speed can be reduced.

Pump speed: 1 push within 1 second

Standard opening pressure:

74 to 103 kPa (0.75 to 1.05 kgf/cm^2, 10.7 to 14.9 psi)

Minimum opening pressure:

59 kPa (0.6 kgf/cm^2, 8.6 psi)

If the opening pressure is less than minimum, replace the radiator cap.

HINT:

Use the tester's maximum reading as the opening pressure.

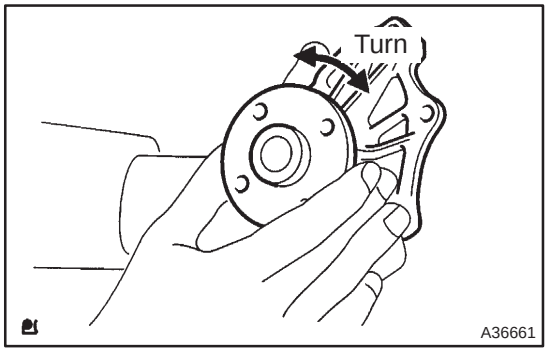

3. INSPECT WATER PUMP ASSY

(a) Visually check the drain hole for coolant leakage.

If leakage is found, replace the water pump.

(b) Turn the pulley, and check that the water pump bearing moves smoothly and does not make noise.

If necessary, replace the water pump.

COOLING FAN SYSTEM (1AZ–FSE)

1600R–12

ON–VEHICLE INSPECTION

HINT:

It is normal that the cooling fan sometime rotates when the ignition switch is turned from ACC to ON.

1. CHECK COOLING FAN OPERATION WITH LOW TEMPERATURE (Below 83°C (181°F))

(a) Turn the ignition switch ON.

(b) Check that the cooling fan stops.

If not, check the cooling fan relay and engine coolant temperature sensor, and check for disconnection of connectors or wire break between the cooling fan relay and engine coolant temperature sensor.

(c) Disconnect the engine coolant temperature sensor connector.

(d) Check that the cooling fan rotates.

If not, check the fuses, cooling fan relay, ECM and cooling fan, and check for a short circuit between the cooling fan relay and engine coolant temperature sensor.

(e) Reconnect the engine coolant temperature sensor connector.

2. CHECK COOLING FAN OPERATION WITH HIGH TEMPERATURE (Above 100°C (212°F))

(a) Start the engine, and raise coolant temperature to above 100°C (212°F).

HINT:

Coolant temperature is the detected value by the engine coolant temperature sensor on the water outlet.

(b) Check that the cooling fan rotates.

If not, replace the engine coolant temperature sensor.

3. INSPECT COOLING FAN

(a) Disconnect the cooling fan connector.

(b) Connect battery and ammeter to the cooling fan connector.

(c) Check that the cooling fan rotates smoothly, and check the reading on the ammeter.

Standard amperage:
5.2 to 8.2 A at 20°C (68°F) (M/T)
8.3 to 11.3 A at 20°C (68°F) (A/T)

(d) Reconnect the cooling fan connector.

4. INSPECT COOLING FAN No.2 (With Air Conditioner)

(a) Disconnect the cooling fan connector.

(b) Connect battery and ammeter to the cooling fan connector.

(c) Check that the cooling fan rotates smoothly, and check the reading on the ammeter.

Standard amperage:
5.2 to 8.2 A at 20°C (68°F) (M/T)
8.3 to 11.3 A at 20°C (68°F) (A/T)

(d) Reconnect the cooling fan connector.

INSPECTION

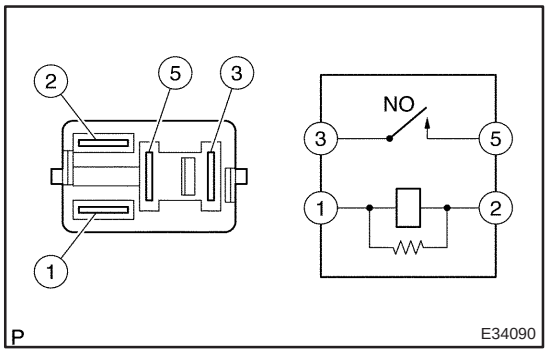

1. INSPECT COOLING FAN RELAY

(a) Continuity inspection.

(1) Using an ohmmeter, check for continuity between each terminal.

Specified condition:

Terminal No.	Specified condition
1 – 2	Continuity
3 – 5	No continuity
	Continuity (Apply battery boltage terminals 1 and 2)

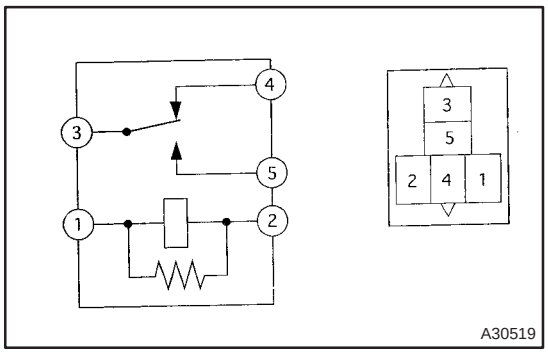

2. INSPECT COOLING FAN RELAY NO.2

(a) Continuity inspection.

(1) Using an ohmmeter, check for continuity between each terminal.

Specified condition:

Terminal No.	Specified condition
1 – 2 3 – 4	Continuity
3 – 5	No continuity
	Continuity (Apply battery boltage terminals 1 and 2)

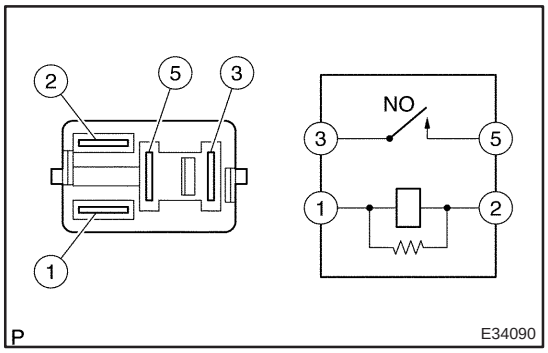

3. INSPECT COOLING FAN RELAY NO.3

(a) Continuity inspection.

(1) Using an ohmmeter, check for continuity between each terminal.

Specified condition:

Terminal No.	Specified condition
1 – 2	Continuity
3 – 5	No continuity
	Continuity (Apply battery boltage terminals 1 and 2)

ENGINE COOLANT (1AZ–FSE)

160MU–01

REPLACEMENT

1. DRAIN ENGINE COOLANT

CAUTION:

To avoid the danger of being burned, do not remove the radiator cap while the engine and radiator are still hot, as fluid and steam can be blown out under pressure.

(a) Remove the radiator cap.

(b) Loosen the radiator plug and drain the coolant.

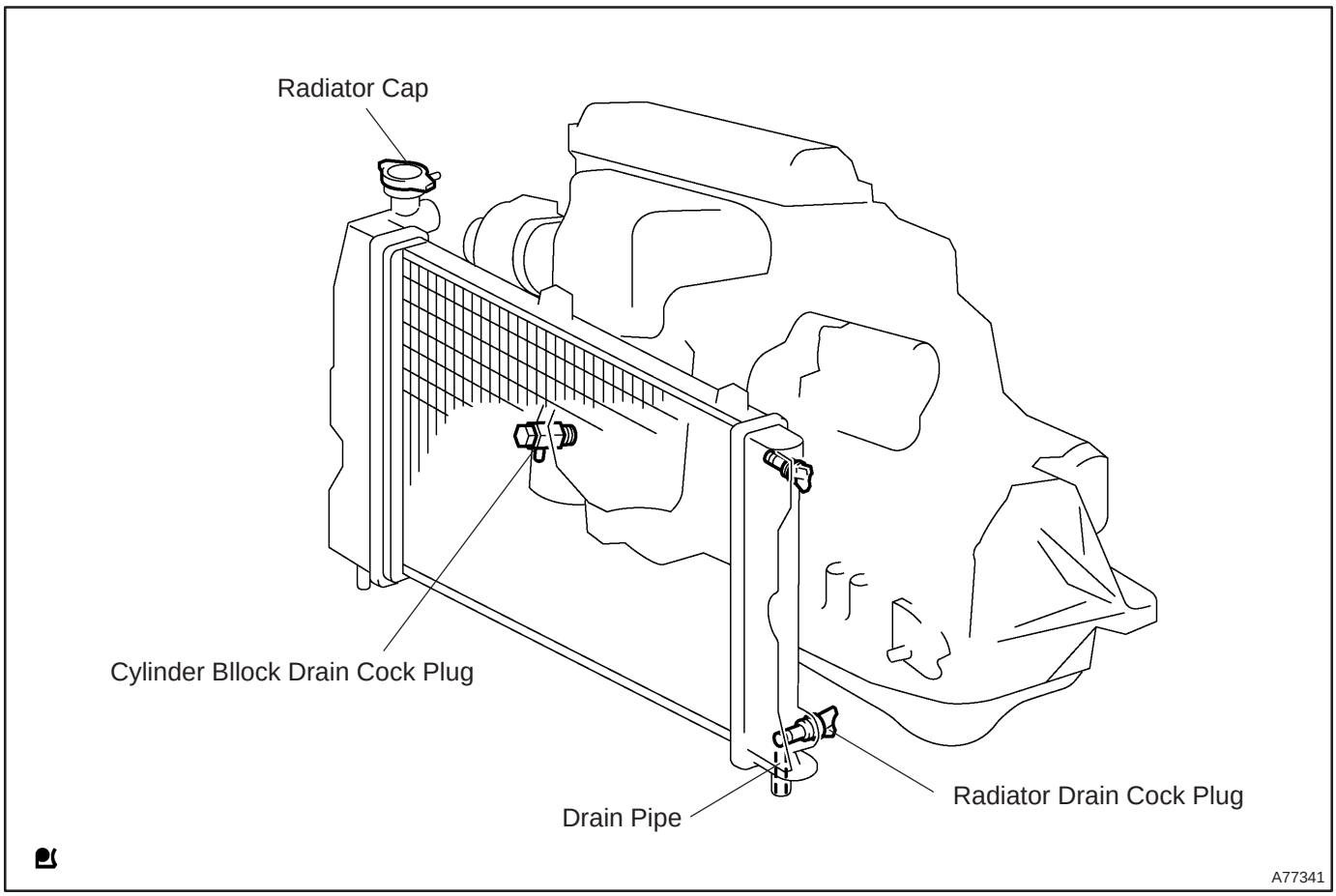

2. ADD ENGINE COOLANT

(a) Tighten the radiator drain plug, and pour coolant into radiator until it overflows.
Capacity:

Transmission type	Steering	Coolant Capacity [liters (US gts, lmp. gts)]
M/T	LHD	6.0 (6.3, 5.3)
M/T	RHD	6.1 (6.4, 5.4)
A/T	LHD	6.3 (6.7, 5.5)
A/T	RHD	6.4 (6.8, 5.6)

NOTICE:

- **Do not use an alcohol type coolant or plain water alone.**
- **The coolant should be mixed with plain water (preferably demineralized water or distilled water).**

HINT:

- Use of improper coolants may damage engine cooling system.
- Use ”Toyota Long Life Coolant” or equivalent and mix it with plain water according to the manufacturer’s directions.
- Using of coolant with includes more than 50 % (freezing protection down to –35°C (–31°F)) or 60 % (freezing protection down to –50°C (–58°F)) of ethylene–glycol is recommended but not more than 70 %.
- Press the radiator inlet and outlet hose several times with hard.
- If the coolant level gets lower, pour coolant.

(b) Reinstall the radiator cap.

(c) Pour engine coolant into the reservoir tank until it reaches full line.

(d) Warm up the engine until the thermostat valve begins to open.

HINT:

Press the radiator inlet and outlet hose several times with hard during the warming up.

(e) Stop the engine and wait until the coolant temp. Gets cold. Then remove the radiator cap to check the coolant level.

HINT:

- If the level gets lower, perform the procedures above again.
- If the level does not gets lower, adjust the reservoir tank coolant level.

3. CHECK FOR ENGINE COOLANT LEAKS (See page 16–25)

WATER PUMP ASSY (1AZ–FSE)

160MR–01

REPLACEMENT

1. **DRAIN COOLANT (See page 16–31)**
2. **REMOVE RADIATOR SUPPORT OPENING COVER**
3. **REMOVE ENGINE ROOM COVER SIDE**
4. **REMOVE ENGINE UNDER COVER RH**
5. **REMOVE FAN AND GENERATOR V BELT (See page 14–185)**
   SST 09249–63010
6. **REMOVE GENERATOR ASSY (See page 19–20)**

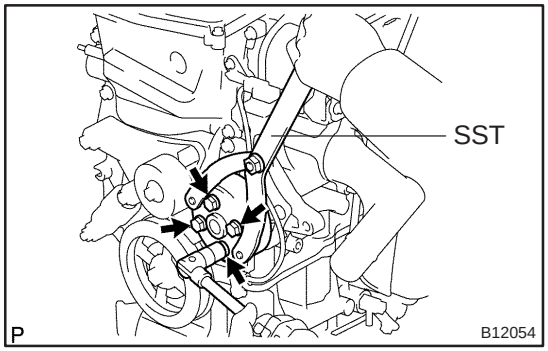

7. REMOVE WATER PUMP PULLEY

(a) Using SST, remove 4 bolts and pump pulley.
SST 09960–10010 (09962–01000, 09963–00700)

(b) Disconnect the crankshaft position sensor wire clamp from the water pump.

(c) Disconnect the crankshaft position sensor wire from the clamp on the water pump.

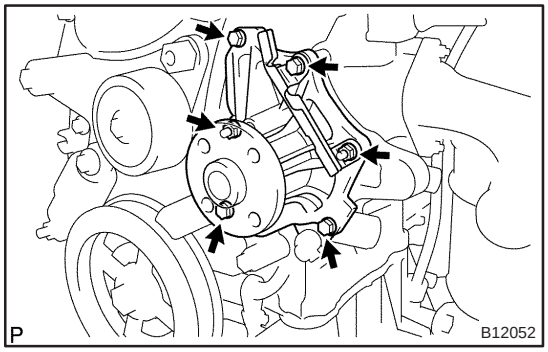

8. REMOVE WATER PUMP ASSY

(a) Remove 4 bolts, 2 nuts, wire clamp and water pump.

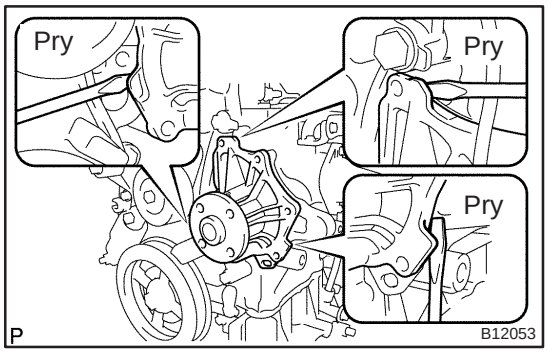

(b) Using a screwdriver, pry between the water pump and cylinder block, and remove the water pump.

NOTICE:

Be careful not to damage the contact surface of the water pump and cylinder block.

9. INSTALL WATER PUMP ASSY

(a) Remove any old packing (FIPG) material from the contact surface.

(b) Apply seal packing to the water pump as shown in the illustration.

Seal packing: Part No. 08826 – 00100 or equivalent

- Install a nozzle that has been cut to a 2.2 to 2.5 mm (0.09 to 0.10 in.) opening.
- Parts must be assembled within 5 minutes of application. Otherwise the material must be removed and reapplied.
- Immediately remove nozzle from the tube and reinstall cap.

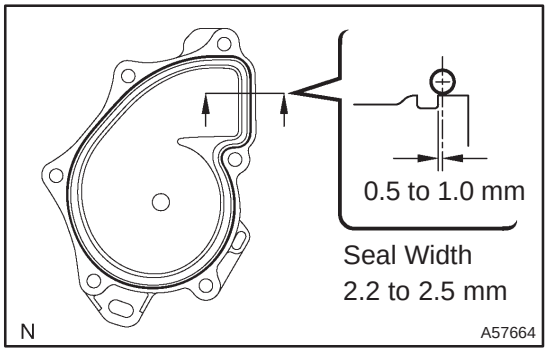

(c) Install the water pump and wire clamp with 4 bolts and 2 nuts.

Torque: 9.0 N·m (90 kgf·cm, 80 in.·lbf)

(d) Install the crankshaft position sensor wire harness clamp to the water pump.

(e) Install the crankshaft position sensor wire to the wire clamp on the water pump.

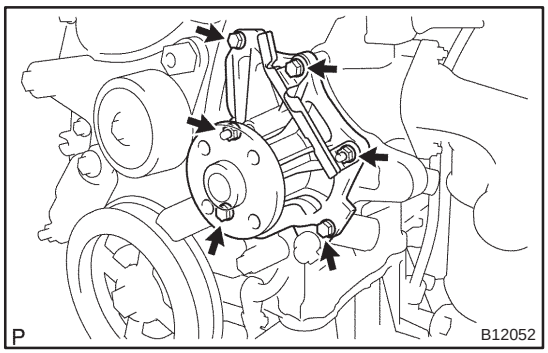

10. INSTALL WATER PUMP PULLEY

(a) Using SST, install the pump pulley with 4 bolts.

SST 09960–10010 (09962–01000, 09963–00700)

Torque: 26 N·m (265 kgf·cm, 19 ft·lbf)

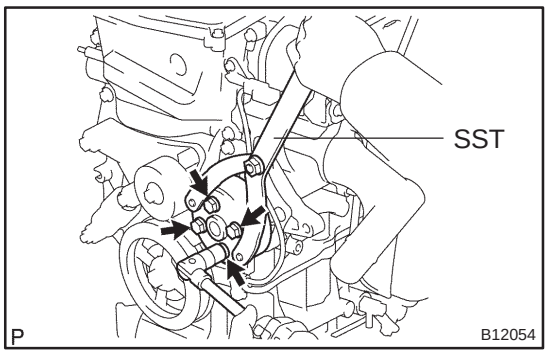

11. INSTALL GENERATOR ASSY (See page 19–20)

12. INSTALL FAN AND GENERATOR V BELT (See page 14–185)

SST 09249–63010

13. ADD COOLANT (See page 16–31)

14. INSPECT CHECK FOR ENGINE COOLANT LEAKS (See page 16–25)

THERMOSTAT (1AZ–FSE)

160MQ–01

REPLACEMENT

1. **DRAIN COOLANT (See page 16–31)**
2. **REMOVE RADIATOR SUPPORT OPENING COVER**
3. **REMOVE ENGINE ROOM COVER SIDE**
4. **REMOVE ENGINE UNDER COVER RH**
5. **REMOVE FAN AND GENERATOR V BELT (See page 14–185)**
   SST 09249–63010
6. **REMOVE GENERATOR ASSY (See page 19–20)**

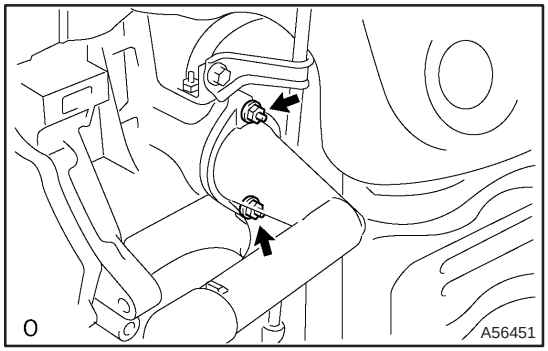

7. **REMOVE WATER INLET**
(a) Remove 2 nuts, and disconnect the water inlet from the cylinder block.

8. **REMOVE THERMOSTAT**

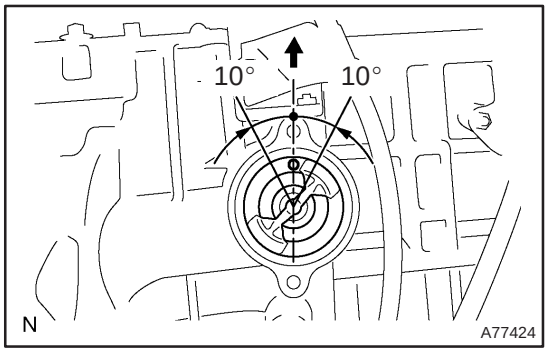

9. **INSTALL THERMOSTAT**
(a) Install a new gasket to the thermostat.
(b) Install the thermostat with the jiggle valve upward.
HINT:
The jiggle valve may be set within 10° on either side of the prescribed position.

10. **INSTALL WATER INLET**
(a) Install the water inlet with 2 nuts.
Torque: 9.0 N·m (92 kgf·cm, 7 in.·lbf)
11. **INSTALL GENERATOR ASSY (See page 19–20)**
12. **INSTALL FAN AND GENERATOR V BELT (See page 14–185)**
SST 09249–63010
13. **ADD COOLANT (See page 16–31)**
14. **INSPECT CHECK FOR ENGINE COOLANT LEAKS (See page 16–25)**

RADIATOR ASSY (1AZ–FSE)

160MS–01

REPLACEMENT

1. DRAIN COOLANT (See page 16–31)
2. REMOVE RADIATOR SUPPORT OPENING COVER
3. REMOVE ENGINE ROOM COVER SIDE
4. REMOVE ENGINE UNDER COVER RH
5. DISCONNECT RADIATOR HOSE INLET
6. DISCONNECT RADIATOR HOSE OUTLET
7. REMOVE RADIATOR SUPPORT UPPER
(a) Disconnect the fan w/ motor wire harness, connector and the horn connector.
(b) Remove 4 bolts, the nut and the radiator support.
8. REMOVE RADIATOR ASSY
(a) Remove 2 upper support, and radiator assembly
9. REMOVE RADIATOR SUPPORT LOWER
10. REMOVE FAN ASSY W/MOTOR
(a) Remove 6 bolts and fan w/motor.
11. INSTALL FAN ASSY W/MOTOR
12. INSTALL RADIATOR SUPPORT LOWER
13. INSTALL RADIATOR ASSY
14. INSTALL RADIATOR SUPPORT UPPER
(a) Install radiator support with 2 bolts.
Torque: 19 N·m (194 kgf·cm, 14 ft·lbf)
15. ADD COOLANT (See page 16–31)
16. INSPECT CHECK FOR ENGINE COOLANT LEAKS (See page 16–25)

COOLING SYSTEM (1CD–FTV)

ON–VEHICLE INSPECTION

160N6–01

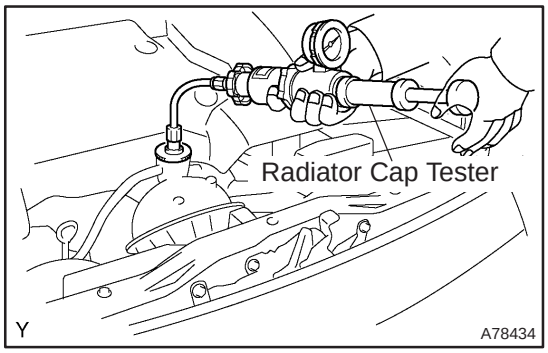

1. INSPECT COOLING SYSTEM FOR LEAKS

CAUTION:

To avoid the danger of being burned, do not remove the radiator cap while the engine and radiator are still hot. Thermal expansion will cause hot engine coolant and steam to blow out from the radiator.

(a) Remove the radiator support opening cover.
(b) Remove the engine room cover side.
(c) Fill the radiator with coolant and attach a radiator cap tester.
(d) Warm up the engine.
(e) Pump it to 137 kPa (1.4 kgf/cm^2, 19.9 psi), and check that the pressure does not drop.

If the pressure drops, check the hoses, radiator and water pump for leaks. If there are no signs or traces of external coolant leaks, check the heater core, cylinder block and head.

(f) Reinstall the engine room cover side.
(g) Reinstall the radiator support opening cover.

2. CHECK ENGINE COOLANT LEVEL AT RESERVOIR

(a) The engine coolant should be between the ”LOW” and ”FULL” lines, when the engine is cold.

If low, check for leaks and add ”Toyota Long Life Coolant” or equivalent up to the ”FULL” line.

3. CHECK ENGINE COOLANT QUALITY

(a) Remove the radiator cap.

CAUTION:

To avoid the danger of being burned, do not remove the radiator cap while the engine and radiator are still hot. Thermal expansion will cause hot engine coolant and steam to blow out from the radiator.

(b) Check if there is any excessive deposits of rust or scale around the radiator cap and radiator filler hole; the coolant should be free from oil.

If excessively dirty, replace the coolant.

(c) Reinstall the radiator cap.

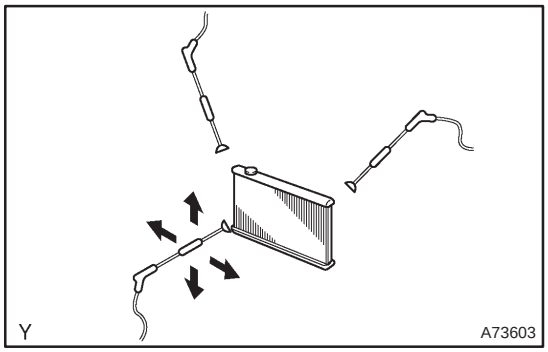

4. INSPECT FINS BLOCKAGE

(a) If fins are clogged, wash them with water or a steam cleaner and dry with compressed air.

NOTICE:

- **If the distance between the steam cleaner and the core is too close, there is a possibility of damaging the fins, so keep the following injection distance.**

Injection Pressures kPa (kgf/cm^2, psi)	Injection Distance mm (in.)
2,942 to 4,903 (30 to 50, 427 to 711)	300 (11.811)
4,903 to 7,845 (50 to 80, 711 to 1,138)	500 (19.685)

- **If the fins are bent, straighten them with a screwdriver or pliers.**
- **Be careful not pour water directly onto electronic components.**

INSPECTION

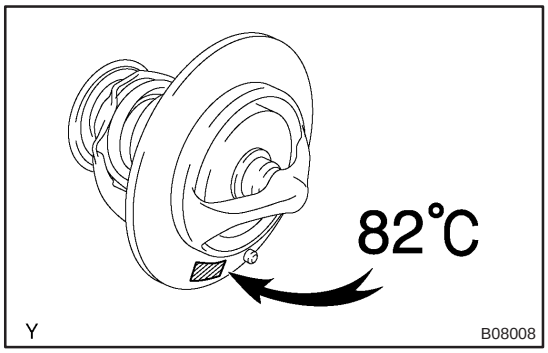

1. INSPECT THERMOSTAT

HINT:

The thermostat is numbered with the valve opening temperature.

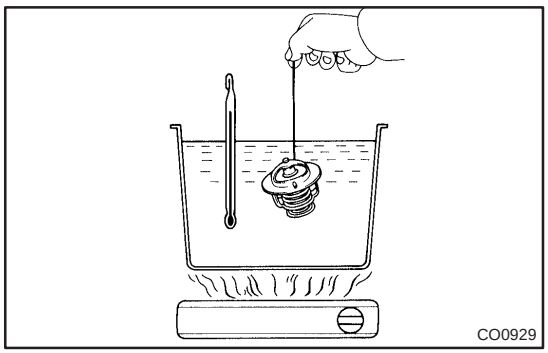

(a) Immerse the thermostat in water and gradually heat the water.

(b) Check the valve opening temperature of the thermostat.
Valve opening temperature:
80 to 84°C (176 to 183°F)

If the valve opening temperature is not as specified, replace the thermostat.

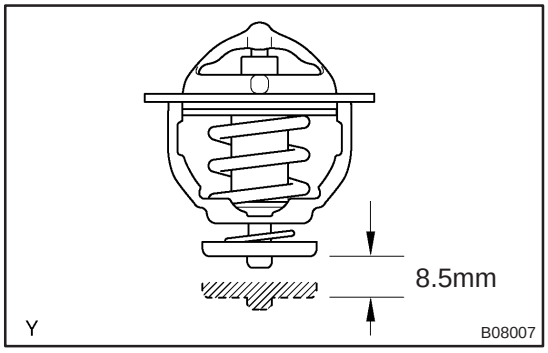

(c) Check the valve lift.
Valve lift: 8.5 mm (0.33 in.) or more at 95°C (203°F)

If the valve lift is not as specified, replace the thermostat.

(d) Check that the valve is fully closed when the thermostat is at low temperatures (below 77°C (171°F)).

If not closed, replace the thermostat.

2. INSPECT RESERVE TANK CAP SUB–ASSY

NOTICE:

- **If the radiator cap is contaminatied, rinse it with water.**
- **Before using a radiator cap tester, wet the relief valve and the pressure valve with engine coolant or water.**
- **When performing following steps (a) and (b), keep the tester at an angle of over 30° above horizontal.**

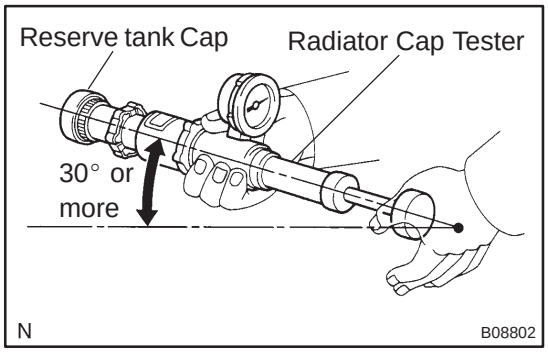

(a) Using a radiator cap tester, slowly pump the tester and check that air is coming from the vacuum valve.

Pump speed: 1 push / 3 seconds or more

NOTICE:

Push the pump at a constant speed.

If air is not coming from the vacuum valve, replace the reserve tank cap.

(b) Pump the tester and measure the relief valve opening pressure.

NOTICE:

The following pump speed is for the first pump only (in order to close the vacuum valve). After the first pump, the pump speed can be reduced.

Pump speed: 1 push within 1 second

Standard opening pressure:

93 to 122 kPa (0.95 to 1.25 kgf/cm^2, 13.4 to 17.6 psi)

Minimum opening pressure:

78 kPa (0.8 kgf/cm^2, 11.4 psi)

If the opening pressure is less than minimum, replace the reserve tank cap.

HINT:

Use the tester's maximum reading as the opening pressure.

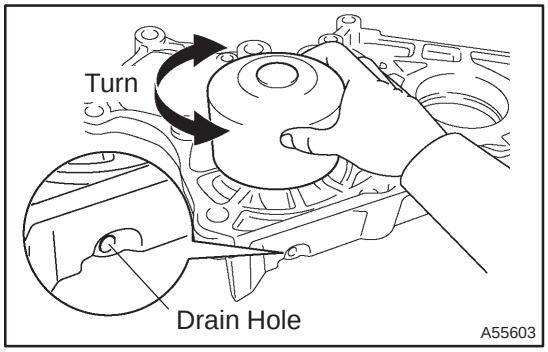

3. INSPECT WATER PUMP ASSY

(a) Visually check the drain hole for coolant leakage.

If leakage is found, replace the water pump.

(b) Turn the pulley, and check that the water pump bearing moves smoothly and does not make noise.

If necessary, replace the water pump.

COOLING FAN SYSTEM (1CD–FTV)

1606N–03

ON–VEHICLE INSPECTION

1. CHECK COOLING FAN OPERATION WITH LOW TEMPERATURE (Below 83°C (181°F))

(a) Turn the ignition switch ON.
(b) Check that the cooling fan stops.
(c) Disconnect the temperature detect switch connector.
(d) Connect the terminals on the temperature detect switch connector.
(e) Check that the cooling fan rotates.

If not, check the fuses, cooling fan relay and cooling fan, and check for a open circuit between the cooling fan relay and temperature detect switch.

(f) Reconnect the temperature detect switch connector.

2. CHECK COOLING FAN OPERATION WITH HIGH TEMPERATURE (Above 93°C (199°F))

(a) Start the engine, and raise coolant temperature to above 93°C (199°F)

HINT:

Coolant temperature is the detected value by the temperature detect switch on the radiator lower tank.

(b) Check that the cooling fan rotates.

If not, replace the temperature detect switch.

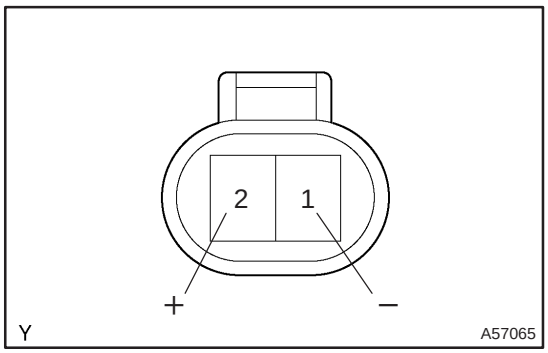

3. INSPECT COOLING FANS

(a) Disconnect the cooling fan connector.
(b) Connect battery and ammeter to the cooling fan connector.
(c) Check that the cooling fan rotates smoothly, and check the reading on the ammeter.
Standard amperage:
Approx. 13.2 A at 20°C (68°F)
(d) Reconnect the cooling fan connector.

160N8–01

INSPECTION

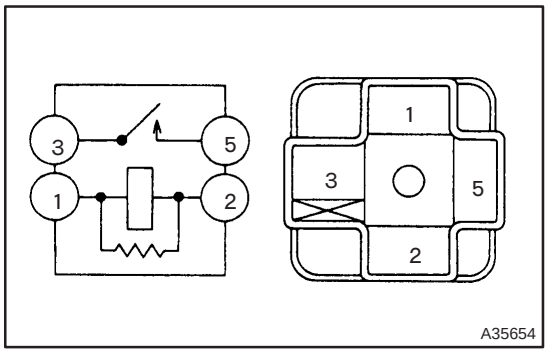

1. INSPECT COOLING FAN RELAY

(a) Continuity inspection.

(1) Using an ohmmeter, check for continuity between each terminal.

Specified condition:

Terminal No.	Specified condition
1 – 2	Continuity
3 – 5	No continuity
	Continuity (Apply battery voltage terminals 1 and 2)

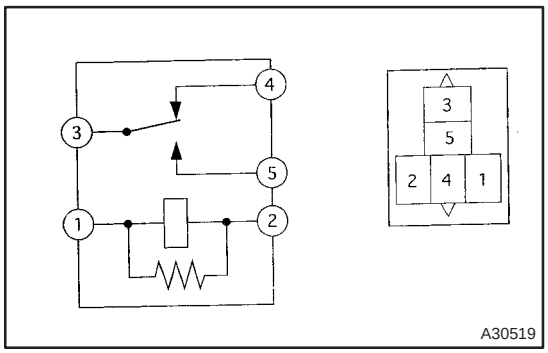

2. INSPECT COOLING FAN RELAY NO.2

(a) Continuity inspection.

(1) Using an ohmmeter, check for continuity between each terminal.

Specified condition:

Terminal No.	Specified condition
1 – 2 3 – 4	Continuity
3 – 5	No continuity
	Continuity (Apply battery boltage terminals 1 and 2)

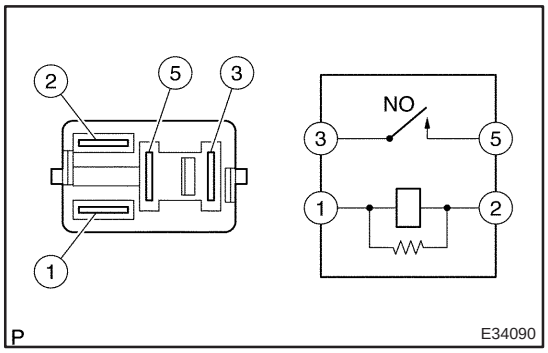

3. INSPECT COOLING FAN RELAY NO.3

(a) Continuity inspection.

(1) Using an ohmmeter, check for continuity between each terminal.

Specified condition:

Terminal No.	Specified condition
1 – 2	Continuity
3 – 5	No continuity
	Continuity (Apply battery voltage terminals 1 and 2)

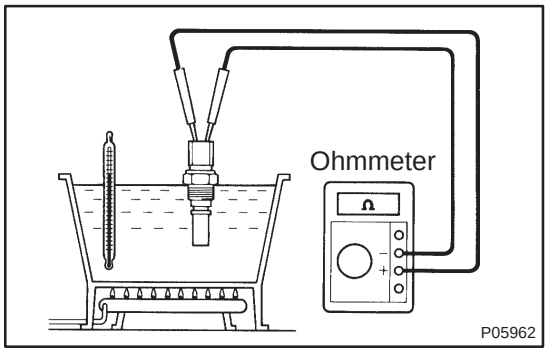

4. INSPECT TEMPERATURE DETECT SWITCH NO.2

(a) Using an ohmmeter, check that there is continuity between the terminals when the coolant temperature is above 93°C (199°F).

Specified condition: Continuity

(b) Using an ohmmeter, check that there is no continuity between the terminals when the coolant temperature is below 83°C (181°F).

Specified condition: No continuity

ENGINE COOLANT (1CD–FTV)

160MD–01

REPLACEMENT

1. DRAIN ENGINE COOLANT

(a) Remove the radiator cap.

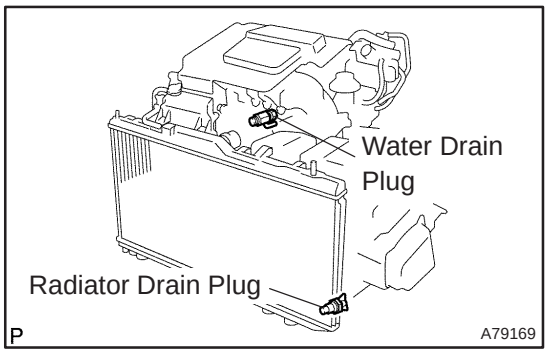

(b) Loosen the radiator and engine drain plugs, drain the coolant.

(c) Close the drain plugs.

Torque: 13 N·m (133 kgf·cm, 10 ft·lbf) for engine

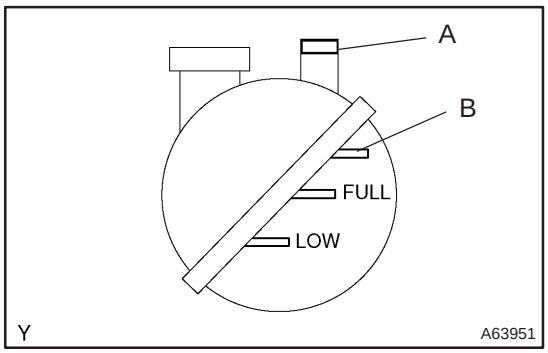

2. ADD ENGINE COOLANT

(a) Loosen air bleed valve A.

(b) Fill the cooling system with coolant up to line B.

Capacity:
With heater: 7.6 liters (8.0 US qts, 6.7 lmp. qts)
Without heater: 7.4 liters (7.8 US qts, 6.5 lmp. qts)

HINT:

- Use of improper coolants may damage engine cooling system.
- Use ”Toyota Long Life Coolant” or equivalent and mix it with plain water according to the manufacturer’s instruction.
- Using of coolant which includes more than 50 % (freezing protection down to –35°C (–31°F)) or 60 % (freezing protection down to –50°C (–58°F)) of ethylene–glycol is recommended but not more than 70 %.

(c) Tighten the air bleed valve securely.

(d) Install the radiator cap securely.

(e) Warm up the engine.

HINT:

Warm up the engine with the speed of 2,000 rpm or more and keep the warm–up until the thermostat has open and the radiator reservoir has become hot.

(f) Run the engine intermittently for 5 seconds at 3,000 rpm and for 45 seconds at idle.

(g) Do the above operation for 7 minutes or more.

(h) After the engine has become cold, check that the coolant level is between LOW and FULL lines.

3. CHECK FOR ENGINE COOLANT LEAKS

(a) Fill the radiator with coolant and attach a radiator cap tester.

(b) Pump it to 137 kPa (1.4 kgf/cm^{2,} 19.9 psi), and check that the pressure does not drop.

WATER PUMP ASSY (1CD–FTV)

160ME–01

REPLACEMENT

1. **REMOVE RADIATOR SUPPORT OPENING COVER**
2. **REMOVE ENGINE ROOM COVER SIDE**
3. **DRAIN ENGINE COOLANT (See page 16–44)**
4. **REMOVE FRONT WHEEL RH**
5. **REMOVE ENGINE UNDER COVER SUB–ASSY NO.1**
6. **REMOVE ENGINE UNDER COVER RH**
7. **REMOVE ENGINE COVER NO.1**

(a) Remove the 5 nuts and the engine cover.

8. **REMOVE INJECTOR DRIVER (See page 14–286)**
9. **REMOVE V (COOLER COMPRESSOR TO CRANKSHAFT PULLEY) BELT NO.1 (See page 14–269)**
10. **REMOVE GENERATOR V BELT (See page 14–269)**
11. **SEPARATE POWER STEERING IDLE PULLEY BRACKET (See page 14–286)**
12. **SEPARATE ENGINE MOUNTING INSULATOR SUB–ASSY RH (See page 14–307)**
13. **REMOVE CRANKSHAFT PULLEY (See page 14–307)**

SST 09213–54015 (90105–08076), 09330–00021, 09950–50013 (09951–05010, 09952–05010, 09953–05020, 09954–05031)

14. **REMOVE IDLER PULLEY SUB–ASSY**

(a) Remove the bolt, the washer and the pulley.

15. **REMOVE TIMING BELT NO.2 COVER (See page 14–307)**
16. **REMOVE TIMING BELT NO.1 COVER (See page 14–307)**
17. **REMOVE TIMING BELT GUIDE**
18. **REMOVE TRANSVERSE ENGINE ENGINE MOUNTING BRACKET (See page 14–307)**
19. **SET NO. 1 CYLINDER TO TDC/COMPRESSION (See page 14–307)**
20. **REMOVE TIMING CHAIN COVER PLATE (See page 14–307)**
21. **REMOVE TIMING BELT (See page 14–307)**

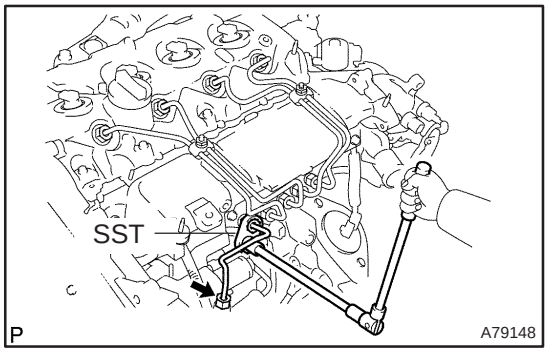

22. **REMOVE FUEL INLET PIPE SUB–ASSY (See page 11–69)**

NOTICE:

After removing the fuel inlet pipe, cover the common rail and injection pump with vinyl tape to prevent dust from being introduced.

(a) Remove the wire bracket and slide the engine wire.

(b) Using SST, remove the fuel inlet pipe from the common rail.

SST 09023–12700

(c) Using SST, remove the fuel inlet pipe from the injection pump.

SST 09023–12700

23. **REMOVE INTAKE MANIFOLD INSULATOR NO.1 (See page 11–69)**
24. **REMOVE OIL LEVEL GAGE SUB–ASSY**
25. **REMOVE OIL LEVEL GAGE GUIDE (See page 17–22)**
26. **REMOVE WATER INLET (See page 16–50)**
27. **DISCONNECT INJECTION PUMP TO FUEL PIPE FUEL HOSE (See page 11–69)**
28. **DISCONNECT INJECTION PUMP TO FUEL FILTER FUEL HOSE OR PIPE (See page 11–69)**

29. REMOVE INJECTION PUMP DRIVE PULLEY (See page 11–69)
SST 09960–10010 (09962–01000, 09963–01000), 09950–50013 (09951–05010, 09952–05010, 09953–05020, 09954–05021)

30. REMOVE INJECTION OR SUPPLY PUMP ASSY (See page 11–69)

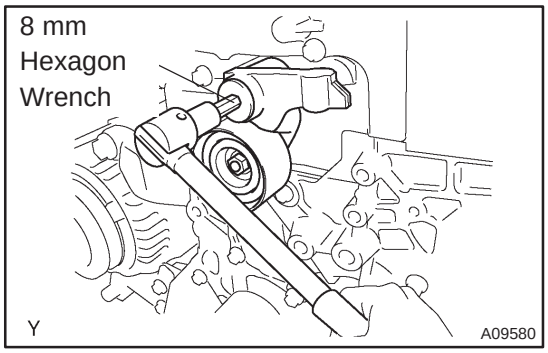

31. REMOVE TIMING BELT IDLER SUB–ASSY NO.1
(a) Using an 8 mm hexagon wrench, remove the idler pulley shaft, the idler pulley and the plate washer.

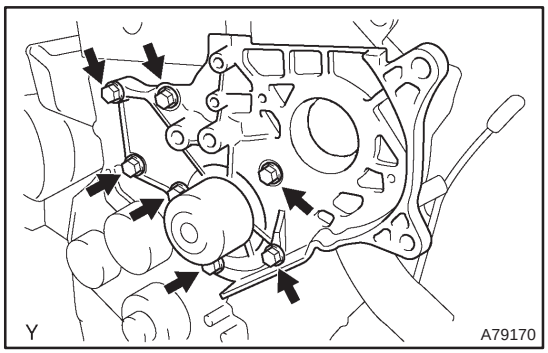

32. REMOVE WATER PUMP ASSY
(a) Remove the 7 bolts, then remove the water pump and the gasket.

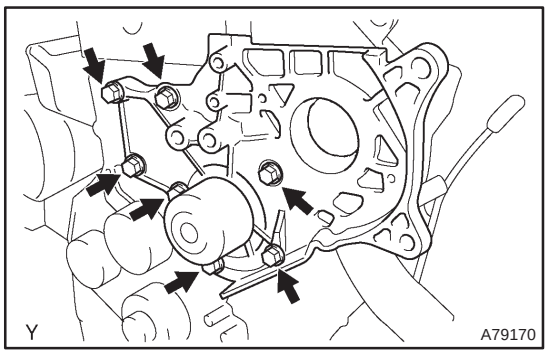

33. INSTALL WATER PUMP ASSY
(a) Install a new gasket and the water pump with the 7 bolts.
Torque: 31 N·m (320 kgf·cm, 23 ft.·lbf)

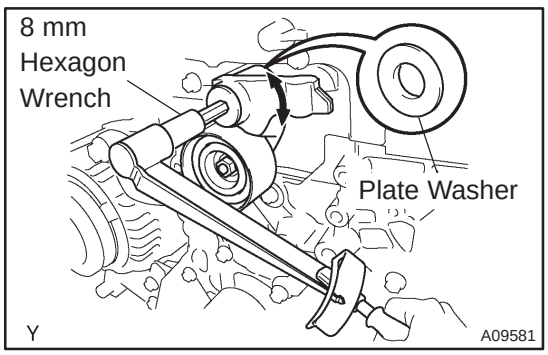

34. INSTALL TIMING BELT IDLER SUB–ASSY NO.1
(a) Using an 8 mm hexagon wrench, install the plate washer and the idler pulley with the idler pulley shaft.
Torque: 35 N·m (357 kgf·cm, 26 ft·lbf)
(b) Check that the pulley bracket moves smoothly.

35. INSTALL INJECTION OR SUPPLY PUMP ASSY (See page 11–69)
36. INSTALL INJECTION PUMP DRIVE PULLEY (See page 11–69)
SST 09960–10010 (09962–01000, 09963–01000)
37. INSTALL WATER INLET (See page 16–50)
38. INSTALL OIL LEVEL GAGE GUIDE (See page 17–22)

39. INSTALL INTAKE MANIFOLD INSULATOR NO.1 (See page 11–69)

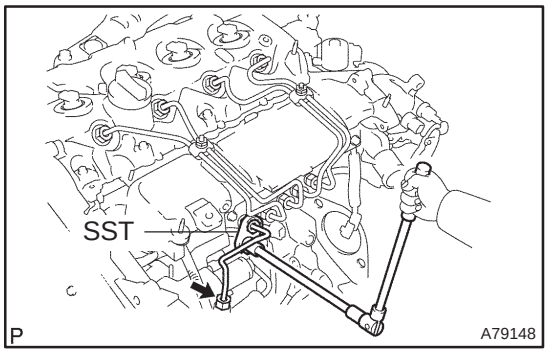

40. INSTALL FUEL INLET PIPE SUB–ASSY

NOTICE:

- **In case of having the water pump replaced, must replace fuel inlet pipe, too.**
- **When assembling the pipe, perform the operation with the engine cold under room temperature.**

(a) Temporarily install the new fuel inlet pipe.

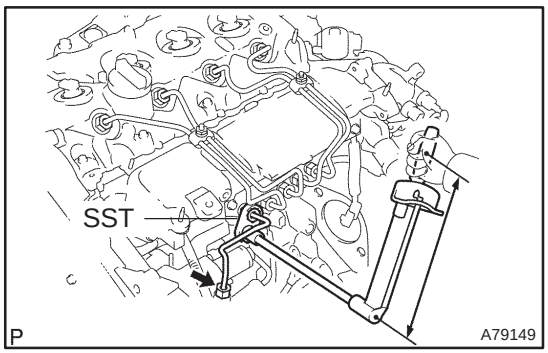

(b) Using SST, tighten the nut of the fuel inlet pipe to the common rail side.

SST 09023–12700

Torque:

42 N·m (428 kgf·cm, 31 ft·lbf) for a used pipe using SST

46 N·m (469 kgf·cm, 34 ft·lbf) for a used pipe not using SST

31 N·m (316 kgf·cm, 23 ft·lbf) for a new pipe using SST

34 N·m (347 kgf·cm, 25 ft·lbf) for a new pipe not using SST

HINT:

- Use a torque wrench with a fulcrum length of 30 cm (11.81 in.)
- Check if the used pipe has deflection or is installed properly after inlet pipe is reassembled. If there is deflection or if it can not be installed properly, replace the used pipe with a new pipe.

(c) Using SST, tighten the nut of the fuel inlet pipe to the injection pump side.

SST 09023–12700

Torque:

42 N·m (428 kgf·cm, 31 ft·lbf) for a used pipe using SST

46 N·m (469 kgf·cm, 34 ft·lbf) for a used pipe not using SST

31 N·m (316 kgf·cm, 23 ft·lbf) for a new pipe using SST

34 N·m (347 kgf·cm, 25 ft·lbf) for a new pipe not using SST

HINT:

- Use a torque wrench with a fulcrum length of 30 cm (11.81 in.)
- Check if the used pipe has deflection or is installed properly after inlet pipe is reassembled. If there is deflection or if it can not be installed properly, replace the used pipe with a new pipe.

41. **SET NO. 1 CYLINDER TO TDC/COMPRESSION**
    SST 09960–10010 (09962–01000, 09963–01000)
42. **INSTALL TIMING BELT (See page 14–307)**
43. **CHECK VALVE TIMING (See page 14–307)**
44. **INSTALL TIMING CHAIN COVER PLATE (See page 14–307)**
45. **INSTALL TRANSVERSE ENGINE ENGINE MOUNTING BRACKET (See page 14–307)**
46. **INSTALL TIMING BELT GUIDE (See page 14–307)**
47. **INSTALL TIMING BELT NO.1 COVER (See page 14–307)**
48. **INSTALL TIMING BELT NO.2 COVER (See page 14–307)**
49. **INSTALL IDLER PULLEY SUB–ASSY (See page 11–69)**
50. **INSTALL CRANKSHAFT PULLEY (See page 14–307)**
    SST 09213–54015 (90105–08076), 09330–00021
51. **INSTALL ENGINE MOUNTING INSULATOR SUB–ASSY RH (See page 14–307)**
52. **INSTALL POWER STEERING IDLE PULLEY BRACKET (See page 14–286)**
53. **ADJUST V (COOLER COMPRESSOR TO CRANKSHAFT PULLEY) BELT NO.1 (See page 14–269)**
54. **INSTALL INJECTOR DRIVER (See page 11–69)**
55. **INSTALL FRONT WHEEL RH**
    Torque: 103 N·m (1,050 kgf·cm, 76 ft·lbf)
56. **INSTALL ENGINE COVER NO.1**
    Torque: 8.0 N·m (82 kgf·cm, 71 in.·lbf)
57. **ADD ENGINE COOLANT (See page 16–44)**
58. **CHECK FOR ENGINE COOLANT LEAKS (See page 16–44)**
59. **CHECK FOR FUEL LEAKS (See page 11–60)**

THERMOSTAT (1CD–FTV)

160MF–01

REPLACEMENT

1. **REMOVE RADIATOR SUPPORT OPENING COVER**
2. **REMOVE ENGINE ROOM COVER SIDE**
3. **DRAIN ENGINE COOLANT (See page 16–44)**
4. **REMOVE RADIATOR RESERVE TANK ASSY**

(a) Disconnect the water by–pass hose No. 1 and water by–pass hose No. 2.
(b) Remove the 2 bolts and the reserve tank assembly.

5. **REMOVE RADIATOR HOSE OUTLET**

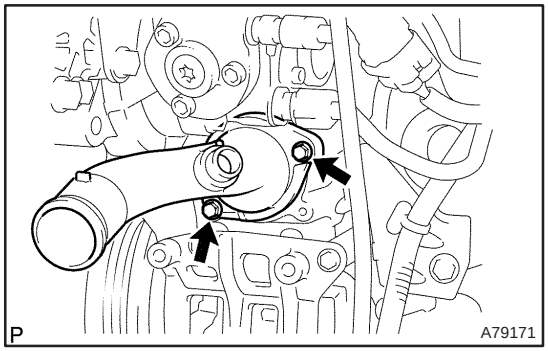

6. **REMOVE WATER INLET**

(a) Remove the 2 bolts and the water inlet.

7. **REMOVE THERMOSTAT**

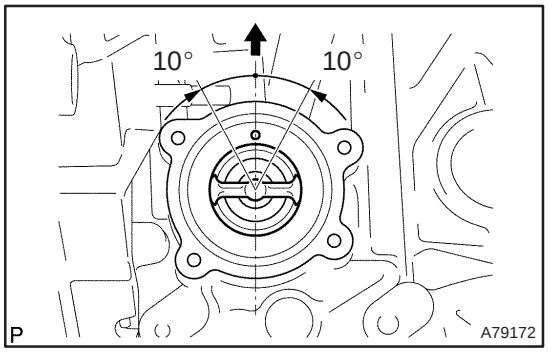

8. **INSTALL THERMOSTAT**

(a) Install a new gasket to the thermostat.
(b) Install the thermostat with the jiggle valve facing upward.

HINT:
The jiggle valve may be set within 10° on either side as shown in the illustration.

9. **INSTALL WATER INLET**
   Torque: 8.8 N·m (90 kgf·cm, 78 in.·lbf)
10. **INSTALL RADIATOR RESERVE TANK ASSY**
    Torque: 6.0 N·m (61 kgf·cm, 53 in.·lbf)
11. **ADD ENGINE COOLANT (See page 16–44)**
12. **CHECK FOR ENGINE COOLANT LEAKS (See page 16–44)**

RADIATOR ASSY (1CD–FTV)

160MG–01

REPLACEMENT

1. DRAIN ENGINE COOLANT (See page 16–44)
2. REMOVE RADIATOR SUPPORT OPENING COVER
3. REMOVE ENGINE ROOM COVER SIDE
4. REMOVE RADIATOR RESERVE TANK ASSY (See page 16–50)
5. DISCONNECT RADIATOR HOSE INLET
6. DISCONNECT RADIATOR HOSE OUTLET
7. REMOVE RADIATOR ASSY
(a) Remove the 2 bolts and separate the relay box.
(b) Remove the 2 upper support and radiator assy.
8. REMOVE RADIATOR SUPPORT LOWER
9. REMOVE FAN ASSY W/MOTOR
(a) Remove the 2 bolts and the fan w/motor.
10. INSTALL FAN ASSY W/MOTOR
Torque: 7.5 N·m (76 kgf·cm, 66 in.·lbf)
11. INSTALL RADIATOR ASSY
(a) Install the 2 upper support and the radiator assembly to the vehicle.
Torque: 19 N·m (194 kgf·cm, 14 ft·lbf)
(b) Install the 2 bolts and the relay box.
Torque: 5.3 N·m (54 kgf·cm, 47 in.·lbf)
12. INSTALL RADIATOR RESERVE TANK ASSY (See page 16–50)
13. ADD ENGINE COOLANT (See page 16–44)
14. CHECK FOR ENGINE COOLANT LEAKS (See page 16–44)

LUBRICATION SYSTEM (1ZZ–FE/3ZZ–FE)

1700F–10

ON–VEHICLE INSPECTION

1. CHECK ENGINE OIL LEVEL

(a) After warm up the engine and then 5 minutes after the engine stop, oil level should be between the low level and full level marks of the dipstick.

If low, check for leakage and add oil up to the full level mark.

NOTICE:

Do not fill with engine oil above the full level mark.

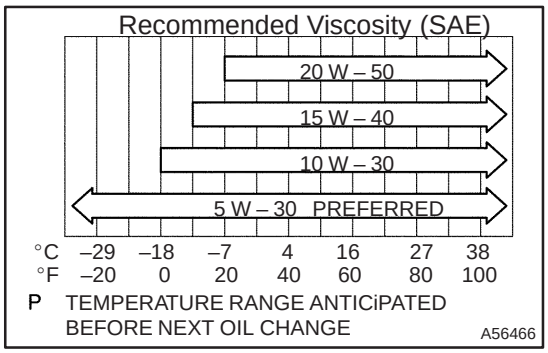

2. CHECK ENGINE OIL QUALITY

(a) Check the oil for deterioration, entry of water, discoloring or thinning.

If the quality is visibly poor, replace the oil.

Oil grade:

API grade ”SJ” Energy–Conserving, ”SL” Energy–Conserving or ILSAC multi grade engine oil. Recommended viscosity is as shown in the illustration.

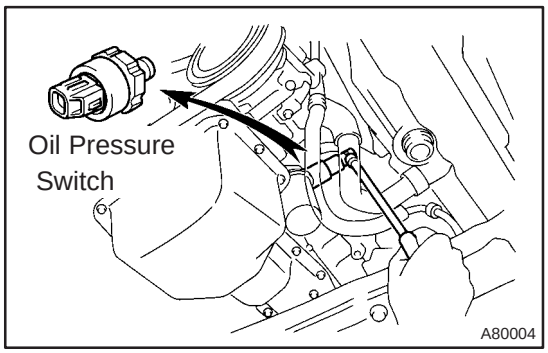

3. REMOVE OIL PRESSURE SWITCH ASSY

(a) Disconnect the oil pressure switch connector.

(b) Using a 24mm deep socket wrench, remove the oil pressure switch.

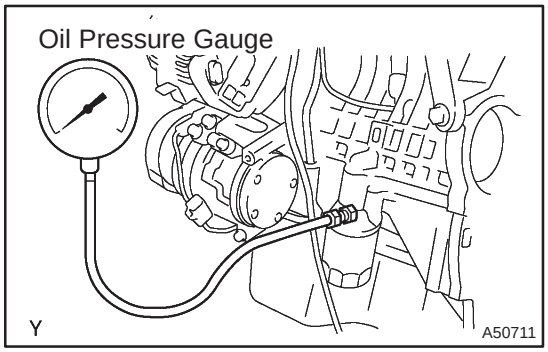

4. INSTALL OIL PRESSURE GAUGE

(a) Install the oil pressure gauge.

5. WARM UP ENGINE

6. CHECK OIL PRESSURE

Oil pressure:

At idle	29 kPa (0.3 kgf/cm^2, 4.3 psi) or more
At 3,000 rpm	294 to 539 kPa (3.0 to 5.5 kgf/cm^2, 43 to 78 psi) or more

7. REMOVE OIL PRESSURE GAUGE

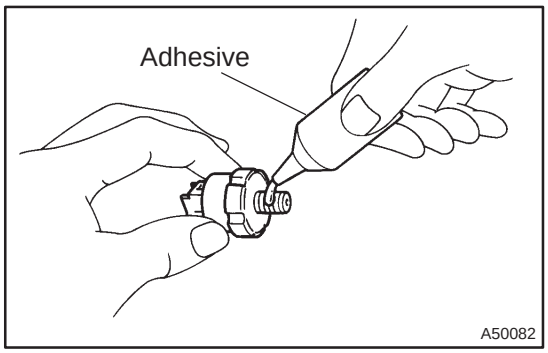

8. INSTALL OIL PRESSURE SWITCH ASSY

(a) Apply adhesive to 2 or 3 threads of the oil pressure switch.

Adhesive:
Part No. 08833–00080, THREE BOND 1344, LOCTITE 242 or equivalent

(b) Using a 24mm deep socket wrench, install the oil pressure switch.

Torque: 15 N·m (153 kgf·cm, 11 ft·lbf)

NOTICE:

Do not start the engine within 1 hour of installation.

(c) Connect the oil pressure switch connector.

9. START ENGINE AND CHECK FOR LEAKS

OIL PUMP ASSY (1ZZ–FE/3ZZ–FE)

170FR–01

REPLACEMENT

1. DRAIN ENGINE OIL

(a) Remove the oil pan drain plug and drain engine oil.

2. REMOVAL & INSTALLATION CHAIN SUB–ASSY (See page 14–49)

3. REMOVE CHAIN VIBRATION DAMPER NO.1

(a) Remove the 2 bolts and the chain vibration damper No. 1.

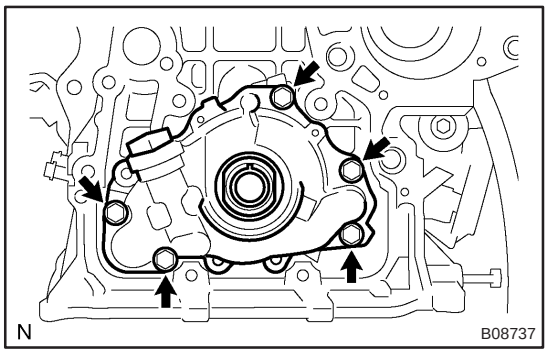

4. REMOVE OIL PUMP ASSY

(a) Remove the 5 bolts.

(b) Remove the oil pump assy and the gasket.

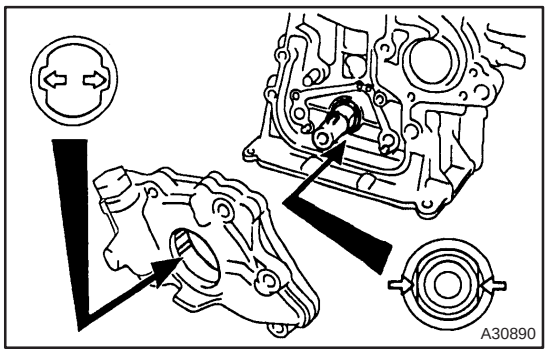

5. INSTALL OIL PUMP ASSY

(a) Place a new gasket on the cylinder block.

(b) Align the keyway of the oil pump drive rotor with the rectangular portion of the crankshaft and slide the oil pump into place.

(c) Install the oil pump with the 5 bolts.
Torque: 9.0 N·m (92 kgf·cm, 80 in.·lbf)

6. INSTALL CHAIN VIBRATION DAMPER NO.1

(a) Install the chain vibration damper No. 1 with 2 bolts.
Torque: 9.0 N·m (92 kgf·cm, 8.0 in.·lbf)

7. INSTALL OIL PAN DRAIN PLUG

(a) Clean and install the oil pan drain plug with a new gasket.
Torque: 37 N·m (377 kgf·cm, 27 ft·lbf)

8. ADD ENGINE OIL (See page 17–4)

9. ADD ENGINE COOLANT (See page 16–7)

10. CHECK FOR ENGINE OIL LEAKS

11. CHECK FOR ENGINE COOLANT LEAKS (See page 16–1)

OIL FILTER SUB–ASSY (1ZZ–FE/3ZZ–FE)

170FS–01

REPLACEMENT

CAUTION:

- **Prolonged and repeated contact with engine oil will result in the removal of natural oils from the skin, leading to dryness, irritation and dermatitis. In addition, used engine oil contains potentially harmful contaminants which may cause skin cancer.**
- **Precautions should be taken when replacing engine oil to minimize the risk of your skin making contact with used engine oil. Wear protective clothes and gloves. Wash your skin thoroughly with soap and water, or use water–less hand cleaner to remove any used engine oil. Do not use gasoline, thinners, or solvents.**
- **In order to preserve the environment, used oil and used oil filter must be disposed of only at designated disposal sites.**

1. DRAIN ENGINE OIL

(a) Remove the oil pan drain plug and drain engine oil.

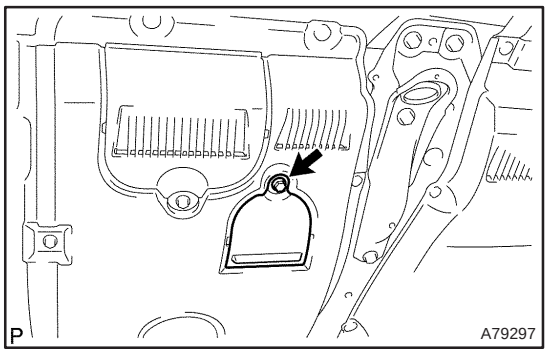

2. REMOVE OIL FILTER SUB–ASSY

(a) Remove the screw and open the under cover.

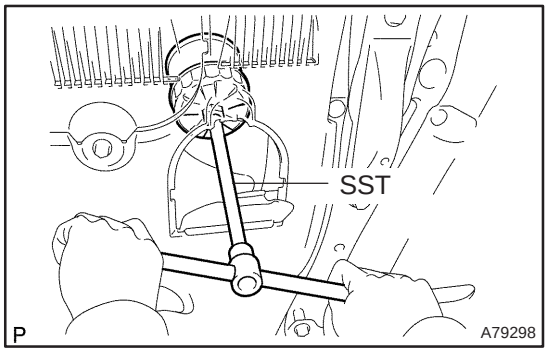

(b) Using SST, remove the oil filter
SST 09228–06501

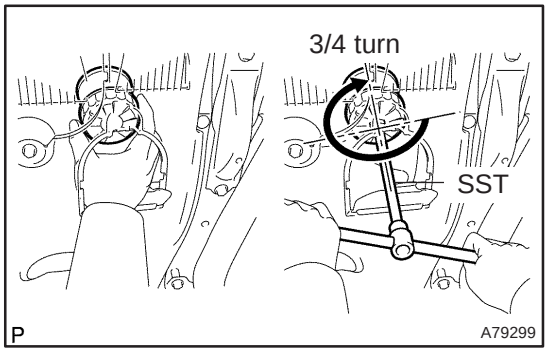

3. INSTALL OIL FILTER SUB–ASSY

(a) Check and clean the oil filter mounting surface.
(b) Apply clean engine oil to the gasket of a new oil filter.
(c) Lightly screw the oil filter into place, and tighten it until the gasket contacts the seat.
(d) Using SST, tighten it an additional 3/4 turn as shown in the illustration.
SST 09228–06501

4. INSTALL OIL PAN DRAIN PLUG

(a) Clean and install the oil pan drain plug with a new gasket.
Torque: 37 N·m (377 kgf·cm, 27 in.·lbf)

5. ADD ENGINE OIL
Capacity:
With oil filler replacement: 3.7 liters (3.9 US qts, 3.3 lmp. qts)
Without oil filler replacement: 3.5 liters (3.7 US qts, 3.1 lmp. qts)
Dry fill: 4.2 liters (4.4 US qts, 3.7 lmp. qts)

6. CHECK FOR ENGINE OIL LEAKS

LUBRICATION SYSTEM (1AZ–FE)

1700F–09

ON–VEHICLE INSPECTION

1. CHECK ENGINE OIL LEVEL

(a) After warm up the engine and then 5 minutes after the engine stop, oil level should be between the low level and full level marks of the dipstick.

If low, check for leakage and add oil up to the full level mark.

NOTICE:

Do not fill with engine oil above the full level mark.

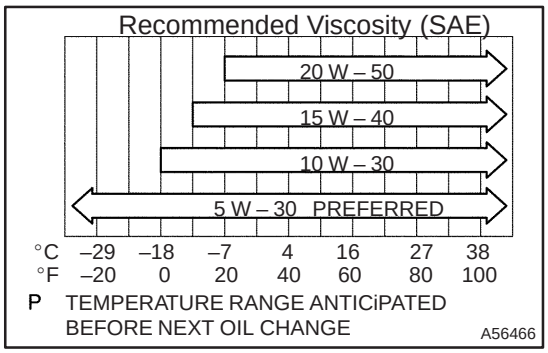

2. CHECK ENGINE OIL QUALITY

(a) Check the oil for deterioration, entry of water, discoloring or thinning.

If the quality is visibly poor, replace the oil.

Oil grade:

API grade ”SJ” Energy–Conserving, ”SL” Energy–Conserving or ILSAC multi grade engine oil. Recommended viscosity is as shown in the illustration.

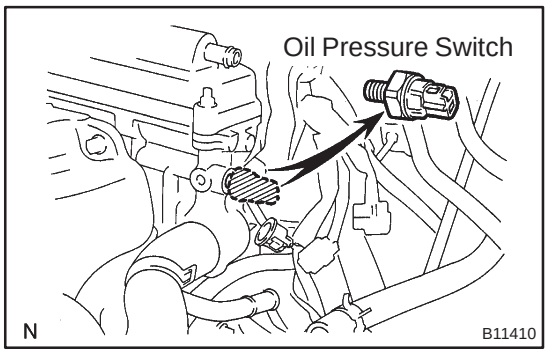

3. REMOVE OIL PRESSURE SWITCH ASSY

(a) Disconnect the oil pressure switch connector.

(b) Using a deep socket wrench 24mm, remove the oil pressure switch.

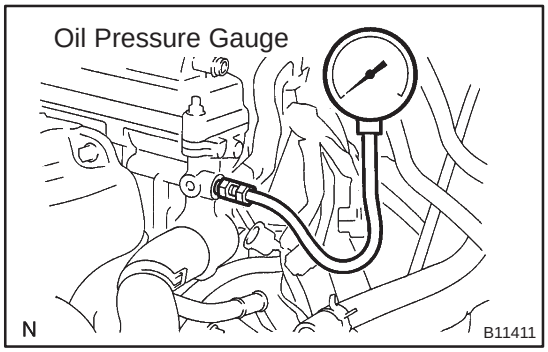

4. INSTALL OIL PRESSURE GAUGE

(a) Install the oil pressure gauge.

5. WARM UP ENGINE

6. CHECK OIL PRESSURE

Oil pressure:

At idle	29 kPa (0.3 kgf/cm^2, 4.3 psi) or more
At 3,000 rpm	245 to 539 kPa (2.5 to 5.5 kgf/cm^2, 36 to 78 psi) or more

7. REMOVE OIL PRESSURE GAUGE

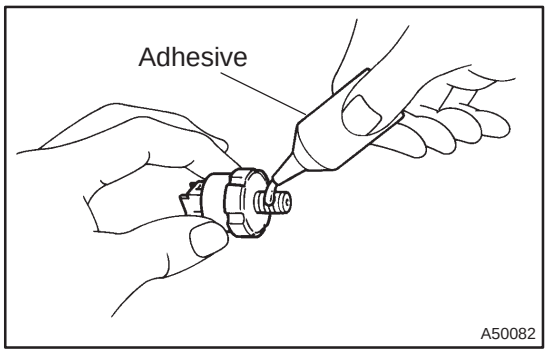

8. INSTALL OIL PRESSURE SWITCH ASSY

(a) Apply adhesive to 2 or 3 threads of the oil pressure switch.

Adhesive:
Part No. 08833–00080, THREE BOND 1344, LOCTITE 242 or equivalent

(b) Using a deep socket wrench 24mm, install the oil pressure switch.

Torque: 15 N·m (153 kgf·cm, 11 ft·lbf)

NOTICE:

Do not start the engine within 1 hour after the installation.

(c) Connect the oil pressure switch connector.

9. START ENGINE AND CHECK FOR LEAKS

OIL PUMP ASSY (1AZ–FE)

170FU–01

REPLACEMENT

1. **DISCHARGE FUEL SYSTEM PRESSURE (See page 11–15)**
2. **REMOVE FRONT WHEEL RH**
3. **REMOVE RADIATOR SUPPORT OPENING COVER**
4. **REMOVE ENGINE ROOM COVER SIDE**
5. **REMOVE ENGINE UNDER COVER RH**
6. **REMOVE ENGINE UNDER COVER LH**
7. **DRAIN ENGINE OIL**

(a) Install a new gasket and drain plug after draining engine oil.
Torque: 25 N·m (250 kgf·cm, 18 ft·lbf)

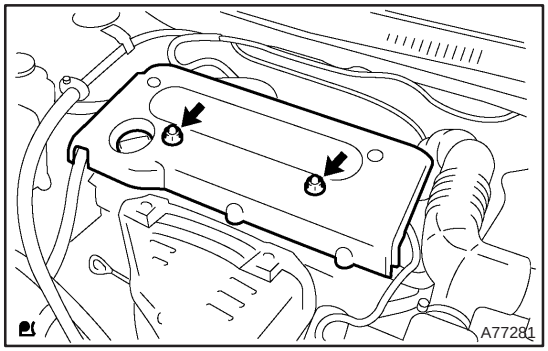

8. **REMOVE ENGINE COVER SUB–ASSY NO.1**

(a) Remove 2 nuts and the engine cover No. 1.

9. **REMOVE FAN AND GENERATOR V BELT (See page 14–105)**
SST 09249–63010
10. **REMOVE GENERATOR ASSY (See page 19–20)**
11. **REMOVE EXHAUST PIPE ASSY FRONT (See page 15–7)**
12. **SEPARATE VANE PUMP ASSY (See page 14–139)**
13. **SEPARATE RETURN TUBE SUB–ASSY (See page 14–139)**
14. **SEPARATE COOLER REFRIGERANT SUCTION HOSE NO.1 (LHD(W/ AIR CONDITIONER) STEERING POSITION TYPE) (See page 14–139)**
15. **SEPARATE VANE PUMP OIL RESERVOIR ASSY**
16. **REMOVE OIL RESERVOIR BRACKET NO.1 (See page 14–139)**
17. **SEPARATE ENGINE WIRE**
18. **REMOVE ENGINE SERVICE COVER BRACKET RH (W/O AIR CONDITIONING)**

(a) Remove a bolt and the engine service cover bracket RH.

19. **REMOVE COOLER BRACKET (LHD(W/ AIR CONDITIONER) STEERING POSITION TYPE) (See page 14–139)**
20. **REMOVE ENGINE SERVICE COVER BRACKET RH (RHD(W/ AIR CONDITIONER) STEERING POSITION TYPE)**

(a) Remove a bolt and the engine service cover bracket RH.

21. **REMOVE IGNITION COIL ASSY**

(a) Remove 4 bolts and the ignition coils.

22. **REMOVE CYLINDER HEAD COVER SUB–ASSY (See page 14–139)**
23. **SET NO. 1 CYLINDER TO TDC/COMPRESSION (See page 14–139)**
24. **REMOVE ENGINE MOUNTING BRACKET NO.2 RH (See page 14–139)**
25. **REMOVE TRANSVERSE ENGINE ENGINE MOUNTING INSULATOR (See page 14–139)**

26. REMOVE CRANKSHAFT PULLEY (See page 14–139)
SST 09213–54015 (91651–60855), 09330–00021, 09950–50013 (09951–05010, 09952–05010, 09953–05020, 09954–05021)

27. REMOVE CHAIN TENSIONER ASSY NO.1 (See page 14–139)

28. REMOVE CRANKSHAFT POSITION SENSOR (See page 18–16)

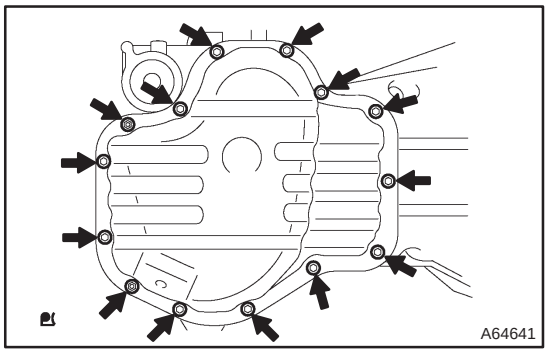

29. REMOVE OIL PAN SUB–ASSY
(a) Remove 12 bolts and 2 nuts.

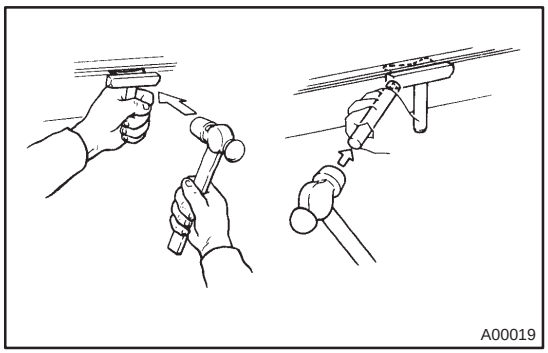

(b) Insert the blade of SST between the crank case, timing chain cover and oil pan, cut off applied sealer and remove the oil pan.
SST 09032–00100

NOTICE:
Be careful not to damage the contact surface of timing chain cover, crank case and oil pan.

30. REMOVE V–RIBBED BELT TENSIONER ASSY (See page 14–139)

31. REMOVE TIMING CHAIN OR BELT COVER SUB–ASSY (See page 14–139)

32. REMOVE CRANKSHAFT POSITION SENSOR PLATE NO.1

33. REMOVE CHAIN TENSIONER SLIPPER

34. REMOVE CHAIN VIBRATION DAMPER NO.1

35. REMOVE TIMING CHAIN GUIDE (See page 14–139)

36. REMOVE CHAIN SUB–ASSY

37. REMOVE CRANKSHAFT TIMING GEAR OR SPROCKET

38. REMOVE NO.2 CHAIN SUB–ASSY (See page 14–139)

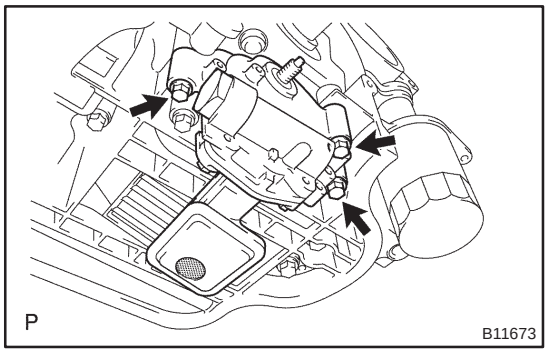

39. REMOVE OIL PUMP ASSY
(a) Remove 3 bolts, the oil pump and gasket.

40. INSTALL OIL PUMP ASSY
(a) Install a new gasket and oil pump with 3 bolts.
Torque: 19 N·m (195 kgf·cm, 15 ft·lbf)

41. INSTALL NO.2 CHAIN SUB–ASSY (See page 14–139)

42. INSTALL CRANKSHAFT TIMING GEAR OR SPROCKET

43. SET NO. 1 CYLINDER TO TDC/COMPRESSION (See page 14–139)
44. INSTALL CHAIN VIBRATION DAMPER NO.1
Torque: 9.0 N·m (92 kgf·cm, 80 in.·lbf)
45. INSTALL CHAIN SUB–ASSY (See page 14–139)
46. INSTALL TIMING CHAIN GUIDE
Torque: 9.0 N·m (92 kgf·cm, 80 in.·lbf)
47. INSTALL CHAIN TENSIONER SLIPPER (See page 14–139)
48. INSTALL CRANKSHAFT POSITION SENSOR PLATE NO.1 (See page 14–139)
49. INSTALL TIMING CHAIN OR BELT COVER SUB–ASSY (See page 14–139)
50. INSTALL V–RIBBED BELT TENSIONER ASSY (See page 14–139)

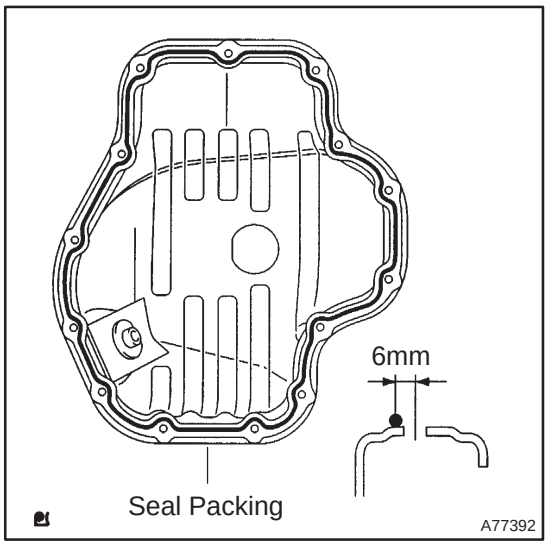

51. INSTALL OIL PAN SUB–ASSY
NOTICE:
- **Remove any oil from the contact surface.**
- **Install the oil pan within 3 minutes after applying seal packing.**
- **Do not start the engine within 2 hours after installing.**

(a) Remove any old packing (FIPG) material and be careful not to drop any oil on the contact surface of the cylinder block and oil pan.
(b) Apply seal packing in the shape of bead (Diameter 3 to 4 mm (0.157 in.)) as shown in the illustration, and install the oil pan.
Seal Packing: Part No. 08826 – 00080 or equivalent

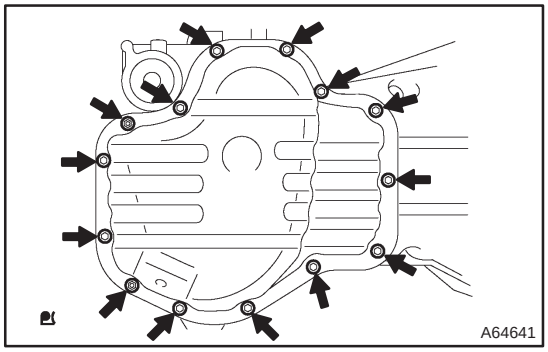

(c) Insert the oil pan with 12 bolts and 2 nuts.
Torque: 9.0 N·m (92 kgf·cm, 80 in.·lbf)

52. INSTALL CRANKSHAFT POSITION SENSOR (See page 14–139)
53. INSTALL CRANKSHAFT PULLEY (See page 14–139)
SST 09213–54015 (91651–60855), 09330–00021
54. INSTALL CHAIN TENSIONER ASSY NO.1 (See page 14–139)
55. INSTALL TRANSVERSE ENGINE ENGINE MOUNTING INSULATOR
Torque: 52 N·m (530 kgf·cm, 38 ft·lbf)
56. INSTALL ENGINE MOUNTING BRACKET NO.2 RH (See page 14–139)
57. INSTALL CYLINDER HEAD COVER SUB–ASSY (See page 14–139)
58. INSTALL ENGINE SERVICE COVER BRACKET RH (W/O AIR CONDITIONING)
Torque: 9.0 N·m (92 kgf·cm, 80 in.·lbf)
59. INSTALL COOLER BRACKET (LHD(W/ AIR CONDITIONER) STEERING POSITION TYPE)
Torque: 9.0 N·m (92 kgf·cm, 80 in.·lbf)
60. INSTALL ENGINE SERVICE COVER BRACKET RH (RHD(W/ AIR CONDITIONER) STEERING POSITION TYPE)
Torque: 9.0 N·m (92 kgf·cm, 80 in.·lbf)

61. INSTALL ENGINE WIRE
Torque: 7.0 N·m (71 kgf·cm, 62 in.·lbf)
62. INSTALL OIL RESERVOIR BRACKET NO.1
Torque: 8.0 N·m (82 kgf·cm, 71 in.·lbf)
63. INSTALL COOLER REFRIGERANT SUCTION HOSE NO.1 (LHD(W/ AIR CONDITIONER) STEERING POSITION TYPE)
Torque: 9.0 N·m (92 kgf·cm, 80 in.·lbf)
64. INSTALL RETURN TUBE SUB–ASSY
Torque: 8.0 N·m (82 kgf·cm, 71 in.·lbf)
65. INSTALL IGNITION COIL ASSY
Torque: 9.0 N·m (92 kgf·cm, 80 in.·lbf)
66. INSTALL VANE PUMP ASSY
Torque: 37 N·m (377 kgf·cm, 27 ft·lbf)
67. INSTALL EXHAUST PIPE ASSY FRONT (See page 15–7)
68. INSTALL GENERATOR ASSY (See page 19–20)
69. INSTALL FAN AND GENERATOR V BELT (See page 14–105)
SST 09249–63010
70. ADD ENGINE OIL
71. CHECK FOR ENGINE OIL LEAKS
72. INSTALL ENGINE COVER SUB–ASSY NO.1
Torque: 7.0 N·m (71 kgf·cm, 62 in.·lbf)
73. INSTALL FRONT WHEEL RH
Torque: 103 N·m (1,050 kgf·cm, 76 ft·lbf)

OIL FILTER SUB–ASSY (1AZ–FE)

170FW–01

REPLACEMENT

CAUTION:

- **Prolonged and repeated contact with mineral oil will result in the removal of natural fats from the skin, leading to dryness, irritation and dermatitis. In addition, used engine oil contains potentially harmful contaminants which may cause skin cancer.**
- **Exercise caution in order to minimize the length and frequency of contact of your skin to used oil. Wear protective clothing and gloves. Wash your skin thoroughly with soap and water, or use water–less hand cleaner to remove any used engine oil. Do not use gasoline, thinners, or solvents.**
- **In order to preserve the environment, used oil and used oil filter must be disposed of only at designated disposal sites.**

1. REMOVE ENGINE UNDER COVER RH

2. DRAIN ENGINE OIL

(a) Install a new gasket and drain plug after draining engine oil.
Torque: 25 N·m (250 kgf·cm, 18 ft·lbf)

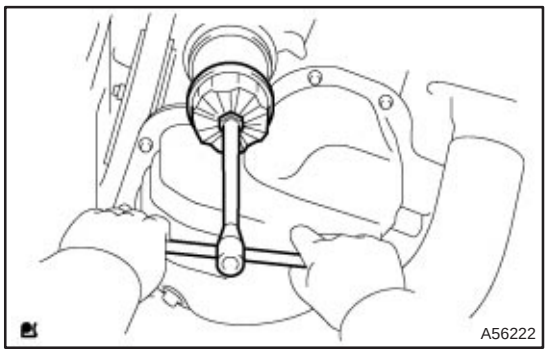

3. REMOVE OIL FILTER SUB–ASSY

(a) Using SST, remove the oil filter.
SST 09228–06501

4. INSTALL OIL FILTER SUB–ASSY

(a) Check and clean the oil filter installation surface.

(b) Apply clean engine oil to the gasket of a new oil filter.

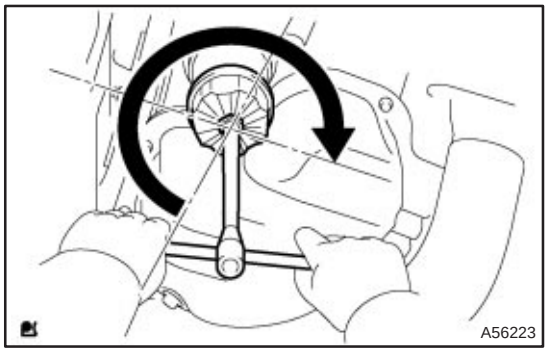

(c) Lightly screw the oil filter into place, and tighten it until the gasket contacts the seat.

(d) Using SST, tighten it an additional 3/4 turn.
SST 09228–06501

5. ADD ENGINE OIL

(a) Fill with fresh engine oil.
Capacity:
Drain and refill w/ Oil filter change 4.2 liters (4.4 US qts, 3.7 lmp. qts)
Drain and refill w/o Oil filter change 4.0 liters (4.2 US qts, 3.5 lmp. qts)
Dry fill 4.9 liters (5.2 US qts, 4.3 lmp. qts)

(b) Install the oil filler cap.

6. INSPECT OIL LEAK

LUBRICATION SYSTEM (1AZ–FSE)

1700E–07

ON–VEHICLE INSPECTION

1. CHECK ENGINE OIL LEVEL

(a) After warm up the engine and then 5 minutes after the engine stop, oil level should be between the low level and full level marks of the dipstick.

If low, check for leakage and add oil up to the full level mark.

NOTICE:

Do not fill with engine oil above the full level mark.

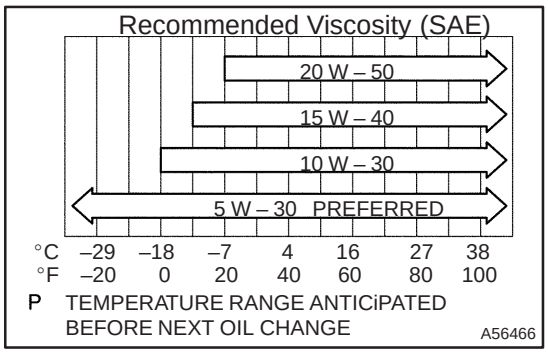

2. CHECK ENGINE OIL QUALITY

(a) Check the oil for deterioration, entry of water, discoloring or thinning.

If the quality is visibly poor, replace the oil.

Oil grade:

API grade ”SJ” Energy–Conserving, ”SL” Energy–Conserving or ILSAC multi grade engine oil. Recommended viscosity is as shown in the illustration.

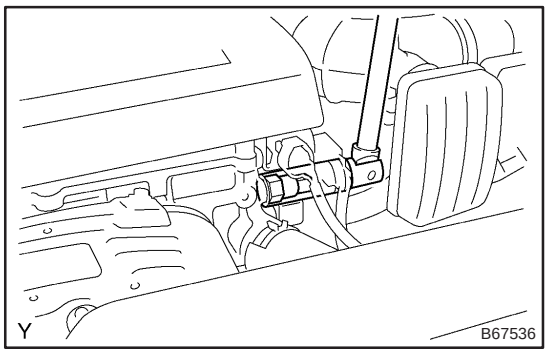

3. REMOVE OIL PRESSURE SWITCH ASSY

(a) Disconnect the oil pressure switch connector.

(b) Using a deep socket wrench 24mm, remove the oil pressure switch.

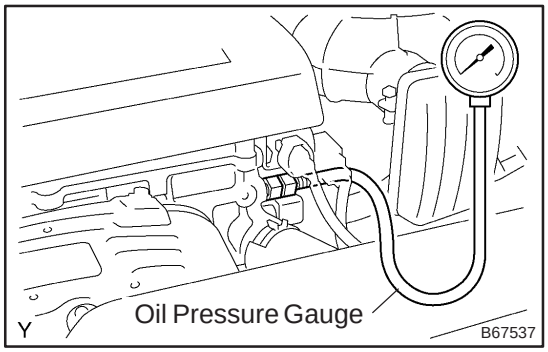

4. INSTALL OIL PRESSURE GAUGE

(a) Install the oil pressure gauge.

5. WARM UP ENGINE

6. CHECK OIL PRESSURE

Oil pressure:

At idle	29 kPa (0.3 kgf/cm^2, 4.3 psi) or more
At 3,000 rpm	245 to 539 kPa (2.5 to 5.5 kgf/cm^2, 36 to 78 psi) or more

7. REMOVE OIL PRESSURE GAUGE

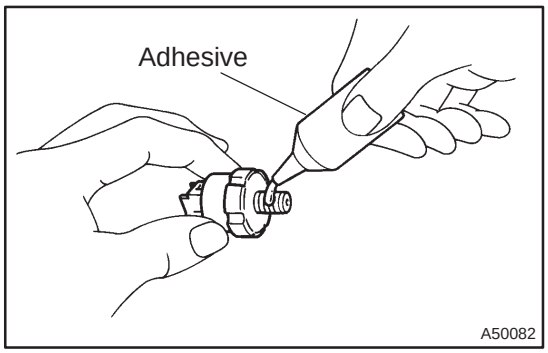

8. INSTALL OIL PRESSURE SWITCH ASSY

(a) Apply adhesive to 2 or 3 threads of the oil pressure switch.

Adhesive:
Part No. 08833–00080, THREE BOND 1344, LOCTITE 242 or equivalent

(b) Using a deep socket wrench 24mm, install the oil pressure switch.

Torque: 15 N·m (153 kgf·cm, 11 ft·lbf)

NOTICE:

Do not start the engine within 1 hour after the installation.

(c) Connect the oil pressure switch connector.

9. START ENGINE AND CHECK FOR LEAKS

OIL PUMP ASSY (1AZ–FSE)

170FX–01

REPLACEMENT

1. **DISCHARGE FUEL SYSTEM PRESSURE (See page 11–30)**
2. **REMOVE FRONT WHEEL RH**
3. **REMOVE RADIATOR SUPPORT OPENING COVER**
4. **REMOVE ENGINE ROOM COVER SIDE**
5. **REMOVE ENGINE UNDER COVER RH**
6. **REMOVE ENGINE UNDER COVER LH**
7. **DRAIN ENGINE OIL**

(a) Install a new gasket and drain plug after draining engine oil.
Torque: 25 N·m (250 kgf·cm, 18 ft·lbf)

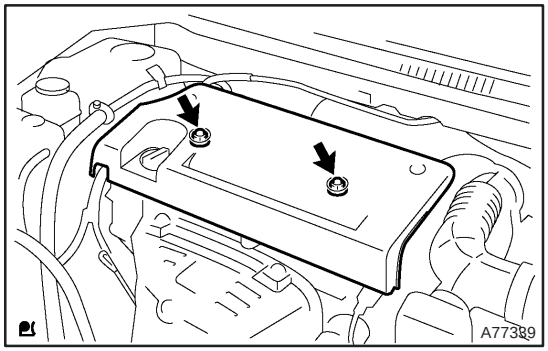

8. **REMOVE ENGINE COVER SUB–ASSY NO.1**

(a) Remove 2 nuts and the engine cover No. 1.

9. **REMOVE FUEL PRESSURE PULSATION DAMPER ASSY**
10. **DISCONNECT FUEL TUBE SUB–ASSY (See page 11–33)**
11. **SEPARATE FUEL PIPE SUB–ASSY NO.1 (See page 11–52)**
    SST 09023–12900
12. **REMOVE FUEL PUMP ASSY (See page 11–52)**
13. **REMOVE FAN AND GENERATOR V BELT (See page 14–185)**
    SST 09249–63010
14. **REMOVE GENERATOR ASSY (See page 19–20)**
15. **REMOVE EXHAUST PIPE ASSY FRONT (See page 15–7)**
16. **SEPARATE VANE PUMP ASSY (See page 14–222)**
17. **SEPARATE RETURN TUBE SUB–ASSY (See page 14–222)**
18. **SEPARATE COOLER REFRIGERANT SUCTION HOSE NO.1 (LHD STEERING POSITION TYPE) (See page 14–222)**
19. **SEPARATE VANE PUMP OIL RESERVOIR ASSY**
20. **REMOVE OIL RESERVOIR BRACKET NO.1 (See page 14–222)**
21. **SEPARATE ENGINE WIRE**
22. **REMOVE COOLER BRACKET (LHD STEERING POSITION TYPE) (See page 14–222)**
23. **REMOVE ENGINE SERVICE COVER BRACKET RH (RHD STEERING POSITION TYPE)**

(a) Remove a bolt and the engine service cover bracket RH.

24. **REMOVE IGNITION COIL ASSY**

(a) Remove 4 bolts and the ignition coils.

25. **REMOVE CYLINDER HEAD COVER SUB–ASSY (See page 14–222)**
26. **SET NO. 1 CYLINDER TO TDC/COMPRESSION (See page 14–222)**
27. **REMOVE ENGINE MOUNTING BRACKET NO.2 RH (See page 14–222)**
28. **REMOVE TRANSVERSE ENGINE ENGINE MOUNTING INSULATOR (See page 14–222)**

29. REMOVE CRANKSHAFT PULLEY (See page 14–222)
SST 09213–54015 (91651–60855), 09330–00021, 09950–50013 (09951–05010, 09952–05010, 09953–05020, 09954–05021)

30. REMOVE CHAIN TENSIONER ASSY NO.1 (See page 14–139)

31. REMOVE CRANKSHAFT POSITION SENSOR (See page 18–17)

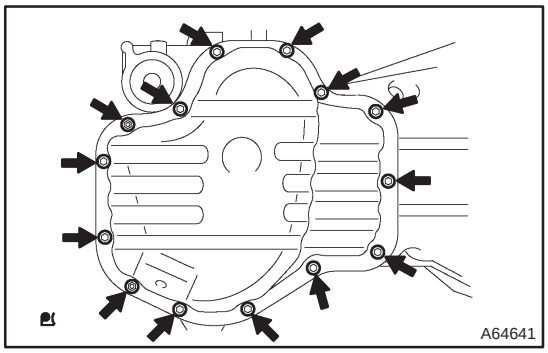

32. REMOVE OIL PAN SUB–ASSY
(a) Remove 12 bolts and 2 nuts.

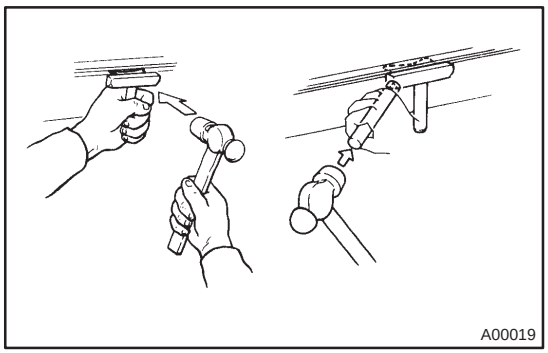

(b) Insert the blade of SST between the crank case, timing chain cover and oil pan, cut off applied sealer and remove the oil pan.
SST 09032–00100

NOTICE:
Be careful not to damage the contact surface of timing chain cover, crank case and oil pan.

33. REMOVE V–RIBBED BELT TENSIONER ASSY (See page 14–139)
34. REMOVE TIMING CHAIN OR BELT COVER SUB–ASSY (See page 14–139)
35. REMOVE CRANKSHAFT POSITION SENSOR PLATE NO.1
36. REMOVE CHAIN TENSIONER SLIPPER
37. REMOVE CHAIN VIBRATION DAMPER NO.1
38. REMOVE TIMING CHAIN GUIDE (See page 14–139)
39. REMOVE CHAIN SUB–ASSY
40. REMOVE CRANKSHAFT TIMING GEAR OR SPROCKET
41. REMOVE NO.2 CHAIN SUB–ASSY (See page 14–139)

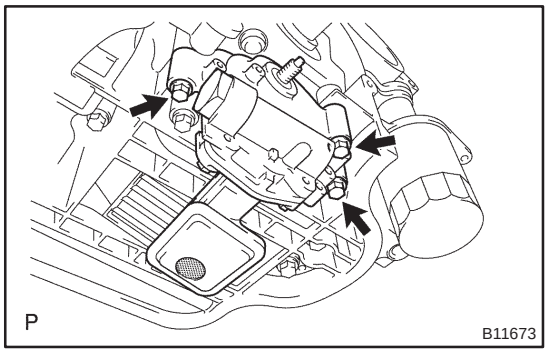

42. REMOVE OIL PUMP ASSY
(a) Remove 3 bolts, the oil pump and gasket.

43. INSTALL OIL PUMP ASSY
(a) Install a new gasket and oil pump with 3 bolts.
Torque: 19 N·m (195 kgf·cm, 15 ft·lbf)

44. INSTALL NO.2 CHAIN SUB–ASSY (See page 14–139)
45. INSTALL CRANKSHAFT TIMING GEAR OR SPROCKET

46. SET NO. 1 CYLINDER TO TDC/COMPRESSION (See page 14–139)
47. INSTALL CHAIN VIBRATION DAMPER NO.1
Torque: 9.0 N·m (92 kgf·cm, 80 in.·lbf)
48. INSTALL CHAIN SUB–ASSY (See page 14–139)
49. INSTALL TIMING CHAIN GUIDE
Torque: 9.0 N·m (92 kgf·cm, 80 in.·lbf)
50. INSTALL CHAIN TENSIONER SLIPPER (See page 14–139)
51. INSTALL CRANKSHAFT POSITION SENSOR PLATE NO.1 (See page 14–139)
52. INSTALL TIMING CHAIN OR BELT COVER SUB–ASSY (See page 14–139)
53. INSTALL V–RIBBED BELT TENSIONER ASSY (See page 14–139)

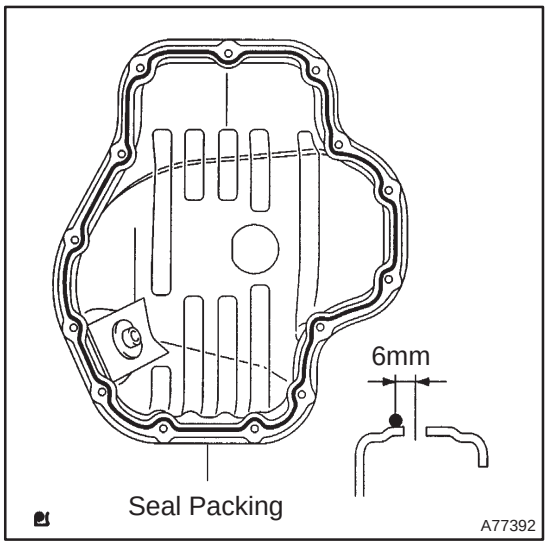

54. INSTALL OIL PAN SUB–ASSY
NOTICE:
- **Remove any oil from the contact surface.**
- **Install the oil pan within 3 minutes after applying seal packing.**
- **Do not start the engine within 2 hours after installing.**

(a) Remove any old packing (FIPG) material and be careful not to drop any oil on the contact surface of the cylinder block and oil pan.

(b) Apply seal packing in the shape of bead (Diameter 3 to 4 mm (0.157 in.)) as shown in the illustration, and install the oil pan.
Seal Packing: Part No. 08826 – 00080 or equivalent

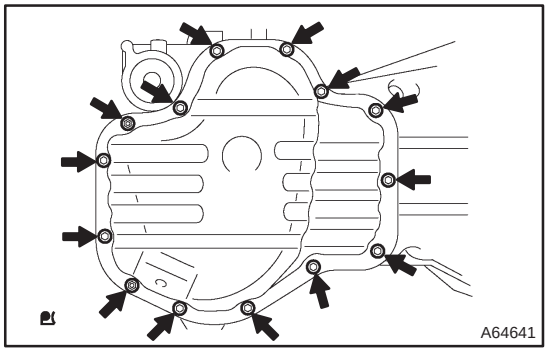

(c) Insert the oil pan with 12 bolts and 2 nuts.
Torque: 9.0 N·m (92 kgf·cm, 80 in.·lbf)

55. INSTALL CRANKSHAFT POSITION SENSOR (See page 18–17)
56. INSTALL CRANKSHAFT PULLEY (See page 14–139)
SST 09213–54015 (91651–60855), 09330–00021
57. INSTALL CHAIN TENSIONER ASSY NO.1
58. INSTALL TRANSVERSE ENGINE ENGINE MOUNTING INSULATOR
Torque: 52 N·m (530 kgf·cm, 38 ft·lbf)
59. INSTALL ENGINE MOUNTING BRACKET NO.2 RH (See page 14–139)
60. INSTALL CYLINDER HEAD COVER SUB–ASSY (See page 14–139)
61. INSTALL COOLER BRACKET (LHD STEERING POSITION TYPE)
Torque: 9.0 N·m (92 kgf·cm, 80 in.·lbf)
62. INSTALL ENGINE SERVICE COVER BRACKET RH (RHD STEERING POSITION TYPE)
Torque: 9.0 N·m (92 kgf·cm, 80 in.·lbf)
63. INSTALL ENGINE WIRE
Torque: 7.0 N·m (71 kgf·cm, 62 in.·lbf)

64. INSTALL OIL RESERVOIR BRACKET NO.1
Torque: 8.0 N·m (82 kgf·cm, 71 in.·lbf)
65. INSTALL COOLER REFRIGERANT SUCTION HOSE NO.1 (LHD STEERING POSITION TYPE)
Torque: 9.0 N·m (92 kgf·cm, 80 in.·lbf)
66. INSTALL RETURN TUBE SUB–ASSY
Torque: 8.0 N·m (82 kgf·cm, 71 in.·lbf)
67. INSTALL IGNITION COIL ASSY
Torque: 9.0 N·m (92 kgf·cm, 80 in.·lbf)
68. INSTALL VANE PUMP ASSY
Torque: 37 N·m (377 kgf·cm, 27 ft·lbf)
69. INSTALL EXHAUST PIPE ASSY FRONT (See page 15–7)
70. INSTALL GENERATOR ASSY (See page 19–20)
71. INSTALL FAN AND GENERATOR V BELT (See page 14–185)
SST 09249–63010
72. INSTALL FUEL PUMP ASSY (See page 11–52)
73. INSTALL FUEL PIPE SUB–ASSY NO.1 (See page 11–52)
SST 09023–12900
74. INSTALL FUEL TUBE SUB–ASSY (See page 11–33)
75. INSTALL FUEL PRESSURE PULSATION DAMPER ASSY (See page 11–52)
76. ADD ENGINE OIL
77. CHECK FOR ENGINE OIL LEAKS
78. CHECK FUEL LEAK
79. INSTALL ENGINE COVER SUB–ASSY NO.1
Torque: 7.0 N·m (71 kgf·cm, 62 in.·lbf)
80. INSTALL FRONT WHEEL RH
Torque: 103 N·m (1,050 kgf·cm, 76 ft·lbf)

OIL FILTER SUB–ASSY (1AZ–FSE)

170FV–01

REPLACEMENT

CAUTION:

- **Prolonged and repeated contact with mineral oil will result in the removal of natural fats from the skin, leading to dryness, irritation and dermatitis. In addition, used engine oil contains potentially harmful contaminants which may cause skin cancer.**
- **Exercise caution in order to minimize the length and frequency of contact of your skin to used oil. Wear protective clothing and gloves. Wash your skin thoroughly with soap and water, or use water–less hand cleaner to remove any used engine oil. Do not use gasoline, thinners, or solvents.**
- **In order to preserve the environment, used oil and used oil filter must be disposed of only at designated disposal sites.**

1. REMOVE ENGINE UNDER COVER RH

2. DRAIN ENGINE OIL

(a) Install a new gasket and drain plug after draining engine oil.
Torque: 25 N·m (250 kgf·cm, 18 ft·lbf)

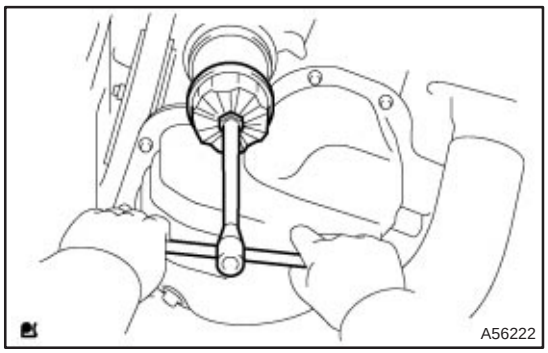

3. REMOVE OIL FILTER SUB–ASSY

(a) Using SST, remove the oil filter.
SST 09228–06501

4. INSTALL OIL FILTER SUB–ASSY

(a) Check and clean the oil filter installation surface.

(b) Apply clean engine oil to the gasket of a new oil filter.

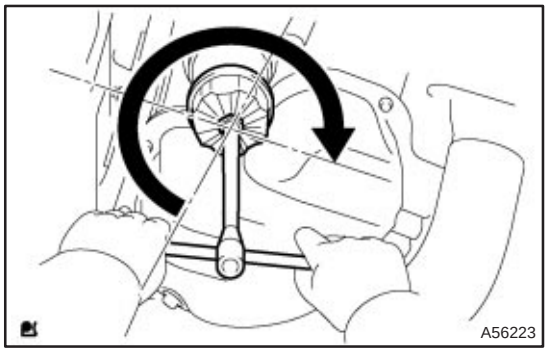

(c) Lightly screw the oil filter into place, and tighten it until the gasket contacts the seat.

(d) Using SST, tighten it an additional 3/4 turn.
SST 09228–06501

5. ADD ENGINE OIL

(a) Fill with fresh engine oil.
Capacity:
Drain and refill w/ Oil filter change 4.2 liters (4.4 US qts, 3.7 lmp. qts)
Drain and refill w/o Oil filter change 4.0 liters (4.2 US qts, 3.5 lmp. qts)
Dry fill 4.9 liters (5.2 US qts, 4.3 lmp. qts)

(b) Install the oil filler cap.

6. INSPECT OIL LEAK

LUBRICATION SYSTEM (1CD–FTV)

17045–03

ON–VEHICLE INSPECTION

1. CHECK ENGINE OIL LEVEL

(a) After warm up the engine and then 5 minutes after the engine stop, oil level should be between the low level and full level marks of the dipstick.

If low, check for leakage and add oil up to the full level mark.

NOTICE:

Do not fill with engine oil above the full level mark.

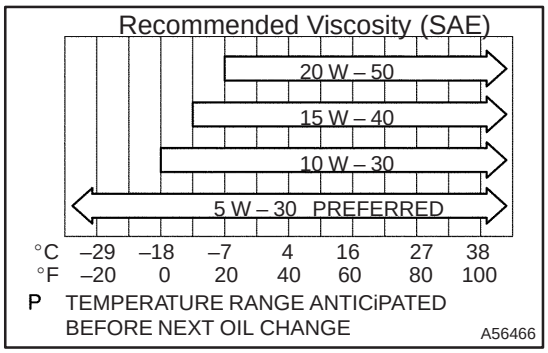

2. CHECK ENGINE OIL QUALITY

(a) Check the oil for deterioration, entry of water, discoloring or thinning.

If the quality is visibly poor, replace the oil.

Oil grade:

Use ACEA B1, API grade CF – 4 or CF

(You may also use API CE or CD)

SAE 5W – 30 is the best choice for your vehicle, for good fuel economy, and good starting in cold weather.

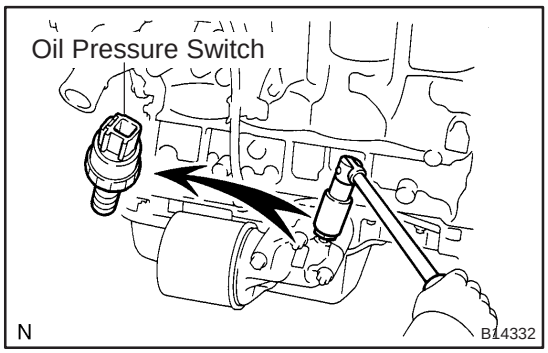

3. REMOVE OIL PRESSURE SWITCH ASSY

(a) Disconnect the oil pressure switch connector.

(b) Using a deep socket wrench 24mm, remove the oil pressure switch.

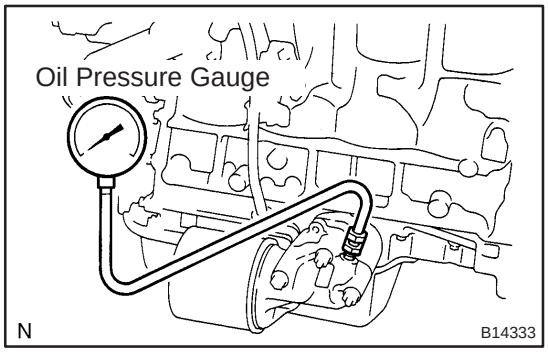

4. INSTALL OIL PRESSURE GAUGE

(a) Install the oil pressure gauge.

5. WARM UP ENGINE

6. CHECK OIL PRESSURE

Oil pressure:

At idle	29 kPa (0.3 kgf/cm^2, 4.3 psi) or more
At 4,500 rpm	245 to 588 kPa (2.5 to 6.0 kgf/cm^2, 36 to 85 psi) or more

7. REMOVE OIL PRESSURE GAUGE

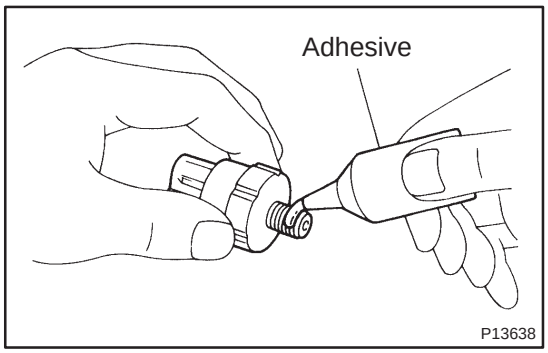

8. INSTALL OIL PRESSURE SWITCH ASSY

(a) Apply adhesive to 2 or 3 threads of the oil pressure switch.

Adhesive:

Part No. 08833 – 00080, THREE BOND 1344, LOCTITE 242 or equivalent

(b) Using a deep socket wrench 24mm, install the oil pressure switch.

Torque: 15 N·m (153 kgf·cm, 11 ft·lbf)

NOTICE:

Do not start the engine within 1 hour after the installation.

(c) Connect the oil pressure switch connector.

9. START ENGINE AND CHECK FOR LEAKS

OIL PUMP ASSY (1CD–FTV)

170FP–01

REPLACEMENT

1. **DRAIN ENGINE OIL (See page 17–30)**
2. **REMOVE RADIATOR SUPPORT OPENING COVER**
3. **REMOVE ENGINE ROOM COVER SIDE**
4. **REMOVE FRONT WHEEL RH**
5. **REMOVE ENGINE UNDER COVER RH**
6. **REMOVE ENGINE UNDER COVER SUB–ASSY NO.1**
7. **REMOVE ENGINE COVER NO.1**

(a) Remove the 5 nuts and the engine cover.

8. **REMOVE INJECTOR DRIVER (See page 14–307)**
9. **REMOVE V (COOLER COMPRESSOR TO CRANKSHAFT PULLEY) BELT NO.1 (See page 14–269)**
10. **REMOVE GENERATOR V BELT (See page 14–269)**
11. **SEPARATE POWER STEERING IDLE PULLEY BRACKET (See page 14–286)**
12. **REMOVE ENGINE MOUNTING INSULATOR SUB–ASSY RH (See page 14–307)**
13. **REMOVE CRANKSHAFT PULLEY (See page 14–307)**

SST 09213–54015 (90105–08076), 09330–00021, 09950–50013 (09951–05010, 09952–05010, 09953–05020, 09954–05031)

14. **REMOVE IDLER PULLEY SUB–ASSY (See page 14–307)**
15. **REMOVE TIMING BELT NO.2 COVER (See page 14–307)**
16. **REMOVE TIMING BELT NO.1 COVER (See page 14–307)**
17. **REMOVE TIMING BELT GUIDE**
18. **REMOVE TRANSVERSE ENGINE ENGINE MOUNTING BRACKET (See page 14–307)**
19. **SET NO. 1 CYLINDER TO TDC/COMPRESSION (See page 14–307)**
20. **REMOVE TIMING CHAIN COVER PLATE (See page 14–307)**
21. **REMOVE TIMING BELT (See page 14–307)**
22. **REMOVE TIMING BELT IDLER SUB–ASSY NO.2 (See page 14–307)**

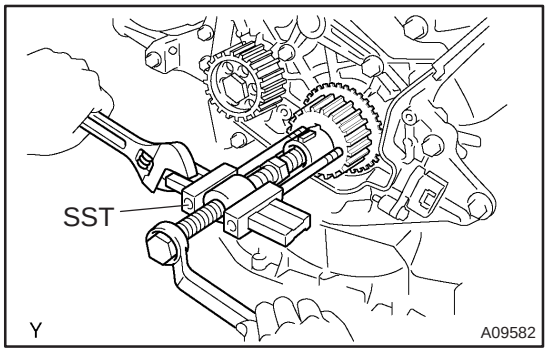

23. **REMOVE CRANKSHAFT TIMING PULLEY**

(a) If the timing pulley can not be removed by hand, use SST to remove the pulley.

SST 09950–50013 (09951–05010, 09952–05010, 09953–05010, 09953–05020, 09954–05021)

24. **REMOVE GENERATOR ASSY (See page 19–29)**
25. **REMOVE TIMING BELT IDLER SUB–ASSY NO.1**
26. **REMOVE V–RIBBED BELT TENSIONER ASSY**

(a) Remove the 2 bolts and the V–ribbed belt tensioner.

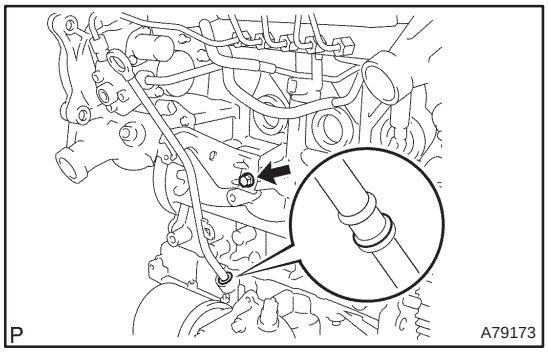

27. REMOVE OIL LEVEL GAGE GUIDE

(a) Remove the bolt which is used to secure the oil level gage guide to the cylinder block.

(b) Pull out the oil level gage guide together with the oil level gage from the No. 1 oil pan.

(c) Remove the O–ring from the oil level gage guide.

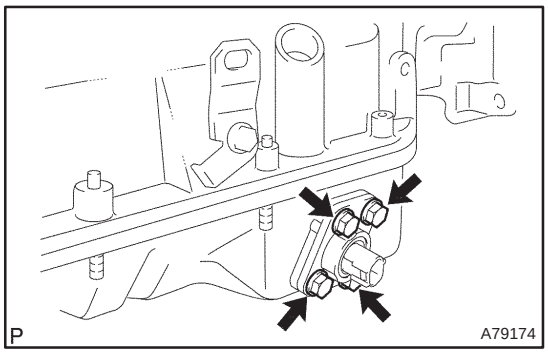

28. REMOVE ENGINE OIL LEVEL SENSOR

(a) Remove the 4 bolts and the level sensor.

NOTICE:

Be careful not to drop the oil level sensor when removing.

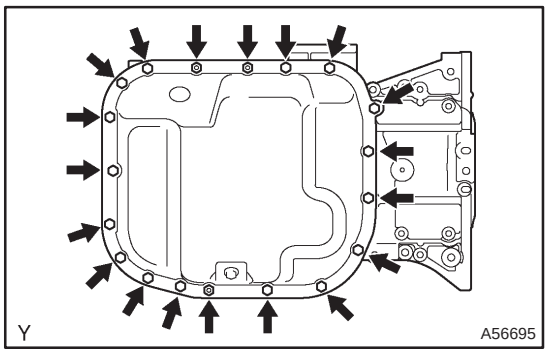

29. REMOVE OIL PAN SUB–ASSY NO.2

(a) Remove the 17 bolts and 2 nuts.

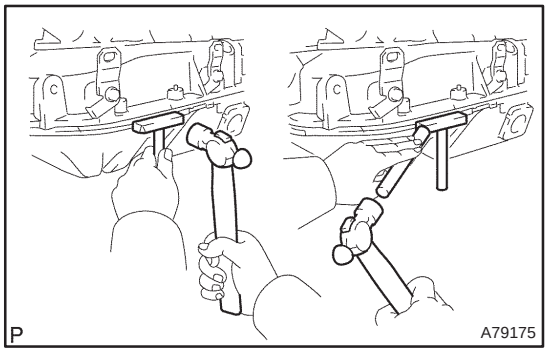

(b) Insert the blade of SST between the No. 1 and No. 2 oil pans, and cut off applied sealer and remove the No. 2 oil pan.

SST 09032–00100

NOTICE:

Be careful not to damage the No. 1 and No. 2 oil pans.

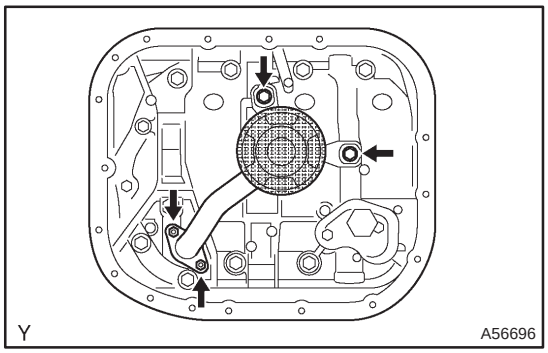

30. REMOVE OIL STRAINER SUB–ASSY

(a) Remove the 2 bolts and 2 nuts, then remove the oil strainer and the gasket.

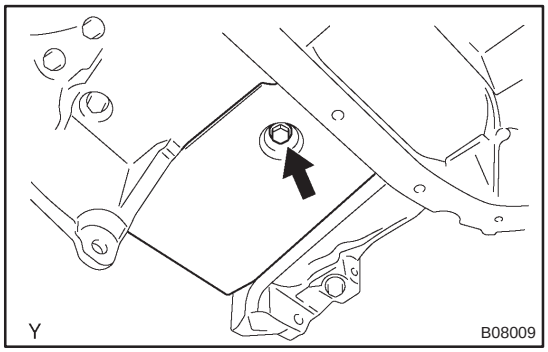

31. REMOVE OIL PAN INSULATOR

(a) Remove the bolt and the oil pan insulator.

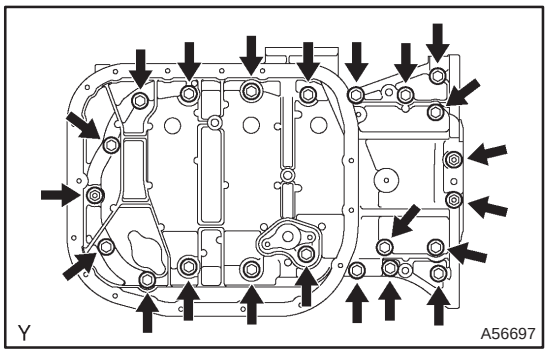

32. REMOVE OIL PAN SUB–ASSY

(a) Remove the 19 bolts and 3 nuts.

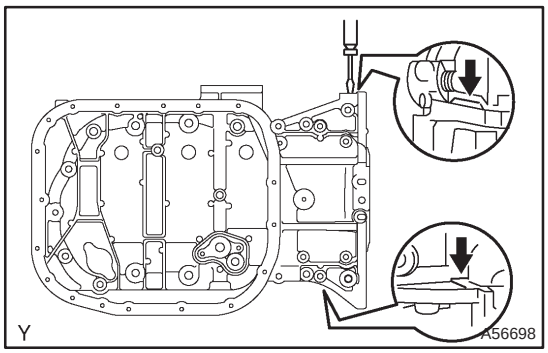

(b) Using a screwdriver, remove the oil pan by prying between the cylinder block and the No. 1 oil pan.

NOTICE:

Be careful not to damage the cylinder block and No. 1 oil pan.

33. REMOVE CRANKSHAFT POSITION SENSOR

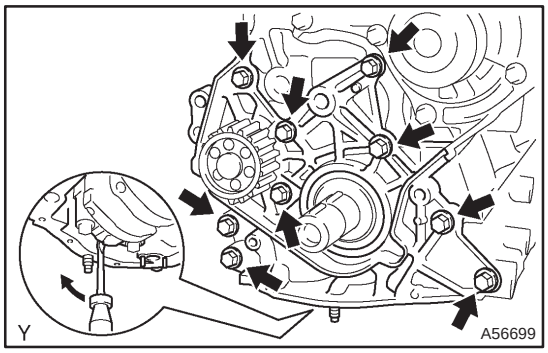

34. REMOVE OIL PUMP ASSY

(a) Remove the 9 bolts.

(b) Remove the oil pump by prying between the oil pump and the main bearing cap with a screwdriver.

(c) Remove the gasket.

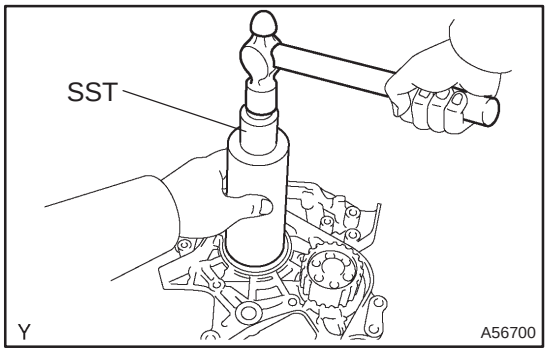

35. INSTALL CRANKSHAFT SEAL

(a) Using SST and a hammer, tap in a new oil seal until its surface is flush with the oil pump edge.
SST 09316–60011 (09316–00011, 09316–00021)

36. INSTALL OIL PUMP ASSY

(a) Remove any old packing (FIPG) and be careful not to drop any oil on the contact surfaces of the oil pump and the cylinder block.
(1) Using a razor blade and a gasket scraper, remove all the old packing from the gasket surfaces and the sealing groove.
(2) Thoroughly clean all components to remove all the loose material.
(3) Using a non–residue solvent, clean both the sealing surfaces.

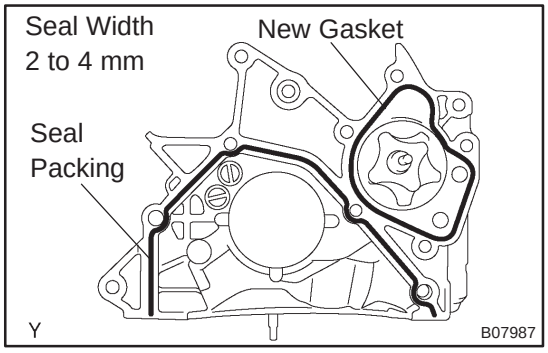

(b) Apply seal packing to the oil pump as shown in the illustration.
Seal packing: Part No. 08826–00080 or equivalent

NOTICE:

Avoid applying an excessive amount to the surface.

(1) Install a nozzle that has been cut to a 2 to 4 mm (0.08 to 0.16 in.) opening.
(2) Parts must be set within 3 minutes and assembled within 15 minutes of application. Otherwise the material must be removed and reapplied.
(3) Immediately remove nozzle from the tube and reinstall the cap.

(c) Install a new gasket to the oil pump.

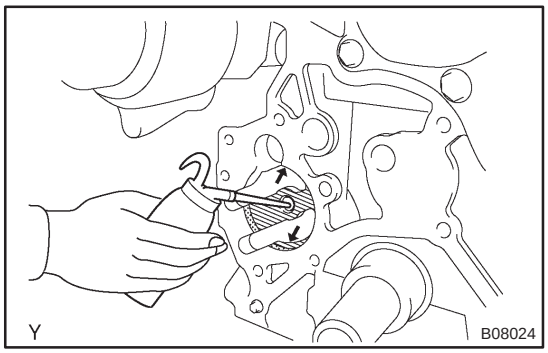

(d) Pour in 0.5 cm^3 (0.03 cu in.) or more of engine oil into the bushing of the cylinder block.

(e) Apply engine oil to the cylinder block side where it contacts with the oil pump driven rotor.

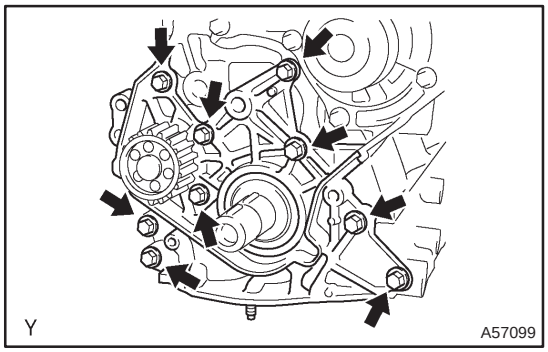

(f) Install the oil pump with the 9 bolts.
Torque: 31 N·m (320 kgf·cm, 23 ft·lbf)

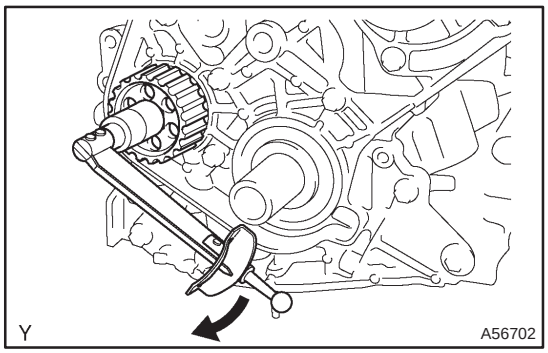

(g) Measure the oil pump rotating torque.
(1) Check that the pump rotates smoothly without noise.
(2) Using a torque wrench, check the pump rotating torque.
Rotating torque: 3.0 N·m (31 kgf·cm, 27 in.·lbf) or less

37. INSTALL CRANKSHAFT POSITION SENSOR
Torque: 8.8 N·m (90 kgf·cm, 78 in.·lbf)

38. INSTALL OIL PAN SUB–ASSY

(a) Remove any old packing (FIPG) and be careful not to drop any oil on the contact surfaces of the No. 1 oil pan, the cylinder block and the oil pump and the rear oil seal retainer.
(1) Using a razor blade and gasket scraper, remove all the old packing from the gasket surfaces.
(2) Thoroughly clean all components to remove all the loose material.
(3) Using a non–residue solvent, clean both the sealing surfaces.

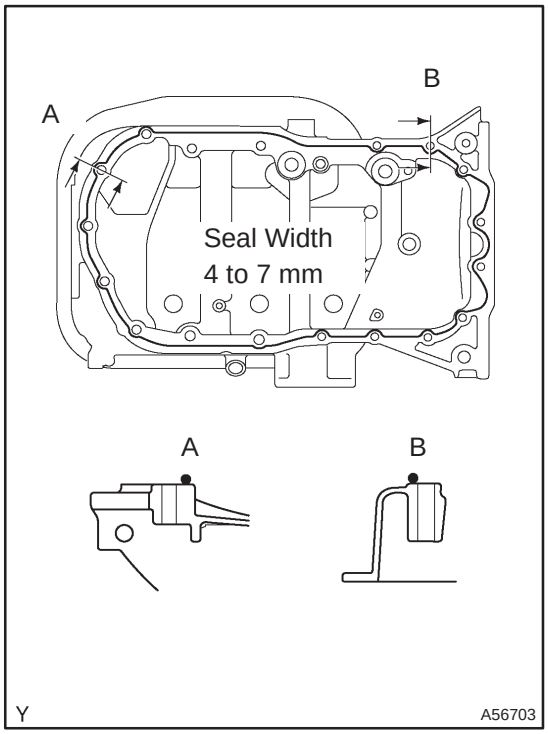

(b) Apply a seal packing to the No. 1 oil pan as shown in the illustration.

Seal packing: Part No. 08826–00080 or equivalent

(1) Install a nozzle that has been cut to a 4 to 7 mm (0.16 to 0.28 in.) opening.

(2) Parts must be set within 3 minutes and assembled within 15 minutes of application. Otherwise the material must be removed and reapplied.

(3) Immediately remove nozzle from the tube and reinstall the cap.

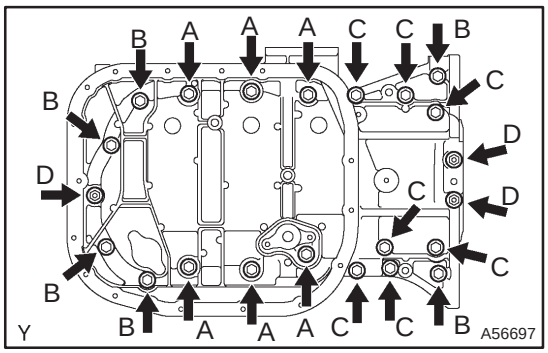

(c) Install the oil pan with the 19 bolts and 3 nuts.

Torque:
42 N·m (428 kgf·cm, 31 ft·lbf) for bolt A
21 N·m (214 kgf·cm, 15 ft·lbf) for bolt B
11 N·m (112 kgf·cm, 8 ft·lbf) for bolt C
12 N·m (122 kgf·cm, 9 ft·lbf) for nut D

39. INSTALL OIL PAN INSULATOR

(a) Install the oil pan insulator with the bolt.

Torque: 7.5 N·m (76 kgf·cm, 66 in.·lbf)

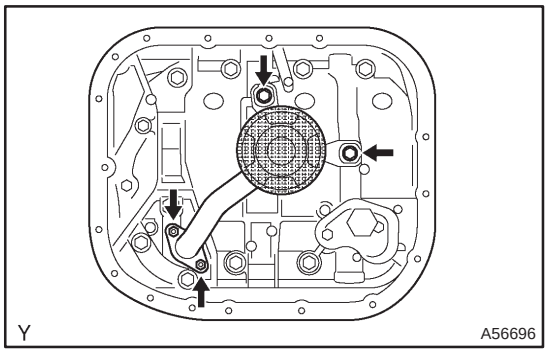

40. INSTALL OIL STRAINER SUB–ASSY

(a) Install a new gasket and the oil strainer with the 2 bolts and 2 nuts.

Torque:
21 N·m (209 kgf·cm, 15 ft·lbf) for bolt
13 N·m (135 kgf·cm, 10 ft·lbf) for nut

41. INSTALL OIL PAN SUB–ASSY NO.2

(a) Remove any old packing and be careful not to drop any oil on the contact surfaces of the No. 1 and No. 2 oil pans.

(1) Using a razor blade and gasket scraper, remove all the old packing from the gasket surfaces.

(2) Thoroughly clean all components to remove all the loose material.

(3) Using a non–residue solvent, clean both the sealing surfaces.

NOTICE:
Do not use a solvent, which will affect the painted surfaces.

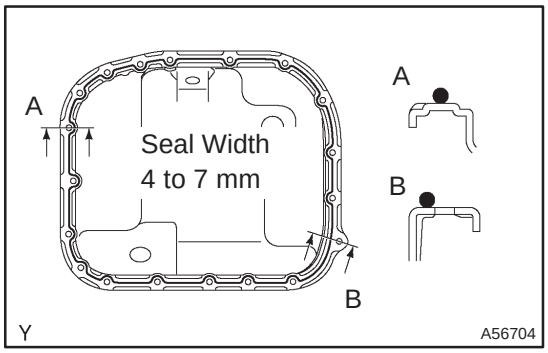

(b) Apply a seal packing to the oil pan as shown in the illustration.
Seal packing: Part No. 08826–00080 or equivalent
(1) Install a nozzle that has been cut to a 4 to 7 mm (0.16 to 0.28 in.) opening.
(2) Parts must be set within 3 minutes and assembled within 15 minutes of application. Otherwise the material must be removed and reapplied.
(3) Immediately remove nozzle from the tube and reinstall the cap.

(c) Install the oil pan with the 17 bolts and 2 nuts. Tighten the bolts and nuts uniformly in several steps.
Torque: 12 N·m (119 kgf·cm, 9 ft·lbf)

42. INSTALL ENGINE OIL LEVEL SENSOR
Torque: 7.0 N·m (71 kgf·cm, 62 in.·lbf)

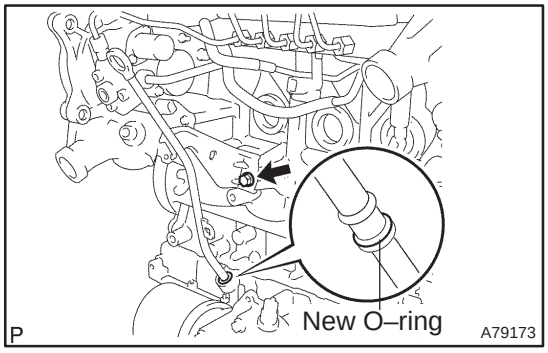

43. INSTALL OIL LEVEL GAGE GUIDE
(a) Install a new O–ring to the oil level gage guide.
(b) Apply engine oil to the O–ring.
(c) Push in the oil level gage guide end into the guide hole of the No. 1 oil pan.
(d) Install the oil level gage guide with the bolt.
Torque: 18 N·m (184 kgf·cm, 13 ft·lbf)
(e) Apply engine oil to the O–ring on the oil level gage.
(f) Install the oil level gage.

44. INSTALL V–RIBBED BELT TENSIONER ASSY
Torque: 31 N·m (320 kgf·cm, 23 ft·lbf)
45. INSTALL TIMING BELT IDLER SUB–ASSY NO.1
Torque: 35 N·m (357 kgf·cm, 26 ft·lbf)
46. INSTALL GENERATOR ASSY (See page 19–29)

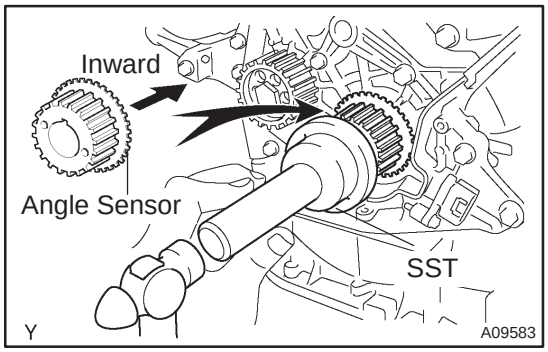

47. INSTALL CRANKSHAFT TIMING PULLEY

(a) Align the keyway of the timing pulley with the key located on the camshaft, slide the pulley into place.

(b) Using SST and a hammer, tap in the timing pulley with the angle sensor facing inward.
SST 09223–46011

48. INSTALL TIMING BELT IDLER SUB–ASSY NO.2
Torque: 47 N·m (479 kgf·cm, 35 ft·lbf)

49. SET NO. 1 CYLINDER TO TDC/COMPRESSION (See page 14–307)
SST 09960–10010 (09962–01000, 09963–01000)

50. INSTALL TIMING BELT (See page 14–307)

51. CHECK VALVE TIMING (See page 14–307)

52. INSTALL TIMING CHAIN COVER PLATE (See page 14–307)

53. INSTALL TRANSVERSE ENGINE ENGINE MOUNTING BRACKET (See page 14–307)

54. INSTALL TIMING BELT GUIDE (See page 14–307)

55. INSTALL TIMING BELT NO.1 COVER (See page 14–307)

56. INSTALL TIMING BELT NO.2 COVER (See page 14–307)

57. INSTALL CRANKSHAFT PULLEY (See page 14–307)
SST 09213–54015 (90105–08076), 09330–00021

58. INSTALL ENGINE MOUNTING INSULATOR SUB–ASSY RH
Torque: 52 N·m (530 kgf·cm, 38 ft·lbf)

59. INSTALL IDLER PULLEY SUB–ASSY

60. INSTALL POWER STEERING IDLE PULLEY BRACKET (See page 14–286)

61. ADJUST V (COOLER COMPRESSOR TO CRANKSHAFT PULLEY) BELT NO.1 (See page 14–269)

62. INSTALL INJECTOR DRIVER (See page 14–307)

63. INSTALL ENGINE COVER NO.1
Torque: 8.0 N·m (82 kgf·cm, 71 in.·lbf)

64. INSTALL FRONT WHEEL RH
Torque: 103 N·m (1,050 kgf·cm, 76 ft·lbf)

65. ADD ENGINE OIL (See page 17–30)

66. CHECK FOR ENGINE OIL LEAKS

OIL FILTER SUB–ASSY (1CD–FTV)

170FO–01

REPLACEMENT

NOTICE:

- **Prolonged and repeated contact with engine oil will result in the removal of natural oils from the skin, leading to dryness, irritation and dermatitis. In addition, used engine oil contains potentially harmful contaminants which may cause skin cancer.**
- **Precautions should be taken when replacing engine oil to minimize the risk of your skin making contact with used engine oil. Wear protective clothing and gloves. Wash your skin thoroughly with soap and water, or use water–less hand cleaner to remove any used engine oil. Do not use gasoline, thinners, or solvents.**
- **In order to preserve the environment, used oil and oil filter must be disposed of at designated disposal sites.**

1. DRAIN ENGINE OIL

(a) Remove the oil filler cap.

(b) Remove the oil drain plug and drain the oil into a container.

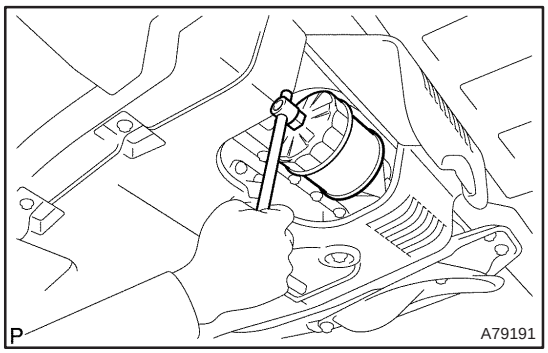

2. REMOVE OIL FILTER SUB–ASSY

(a) Remove the clip and open the engine under cover.

(b) Using SST, remove the oil filter.
SST 09228–10002

3. INSTALL OIL FILTER SUB–ASSY

(a) Check and clean the oil filter installation surface.

(b) Apply clean engine oil to the gasket of a new oil filter.

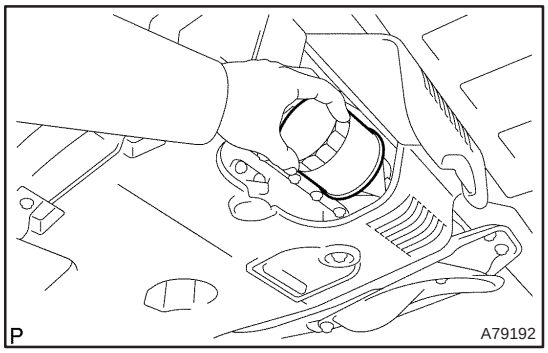

(c) Lightly screw the oil filter into place, and tighten it until the gasket contacts the seat.

(d) Using SST, tighten it an additional 3/4 turn.
SST 09228–10002

4. ADD ENGINE OIL

(a) Clean and install the oil drain plug with a new gasket.
Torque: 34 N·m (350 kgf·cm, 25 ft·lbf)

(b) Fill with fresh engine oil.
Capacity:
With the oil filter replacement: 5.9 liters (6.2 US qts, 5.2 lmp. qts)
Without the oil filter replacement: 5.3 liters (5.6 US qts, 4.7 lmp. qts)
Dry fill: 6.7 liters (7.1 US qts, 5.9 lmp. qts)

(c) Install the oil filler cap.

5. CHECK FOR ENGINE OIL LEAKS

OIL COOLER ASSY (1CD–FTV)

170FQ–01

REPLACEMENT

1. DRAIN ENGINE COOLANT (See page 16–44)
2. DRAIN ENGINE OIL (See page 17–30)
3. REMOVE ENGINE UNDER COVER LH

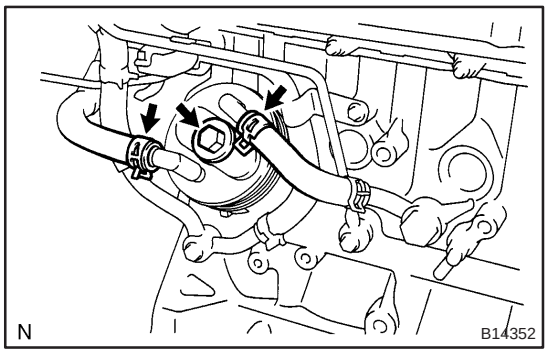

4. REMOVE OIL COOLER ASSY

(a) Disconnect the 2 cooler hoses from the oil cooler.
(b) Remove the union bolt and the oil cooler.
(c) Remove the O–ring from the oil cooler.
(d) Remove the O–ring from the union bolt.

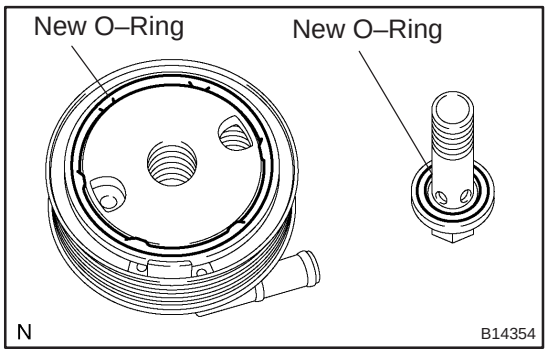

5. INSTALL OIL COOLER ASSY

(a) Clean the oil cooler mounting surface.
(b) Install a new O–ring to the union bolt.
(c) Install a new O–ring to the oil cooler.

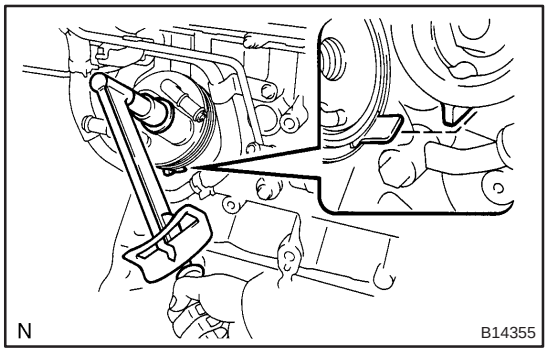

(d) Apply a light coat of engine oil on the threads of the union bolt.
(e) Align the tab of the oil cooler with the tab located on the cylinder block.
(f) Install the oil cooler with the union bolt.
Torque: 45 N·m (454 kgf·cm, 33 ft·lbf)
(g) Connect the 2 cooler hoses to the oil cooler.

6. ADD ENGINE OIL (See page 17–30)
7. ADD ENGINE COOLANT (See page 16–44)
8. CHECK FOR ENGINE OIL LEAKS (See page 16–44)
9. CHECK FOR ENGINE COOLANT LEAKS

IGNITION SYSTEM (1ZZ–FE/3ZZ–FE)

1807O–01

ON–VEHICLE INSPECTION

NOTICE:

"Cold" and "Hot" in this section mean the temperature of the coils themselves."Cold" is from –10°C (14°F) to 50 °C (122 °F) and "Hot" is from 50 °C (122 °F) to 100 °C (212 °F).

1. INSPECT IGNITION COIL (WITH IGNITER) AND SPARK TEST

(a) Check for DTCs.

NOTICE:

If DTC is present, perform a troubleshooting in accordance with a procedure for that DTC.

(b) Check that spark occurs.

(1) Remove the cylinder head cover No. 2. (See page 14–6)

(2) Remove the ignition coils (with igniter).

(3) Using a 16mm (0.63 in) plug wrench, remove the spark plugs.

(4) Install the spark plugs to each ignition coil (with igniter) and connect the ignition coil connectors.

(5) Disconnect the 4 injector connectors.

(6) Ground the spark plugs.

(7) Check if spark occurs at each spark plug while engine is being cranked.

NOTICE:

- **Be sure to ground the spark plug when checking.**
- **Replace the ignition coil it is given physical impact.**
- **Do not crank the engine for more than 2 seconds.**

If the sparks do not occur, do the following test:

SPARK TEST

↓ NG

CHECK CONNECTION OF IGNITION COIL WITH IGNITER CONNECTOR → NG → Connect securely.

↓ OK

CHANGE IT TO NORMAL IGNITION COIL WITH IGNITER AND PERFORM SPARK TEST AGAIN → OK → Replace ignition coil with igniter.

↓ NG

CHECK POWER SUPPLY TO IGNITION COIL WITH IGNITER
1. Turn ignition switch ON.
2. Check that there is battery voltage at ignition coil positive (+) terminal.

→ NG → Check wiring between ignition switch to ignition coil with igniter.

↓ OK

CHECK RESISTANCE OF CAMSHAFT POSITION SENSOR (See page 18–3)

	Cold	Hot
Resistance:	**835 to 1,400 Ω**	**1,060 to 1,645 Ω**

→ NG → Replace camshaft position sensor.

↓ OK

CHECK RESISTANCE OF CRANKSHAFT POSITION SENSOR (See page 18–3)

	Cold	Hot
Resistance:	**1,630 to 2,740 Ω**	**2,065 to 3,225 Ω**

→ NG → Replace crankshaft position sensor.

↓ OK

CHECK IGT SIGNAL FROM ECM (See page 05–103) → NG → Check ECM (See page 01–32)

↓ OK

REPAIR WIRING BETWEEN IGNITION COIL AND ECM

(c) Using a 16 mm (0.63 in.) plug wrench, install the spark plugs.
Torque: 18 N·m (184 kgf·cm, 13 ft·lbf)

(d) Install the ignition coil with igniter.
Torque: 9.0 N·m (92 kgf·cm, 80 in.·lbf)

(e) Install the cylinder head cover No. 2. (See page 14–6)

INSPECTION

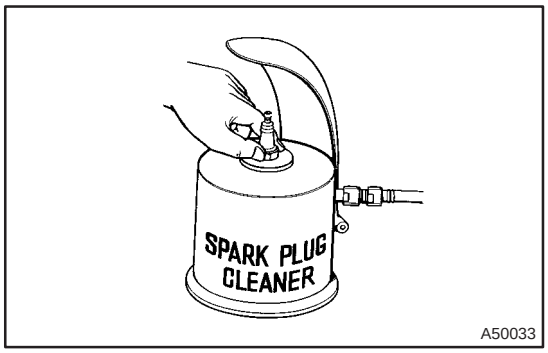

1. INSPECT SPARK PLUG

(a) Clean the spark plugs.

If the electrode has traces of wet carbon, clean the electrode with a spark plug cleaner then dry it.

Air pressure: Below 588 kPa (6kg/cm^2, 85 psi)
Duration: 20 seconds or less

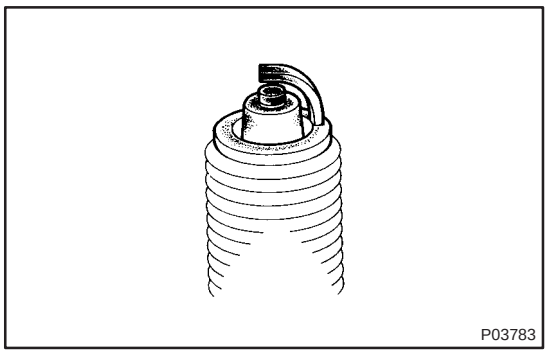

(b) Check the spark plug for any damage on its thread and insulator damage.

If there is damage, replace the spark plug.

Recommended spark plug:

DENSO made	K16R–U11
NGK made	BKR5EYA11

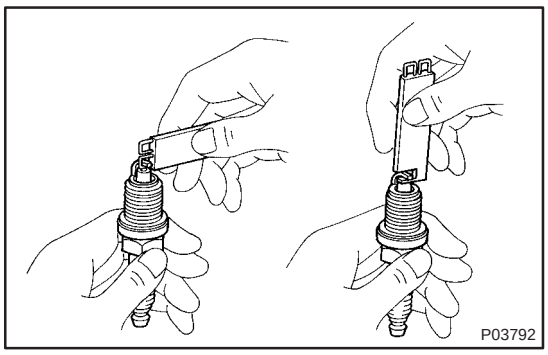

(c) Adjust electrode gap.

Electrode gap: 1.0 to 1.1 mm (0.039 to 0.043 in.)

2. INSPECT CAMSHAFT POSITION SENSOR

(a) Using an ohmmeter, measure the resistance between the terminals.

RESISTANCE:
835 to 1,400 Ω at cold
1,060 to 1,645 Ω at hot

NOTICE:

"Cold" and "Hot" mean the temperature of the coils themselves."Cold" is from – 10°C (14°F) to 50 °C (122 °F) and "Hot" is from 50 °C (122 °F) to 100 °C (212 °F).

3. INSPECT CRANKSHAFT POSITION SENSOR

(a) Using an ohmmeter, measure the resistance between the terminals.

RESISTANCE:

1,630 to 2,740 Ω at cold

2,065 to 3,225 Ω at hot

NOTICE:

"Cold" and "Hot" mean the temperature of the coils themselves."Cold" is from – 10°C (14°F) to 50 °C (122 °F) and "Hot" is from 50 °C (122 °F) to 100 °C (212 °F).

CAMSHAFT POSITION SENSOR (1ZZ–FE/3ZZ–FE)

1807I–01

REPLACEMENT

1. **REMOVE RADIATOR SUPPORT OPENING COVER (See page 10–9)**
2. **REMOVE CYLINDER HEAD COVER NO.2 (See page 10–9)**

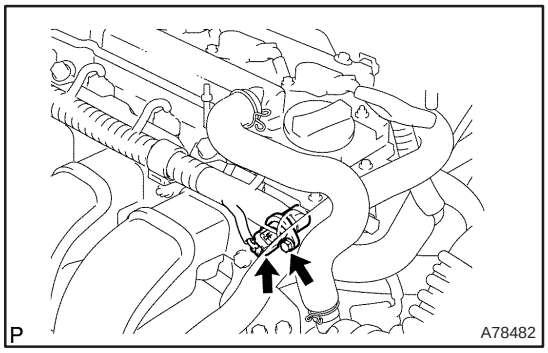

3. **REMOVE CAMSHAFT POSITION SENSOR**

(a) Disconnect the camshaft position sensor connector.

(b) Remove the bolt, and then remove the camshaft position sensor.

4. **INSTALL CAMSHAFT POSITION SENSOR**

(a) Apply a light coat of engine oil to the O–ring on the camshaft position sensor.

(b) Install the camshaft position sensor with the bolt.

Torque: 9.0 N·m (92 kgf·cm, 80 in.·lbf)

(c) Connect the camshaft position sensor connector.

5. **INSTALL CYLINDER HEAD COVER NO.2 (See page 10–9)**
6. **INSTALL RADIATOR SUPPORT OPENING COVER**

CRANKSHAFT POSITION SENSOR (1ZZ–FE/3ZZ–FE)

1807J–01

REPLACEMENT

1. REMOVE ENGINE UNDER COVER LH (See page 19–20)
2. REMOVE ENGINE UNDER COVER SUB–ASSY NO.1 (See page 10–17)
3. REMOVE ENGINE UNDER COVER RH (See page 19–20)
4. REMOVE RADIATOR SUPPORT OPENING COVER (See page 10–9)
5. REMOVE ENGINE ROOM COVER SIDE (See page 10–9)
6. REMOVE FAN AND GENERATOR V BELT (See page 14–5)
7. REMOVE GENERATOR ASSY (See page 19–7)

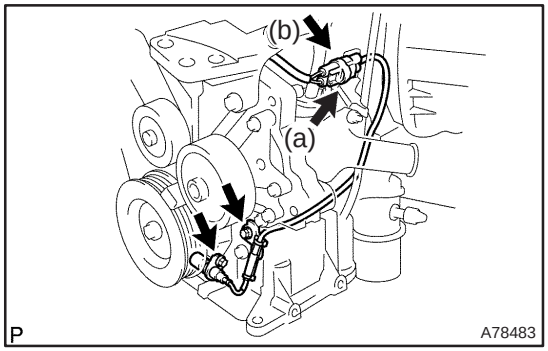

8. REMOVE CRANKSHAFT POSITION SENSOR

(a) Disconnect the crankshaft position sensor connector.
(b) Remove the connector clamp.
(c) Remove the 2 bolts, and then remove the crankshaft position sensor.
(d) Remove the cord clamp from the crankshaft position sensor.

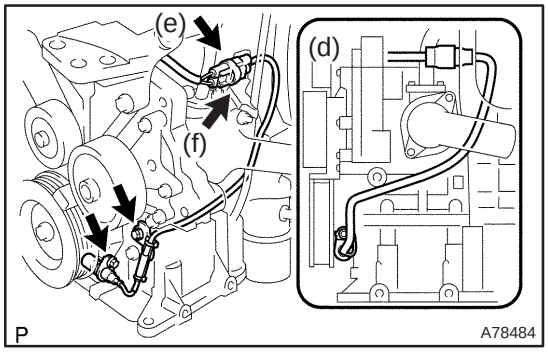

9. INSTALL CRANKSHAFT POSITION SENSOR

(a) Install the cord clamp to the crankshaft position sensor.
(b) Apply a light coat of engine oil on the O–ring of the crankshaft position sensor.
(c) Install the crankshaft position sensor with the 2 bolts.
Torque: 9.0 N·m (92 kgf·cm, 80 in.·lbf)
(d) Install the wire harness as shown in the illustration.
(e) Install the connector clamp.
(f) Connect the crankshaft position sensor connector.

10. INSTALL GENERATOR ASSY (See page 19–7)
11. INSTALL FAN AND GENERATOR V BELT (See page 14–5)
12. INSTALL ENGINE ROOM COVER SIDE
13. INSTALL RADIATOR SUPPORT OPENING COVER
14. INSTALL ENGINE UNDER COVER RH
15. INSTALL ENGINE UNDER COVER SUB–ASSY NO.1
16. INSTALL ENGINE UNDER COVER LH

IGNITION SYSTEM (1AZ–FE)

1807M–01

ON–VEHICLE INSPECTION

NOTICE:

"Cold" and "Hot" in this section mean the temperature of the coils themselves."Cold" is from –10°C (14°F) to 50 °C (122 °F) and "Hot" is from 50 °C (122 °F) to 100 °C (212 °F).

1. INSPECT IGNITION COIL (WITH IGNITER) AND SPARK TEST

(a) Check for DTCs.

NOTICE:

If DTC is present, perform a troubleshooting in accordance with a procedure for that DTC.

(b) Check that spark occurs.

(1) Remove the cylinder head cover No. 1. (See page 14–106)

(2) Remove the ignition coils (with igniter).

(3) Using a 16mm (0.63 in) plug wrench, remove the spark plugs.

(4) Install the spark plugs to each ignition coil (with igniter) and connect the ignition coil connectors.

(5) Disconnect the 4 injector connectors.

(6) Ground the spark plugs.

(7) Check if spark occurs at each spark plug while engine is being cranked.

NOTICE:

- **Be sure to ground the spark plug when checking.**
- **Replace the ignition coil if it is given physical impact.**
- **Do not crank the engine for more than 2 seconds.**

If the sparks do not occur, do the following test:

SPARK TEST

↓ NG

CHECK CONNECTION OF IGNITION COIL WITH IGNITER CONNECTOR → NG → Connect securely.

↓ OK

CHANGE IT TO NORMAL IGNITION COIL WITH IGNITER AND PERFORM SPARK TEST AGAIN → OK → Replace ignition coil with igniter.

↓ NG

CHECK POWER SUPPLY TO IGNITION COIL WITH IGNITER
1. Turn ignition switch ON.
2. Check that there is battery voltage at ignition coil positive (+) terminal.

→ NG → Check wiring between ignition switch to ignition coil with igniter.

↓ OK

CHECK RESISTANCE OF CAMSHAFT POSITION SENSOR (See page 18–9)

	Cold	Hot
Resistance:	**835 to 1,400 Ω**	**1,060 to 1,645 Ω**

→ NG → Replace camshaft position sensor.

↓ OK

CHECK RESISTANCE OF CRANKSHAFT POSITION SENSOR (See page 18–9)

	Cold	Hot
Resistance:	**985 to 1,600 Ω**	**1,265 to 1,890 Ω**

→ NG → Replace crankshaft position sensor.

↓ OK

CHECK IGT SIGNAL FROM ECM (See page 05–232) → NG → Check ECM (See page 01–32)

↓ OK

REPAIR WIRING BETWEEN IGNITION COIL AND ECM

(c) Using a 16 mm (0.63 in.) plug wrench, install the spark plugs.
Torque: 19 N·m (194 kgf·cm, 14 ft·lbf)

(d) Install the ignition coil with igniter.
Torque: 9.0 N·m (92 kgf·cm, 80 in.·lbf)

(e) Install the cylinder head cover No. 1. (See page 14–106)

INSPECTION

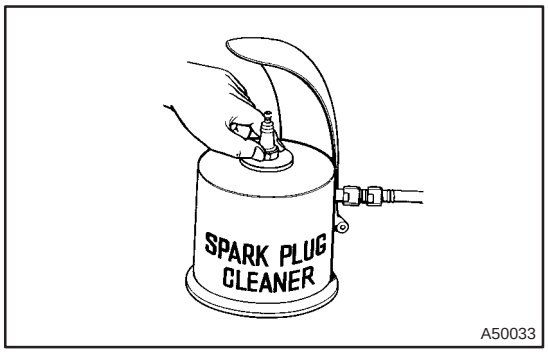

1. INSPECT SPARK PLUG (EXCEPT EUROPE)

(a) Clean the spark plugs.

If the electrode has traces of wet carbon, clean the electrode with a spark plug cleaner then dry it.

Air pressure: Below 588 kPa (6kg/cm^2, 85 psi)
Duration: 20 seconds or less

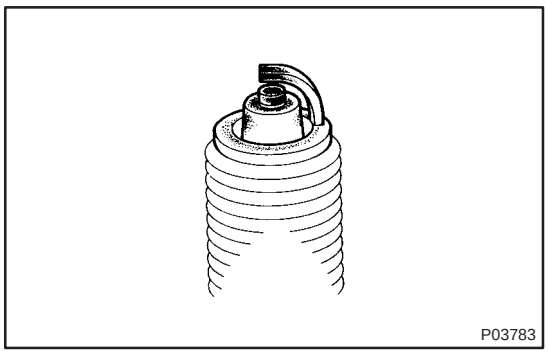

(b) Check the spark plug for any damage on its thread and insulator damage.

If there is damage, replace the spark plug.

Recommended spark plug:

DENSO made	K20R–U11
NGK made	BKR6EYA11

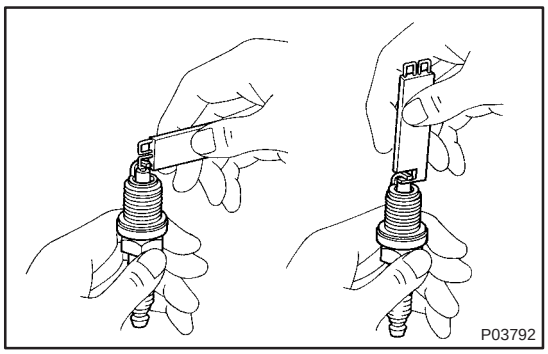

(c) Adjust electrode gap.

Electrode gap: 1.0 to 1.1 mm (0.039 to 0.043 in.)

2. INSPECT SPARK PLUG (FOR EUROPE)

NOTICE:

- **Do not use a wire brush for cleaning.**
- **Do not attempt to adjust the electrode gap of a used spark plug.**
- **Spark plug should be replaced every 100,000 km (60,000 miles).**

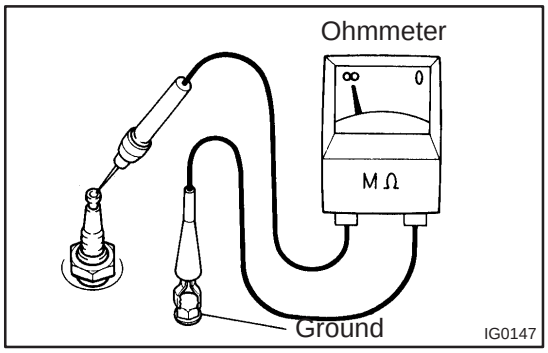

(a) Check the electrode.

(1) Using an ohmmeter, measure the insulation resistance.

Correct insulation resistance: 10 MΩ or more

If the resistance is less then the specified valve, proceed to step (d).

HINT:

If the ohmmeter is not available, perform the following alternative inspection. This provides also fairly accurate results.

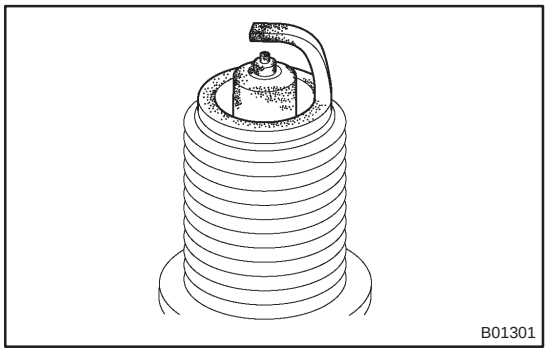

(b) Alternative inspection:
(1) Quickly accelerate the engine to 4,000 rpm 5 times.
(2) Remove the spark plug.
(3) Visually check the spark plug.
(4) If the electrode is dry...OK.
(5) If the electrode is wet...Proceed to step (C).
(6) Reinstall the spark plug.

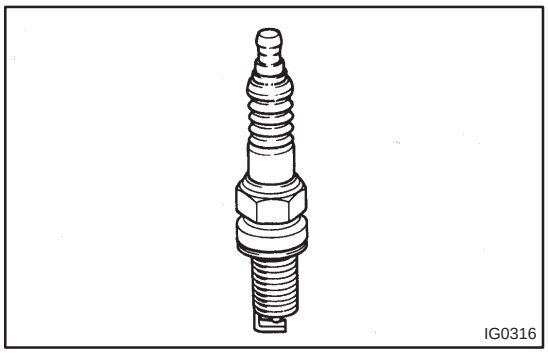

(c) Check the spark plug for any damage on its thread and insulator.

If there is damage, replace the spark plug.

Recommended spark plug:

DENSO made	SK20R11
NGK made	IFR6A11

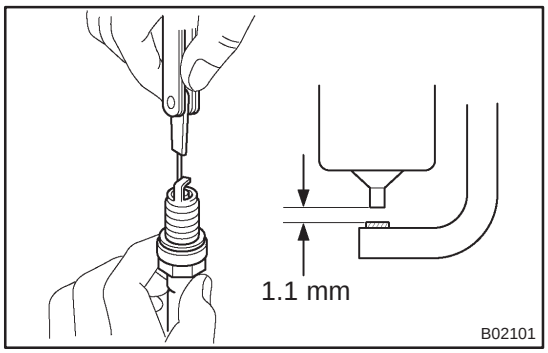

(d) Check the spark plug electrode gap.

Maximum electrode gap for used spark plug:
1.3 mm (0.051 in.)

If the gap is greater than maximum, replace the spark plug.

Correct electrode gap for new spark plug:
1.0 to 1.1 mm (0.039 to 0.043 in.)

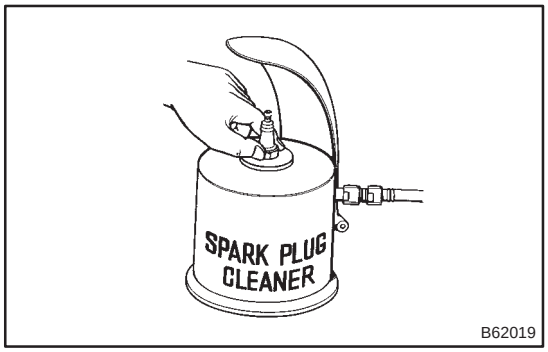

(e) Clean the spark plugs.

If the electrode has traces of wet carbon, clean the electrode with a spark plug cleaner then dry it.

Air pressure: Blow 588 kPa (6 kgf/cm^2, 85 psi)
Duration: 20 seconds or less

HINT:

If there are traces of oil, remove it with gasoline before using the spark plug cleaner.

3. INSPECT CAMSHAFT POSITION SENSOR

(a) Using an ohmmeter, measure the resistance between the terminals.

RESISTANCE:
835 to 1,400 Ω at cold
1,060 to 1,645 Ω at hot

NOTICE:

"Cold" and "Hot" mean the temperature of the coils themselves."Cold" is from – 10°C (14°F) to 50 °C (122 °F) and "Hot" is from 50 °C (122 °F) to 100 °C (212 °F).

4. INSPECT CRANKSHAFT POSITION SENSOR

(a) Using an ohmmeter, measure the resistance between the terminals.

RESISTANCE:

985 to 1,600 Ω at cold

1,265 to 1,890 Ω at hot

NOTICE:

"Cold" and "Hot" mean the temperature of the coils themselves."Cold" is from – 10°C (14°F) to 50 °C (122 °F) and "Hot" is from 50 °C (122 °F) to 100 °C (212 °F).

IGNITION SYSTEM (1AZ–FSE)

1807Q–01

ON–VEHICLE INSPECTION

NOTICE:

"Cold" and "Hot" in this section mean the temperature of the coils themselves."Cold" is from –10°C (14°F) to 50 °C (122 °F) and "Hot" is from 50 °C (122 °F) to 100 °C (212 °F).

1. INSPECT IGNITION COIL (WITH IGNITER) AND SPARK TEST

(a) Check for DTCs.

NOTICE:

If DTC is present, perform a troubleshooting in accordance with a procedure for that DTC.

(b) Check that spark occurs.

(1) Remove the cylinder head cover No. 1. (See page 14–186)

(2) Remove the ignition coils (with igniter).

(3) Using a 16mm (0.63 in) plug wrench, remove the spark plugs.

(4) Install the spark plugs to each ignition coil (with igniter) and connect the ignition coil connectors.

(5) Disconnect the 4 injector connectors.

(6) Ground the spark plugs.

(7) Check if spark occurs at each spark plug while engine is being cranked.

NOTICE:

- **Be sure to ground the spark plug when checking.**
- **Replace the ignition coil it is given physical impact.**
- **Do not crank the engine for more than 2 seconds.**

If the sparks do not occur, do the following test:

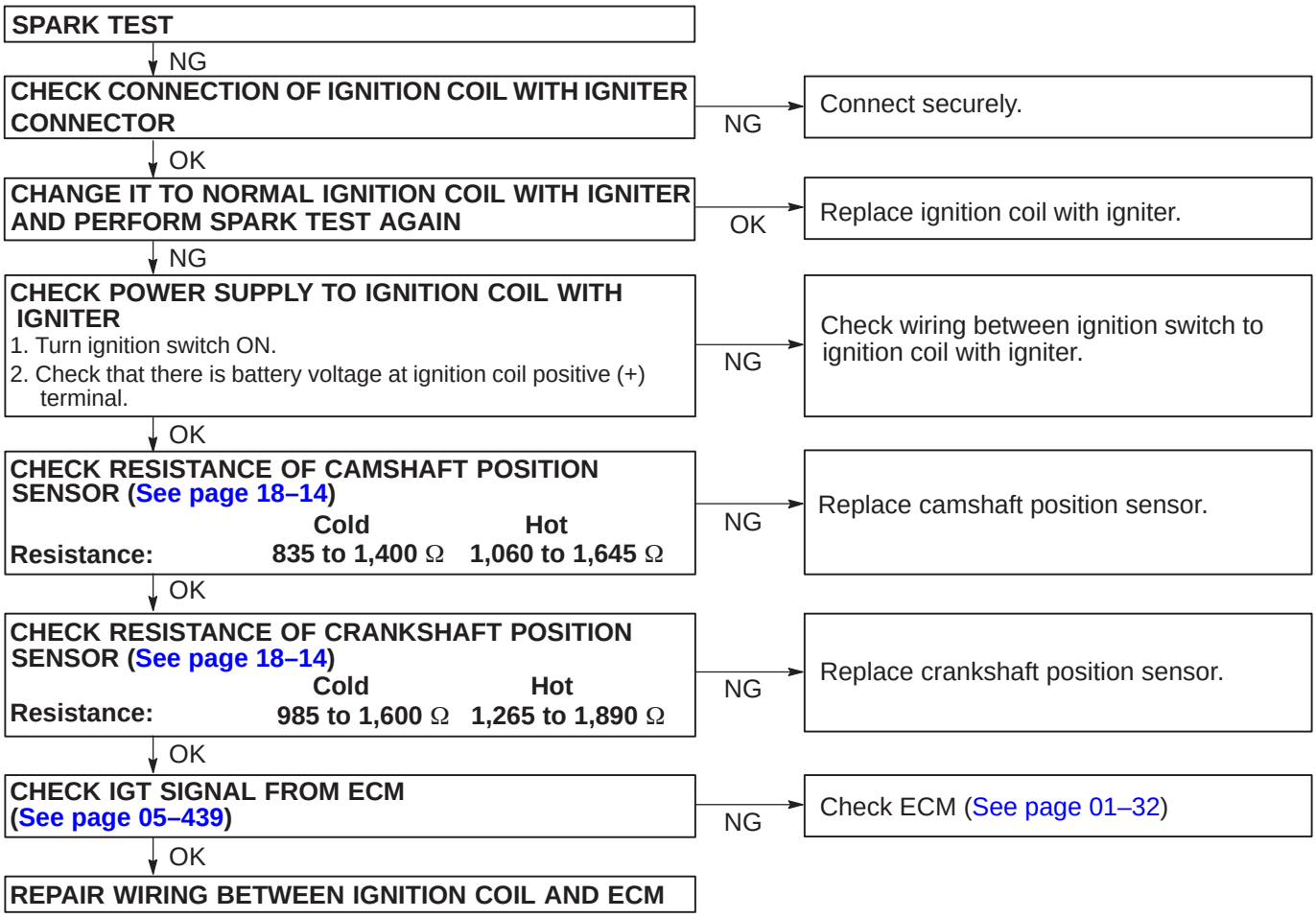

(c) Using a 16 mm (0.63 in.) plug wrench, install the spark plugs.
Torque: 19 N·m (194 kgf·cm, 14 ft·lbf)

(d) Install the ignition coil with igniter.
Torque: 9.0 N·m (92 kgf·cm, 80 in.·lbf)

(e) Install the cylinder head cover No. 1. (See page 14–186)

INSPECTION

1. INSPECT SPARK PLUG

NOTICE:

- **Do not use a wire brush for cleaning.**
- **Do not attempt to adjust the electrode gap of a used spark plug.**
- **Spark plug should be replaced every 100,000 km (60,000 miles).**

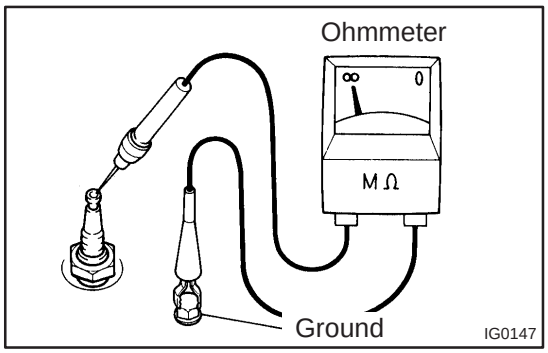

(a) Check the electrode.

(1) Using an ohmmeter, measure the insulation resistance.

Correct insulation resistance: 10 MΩ or more

If the resistance is less then the specified value, proceed to step (d).

HINT:

If the ohmmeter is not available, do the following inspection instead.

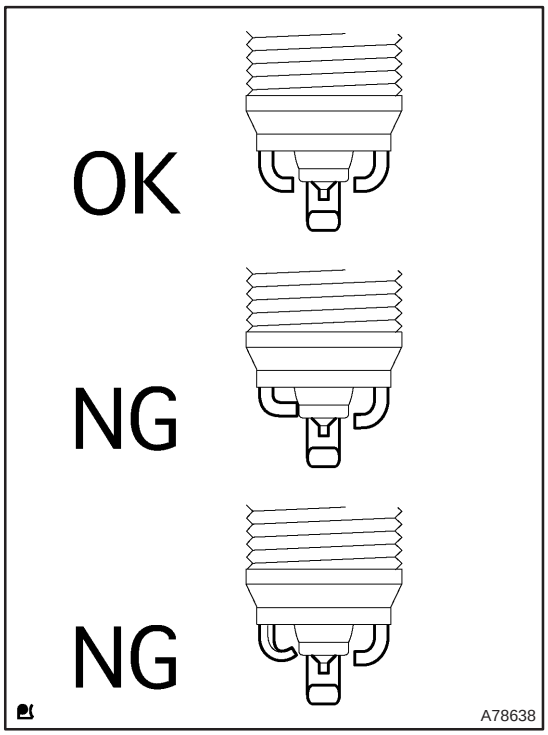

(b) Alternative inspection:

(1) Quickly accelerate the engine to 4,000 rpm 5 times.

(2) Remove the spark plug.

(3) Visually check the spark plug.

If a kink or twist as shown in the illustration on the left is found on the spark plug, replace it with a new one.

(4) If the electrode is dry...OK.

(5) If the electrode is wet...Proceed to step (e).

(6) Reinstall the spark plug.

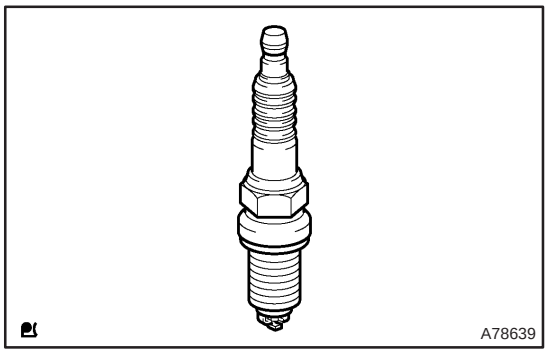

(c) Check the spark plug for any damage on its thread and insulator.

If there is damage, replace the spark plug.

Recommended spark plug:

DENSO made	SK20BR11

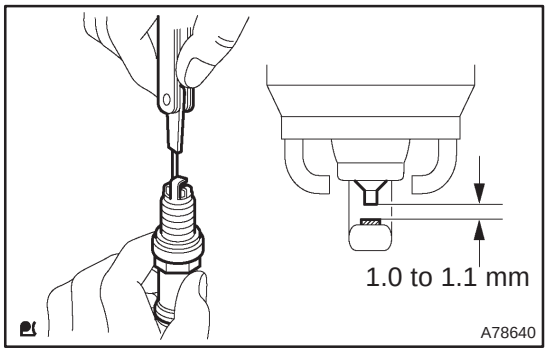

(d) Check the spark plug electrode gap.

Maximum electrode gap for used spark plug:
1.3 mm (0.051 in.)

If the gap is greater than maximum, replace the spark plug.

Correct electrode gap for new spark plug:
1.0 to 1.1 mm (0.039 to 0.043 in.)

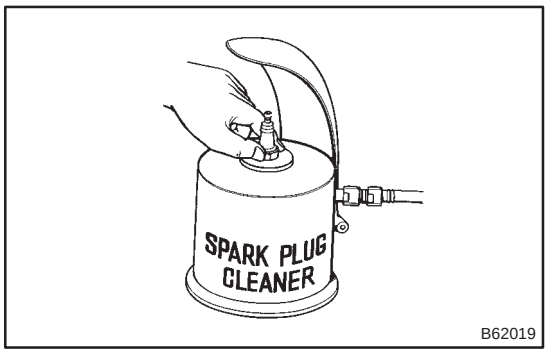

(e) Clean the spark plugs.

If the electrode has traces of wet carbon, clean the electrode with a spark plug cleaner then dry it.

Air pressure: Blow 588 kPa (6 kgf/cm^2, 85 psi)
Duration: 20 seconds or less

HINT:

If there are traces of oil, remove them with gasoline before using the spark plug cleaner.

2. INSPECT CAMSHAFT POSITION SENSOR

(a) Using an ohmmeter, measure the resistance between the terminals.

RESISTANCE:
835 to 1,400 Ω at cold
1,060 to 1,645 Ω at hot

NOTICE:

"Cold" and "Hot" mean the temperature of the coils themselves."Cold" is from –10°C (14°F) to 50 °C (122 °F) and "Hot" is from 50 °C (122 °F) to 100 °C (212 °F).

3. INSPECT CRANKSHAFT POSITION SENSOR

(a) Using an ohmmeter, measure the resistance between the terminals.

RESISTANCE:
985 to 1,600 Ω at cold
1,265 to 1,890 Ω at hot

NOTICE:

"Cold" and "Hot" mean the temperature of the coils themselves."Cold" is from –10°C (14°F) to 50 °C (122 °F) and "Hot" is from 50 °C (122 °F) to 100 °C (212 °F).

CAMSHAFT POSITION SENSOR (1AZ–FE/1AZ–FSE)

1807K–01

REPLACEMENT

1. REMOVE RADIATOR SUPPORT OPENING COVER (See page 10–26)

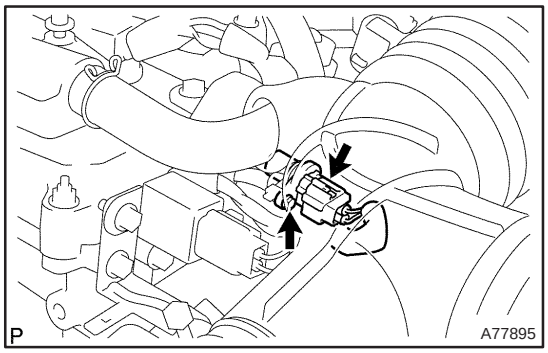

2. REMOVE CAMSHAFT POSITION SENSOR

(a) Disconnect the camshaft position sensor connector.

(b) Remove the bolt, and then remove the camshaft position sensor.

3. INSTALL CAMSHAFT POSITION SENSOR

(a) Apply a light coat of engine oil to the O–ring on the camshaft position sensor.

(b) Install the camshaft position sensor with the bolt.

Torque: 9.0 N·m (92 kgf·cm, 79 in.·lbf)

(c) Connect the camshaft position sensor connector.

4. INSTALL RADIATOR SUPPORT OPENING COVER

CRANKSHAFT POSITION SENSOR (1AZ–FE/1AZ–FSE)

1807L–01

REPLACEMENT

1. **REMOVE ENGINE UNDER COVER LH (See page 19–20)**
2. **REMOVE ENGINE UNDER COVER RH (See page 19–20)**
3. **REMOVE RADIATOR SUPPORT OPENING COVER (See page 10–26)**
4. **REMOVE ENGINE ROOM COVER SIDE (See page 10–26)**
5. **REMOVE FAN AND GENERATOR V BELT**
6. **REMOVE GENERATOR ASSY (See page 19–20)**

   SST 09249–63010

HINT:

- 1AZ–FE: 14–105
- 1AZ–FSE: 14–185

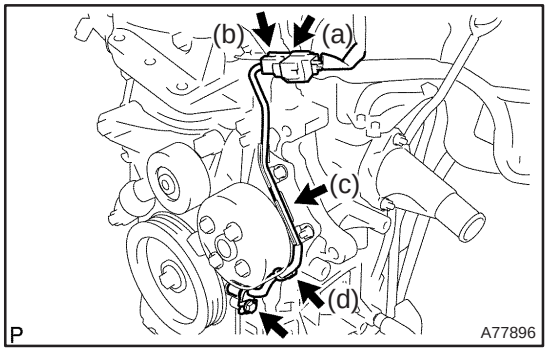

7. **REMOVE CRANKSHAFT POSITION SENSOR**

(a) Disconnect the crankshaft position sensor connector.
(b) Remove the wire harness of the crankshaft position sensor from the wire harness clamp bracket.
(c) Remove the connector clamp.
(d) Remove the wire harness clamp.
(e) Remove the bolt, and then remove the crankshaft position sensor.

8. **INSTALL CRANKSHAFT POSITION SENSOR**

(a) Apply a light coat of engine oil to the O–ring on the crankshaft position sensor.
(b) Install the crankshaft position sensor with the bolt.
Torque: 9.0 N·m (92 kgf·cm, 79 in.·lbf)
(c) Install the wire harness clamp.
(d) Install the connector clamp.
(e) Install the wire harness of the crankshaft position sensor to the the wire harness clamp bracket.
(f) Connect the crankshaft position sensor connector.

9. **INSTALL GENERATOR ASSY (See page 19–20)**
10. **INSTALL FAN AND GENERATOR V BELT**

    SST 09249–63010

HINT:

- 1AZ–FE: 14–105
- 1AZ–FSE: 14–185

11. **INSTALL ENGINE ROOM COVER SIDE**
12. **INSTALL RADIATOR SUPPORT OPENING COVER**
13. **INSTALL ENGINE UNDER COVER RH**
14. **INSTALL ENGINE UNDER COVER LH**

STARTING SYSTEM (1ZZ–FE/3ZZ–FE)

190NO–01

INSPECTION

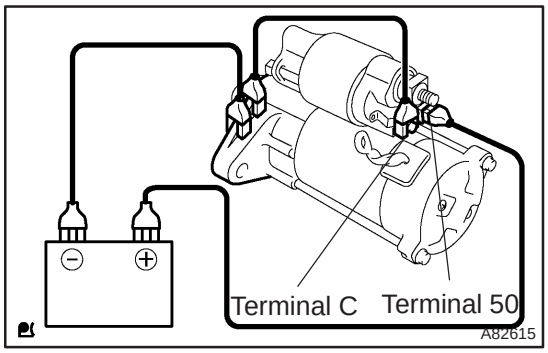

1. INSPECT STARTER ASSY

NOTICE:

These tests must be performed within 3 to 5 seconds to avoid burning out the coil.

(a) Do pull–in test

(1) Disconnect the field coil lead wire from terminal C.

(2) Connect the battery to the magnetic switch as shown in the illustration on the left. Check that the clutch pinion gear is extended.

If the clutch pinion gear is not extended, replace the magnetic switch.

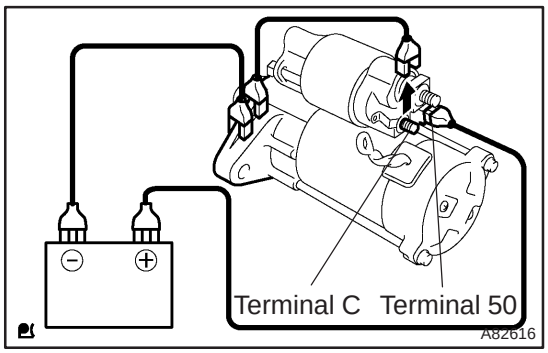

(b) Do hold–in test

(1) Disconnect the negative (–) lead from terminal C with the above condition (a) is being maintained. Check that the pinion gear remains extended.

If the clutch pinion gear returns, replace the magnetic switch.

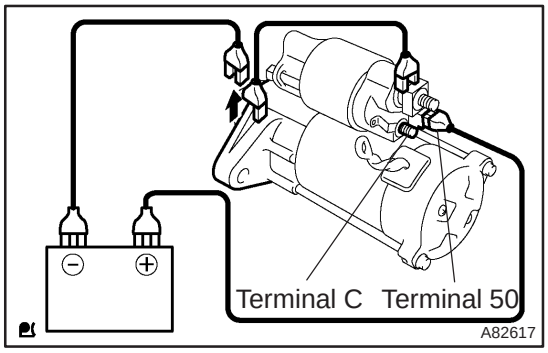

(c) Inspect clutch pinion gear return

(1) Disconnect the negative (–) lead from the switch body. Check that the clutch pinion gear returns.

If the clutch pinion gear does not return, replace the magnetic switch.

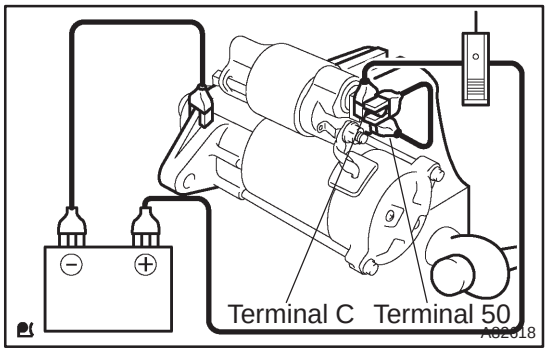

(d) Do no–load performance test

(1) Connect the field coil lead wire to terminal C. Make sure that the lead is not grounded.

Torque: 5.9 N·m (60 kgf·cm, 52 in·lbf)

(2) Clamp the starter in a vise.

(3) Connect the battery and an ammeter to the starter as shown in the illustration.

(4) Check that the starter rotates smoothly and steadily with the clutch pinion gear extended. Check that the ammeter reads the specified current.

Specified current: 85 A or less at 11.5 V

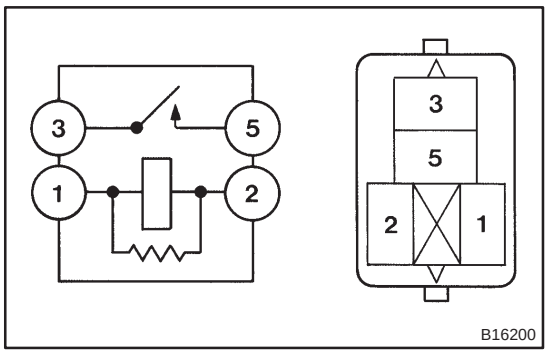

2. INSPECT STARTER RELAY ASSY

(a) Continuity inspection.

(1) Using an ohmmeter, check for continuity between each terminal.

Specified condition:

Terminal No.	Specified condition
1 – 2	Continuity
3 – 5	No continuity
	Continuity (Apply battery voltage terminals 1 and 2)

STARTER ASSY (1ZZ–FE/3ZZ–FE)

190NH–01

REPLACEMENT

1. REMOVE ENGINE UNDER COVER SUB–ASSY NO.1 (See page 10–17)

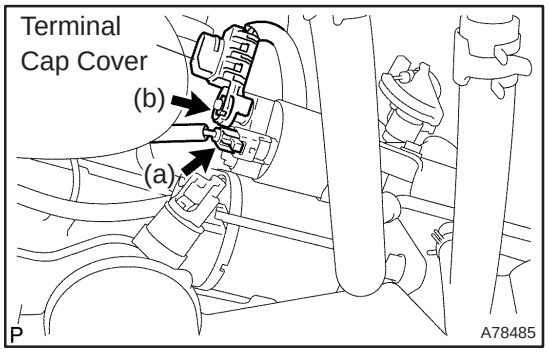

2. REMOVE STARTER ASSY

(a) Disconnect the starter connector.

(b) Open the terminal cap cover.

(c) Remove the nut and disconnect the starter wire.

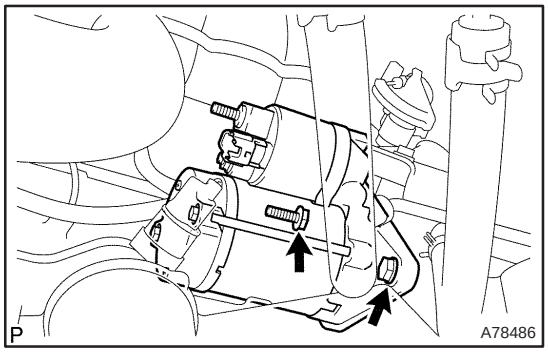

(d) Remove the 2 bolts, and then remove the starter.

3. INSTALL STARTER ASSY

Torque:
37 N·m (378 kgf·cm, 28 ft·lbf) for bolt
9.8 N·m (100 kgf·cm, 7 ft·lbf) for nut

4. INSTALL ENGINE UNDER COVER SUB–ASSY NO.1

CHARGING SYSTEM (1ZZ–FE/3ZZ–FE)

190NP–01

PRECAUTION

1. **Check that the battery cables are connected to the correct terminals.**
2. **Disconnect the battery cables when the battery is given a quick charge.**
3. **Do not perform tests with a high voltage insulation resistance tester.**
4. **Never disconnect the battery while the engine is running.**
5. **Check that the charging cable is tightened on terminal B of the generator and the fuse box.**

190NQ–01

ON–VEHICLE INSPECTION

1. CHECK BATTERY ELECTROLYTE LEVEL

(a) Check the electrolyte quantity of each cell.

(1) If the electrolyte is under the low level, replace the battery (or add distilled water if possible) and check the charging system.

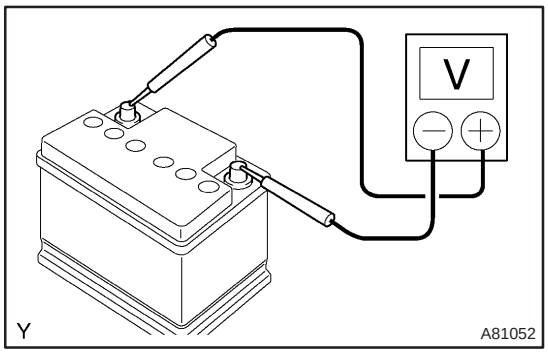

2. CHECK BATTERY VOLTAGE

(a) If it has not been 20 minutes since you drove the vehicle or since the engine was stopped, turn the ignition switch and the electrical system (headlight, blower motor, rear defogger etc.) to the on position for 60 seconds. This will remove the surface charge on the battery.

(b) Turn off the ignition switch and the electrical systems.

(c) Measure the battery voltage between the negative (–) and positive (+) terminals of the battery.

Standard voltage: 12.5 to 12.9 V at 20°C (68°F)

HINT:

If the voltage is less than specification, charge the battery.

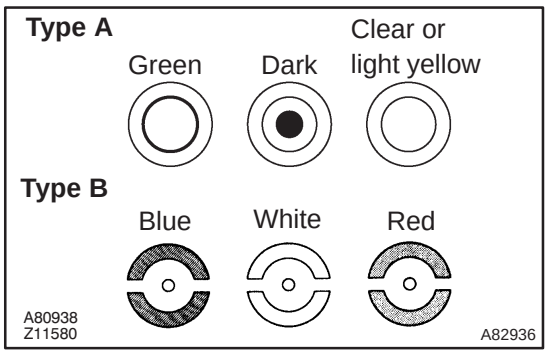

(d) Check the indicator as shown in the illustration.

HINT:

Indicator color		Condition
Type A	Type B	
Green	Blue	OK
Dark	White	Charging necessary
Clear or light yellow	Red	Replace

3. CHECK BATTERY TERMINALS, FUSIBLE LINK AND FUSES

(a) Check that the battery terminals are not loosened or corroded.

(b) Check the fusible links, high–current fuses and regular fuses.

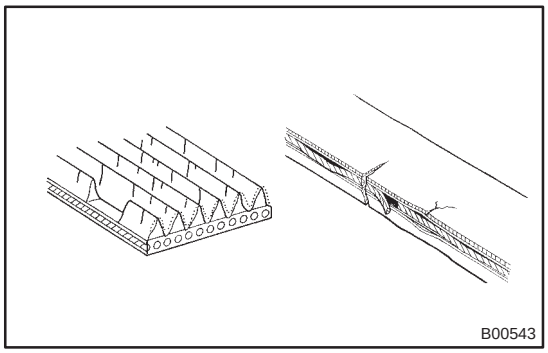

4. INSPECT DRIVE BELT

(a) Visually check the belt for excessive wear, frayed cords etc.

HINT:

- If any defect found, replace the drive belt.
- Cracks on the rib side of a belt are considered acceptable. If the belt has chunks missing from the ribs, it should be replaced.

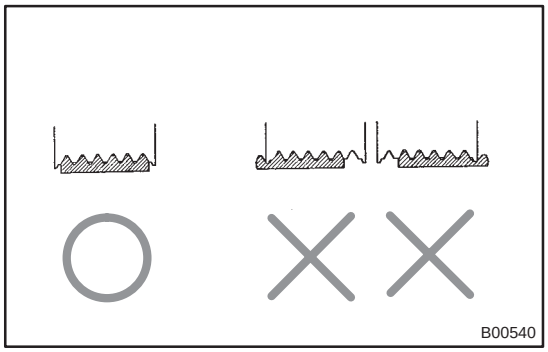

(b) Check that it fits properly in the ribbed grooves.

HINT:

Check with your hand to confirm that the belt has not slipped out of the groove on the bottom of the pulley.

5. VISUALLY CHECK GENERATOR WIRING

(a) Check that the wiring is in good condition.

6. LISTEN FOR ABNORMAL NOISES FROM GENERATOR

(a) Check that there is no abnormal noise from the generator while the engine is running.

7. INSPECT CHARGE WARNING LIGHT CIRCUIT

(a) Turn the ignition switch ON. Check that the charge warning light comes on.

(b) Start the engine and check that the light goes off.

HINT:

If the light does not operate as specified, troubleshoot the charge warning light circuit.

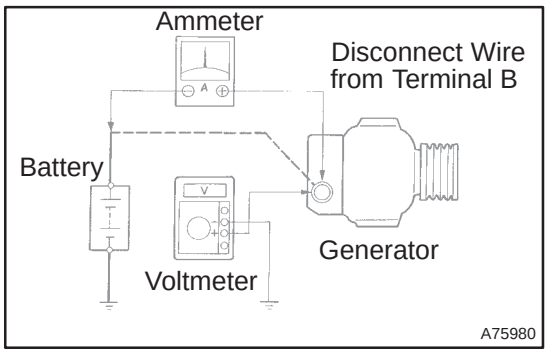

8. INSPECT CHARGING CIRCUIT WITHOUT LOAD

(a) According to the following procedure, connect an ammeter and voltmeter as shown in the illustration.

(1) Disconnect the wire from terminal B of the generator and connect it to the negative (–) lead of the ammeter.

(2) Connect the positive (+) lead of the ammeter to terminal B of the generator

(3) Connect the positive (+) lead of the voltmeter to terminal B of the generator.

(4) Ground the negative (–) lead of the voltmeter.

(b) Check the charging circuit.

(1) Keep the engine speed at 2,000 rpm, check the reading on the ammeter and voltmeter.

Standard amperage: 10 A or less

Standard voltage: 12.9 to 14.9 V

HINT:

- If the voltmeter reading is more than standard voltage, replace the voltage regulator.
- If the voltmeter reading is less than the standard voltage, check the voltage regulator and generator as follows:

9. INSPECT CHARGING CIRCUIT WITH LOAD

(a) Keep the engine speed at 2,000 rpm, turn on the high beam headlights and turn the heater blower switch to the ”HI” position.

(b) Check the reading on the ammeter.

Standard amperage: 30 A or more

HINT:

- If the ammeter reading is less than standard amperage, repair the generator.
- If the battery is fully charged, the indication will sometimes be less than standard amperage.

GENERATOR ASSY (1ZZ–FE/3ZZ–FE)

190NI–01

REPLACEMENT

1. **REMOVE ENGINE UNDER COVER SUB–ASSY NO.1 (See page 10–17)**
2. **REMOVE RADIATOR SUPPORT OPENING COVER (See page 10–9)**
3. **REMOVE ENGINE ROOM COVER SIDE (See page 10–9)**
4. **REMOVE FAN AND GENERATOR V BELT (See page 14–5)**

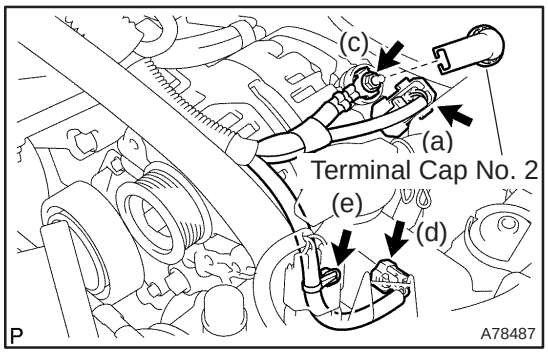

5. **REMOVE GENERATOR ASSY**

(a) Disconnect the generator connector.
(b) Remove the terminal cap No. 2.
(c) Remove the nut and disconnect the generator wire.
(d) Disconnect the A/C connector.
(w/ Air Conditioning)
(e) Remove the wire harness clamp. (w/ Air Conditioning)

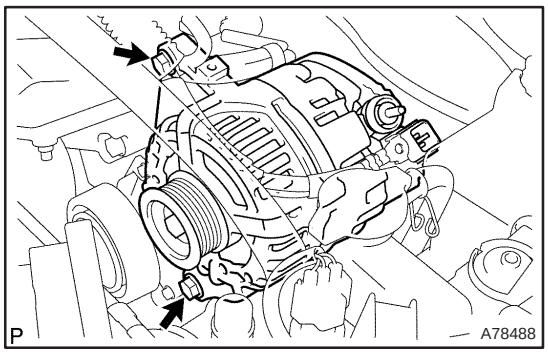

(f) Remove the 2 bolts, and then remove the generator.

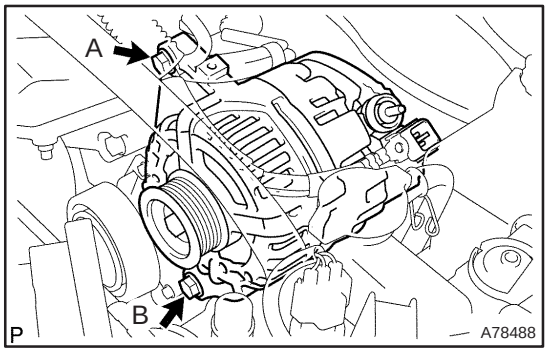

6. **INSTALL GENERATOR ASSY**

(a) Install the generator with the 2 bolts.
Torque:
25 N·m (255 kgf·cm, 18 ft·lbf) for bolt A
54 N·m (551 kgf·cm, 40 ft·lbf) for bolt B
(b) Install the wire harness clamp. (w/ Air Conditioning)
(c) Connect the A/C connector.
(w/ Air Conditioning)
(d) Install the generator wire with the nut.
Torque: 9.8 N·m (100 kgf·cm, 7 ft·lbf)
(e) Install the terminal cap No. 2.
(f) Connect the generator connector.

7. **INSTALL FAN AND GENERATOR V BELT (See page 14–5)**
8. **INSTALL ENGINE ROOM COVER SIDE**
9. **INSTALL RADIATOR SUPPORT OPENING COVER**
10. **INSTALL ENGINE UNDER COVER SUB–ASSY NO.1**

STARTING SYSTEM (1AZ–FE)

190NU–01

INSPECTION

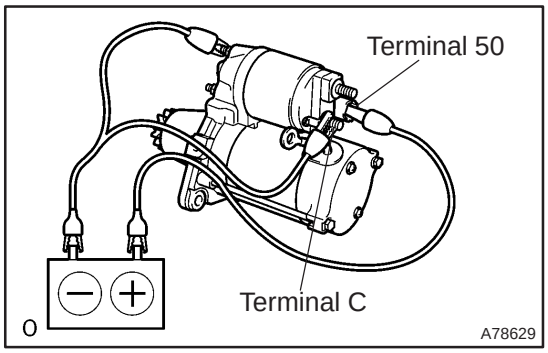

1. INSPECT STARTER ASSY

NOTICE:

These tests must be performed within 3 to 5 seconds to avoid burning out the coil.

(a) Do pull–in test

(1) Disconnect the field coil lead wire from terminal C.

(2) Connect the battery to the magnetic switch as shown in the illustration on the left. Check that the clutch pinion gear is extended.

If the clutch pinion gear is not extended, replace the magnetic switch.

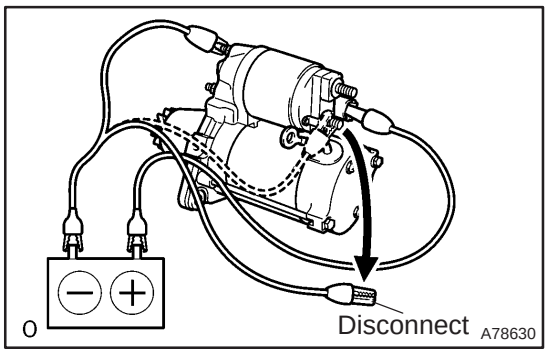

(b) Do hold–in test

(1) Disconnect the negative (–) lead from terminal C with the above condition (a) is being maintained. Check that the pinion gear remains extended.

If the clutch pinion gear returns, replace the magnetic switch.

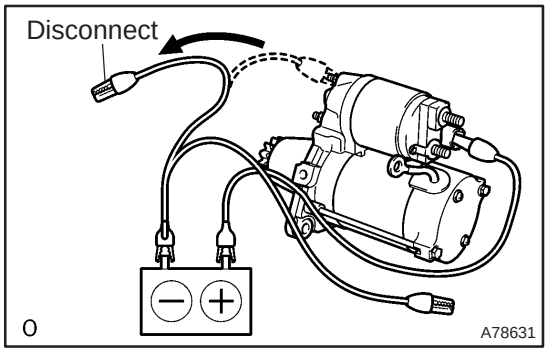

(c) Inspect clutch pinion gear return

(1) Disconnect the negative (–) lead from the switch body. Check that the clutch pinion gear returns.

If the clutch pinion gear does not return, replace the magnetic switch.

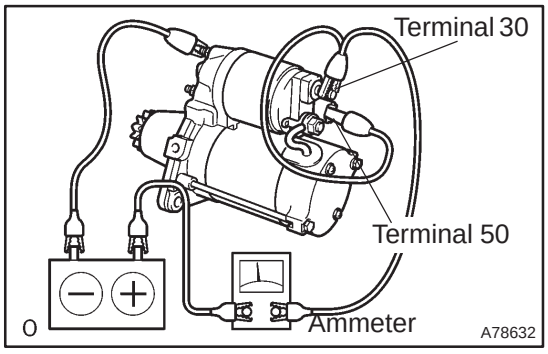

(d) Do no–load performance test

(1) Connect the field coil lead wire to terminal C. Make sure that the lead is not grounded.

Torque: 5.9 N·m (60 kgf·cm, 52 in·lbf)

(2) Clamp the starter in a vise.

(3) Connect the battery and an ammeter to the starter as shown in the illustration.

(4) Check that the starter rotates smoothly and steadily with the clutch pinion gear extended. Check that the ammeter reads the specified current.

Specified current: 85 A or less at 11.5 V

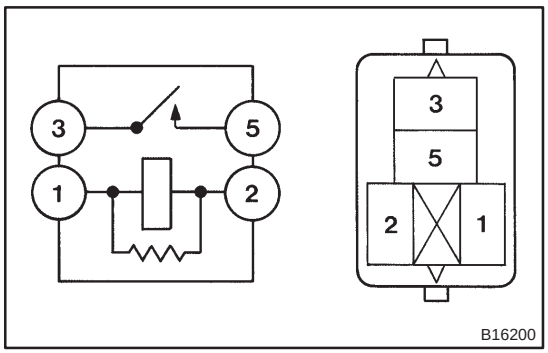

2. INSPECT STARTER RELAY ASSY

(a) Continuity inspection.

(1) Using an ohmmeter, check for continuity between each terminal.

Specified condition:

Terminal No.	Specified condition
1 – 2	Continuity
3 – 5	No continuity
	Continuity (Apply battery voltage terminals 1 and 2)

STARTING SYSTEM (1AZ–FSE)

190NR–01

INSPECTION

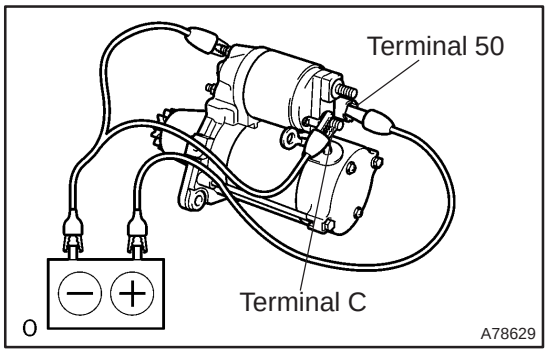

1. INSPECT STARTER ASSY

NOTICE:

These tests must be performed within 3 to 5 seconds to avoid burning out the coil.

(a) Do pull–in test

(1) Disconnect the field coil lead wire from terminal C.

(2) Connect the battery to the magnetic switch as shown in the illustration on the left. Check that the clutch pinion gear is extended.

If the clutch pinion gear is not extended, replace the magnetic switch.

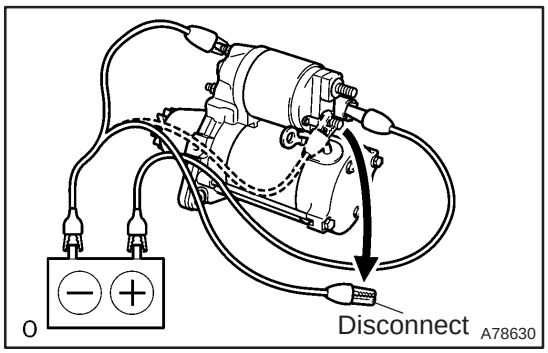

(b) Do hold–in test

(1) Disconnect the negative (–) lead from terminal C with the above condition (a) is being maintained. Check that the pinion gear remains extended.

If the clutch pinion gear returns, replace the magnetic switch.

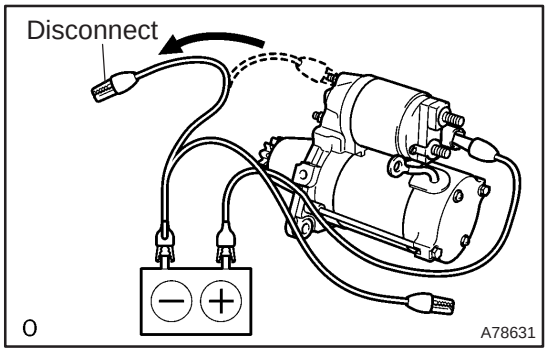

(c) Inspect clutch pinion gear return

(1) Disconnect the negative (–) lead from the switch body. Check that the clutch pinion gear returns.

If the clutch pinion gear does not return, replace the magnetic switch.

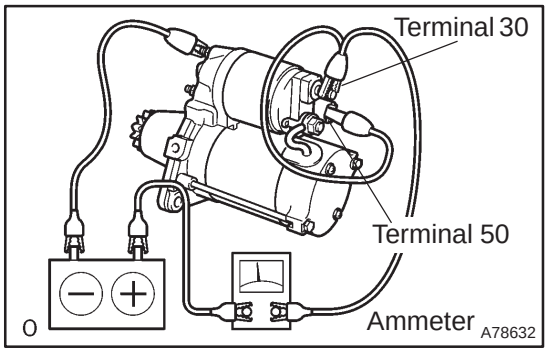

(d) Do no–load performance test

(1) Connect the field coil lead wire to terminal C. Make sure that the lead is not grounded.

Torque: 5.9 N·m (60 kgf·cm, 52 in·lbf)

(2) Clamp the starter in a vise.

(3) Connect the battery and an ammeter to the starter as shown in the illustration.

(4) Check that the starter rotates smoothly and steadily with the clutch pinion gear extended. Check that the ammeter reads the specified current.

Specified current:

1.3kw 85 A or less at 11.5 V

1.6kw 75 A or less at 11.5 V

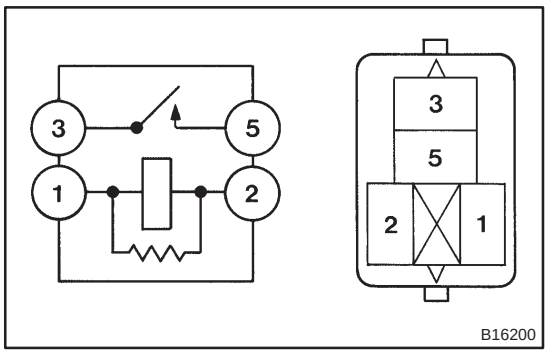

2. INSPECT STARTER RELAY ASSY

(a) Continuity inspection.

(1) Using an ohmmeter, check for continuity between each terminal.

Specified condition:

Terminal No.	Specified condition
1 – 2	Continuity
3 – 5	No continuity
	Continuity (Applying battery voltage terminals 1 and 2)

STARTER ASSY (1AZ–FE/1AZ–FSE)

190NJ–01

REPLACEMENT

1. REMOVE RADIATOR SUPPORT OPENING COVER (See page 10–26)
2. REMOVE BATTERY CLAMP SUB–ASSY
3. REMOVE BATTERY
4. REMOVE BATTERY TRAY

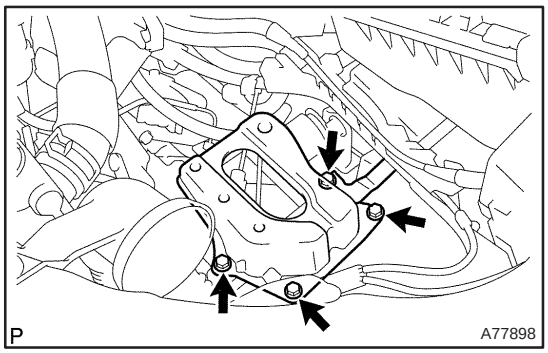

5. REMOVE BATTERY CARRIER

(a) Remove the 4 bolts, and then remove the battery carrier.

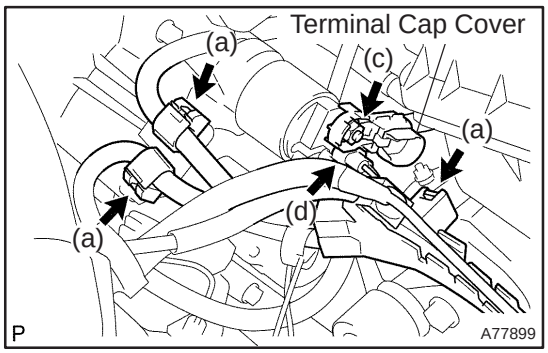

6. REMOVE STARTER ASSY

(a) Remove the 3 wire harness clamps.

(b) Open the terminal cap cover.

(c) Remove the nut and disconnect the starter wire.

(d) Disconnect the starter connector.

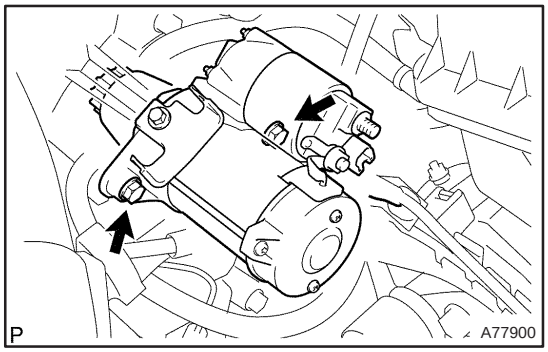

(e) Remove the 2 bolts, and then remove the starter.

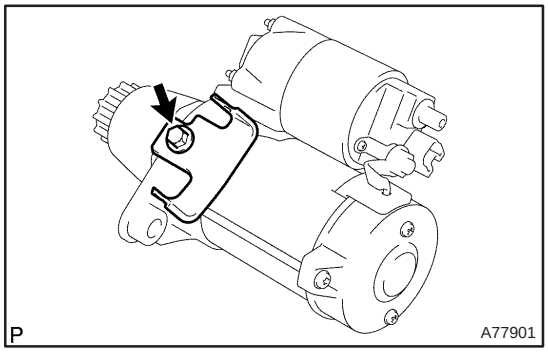

(f) Remove the bolt, and then remove the wire harness clamp bracket.

7. INSTALL STARTER ASSY

(a) Install the wire harness clamp bracket with the bolt.
Torque: 8.4 N·m (86 kgf·cm, 74 in.·lbf)

(b) Install the starter with the 2 bolts.
Torque: 37 N·m (380 kgf·cm, 28 ft·lbf)

(c) Connect the starter connector.

(d) Connect the starter wire with the nut.
Torque: 9.8 N·m (100 kgf·cm, 7 ft·lbf)

(e) Close the terminal cap cover.

(f) Install the 3 wire harness clamps.

8. INSTALL BATTERY CARRIER
Torque: 13 N·m (131 kgf·cm, 9 ft·lbf)

9. INSTALL BATTERY TRAY

10. INSTALL BATTERY

11. INSTALL BATTERY CLAMP SUB–ASSY
Torque:
5.0 N·m (51 kgf·cm, 44 in.·lbf) for bolt
3.6 N·m (36 kgf·cm, 31 in.·lbf) for nut
5.4 N·m (55 kgf·cm, 48 in.·lbf) for terminal

12. INSTALL RADIATOR SUPPORT OPENING COVER

CHARGING SYSTEM (1AZ–FE)

190NV–01

PRECAUTION

1. **Check that the battery cables are connected to the correct terminals.**
2. **Disconnect the battery cables when the battery is given a quick charge.**
3. **Do not perform tests with a high voltage insulation resistance tester.**
4. **Never disconnect the battery while the engine is running.**
5. **Check that the charging cable is tightened on terminal B of the generator and the fuse box.**

190NW–01

ON–VEHICLE INSPECTION

1. CHECK BATTERY ELECTROLYTE LEVEL

(a) Check the electrolyte quantity of each cell.

(1) If the electrolyte is under the low level, replace the battery (or add distilled water if possible) and check the charging system.

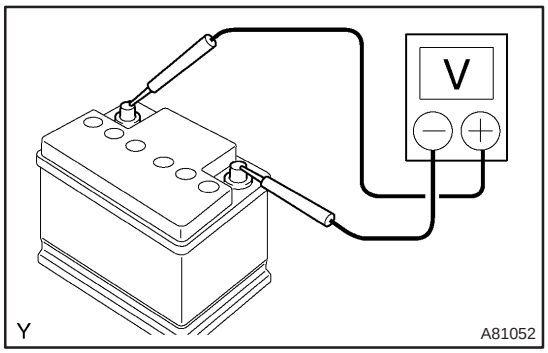

2. CHECK BATTERY VOLTAGE

(a) If it has not been 20 minutes since you drove the vehicle or since the engine was stopped, turn the ignition switch and the electrical system (headlight, blower motor, rear defogger etc.) to the on position for 60 seconds. This will remove the surface charge on the battery.

(b) Turn off the ignition switch and the electrical systems.

(c) Measure the battery voltage between the negative (–) and positive (+) terminals of the battery.

Standard voltage: 12.5 to 12.9 V at 20°C (68°F)

HINT:

If the voltage is less than specification, charge the battery.

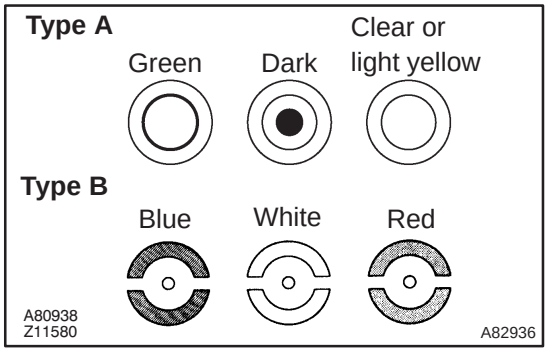

(d) Check the indicator as shown in the illustration.

HINT:

Indicator color		Condition
Type A	Type B	
Green	Blue	OK
Dark	White	Charging necessary
Clear or light yellow	Red	Replace

3. CHECK BATTERY TERMINALS, FUSIBLE LINK AND FUSES

(a) Check that the battery terminals are not loosened or corroded.

(b) Check the fusible links, high–current fuses and regular fuses.

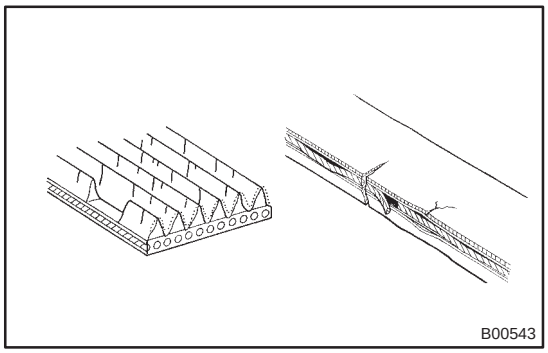

4. INSPECT DRIVE BELT

(a) Visually check the belt for excessive wear, frayed cords etc.

HINT:

- If any defect found, replace the drive belt.
- Cracks on the rib side of a belt are considered acceptable. If the belt has chunks missing from the ribs, it should be replaced.

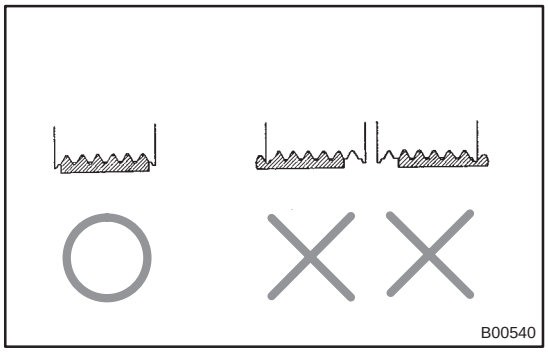

(b) Check that it fits properly in the ribbed grooves.

HINT:

Check with your hand to confirm that the belt has not slipped out of the groove on the bottom of the pulley.

5. VISUALLY CHECK GENERATOR WIRING

(a) Check that the wiring is in good condition.

6. LISTEN FOR ABNORMAL NOISES FROM GENERATOR

(a) Check that there is no abnormal noise from the generator while the engine is running.

7. INSPECT CHARGE WARNING LIGHT CIRCUIT

(a) Turn the ignition switch ON. Check that the charge warning light comes on.

(b) Start the engine and check that the light goes off.

HINT:

If the light does not operate as specified, troubleshoot the charge warning light circuit.

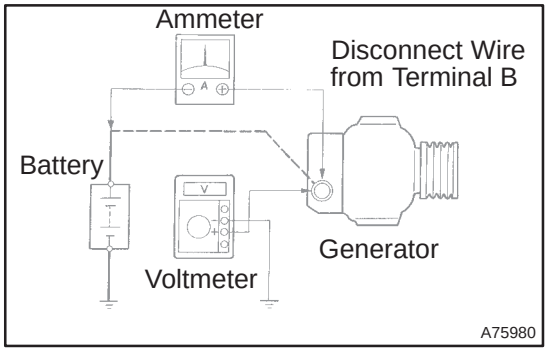

8. INSPECT CHARGING CIRCUIT WITHOUT LOAD

(a) According to the following procedure, connect an ammeter and voltmeter as shown in the illustration.

(1) Disconnect the wire from terminal B of the generator and connect it to the negative (–) lead of the ammeter.

(2) Connect the positive (+) lead of the ammeter to terminal B of the generator

(3) Connect the positive (+) lead of the voltmeter to terminal B of the generator.

(4) Ground the negative (–) lead of the voltmeter.

(b) Check the charging circuit.

(1) Keep the engine speed at 2,000 rpm, check the reading on the ammeter and voltmeter.

Standard amperage: 10 A or less

Standard voltage: 12.9 to 14.9 V

HINT:

- If the voltmeter reading is more than standard voltage, replace the voltage regulator.
- If the voltmeter reading is less than the standard voltage, check the voltage regulator and generator as follows:

9. INSPECT CHARGING CIRCUIT WITH LOAD

(a) Keep the engine speed at 2,000 rpm, turn on the high beam headlights and turn the heater blower switch to the ”HI” position.

(b) Check the reading on the ammeter.

Standard amperage: 30 A or more

HINT:

- If the ammeter reading is less than standard amperage, repair the generator.
- If the battery is fully charged, the indication will sometimes be less than standard amperage.

CHARGING SYSTEM (1AZ–FSE)

190NS–01

PRECAUTION

1. **Check that the battery cables are connected to the correct terminals.**
2. **Disconnect the battery cables when the battery is given a quick charge.**
3. **Do not perform tests with a high voltage insulation resistance tester.**
4. **Never disconnect the battery while the engine is running.**
5. **Check that the charging cable is tightened on terminal B of the generator and the fuse box.**

190NT–01

ON–VEHICLE INSPECTION

1. CHECK BATTERY ELECTROLYTE LEVEL

(a) Check the electrolyte quantity of each cell.

(1) If the electrolyte is under the low level, replace the battery (or add distilled water if possible) and check the charging system.

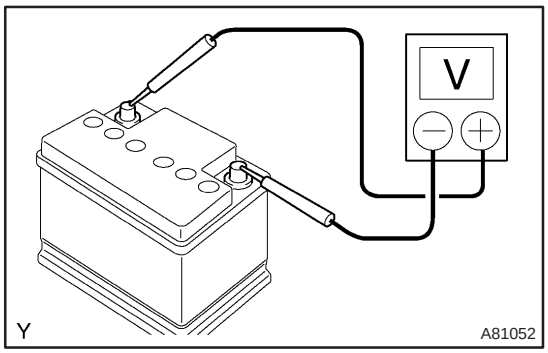

2. CHECK BATTERY VOLTAGE

(a) If it has not been 20 minutes since you drove the vehicle or since the engine was stopped, turn the ignition switch and the electrical system (headlight, blower motor, rear defogger etc.) to the on position for 60 seconds. This will remove the surface charge on the battery.

(b) Turn off the ignition switch and the electrical systems.

(c) Measure the battery voltage between the negative (–) and positive (+) terminals of the battery.

Standard voltage: 12.5 to 12.9 V at 20°C (68°F)

HINT:

If the voltage is less than specification, charge the battery.

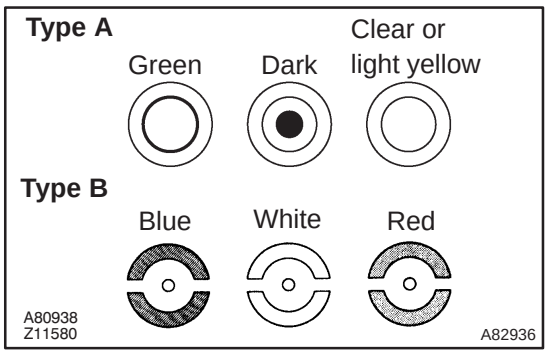

(d) Check the indicator as shown in the illustration.

HINT:

Indicator color		Condition
Type A	Type B	
Green	Blue	OK
Dark	White	Charging necessary
Clear or light yellow	Red	Replace

3. CHECK BATTERY TERMINALS, FUSIBLE LINK AND FUSES

(a) Check that the battery terminals are not loosened or corroded.

(b) Check the fusible links, high–current fuses and regular fuses.

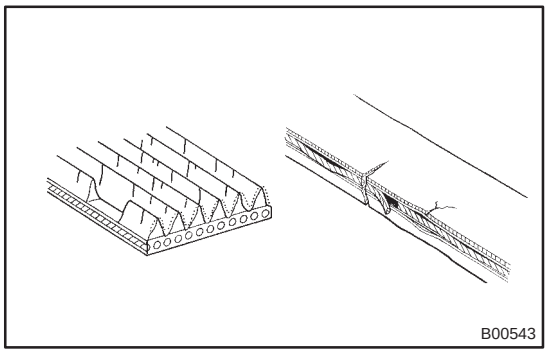

4. INSPECT DRIVE BELT

(a) Visually check the belt for excessive wear, frayed cords etc.

HINT:

- If any defect found, replace the drive belt.
- Cracks on the rib side of a belt are considered acceptable. If the belt has chunks missing from the ribs, it should be replaced.

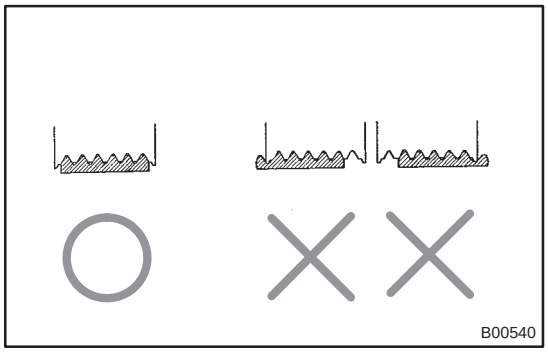

(b) Check that it fits properly in the ribbed grooves.

HINT:

Check with your hand to confirm that the belt has not slipped out of the groove on the bottom of the pulley.

5. VISUALLY CHECK GENERATOR WIRING

(a) Check that the wiring is in good condition.

6. LISTEN FOR ABNORMAL NOISES FROM GENERATOR

(a) Check that there is no abnormal noise from the generator while the engine is running.

7. INSPECT CHARGE WARNING LIGHT CIRCUIT

(a) Turn the ignition switch ON. Check that the charge warning light comes on.

(b) Start the engine and check that the light goes off.

HINT:

If the light does not operate as specified, troubleshoot the charge warning light circuit.

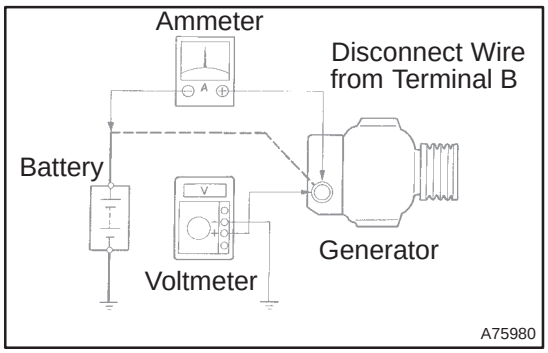

8. INSPECT CHARGING CIRCUIT WITHOUT LOAD

(a) According to the following procedure, connect an ammeter and voltmeter as shown in the illustration.

(1) Disconnect the wire from terminal B of the generator and connect it to the negative (–) lead of the ammeter.

(2) Connect the positive (+) lead of the ammeter to terminal B of the generator

(3) Connect the positive (+) lead of the voltmeter to terminal B of the generator.

(4) Ground the negative (–) lead of the voltmeter.

(b) Check the charging circuit.

(1) Keep the engine speed at 2,000 rpm, check the reading on the ammeter and voltmeter.

Standard amperage: 10 A or less

Standard voltage: 12.9 to 14.9 V

HINT:

- If the voltmeter reading is more than standard voltage, replace the voltage regulator.
- If the voltmeter reading is less than the standard voltage, check the voltage regulator and generator as follows:

9. INSPECT CHARGING CIRCUIT WITH LOAD

(a) Keep the engine speed at 2,000 rpm, turn on the high beam headlights and turn the heater blower switch to the ”HI” position.

(b) Check the reading on the ammeter.

Standard amperage: 30 A or more

HINT:

- If the ammeter reading is less than standard amperage, repair the generator.
- If the battery is fully charged, the indication will sometimes be less than standard amperage.

GENERATOR ASSY (1AZ–FE/1AZ–FSE)

190NK–01

REPLACEMENT

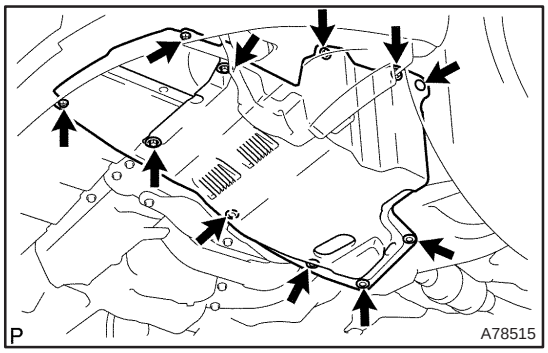

1. REMOVE ENGINE UNDER COVER LH

(a) Remove the 6 screws and 5 clips, and then remove the engine under cover.

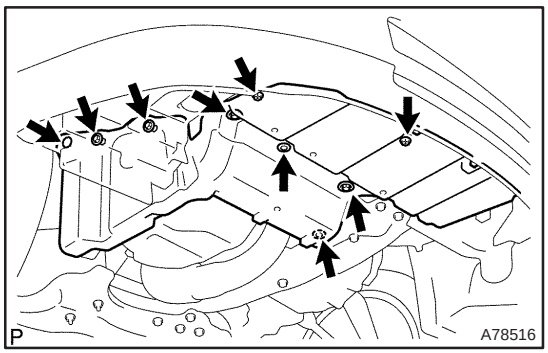

2. REMOVE ENGINE UNDER COVER RH

(a) Remove the 6 screws and the 3 clips, and then remove the engine under cover.

3. REMOVE RADIATOR SUPPORT OPENING COVER (See page 10–26)

4. REMOVE ENGINE ROOM COVER SIDE (See page 10–26)

5. REMOVE FAN AND GENERATOR V BELT

SST 09249–63010

HINT:

- 1AZ–FE: 14–105
- 1AZ–FSE: 14–185

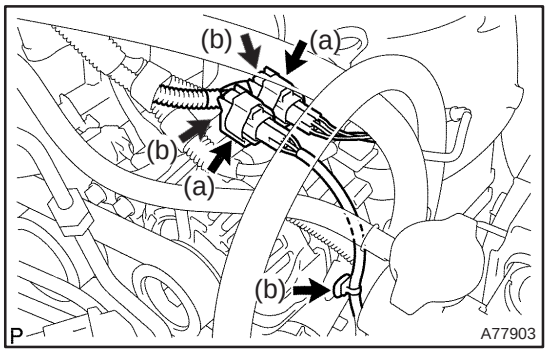

6. REMOVE GENERATOR ASSY

(a) Disconnect the 2 heated oxygen sensor connectors. (1AZ–FE (Unleaded Gasoline) or 1AZ–FSE)

(b) Remove the 2 connector clamps of the heated oxygen sensor and the wire harness clamp. (1AZ–FE (Unleaded Gasoline) or 1AZ–FSE)

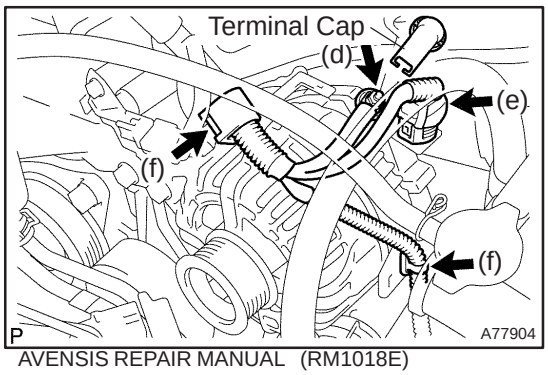

(c) Remove the terminal cap.

(d) Remove the nut and disconnect the generator wire.

(e) Disconnect the generator connector.

(f) Remove the 2 wire harness clamps.

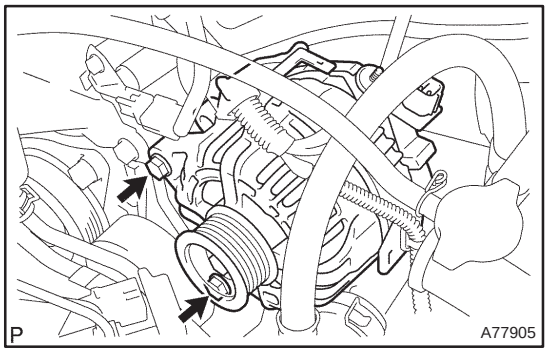

(g) Remove the 2 bolts, and then remove the generator.

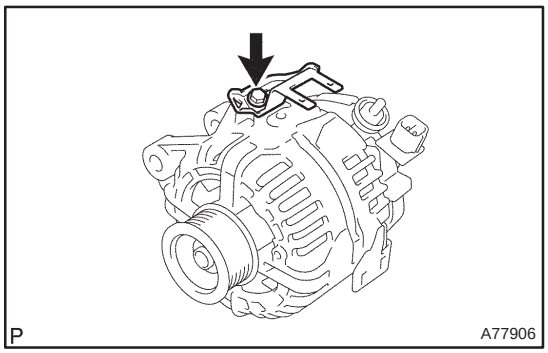

(h) Remove the bolt, and then remove the wire harness clamp bracket.

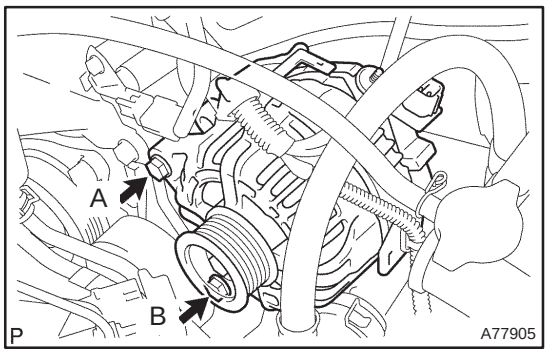

7. INSTALL GENERATOR ASSY

(a) Install the wire harness clamp bracket wire the bolt.
Torque: 8.4 N·m (86 kgf·cm, 74 in.·lbf)

(b) Install the generator the 2 bolts.
Torque:
52 N·m (530 kgf·cm, 38 ft·lbf) for bolt A
21 N·m (214 kgf·cm, 16 ft·lbf) for bolt B

(c) Install the 2 wire harness clamps.

(d) Connect the generator connector.

(e) Install the generator wire with the nut.
Torque: 9.8 N·m (100 kgf·cm, 7 ft·lbf)

(f) Install the terminal cap.

(g) Install the 2 connector clamps of the heated oxygen sensor and the wire harness clamp.
(1AZ–FE (Unleaded Gasoline) or 1AZ–FSE)

(h) Connect the 2 heated oxygen sensor connectors.
(1AZ–FE (Unleaded Gasoline) or 1AZ–FSE)

8. INSTALL FAN AND GENERATOR V BELT
SST 09249–63010

HINT:
- 1AZ–FE: 14–105
- 1AZ–FSE: 14–185

9. INSTALL ENGINE ROOM COVER SIDE

10. INSTALL RADIATOR SUPPORT OPENING COVER

11. INSTALL ENGINE UNDER COVER RH

12. INSTALL ENGINE UNDER COVER LH

STARTING SYSTEM (1CD–FTV)

190NL–01

INSPECTION

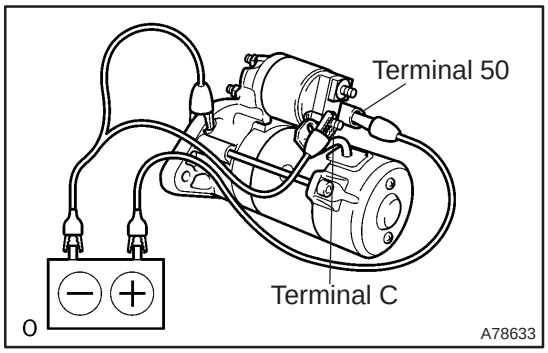

1. INSPECT STARTER ASSY

NOTICE:

These tests must be performed within 3 to 5 seconds to avoid burning out the coil.

(a) Do pull–in test

(1) Disconnect the field coil lead wire from terminal C.

(2) Connect the battery to the magnetic switch as shown in the illustration on the left. Check that the clutch pinion gear is extended.

If the clutch pinion gear is not extended, replace the magnetic switch.

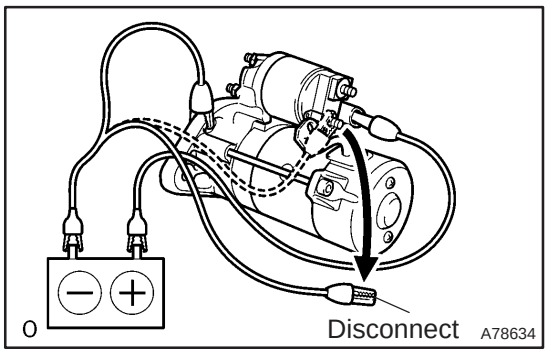

(b) Do hold–in test

(1) Disconnect the negative (–) lead from the terminal C with the above condition (a) is being maintained. Check that the pinion gear remains extended.

If the clutch pinion gear returns, replace the magnetic switch.

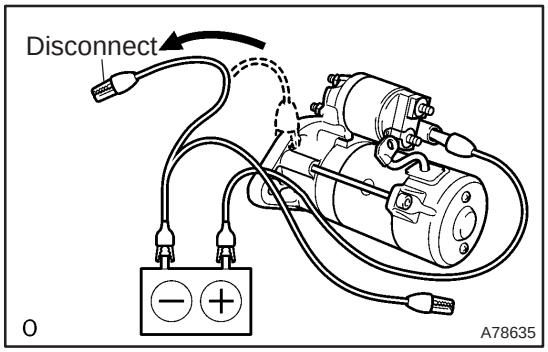

(c) Inspect clutch pinion gear return

(1) Disconnect the negative (–) lead from the switch body. Check that the clutch pinion gear returns.

If the clutch pinion gear does not return, replace the magnetic switch.

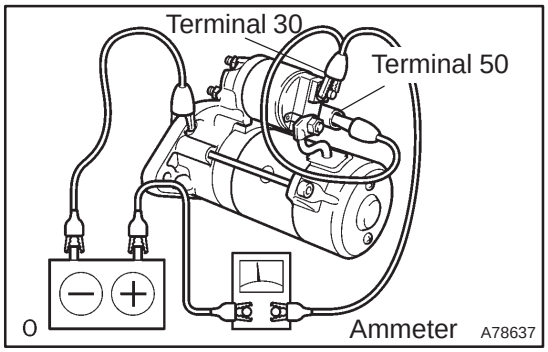

(d) Do no–load performance test

(1) Connect the field coil lead wire to terminal C. Make sure that the lead is not grounded.

Torque: 5.9 N·m (60 kgf·cm, 52 in·lbf)

(2) Clamp the starter in a vise.

(3) Connect the battery and an ammeter to the starter as shown in the illustration.

(4) Check that the starter rotates smoothly and steadily with the clutch pinion gear extended. Check that the ammeter reads the specified current.

Specified current: 190 A or less at 11.5 V

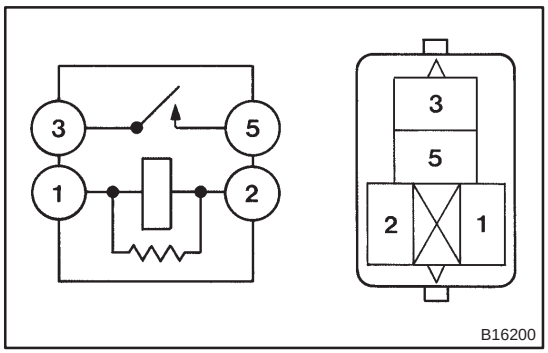

2. INSPECT STARTER RELAY ASSY

(a) Continuity inspection.

(1) Using an ohmmeter, check for continuity between each terminal.

Specified condition:

Terminal No.	Specified condition
1 – 2	Continuity
3 – 5	No continuity
	Continuity (Apply battery voltage terminals 1 and 2)

STARTER ASSY (1CD–FTV)

190O0–01

REPLACEMENT

1. **DRAIN ENGINE COOLANT (See page 16–44)**
2. **REMOVE RADIATOR SUPPORT OPENING COVER**
3. **REMOVE RADIATOR RESERVE TANK ASSY (See page 16–50)**
4. **REMOVE AIR CLEANER ASSY (See page 14–286)**
5. **REMOVE BATTERY**
6. **REMOVE STARTER ASSY**

(a) Remove the nut and disconnect terminal 30.
(b) Disconnect the starter connector.
(c) Remove the 2 bolts and the starter.

7. **INSTALL STARTER ASSY**

   Torque:
   37 N·m (377 kgf·cm, 27 ft·lbf) for bolt
   9.8 N·m (100 kgf·cm, 7.2 ft·lbf) for terminal 30

8. **INSTALL AIR CLEANER ASSY (See page 14–286)**
9. **INSTALL RADIATOR RESERVE TANK ASSY (See page 16–50)**
10. **ADD ENGINE COOLANT (See page 16–44)**
11. **CHECK FOR ENGINE COOLANT LEAKS (See page 16–44)**

CHARGING SYSTEM (1CD–FTV)

190NM–01

PRECAUTION

1. **Check that the battery cables are connected to the correct terminals.**
2. **Disconnect the battery cables when the battery is given a quick charge.**
3. **Do not perform tests with a high voltage insulation resistance tester.**
4. **Never disconnect the battery while the engine is running.**
5. **Check that the charging cable is tightened on terminal B of the generator and the fuse box.**

190NN–01

ON–VEHICLE INSPECTION

1. CHECK BATTERY ELECTROLYTE LEVEL

(a) Check the electrolyte quantity of each cell.

(1) If the electrolyte is under the low level, replace the battery (or add distilled water if possible) and check the charging system.

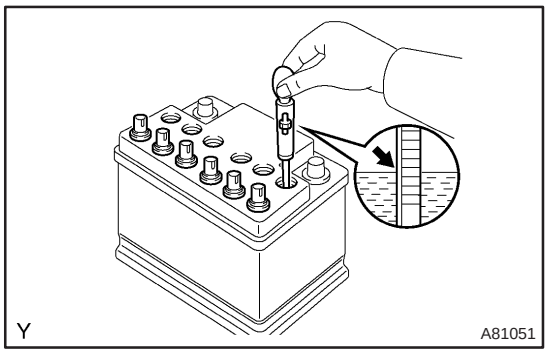

2. CHECK BATTERY SPECIFIC GRAVITY (MAINTENANCE TYPE BATTERY)

(a) Check the specific gravity of each cell.

Standard specific gravity: 1.25 to 1.29 at 20°C (68°F)

HINT:

If the specific gravity is less than specification, charge the battery.

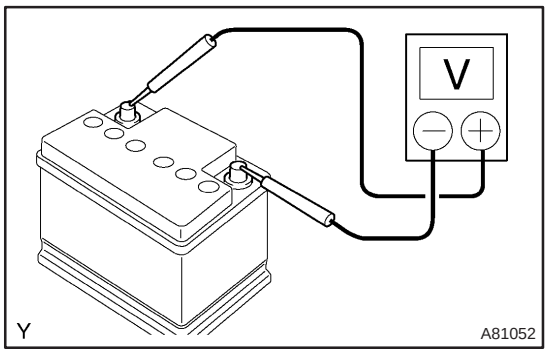

3. CHECK BATTERY VOLTAGE

(a) If it has not been 20 minutes since you drove the vehicle or since the engine was stopped, turn the ignition switch and the electrical system (headlight, blower motor, rear defogger etc.) to the on position for 60 seconds. This will remove the surface charge on the battery.

(b) Turn off the ignition switch and the electrical systems.

(c) Measure the battery voltage between the negative (–) and positive (+) terminals of the battery.

Standard voltage: 12.5 to 12.9 V at 20°C (68°F)

HINT:

If the voltage is less than specification, charge the battery.

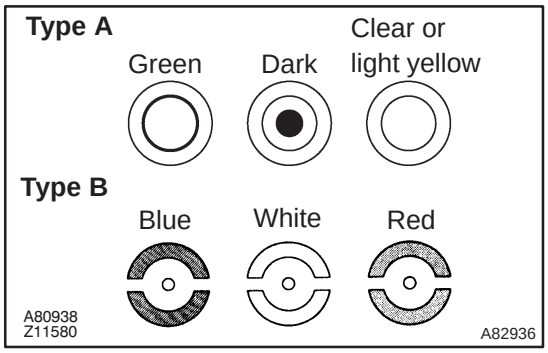

(d) Check the indicator as shown in the illustration. (Non maintenance type battery)

HINT:

Indicator color		Condition
Type A	Type B	
Green	Blue	Good
Dark	White	Charging necessary
Clear or light yellow	Red	Replace

4. CHECK BATTERY TERMINALS, FUSIBLE LINK AND FUSES

(a) Check that the battery terminals are not loosened or corroded.

(b) Check the fusible links, high–current fuses and regular fuses.

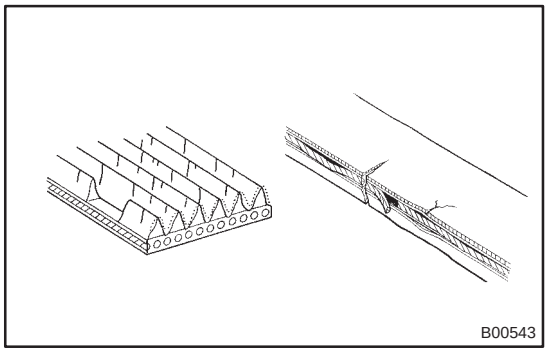

5. INSPECT DRIVE BELT

(a) Visually check the belt for excessive wear, frayed cords etc.

HINT:

- If any defect found, replace the drive belt.
- Cracks on the rib side of a belt are considered acceptable. If the belt has chunks missing from the ribs, it should be replaced.

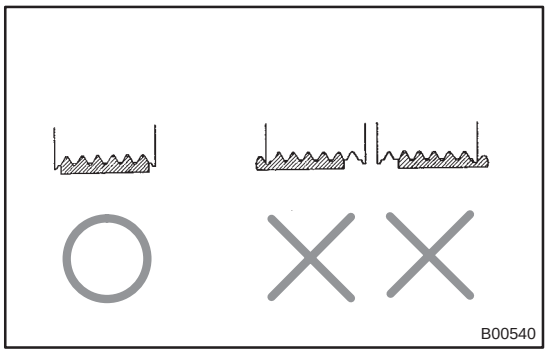

(b) Check that it fits properly in the ribbed grooves.

HINT:

Check with your hand to confirm that the belt has not slipped out of the groove on the bottom of the pulley.

6. VISUALLY CHECK GENERATOR WIRING

(a) Check that the wiring is in good condition.

7. LISTEN FOR ABNORMAL NOISES FROM GENERATOR

(a) Check that there is no abnormal noise from the generator while the engine is running.

8. INSPECT CHARGE WARNING LIGHT CIRCUIT

(a) Turn the ignition switch ON. Check that the charge warning light comes on.

(b) Start the engine and check that the light goes off.

HINT:

If the light does not operate as specified, troubleshoot the charge warning light circuit.

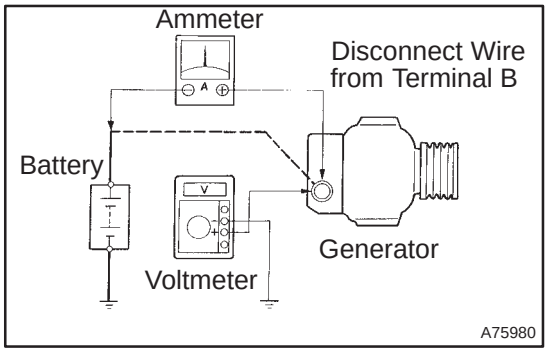

9. INSPECT CHARGING CIRCUIT WITHOUT LOAD

(a) According to the following procedure, connect an ammeter and voltmeter as shown in the illustration.

(1) Disconnect to the wire from terminal B of the generator and connect it to the negative (–) lead of the ammeter.

(2) Connect the positive (+) lead of the ammeter to terminal B of the generator

(3) Connect the positive (+) lead of the voltmeter to terminal B of the generator.

(4) Ground the negative (–) lead of the voltmeter.

(b) Check the charging circuit.

(1) Keep the engine speed at 2,000 rpm, check the reading on the ammeter and voltmeter.

Standard amperage: 10 A or less

Standard voltage: 13.2 to 14.8 V

HINT:

- If the voltmeter reading is more than standard voltage, replace the voltage regulator.
- If the voltmeter reading is less than the standard voltage, check the voltage regulator and generator as follows:

10. INSPECT CHARGING CIRCUIT WITH LOAD

(a) Keep the engine speed at 2,000 rpm, turn on the high beam headlights and turn the heater blower switch to the ”HI” position.

(b) Check the reading on the ammeter.

Standard amperage: 30 A or more

HINT:

- If the ammeter reading is less than standard amperage, repair the generator.
- If the battery is fully charged, the indication will sometimes be less than standard amperage.

GENERATOR ASSY (1CD–FTV)

190O1–01

REPLACEMENT

1. REMOVE FRONT WHEEL RH
2. REMOVE RADIATOR SUPPORT OPENING COVER
3. REMOVE ENGINE ROOM COVER SIDE
4. REMOVE ENGINE UNDER COVER SUB–ASSY NO.1
5. REMOVE ENGINE UNDER COVER RH
6. REMOVE V (COOLER COMPRESSOR TO CRANKSHAFT PULLEY) BELT NO.1 (See page 14–269)
7. REMOVE GENERATOR V BELT (See page 14–269)
8. REMOVE FLOOR PANEL BRACE FRONT (See page 15–10)
9. REMOVE EXHAUST PIPE ASSY FRONT (See page 15–10)
10. REMOVE EXHAUST PIPE ASSY (W/ COLD AREA) (See page 13–11)

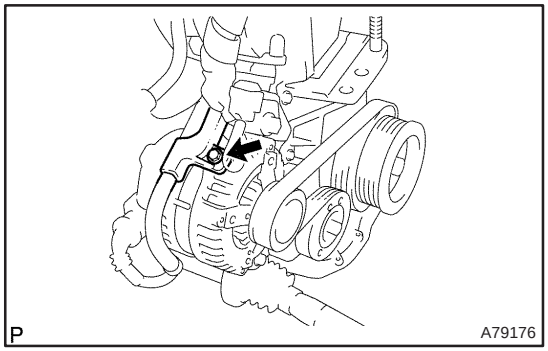

11. REMOVE GENERATOR ASSY
    (a) Remove the bolt and disconnect the wire harness.
    (b) Remove the cap and nut, disconnect the generator wire.
    (c) Disconnect the generator connector.
    (d) Remove the 2 bolts and the generator.

12. INSTALL GENERATOR ASSY
    Torque:
    31 N·m (320 kgf·cm, 23 ft·lbf) for M8
    47 N·m (475 kgf·cm, 34 ft·lbf) for M10
    9.8 N·m (100 kgf·cm, 7 ft·lbf) for Generator wire
    5.0 N·m (51 kgf·cm, 44 ft·lbf) for Wire harness
13. INSTALL EXHAUST PIPE ASSY (W/ COLD AREA) (See page 13–11)
14. INSTALL EXHAUST PIPE ASSY FRONT (See page 15–10)
15. INSTALL FLOOR PANEL BRACE FRONT (See page 15–10)
16. ADJUST V (COOLER COMPRESSOR TO CRANKSHAFT PULLEY) BELT NO.1 (See page 14–286)
17. INSTALL FRONT WHEEL RH
    Torque: 103 N·m (1,050 kgf·cm, 76 ft·lbf)
18. CHECK FOR EXHAUST GAS LEAKS

PRE–HEATING SYSTEM (1CD–FTV)

190JE–02

ON–VEHICLE INSPECTION

NOTICE:

Turn the ignition switch OFF for 60 seconds before performing the following inspections.

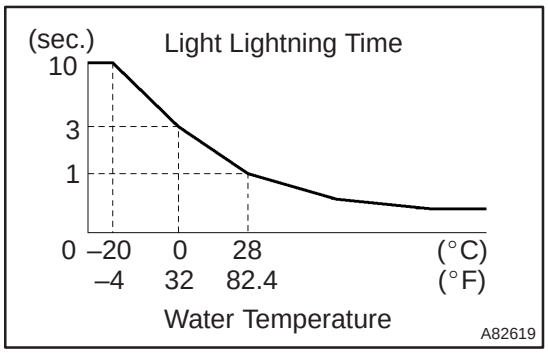

1. INSPECT LIGHTING DURATION OF GLOW INDICATOR LIGHT

(a) Turn the ignition switch ON, and measure the lighting duration.

Light lighting duration: Refer to the chart graph

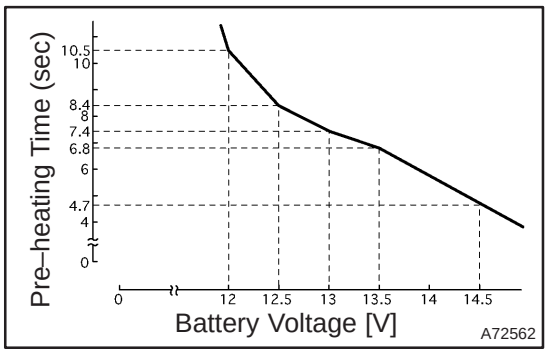

2. INSPECT PRE–HEATING

(a) Turn the ignition switch ON, measure how long it takes to the battery voltage is applied to the glow plugs.

SST 09082–00030, 09083–00150

Pre–Heating time:

Engine coolant temperature	Pre–Heating time
40 °C or more	1 sec
40 °C or less	Refer to the chart graph (15 sec at the longest)

(b) Turn the ignition switch STA, check that the battery voltage applied to the glow plugs.

SST 09082–00030, 09083–00150

(c) While cranking the engine, measure how long it takes to the battery voltage is applied to the glow plugs.

SST 09082–00030, 09083–00150

Pre–Heating time:

Engine coolant temperature	Pre–Heating time
40 °C or more	1 sec
40 °C or less	Refer to the chart graph (15 sec at the longest)

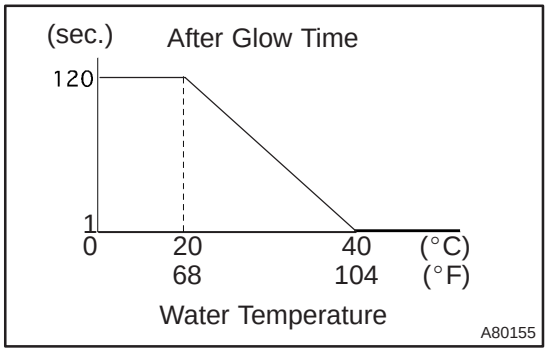

3. INSPECT AFTER GLOW TIME

(a) After the engine starting, measure how long it takes to the battery voltage is applied to the terminal SREL of the ECM.

After glow time: Refer to the chart graph

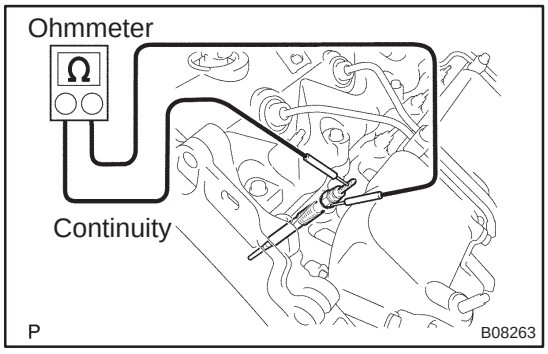

4. INSPECT GLOW PLUGS

(a) Using an ohmmeter, check that there is continuity between the glow plug terminal and ground.

Standard resistance: Approx. 0.72 Ω at 20°C (68°F)

NOTICE:

- **Be careful not to damage the glow plug pipes as it could cause an open circuit or shorten life of the glow plugs.**
- **Avoid getting oil and gasoline on the glow plug when cleaning.**
- **Wipe up any oil on the terminal and Bakelite washer with a dry cloth if they are stained with oil during inspection.**
- **Be careful not to apply more than 11 V to the glow plug as it could cause an open circuit.**

190JF–02

INSPECTION

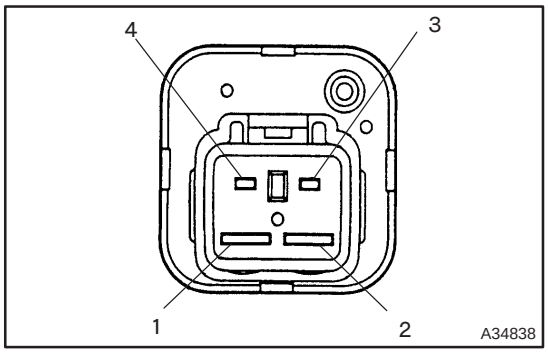

1. INSPECT GLOW PLUG RELAY ASSY

(a) Using an ohmmeter, check for continuity between each terminal.

Specified condition:

1 – 2	No continuity
	Continuity (Apply battery voltage terminals 3 and 4)

GLOW PLUG ASSY (1CD–FTV)

190O2–01

REPLACEMENT

1. REMOVE ENGINE COVER NO.1

(a) Remove the 5 nuts and the engine cover.

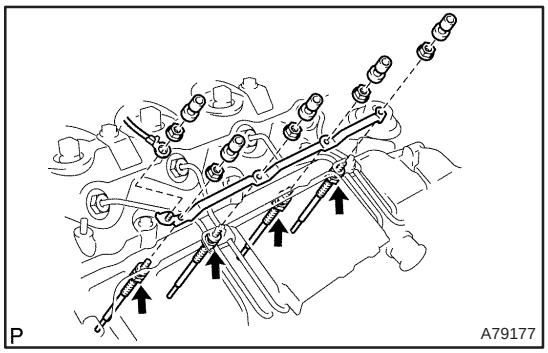

2. REMOVE GLOW PLUG ASSY

(a) Remove the 5 grommets.

(b) Remove the 5 nuts and the glow plug connector.

(c) Remove the 4 glow plugs.

3. INSTALL GLOW PLUG ASSY

Torque:
12.3 N·m (125 kgf·cm, 9 ft·lbf) for glow plug
2.2 N·m (22 kgf·cm, 19 in.·lbf) for nut

4. INSTALL ENGINE COVER NO.1

Torque: 8.0 N·m (82 kgf·cm, 71 in.·lbf)

FRONT SUSPENSION SYSTEM

2600K–06

PROBLEM SYMPTOMS TABLE

Use the table below to help you find the cause of the problem. The numbers indicate the priority of the likely cause of the problem. Check each part in order. If necessary, replace these parts.

Symptom	Suspect Area	See page
Wander/pulls	4. Tire (Worn or improperly inflated)	28–1
	5. Wheel alignment (Incorrect)	26–6
	6. Steering linkage (Loose or worn)	–
	7. Hub bearing (Worn)	30–2
	8. Steering gear (Out of adjustment or broken)	51–28 51–36
	9. Suspension parts (Worn)	–
Bottoming	1. Vehicle (Overloaded)	–
	2. Spring (Weak)	26–10
	3. Shock absorber (Worn)	26–10
Sways/pitches	1. Tire (Worn or improperly inflated)	28–1
	2. Stabilizer bar (Bent or broken)	26–26
	3. Shock absorber (Worn)	26–10
Front wheel shimmy	1. Tire (Worn or improperly inflated)	28–1
	2. Wheel (Out of balance)	28–1
	3. Shock absorber (Worn)	26–10
	4. Wheel alignment (Incorrect)	26–6
	5. Ball joint (Worn)	26–24
	6. Hub bearing (Worn)	30–2
	7. Steering linkage (Loose or worn)	–
	8. Steering gear (Out of adjustment or broken)	51–28 51–36
Abnormal tire wear	1. Tire (Worn or improperly inflated)	28–1
	2. Wheel alignment (Incorrect)	26–6
	3. Shock absorber (Worn)	26–10
	4. Suspension parts (Worn)	–

FRONT SUSPENSION

COMPONENTS

260DP–01

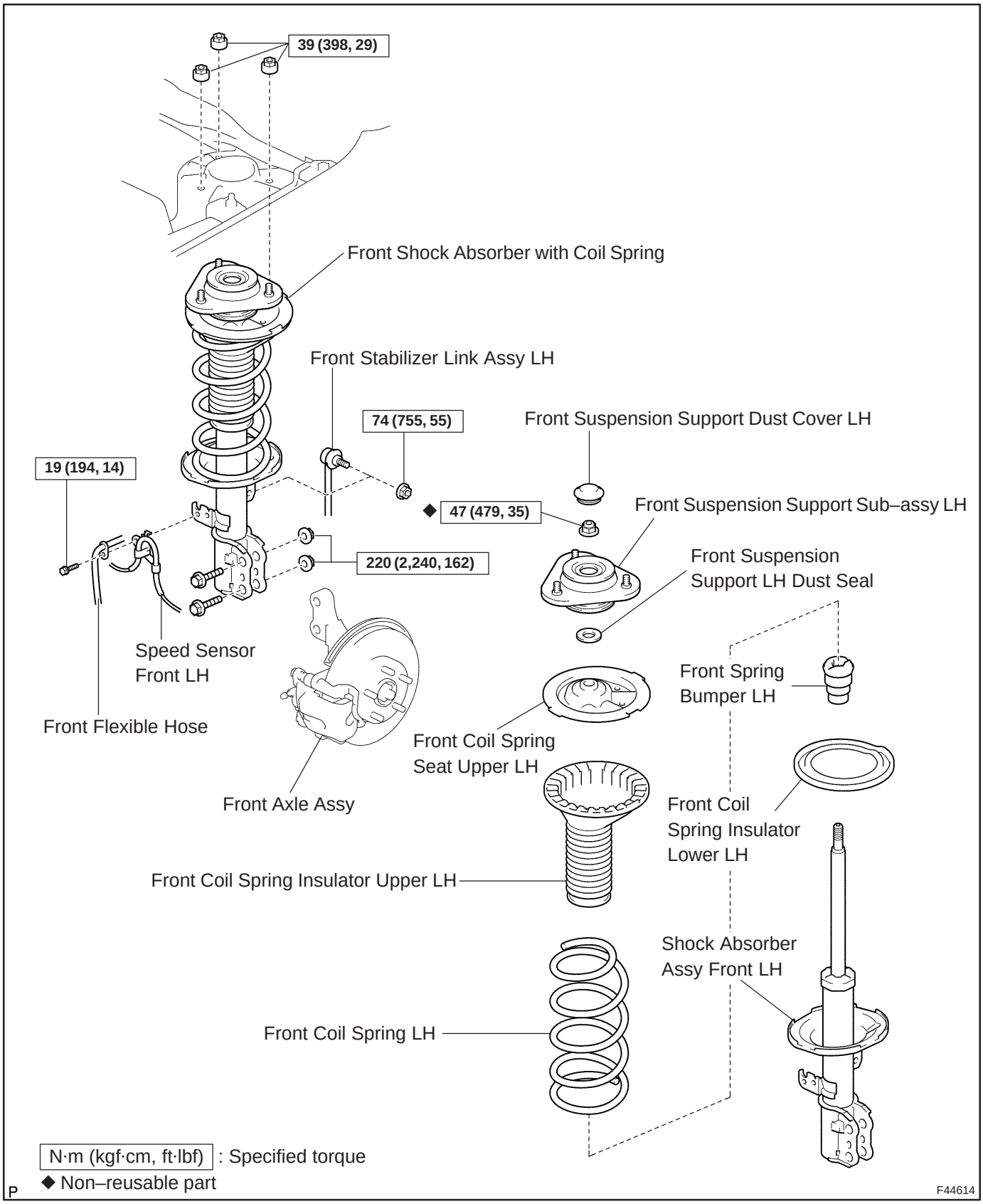

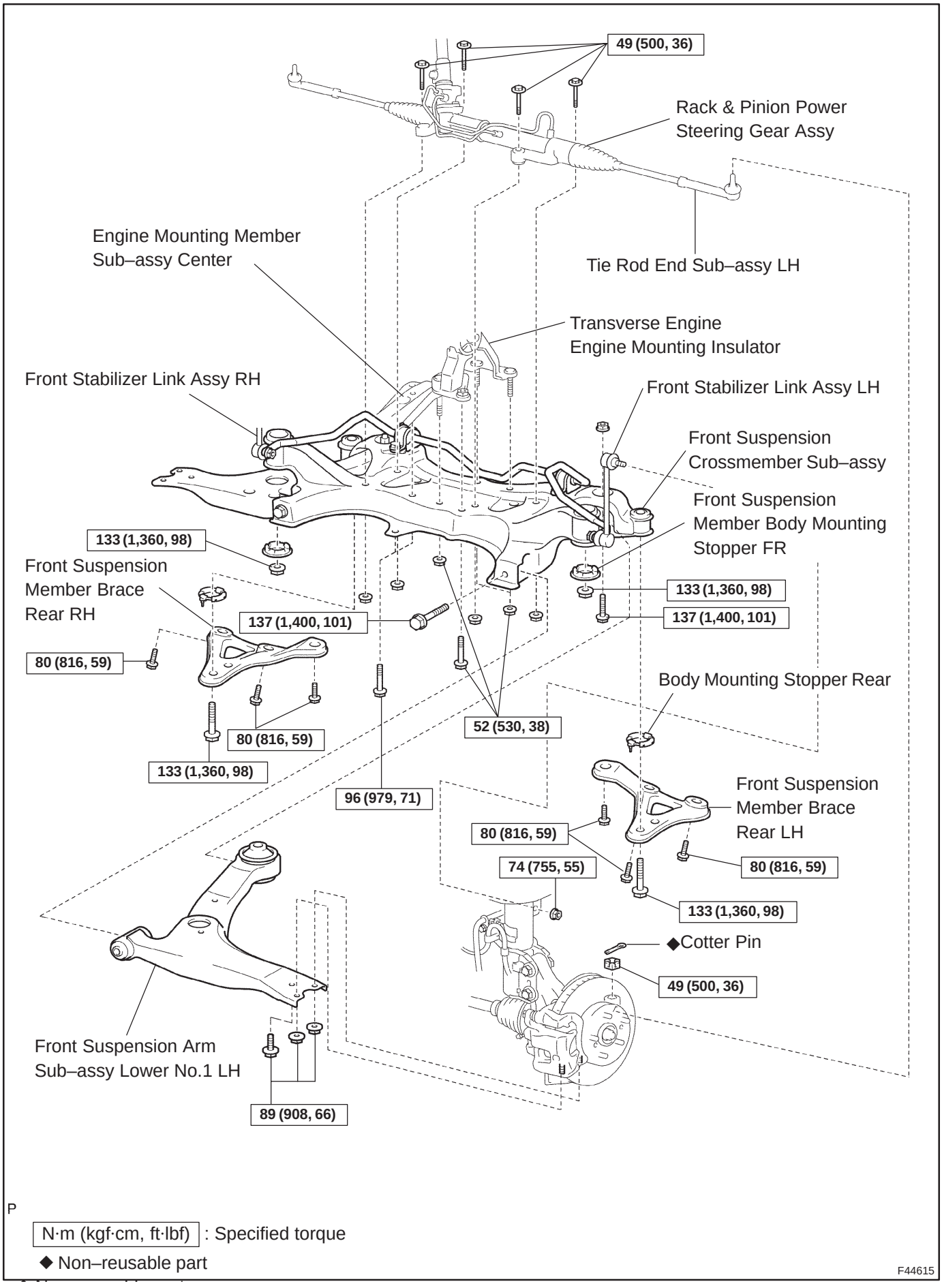

P

N·m (kgf·cm, ft·lbf) : Specified torque

◆ Non–reusable part

F44615

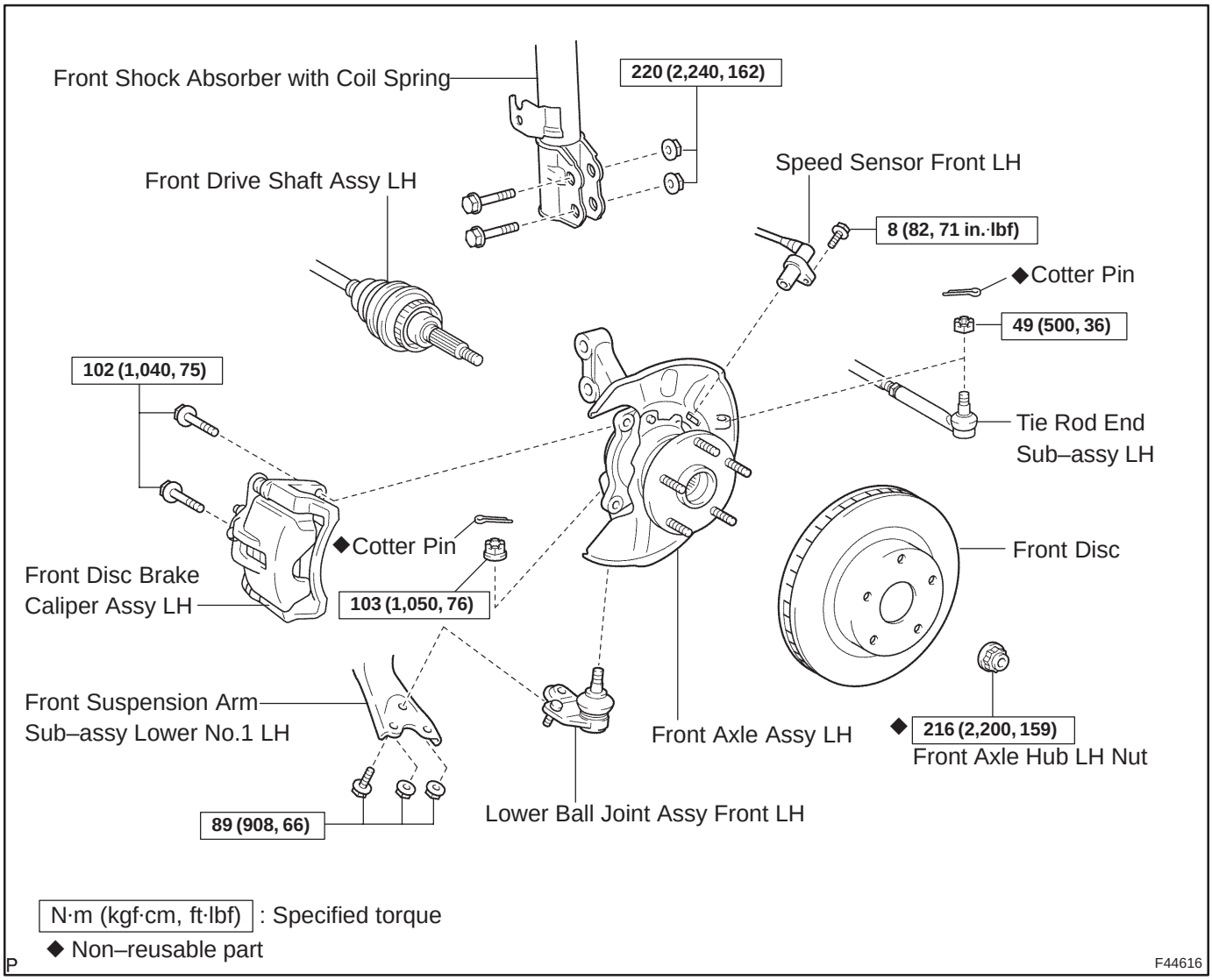
Front Shock Absorber with Coil Spring
220 (2,240, 162)
Front Drive Shaft Assy LH
Speed Sensor Front LH
8 (82, 71 in.·lbf)
◆Cotter Pin
49 (500, 36)
102 (1,040, 75)
Tie Rod End
Sub–assy LH
◆Cotter Pin
Front Disc
Front Disc Brake
Caliper Assy LH
103 (1,050, 76)
Front Suspension Arm
Sub–assy Lower No.1 LH
Front Axle Assy LH
◆ 216 (2,200, 159)
Front Axle Hub LH Nut
89 (908, 66)
Lower Ball Joint Assy Front LH
N·m (kgf·cm, ft·lbf) : Specified torque
◆ Non–reusable part
F44616

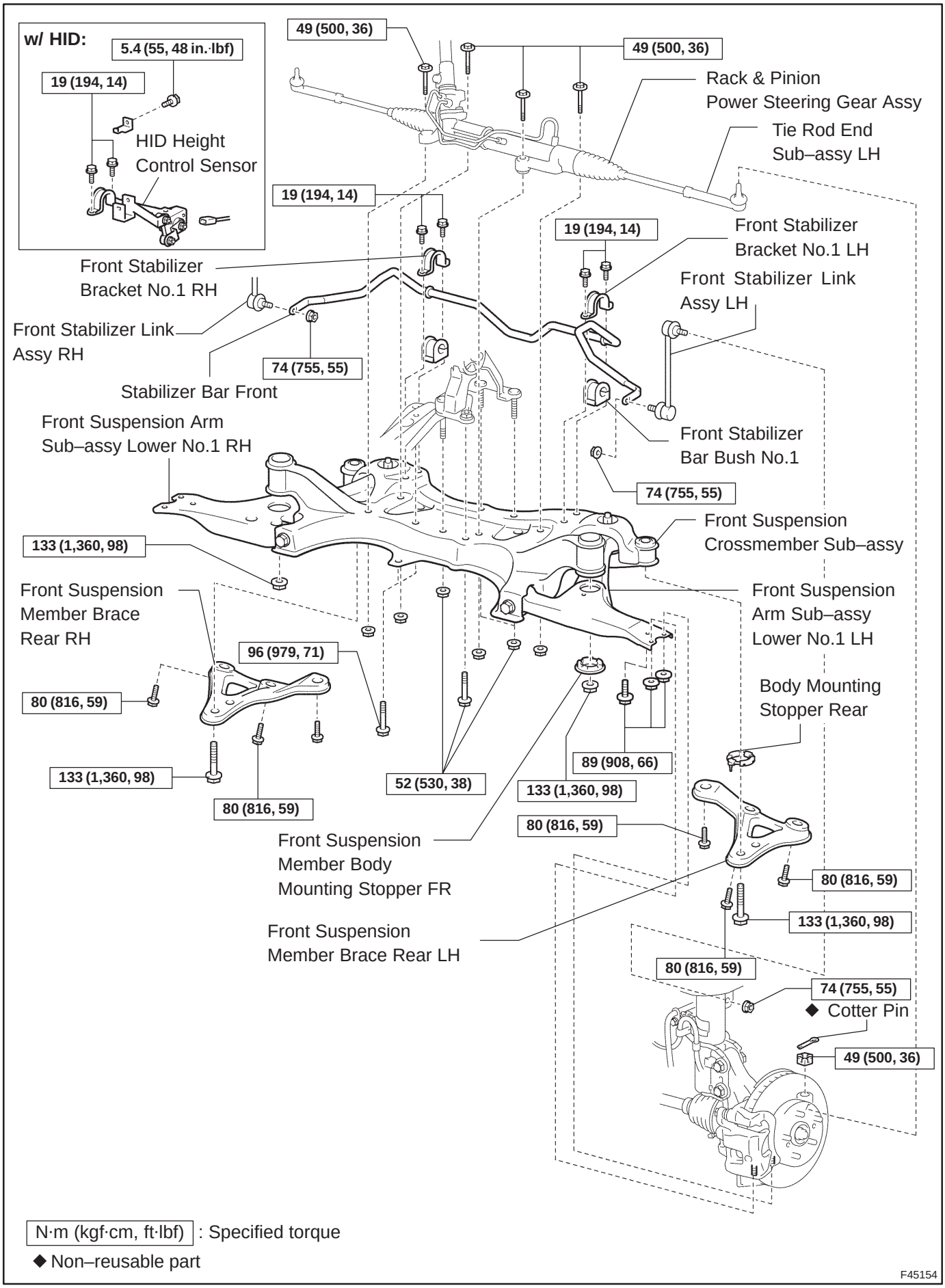

N·m (kgf·cm, ft·lbf) : Specified torque

◆ Non–reusable part

F45154

FRONT WHEEL ALIGNMENT

2600L–02

ADJUSTMENT

1. INSPECT TIRE (See page 28–1)

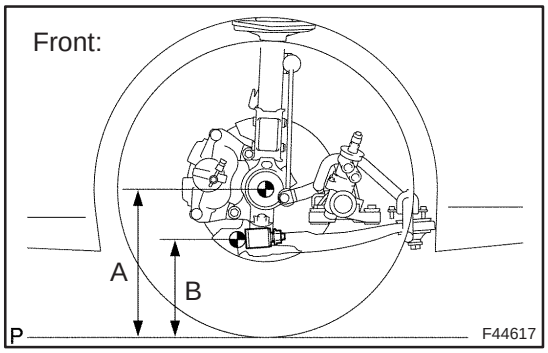

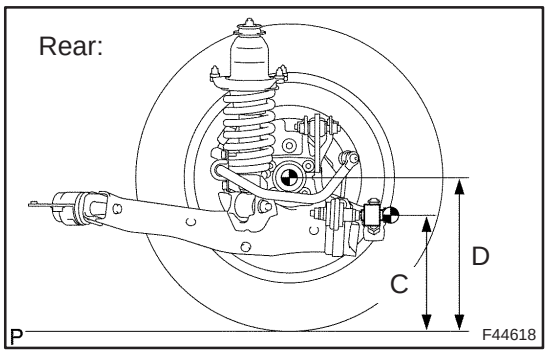

2. MEASURE VEHICLE HEIGHT

Vehicle height:

(Normal package)

Front	A – B: 92 mm (3.62 in.)
Rear	D – C: 61 mm (2.40 in.)

(Rough road package)

Front	A – B: 72 mm (2.83 in.)
Rear	D – C: 41 mm (1.61 in.)

Measuring points:

A: Ground clearance of front wheel center

B: Ground clearance of lower suspension arm front bolt center

C: Ground clearance of toe control arm inner bolt center

D: Ground clearance of rear wheel center

NOTICE:

Before inspecting the wheel alignment, adjust the vehicle height to the specified value.

If the vehicle height is not the specified value, adjust it by pushing down or lifting the body.

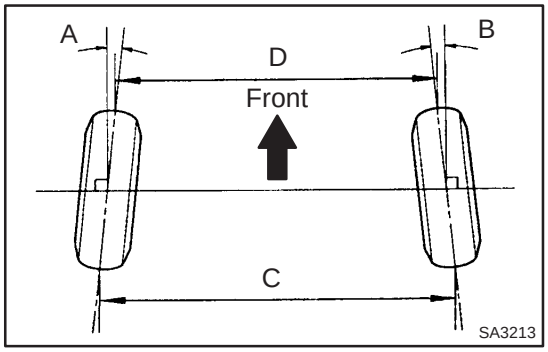

3. INSPECT TOE–IN

Toe–in:

Toe–in (total)	A + B: 0°06' ± 12' (0.1° ± 0.2°) C – D: 1 ± 2 mm (0.04 ± 0.08 in.)

If the toe–in is not within the specified value, adjust it at the rack ends.

4. ADJUST TOE–IN

(a) Remove the rack boot set clips.

(b) Loosen the tie rod end lock nuts.

(c) Turn the right and left rack ends by an equal amount to adjust the toe–in.

HINT:

Adjust the toe–in to the center of the specified value as much as possible.

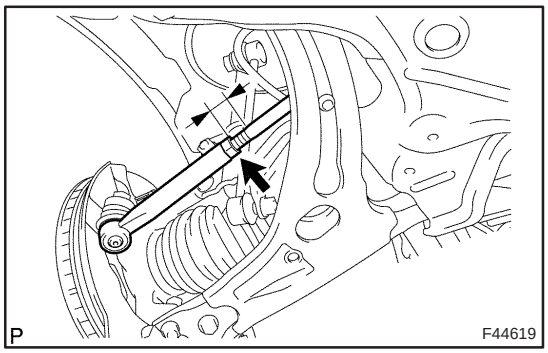

(d) Make sure that the lengths of the right and left rack ends are the same.

(e) Torque the tie rod end lock nuts.

Torque: 74 N·m (755 kgf·cm, 55 ft·lbf)

(f) Place the boots on the seats and install the clips.

HINT:

Make sure that the boots are not twisted.

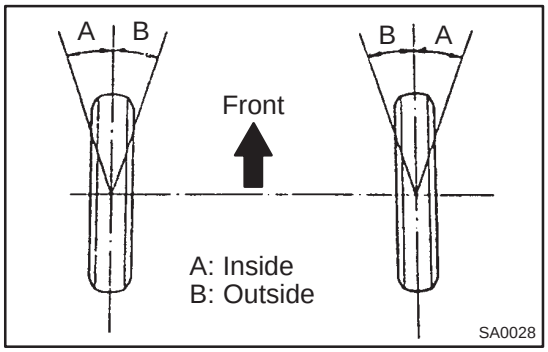

5. INSPECT WHEEL ANGLE

(a) Turn the steering wheel fully and measure the turning angle.

Wheel turning angle:

(Normal package)

Inside wheel	38°17' ± 2° (38.28° ± 2°) *1 35°47' ± 2° (35.78° ± 2°) *2
Outside wheel: Reference	32°52' (32.87°) *1 31°15' (31.25°) *2

(Rough road package)

Inside wheel	38°42' ± 2° (38.70° ± 2°) *1 36°09' ± 2° (36.15° ± 2°) *2
Outside wheel: Reference	33°16' (33.27°) *1 31°38' (31.63°) *2

***1: Electric motor power steering models**

***2: Oil pressure power steering models**

If the right and left inside wheel angles differ from the specified value, check the right and left rack end lengths.

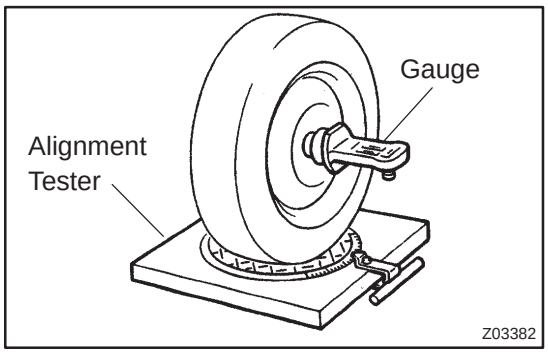

6. INSPECT CAMBER, CASTER AND STEERING AXIS INCLINATION

(a) Install the camber–caster–kingpin gauge or position the vehicle on the wheel alignment tester.

(b) Inspect the camber, caster and steering axis inclination.

Camber, caster and steering axis inclination:

(Normal package)

Camber	–0°34' ± 45' (–0.57° ± 0.75°)
Right–left error	45' (0.75°) or less
Caster	2°54' ± 45' (2.90° ± 0.75°)
Right–left error	45' (0.75°) or less
Steering axis inclination	12°27' ± 45' (12.45° ± 0.75°)
Right–left error	45' (0.75°) or less

(Rough road package)

Camber	–0°19' ± 45' (–0.32° ± 0.75°)
Right–left error	45' (0.75°) or less
Caster	2°40' ± 45' (2.67° ± 0.75°)
Right–left error	45' (0.75°) or less
Steering axis inclination	11°56' ± 45' (11.93° ± 0.75°)
Right–left error	45' (0.75°) or less

If the caster and steering axis inclination are not within the specified values, after the camber has been correctly adjusted, recheck the suspension parts for damaged and/or worn out parts.

7. ADJUST CAMBER

NOTICE:

After the camber has been adjusted, inspect the toe–in.

(a) Remove the front wheel.

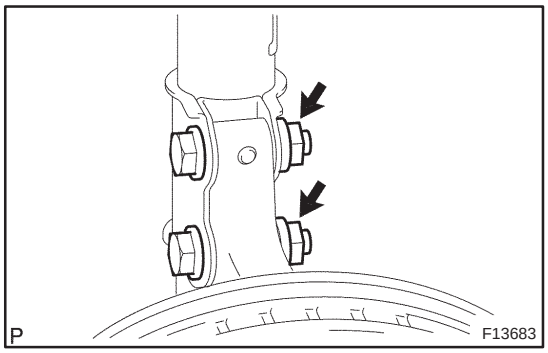

(b) Remove the 2 bolts and nuts on the lower side of the shock absorber.

If reusing the bolts and/or nuts, coat the threads of nuts with engine oil.

(c) Clean the installation surfaces of the shock absorber and the steering knuckle.

(d) Temporarily install the 2 bolts and nuts.

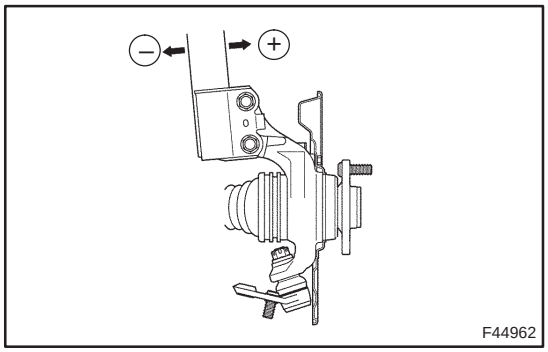

(e) Adjust the camber by pushing or pulling the lower side of the shock absorber in the direction in which the camber adjustment is required.

(f) Tighten the nuts.
Torque: 220 N·m (2,240 kgf·cm, 162 ft·lbf)

(g) Install the front wheel.
Torque: 103 N·m (1,050 kgf·cm, 76 ft·lbf)

(h) Check the camber.

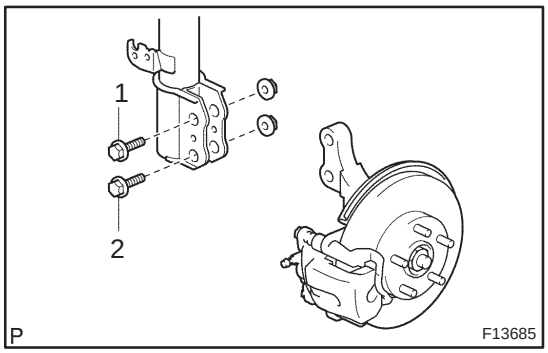

HINT:

- Adjust the camber to the center of the specified value as much as possible.
- Adjusting value for the set bolts is 6' – 30' (0.1° – 0.5°).

If the camber is not within the specified value, using the following table, estimate how much additional camber adjustment will be required, and select the camber adjusting bolt.

NOTICE:
Tighten the adjusting bolt with a washer and a new nut.

Bolt / Adjusting Value	Set Bolt		Adjusting Bolt					
	90105–17008		90105–17009		90105–17010		90105–17011	
			1 Dot		2 Dots		3 Dots	
	1	2	1	2	1	2	1	2
–1°30'––1°15'							●	●
–1°15'––1°00'					●			●
–1°00'––45'			●					●
–45'––30'	●							●
–30'––15'	●					●		
–15'–0'	●			●				
0'–15'	●			●				
15'–30'	●					●		
30'–45'	●							●
45'–1°00'			●					●
1°00'–1°15'					●			●
1°15'–1°30'							●	●

N
F12938

(i) Perform the procedure mentioned above again. At step (b), replace 1 or 2 selected bolts.

HINT:
When replacing the 2 bolts, replace 1 bolt for each time.

FRONT SHOCK ABSORBER WITH COIL SPRING

OVERHAUL

2600M–04

HINT:

- COMPONENTS: See page 26–2
- This procedure is provided for the overhaul on the LH side. Overhaul the other side by the same procedure as the LH side.

1. REMOVE FRONT WHEEL

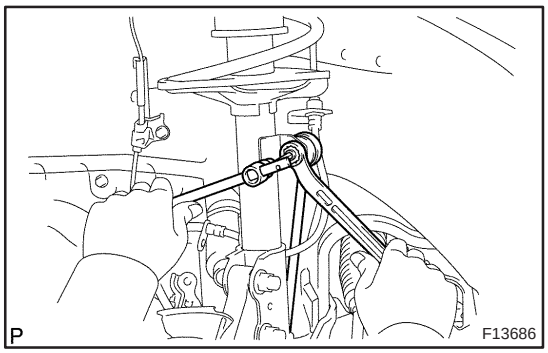

2. SEPARATE FRONT STABILIZER LINK ASSY LH

(a) Remove the nut and disconnect the stabilizer bar link from the shock absorber.

HINT:

If the ball joint turns together with the nut, use a hexagon (6 mm) wrench to hold the stud.

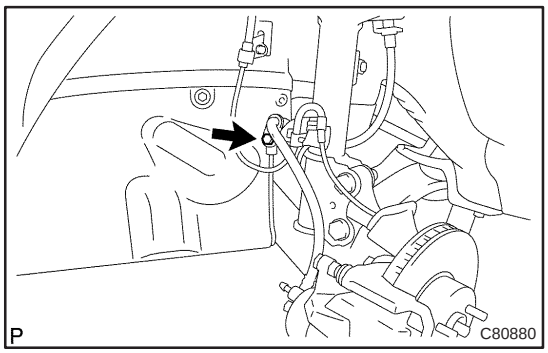

3. REMOVE FRONT SHOCK ABSORBER WITH COIL SPRING

(a) Remove the bolt, disconnect the front flexible hose and speed sensor front LH.

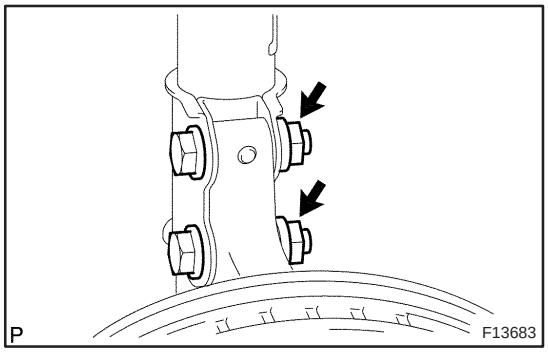

(b) Remove the 2 nuts and bolts on the lower side of the shock absorber.

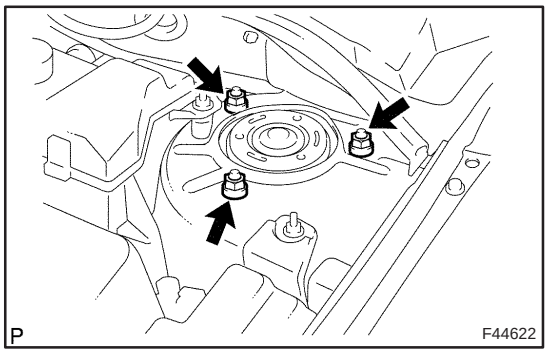

(c) Remove the 3 nuts on the upper side of the shock absorber.

(d) Remove the shock absorber with the coil spring.

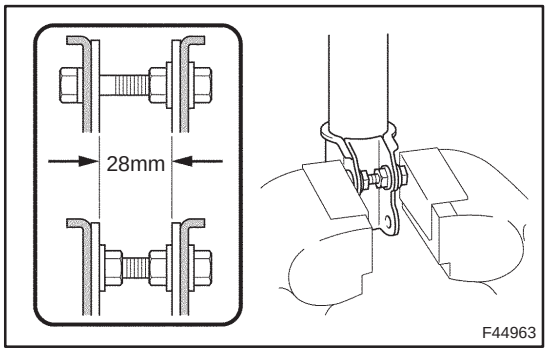

4. FIX FRONT SHOCK ABSORBER WITH COIL SPRING

(a) Install 2 nuts and a bolt to the bracket at the lower side of the shock absorber and secure it in a vise.

5. REMOVE FRONT SUSPENSION SUPPORT DUST COVER LH

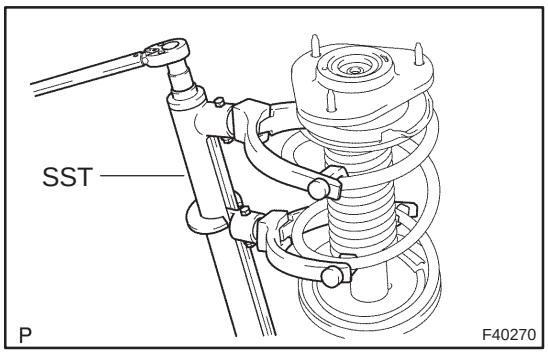

6. REMOVE FRONT SUPPORT TO FRONT SHOCK ABSORBER LH NUT

(a) Using SST, compress the coil spring.
SST 09727–30021

NOTICE:

Do not use an impact wrench. It will damage the SST.

(b) Remove the front suspension support dust cover from the suspension support.

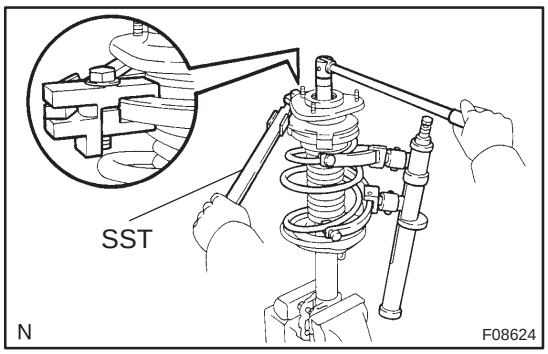

(c) Using SST to hold the spring seat, remove the nut.
SST 09729–22031

7. REMOVE FRONT SUSPENSION SUPPORT SUB–ASSY LH
8. REMOVE FRONT SUSPENSION SUPPORT LH DUST SEAL
9. REMOVE FRONT COIL SPRING SEAT UPPER LH
10. REMOVE FRONT COIL SPRING INSULATOR UPPER LH
11. REMOVE FRONT COIL SPRING LH
12. REMOVE FRONT SPRING BUMPER LH
13. REMOVE FRONT COIL SPRING INSULATOR LOWER LH

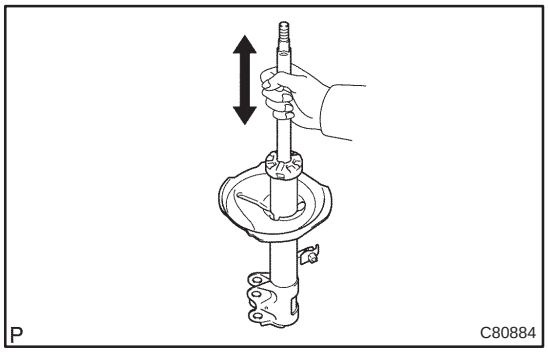

14. INSPECT SHOCK ABSORBER ASSY FRONT LH

(a) Compress and extend the shock absorber rod and check that there is no abnormal resistance or unusual sound during operation.

If there is any abnormality, replace the shock absorber with a new one.

NOTICE:

When disposing of the shock absorber, see DISPOSAL on page 26–15.

15. INSTALL FRONT COIL SPRING INSULATOR LOWER LH

HINT:

Fit the front coil spring insulator lower into the gap of the shock absorber.

(a) Install the front coil spring insulator lower onto the shock absorber.

16. INSTALL FRONT SPRING BUMPER LH

(a) Install the spring bumper to the piston rod.

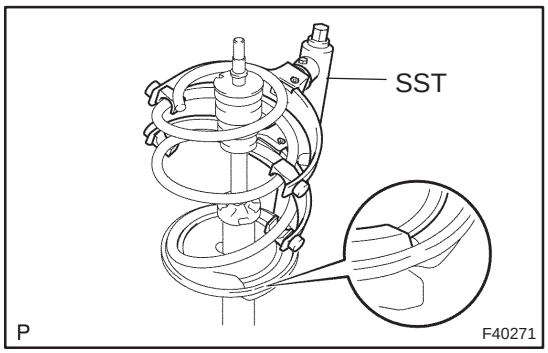

17. INSTALL FRONT COIL SPRING LH

(a) Using SST, compress the coil spring.

SST 09727–30021

NOTICE:

Do not use an impact wrench. It will damage the SST.

(b) Install the coil spring to the shock absorber.

HINT:

Fit the lower end of the coil spring into the gap of the front coil spring insulator lower LH.

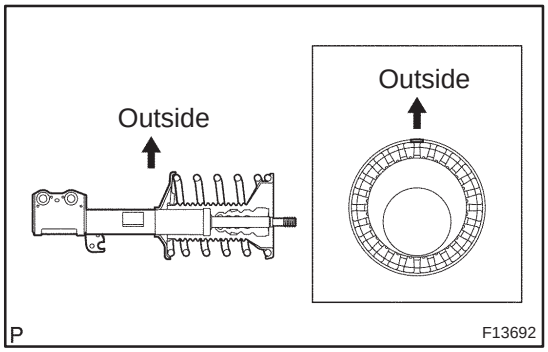

18. INSTALL FRONT COIL SPRING INSULATOR UPPER LH

(a) Install the upper insulator as shown in the illustration.

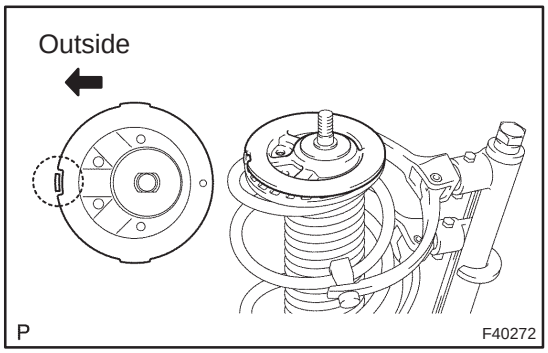

19. INSTALL FRONT COIL SPRING SEAT UPPER LH

(a) Install the spring seat to the shock absorber with the mark facing to the outside of the vehicle.

20. INSTALL FRONT SUSPENSION SUPPORT LH DUST SEAL

(a) Install a new dust seal.

21. INSTALL FRONT SUSPENSION SUPPORT SUB–ASSY LH

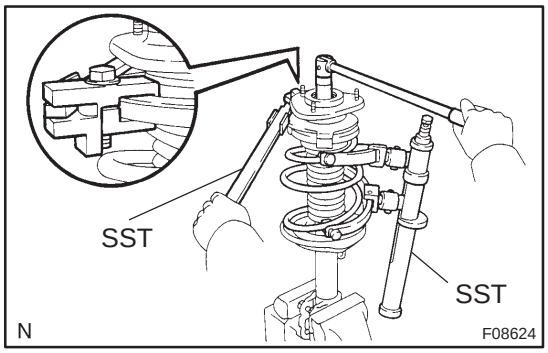

22. INSTALL FRONT SUPPORT TO FRONT SHOCK ABSORBER LH NUT

(a) Using SST to hold the suspension support, install a new nut.
SST 09729–22031
Torque: 47 N·m (479 kgf·cm, 35 ft·lbf)

(b) Remove the SST.
SST 09727–30021,09729–22031

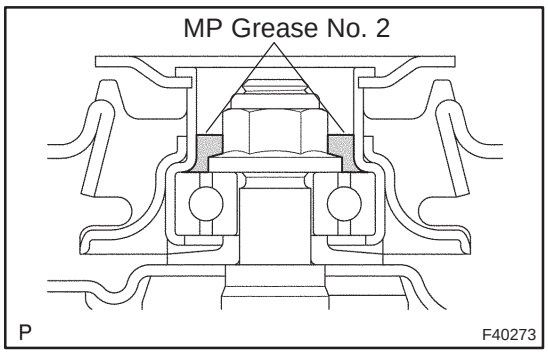

23. INSTALL FRONT SUSPENSION SUPPORT DUST COVER LH

(a) Apply MP grease No. 2 into the suspension support.

CAUTION:
Do not touch grease on rubber surface of the suspension support.

(b) Install the dust cover.

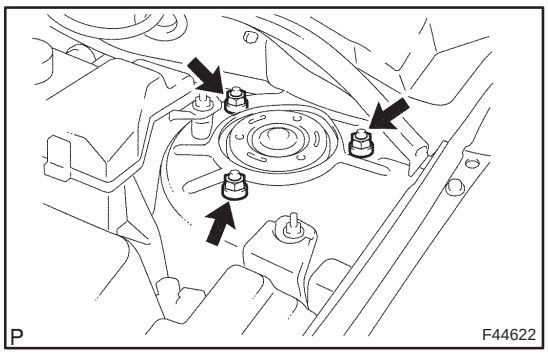

24. INSTALL FRONT SHOCK ABSORBER WITH COIL SPRING

(a) Install the shock absorber with the 2 bolts.

(b) Install the 3 nuts on the upper side of shock absorber.
Torque: 39 N·m (398 kgf·cm, 29 ft·lbf)

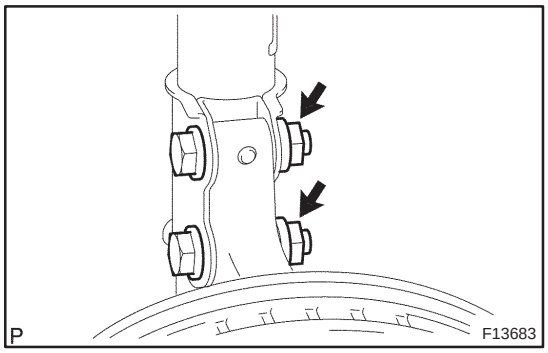

(c) Install the 2 nuts to the lower side of shock absorber.
Torque: 220 N·m (2,240 kgf·cm, 162 ft·lbf)

HINT:
Coat the threads of the nuts with engine oil.

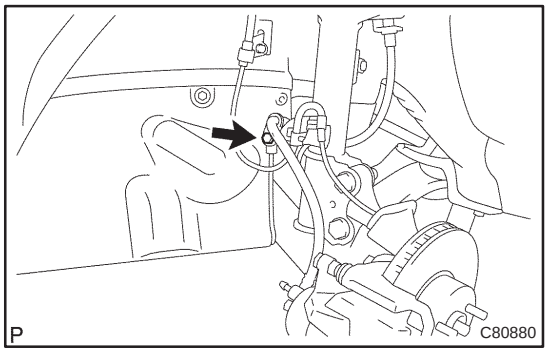

(d) Install the flexible hose and ABS speed sensor wire harness bracket with the bolt.
Torque: 19 N·m (192 kgf·cm, 14 ft·lbf)

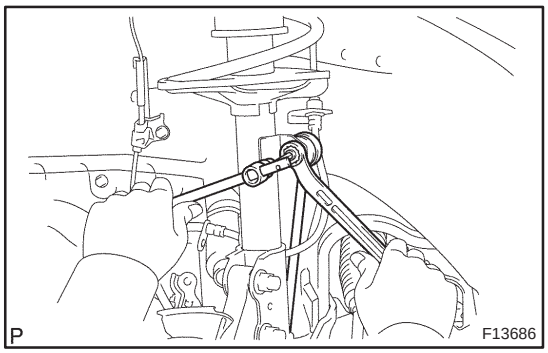

25. INSTALL FRONT STABILIZER LINK ASSY LH

(a) Install the stabilizer bar link with the nut.
Torque: 74 N·m (755 kgf·cm, 55 ft·lbf)

HINT:
If the ball joint turns together with the nut, use a hexagon (6 mm) wrench to hold the stud.

26. INSTALL FRONT WHEEL
Torque: 103 N·m (1,050 kgf·cm, 76 ft·lbf)

27. INSPECT AND ADJUST FRONT WHEEL ALIGNMENT **(See page 26–6)**

2600N–04

DISPOSAL

HINT:

Dispose the RH side by the same procedures as the LH side.

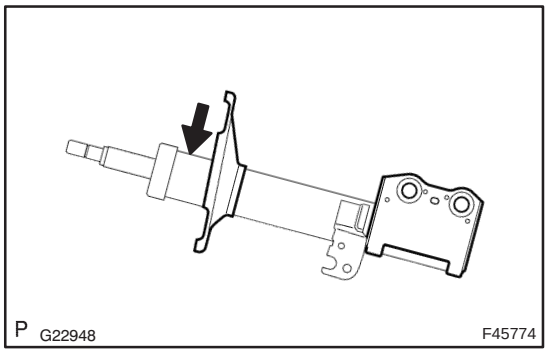

1. DISPOSE OF SHOCK ABSORBER ASSY FRONT LH

(a) Fully extend the shock absorber rod.

(b) Using a drill, make a hole in the cylinder as shown in the illustration to discharge the gas inside.

CAUTION:

- **When drilling, chips may fly out. Work carefully.**
- **The gas is colorless, odorless and non–poisonous.**

FRONT SUSPENSION ARM SUB–ASSY LOWER NO.1 LH (ATM)

260DQ–01

REPLACEMENT

HINT:

- COMPONENTS: See page 26–2
- Replace the RH side (Engine: 1AZ) by the same procedures as the LH (ATM) side.
- Replace the RH side (Engine: 1ZZ) by the same procedures as the LH (MTM) side.

1. REMOVE FRONT WHEELS

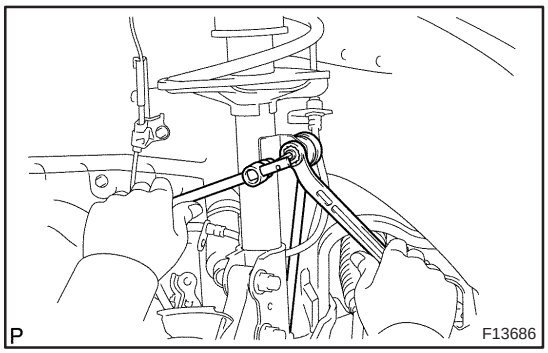

2. SEPARATE FRONT STABILIZER LINK ASSY LH

(a) Remove the nut and disconnect the stabilizer bar link from the shock absorber.

HINT:

If the ball joint turns together with the nut, use a hexagon (6 mm) wrench to hold the stud.

3. SEPARATE FRONT STABILIZER LINK ASSY RH

HINT:

Separate the RH side by the same procedures as the LH side.

4. SEPARATE TIE ROD END SUB–ASSY LH (See page 30–6)

SST 09628–62011

5. SEPARATE TIE ROD END SUB–ASSY RH

SST 09628–62011

HINT:

Separate the RH side by the same procedures as the LH side.

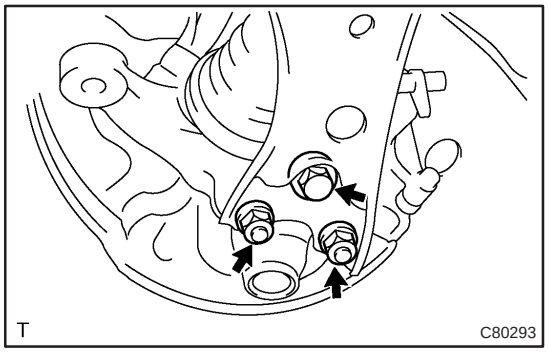

6. SEPARATE FRONT SUSPENSION ARM SUB–ASSY LOWER NO.1 LH

(a) Remove the bolt and 2 nuts, and separate the front suspension arm sub–assy lower No.1 from the lower ball joint.

7. SEPARATE FRONT SUSPENSION ARM SUB–ASSY LOWER NO.1 RH

HINT:

Separate the RH side by the same procedures as the LH side.

8. SEPARATE RACK & PINION POWER STEERING GEAR ASSY

(a) Electric power steering model: See page 51–28

(b) Oil pressure power steering model: See page 51–36

9. SUSPEND ENGINE ASSY

(a) U341E: See page 40–11

(b) U241E: See page 40–25

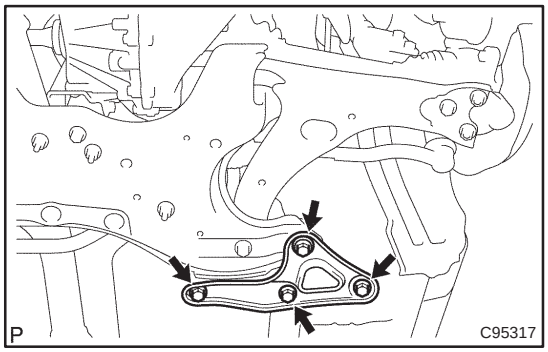

10. REMOVE FRONT SUSPENSION MEMBER BRACE REAR LH

(a) Support the front suspension crossmember sub–assy with a transmission jack.

(b) Remove the 4 bolts and front suspension member brace rear LH.

(c) Remove the front suspension member body mounting stopper rear from the front suspension member brace rear LH.

11. REMOVE FRONT SUSPENSION MEMBER BRACE REAR RH

HINT:

Remove the RH side by the same procedures as the LH side.

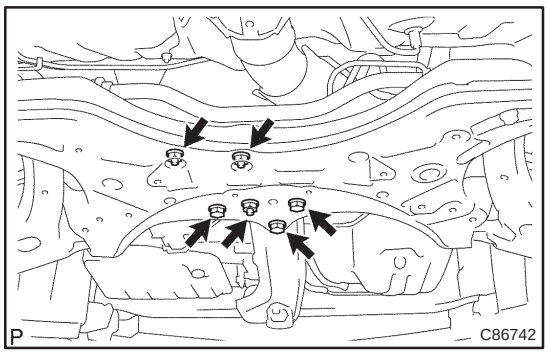

12. SEPARATE FRONT SUSPENSION CROSSMEMBER SUB–ASSY

(a) w/ HID:

Disconnect the height control sensor (Front) connector.

(b) Remove the 3 bolts and 3 nuts, disconnect the transverse engine engine mounting insulator and engine mounting member sub–assy center from the front suspension crossmember sub–assy.

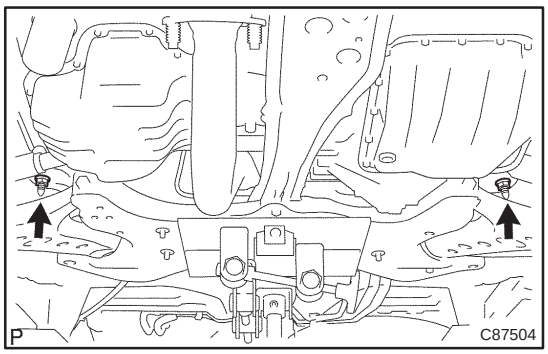

(c) Remove the 2 nuts and 2 front suspension member body mounting stoppers front.

(d) Lower the transmission jack, remove the front suspension crossmember sub–assy.

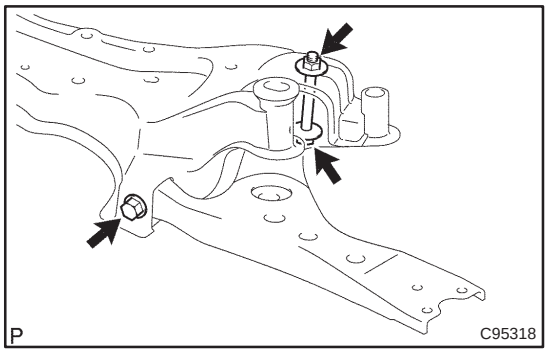

13. REMOVE FRONT SUSPENSION ARM SUB–ASSY LOWER NO.1 LH

(a) Remove the 2 bolts, nut and lower suspension arm sub–assy lower No.1 LH from the front suspension crossmember sub–assy.

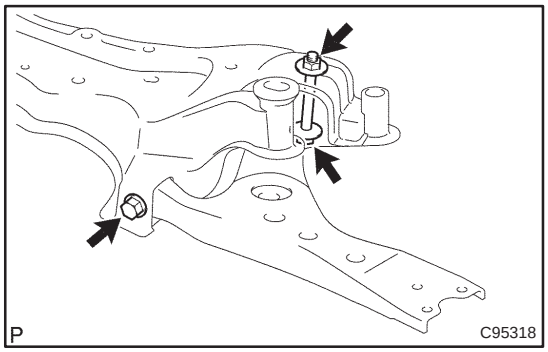

14. TEMPORARILY TIGHTEN FRONT SUSPENSION ARM SUB–ASSY LOWER NO.1 LH

(a) Install the lower suspension arm sub–assy lower No.1 LH, and temporarily tighten the 2 bolts and nut.

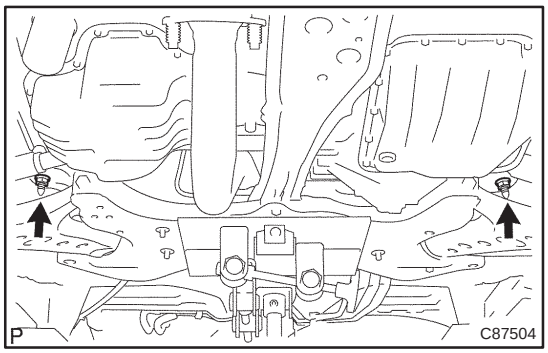

15. INSTALL FRONT SUSPENSION CROSSMEMBER SUB–ASSY

(a) Support the front suspension crossmember sub–assy with a transmission jack.

(b) Install the 2 front suspension member body mounting stoppers front and 2 nuts.

Torque: 133 N·m (1,360 kgf·cm, 98 ft·lbf)

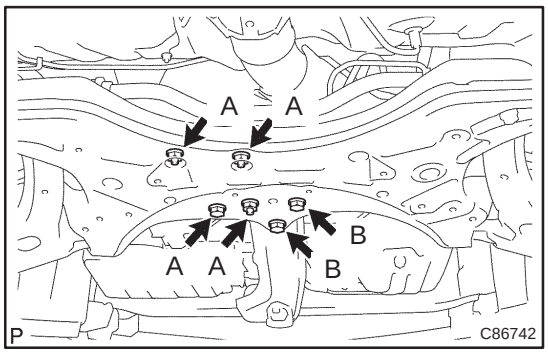

(c) Connect the transverse engine engine mounting insulator and engine mounting member sub–assy center to the front suspension crossmember sub–assy.

(d) Install the 3 bolts and 3 nuts.

Torque:
Bolt A: 52 N·m (530 kgf·cm, 38 ft·lbf)
Bolt B: 96 N·m (979 kgf·cm, 71 ft·lbf)

(e) w/ HID:
Connect the height control sensor (Front) connector.

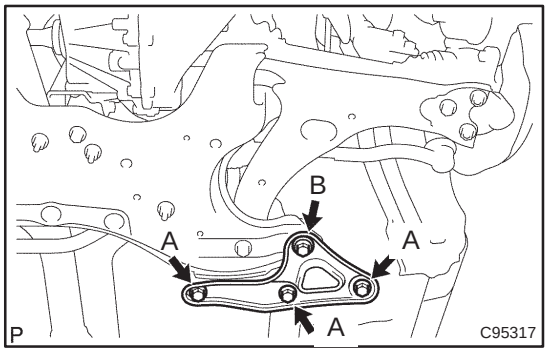

16. INSTALL FRONT SUSPENSION MEMBER BRACE REAR LH

(a) Install the front suspension member body mounting stopper rear to the front suspension member brace rear LH.

(b) Install the 4 bolts and front suspension member brace rear LH.

Torque:
Bolt A: 80 N·m (816 kgf·cm, 59 ft·lbf)
Bolt B: 133 N·m (1,360 kgf·cm, 98 ft·lbf)

17. INSTALL FRONT SUSPENSION MEMBER BRACE REAR RH

HINT:
Install the RH side by the same procedures as the LH side.

18. CONNECT RACK & PINION POWER STEERING GEAR ASSY

(a) Electric power steering model: See page 51–28

(b) Oil pressure power steering model: See page 51–36

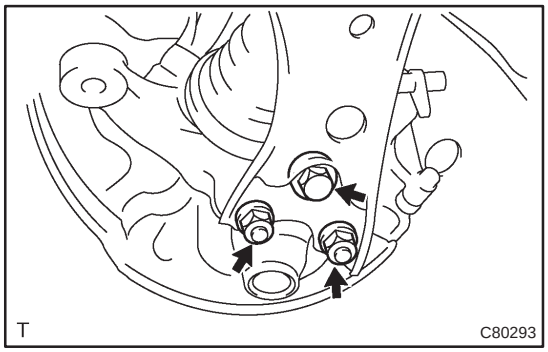

19. CONNECT FRONT SUSPENSION ARM SUB–ASSY LOWER NO.1 LH

(a) Connect the lower suspension arm to the lower ball joint with the 2 nuts and bolt.
Torque: 89 N·m (908 kgf·cm, 66 ft·lbf)

20. CONNECT FRONT SUSPENSION ARM SUB–ASSY LOWER NO.1 RH

HINT:
Connect the RH side by the same procedures as the LH side.

21. INSTALL TIE ROD END SUB–ASSY LH (See page 30–6)

22. INSTALL TIE ROD END SUB–ASSY RH

HINT:
Connect the RH side by the same procedures as the LH side.

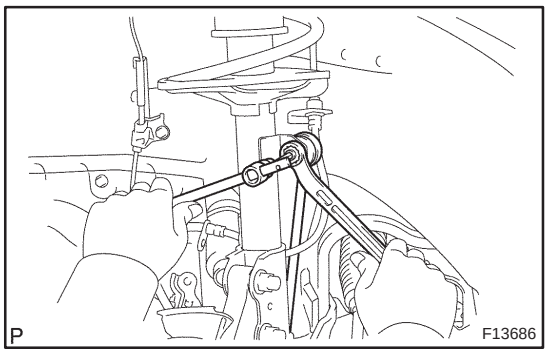

23. CONNECT FRONT STABILIZER LINK ASSY LH

(a) Install the stabilizer bar link with the nut.
Torque: 74 N·m (755 kgf·cm, 55 ft·lbf)

HINT:
If the ball joint turns together with the nut, use a hexagon (6 mm) wrench to hold the stud.

24. CONNECT FRONT STABILIZER LINK ASSY RH

HINT:
Install the RH side by the same procedures as the LH side.

25. STABILIZE SUSPENSION

(a) Install the front wheel and jack down the vehicle.
Torque: 103 N·m (1,050 kgf·cm, 76 ft·lbf)

(b) Bounce the vehicle up and down several times to stabilize the suspension.

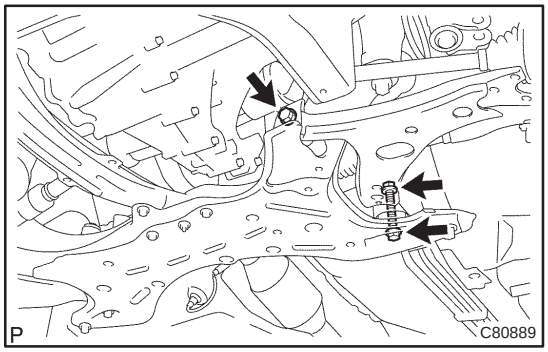

26. FULLY TIGHTEN FRONT SUSPENSION ARM SUB–ASSY LOWER NO.1 LH

(a) Fully tighten the 2 bolts and nut.
Torque: 137 N·m (1,400 kgf·cm, 101 ft·lbf)

27. INSPECT AND ADJUST FRONT WHEEL ALIGNMENT (See page 26–6)

FRONT SUSPENSION ARM SUB–ASSY LOWER NO.1 LH (MTM)

260DR–01

REPLACEMENT

HINT:

- COMPONENTS: See page 26–2
- Replace the RH side (Engine: 1AZ) by the same procedures as the LH (ATM) side.
- Replace the RH side (Engine: 1ZZ, 3ZZ, 1CD) by the same procedures as the LH (MTM) side.

1. REMOVE FRONT WHEELS

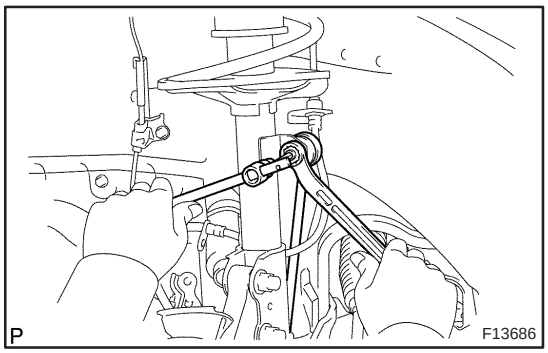

2. SEPARATE FRONT STABILIZER LINK ASSY LH

(a) Remove the nut and disconnect the stabilizer bar link from the shock absorber.

HINT:

If the ball joint turns together with the nut, use a hexagon (6 mm) wrench to hold the stud.

3. SEPARATE FRONT STABILIZER LINK ASSY RH

HINT:

Separate the RH side by the same procedures as the LH side.

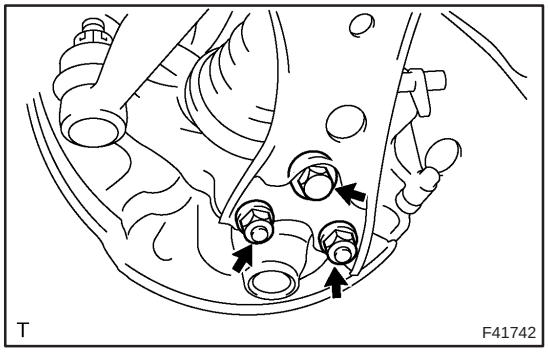

4. SEPARATE FRONT SUSPENSION ARM SUB–ASSY LOWER NO.1 LH

(a) Remove the bolt and 2 nuts, and separate the lower suspension arm from the lower ball joint.

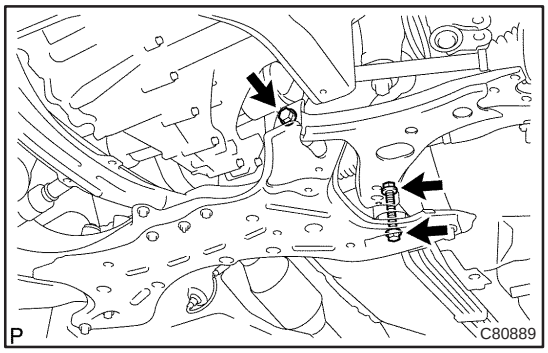

5. REMOVE FRONT SUSPENSION ARM SUB–ASSY LOWER NO.1 LH

(a) Remove the 2 bolts, nut and lower suspension arm sub–assy lower No.1 LH from the front suspension crossmember sub–assy.

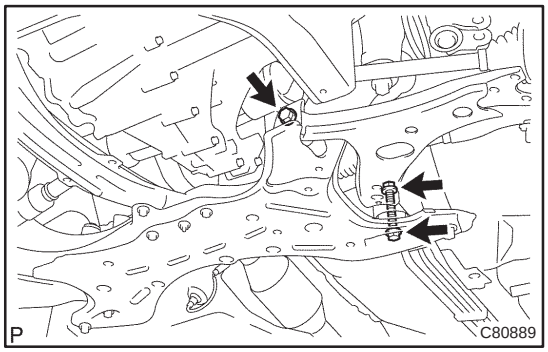

6. TEMPORARILY TIGHTEN FRONT SUSPENSION ARM SUB–ASSY LOWER NO.1 LH

(a) Install the lower suspension arm, temporary tighten the 2 bolts and nut.

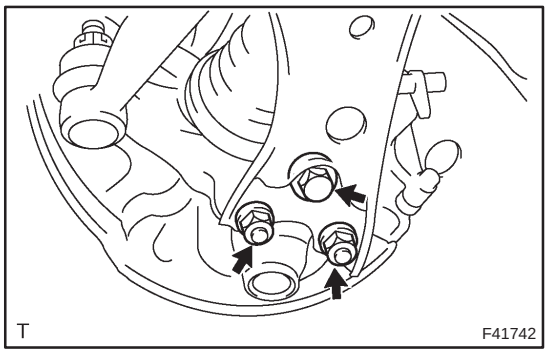

7. CONNECT FRONT SUSPENSION ARM SUB–ASSY LOWER NO.1 LH

(a) Connect the lower suspension arm to the lower ball joint with the 2 nuts and bolt.
Torque: 89 N·m (908 kgf·cm, 66 ft·lbf)

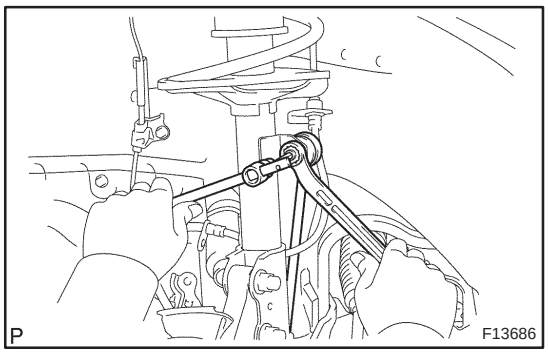

8. CONNECT FRONT STABILIZER LINK ASSY LH

(a) Install the stabilizer bar link with the nut.
Torque: 74 N·m (755 kgf·cm, 55 ft·lbf)

HINT:
If the ball joint turns together with the nut, use a hexagon (6 mm) wrench to hold the stud.

9. CONNECT FRONT STABILIZER LINK ASSY RH

HINT:
Install the RH side by the same procedures as the LH side.

10. STABILIZE SUSPENSION

(a) Install the front wheel and jack down the vehicle.
Torque: 103 N·m (1,050 kgf·cm, 76 ft·lbf)

(b) Bounce the vehicle up and down several times to stabilize the suspension.

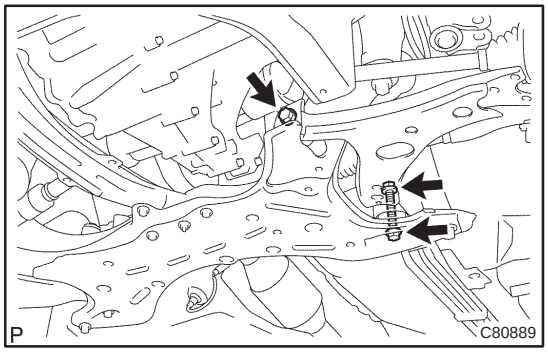

11. FULLY TIGHTEN FRONT SUSPENSION ARM SUB–ASSY LOWER NO.1 LH

(a) Fully tighten the 2 bolts and nut.
Torque: 137 N·m (1,400 kgf·cm, 101 ft·lbf)

12. INSPECT AND ADJUST FRONT WHEEL ALIGNMENT (See page 26–6)

LOWER BALL JOINT ASSY FRONT LH

260DS–01

REPLACEMENT

HINT:

- COMPONENTS: See page 26–2
- Replace the RH side by the same procedures as the LH side.

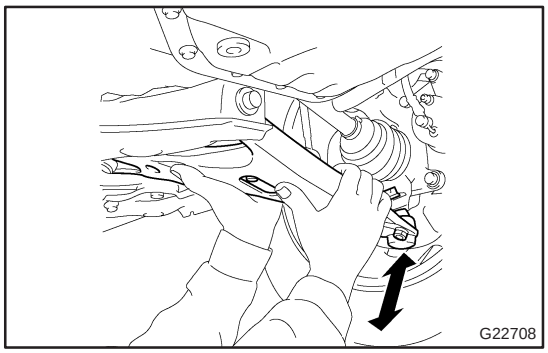

1. INSPECT LOWER BALL JOINT ASSY FRONT LH

(a) Jack up front side of the vehicle.

(b) Check that there is no looseness on the ball joint by shaking the lower arm up and down with a force of 294 N (30 kgf, 66 lbf).

2. REMOVE FRONT WHEEL

3. SEPARATE FRONT AXLE HUB LH NUT (See page 30–6)

SST 09930–00010

4. DISCONNECT SPEED SENSOR FRONT LH (See page 30–6)

5. SEPARATE FRONT DISC BRAKE CALIPER ASSY LH (See page 30–22)

6. REMOVE FRONT DISC

7. SEPARATE TIE ROD END SUB–ASSY LH (See page 30–22)

SST 09628–62011

8. SEPARATE FRONT SUSPENSION ARM SUB–ASSY LOWER NO.1 LH (See page 30–22)

9. REMOVE FRONT AXLE ASSY LH (See page 30–22)

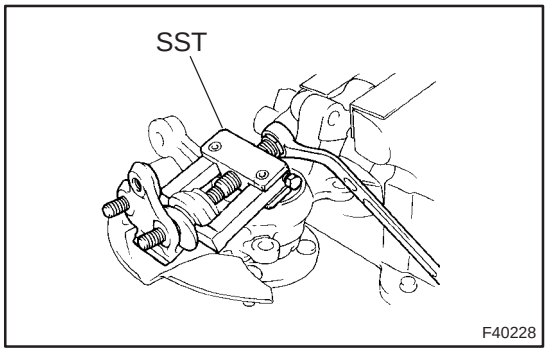

10. REMOVE LOWER BALL JOINT ASSY FRONT LH

(a) Remove the cotter pin and nut.

(b) Using SST, remove the lower ball joint assy front LH.

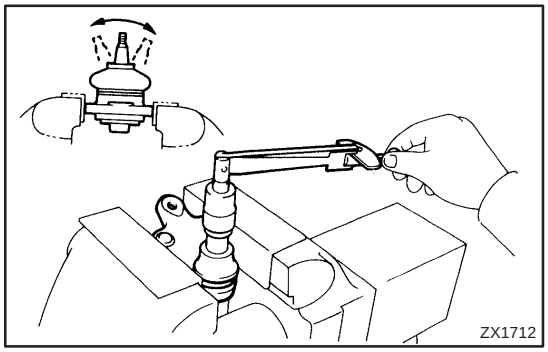

11. INSPECT LOWER BALL JOINT ASSY FRONT LH

(a) As shown in the illustration, flip the ball joint stud back and forth 5 times, before installing the nut.

(b) Using a torque wrench, turn the nut continuously at a rate of 3 – 5 seconds per 1 turn and take the torque reading on the 5th turn.

Turning torque:

0.98 – 4.9 N·m (10 – 50 kgf·cm, 9 – 43 in.·lbf)

12. INSTALL LOWER BALL JOINT ASSY FRONT LH

(a) Install the lower ball joint assy front LH, and torque the nut.
Torque: 103 N·m (1,050 kgf·cm, 76 ft·lbf)

(b) Install a new cotter pin.

NOTICE:
If the holes for the cotter pin are not aligned, tighten the nut further up to 60°.

13. INSTALL FRONT AXLE ASSY LH (See page 30–22)
14. INSTALL FRONT SUSPENSION ARM SUB–ASSY LOWER NO.1 LH (See page 30–22)
15. INSTALL TIE ROD END SUB–ASSY LH (See page 30–22)
16. INSTALL FRONT DISC
17. INSTALL FRONT DISC BRAKE CALIPER ASSY LH (See page 30–22)
18. CONNECT SPEED SENSOR FRONT LH (See page 30–6)
19. INSTALL FRONT AXLE HUB LH NUT (See page 30–6)
20. INSTALL FRONT WHEEL
Torque: 103 N·m (1,050 kgf·cm, 76 ft·lbf)
21. INSPECT AND ADJUST FRONT WHEEL ALIGNMENT (See page 26–6)
22. CHECK ABS SPEED SENSOR SIGNAL

(a) w/o VSC: See page 05–699
(b) w/ VSC: See page 05–756

STABILIZER BAR FRONT

REPLACEMENT

2600P–03

HINT:

COMPONENTS: See page 26–2

1. REMOVE FRONT WHEEL

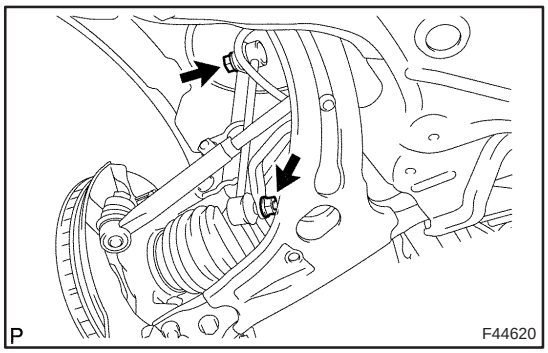

2. REMOVE FRONT STABILIZER LINK ASSY LH

(a) Remove the 2 nuts and front stabilizer link assy LH.

HINT:

If the ball joint turns together with the nut,use a hexagon wrench (6 mm) to hold the stud.

3. REMOVE FRONT STABILIZER LINK ASSY RH

HINT:

Remove the RH side by the same procedures as the LH side.

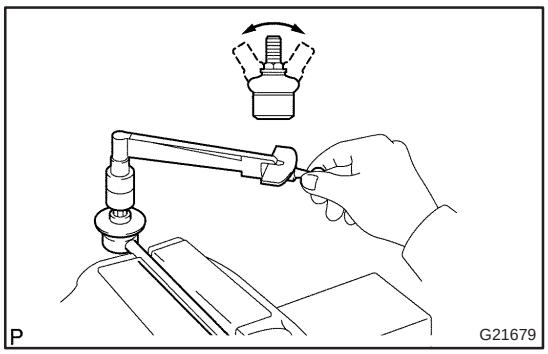

4. INSPECT FRONT STABILIZER LINK ASSY LH

(a) As shown in the illustration, flip the ball joint stud back and forth 5 times, before installing the nut.

(b) Using a torque wrench, turn the nut continuously at a rate of 3 – 5 seconds per 1 turn and take the torque reading on the 5th turn.

Turning torque:

0.05 – 1.96 N·m (0.5 – 20 kgf·cm, 0.4 – 17 in.·lbf)

5. SEPARATE TIE ROD END SUB–ASSY LH (See page 30–6)

SST 09628–62011

6. SEPARATE TIE ROD END SUB–ASSY RH

SST 09628–62011

HINT:

Separate the RH side by the same procedures as the LH side.

7. SEPARATE FRONT SUSPENSION ARM SUB–ASSY LOWER NO.1 LH (See page 30–6)

8. SEPARATE FRONT SUSPENSION ARM SUB–ASSY LOWER NO.1 RH

HINT:

Separate the RH side by the same procedures as the LH side.

9. SEPARATE RACK & PINION POWER STEERING GEAR ASSY

(a) Electric power steering model: See page 51–28

(b) Oil pressure power steering model: See page 51–36

10. SUSPEND ENGINE ASSY

(a) 1ZZ, 3ZZ Engine: See page 41–15

(b) 1AZ Engine: See page 41–24

(c) 1CD Engine: See page 41–33

11. REMOVE FRONT SUSPENSION MEMBER BRACE REAR LH (See page 26–16)

12. REMOVE FRONT SUSPENSION MEMBER BRACE REAR RH

HINT:

Remove the RH side by the same procedures as the LH side.

13. SEPARATE FRONT SUSPENSION CROSSMEMBER SUB–ASSY (See page 26–16)

14. REMOVE FRONT STABILIZER BRACKET NO.1 LH

(a) Remove the 2 bolts and the front stabilizer bracket No.1 LH.

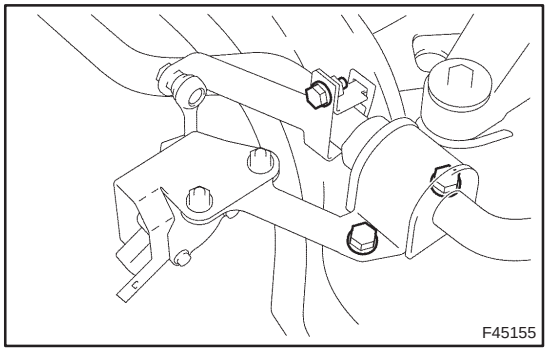

15. REMOVE FRONT STABILIZER BRACKET NO.1 RH

(a) w/ HID:
Remove the 3 bolts, the front stabilizer bracket No.1 RH and the height control sensor (Front).

(b) w/o HID:
Remove the 2 bolts and the front stabilizer bracket No.1 RH.

16. REMOVE FRONT STABILIZER BAR BUSH NO.1

(a) Remove the 2 bushings from the stabilizer bar.

17. REMOVE STABILIZER BAR FRONT

18. INSTALL STABILIZER BAR FRONT

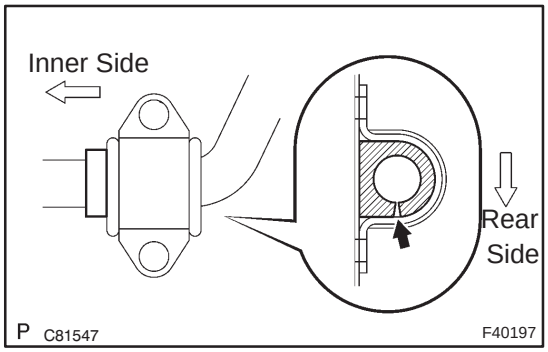

19. INSTALL FRONT STABILIZER BAR BUSH NO.1

(a) Install the 2 front stabilizer bar bush No.1 to the stabilizer bar front as shown in the illustration.

HINT:

Install the bushing to the outer side of the bushing stopper on the stabilizer bar.

20. INSTALL FRONT STABILIZER BRACKET NO.1 LH

(a) Install the front stabilizer bracket No.1 LH with the 2 bolts.
Torque: 19 N·m (194 kgf·cm, 14 ft·lbf)

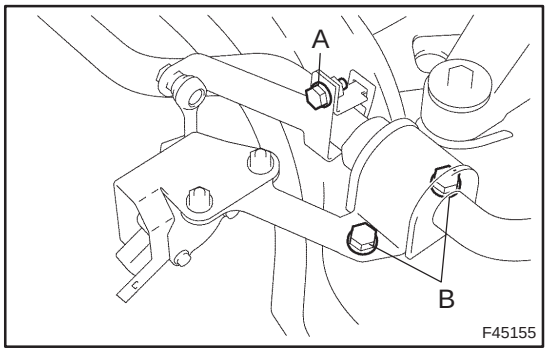

21. INSTALL FRONT STABILIZER BRACKET NO.1 RH

(a) w/ HID:
Install the front stabilizer bracket No.1 RH and the height control sensor (Front) with the 3 bolts.
Torque:
Bolt A: 5.4 N·m (55 kgf·cm, 48 in.·lbf)
Bolt B: 19 N·m (194 kgf·cm, 14 ft·lbf)

(b) w/o HID:
Install the front stabilizer bracket No.1 RH with the 2 bolts.
Torque: 19 N·m (194 kgf·cm, 14 ft·lbf)

22. INSTALL FRONT SUSPENSION CROSSMEMBER SUB–ASSY (See page 26–16)

23. INSTALL FRONT SUSPENSION MEMBER BRACE REAR LH (See page 26–16)

24. INSTALL FRONT SUSPENSION MEMBER BRACE REAR RH

HINT:
Install the RH side by the same procedures as the LH side.

25. INSTALL RACK & PINION POWER STEERING GEAR ASSY

(a) Electric power steering model: See page 51–28
(b) Oil pressure power steering model: See page 51–36

26. INSTALL FRONT SUSPENSION ARM SUB–ASSY LOWER NO.1 LH (See page 30–6)

27. INSTALL FRONT SUSPENSION ARM SUB–ASSY LOWER NO.1 RH

HINT:
Connect the RH side by the same procedures as the LH side.

28. INSTALL TIE ROD END SUB–ASSY LH (See page 30–6)

29. INSTALL TIE ROD END SUB–ASSY RH

HINT:
Connect the RH side by the same procedures as the LH side.

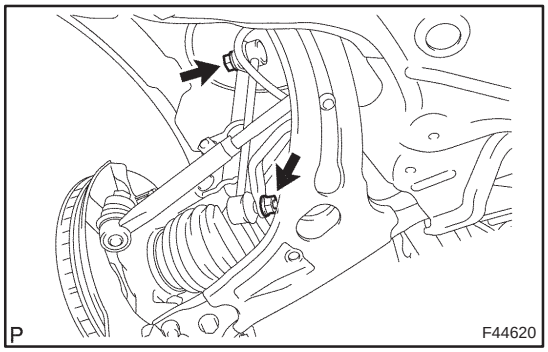

30. INSTALL FRONT STABILIZER LINK ASSY LH

(a) Install the front stabilizer link assy LH with the 2 nuts.
Torque: 74 N·m (755 kgf·cm, 55 ft·lbf)

HINT:
If the ball joint turns together with the nut, use a hexagon wrench (6 mm) to hold the stud.

31. INSTALL FRONT STABILIZER LINK ASSY RH

HINT:
Install the RH side by the same procedures as the LH side.

32. INSTALL FRONT WHEEL
Torque: 103 N·m (1,050 kgf·cm, 76 ft·lbf)

33. INSPECT AND ADJUST FRONT WHEEL ALIGNMENT (See page 26–6)

34. HEADLIGHT AIM ONLY (W/ DISCHARGE HEAD LAMP) (See page 65–19)

REAR SUSPENSION SYSTEM

PROBLEM SYMPTOMS TABLE

270E7–01

Use the table below to help you find the cause of the problem. The numbers indicate the probability of the likely cause of the problem. Check each part in order. If necessary, replace these parts.

Symptom	Suspect Area	See page
Wander/pulls	1. Tire (Worn or improperly inflated) 2. Wheel alignment (Incorrect) 3. Steering linkage (Loose or worn) 4. Hub bearing (Worn) 5. Suspension parts (Worn)	28–1 27–4 – 30–2 –
Bottoming	1. Vehicle (Overloaded) 2. Spring (Weak) 3. Shock absorber (Worn)	– 27–8 27–8
Sways/pitches	1. Tire (Worn or improperly inflated) 2. Stabilizer bar (Bent or broken) 3. Shock absorber (Worn)	28–1 27–29 27–8
Rear wheel shimmy	1. Tire (Worn or improperly inflated) 2. Wheel (Out of balance) 3. Shock absorber (Worn) 4. Wheel alignment (Incorrect) 5. Hub bearing (Worn)	28–1 28–1 27–8 27–4 30–2
Abnormal tire wear	1. Tire (Worn or improperly inflated) 2. Wheel alignment (Incorrect) 3. Shock absorber (Worn) 4. Suspension parts (Worn)	28–1 27–4 27–8 –

REAR SUSPENSION

COMPONENTS

270E0–01

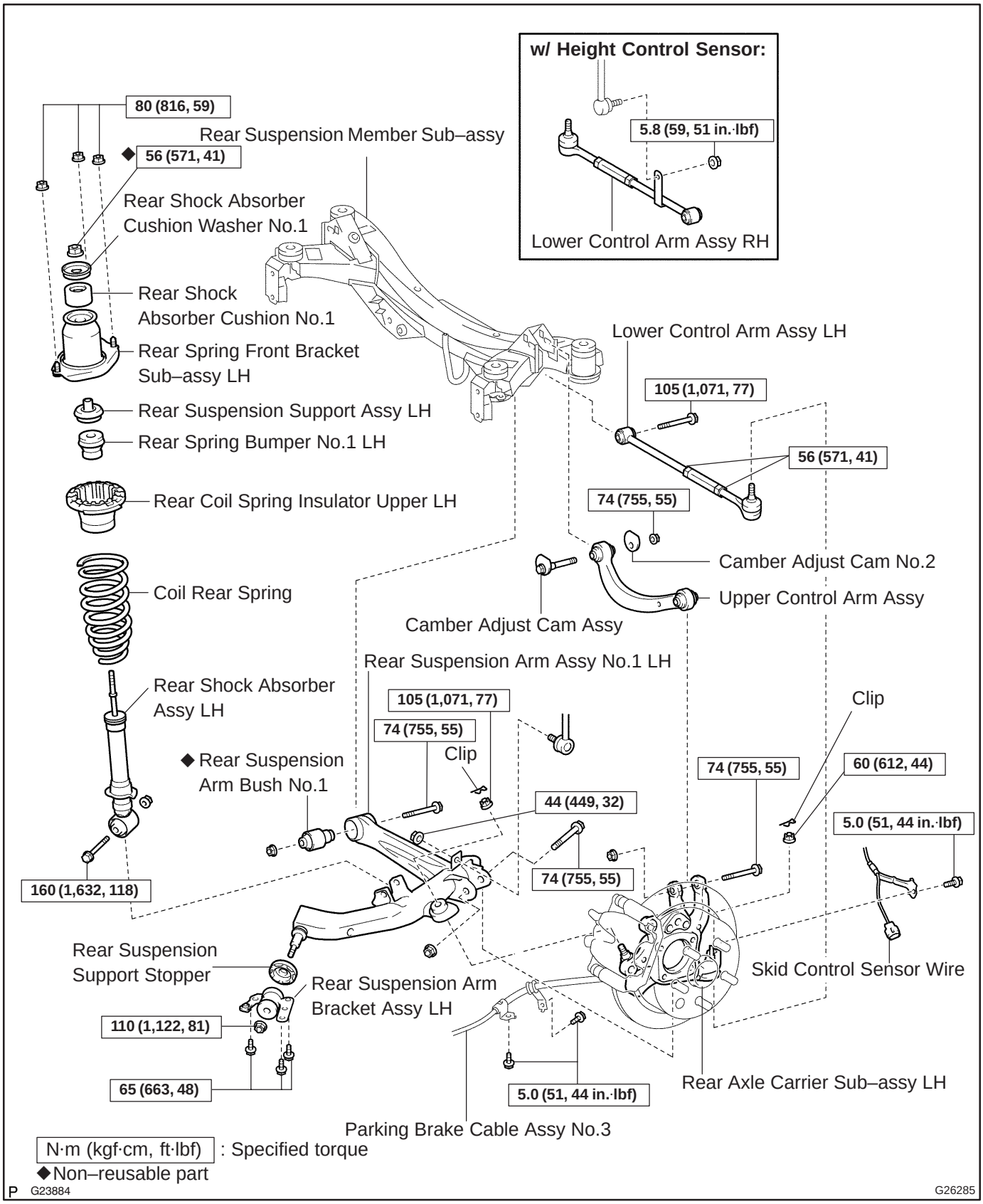

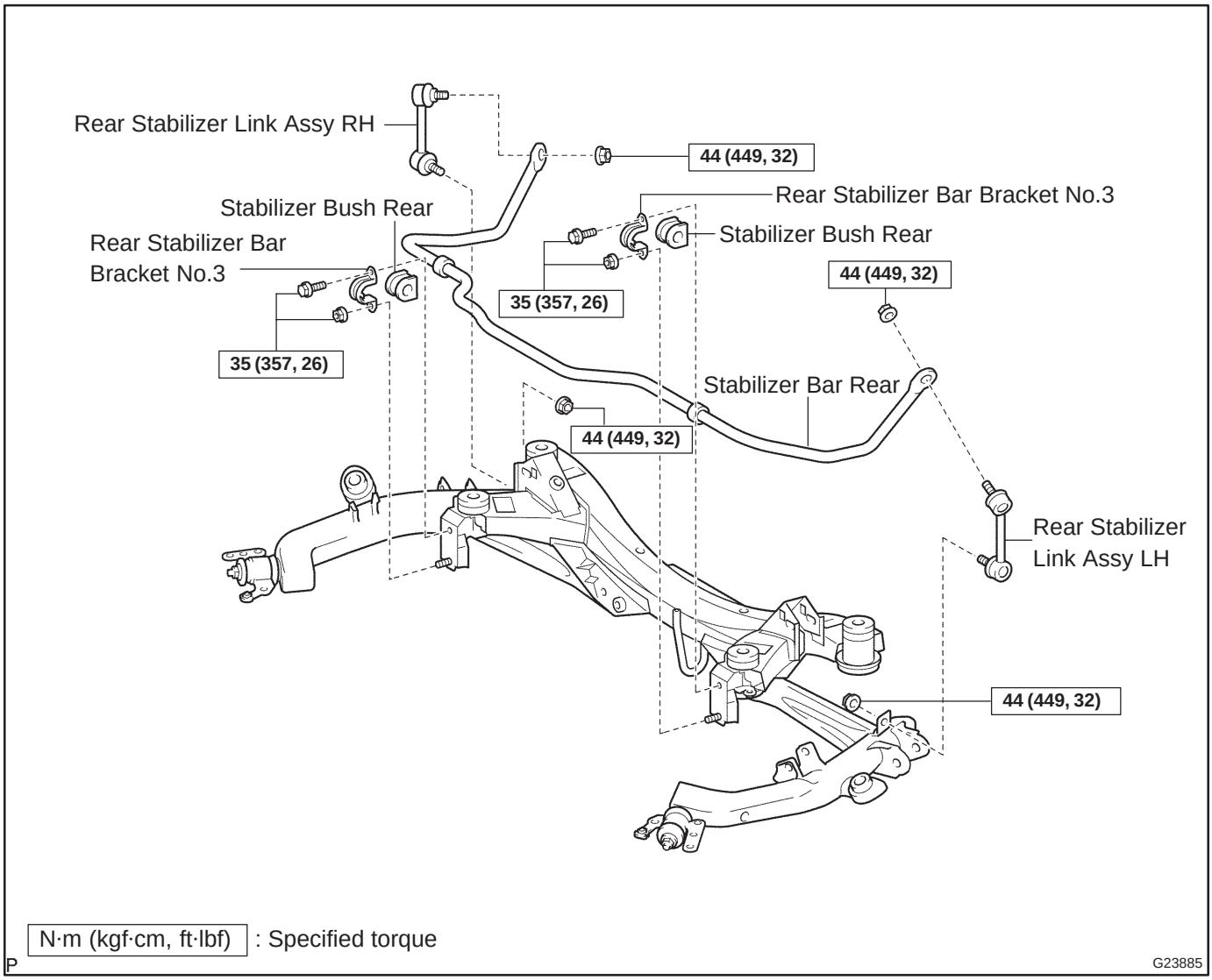
Rear Stabilizer Link Assy RH
44 (449, 32)
Rear Stabilizer Bar Bracket No.3
Stabilizer Bush Rear
Rear Stabilizer Bar
Bracket No.3
Stabilizer Bush Rear
44 (449, 32)
35 (357, 26)
35 (357, 26)
Stabilizer Bar Rear
44 (449, 32)
Rear Stabilizer
Link Assy LH
44 (449, 32)
N·m (kgf·cm, ft·lbf) : Specified torque
G23885

REAR WHEEL ALIGNMENT

270E1–01

ADJUSTMENT

1. INSPECT TIRE (See page 28–1)

2. MEASURE VEHICLE HEIGHT (See page 26–6)

NOTICE:

Before inspecting the wheel alignment, adjust the vehicle height to the specified value.

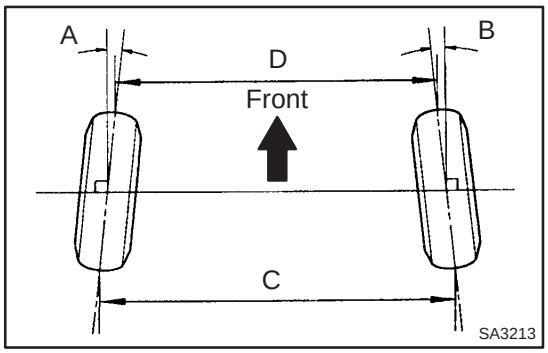

3. INSPECT TOE–IN

Toe–in:

(Normal package)

Toe–in (total)	A + B: 0°18' ± 12' (0.3° ± 0.2°) C – D: 3.0 ± 2.0 mm (0.12 ± 0.08 in.)

(Rough road package)

Toe–in (total)	A + B: 0°18' ± 12' (0.3° ± 0.2°) C – D: 3.0 ± 2.0 mm (0.12 ± 0.08 in.)

If the toe–in is not within the specified value, inspect the suspension parts and replace them if necessary.

4. INSPECT CAMBER

(a) Install the camber–caster–kingpin gauge or position the vehicle on the wheel alignment tester.

(b) Inspect the camber.

Camber:

(Normal package)

Camber	–0°54' ± 30' (–0.9° ± 0.5°)
Right–left error	30' (0.5°) or less

(Rough road package)

Camber	–0°30' ± 30' (–0.5° ± 0.5°)
Right–left error	30' (0.5°) or less

If the measured value is not within the specified value, inspect the suspension parts for damage and/or wear and replace them if necessary because camber is not adjustable.

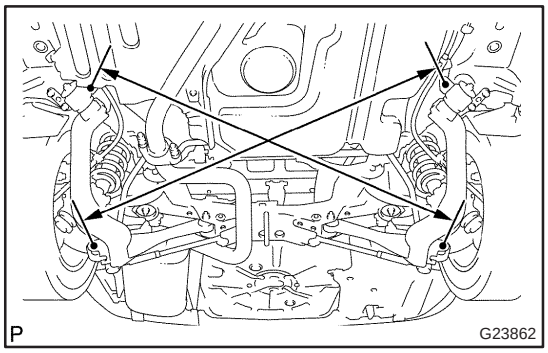

5. ADJUST CAMBER AND TOE–IN

(a) Measure the distance from the LH rear suspension arm bracket assy set bolt to the RH rear axle carrier rear side set bolt as shown in the illustration.

(b) Measure the distance from the RH rear suspension arm bracket assy set bolt to the LH rear axle carrier rear side set bolt as shown in the illustration.

(c) Employ the same manner to the LH–RH.

Length difference: 6.0 mm (0.236 in.) or less

If the difference exceeds the specified value, adjust it by turning the camber adjusting cam assy and tie rod adjusting tube.

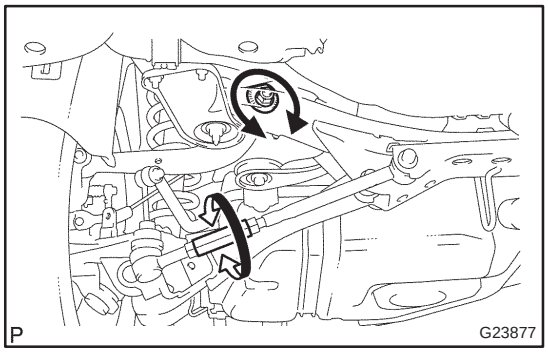

(d) Loosen the camber adjusting cam assy set nut.
(e) Loosen the tie rod adjusting tube set nut.
(f) Adjust the camber and toe–in by turning the adjusting cam and adjusting tube.

HINT:
Adjust the camber and toe–in to the center of the specified values as much as possible.

Toe–in:
(Normal package)

Toe–in (total)	A + B: 0°18' ± 6' (0.3° ± 0.1°) C – D: 3.0 ± 1.0 mm (0.12 ± 0.04 in.)

(Rough road package)

Toe–in (total)	A + B: 0°18' ± 6' (0.3° ± 0.1°) C – D: 3.0 ± 1.0 mm (0.12 ± 0.04 in.)

Camber:
(Normal package)

Camber	–0°54' ± 20' (–0.9° ± 0.3°)
Right–left error	30' (0.5°) or less

(Rough road package)

Camber	–0°30' ± 20' (–0.5° ± 0.3°)
Right–left error	30' (0.5°) or less

(g) Tighten the camber adjusting cam assy set nut.
Torque: 74 N·m (755 kgf·cm, 55 ft·lbf)
(h) Tighten the tie rod adjusting tube set nut.
Torque: 56 N·m (571 kgf·cm, 41 ft·lbf)

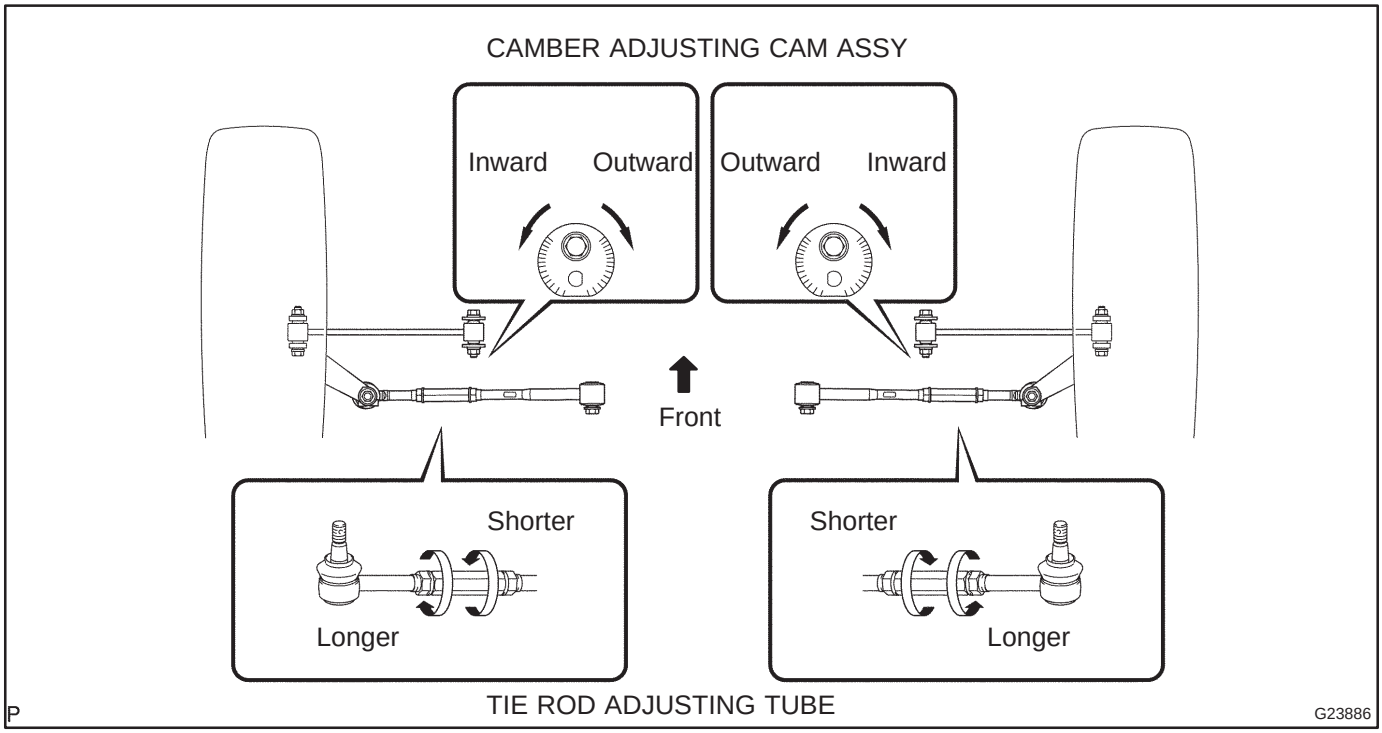

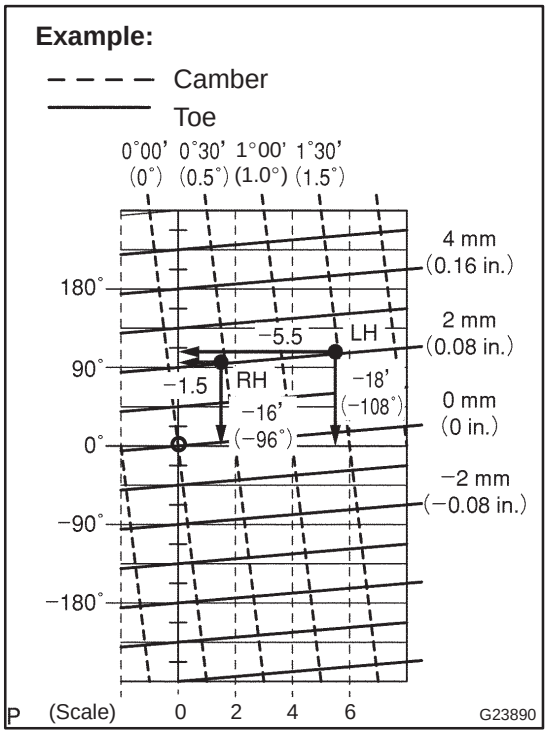

(i) How to read an adjustment chart (using examples).

(1) Measure the present alignment.

Example:

Camber (RH) : –1°24' (–1.4°)

Camber (LH) : –2°24' (–2.4°)

Toe–in (total) : IN 7.0 mm (0.276 in.)

(2) Mark the difference between the standard value (A) and the measured value (B) on the adjustment chart.

Standard value:

Camber: –0°54' (–0.9°)

Toe–in (total) : IN 3.0 mm (0.12 in.)

Formula: A – B = C

Camber: (RH) : –0°54' – (–1°24') = 0°30'

Camber: (LH) : –0°54' – (–2°24') = 1°30'

Toe–in (total) : IN 3.0 – IN 7.0 = OUT 4.0

Toe–in (each side) : OUT 2.0

(3) As shown in the example chart, read the distance from the marked point to the center of the chart, and adjust the upper and/or lower arm adjusting cams accordingly.

Amount to turn camber adjusting cam assy (by graduation) :

Scale (RH) : – (Inward) 1.5

Scale (LH) : – (Inward) 5.5

Amount to turn tie rod adjusting tube (by graduation):

Angle (RH) : – (Shorter) 96°

Angle (LH) : – (Shorter) 108°

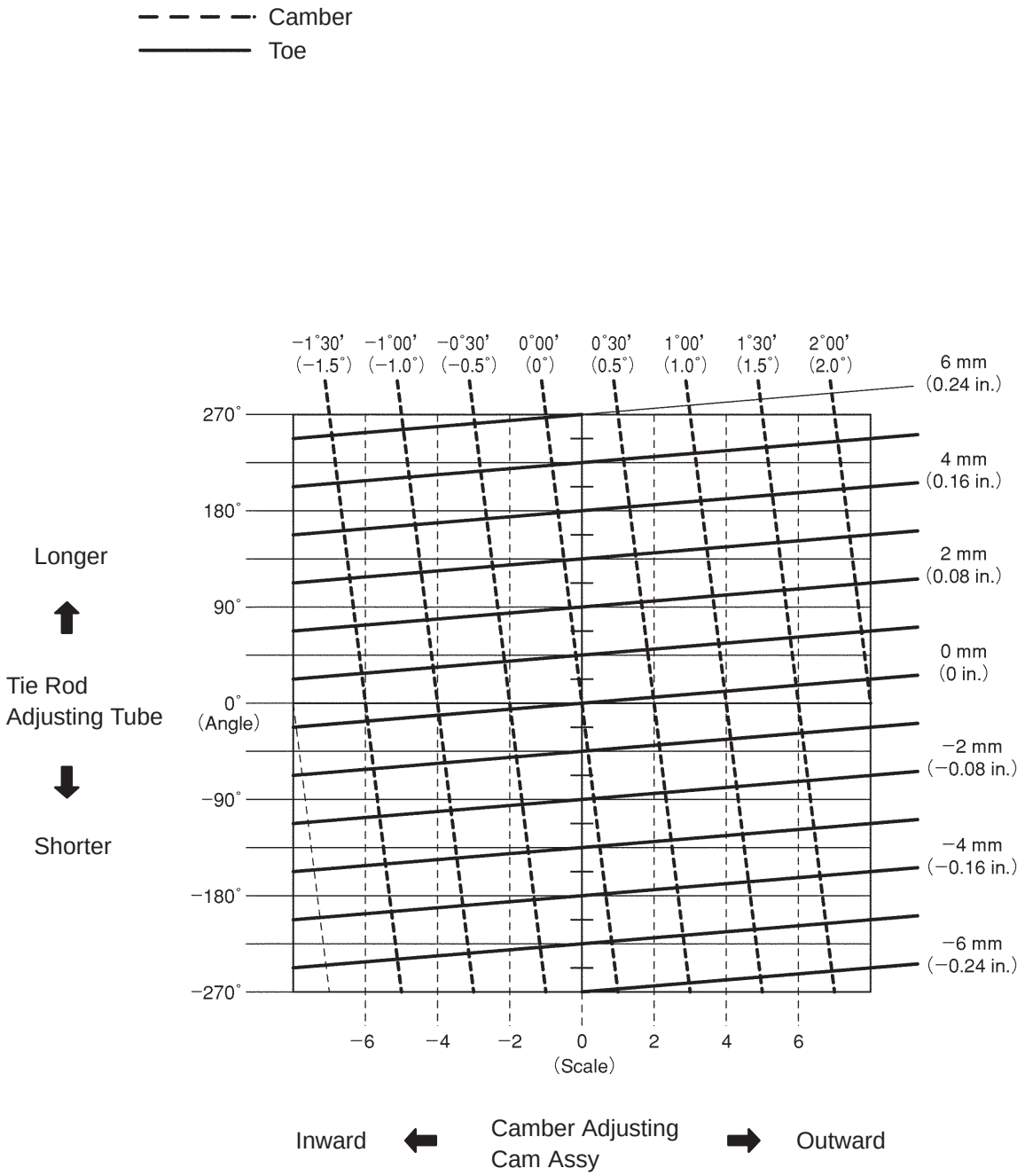
Camber
Toe
−1°30' (−1.5°)
−1°00' (−1.0°)
−0°30' (−0.5°)
0°00' (0°)
0°30' (0.5°)
1°00' (1.0°)
1°30' (1.5°)
2°00' (2.0°)
6 mm (0.24 in.)
4 mm (0.16 in.)
2 mm (0.08 in.)
0 mm (0 in.)
−2 mm (−0.08 in.)
−4 mm (−0.16 in.)
−6 mm (−0.24 in.)
270°
180°
90°
0° (Angle)
−90°
−180°
−270°
−6
−4
−2
0
2
4
6
(Scale)
Longer
Tie Rod Adjusting Tube
Shorter
Inward
Camber Adjusting Cam Assy
Outward

P

G23889

REAR SHOCK ABSORBER WITH COIL SPRING

OVERHAUL

270E8–01

HINT:

COMPONENTS: See page 27–2.

1. REMOVE REAR DOOR SCUFF PLATE LH

2. REMOVE REAR SEAT CUSHION ASSEMBLY

(a) 40/60 FOLDING FLIP–UP CUSHION (See page 72–21)

(b) 40/60 FOLDING (See page 72–27)

(c) UNITED FIXED (See page 72–32)

3. REMOVE REAR SEATBACK ASSY

(a) 40/60 FOLDING FLIP–UP CUSHION (See page 72–21)

(b) 40/60 FOLDING (See page 72–27)

(c) UNITED FIXED (See page 72–32)

4. REMOVE REAR FLOOR FINISH PLATE (SEDAN MODELS)

5. REMOVE LUGGAGE COMPARTMENT TRIM COVER INNER LH (SEDAN MODELS)

6. REMOVE REAR FLOOR FINISH PLATE (LIFTBACK MODELS)

7. REMOVE DECK TRIM SIDE BOARD LH (LIFTBACK MODELS) (See page 76–45)

8. REMOVE REAR FLOOR FINISH PLATE (WAGON MODELS)

9. REMOVE DECK TRIM SIDE PANEL ASSY LH (WAGON MODELS) (See page 76–54)

10. REMOVE REAR WHEEL

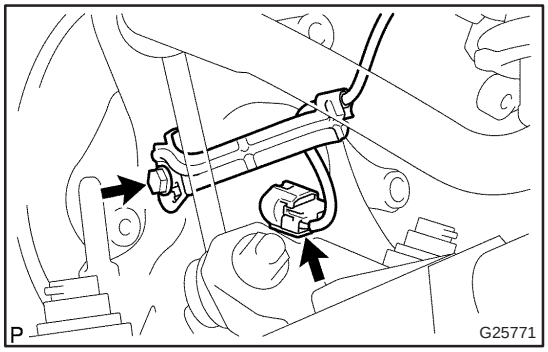

11. DISCONNECT SKID CONTROL SENSOR WIRE

(a) Disconnect the skid control sensor connector.

(b) Remove the bolt and wire bracket.

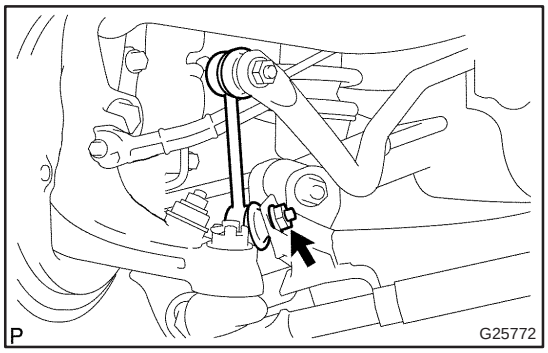

12. SEPARATE REAR STABILIZER LINK ASSY LH

(a) Remove the nut, and separate the rear stabilizer link assy LH.

HINT:

If the ball joint turns together with the nut, use a hexagon (5 mm) wrench to hold the stud.

13. SEPARATE REAR STABILIZER LINK ASSY RH

HINT:

Separate the RH side by the same procedures as the LH side.

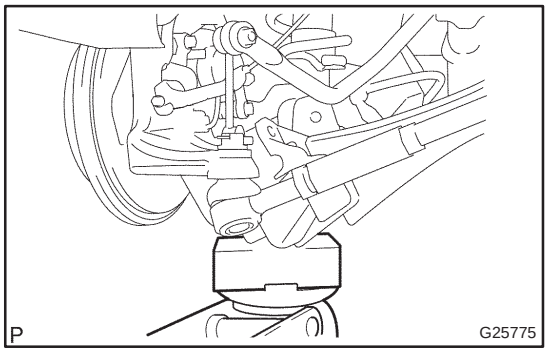

14. REMOVE REAR SHOCK ABSORBER WITH COIL SPRING

(a) Support the rear suspension arm assy No.1 LH.

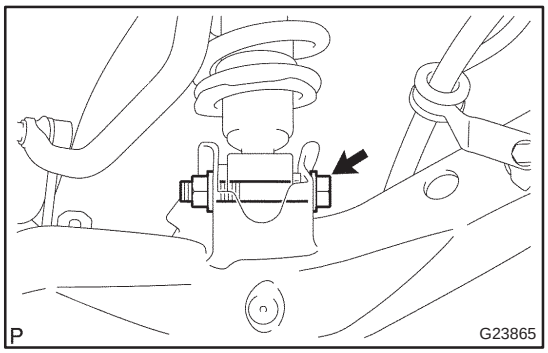

(b) Remove the bolt and nut from the rear suspension arm assy No.1 LH.

NOTICE:
When removing the bolt, hold the nut not to rotate.

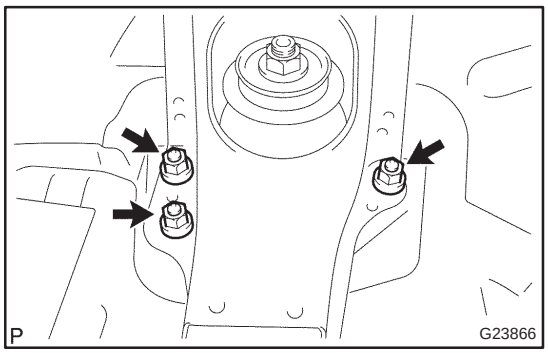

(c) Remove the 3 nuts.

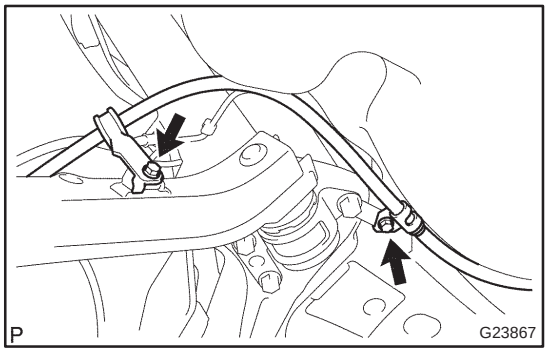

(d) Remove the 2 bolts, and separate the parking brake cable assy No.3.

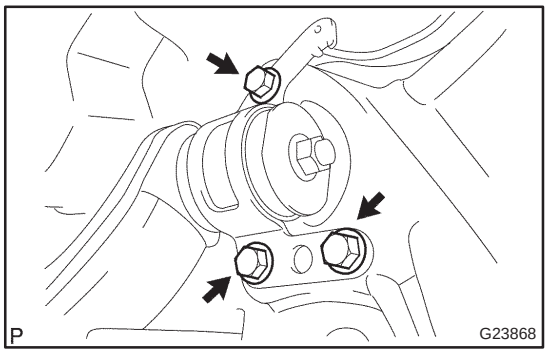

(e) Remove the 3 bolts from the rear suspension arm assy No.1 LH.

(f) Press the rear suspension arm assy No.1 LH down to the outside of the vehicle and remove the rear shock absorber with coil spring.

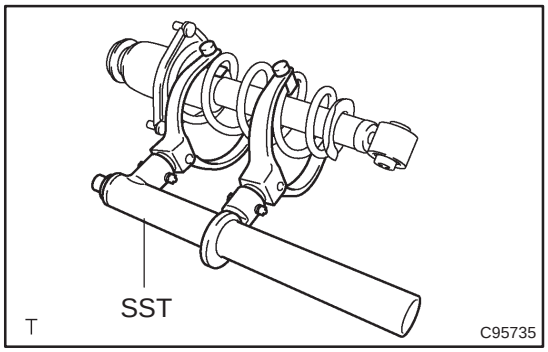

15. REMOVE SHOCK ABSORBER ASSY REAR LH

(a) Using SST, compress the coil rear spring.
SST 09727–30021 (09727–00010, 09727–00021, 09727–00031)

NOTICE:
Do not use an impact wrench. It will damage the SST.

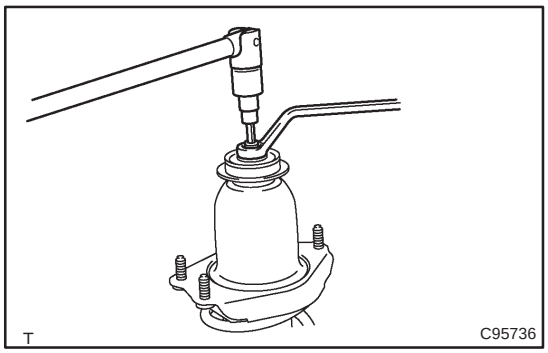

(b) Using a 6 mm hexagon wrench to hold the piston rod, remove the nut.

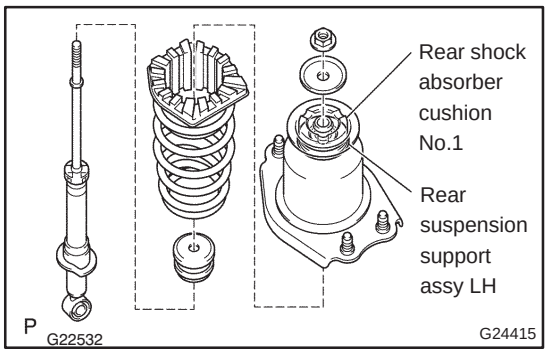

(c) Remove the rear shock absorber cushion washer No.1.
(d) Remove the rear suspension support assy LH.
(e) Remove the rear spring front bracket sub–assy LH.
(f) Remove the rear shock absorber cushion No.1.
(g) Remove the rear spring bumper No.1 LH.
(h) Remove the rear coil spring insulator upper LH.
(i) Remove the coil rear spring.

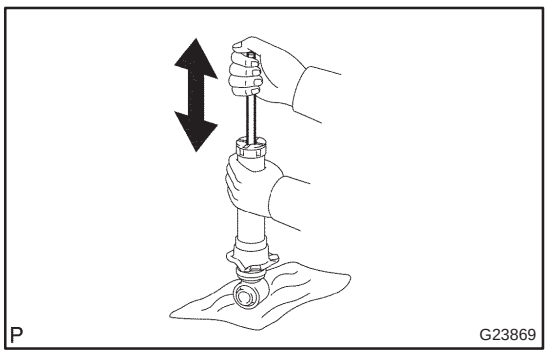

16. INSPECT SHOCK ABSORBER ASSY REAR LH

(a) Compress and extend the shock absorber rod and check for unusual resistance or unusual sound during the operation.

If there is any malfunction, replace the shock absorber assy rear LH with a new one.

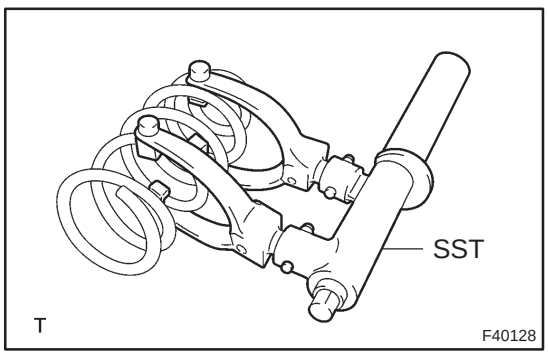

17. INSTALL SHOCK ABSORBER ASSY REAR LH

(a) Using SST, compress the coil rear spring.
SST 09727–30021 (09727–00010, 09727–00021, 09727–00031)

NOTICE:
Do not use an impact wrench. It will damage the SST.

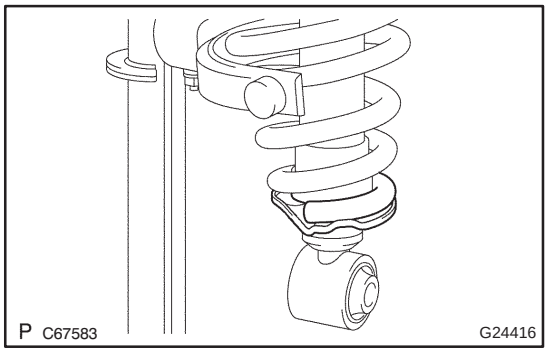

(b) Install the coil rear spring to the shock absorber assy rear LH.

NOTICE:

Fit the lower end of the coil rear spring into the gap of the spring lower seat.

(c) Install the rear spring bumper No.1 LH and rear suspension support assy LH.

(d) Set the rear coil spring insulator upper LH to the rear spring front bracket sub–assy LH.

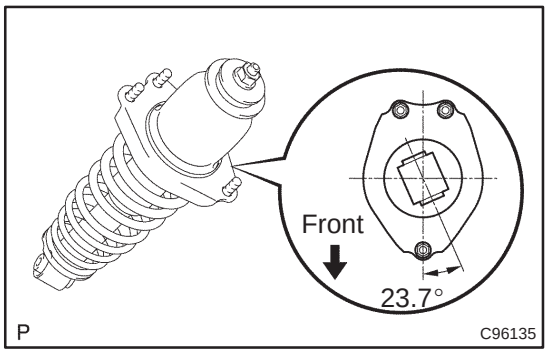

(e) Position the rear spring front bracket sub–assy LH with rear coil spring insulator upper LH as shown in the illustration.

HINT:

Place the RH side on the symmetric position to the illustration.

(f) Install the rear suspension support assy LH and rear shock absorber cushion washer No.1.

(g) Temporarily tighten a new center nut.

(h) Remove the SST.

(i) Recheck the direction of the spring bracket.

(j) Using a 6 mm hexagon wrench to hold the piston rod, tighten a new nut.

Torque: 56 N·m (571 kgf·cm, 41 ft·lbf)

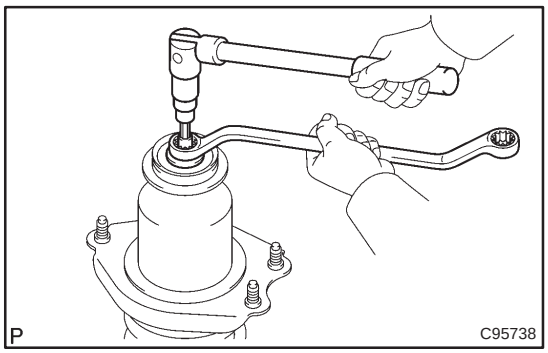

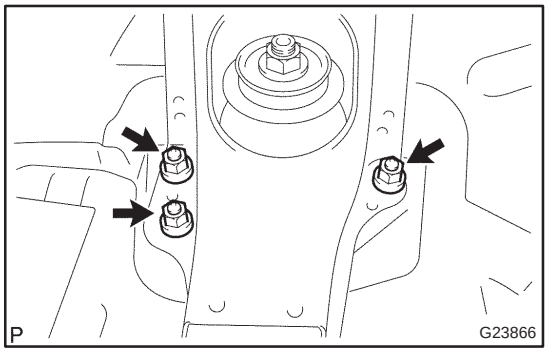

18. INSTALL REAR SHOCK ABSORBER WITH COIL SPRING

(a) Install the 3 nuts.

Torque: 80 N·m (816 kgf·cm, 59 ft·lbf)

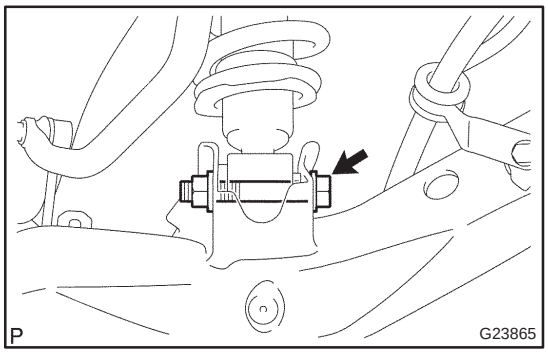

(b) Install the rear shock absorber with coil spring, and temporarily tighten the bolt and nut.

NOTICE:

When installing the bolt, tighten the bolt temporarily with the nut fixed.

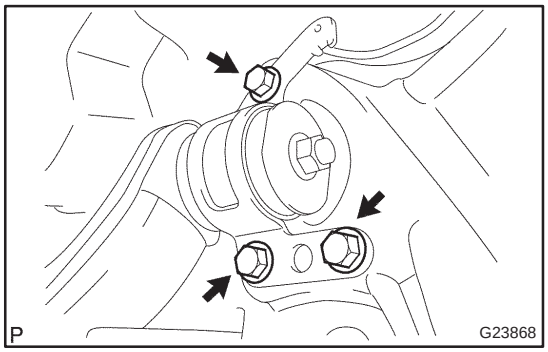

(c) Install the rear suspension arm assy No.1 LH with the 3 bolts.
Torque: 65 N·m (663 kgf·cm, 48 ft·lbf)

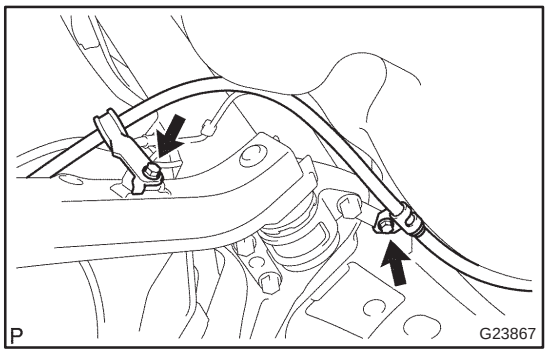

(d) Connect the parking brake cable assy No.3 with the 2 bolts.
Torque: 5.0 N·m (51 kgf·cm, 44 in.·lbf)

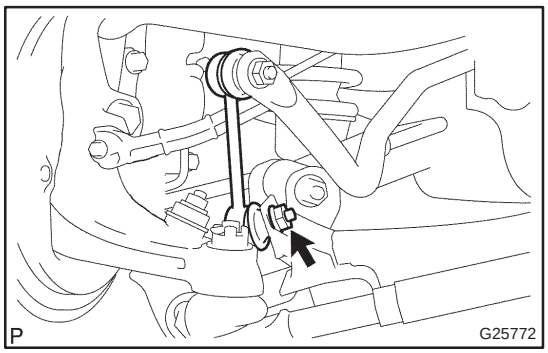

19. INSTALL REAR STABILIZER LINK ASSY LH

(a) Install the rear stabilizer link assy LH with the nut.
Torque: 44 N·m (449 kgf·cm, 32 ft·lbf)

HINT:
If the ball joint turns together with the nut, use a hexagon (5 mm) wrench to hold the stud.

20. INSTALL REAR STABILIZER LINK ASSY RH

HINT:
Install the RH side by the same procedures as the LH side.

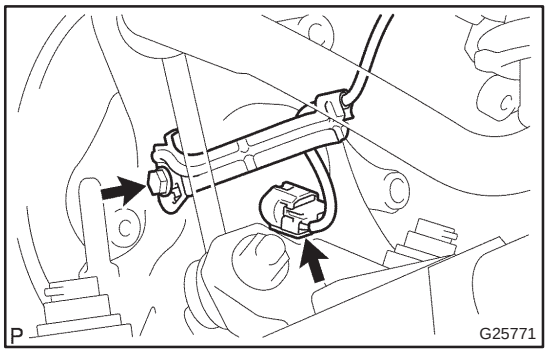

21. CONNECT SKID CONTROL SENSOR WIRE

(a) Install the wire bracket and bolt.
Torque: 5.0 N·m (51 kgf·cm, 44 in.·lbf)

(b) Connect the skid control sensor connector.

22. INSTALL REAR WHEEL
Torque: 103 N·m (1,050 kgf·cm, 76 ft·lbf)

23. STABILIZE SUSPENSION

(a) Bounce the vehicle up and down several times to stabilize the suspension.

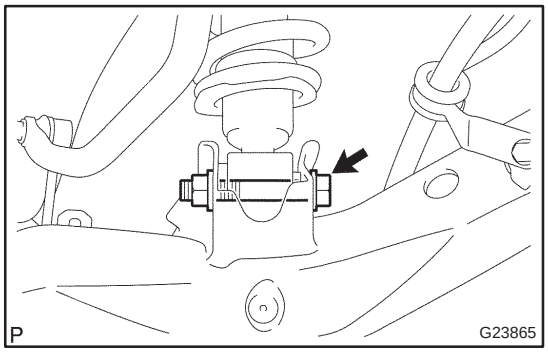

24. FULLY TIGHTEN REAR SHOCK ABSORBER WITH COIL SPRING

(a) Fully tighten the bolt and nut.

Torque: 160 N·m (1,632 kgf·cm, 118 ft·lbf)

NOTICE:

- **When installing the bolt, hold the nut not to rotate.**
- **Be sure to empty the vehicle when fully tightening the bolt and nut.**

25. INSPECT AND ADJUST REAR WHEEL ALIGNMENT (See page 27–4)

26. CHECK ABS SPEED SENSOR SIGNAL

(a) ABD WITH EBD SYSTEM (See page 05–699)

(b) ABD WITH EBD & BA & TRC & VSC SYSTEM (See page 05–756)

DISPOSAL

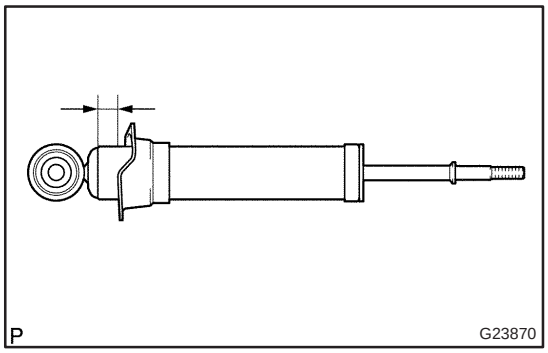

1. DISPOSE OF SHOCK ABSORBER ASSY REAR LH

(a) Fully extend the shock absorber rod.

(b) Using a drill, make a hole in the cylinder as shown in the illustration to discharge the gas inside the cylinder.

CAUTION:

- **When drilling, since the fragments may fly out, work carefully.**
- **The discharged gas is colorless, odorless and non–poisonous.**

REAR SUSPENSION ARM ASSY NO.1 LH

270E3–01

OVERHAUL

HINT:

COMPONENTS: See page 27–2.

1. REMOVE REAR WHEEL

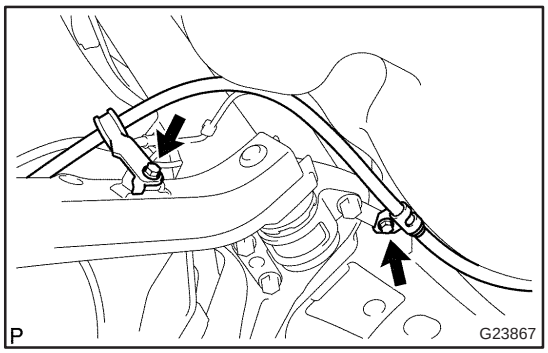

2. SEPARATE PARKING BRAKE CABLE ASSY NO.3

(a) Remove the 2 bolts, and separate the parking brake cable assy No.3.

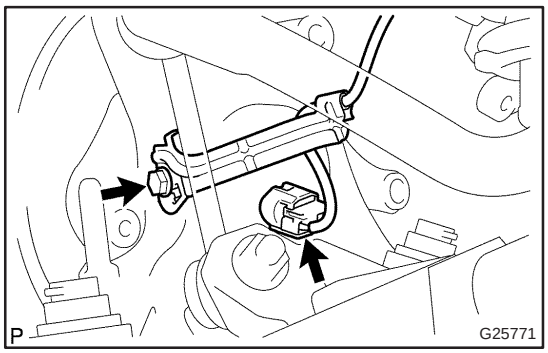

3. DISCONNECT SKID CONTROL SENSOR WIRE

(a) Disconnect the skid control sensor connector.

(b) Remove the bolt and wire bracket.

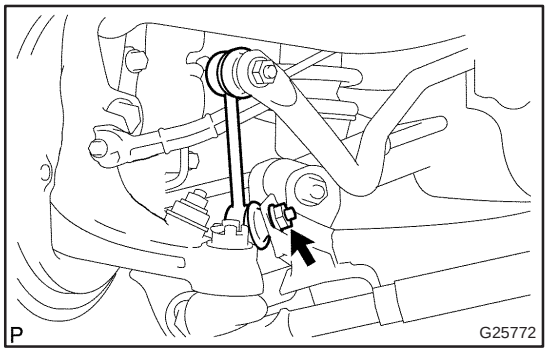

4. SEPARATE REAR STABILIZER LINK ASSY LH

(a) Remove the nut, and separate the rear stabilizer link assy LH.

HINT:

If the ball joint turns together with the nut, use a hexagon (5 mm) wrench to hold the stud.

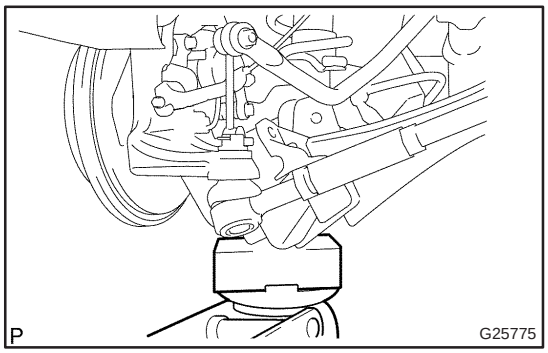

5. REMOVE LOWER CONTROL ARM ASSY LH

(a) Support the rear suspension arm assy No.1 LH.

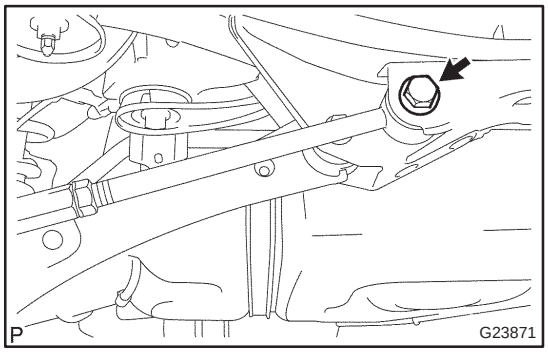

(b) Remove the bolt, and remove the member side lower control arm assy LH.

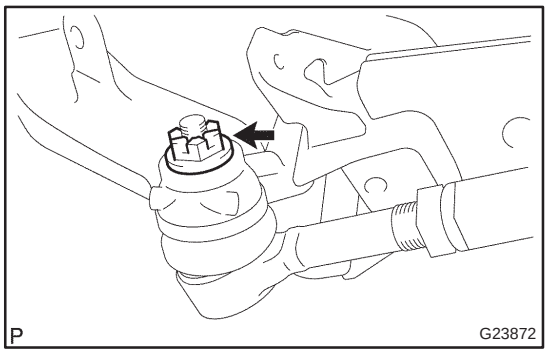

(c) Remove the clip and nut.

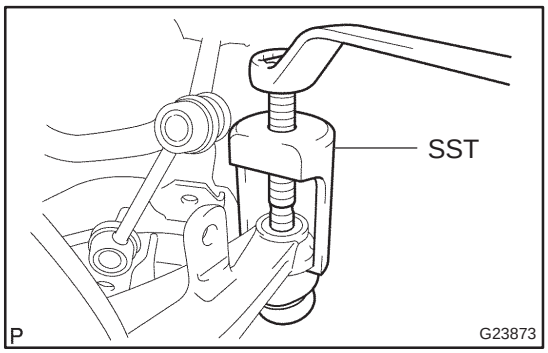

(d) Using SST, remove the lower control arm assy LH from the rear axle carrier sub–assy LH.
SST 09610–20012

NOTICE:
Do not damage the dust cover.

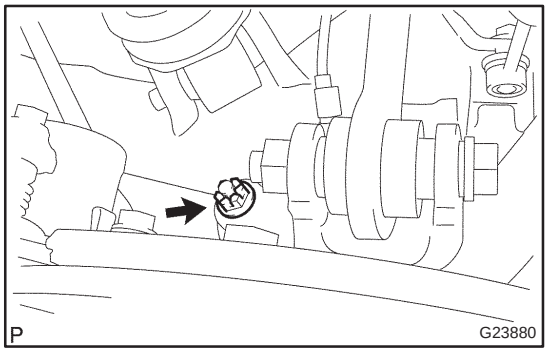

6. REMOVE REAR SUSPENSION ARM ASSY NO.1 LH

(a) Remove the clip and nut.

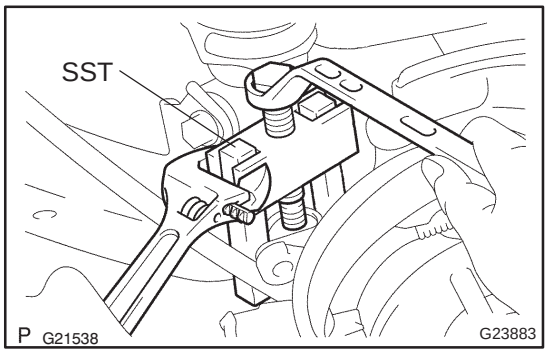

(b) Using SST, separate the rear axle carrier sub–assy LH front side from the rear suspension arm assy No.1 LH.
SST 09628–62011

NOTICE:
- **Do not damage the dust cover.**
- **Hang the upper control arm assy on the rear axle carrier sub–assy LH side with a wire substitute thing.**

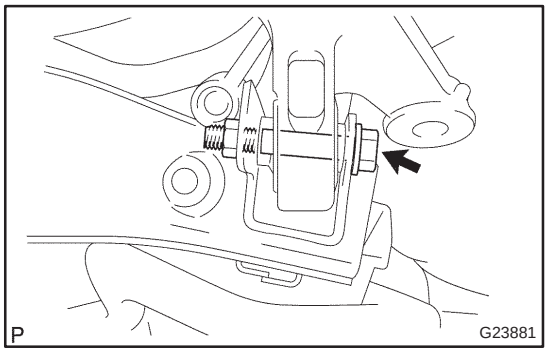

(c) Remove the bolt and nut, and separate the rear axle carrier sub–assy LH rear side from rear suspension arm assy No.1 LH.

NOTICE:

When removing the bolt, hold the nut not to rotate.

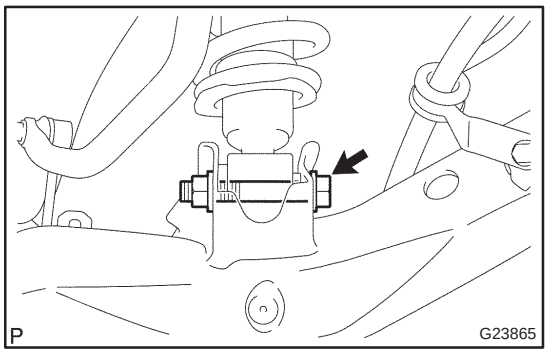

(d) Remove the bolt and nut, and remove the rear shock absorber with coil spring.

NOTICE:

When removing the bolt, hold the nut not to rotate.

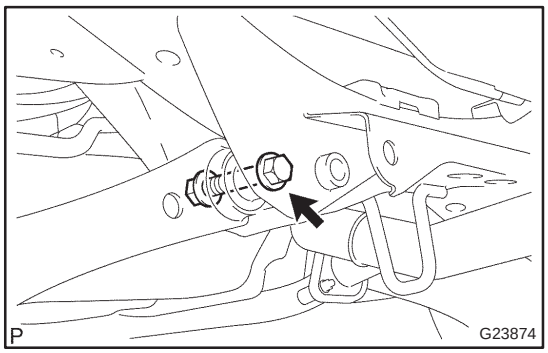

(e) Remove the bolt and nut, and separate the rear side rear suspension arm assy No.1 LH.

NOTICE:

When removing the bolt, hold the nut not to rotate.

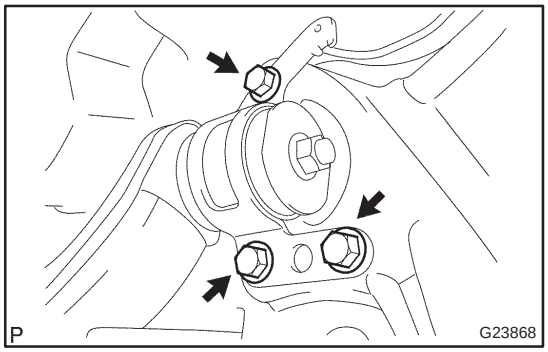

(f) Remove the 3 bolts on the front side and rear suspension arm assy No.1 LH.

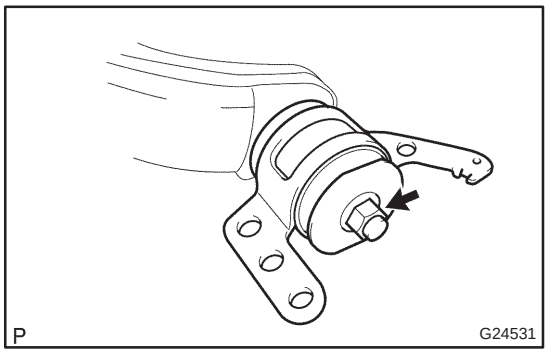

(g) Remove the nut, rear suspension arm bracket assy LH and rear suspension support stopper.

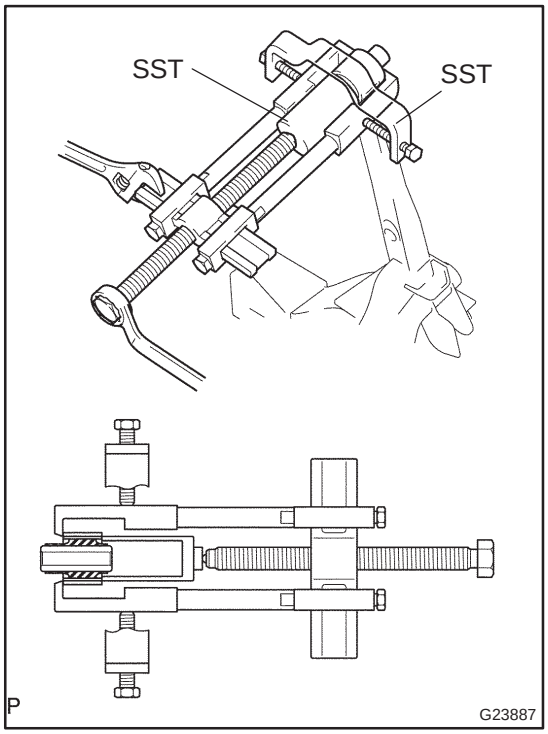

7. REMOVE REAR SUSPENSION ARM BUSH NO.1

(a) Using SST, remove the rear suspension arm bush No.1.
SST 09632–36010, 09950–40011 (09951–04010, 09952–04010, 09953–04030, 09954–04020, 09955–04051, 09957–04010, 09958–04011)

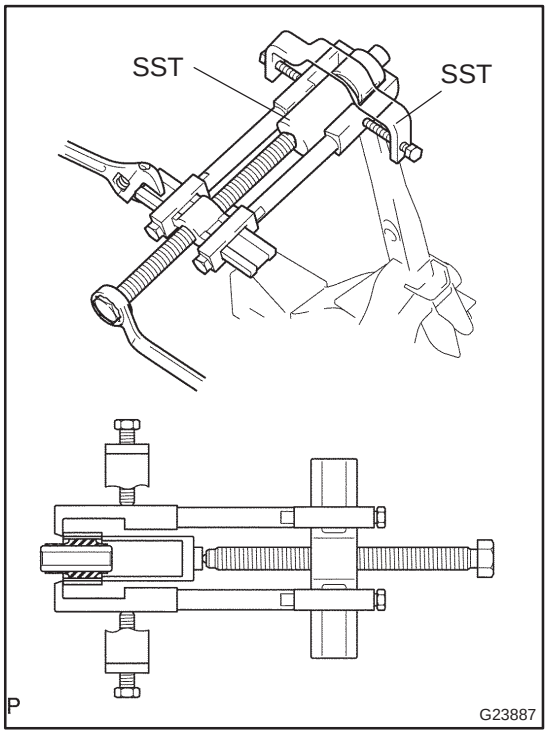

8. INSTALL REAR SUSPENSION ARM BUSH NO.1

(a) Using SST, install a new rear suspension arm bush No.1.
SST 09632–36010, 09950–40011 (09951–04010, 09952–04010, 09953–04030, 09954–04020, 09955–04051, 09957–04010, 09958–04011)

NOTICE:

- **Install the rear suspension arm bush No.1 in the correct direction.**
- **Place the rear suspension arm bush No.1 at the position in the illustration.**

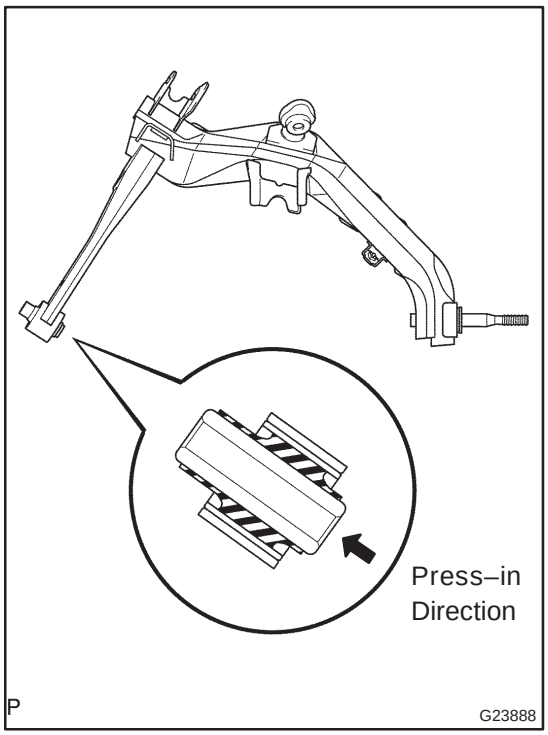

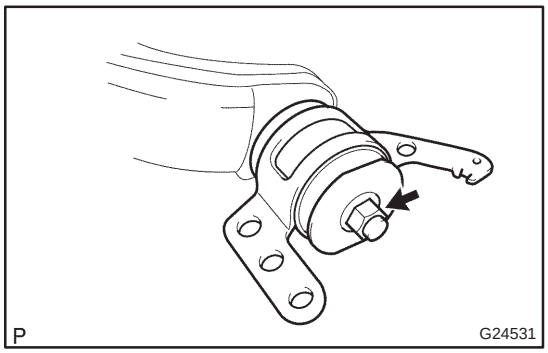

9. INSTALL REAR SUSPENSION ARM ASSY NO.1 LH

(a) Install the rear suspension support stopper and rear suspension arm bracket assy LH, and temporarily tighten the nut.

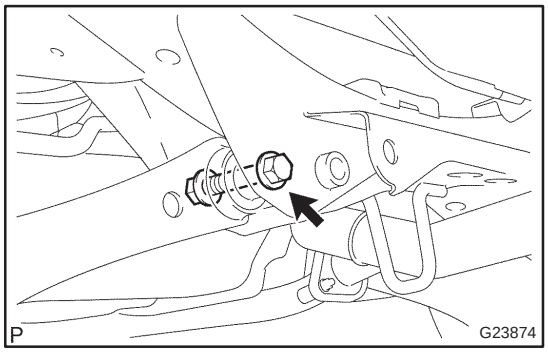

(b) Install the rear side rear suspension arm assy No.1 LH, and temporarily tighten bolt and nut.

NOTICE:

When installing the bolt, hold the nut not to rotate.

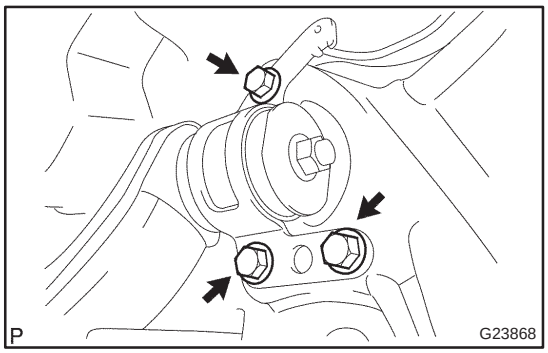

(c) Install the 3 bolts.

Torque: 65 N·m (663 kgf·cm, 48 ft·lbf)

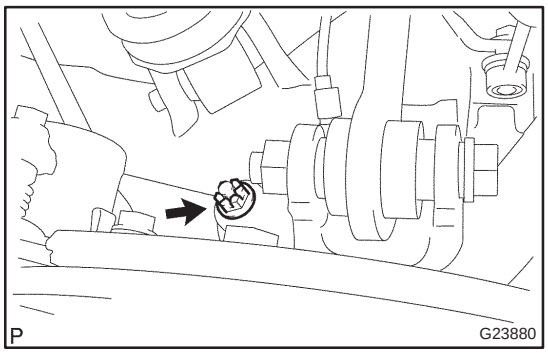

(d) Install the front side rear axle carrier sub–assy LH to the rear suspension arm assy No.1 LH, and temporarily tighten the nut.

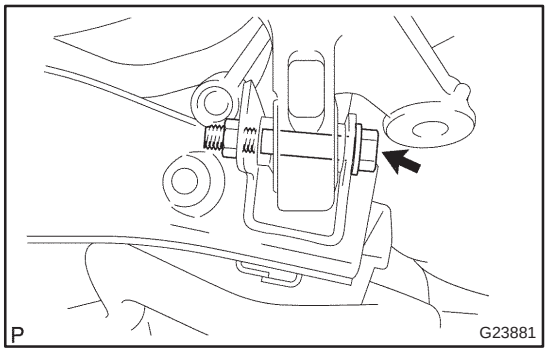

(e) Install the axle carrier sub–assy LH to the rear suspension arm assy No.1 LH, and temporarily tighten the bolt and nut.

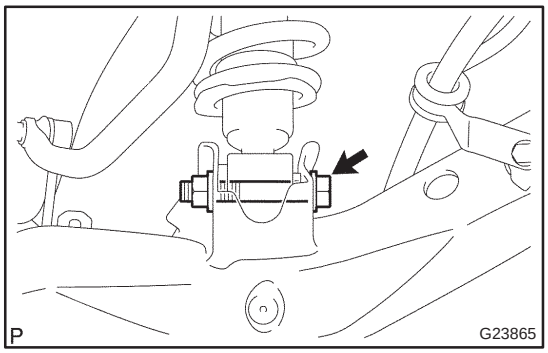

(f) Install the rear shock absorber with coil spring to the rear suspension arm assy No.1 LH, and temporarily tighten the bolt and nut.

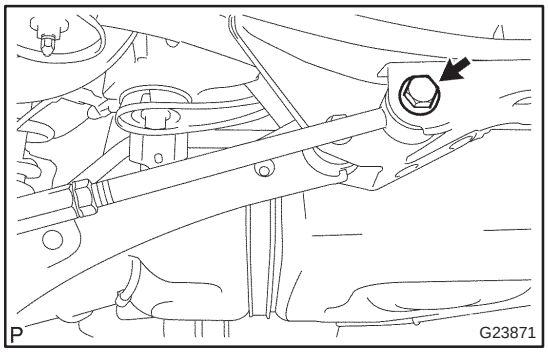

10. INSTALL LOWER CONTROL ARM ASSY LH

(a) Install the lower control arm assy LH, and temporarily tighten the bolt.

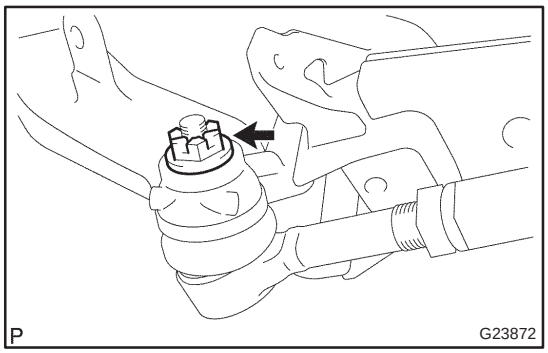

(b) Install the lower control arm assy LH to the rear axle carrier LH, and temporarily tighten the nut.

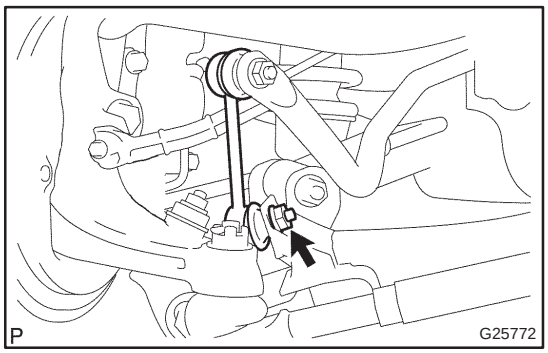

11. INSTALL REAR STABILIZER LINK ASSY LH

(a) Install the rear stabilizer link assy LH with the nut.
Torque: 44 N·m (449 kgf·cm, 32 ft·lbf)

HINT:

If the ball joint turns together with the nut, use a hexagon (5 mm) wrench to hold the stud.

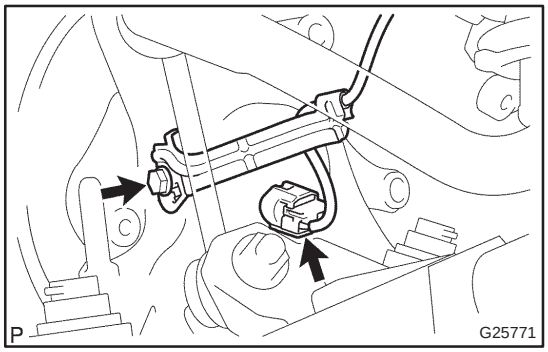

12. CONNECT SKID CONTROL SENSOR WIRE

(a) Install the wire bracket and bolt.
Torque: 5.0 N·m (51 kgf·cm, 44 in.·lbf)

(b) Connect the skid control sensor connector.

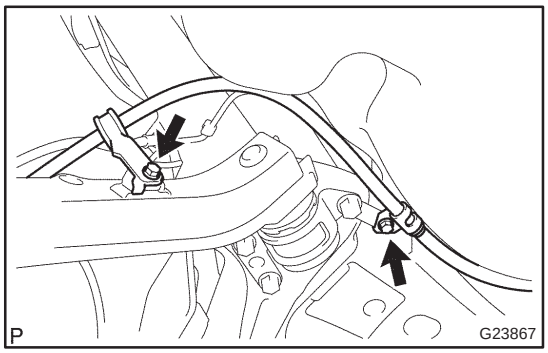

13. INSTALL PARKING BRAKE CABLE ASSY NO.3

(a) Connect the parking brake cable assy No.3 with the 2 bolts.
Torque: 5.0 N·m (51 kgf·cm, 44 in.·lbf)

14. INSTALL REAR WHEEL
Torque: 103 N·m (1,050 kgf·cm, 76 ft·lbf)

15. STABILIZE SUSPENSION

(a) Bounce the vehicle up and down several times to stabilize the suspension.

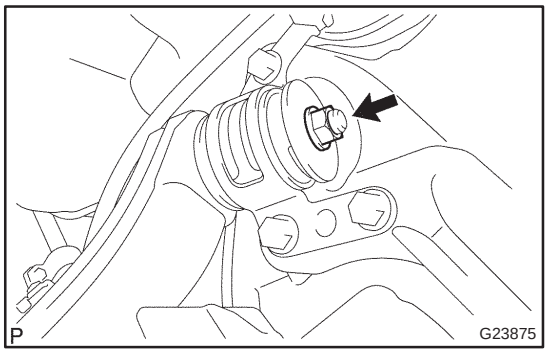

16. FULLY TIGHTEN REAR SUSPENSION ARM ASSY NO.1 LH

NOTICE:

Be sure to empty the vehicle when fully tightening the bolt and nut.

(a) Fully tighten the nut.
Torque: 110 N·m (1,122 kgf·cm, 81 ft·lbf)

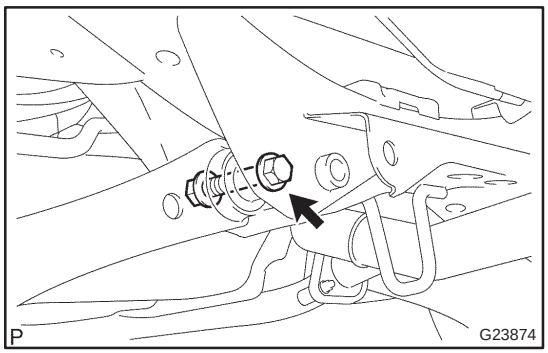

(b) Fully tighten the bolt.
Torque: 74 N·m (755 kgf·cm, 55 ft·lbf)

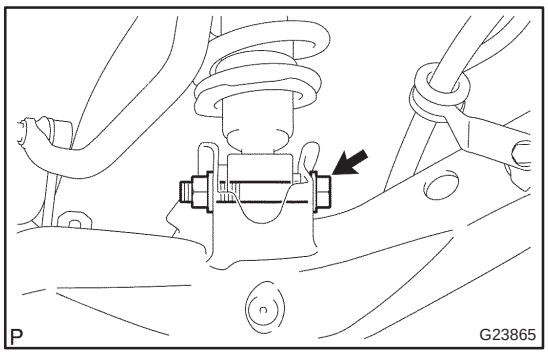

(c) Fully tighten the bolt and nut.
Torque: 160 N·m (1,632 kgf·cm, 118 ft·lbf)

NOTICE:

When installing the bolt, hold the nut not to rotate.

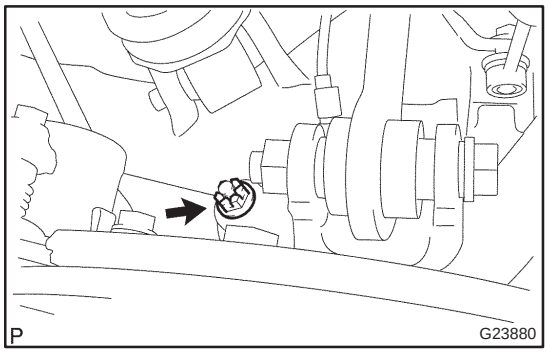

(d) Fully tighten the nut.
Torque: 105 N·m (1,071 kgf·cm, 77 ft·lbf)

(e) Install the clip.

NOTICE:

- **When the holes for the clip are not aligned, adjust them by tightening the nut. The tightening angle for the adjustment must be less than 60°.**
- **Insert the clip from the front side of a vehicle.**

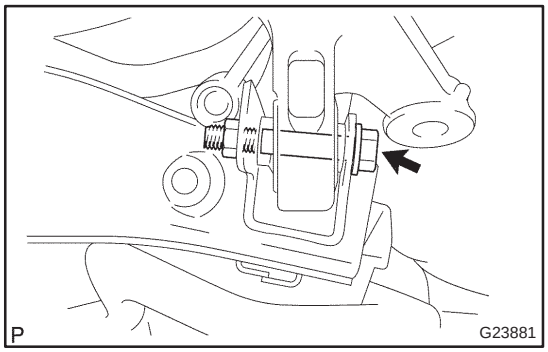

(f) Fully tighten the bolt and nut.
Torque: 74 N·m (755 kgf·cm, 55 ft·lbf)

NOTICE:
When installing the bolt, hold the nut not to rotate.

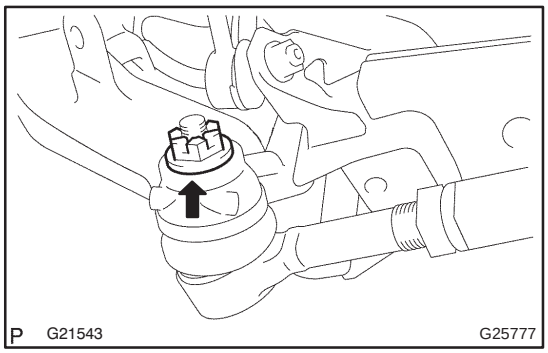

17. FULLY TIGHTEN LOWER CONTROL ARM ASSY LH

NOTICE:
Be sure to empty the vehicle when fully tightening the bolt and nut.

(a) Fully tighten the nut.
Torque: 60 N·m (612 kgf·cm, 44 ft·lbf)

(b) Install the clip.

NOTICE:
- **When the holes for the clip are not aligned, adjust them by tightening the nut. The tightening angle for the adjustment must be less than 60°.**
- **Insert the clip from the rear side of a vehicle.**

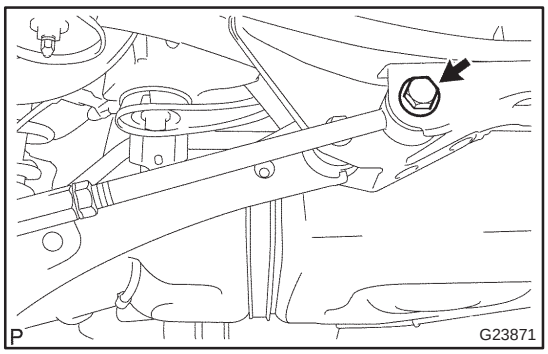

(c) Fully tighten the bolt.
Torque: 105 N·m (1,071 kgf·cm, 77 ft·lbf)

18. INSPECT AND ADJUST REAR WHEEL ALIGNMENT (See page 27–4)

19. CHECK ABS SPEED SENSOR SIGNAL

(a) ABD WITH EBD SYSTEM (See page 05–699)

(b) ABD WITH EBD & BA & TRC & VSC SYSTEM (See page 05–756)

LOWER CONTROL ARM ASSY LH

270E4–01

REPLACEMENT

HINT:

COMPONENTS: See page 27–2.

1. REMOVE REAR WHEEL

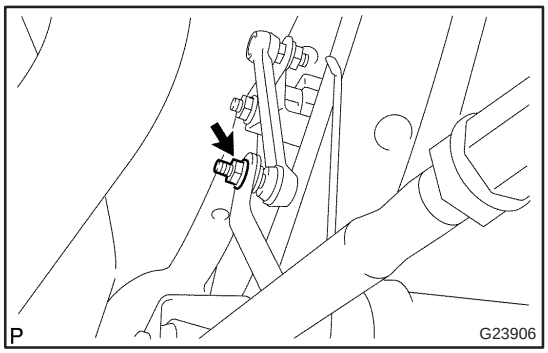

2. REMOVE LOWER CONTROL ARM ASSY LH

(a) RH side (w/ Height control sensor):
Remove the nut, and separate the height control sensor sub–assy from the lower control arm assy RH.

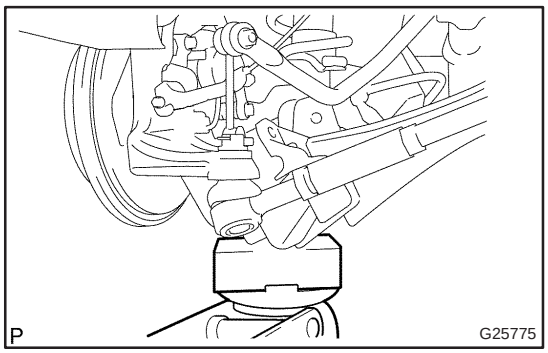

(b) Support the rear suspension arm assy No.1 LH.

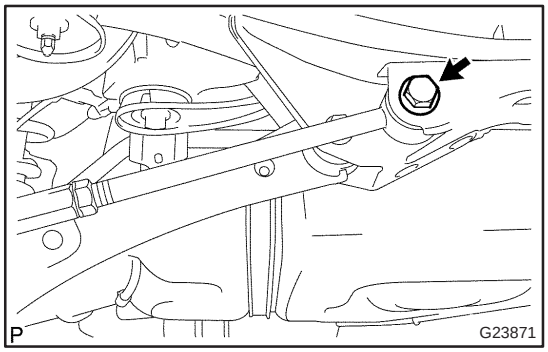

(c) Remove the bolt, and separate the member side lower control arm assy LH.

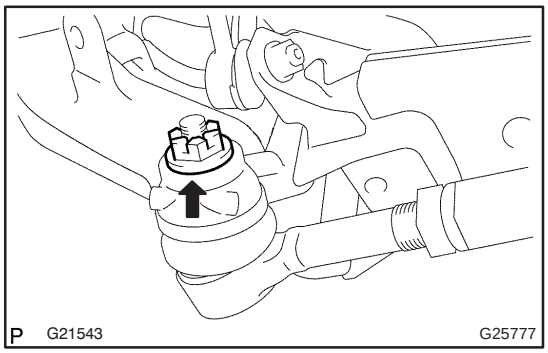

(d) Remove the clip and nut.

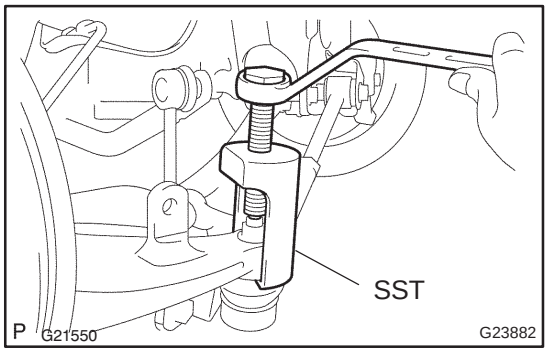

(e) Using SST, remove the lower control arm assy LH from the rear axle carrier sub–assy LH.
SST 09610–20012

NOTICE:
Do not damage the dust cover.

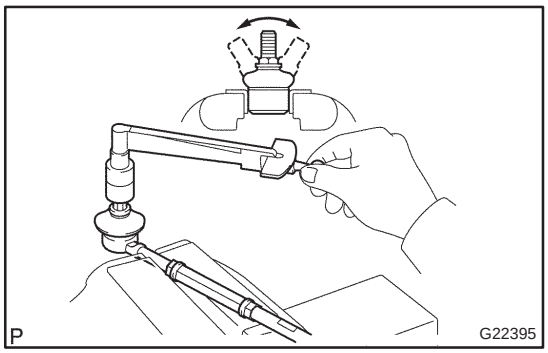

3. INSPECT LOWER CONTROL ARM ASSY LH

(a) Before installing the nut, flip the ball joint stud back and forth 5 times as shown in the illustration.

(b) Using a torque wrench, continuously turn the nut for 2 to 4 seconds per 1 turn, and take the torque reading at the 5th turn.
Turning torque:
3.0 N·m (31 kgf·cm, 27 in.·lbf) or less

NOTICE:
- **Neither unusual drag nor rattle occurs during the rotation.**
- **Neither crack nor grease leakage exists on the dust cover.**
- **Make sure that lower control arm assy LH is not deformed.**

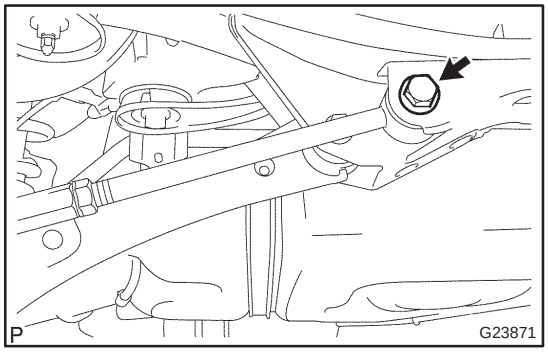

4. INSTALL LOWER CONTROL ARM ASSY LH

(a) Install the member side lower control arm assy LH, and temporarily tighten bolt.

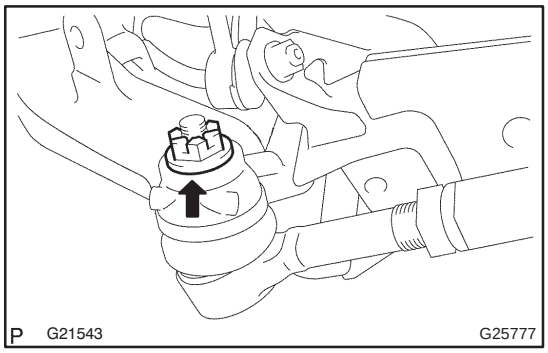

(b) Install the nut.
Torque: 60 N·m (612 kgf·cm, 44 ft·lbf)

(c) Install the clip.

NOTICE:
- **When the holes for the clip are not aligned, adjust them by tightening the nut. The tightening angle for the adjustment must be less than 60°.**
- **Insert the clip from the rear side of a vehicle.**

5. INSTALL REAR WHEEL
Torque: 103 N·m (1,050 kgf·cm, 76 ft·lbf)

6. STABILIZE SUSPENSION (See page 27–8)

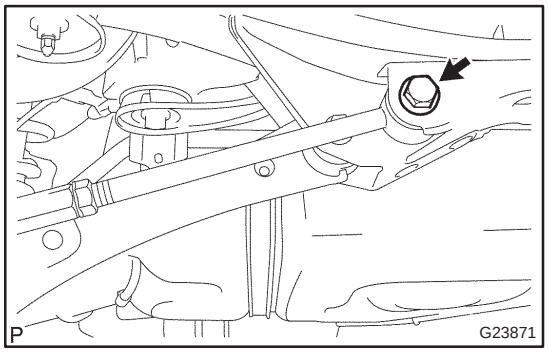

7. FULLY TIGHTEN LOWER CONTROL ARM ASSY LH

(a) Fully tighten the bolt.
Torque: 105 N·m (1,071 kgf·cm, 77 ft·lbf)

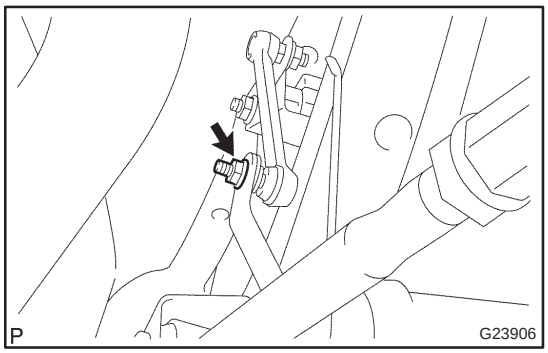

(b) RH side (w/ Height control sensor):
Install the height control sensor sub–assy and nut to the lower control arm assy RH.
Torque: 5.8 N·m (59 kgf·cm, 51 in.·lbf)

(c) RH side (w/ Height control sensor):
Headlight aim only (See page 65–19).

8. INSPECT AND ADJUST REAR WHEEL ALIGNMENT (See page 27–4)

UPPER CONTROL ARM ASSY

REPLACEMENT

270E5–01

HINT:

COMPONENTS: See page 27–2.

1. REMOVE REAR WHEEL

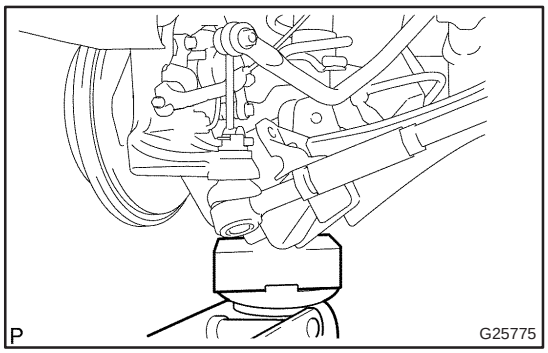

2. REMOVE UPPER CONTROL ARM ASSY

(a) Support the rear suspension arm assy No.1 LH.

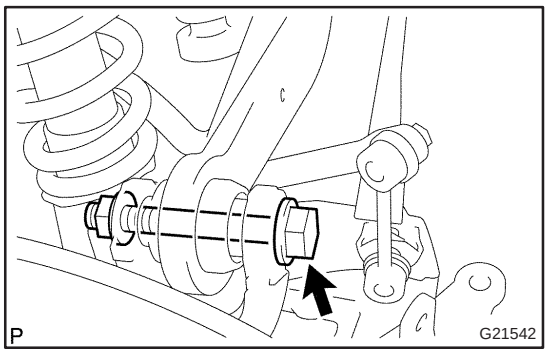

(b) Remove the bolt and nut, separate the upper control arm assy.

NOTICE:

When removing the bolt, hold the nut not to rotate.

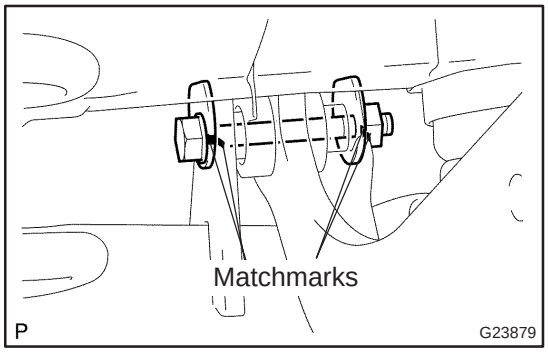

(c) Place matchmarks on the camber adjust cam assy, camber adjust cam No.2 and rear suspension member sub–assy.

(d) Remove the nut, camber adjust cam assy and camber adjust cam No.2.

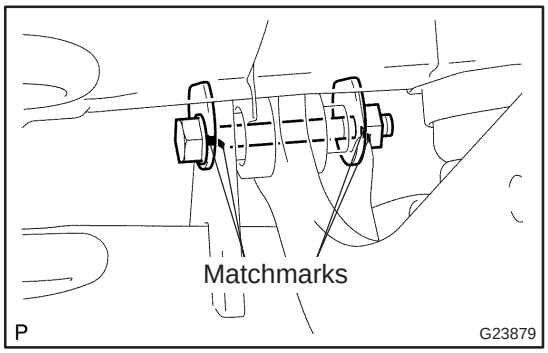

3. INSTALL UPPER CONTROL ARM ASSY

(a) Install the camber adjust cam assy from the front side of the vehicle, and temporarily fix it with the nut and the camber adjust cam No.2.

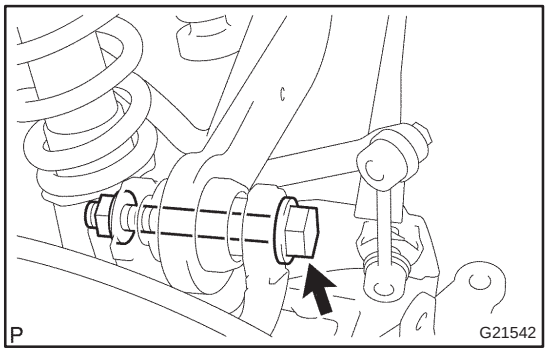

(b) Install the upper control arm assy, and temporarily tighten the bolt and nut.

4. INSTALL REAR WHEEL
Torque: 103 N·m (1,050 kgf·cm, 76 ft·lbf)

5. STABILIZE SUSPENSION (See page 27–8)

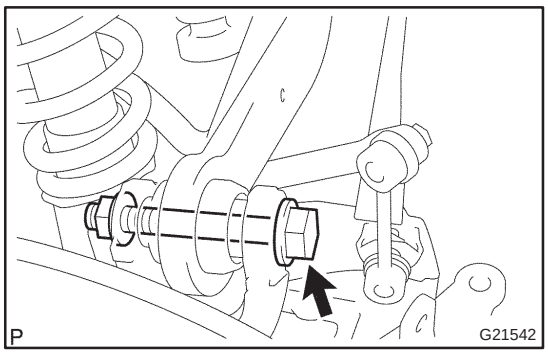

6. FULLY TIGHTEN UPPER CONTROL ARM ASSY

NOTICE:

Be sure to empty the vehicle when fully tightening the bolt and nut.

(a) Fully tighten the bolt and nut.
Torque: 74 N·m (755 kgf·cm, 55 ft·lbf)

NOTICE:

When instaling the bolt, hold the nut not to rotate.

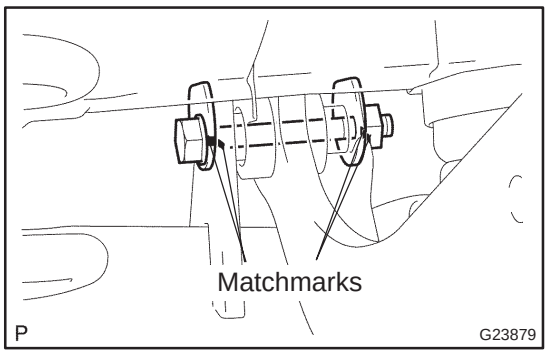

(b) Align the matchmarks, and fully tighten the nut.
Torque: 74 N·m (755 kgf·cm, 55 ft·lbf)

7. INSPECT AND ADJUST REAR WHEEL ALIGNMENT (See page 27–4)

STABILIZER BAR REAR

REPLACEMENT

270E6–01

HINT:

COMPONENTS: See page 27–2.

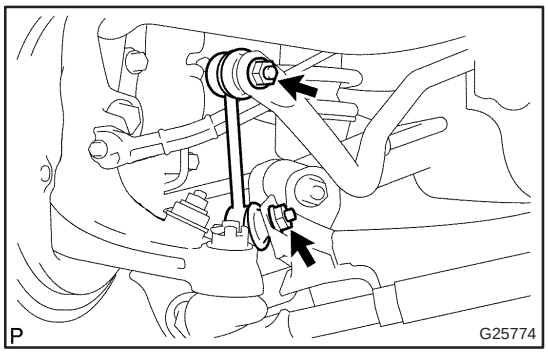

1. REMOVE REAR STABILIZER LINK ASSY LH

(a) Remove the 2 nuts and rear stabilizer link assy LH.

HINT:

If the ball joint turns together with the nut, use a hexagon (5 mm) wrench to hold the stud.

2. REMOVE REAR STABILIZER LINK ASSY RH

HINT:

Remove the RH side by the same procedures as the LH side.

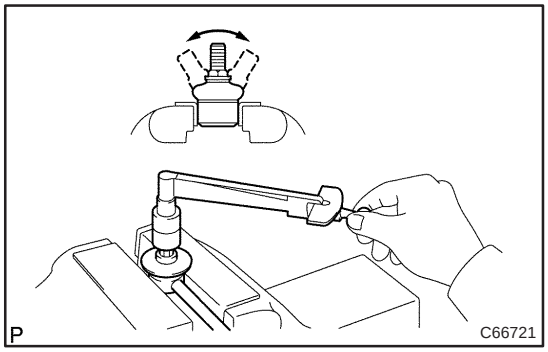

3. INSPECT REAR STABILIZER LINK ASSY LH

(a) Before installing the nut, flip the ball joint stud back and forth 5 times as shown in the illustration.

(b) Using a torque wrench, continuously turn the nut for 2 to 4 seconds per 1 turn, and take the torque reading on the 5th turn.

Turning torque:

1.0 N·m (10 kgf·cm, 8.7 in.·lbf) or less

NOTICE:

- **Neither unusual drag nor rattle occurs during the rotation.**
- **Neither crack nor grease leakage exists on the dust cover.**
- **Make sure that rear stabilizer link assy LH is not deformed.**

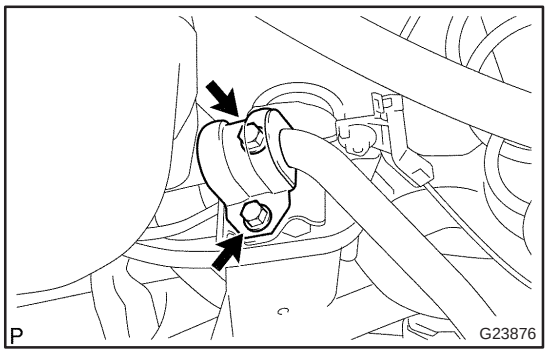

4. REMOVE STABILIZER BAR REAR

(a) Remove the 2 bolts, 2 nuts and 2 rear stabilizer bar bracket No.3 from the rear suspension member sub–assy.

(b) Remove the 2 stabilizer bush rear from each stabilizer bar rear.

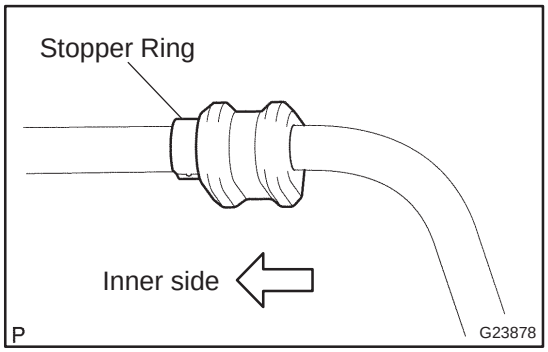

5. INSTALL STABILIZER BAR REAR

(a) Install the 2 stabilizer bush rear to each stabilizer bar rear.

HINT:

Install the stabilizer bush rear to the outer side of the stopper ring on the stabilizer bar.

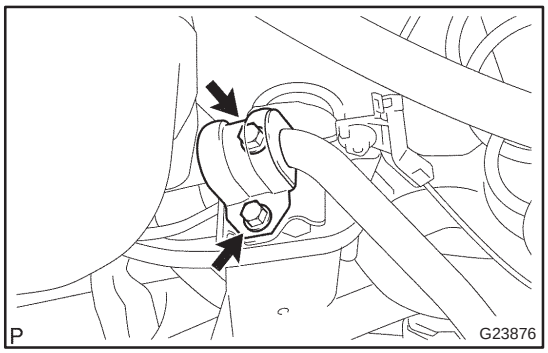

(b) Install the stabilizer bar rear and 2 rear stabilizer bar bracket No.3 with 2 bolts and 2 nuts.

Torque: 35 N·m (357 kgf·cm, 26 ft·lbf)

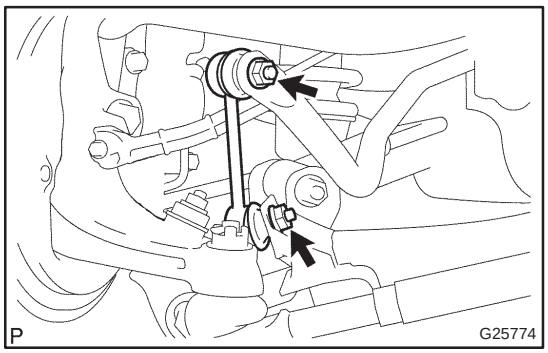

6. INSTALL REAR STABILIZER LINK ASSY LH

(a) Install the rear stabilizer link assy LH with the 2 nuts.

Torque: 44 N·m (449 kgf·cm, 32 ft·lbf)

HINT:

If the ball joint turns together with the nut, use a hexagon (5 mm) wrench to hold the stud.

7. INSTALL REAR STABILIZER LINK ASSY RH

HINT:

Install the RH side by the same procedures as the LH side.

8. INSPECT AND ADJUST REAR WHEEL ALIGNMENT (See page 27–4)

WHEEL AND TIRE SYSTEM

2801F–02

INSPECTION

1. INSPECT TIRE

(a) Check the tires for wear and proper inflation pressure.

Cold tire inflation pressure:

3ZZ – FE, 1ZZ – FE, 1AZ – FE engine models:

Tire size	Front kPa (kgf·cm^2, psi)	Rear kPa (kgf·cm^2, psi)
195/65R16 91V, 205/55R16 91V:		
with 4 or less occupants	220 (2.2, 32) *1 240 (2.4, 35) *2	220 (2.2, 32) *1 240 (2.4, 35) *2
with 5 or more occupants	220 (2.2, 32) *1 250 (2.5, 36) *2	220 (2.2, 32) *1 280 (2.8, 41) *2

1CD – FTV engine models:

Tire size	Front kPa (kgf·cm^2, psi)	Rear kPa (kgf·cm^2, psi)
205/55R16 91V:		
with 4 or less occupants	240 (2.4, 35) *1 270 (2.7, 39) *2	240 (2.4, 35) *1 270 (2.7, 39) *2
with 5 or more occupants	240 (2.4, 35) *1 280 (2.8, 41) *2	240 (2.4, 35) *1 290 (2.9, 42) *2

1AZ – FSE engine models:

Tire size	Front kPa (kgf·cm^2, psi)	Rear kPa (kgf·cm^2, psi)
205/55R16 91V:		
with 4 or less occupants	220 (2.2, 32) *1 250 (2.5, 36) *2	220 (2.2, 32) *1 250 (2.5, 36) *2
with 5 or more occupants	220 (2.2, 32) *1 270 (2.7, 39) *2	220 (2.2, 32) *1 280 (2.8, 41)*2
215/45R17 87W:		
with 4 or less occupants	240 (2.4, 35) *1 290 (2.9, 42) *2	240 (2.4, 35) *1 290 (2.9, 42) *2
with 5 or more occupants	240 (2.4, 35) *1 310 (3.1, 45) *2	240 (2.4, 35) *1 330 (3.3, 48) *2

***1: For driving under 160 km/h (100 mph)**

***2: For driving at 160 km/h (100 mph) or over**

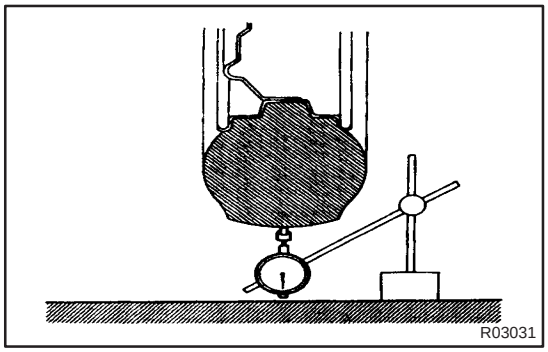

(b) Using a dial indicator, check the runout of tires.
Tire runout: 1.4 mm (0.055 in.) or less

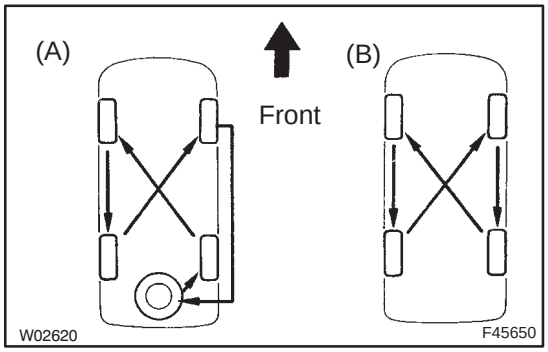

2. ROTATE TIRE

HINT:

If the spare tire is the same as ground tire, perform as ”A” in the illustration, and if the spare tire is compact tire, perform as ”B” in the illustration.

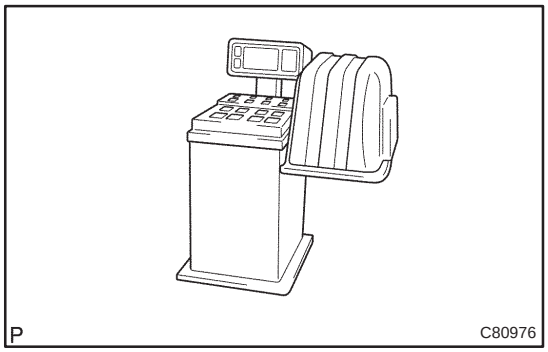

3. INSPECT WHEEL BALANCE

(a) Check and adjust the Off–the–car balance.

(b) If required, check and adjust the On–the–car balance.

Imbalance after adjustment: 8.0 g (0.018 lb) or less

4. INSPECT BEARING BACKLASH (See page 30–2)

5. INSPECT AXLE HUB DEVIATION (See page 30–2)

6. INSPECT BEARING BACKLASH (See page 30–2)

7. INSPECT AXLE HUB DEVIATION (See page 30–2)

DRIVE SHAFT, PROPELLER SHAFT, AXLE

3005C–02

PROBLEM SYMPTOMS TABLE

Use the table below to help you find the cause of the problem. The numbers indicate the priority of the likely cause of the problem. Check each part in order. If necessary, replace these parts.

Symptom	Suspect Area	See page
Wander	5. Wheel	28–1
	6. Front wheel alignment	26–6
	7. Rear wheel alignment	27–4
	8. Hub bearing (Worn)	30–2
	9. Front shock absorber	26–10
	10. Rear shock absorber	27–8
Front wheel shimmy	1. Wheel (Imbalance)	28–1
	2. Hub bearing (Worn)	30–2
	3. Lower suspension arm ATM:	26–16
	4. Lower suspension arm MTM:	26–21
	5. Lower ball joint (Worm)	26–24
	6. Front shock absorber	26–10
Noise (Front)	1. Front drive shaft	30–6
	2. Front shock absorber	26–10
	3. Hub bearing (Worn)	30–2
	4. Lower ball joint (Worm)	26–24
Noise (Rear)	1. Hub bearing (Worn)	30–2
	2. Rear shock absorber	27–8

ON–VEHICLE INSPECTION

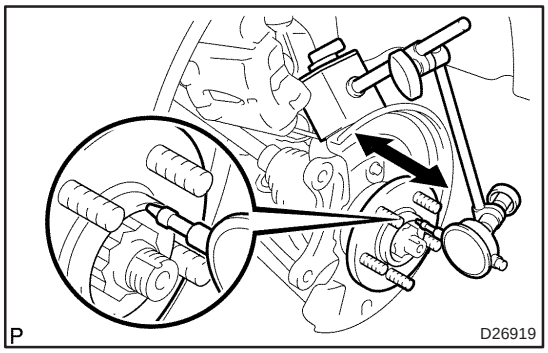

1. INSPECT FRONT AXLE HUB BEARING BACKLASH

(a) Using a dial indicator, check the backlash near the center of the axle hub.

Maximum: 0.05 mm (0.0020 in.)

If the backlash exceeds the maximum, replace the bearing.

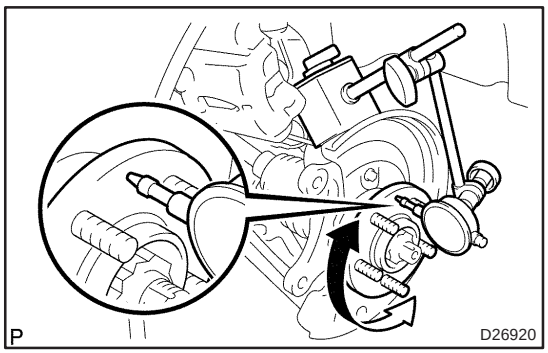

2. INSPECT FRONT AXLE HUB DEVIATION

(a) Using a dial indicator, check the deviation at the surface of the axle hub outside the hub bolt.

Maximum: 0.05 mm (0.0020 in.)

If the backlash exceeds the maximum, replace the axle hub.

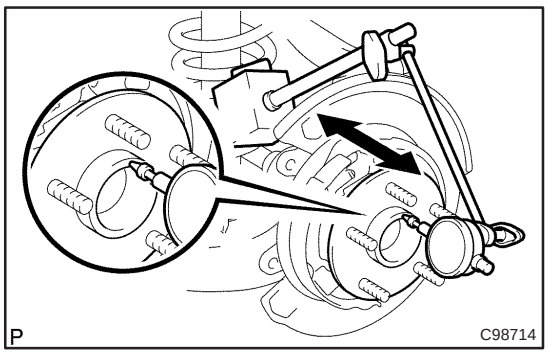

3. INSPECT REAR AXLE HUB BEARING BACKLASH

(a) Using a dial indicator, check the backlash near the center of the axle hub.

Maximum: 0.05 mm (0.0020 in.)

If the backlash exceeds the maximum, replace the axle hub assembly.

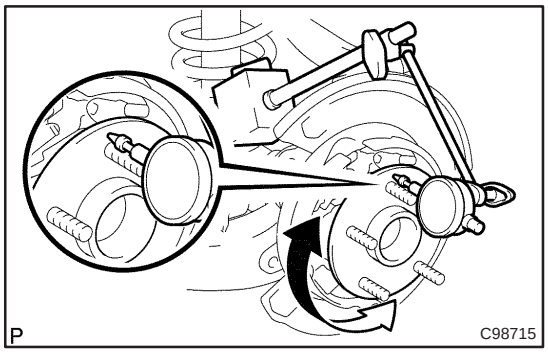

4. INSPECT REAR AXLE HUB DEVIATION

(a) Using a dial indicator, check the deviation at the surface of the axle hub outside the hub bolt.

Maximum: 0.07 mm (0.0028 in.)

If the backlash exceeds the maximum, replace the axle hub assembly.

FRONT DRIVE SHAFT

COMPONENTS

300JW–01

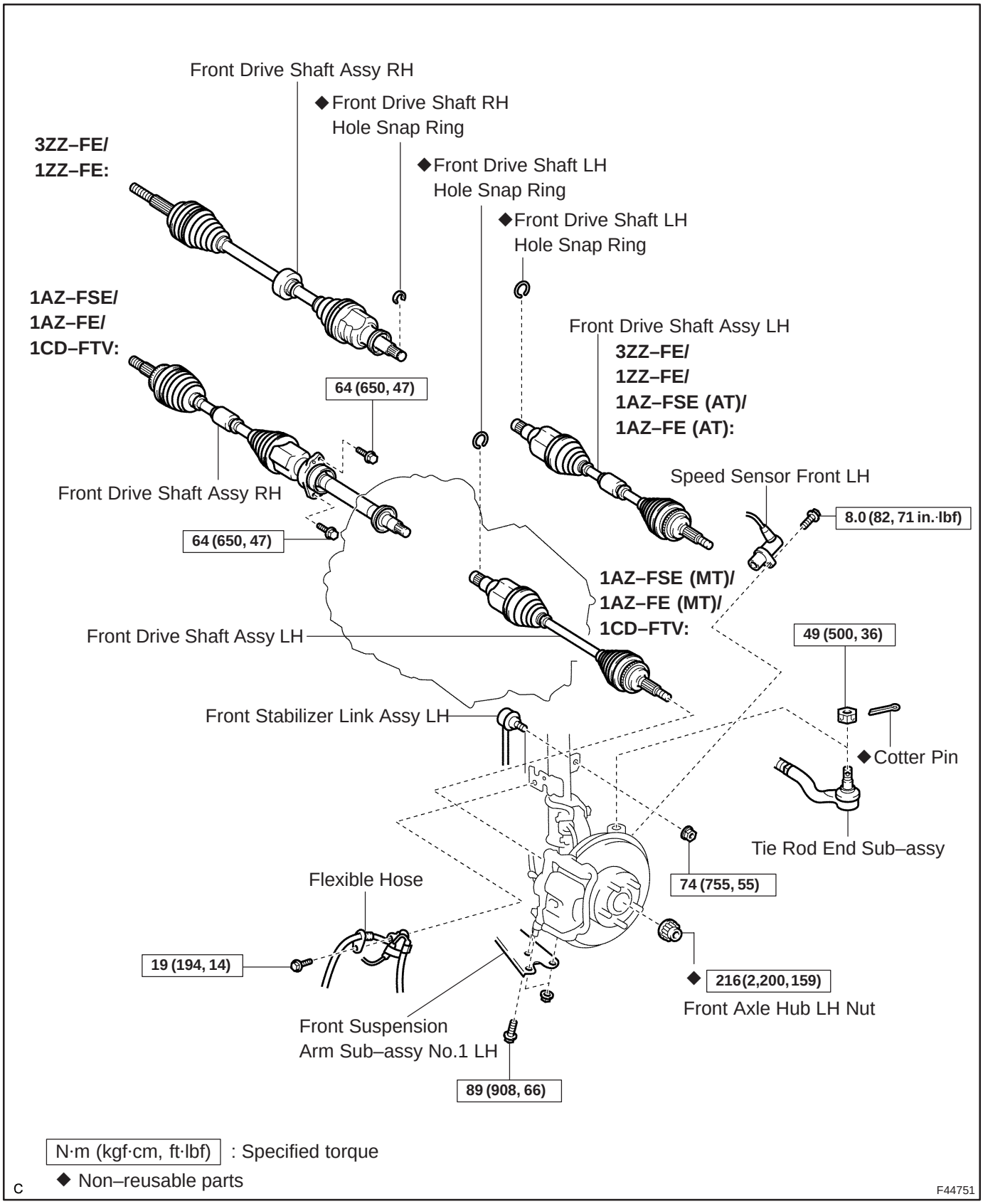

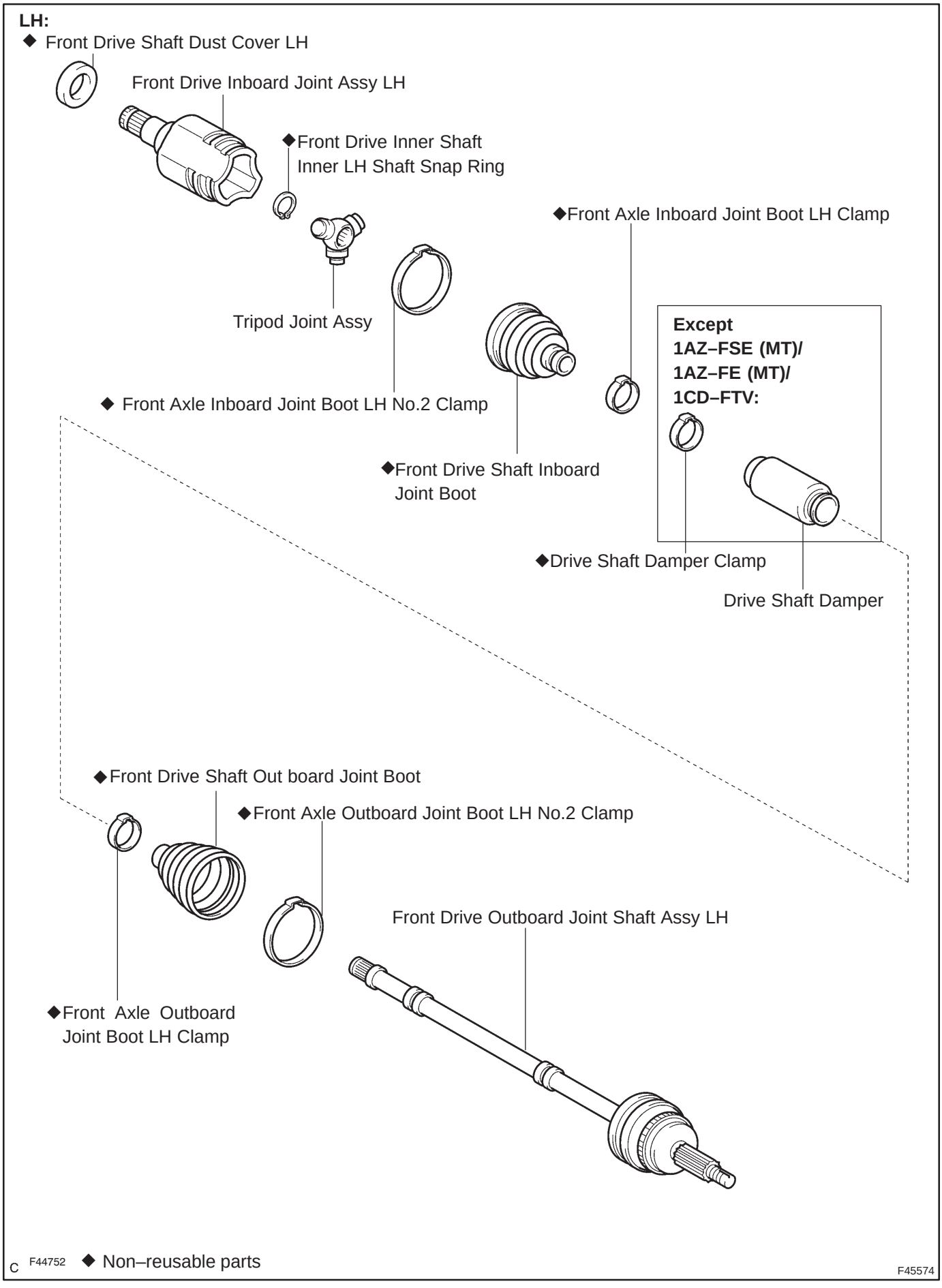
LH:
◆ Front Drive Shaft Dust Cover LH
Front Drive Inboard Joint Assy LH
◆Front Drive Inner Shaft
Inner LH Shaft Snap Ring
◆Front Axle Inboard Joint Boot LH Clamp
Tripod Joint Assy
◆ Front Axle Inboard Joint Boot LH No.2 Clamp
◆Front Drive Shaft Inboard
Joint Boot
Except
1AZ–FSE (MT)/
1AZ–FE (MT)/
1CD–FTV:
◆Drive Shaft Damper Clamp
Drive Shaft Damper
◆Front Drive Shaft Out board Joint Boot
◆Front Axle Outboard Joint Boot LH No.2 Clamp
Front Drive Outboard Joint Shaft Assy LH
◆Front Axle Outboard
Joint Boot LH Clamp
C F44752 ◆ Non–reusable parts
F45574

RH:

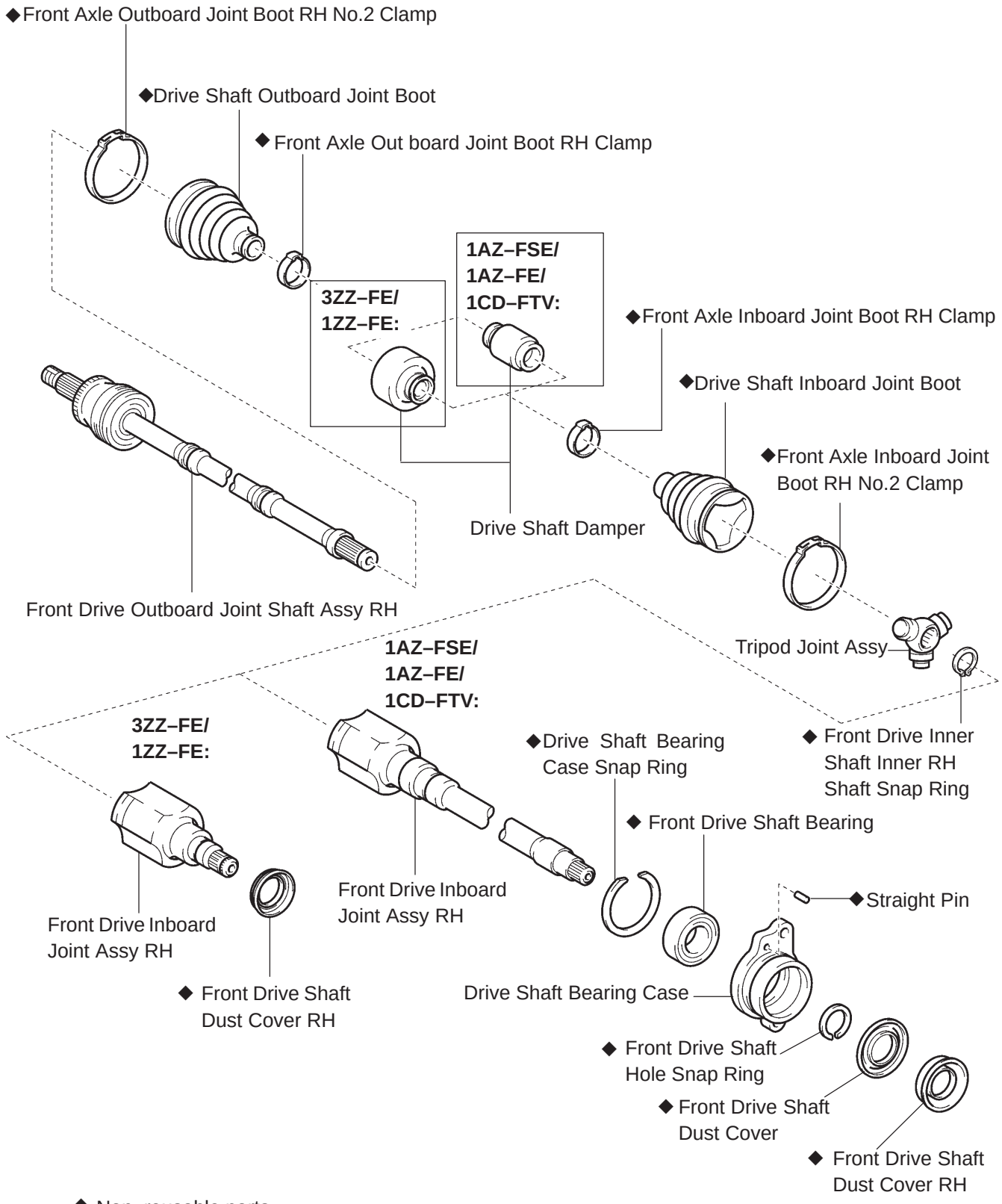

C F44753 ◆ Non–reusable parts

F45575

300JX–01

OVERHAUL

HINT:

Overhaul the RH side by the same procedures as the LH side.

1. DRAIN AUTOMATIC TRANSAXLE FLUID (A/T TRANSAXLE)

(a) Remove the drain plug and gasket, and then drain the ATF.

(b) Install a new gasket and drain plug.

Torque: 49 N·m (500 kgf·cm, 36 ft·lbf)

2. DRAIN MANUAL TRANSAXLE OIL (M/T TRANSAXLE)

(a) Remove the filler plug and gasket.

(b) Remove the drain plug and gasket.

(c) Install 2 new gaskets, drain plug and filler plug.

Torque:

C50/C250: 39 N·m (400 kgf·cm, 29 ft·lbf)

E354/E357: 49 N·m (500 kgf·cm, 36 ft·lbf)

3. REMOVE FRONT WHEEL

4. REMOVE ENGINE UNDER COVER LH

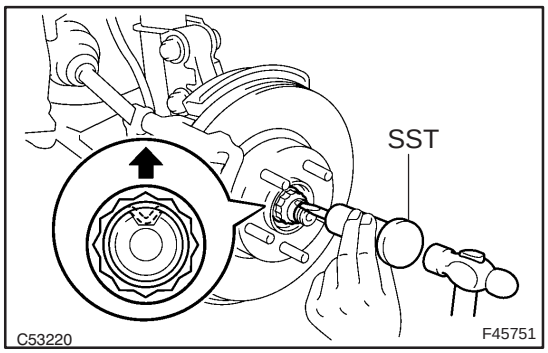

5. SEPARATE FRONT AXLE HUB LH NUT

(a) Using SST and a hammer, unstake the staked part of the nut.

SST 09930–00010

(b) While applying the brakes, remove the axle hub LH nut.

NOTICE:

Loosen the staked part of the lock nut completely, otherwise the screw of the drive shaft may be damaged.

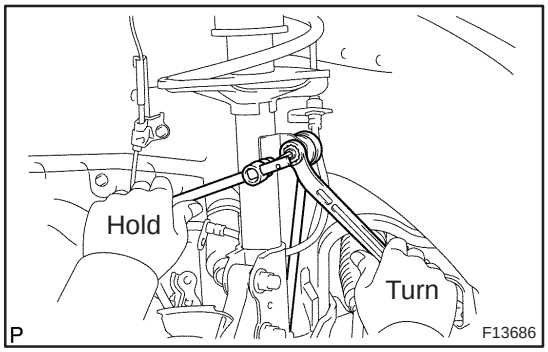

6. SEPARATE FRONT STABILIZER LINK ASSY LH

(a) Remove the nut and separate the front stabilizer link assy LH from the shock absorber assy LH.

HINT:

If the ball joint turns together with the nut, use a hexagon wrench (6 mm) to hold the stud.

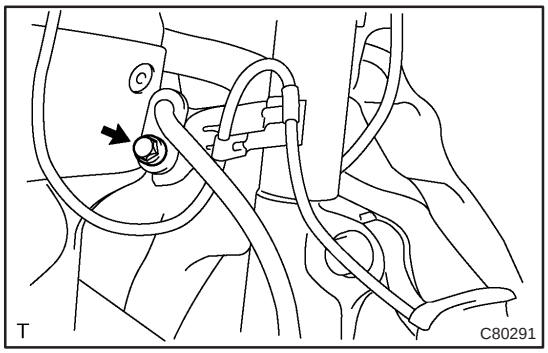

7. DISCONNECT SPEED SENSOR FRONT LH

(a) Remove the bolt, disconnect the speed sensor wire and flexible hose from the shock absorber.

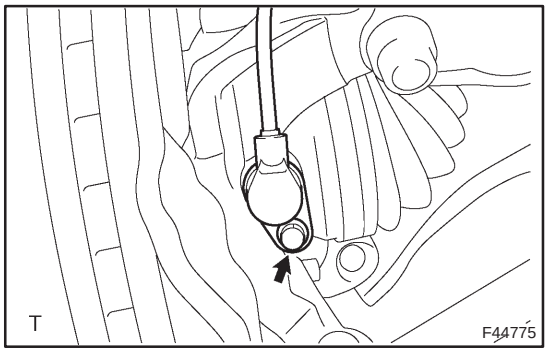

(b) Remove the bolt, and disconnect the speed sensor from the steering knuckle.

NOTICE:

- **Be careful not to damage the speed sensor.**
- **Prevent foreign matter from attaching to the speed sensor.**

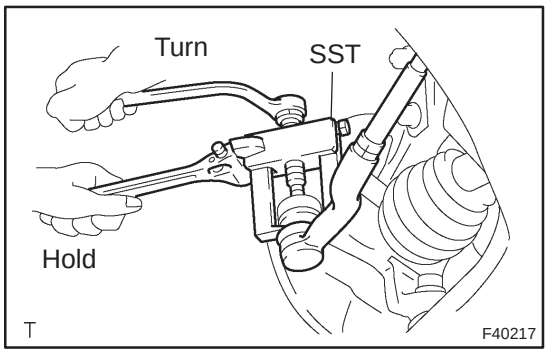

8. SEPARATE TIE ROD END SUB–ASSY LH

(a) Remove the cotter pin and nut.

(b) Using SST, separate the tie rod end sub–assy LH from the steering knuckle.
SST 09628–62011

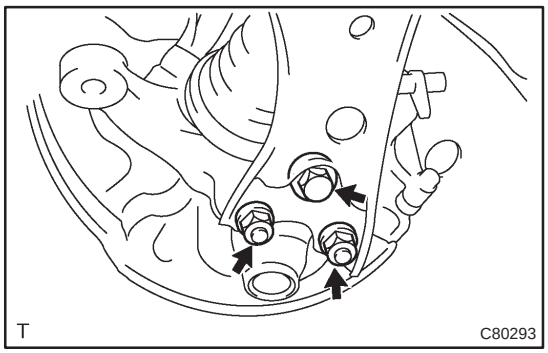

9. SEPARATE FRONT SUSPENSION ARM SUB–ASSY LOWER NO.1 LH

(a) Remove the bolt and 2 nuts, and separate the front suspension arm sub–assy lower No.1 LH from the lower ball joint.

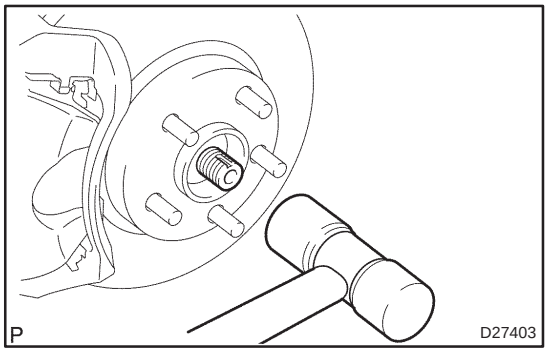

10. SEPARATE FRONT AXLE ASSY LH

(a) Using a plastic hammer, separate the front drive shaft assy LH from the axle hub.

NOTICE:

Be careful not to damage the boot and speed sensor rotor.

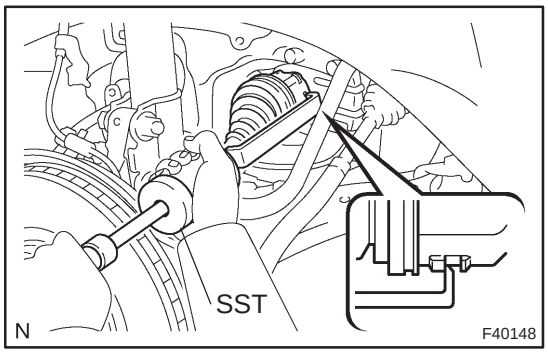

11. REMOVE FRONT DRIVE SHAFT ASSY LH

(a) Using SST, remove the front drive shaft assy LH.
SST 09520–01010, 09520–24010 (09520–32040)

NOTICE:

- **Be careful not to damage the oil seal, boot and dust cover.**
- **Be careful not to drop the drive shaft assy.**

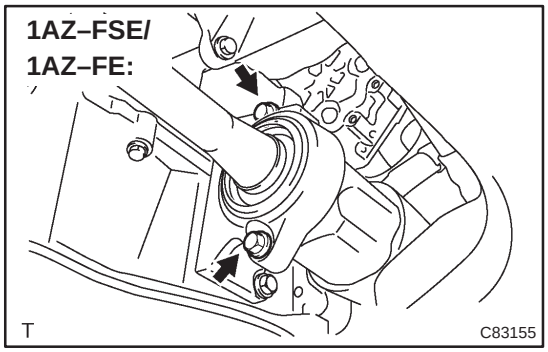

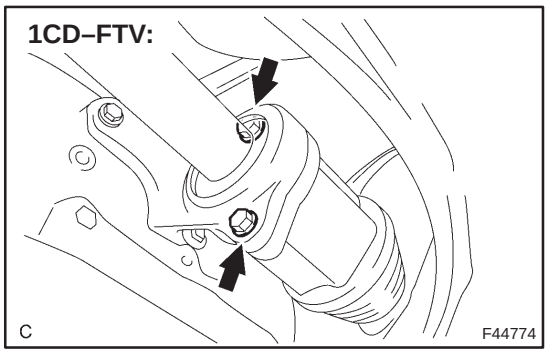

12. REMOVE FRONT DRIVE SHAFT ASSY RH

HINT:

1AZ–FSE, 1AZ–FE, 1CD–FTV only

(a) Remove the 2 bolts and pull out the drive shaft together with the center bearing bracket.

(b) Remove the drive shaft from the transaxle.

NOTICE:

- **Be careful not to damage the oil seal, boot and dust cover.**
- **Be careful not to drop the drive shaft assy.**

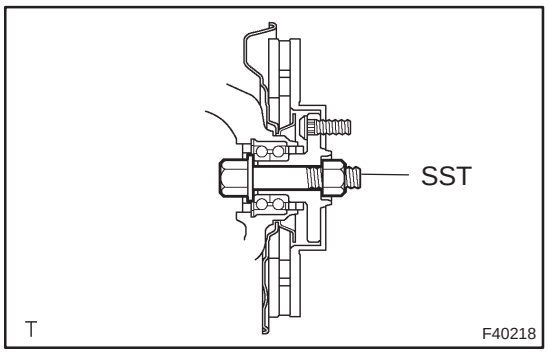

13. FIX FRONT AXLE ASSY LH

NOTICE:

The hub bearing could be damaged if it is subjected to the vehicle weight, such as when moving the vehicle with the drive shaft removed.

Therefore, if it is absolutely necessary to place the vehicle weight on the hub bearing, first support it with SST.

SST 09608–16042 (09608–02021, 09608–02041)

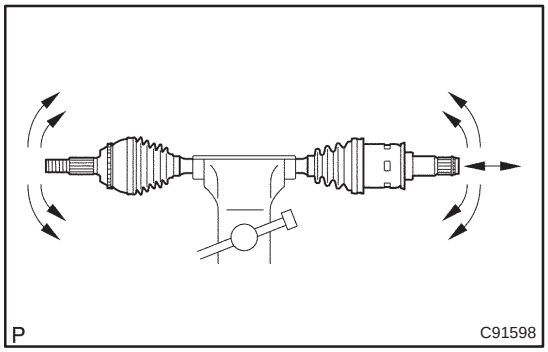

14. INSPECT FRONT DRIVE SHAFT ASSY LH

(a) Check that there is no remarkable play in the radial direction of the outboard joint.

(b) Check that the inboard joint slides smoothly in the thrust direction.

(c) Check that there is no remarkable play in the radial direction of the inboard joint.

(d) Check the boots for damage.

NOTICE:

Keep the drive shaft assy level during inspection.

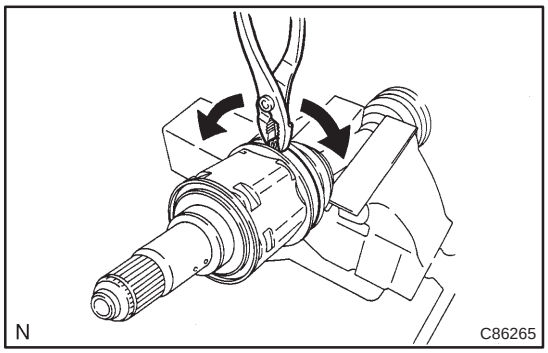

15. REMOVE FRONT AXLE INBOARD JOINT BOOT CLAMP

(a) Using pliers, remove the inboard joint boot LH No.2 clamp, as shown in the illustration.

(b) Remove the inboard joint boot LH clamp by the same procedures as the inboard joint boot LH No.2 clamp.

16. REMOVE FR AXLE INBOARD JOINT BOOT

(a) Remove the inboard joint boot from the inboard joint assy LH.

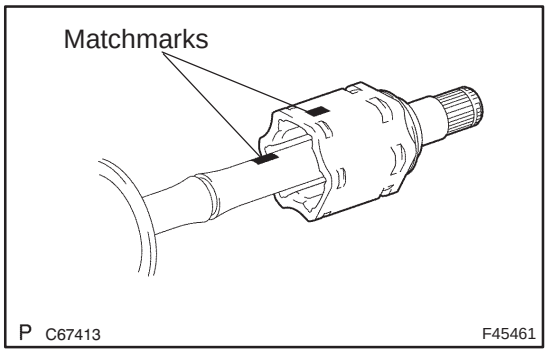

17. REMOVE FRONT DRIVE INBOARD JOINT ASSY LH

(a) Remove the old grease from the inboard joint.

(b) Place matchmarks on the inboard joint assy LH and outboard joint shaft assy LH.

NOTICE:

Do not punch the marks.

(c) Remove the inboard joint assy LH from the outboard joint shaft assy LH.

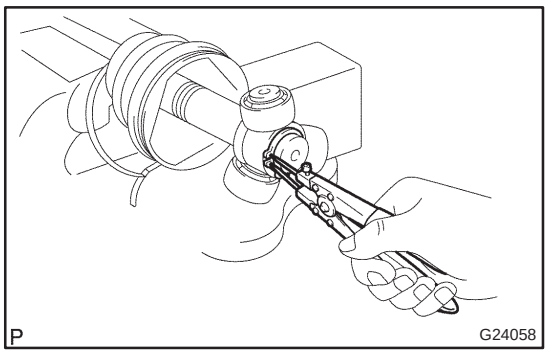

(d) Using a snap ring expander, remove the shaft snap ring.

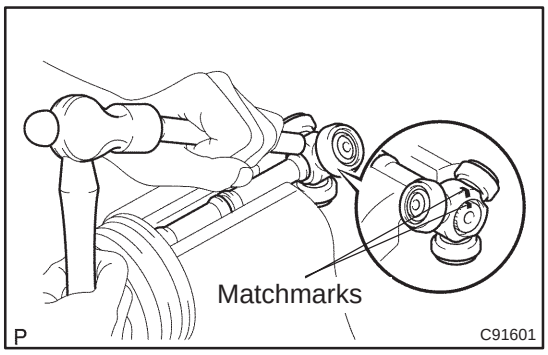

(e) Place matchmarks on the outboard joint shaft assy LH and tripod joint assy.

NOTICE:

Do not punch the marks.

(f) Using a brass bar and hammer, remove the tripod joint assy from the outboard joint shaft assy LH.

NOTICE:

Do not tap the roller.

(g) Remove the inboard joint boot and 2 clamps.

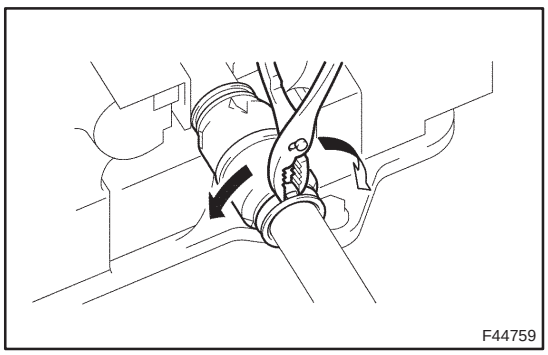

18. REMOVE DAMPER, DRIVE SHAFT

HINT:

- Except 1AZ–FSE, FE (MT)/ 1CD–FTV
- Perform the procedure only when reassembling the RH side.

(a) Using pliers, remove the damper clamp, as shown in the illustration.

(b) Remove the drive shaft damper.

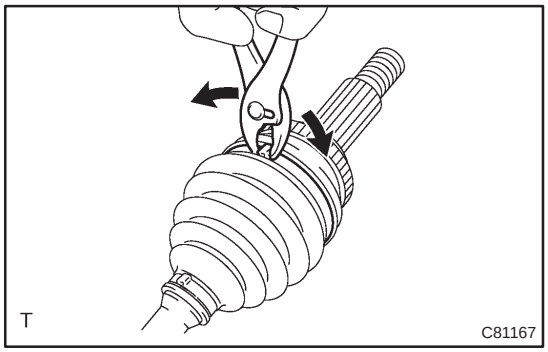

19. REMOVE FRONT AXLE OUTBOARD JOINT BOOT CLAMP

(a) Using pliers and remove the outboard joint boot LH No.2 clamp, as shown in the illustration.

(b) Remove the outboard joint boot LH clamp by the same procedures as outboard joint boot LH No.2 clamp.

20. REMOVE OUTBOARD JOINT BOOT

(a) Remove the outboard joint boot from the outboard joint shaft assy LH.

(b) Remove the old grease from the outboard joint.

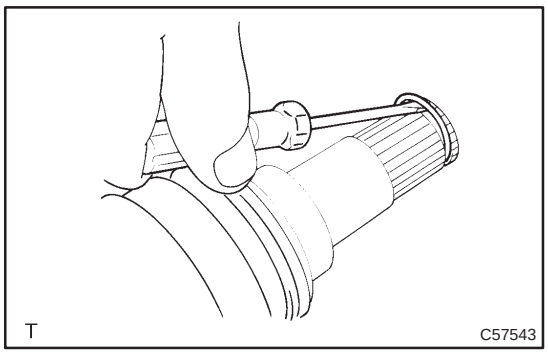

21. REMOVE FRONT DRIVE SHAFT LH HOLE SNAP RING

(a) Using a screwdriver, remove the hole snap ring.

HINT:

Except RH (1AZ–FSE, 1AZ–FE, 1CD–FTV)

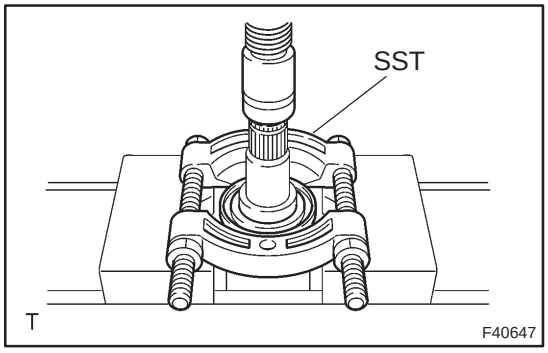

22. REMOVE FRONT DRIVE SHAFT DUST COVER LH

(a) Using SST and a press, remove the front drive shaft dust cover LH.

SST 09950–00020

NOTICE:

Be careful not to drop the inboard joint assy.

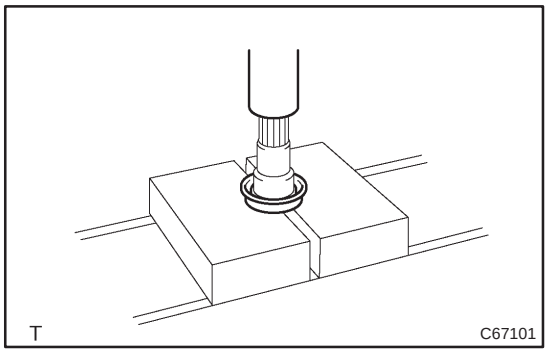

23. REMOVE FRONT DRIVE SHAFT DUST COVER RH

(a) 1AZ–FSE, 1AZ–FE, 1CD–FTV:

(1) Using a press, remove the drive shaft dust cover RH.

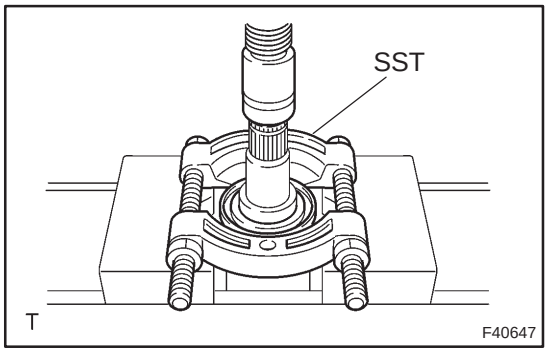

(b) 3ZZ–FE, 1ZZ–FE:
(1) Using SST and a press, remove the drive shaft dust cover RH.
SST 09950–00020

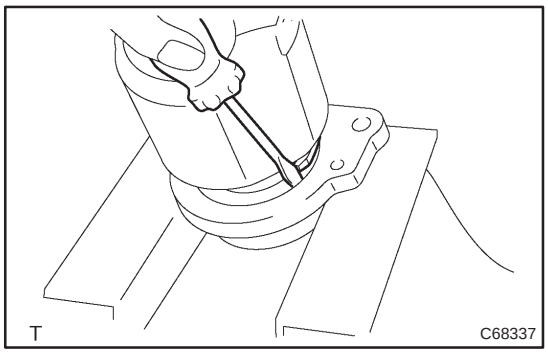

24. REMOVE CASE SUB ASSY, DRIVE SHAFT BEARING SNAP RING

HINT:
1AZ–FSE, 1AZ–FE, 1CD–FTV only.
(a) Using a screwdriver, remove the bearing case snap ring.

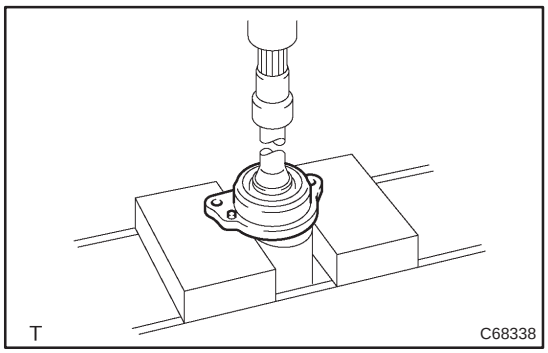

25. REMOVE DRIVE SHAFT BEARING CASE SUB ASSY

HINT:
1AZ–FSE, 1AZ–FE, 1CD–FTV only.
(a) Using a press, remove the drive shaft bearing case.
NOTICE:
Be careful not to drop the inboard joint assy.

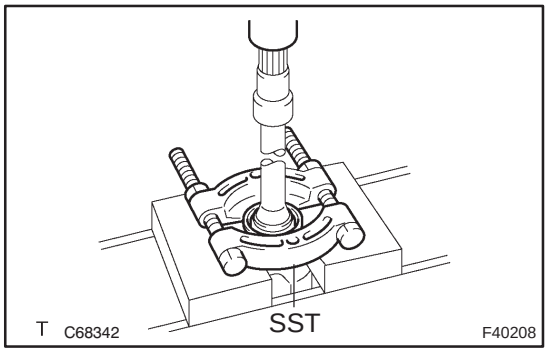

26. REMOVE FRONT DRIVE SHAFT DUST COVER

HINT:
1AZ–FSE, 1AZ–FE, 1CD–FTV only.
(a) Using SST and a press, remove the drive shaft dust cover.
SST 09950–00020
NOTICE:
Be careful not to drop the inboard joint assy.

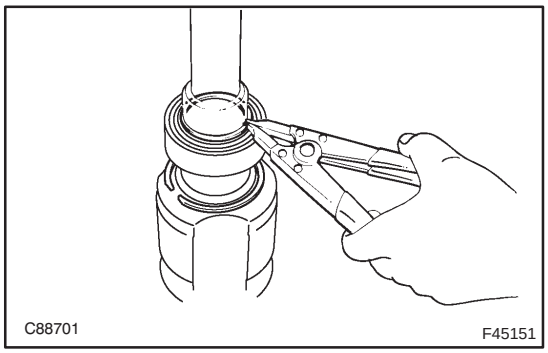

27. REMOVE FRONT DRIVE SHAFT BEARING

HINT:
1AZ–FSE, 1AZ–FE, 1CD–FTV only.
(a) Using a snap ring expander, remove the drive shaft hole snap ring.

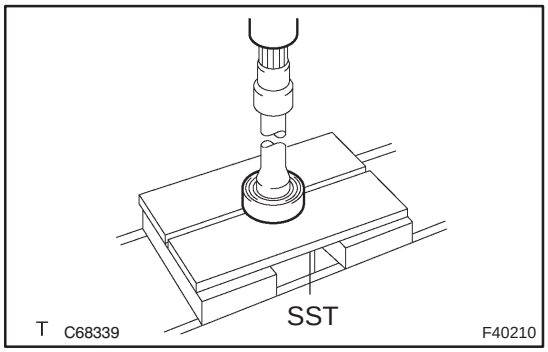

(b) Using SST and a press, remove the drive shaft bearing.
SST 09527–10011
(c) Remove the snap ring.

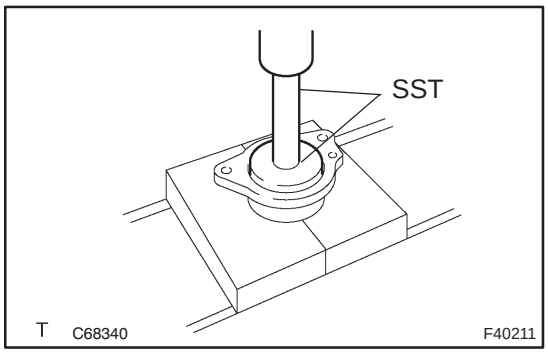

28. INSTALL FRONT DRIVE SHAFT BEARING

HINT:

1AZ–FSE, 1AZ–FE, 1CD–FTV only.

(a) Using SST and a press, install a new drive shaft bearing.
SST 09950–60020 (09951–00710), 09950–70010 (09951–07100)

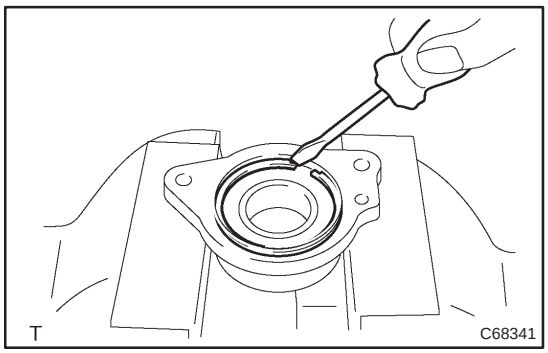

29. INSTALL CASE SUB ASSY, DRIVE SHAFT BEARING SNAP RING

HINT:

1AZ–FSE, 1AZ–FE, 1CD–FTV only.

(a) Using a screwdriver, install a new bearing case snap ring.

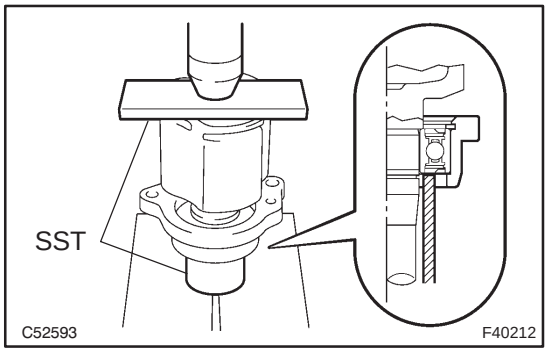

30. INSTALL DRIVE SHAFT BEARING CASE SUB ASSY

HINT:

1AZ–FSE, 1AZ–FE, 1CD–FTV only.

(a) Using SST and a press, install the drive shaft bearing case to the inboard joint assy RH.
SST 09527–10011, 09710–04081

NOTICE:

Bearing should be installed completely.

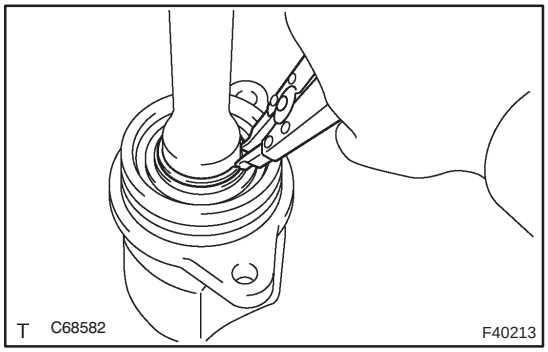

(b) Using a snap ring expander, install a new drive shaft hole snap ring.

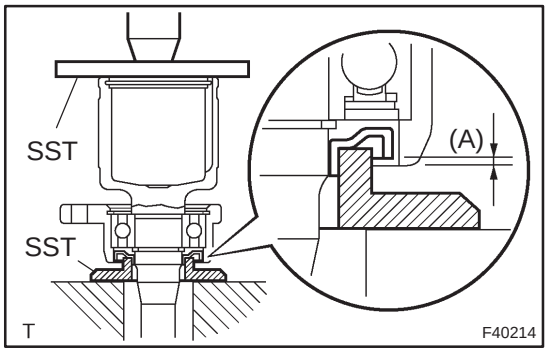

31. INSTALL FRONT DRIVE SHAFT DUST COVER

HINT:

1AZ–FSE, 1AZ–FE, 1CD–FTV only.

(a) Using SST and a press, install a new drive shaft dust cover.

SST 09726–40010, 09527–10011

Distance (A): 0.5 ± 0.5 mm (0.020 ± 0.020 in.)

NOTICE:

Be careful not to damage the dust cover.

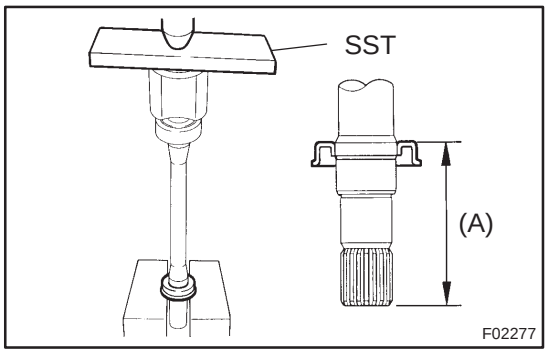

32. INSTALL FRONT DRIVE SHAFT DUST COVER RH

(a) 1AZ–FSE, 1AZ–FE, 1CD–FTV:

(1) Using SST and a press, install a new drive shaft dust cover RH until the distance from the tip of center drive shaft to the drive shaft dust cover RH reaches the specification, as shown in the illustration.

SST 09527–10011

Distance (A): 91.5 ± 0.5 mm (3.602 ± 0.020 in.)

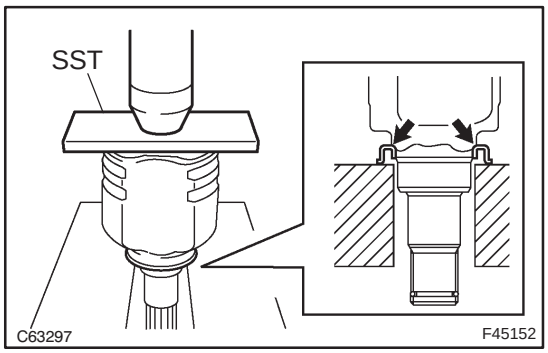

(b) 3ZZ–FE, 1ZZ–FE:

(1) Using SST and a press, install a new drive shaft dust cover RH.

SST 09527–10011

NOTICE:

- **Dust cover should be installed completely.**
- **Be careful not to damage the dust cover.**

33. INSTALL FRONT DRIVE SHAFT DUST COVER LH

(a) Using SST and a press, install a new drive shaft dust cover LH.

SST 09527–10011

NOTICE:

- **Dust cover should be installed completely.**
- **Be careful not to damage the dust cover.**

HINT:

Install the LH side by the same procedures as the RH (3ZZ–FE, 1ZZ–FE) side.

34. INSTALL FRONT DRIVE SHAFT LH HOLE SNAP RING

(a) Install a new hole snap ring.

HINT:

Except RH (1AZ–FSE, 1AZ–FE, 1CD–FTV)

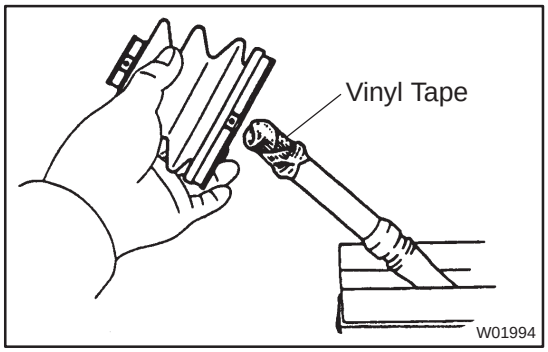

35. INSTALL OUTBOARD JOINT BOOT

HINT:

Before installing the boots, wrap the spline of the drive shaft with vinyl tape to prevent the boots from being damaged.

(a) Install new parts to the outboard joint shaft assy in the following order.
  (1) Outboard joint boot LH No.2 clamp
  (2) Outboard joint boot
  (3) Outboard joint boot LH clamp

(b) Pack the outboard joint shaft and boot with grease in the boot kit.

Grease capacity:

Engine type	Grease capacity g (oz.)
1AZ–FSE, 1AZ–FE, 1CD–FTV	152 – 162 g (5.4 – 5.7 oz.)
3ZZ–FE, 1ZZ–FE	85 – 105 g (3.0 – 3.7 oz.)

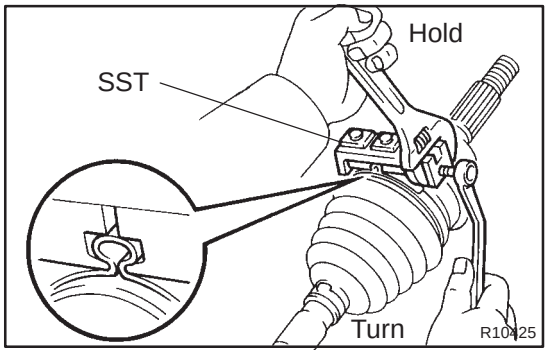

36. INSTALL FRONT AXLE OUTBOARD JOINT BOOT CLAMP

(a) Hold the front drive shaft in a soft vise.

(b) Secure the 2 outboard joint boot clamps onto the boot.

(c) Place SST onto the outboard joint large boot clamp.
  SST 09521–24010

(d) Tighten the SST so that the large clamp is pinched.

NOTICE:

Do not overtighten the SST.

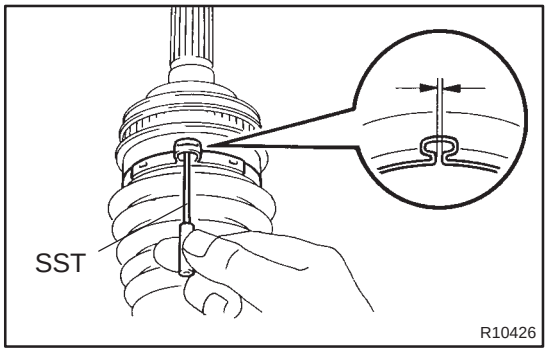

(e) Using SST, adjust the clearance of the large clamp.
  SST 09240–00020
  Clearance: 0.8 mm (0.031 in.) or less

(f) Install the outboard joint boot LH clamp by the same procedures as the outboard joint boot LH No.2 clamp.

NOTICE:

When the measured value exceeds the specified value, retighten the clamp.

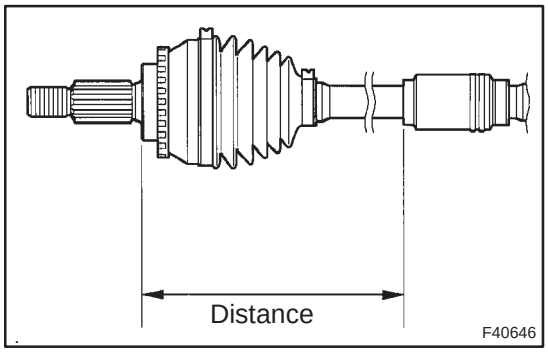

37. INSTALL DAMPER, DRIVE SHAFT

HINT:

- Except 1AZ–FSE, FE (MT)/ 1CD–FTV
- Perform the above procedure only when reassembling the RH side

(a) Temporarily install a new damper clamp.

(b) Set the distance, as described below.

Engine type		Distance mm (in.)
3ZZ–FE	RH	422.0 ± 2.0 (16.61 ± 0.08)
	LH	176.0 ± 2.0 (6.93 ± 0.08)
1ZZ–FE	RH	416.0 ± 2.0 (16.38 ± 0.08)
	LH	176.0 ± 2.0 (6.93 ± 0.08)
1AZ–FSE, FE	RH	212.0 ± 2.0 (8.35 ± 0.08)
	LH (AT)	183.0 ± 2.0 (7.20 ± 0.08)
1CD–FTV	RH	192.0 ± 2.0 (7.56 ± 0.08)
	LH	–

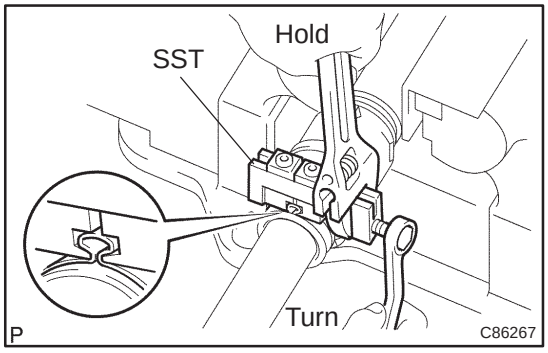

(c) Install the damper clamp.

HINT:

- Install the damper clamp to inboard joint side.
  (1) Hold the front drive shaft in a soft vise.
  (2) Secure the damper clamp onto the damper.
  (3) Place SST onto the damper clamp.
  SST 09521–24010
  (4) Tighten the SST so that the damper clamp is pinched.

NOTICE:

Do not overtighten the SST.

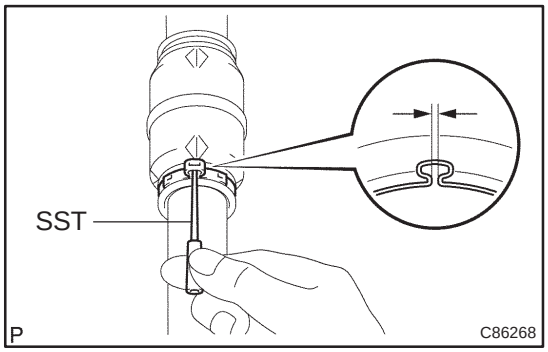

(5) Using SST, adjust the clearance of the damper clamp.

SST 09240–00020

Clearance: 0.8 mm (0.031 in.) or less

NOTICE:

When the measured value exceeds the specified value, re-tighten the clamp.

HINT:

- Install the damper clamp to inboard joint side.
- Except 1AZ–FSE, FE (MT)/ 1CD–FTV
- Perform the above procedure only when reassembling the RH side

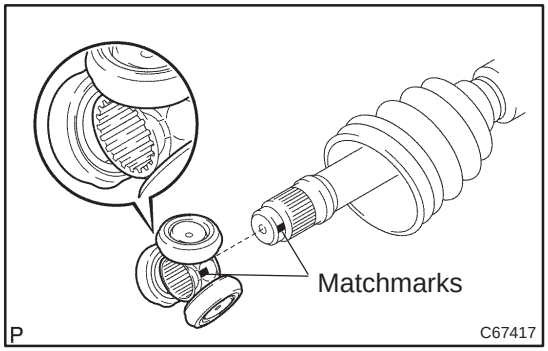

38. INSTALL FRONT DRIVE INBOARD JOINT ASSY LH

(a) Wrap the spline of the outboard joint shaft assy LH with vinyl tape to prevent them from being damaged.

(b) Install new parts to the outboard joint shaft assy LH in the following order.
  (1) Inboard joint boot LH clamp
  (2) Inboard joint boot
  (3) Inboard joint boot LH No.2 clamp

(c) Place the beveled side of the tripod axial spline toward the outboard joint.

(d) Align the matchmarks placed before removal.

(e) Using a brass bar and hammer, tap in the tripod joint assy to the drive shaft assy LH.

NOTICE:

- **Do not tap the roller.**
- **Be sure to install the tripod joint assy in the correct direction.**

(f) Pack the inboard joint shaft and boot with grease in the boot kit.

Engine type	Grease capacity g (oz.)
1AZ–FSE, 1AZ–FE, 1CD–FTV	170 – 190 g (6.0 – 6.7 oz.)
3ZZ–FE, 1ZZ–FE	125.5 – 135.5 g (4.4 – 4.8 oz.)

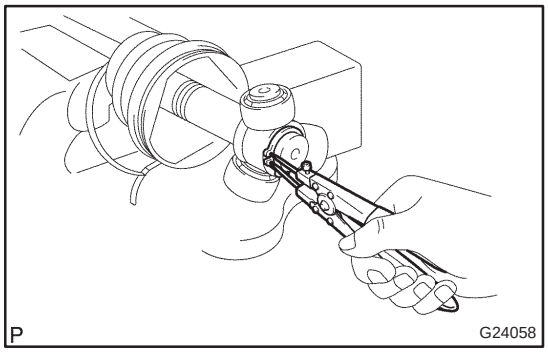

(g) Using a snap ring expander, install a new shaft snap ring.

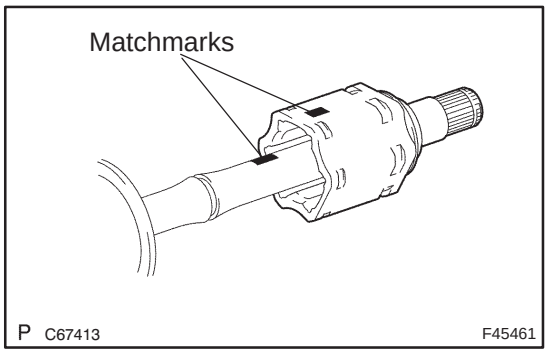

(h) Aligning the matchmarks, install the inboard joint assy LH to the outboard joint shaft assy LH.

39. INSTALL FR AXLE INBOARD JOINT BOOT

(a) Install the inboard joint boot to the inboard joint assy LH and outboard joint shaft assy LH.

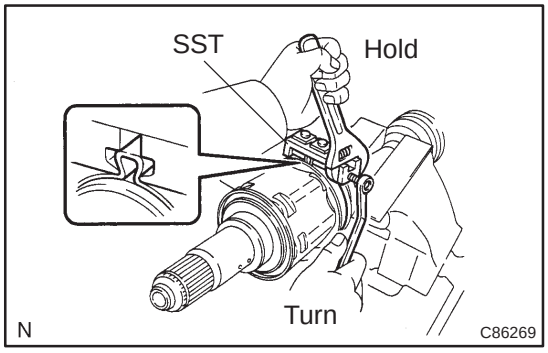

40. INSTALL FRONT AXLE INBOARD JOINT BOOT CLAMP

(a) Install the inboard joint boot clamp.
   (1) Hold the drive shaft in a soft vise.
   (2) Secure the 2 inboard joint boot clamps onto the boot.
   (3) Place SST onto the inboard joint large boot clamp.
   SST 09521–24010
   (4) Tighten the SST so that the large clamp is pinched.

NOTICE:
Do not overtighten the SST.

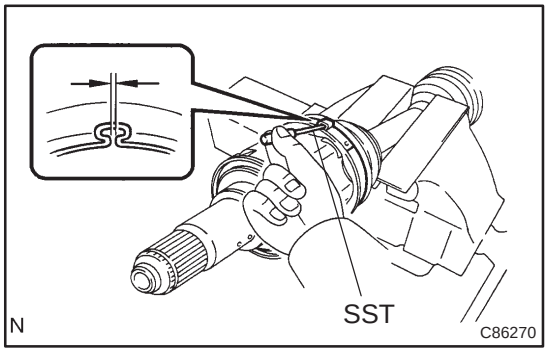

   (5) Using SST, adjust the clearance of the large clamp.
   SST 09240–00020
   Clearance: 0.8 mm (0.031 in.) or less

NOTICE:
When the measured value exceeds the specified value, re-tighten the clamp.

(b) Install the inboard joint boot LH clamp by the same procedures as the inboard joint boot LH No.2 clamp.

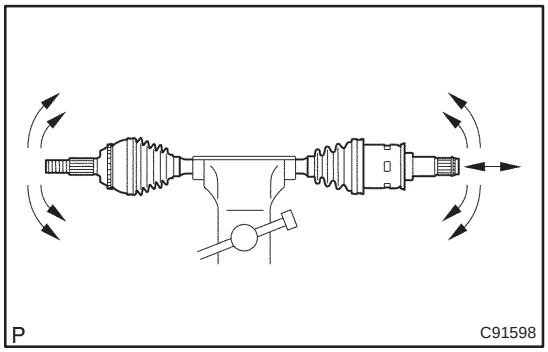

41. INSPECT FRONT DRIVE SHAFT

(a) Check that there is no remarkable play in the radial direction of the outboard joint.

(b) Check that the inboard joint slides smoothly in the thrust direction.

(c) Check that there is no remarkable play in the radial direction of the inboard joint.

(d) Check the boots for damage.

NOTICE:

Keep the drive shaft assy level during inspection.

HINT:

For dimension (A), refer to the following table.

Engine type	LH mm (in.)	RH mm (in.)
3ZZ–FE	583.8 (22.98) ± 5.0 (0.20)	856.3 (33.71) ± 5.0 (0.20)
1ZZ–FE	582.9 (22.94) ± 5.0 (0.20)	855.4 (33.68) ± 5.0 (0.20)
1AZ–FSE, 1AZ–FE	559.8 (22.03) ± 5.0 (0.20)	876.0 (34.49) ± 5.0 (0.20)
1CD–FTV	546.8 (21.53) ± 5.0 (0.20)	889.0 (35.00) ± 5.0 (0.20)

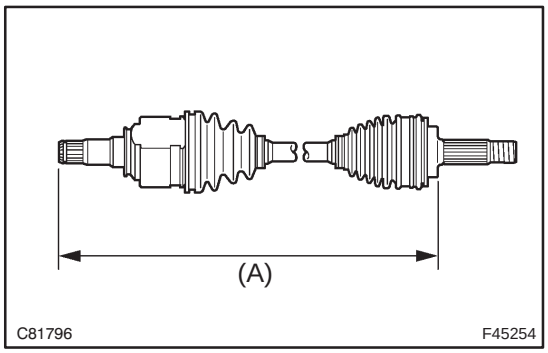

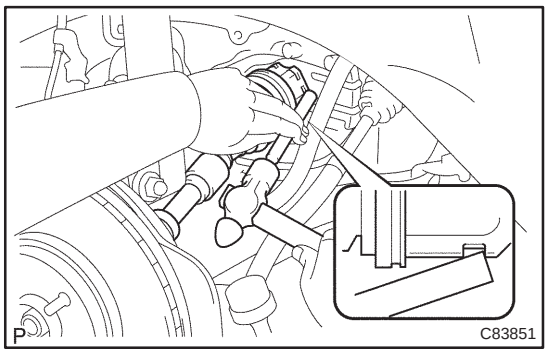

42. INSTALL FRONT DRIVE SHAFT ASSY LH

(a) Coat the spline of the inboard joint shaft assy LH with gear oil.

(b) Aligh the shaft splines and install the drive shaft assy LH with a brass bar and hammer.

NOTICE:

- **Set the snap ring with the opening side facing downwards.**
- **Be careful not to damage the oil seal, boot and dust cover.**

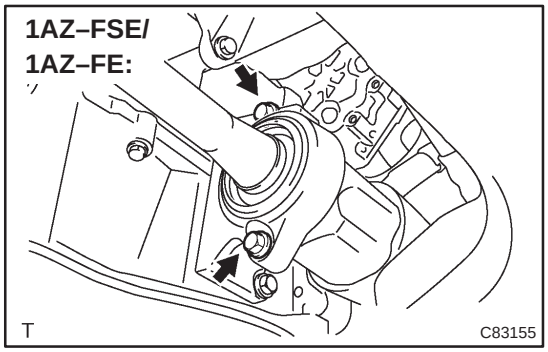

43. INSTALL FRONT DRIVE SHAFT ASSY RH

HINT:

1AZ–FSE, 1AZ–FE, 1CD–FTV only.

(a) Coat the spline of the inboard joint shaft assy RH with gear oil.

(b) Aline the shaft splines and install the drive shaft assy RH with the 2 bolts.

Torque: 64 N·m (650 kgf·cm, 47 ft·lbf)

NOTICE:

Do not damage the oil seal, boot and dust cover.

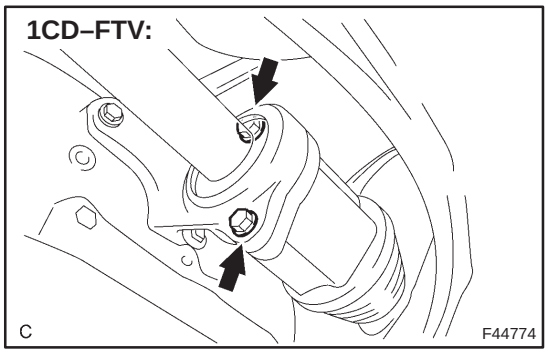

44. INSTALL FRONT AXLE ASSY LH

(a) Install the drive shaft assy LH to the front axle assy LH.

NOTICE:

- **Be careful not to damage the outboard joint boot.**
- **Be careful not to damage the speed sensor rotor.**

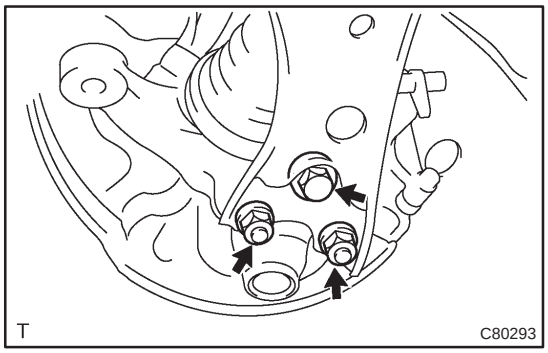

45. INSTALL FRONT SUSPENSION ARM SUB–ASSY LOWER NO.1 LH

(a) Install the lower ball joint to the front suspension arm sub–assy lower No.1 LH with the bolt and 2 nuts.
Torque: 89 N·m (908 kgf·cm, 66 ft·lbf)

46. INSTALL TIE ROD END SUB–ASSY LH

(a) Install the tie rod end sub–assy LH to the steering knuckle with the nut.
Torque: 49 N·m (500 kgf·cm, 36 ft·lbf)

(b) Install a new cotter pin.

NOTICE:

If the holes for the cotter pin are not aligned, tighten the nut up to 60° further.

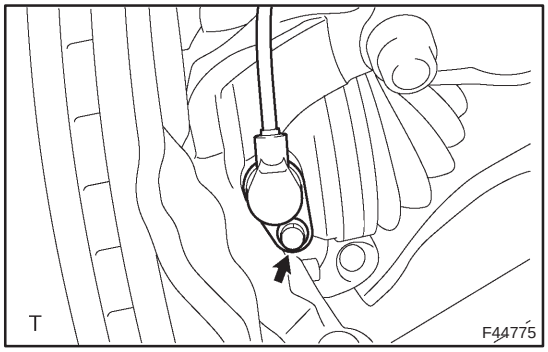

47. CONNECT SPEED SENSOR FRONT LH

(a) Install the speed sensor front LH to the steering knuckle with the bolt.
Torque: 8.0 N·m (82 kgf·cm, 71 in.·lbf)

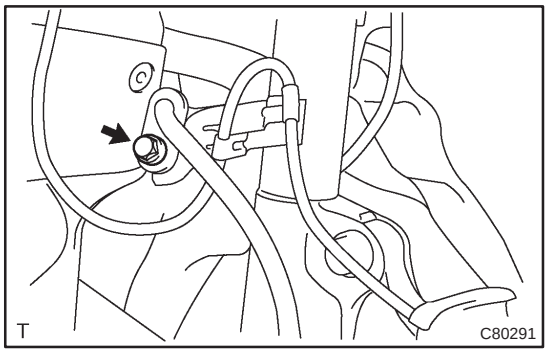

(b) Connect the speed sensor wire and flexible hose to the shock absorber with the bolt.
Torque: 19 N·m (194 kgf·cm, 14 ft·lbf)

NOTICE:

- **Be careful not to damage the speed sensor.**
- **Keep the speed sensor clean.**
- **Do not twist the sensor wire when installing the sensor.**

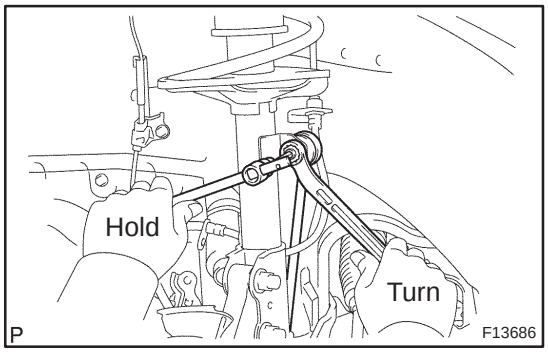

48. INSTALL FRONT STABILIZER LINK ASSY LH

(a) Install the front stabilizer link assy LH with the nut.
Torque: 74 N·m (755 kgf·cm, 55 ft·lbf)

HINT:

If the ball joint turns together with the nut, use a hexagon wrench (6 mm) to hold the stud.

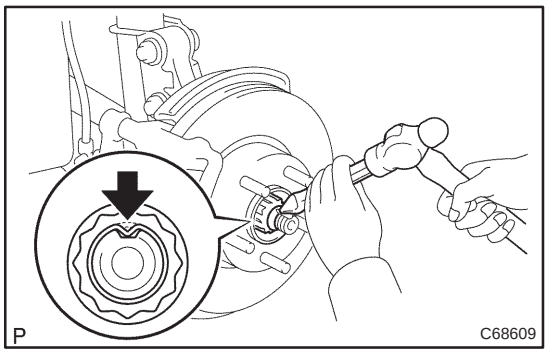

49. INSTALL FRONT AXLE HUB LH NUT

(a) Install a new axle hub LH nut.
Torque: 216 N·m (2,200 kgf·cm, 159 ft·lbf)

(b) Using a chisel and hammer, stake the axle hub LH nut.

50. INSTALL ENGINE UNDER COVER LH

51. INSTALL FRONT WHEEL
Torque: 103 N·m (1,050 kgf·cm, 76 ft·lbf)

52. ADD AUTOMATIC TRANSAXLE FLUID (A/T TRANSAXLE)

53. INSPECT AND ADJUST AUTOMATIC TRANSAXLE FLUID (A/T TRANSAXLE) (See page 40–2)

54. ADD MANUAL TRANSAXLE OIL (M/T TRANSAXLE)

55. INSPECT MANUAL TRANSAXLE OIL (M/T TRANSAXLE) (See page 41–2)

56. INSPECT AND ADJUST FRONT WHEEL ALIGNMENT (See page 26–6)

57. CHECK ABS SPEED SENSOR SIGNAL

(a) ABD WITH EBD SYSTEM (See page 05–699)

(b) ABD WITH EBD & BA & TRC & VSC SYSTEM (See page 05–756)

FRONT AXLE HUB SUB–ASSY LH

30091–02

COMPONENTS

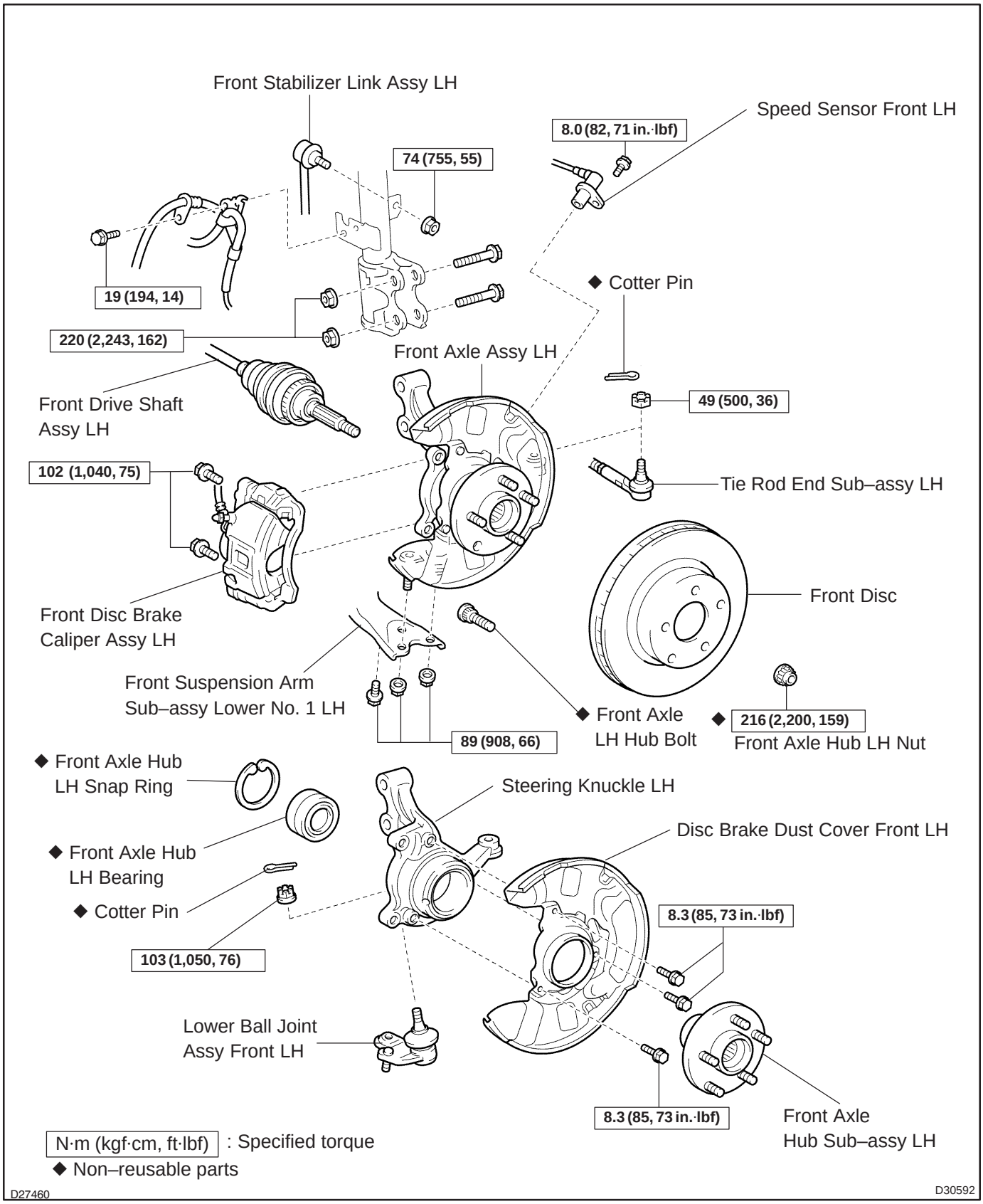

300JY–01

REPLACEMENT

HINT:

Replace the RH side by the same procedures as the LH side.

1. REMOVE FRONT WHEEL

2. SEPARATE FRONT STABILIZER LINK ASSY LH (See page 30–6)

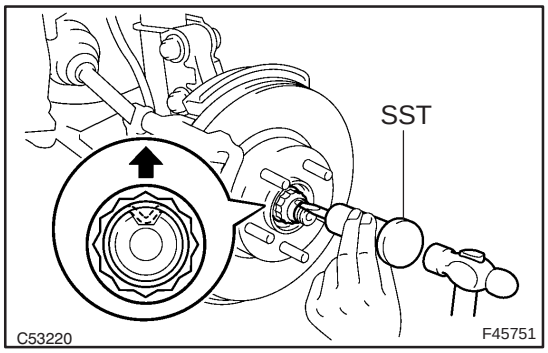

3. REMOVE FRONT AXLE HUB LH NUT

(a) Using SST and a hammer, unstake the staked part of the axle hub LH nut.

SST 09930–00010

(b) While applying the brakes, remove the axle hub LH nut.

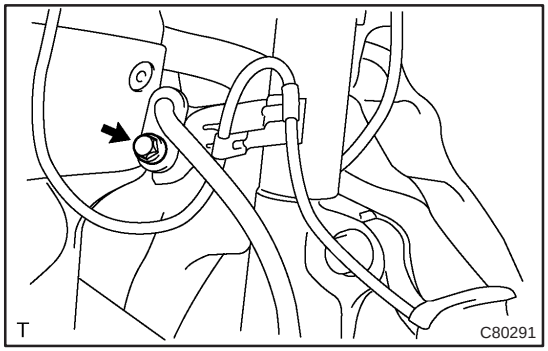

4. DISCONNECT SPEED SENSOR FRONT LH

(a) Remove the bolt, and disconnect the speed sensor wire and flexible hose from the shock absorber.

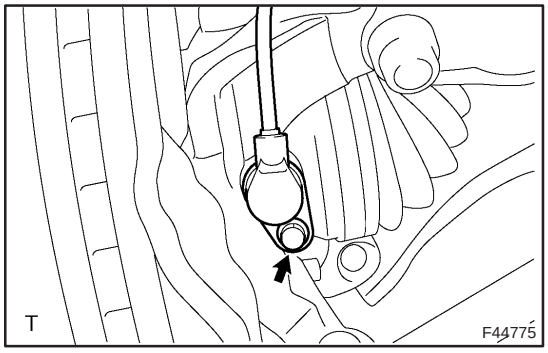

(b) Remove the bolt, separate the speed sensor front LH from the steering knuckle.

NOTICE:

- **Be careful not to damage the speed sensor.**
- **Prevent foreign matter from attaching to the speed sensor.**

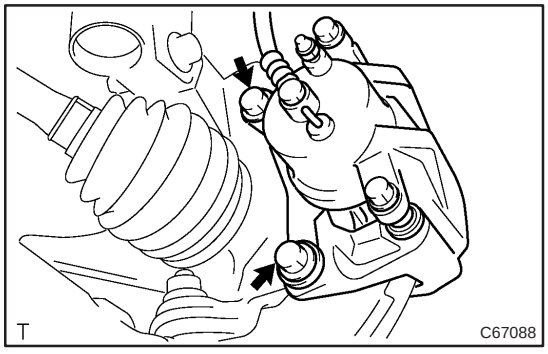

5. SEPARATE FRONT DISC BRAKE CALIPER ASSY LH

(a) Removing the 2 bolts, separate the disc brake caliper assy LH from the steering knuckle.

NOTICE:

Use a string or other device to keep the brake caliper from hanging down.

6. REMOVE FRONT DISC

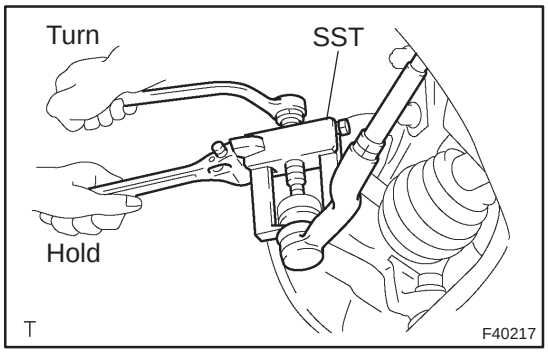

7. SEPARATE TIE ROD END SUB–ASSY LH

(a) Remove the cotter pin and nut.

(b) Using SST, separate the tie rod end sub–assy LH from the steering knuckle.
SST 09628–62011

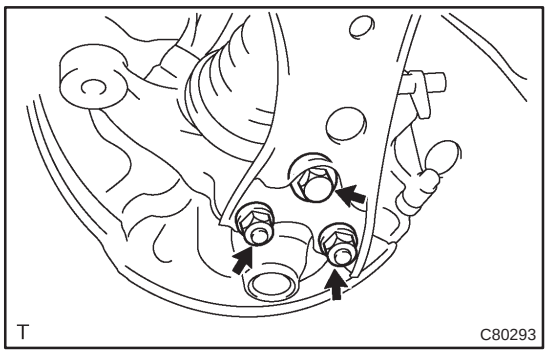

8. SEPARATE FRONT SUSPENSION ARM SUB–ASSY LOWER NO.1 LH

(a) Remove the bolt and 2 nuts, and separate the suspension arm sub–assy lower No.1 LH from the lower ball joint.

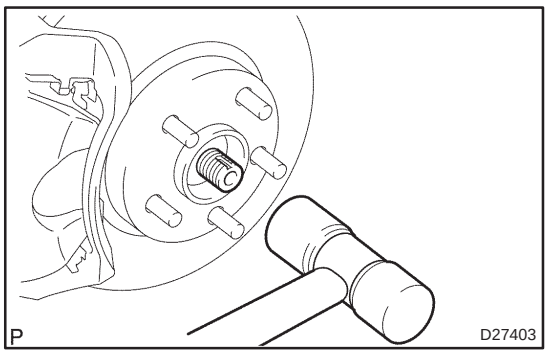

9. REMOVE FRONT AXLE ASSY LH

(a) Using a plastic hammer, separate the drive shaft assy LH from the axle hub.

NOTICE:
Be careful not to damage the boot and ABS speed sensor rotor.

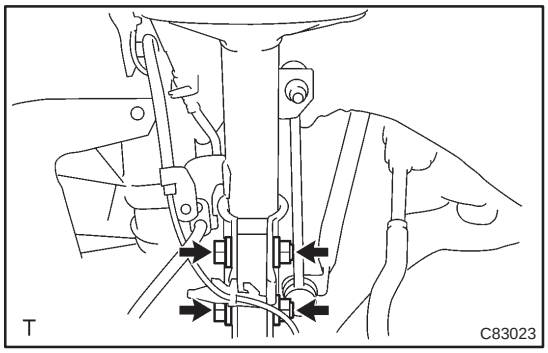

(b) Remove the 2 bolts, nuts and steering knuckle with the shock absorber.

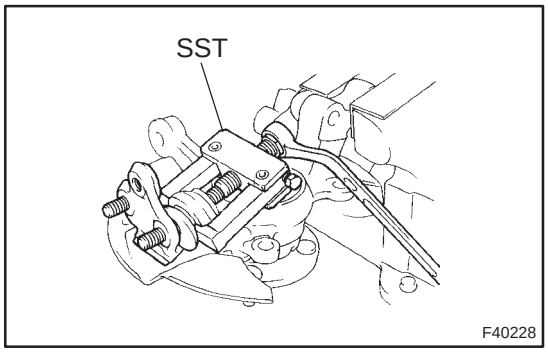

10. REMOVE LOWER BALL JOINT ASSY FRONT LH

(a) Remove the cotter pin and nut.

(b) Using SST, remove the ball joint.
SST 09628–62011

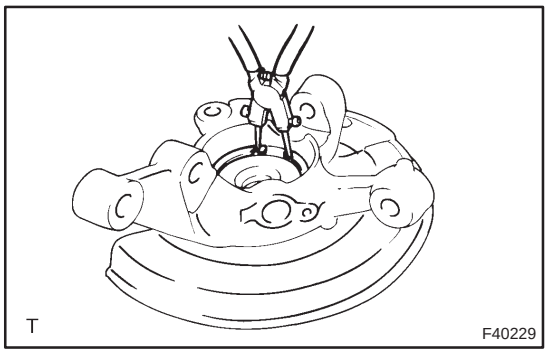

11. REMOVE FRONT AXLE HUB LH HOLE SNAP RING

(a) Using snap ring pliers, remove the hole snap ring.

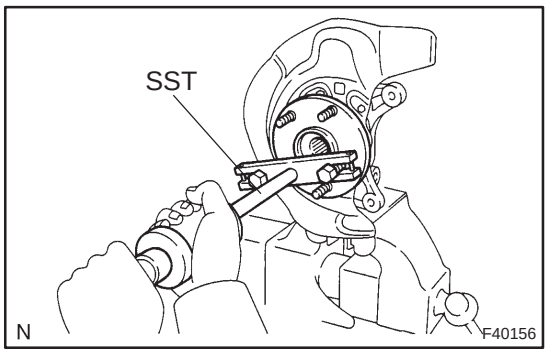

12. REMOVE FRONT AXLE HUB SUB–ASSY LH

(a) Using SST, remove the axle hub sub–assy.
SST 09520–00031

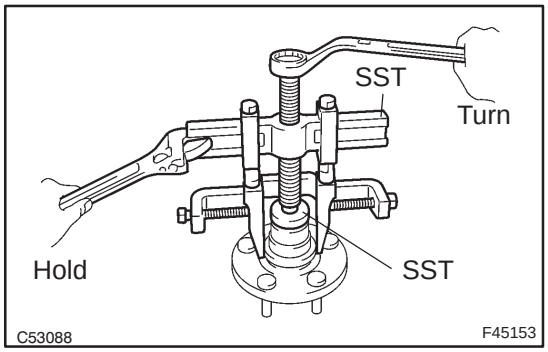

(b) Using SST, remove the bearing inner race (outside) from the axle hub sub–assy.
SST 09950–40011 (09951–04020, 09952–04010, 09953–04030, 09954–04010, 09955–04061, 09957–04010, 09958–04010), 09950–60010 (09951–00370)

13. REMOVE DISC BRAKE DUST COVER FRONT LH

(a) Remove the 3 bolts and disc brake dust cover front LH.

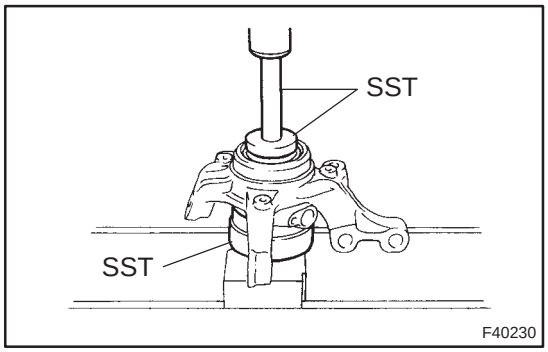

14. REMOVE FRONT AXLE HUB LH BEARING

(a) Place the bearing inner race (outside) on the axle hub LH bearing.

(b) Using SST and a press, remove the axle hub LH bearing from the steering knuckle.

SST 09527–17011, 09950–60010 (09951–00640), 09950–70010 (09951–07100)

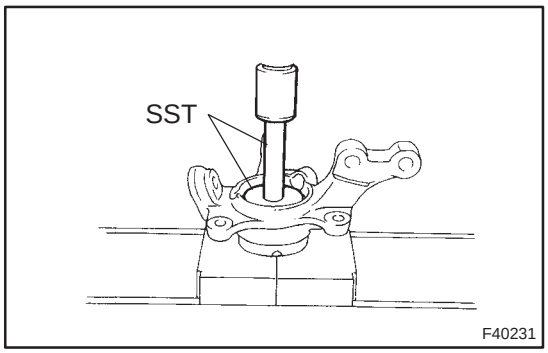

15. INSTALL FRONT AXLE HUB LH BEARING

(a) Using SST and a press, install a new axle hub LH bearing to the steering knuckle.

SST 09950–60020 (09951–00720), 09950–70010 (09951–07100)

16. INSTALL DISC BRAKE DUST COVER FRONT LH

(a) Install the disc brake dust cover with the 3 bolts.

Torque: 8.3 N·m (85 kgf·cm, 73 in.·lbf)

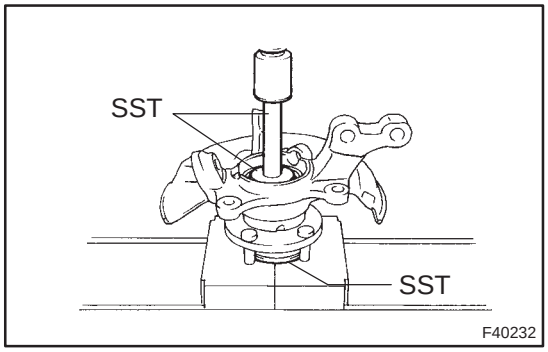

17. INSTALL FRONT AXLE HUB SUB–ASSY LH

(a) Using SST and a press, install the axle hub sub–assy.

SST 09608–32010, 09950–60010 (09951–00600), 09950–70010 (09951–07100)

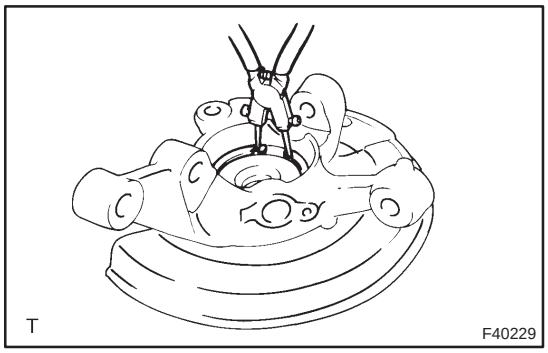

18. INSTALL FRONT AXLE HUB LH HOLE SNAP RING

(a) Using snap ring pliers, install the hole snap ring.

19. INSTALL LOWER BALL JOINT ASSY FRONT LH

(a) Install the lower ball joint and torque the nut.
Torque: 103 N·m (1,050 kgf·cm, 76 ft·lbf)

(b) Install a new cotter pin.

NOTICE:

If the holes for the cotter pin are not aligned, tighten the nut up to 60° further.

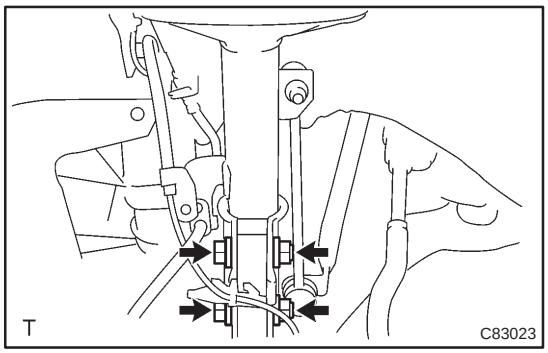

20. INSTALL FRONT AXLE ASSY LH

(a) Install the 2 bolts, nuts and steering knuckle with 2 bolts and nuts to the shock absorber.
Torque: 220 N·m (2,243 kgf·cm, 162 ft·lbf)

NOTICE:

Only when reusing the bolts and nuts, apply engine oil to the screw part of the nuts.

(b) Push the front axle assy toward the outside of the vehicle, fit the splined part of the drive shaft assy to that of the front axle assy and insert the drive shaft assy into the front axle assy.

NOTICE:

- **Do not push out the front axle assy excessively.**
- **Be careful not to damage the drive shaft outboard joint boot.**
- **Be careful not to damage the speed sensor rotor.**

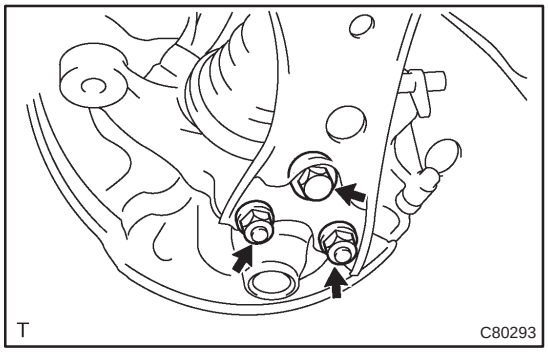

21. INSTALL FRONT SUSPENSION ARM SUB–ASSY LOWER NO.1 LH

(a) Install the front suspension arm sub–assy lower No.1 LH and lower ball joint with the 2 nuts and bolt.
Torque: 89 N·m (908 kgf·cm, 66 ft·lbf)

22. INSTALL TIE ROD END SUB–ASSY LH

(a) Install the tie rod end sub–assy LH to the steering knuckle.

(b) Install the nut and a new cotter pin.
Torque: 49 N·m (500 kgf·cm, 36 ft·lbf)

NOTICE:

If the holes for the cotter pin are not aligned, tighten the nut up to 60° further.

23. INSTALL FRONT STABILIZER LINK ASSY LH (See page 30–6)

24. INSTALL FRONT DISC

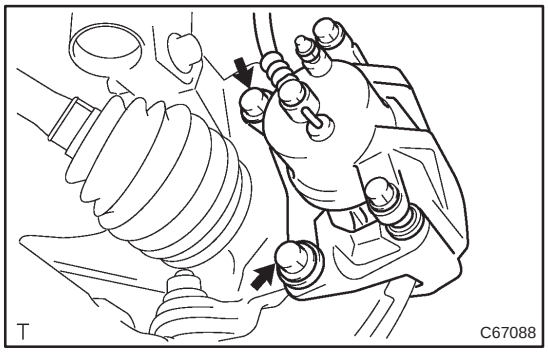

25. INSTALL FRONT DISC BRAKE CALIPER ASSY LH

(a) Install the disc brake caliper assy with the 2 bolts to the steering knuckle.
Torque: 104 N·m (1,040 kgf·cm, 75 ft·lbf)

26. INSTALL FRONT AXLE HUB LH NUT

(a) Using a socket wrench (30 mm), install a new axle hub LH nut.
Torque: 216 N·m (2,200 kgf·cm, 159 ft·lbf)

27. SEPARATE FRONT DISC BRAKE CALIPER ASSY LH

(a) Removing the 2 bolts, separate the disc brake caliper assy from the steering knuckle.

NOTICE:

Use a string or other device to keep the brake caliper from hanging down.

28. REMOVE FRONT DISC

29. INSPECT BEARING BACKLASH (See page 30–2)

30. INSPECT AXLE HUB DEVIATION (See page 30–2)

31. INSTALL FRONT DISC

32. INSTALL FRONT DISC BRAKE CALIPER ASSY LH

(a) Install the disc brake caliper assy with the 2 bolts to the steering knuckle.
Torque: 104 N·m (1,040 kgf·cm, 75 ft·lbf)

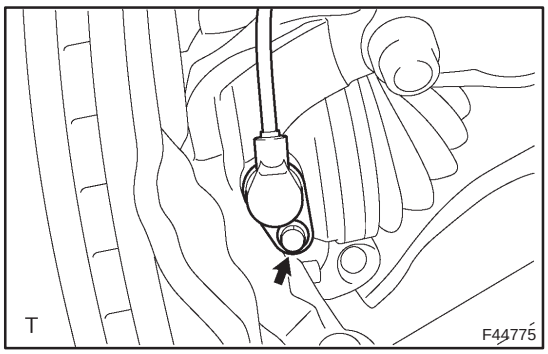

33. CONNECT SPEED SENSOR FRONT LH

(a) Install the speed sensor front LH to the steering knuckle with the bolt.
Torque: 8.0 N·m (82 kgf·cm, 71 in.·lbf)

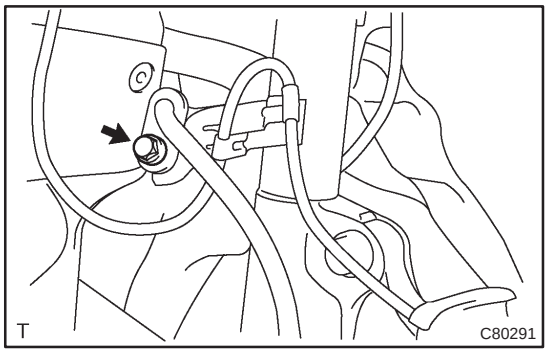

(b) Connect the speed sensor wire and flexible hose to the shock absorber with the bolt.
Torque: 19 N·m (194 kgf·cm, 14 ft·lbf)

NOTICE:

- **Be careful not to damage the speed sensor.**
- **Keep the speed sensor clean.**
- **Do not twist the sensor wire when installing the sensor.**

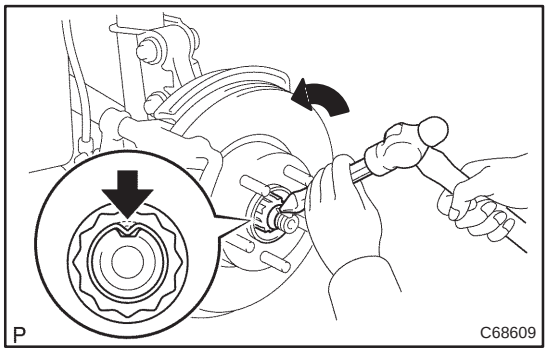

34. INSTALL FRONT AXLE HUB LH NUT

(a) While applying the brakes, install a new axle hub LH nut.
Torque: 216 N·m (2,200 kgf·cm, 159 ft·lbf)

(b) Using a chisel and hammer, stake the axle hub LH nut.

35. INSTALL FRONT WHEEL
Torque: 103 N·m (1,050 kgf·cm, 76 ft·lbf)

36. INSPECT AND ADJUST FRONT WHEEL ALIGNMENT (See page 26–6)

37. CHECK ABS SPEED SENSOR SIGNAL

(a) ABD WITH EBD SYSTEM (See page 05–699)

(b) ABD WITH EBD & BA & TRC & VSC SYSTEM (See page 05–756)

FRONT AXLE LH HUB BOLT

30092–02

REPLACEMENT

HINT:

- COMPONENTS: See page 30–21
- Replace the RH side by the same procedures as the LH side.

1. REMOVE FRONT WHEEL

2. SEPARATE FRONT DISC BRAKE CALIPER ASSY LH (See page 30–22)

3. REMOVE FRONT DISC

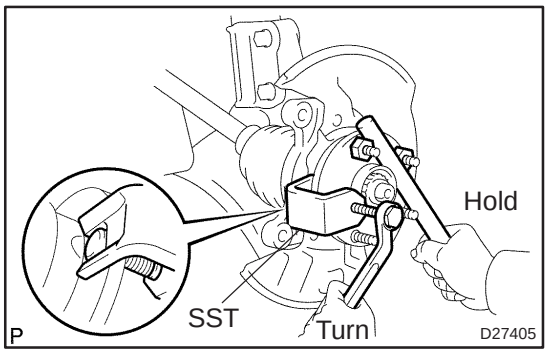

4. REMOVE FRONT AXLE LH HUB BOLT

(a) Using SST and a hammer handle or an equivalent to hold the axle hub sub–assy LH, remove the LH hub bolt.
SST 09628–10011

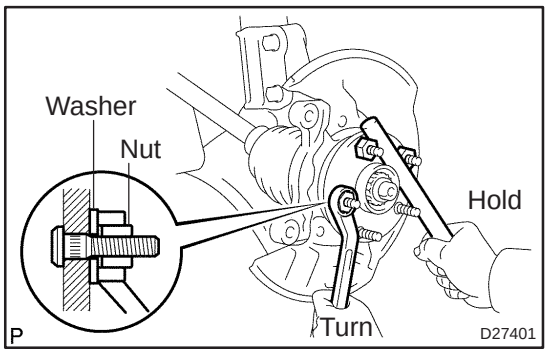

5. INSTALL FRONT AXLE LH HUB BOLT

(a) Install a washer and nut to a new LH hub bolt as shown in the illustration.

(b) Using a hammer handle or an equivalent to hold the axle hub sub–assy LH, install the LH hub bolt by tightening the nut.

6. INSTALL FRONT DISC

7. INSTALL FRONT DISC BRAKE CALIPER ASSY LH (See page 30–22)

8. INSTALL FRONT WHEEL
Torque: 103 N·m (1,050 kgf·cm, 76 ft·lbf)

REAR AXLE CARRIER SUB–ASSY LH

30093–02

COMPONENTS

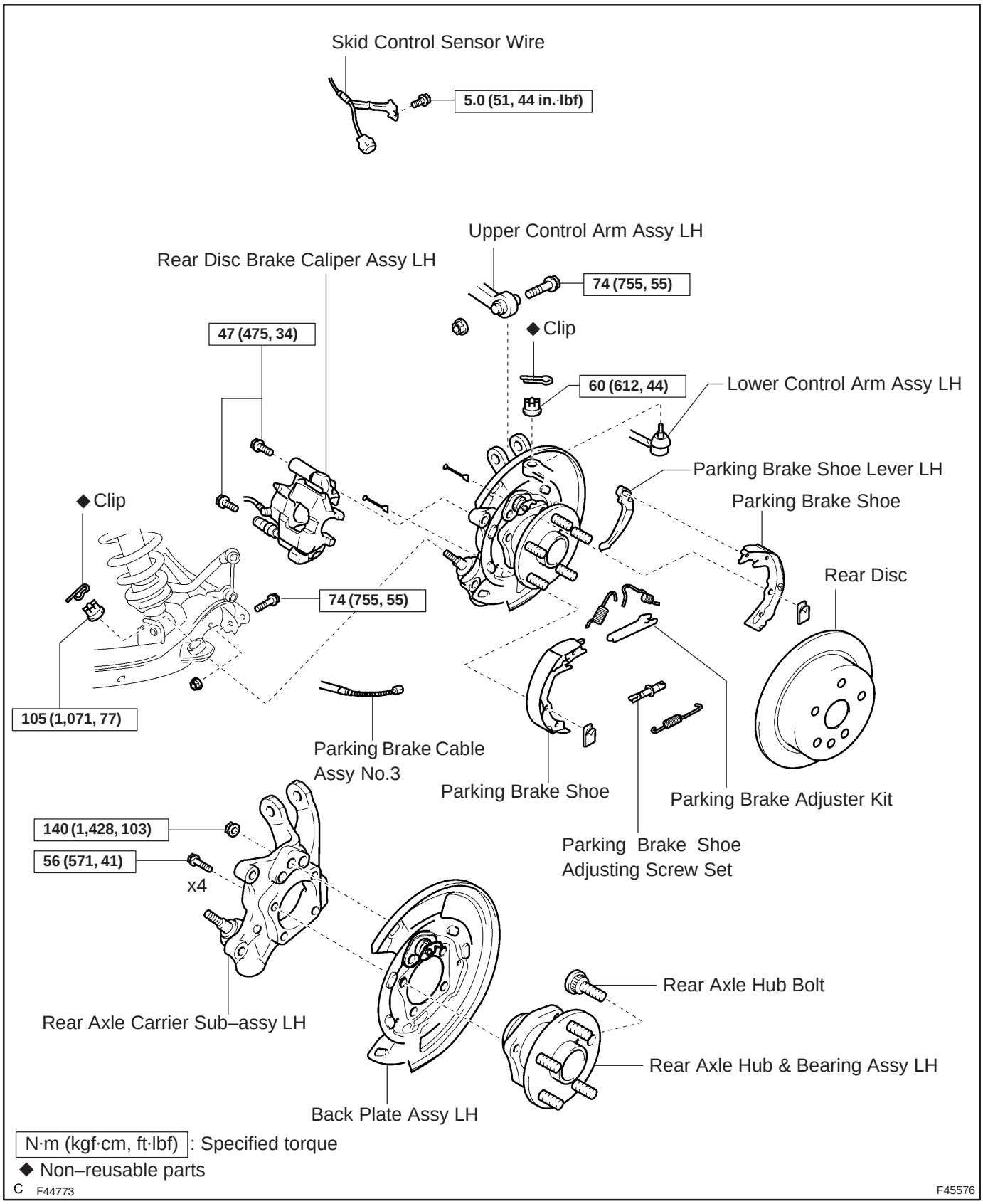

REPLACEMENT

HINT:

Replace the RH side by the same procedures as the LH side.

1. INSPECT REAR AXLE CARRIER SUB–ASSY LH

(a) Check that there is no looseness on the ball joint by shaking the lower arm up and down with a force of 294 N (30kgf, 66 lbf).

2. REMOVE REAR WHEEL

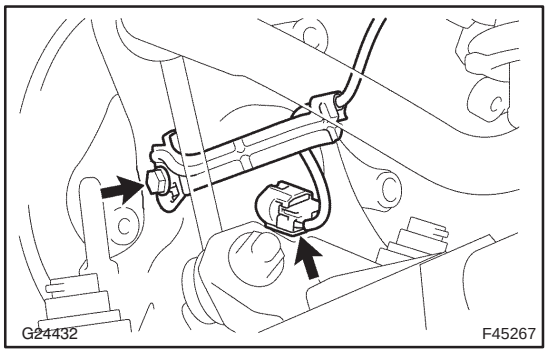

3. DISCONNECT SKID CONTROL SENSOR WIRE

(a) Remove the bolt, disconnect the skid control sensor wire.

(b) Disconnect the connector.

4. SEPARATE REAR DISC BRAKE CALIPER ASSY LH

(a) Removing the 2 bolts and rear disc brake caliper assy.

NOTICE:

Use a string or other device to keep the brake caliper from hanging down.

5. REMOVE REAR DISC

6. REMOVE PARKING BRAKE ADJUSTER KIT (See page 33–14)

7. REMOVE PARKING BRAKE SHOE ADJUSTING SCREW SET (See page 33–14)

8. REMOVE PARKING BRAKE SHOE KIT (See page 33–14)

SST 09718–00010

9. REMOVE PARKING BRAKE SHOE LEVER LH (See page 33–14)

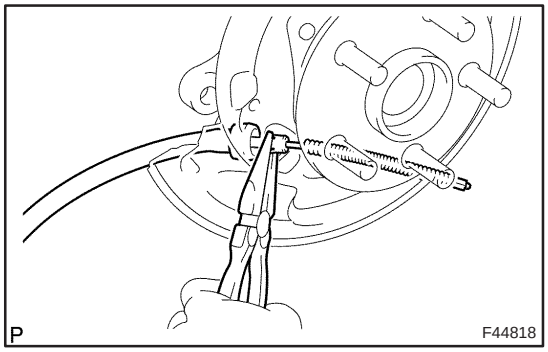

10. DISCONNECT PARKING BRAKE CABLE ASSY NO.3

(a) Using needle–nose pliers, and disconnect the parking brake cable assy No.3 from the backing plate.

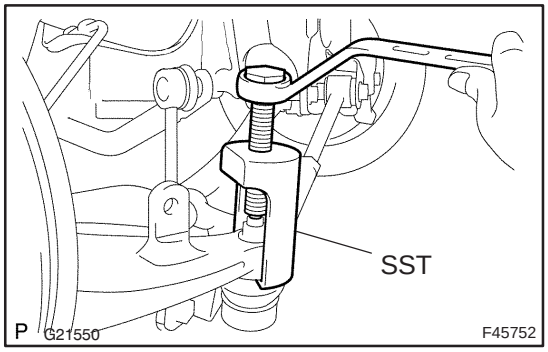

11. SEPARATE LOWER CONTROL ARM ASSY LH

(a) Loosen the lower control arm assy bolt (member side).

(b) Remove the clip and nut.

(c) Using SST, separate the lower control arm assy from the axle carrier.

SST 09610–20012

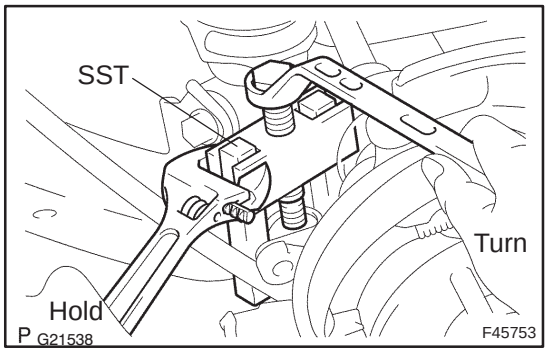

12. SEPARATE REAR SUSPENSION ARM ASSY NO.1 LH

(a) Remove the clip and nut.

(b) Using SST, separate the rear suspension arm assy No.1 (ball joint side).
SST 09628–62011

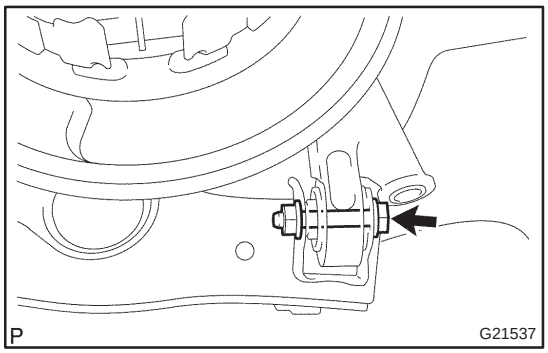

(c) Remove the bolt and nut, separate the rear suspension arm assy No.1.

NOTICE:
When removing the bolt, hold the nut not to rotate.

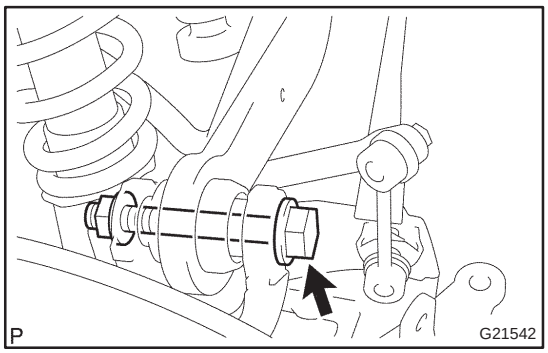

13. SEPARATE UPPER CONTROL ARM ASSY

(a) Remove the bolt and nut, separate the upper control arm assy from the axle carrier.

NOTICE:
When removing the bolt, hold the nut not to rotate.

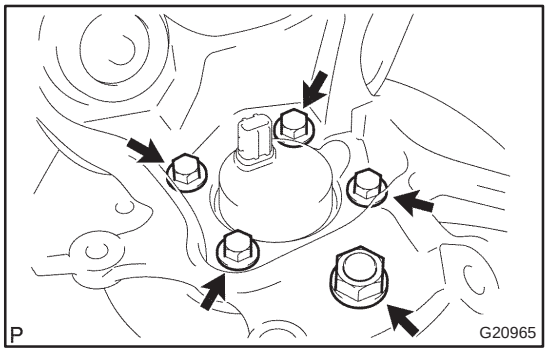

14. REMOVE REAR AXLE CARRIER SUB–ASSY LH

(a) Remove the 4 bolts and nut, hub & bearing assy and axle carrier sub–assy.

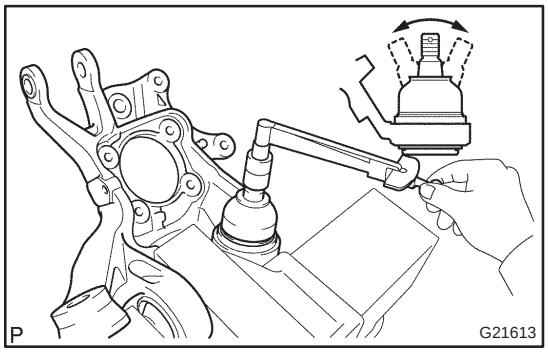

15. INSPECT REAR AXLE CARRIER SUB–ASSY LH

(a) As shown in the illustration, flip the ball joint stud back and forth 5 times, before installing the nut.

(b) Using a torque wrench, turn the nut continuously at a rate of 3 – 5 seconds per turn and take the torque reading on the 5th turn.

Turning torque (Maximum):
3.0 N·m (30 kgf·cm, 27 in.·lbf)

NOTICE:

- **Neither abnormal drag nor rattle exists during the rotation.**
- **Neither crack nor grease leakage exists and deformation on the dust cover.**

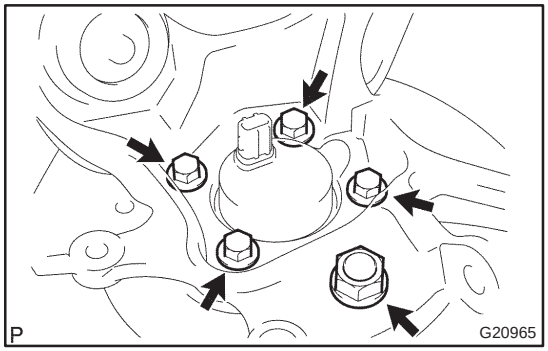

16. INSTALL REAR AXLE CARRIER SUB–ASSY LH

(a) Install the hub & bearing assy and rear axle carrier sub–assy with the 4 bolts and nut.

Torque:
Bolt: 56 N·m (571 kgf·cm, 41 ft·lbf)
Nut: 140 N·m (1,428 kgf·cm, 103 ft·lbf)

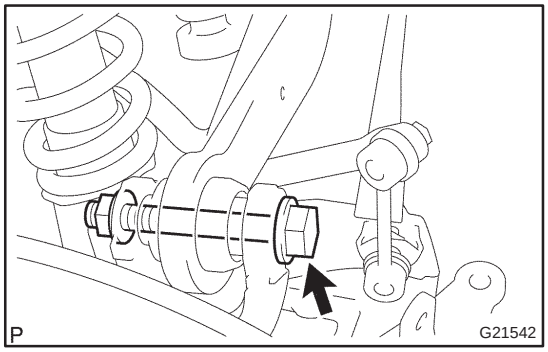

17. TEMPORARILY TIGHTEN UPPER CONTROL ARM ASSY

(a) Temporarily tighten the upper control arm assy with the bolt and nut.

Temporarily tighten torque:
7 – 13 N·m (71 – 133 kgf·cm, 5.1 – 9.6 ft·lbf)

HINT:
Insert the bolt from the rear side of the vehicle and temporarily install the bolt.

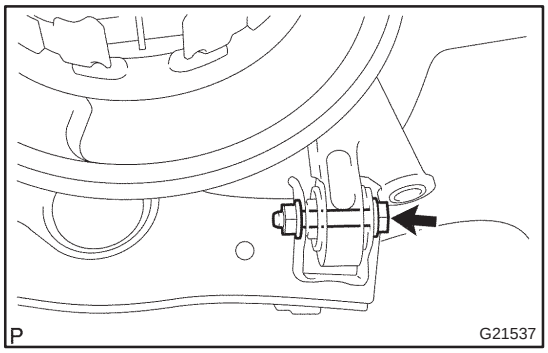

18. TEMPORARILY TIGHTEN REAR SUSPENSION ARM ASSY NO.1 LH

(a) Temporarily tighten the rear suspension arm assy (ball joint side) with the nut.

(b) Temporarily tighten the bolt and nut.

Temporarily tighten torque:
7 – 13 N·m (71 – 133 kgf·cm, 5.1 – 9.6 ft·lbf)

HINT:
Insert the bolt from the rear side of the vehicle and temporarily install the bolt.

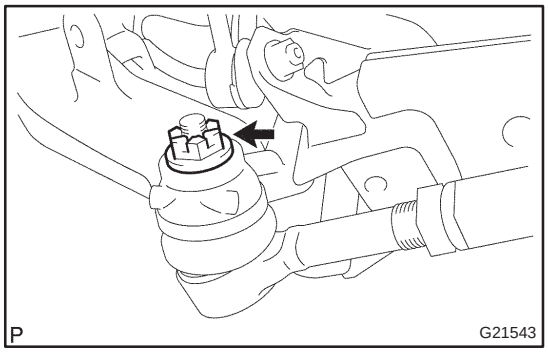

19. TEMPORARILY TIGHTEN LOWER CONTROL ARM ASSY LH

(a) Temporarily tighten the lower control arm assy with the nut.

Temporarily tighten Torque:
7 – 13 N·m (71 – 133 kgf·cm, 5.1 – 9.6 ft·lbf)

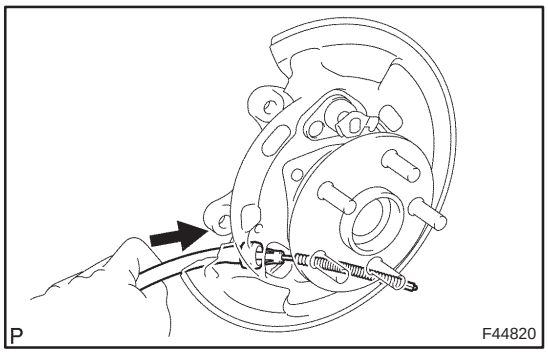

20. CONNECT PARKING BRAKE CABLE ASSY NO.3

(a) Connect the parking brake cable assy No.3 to the backing plate.

21. INSTALL PARKING BRAKE SHOE LEVER LH (See page 33–14)
22. INSTALL PARKING BRAKE SHOE KIT (See page 33–14)
SST 09718–00010
23. INSTALL PARKING BRAKE SHOE ADJUSTING SCREW SET (See page 33–14)
24. INSTALL PARKING BRAKE ADJUSTER KIT (See page 33–14)
25. CHECK PARKING BRAKE INSTALLATION (See page 33–14)
26. INSPECT BEARING BACKLASH (See page 30–2)
27. INSPECT AXLE HUB DEVIATION (See page 30–2)
28. INSTALL REAR DISC
29. ADJUST PARKING BRAKE SHOE CLEARANCE (See page 33–14)
30. INSTALL REAR DISC BRAKE CALIPER ASSY LH

(a) Install the rear disc brake caliper with the 2 bolts.
Torque: 47 N·m (475 kgf·cm, 34 ft·lbf)

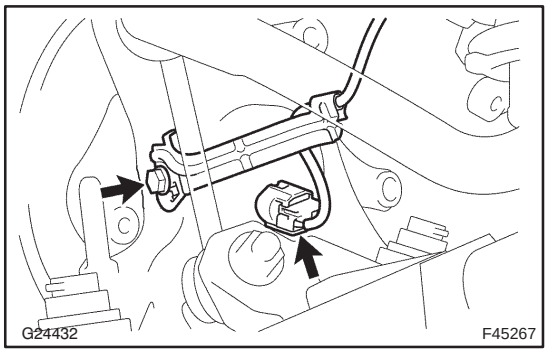

31. CONNECT SKID CONTROL SENSOR WIRE

(a) Connect the skid control sensor wire with the bolt.
Torque: 5.0 N·m (51 kgf·cm, 44 in.·lbf)

(b) Connect the connector.

HINT:
Do not twist the sensor wire when installing the sensor.

32. INSTALL REAR WHEEL
Torque: 103 N·m (1,050 kgf·cm, 76 ft·lbf)
33. STABILIZE SUSPENSION (See page 27–8)

34. FULLY TIGHTEN UPPER CONTROL ARM ASSY

(a) Fully tighten the bolt.

Torque: 74 N·m (755 kgf·cm, 55 ft·lbf)

NOTICE:

When installing the bolt, hold the nut not to rotate.

35. FULLY TIGHTEN REAR SUSPENSION ARM ASSY NO.1 LH

(a) Fully tighten the nut (ball joint side).

Torque: 105 N·m (1,071 kgf·cm, 77 ft·lbf)

(b) Install the clip.

NOTICE:

If the holes for the clip are not aligned, tighten the nut up to 60° further.

(c) Fully tighten the bolt and nut.

Torque: 74 N·m (755 kgf·cm, 55 ft·lbf)

NOTICE:

When installing the bolt, hold the nut not to rotate.

36. FULLY TIGHTEN LOWER CONTROL ARM ASSY LH

(a) Fully tighten the nut.

Torque: 60 N·m (612 kgf·cm, 44 ft·lbf)

(b) Install the clip.

NOTICE:

If the holes for the clip are not aligned, tighten the nut up to 60° further.

(c) Fully tighten the bolt (member side).

Torque: 105 N·m (1,071 kgf·cm, 77 ft·lbf)

NOTICE:

When installing the bolt, hold the nut not to rotate.

37. INSPECT AND ADJUST PARKING BRAKE LEVER TRAVEL (See page 33–2)

38. INSPECT AND ADJUST REAR WHEEL ALIGNMENT (See page 27–4)

39. CHECK ABS SPEED SENSOR SIGNAL

(a) ABD WITH EBD SYSTEM (See page 05–699)

(b) ABD WITH EBD & BA & TRC & VSC SYSTEM (See page 05–756)

REAR AXLE LH HUB BOLT

300K0–01

REPLACEMENT

HINT:

- COMPONENTS: See page 30–30
- Replace the RH side by the same procedures as the LH side.

1. REMOVE REAR WHEEL

2. SEPARATE REAR DISC BRAKE CALIPER ASSY LH

(a) Removing the 2 bolts and rear disc brake caliper assy.

NOTICE:

Use a string or other device to keep the brake caliper from hanging down.

3. REMOVE REAR DISC

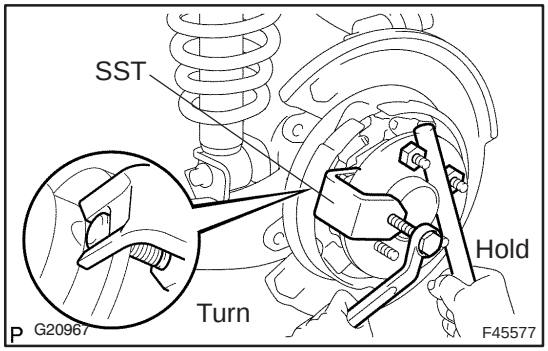

4. REMOVE REAR AXLE LH HUB BOLT

(a) Turn the axle hub to move the LH hub bolt and SST, that are to be removed, to the place shown in the illustration.

NOTICE:

Do not replace the hub bolt in any places other than that in the illustration.

(b) Using SST and a hammer handle or an equivalent to hold the axle hub, remove the LH hub bolt.

SST 09628–10011

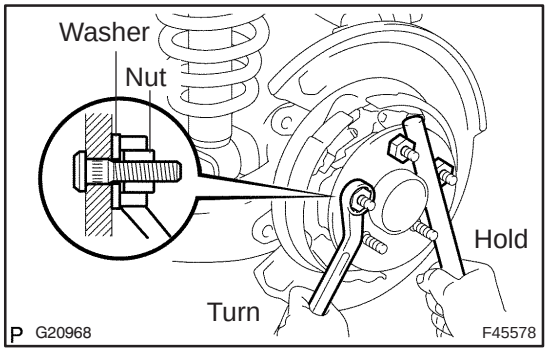

5. INSTALL REAR AXLE LH HUB BOLT

(a) Install a washer and nut to a new LH hub bolt as shown in the illustration.

(b) Using a hammer handle or an equivalent to hold the axle hub, install the LH hub bolt by torquing the nut.

6. INSTALL REAR DISC

7. INSTALL REAR DISC BRAKE CALIPER ASSY LH

(a) Install the rear disc brake caliper assy with the 2 bolts.

Torque: 47 N·m (475 kgf·cm, 34 ft·lbf)

8. INSTALL REAR WHEEL

Torque: 103 N·m (1,050 kgf·cm, 76 ft·lbf)

BRAKE SYSTEM

3201A–12

PRECAUTION

- **Care must be taken to replace each part properly as it could affect the performance of the brake system and result in a driving hazard. Replace the ones with parts having the same part number or equivalent.**
- **It is very important to keep the parts and the area clean when repairing the brake system.**
- **If the vehicle is equipped with a mobile communication system, refer to the precaution in the INTRODUCTION.**

3201B–12

PROBLEM SYMPTOMS TABLE

Use the table below to help you find the cause of the problem. The numbers indicate the probability of the problems in descending order. Check each part in order. If necessary, replace these parts.

Symptom	Suspect Area	See page
Low pedal or spongy pedal	3. Fluid leaks in brake system	–
	4. Air in brake system	32–4
	5. Piston seals (Worn or damaged)	32–41 32–47
	6. Brake master cylinder (faulty)	32–13
	7. Brake booster push rod (Out of adjustment)	32–13
Brake drag	1. Brake pedal free play (Minimal)	32–6
	2. Parking brake lever travel (Out of adjustment)	33–2
	3. Parking brake wire (Sticking)	33–2
	4. Disk brake pad (Cracked or distorted)	32–41 32–47
	5. Piston (Stuck or Frozen)	32–41 32–47
	6. Brake booster push rod (Out adjustment)	32–13
	7. Vacuum leaks in brake booster system	32–17 32–21
	8. Brake master cylinder (Faulty)	32–13
Brake pull	1. Piston (Stuck or Frozen)	32–41 32–47
	2. Pad or lining (Oily)	32–41 32–47
	3. Disc (Scored)	32–41 32–47
	4. Pad (Cracked or distorted)	32–41 32–47
Hard pedal but brake inefficient	1. Fluid leaks in brake system	–
	2. Air in brake system	32–4
	3. Pad (Worn)	32–41 32–47
	4. Pad (Cracked or distorted)	32–41 32–47
	5. Pad (Oily)	32–41 32–47
	6. Pad (Glazed)	32–41 32–47
	7. Disc (Scored)	32–41 32–47
	8. Booster push rod (Out of adjustment)	32–13
	9. Vacuum leaks for booster system	32–17 32–21

Noise from brakes	1. Pad (Cracked or distorted)	32–41 32–47
	2. Installation bolt (Loose)	32–41 32–47
	3. Disc (Scored)	32–41 32–47
	4. Pad support plate (Loose)	32–41 32–47
	5. Sliding pin (Worn)	32–41 32–47
	6. Pad (dirty)	32–41 32–47
	7. Pad(Glazed)	32–41 32–47

BRAKE FLUID

3201C–08

BLEEDING

NOTICE:

Wash the brake fluid off immediately if it adheres to any painted surfaces.

HINT:

When working on the brake system or when air in the brake lines is suspected, bleed the air from the system.

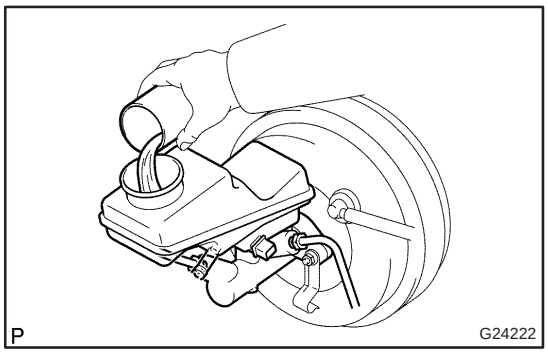

1. FILL RESERVOIR WITH BRAKE FLUID
Fluid: SAE J1704 or FMVSS No. 116 DOT4

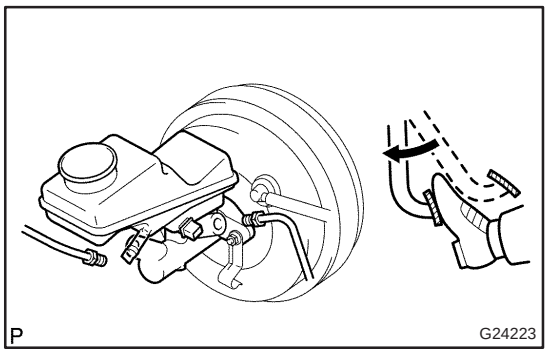

2. BLEED MASTER CYLINDER

HINT:

After disassembling the master cylinder or when the reservoir becomes empty, bleed the air out of the brake master cylinder.

(a) w/o VSC:
Using SST, Disconnect the brake lines from the brake master cylinder.
SST 09023–00100

(b) w/ VSC:
Using SST, Disconnect the brake lines from the brake master cylinder.
SST 09023–38400

(c) Slowly depress and hold the brake pedal it.

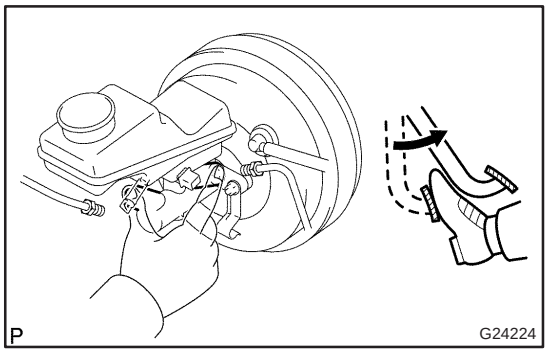

(d) Cover off the outer holes with your fingers, and release the brake pedal.

(e) Repeat (b) and (c) 3 or 4 times.

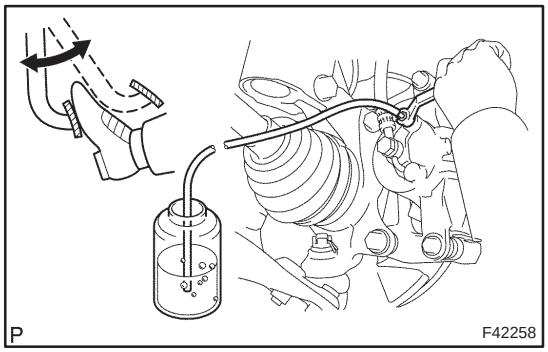

3. BLEED BRAKE LINE

(a) Connect the vinyl tube to the brake caliper.

(b) Depress the brake pedal several times, then loosen the bleeder plug with the pedal depressed.

(c) At the point when the fluid stops, coming out tighten the bleeder plug, then release the brake pedal.

(d) Repeat (b) and (c) until all the air in the fluid has been bled out.

(e) Repeat the above procedure to bleed the air out of the brake line for each wheel.
Torque: 10 N·m (102 kgf·cm, 7 ft.·lbf)

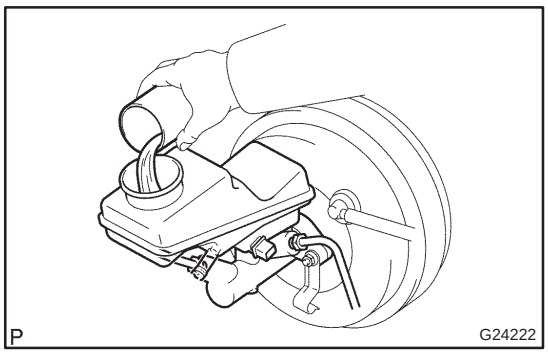

4. CHECK FLUID LEVEL IN RESERVOIR

(a) Check the fluid level and add fluid if necessary.
Fluid: SAE J1704 or FMVSS No. 116 DOT4

BRAKE PEDAL SUB–ASSY

320VI–01

ADJUSTMENT

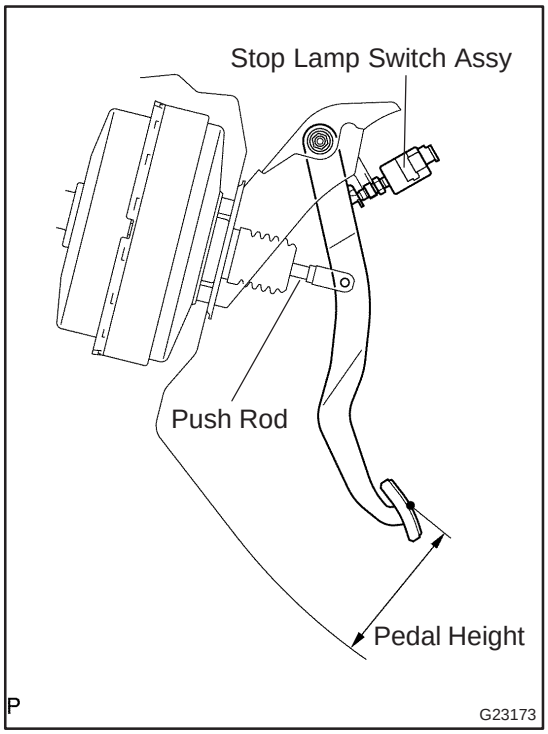

1. CHECK AND ADJUST BRAKE PEDAL HEIGHT

(a) Inspect brake pedal height.

Pedal height from dash panel:
RHD: 142.5 to 152.5 mm (5.610 to 6.004 in.)
LHD:
M/T: 148.1 to 158.1 mm (5.831 to 6.224 in.)
A/T: 149.9 to 159.9 mm (5.902 to 6.295 in.)

(b) Adjust brake pedal height.

(1) Remove the instrument finish panel lower.
(2) Disconnect the connector from the stop lamp switch assy.
(3) Turn the stop lamp switch assy counterclokwise and remove the stop lamp switch assy.
(4) Loosen the brake master cylinder push rod clevis lock nut.
(5) Adjust the pedal height by turning the pedal push rod.
(6) Tighten the push rod lock nut.

Torque: 19 N·m (194 kgf·cm, 14 ft·lbf)

HINT:
If the pedal height is incorrect, check and adjust the stop lamp switch clearance.

(c) Disconnect the stop lamp switch assy connector from the stop lamp switch assy.
(d) Turn the stop lamp switch assy counterclockwise and remove the stop lamp switch assy.

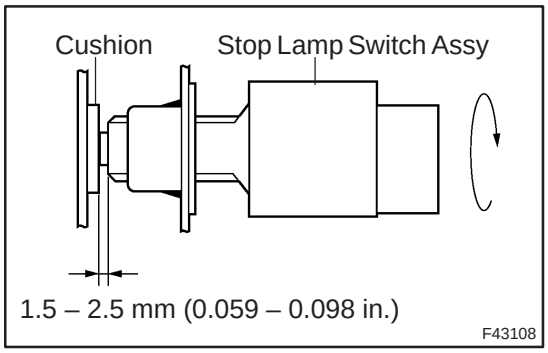

(e) Insert the stop lamp switch assy until the body hits the cushion.

NOTICE:
When inserting the stop lamp switch assy, support the pedal from behind so that the pedal is not pushed in.

(f) Make a quarter turn clockwise to install the stop lamp switch assy.

NOTICE:
The turning torque for installing the stop lamp switch assy.
Torque: 1.5 N·m (15 kgf·cm, 13 in.·lbf) or less

(g) Connect the stop lamp switch connector to the stop lamp switch assy.

(h) Check the protrusion of the rod.
Protrusion of the rod: 0.5 to 2.6 mm (0.020 to 0.102 in.)
(i) Install the clevis pin and clip.
(j) After adjusting the pedal height, check the pedal free play.

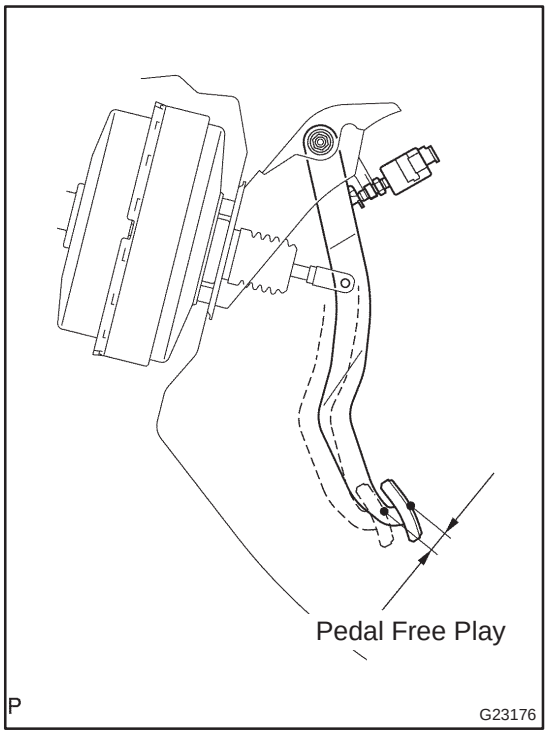

2. CHECK PEDAL FREE PLAY

(a) Stop the engine and depress the brake pedal several times until there is no more vacuum left in the booster.
(b) Push in the pedal until the beginning of the resistance is felt. Measure the distance, as shown.
Pedal free play: 1 to 6 mm (0.04 to 0.24 in.)

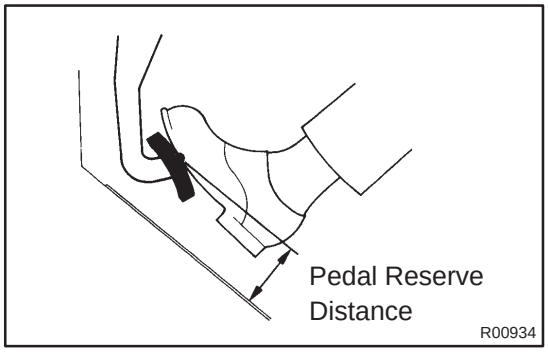

3. CHECK PEDAL RESERVE DISTANCE

(a) Release the parking brake lever.
With the engine running, depress the pedal and measure the pedal reserve distance, as shown.
Pedal reserve distance from asphalt sheet at 490 N (50 kgf, 110.2 lbf): More than 50 mm (1.97 in.)

If the distance is out of the specification , troubleshoot the brake system.

320G0–02

COMPONENTS

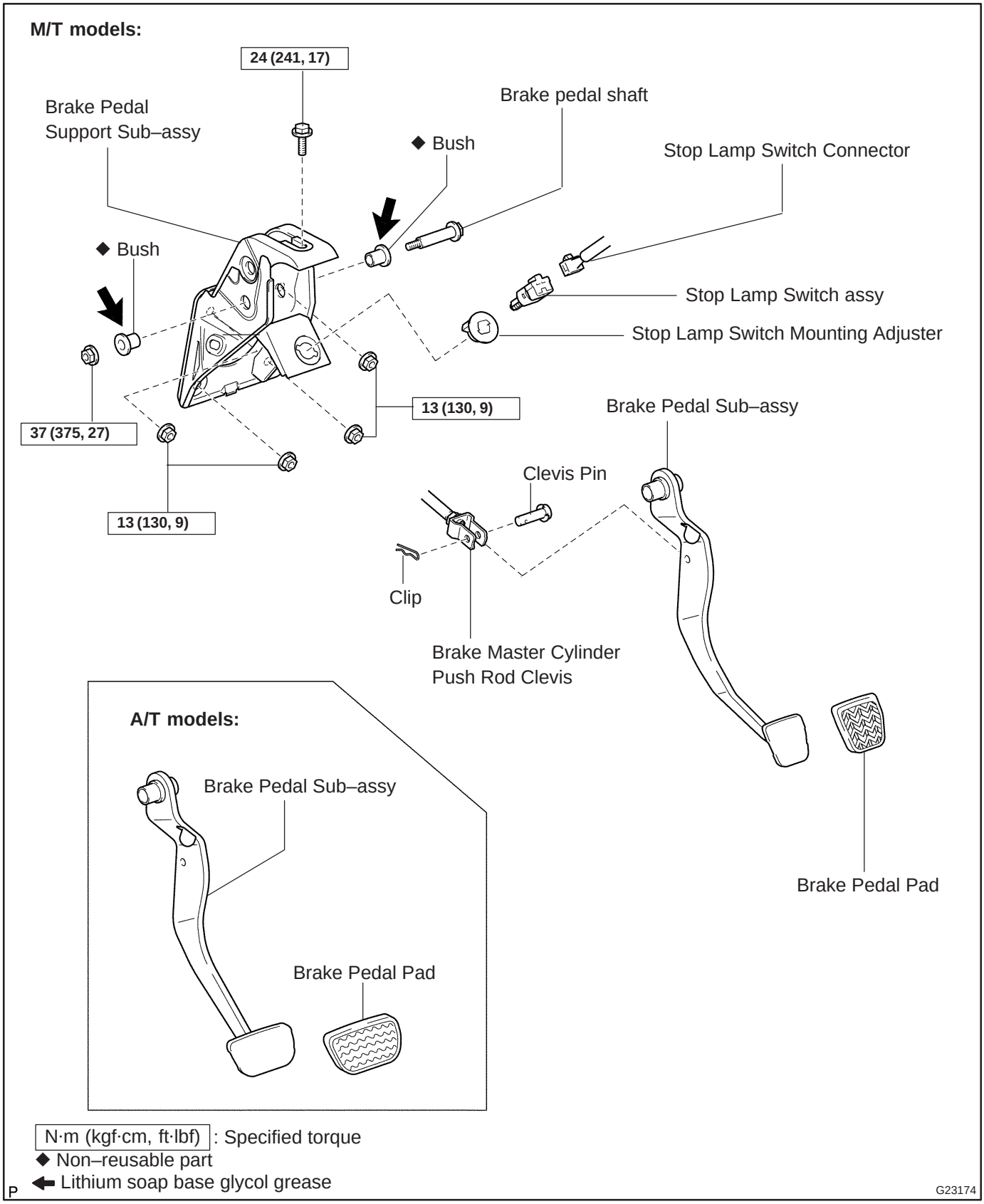

N·m (kgf·cm, ft·lbf) : Specified torque

◆ Non–reusable part

⬅ Lithium soap base glycol grease

P

G23174

REPLACEMENT

1. REMOVE COMBINATION METER ASSEMBLY (See page 71–21)

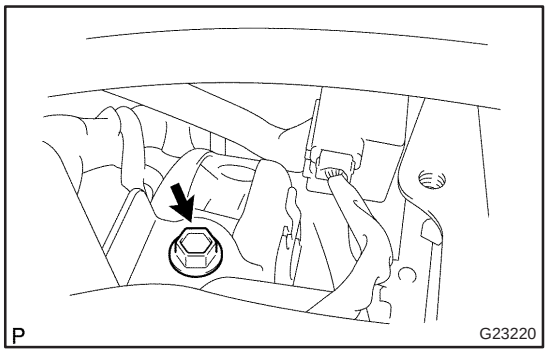

2. REMOVE BRAKE PEDAL SUPPORT SUB–ASSY

(a) Remove the bolt from the brake pedal support sub–assy.
(b) Disconnect the stop lamp switch connector.
(c) Remove the clip and clevis pin, and disconnect the brake master cylinder push rod clevis from the brake pedal sub–assy.

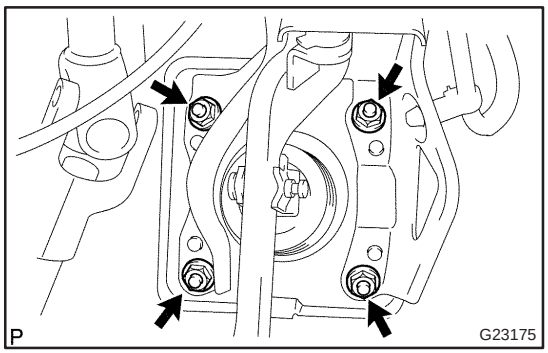

(d) Remove the 4 nuts and brake pedal support sub–assy.

3. REMOVE BRAKE PEDAL SUB–ASSY

(a) Remove the brake pedal shaft and nut from the brake pedal support sub–assy.
(b) Remove the brake pedal sub–assy and 2 bushes.

4. REMOVE STOP LAMP SWITCH ASSY

(a) Turn the stop lamp switch assy counterclockwise and remove the stop lamp switch assy.
(b) Remove the stop lamp switch mounting adjuster from the brake pedal support sub–assy.

5. REMOVE BRAKE PEDAL PAD

(a) Remove the brake pedal pad from the brake pedal sub–assy.

6. INSTALL BRAKE PEDAL PAD

(a) Install the brake pedal pad to the brake pedal sub–assy.

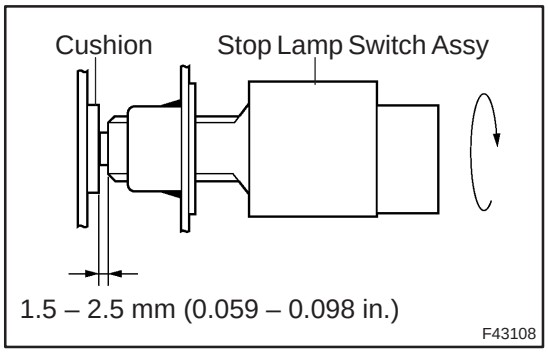

7. INSTALL STOP LAMP SWITCH ASSY

(a) Install the stop lamp switch mounting adjuster to the brake pedal support sub–assy.
(b) Install the stop lamp switch assy until the body hits the cushion.

NOTICE:

When inserting the stop lamp switch assy, support the pedal from behind so that the pedal is not pushed in.

(c) Make a quarter turn clockwise to install the stop lamp switch assy.

NOTICE:

The turning torque for installing the stop lamp switch assy.

Torque: 1.5 N·m (15 kgf·cm, 13 in.·lbf) or less

8. INSTALL BRAKE PEDAL SUB–ASSY

(a) Apply lithium soap base glycol grease to the inside surface of 2 new bushes.

(b) Install the brake pedal sub–assy and 2 bushes to the brake pedal support sub–assy with the brake pedal shaft and nut.

Torque: 37 N·m (375 kgf·cm, 27 ft·lbf)

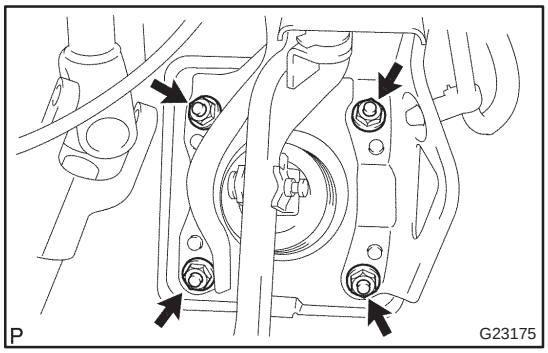

9. INSTALL BRAKE PEDAL SUPPORT SUB–ASSY

(a) Install the brake pedal support sub–assy with the 4 nuts.

Torque: 13 N·m (130 kgf·cm, 9 ft·lbf)

(b) Connect the stop lamp switch connector to the stop lamp switch assy.

(c) Apply lithium soap base glycol grease to the clevis pin.

(d) Install the clip and clevis pin, and connect the brake master cylinder push rod clevis with the clevis pin and clip.

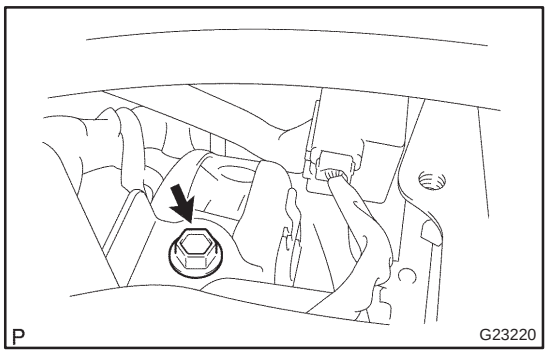

(e) Install the bolt to the brake pedal support assy.

Torque: 24 N·m (241 kgf·cm, 17 ft·lbf)

10. INSTALL COMBINATION METER ASSEMBLY (See page 71–21)

11. CHECK AND ADJUST BRAKE PEDAL HEIGHT (See page 32–6)

12. CHECK PEDAL FREE PLAY (See page 32–6)

13. CHECK PEDAL RESERVE DISTANCE (See page 32–6)

BRAKE MASTER CYLINDER SUB–ASSY

320W5–01

COMPONENTS

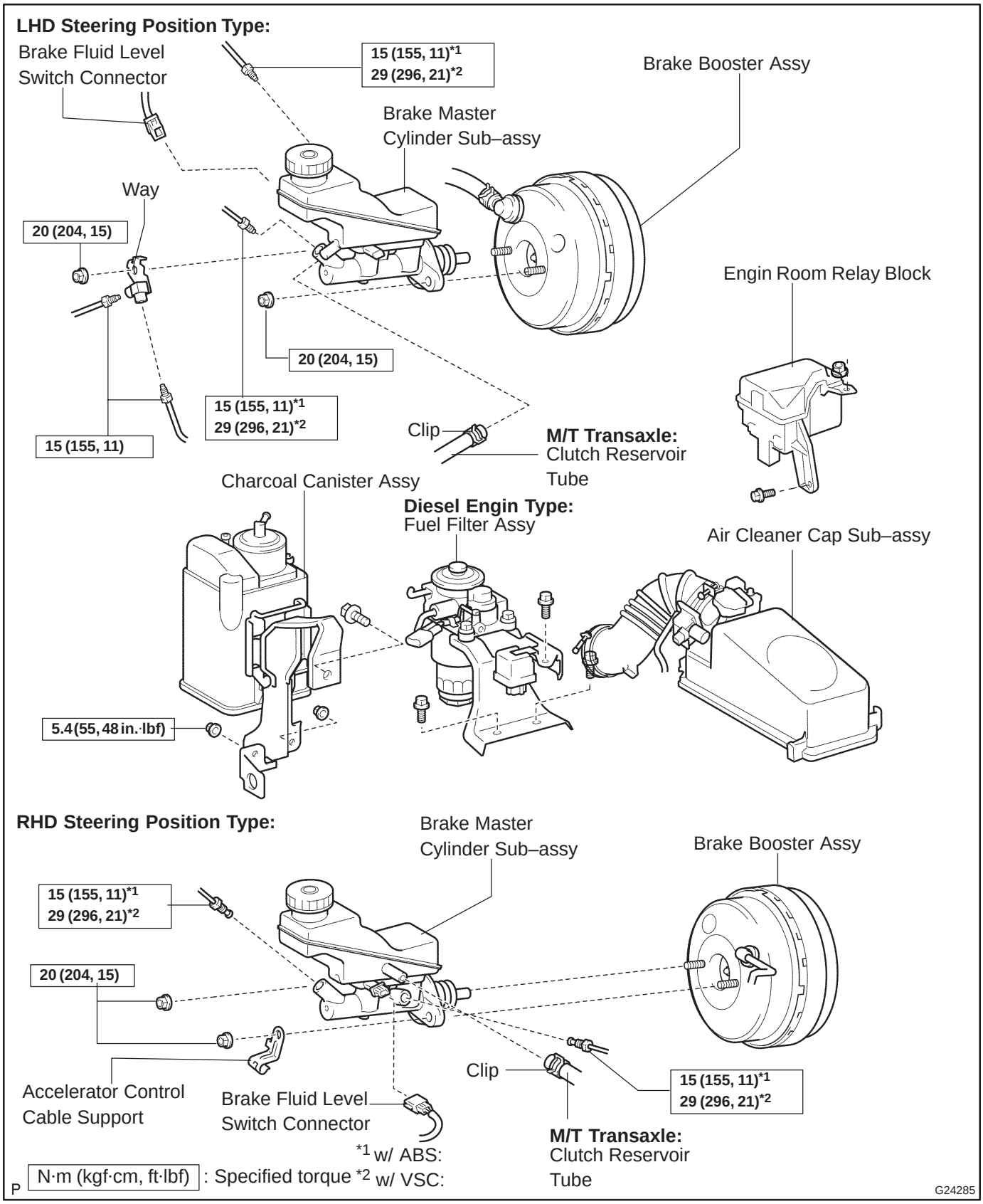

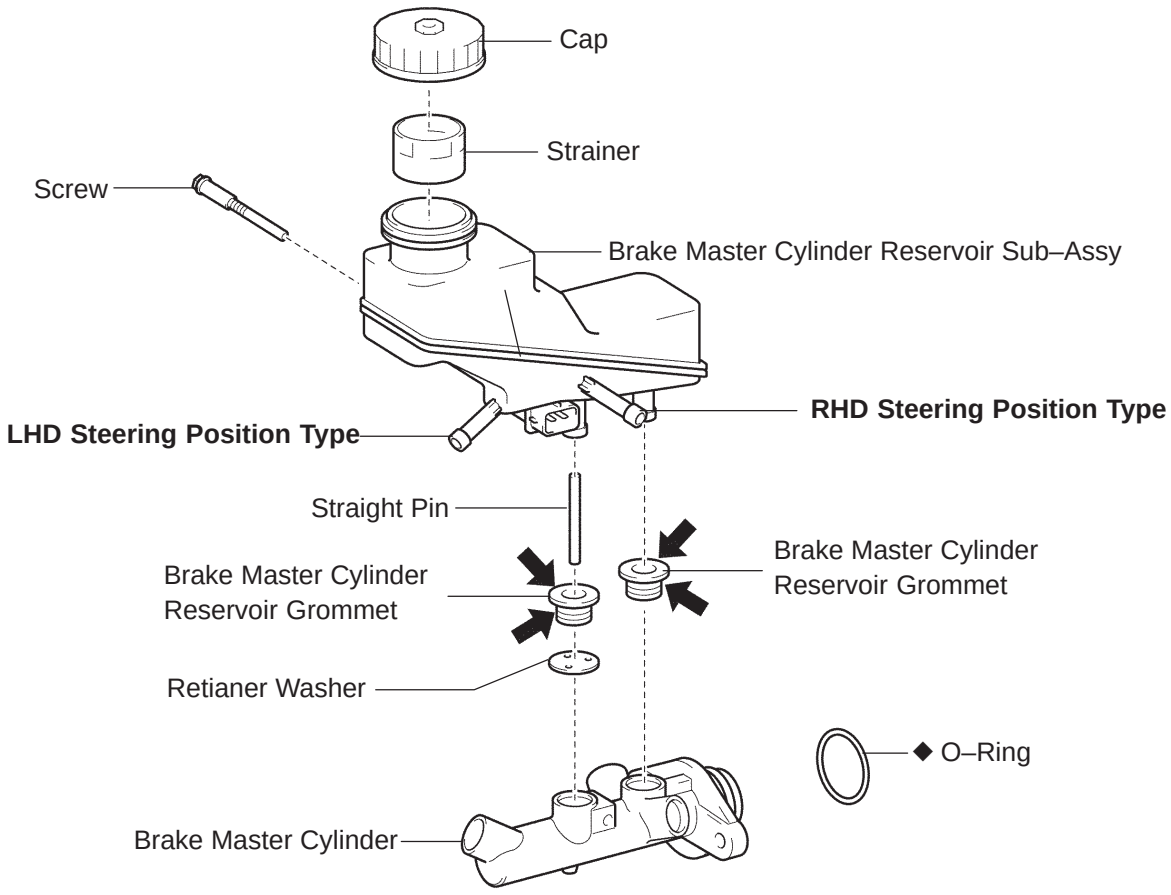
Cap
Strainer
Screw
Brake Master Cylinder Reservoir Sub–Assy
RHD Steering Position Type
LHD Steering Position Type
Straight Pin
Brake Master Cylinder Reservoir Grommet
Brake Master Cylinder Reservoir Grommet
Retianer Washer
◆ O–Ring
Brake Master Cylinder
N·m (kgf·cm, ft·lbf) : Specified torque
◆ Non–reusable part
P ⬅ Lithium soap base glycol grease
G24284

320W6–01

REPLACEMENT

NOTICE:

Do not adjust the brake booster push rod.

1. DRAIN BRAKE FLUID

NOTICE:

Wash the brake fluid off immediately if it adheres to any painted surface.

2. REMOVE ENGINE ROOM RELAY BLOCK (LHD STEERING POSITION TYPE)

3. REMOVE AIR CLEANER CAP SUB–ASSY (LHD STEERING POSITION TYPE)

4. REMOVE CHARCOAL CANISTER ASSY (LHD STEERING POSITION TYPE)

5. REMOVE FUEL FILTER ASSY (LHD STEERING POSITION TYPE)

(a) Diesal engine type:
Remove the fuel filter assy with the 3 bolts.

6. REMOVE BRAKE MASTER CYLINDER SUB–ASSY (LHD STEERING POSITION TYPE)

(a) Disconnect the brake fluid level switch connector.

(b) M/T transaxle:
Slide the clip and disconnect the clutch reservoir tube.

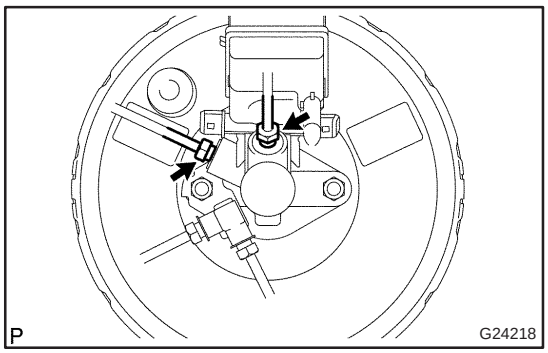

(c) w/o VSC:
Using SST, disconnect the 2 brake lines from the brake master cylinder sub–assy.
SST 09023–00100

(d) w/ VSC:
Using SST, disconnect the 2 brake lines from the brake master cylinder sub–assy.
SST 09023–38400

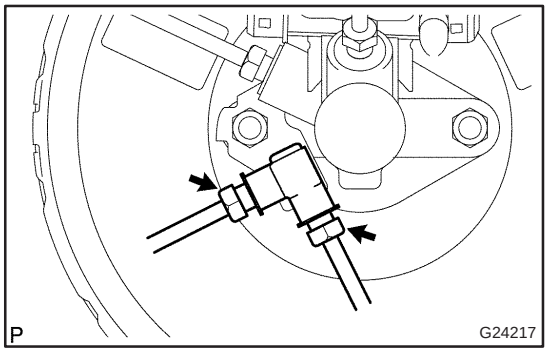

(e) Using SST, disconnect the 2 brake lines from the way.
SST 09023–00100

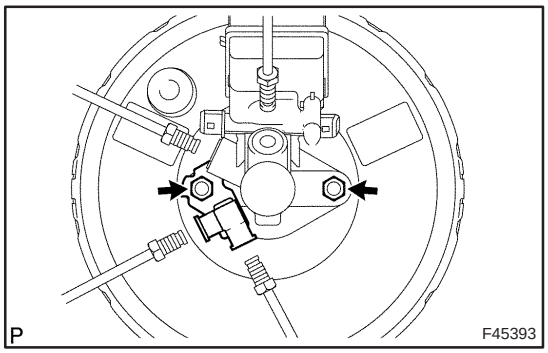

(f) Remove the 2 nuts, and pull out the way and brake master cylinder sub–assy.

(g) Remove the O–ring from the brake master cylinder sub–assy.

7. REMOVE BRAKE MASTER CYLINDER SUB–ASSY (RHD STEERING POSITION TYPE)

(a) Disconnect the brake fluid level switch connector.

(b) M/T transaxle:
Slide the clip and disconnect the clutch reservoir tube.

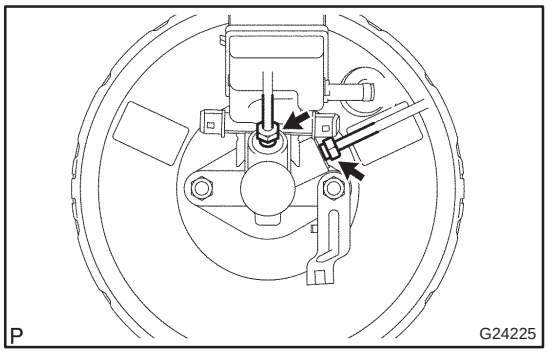

(c) w/o VSC:
Using SST, disconnect the 2 brake lines from the brake master cylinder sub–assy.
SST 09023–00100

(d) w/ VSC:
Using SST, disconnect the 2 brake lines from the brake master cylinder sub–assy.
SST 09023–38400

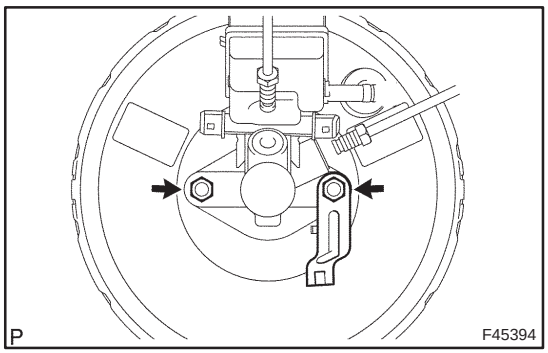

(e) Remove the 2 nuts and pull out the accelerator control cable support and brake master cylinder sub–assy.

(f) Remove the O–ring from the brake master cylinder sub–assy.

8. REMOVE BRAKE MASTER CYLINDER RESERVOIR SUB–ASSY

(a) Using a screwdriver, remove the screw from the brake master cylinder.

(b) Remove the brake master cylinder reservoir sub–assy and 2 brake master cylinder reservoir grommets from the brake master cylinder.

(c) Remove the cap and strainer from the master cylinder reservoir.

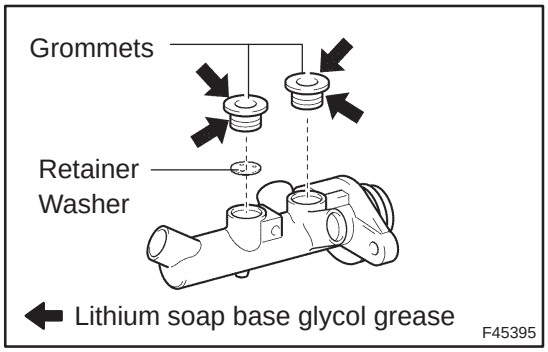

9. INSTALL BRAKE MASTER CYLINDER RESERVOIR SUB–ASSY

(a) Apply lithium soap base grycol grease to the 2 brake master cylinder reservoir grommets.

(b) Install the retainer washer to the brake master cylinder.

(c) Install the 2 brake master cylinder reservoir grommets to the brake master cylinder.

(d) Using a screwdriver, install the brake master cylinder resevoir sub–assy with the screw.

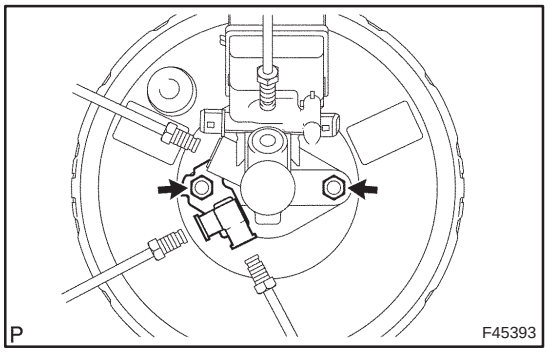

10. INSTALL BRAKE MASTER CYLINDER SUB–ASSY (LHD STEERING POSITION TYPE)

(a) Install the new O–ring from the brake master cylinder sub–assy.

(b) Install the brake master cylinder sub–assy and way bracket with the 2 nuts.
Torque: 20 N·m (204 kgf·cm, 15 ft·lbf)

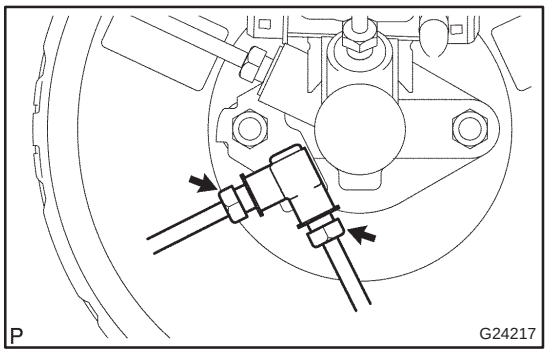

(c) Using SST, connect the 2 brake lines to the way.
SST 09023–00100
Torque: 15 N·m (155 kgf·cm, 11 ft·lbf)

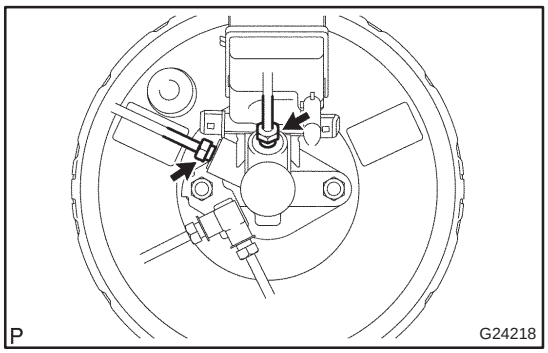

(d) w/o VSC:
Using SST, connect the 2 brake lines to the brake master cylinder sub–assy.
SST 09023–00100
Torque: 15 N·m (155 kgf·cm, 11 ft·lbf)

(e) w/ VSC:
Using SST, connect the 2 brake lines to the brake master cylinder sub–assy.
SST 09023–38400
Torque: 29 N·m (296 kgf·cm, 21 ft·lbf)

(f) M/T transaxle:
Slide the clip and connect the clutch reservoir tube.

(g) Connect the brake fluid level switch connector.

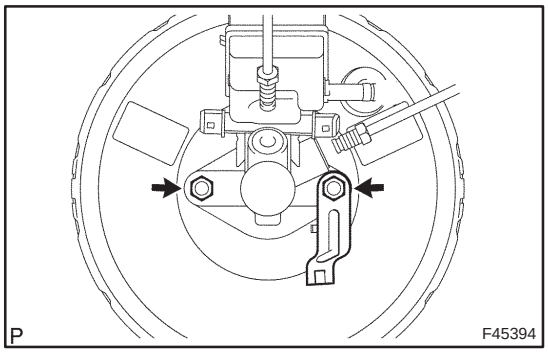

11. INSTALL BRAKE MASTER CYLINDER SUB–ASSY (RHD STEERING POSITION TYPE)

(a) Install the new O–ring from the brake master cylinder sub–assy.

(b) Install the brake master cylinder sub–assy and accelerator control cable support with the 2 nuts.
Torque: 20 N·m (204 kgf·cm, 15 ft·lbf)

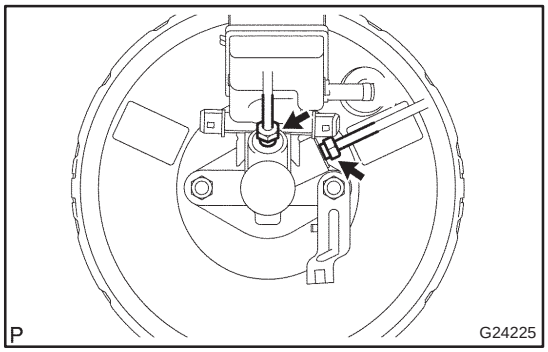

(c) w/o VSC:
Using SST, connect the 2 brake lines to the brake master cylinder sub–assy.
SST 09023–00100
Torque: 15 N·m (155 kgf·cm, 11 ft·lbf)

(d) w/ VSC:
Using SST, connect the 2 brake lines to the brake master cylinder sub–assy.
SST 09023–38400
Torque: 29 N·m (296 kgf·cm, 21 ft·lbf)

(e) M/T transaxle:
Slide the clip and connect the clutch reservoir tube.

(f) Connect the brake fluid level switch connector.

12. INSTALL CHARCOAL CANISTER ASSY (LHD STEERING POSITION TYPE)
13. INSTALL ENGINE ROOM RELAY BLOCK (LHD STEERING POSITION TYPE)
14. INSTALL AIR CLEANER CAP SUB–ASSY (LHD STEERING POSITION TYPE)
15. INSTALL FUEL FILTER ASSY (LHD STEERING POSITION TYPE)
16. FILL RESERVOIR WITH BRAKE FLUID (See page 32–4)
17. BLEED MASTER CYLINDER (See page 32–4)
(a) w/o VSC:
SST 09023–00100
(b) w/ VSC:
SST 09023–38400
18. BLEED BRAKE LINE (See page 32–4)
19. BLEED CLUTCH PIPE LINE (M/T TRANSAXLE) (See page 42–13)
20. CHECK FLUID LEVEL IN RESERVOIR (See page 32–4)
21. CHECK BRAKE FLUID LEAKAGE

BRAKE BOOSTER ASSY (LHD)

3201G–07

ON–VEHICLE INSPECTION

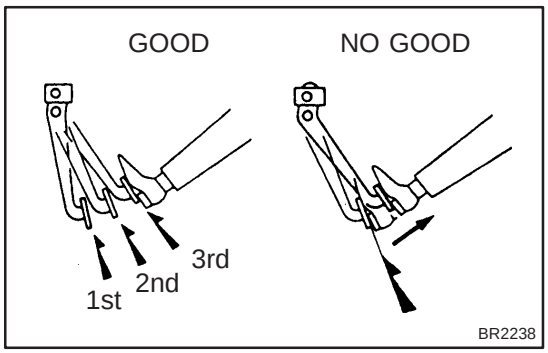

1. INSPECT BRAKE BOOSTER

(a) Airtightness check.

(1) Start the engine and stop it after 1 or 2 minutes. Depress the brake pedal several times slowly.

HINT:

If the pedal can be depressed to the f;oor the first time, but on the 2nd or 3rd time cannot be depreesed as far, the booster is airtight.

(2) Depress the brake pedal while the engine is running, and stop the engine with the pedal depressed.

HINT:

If there is no change in the pedal reserve distance after holding the pedal for 30 seconds, the booster is airtight.

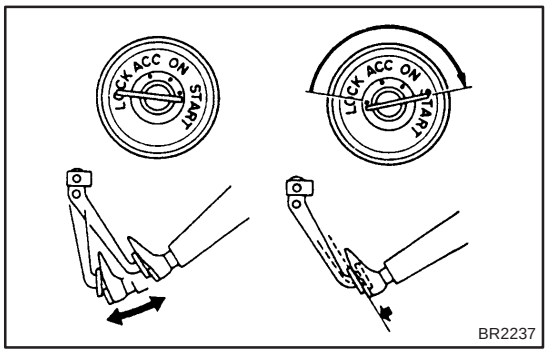

(b) Operating check.

(1) Depress the brake pedal several times with the ignition switch off and check that there is no change in the pedal reserve distance.

(2) Depress the brake pedal and start the engine.

HINT:

If the pedal goes down slightly, operation is normal.

2. INSPECT VACUUM CHECK VALVE

(a) Inspect vacuum check valve.

(1) Slide the clip and disconnect the vacuum hose.

(2) Remove the vacuum check valve.

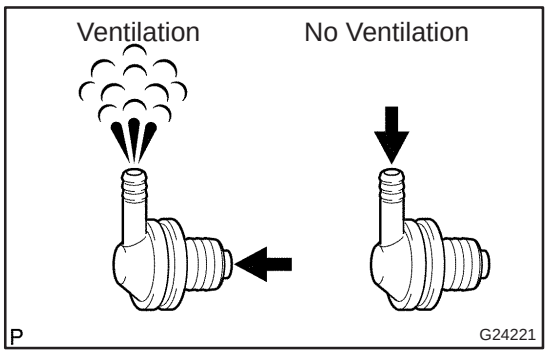

(3) Check that there is ventilation from the booster to the engine, and no ventilation from the engine to the booster.

(4) If any fault is found, replace the vacuum check valve.

320VU–01

COMPONENTS

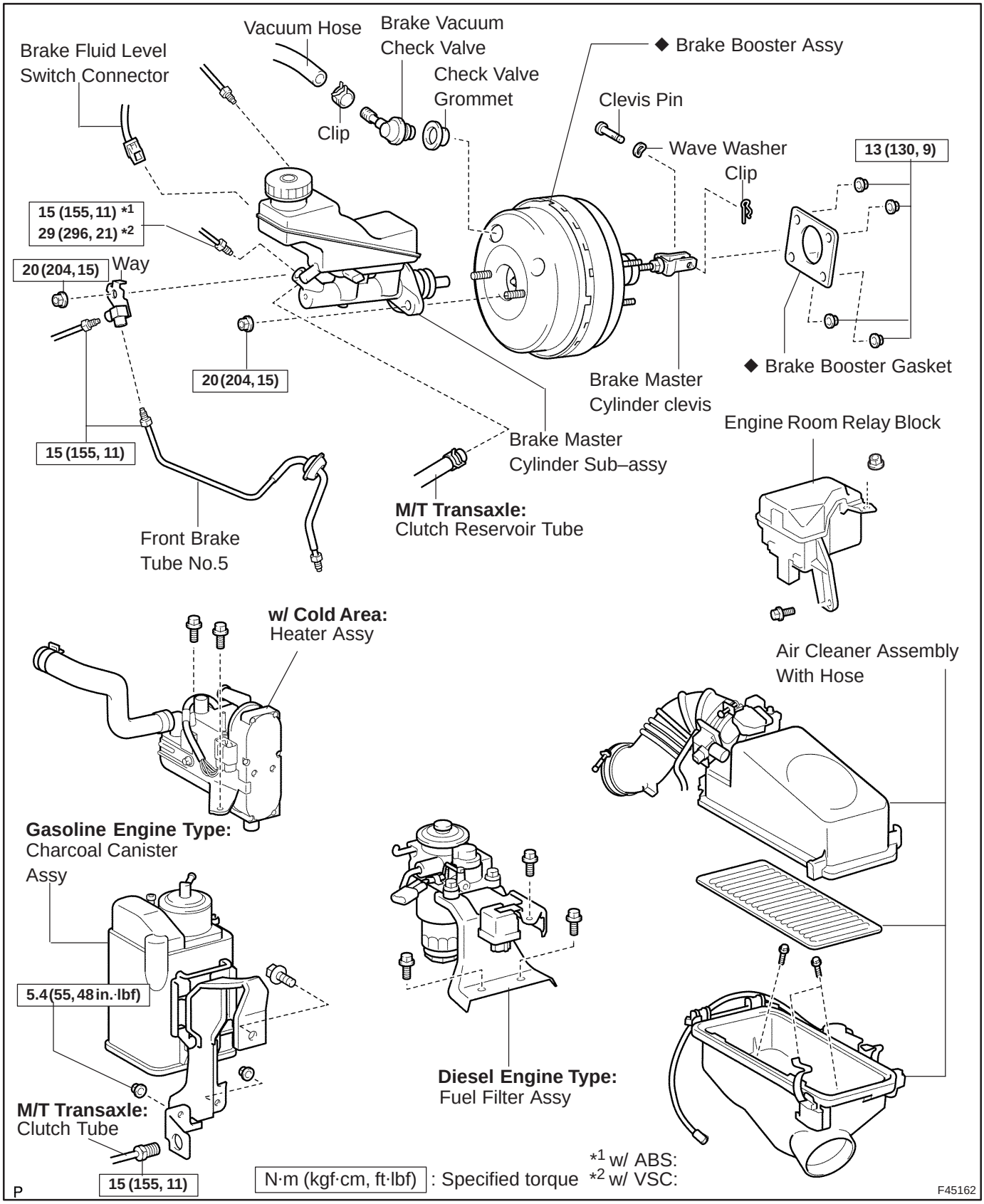

REPLACEMENT

NOTICE:

Do not adjust the brake booster push rod.

1. DRAIN BRAKE FLUID

NOTICE:

Wash the brake fluid off immediately if it adheres to any painted surface.

2. REMOVE AIR CLEANER ASSEMBLY WITH HOSE

3. SEPARATE ENGINE ROOM RELAY BLOCK

4. REMOVE CHARCOAL CANISTER ASSY (GASOLINE ENGINE TYPE)

5. REMOVE FUEL FILTER ASSY (DIESEL ENGINE TYPE) **(See page 11–82)**

6. REMOVE BRAKE MASTER CYLINDER SUB–ASSY **(See page 32–13)**

(a) w/o VSC:
SST 09023–00100

(b) w/ VSC:
SST 09023–38400

7. REMOVE HEATER ASSY (W/ COLD AREA) **(See page 55–100)**

8. REMOVE FRONT WHEEL LH

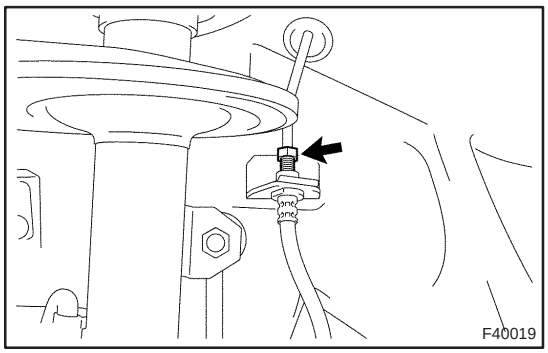

9. DISCONNECT FRONT BRAKE TUBE NO.5

(a) Using SST and spanner, disconnect the brake line from the flexible hose of the front brake LH.
SST 09023–00100

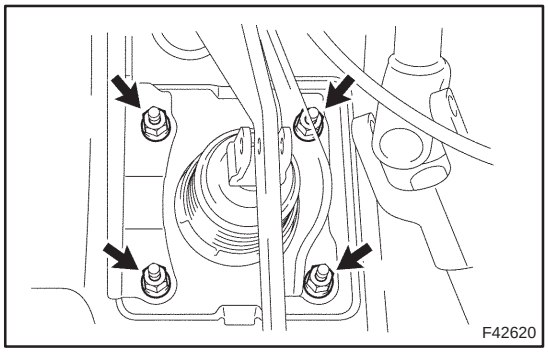

10. REMOVE BRAKE BOOSTER ASSY

(a) Disconnect the vacuum hose from the brake booster assy.

(b) Remove the clip and clevis pin.

(c) Remove the 4 nuts.

(d) Pull out the brake booster assy.

11. REMOVE BRAKE BOOSTER GASKET

(a) Pull out the brake booster gasket from the brake booster assy.

12. REMOVE CHECK VALVE

(a) Remove the check valve and grommet from the brake booster assy.

13. INSTALL CHECK VALVE

(a) Install the check valve and grommet to the brake booster assy.

14. INSTALL BRAKE BOOSTER GASKET

(a) Install a new brake booster gasket to the brake booster assy.

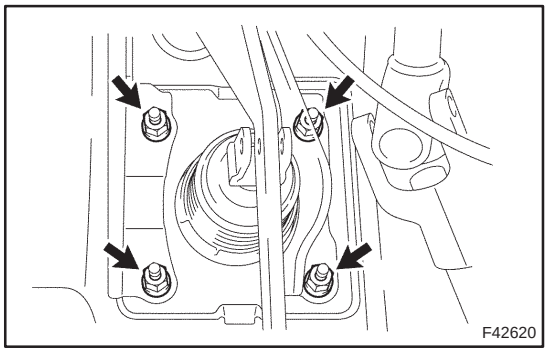

15. INSTALL BRAKE BOOSTER ASSY

(a) Install the brake booster assy with the 4 nuts.
Torque: 13 N·m (130 kgf·cm, 9 ft·lbf)

(b) Install the clevis pin and clip to the brake master cylinder clevis.

(c) Connect the vacuum hose to the brake booster assy.

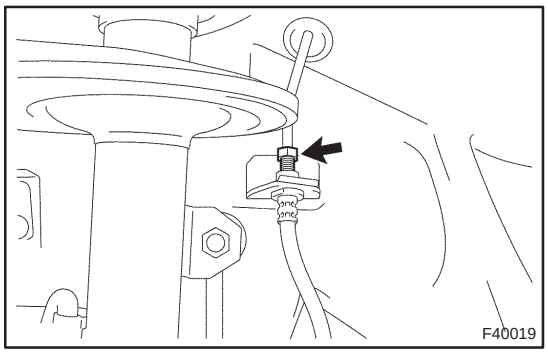

16. CONNECT FRONT BRAKE TUBE NO.5

(a) Using SST and spanner, connect the brake tube to the flexible hose.
SST 09023–00100
Torque: 15 N·m (155 kgf·cm, 11 ft·lbf)

17. INSTALL FRONT WHEEL LH
Torque: 103 N·m (1,050 kgf·cm, 76 ft·lbf)

18. INSTALL HEATER ASSY (W/ COLD AREA) (See page 55–100)

19. INSTALL BRAKE MASTER CYLINDER SUB–ASSY (See page 32–13)

(a) w/o VSC:
SST 09023–00100

(b) w/ VSC:
SST 09023–38400

20. INSTALL CHARCOAL CANISTER ASSY (GASOLINE ENGINE TYPE)

21. INSTALL FUEL FILTER ASSY (DIESEL ENGINE TYPE) (See page 11–82)

22. CONNECT ENGINE ROOM RELAY BLOCK

23. INSTALL AIR CLEANER ASSEMBLY WITH HOSE

24. FILL RESERVOIR WITH BRAKE FLUID (See page 32–4)

25. BLEED MASTER CYLINDER (See page 32–4)

(a) w/o VSC:
SST 09023–00100

(b) w/ VSC:
SST 09023–38400

26. BLEED BRAKE LINE (See page 32–4)

27. BLEED CLUTCH PIPE LINE (M/T TRANSAXLE) (See page 42–13)

28. CHECK AND ADJUST BRAKE PEDAL HEIGHT (See page 32–6)

29. CHECK PEDAL FREE PLAY (See page 32–6)

30. CHECK PEDAL RESERVE DISTANCE (See page 32–6)

31. CHECK FUEL LEAK

32. CHECK FLUID LEVEL IN RESERVOIR (See page 32–4)

33. CHECK BRAKE FLUID LEAKAGE

BRAKE BOOSTER ASSY (RHD)

320GN–02

ON–VEHICLE INSPECTION

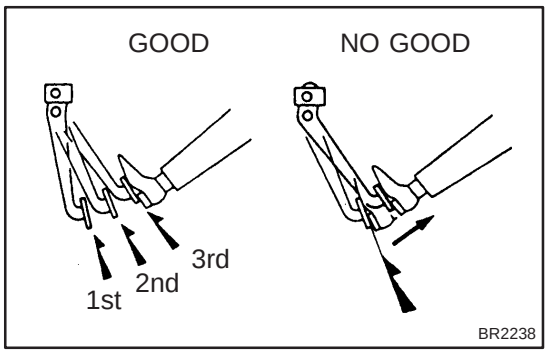

1. INSPECT BRAKE BOOSTER

(a) Airtightness check.

(1) Start the engine and stop it after 1 or 2 minutes. Depress the brake pedal several times slowly.

HINT:

If the pedal can be depressed to the f;oor the first time, but on the 2nd or 3rd time cannot be depreesed as far, the booster is airtight.

(2) Depress the brake pedal while the engine is running, and stop the engine with the pedal depressed.

HINT:

If there is no change in the pedal reserve distance after holding the pedal for 30 seconds, the booster is airtight.

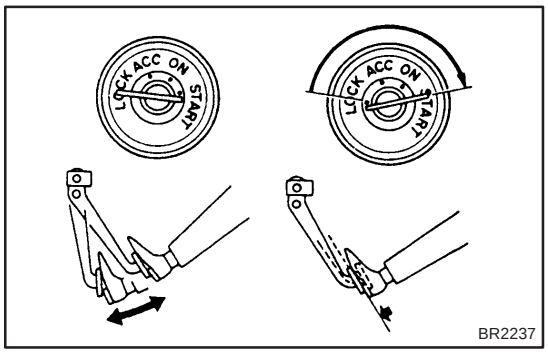

(b) Operating check.

(1) Depress the brake pedal several times with the ignition switch off and check that there is no change in the pedal reserve distance.

(2) Depress the brake pedal and start the engine.

HINT:

If the pedal goes down slightly, operation is normal.

2. INSPECT VACUUM CHECK VALVE

(a) Inspect vacuum check valve.

(1) Slide the clip and disconnect the vacuum hose.

(2) Remove the vacuum check valve.

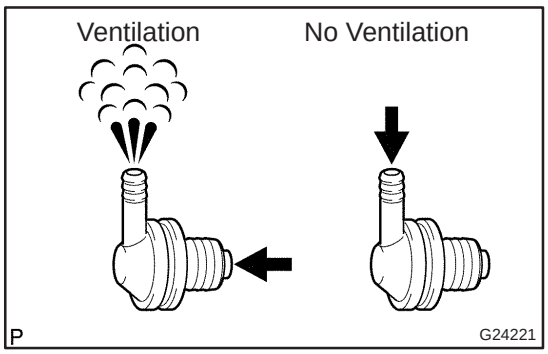

(3) Check that there is ventilation from the booster to the engine, and no ventilation from the engine to the booster.

(4) If any fault is found, replace the vacuum check valve.

320W3–01

COMPONENTS

1ZZ–FE,3ZZ–FE Engine Type:

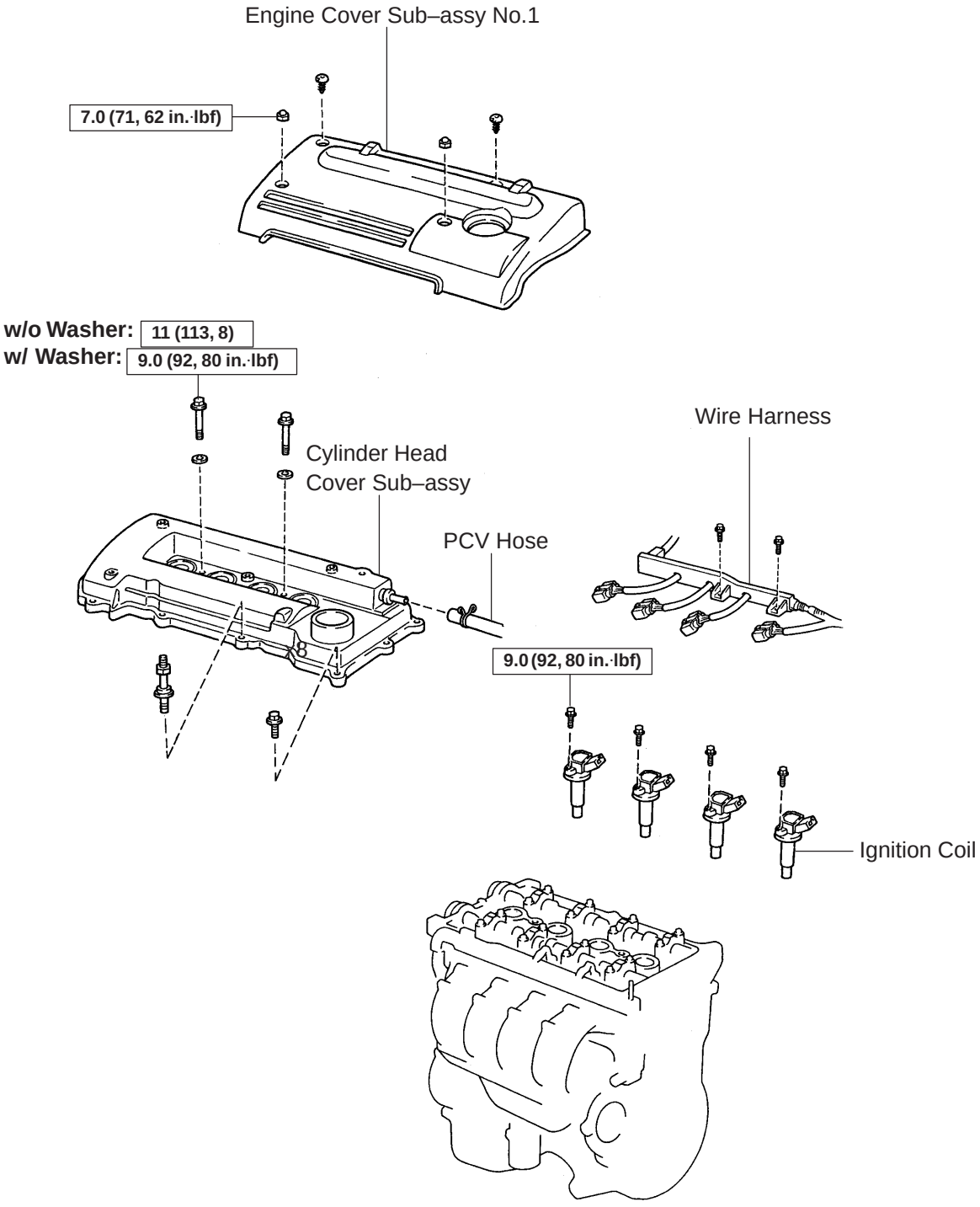

N N·m (kgf·cm, ft·lbf) : Specified torque

F45167

1CD–FTV Engine Type:

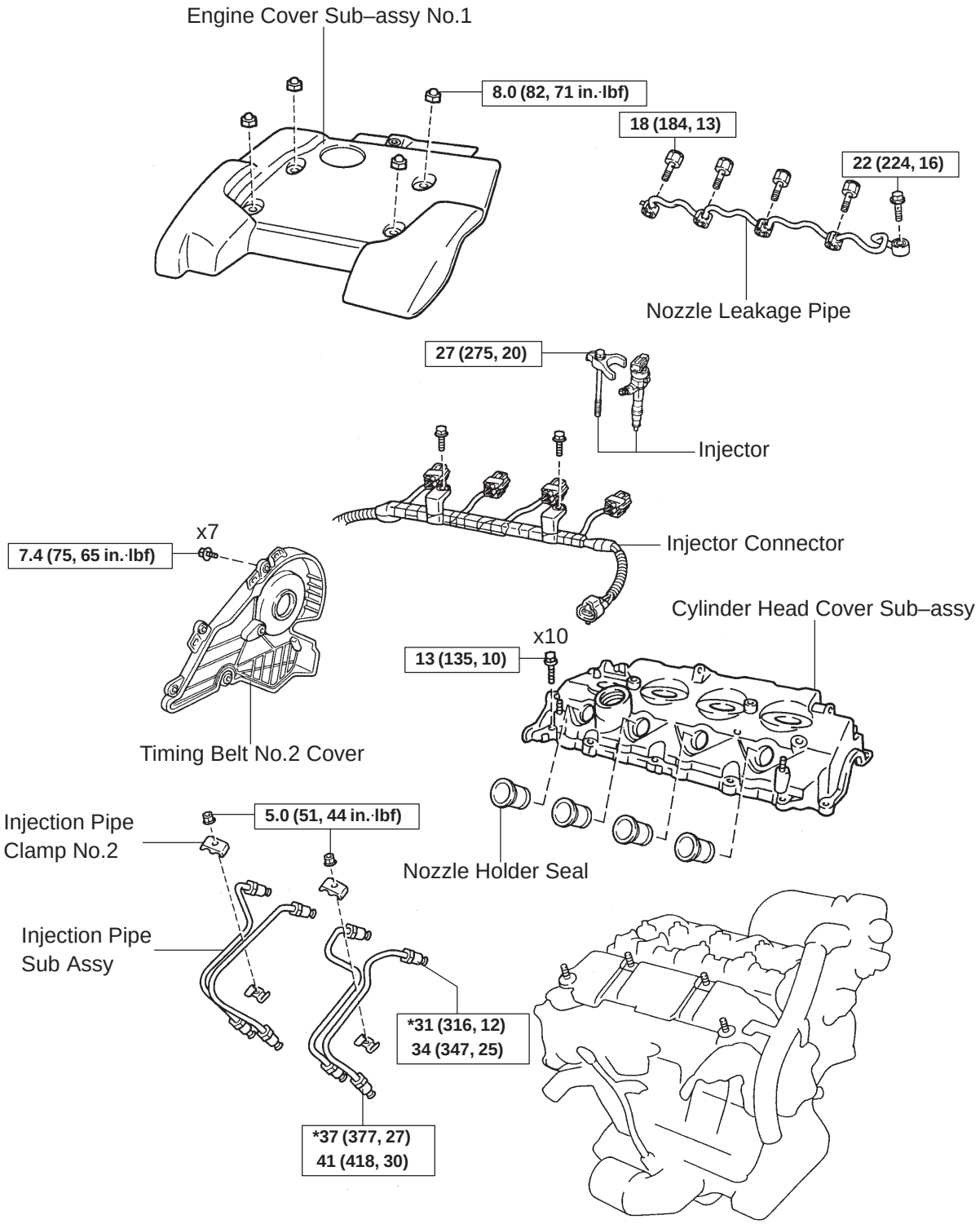

N·m (kgf·cm, ft·lbf) : Specified torque

N F42298 * For use with SST

F42611

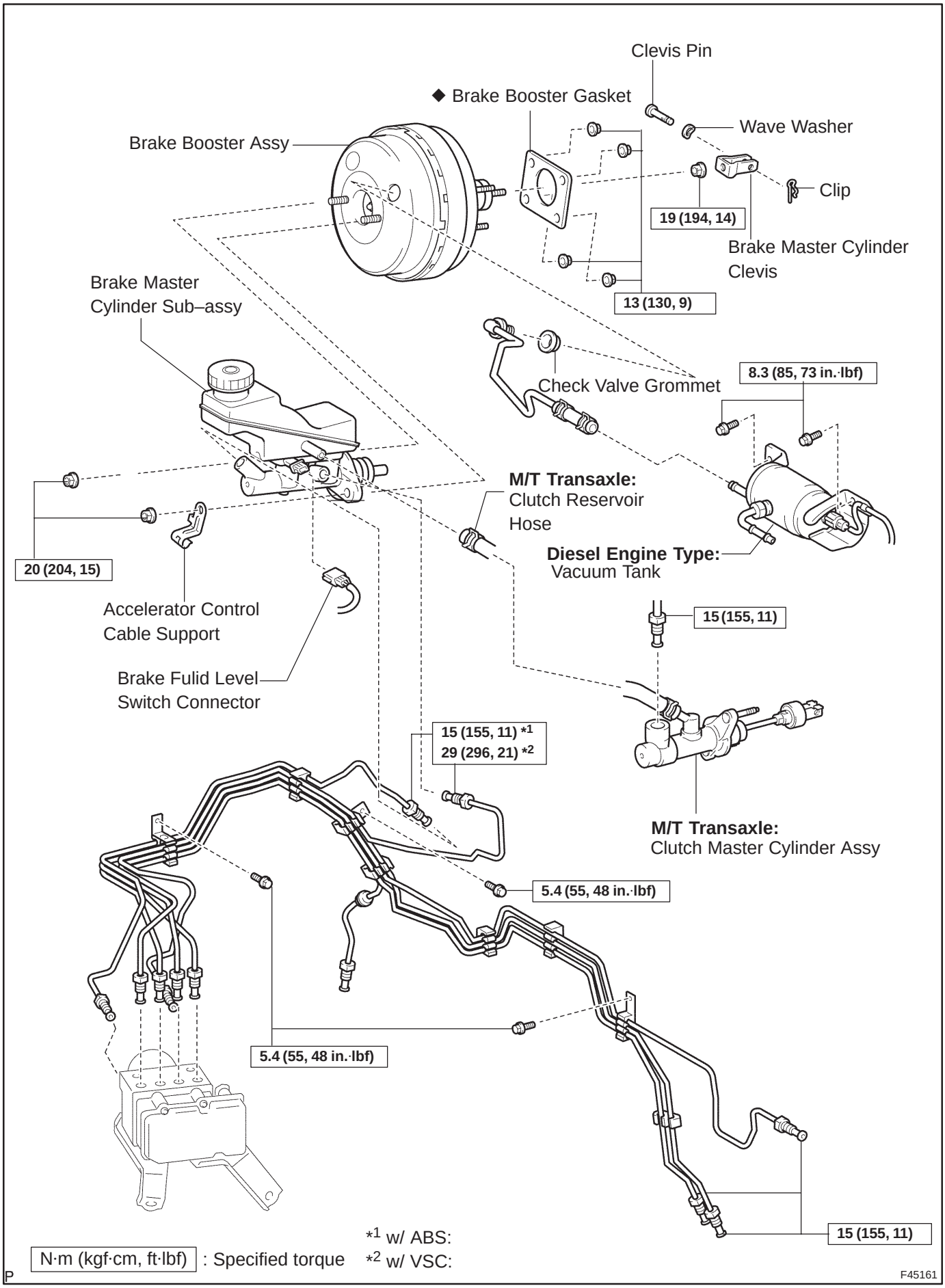
Clevis Pin
◆ Brake Booster Gasket
Wave Washer
Brake Booster Assy
Clip
19 (194, 14)
Brake Master Cylinder Clevis
Brake Master Cylinder Sub–assy
13 (130, 9)
Check Valve Grommet
8.3 (85, 73 in.·lbf)
M/T Transaxle: Clutch Reservoir Hose
Diesel Engine Type: Vacuum Tank
20 (204, 15)
Accelerator Control Cable Support
15 (155, 11)
Brake Fulid Level Switch Connector
15 (155, 11) *1
29 (296, 21) *2
M/T Transaxle: Clutch Master Cylinder Assy
5.4 (55, 48 in.·lbf)
5.4 (55, 48 in.·lbf)
15 (155, 11)
N·m (kgf·cm, ft·lbf) : Specified torque
*1 w/ ABS:
*2 w/ VSC:
P
F45161

320W4–01

REPLACEMENT

NOTICE:

Do not adjust the brake booster push rod.

1. DRAIN BRAKE FLUID

NOTICE:

Wash the brake fluid off immediately if it adheres to any painted surface.

2. REMOVE BRAKE MASTER CYLINDER SUB–ASSY (See page 32–13)

(a) w/o VSC:
SST 09023–00100

(b) w/ VSC:
SST 09023–38400

3. REMOVE CLUTCH MASTER CYLINDER ASSY (M/T TRANSAXLE) (See page 42–13)
SST 09023–00100

4. REMOVE ENGINE ASSEMBLY WITH TRANSAXLE (1AZ–FSE ENGINE TYPE) (See page 14–204)

5. REMOVE ENGINE COVER NO.1

6. REMOVE IGNITION COIL ASSY (GASOLINE ENGINE TYPE) (See page 14–81)

7. REMOVE CYLINDER HEAD COVER SUB–ASSY (GASOLINE ENGINE TYPE) (See page 14–81)

8. REMOVE TIMING BELT NO.2 COVER (DIESEL ENGINE TYPE) (See page 14–307)

9. REMOVE CYLINDER HEAD COVER SUB–ASSY (DIESEL ENGINE TYPE) (See page 14–318)

10. REMOVE INJECTOR ASSY (DIESEL ENGINE TYPE) (See page 14–318)

11. REMOVE FRONT WHEEL RH

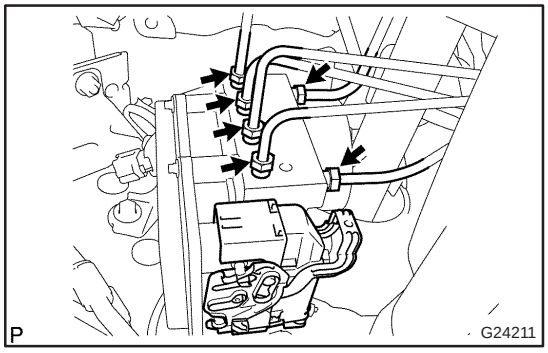

12. REMOVE BRAKE TUBE

(a) w/o VSC:
Using SST, disconnect the 6 brake tubes from the brake actuator.
SST 09023–00100

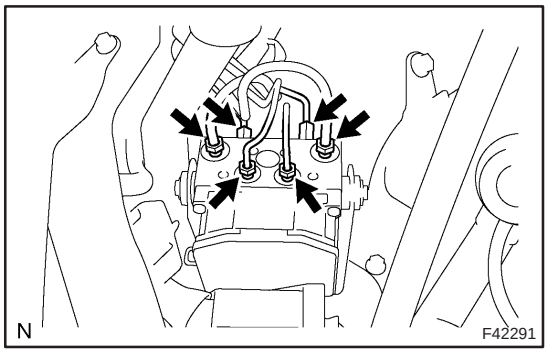

(b) w/ VSC:
Using SST, disconnect the 6 brake tubes from the brake actuator.
SST 09023–00100, 09023–38400

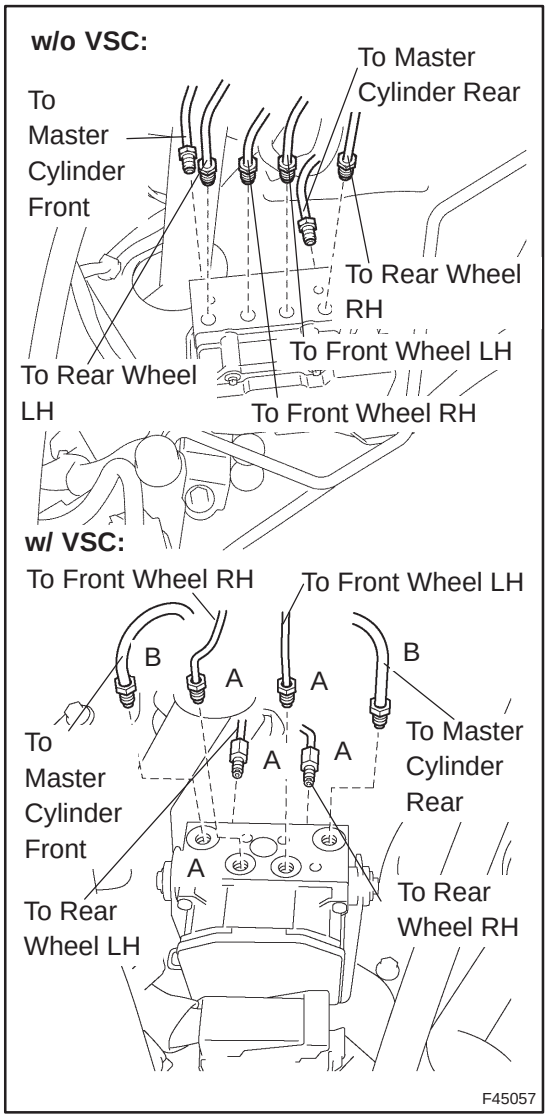

(c) Use tags or make a memo to identify the place to reconnect.

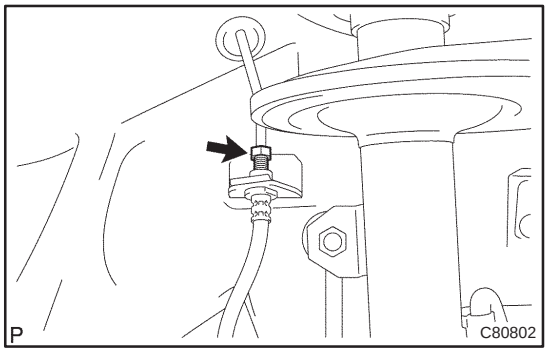

(d) Using SST and a spanner, disconnect the brake tube from the flexible hose of the front brake RH.
SST 09023–00100

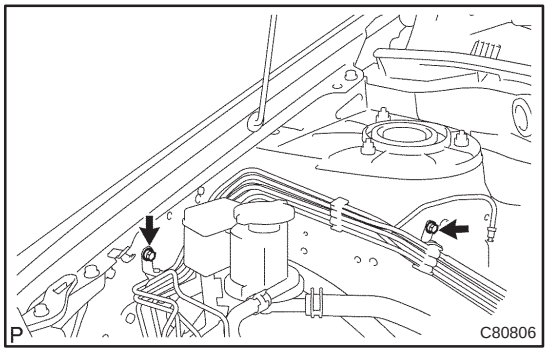

(e) Remove the 2 bolts and disconnect the 2 brake tube clamps.

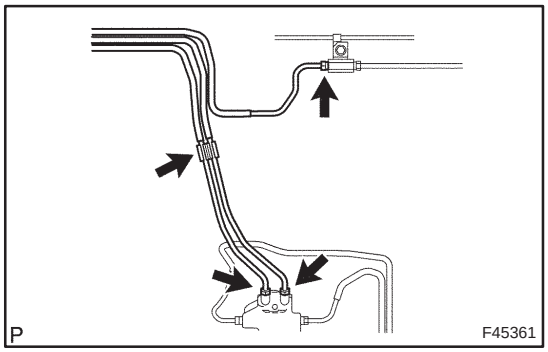

(f) Using SST, disconnect the 3 brake tubes from the ways.
SST 09023–00100

(g) Disconnect the brake tube from the clamp and remove the brake tubes.

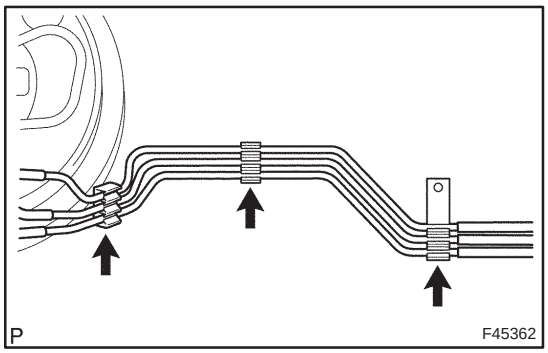

(h) Disconnect the 3 brake tubes from the clamp and remove the brake tubes.

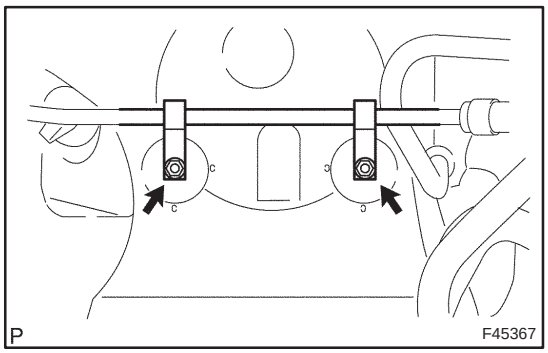

13. REMOVE BRAKE BOOSTER ASSY

(a) Gasoline engine type:
Remove the 2 bolts and separate the vacuum pipe from the body.

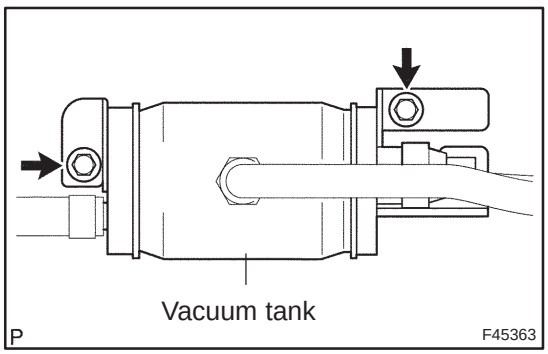

(b) Diesel engine type:
Remove the 2 bolts and remove the vacuum tank from the body.

(c) Disconnect the vacuum hose from the brake booster assy.

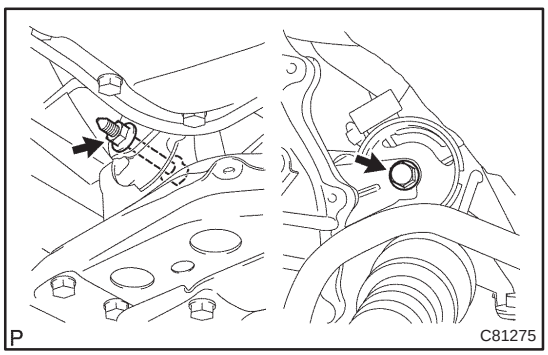

(d) Remove the engine under cover.

(e) Remove the 2 nuts from the engine mounting bracket RH.

(f) Remove the bolt from the rear engine mounting bracket.

(g) Remove the bolt and nut from the front engine mounting bracket.

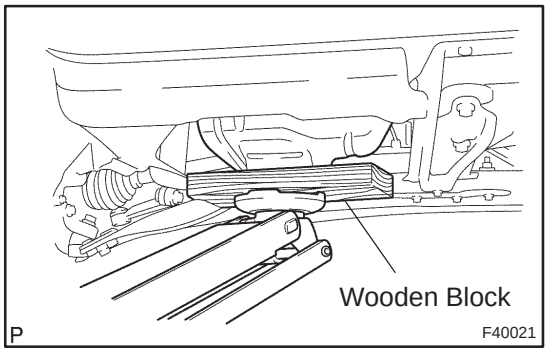

(h) Hold the engine with a jack, putting a wooden block between them.

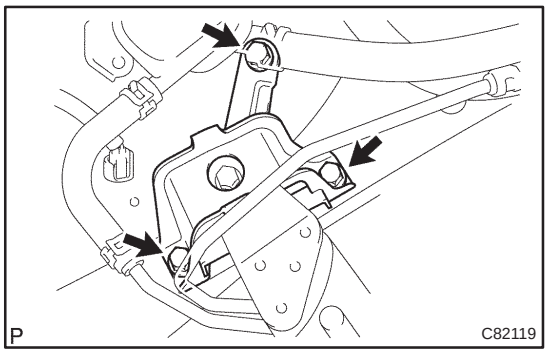

(i) Remove the 3 bolts and separate the engine mounting bracket RH from the body.

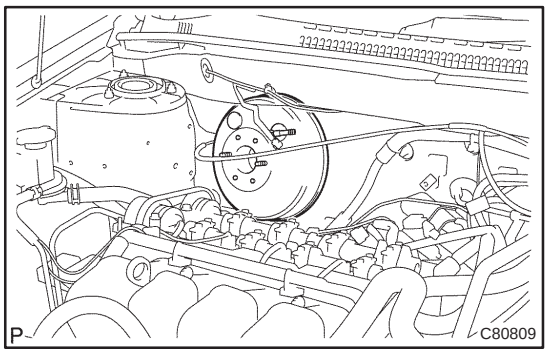

(j) Gradually tilt the engine by lowering the jack to remove the brake booster assy.

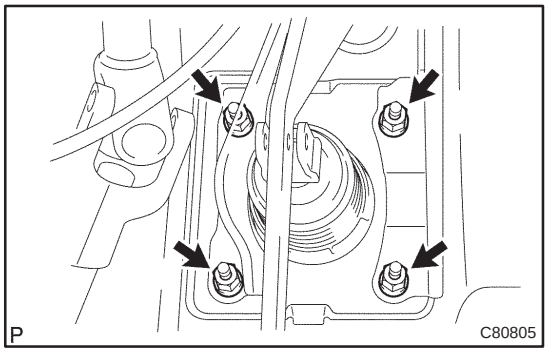

(k) Remove the 4 nuts and clevis.
(l) Pull out the brake booster assy.

14. REMOVE BRAKE BOOSTER GASKET

(a) Pull out the brake booster gasket.

15. REMOVE CHECK VALVE

(a) Remove the check valve from the brake booster assy.

16. INSTALL CHECK VALVE

(a) Install the check valve and grommet to the brake booster assy.

17. INSTALL BRAKE BOOSTER GASKET

(a) Install a new brake booster gasket to the brake booster assy.

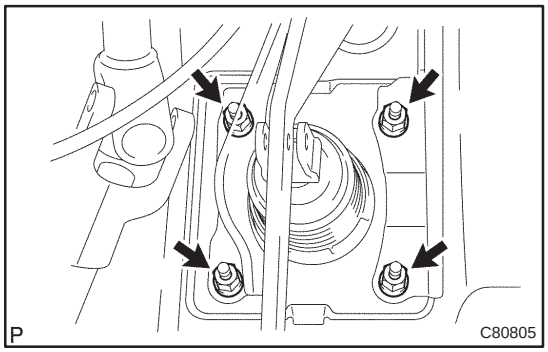

18. INSTALL BRAKE BOOSTER ASSY

(a) Install the clevis to the booster push rod.

(b) Install the brake booster assy with the 4 nuts.
Torque: 13 N·m (130 kgf·cm, 9 ft·lbf)

(c) Connect the vacuum hose to the check valve.

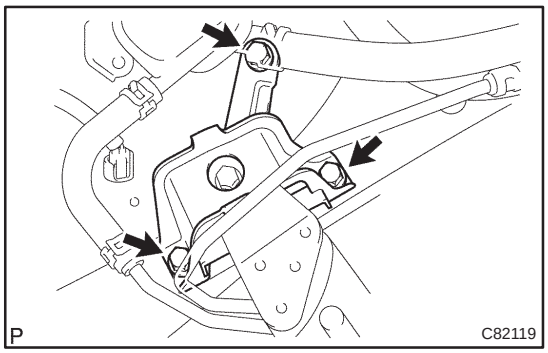

(d) Install the engine mounting bracket RH to the body with the 3 bolts.
Torque: 52 N·m (530 kgf·cm, 39 ft·lbf)

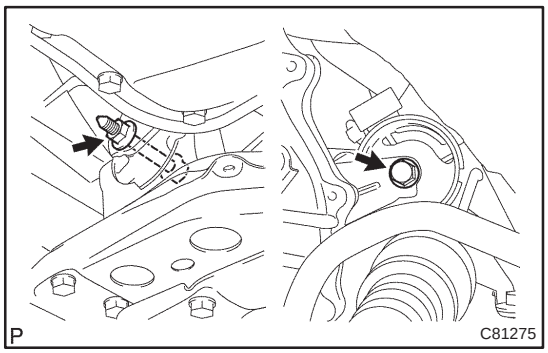

(e) Install the bolt to the rear engine mounting bracket.
Torque: 87 N·m (887 kgf·cm, 64 ft·lbf)

(f) Install the bolt and nut to the front engine mounting bracket.
Torque: 52 N·m (530 kgf·cm, 39 ft·lbf)

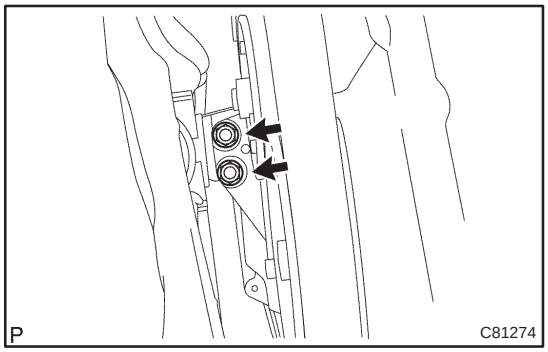

(g) Install the 2 nuts to the engine mounting bracket RH.
Torque: 52 N·m (530 kgf·cm, 39 ft·lbf)

(h) Install the engine under cover.

(i) Connect the vacuum hose to the brake booster assy.

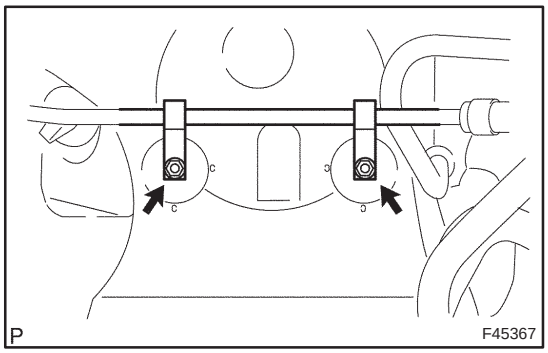

(j) Gasoline engine type:
Install the vacuum pipe with 2 bolts to the body.
Torque: 5.4 N·m (55 kgf·cm, 48 in.·lbf)

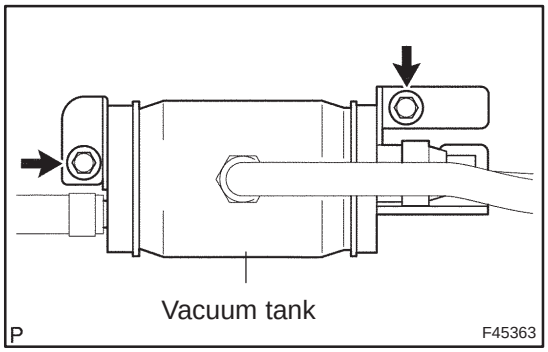

(k) Diesel engine type:
Install the vacuum tank with 2 bolts.
Torque: 8.3 N·m (85 kgf·cm, 73 in.·lbf)

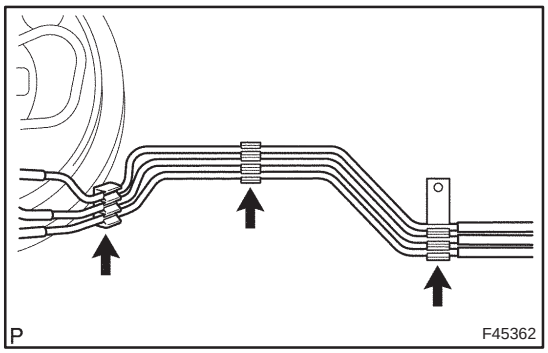

19. INSTALL BRAKE TUBE

(a) Disconnect the 3 brake tubes from the clamp and remove the brake tubes.

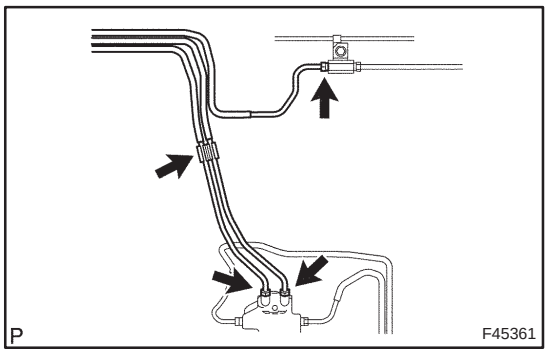

(b) Using SST, connect the 3 brake tubes to the ways.
SST 09023–00100
Torque: 15 N·m (155 kgf·cm, 11 ft·lbf)

(c) Connect the brake tube to the clamp.

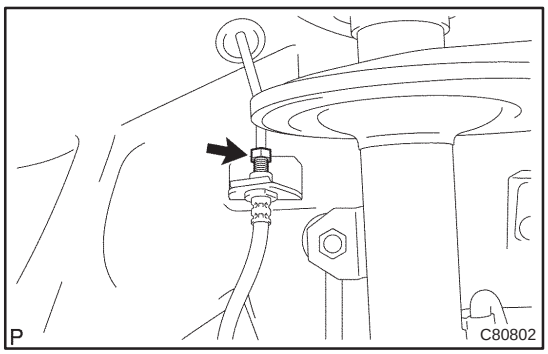

(d) Using SST and a spanner, connect the brake tube to the flexible hose of front brake RH.
SST 09023–00100
Torque: 15 N·m (155 kgf·cm, 11 ft·lbf)

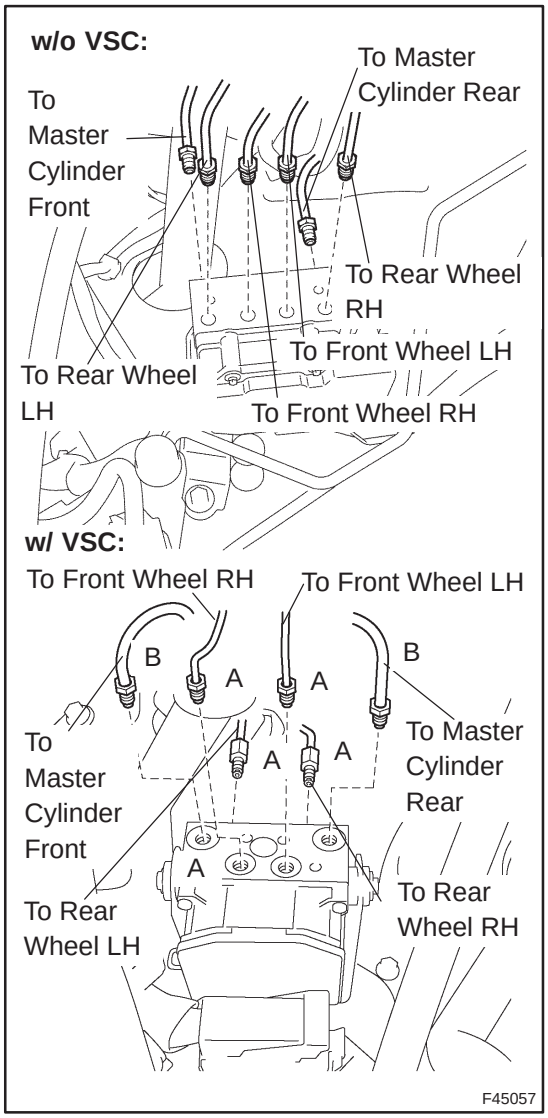

(e) w/o VSC:
Using SST, connect the 6 brake tubes to the brake actuator, as shown in the illustration.
SST 09023–00100
Torque: 15 N·m (155 kgf·cm, 11 ft·lbf)

(f) w/ VSC:
Using SST, connect the 6 brake tubes to the brake actuator as shown in the illustration.
SST 09023–00100, 09023–38400
Torque:
A: 15 N·m (155 kgf·cm, 11 ft·lbf)
B: 29 N·m (296 kgf·cm, 21 ft·lbf)

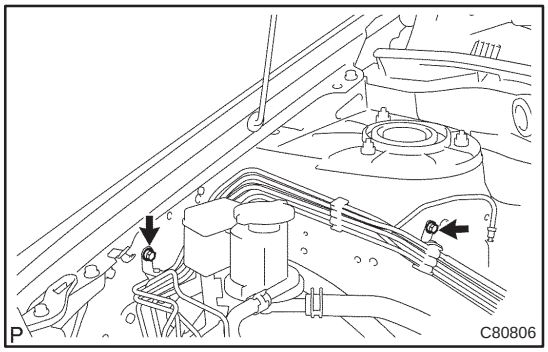

(g) Install the brake tube clamps with the 2 bolts.
Torque: 5.4 N·m (55 kgf·cm, 48 in.·lbf)

20. INSTALL FRONT WHEEL RH
21. INSTALL CYLINDER HEAD COVER SUB–ASSY (GASOLINE ENGINE TYPE) (See page 14–81)
22. INSTALL IGNITION COIL ASSY (GASOLINE ENGINE TYPE) (See page 14–81)
23. INSTALL INJECTOR ASSY (DIESEL ENGINE TYPE) (See page 14–318)
24. INSTALL CYLINDER HEAD COVER SUB–ASSY (DIESEL ENGINE TYPE) (See page 14–318)
25. INSTALL TIMING BELT NO.2 COVER (DIESEL ENGINE TYPE) (See page 14–307)

26. INSTALL ENGINE COVER NO.1
27. INSTALL ENGINE ASSEMBLY WITH TRANSAXLE (1AZ–FSE ENGINE TYPE) (See page 14–204)
28. INSTALL CLUTCH MASTER CYLINDER ASSY (M/T TRANSAXLE) (See page 42–13)
SST 09023–00100
29. INSTALL BRAKE MASTER CYLINDER SUB–ASSY (See page 32–13)
(a) w/o VSC:
SST 09023–00100
(b) w/ VSC:
SST 09023–38400
30. FILL RESERVOIR WITH BRAKE FLUID (See page 32–4)
31. BLEED MASTER CYLINDER (See page 32–4)
(a) w/o VSC:
SST 09023–00100, 09023–00100
(b) w/ VSC:
SST 09023–00100, 09023–00100
32. BLEED BRAKE LINE (See page 32–4)
33. CHECK AND ADJUST BRAKE PEDAL HEIGHT (See page 32–6)
34. CHECK PEDAL FREE PLAY (See page 32–6)
35. CHECK PEDAL RESERVE DISTANCE (See page 32–6)
36. BLEED CLUTCH PIPE LINE (M/T TRANSAXLE) (See page 42–13)
37. INSPECT AND ADJUST CLUTCH PEDAL SUB–ASSY (M/T TRANSAXLE) (See page 42–2)
38. CHECK FLUID LEVEL IN RESERVOIR (See page 32–4)
39. CHECK BRAKE FLUID LEAKAGE
40. CHECK CLUTCH FLUID LEAKAGE (M/T TRANSAXLE)

VACUUM PUMP ASSY (1CD–FTV)

32091–05

ON–VEHICLE INSPECTION

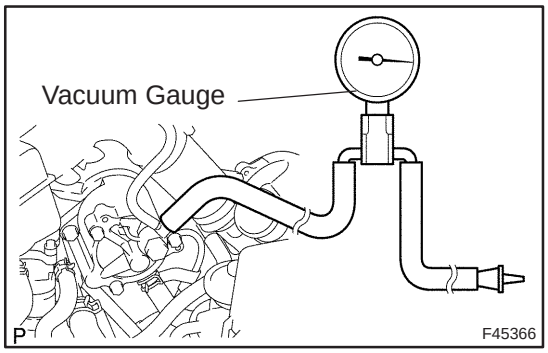

1. OPERATIONING CHECK

(a) Slide the clip, then disconnect the vacuum hose from vacuum pump assy.

(b) Connect the hose of the vacuum gauge to the vacuum pump assy.

(c) Block off another hose of the vacuum gauge with the hose clamp No.2.

(d) Start the engine and warm it up for more than 2 minutes.

(e) With the engine idle, check the negative pressure of the vacuum pump assy.

Standard: More than 650 mmHg (86.7 kPa).

(f) Remove the vacuum gauge from the vacuum pump assy.

(g) Connect the vacuum hose with the clip to the vacuum pump assy.

32092–05

COMPONENTS

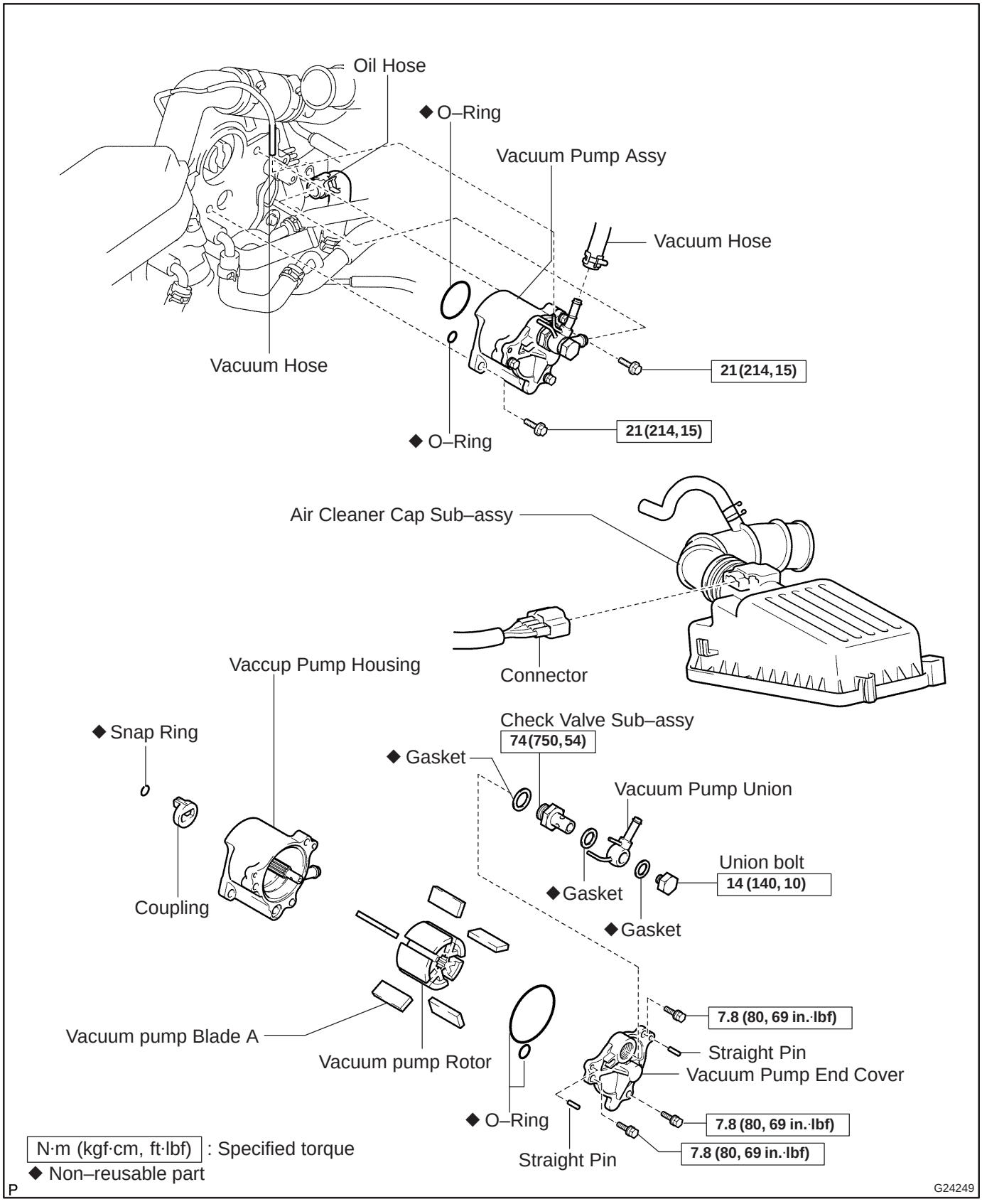

OVERHAUL

1. REMOVE AIR CLEANER CAP SUB–ASSY

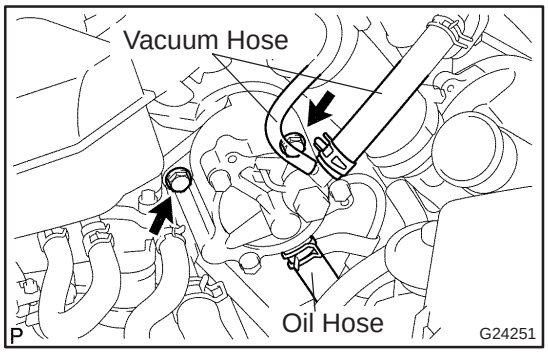

2. REMOVE VACUUM PUMP ASSY

(a) Disconnect the 2 vacuum hoses and oil hose from the vacuum pump assy.
(b) Remove the 2 bolts and vacuum pump assy.
(c) Remove the 2 O–rings from the vacuum pump assy.

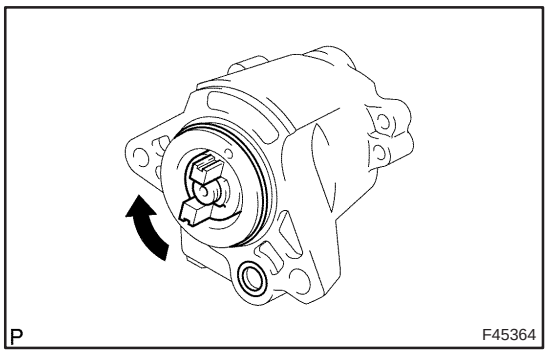

3. INSPECT VACUUM PUMP ASSY

(a) Turn the coupling counterclockwise direction by hand when seeing from the coupling direction and check for any abnormality such as dragging or torque fluctuation.

NOTICE:

Pay coupling attention, because the engine oil remained in the pump escapes while coupling is turning.

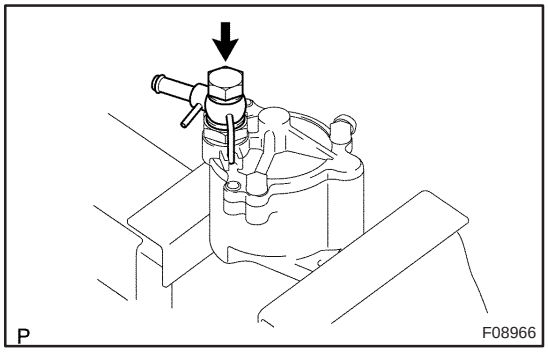

4. REMOVE VACUUM PUMP UNION

(a) Using soft jaws on a vise, hold the vacuum pump assy in a vise.

NOTICE:

Do not tighten the vise excessively and perform the work while holding the vacuum pump assy by hand.

(b) Remove the union bolt, vacuum pump union and 2 gaskets.

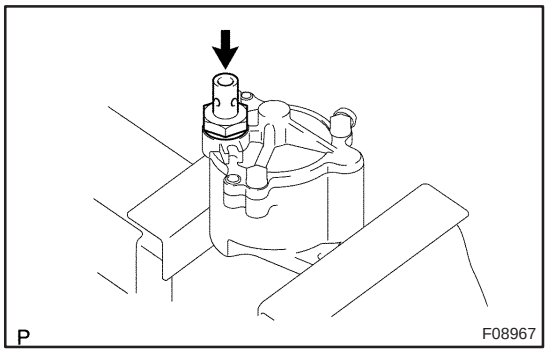

5. REMOVE CHECK VALVE SUB–ASSY

(a) Remove the check valve sub–assy and gasket.

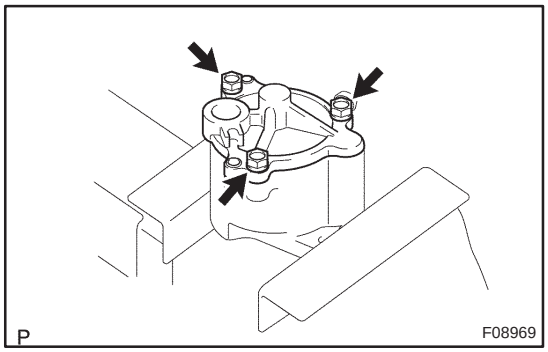

6. REMOVE VACUUM PUMP ROTOR SUB–ASSY

(a) Remove the 3 bolts.

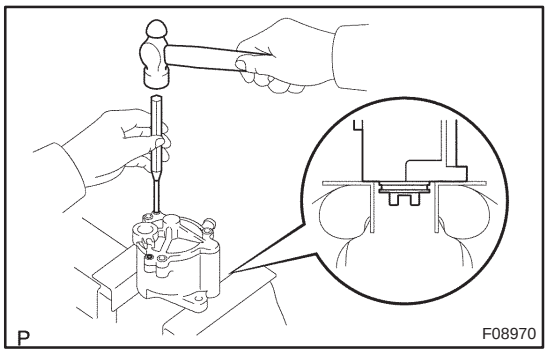

(b) Using soft jaws on the vise, place the vacuum pump assy on the vise, as shown in the illustration.

NOTICE:

Only place the vacuum pump assy, never hold the in–low of the housing with a vise.

(c) Using a pin punch and hammer, drive out the 2 straight pins.

(d) Remove the end cover and 2 O–rings.

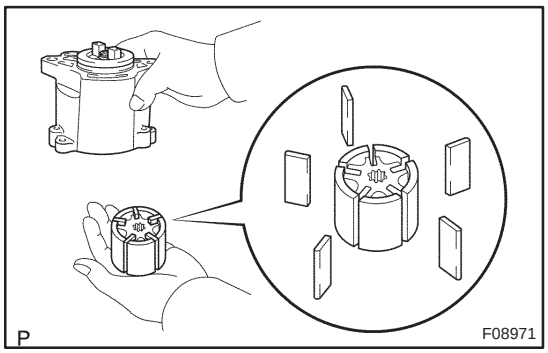

(e) Remove the vacuum pump rotor and 5 blades.

NOTICE:

Do not damage the housing with the rotor.

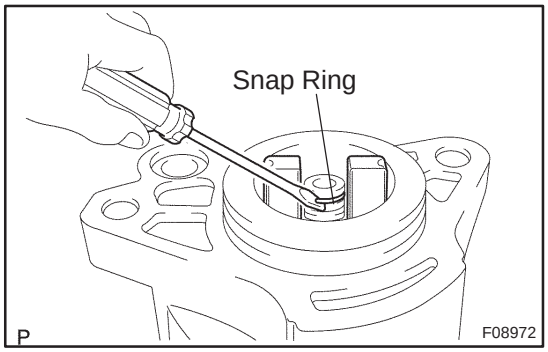

7. REMOVE VACUUM PUMP COUPLING

(a) Using a screwdriver, remove the snap ring.

(b) Remove the coupling.

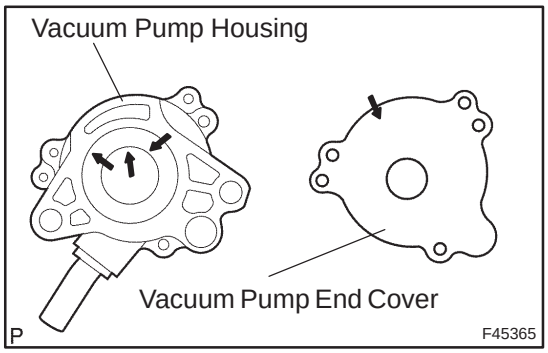

8. INSPECT VACUUM PUMP HOUSING

(a) Inspect the inside surface on the housing for scoring.

If necessary, replace the vacuum pump assy.

9. INSPECT VACUUM PUMP END COVER

(a) Inspect the inside surface on the vacuum pump end cover for scoring.

If necessary, replace the vacuum pump assy.

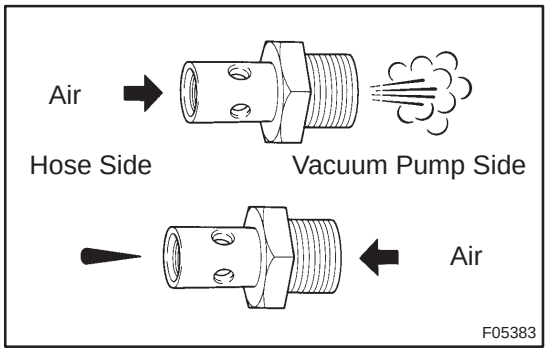

10. INSPECT CHECK VALVE SUB–ASSY

(a) Check that air flows from the hose side to the pump side.

(b) Check that air does not flow from the pump side to the hose side.

NOTICE:

Block off the 4 holes on the side surface of the check valve when checking.

If necessary, replace the check valve.

11. INSTALL VACUUM PUMP COUPLING

(a) Place the vacuum pump coupling to the rotor shaft.

(b) Install a new snap ring to the rotor shaft.

12. INSTALL VACUUM PUMP ROTOR SUB–ASSY

(a) Coat the rotor with engine oil, and install it to the rotor shaft.

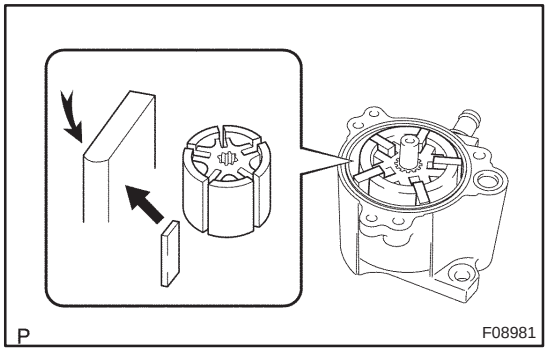

13. INSTALL VACUUM PUMP BLADE A

(a) Apply the engine oil to the rotor, and install the rotor in the housing.

(b) Apply the engine oil to the 5 new blades.

(c) Install the 5 blades with the round end facing outward.

NOTICE:

Install so that the blade attaches on the housing.

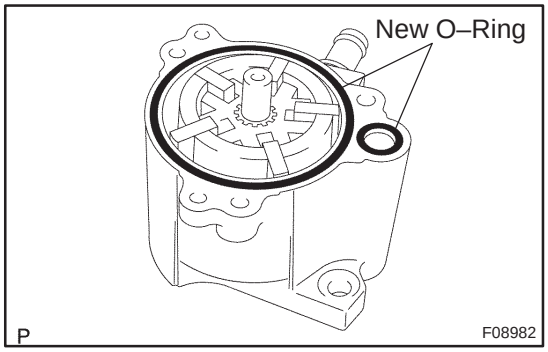

(d) Coat 2 new O–rings with engine oil, and install them on the housing.

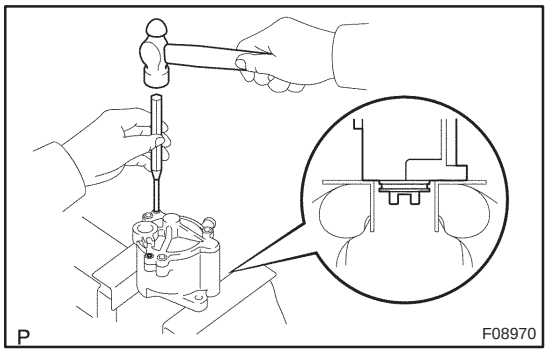

(e) Using soft jaws on the vise, place the vacuum pump on the vise, as shown in the illustration.

NOTICE:

Only place the vacuum pump assy, never hold the in–low of the housing with a vise.

(f) Place the end cover, and temporarily install the 3 bolts.

(g) Using a pin punch and hammer, drive in the 2 straight pins.

NOTICE:

Install so that the blade and end cover of the eccentric ring does not interfere with each other.

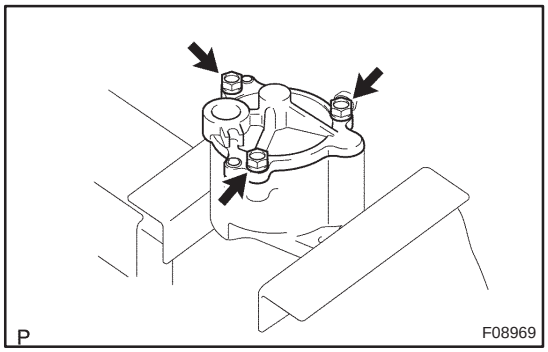

(h) Using soft jaws on the vise, hold the vacuum pump in the vise.

NOTICE:

Do not tighten the vise to tightly.

(i) Tighten the 3 bolts.
Torque: 7.8 N·m (80 kgf·cm, 69 in.·lbf)

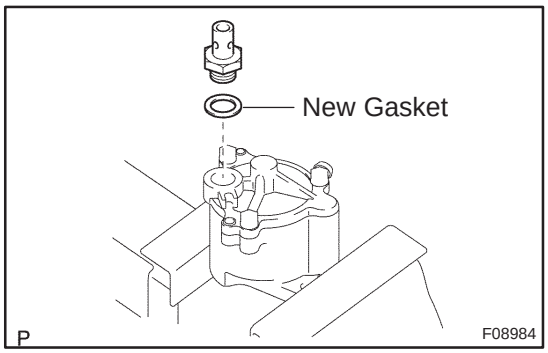

14. INSTALL CHECK VALVE SUB–ASSY

(a) Install the check valve sub–assy and a new gasket.
Torque: 74 N·m (750 kgf·cm, 54 ft·lbf)

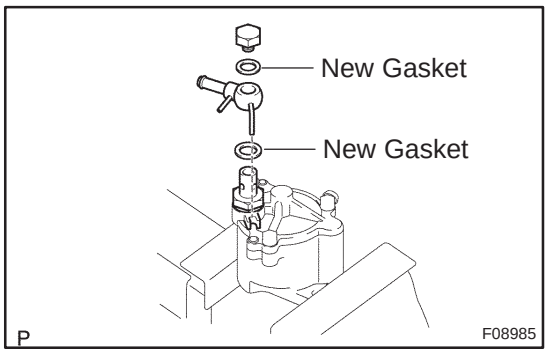

15. INSTALL VACUUM PUMP UNION

(a) Install the vacuum pump union and 2 new gaskets with the union bolt.
Torque: 14 N·m (140 kgf·cm, 10 ft·lbf)

HINT:

Align and insert the pin of the union into the matching hole of the casing.

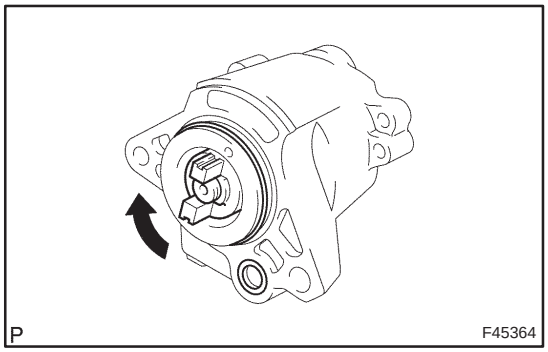

16. INSPECT VACUUM PUMP ASSY

(a) Turn the gear counterclockwise direction by hand when seeing from the vacuum pump gear direction and check for any abnormality such as dragging or torque fluctuation.

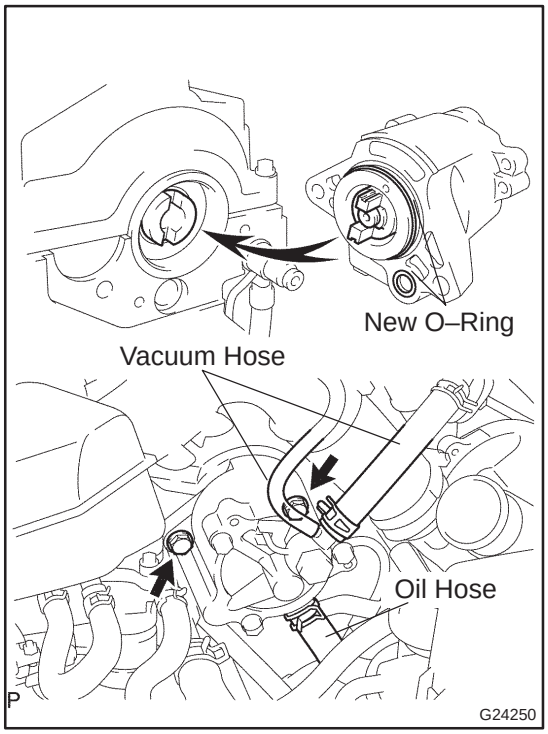

17. INSTALL VACUUM PUMP ASSY

(a) Coat 2 new O–rings with engine oil, and install them to the vacuum pump assy.

(b) Install the vacuum pump assy aligning the coupling with the slit of the camshaft.

(c) Install the 2 bolts.

Torque: 21 N·m (214 kgf·cm, 15 ft·lbf)

(d) Connect 2 vacuum hoses and oil hose.

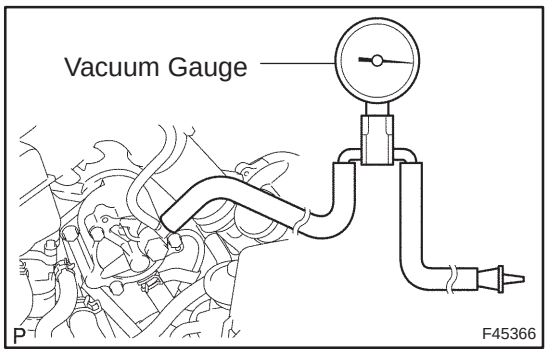

18. INSPECT CHECK VACUUM PUMP OPERATION

(a) Slide the clip, then disconnect the vacuum hose from vacuum pump assy.

(b) Connect the hose of the vacuum gauge to the vacuum pump assy.

(c) Block off another hose of the vacuum gauge with the hose clamp No.2.

(d) Start the engine and warm it up for more than 2 minutes.

(e) With the engine idle, check the negative pressure of the vacuum pump assy.

Standard: More than 650 mmHg (86.7 kPa).

(f) Remove the vacuum gauge from the vacuum pump assy.

(g) Connect the vacuum hose with the clip to the vacuum pump assy.

19. INSTALL AIR CLEANER CAP SUB–ASSY

FRONT BRAKE

COMPONENTS

320GA–03

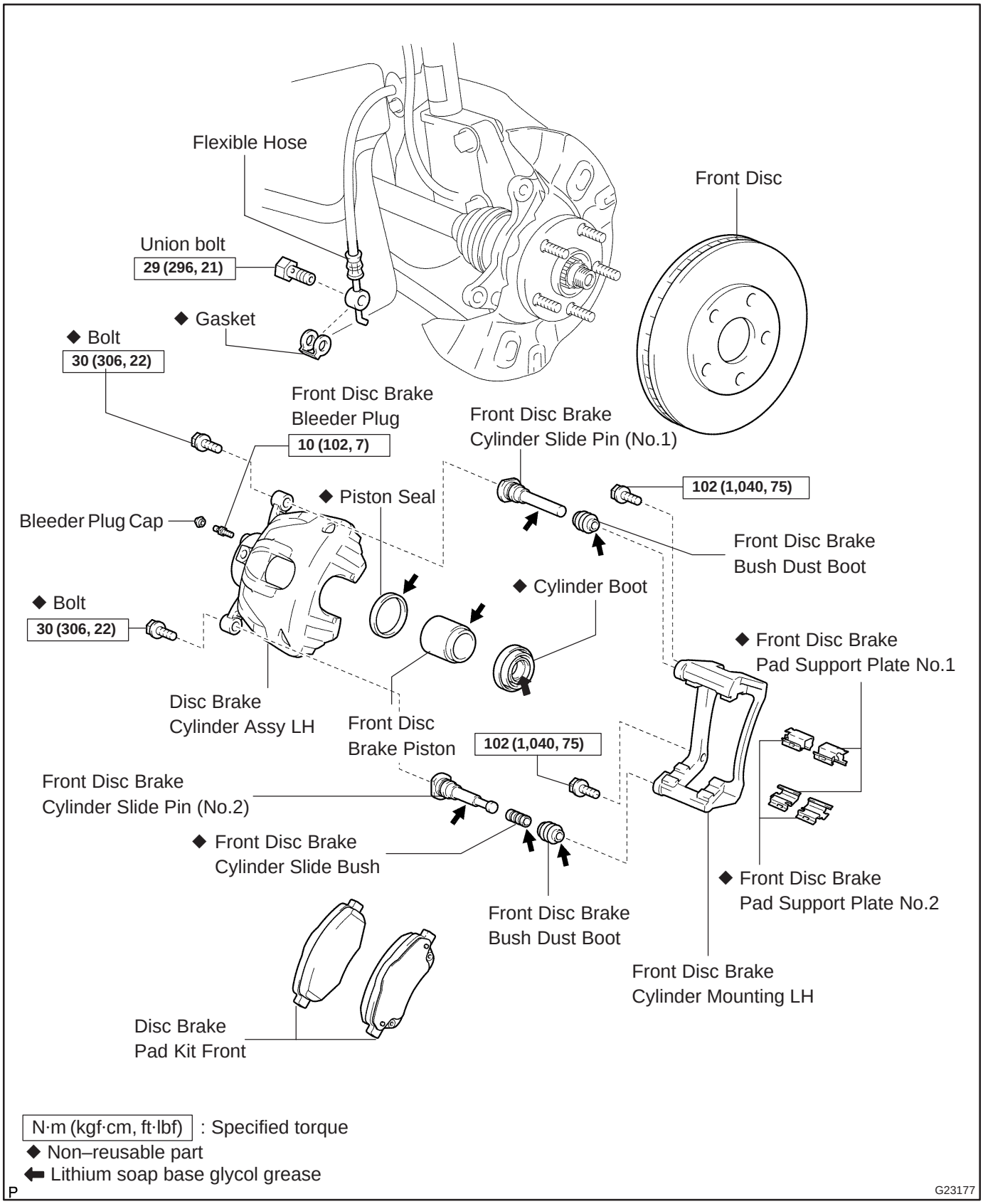

320W1–01

OVERHAUL

HINT:

Overhaul the RH side by using the same procedures as those for the LH side.

1. REMOVE FRONT WHEEL

2. DRAIN BRAKE FLUID

NOTICE:

Wash the brake fluid off immediately if it adheres to any painted surface.

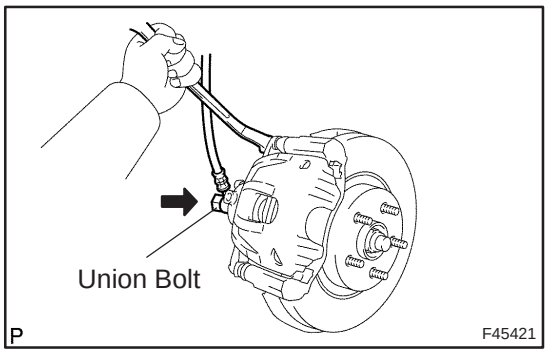

3. REMOVE DISC BRAKE CYLINDER ASSY LH

(a) Remove the union bolt and gasket from the disc brake cylinder assy LH, then disconnect the flexible hose.

(b) Hold the front disc brake cylinder slide pin and remove the 2 bolts.

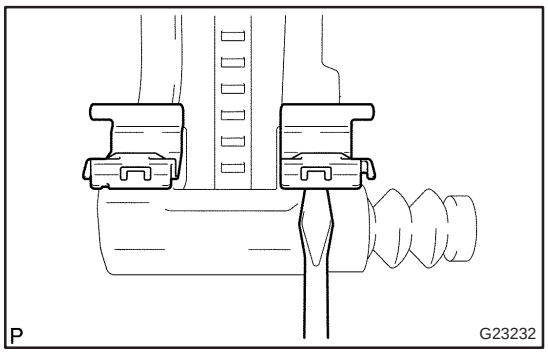

4. REMOVE FRONT DISC BRAKE PAD KIT

(a) Remove the disc brake pad kit front from the front disc brake cylinder mounting LH.

(b) Remove the 2 front disc brake pad support plates No.2 and 2 front disc brake pad support plates No.1.

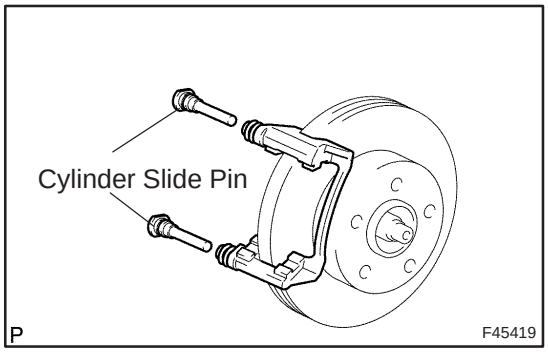

5. REMOVE FRONT DISC BRAKE CYLINDER SLIDE PIN KIT

(a) Remove the front disc brake cylinder slide pin (No.1) and front disc brake cylinder slide pin (No.2) from the front disc brake cylinder mounting LH.

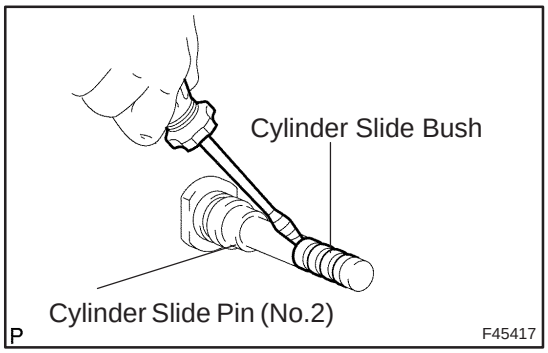

(b) Remove the front disc brake cylinder slide bush from the bottom side of the front disk brake cylinder slide pin (No.2).

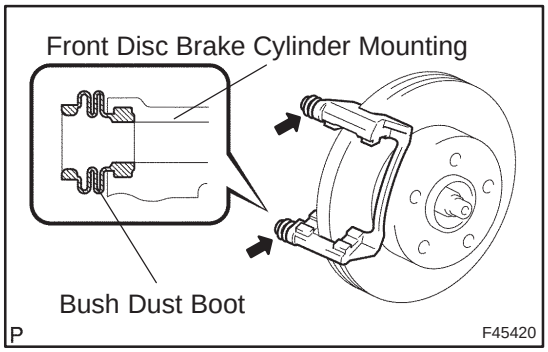

6. REMOVE FRONT DISC BRAKE BUSH DUST BOOT

(a) Remove the 2 front disc brake bush dust boots from the front disc brake cylinder mounting LH.

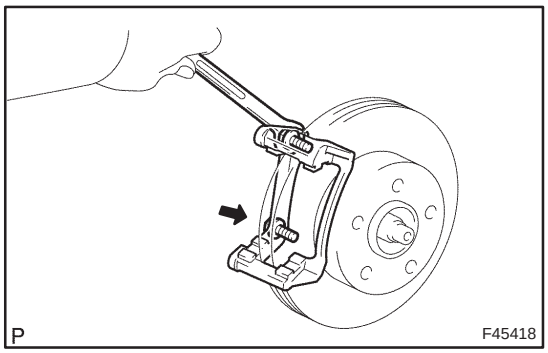

7. REMOVE FRONT DISC BRAKE CYLINDER MOUNTING LH

(a) Remove the 2 bolts and front disc brake cylinder mounting LH.

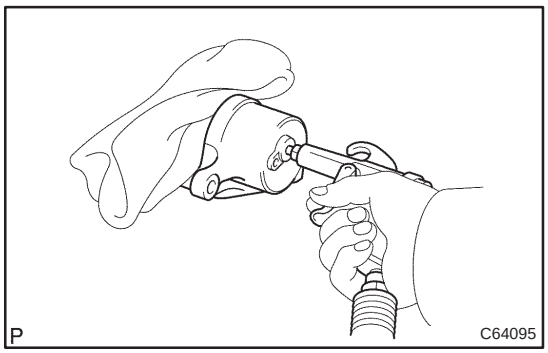

8. REMOVE FRONT DISC BRAKE PISTON

(a) Place a shop rug between the front disc brake piston and the disc brake cylinder assy LH.

(b) Use compressed air to remove the front disc brake piston from the disc brake cylinder assy LH.

CAUTION:

Do not place your fingers in front of the piston when using compressed air.

NOTICE:

Do not spatter the brake fluid.

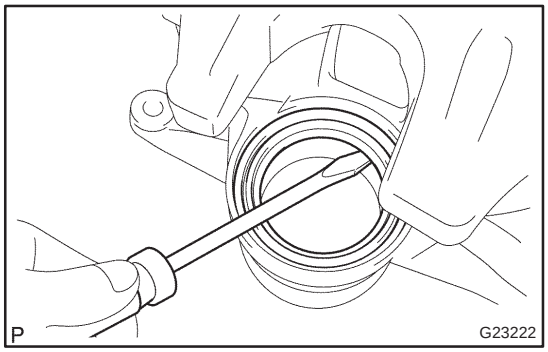

9. REMOVE CYLINDER BOOT

(a) Using a screwdriver, remove the cylinder boot.

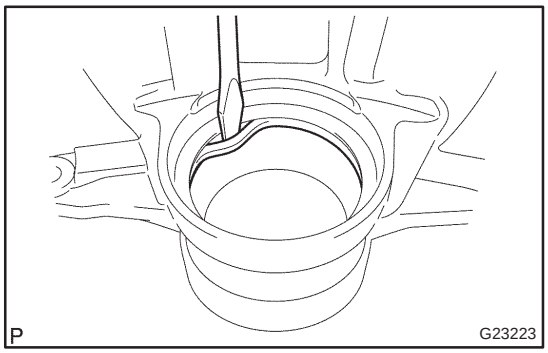

10. REMOVE PISTON SEAL

(a) Using a screwdriver, remove the piston seal.

NOTICE:

Do not damage the inner cylinder and cylinder groove.

11. REMOVE FRONT DISC BRAKE BLEEDER PLUG

(a) Remove the bleeder plug cap and front disc brake bleeder plug from the disc brake cylinder assy LH.

12. INSPECT BRAKE CYLINDER AND PISTON

(a) Check the cylinder bore and piston for rust or scoring.

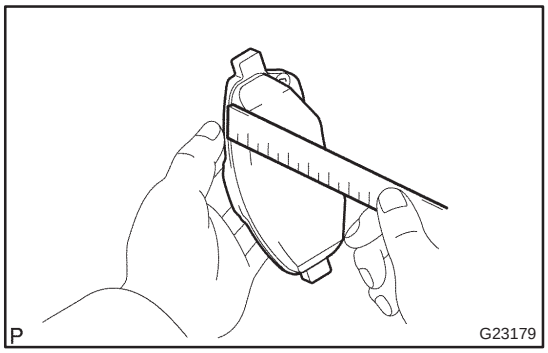

13. INSPECT FRONT DISC BRAKE PAD KIT

(a) Using a ruler, measure the disc brake pad lining thickness.

Standard thickness: 12.5 mm (0.492 in.)
Minimum thickness: 2.0 mm (0.079 in.)

(b) Inspect the 2 front disc brake pad support plates No.2 and front disc brake pad support plates No.1.

Make sure that they have sufficient rebound, no deformation, cracks nor wear, and have had all rust, dirt and foreign particles cleaned off.

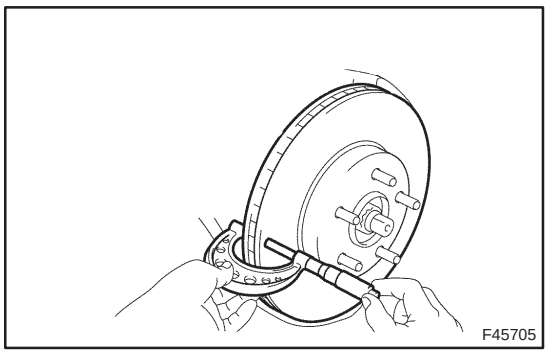

14. INSPECT DISC THICKNESS

(a) Using a micrometer, measure the front disc thickness.

Standard thickness: 26.0 mm (1.024 in.)
Minimum thickness: 24.0 mm (0.945 in.)

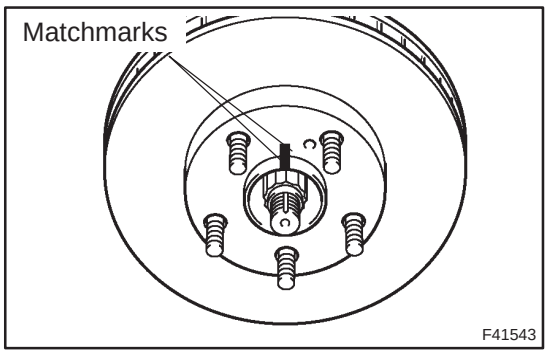

15. REMOVE FRONT DISC

(a) Place matchmarks on the front disc and the axle hub.

(b) Remove the front disc.

16. INSTALL FRONT DISC

(a) Aligning the matchmarks, install the front disc.

HINT:

Select the installation position where the disc has the minimum runout.

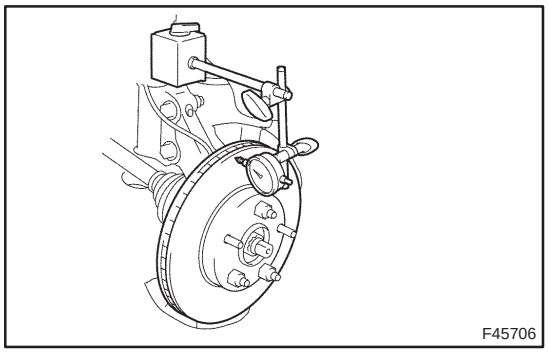

17. INSPECT DISC RUNOUT

(a) Temporarily fasten the front disc together with the hub nuts.

Torque: 103 N·m (1,050 kgf·cm, 76 ft·lbf)

(b) Using a dial indicator, measure the front disc runout 10 mm (0.39 in.) away from the outer edge of the front disc.

Maximum disc runout: 0.05 mm (0.0020 in.)

(c) If the disc's runout is maximum value or greater, check the bearing play in the axial direction and check for the axle hub runout (See page 30–2). If the bearing play and axle hub runout are normal, adjust the disc runout or grind it on a "On–car" brake lathe.

18. TEMPORARILY TIGHTEN FRONT DISC BRAKE BLEEDER PLUG

(a) Temporarily install the front disc brake bleeder plug to the disc brake cylinder assy LH.

(b) Install the bleeder plug cap to the bleeder plug.

19. INSTALL PISTON SEAL

(a) Apply lithium soap base glycol grease to a new piston seal.

(b) Install the piston seal to the disc brake cylinder assy LH.

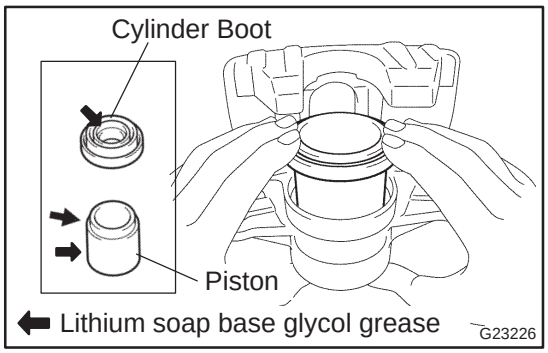

20. INSTALL FRONT DISC BRAKE PISTON

(a) Apply lithium soap base glycol grease to the front disc brake piston and a new cylinder boot.

(b) Install the cylinder boot to the front disc brake piston.

(c) Install the piston to the disc brake cylinder assy LH.

NOTICE:

Do not install the piston forcibly in the disc brake cylinder.

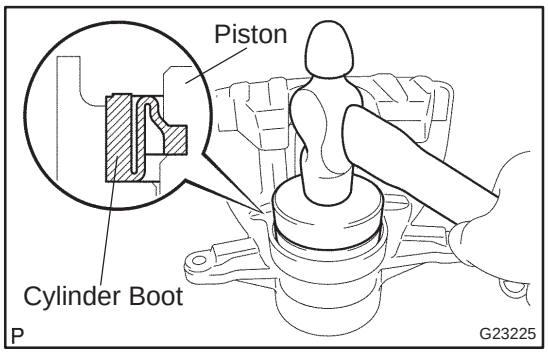

21. INSTALL CYLINDER BOOT

(a) Using SST and a hammer, install the cylinder boot to the disc brake cylinder assy LH.

SST 09550–60010

NOTICE:

Do not damage the cylinder boot.

HINT:

Install the boot securely to the disc brake cylinder assy LH.

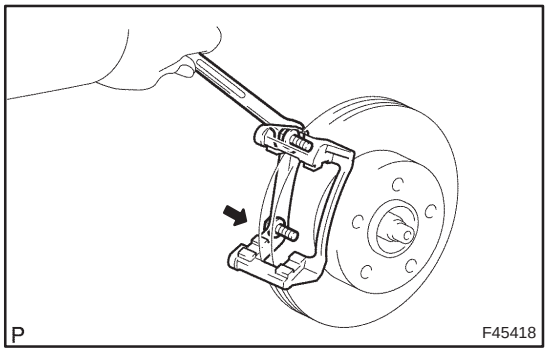

22. INSTALL FRONT DISC BRAKE CYLINDER MOUNTING LH

(a) Install the front disc brake cylinder mounting LH with the 2 bolts.

Torque: 102 N·m (1,040 kgf·cm, 75 ft·lbf)

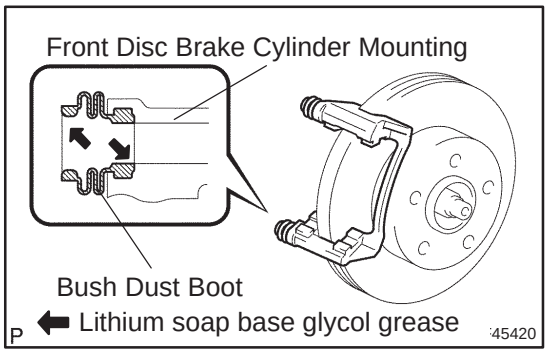

23. INSTALL FRONT DISC BRAKE BUSH DUST BOOT

(a) Apply lithium soap base glycol grease to the sealing surface of 2 new front disc brake bush dust boots.

(b) Install the 2 front disc brake bush dust boots to the front disc brake cylinder mounting LH.

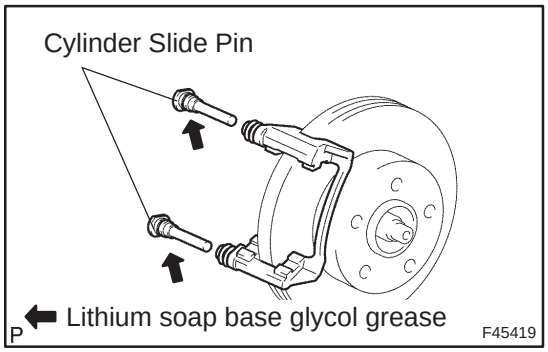

24. INSTALL FRONT DISC BRAKE CYLINDER SLIDE PIN KIT

(a) Apply lithium soap base glycol grease to the a new front disc brake cylinder slide bush.

(b) Install the front disc brake cylinder slide bush to the bottom side of the front disc brake cylinder slide pin (No.2).

(c) Apply lithium soap base glycol grease to the sliding part and the sealing surface of the 2 cylinder slide pins.

(d) Install the 2 front disc brake cylinder slide pins to the front disc brake cylinder mounting LH.

25. INSTALL FRONT DISC BRAKE PAD KIT

(a) Install the 2 front disc brake pad support plates (No.1) and 2 front disc brake pad support plates (No.2) to the front disc brake cylinder mounting LH.

(b) Install the disc brake pad kit front to the front disc brake cylinder mounting LH.

NOTICE:

There should be no oil or grease on the friction surfaces of the pads and the disc.

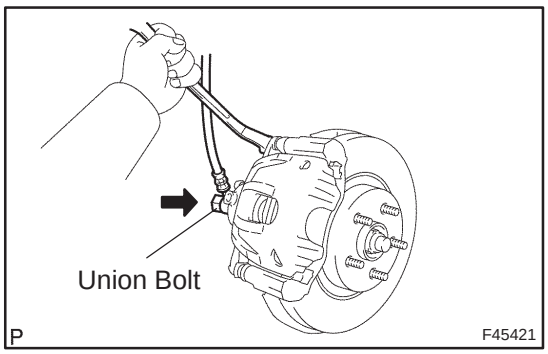

26. INSTALL DISC BRAKE CYLINDER ASSY LH

(a) Install the disc brake cylinder assy LH with the 2 bolts.
Torque: 30 N·m (306 kgf·cm, 22 ft·lbf)

(b) Install a new gasket and flexible hose with the union bolt.
Torque: 29 N·m (296 kgf·cm, 21 ft·lbf)

HINT:

Install the flexible hose lock securely in the lock hole in the disc brake cylinder assy LH.

27. FILL RESERVOIR WITH BRAKE FLUID (See page 32–4)

28. BLEED MASTER CYLINDER (See page 32–4)

(a) w/o VSC:
SST 09023–00100

(b) w/ VSC:
SST 09023–38400

29. BLEED BRAKE LINE (See page 32–4)

30. CHECK FLUID LEVEL IN RESERVOIR (See page 32–4)

31. CHECK BRAKE FLUID LEAKAGE

32. INSTALL FRONT WHEEL
Torque: 103 N·m (1,050 kgf·cm, 76 ft·lbf)

REAR DISC BRAKE

COMPONENTS

320GE–03

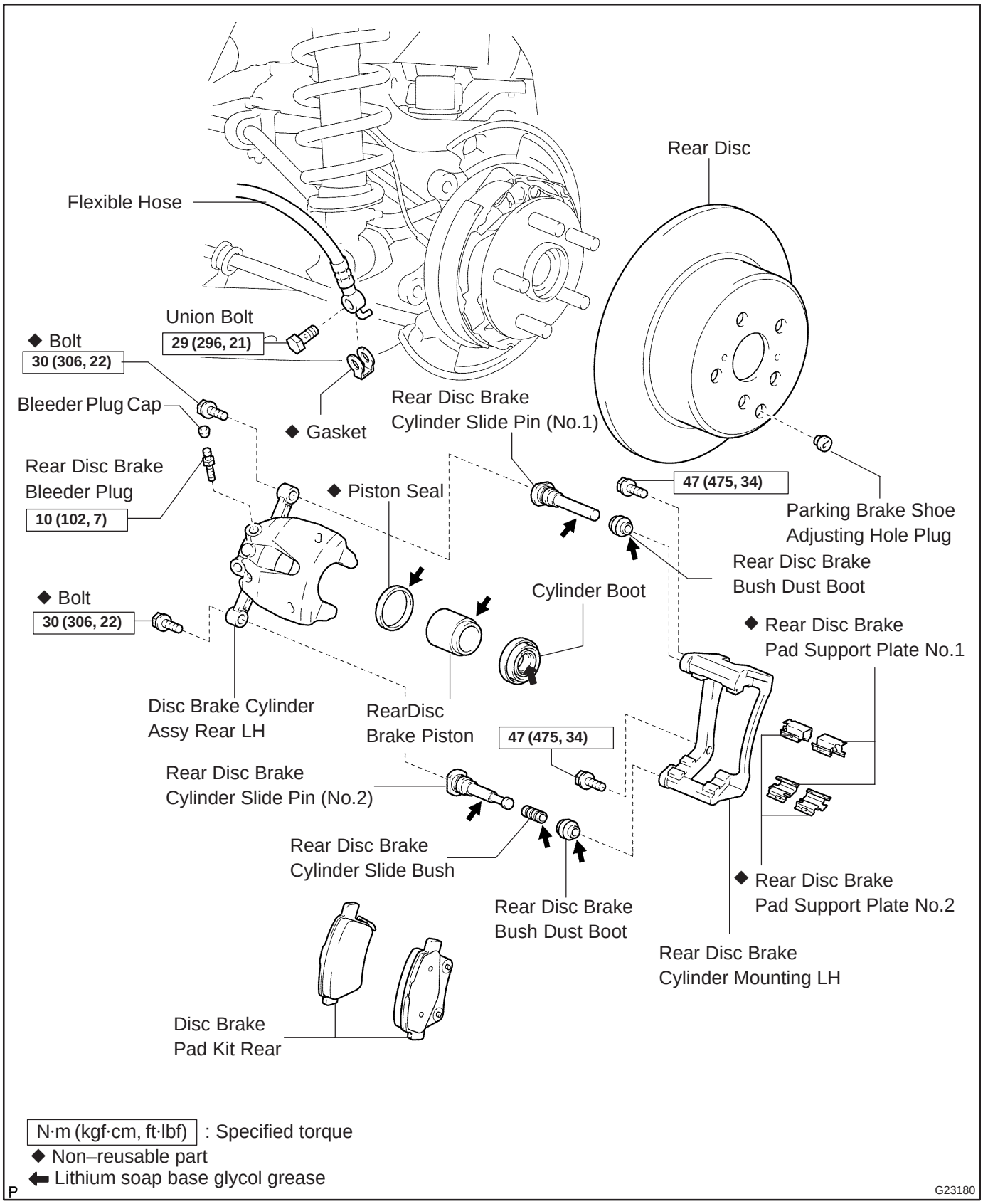

320W0–01

OVERHAUL

HINT:

Overhaul the RH side by using the same procedures as those for the LH side.

1. REMOVE REAR WHEEL

2. DRAIN BRAKE FLUID

NOTICE:

Wash the brake fluid off immediately if it adheres to any painted surface.

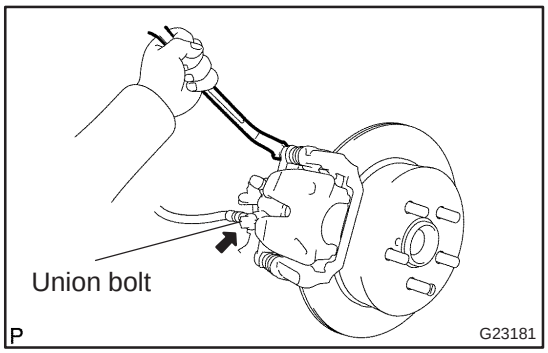

3. REMOVE DISC BRAKE CYLINDER ASSY REAR LH

(a) Remove the union bolt and gasket from the brake cylinder assy rear LH, then disconnect the flexible hose from the disc brake cylinder assy rear LH.

(b) Hold the rear disc brake cylinder slide pin and remove the 2 bolts.

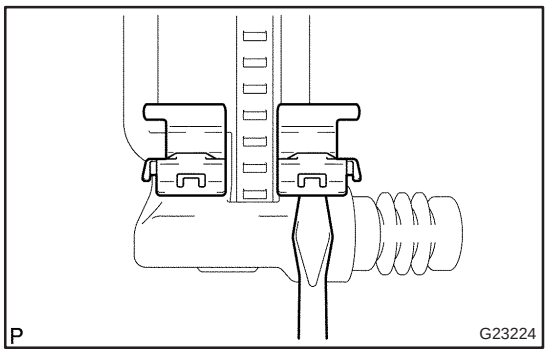

4. REMOVE REAR DISC BRAKE PAD KIT

(a) Remove the disc brake pad kit rear.

(b) Remove the 2 rear disc brake pad support plates No.1 and 2 rear disc brake pad support plates No.2 from the rear disc brake cylinder mounting LH.

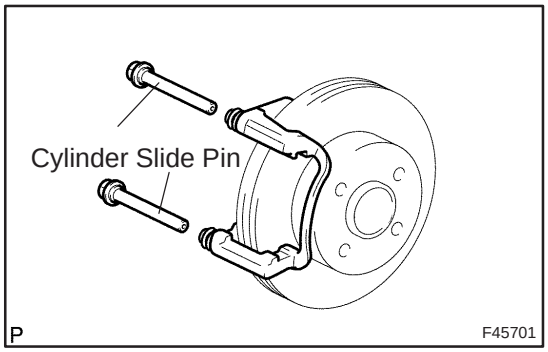

5. REMOVE REAR DISC BRAKE CYLINDER SLIDE PIN KIT

(a) Remove the rear disc brake cylinder slide pin (No.1) and rear disc brake cylinder slide pin (No.2) from the disc brake cylinder mounting LH.

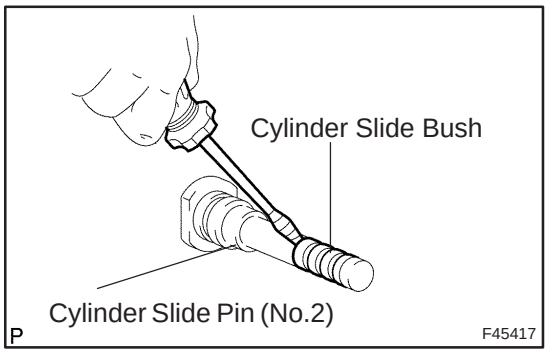

(b) Remove the rear disc brake cylinder slide bush from the bottom side of the rear disc brake cylinder slide pin (No.2).

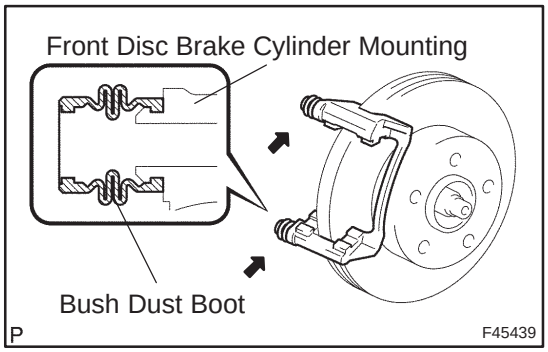

6. REMOVE REAR DISC BRAKE BUSH DUST BOOT

(a) Remove the 2 rear disc brake bush dust boots from the rear disc brake cylinder mounting LH.

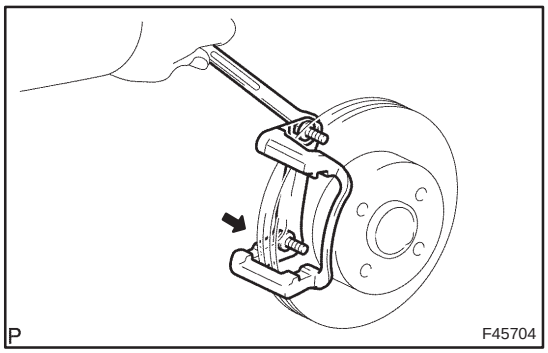

7. REMOVE REAR DISC BRAKE CYLINDER MOUNTING LH

(a) Remove the 2 bolts and rear disc brake cylinder mounting LH.

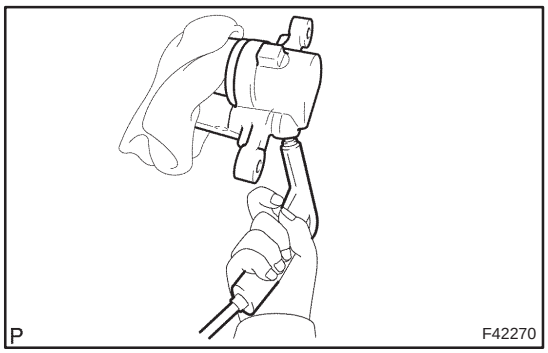

8. REMOVE REAR DISC BRAKE PISTON

(a) Place a shop rug between the rear disc brake piston and the disc brake cylinder assy rear LH.

(b) Use compressed air to remove the rear disc brake piston from the disc brake cylinder assy rear LH.

CAUTION:

Do not place your fingers in front of the piston when using compressed air.

NOTICE:

Do not spatter the brake fluid.

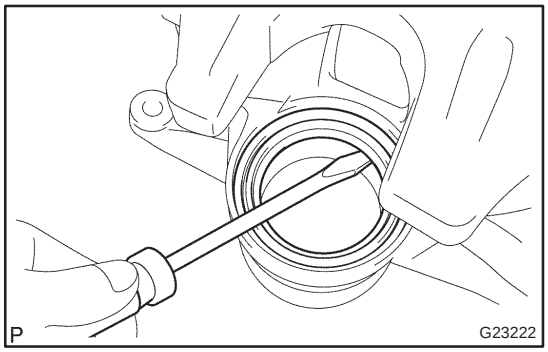

9. REMOVE CYLINDER BOOT

(a) Using a screwdriver, remove the cylinder boot.

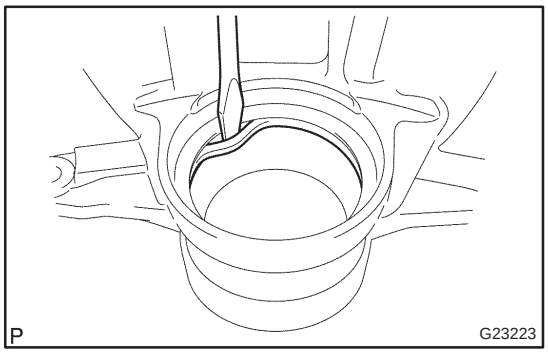

10. REMOVE PISTON SEAL

(a) Using a screwdriver, remove the piston seal.

NOTICE:

Do not damage the inner cylinder and cylinder groove.

11. REMOVE REAR DISC BRAKE BLEEDER PLUG

(a) Remove the bleeder plug cap and rear disc brake bleeder plug from the disc brake cylinder assy raer LH.

12. INSPECT BRAKE CYLINDER AND PISTON

(a) Check the cylinder bore and piston for rust or scoring.

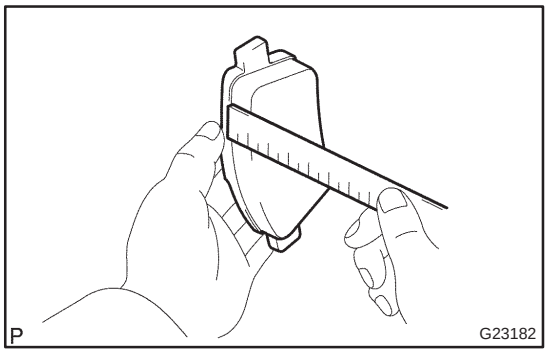

13. INSPECT REAR DISC BRAKE PAD KIT

(a) Using a ruler, measure the disc brake pad lining thickness.

Standard thickness: 10.0 mm (0.394 in.)
Minimum thickness: 2.0 mm (0.079 in.)

(b) Inspect the 2 rear disc brake pad support plates No.1 and 2 rear disc brake pad support plates No.2. Make sure that they have sufficient rebound, no deformation cracks or wear, and have had all rust, dirt and foreign particles cleaned off.

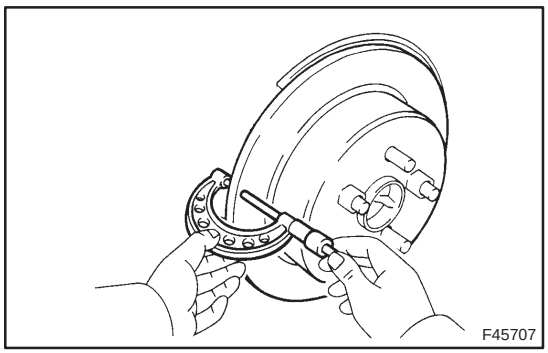

14. INSPECT DISC THICKNESS

(a) Using a micrometer, measure the rear disc thickness.

Standard thickness: 10.0 mm (0.394 in.)
Minimum thickness: 9.0 mm (0.354 in.)

15. REMOVE PARKING BRAKE SHOE ADJUSTING HOLE PLUG

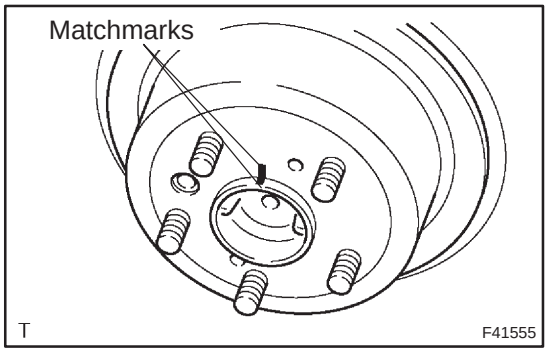

16. REMOVE REAR DISC

(a) Place matchmarks on the rear disc and the axle hub.

(b) Remove the rear disc.

17. INSTALL REAR DISC

(a) Aligning the matchmarks, install the rear disc.

HINT:

Select the installation position where the rear disc has the minimum runout.

18. INSTALL PARKING BRAKE SHOE ADJUSTING HOLE PLUG

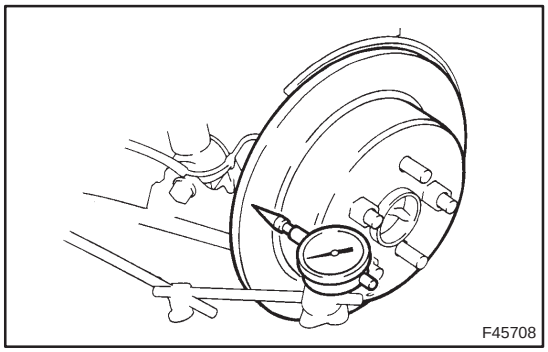

19. INSPECT DISC RUNOUT

(a) Temporarily fasten the rear disc with the hub nuts.
Torque: 103 N·m (1,050 kgf·cm, 76 ft·lbf)

(b) Using a dial indicator, measure the disc runout 10 mm (0.39 in.) away from the outer edge of the rear disc.
Maximum disc runout: 0.15 mm (0.0059 in.)

(c) If the disc runout is maximum value or greater, check the bearing play in the axial direction and check for the axle hub runout (See page 30–2). If the bearing play and axle hub runout are normal, adjust the disc runout or grind it on a ”On–car” brake lathe.

20. TEMPORARILY TIGHTEN REAR DISC BRAKE BLEEDER PLUG

(a) Temporarily install the rear disc brake bleeder plug to the disc brake cylinder assy rear LH.

21. INSTALL PISTON SEAL

(a) Apply the lithium soap base glycol grease to a new piston seal.

(b) Install the piston seal to the disc brake cylinder assy rear LH.

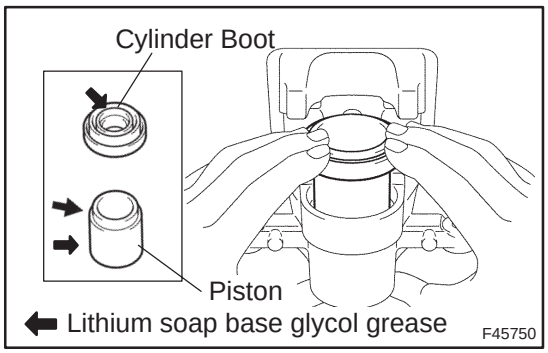

22. INSTALL REAR DISC BRAKE PISTON

(a) Apply lithium soap base glycol grease to the rear disc brake piston and a new cylinder boot.

(b) Install the cylinder boot to the rear disc brake piston.

(c) Install the piston to the disc brake cylinder assy LH.

NOTICE:
Do not install the piston forcibly in the disc brake cylinder.

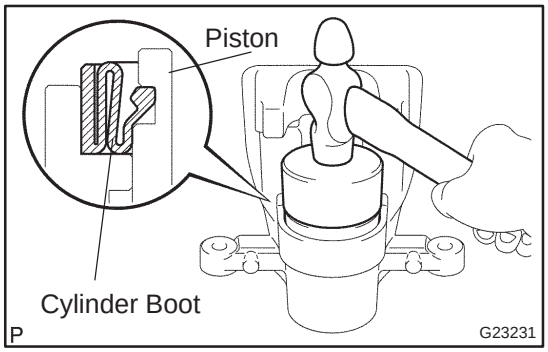

23. INSTALL CYLINDER BOOT

(a) Using SST and a hammer, install the cylinder boot to the disc brake cylinder assy rear LH.
SST 09710–06051

NOTICE:
Do not damage the cylinder boot.

HINT:
Install the boot securely to the disc brake cylinder rear LH.

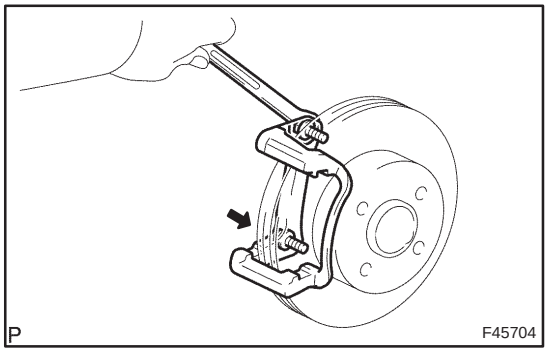

24. INSTALL REAR DISC BRAKE CYLINDER MOUNTING LH

(a) Install the rear disc brake cylinder mounting LH with the 2 bolts.
Torque: 47 N·m (475 kgf·cm, 34 ft·lbf)

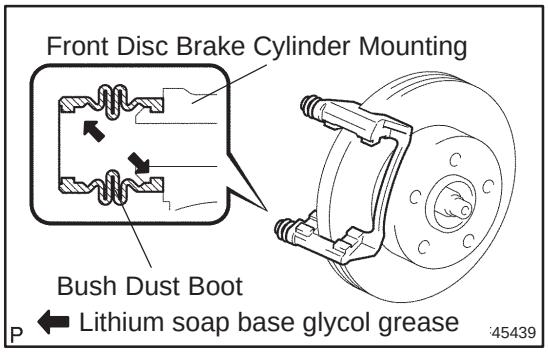

25. INSTALL REAR DISC BRAKE BUSH DUST BOOT

(a) Apply lithium soap base glycol grease to the sealing surface of 2 new bush dust boots.

(b) Install the 2 bush dust boots to the rear disc brake cylinder mounting LH.

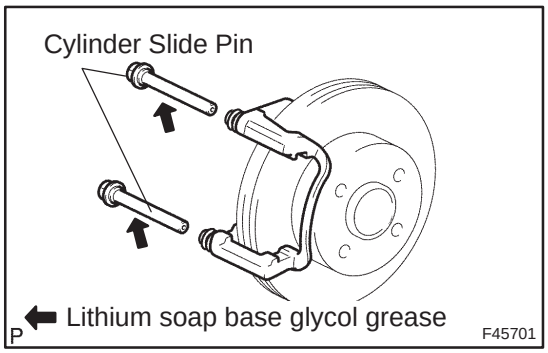

26. INSTALL REAR DISC BRAKE CYLINDER SLIDE PIN KIT

(a) Apply lithium soap base glycol grease to sealing surface of a new cylinder slide bush.

(b) Install the rear disc brake cylinder slide bush to the bottom side of the rear disc brake cylinder slide pin (No.2).

(c) Apply lithium soap base glycol grease to the sliding part and the sealing surface of the 2 rear disc brake cylinder slide pins.

(d) Install the rear disc brake cylinder slide pin (No.1) and rear disc brake cylinder slide pin (No.2) to the rear disc brake cylinder mounting LH.

27. INSTALL REAR DISC BRAKE PAD KIT

(a) Install the 2 rear disc brake pad support plates No.1 and 2 rear disc brake pad support plate No.2 to the rear disc brake cylinder mounting LH.

(b) Install the disc brake pad kit rear to the disc brake cylinder mounting LH.

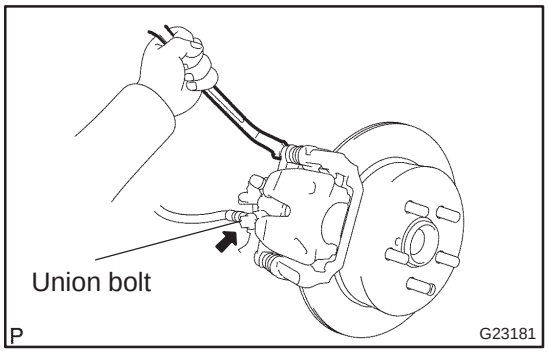

28. INSTALL DISC BRAKE CYLINDER ASSY REAR LH

(a) Install the disc brake cylinder assy rear LH with the 2 bolts.
Torque: 30 N·m (306 kgf·cm, 22 ft·lbf)

(b) Install a new gasket and flexible hose with the union bolt.
Torque: 29 N·m (296 kgf·cm, 21 ft·lbf)

HINT:
Install the flexible hose lock securely in to the lock hole in the disc brake cylinder assy rear LH.

29. FILL RESERVOIR WITH BRAKE FLUID (See page 32–4)

30. BLEED MASTER CYLINDER (See page 32–4)

(a) w/o VSC:
SST 09023–00100

(b) w/ VSC:
SST 09023–38400

31. BLEED BRAKE LINE (See page 32–4)

32. CHECK FLUID LEVEL IN RESERVOIR (See page 32–4)

33. CHECK BRAKE FLUID LEAKAGE

34. INSTALL REAR WHEEL

Torque: 103 N·m (1,050 kgf·cm, 76 ft·lbf)

BRAKE ACTUATOR ASSY (W/O VSC)

320VY–01

ON–VEHICLE INSPECTION

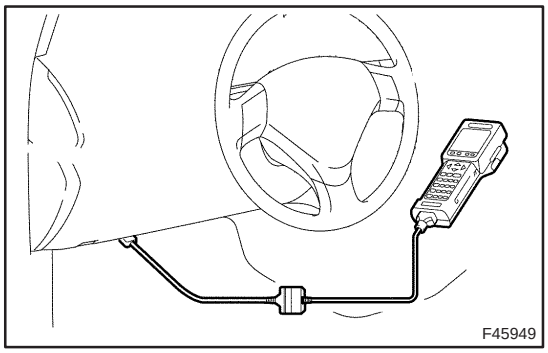

1. CONNECT HAND–HELD TESTER:

(a) Connect the hand–held tester to the DLC3.

(b) Start the engine and run at idle.

(c) Select the ACTIVE TEST mode on the hand–held tester.

HINT:

Please refer to the hand–held tester operator's manual for further details.

2. INSPECT ACTUATOR MOTOR OPERATION

(a) With the motor relay on, check the actuator motor operation noise.

(b) Turn the motor relay off.

(c) Depress the brake pedal and hold it for about 15 seconds. Check that the brake pedal cannot be depressed.

(d) With the motor relay on, check that the pedal does not pulsate.

NOTICE:

Do not keep a motor relay tvrned on for more than 5 seconds continuously. When operating it continuously, set an interval more than 20 seconds.

(e) Turn the motor relay off and release the brake pedal.

3. INSPECT RIGHT FRONT WHEEL OPERATION

NOTICE:

Never turn on a solenoid in a manner described below.

(a) With the brake pedal depressed, perform the following operations.

(b) Turn the SFRH and SFRR solenoid on simultaneously, and check that the pedal cannot be depressed.

NOTICE:

Do not keep a solenoids tvrned on for more than 5 seconds continuously. When operating it continuously, set an interval more than 20 seconds.

(c) Turn the SFRH and SFRR solenoid off simultaneously, and check that the pedal can be depressed.

(d) Turn the motor relay on, and check that the pedal returns.

NOTICE:

Do not keep a motor relay tvrned on for more than 5 seconds continuously. When operating it continuously, set an interval more than 20 seconds.

(e) Turn the motor relay off and release the brake pedal.

4. INSPECT OTHER WHEEL OPERATION

(a) Using the same procedure, check the solenoids of the other wheels.

HINT:

Left front wheel: SFLH, SFLR

Right rear wheel: SRRH, SRRR

Left rear wheel: SRLH, SRLR

REPLACEMENT

1. DRAIN BRAKE FLUID

NOTICE:

Wash the brake fluid off immediately if it adheres to any painted surfaces.

2. REMOVE FRONT WHEEL RH

3. REMOVE FRONT FENDER LINER RH

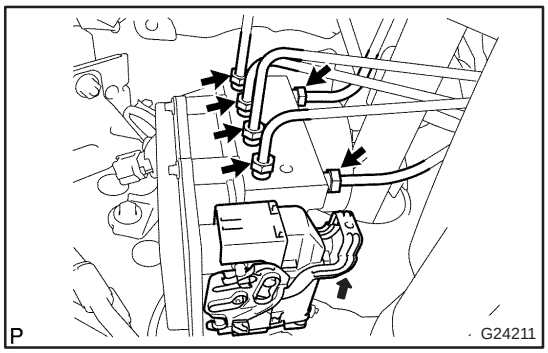

4. REMOVE BRAKE ACTUATOR WITH BRACKET

(a) Release the latch of the brake actuator connector to disconnect the connector.

(b) Using SST, disconnect the brake tubes from the brake actuator.

SST 09023–00100

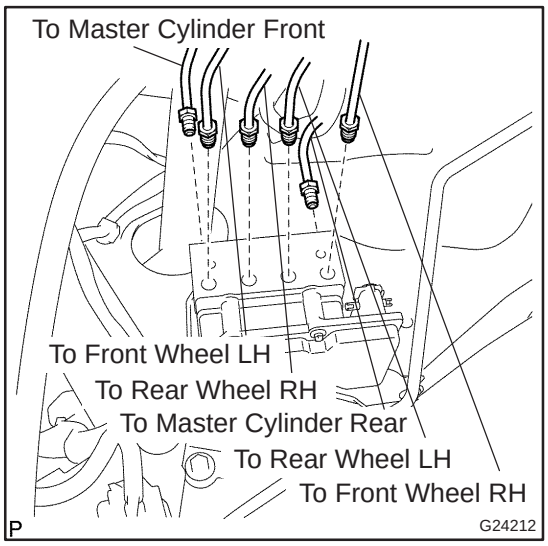

(c) Use tags or make a memo to identify the place to reconnect.

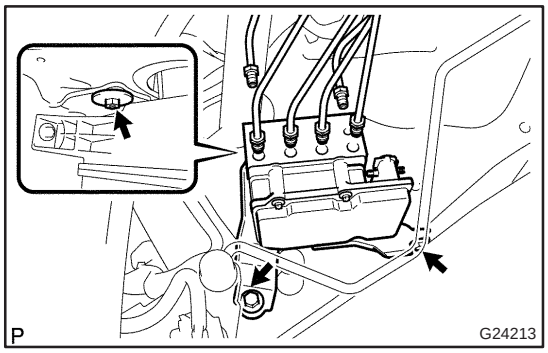

(d) Remove the nut, 2 bolts and brake actuator with bracket.

5. REMOVE BRAKE ACTUATOR ASSY

(a) Remove the 2 nuts and brake actuator from the brake acutuator bracket.

6. REMOVE SKID CONTROL ECU

(a) Disconnect the connector from the skid control ECU.

(b) Using a torx driver (T20), remove the 4 screws and the skid control ECU from the brake actuator.

7. INSTALL SKID CONTROL ECU

(a) Install the skid control ECU and 4 screws with a torx driver (T20).

(b) Connect the connector to the skid control ECU.

8. INSTALL BRAKE ACTUATOR ASSY

(a) Install the brake actuator with the 2 nuts to the brake actuator bracket.

Torque: 7.0 N·m (71 kgf·cm, 62 in.·lbf)

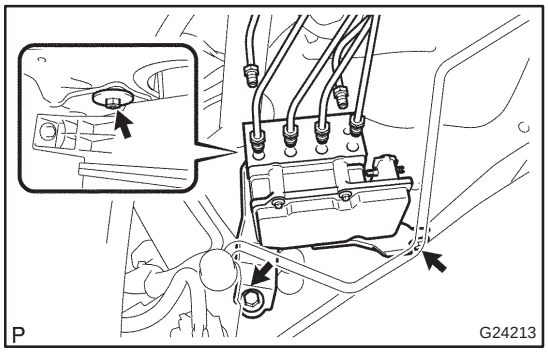

9. INSTALL BRAKE ACTUATOR WITH BRACKET

(a) Install the brake actuator with bracket with the nut and 2 bolts.

Torque: 19 N·m (194 kgf·cm, 14 ft·lbf)

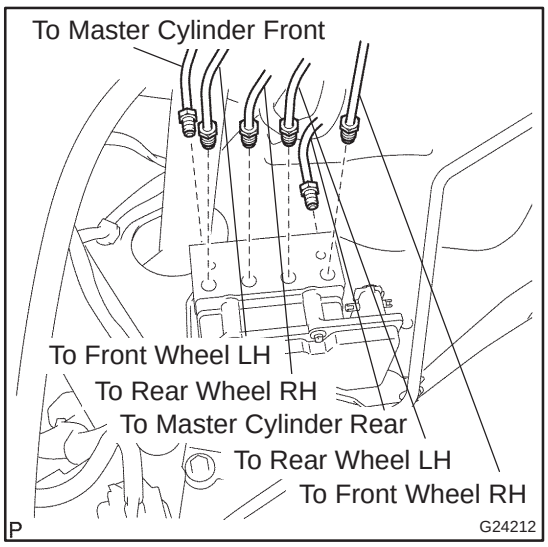

(b) Using SST, connect each brake line to the correct position of the brake actuator, as shown in the illustration.

SST 09023–00100

Torque:

A: 15 N·m (155 kgf·cm, 11 ft·lbf)

(c) Connect the brake actuator connector.

10. INSTALL FRONT FENDER LINER RH

11. INSTALL FRONT WHEEL RH

Torque: 103 N·m (1,050 kgf·cm, 76 ft·lbf)

12. FILL RESERVOIR WITH BRAKE FLUID (See page 32–4)

13. BLEED MASTER CYLINDER (See page 32–4)

SST 09023–00100

14. BLEED BRAKE LINE (See page 32–4)

15. CHECK FLUID LEVEL IN RESERVOIR (See page 32–4)

16. CHECK BRAKE FLUID LEAKAGE

17. CHECK BRAKE ACTUATOR WITH HAND–HELD TESTER (See page 05–699)

BRAKE ACTUATOR ASSY (W/ VSC)

320VW–01

ON–VEHICLE INSPECTION

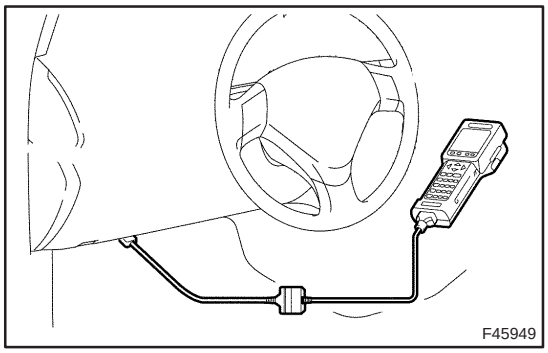

1. CONNECT HAND–HELD TESTER:

(a) Connect the hand–held tester to the DLC3.

(b) Start the engine and run at idle.

(c) Select the ACTIVE TEST mode on the hand–held tester.

HINT:

Please refer to the hand–held tester operator's manual for further details.

2. INSPECT ACTUATOR MOTOR OPERATION

(a) With the motor relay on, check the actuator motor operation noise.

(b) Turn the motor relay off.

(c) Depress the brake pedal and hold it for about 15 seconds. Check that the brake pedal cannot be depressed.

(d) With the motor relay on, check that the pedal does not pulsate.

NOTICE:

Do not keep a motor relay tvrned on for more than 5 seconds continuously. When operating it continuously, set an interval more than 20 seconds.

(e) Turn the motor relay off and release the brake pedal.

3. INSPECT RIGHT FRONT WHEEL OPERATION

NOTICE:

Never turn on a solenoid in a manner described below.

(a) With the brake pedal depressed, perform the following operations.

(b) Turn the SFRH and SFRR solenoid on simultaneously, and check that the pedal cannot be depressed.

NOTICE:

Do not keep a solenoids tvrned on for more than 5 seconds continuously. When operating it continuously, set an interval more than 20 seconds.

(c) Turn the SFRH and SFRR solenoid off simultaneously, and check that the pedal can be depressed.

(d) Turn the motor relay on, and check that the pedal returns.

NOTICE:

Do not keep a motor relay tvrned on for more than 5 seconds continuously. When operating it continuously, set an interval more than 20 seconds.

(e) Turn the motor relay off and release the brake pedal.

4. INSPECT OTHER WHEEL OPERATION

(a) Using the same procedure, check the solenoids of the other wheels.

HINT:

Left front wheel: SFLH, SFLR

Right rear wheel: SRRH, SRRR

Left rear wheel: SRLH, SRLR

REPLACEMENT

1. DRAIN BRAKE FLUID

NOTICE:

Wash the brake fluid off immediately if it adheres to any painted surfaces.

2. REMOVE FRONT WHEEL RH

3. REMOVE FRONT FENDER LINER RH

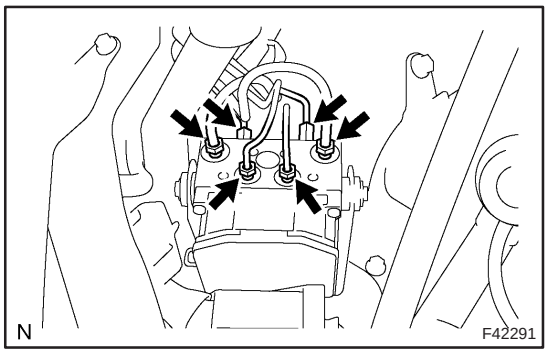

4. REMOVE BRAKE ACTUATOR WITH BRACKET

(a) Release the latch of the brake actuator connector to disconnect the connector.

(b) Disconnect oil presser sensor connector.

(c) Using SST, disconnect the brake tubes from the brake actuator.
SST 09023–00100, 09023–38400

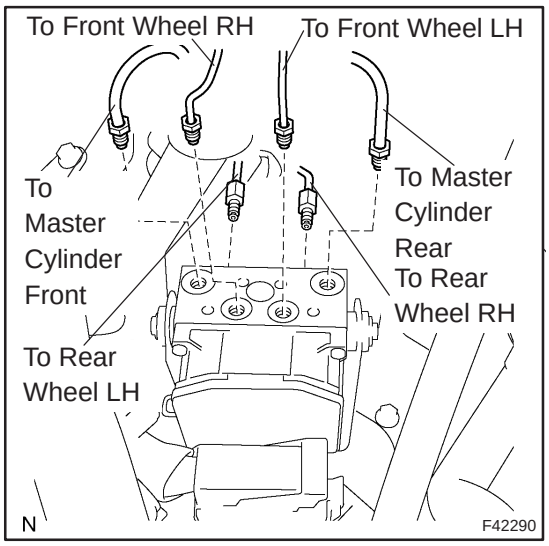

(d) Use tags or make a memo to identify the place to reconnect.

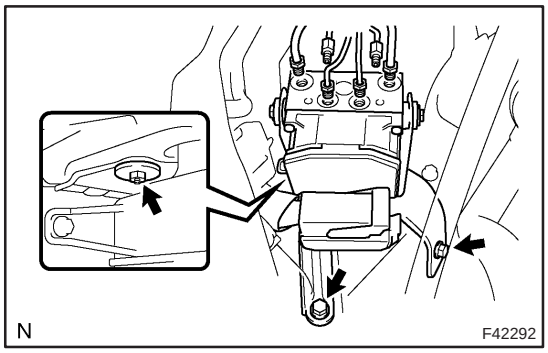

(e) Remove the nut, 2 bolts and brake actuator with bracket.

5. REMOVE BRAKE ACTUATOR ASSY

(a) Remove the 3 bolts and brake actuator from the brake acutuator bracket.

6. REMOVE OIL PRESSURE SENSOR

7. REMOVE SKID CONTROL ECU

(a) Disconnect the connector from the skid control ECU.

(b) Using a torx driver (T20), remove the 6 screws and the skid control ECU from the brake actuator.

8. INSTALL SKID CONTROL ECU

(a) Install the skid control ECU and 6 screws with a torx driver (T20).

(b) Connect the connector to the skid control ECU.

9. INSTALL OIL PRESSURE SENSOR

10. INSTALL BRAKE ACTUATOR ASSY

(a) Install the brake actuator with 3 the bolts to the brake actuator bracket.

Torque: 4.7 N·m (48 kgf·cm, 42 in.·lbf)

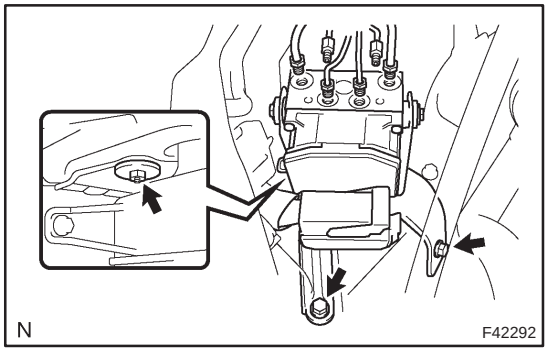

11. INSTALL BRAKE ACTUATOR WITH BRACKET

(a) Install the brake actuator with bracket with the nut and 2 bolts.

Torque: 19 N·m (194 kgf·cm, 14 ft·lbf)

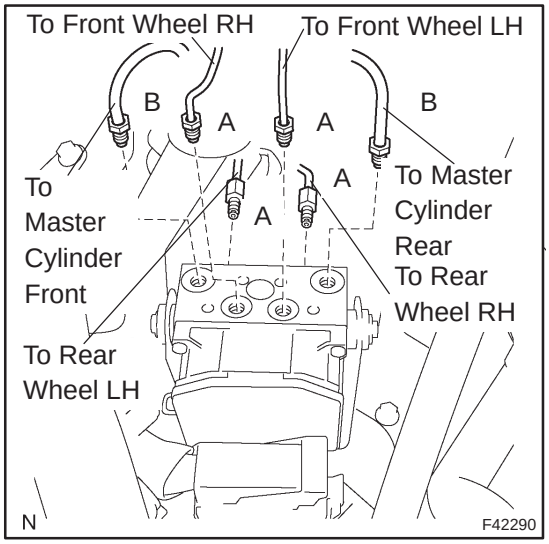

(b) Using SST, connect each brake line to the correct position of the brake actuator, as shown in the illustration.

SST 09023–00100, 09023–38400

Torque:

A: 15 N·m (155 kgf·cm, 11 ft·lbf)

B: 29 N·m (296 kgf·cm, 21 ft·lbf)

(c) Connect the oil presser sensor connector.

(d) Connect the brake actuator connector.

12. INSTALL FRONT FENDER LINER RH

13. INSTALL FRONT WHEEL RH

Torque: 103 N·m (1,050 kgf·cm, 76 ft·lbf)

14. FILL RESERVOIR WITH BRAKE FLUID (See page 32–4)

15. BLEED MASTER CYLINDER (See page 32–4)

SST 09023–38400

16. BLEED BRAKE LINE (See page 32–4)

17. CHECK FLUID LEVEL IN RESERVOIR (See page 32–4)

18. CHECK BRAKE FLUID LEAKAGE

19. CHECK BRAKE ACTUATOR WITH HAND–HELD TESTER (See page 05–756)

SPEED SENSOR FRONT LH

3201P–05

REPLACEMENT

HINT:

Replace the RH side by using the same procedures as those for the LH side.

1. REMOVE FRONT WHEEL

2. REMOVE FRONT FENDER LINER LH

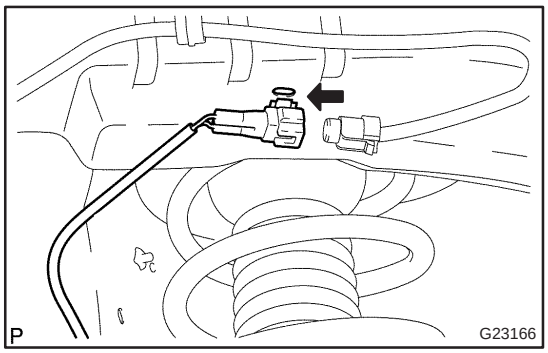

3. REMOVE SPEED SENSOR FRONT LH

(a) Disconnect the resin clip and speed sensor wire harness from the body and clamp.

(b) Disconnect the speed sensor connector.

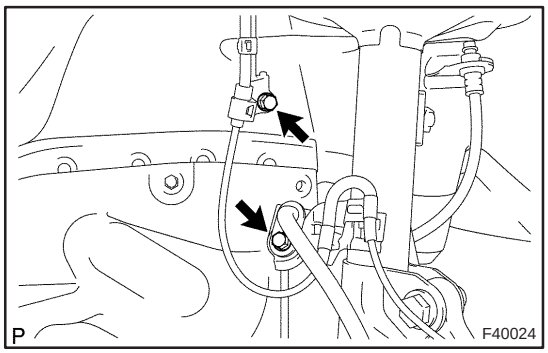

(c) Remove the 2 clamp bolts holding the sensor harness from the body and shock absorber.

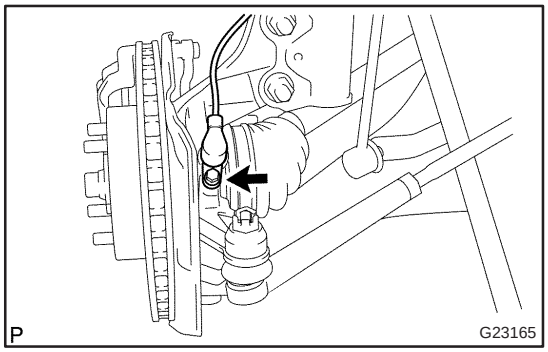

(d) Remove the bolt and separate the speed sensor front LH.

NOTICE:

Prevent foeingn matter from attaching to the sensor tip.

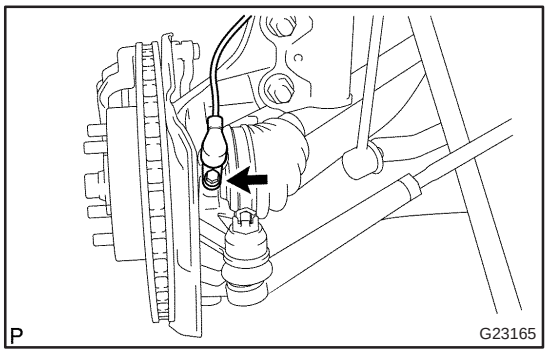

4. INSTALL SPEED SENSOR FRONT LH

(a) Install the speed sensor front LH with the bolt.

Torque: 8.0 N·m (82 kgf·cm, 71 in.·lbf)

NOTICE:

Prevent foeingn matter from attaching to the sensor tip.

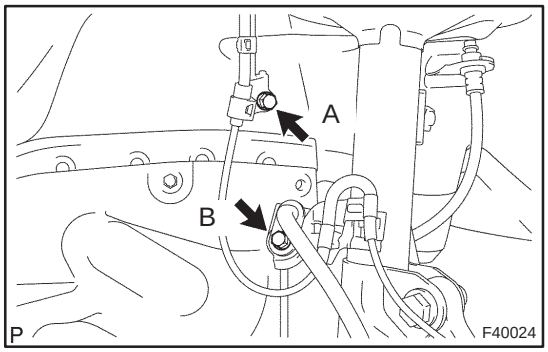

(b) Install the sensor harness clamp with the 2 bolts ”A” and ”B” to the body and shock absorber.
Torque:
Bolt A: 8.0 N·m (82 kgf·cm, 71 in.·lbf)
Bolt B: 29 N·m (296 kgf·cm, 21 ft·lbf)

NOTICE:
Do not twist the sensor wire when installing the sensor.

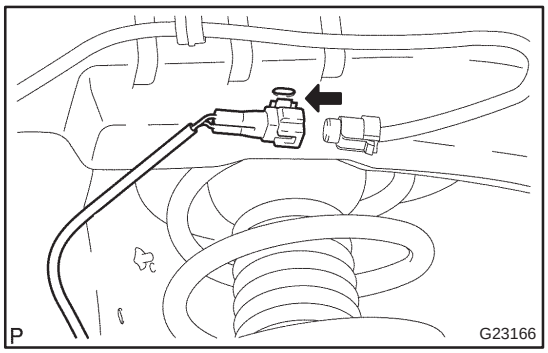

(c) Connect the speed sensor connector.
(d) Connect the resin clip and speed sensor wire harness to the body and clamp.

5. INSTALL FRONT FENDER LINER LH
6. INSTALL FRONT WHEEL
Torque: 103 N·m (1,050 kgf·cm, 76 ft·lbf)
7. CHECK ABS SPEED SENSOR SIGNAL (See page 05–699)

SKID CONTROL SENSOR

320VV–01

REPLACEMENT

HINT:

Replace the RH side by using the same procedures as those for the LH side.

1. REMOVE REAR WHEEL

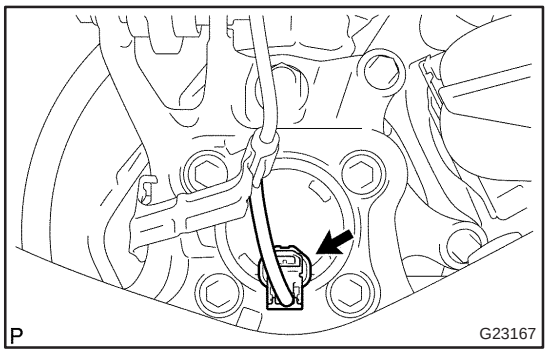

2. DISCONNECT SKID CONTROL SENSOR WIRE

(a) Disconnect the connector from the skid control sensor.

3. REMOVE REAR DISC BRAKE CALIPER ASSY LH

(a) Remove the 2 bolts and rear brake caliper assy LH.

4. REMOVE REAR DISC

(a) place matchmarks on the rear disc and the axle hub.

(b) Remove the rear disc.

5. REMOVE REAR AXLE HUB & BEARING ASSY LH (See page 30–31)

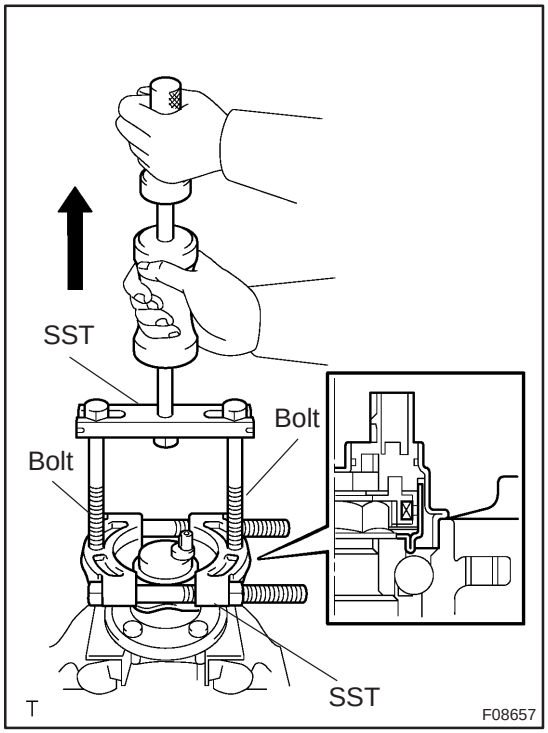

6. REMOVE SKID CONTROL SENSOR

(a) Mount the rear axle hub in a soft jaw vise.

NOTICE:

Replace the axle hub assembly if it is dropped or receives a strong shock.

(b) Using a pin punch and hammer, drive out the 2 pins and remove the 2 attachments from SST.

(c) Using SST and 2 bolts (Diameter: 12 mm, pitch: 1.5 mm), remove the skid control sensor from the rear axle hub.

SST 09520–00031 (09520–00040), 09521–00020, 09950–00020

NOTICE:

- **If the sensor rotor is damaged, replace the axle hub assembly.**
- **Do not scratch the contacting surface of the axle hub and speed sensor.**

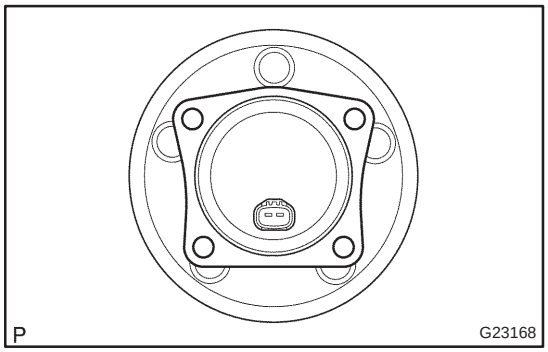

7. INSTALL SKID CONTROL SENSOR

(a) Clean the contacting surface of the axle hub and that of a new skid control sensor.

NOTICE:

Make sure the sensor rotor is clean.

(b) Place the skid control sensor on the axle hub so that the connector comes into the most downward position under the on vehicle condition.

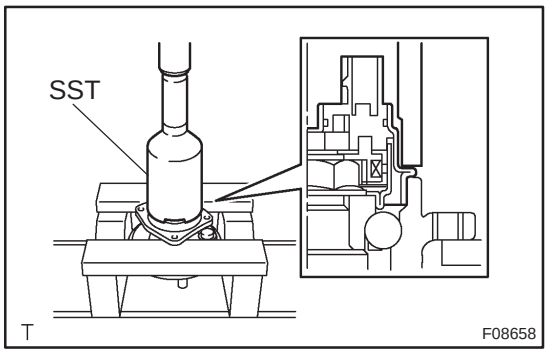

(c) Using SST and a press, install the skid control sensor to the axle hub.

NOTICE:

- **Do not tap the skid control sensor directly with a hammer.**
- **Check that there is no foreign matter on the skid control sensor detection portion.**
- **Press in the skid control sensor straight and slowly.**

SST 09830–36010, 09950–60010 (09951–00650), 09950–70010 (09951–07100)

8. INSTALL REAR AXLE HUB & BEARING ASSY LH (See page 30–31)

9. INSTALL REAR BRAKE DRUM SUB–ASSY

(a) Aligning the matchmarks, install the rear disc.

10. INSTALL REAR DISC BRAKE CALIPER ASSY LH

(a) Install the rear disc brake caliper assy LH with the 2 bolts.

Torque: 47 N·m (475 kgf·cm, 34 ft·lbf)

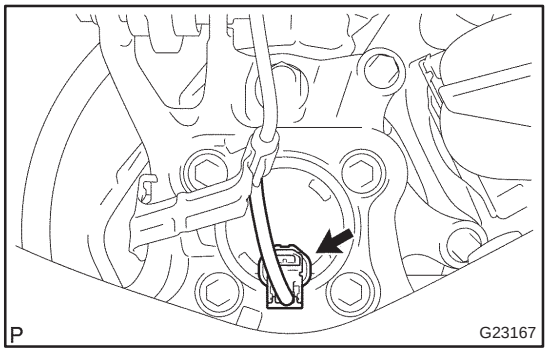

11. CONNECT SKID CONTROL SENSOR WIRE

(a) Connect the connector from the skid control sensor.

12. INSTALL REAR WHEEL

Torque: 103 N·m (1,050 kgf·cm, 76 ft·lbf)

13. INSPECT AND ADJUST REAR WHEEL ALIGNMENT (See page 27–4)

14. CHECK ABS SPEED SENSOR SIGNAL (See page 05–699)

YAWRATE SENSOR

320GM–02

REPLACEMENT

NOTICE:

- **Don’t use the dropped or damaged yawrate sensor.**
- **Free from the foreing matters between yawrate sensor braket and body.**
- **Make sure the sensor direction.**

1. REMOVE FRONT SEAT ASSEMBLY LH (See page 72–11 or 72–16)

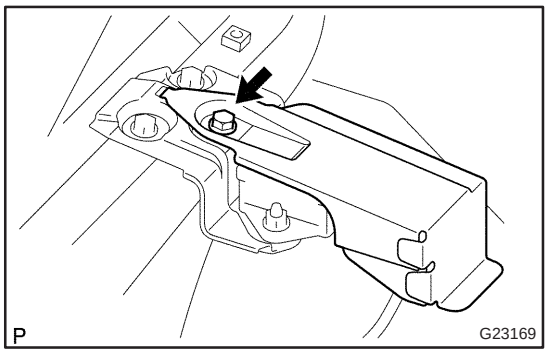

2. REMOVE YAWRATE SENSOR BRACKET

(a) Remove the bolt and upper part of the yawrate sensor bracket.

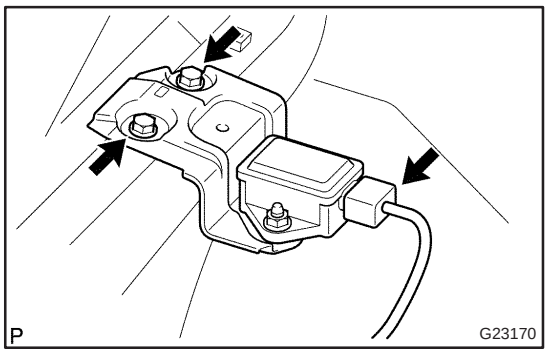

3. REMOVE YAWRATE SENSOR

(a) Disconnect the yawrate sensor connector from the yawrate sensor.

(b) Remove the 2 bolts and the yawrate sensor with the yawrate sensor bracket from the body.

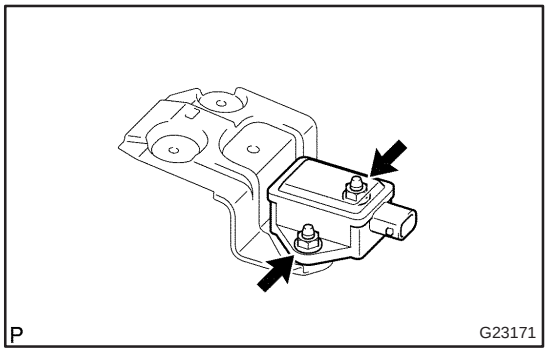

(c) Remove the 2 nuts and yawrate sensor from the yawrate sensor bracket.

4. INSTALL YAWRATE SENSOR

(a) Install the 2 nuts and yawrate sensor to the yawrate sensor bracket.
Torque: 6 N·m (61 ft·lbf, 53 in.·lbf)

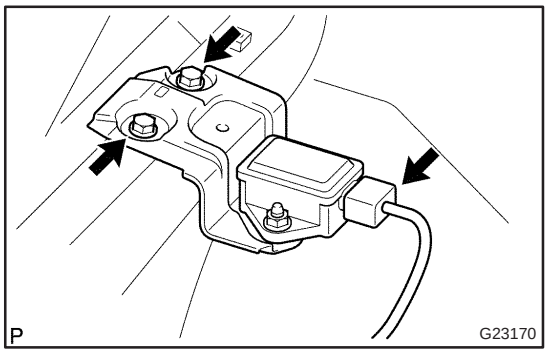

(b) Install the 2 bolts and the yawrate sensor with the yawrate sensor bracket to the body.
Torque: 21 N·m (214 ft·lbf, 15 ft·lbf)

(c) Connect the yawrate sensor connector to the yawrate sensor.

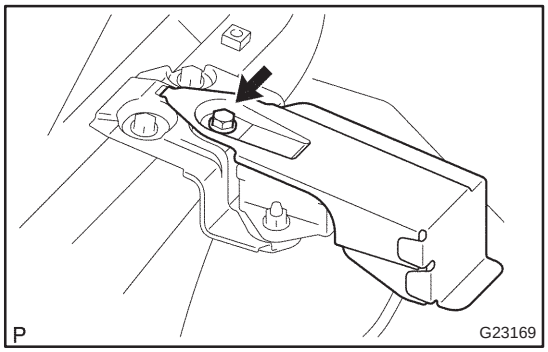

5. INSTALL YAWRATE SENSOR BRACKET

(a) Install the bolt and upper part og the yawrate sensor bracket.
Torque: 21 N·m (214 ft·lbf, 15 ft·lbf)

6. INSTALL FRONT SEAT ASSEMBLY LH (See page 72–11 or 72–16)

7. PERFORM YAWRATE SENSOR ZERO POINT CALIBRATION (See page 05–756)

STEERING SENSOR

320G5–02

REPLACEMENT

1. PRECAUTION (See page 60–1)
2. REMOVE PLACE FRONT WHEELS FACING STRAIGHT AHEAD
3. DISCONNECT BATTERY NEGATIVE TERMINAL (See page 60–1)
4. REMOVE HORN BUTTON ASSY (See page 60–17)
5. REMOVE STEERING WHEEL ASSY (See page 50–9)
6. REMOVE STEERING COLUMN COVER LWR (See page 50–9)
7. REMOVE STEERING COLUMN COVER W/INSTRUMENT CLUSTER FINISH PANEL ASSY (See page 50–9)
8. REMOVE STEERING COLUMN ASSY(See page 50–9)
9. REMOVE STEERING INTERMEDIATE SHAFT ASSY NO.2 (See page 50–9)

10. REMOVE STEERING SENSOR

(a) Place the steering column assy on the V–blocks and rubber stick.

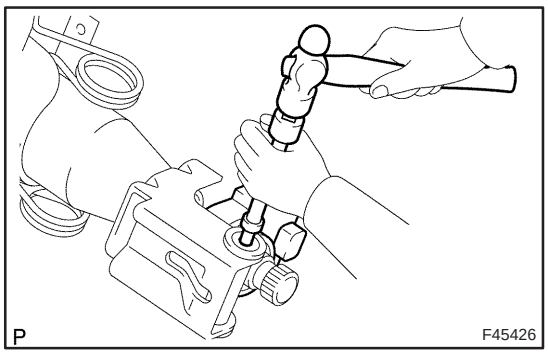

(b) Using a extension bar and hammer, remove the steering column bracket spacer and 2 tilt steering support collar No.1 from the steering column assy.

NOTICE:

- **During this procedure, do not apply the strong shock to the steering sensor.**
- **Do not apply any oil or grease on the pin.**

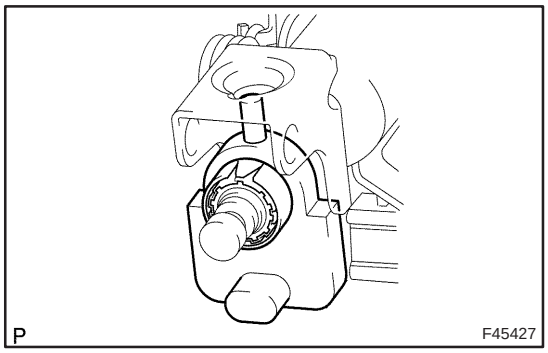

(c) Using a screwdriver, remove the bush from the steering column assy.

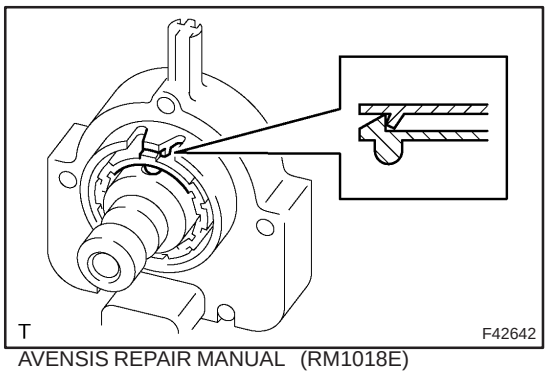

(d) Disconnect the pick on the steering sensor and steering sensor adapter, then remove the steering sensor from the column shaft.

(e) Remove the steering sensor adapter.

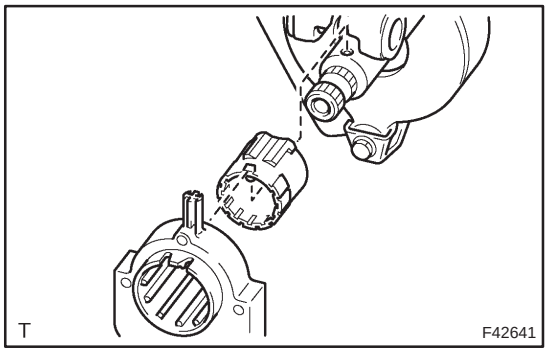

11. INSTALL STEERING SENSOR

(a) Install the steering sensor adapter to the column shaft.

HINT:

At that time, the projection of the steering sensor adapter should be fit in the hole on the steering column shaft.

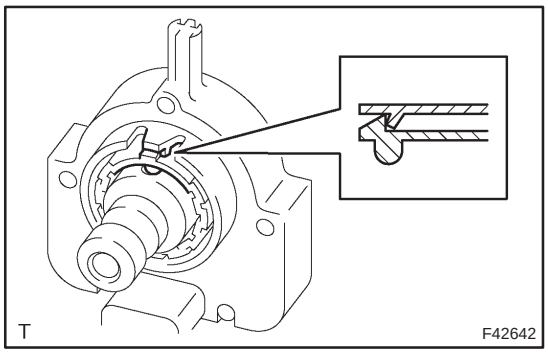

(b) Install the steering sensor to the column shaft.

HINT:

- At that time, the pick of the steering sensor should be fit to the pick of the steering sensor adapter.
- After installation, make sure the steering sensor is fixed securely in the steering sensor adapter.

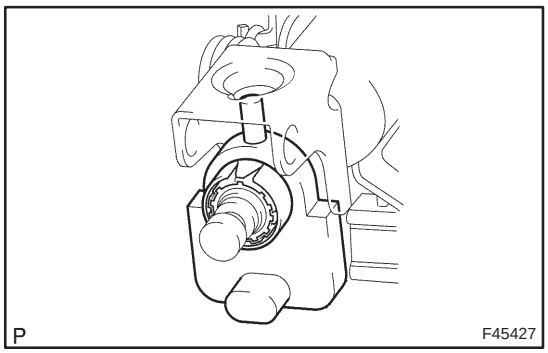

(c) Place the steering column assy on the V–blocks and rubber stick.

(d) Install the 2 new tilt steering support collar No.1 to the steering column assy.

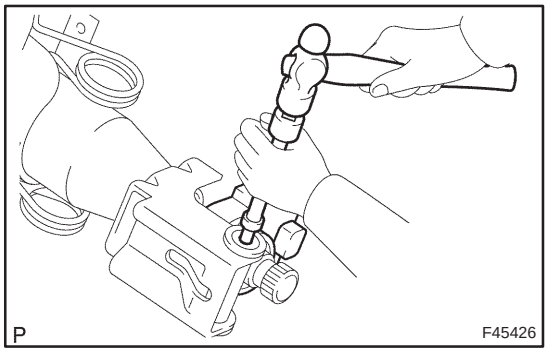

(e) Using a extension bar and hammer, install the steering column bracket spacer to the steering column assy.

NOTICE:

- **During this procedure, do not apply the strong shock to the steering sensor.**
- **Do not apply any grease or oil on the pin.**

12. INSTALL STEERING INTERMEDIATE SHAFT ASSY NO.2 (See page 50–9)
13. INSTALL STEERING COLUMN ASSY (See page 50–9)
14. INSTALL SPIRAL CABLE SUB–ASSY (See page 60–26)
15. INSTALL STEERING COLUMN COVER W/INSTRUMENT CLUSTER FINISH PANEL ASSY (See page 50–9)
16. INSTALL STEERING COLUMN COVER LWR (See page 50–9)
17. INSTALL STEERING WHEEL ASSY (See page 50–9)
18. INSPECT STEERING WHEEL CENTER POINT
19. INSTALL HORN BUTTON ASSY (See page 60–17)

20. CONNECT BATTERY NEGATIVE TERMINAL (See page 60–1)
21. INSPECT SRS WARNING LIGHT (See page 05–1184)
22. INSPECT ABS WARNING LIGHT AND VSC WARNING LIGHT (See page 05–756)

PARKING BRAKE SYSTEM

3300E–07

PROBLEM SYMPTOMS TABLE

Use the table below to help you find the cause of the problem. The numbers indicate the likelihood of the cause in the descending order. Check each parts in the order shown. Replace these parts as necessary.

Symptom	Suspect Area	See page
Brake drag	1. Parking brake lever travel (Out of adjustment)	33–2
	2. Parking brake wire (Sticking)	33–7 33–10
	3. Parking brake shoe clearance (Out of adjustment)	33–14
	4. Parking brake shoe lining (Cracked or distorted)	33–14
	5. Tension or return spring (Damaged)	33–14

3300F–07

ADJUSTMENT

1. REMOVE REAR WHEEL

2. ADJUST PARKING BRAKE SHOE CLEARANCE (See page 33–14)

3. INSTALL REAR WHEEL

Torque: 103 N·m (1,050 kgf·cm, 76 ft·lbf)

4. INSPECT PARKING BRAKE LEVER TRAVEL

(a) Pull the parking brake lever all the way up, and count the number of clicks.

Parking brake lever travel: 6 – 9 clicks at 196 N (20 kgf, 44.1 lbf)

5. ADJUST PARKING BRAKE LEVER TRAVEL

(a) Remove the console box assy RR.
(See page 71–11)

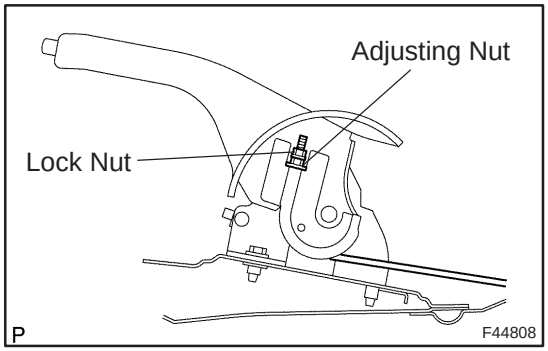

(b) Loosen the lock nut and turn the adjusting nut until the lever travel turns correct.

(c) Tighten the lock nut.

Torque: 5.0 N·m (51 kgf·cm, 44 in.·lbf)

(d) Install the console box assy RR.
(See page 71–11)

PARKING BRAKE LEVER SUB–ASSY

33068–03

COMPONENTS

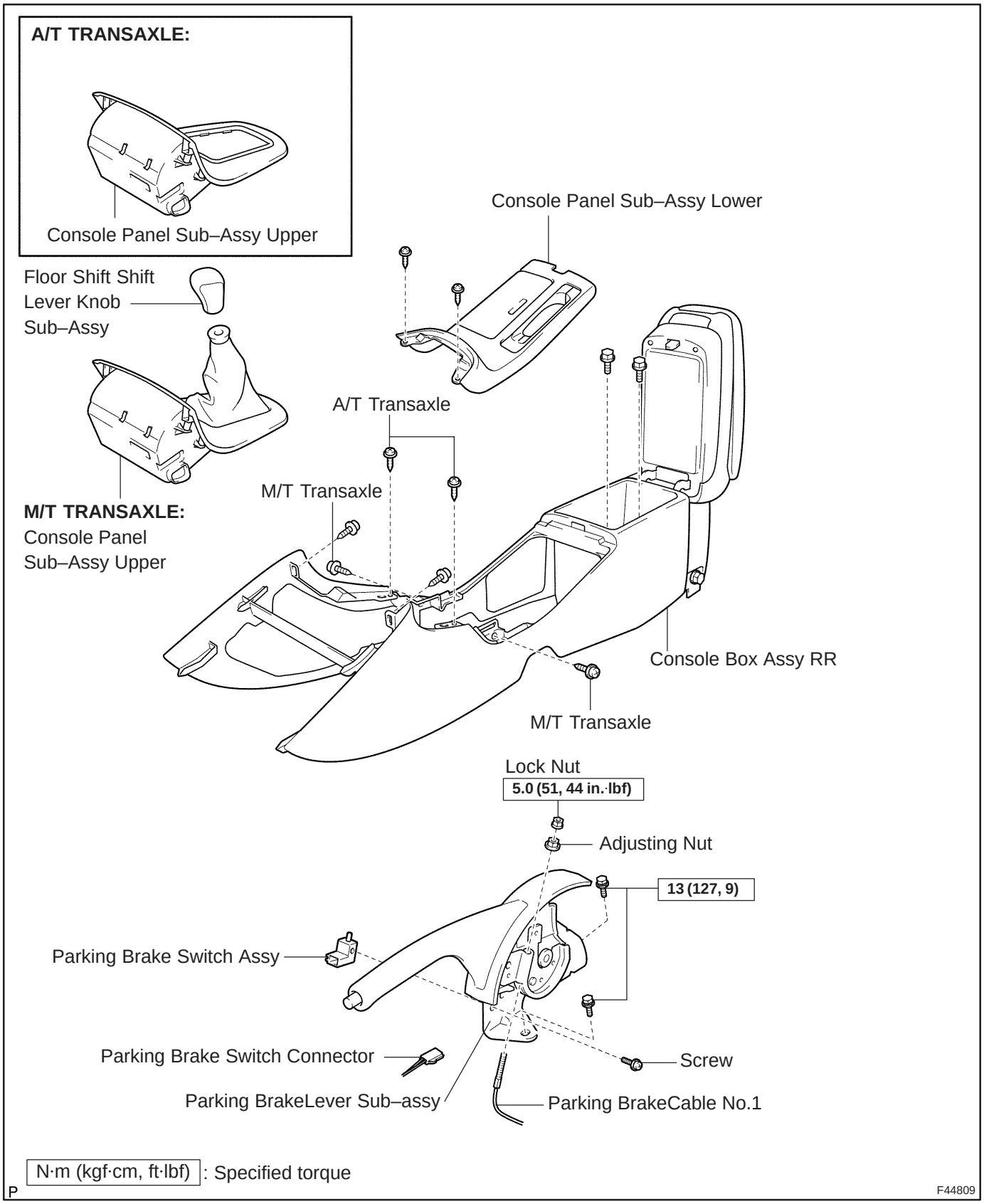

330C6–01

REPLACEMENT

1. REMOVE FLOOR SHIFT SHIFT LEVER KNOB SUB–ASSY (M/T TRANSAXLE) (See page 41–11)
2. REMOVE CONSOLE PANEL SUB–ASSY UPPER (See page 71–11)
3. REMOVE CONSOLE PANEL SUB–ASSY LOWER (See page 71–11)
4. REMOVE CONSOLE BOX ASSY RR (See page 71–11)

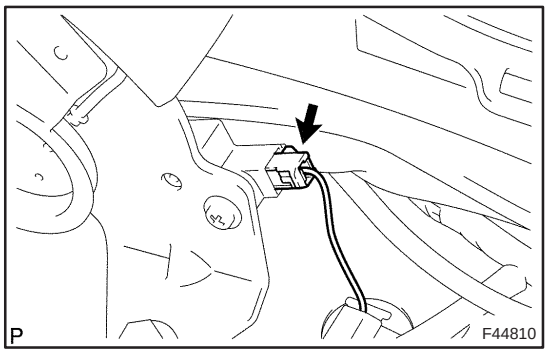

5. REMOVE PARKING BRAKE LEVER SUB–ASSY

(a) Disconnect the parking brake switch connector from the parking brake switch.

(b) Remove the lock nut and adjusting nut from the parking brake cable assy No.1.

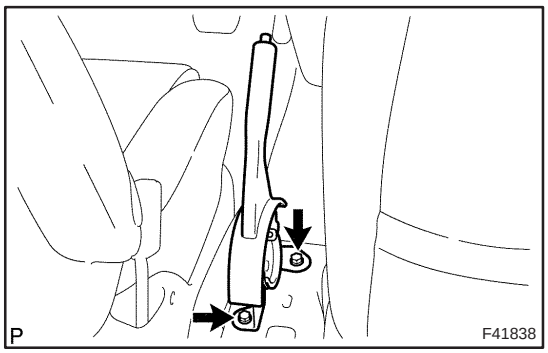

(c) Remove the 2 bolts.

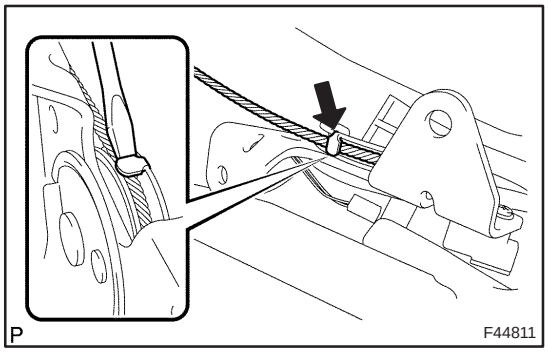

(d) Using a screwdriver, raise the pick on the parking brake lever, and remove the parking brake cable assy No.1 from the parking brake lever.

(e) Remove the parking brake lever from the body.

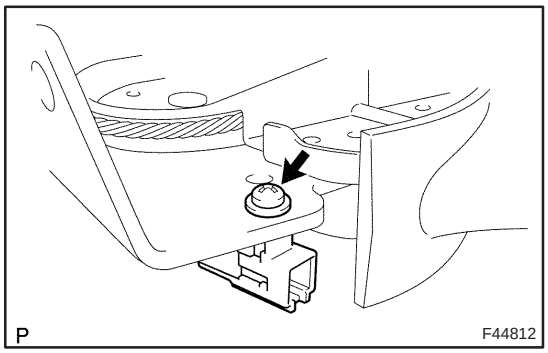

6. REMOVE PARKING BRAKE SWITCH ASSY

(a) Remove the screw and parking brake switch.

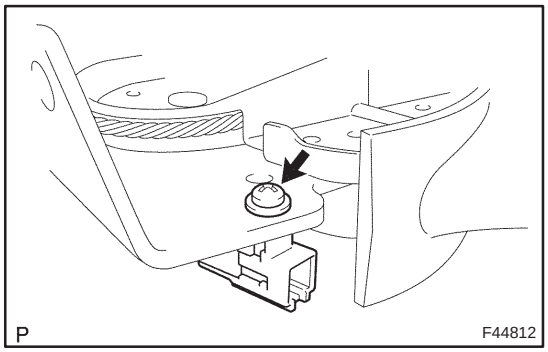

7. INSTALL PARKING BRAKE SWITCH ASSY

(a) Install the parking brake switch to the parking brake lever with the screw.

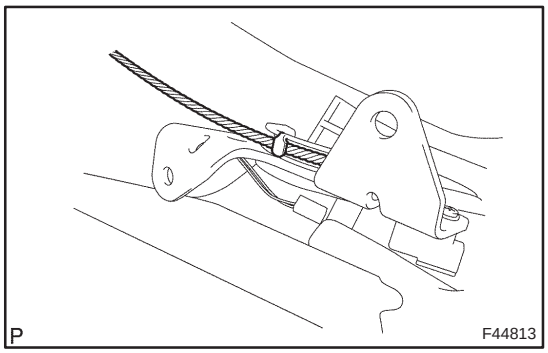

8. INSTALL PARKING BRAKE LEVER SUB–ASSY

(a) Install the parking brake cable assy No.1 to the parking brake lever, temporally tighten the adjusting nut and lock nut.

(b) Using a screwdriver, fix the parking brake cable No.1 to the pick.

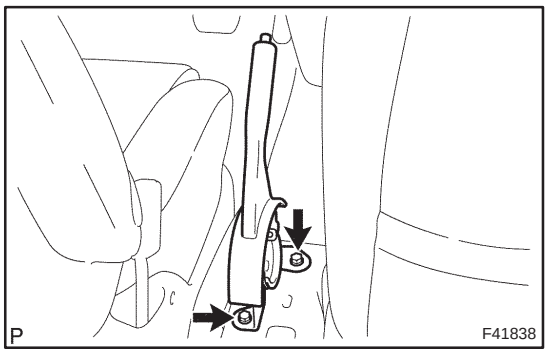

(c) Install the parking brake lever with the 2 bolts.
Torque: 13 N·m (127 kgf·cm, 9 ft·lbf)

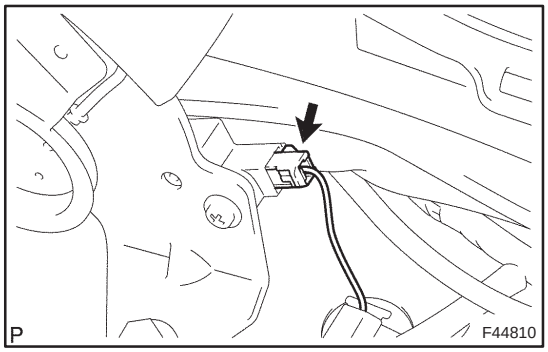

(d) Install the parking brake switch connector to the parking brake switch.

9. INSPECT PARKING BRAKE LEVER TRAVEL (See page 33–2)

10. ADJUST PARKING BRAKE LEVER TRAVEL (See page 33–2)

PARKING BRAKE CABLE ASSY NO.1

COMPONENTS

3306A–03

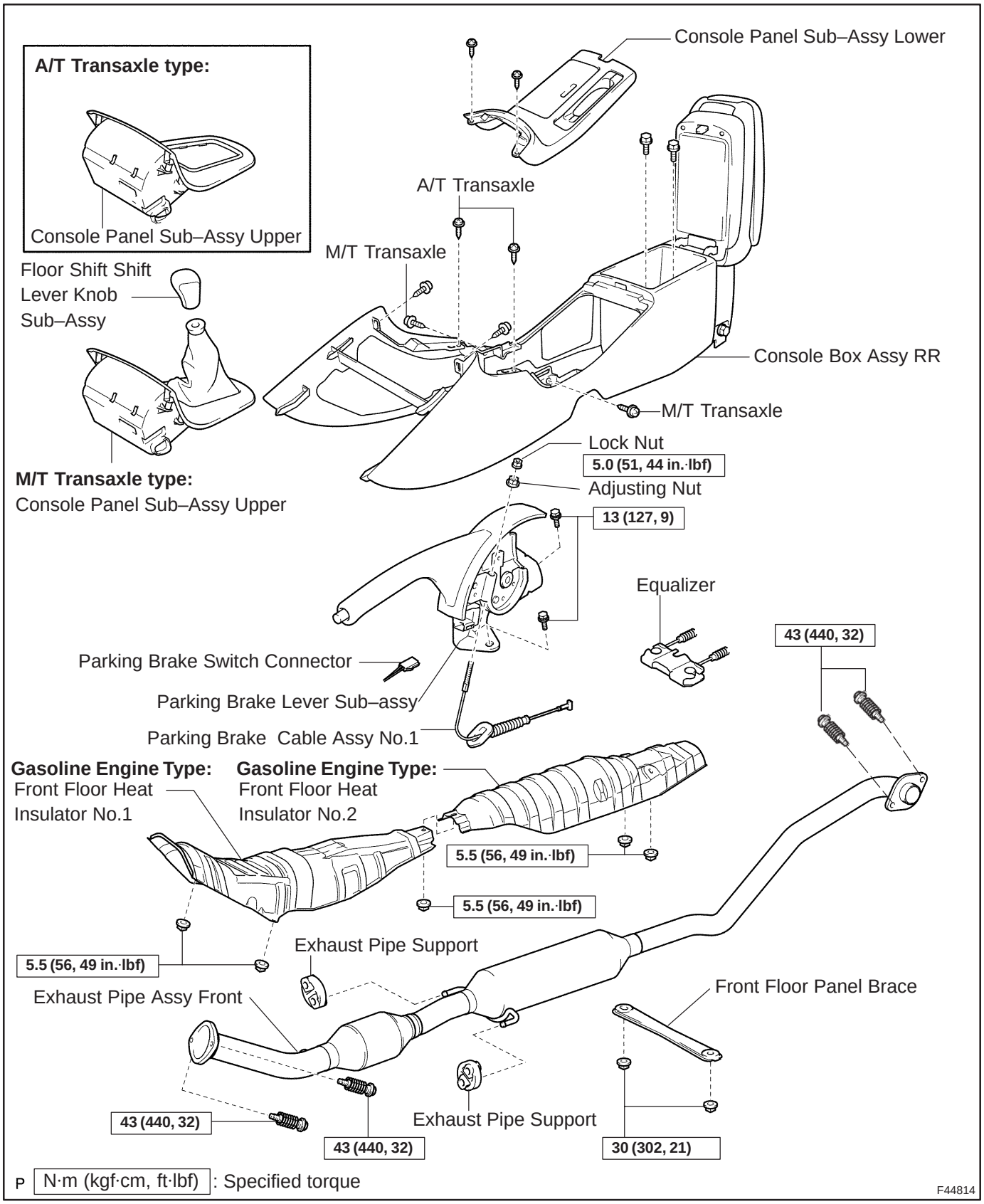

3306B–03

REPLACEMENT

1. REMOVE SHIFT LEVER KNOB SUB–ASSY (M/T TRANSAXLE) (See page 41–11)
2. REMOVE CONSOLE PANEL SUB–ASSY UPPER (See page 71–11)
3. REMOVE CONSOLE PANEL SUB–ASSY LOWER (See page 71–11)
4. REMOVE CONSOLE BOX ASSY RR (See page 71–11)
5. REMOVE PARKING BRAKE LEVER SUB–ASSY (See page 33–4)
6. REMOVE EXHAUST PIPE ASSY FRONT
   1ZZ–FE/3ZZ–FE ENGINE TYPE: See page 15–2
   1AZ–FE/1AZ–FSE ENGINE TYPE: See page 15–7

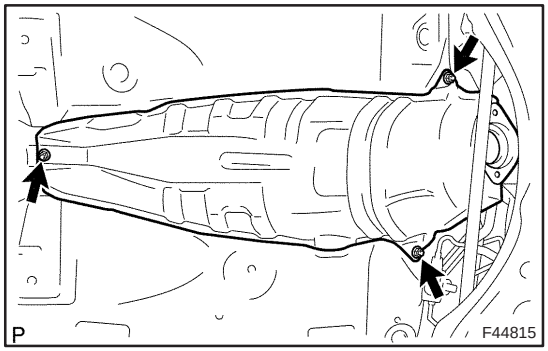

7. REMOVE FRONT FLOOR HEAT INSULATOR NO.1 (GASOLINE ENGINE TYPE)

(a) Remove the 3 nuts and front floor insulator No.1.

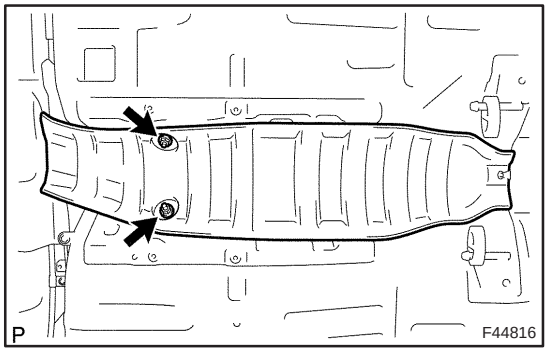

8. REMOVE FRONT FLOOR HEAT INSULATOR NO.2 (GASOLINE ENGINE TYPE)

(a) Remove the 2 nuts and front floor insulator No.2.

9. REMOVE PARKING BRAKE CABLE ASSY NO.1

(a) Disconnect the parking brake cable assy No.1 from the equalizer and remove the parking brake cable assy No.1.

10. INSTALL PARKING BRAKE CABLE ASSY NO.1

(a) Connect the parking brake cable assy No.1 to the equalizer and install the parking brake cable assy No.1.

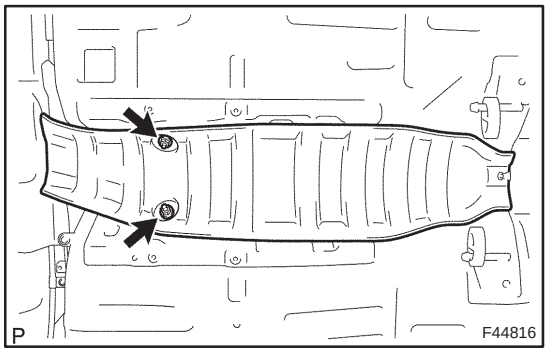

11. INSTALL FRONT FLOOR HEAT INSULATOR NO.2 (GASOLINE ENGINE TYPE)

(a) Install the front floor insulator No.2 with the 2 nuts.
Torque: 5.5 N·m (56 kgf·cm, 49 in.·lbf)

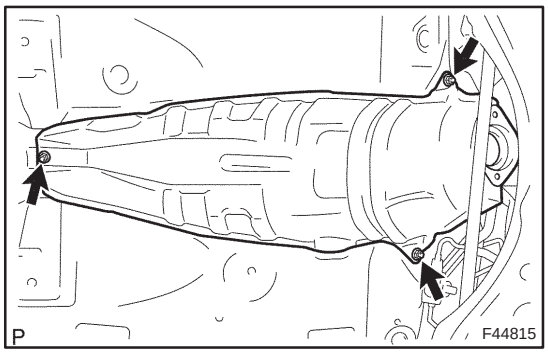

12. .INSTALL FRONT FLOOR HEAT INSULATOR NO.1 (GASOLINE ENGINE TYPE)

(a) Install the front floor insulator No.1 with the 3 nuts.
Torque: 5.5 N·m (56 kgf·cm, 49 in.·lbf)

13. INSTALL EXHAUST PIPE ASSY FRONT
1ZZ–FE/3ZZ–FE ENGINE TYPE: See page 15–2
1AZ–FE/1AZ–FSE ENGINE TYPE: See page 15–7

14. INSTALL PARKING BRAKE LEVER SUB–ASSY (See page 33–4)

15. INSPECT PARKING BRAKE LEVER TRAVEL (See page 33–2)

16. ADJUST PARKING BRAKE LEVER TRAVEL (See page 33–2)

PARKING BRAKE CABLE ASSY NO.3

3306C–05

COMPONENTS

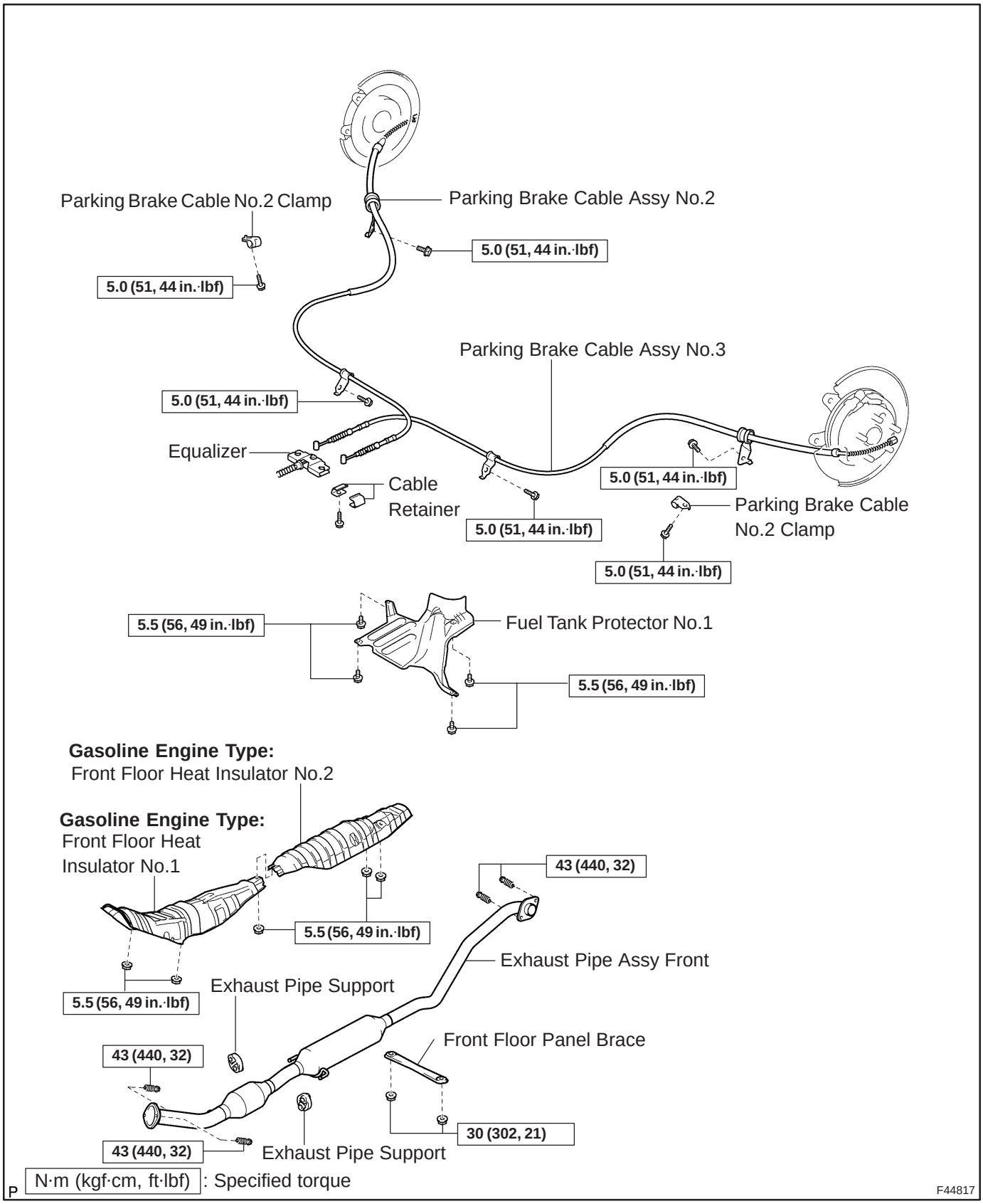

330C7–01

REPLACEMENT

HINT:

For parking brake cable assy No.2, perform the same procedure to the RH side.

1. **REMOVE REAR WHEEL**
2. **DISCONNECT REAR DISC BRAKE CALIPER ASSY LH (See page 30–31)**
3. **REMOVE REAR DISC(See page 33–14)**
4. **REMOVE PARKING BRAKE ADJUSTER KIT (See page 33–14)**
5. **REMOVE PARKING BRAKE SHOE ADJUSTING SCREW SET(See page 33–14)**
6. **REMOVE PARKING BRAKE SHOE KIT (See page 33–14)**
   SST 09718–00010

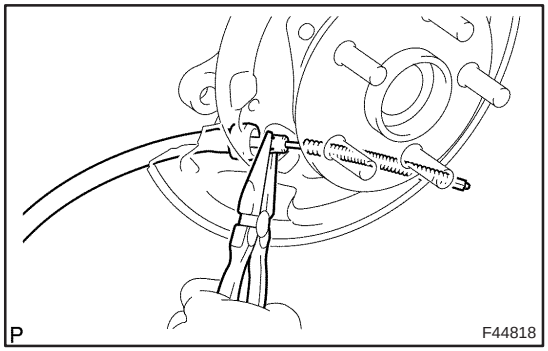

7. **DISCONNECT PARKING BRAKE CABLE ASSY NO.3**
   (a) Using needle–nose pliers, and disconnect the parking brake cable assy No.3 from the backing plate.

8. **REMOVE EXHAUST PIPE ASSY FRONT**
   1ZZ–FE/3ZZ–FE ENGINE TYPE: See page 15–2
   1AZ–FE/1AZ–FSE ENGINE TYPE: See page 15–7
9. **REMOVE FRONT FLOOR HEAT INSULATOR NO.1 (GASOLINE ENGINE TYPE) (See page 33–7)**
10. **REMOVE FRONT FLOOR HEAT INSULATOR NO.2 (GASOLINE ENGINE TYPE) (See page 33–7)**

11. **REMOVE PARKING BRAKE CABLE ASSY NO.3**
    (a) Remove the 3 nuts and fuel tank protector No.1 (When replacing parking brake cable assy No.2).
    (b) Remove the 4 bolts and cable retainer from the body.
    (c) Disconnect the parking brake cable assy No.3 from the equalizer, and remove the parking brake cable assy No.3.

12. INSTALL PARKING BRAKE CABLE ASSY NO.3

(a) Connect the parking brake cable assy No.3 to the equalizer.

(b) Install the parking brake cable assy No.3 with the 4 bolts.
Torque: 5.0 N·m (55 kgf·cm, 48 in.·lbf)

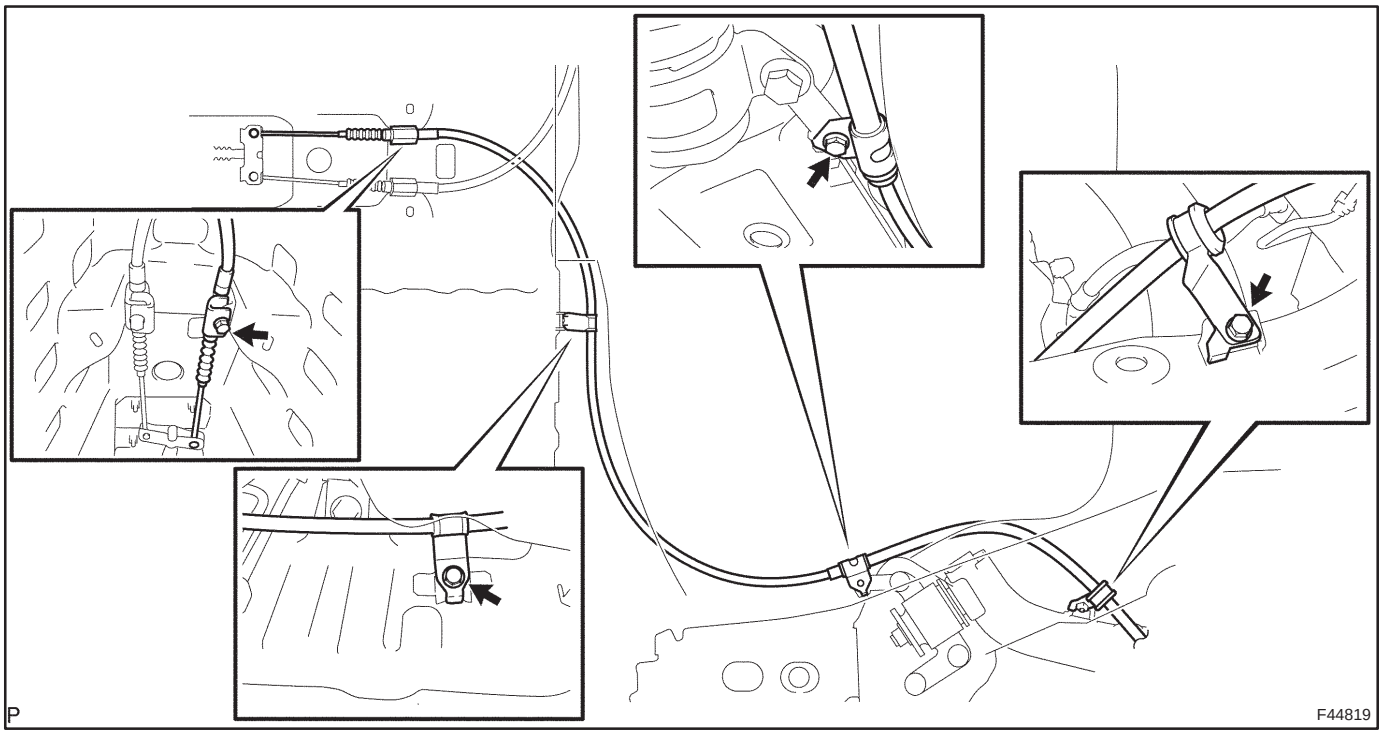

(c) Install the fuel tank protector No.1 and 3 nuts (When replacing parking brake cable assy No.2).
Torque: 5.5 N·m (56 kgf·cm, 49 in.·lbf)

13. INSTALL FRONT FLOOR HEAT INSULATOR NO.2 (GASOLINE ENGINE TYPE)
(See page 33–7)

14. INSTALL FRONT FLOOR HEAT INSULATOR NO.1 (GASOLINE ENGINE TYPE)
(See page 33–7)

15. INSTALL EXHAUST PIPE ASSY FRONT
1ZZ–FE/3ZZ–FE ENGINE TYPE: See page 15–2
1AZ–FE/1AZ–FSE ENGINE TYPE: See page 15–7

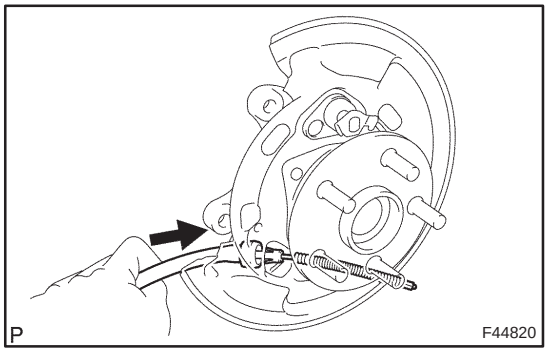

16. CONNECT PARKING BRAKE CABLE ASSY NO.3

(a) Connect the parking brake cable assy No.3 to the backing plate.

17. **APPLY HIGH TEMPERATURE GREASE (See page 33–14)**
18. **INSTALL PARKING BRAKE SHOE LEVER LH (See page 33–14)**
19. **INSTALL PARKING BRAKE SHOE KIT (See page 33–14)**
    SST 09718–00010
20. **INSTALL PARKING BRAKE SHOE ADJUSTING SCREW SET (See page 33–14)**
21. **INSTALL PARKING BRAKE ADJUSTER KIT (See page 33–14)**
22. **INSTALL REAR DISC**
23. **CONNECT REAR DISC BRAKE CALIPER ASSY LH(See page 30–31)**
24. **ADJUST PARKING BRAKE SHOE CLEARANCE(See page 33–14)**
25. **INSTALL REAR WHEEL**
    Torque: 103 N·m (1,050 kgf·cm, 76 ft·lbf)
26. **SETTLING PARKING BRAKE SHOES AND DISC (See page 33–14)**
27. **INSPECT PARKING BRAKE LEVER TRAVEL (See page 33–2)**
28. **ADJUST PARKING BRAKE LEVER TRAVEL (See page 33–2)**
29. **CHECK EXHAUST LEAKAGE**

PARKING BRAKE ASSY

COMPONENTS

3306E–05

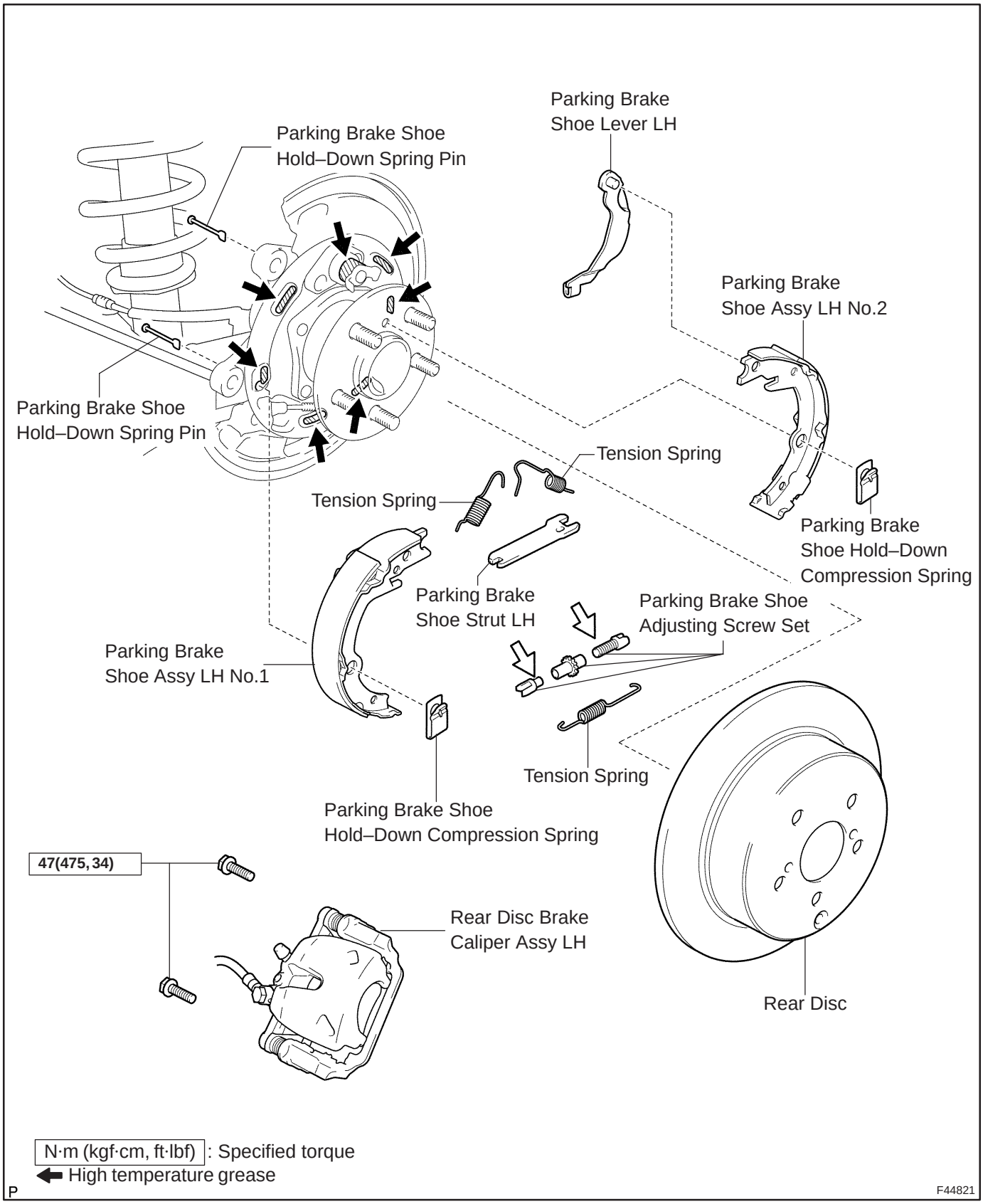

330C8–01

OVERHAUL

HINT:

Overhaul the RH side by the same procedures as those of the LH side.

1. REMOVE REAR WHEEL

2. DISCONNECT REAR DISC BRAKE CALIPER ASSY LH (See page 30–31)

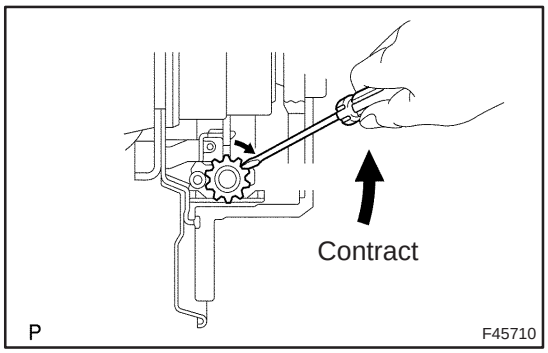

3. REMOVE REAR DISC

(a) Release the parking brake, and remove the rear disc.

HINT:

- Put matchmarks on the disc and the axle hub.
- If the disc cannot be removed easily, turn the shoe adjuster until the wheel turns freely.

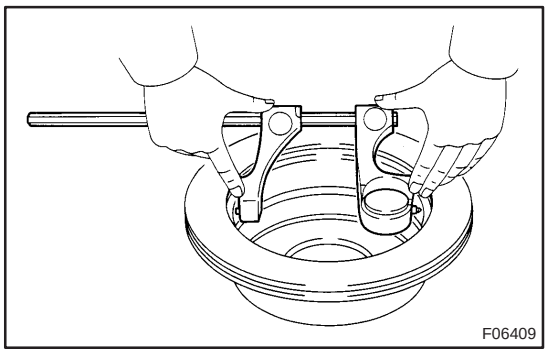

4. INSPECT BRAKE DISC INSIDE DIAMETER

(a) Using a brake drum gauge or equivalent, measure the inside diameter of the disc.

Standard inside diameter: 173 mm (6.81 in.)
Maximum inside diameter: 174 mm (6.85 in.)

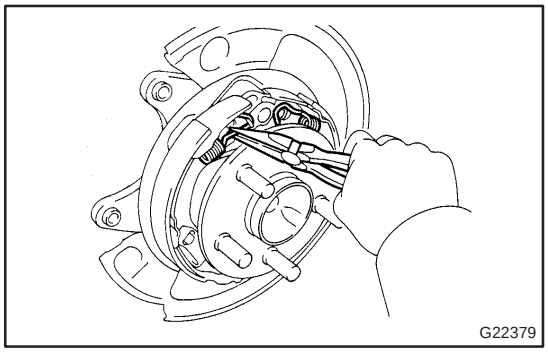

5. REMOVE PARKING BRAKE ADJUSTER KIT

(a) Using needle–nose pliers, remove the shoe upper side 2 tension springs.

(b) Remove the parking brake shoe strut LH.

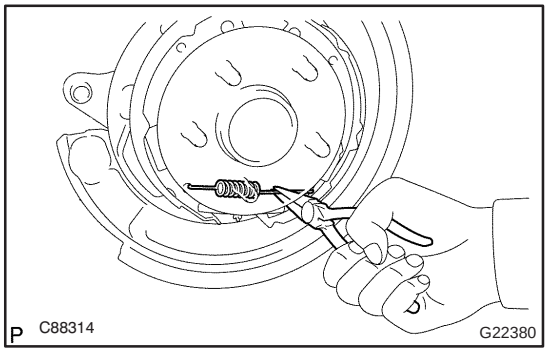

6. REMOVE PARKING BRAKE SHOE ADJUSTING SCREW SET

(a) Using needle–nose pliers, remove the anchor side tension spring.

(b) Remove the shoe adjusting screw set.

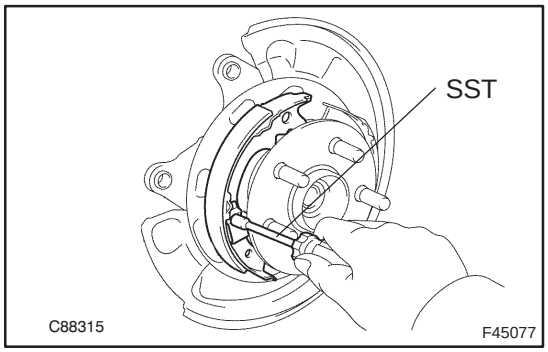

7. REMOVE PARKING BRAKE SHOE KIT

(a) Using SST, remove the parking brake shoe hold–down compression spring, parking brake shoe hold–down spring pin and parking brake shoe assy LH No.1.
SST 09718–00010

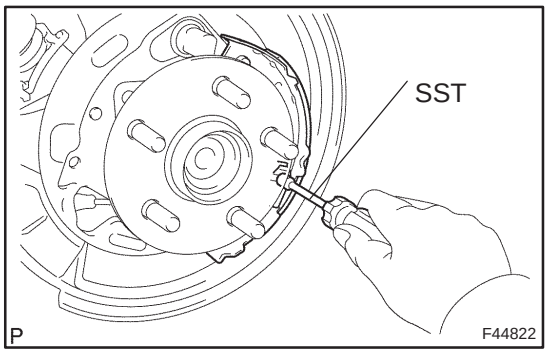

(b) Using SST, remove the parking brake shoe hold–down compression spring and parking brake shoe hold–down spring pin.
SST 09718–00010

(c) Disconnect the parking brake shoe assy LH No.2 from the parking brake shoe lever LH, and remove the parking brake shoe LH No.2.

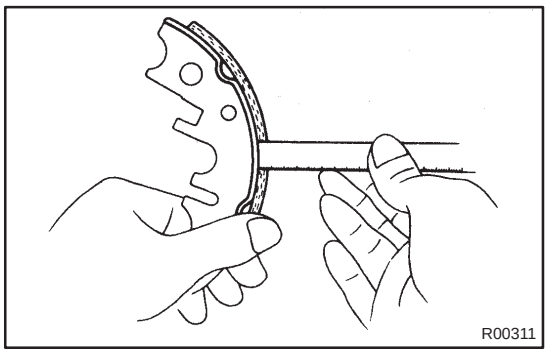

8. INSPECT PARKING BRAKE SHOE LINING THICKNESS

(a) Using a ruler, measure the thickness of the shoe lining.
Standard thickness: 3.5 mm (0.138 in.)
Minimum thickness: 1.0 mm (0.039 in.)

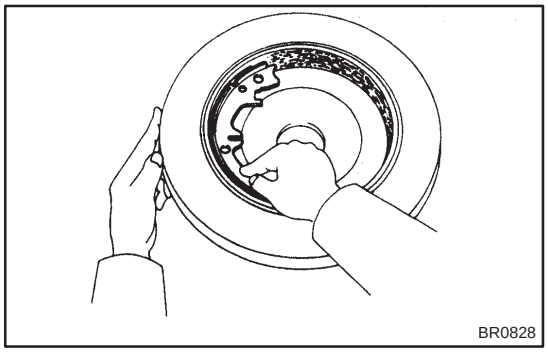

9. INSPECT BRAKE DISC AND PARKING BRAKE SHOE LINING FOR PROPER CONTACT

(a) Apply chalk to the inside surface of the disc, then grind down the brake shoe lining to fit.

If the contact between the brake disc and the shoe lining is improper, repair it using a brake shoe grinder or replace the brake shoe assembly.

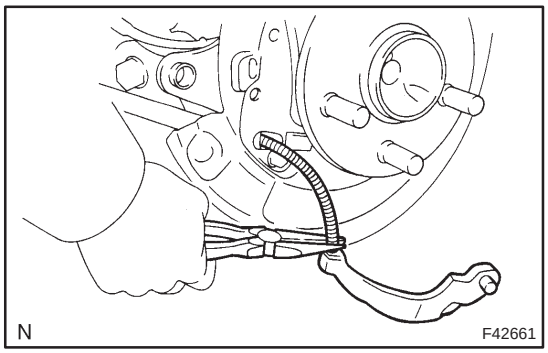

10. REMOVE PARKING BRAKE SHOE LEVER LH

(a) Using needle–nose pliers, disconnect the parking brake cable assy No.3 and remove the parking brake shoe lever LH.

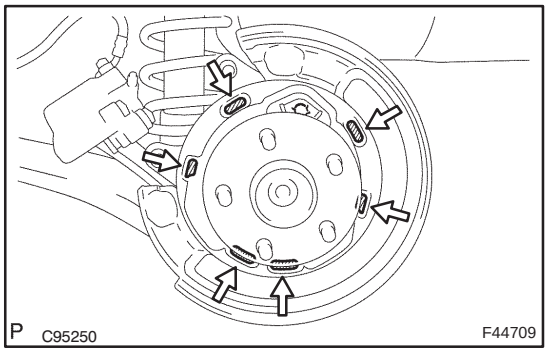

11. APPLY HIGH TEMPERATURE GREASE

(a) Apply the high temperature grease to the shoe attached surface of backing plate.

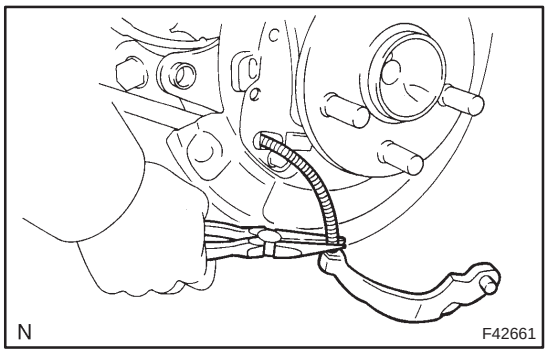

12. INSTALL PARKING BRAKE SHOE LEVER LH

(a) Using needle–nose pliers, connect the parking brake cable assy No.3 to the parking brake shoe lever LH.

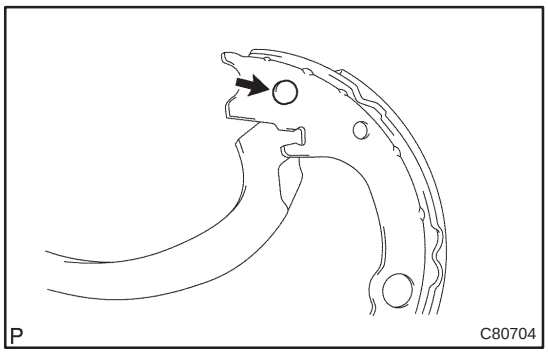

13. INSTALL PARKING BRAKE SHOE KIT

(a) Apply the high temperature grease to the contact part of the parking brake shoe and parking brake shoe lever.

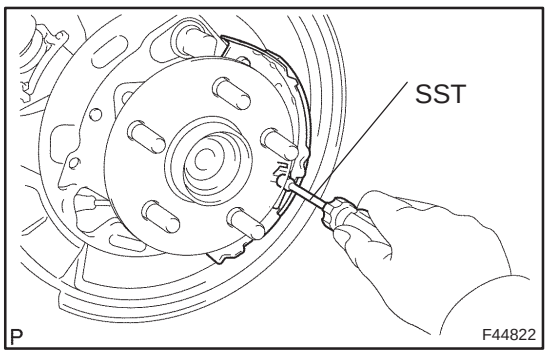

(b) Using SST, install the parking brake shoe LH No.2 with the parking brake shoe hold–down compression spring and parking brake shoe hold–down spring pin.
SST 09718–00010

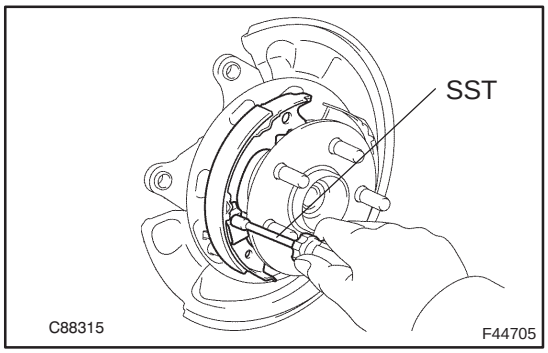

(c) Using SST, install the parking brake shoe LH No.1 with the parking brake shoe hold–down compression spring and parking brake shoe hold–down spring pin.
SST 09718–00010

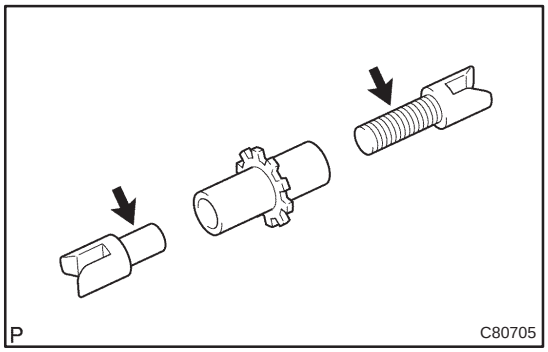

14. INSTALL PARKING BRAKE SHOE ADJUSTING SCREW SET

(a) Apply the high temperature grease to the adjusting bolt and support piece.

(b) Install the parking brake shoe adjusting screw set LH.

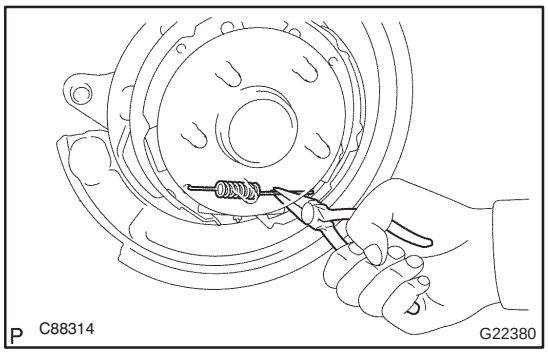

(c) Using needle–nose pliers, install the tension spring.

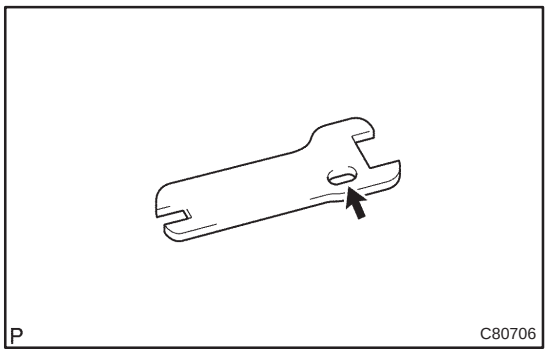

15. INSTALL PARKING BRAKE ADJUSTER KIT

(a) Apply the high temperature grease to the contact part of the shoe strut and tension spring.

(b) Install the parking brake shoe strut LH.

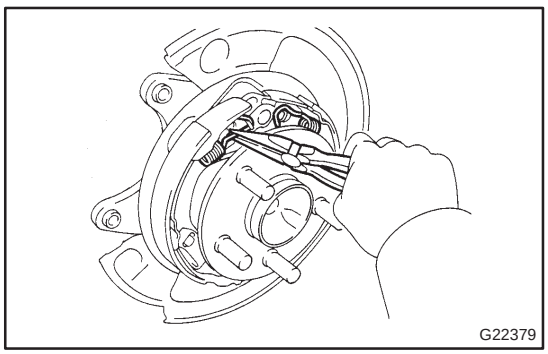

(c) Using needle–nose pliers, install the upper side 2 tension springs.

HINT:

Install the 2 tension spring securely to the grooves of the shoe strut.

16. CHECK PARKING BRAKE INSTALLATION

(a) Check that each part is installed properly.

NOTICE:

There should be no oil or grease on the friction surface of the shoe lining and disc.

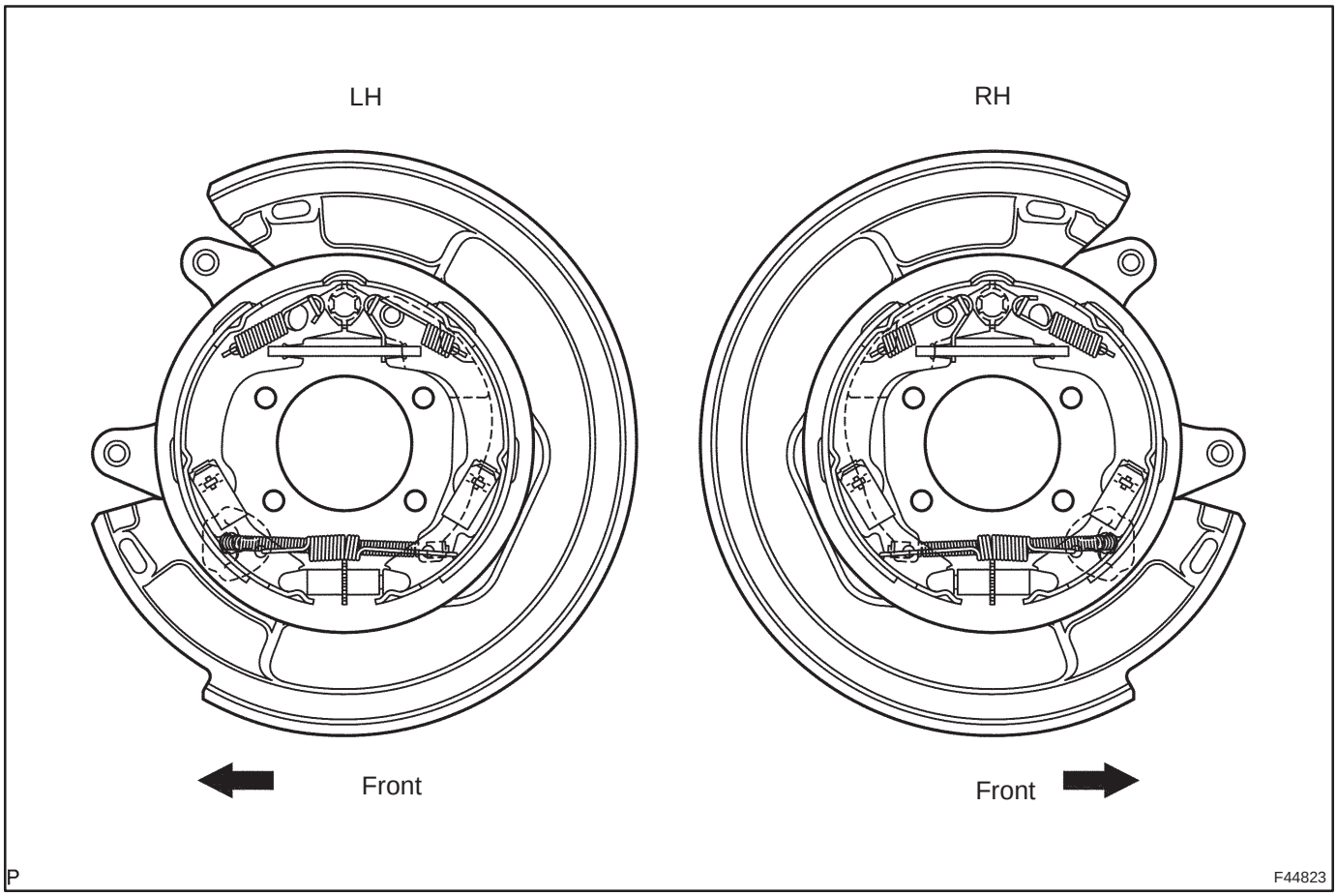

17. INSTALL REAR DISC

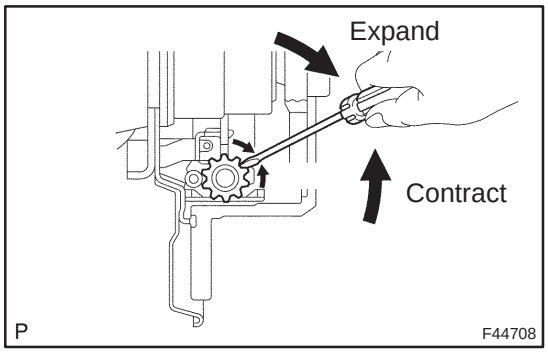

18. ADJUST PARKING BRAKE SHOE CLEARANCE

(a) Temporarily install the hub nuts.

(b) Remove the hole plug, and turn the adjuster and expand the shoes until the disc locks.

(c) Contract the shoe adjuster until the disc can rotate smoothly.

Standard : Return 8 notches

(d) Check that there is no brake drag.

(e) Install the hole plug.

19. CONNECT REAR DISC BRAKE CALIPER ASSY LH

(a) Install the rear disc brake caliper with the 2 bolts.

Torque: 47 N·m (475 kgf·cm, 34 ft·lbf)

20. INSTALL REAR WHEEL

Torque: 103 N·m (1,050 kgf·cm, 76 ft·lbf)

21. SETTLING PARKING BRAKE SHOES AND DISC

(a) Drive the vehicle at about 50km/h (31 mph) on a safe,level and dry road.

(b) With the parking brake release button pushed in, pull on the lever with 98 N (10kgf, 19.8 lbf) of force.

(c) Drive the vehicle for about 400 meters (0.25 mile) in this condition.

(d) Repeat this procedure 2 or 3 times.

22. INSPECT PARKING BRAKE LEVER TRAVEL (See page 33–2)

23. ADJUST PARKING BRAKE LEVER TRAVEL (See page 33–2)

AUTOMATIC TRANSAXLE ASSY (ATM)

400D8–02

PRECAUTION

1. The automatic transaxle is composed of highly precision–finished parts which need careful inspection before reassembly because even a small nick could cause fluid leakage or affect the performance. The instructions here are organized in order to work on only one component group at a time. This will help avoid confusion comes from the similar–looking part of the different sub–assemblies being on your workbench at the same time. Inspect and repair the component groups from the converter housing side. Complete the inspection, repair and reassembly before proceeding to the next component group. If a defect is found in a certain component group during reassembly, inspect and repair this group immediately. If a component group cannot be assembled because the necessary parts are being ordered, be sure to keep all the parts of the group in a separate container while proceeding with disassembly, inspection, repair and reassembly of the other component groups.
   Recommended ATF: T–IV
2. All the disassembled parts should be washed clean and any fluid passages and holes should be blown through with compressed air.
3. Dry all parts with compressed air. Never use shop rags to dry them.
4. Be careful of ATF or kerosene not to be squirted over your face when using compressed air.
5. The recommended automatic transaxle fluid or kerosene should be used for cleaning.
6. After cleaning, the parts should be arranged in the correct order for efficient inspection, repairs, and reassembly.
7. When disassembling the valve body, be sure to match each valve together with the corresponding spring.
8. New discs for the replacement of the brakes and clutches must be soaked in ATF for at least 15 minutes before reassembly.
9. All the oil seal rings, clutch discs, clutch plates, rotating parts, and sliding surfaces should be coated with ATF prior to reassembly.
10. Replace all the gaskets and rubber O–rings.
11. Do not apply adhesive cements to the gaskets and similar parts.
12. Make sure that the ends of the snap ring are not aligned with one of the cutouts and are installed in the groove correctly.
13. If a worn bushing is to be replaced, the sub–assembly containing the bushing must also be replaced.
14. Check the thrust bearings and races for wear or damage. Replace them as necessary.
15. Use petroleum jelly to keep the parts in place.
16. When working with FIPG material, you must follow the procedure below.

- Remove all the old packing (FIPG) material from the gasket surface using a razor blade and a gasket scraper.
- Thoroughly clean all the components to remove all the loose material.
- Clean both the sealing surfaces with non–residue solvent.
- Parts must be reassembled within 10 minutes of application. Otherwise, the packing (FIPG) material must be removed and reapplied.

AUTOMATIC TRANSAXLE FLUID (ATM)

400D7–02

ON–VEHICLE INSPECTION

1. CHECK THE FLUID LEVEL

HINT:

Drive the vehicle so that the engine and transaxle are at the normal operating temperature.

Fluid temperature: 70 – 80 °C (158 – 176 °F)

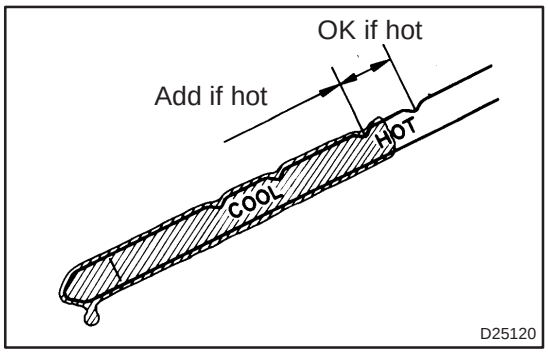

(a) Park the vehicle on a level surface and set the parking brake.
(b) With the engine idling and the brake pedal depressed, shift the shift lever into all position from P to L position and return to P position.
(c) Pull out the dipstick and wipe it clean.
(d) Push it back fully into the pipe.
(e) Pull it out and check that the fluid level is in the HOT position.

If there are leaks, it is necessary to repair or replace O–rings, FIPGs, oil seals, plugs or other parts.

PARK/NEUTRAL POSITION SWITCH ASSY (ATM)

4011W–01

REPLACEMENT

1. REMOVE ENGINE UNDER COVER LH

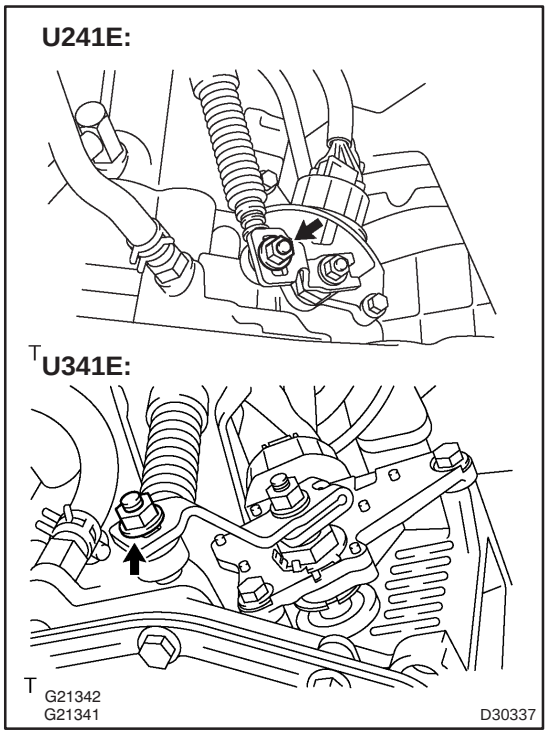

2. SEPARATE TRANSMISSION CONTROL CABLE ASSY

(a) Remove the nut from the control shaft lever.

(b) Separate the control cable from the control shaft lever.

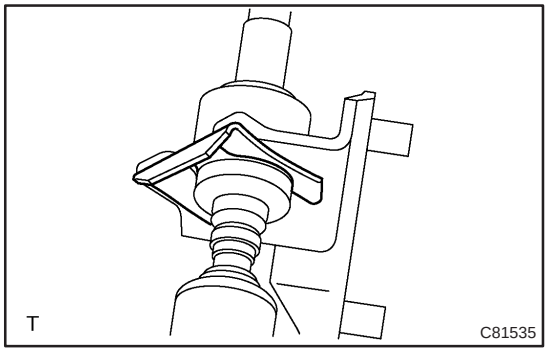

(c) Remove the clip and separate the control cable from the control cable bracket.

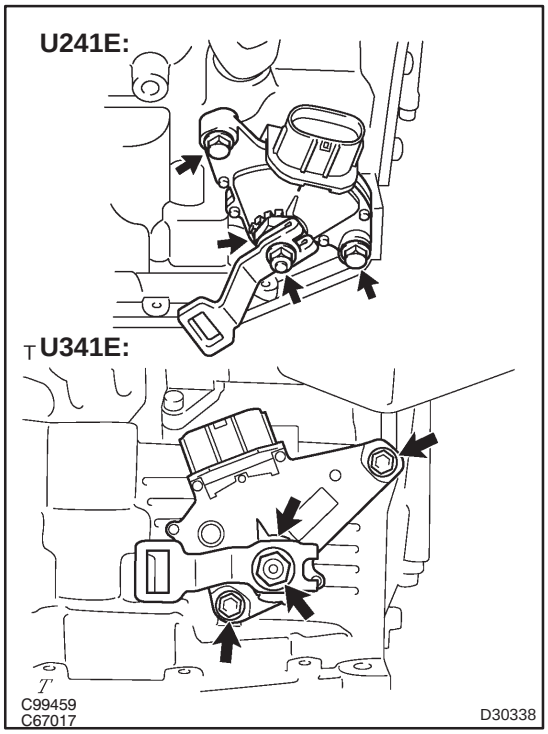

3. REMOVE PARK/NEUTRAL POSITION SWITCH ASSY

(a) Disconnect the park/neutral position switch connector.
(b) Remove the nut, washer and control shaft lever.
(c) Pry out the lock plate and remove the manual valve shaft nut and lock plate.
(d) Remove the 2 bolts and pull out the park/neutral position switch.

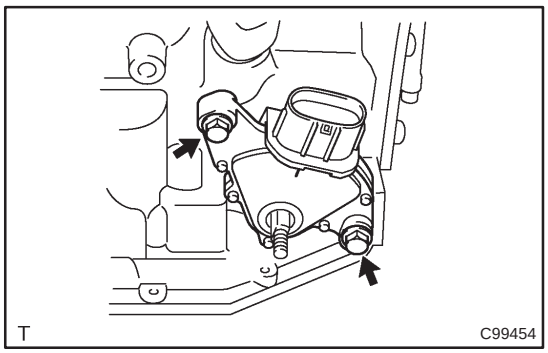

4. INSTALL PARK/NEUTRAL POSITION SWITCH ASSY

(a) U241E:
  (1) Install the park/neutral position switch to the manual valve shaft.
  (2) Temporarily install the 2 bolts.

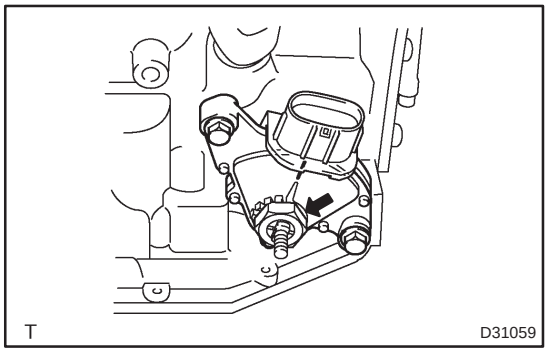

  (3) Place a new lock plate and tighten the nut.
Torque: 6.9 N·m (70 kgf·cm, 61 in.·lbf)
  (4) Temporarily install the control shaft lever.

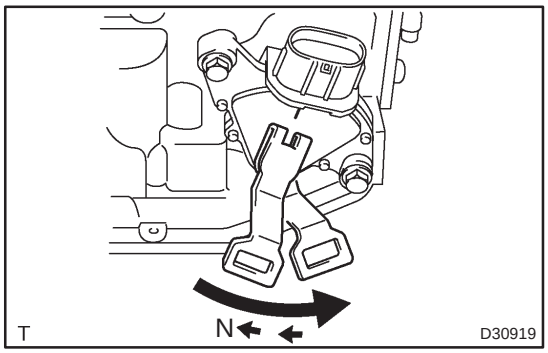

  (5) Turn the lever counterclockwise until it stops, then turn it clockwise 2 notches.
  (6) Remove the control shaft lever.

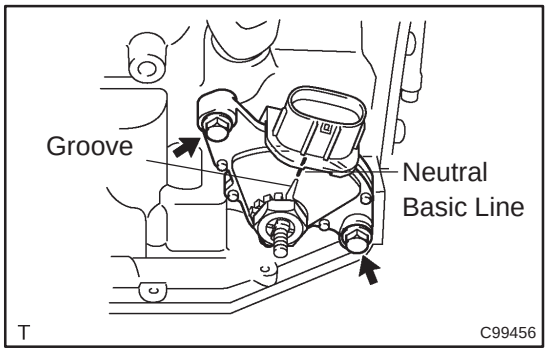

(7) Align the groove with the neutral basic line.
(8) Hold the switch in position and tighten the 2 bolts.
Torque: 5.4 N·m (55 kgf·cm, 48 in.·lbf)

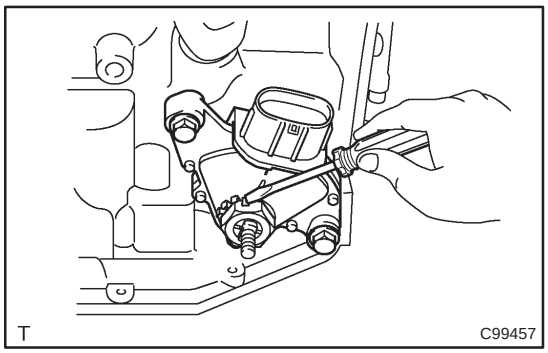

(9) Using a screwdriver, stake the nut with the lock plate.

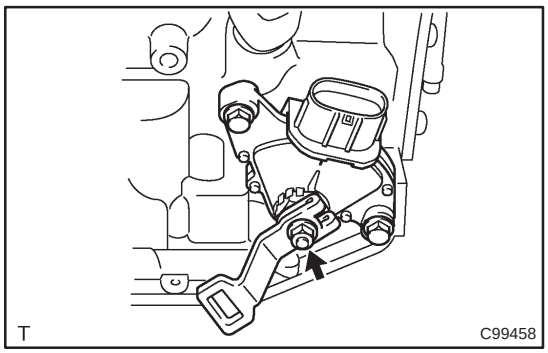

(10) Install the control shaft lever, washer and nut.
Torque: 13 N·m (130 kgf·cm, 9 ft·lbf)
(11) Connect the park/neutral position switch connector.

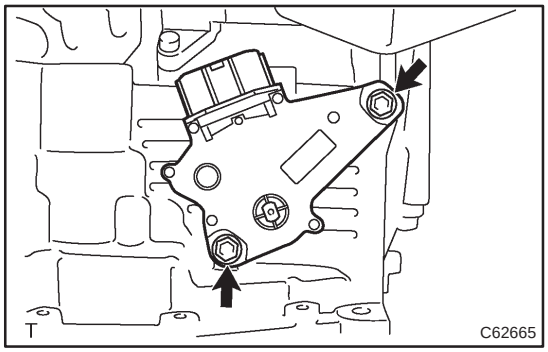

(b) U341E:
(1) Install the park/neutral position switch to the manual valve shaft.
(2) Temporarily install the 2 bolts.

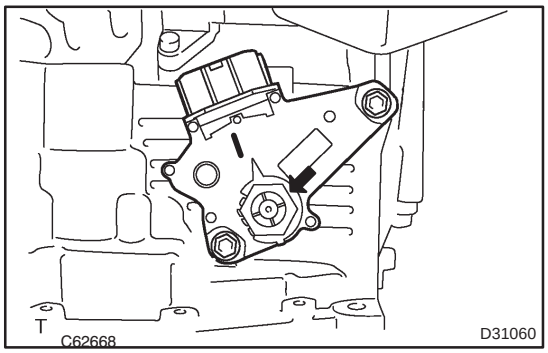

(3) Place a new lock plate and tighten the nut.
Torque: 6.9 N·m (70 kgf·cm, 61 in.·lbf)
(4) Temporarily install the control shaft lever.

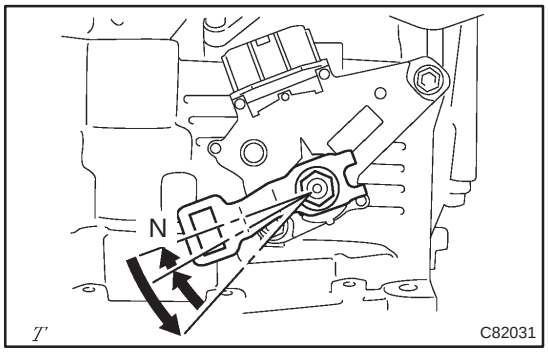

(5) Turn the lever counterclockwise until it stops, then turn it clockwise 2 notches.
(6) Remove the control shaft lever.

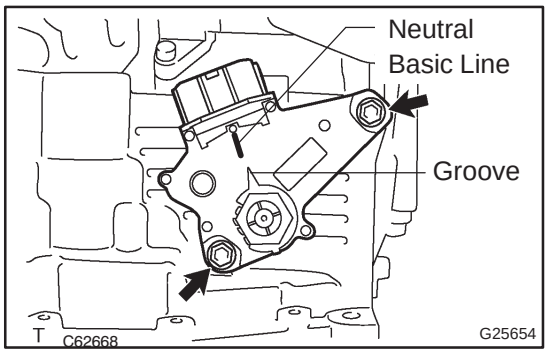

(7) Align the groove with the Gneutral basic line.
(8) Hold the switch in position and tighten the 2 bolts.
Torque: 5.4 N·m (55 kgf·cm, 48 in. lbf)

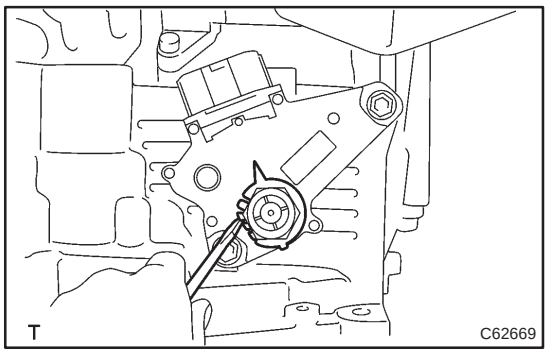

(9) Using a screwdriver, stake the nut with the lock plate.

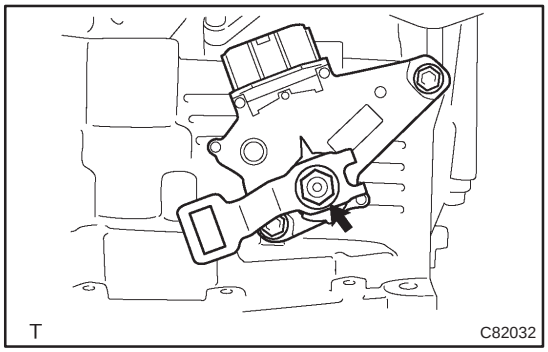

(10) Install the control shaft lever, washer and nut.
Torque: 13 N·m (130 kgf·cm, 9 ft·lbf)
(11) Connect the park/neutral position switch connector.

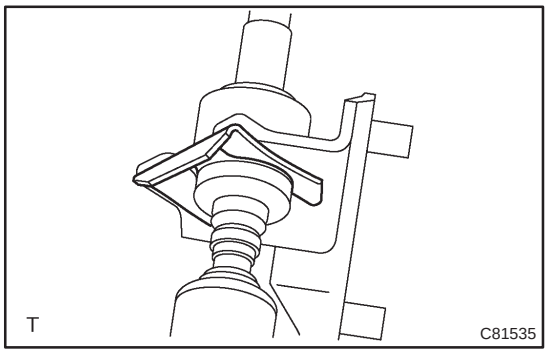

5. INSTALL TRANSMISSION CONTROL CABLE ASSY

(a) Install the control cable and clip to the control cable bracket.

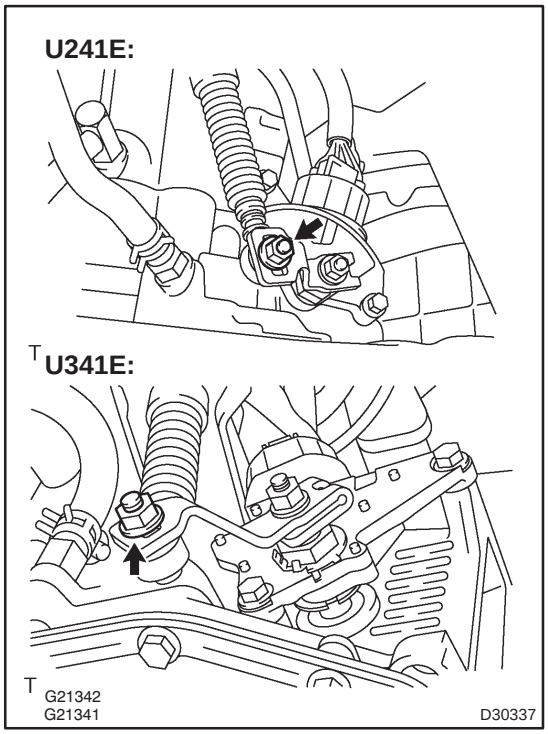

(b) Temporarily install the control cable to the control shaft lever with the nut.

6. **ADJUST SHIFT LEVER POSITION (See page 40–69)**
7. **INSPECT SHIFT LEVER POSITION (See page 40–69)**
8. **INSPECT PARK/NEUTRAL POSITION SWITCH ASSY (See page 40–8)**

400DA–02

ADJUSTMENT

1. INSPECT PARK/NEUTRAL POSITION SWITCH ASSY

(a) Apply the parking brake and turn the ignition switch ON.

(b) Depress the brake pedal and check that the engine starts only when the shift lever is set in N or P position and it does not start in other position.

(c) Check that the back–up light is on and the reverse warning buzzer sounds only when the shift lever is set in R position and these do not function in other position.

If a failure is found, check the park/neutral position switch for continuity.

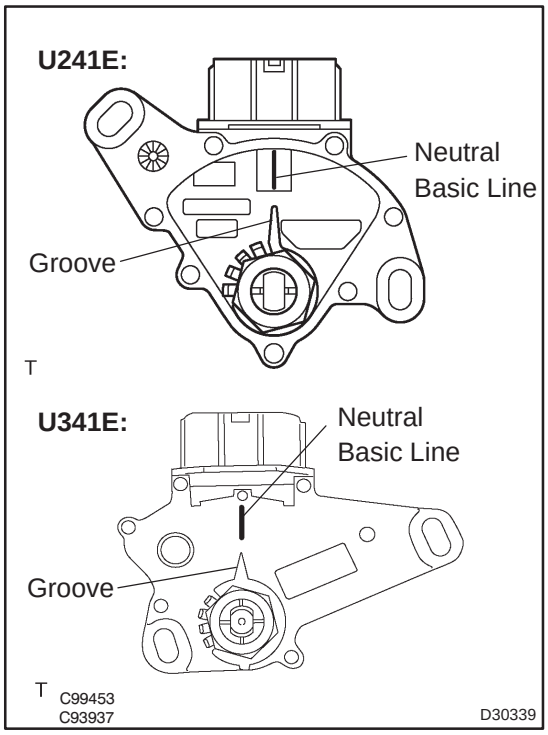

2. ADJUST PARK/NEUTRAL POSITION SWITCH ASSY

(a) Loosen the 2 bolts of park/neutral position switch and set the shift lever to the N position.

(b) Align the groove and neutral basic line.

(c) Hold the switch in position and tighten the 2 bolts.
Torque: 5.4 N·m (55 kgf·cm, 48 in.·lbf)

(d) After adjustment, perform the inspection described in step 1.

AUTOMATIC TRANSAXLE ASSY (U341E)

COMPONENTS

4011Y–01

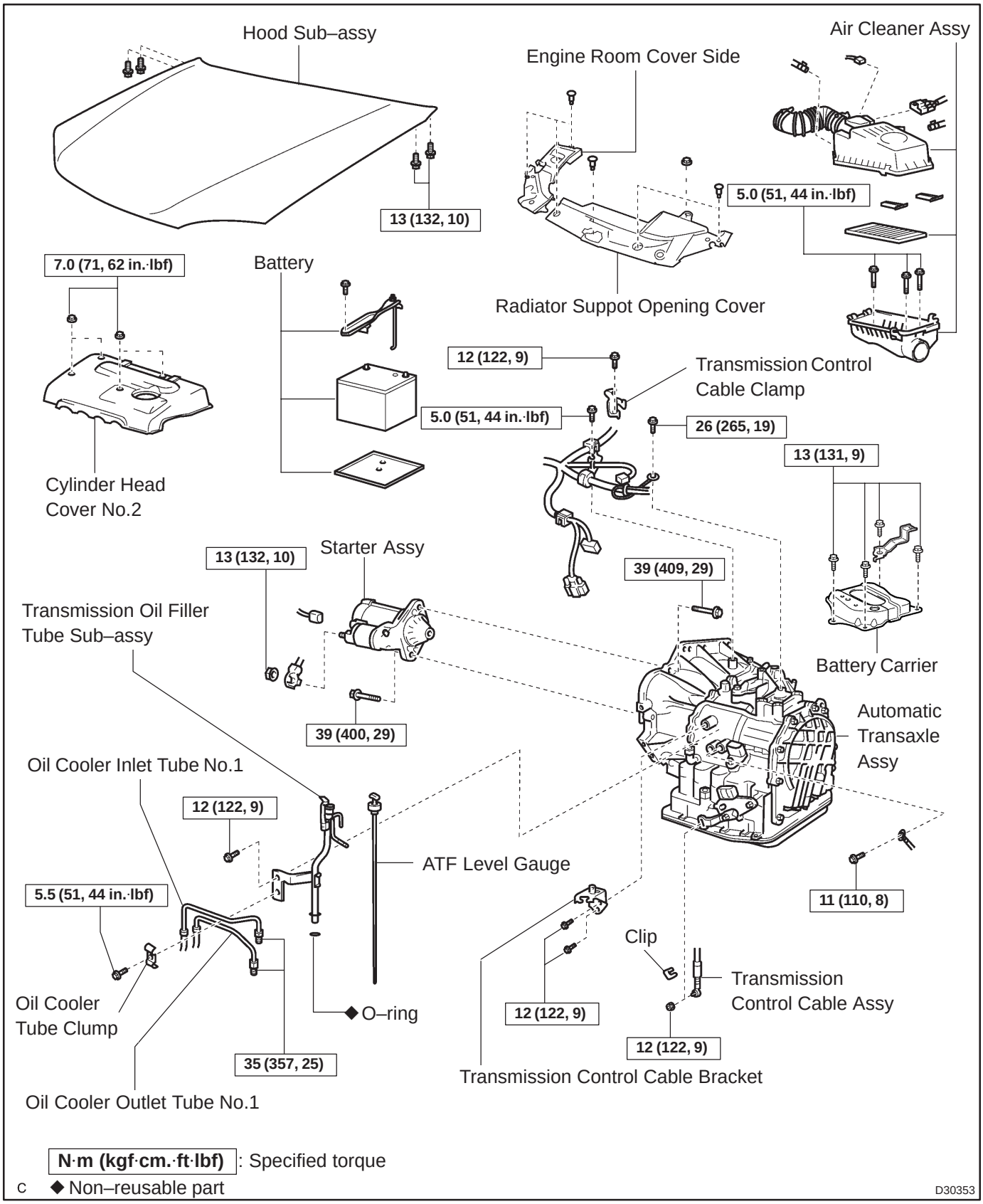

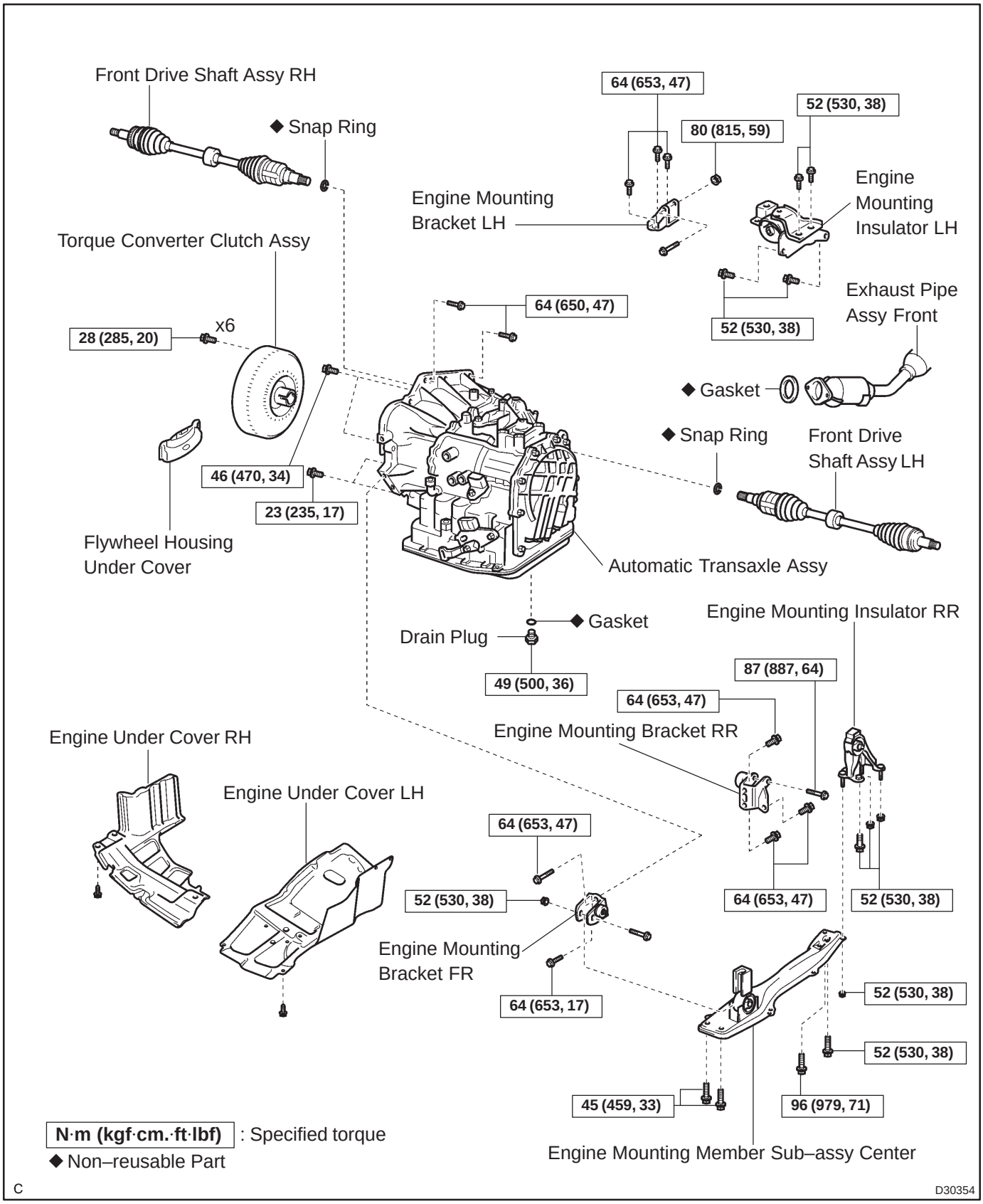
Front Drive Shaft Assy RH
◆ Snap Ring
64 (653, 47)
52 (530, 38)
80 (815, 59)
Engine Mounting Bracket LH
Engine Mounting Insulator LH
Torque Converter Clutch Assy
28 (285, 20)
x6
64 (650, 47)
52 (530, 38)
Exhaust Pipe Assy Front
◆ Gasket
◆ Snap Ring
Front Drive Shaft Assy LH
46 (470, 34)
23 (235, 17)
Flywheel Housing Under Cover
Automatic Transaxle Assy
Drain Plug
◆ Gasket
49 (500, 36)
Engine Mounting Insulator RR
87 (887, 64)
64 (653, 47)
Engine Mounting Bracket RR
Engine Under Cover RH
Engine Under Cover LH
64 (653, 47)
52 (530, 38)
64 (653, 47)
52 (530, 38)
Engine Mounting Bracket FR
64 (653, 17)
52 (530, 38)
52 (530, 38)
45 (459, 33)
96 (979, 71)
N·m (kgf·cm.·ft·lbf) : Specified torque
◆ Non–reusable Part
Engine Mounting Member Sub–assy Center
C
D30354

REPLACEMENT

1. **REMOVE HOOD SUB–ASSY**
2. **REMOVE CYLINDER HEAD COVER NO.2**
3. **REMOVE RADIATOR SUPPORT OPENING COVER**
4. **REMOVE ENGINE ROOM COVER SIDE**
5. **REMOVE BATTERY**

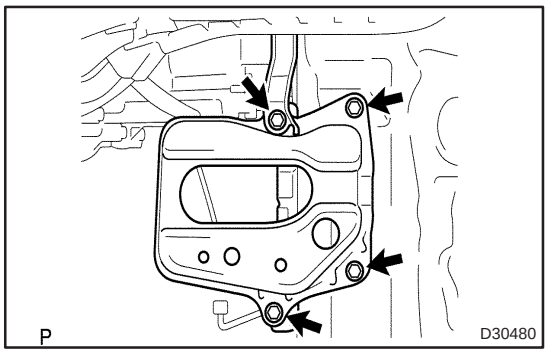

6. REMOVE BATTERY CARRIER

(a) Remove the 4 bolts and battery carrier and clamp.

7. REMOVE AIR CLEANER ASSY

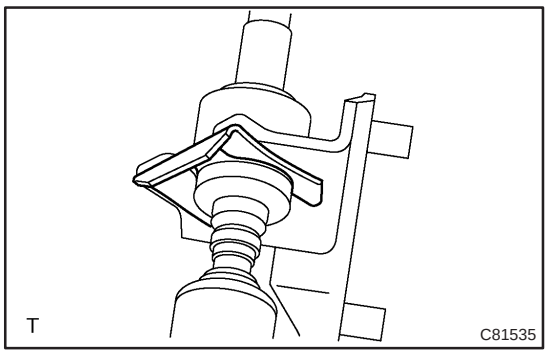

8. SEPARATE TRANSMISSION CONTROL CABLE ASSY

(a) Remove the nut from the control shaft lever.
(b) Separate the control cable from the control shaft lever.
(c) Remove the clip and disconnect the control cable from the control cable bracket.

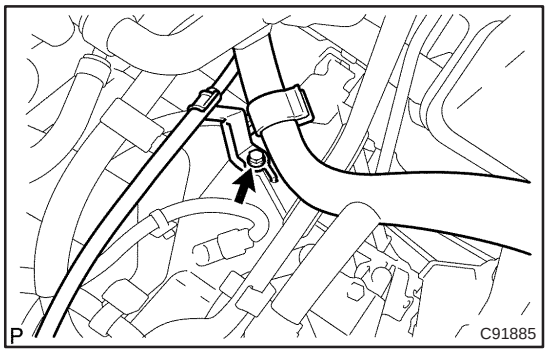

9. REMOVE TRANSMISSION CONTROL CABLE CLAMP

(a) Disconnect the wire harness clamp and control cable from the control cable clamp.
(b) Remove the bolt and control cable clamp.

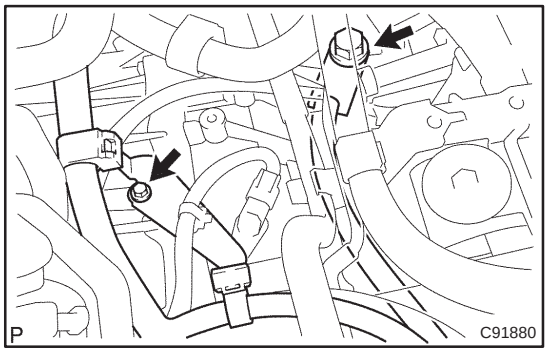

10. SEPARATE WIRE HARNESS

(a) Remove the bolt and disconnect the wire harness.

(b) Remove the bolt and disconnect the wire harness clamp bracket.

11. SEPARATE CONNECTOR

(a) Disconnect the transmission wire connector.

(b) Disconnect the park/neutral position switch connector.

(c) Disconnect the speed sensor connector.

12. REMOVE ENGINE UNDER COVER RH

13. REMOVE ENGINE UNDER COVER LH

14. DRAIN COOLANT (See page 16–7)

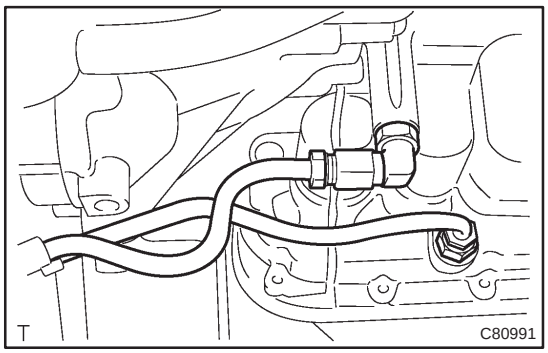

15. DISCONNECT OIL COOLER INLET TUBE NO.1

(a) Using SST, disconnect the oil cooler inlet tube No.1.
SST 09023–12700

16. DISCONNECT OIL COOLER OUTLET TUBE NO.1

(a) Using SST, disconnect the oil cooler outlet tube No.1.
SST 09023–12700

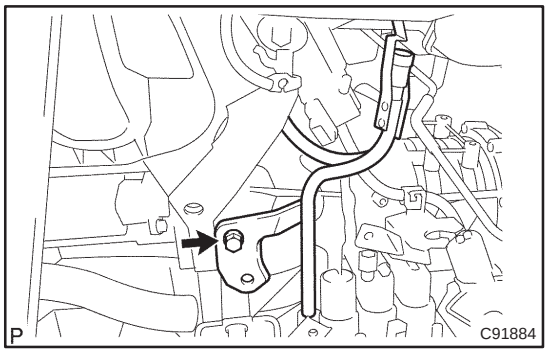

17. REMOVE TRANSMISSION OIL FILLER TUBE SUB–ASSY

(a) Remove the ATF level gauge.

(b) Remove the 2 bolts, oil cooler tube clamp and oil filler tube.

(c) Remove the breather hose from the oil filler tube.

(d) Remove the O–ring from the oil filler tube.

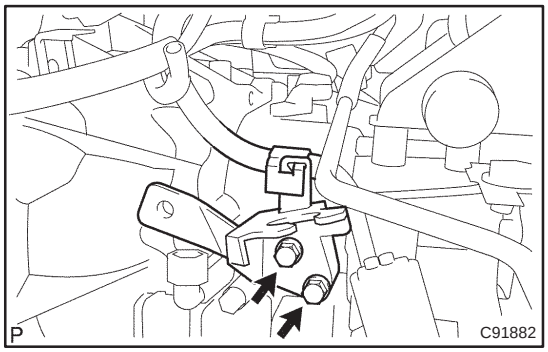

18. REMOVE TRANSMISSION CONTROL CABLE BRACKET NO.1

(a) Disconnect the wire harness clamp.

(b) Remove the 2 bolts and control cable bracket.

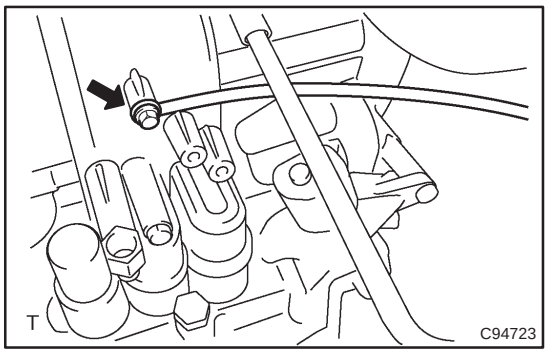

19. SEPARATE WIRE HARNESS

(a) Remove the bolt and wire harness.

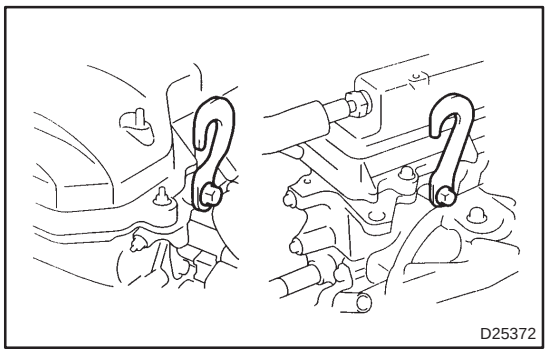

20. SUSPEND ENGINE ASSY

(a) Install the No.1 and No.2 engine hangers in the correct direction.

Parts No.:
No.1 engine hanger: 12281–22021
No.2 engine hanger: 12281–15040
Bolt: 91512–B1016
Torque: 38 N·m (387 kgf·cm, 28 ft·lbf)

(b) Attach the engine chain hoist to the engine hangers.

CAUTION:
Do not attempt to hang the engine by hooking the chain to any other parts.

21. REMOVE FRONT WHEELS

22. DRAIN AUTOMATIC TRANSAXLE FLUID

(a) Remove the drain plug, gasket and drain ATF.

(b) Install a new gasket and the drain plug.
Torque: 49 N·m (500 kgf·cm, 36 ft·lbf)

23. REMOVE EXHAUST PIPE ASSY FRONT (See page 15–2)

24. REMOVE FRONT DRIVE SHAFT ASSY LH (See page 30–6)
SST 09520–01010, 09520–24010 (09520–32040)

25. REMOVE FRONT DRIVE SHAFT ASSY RH (See page 30–6)
SST 09520–01010, 09520–24010 (09520–32040)

26. REMOVE STARTER ASSY

(a) Remove the nut and disconnect the starter wire.

(b) Disconnect the connector.

(c) Remove the 2 bolts and starter.

27. SUPPORT AUTOMATIC TRANSAXLE ASSY

(a) Support the automatic transaxle with a transmission jack.

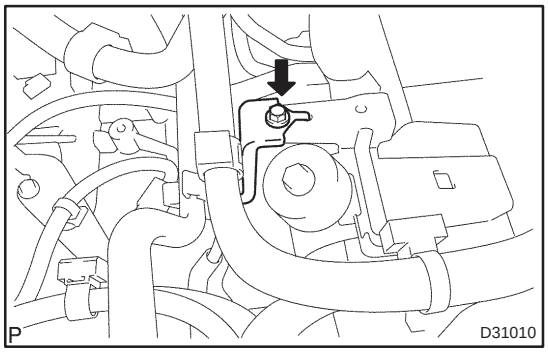

28. REMOVE TRANSVERSE ENGINE ENGINE MOUNTING INSULATOR

(a) Remove the bolt and disconnect the wire harness clamp bracket.

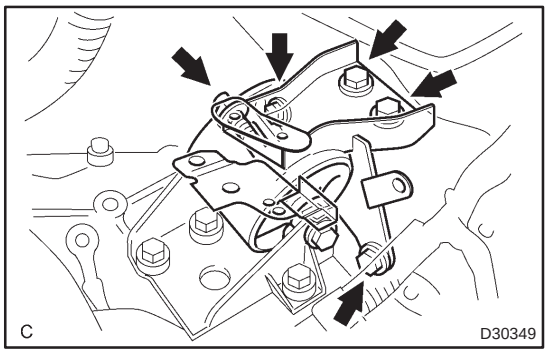

(b) Remove the 4 bolts, nut and engine mounting insulator LH.

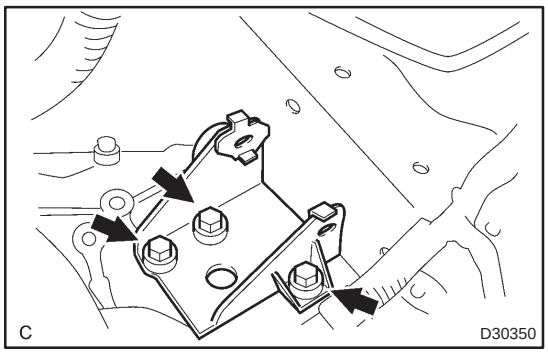

29. REMOVE TRANSVERSE ENGINE ENGINE MOUNTING BRACKET

(a) Remove the 3 bolts and engine mounting bracket LH.

30. REMOVE TRANSVERSE ENGINE ENGINE MOUNTING INSULATOR

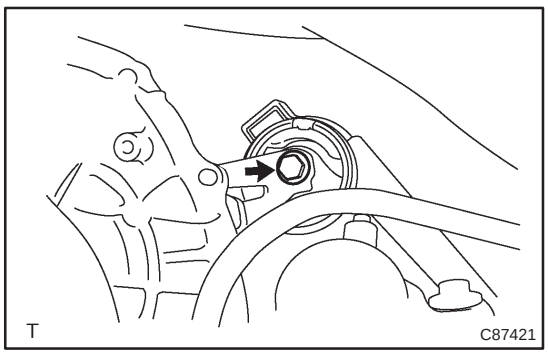

(a) Remove the bolt from the engine mounting bracket RR.

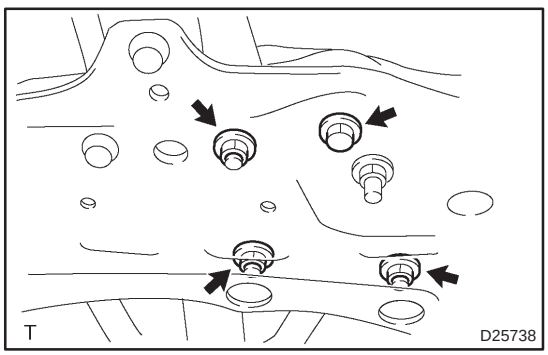

(b) Remove the 3 nuts, bolt and engine mounting insulator RR from the suspension member.

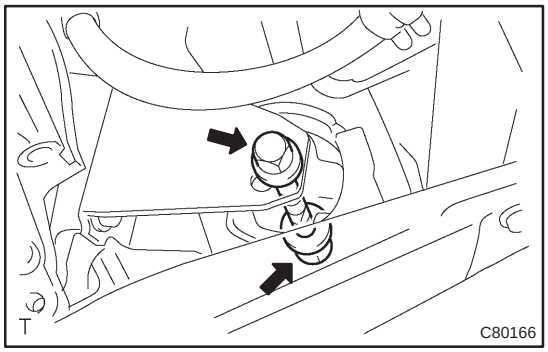

31. REMOVE TRANSVERSE ENGINE ENGINE MOUNTING INSULATOR

(a) Remove the bolt and nut from the engine mounting bracket FR.

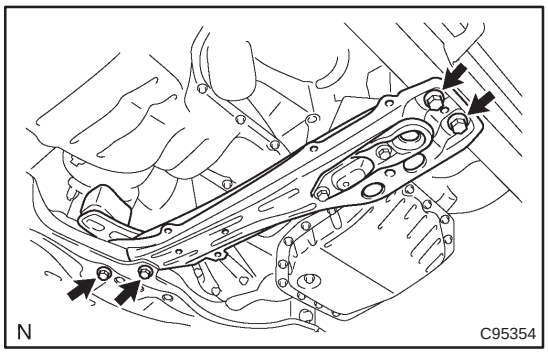

32. REMOVE ENGINE MOUNTING MEMBER SUB–ASSY CENTER

(a) Remove the 4 bolts and center member with engine mounting insulator FR.

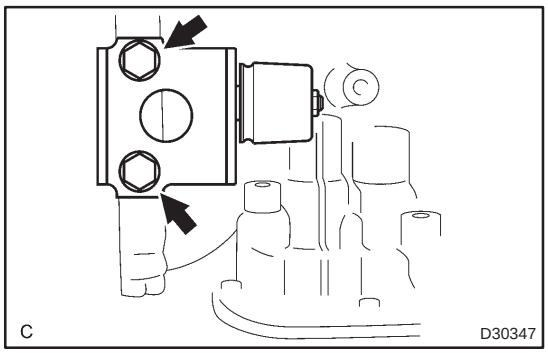

33. REMOVE TRANSVERSE ENGINE ENGINE MOUNTING BRACKET

(a) Remove the 2 bolts and engine mounting bracket FR.

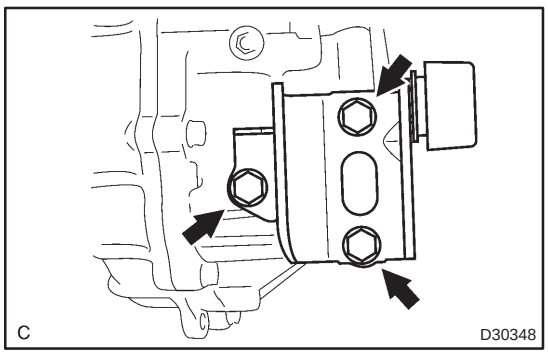

34. REMOVE TRANSVERSE ENGINE ENGINE MOUNTING BRACKET

(a) Remove the 3 bolts and engine mounting bracket RR.

35. REMOVE FLYWHEEL HOUSING UNDER COVER

(a) Remove the flywheel housing under cover from the automatic transaxle.

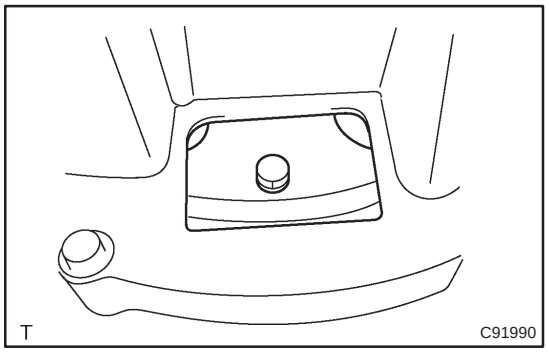

36. REMOVE AUTOMATIC TRANSAXLE ASSY

(a) Turn the crankshaft to remove the 6 bolts while holding the crankshaft pulley bolt with a wrench.

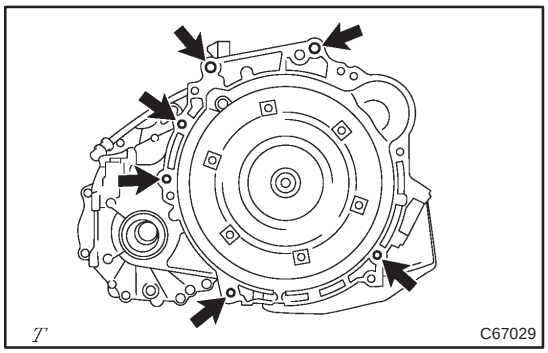

(b) Remove the 6 bolts.

(c) Separate and remove the automatic transaxle.

37. REMOVE TORQUE CONVERTER CLUTCH ASSY

38. INSPECT TORQUE CONVERTER CLUTCH ASSY (See page 40–37)

SST 09350–32014 (09351–32010, 09351–32020)

39. INSTALL TORQUE CONVERTER CLUTCH ASSY

(a) Install the torque converter clutch to the automatic transaxle.

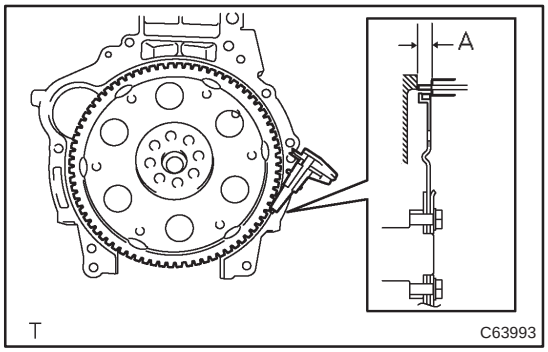

(b) Using vernier calipers, measure the dimension ”A” between the trasaxle fitting part and the converter fitting part of the drive plate.

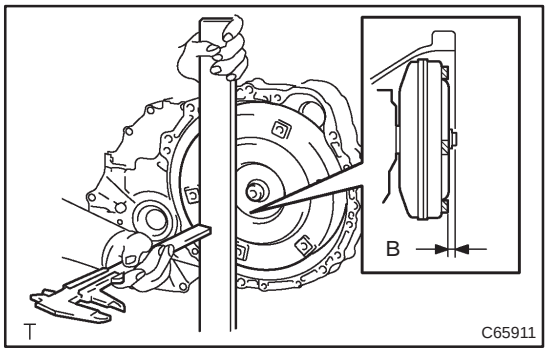

(c) Using vernier calipers and a straight edge, measure the dimension ”B” shown in the illustration and check that ”B” is greater than ”A” measured in (b).
Standard: A + 1 mm or more

NOTICE:
Do not add the thickness of the straight edge.

40. INSTALL AUTOMATIC TRANSAXLE ASSY

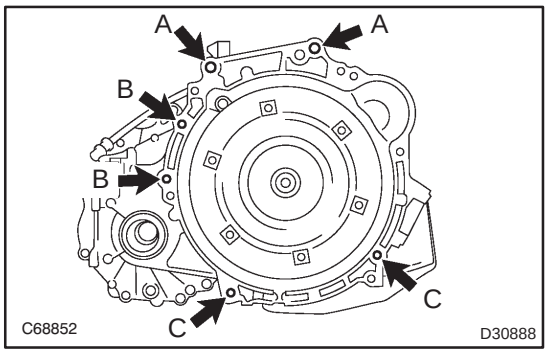

(a) Install the automatic transaxle and 6 bolts to the engine.
Torque:
Bolt A: 64 N·m (650 kgf·cm, 47 ft·lbf)
Bolt B: 46 N·m (470 kgf·cm, 34 ft·lbf)
Bolt C: 23 N·m (235 kgf·cm, 17 ft·lbf)

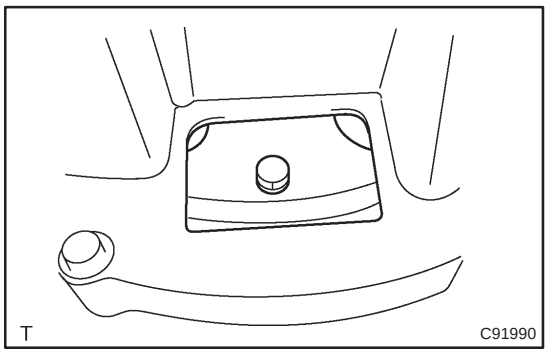

(b) Install the 6 torque converter mounting bolts.
Torque: 28 N·m (285 kgf·cm, 20 ft·lbf)

HINT:
First install yellowish green colored bolt, and then the the 5 bolts.

41. INSTALL FLYWHEEL HOUSING UNDER COVER

(a) Install the flywheel housing under cover to the automatic transaxle.

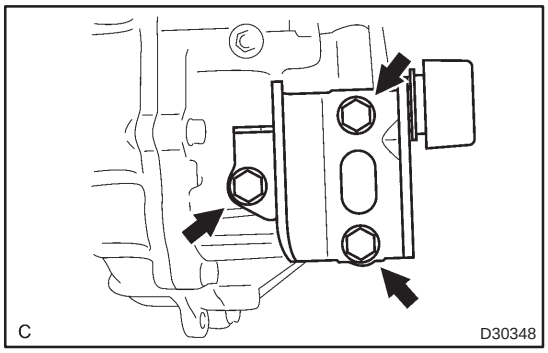

42. INSTALL TRANSVERSE ENGINE ENGINE MOUNTING BRACKET

(a) Install the engine mounting bracket RR and 3 bolts to the automatic trasaxle.
Torque: 64 N·m (653 kgf·cm, 47 ft·lbf)

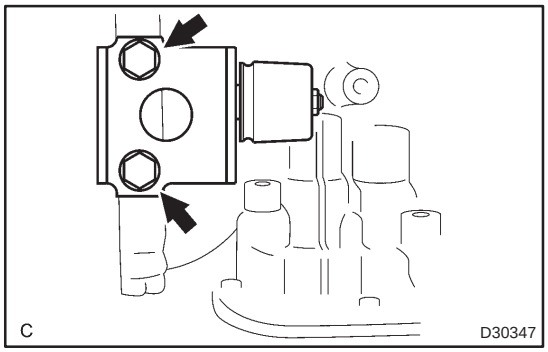

43. INSTALL TRANSVERSE ENGINE ENGINE MOUNTING BRACKET

(a) Install the engine mounting bracket FR and 2 bolts to the automatic trasaxle.
Torque: 64 N·m (653 kgf·cm, 47 ft·lbf)

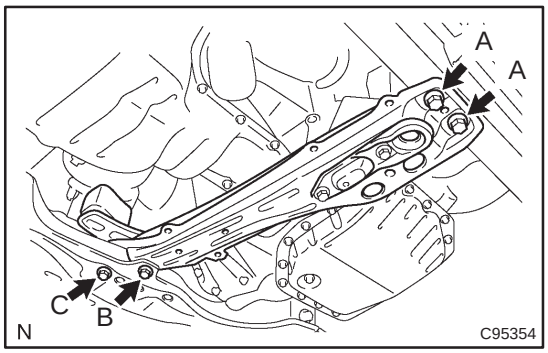

44. INSTALL ENGINE MOUNTING MEMBER SUB–ASSY CENTER

(a) Install the dynamic damper, member sub–assy center with the engine mounting insulator FR and 4 bolts.
Torque:
Bolt A: 45 N·m (459 kgf·cm, 33 ft·lbf)
Bolt B: 96 N·m (979 kgf·cm, 71 ft·lbf)
Bolt C: 52 N·m (530 kgf·cm, 38 ft·lbf)

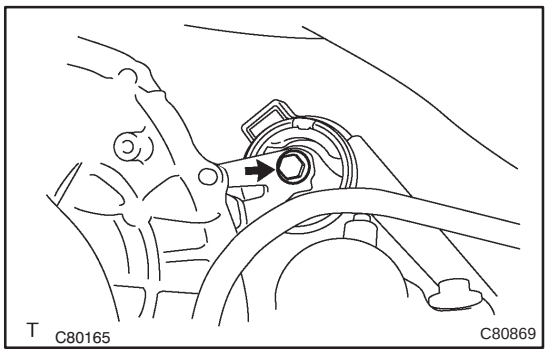

45. INSTALL TRANSVERSE ENGINE ENGINE MOUNTING INSULATOR

(a) Install the engine mounting insulator RR and bolt to the engine mounting bracket RR.
Torque: 87 N·m (887 kgf·cm, 64 ft·lbf)

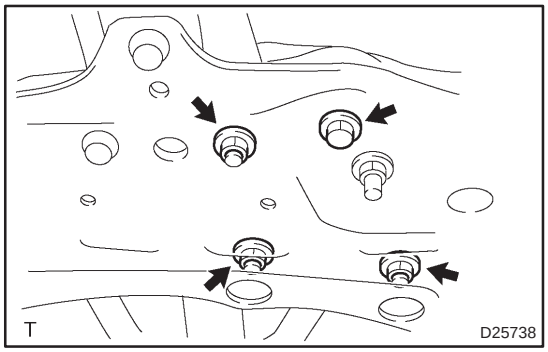

(b) Tighten the 3 nuts and bolt.
Torque: 52 N·m (530 kgf·cm, 38 ft·lbf)

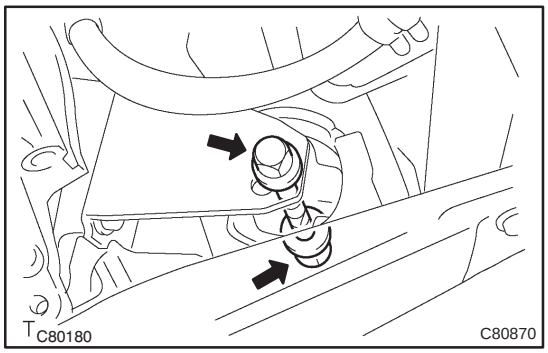

46. INSTALL TRANSVERSE ENGINE ENGINE MOUNTING INSULATOR

(a) Install the bolt and nut to the engine mounting bracket FR.
Torque: 52 N·m (530 kgf·cm, 38 ft·lbf)

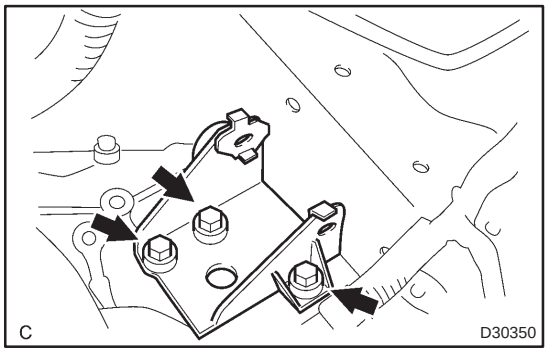

47. INSTALL TRANSVERSE ENGINE ENGINE MOUNTING BRACKET

(a) Install the engine mounting bracket LH and 3 bolts to the automatic transaxle.
Torque: 64 N·m (653 kgf·cm, 47 ft·lbf)

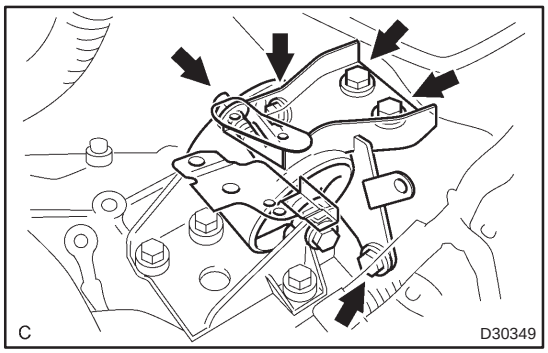

48. INSTALL TRANSVERSE ENGINE ENGINE MOUNTING INSULATOR

(a) Install the engine mounting insulator LH, 4 bolts and nut.
Torque:
Bolt : 52 N·m (530 kgf·cm, 38 ft·lbf)
Nut : 80 N·m (815 kgf·cm, 59 ft·lbf)

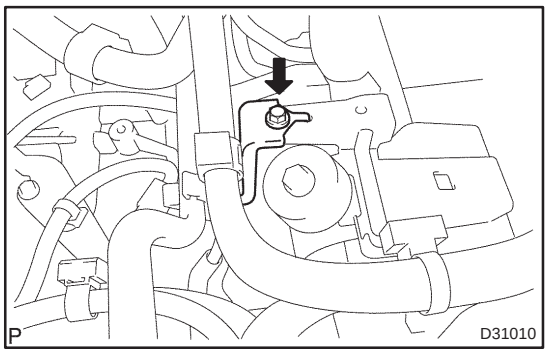

(b) Install the wire harness clamp bracket and bolt.

49. INSTALL STARTER ASSY

(a) Install the starter and 2 bolts.
Torque: 39 N·m (400 kgf·cm, 29 ft·lbf)

(b) Connect the connector.

(c) Install the starter wire and nut.
Torque: 13 N·m (132 kgf·cm, 10 ft·lbf)

50. INSTALL FRONT DRIVE SHAFT ASSY LH (See page 30–6)

51. INSTALL FRONT DRIVE SHAFT ASSY RH (See page 30–6)

52. INSTALL EXHAUST PIPE ASSY FRONT (See page 15–2)

53. INSTALL FRONT WHEELS

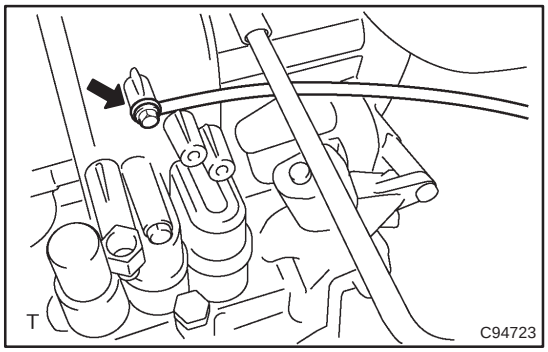

54. INSTALL WIRE HARNESS

(a) Install the wire harness clamp bracket and bolt.
Torque: 11 N·m (110 kgf·cm, 8 ft·lbf)

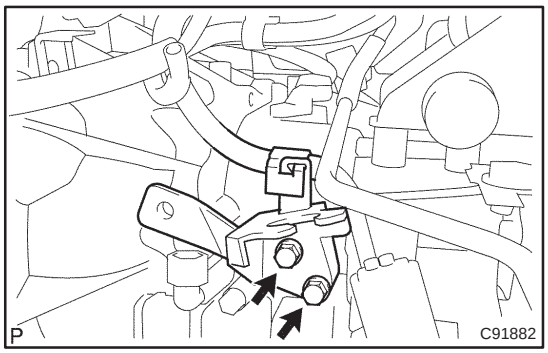

55. INSTALL TRANSMISSION CONTROL CABLE BRACKET NO.1

(a) Install the control cable bracket and 2 bolts.
Torque: 12 N·m (122 kgf·cm, 9 ft·lbf)

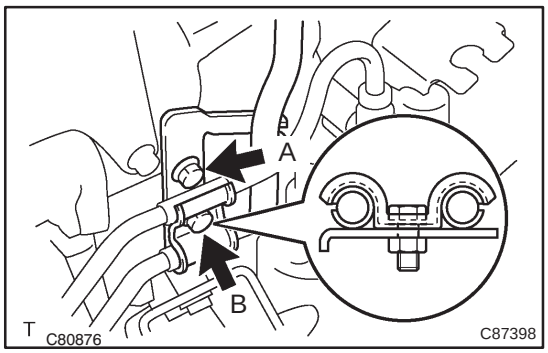

56. INSTALL TRANSMISSION OIL FILLER TUBE SUB–ASSY

(a) Temporarily install the oil cooler outlet tube No.1.
(b) Temporarily install the oil cooler inlet tube No.1.
(c) Coat a new O–ring with ATF, and install it to the oil filler tube.
(d) Install the oil filler tube to the automatic transaxle.
(e) Install the oil cooler tube clamp and 2 bolts.
Torque:
Bolt A: 12 N·m (122 kgf·cm, 9 ft·lbf)
Bolt B: 5.5 N·m (56 kgf·cm, 49 in.·lbf)
(f) Install the ATF level gauge.

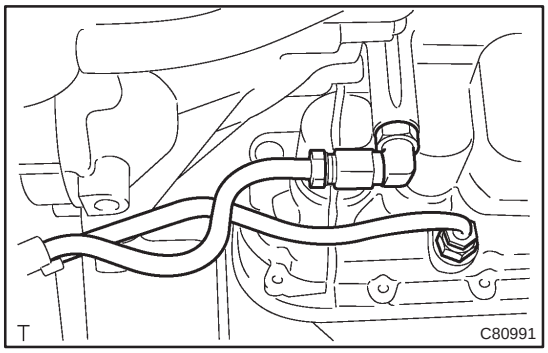

57. CONNECT OIL COOLER OUTLET TUBE NO.1

(a) Using SST, tighten oil cooler outlet tube No.1.
Torque: 35 N·m (357 kgf·cm, 25 ft·lbf)
SST 09023–12700

58. CONNECT OIL COOLER INLET TUBE NO.1

(a) Using SST tighten the oil cooler inlet tube No.1.
SST 09023–12700
Torque: 35 N·m (357 kgf·cm, 25 ft·lbf)

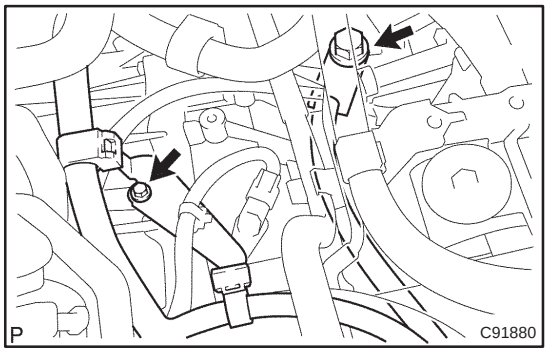

59. INSTALL WIRE HARNESS

(a) Install the wire harness and bolt.
Torque: 26 N·m (265 kgf·cm, 19 ft·lbf)

(b) Install the wire harness clamp bracket and bolt.
Torque: 5.0 N·m (51 kgf·cm, 44 in.·lbff)

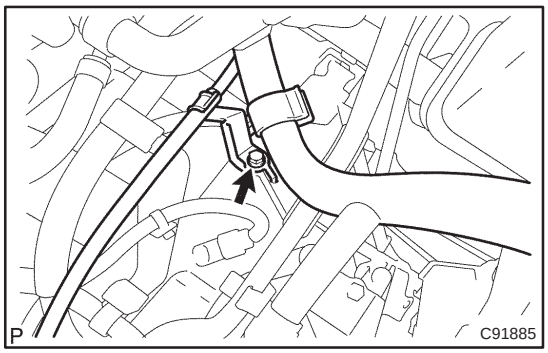

60. INSTALL TRANSMISSION CONTROL CABLE CLAMP

(a) Install the control cable support and bolt.
Torque: 12 N·m (122 kgf·cm, 9 ft·lbf)

(b) Connect the control cable and wire harness to the control cable support.

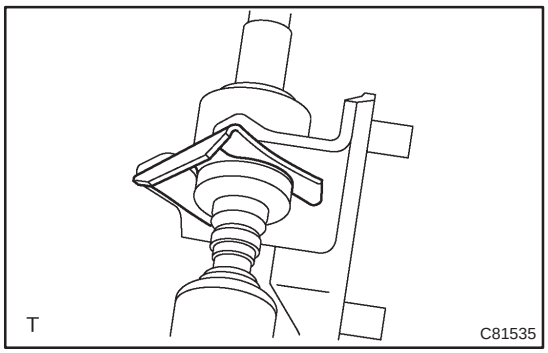

61. INSTALL TRANSMISSION CONTROL CABLE ASSY

(a) Temporarily install the control cable to the control shaft lever with the nut.

(b) Install the control cable and clip to the bracket.

62. INSTALL AIR CLEANER ASSY
Torque: 5.0 N·m (51 kgf·cm, 44 in.·lbf)

63. INSTALL BATTERY CARRIER
Torque: 13 N·m (131 kgf·cm, 9 ft·lbf)

64. INSTALL BATTERY

65. INSTALL ENGINE ROOM COVER SIDE

66. INSTALL RADIATOR SUPPORT OPENING COVER

67. INSTALL CYLINDER HEAD COVER NO.2
Torque: 7.0 N·m (71 kgf·cm, 62 in.·lbf)

68. INSTALL HOOD SUB–ASSY
Torque: 13 N·m (133 kgf·cm, 10 ft·lbf)

69. INSPECT HOOD SUB–ASSY (See page 75–2)

70. ADJUST HOOD SUB–ASSY (See page 75–2)

71. ADD AUTOMATIC TRANSAXLE FLUID

72. ADD COOLANT (See page 16–1)

73. CHECK FOR ENGINE COOLANT LEAKS (See page 16–1)

74. INSPECT AUTOMATIC TRANSAXLE FLUID (See page 40–2)

75. ADJUST SHIFT LEVER POSITION (See page 40–69)

76. INSPECT SHIFT LEVER POSITION (See page 40–69)

77. INSPECT AND ADJUST FRONT WHEEL ALIGNMENT (See page 26–6)

78. CHECK ABS SPEED SENSOR SIGNAL (See page 05–699)

79. RESET MEMORY (See page 05–985)

AUTOMATIC TRANSAXLE ASSY (U241E)

COMPONENTS

40120–01

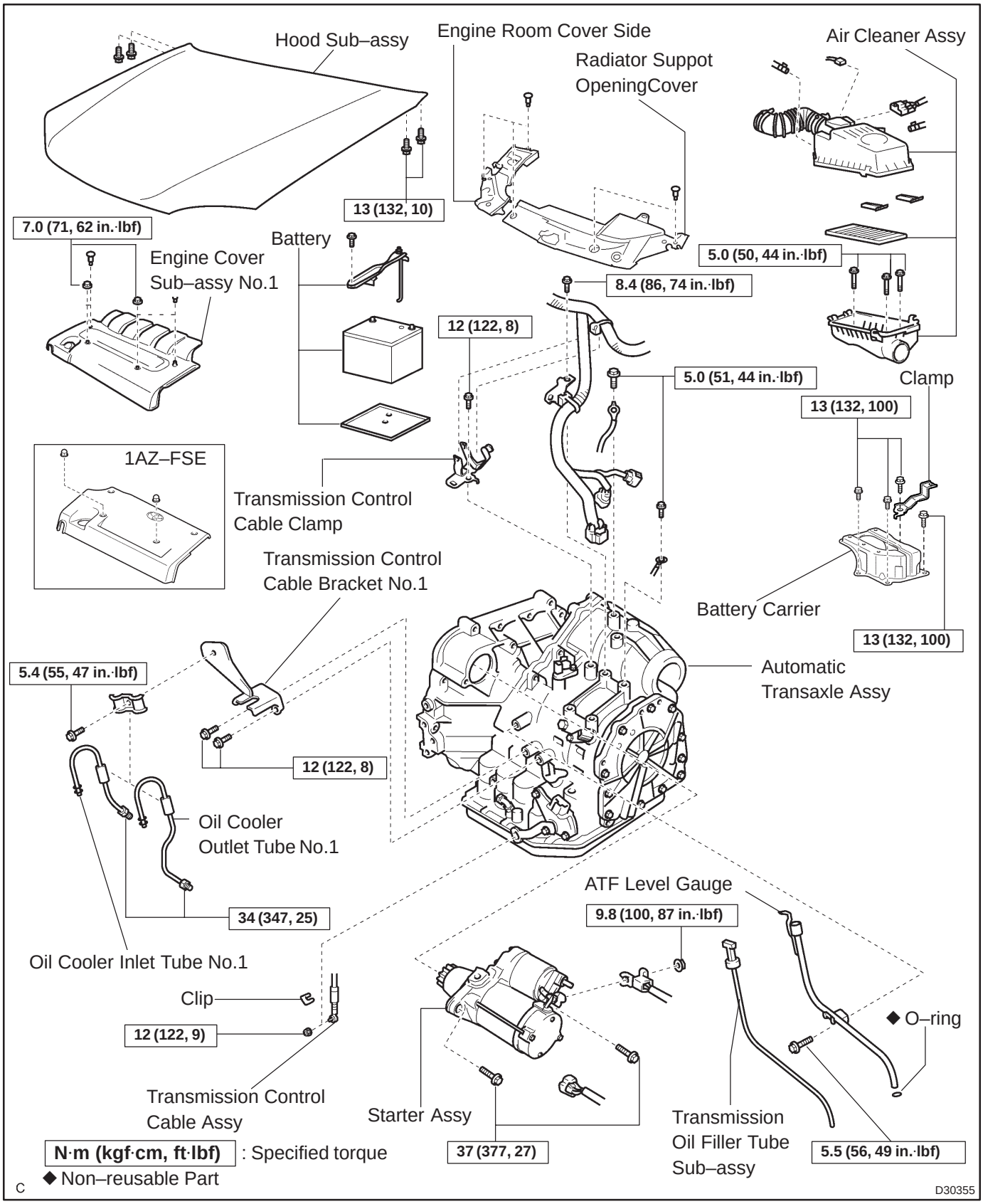

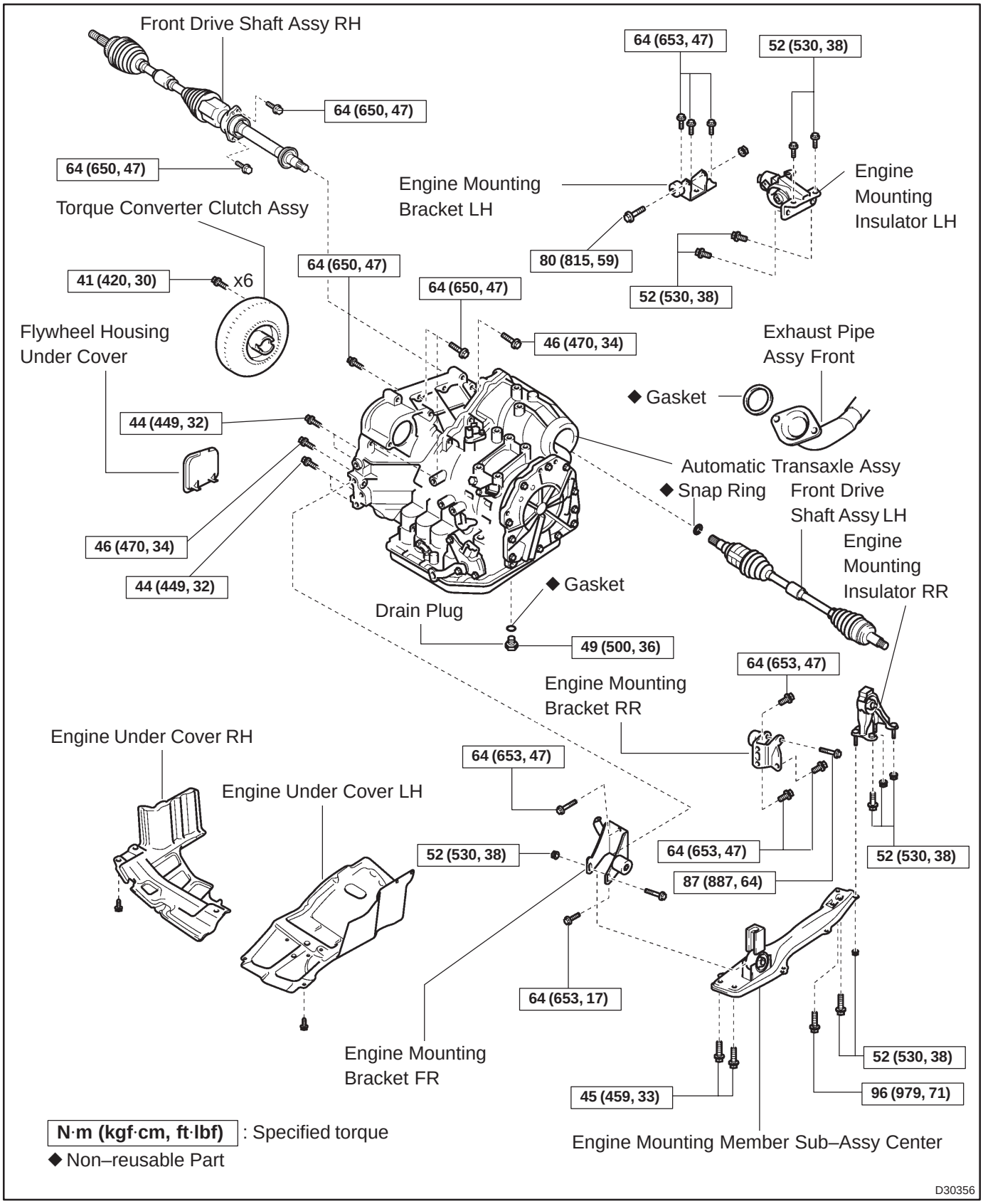
Front Drive Shaft Assy RH
64 (650, 47)
64 (650, 47)
Torque Converter Clutch Assy
64 (653, 47)
52 (530, 38)
Engine Mounting Bracket LH
Engine Mounting Insulator LH
80 (815, 59)
52 (530, 38)
41 (420, 30)
x6
64 (650, 47)
64 (650, 47)
46 (470, 34)
Flywheel Housing Under Cover
Exhaust Pipe Assy Front
◆ Gasket
44 (449, 32)
Automatic Transaxle Assy
◆ Snap Ring
Front Drive Shaft Assy LH
46 (470, 34)
44 (449, 32)
Engine Mounting Insulator RR
◆ Gasket
Drain Plug
49 (500, 36)
64 (653, 47)
Engine Mounting Bracket RR
Engine Under Cover RH
64 (653, 47)
Engine Under Cover LH
52 (530, 38)
64 (653, 47)
52 (530, 38)
87 (887, 64)
64 (653, 17)
Engine Mounting Bracket FR
52 (530, 38)
45 (459, 33)
96 (979, 71)
N·m (kgf·cm, ft·lbf) : Specified torque
◆ Non–reusable Part
Engine Mounting Member Sub–Assy Center
D30356

REPLACEMENT

1. REMOVE HOOD SUB–ASSY

2. REMOVE ENGINE COVER SUB–ASSY NO.1

(a) Remove the 2 nuts and engine cover.

3. REMOVE RADIATOR SUPPORT OPENING COVER

4. REMOVE ENGINE ROOM COVER SIDE

5. REMOVE BATTERY

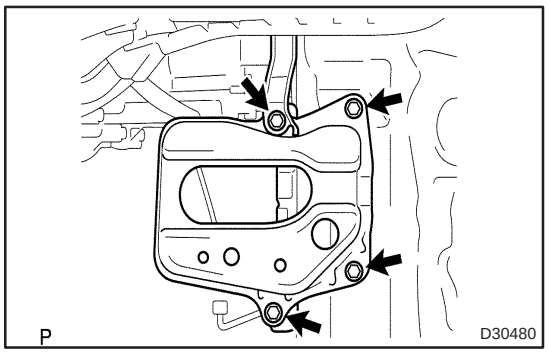

6. REMOVE BATTERY CARRIER

(a) Remove the 4 bolts and battery carrier.

7. REMOVE AIR CLEANER ASSY

8. REMOVE AIR CLEANER HOSE NO.1

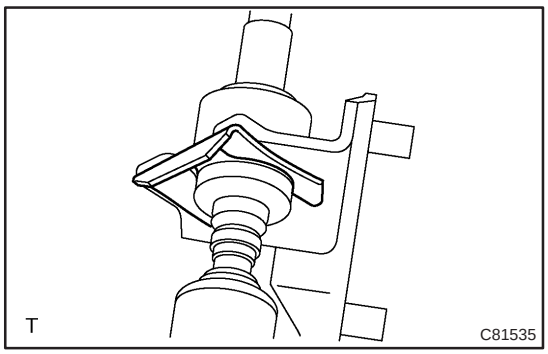

9. SEPARATE TRANSMISSION CONTROL CABLE ASSY

(a) Remove the nut from the control shaft lever.

(b) Separate the control cable from the control shaft lever.

(c) Remove the clip and separate the control cable from the control cable bracket.

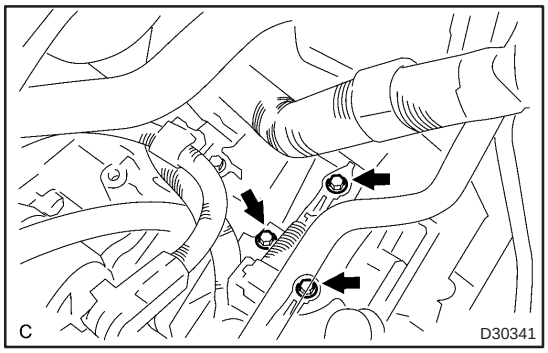

10. SEPARATE WIRE HARNESS

(a) Remove the 3 bolts and 2 wire harnesses and wire harness bracket.

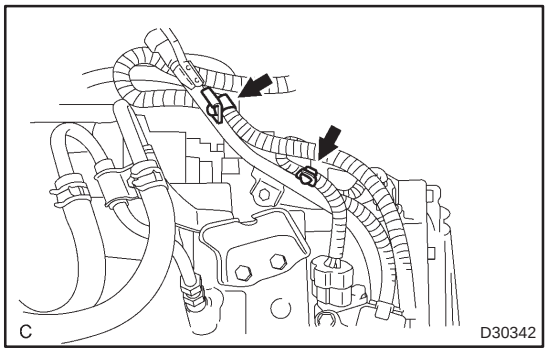

11. SEPARATE CONNECTOR

(a) Separate the 2 wire harnesse clamps from the oil filler tube.
(b) Separate the transmission wire connector.
(c) Separate the park/neutral position switch connector.
(d) Separate the 2 speed sensor connectors.

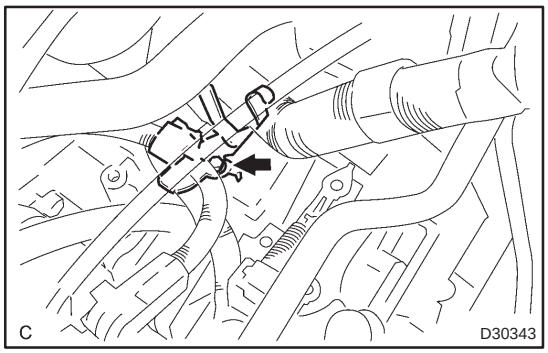

12. REMOVE TRANSMISSION CONTROL CABLE CLAMP

(a) Remove the bolt and transmission control cable clamp from the automatic transaxle.

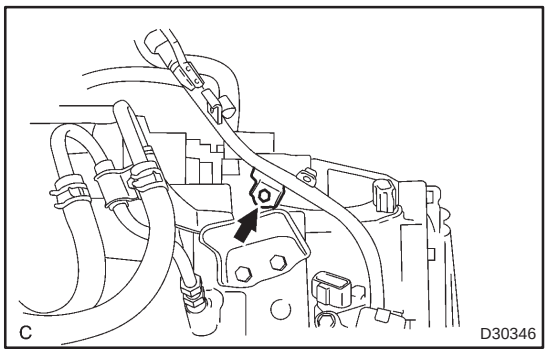

13. REMOVE TRANSMISSION OIL FILLER TUBE SUB–ASSY

(a) Remove the ATF level gauge.
(b) Remove the bolt and oil filler tube.
(c) Remove the O–ring from the oil filler tube.

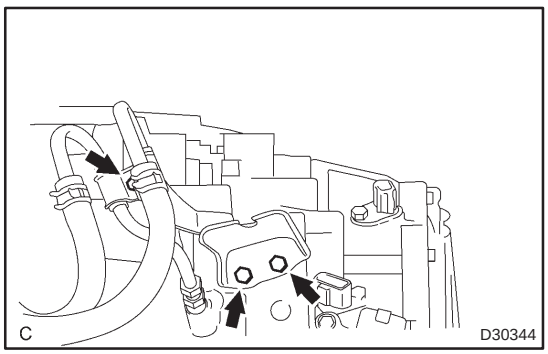

14. REMOVE TRANSMISSION CONTROL CABLE BRACKET NO.1

(a) Remove the 3 bolts and control cable bracket No.1.

15. REMOVE FRONT WHEELS

16. REMOVE ENGINE UNDER COVER RH

17. REMOVE ENGINE UNDER COVER LH

18. DRAIN AUTOMATIC TRANSAXLE FLUID

(a) Remove the drain plug gasket and drain ATF.
(b) Install a new gasket and drain plug.
Torque: 49 N·m (500 kgf·cm, 36 ft·lbf)

19. DRAIN COOLANT

(a) 1AZ–FE (See pege 16–19)
(b) 1AZ–FSE (See pege 16–31)

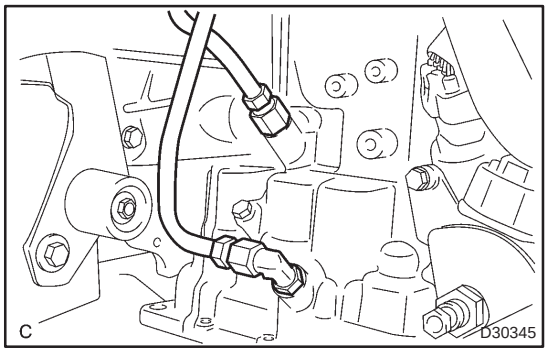

20. SEPARATE OIL COOLER INLET TUBE NO.1

(a) Using SST, disconnect the oil cooler inlet tube No.1.
SST 09023–12700

21. SEPARATE OIL COOLER OUTLET TUBE NO.1

(a) Using SST, disconnect the oil cooler outlet tube No.1.
SST 09023–12700

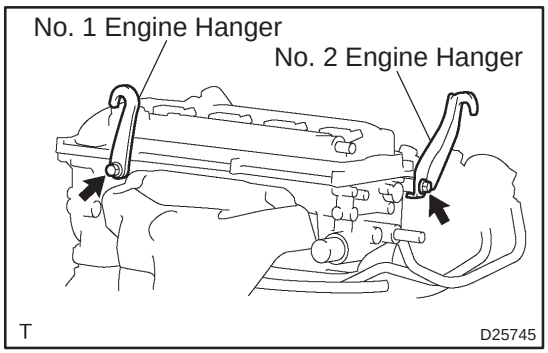

22. SUSPEND ENGINE ASSY

(a) Install the No.1 and No.2 engine hangers in the correct direction.
Parts No.:
No. 1 engine hanger: 12281–28010
No. 2 engine hanger: 12282–28010
Bolt: 91512–61020
Torque: 38 N·m (387 kgf·cm, 28 ft·lbf)

(b) Attach the engine chain hoist to the engine hanger.

CAUTION:
Do not attempt to hang the engine by hooking the chain to any other part.

23. REMOVE EXHAUST PIPE ASSY FRONT (See page 15–7)

24. REMOVE FRONT DRIVE SHAFT ASSY RH (See page 30–6)

25. REMOVE FRONT DRIVE SHAFT ASSY LH (See page 30–6)
SST 09520–01010, 09520–24010 (09520–32040)

26. REMOVE STARTER ASSY

(a) Remove the nut and disconnect the starter wire.
(b) Disconnect the connector.
(c) Remove the 2 bolts and starter.

27. SUPPORT AUTOMATIC TRANSAXLE ASSY

(a) Support the automatic transaxle with a transmission jack.

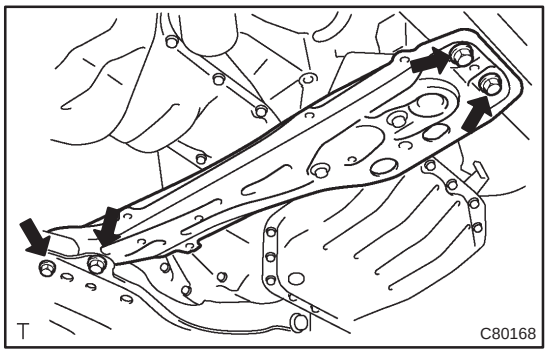

28. REMOVE ENGINE MOUNTING MEMBER SUB–ASSY CENTER

(a) Remove the 4 bolts and center member with engine mounting insulator FR.

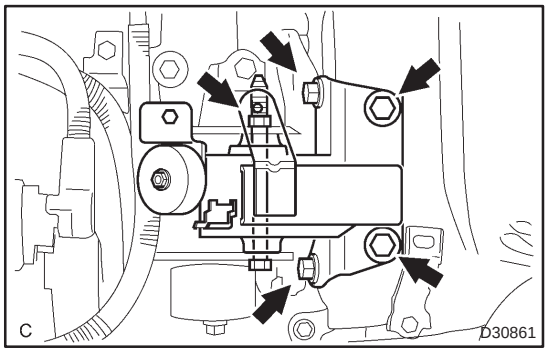

29. REMOVE TRANSVERSE ENGINE ENGINE MOUNTING INSULATOR

(a) Remove the 4 bolts, nut and engine mounting insulator LH.

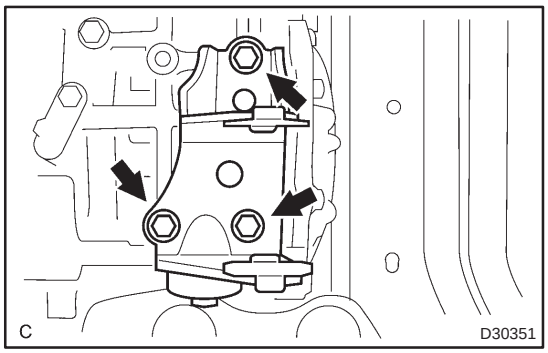

30. REMOVE TRANSVERSE ENGINE ENGINE MOUNTING BRACKET

(a) Remove the 3 bolts and engine mounting bracket LH from the automatic transaxle.

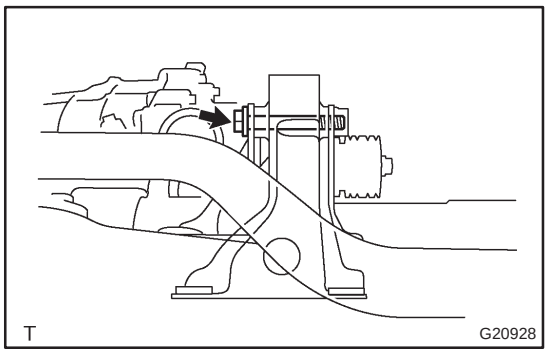

31. REMOVE TRANSVERSE ENGINE ENGINE MOUNTING INSULATOR

(a) Remove the bolt and separate the hose clamp from the engine mounting insulator RR.

(b) Remove the bolt from the engine mounting bracket RR.

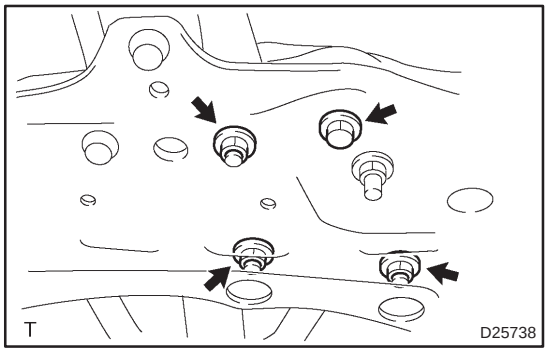

(c) Remove the 3 nuts, bolt and engine mounting insulator RR from suspension member.

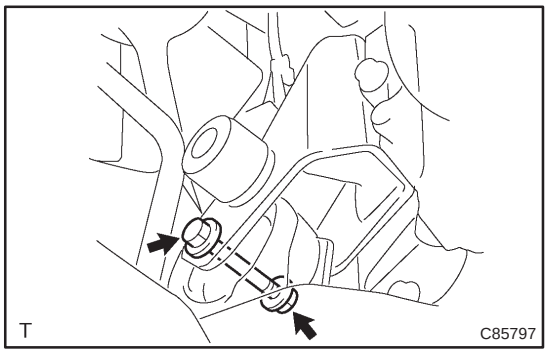

32. SEPARATE TRANSVERSE ENGINE ENGINE MOUNTING INSULATOR

(a) Remove the bolt and nut from the engine mounting bracket FR.

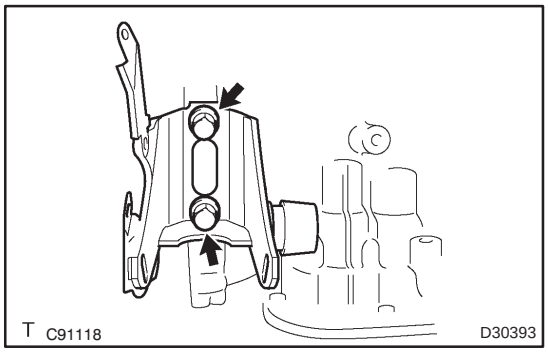

33. REMOVE TRANSVERSE ENGINE ENGINE MOUNTING BRACKET

(a) Remove the 2 bolts and engine mounting bracket FR from the automatic transaxle.

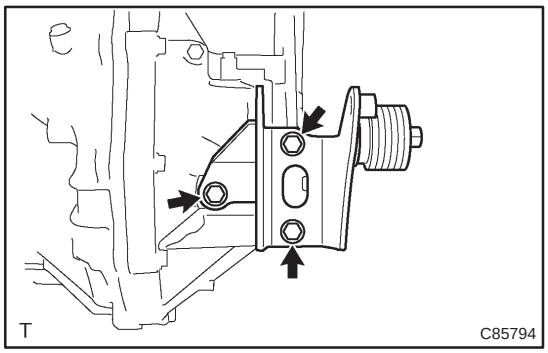

34. REMOVE TRANSVERSE ENGINE ENGINE MOUNTING BRACKET

(a) Remove the 3 bolts and engine mounting bracket RR from the automatic transaxle.

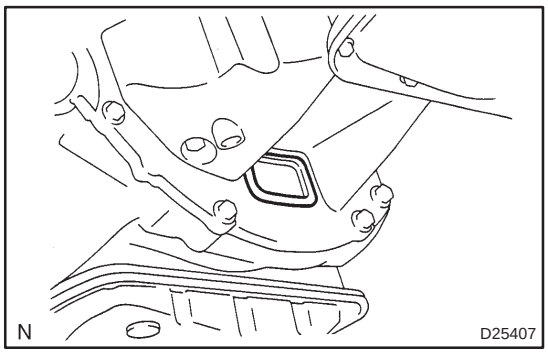

35. REMOVE FLYWHEEL HOUSING UNDER COVER

(a) Remove the flywheel housing under cover from the automatic transaxle.

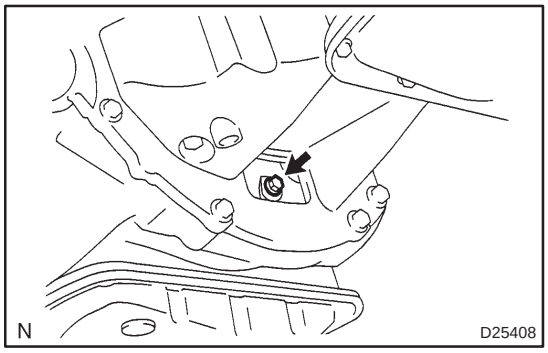

36. REMOVE AUTOMATIC TRANSAXLE ASSY

(a) Turn the crankshaft to remove the 6 bolts while holding the crankshaft pulley bolt with a wrench.

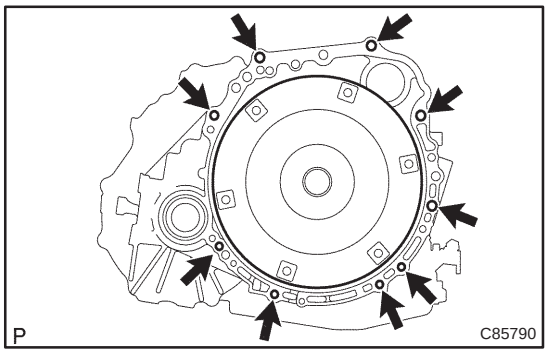

(b) Remove the 9 bolts.

(c) Separate and remove the automatic transaxle.

37. REMOVE TORQUE CONVERTER CLUTCH ASSY

38. INSPECT TORQUE CONVERTER CLUTCH ASSY (See page 40–37)

SST 09350–32014 (09351–32010, 09351–32020)

39. INSTALL TORQUE CONVERTER CLUTCH ASSY

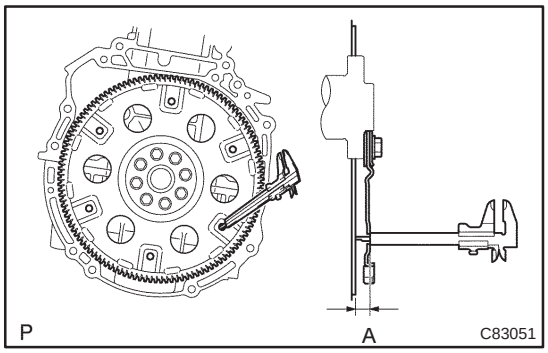

(a) Using vernier calipers, measure the dimension A between the transaxle and the end surface of the drive plate.

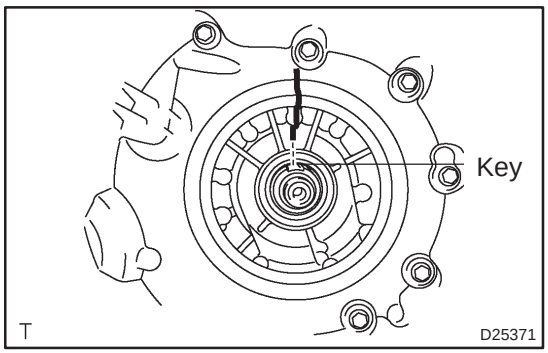

(b) Set the key of the front oil pump drive gear at the top and put a mark on the housing.

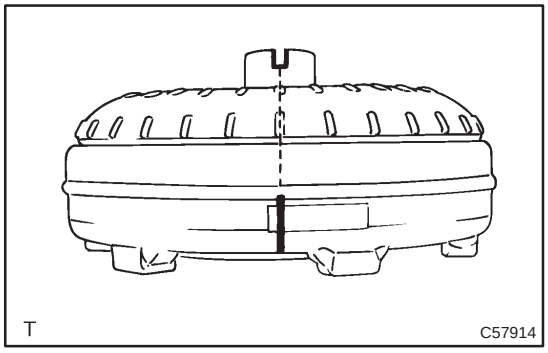

(c) Put a mark on the torque converter clutch so that its groove can be clearly indicated.

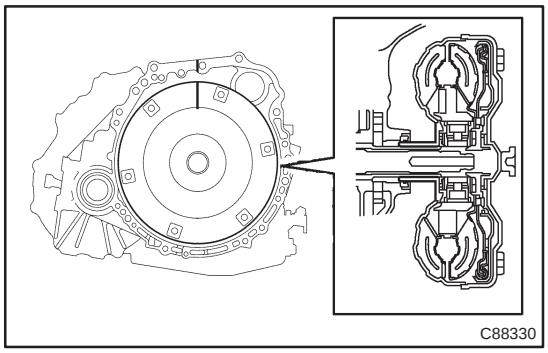

(d) Match the 2 marks on the transaxle case and the torque converter clutch and fit the splined part of the input shaft to the spline part of the turbine runner.

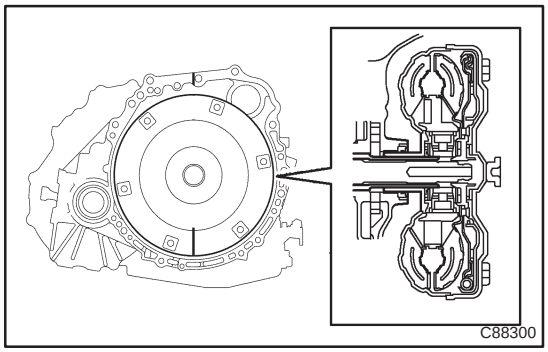

(e) Rotating the torque converter clutch, fit the spline part of the stator shaft with the spline part of the stator.

HINT:

Rotate it about 180 degrees.

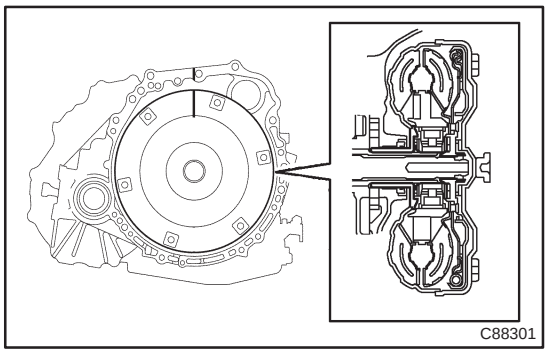

(f) Rotating the torque converter clutch, match the 2 marks on the case and the torque converter clutch again and fit the key of the oil pump drive gear into the key way of the torque converter clutch.

NOTICE:

When rotating the torque converter clutch, do not push it by excessive force.

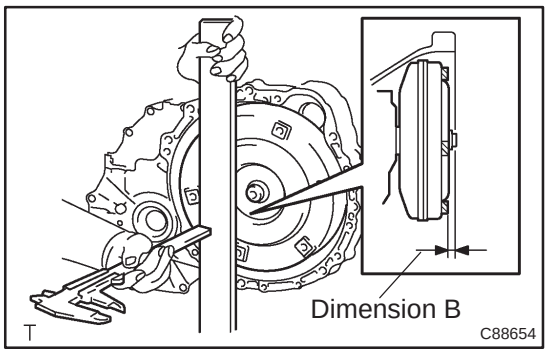

(g) Using calipers and a straight edge, measure the dimension B shown in the illustration and check that B is greater than A measured in (a).

Standard: A + 1 mm or more

40. INSTALL AUTOMATIC TRANSAXLE ASSY

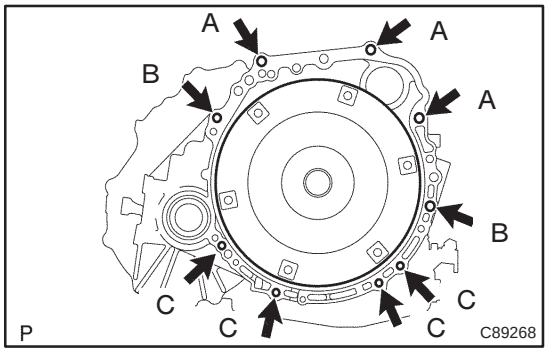

(a) Install the automatic transaxle and 9 bolts to the engine.

Torque:

Bolt A: 64 N·m (650 kgf·cm, 47 ft·lbf)

Bolt B: 46 N·m (470 kgf·cm, 34 ft·lbf)

Bolt C: 44 N·m (449 kgf·cm, 32 ft·lbf)

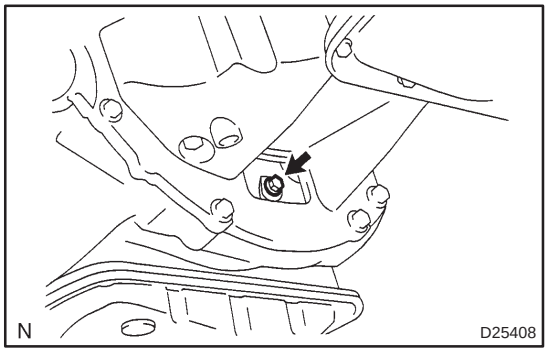

(b) Install the 6 torque converter clutch mounting bolts.

Torque: 41 N·m (420 kgf·cm, 30 ft·lbf)

HINT:

First install green colored bolt, and then the 5 bolts.

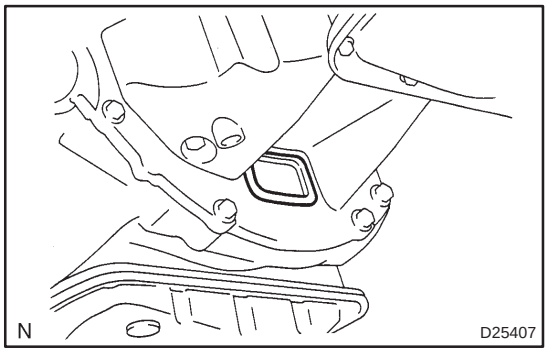

41. INSTALL FLYWHEEL HOUSING UNDER COVER

(a) Install the flywheel housing under cover to the automatic transaxle.

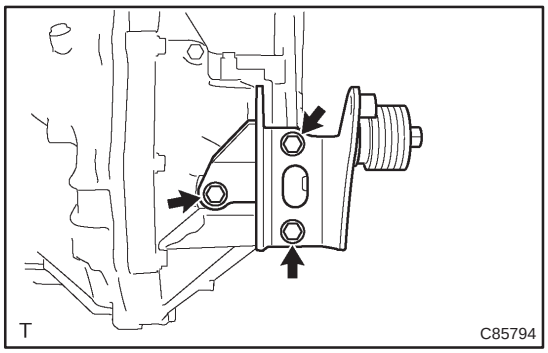

42. INSTALL TRANSVERSE ENGINE ENGINE MOUNTING BRACKET

(a) Install the engine mounting bracket RR and 3 bolts to the automatic transaxle.
Torque: 64 N·m (652 kgf·cm, 47 ft·lbf)

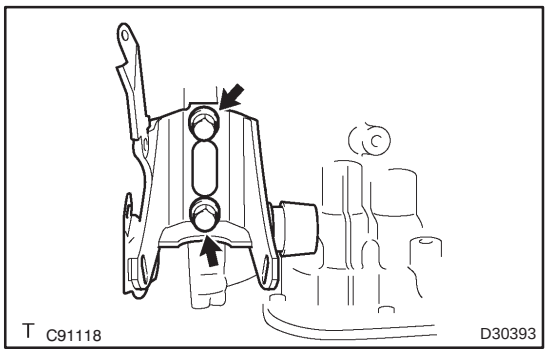

43. INSTALL TRANSVERSE ENGINE ENGINE MOUNTING BRACKET

(a) Install the engine mounting bracket FR and 2 bolts to the automatic transaxle.
Torque: 64 N·m (652 kgf·cm, 47 ft·lbf)

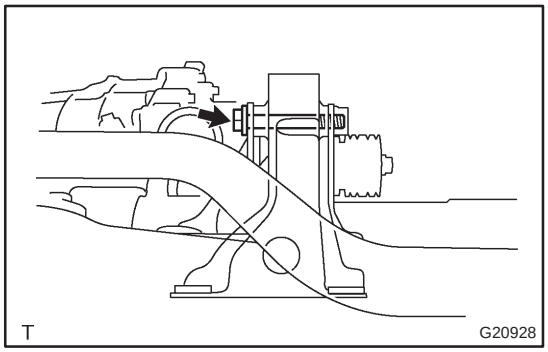

44. INSTALL TRANSVERSE ENGINE ENGINE MOUNTING INSULATOR

(a) Install the engine mounting insulator RR and bolt to the engine mounting bracket RR.
Torque: 87 N·m (887 kgf·cm, 64 ft·lbf)

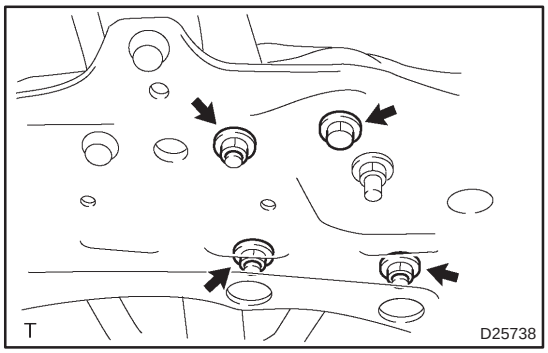

(b) Tighten the 3 nuts and bolt.
Torque: 52 N·m (530 kgf·cm, 38 ft·lbf)

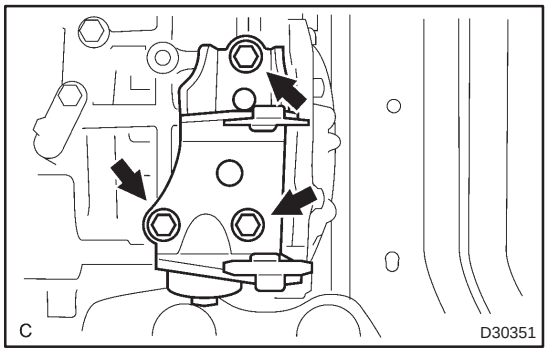

45. INSTALL TRANSVERSE ENGINE ENGINE MOUNTING BRACKET

(a) Install the engine mounting bracket LH and 3 bolts to the automatic transaxle.
Torque: 64 N·m (653 kgf·cm, 47 ft·lbf)

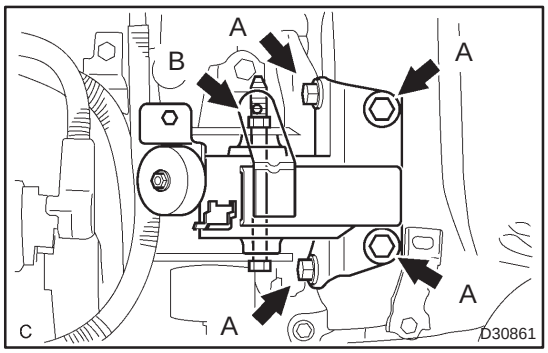

46. INSTALL TRANSVERSE ENGINE ENGINE MOUNTING INSULATOR

(a) Install the engine mounting insulator LH, 5 bolts and nut.
Torque:
Bolt A: 52 N·m (530 kgf·cm, 38 ft·lbf)
Nut B: 80 N·m (816 kgf·cm, 59 ft·lbf)

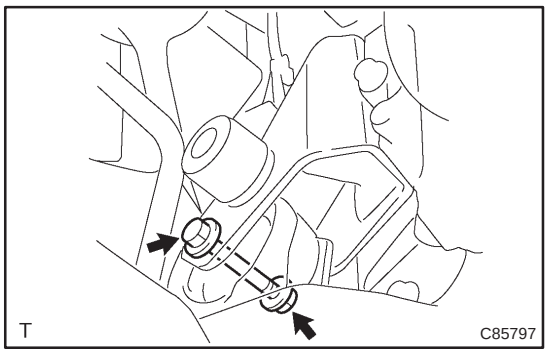

47. INSTALL TRANSVERSE ENGINE ENGINE MOUNTING INSULATOR

(a) Install the bolt and nut to the engine mounting bracket FR.
Torque: 52 N·m (530 kgf·cm, 38 ft·lbf)

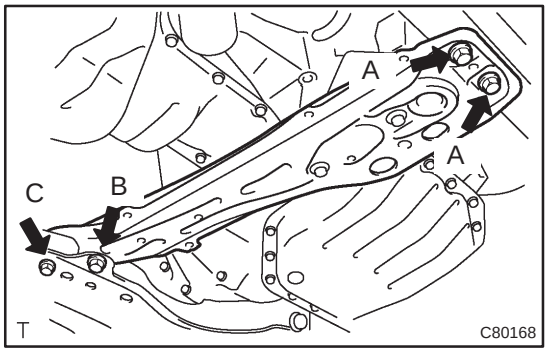

48. INSTALL ENGINE MOUNTING MEMBER SUB–ASSY CENTER

(a) Install the center member and 4 bolts.
Torque:
Bolt A: 45 N·m (459 kgf·cm, 33 ft·lbf)
Bolt B: 96 N·m (979 kgf·cm, 71 ft·lbf)
Bolt C: 52 N·m (530 kgf·cm, 38 ft·lbf)

49. INSTALL STARTER ASSY

(a) Install the starter with the 2 bolts.
Torque: 37 N·m (377 kgf·cm, 27 ft·lbf)

(b) Connect the connecter.

(c) Install the starter wire with the nut.
Torque: 9.8 N·m (100 kgf·cm, 87 in.·lbf)

50. INSTALL FRONT DRIVE SHAFT ASSY LH (See page 30–6)

51. INSTALL FRONT DRIVE SHAFT ASSY RH (See page 30–6)

52. INSTALL EXHAUST PIPE ASSY FRONT (See page 15–7)

53. INSTALL FRONT WHEELS

Torque: 103 N·m (1,050 kgf·cm, 76 ft·lbf)

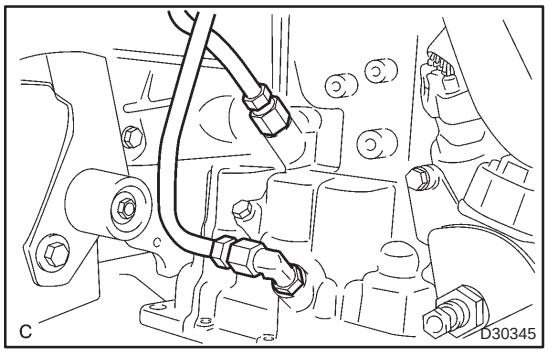

54. INSTALL OIL COOLER OUTLET TUBE NO.1

(a) Using SST, tighten the oil cooler outlet tube No.1.
Torque: 34 N·m (347 kgf·cm, 25 ft·lbf)
SST 09023–12700

55. INSTALL OIL COOLER INLET TUBE NO.1

(a) Using SST, tighten the oil cooler inlet tube No.1.
Torque: 34 N·m (347 kgf·cm, 25 ft·lbf)
SST 09023–12700

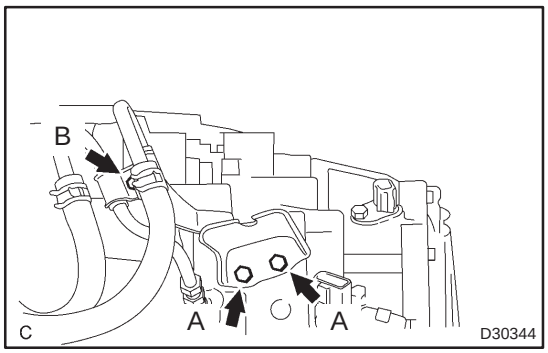

56. INSTALL TRANSMISSION CONTROL CABLE BRACKET NO.1

(a) Install the transmission control cable bracket No.1 and clamp and 3 bolts to the automatic trasaxle.
Torque:
Bolt A: 12 N·m (122 kgf·cm, 8 ft·lbf)
Bolt B: 5.4 N·m (55 kgf·cm, 47 ft·lbf)

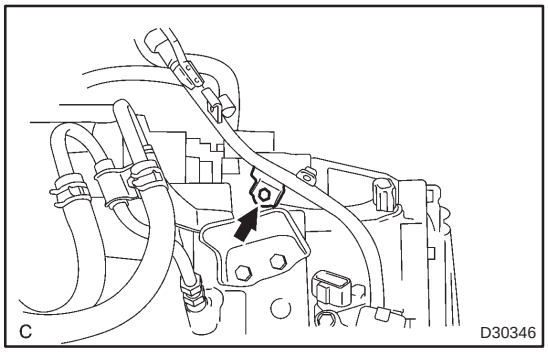

57. INSTALL TRANSMISSION OIL FILLER TUBE SUB–ASSY

(a) Coat a new O–ring with ATF, and install it to the oil filler tube.
(b) Install the oil filler tube and bolt to the automatic transaxle.
Torque: 5.5 N·m (56 kgf·cm, 49 in.·lbf)
(c) Install the ATF level gauge.

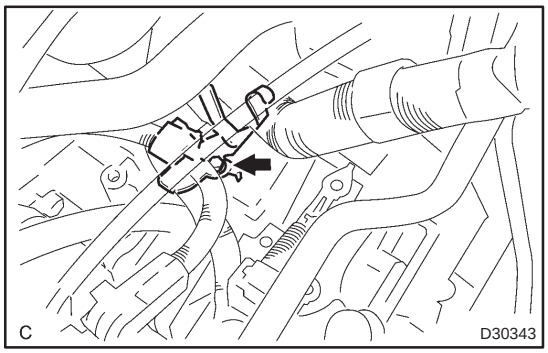

58. INSTALL TRANSMISSION CONTROL CABLE CLAMP

(a) Install the transmission control cable clamp and bolt to the automatic transaxle.
Torque: 12 N·m (122 kgf·cm, 8 ft·lbf)

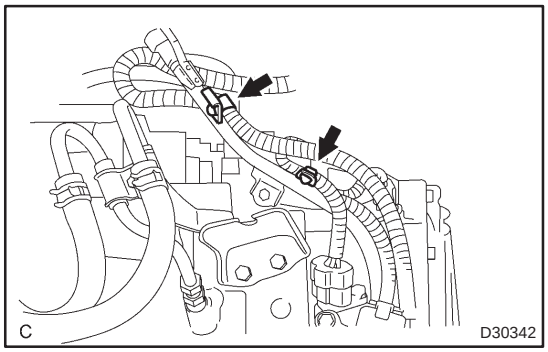

59. CONNECT CONNECTOR

(a) Connect the 2 clamps to the oil filler tube.
(b) Connect the transmission wire connector.
(c) Connect the park/neutral position switch connector.
(d) Connect the 2 speed sensor connectors.

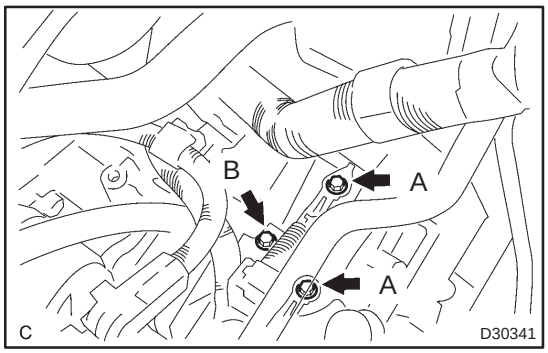

60. INSTALL WIRE HARNESS

(a) Install the 2 wire harnesses and wire harness bracket with the 3 bolts.
Torque:
Bolt A: 5.0 N·m (51 kgf·cm, 44 in.·lbf)
Bolt B: 8.4 N·m (86 kgf·cm, 74 in.·lbf)

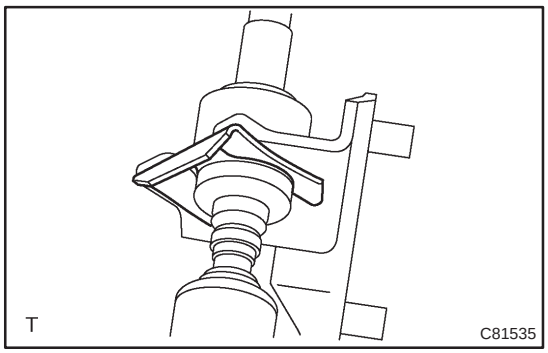

61. INSTALL TRANSMISSION CONTROL CABLE ASSY

(a) Temporarily install the control cable to the control shaft lever with nuts.
(b) Install the control cable and clip to the bracket.

62. INSTALL AIR CLEANER ASSY
Torque: 5.0 N·m (50 kgf·cm, 44 in.·lbf)
63. INSTALL BATTERY CARRIER
Torque: 13 N·m (132 kgf·cm, 10 ft·lbf)
64. INSTALL BATTERY
65. INSTALL ENGINE COVER SUB–ASSY NO.1
Torque: 9.0 N·m (92 kgf·cm, 80 in.·lbf)
66. INSTALL HOOD SUB–ASSY
Torque: 13 N·m (132 kgf·cm, 10 ft·lbf)
67. INSPECT HOOD SUB–ASSY (See page 75–2)
68. ADJUST HOOD SUB–ASSY (See page 75–2)
69. ADD COOLANT
(a) 1AZ–FE (See pege 16–13)
(b) 1AZ–FSE (See pege 16–25)
70. ADD AUTOMATIC TRANSAXLE FLUID
71. INSPECT AUTOMATIC TRANSAXLE FLUID (See page 40–2)
72. ADJUST SHIFT LEVER POSITION (See page 40–69)
73. INSPECT SHIFT LEVER POSITION (See page 40–69)
74. INSPECT AND ADJUST FRONT WHEEL ALIGNMENT (See page 26–6)
75. CHECK ABS SPEED SENSOR SIGNAL

(a) ABS WITH EBD SYSTEM (See pege 05–699)
(b) ABS WITH EBD & BA &TRAC & VSC SYSTEM (See pege 05–756)

76. RESET MEMORY

(a) 1AZ–FE (See pege 05–863)
(b) 1AZ–FSE (See pege 05–920)

TORQUE CONVERTER CLUTCH AND DRIVE PLATE (ATM)

400DN–02

INSPECTION

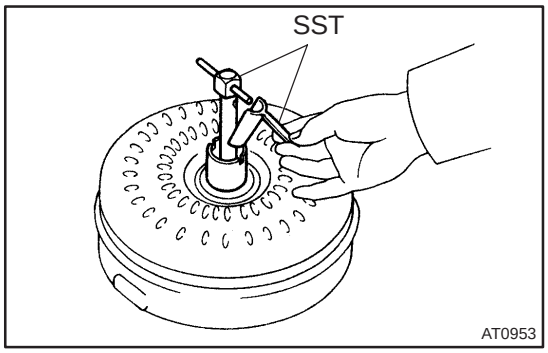

1. INSPECT TORQUE CONVERTER CLUTCH ASSY

(a) Inspect the one–way clutch.

(1) Install SST into the inner race of the one–way clutch.

SST 09350–32014 (09351–32010)

(2) Install SST so that it fits in the notch of the converter hub and outer race of the one–way clutch.

SST 09350–32014 (09351–32020)

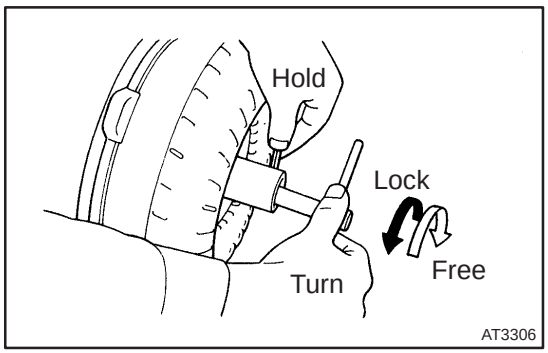

(3) Check that the one–way clutch locks when it is turned counterclockwise, and rotates smoothly clockwise.

Clean the torque converter clutch and retest the one–way clutch as necessary.

Replace the torque converter clutch if the one–way clutch still fails the test.

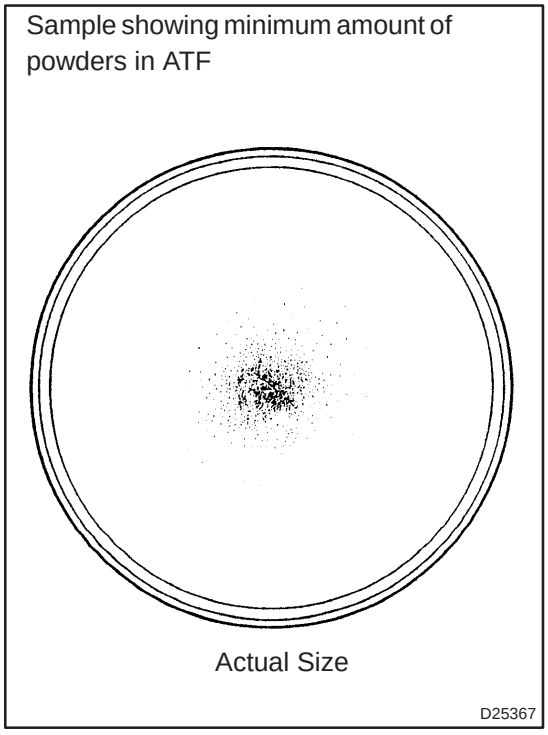

(b) Determine the condition of the torque converter clutch assy.

(1) If the inspection result of the torque converter clutch assy meets the following conditions, replace the torque converter clutch.

Malfunction item:

- **Any metallic sound is heard from the torque converter clutch during stall test or when the shift lever is in neutral position.**
- **One–way clutch is free or locked in both directions. Fine powders exceeding the sample limit is identified in ATF. (See the sample.)**

HINT:

The sample shows the auto fluid of approx. 0.25 liters (0.26 US qts, 0.22 Imp. qts) that is taken out from the removed torque converter clutch.

(c) Replace the ATF in the torque converter clutch.

(1) If the ATF is discolored and/or has a foul odor, stir the ATF in the torque converter clutch completely and drain it with the face for installation facing up.

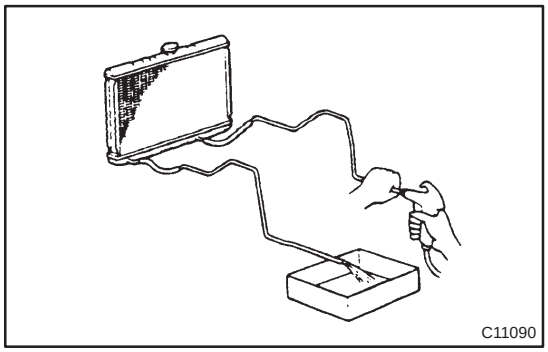

(d) Clean and check the oil cooler and oil pipe line.
(1) If the torque converter clutch is inspected or the ATF is exchanged, clean the oil cooler and oil pipe line.

HINT:

- Spray compressed air of 196 kPa (2 kgf/cm^2, 28 psi) from the inlet hose.
- If plenty of fine powders are identified in the ATF, add new ATF using a bucket pump and clean it again.

(2) If the ATF is cloudy, inspect the oil cooler.

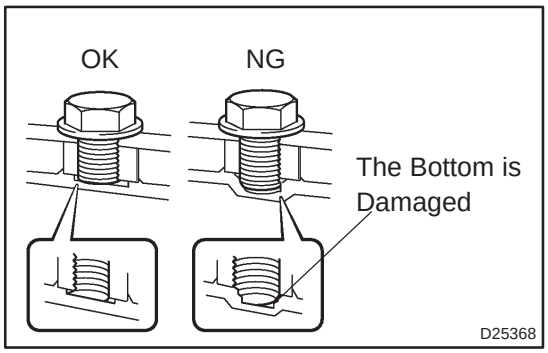

(e) Prevent deformation of the torque converter clutch and damage to the oil pump gear.
(1) When any marks due to interference are found on the end of the bolt for the torque converter clutch and on the bottom of the bolt hole, replace the bolt and the torque converter clutch.
(2) All of the bolts shall have the same length.
(3) Do not lose the spring washer.

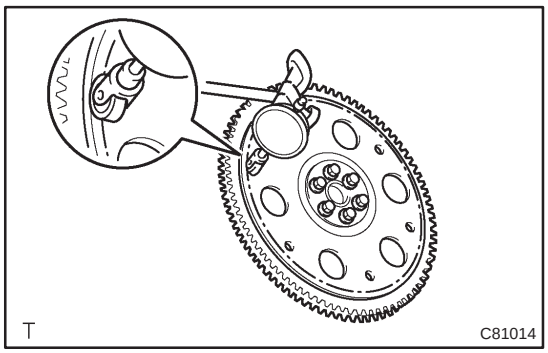

2. INSPECT DRIVE PLATE & RING GEAR SUB–ASSY

(a) Set up a dial indicator and measure the drive plate runout.
(b) Check the damage of the ring gear.
Maximum runout: 0.20 mm (0.0079 in.)

If the runout is not within the specification or ring gear is damaged, replace the drive plate.

SPEED SENSOR (U341E)

4011X–01

REPLACEMENT

1. **REMOVE BATTERY**
2. **REMOVE BATTERY CARRIER**
3. **REMOVE AIR CLEANER ASSY**
4. **REMOVE AIR CLEANER HOSE NO.1**

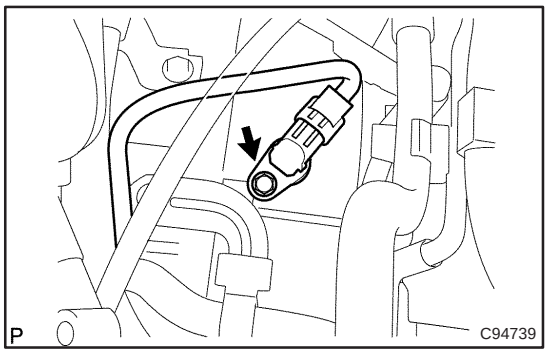

5. **REMOVE SPEED SENSOR**

(a) Disconnect the speed sensor connector.

(b) Remove the bolt and speed sensor.

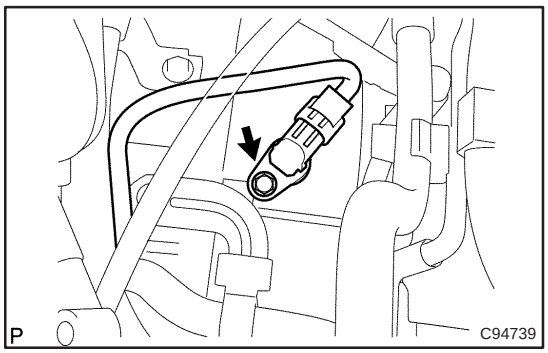

6. **INSTALL SPEED SENSOR**

(a) Coat an O–ring with ATF.

(b) Install the speed sensor with the bolt.

Torque: 5.4 N·m (55 kgf·cm, 48 ft·lbf)

(c) Connect the speed sensor connector.

7. **INSTALL AIR CLEANER HOSE NO.1**
8. **INSTALL AIR CLEANER ASSY**
   Torque: 5.0 N·m (51 kgf·cm, 44 in.·lbf)
9. **INSTALL BATTERY CARRIER**
   Torque: 13 N·m (131 kgf·cm, 9 ft·lbf)
10. **INSTALL BATTERY**

SPEED SENSOR (U241E)

400DB–02

REPLACEMENT

1. REMOVE BATTERY
2. REMOVE BATTERY CARRIER
3. REMOVE AIR CLEANER ASSY
4. REMOVE AIR CLEANER HOSE NO.1

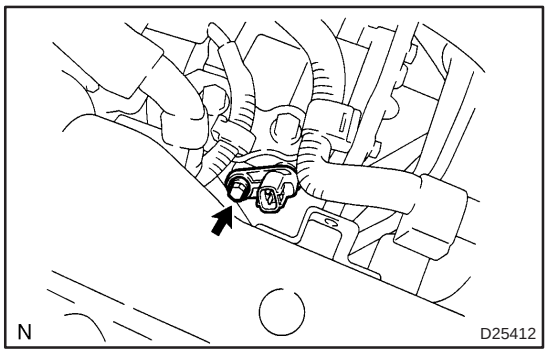

5. REMOVE SPEED SENSOR (NT SENSOR)

(a) Disconnect the speed sensor connector.

(b) Remove the bolt and speed sensor.

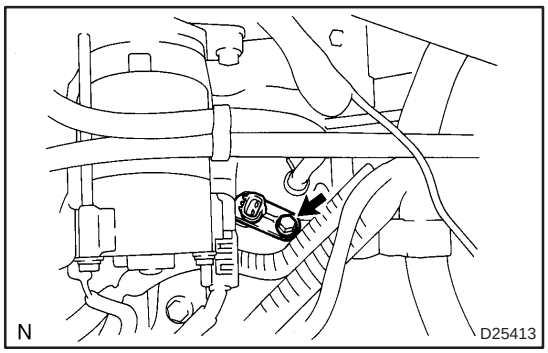

6. REMOVE SPEED SENSOR (NC SENSOR)

(a) Disconnect the speed sensor connector.

(b) Remove the bolt and speed sensor.

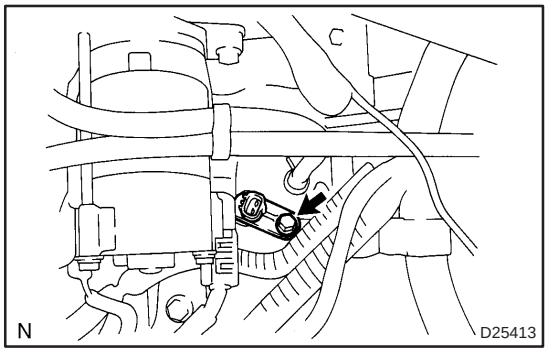

7. INSTALL SPEED SENSOR (NC SENSOR)

(a) Coat an O–ring with ATF.

(b) Install the speed sensor with the bolt.

Torque: 12 N·m (120 kgf·cm, 8 ft·lbf)

HINT:

Make sure of the manufacturer’s name.

(c) Connect the speed sensor connector.

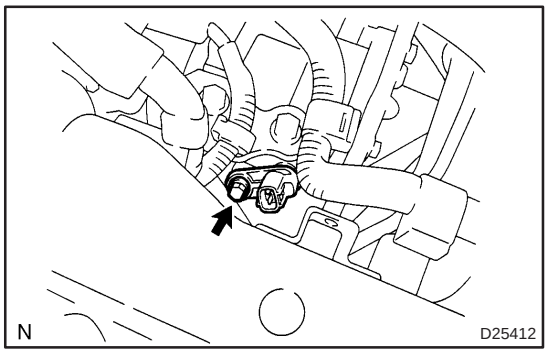

8. INSTALL SPEED SENSOR (NT SENSOR)

(a) Coat an O–ring with ATF.

(b) Install the speed sensor with the bolt.

Torque: 12 N·m (120 kgf·cm, 8 ft·lbf)

HINT:

Make sure of the manufacturer’s name.

(c) Connect the speed sensor connector.

9. INSTALL AIR CLEANER ASSY
Torque: 5.0 N·m (51 kgf·cm, 44 in.·lbf)
10. INSTALL BATTERY CARRIER
Torque: 13 N·m (131 kgf·cm, 9 ft·lbf)
11. INSTALL BATTERY

TRANSMISSION VALVE BODY ASSY (U341E)

40123–01

REPLACEMENT

1. REMOVE ENGINE UNDER COVER LH

2. DRAIN AUTOMATIC TRANSAXLE FLUID

(a) Remove the drain plug, gasket, and drain ATF.

(b) Install a new gasket and the drain plug.
Torque: 49 N·m (500 kgf·cm, 36 ft·lbf)

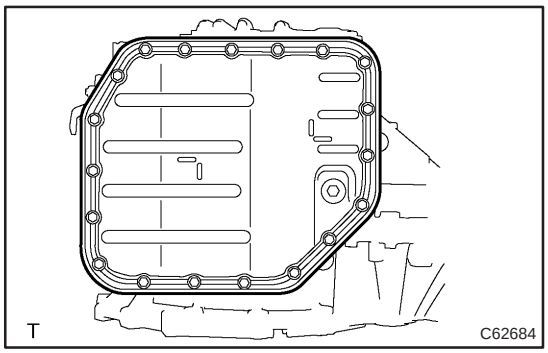

3. REMOVE AUTOMATIC TRANSAXLE OIL PAN SUB–ASSY

(a) Remove the 19 bolts, oil pan and gasket.

NOTICE:

Some fluid will remain in the oil pan. Remove all of the pan bolts, and carefully remove the oil pan assembly. Discard the gasket.

(b) Remove the 2 magnets from the oil pan.

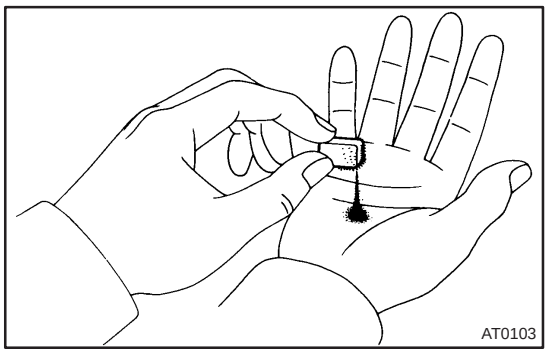

(c) Examine the particles in the oil pan.

(1) Remove the magnets and use them to collect any steel chips. Look at the chips and particles in the oil pan and on the magnet carefully to see the type of wear which might be found in the tranaxle.
Steel (magnetic): bearing, gear and plate wear
Brass (non–magnetic): bearing wear

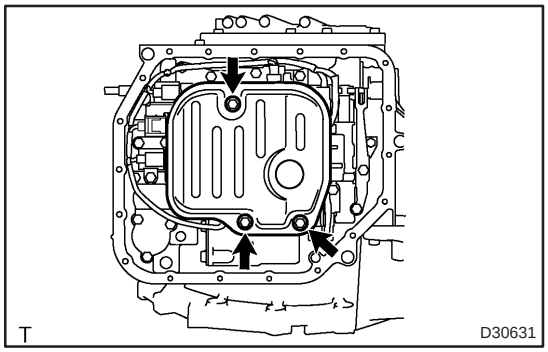

4. REMOVE VALVE BODY OIL STRAINER ASSY

(a) Remove the 3 bolts and oil strainer.

NOTICE:

Be careful as some fluid will come out with the oil strainer.

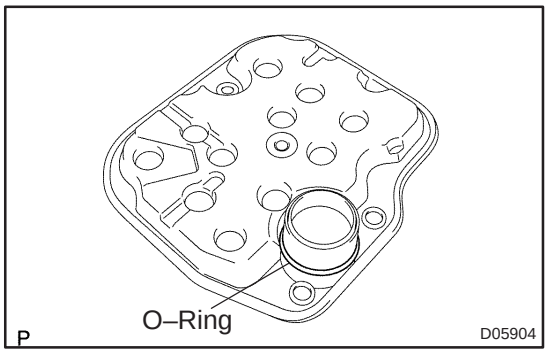

(b) Remove the O–ring from the oil strainer.

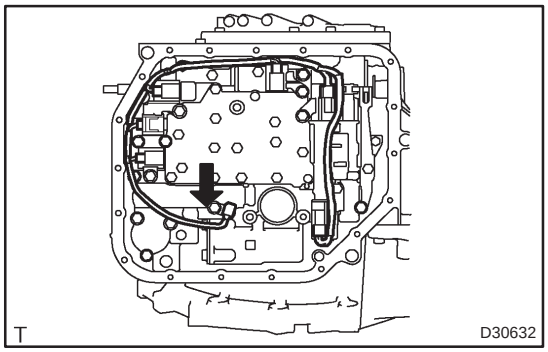

5. REMOVE TRANSMISSION VALVE BODY ASSY

(a) Disconnect the 5 connectors.

(b) Remove the bolt and lock plate, and remove the ATF temperature sensor.

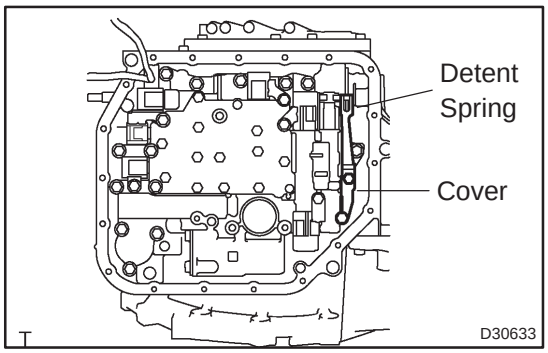

(c) Remove the 2 bolts, cover and detent spring.

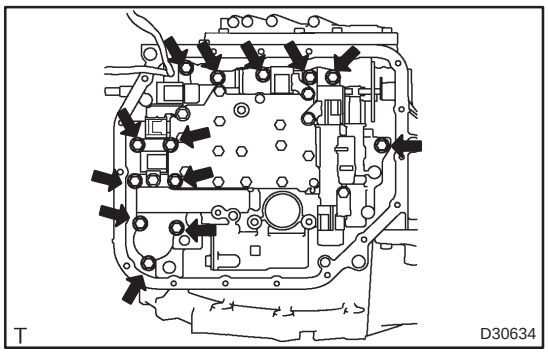

(d) Remove the 13 bolts and valve body.

NOTICE:

Be careful not to drop the check valve body, spring and accumulator piston.

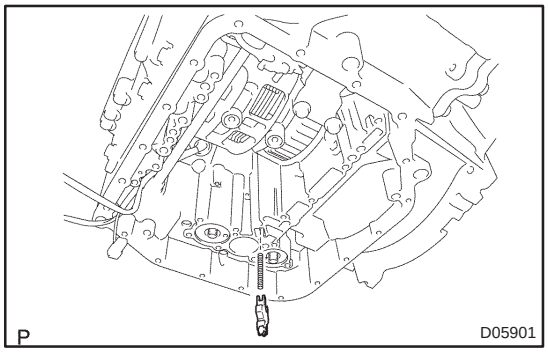

(e) Remove the check ball body and spring.

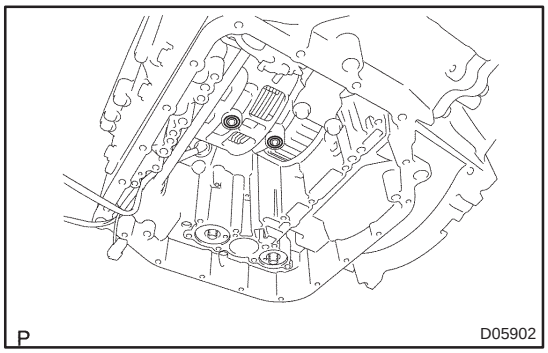

(f) Remove the 2 apply gaskets.

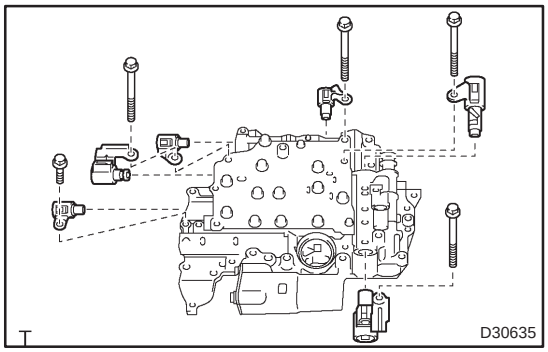

(g) Remove the 5 bolts and 6 shift solenoid valves.

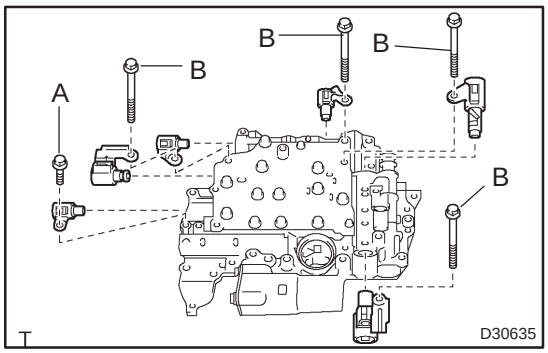

6. INSTALL TRANSMISSION VALVE BODY ASSY

(a) Install the 6 shift solenoid valves with the 5 bolts.

Torque:
Bolt A: 11 N·m (110 kgf·cm, 8 ft ·lbf)
Bolt B: 11 N·m (110 kgf·cm, 8 ft ·lbf)
Bolt length:
Bolt A: 14 mm (0.55 in.)
Bolt B: 55 mm (2.17 in.)

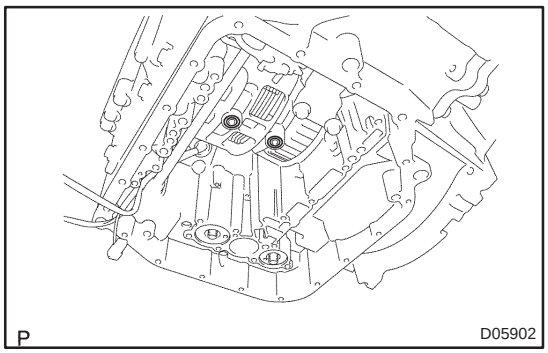

(b) Coat 2 new apply gaskets with ATF.

(c) Install the gaskets to the transaxle case.

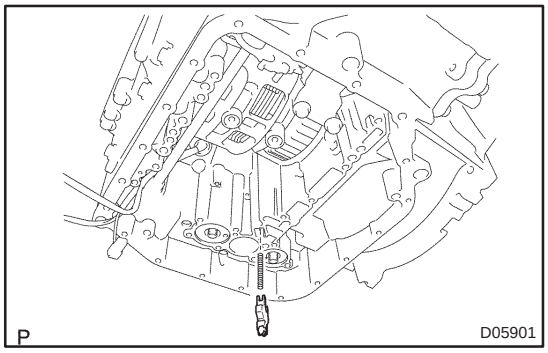

(d) Install the spring and check ball body.

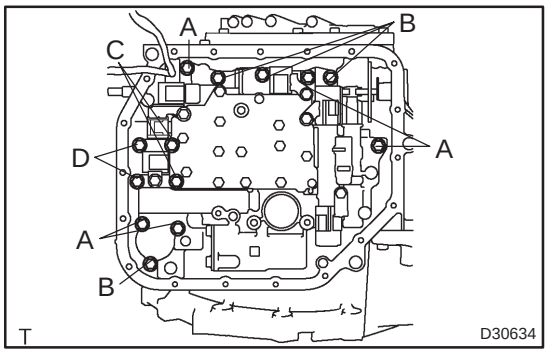

(e) Align the groove of the manual valve with the pin of the manual valve lever.

(f) Temporarily install the valve body with the 13 bolts.

Bolt length:
Bolt A: 32 mm (1.26 in.)
Bolt B: 22 mm (0.87 in.)
Bolt C: 55 mm (2.17 in.)
Bolt D: 45 mm (1.77 in.)

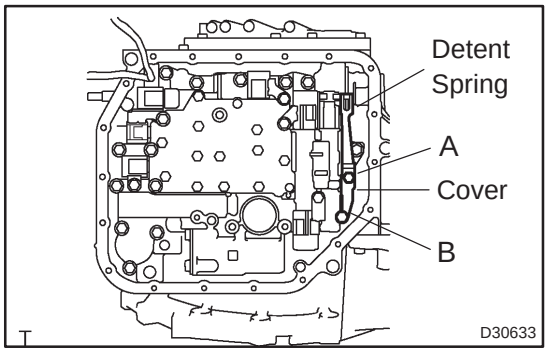

(g) Temporarily install the detent spring and cover with the 2 bolts.
Bolt length:
Bolt A: 14 mm (0.55 in.)
Bolt B: 45 mm (1.77 in.)

(h) Check that the manual valve lever contacts the center of the roller at the tip of the detent spring.

(i) Tighten the 15 bolts.
Torque: 11 N·m (110 kgf·cm, 8 ft·lbf)

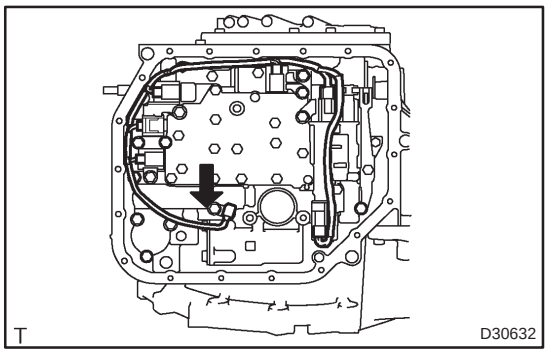

(j) Install the ATF temperature sensor with the lock plate and bolt.
Torque: 11 N·m (110 kgf·cm, 8 ft·lbf)

(k) Connect the 5 shift solenoid valve connectors.

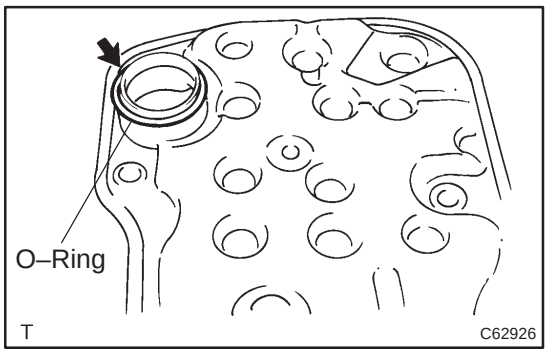

7. INSTALL VALVE BODY OIL STRAINER ASSY

(a) Coat a new O–ring with ATF.

(b) Install the O–ring to the oil strainer.

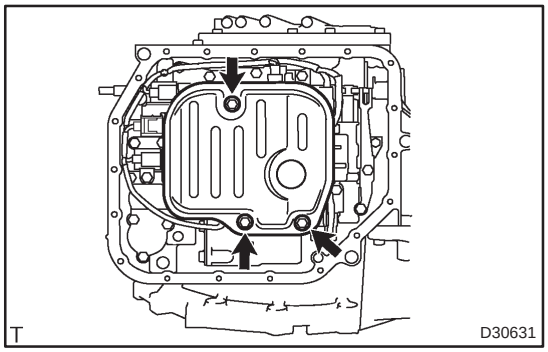

(c) Install the oil strainer with the 3 bolts.
Torque: 11 N·m (110 kgf·cm, 8 ft·lbf)

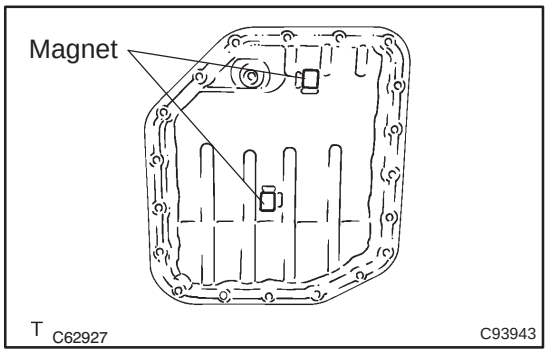

8. INSTALL AUTOMATIC TRANSAXLE OIL PAN SUB–ASSY

(a) Install the 2 magnets in the oil pan, as shown in the illustration.

(b) Install a new gasket to the oil pan.

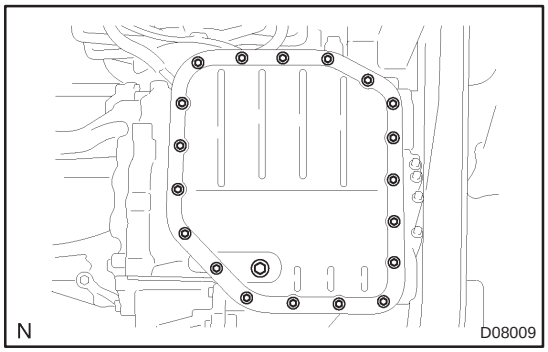

(c) Install the oil pan and a new gasket with the 19 bolts.
Torque: 7.8 N·m (80 kgf·cm, 69 in.·lbf)

9. ADD AUTOMATIC TRANSAXLE FLUID
10. INSPECT AUTOMATIC TRANSAXLE FLUID (See page 40–2)
11. RESET MEMORY (See page 05–985)

TRANSMISSION VALVE BODY ASSY (U241E)

400DC–02

REPLACEMENT

1. REMOVE ENGINE UNDER COVER LH

2. DRAIN AUTOMATIC TRANSAXLE FLUID

(a) Remove the drain plug, gasket and drain ATF.

(b) Install a new gasket and the drain plug.

Torque: 49 N·m (500 kgf·cm, 36 ft·lbf)

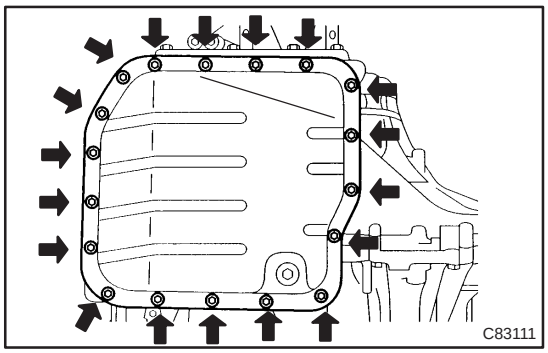

3. REMOVE AUTOMATIC TRANSAXLE OIL PAN SUB–ASSY

(a) Remove the 18 bolts, oil pan and gasket.

NOTICE:

Some fluid will remain in the oil pan. Remove all of the oil pan bolts, and carefully remove the oil pan assembly. Discard the gasket.

(b) Remove the 2 magnets from the oil pan.

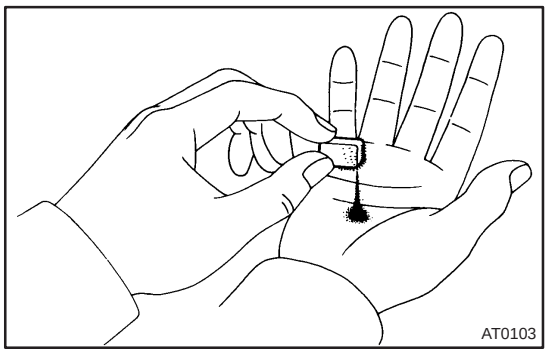

(c) Examine the particles in the oil pan.

(1) Remove the magnets and use them to collect any steel chips. Look at the chips and particles in the oil pan and on the magnet carefully to see the type of wear which might be found in the tranaxle.
Steel (magnetic): bearing, gear and plate wear
Brass (non–magnetic): bearing wear

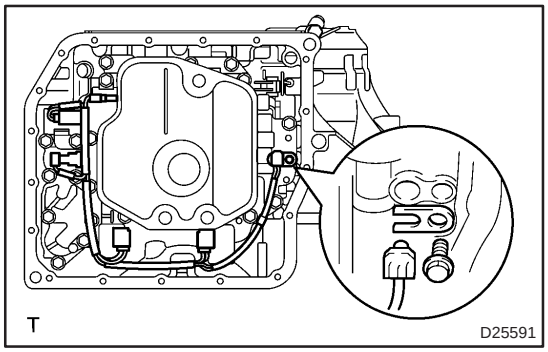

4. SEPARATE TRANSMISSION WIRE

(a) Disconnect the 5 solenoid valve connectors.

(b) Remove the bolt and lock plate, and separate the ATF temperature sensor.

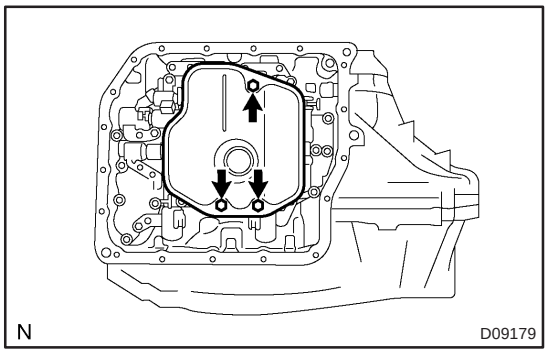

5. REMOVE VALVE BODY OIL STRAINER ASSY

(a) Remove the 3 bolts and oil strainer.

Be careful as some fluid will come out with the oil strainer.

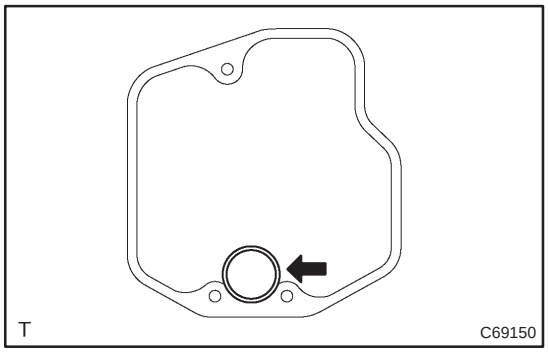

(b) Remove the O–ring from the oil strainer.

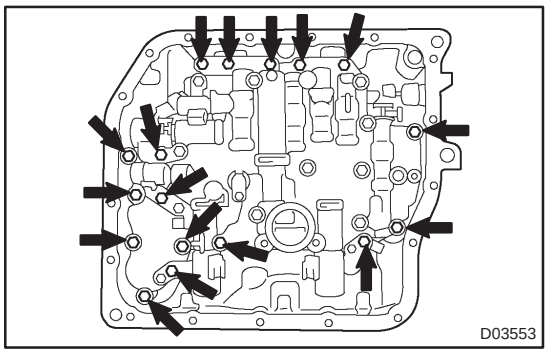

6. REMOVE TRANSMISSION VALVE BODY ASSY

(a) Support the valve body assy, and remove the 17 bolts and the valve body assy.

NOTICE:

Be careful not to drop the check ball body and spring.

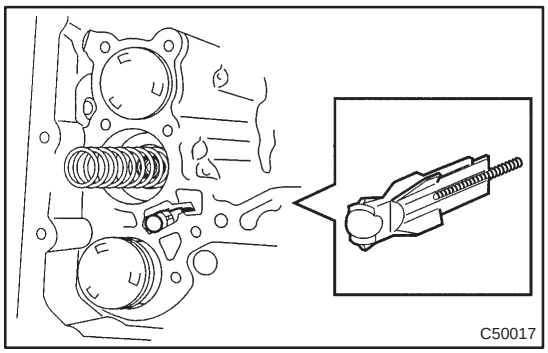

(b) Remove the check ball body and spring.

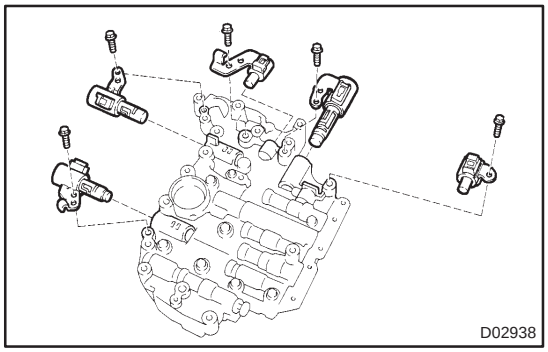

(c) Remove the 5 bolts and 5 solenoid valves.

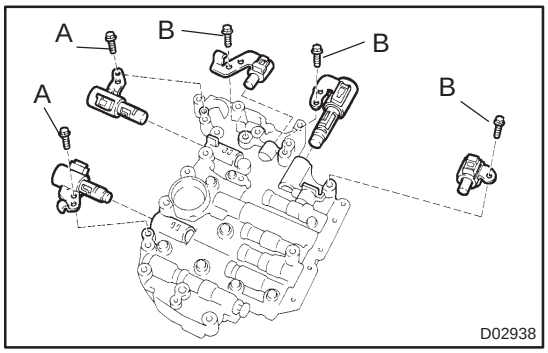

7. INSTALL TRANSMISSION VALVE BODY ASSY

(a) Install the 5 solenoid valves with the 5 bolts.

Torque:

Bolt A: 6.6 N·m (67 kgf·cm, 58 in.·lbf)

Bolt B: 11 N·m (112 kgf·cm, 8 ft ·lbf)

Bolt length:

Bolt A: 12 mm (0.47 in.)

Bolt B: 45 mm (1.77 in.)

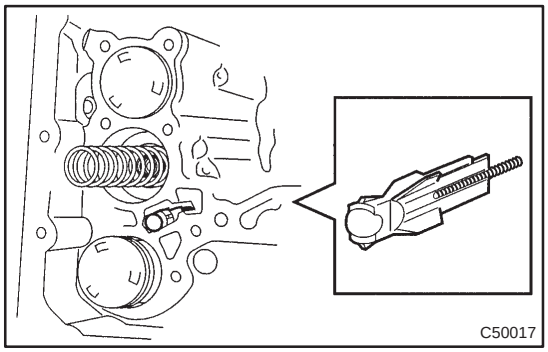

(b) Install the spring and check ball body.

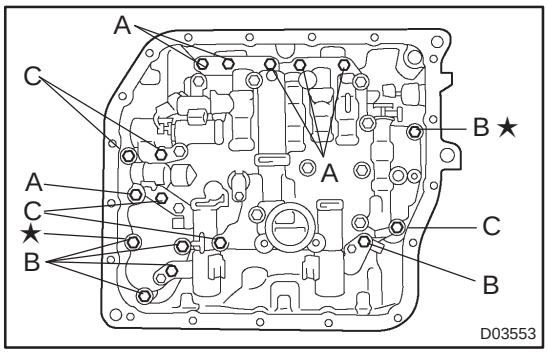

(c) Align the groove of the manual valve with the pin of the lever.

(d) Install the valve body assy with the 17 bolts.
Torque: 11 N·m (112 kgf·cm, 8 ft·lbf)

NOTICE:

- **Push the valve body against the accumulator piston spring and the check ball body to install it.**
- **Tighten those bolts marked by ★ in the illustration first temporarily because they are positioning bolts.**
  Bolt length:
  Bolt A: 25 mm (0.984 in.)
  Bolt B: 41 mm (1.614 in.)
  Bolt C: 45 mm (1.771 in.)

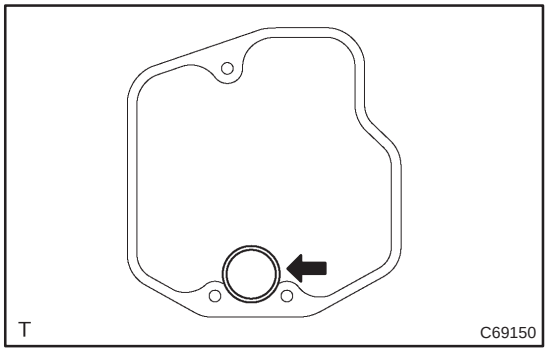

8. INSTALL VALVE BODY OIL STRAINER ASSY

(a) Coat a new O–ring with ATF.

(b) Install the O–ring to the oil strainer.

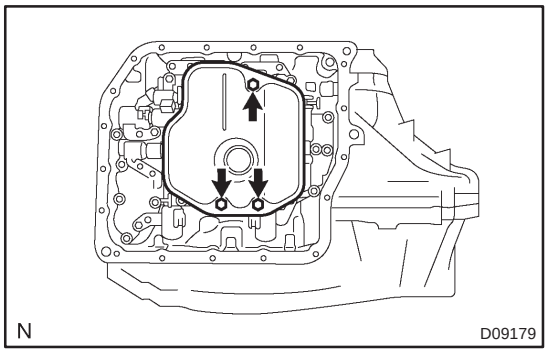

(c) Install the oil strainer with the 3 bolts.
Torque: 11 N·m (112 kgf·cm, 8 ft·lbf)

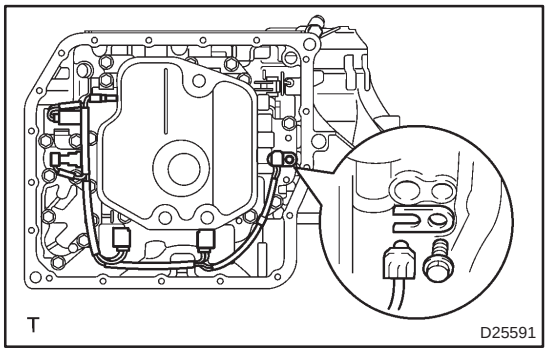

9. INSTALL TRANSMISSION WIRE

(a) Coat an O–ring with ATF.

(b) Install the ATF temperature sensor with the lock plate and bolt.

Torque: 6.6 N·m (67 kgf·cm, 58 in.·lbf)

(c) Connect the 5 solenoid valve connectors.

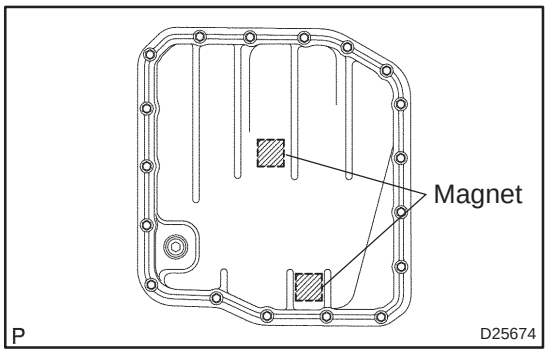

10. INSTALL AUTOMATIC TRANSAXLE OIL PAN SUB–ASSY

(a) Install the 2 magnets in the oil pan.

(b) Apply the seal packing or equivalent to the 18 bolts.

Seal packing:
THREE BOND 1344 or equivalent

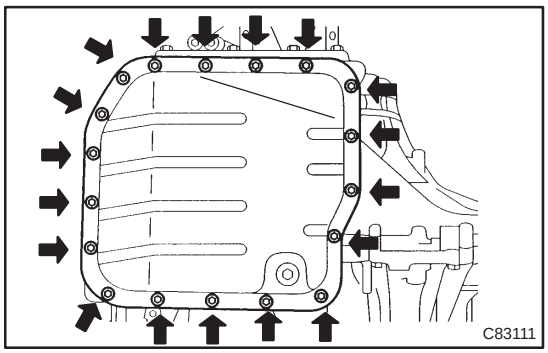

(c) Install a new gasket and the oil pan to the transaxle case with the 18 bolts.

Torque: 7.8 N·m (80 kgf·cm, 69 in.·lbf)

NOTICE:

Apply the seal packing or equivalent to the bolts and tighten them within 10 minutes after application because the bolts should be seal bolts.

11. ADD AUTOMATIC TRANSAXLE FLUID

12. INSPECT AUTOMATIC TRANSAXLE FLUID (See page 40–2)

13. RESET MEMORY

(a) 1AZ–FE (See pege 05–863)

(b) 1AZ–FSE (See pege 05–920)

TRANSMISSION WIRE (U341E)

40122–01

REPLACEMENT

1. REMOVE TRANSMISSION VALVE BODY ASSY (See page 40–42)

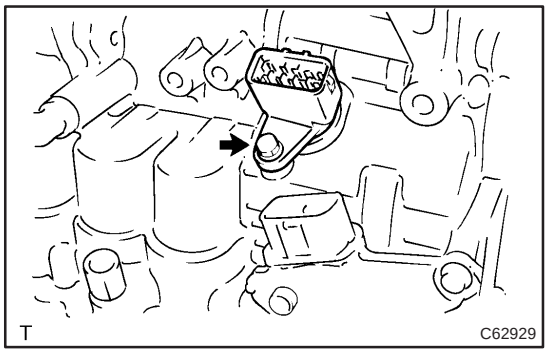

2. REMOVE TRANSMISSION WIRE

(a) Removal the bolt and transmission wire.

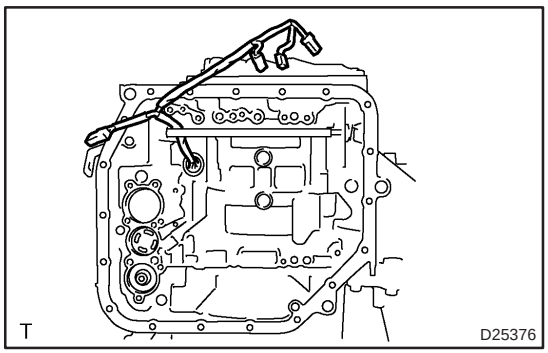

3. INSTALL TRANSMISSION WIRE

(a) Coat an O–ring with ATF.

(b) Install the transmission wire.

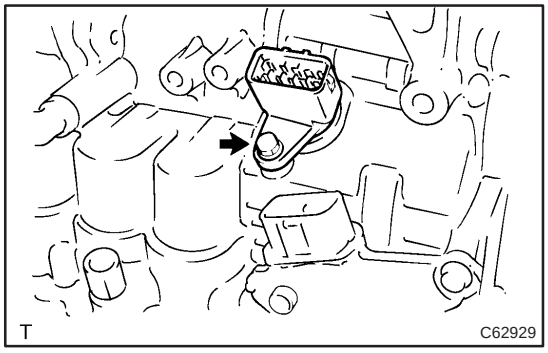

(c) Install the bolt.

Torque: 5.4 N·m (55 kgf·cm, 48 in.·lbf)

4. INSTALL TRANSMISSION VALVE BODY ASSY (See page 40–42)

5. RESET MEMORY (See page 05–985)

TRANSMISSION WIRE (U241E)

400DD–02

REPLACEMENT

1. REMOVE ENGINE UNDER COVER LH

2. DRAIN AUTOMATIC TRANSAXLE FLUID

(a) Remove the drain plug, gasket and drain ATF.

(b) Install a new gasket and the drain plug.
Torque: 49 N·m (500 kgf·cm, 36 ft·lbf)

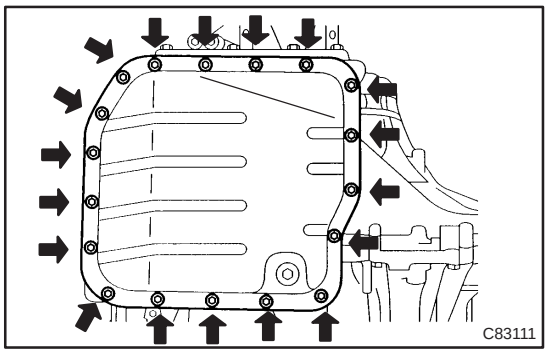

3. REMOVE AUTOMATIC TRANSAXLE OIL PAN SUB–ASSY

(a) Remove the 18 bolts, oil pan and gasket.

NOTICE:

Some fluid will remain in the oil pan. Remove all of the oil pan bolts, and carefully remove the oil pan assembly. Discard the gasket.

(b) Remove the 2 magnets from the oil pan.

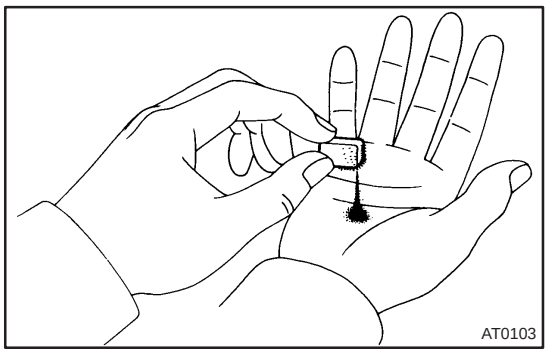

(c) Examine the particles in the oil pan.

(1) Remove the magnets and use them to collect any steel chips. Look at the chips and particles in the oil pan and on the magnet carefully to see the type of wear which might be found in the tranaxle.
Steel (magnetic): bearing, gear and plate wear
Brass (non–magnetic): bearing wear

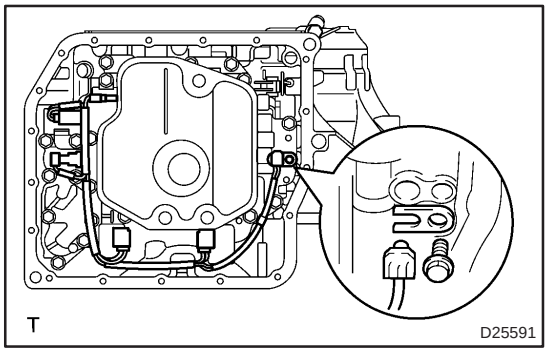

4. SEPARATE TRANSMISSION WIRE

(a) Disconnect the 5 solenoid valve connectors.

(b) Remove the bolt and lock plate, and separate the ATF temperature sensor.

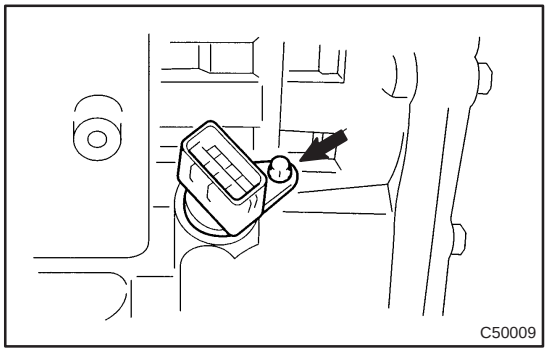

5. REMOVE TRANSMISSION WIRE

(a) Disconnect the transmission wire connector.

(b) Remove the bolt and transmission wire.

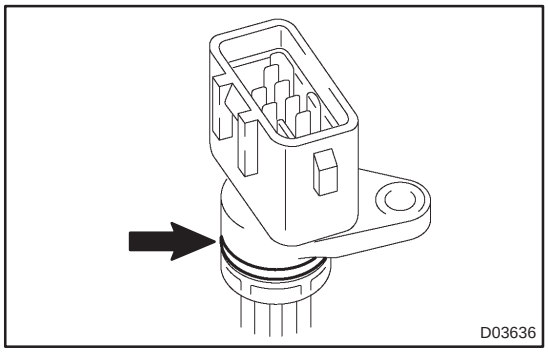

6. INSTALL TRANSMISSION WIRE

(a) Coat an O–ring of the transmission wire connector with ATF.

(b) Install the transmission wire.

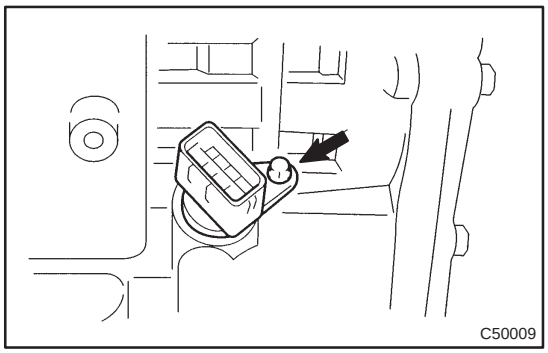

(c) Install the bolt.
Torque: 5.4 N·m (55 kgf·cm, 48 in.·lbf)

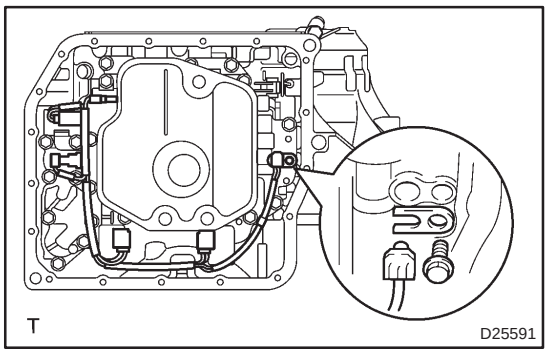

7. CONNECT TRANSMISSION WIRE

(a) Coat an O–ring of the ATF temperature sensor with ATF.

(b) Install the ATF temperature sensor with the lock plate and bolt.
Torque: 6.6 N·m (67 kgf·cm, 58 in.·lbf)

(c) Connect the 5 solenoid valve connectors.

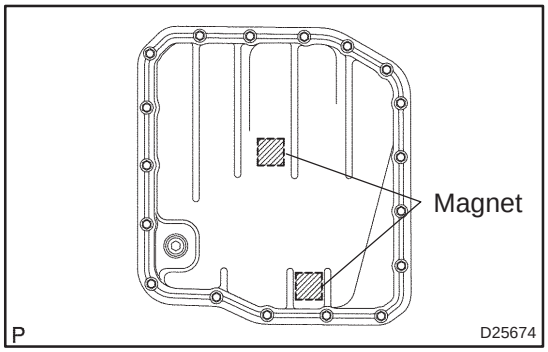

8. INSTALL AUTOMATIC TRANSAXLE OIL PAN SUB–ASSY

(a) Install the 2 magnets in the oil pan.

(b) Apply the seal packing or equivalent to the 18 bolts.
Seal packing:
THREE BOND 1344 or equivalent

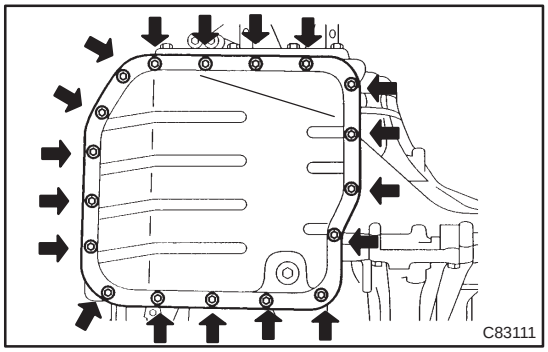

(c) Install a new gasket and the oil pan to the transaxle case with the 18 bolts.
Torque: 7.8 N·m (80 kgf·cm, 69 in.·lbf)

NOTICE:

Apply the seal packing or equivalent to the bolts and tighter them within 10 minutes after application because the bolts should be seal bolts.

9. ADD AUTOMATIC TRANSAXLE FLUID

10. INSPECT AUTOMATIC TRANSAXLE FLUID (See page 40–2)

11. RESET MEMORY

(a) 1AZ–FE (See pege 05–863)

(b) 1AZ–FSE (See pege 05–920)

FRONT DIFFERENTIAL OIL SEAL (U341E)

40124–01

REPLACEMENT

1. **REMOVE FRONT WHEELS**
2. **REMOVE FRONT FENDER APRON SUB–ASSY LH**
3. **REMOVE ENGINE UNDER COVER RH**
4. **REMOVE ENGINE UNDER COVER LH**
5. **DRAIN AUTOMATIC TRANSAXLE FLUID**

(a) Remove the drain plug, gasket and drain ATF.

(b) Install a new gasket and the drain plug.

Torque: 49 N·m (500 kgf·cm, 36 ft·lbf)

6. **REMOVE FRONT DRIVE SHAFT ASSY LH (See page 30–6)**
7. **REMOVE FRONT DRIVE SHAFT ASSY RH (See page 30–6)**

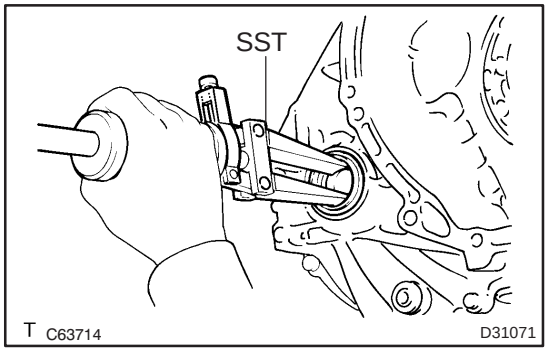

8. **REMOVE FRONT TRANSAXLE CASE OIL SEAL**

(a) Using SST, pull out the oil seal.

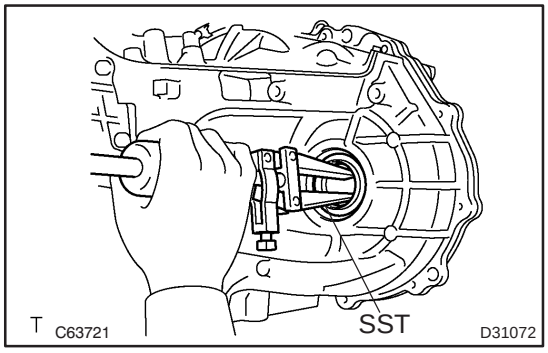

9. **REMOVE TRANSAXLE CASE OIL SEAL**

(a) Using SST, pull out the oil seal.

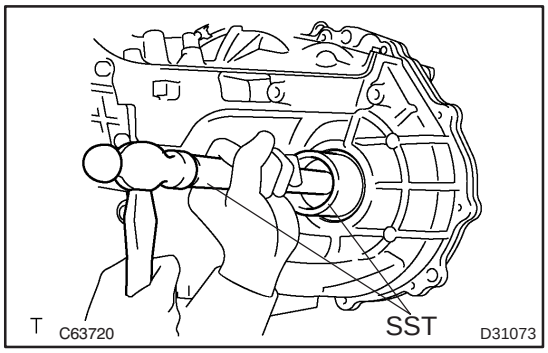

10. **INSTALL TRANSAXLE CASE OIL SEAL**

(a) Using SST and a hammer, drive in a new oil seal.

SST 09726–27012 (09726–02041), 09950–70010 (09951–07200)

Oil seal drive in depth:

2.7 ± 0.5 mm (0 ± 0.020 in.)

(b) Coat the lip of the oil seal with MP grease.

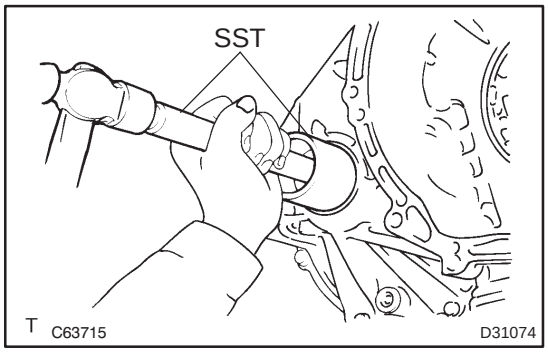

11. INSTALL FRONT TRANSAXLE CASE OIL SEAL

(a) Using SST and a hammer, drive in a new oil seal.
SST 09554–14010, 09950–70010 (09951–07200)
Oil seal drive in depth:
0 ± 0.5 mm (0 ± 0.020 in.)

(b) Coat the lip of the oil seal with MP grease.

12. INSTALL FRONT DRIVE SHAFT ASSY LH (See page 30–6)
13. INSTALL FRONT DRIVE SHAFT ASSY RH (See page 30–6)
14. INSTALL FRONT WHEELS
15. ADD AUTOMATIC TRANSAXLE FLUID
16. INSPECT AUTOMATIC TRANSAXLE FLUID (See page 40–2)
17. INSPECT AND ADJUST FRONT WHEEL ALIGNMENT (See Page 26–6)
18. CHECK ABS SPEED SENSOR SIGNAL (See page 05–699)

FRONT DIFFERENTIAL OIL SEAL (U241E)

400DE–02

REPLACEMENT

1. REMOVE FRONT WHEELS
2. REMOVE ENGINE UNDER COVER RH
3. REMOVE ENGINE UNDER COVER LH
4. DRAIN AUTOMATIC TRANSAXLE FLUID
(a) Remove the drain plug, gasket and drain ATF.
(b) Install a new gasket and the drain plug.
Torque: 49 N·m (500 kgf·cm, 36 ft·lbf)
5. REMOVE FRONT DRIVE SHAFT ASSY RH (See page 30–6)
6. REMOVE FRONT DRIVE SHAFT ASSY LH (See page 30–6)

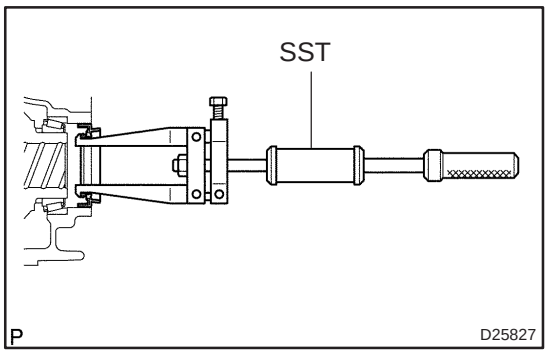

7. REMOVE TRANSAXLE HOUSING OIL SEAL
(a) Using SST, pull out the oil seal.
SST 09308–00010

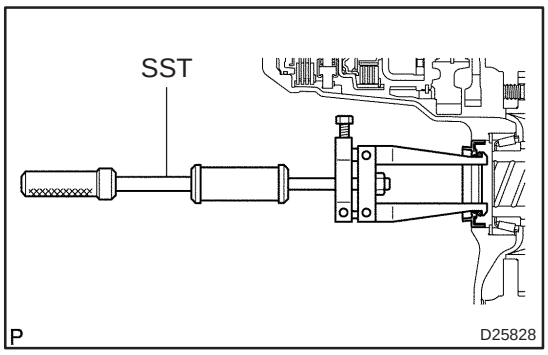

8. REMOVE DIFFERENTIAL SIDE BEARING RETAINER OIL SEAL
(a) Using SST, pull out the oil seal.
SST 09308–00010

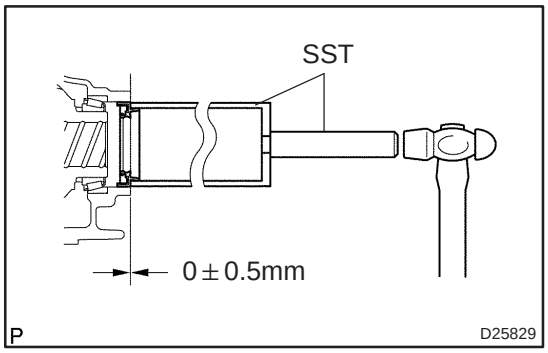

9. INSTALL DIFFERENTIAL SIDE BEARING RETAINER OIL SEAL
(a) Using SST and a hammer, drive in a new oil seal.
SST 09316–60011 (09316–00011)
Oil seal drive in depth:
0 ± 0.5 mm (0 ± 0.020 in.)
(b) Coat the lip of the oil seal with MP grease.

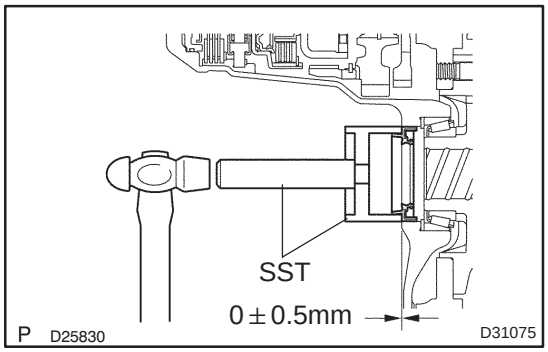

10. INSTALL TRANSAXLE HOUSING OIL SEAL

(a) Using SST and a hammer, drive in a new oil seal.
SST 09649–17010, 09950–70010 (09951–07150)
Oil seal drive in depth:
0 ± 0.5 mm (0 ± 0.020 in.)

(b) Coat the lip of the oil seal with MP grease.

11. INSTALL FRONT DRIVE SHAFT ASSY LH (See page 30–6)
12. INSTALL FRONT DRIVE SHAFT ASSY RH (See page 30–6)
13. INSTALL FRONT WHEELS
Torque: 103 N·m (1,050 kgf·cm, 76 ft·lbf)
14. ADD AUTOMATIC TRANSAXLE FLUID
15. INSPECT AUTOMATIC TRANSAXLE FLUID (See page 40–2)
16. CHECK ABS SPEED SENSOR SIGNAL
(a) ABS WITH EBD SYSTEM (See pege 05–699)
(b) ABS WITH EBD & BA &TRAC & VSC SYSTEM (See pege 05–756)

SHIFT LOCK SYSTEM

4011J–01

ON–VEHICLE INSPECTION

1. CHECK SHIFT LOCK OPERATION

(a) Shift the shift lever to P position.
(b) Turn the ignition switch to LOCK.
(c) Check that the shift lever cannot be shifted to any other positions other than P.
(d) Turn the ignition switch to ON, depress the brake pedal and check that the shift lever can be shifted to any other positions.

2. CHECK SHIFT LOCK RELEASE BUTTON OPERATION

(a) Using a screwdriver, remove the shift lock release button cover.
(b) When operating the shift lever with the shift lock release button pressed and turn the ignition switch to ACC or ON, check that the lever can be shifted to any other position.

3. CHECK KEY INTERLOCK OPERATION

(a) Turn the ignition switch to ON.
(b) Depress the brake pedal and shift the shift lever to any other positions other than P.
(c) Check that the ignition key cannot be turned to LOCK.
(d) Shift the shift lever to P position, turn the ignition key to LOCK and check that the ignition key can be removed.

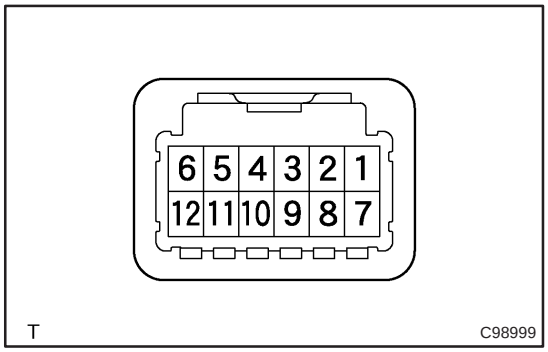

4. INSPECT SHIFT LOCK CONTROL ECU

(a) Using a voltmeter, measure the voltage at each terminal.

HINT:

Do not disconnect the shift lock control ECU connector.

Terminal	Measuring Condition	Voltage (V)
7 (STP) – 8 (E)	Depress brake pedal	10 to 14
7 (STP) – 8 (E)	Release brake pedal	Below 1
1 (IG) – 8 (E)	Ignition switch ON	10 to 14
1 (IG) – 8 (E)	Ignition switch OFF	Below 1

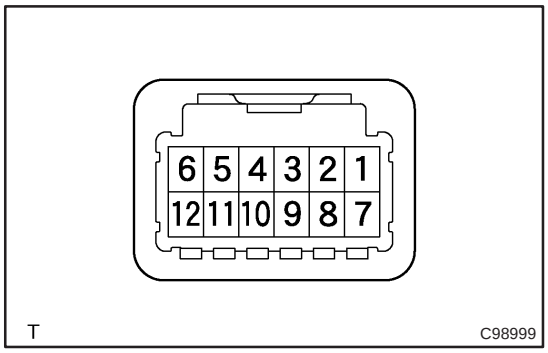

(b) Using an ohmmeter, measure the resistance at the terminal E (8) and body ground.

HINT:

Do not disconnect the shift lock control unit assembly connector.

Terminal	Measuring Condition	Specified Value
8 (E) – Body ground	Always	Continuity

FLOOR SHIFT ASSY

COMPONENTS

4011K–01

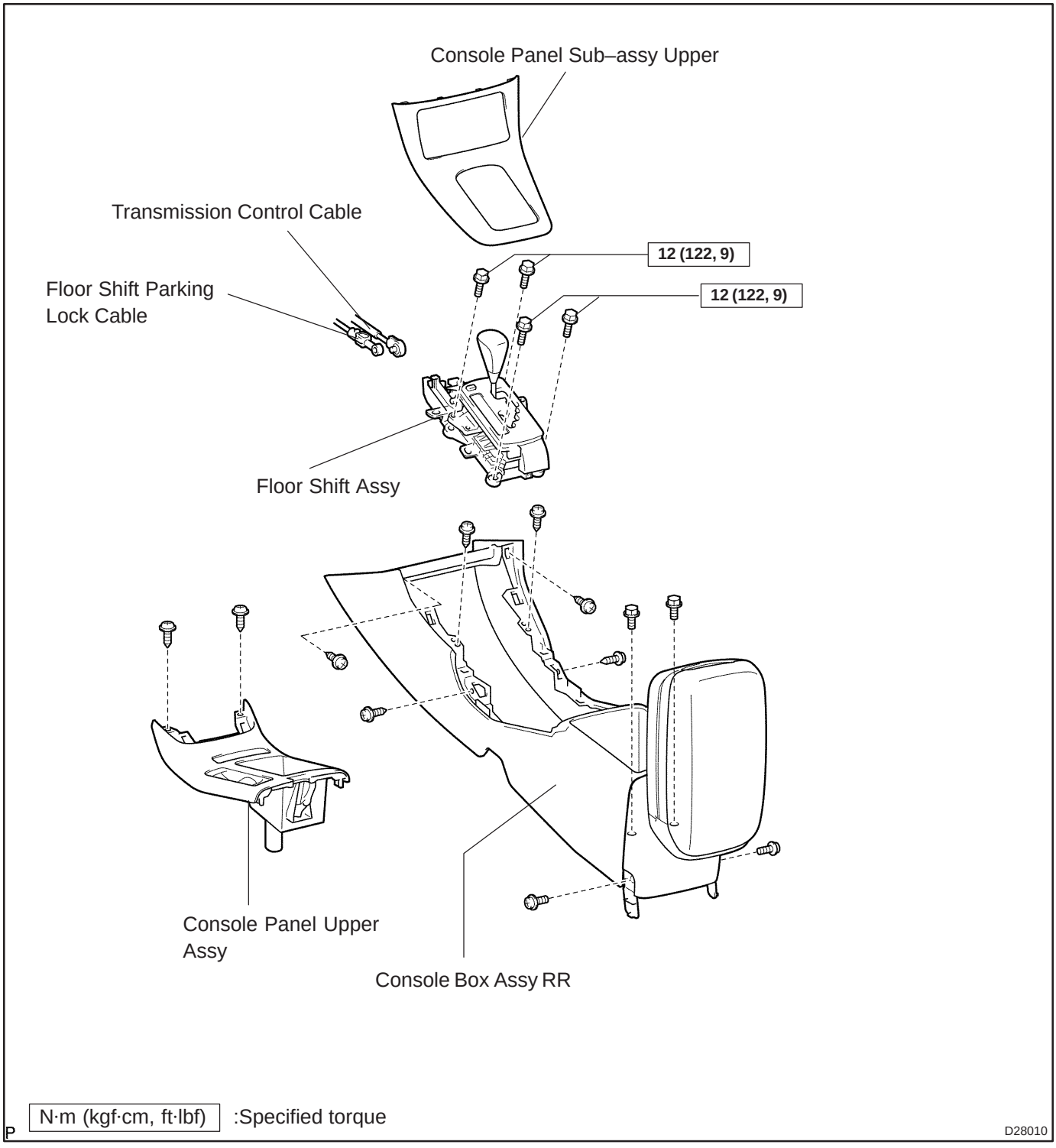

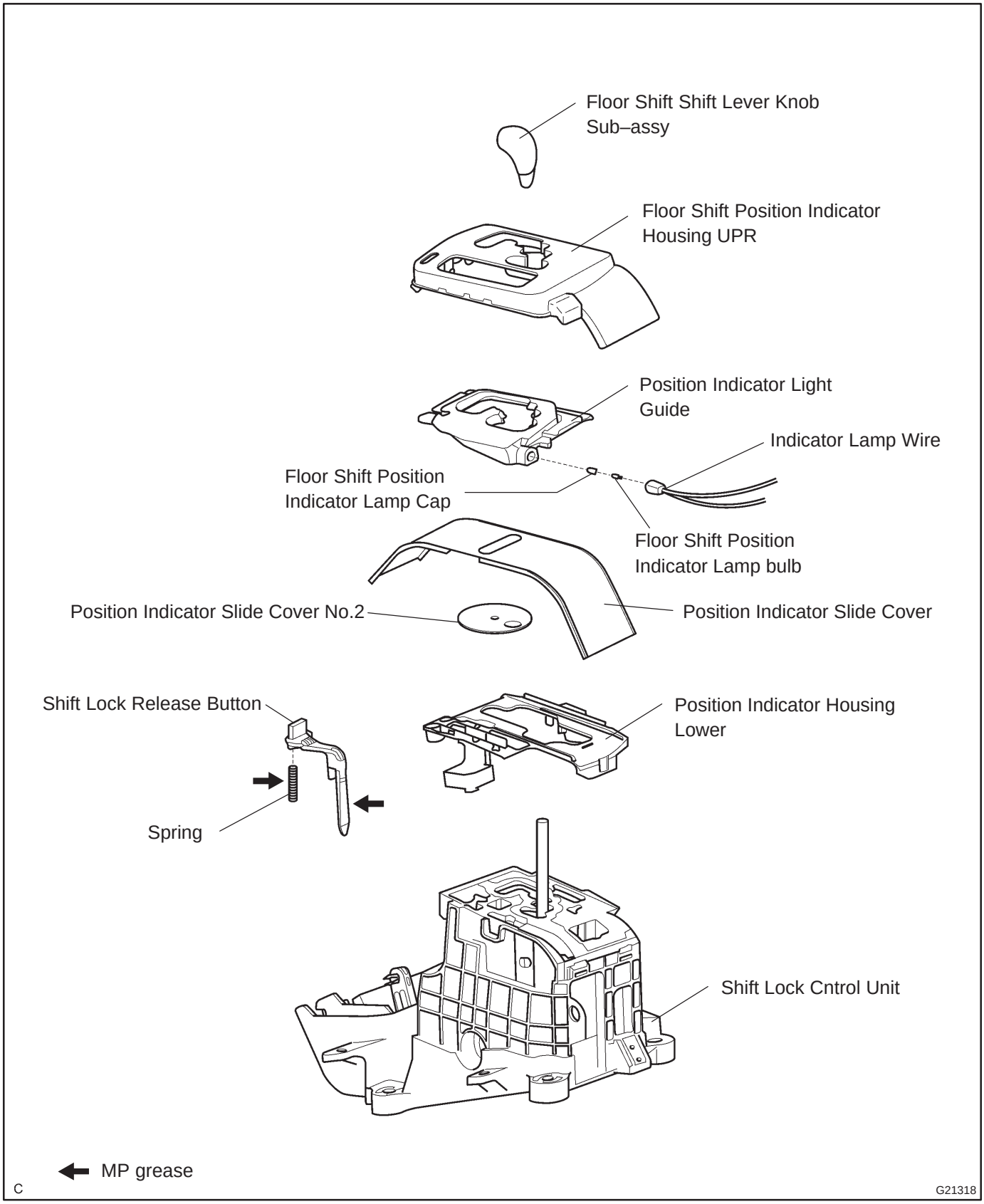
Floor Shift Shift Lever Knob Sub–assy
Floor Shift Position Indicator Housing UPR
Position Indicator Light Guide
Indicator Lamp Wire
Floor Shift Position Indicator Lamp Cap
Floor Shift Position Indicator Lamp bulb
Position Indicator Slide Cover No.2
Position Indicator Slide Cover
Shift Lock Release Button
Position Indicator Housing Lower
Spring
Shift Lock Cntrol Unit
MP grease
C
G21318

4011L–01

OVERHAUL

1. **REMOVE CONSOLE PANEL SUB–ASSY UPPER (See page 71–11)**
2. **REMOVE CONSOLE PANEL UPPER ASSY (See page 71–11)**
3. **REMOVE CONSOLE BOX ASSY RR (See page 71–11)**

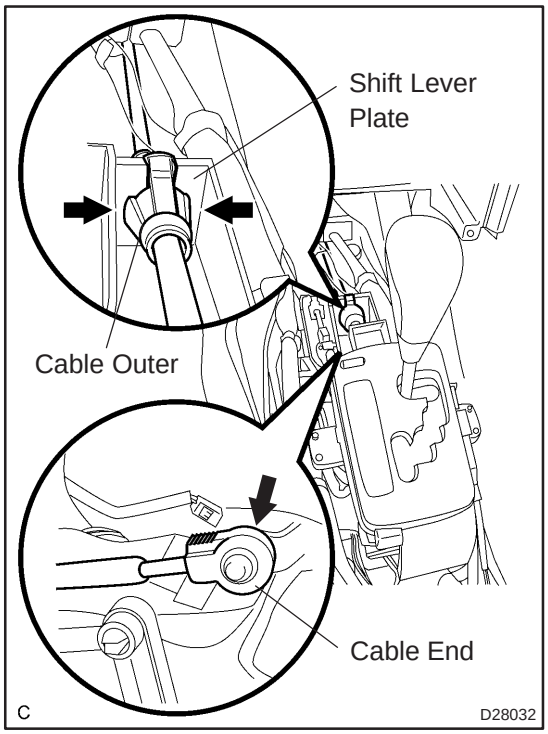

4. **DISCONNECT TRANSMISSION CONTROL CABLE ASSY**

(a) Using a fine screwdriver, separate the cable outer of the transmission control cable assy from the shift lever plate.

(b) Using a screw driver, disconnect the cable end from the floor shift assy.

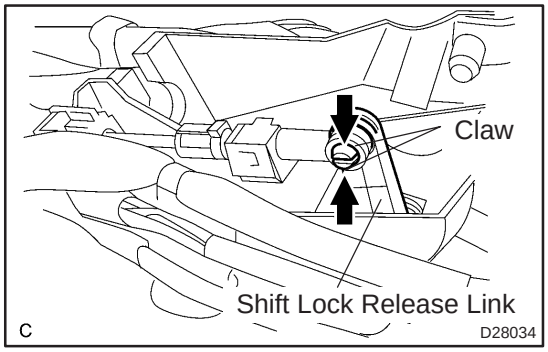

5. **DISCONNECT FLOOR SHIFT PARKING LOCK CABLE ASSY**

(a) Push the claw and disconnect the parking lock cable assy from the shift lock release link.

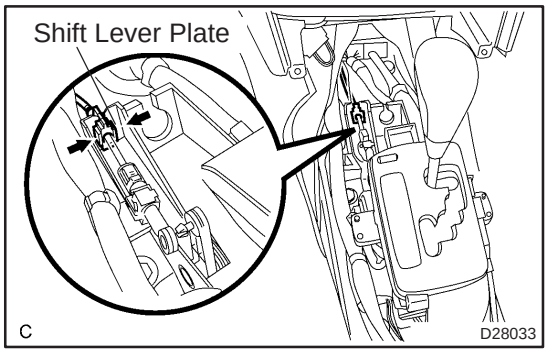

(b) Using a screw driver, disconnect the parking lock cable assy from the shift lever plate.

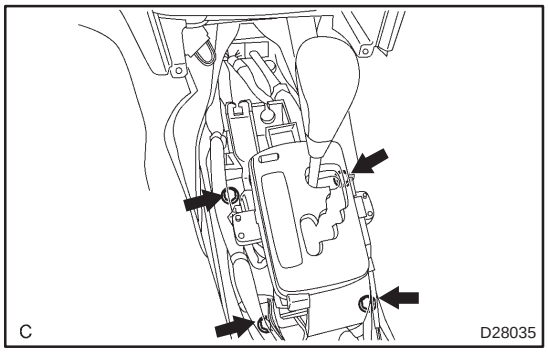

6. REMOVE FLOOR SHIFT ASSY

(a) Disconnect the shift lock control ECU connector and indicator lamp wire connector.

(b) Disconnect the wire harness clamp.

(c) Remove the 4 bolts and floor shift assy.

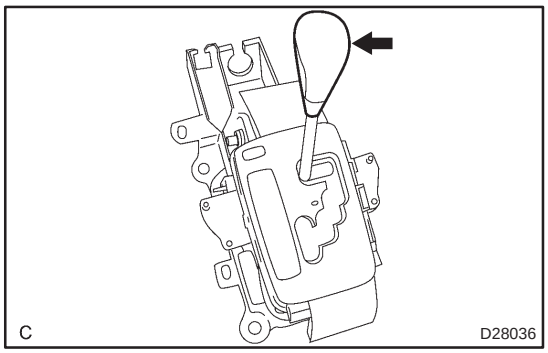

7. REMOVE SHIFT LEVER KNOB SUB–ASSY

(a) Remove the floor shift shift lever knob sub–assy.

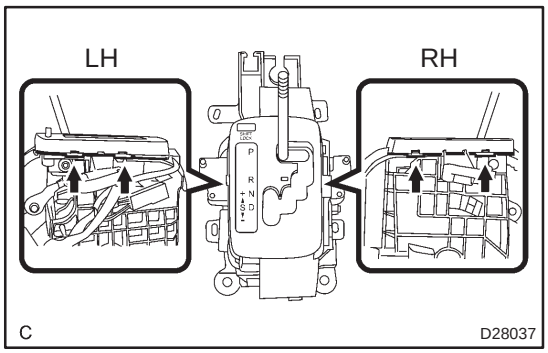

8. REMOVE FLOOR SHIFT POSITION INDICATOR HOUSING SUB–ASSY

(a) Remove the floor shift position indicator housing sub–assy from the floor shift assy.

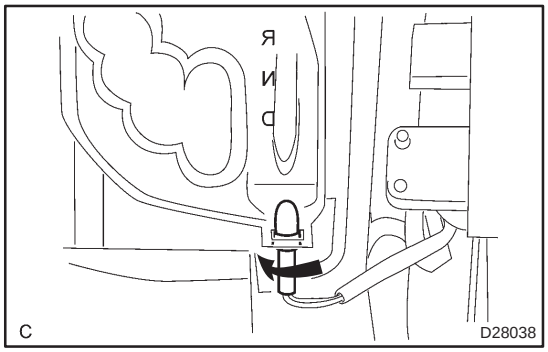

9. REMOVE POSITION INDICATOR LAMP CAP

(a) Separate the indicator lamp wire sub–assy from the position indicator light guide.

(b) Remove the floor shift position indicator lamp cap from the indicator lamp wire.

10. REMOVE POSITION INDICATOR LAMP BULB

(a) Remove the floor shift position indicator lamp bulb from the indicator lamp wire.

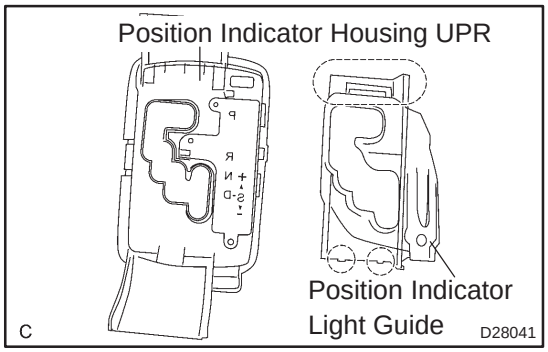

11. REMOVE POSITION INDICATOR LIGHT GUIDE

(a) Using a small screw driver, remove the position indicator light guide from the position indicator housing UPR.

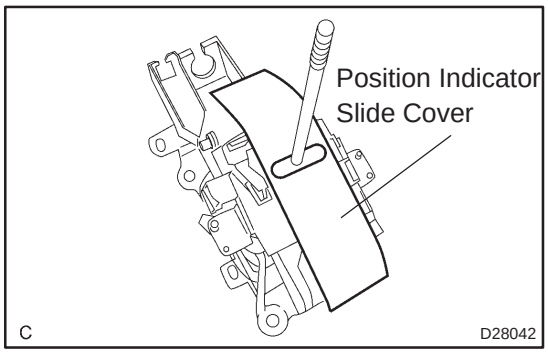

12. REMOVE POSITION INDICATOR SLIDE COVER

(a) Remove the position indicator slide cover from the position indicator housing lower.

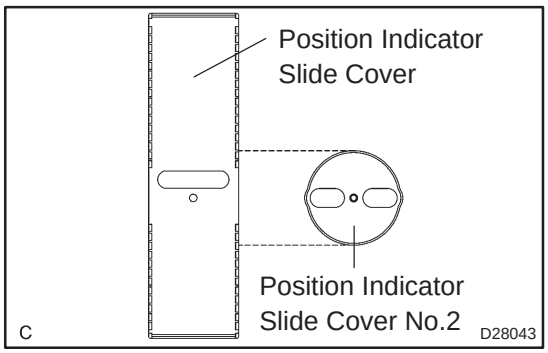

(b) Remove the position indicator slide cover No.2 from the position indicator slide cover.

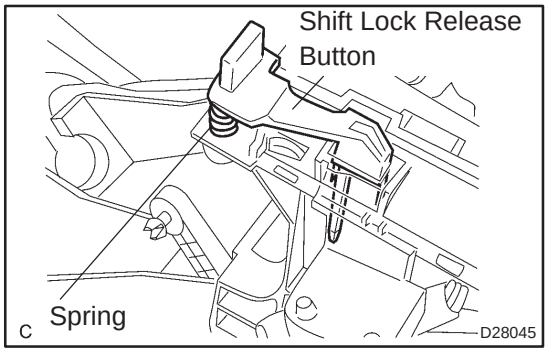

13. REMOVE SHIFT LOCK RELEASE BUTTON

(a) Remove the shift lock release button and spring from the position indicator housing lower.

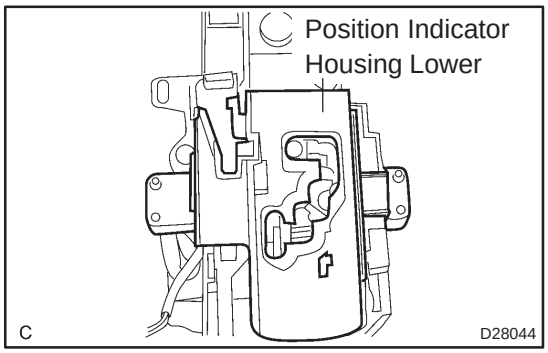

14. REMOVE POSITION INDICATOR HOUSING LOWER

(a) Remove the position indicator housing lower from the floor shift assy.

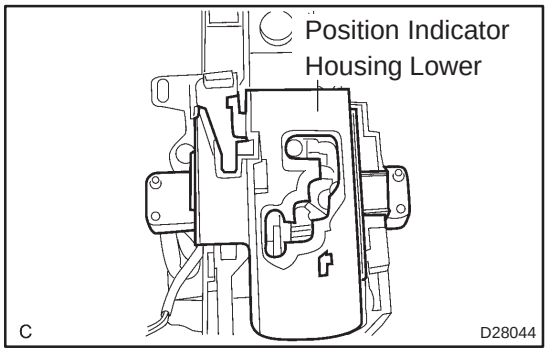

15. INSTALL POSITION INDICATOR HOUSING LOWER

(a) Install the position indicator housing lower to the floor shift assy.

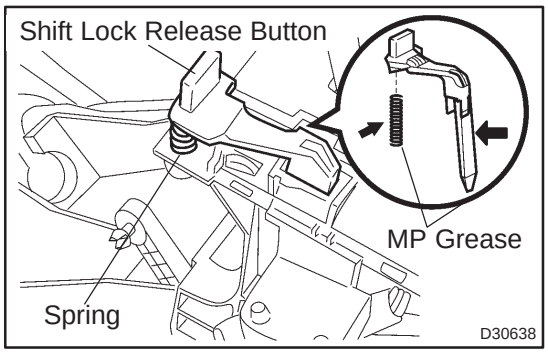

16. INSTALL SHIFT LOCK RELEASE BUTTON

(a) Apply MP grease to the spring.

(b) Install the shift lock release button and spring.

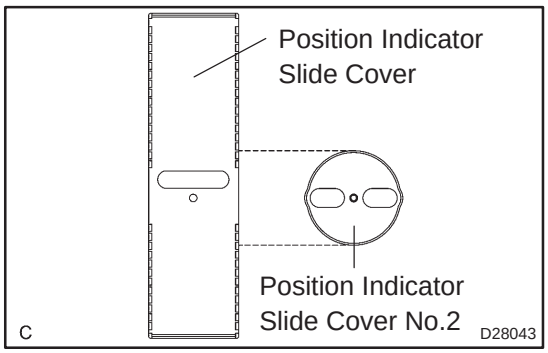

17. INSTALL POSITION INDICATOR SLIDE COVER

(a) Install the position indicator slide cover No.2 to the position indicator slide cover.

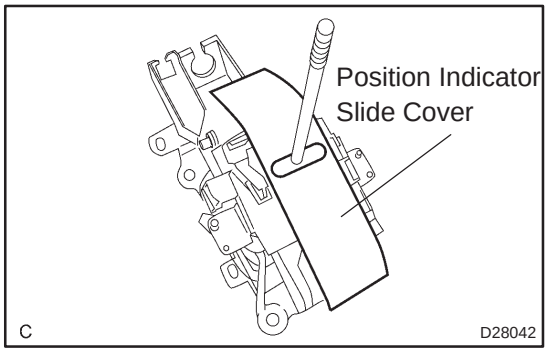

(b) Install the position indicator slide cover to the position indicator housing lower.

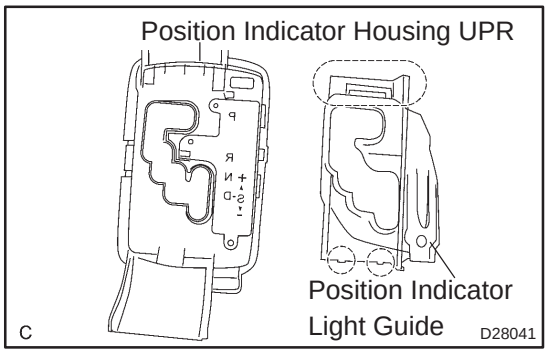

18. INSTALL POSITION INDICATOR LIGHT GUIDE

(a) Install the position indicator light guide to the position indicator housing UPR.

19. INSTALL POSITION INDICATOR LAMP BULB

(a) Install the floor shift position indicator lamp bulb to the indicator lamp wire.

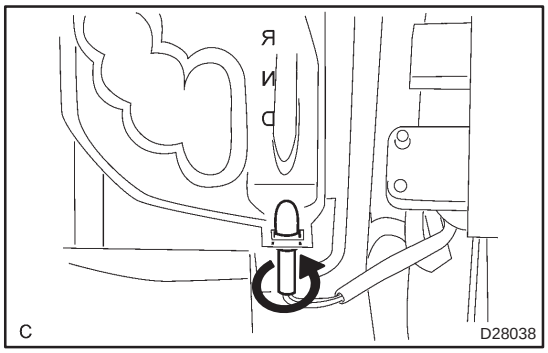

20. INSTALL POSITION INDICATOR LAMP CAP

(a) Install the floor shift position indicator lamp cap to the indicator lamp wire.

(b) Install the indicator lamp wire sub–assy to the position indicator light guide.

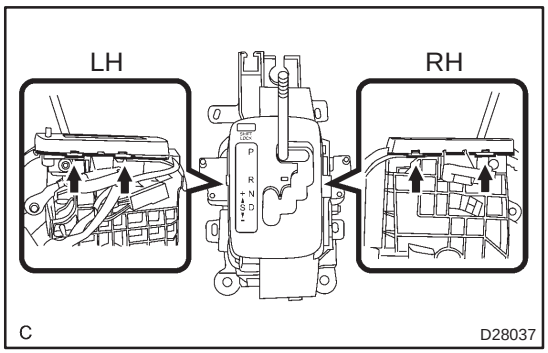

21. INSTALL FLOOR SHIFT POSITION INDICATOR HOUSING SUB–ASSY

(a) Install the floor shift position indicator housing sub–assy to the floor shift assy.

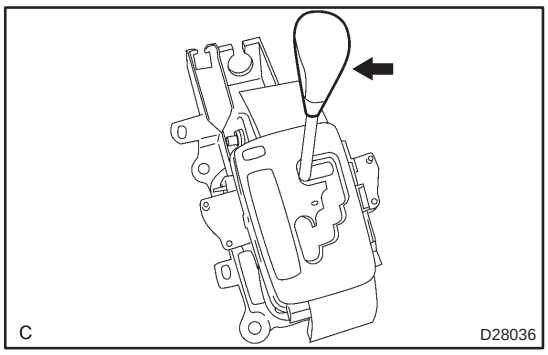

22. INSTALL SHIFT LEVER KNOB SUB–ASSY

(a) Install the floor shift shift lever knob sub–assy.

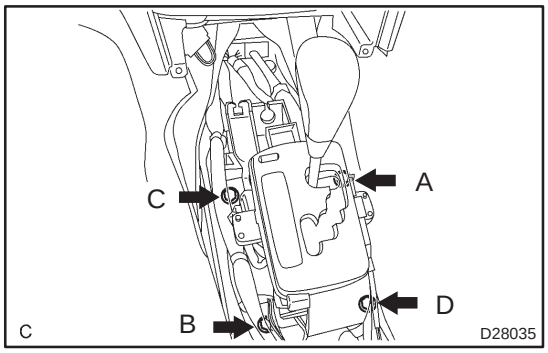

23. INSTALL FLOOR SHIFT ASSY

(a) Install the floor shift assy with the 4 nuts.

Torque: 12.0 N·m (122 kgf·cm. 9 ft·lbf)

HINT:

Tighten them in the order, A, B, C and D.

(b) Connect the shift lock control ECU connector and indicator lamp wire connector.

(c) Connect the wire harness clamp.

NOTICE:

Be careful not to put the wirings of the indicator lamp or the shift lock system between the assy and the floor while installing the floor shift assy.

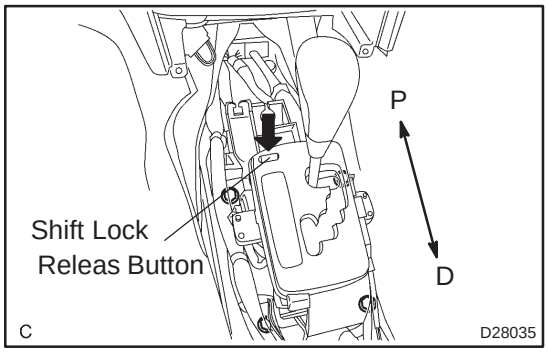

(d) After installing the shift lever assy, perform the shift lever operation as following to check its proper function.

(e) Shift into the P position and back to the D position 5 times with the shift lock releasa button depressed.

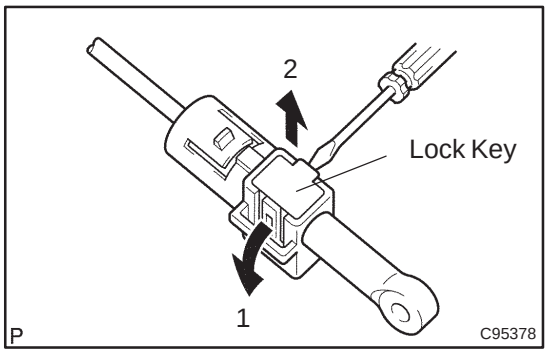

24. CONNECT FLOOR SHIFT PARKING LOCK CABLE ASSY

(a) Using a small screwdriver, unlock the claw of the lock key of the automatic adjustment part.

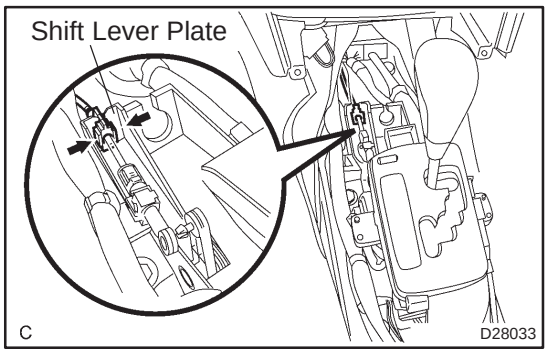

(b) Pass the parking lock cable through the hole of the shift lever plate.

(c) Insert the slide cap into the shift lever plate.

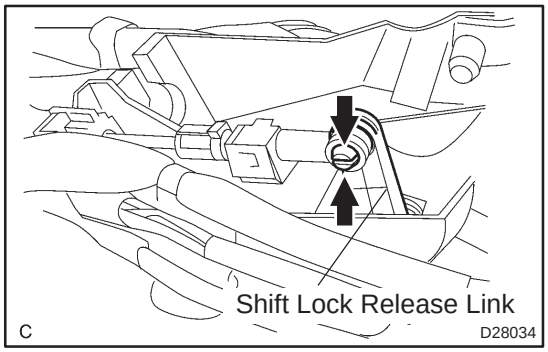

(d) Apply MP grease to the shift lock release link.

(e) Insert the lever pin into the hole in the cable end.

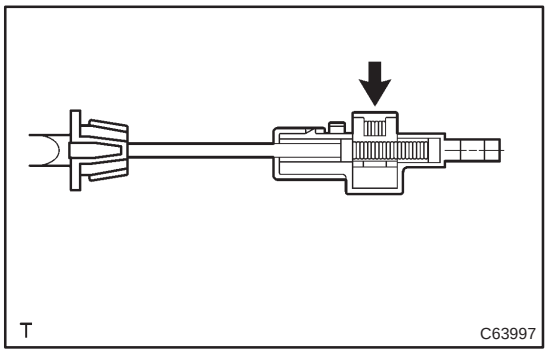

(f) Lock the lock key.

NOTICE:

At this time, the shift lever should be in the P position and the ignition key should be set to Lock.

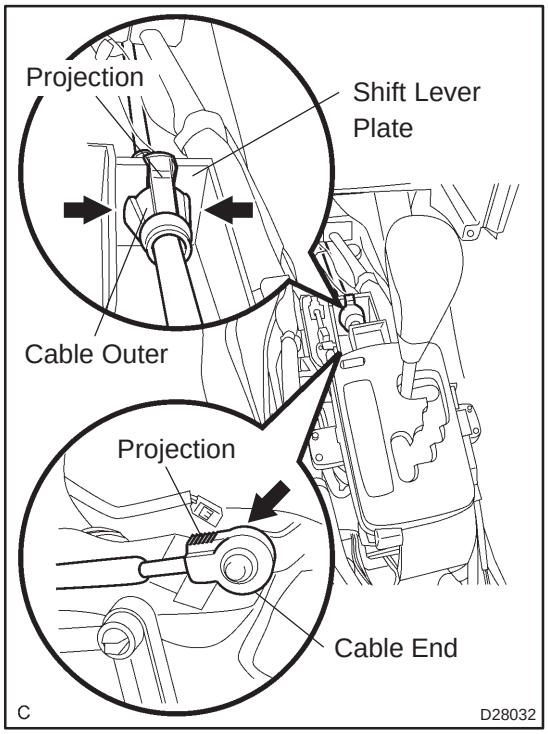

25. CONNECT TRANSMISSION CONTROL CABLE ASSY

(a) Install the control cable to the shift lever plate.

(b) Connect the control cable end to the floor shift assy.

HINT:

Install it with the uneven surface facing up.

NOTICE:

- **Be sure to face up the projection on the cable end to prevent torsion on the inner cable.**
- **Be sure to face up the projection on the outer cable while installing the outer cable to the shift lever plate.**
- **Make sure that the ends of the hooks are open while installing the outer cable to the shift lever plate.**

26. INSPECT SHIFT LEVER POSITION (See page 40–69)

27. ADJUST SHIFT LEVER POSITION (See page 40–69)

ADJUSTMENT

1. INSPECT SHIFT LEVER POSITION

(a) When the shift lever from P to R position with the ignition switch is ON and the brake pedal is depressed, make sure that the shifting lever moves smoothly and can be moderately operated.

(b) When starting engine, make sure that the vehicle moves forward when shifting from N to D position and moves rearward when shifting to R position.

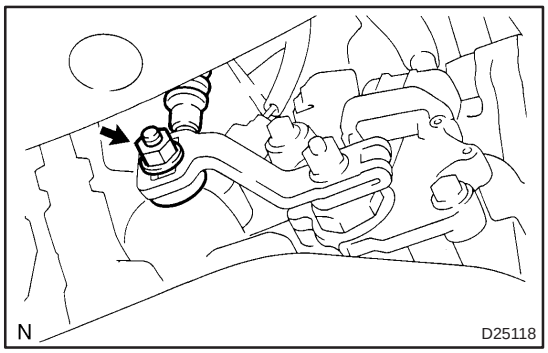

2. ADJUST SHIFT LEVER POSITION

(a) Loosen the nut on the control shaft lever.

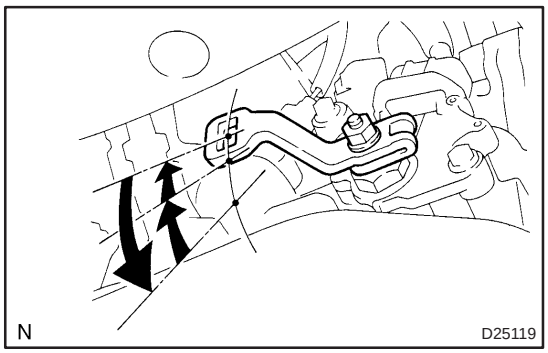

(b) Push the control shaft fully downward.

(c) Return the control shaft lever 2 notches to N position.

(d) Set the shift lever to N position.

(e) While holding the shift lever lightly toward the R position side, tighten the shift lever nut.

Torque: 12 N·m (122 kgf·cm, 9 ft·lbf)

(f) Start the engine and make sure that the vehicle moves forward when shifting the lever from N to D position and moves rearward when shifting it to R position.

TRANSMISSION CONTROL CABLE ASSY

4011M–01

REPLACEMENT

1. REMOVE INSTRUMENT PANEL LOWER ASSY (See page 71–11)
2. REMOVE AIR CONDITIONING RADIATOR ASSY (See page 55–55)
3. REMOVE EXHAUST PIPE ASSY FRONT (1ZZ–FE ENGINE TYPE) (See page 15–2)
4. REMOVE EXHAUST PIPE ASSY FRONT (1AZ–FE/1AZ–FSE ENGINE TYPE) (See page 15–7)

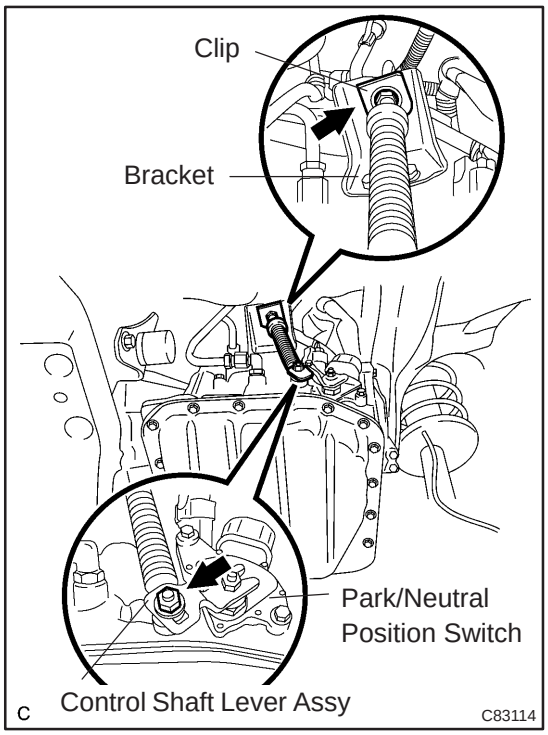

5. REMOVE TRANSMISSION CONTROL CABLE ASSY

(a) Remove the nut and disconnect the transmission control cable assy from the control shaft lever assy.

(b) Remove the clip and disconnect the transmission control cable assy from the bracket.

(c) Disconnect the control cable from the control cable support.

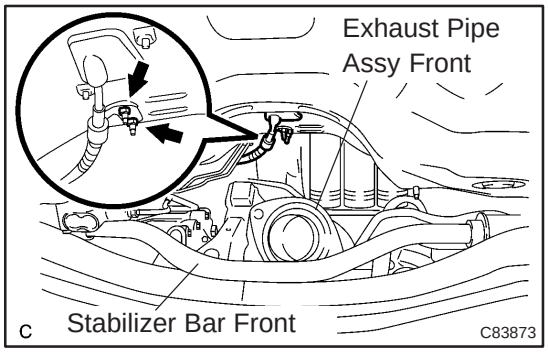

(d) Remove the 2 nuts and separate the transmission control cable assy from the body.

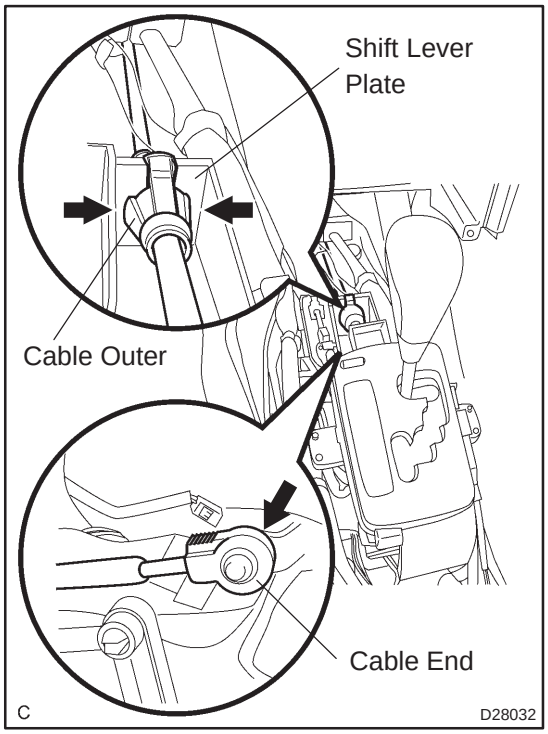

(e) Using a fine screw driver, separate the cable outer of the transmission control cable assy from the shift lever plate.

(f) Using a screw driver, disconnect the transmission control cable end from the floor shift assy.

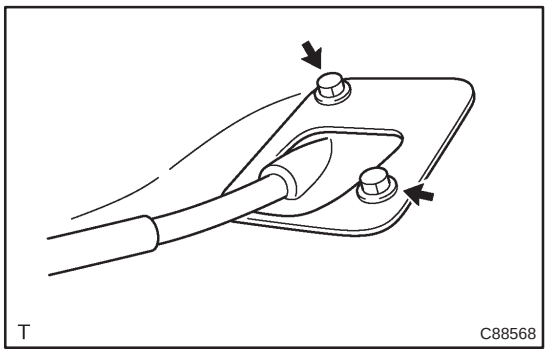

(g) Remove the 2 bolts.

(h) Pull out the transmission control cable assy from the body.

(i) Remove the retainer from the transmission control cable assy.

6. INSTALL TRANSMISSION CONTROL CABLE ASSY

(a) Install the retainer to the transmission control cable assy.

(b) Pull the transmission control cable assy into the body.

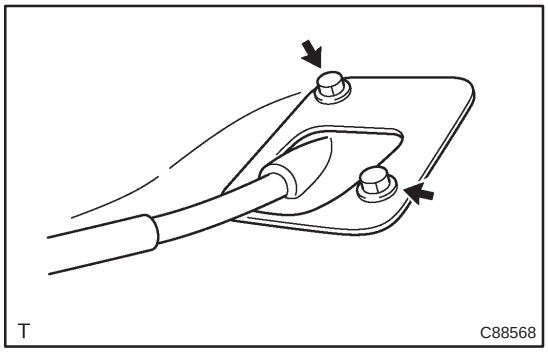

(c) Install the 2 bolts.
Torque: 5.0 N·m (50 kgf·cm, 43 in.·lbf)

(d) Shift the shift lever to the N position.

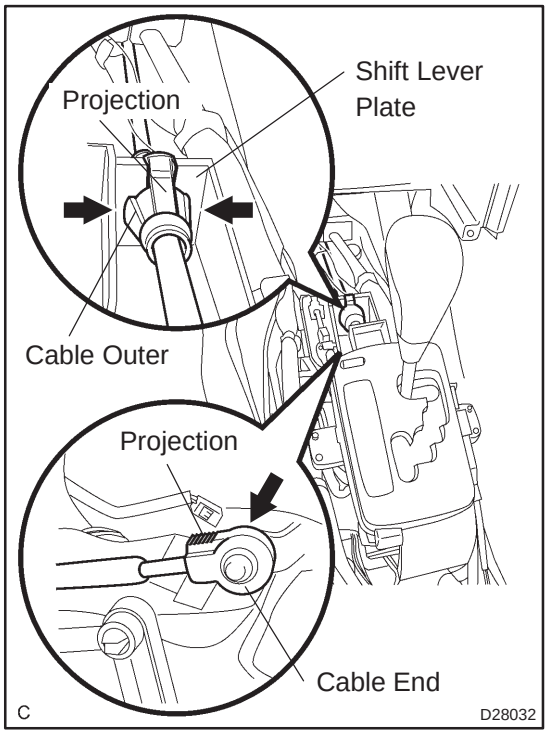

(e) Install the control cable to the shift lever plate.

(f) Connect the control cable end to the floor shift assy.

HINT:

Install it with the uneven surface facing up.

NOTICE:

- **Be sure to face up the projection on the cable end to prevent torsion on the inner cable.**
- **Be sure to face up the projection on the outer cable while installing the outer cable to the shift lever plate.**
- **Make sure that the ends of the hooks are open while installing the outer cable to the shift lever plate.**

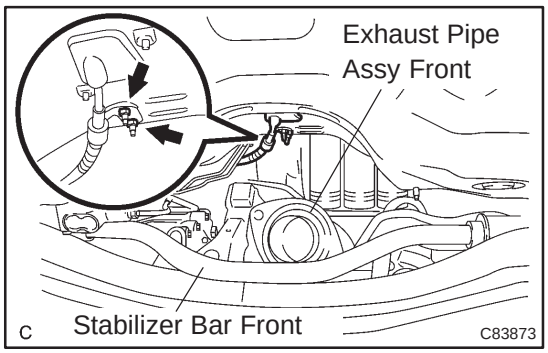

(g) Install the control cable with the 2 nuts to the body.
Torque: 5 N·m (50 kgf·cm, 43 in.·lbf)

(h) Connect the control cable to the control cable support.

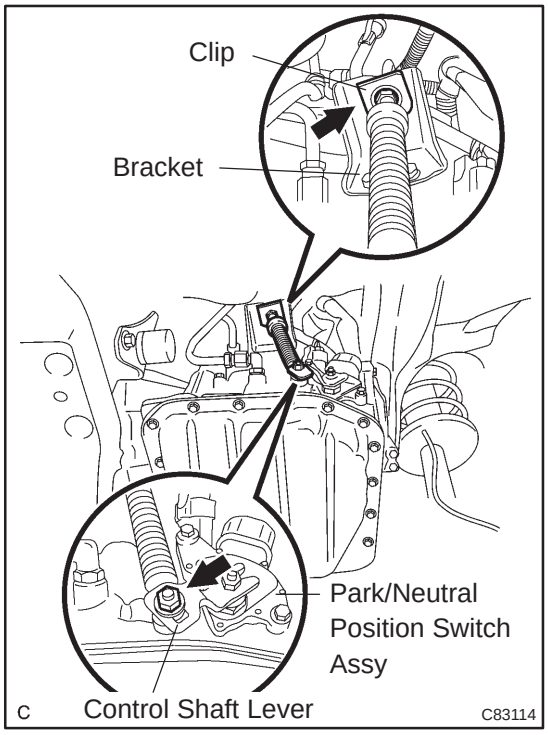

(i) Temporarily install the control cable to the control shaft lever with the nut.

(j) Install the control cable with the clip to the bracket.

NOTICE:

Set the shift position to N. Connect the transmission control cable to the control shaft lever on the transmission assy.

At that time, pull the end of the control cable and release it until back–lash (looseness) in the cable is removed. Then tighten the nut.

7. **INSTALL INSTRUMENT PANEL SUB–ASSY UPPER W/INSTR PNL PASS L/DOOR AIR BAG ASSY (See page 71–11)**
8. **ADJUST SPIRAL CABLE SUB–ASSY (See page 60–26)**
9. **INSTALL STEERING WHEEL ASSY (See page 50–9)**
10. **INSTALL HORN BUTTON ASSY (See page 60–17)**
11. **INSTALL EXHAUST PIPE ASSY FRONT (1ZZ–FE ENGINE TYPE) (See page 15–2)**
12. **INSTALL EXHAUST PIPE ASSY FRONT (1AZ–FE/1AZ–FSE ENGINE TYPE) (See page 15–7)**
13. **INSPECT HORN BUTTON ASSY (See page 60–17)**
14. **INSPECT SRS WARNING LIGHT (See page 05–1184)**
15. **CHECK FOR EXHAUST GAS LEAKS**
16. **ADJUST SHIFT LEVER POSITION (See page 40–69)**
17. **INSPECT SHIFT LEVER POSITION (See page 40–69)**
18. **CHARGE REFRIGERANT (See page 55–38)**
    SST 07110–58060 (07117–58060, 07117–58070, 07117–58080, 07117–58090, 07117–78050, 07117–88060, 07117–88070, 07117–88080)
19. **INSPECT LEAKAGE OF REFRIGERANT (See page 55–38)**

FLOOR SHIFT PARKING LOCK CABLE ASSY

4011N–01

REPLACEMENT

1. PRECAUTION (See page 60–29)
2. DISCONNECT BATTERY NEGATIVE TERMINAL
3. REMOVE INSTRUMENT PANEL HOLE COVER (See page 71–11)
4. REMOVE INSTRUMENT PANEL AIR BAG ASSY (See page 60–29)
5. REMOVE INSTRUMENT PANEL UNDER COVER SUB–ASSY NO.1 (See page 71–11)
6. REMOVE STEERING COLUMN COVER LWR (See page 50–9)
7. REMOVE STEERING COLUMN COVER (See page 50–9)
8. REMOVE CONSOLE PANEL SUB–ASSY UPPER (See page 71–11)
9. REMOVE CONSOLE PANEL UPPER ASSY (See page 71–11)
10. REMOVE CONSOLE REAR END PANEL (See page 71–11)
11. REMOVE CONSOLE BOX ASSY RR (See page 71–11)

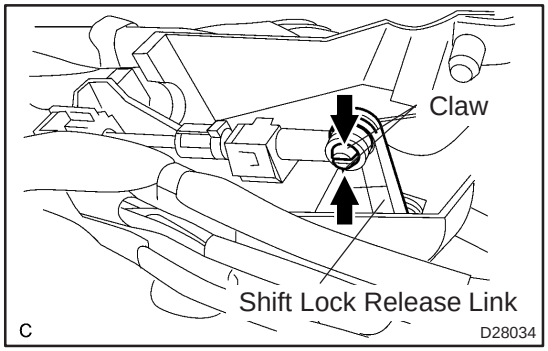

12. REMOVE FLOOR SHIFT PARKING LOCK CABLE ASSY

(a) Push the claw and disconnect the parking lock cable assy from the shift lock release link.

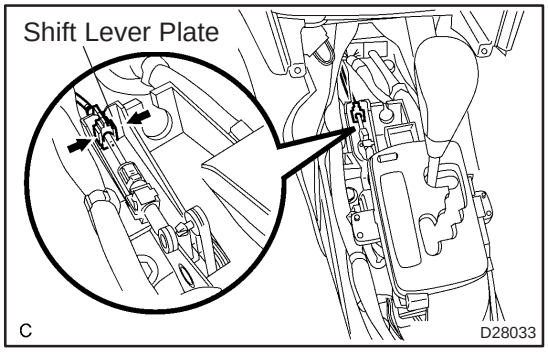

(b) Using a screw driver, disconnect the parking lock cable assy from the shift lever plate.

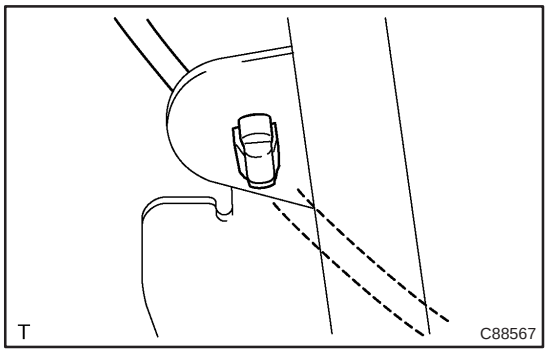

(c) Disconnect the cable clamp.

(d) Turn the ignition switch to ACC or ON.

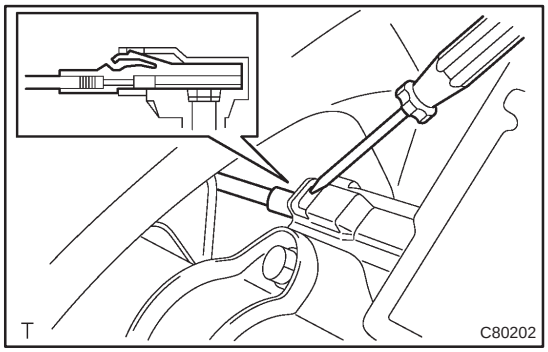

(e) Using a screwdriver, disconnect the cable from the upper bracket.

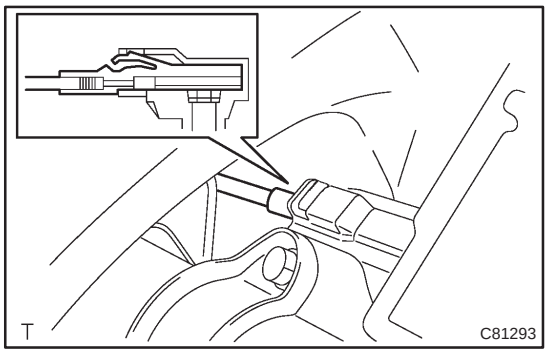

13. INSTALL FLOOR SHIFT PARKING LOCK CABLE ASSY

(a) Turn the ignition switch to ACC or ON.

(b) Connect the cable to the upper bracket.

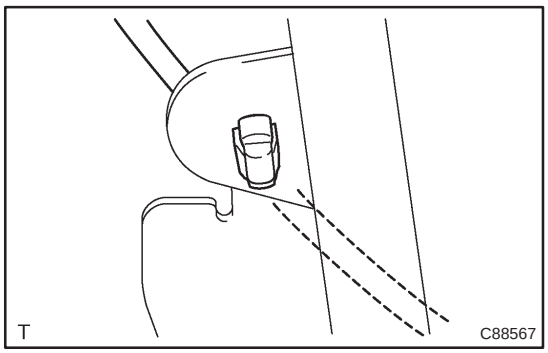

(c) Connect the cable clamp.

(d) Shift the shift lever to the P position.

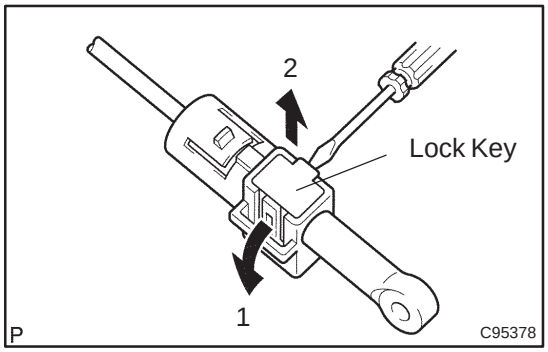

(e) Using a small screwdriver, unlock the claw of the lock key of the automatic adjustment part.

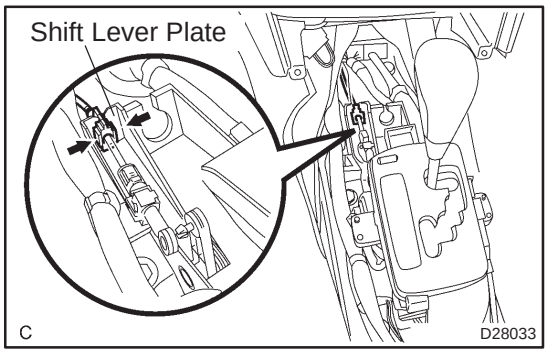

(f) Pass the parking lock cable through the hole of the shift lever plate.

(g) Insert the slide cap into the shift lever plate.

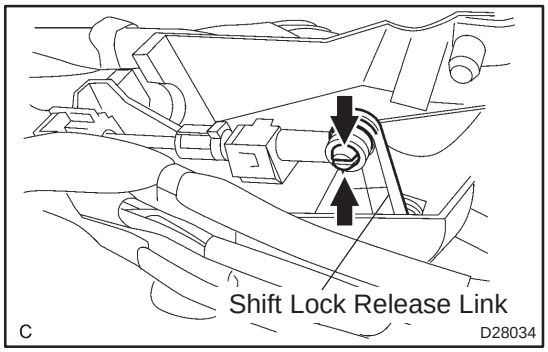

(h) Apply MP grease to the shift lock release link.
(i) Insert the lever pin into the hole in the cable end.

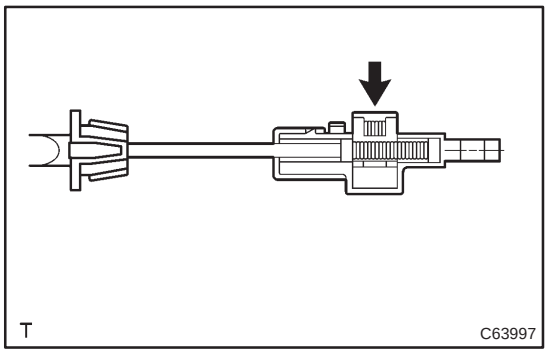

(j) Lock the lock key.

HINT:

At this time, the shift lever should be in the P position and the ignition key should be set to Lock.

14. **INSTALL INSTRUMENT PANEL AIR BAG ASSY (See page 60–29)**
15. **INSPECT INSTRUMENT PANEL AIR BAG ASSY (See page 60–29)**
16. **INSPECT SRS WARNING LIGHT (See page 05–1184)**
17. **CHECK KEY INTERLOCK OPERATION (See page 40–59)**

MANUAL TRANSAXLE SYSTEM (MTM)

4100Y–05

PROBLEM SYMPTOMS TABLE

Use the table below to help find the cause of the problem. The numbers indicate the likelihood of the possible cause in descending order. Check each part in the order shown. Replace these parts as necessary.

★: (C50 MANUAL TRANSAXLE Repair Manual Pub. No. 826E or C250 MANUAL TRANSAXLE Repair Manual Pub. No. RM1020E or E354 MANUAL TRANSAXLE Repair Manual Pub. No. RM944E)

Symptom	Suspect Area		See page
Noise	6. Oil (Level low)		41–2
	7. Oil (Wrong)	C50/C250	41–3
		E354/E357	41–5
	8. Gear (Worn or damaged)		★
	9. Bearing (Worn or damaged)		★
Oil leakage	1. Oil (Level too high)		41–2
	2. Gasket (Damaged)		★
	3. Oil seal (Worn or damaged)	C50/ C250	41–3
		E354/E357	41–5
	4. O–Ring (Worn or damaged)		★
Hard to shift or will not shift	1. Control cable (Faulty)		41–7
	2. Synchronizer ring (Worn or damaged)		★
	3. Shift key spring (Damaged)		★
Jumps out of gear	1. Locking ball spring (Damaged)		★
	2. Shift fork (Worn)		★
	3. Gear (Worn or damaged)		★
	4. Bearing (Worn or damaged)		★

MANUAL TRANSAXLE OIL (MTM)

ON–VEHICLE INSPECTION

4100Z–05

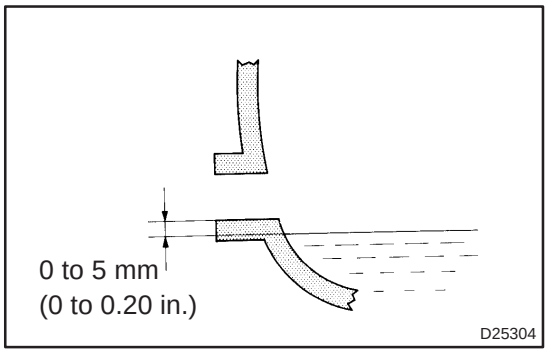

1. INSPECT TRANSAXLE OIL

(a) Stop the vehicle on the level place.

(b) Remove the transmission filler plug and gasket.

(c) Check that the oil surface is within 5 mm (0.20 in.) from the lowest position of the inner surface of the transmission filler plug opening.

NOTICE:

- **Excessively large or small amount of oil may cause troubles.**
- **After replacing oil, drive the vehicle and check the oil level.**

(d) Check for oil leakage when the oil level is low.

(e) Install the transmission filler plug and new gasket.

Torque:
C50, C250: 39 N·m (400 kgf·cm, 29 ft·lbf)
E354, E357: 49 N·m (500 kgf·cm, 36 ft·lbf)

FRONT DIFFERENTIAL OIL SEAL (C50/C250)

41046–11

REPLACEMENT

1. **DRAIN MANUAL TRANSAXLE OIL**
   Torque: 39 N·m (400 kgf·cm, 29 ft·lbf)
2. **REMOVE FRONT WHEELS**
3. **REMOVE ENGINE UNDER COVER LH**
4. **REMOVE ENGINE UNDER COVER RH**
5. **REMOVE FRONT DRIVE SHAFT ASSY LH (See page 30–6)**
   SST 09520–01010, 09520–24010 (09520–32040)
6. **REMOVE FRONT DRIVE SHAFT ASSY RH (See page 30–6)**
   SST 09520–01010, 09520–24010 (09520–32040)

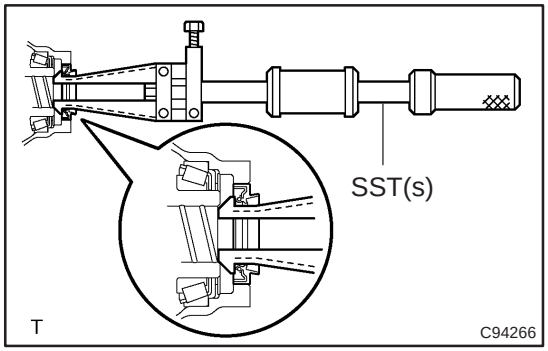

7. **REMOVE TRANSAXLE CASE OIL SEAL**
(a) Using SST(s), remove the oil seal.
SST 09308–00010

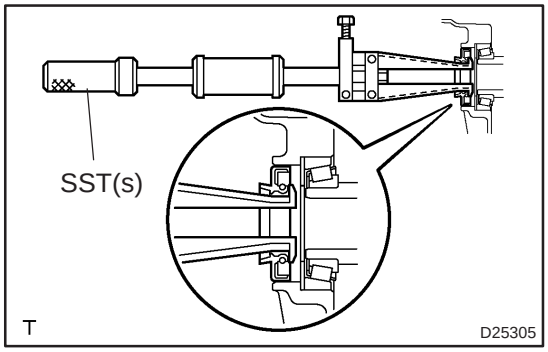

8. **REMOVE TRANSMISSION CASE OIL SEAL**
(a) Using SST(s), remove the oil seal.
SST 09308–00010

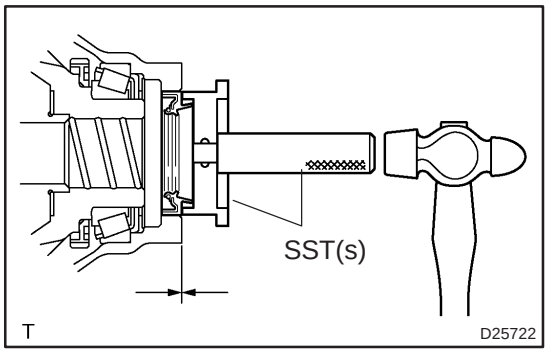

9. **INSTALL TRANSAXLE CASE OIL SEAL**
(a) Coat a new oil seal lip with MP grease.
(b) Using SST(s) and a hammer, install the oil seal.
SST 09554–14010, 09950–70010 (09951–07200)
Drive in depth: 1.9 ± 0.3 mm (0.075 ± 0.012 in.)

NOTICE:
Be careful not to damage the oil seal lip.

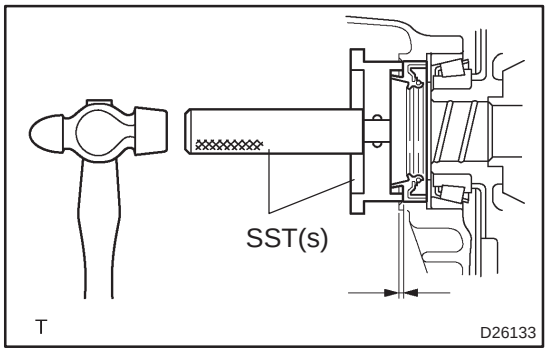

10. INSTALL TRANSMISSION CASE OIL SEAL

(a) Coat a new oil seal lip with MP grease.

(b) Using SST(s) and a hammer, install the oil seal.

SST 09554–14010, 09950–70010 (09951–07200)

Drive in depth: 9.9 ± 0.3 mm (0.390 ± 0.012 in.)

NOTICE:

Be careful not to damage the oil seal lip.

11. INSTALL FRONT DRIVE SHAFT ASSY LH (See page 30–6)

12. INSTALL FRONT DRIVE SHAFT ASSY RH (See page 30–6)

13. INSTALL FRONT WHEELS

Torque: 103 N·m (1,050 kgf·cm, 76 ft·lbf)

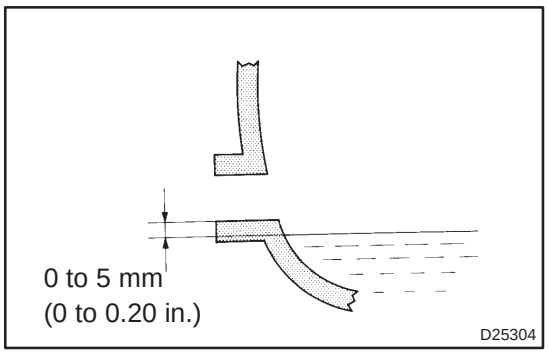

14. ADD MANUAL TRANSAXLE OIL

Oil grade: API GL–4 or GL–5

Viscosity: SAE 75 W–90

Capacity: 1.9 liters (2.0 US qts, 1.7 lmp. qts)

Torque: 39 N·m (400 kgf·cm, 29 ft·lbf)

15. INSPECT MANUAL TRANSAXLE OIL (See page 41–2)

16. INSPECT FRONT WHEEL ALIGNMENT (See page 26–6)

17. CHECK ABS SPEED SENSOR SIGNAL

(a) w/ VSC (See page 05–756)

(b) w/o VSC (See page 05–699)

FRONT DIFFERENTIAL OIL SEAL (E354/E357)

41046–12

REPLACEMENT

1. **DRAIN MANUAL TRANSAXLE OIL**
   Torque: 49 N·m (500 kgf·cm, 36 ft·lbf)
2. **REMOVE FRONT WHEELS**
3. **REMOVE ENGINE UNDER COVER LH**
4. **REMOVE ENGINE UNDER COVER RH**
5. **REMOVE FRONT DRIVE SHAFT ASSY LH (See page 30–6)**
   SST 09520–01010, 09520–24010 (09520–32040)
6. **REMOVE FRONT DRIVE SHAFT ASSY RH (See page 30–6)**
   SST 09520–01010, 09520–24010 (09520–32040)

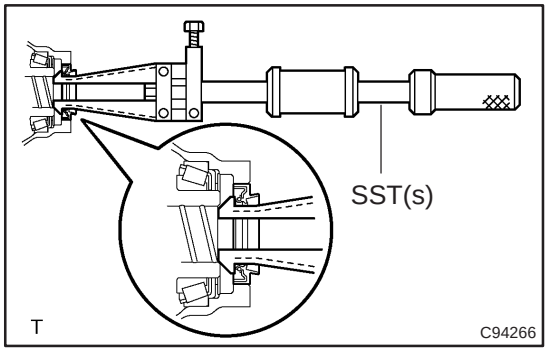

7. **REMOVE FRONT TRANSAXLE CASE COVER OIL SEAL**

(a) Using SST(s), remove the oil seal.
SST 09308–00010

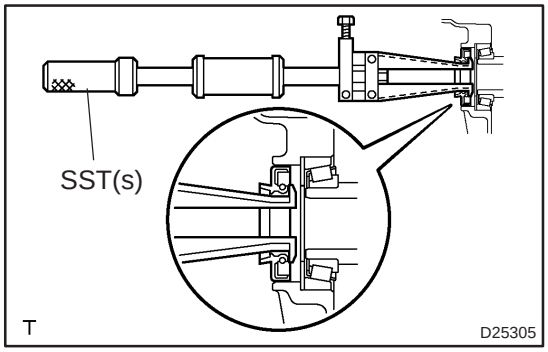

8. **REMOVE TRANSMISSION CASE OIL SEAL**

(a) Using SST(s), remove the oil seal.
SST 09308–00010

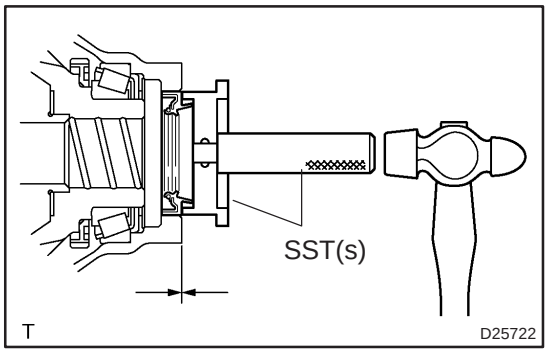

9. **INSTALL FRONT TRANSAXLE CASE COVER OIL SEAL**

(a) Coat a new oil seal lip with MP grease.
(b) Using SST(s) and a hammer, install the oil seal.
SST 09608–10010, 09950–70010 (09951–07200)
Drive in depth: 0 ± 0.5 mm (0 ± 0.020 in.)

NOTICE:
Be careful not to damage the oil seal lip.

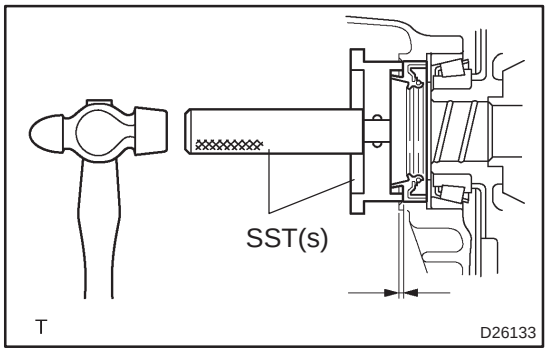

10. INSTALL TRANSMISSION CASE OIL SEAL

(a) Coat a new oil seal lip with MP grease.

(b) Using SST(s) and a hammer, install the oil seal.

SST 09608–32010, 09950–70010 (09951–07200)

Drive in depth: 3.5 ± 0.5 mm (0.138 ± 0.020 in.)

NOTICE:

Be careful not to damage the oil seal lip.

11. INSTALL FRONT DRIVE SHAFT ASSY LH (See page 30–6)

12. INSTALL FRONT DRIVE SHAFT ASSY RH (See page 30–6)

13. INSTALL FRONT WHEELS

Torque: 103 N·m (1,050 kgf·cm, 76 ft·lbf)

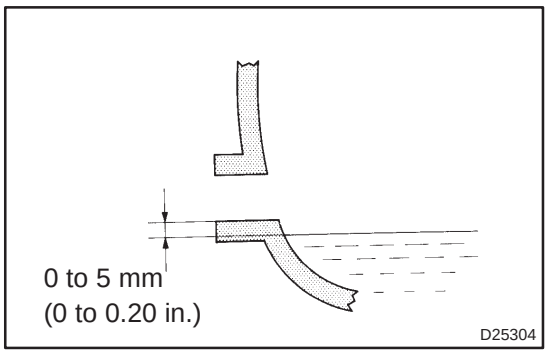

14. ADD MANUAL TRANSAXLE OIL

Oil grade: API GL–4 or GL–5

Viscosity: SAE 75 W–90

Capacity: 2.5 liters (2.6 US qts, 2.2 Imp. qts)

Torque: 49 N·m (500 kgf·cm, 36 ft·lbf)

15. INSPECT MANUAL TRANSAXLE OIL (See page 41–2)

16. INSPECT FRONT WHEEL ALIGNMENT (See page 26–6)

17. CHECK ABS SPEED SENSOR SIGNAL

(a) w/ VSC (See page 05–756)

(b) w/o VSC (See page 05–699)

TRANSMISSION CONTROL CABLE ASSY (MTM)

4105R–02

REPLACEMENT

HINT:

COMPONENTS: See page 41–10

1. REMOVE AIR CONDITIONER UNIT ASSY (See page 55–55)

HINT:

Refer to the instructions for removal of the instrument panel sub–assy lower.

2. REMOVE EXHAUST PIPE ASSY

(a) 1ZZ–FE, 3ZZ–FE Engine (See page 15–2)

(b) 1AZ–FE, 1AZ–FSE Engine (See page 15–7)

(c) 1CD–FTV Engine (See page 15–10)

3. REMOVE FRONT FLOOR HEAT INSULATOR NO.1 (GASOLINE ENGINE TYPE)

(a) Remove the 3 nuts and heat insulator No.1.

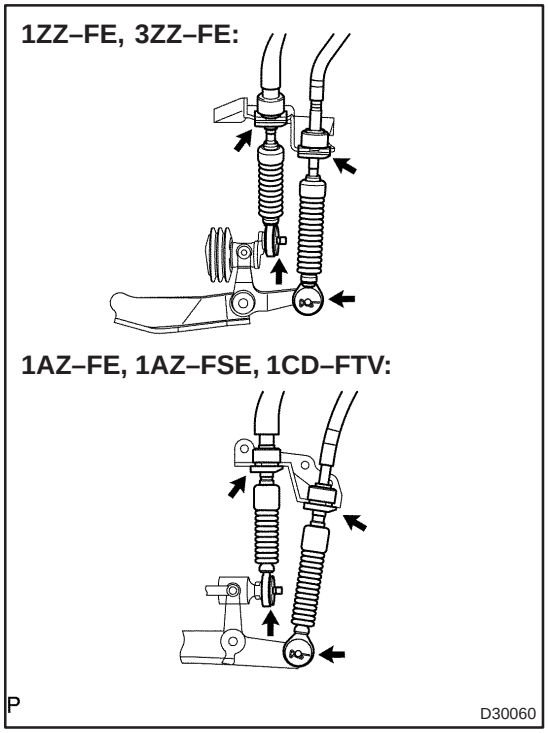

4. REMOVE TRANSMISSION CONTROL CABLE ASSY

(a) Remove the 2 clips, separate the 2 cables from the transaxle.

(b) Remove the 2 clips, separate the 2 cables from the bracket.

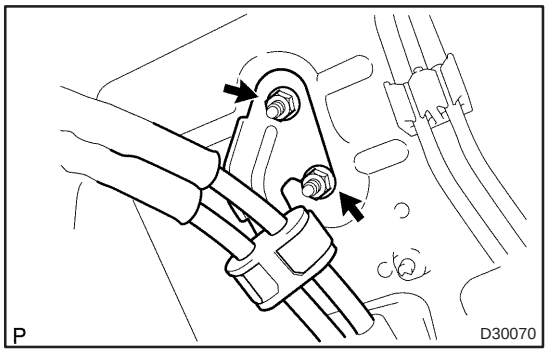

(c) Remove the 2 nuts, separate the control cable assy.

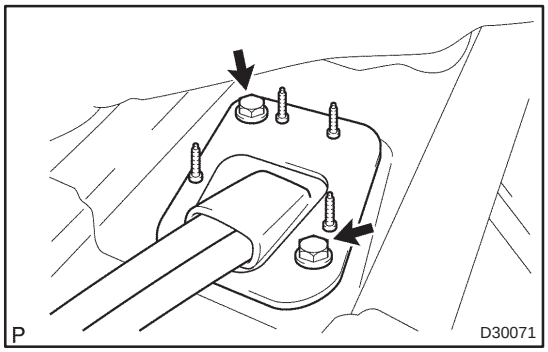

(d) Remove the 2 bolts, separate the control cable assy.

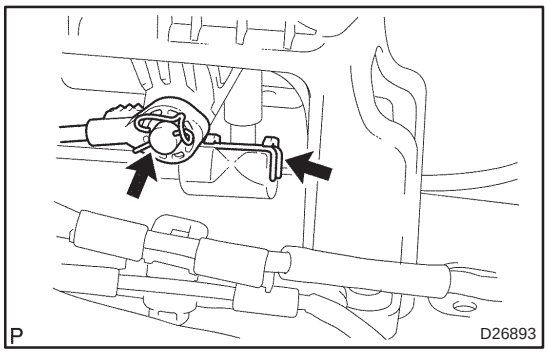

(e) Remove the 2 clips, separate the cable ends of the control cable assy.

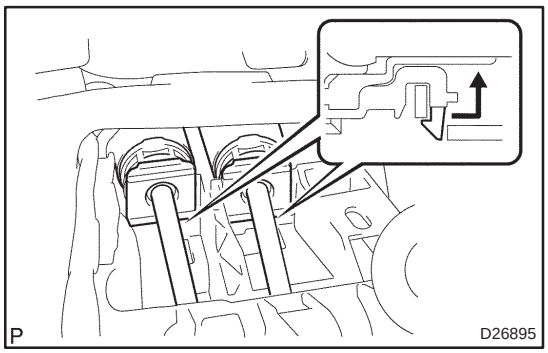

(f) Release the claws, remove the control cable assy.

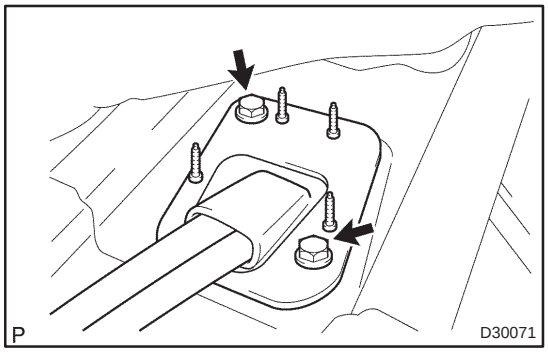

5. INSTALL TRANSMISSION CONTROL CABLE ASSY

(a) Put the control cable assy through the floor hole.

(b) Install the control cable assy with the 2 bolts.

Torque: 5.0 N·m (51 kgf·cm, 44 in.·lbf)

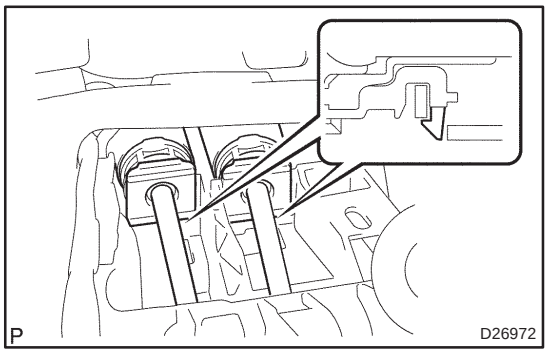

(c) Connect the control cable assy to the shift lever assy.

NOTICE:

Make sure that the claws are firmly engaged.

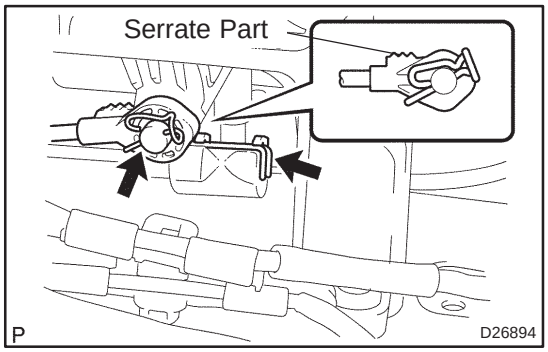

(d) Connect the end of the select cable to the shift lever assy and install the clip.

NOTICE:

- **The serrate part of the select cable point should face upward when the select cable point is connected.**
- **The clip should be inserted to the direction as shown in the illustration.**

(e) Connect the end of the shift cable to the shift lever assy.

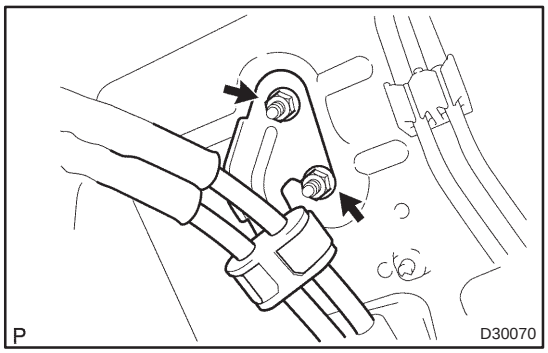

(f) Connect the control cable assy with the 2 nuts.
Torque: 5.0 N·m (51 kgf·cm, 44 in.·lbf)

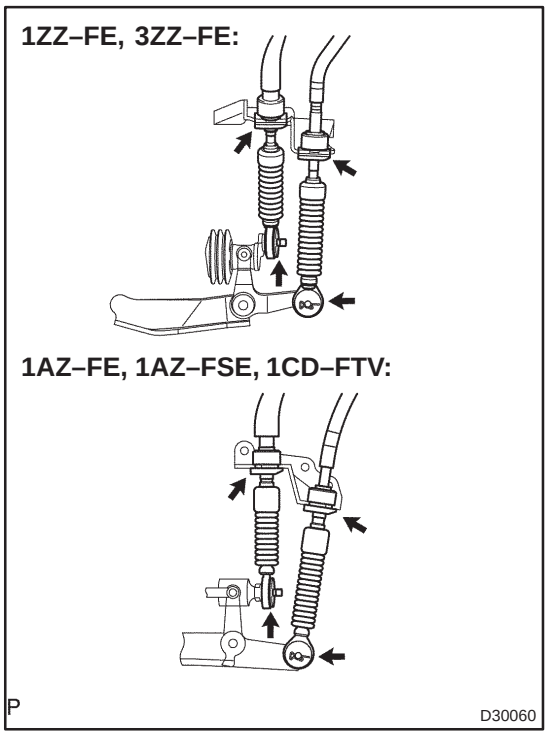

(g) Connect the 2 cable ends, install the 2 clips.
(h) Install the 2 clips to the control cable bracket.

6. INSTALL FRONT FLOOR HEAT INSULATOR NO.1 (GASOLINE ENGINE TYPE)

(a) Install the heat insulator No.1 with the 3 nuts.
Torque: 5.5 N·m (56 kgf·cm, 49 in.·lbf)

7. INSTALL EXHAUST PIPE ASSY

(a) 1ZZ–FE, 3ZZ–FE Engine (See page 15–2)
(b) 1AZ–FE, 1AZ–FSE Engine (See page 15–7)
(c) 1CD–FTV Engine (See page 15–10)

FLOOR SHIFT SHIFT LEVER ASSY (MTM)

4105U–03

COMPONENTS

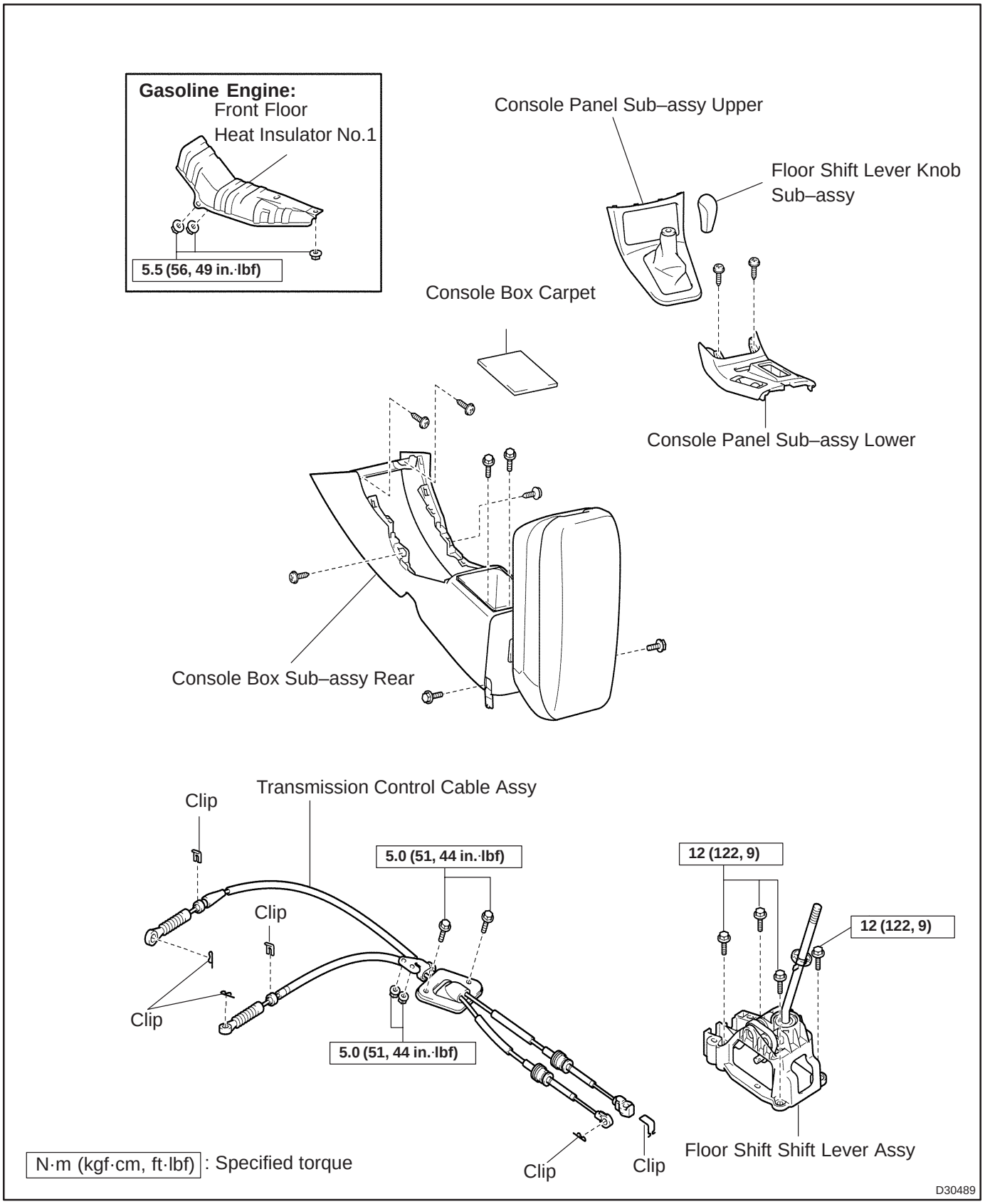

REPLACEMENT

1. REMOVE FLOOR SHIFT SHIFT LEVER KNOB SUB–ASSY (See page 71–11)
2. REMOVE CONSOLE PANEL UPPER (See page 71–11)
3. REMOVE CONSOLE PANEL SUB–ASSY LOWER (See page 71–11)
4. REMOVE CONSOLE BOX ASSY REAR (See page 71–11)

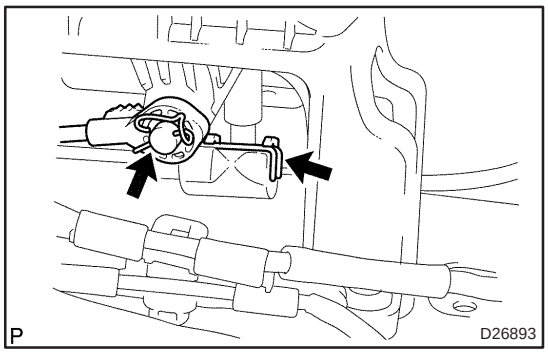

5. SEPARATE TRANSMISSION CONTROL CABLE ASSY

(a) Remove the 2 clips, separate the cable ends of the control cable assy.

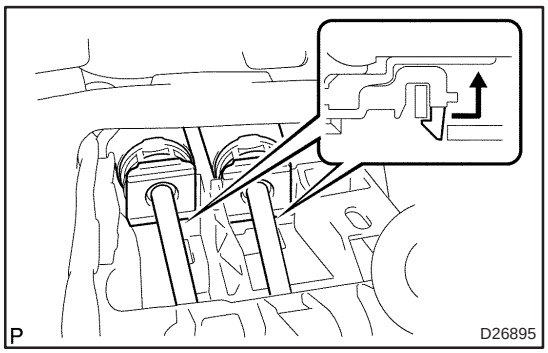

(b) Release the claws, separate the control cable assy.

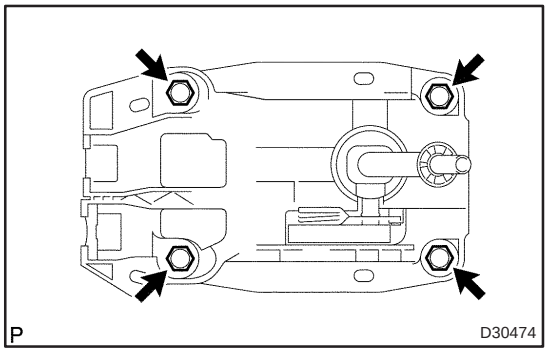

6. REMOVE FLOOR SHIFT SHIFT LEVER ASSY

(a) Remove the 4 bolts and shift lever assy.

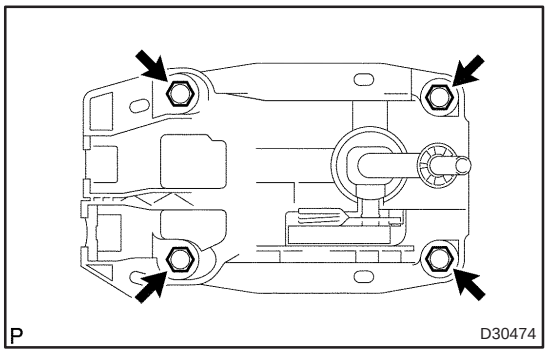

7. INSTALL FLOOR SHIFT SHIFT LEVER ASSY

(a) Install the shift lever assy with the 4 bolts.
Torque: 12 N·m (122 kgf·cm, 9 ft·lbf)

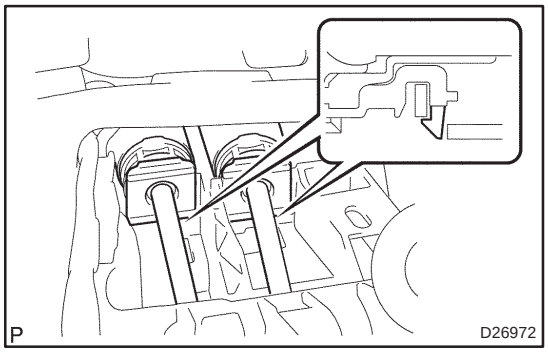

8. CONNECT TRANSMISSION CONTROL CABLE ASSY

(a) Connect the control cable assy to the shift lever assy.

NOTICE:

Make sure that the claws are firmly engaged.

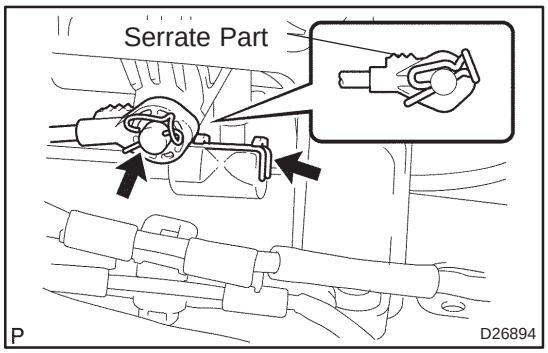

(b) Connect the end of the select cable to the shift lever assy, install the clip.

NOTICE:

- **The serrate part of the select cable point should face upward when the select cable point is connected.**
- **The clip should be inserted to the direction as shown in the illustration.**

(c) Connect the end of the shift cable to the shift lever assy.

MANUAL TRANSAXLE ASSY (1ZZ–FE/3ZZ–FE)

410DS–01

COMPONENTS

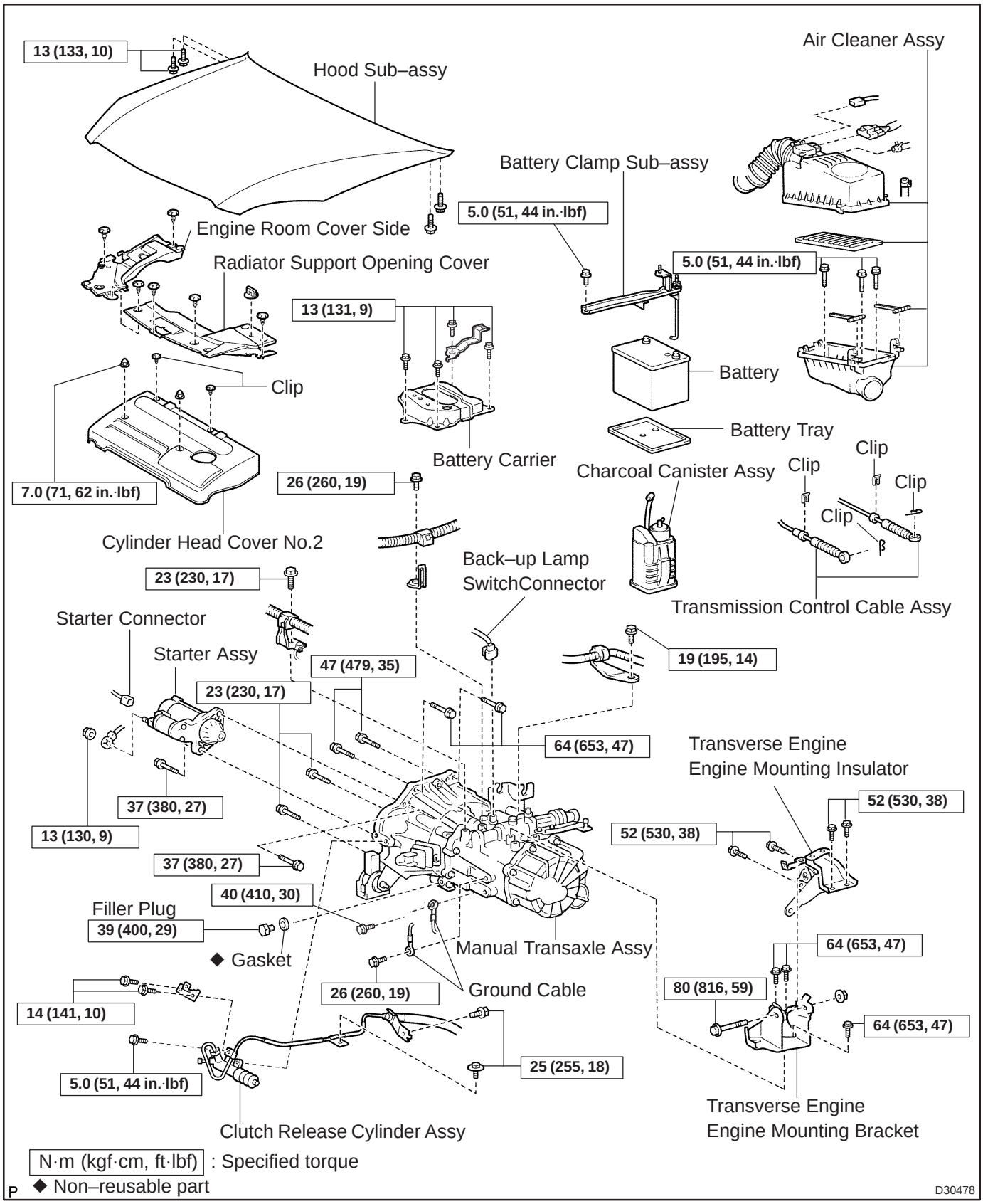

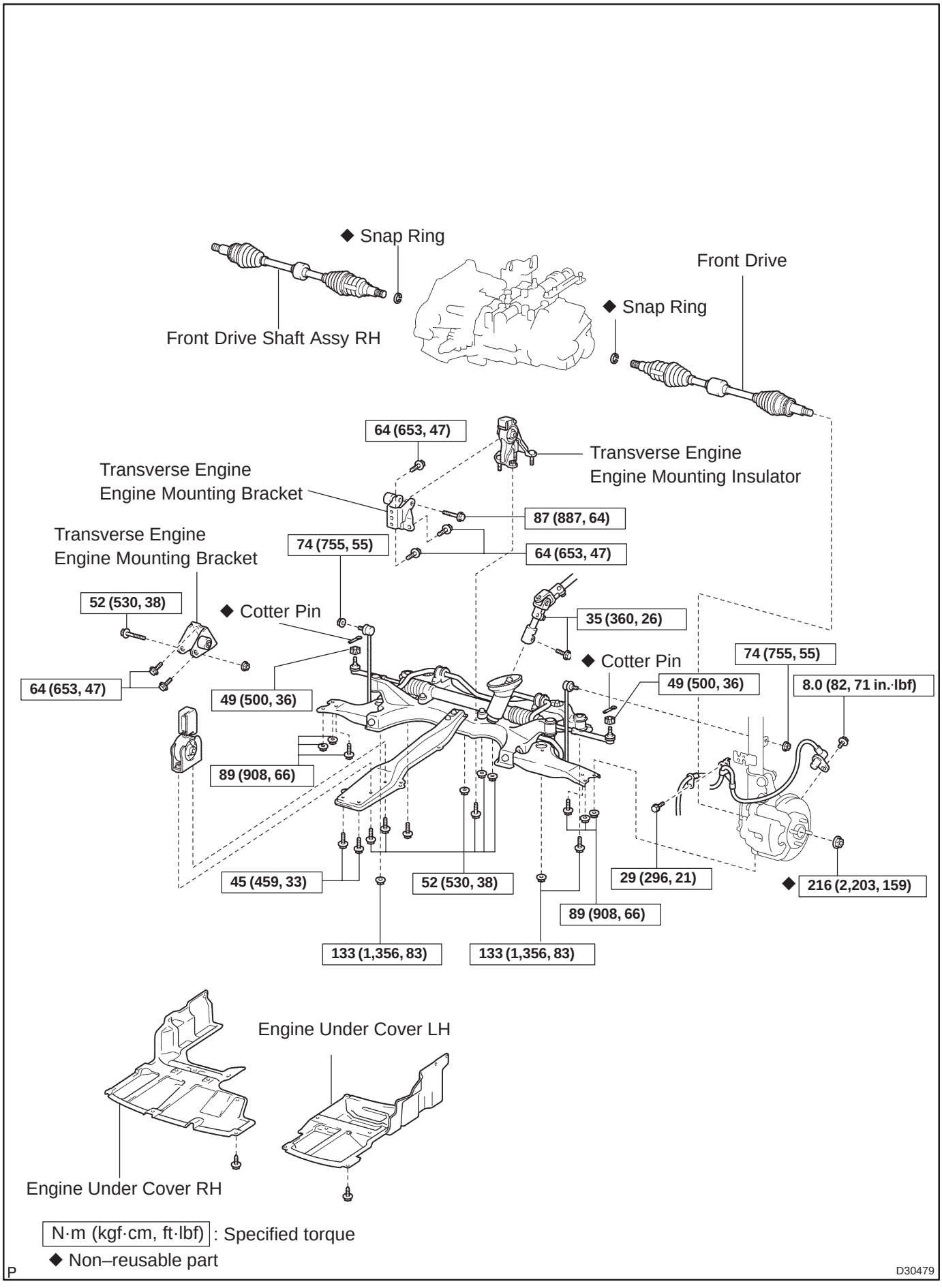
◆ Snap Ring
Front Drive
◆ Snap Ring
Front Drive Shaft Assy RH
64 (653, 47)
Transverse Engine
Engine Mounting Insulator
Transverse Engine
Engine Mounting Bracket
87 (887, 64)
Transverse Engine
Engine Mounting Bracket
74 (755, 55)
64 (653, 47)
52 (530, 38)
◆ Cotter Pin
35 (360, 26)
◆ Cotter Pin
74 (755, 55)
64 (653, 47)
49 (500, 36)
49 (500, 36)
8.0 (82, 71 in.·lbf)
89 (908, 66)
45 (459, 33)
52 (530, 38)
29 (296, 21)
◆ 216 (2,203, 159)
89 (908, 66)
133 (1,356, 83)
133 (1,356, 83)
Engine Under Cover LH
Engine Under Cover RH
N·m (kgf·cm, ft·lbf) : Specified torque
◆ Non–reusable part
P
D30479

REPLACEMENT

1. **INSPECT CENTER FRONT WHEEL**
2. **REMOVE COLUMN HOLE COVER SILENCER SHEET (See page 50–9)**
3. **SEPARATE STEERING INTERMEDIATE SHAFT ASSY NO.2 (See page 50–9)**
4. **REMOVE STEERING COLUMN HOLE COVER SUB–ASSY NO.1 (See page 50–9)**
5. **REMOVE STEERING INTERMEDIATE SHAFT (See page 50–9)**
6. **REMOVE FRONT WHEELS**
7. **REMOVE ENGINE UNDER COVER LH**
8. **REMOVE ENGINE UNDER COVER RH**
9. **DRAIN TRANSAXLE OIL**
   Torque: 39 N·m (400 kgf·cm, 29 ft·lbf)
10. **REMOVE HOOD SUB–ASSY**
11. **REMOVE RADIATOR SUPPORT OPENING COVER**
12. **REMOVE ENGINE ROOM COVER SIDE**
13. **REMOVE CYLINDER HEAD COVER NO.2**
14. **REMOVE AIR CLEANER ASSY**
15. **REMOVE BATTERY CLAMP SUB–ASSY**
16. **REMOVE BATTERY**
17. **REMOVE BATTERY TRAY**

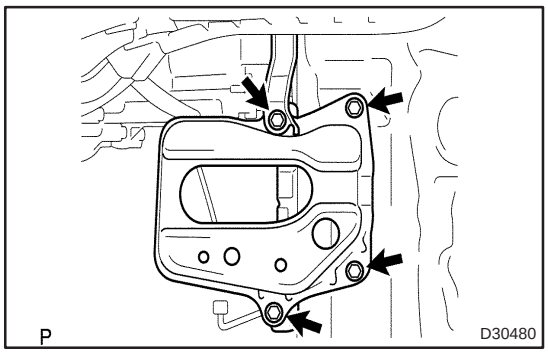

18. REMOVE BATTERY CARRIER

(a) Remove the 4 bolts and battery carrier.

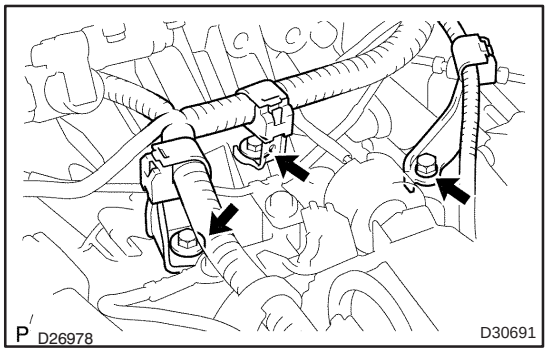

19. DISCONNECT WIRE HARNESS

(a) Remove the 3 bolts, disconnect the wire harness clamps.

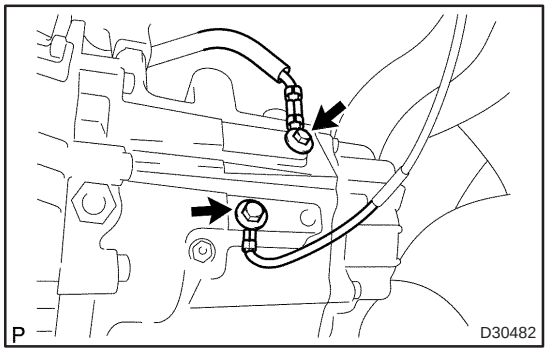

(b) Remove the bolt, disconnect the ground cable.

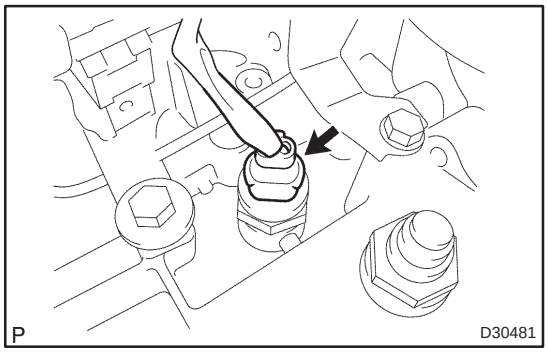

20. DISCONNECT CONNECTOR

(a) Disconnect the back–up lamp switch connector.

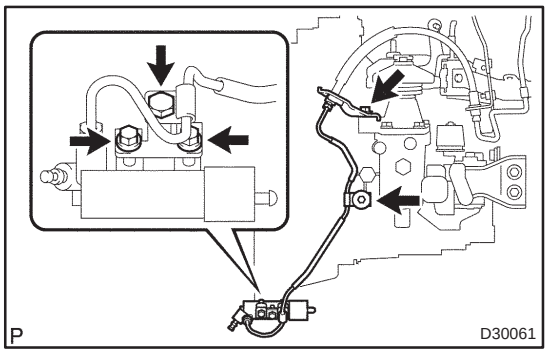

21. SEPARATE CLUTCH RELEASE CYLINDER ASSY

(a) Remove the 5 bolts, separate the release cylinder assy with clutch piping from the transaxle.

22. SEPARATE CHARCOAL CANISTER ASSY

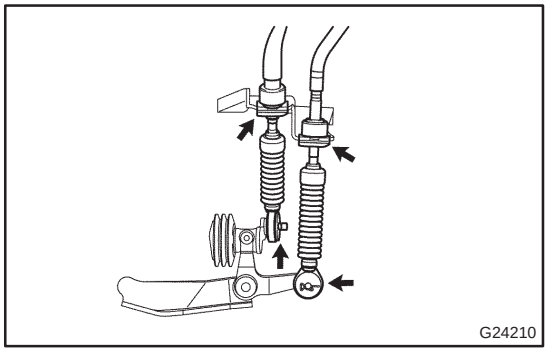

23. SEPARATE TRANSMISSION CONTROL CABLE ASSY

(a) Remove the 2 clips, disconnect the 2 cables from the transaxle.

(b) Remove the 2 clips, disconnect the 2 cables from the control cable bracket.

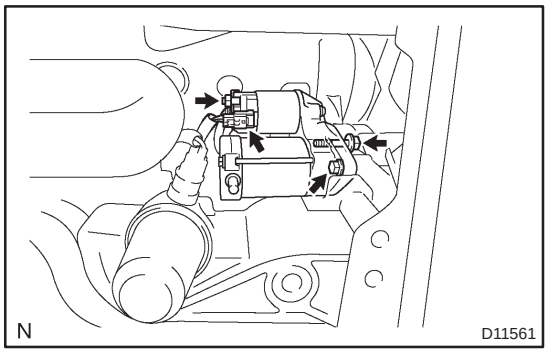

24. REMOVE STARTER ASSY

(a) Remove the nut and disconnect the starter wire.

(b) Disconnect the connector.

(c) Remove the 2 bolts and starter assy.

25. REMOVE FRONT DRIVE SHAFT ASSY LH(See page 30–6)

SST 09520–01010, 09520–24010 (09520–32040)

26. REMOVE FRONT DRIVE SHAFT ASSY RH (See page 30–6)

SST 09520–01010, 09520–24010 (09520–32040)

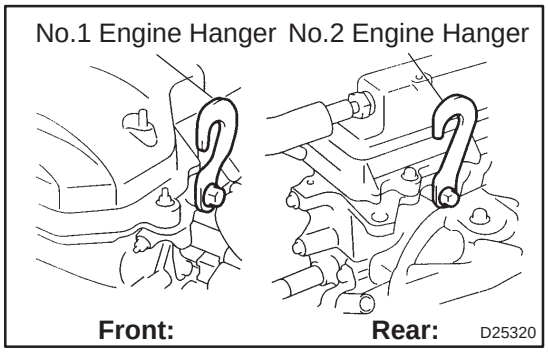

27. SUSPEND ENGINE ASSY

(a) Remove the 2 PCV hoses.

(b) Install the 2 hangers in the correct direction.

No.1 engine hanger: 12281–22021
No.2 engine hanger: 12281–15040
Bolt: 91512–B1016
Torque: 38 N·m (387 kgf·cm, 28 ft·lbf)

(c) Attach the engine chain hoist to the hangers.

CAUTION:
Do not attempt to hang the engine by hooking the chain to any other part.

28. REMOVE HEIGHT CONTROL SENSOR SUB–ASSY FR RH (W/ DISCHARGE HEAD LAMP) (See page 65–28)

29. REMOVE FRONT SUSPENSION CROSSMEMBER SUB–ASSY(See page 26–26)

30. SUPPORT MANUAL TRANSAXLE ASSY

(a) Support the transaxle with a transmission jack.

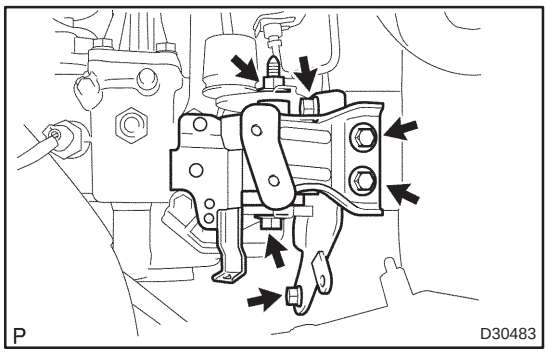

31. REMOVE TRANSVERSE ENGINE ENGINE MOUNTING INSULATOR

(a) Remove the 5 bolts, nut and engine mounting insulator LH from the body.

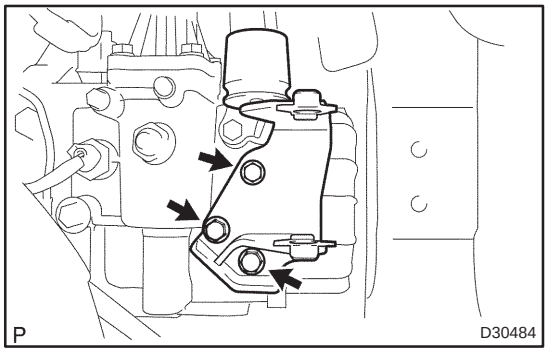

32. REMOVE TRANSVERSE ENGINE ENGINE MOUNTING BRACKET

(a) Remove the 3 bolts and engine mounting bracket LH from the transaxle.

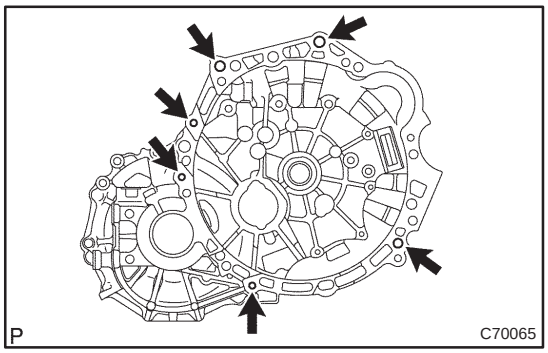

33. REMOVE MANUAL TRANSAXLE ASSY

(a) Remove the 6 bolts and transaxle from the engine.

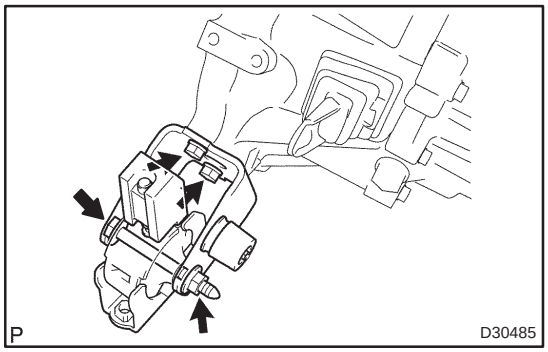

34. REMOVE TRANSVERSE ENGINE ENGINE MOUNTING BRACKET

(a) Remove the bolt, nut and engine mounting insulator FR from the engine mounting bracket FR.

(b) Remove the 2 bolts and engine mounting bracket FR from the transaxle.

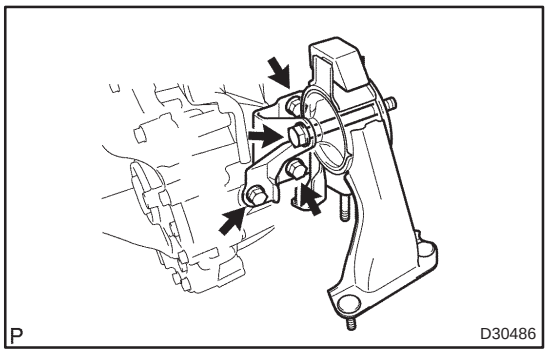

35. REMOVE TRANSVERSE ENGINE ENGINE MOUNTING BRACKET

(a) Remove the bolt and engine mounting insulator RR from the engine mounting bracket RR.

(b) Remove the 3 bolts and engine mounting bracket RR from the transaxle.

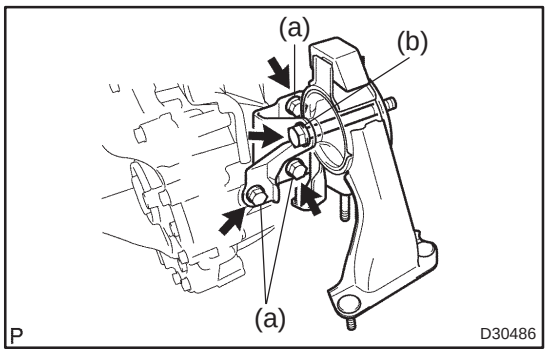

36. INSTALL TRANSVERSE ENGINE ENGINE MOUNTING BRACKET

(a) Install the engine mounting bracket RR and 3 bolts to the transaxle.
Torque: 64 N·m (653 kgf·cm, 47 ft·lbf)

(b) Install the engine mounting insulator RR and bolt to the engine mounting bracket RR.
Torque: 87 N·m (887 kgf·cm, 64 ft·lbf)

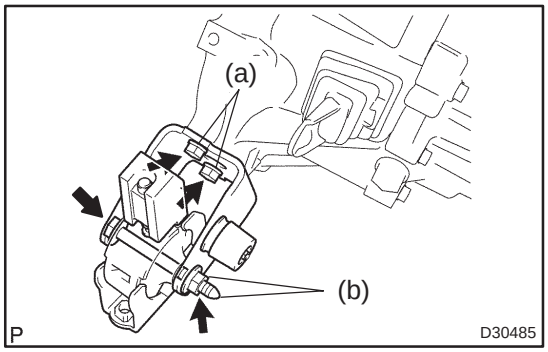

37. INSTALL TRANSVERSE ENGINE ENGINE MOUNTING BRACKET

(a) Install the engine mounting bracket FR and 2 bolts to the transaxle.
Torque: 64 N·m (653 kgf·cm, 47 ft·lbf)

(b) Install the engine mounting insulator FR, bolt and nut to the engine mounting bracket FR.
Torque: 52 N·m (530 kgf·cm, 38 ft·lbf)

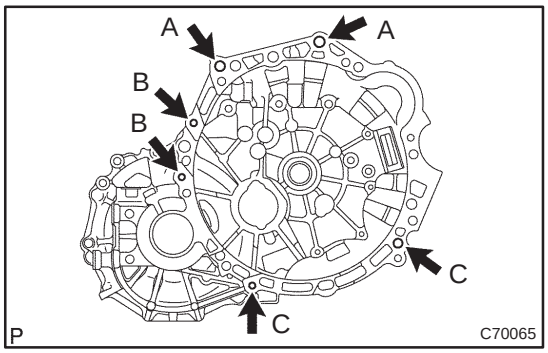

38. INSTALL MANUAL TRANSAXLE ASSY

(a) Align the input shaft with the clutch disc and install the transaxle to the engine.

(b) Install the 6 bolts.
Torque:
Bolt A: 64 N·m (653 kgf·cm, 47 ft·lbf)
Bolt B: 47 N·m (479 kgf·cm, 35 ft·lbf)
Bolt C: 23 N·m (230 kgf·cm, 17 ft·lbf)

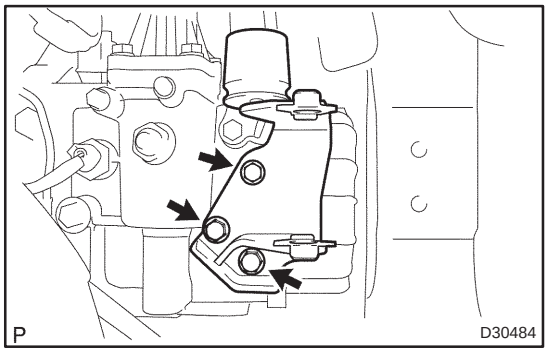

39. INSTALL TRANSVERSE ENGINE ENGINE MOUNTING BRACKET

(a) Install the engine mounting bracket LH to the transaxle with the 3 bolts.
Torque: 64 N·m (653 kgf·cm, 47 ft·lbf)

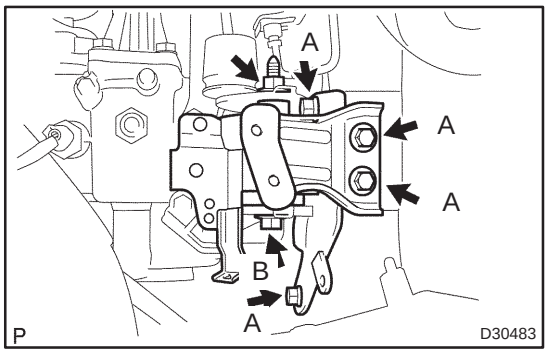

40. INSTALL TRANSVERSE ENGINE ENGINE MOUNTING INSULATOR

(a) Install the engine mounting insulator LH with the 5 bolts and nut.
Torque:
Bolt A: 52 N·m (530 kgf·cm, 38 ft·lbf)
Bolt B: 80 N·m (816 kgf·cm, 59 ft·lbf)

41. INSTALL FRONT SUSPENSION CROSSMEMBER SUB–ASSY (See page 26–26)
SST 09670–00010

42. INSTALL HEIGHT CONTROL SENSOR SUB–ASSY FR RH (W/ DISCHARGE HEAD LAMP) (See page 65–28)

43. INSTALL FRONT DRIVE SHAFT ASSY LH (See page 30–6)

44. INSTALL FRONT DRIVE SHAFT ASSY RH (See page 30–6)

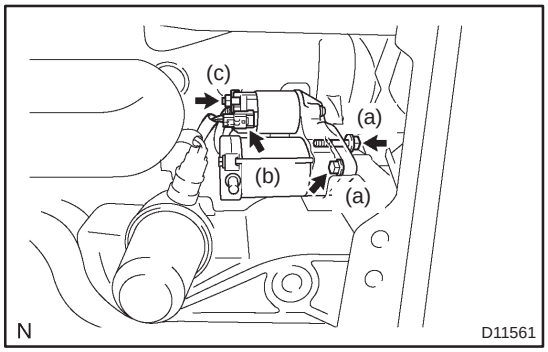

45. INSTALL STARTER ASSY

(a) Install the starter assy and 2 bolts to the transaxle.
Torque: 37 N·m (380 kgf·cm, 27 ft·lbf)

(b) Connect the starter connector.

(c) Install the wire and nut to the starter assy.
Torque: 13 N·m (130 kgf·cm, 9 ft·lbf)

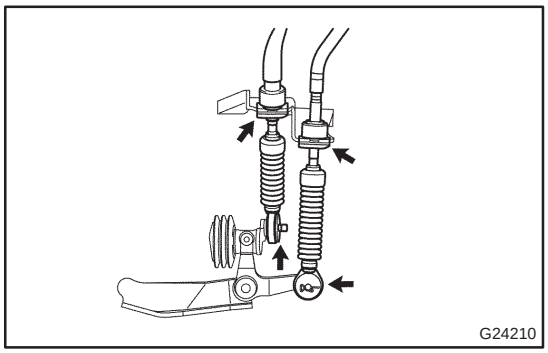

46. CONNECT TRANSMISSION CONTROL CABLE ASSY

(a) Connect the 2 cable ends, install the 2 clips.

(b) Install the 2 clips to the control cable bracket.

47. CONNECT CHARCOAL CANISTER ASSY

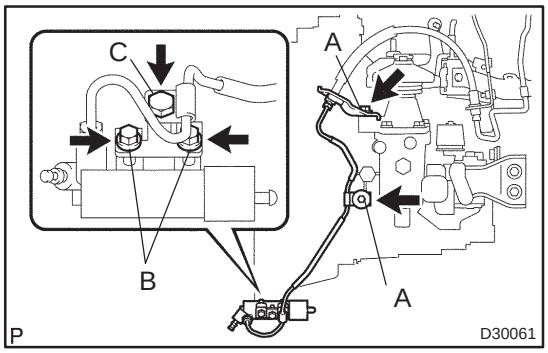

48. CONNECT CLUTCH RELEASE CYLINDER ASSY

(a) Install the release cylinder with the 5 bolts.

Torque:
Bolt A: 25 N·m (255 kgf·cm, 18 ft·lbf)
Bolt B: 14 N·m (141 kgf·cm, 10 ft·lbf)
Bolt C: 5.0 N·m (51 kgf·cm, 44 in.·lbf)

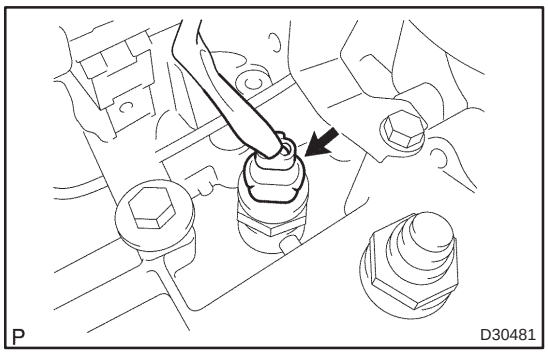

49. CONNECT CONNECTOR

(a) Connect the back–up lamp switch connector.

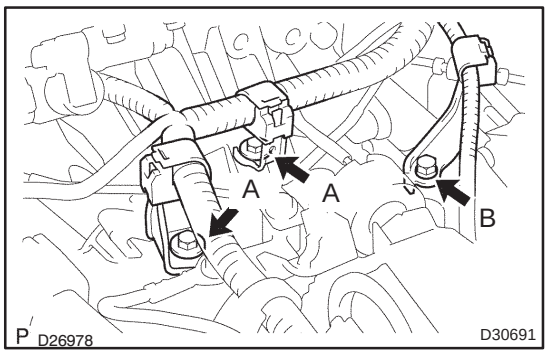

50. CONNECT WIRE HARNESS

(a) Install the 3 wire harness clamps to the transaxle with the 3 bolts.

Torque:
Bolt A: 26 N·m (260 kgf·cm, 19 ft·lbf)
Bolt B: 19 N·m (195 kgf·cm, 14 ft·lbf)

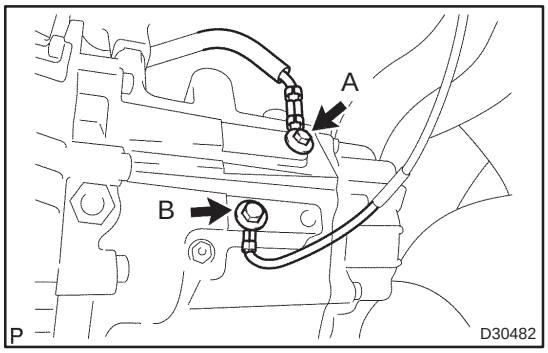

(b) Install the bolt and ground cable as shown in the illustration.

Torque:
Bolt A: 26 N·m (260 kgf·cm, 19 ft·lbf)
Bolt B: 40 N·m (410 kgf·cm, 30 ft·lbf)

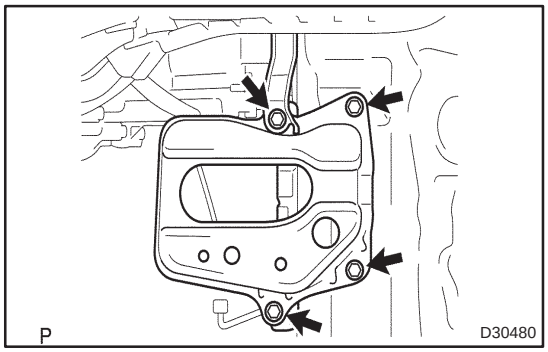

51. INSTALL BATTERY CARRIER

(a) Install the battery carrier and 4 bolts.
Torque: 13 N·m (131 kgf·cm, 9 ft·lbf)

52. INSTALL BATTERY TRAY
53. INSTALL BATTERY
54. INSTALL BATTERY CLAMP SUB–ASSY
Torque:
Bolt: 5.0 N·m (51 kgf·cm, 44 in.·lbf)
Nut: 3.5 N·m (36 kgf·cm, 31 in.·lbf)
55. INSTALL AIR CLEANER ASSY
Torque: 5.0 N·m (51 kgf·cm, 44 in.·lbf)
56. INSTALL CYLINDER HEAD COVER NO.2
Torque: 7.0 N·m (71 kgf·cm, 62 in.·lbf)
57. INSTALL ENGINE ROOM COVER SIDE
58. INSTALL RADIATOR SUPPORT OPENING COVER
59. INSTALL HOOD SUB–ASSY
Torque: 13 N·m (133 kgf·cm, 10 ft·lbf)
60. INSPECT HOOD SUB–ASSY (See page 75–2)
61. ADJUST HOOD SUB–ASSY (See page 75–2)
62. ADD TRANSAXLE OIL (See page 41–3)
63. INSPECT TRANSAXLE OIL (See page 41–2)
64. INSTALL FRONT WHEELS
Torque: 103 N·m (1,050 kgf·cm, 76 ft·lbf)
65. INSTALL STEERING INTERMEDIATE SHAFT (See page 50–9)
66. INSTALL STEERING COLUMN HOLE COVER SUB–ASSY NO.1 (See page 50–9)
67. INSTALL STEERING INTERMEDIATE SHAFT ASSY NO.2 (See page 50–9)
68. INSTALL COLUMN HOLE COVER SILENCER SHEET (See page 50–9)
69. PLACE FRONT WHEELS FACING STRAIGHT AHEAD
70. STEERING WHEEL CENTER POINT
71. INSPECT AND ADJUST FRONT WHEEL ALIGNMENT (See page 26–6)
72. INSTALL ENGINE UNDER COVER LH
73. INSTALL ENGINE UNDER COVER RH
74. CHECK ABS SPEED SENSOR SIGNAL
(a) w/ VSC (See page 05–756)
(b) w/o VSC (See page 05–699)
75. HEADLIGHT AIM ONLY (W/ DISCHARGE HEAD LAMP) (See page 65–19)

MANUAL TRANSAXLE ASSY (1AZ–FE/1AZ–FSE)

410DT–01

COMPONENTS

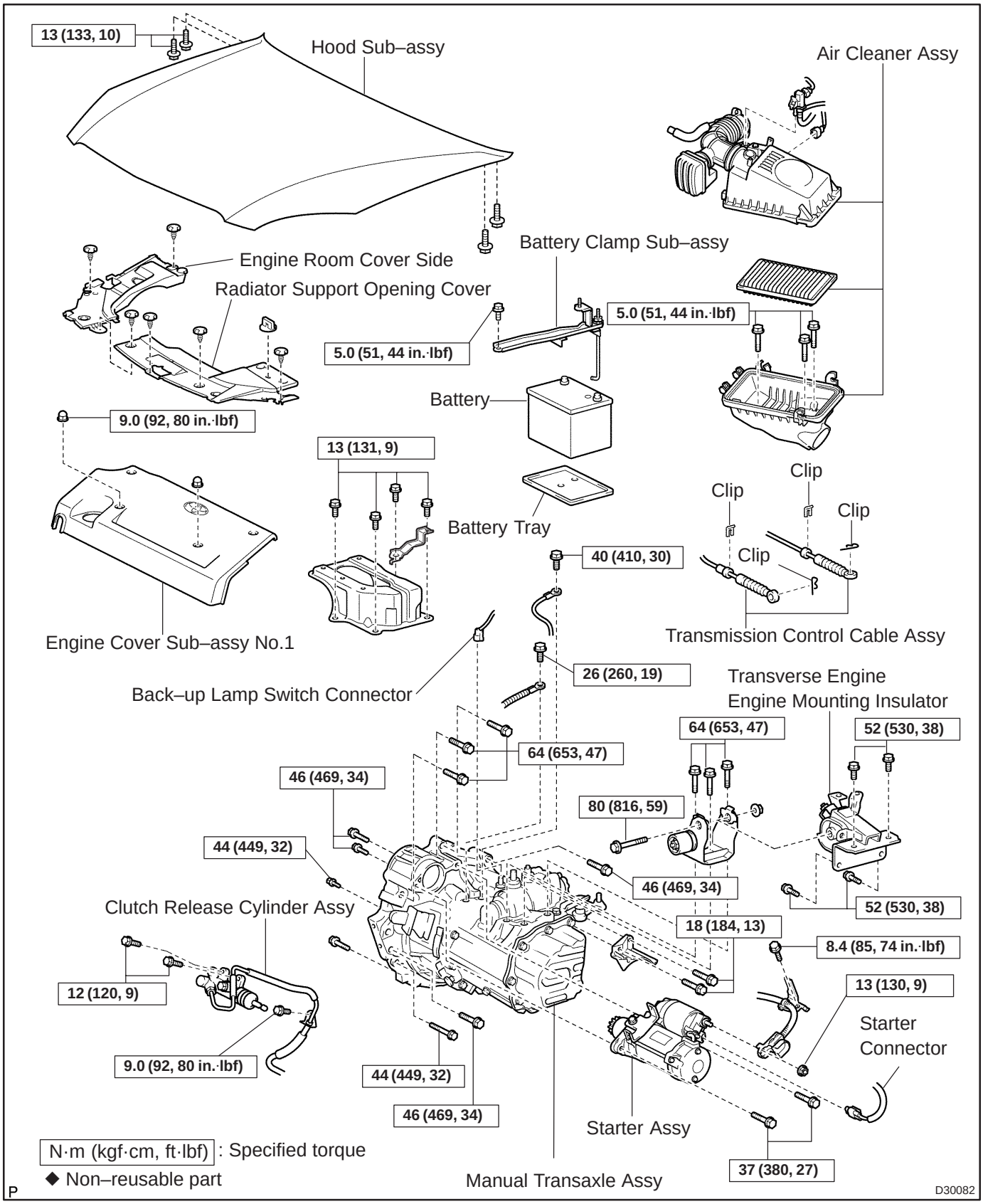

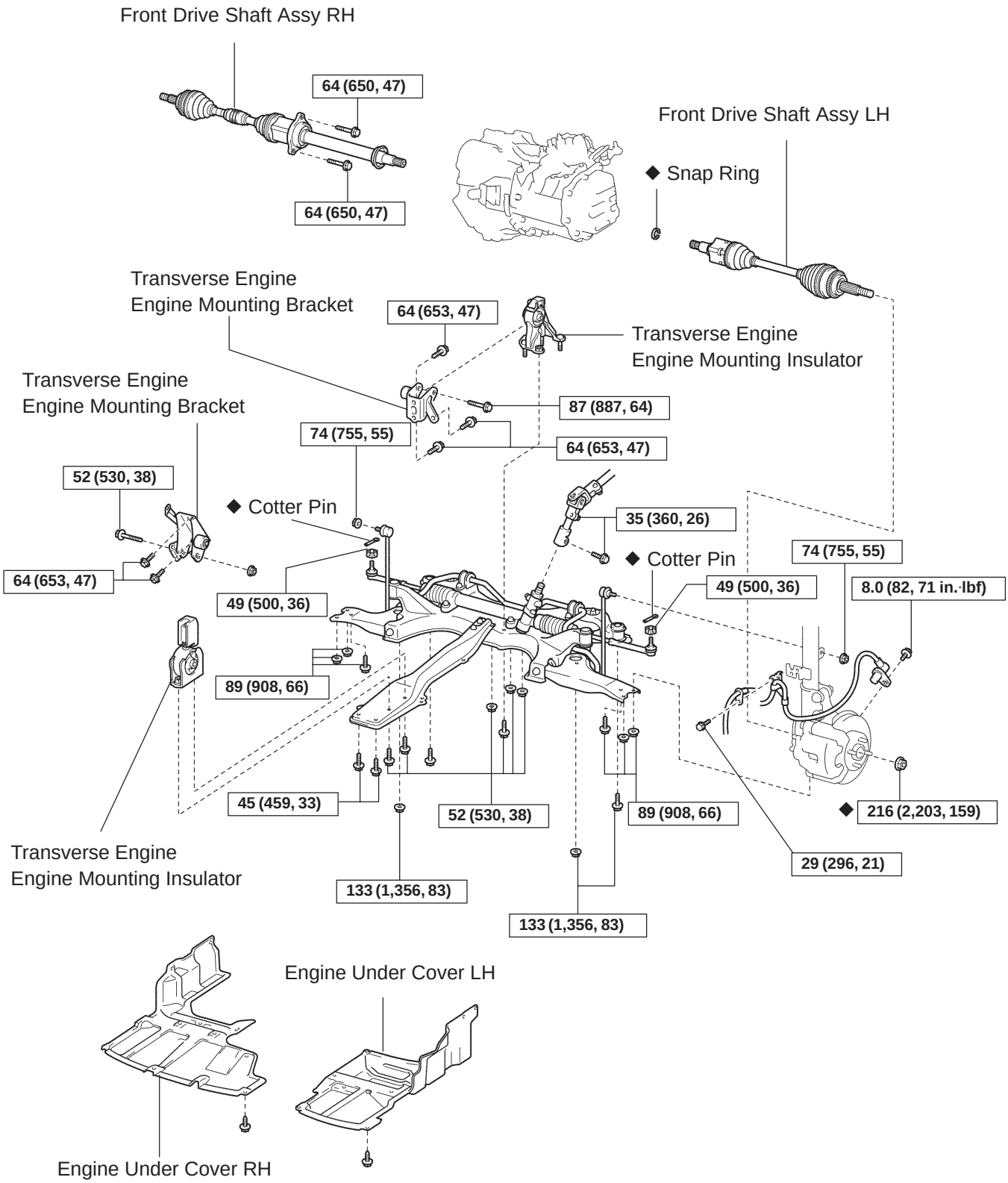

N·m (kgf·cm, ft·lbf) : Specified torque
◆ Non–reusable part

D30473

410DU–01

REPLACEMENT

1. INSPECT CENTER FRONT WHEEL
2. REMOVE COLUMN HOLE COVER SILENCER SHEET (See page 50–9)
3. SEPARATE STEERING INTERMEDIATE SHAFT ASSY NO.2 (See page 50–9)
4. REMOVE STEERING COLUMN HOLE COVER SUB–ASSY NO.1 (See page 50–9)
5. REMOVE STEERING INTERMEDIATE SHAFT (See page 50–9)
6. REMOVE FRONT WHEELS
7. REMOVE ENGINE UNDER COVER LH
8. REMOVE ENGINE UNDER COVER RH
9. DRAIN TRANSAXLE OIL
   Torque: 49 N·m (500 kgf·cm, 36 ft·lbf)
10. REMOVE HOOD SUB–ASSY
11. REMOVE RADIATOR SUPPORT OPENING COVER
12. REMOVE ENGINE ROOM COVER SIDE
13. REMOVE ENGINE COVER SUB–ASSY NO.1
14. REMOVE AIR CLEANER ASSY
15. REMOVE BATTERY CLAMP SUB–ASSY
16. REMOVE BATTERY
17. REMOVE BATTERY TRAY

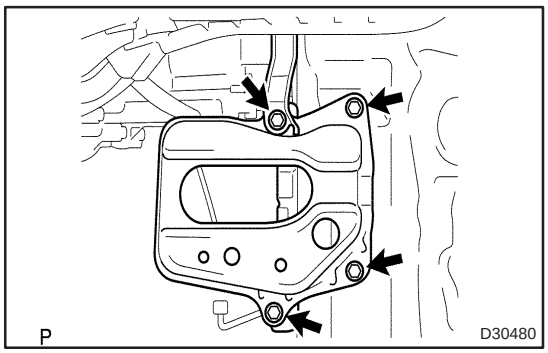

18. REMOVE BATTERY CARRIER
(a) Remove the 4 bolts and battery carrier.

19. REMOVE STARTER ASSY (See page 19–12)

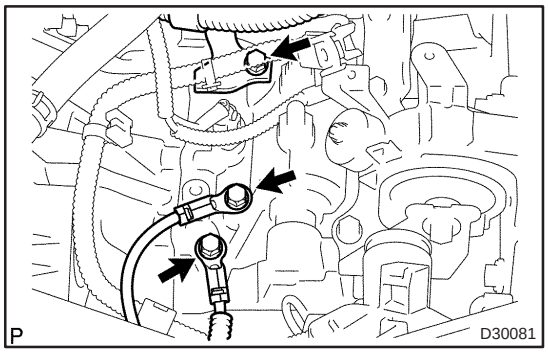

20. SEPARATE WIRE HARNESS
(a) Remove the 3 bolts, and separate the 3 wire harnesses.

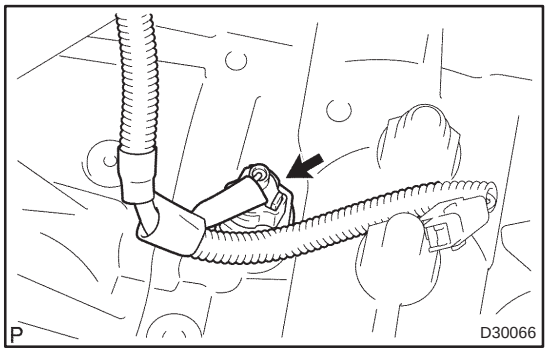

21. SEPARATE CONNECTOR

(a) Separate the back–up lamp switch connector.

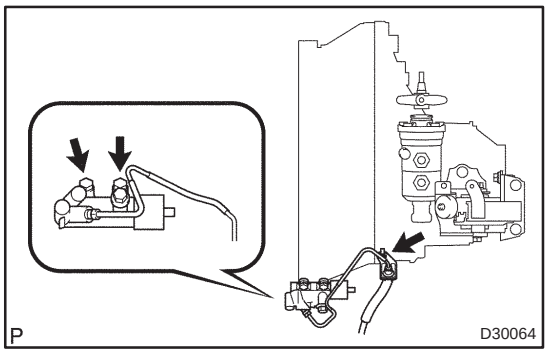

22. SEPARATE CLUTCH RELEASE CYLINDER ASSY

(a) Remove the 3 bolts and separate the release cylinder.

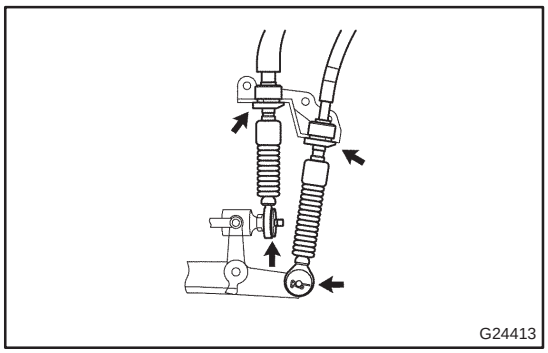

23. SEPARATE TRANSMISSION CONTROL CABLE ASSY

(a) Remove the 2 clips, separate the 2 cables from the transaxle.

(b) Remove the 2 clips, separate the 2 cables from the bracket.

24. REMOVE FRONT DRIVE SHAFT ASSY LH (See page 30–6)

SST 09520–01010, 09520–24010 (09520–32040)

25. REMOVE FRONT DRIVE SHAFT ASSY RH (See page 30–6)

26. REMOVE HEIGHT CONTROL SENSOR SUB–ASSY FR RH (W/ DISCHARGE HEAD LAMP) (See page 65–28)

27. DISCONNECT STEERING GEAR OUTLET RETURN TUBE (See page 51–36)

SST 09023–12700

28. DISCONNECT PRESSURE FEED TUBE ASSY (See page 51–36)

SST 09023–12700

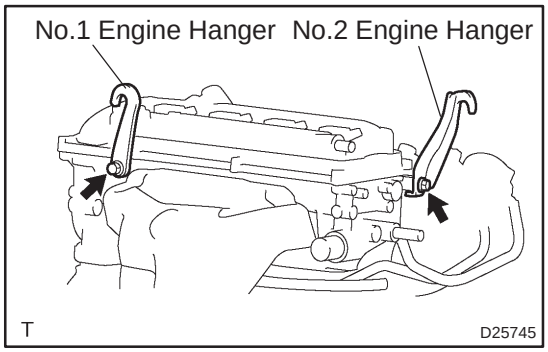

29. SUSPEND ENGINE ASSY

(a) Install the No.1 and No.2 engine hangers in the correct direction.

Parts No.:
No. 1 engine hanger: 12281–28010
No. 2 engine hanger: 12282–28010
Bolt: 91512–61020
Torque: 38 N·m (387 kgf·cm, 28 ft·lbf)

(b) Attach the engine chain hoist to the engine hanger.

CAUTION:
Do not attempt to hang the engine by hooking the chain to any other part.

30. REMOVE FRONT SUSPENSION CROSSMEMBER SUB–ASSY (See page 26–26)

31. SUPPORT MANUAL TRANSAXLE ASSY

(a) Support the manual transaxle with a transmission jack.

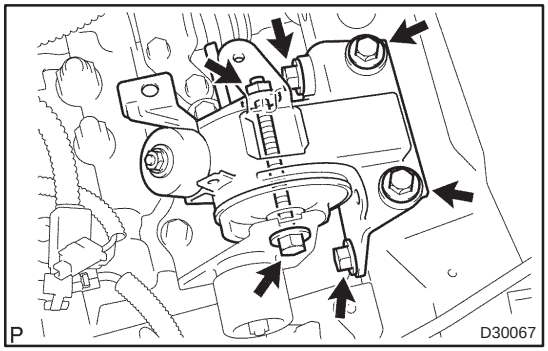

32. REMOVE TRANSVERSE ENGINE ENGINE MOUNTING INSULATOR

(a) Remove the 5 bolts, nut and engine mounting insulator LH.

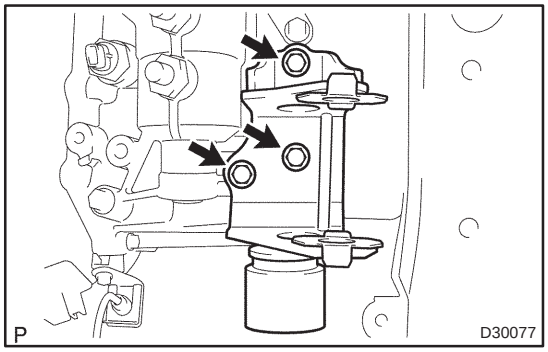

33. REMOVE TRANSVERSE ENGINE ENGINE MOUNTING BRACKET

(a) Remove the 3 bolts and engine mounting bracket.

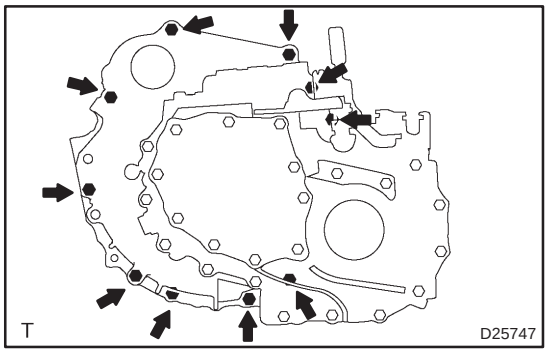

34. REMOVE MANUAL TRANSAXLE ASSY

(a) Separate the wire harness clamp.
(b) Remove the 10 bolts.
(c) Separate and remove the transaxle from the engine.

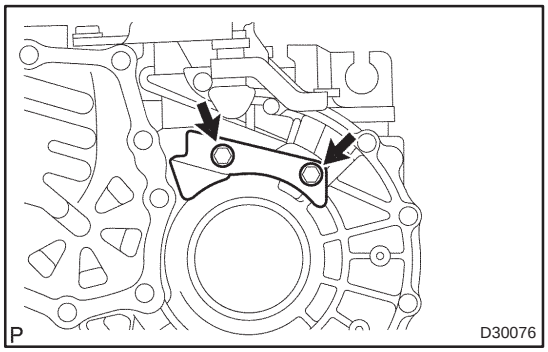

35. REMOVE MANUAL TRANSMISSION CASE PROTECTOR

(a) Remove the 2 bolts and case protector.

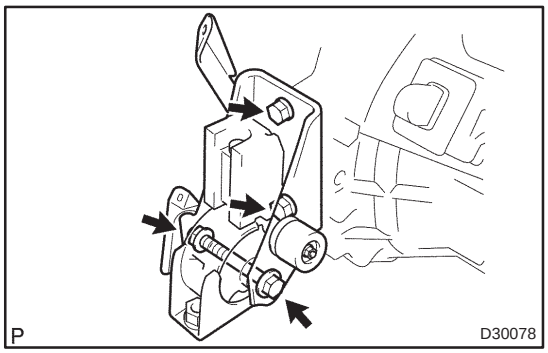

36. REMOVE TRANSVERSE ENGINE ENGINE MOUNTING BRACKET

(a) Remove the bolt, nut and engine mounting insulator FR from the engine mounting bracket.

(b) Remove the 2 bolts and engine mounting bracket FR from the transaxle.

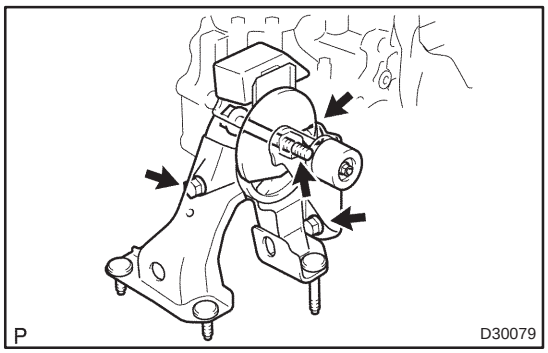

37. REMOVE TRANSVERSE ENGINE ENGINE MOUNTING BRACKET

(a) Remove the bolt and engine mounting insulator RR from the engine mounting bracket.

(b) Remove the 3 bolts and engine mounting bracket RR from the transaxle.

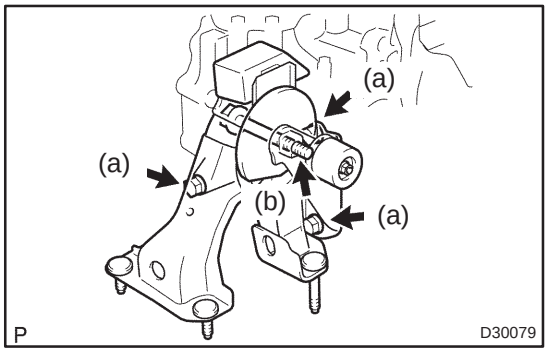

38. INSTALL TRANSVERSE ENGINE ENGINE MOUNTING BRACKET

(a) Install the engine mounting bracket RR and 3 bolts to the transaxle.

Torque: 64 N·m (653 kgf·cm, 47 ft·lbf)

(b) Install the engine mounting insulator RR and bolt to the engine mounting bracket RR.

Torque: 87 N·m (887 kgf·cm, 64 ft·lbf)

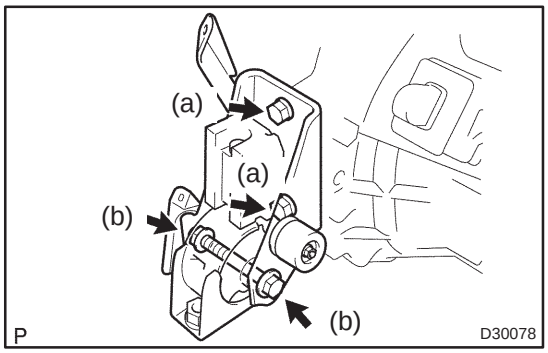

39. INSTALL TRANSVERSE ENGINE ENGINE MOUNTING BRACKET

(a) Install the engine mounting bracket FR and 2 bolts to the transaxle.

Torque: 64 N·m (653 kgf·cm, 47 ft·lbf)

(b) Install the engine mounting insulator FR, bolt and nut to the engine mounting bracket FR.

Torque: 52 N·m (530 kgf·cm, 38 ft·lbf)

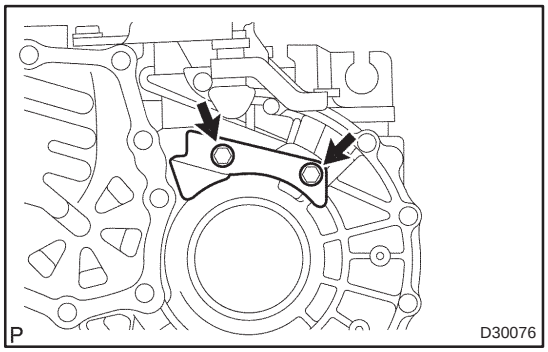

40. INSTALL MANUAL TRANSMISSION CASE PROTECTOR

(a) Install the case protector with the 2 bolts.
Torque: 18 N·m (184 kgf·cm, 13 ft·lbf)

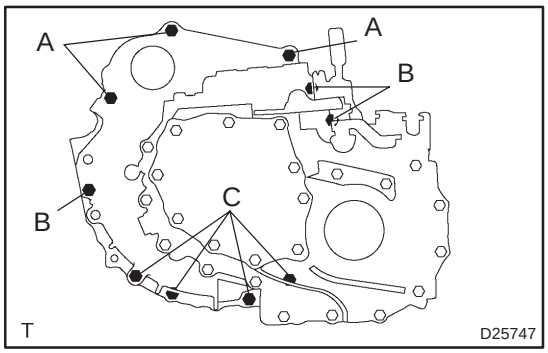

41. INSTALL MANUAL TRANSAXLE ASSY

(a) Align the input shaft with the clutch disc and install the transaxle to the engine.

(b) Install the 10 bolts.
Torque:
Bolt A: 64 N·m (653 kgf·cm, 47 ft·lbf)
Bolt B: 46 N·m (469 kgf·cm, 34 ft·lbf)
Bolt C: 44 N·m (449 kgf·cm, 32 ft·lbf)

(c) Connect the wire harness clamp.

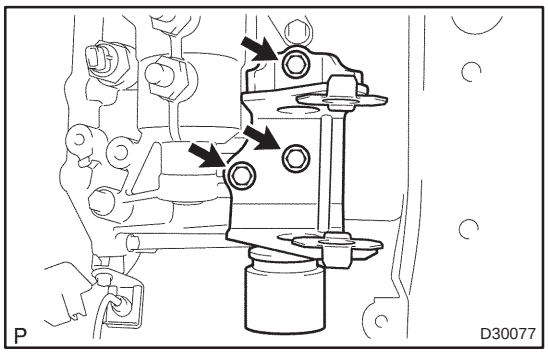

42. INSTALL TRANSVERSE ENGINE ENGINE MOUNTING BRACKET

(a) Install the engine mounting bracket LH to the transaxle with the 3 bolt.
Torque: 64 N·m (653 kgf·cm, 47 ft·lbf)

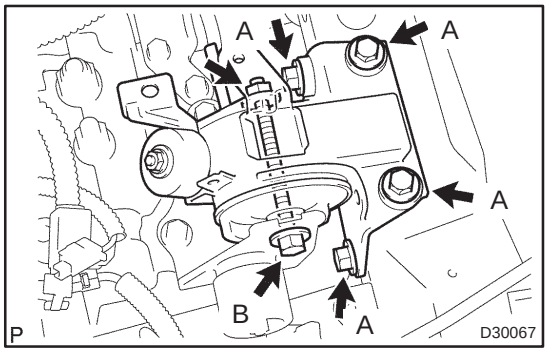

43. INSTALL TRANSVERSE ENGINE ENGINE MOUNTING INSULATOR

(a) Install the engine mounting insulator LH with the 5 bolts and nut.
Torque:
Bolt A: 52 N·m (530 kgf·cm, 38 ft·lbf)
Bolt B: 80 N·m (816 kgf·cm, 59 ft·lbf)

44. INSTALL FRONT SUSPENSION CROSSMEMBER SUB–ASSY (See page 26–26)
SST 09670–00010

45. CONNECT PRESSURE FEED TUBE ASSY (See page 51–36)
SST 09023–12700

46. CONNECT STEERING GEAR OUTLET RETURN TUBE (See page 51–36)
SST 09023–12700

47. INSTALL HEIGHT CONTROL SENSOR SUB–ASSY FR RH (W/ DISCHARGE HEAD LAMP) (See page 65–28)

48. INSTALL FRONT DRIVE SHAFT ASSY LH (See page 30–6)

49. INSTALL FRONT DRIVE SHAFT ASSY RH (See page 30–6)

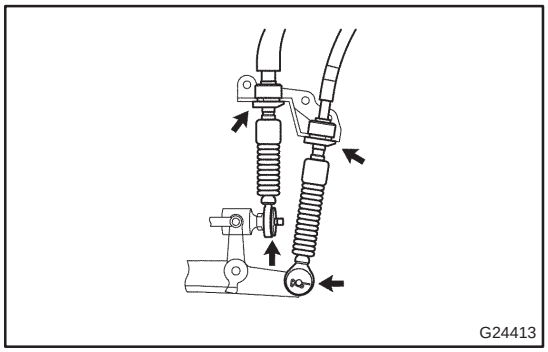

50. INSTALL TRANSMISSION CONTROL CABLE ASSY

(a) Connect the 2 cable ends, install the 2 clips.

(b) Install the 2 clips to the control cable bracket.

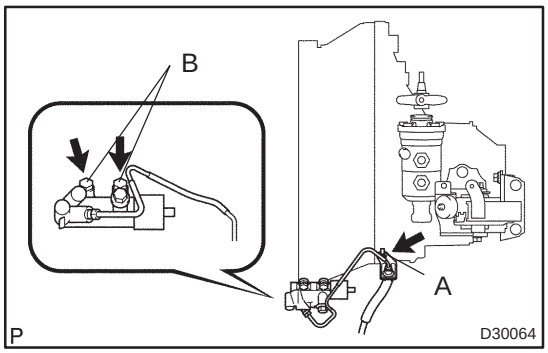

51. INSTALL CLUTCH RELEASE CYLINDER ASSY

(a) Install the release cylinder with the 3 bolts.

Torque:
Bolt A: 9.0 N·m (92 kgf·cm, 80 in.·lbf)
Bolt B: 12 N·m (120 kgf·cm, 9 ft·lbf)

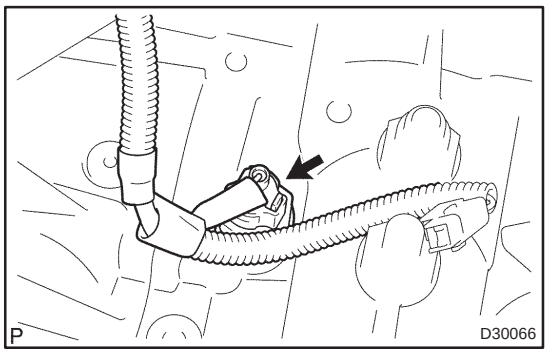

52. CONNECT CONNECTOR

(a) Connect the back–up lamp switch connector.

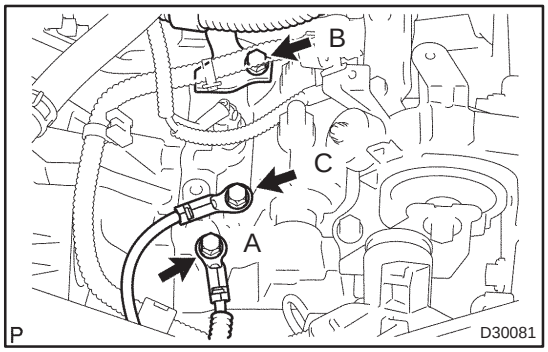

53. CONNECT WIRE HARNESS

(a) Install the 3 wire harnesses with the 3 bolts.

Torque:
Bolt A: 26 N·m (260 kgf·cm, 19 ft·lbf)
Bolt B: 8.4 N·m (85 kgf·cm, 74 in.·lbf)
Bolt C: 40 N·m (410 kgf·cm, 30 ft·lbf)

54. INSTALL STARTER ASSY (See page 19–12)

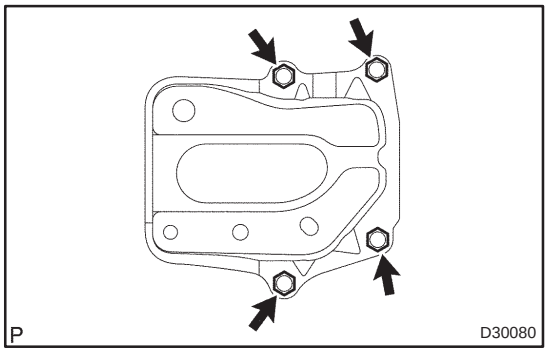

55. INSTALL BATTERY CARRIER

(a) Install the battery carrier and 4 bolts.
Torque: 13 N·m (131 kgf·cm, 9 ft·lbf)

56. INSTALL BATTERY TRAY
57. INSTALL BATTERY
58. INSTALL BATTERY CLAMP SUB–ASSY
Torque:
Bolt: 5.0 N·m (51 kgf·cm, 44 in.·lbf)
Nut: 3.5 N·m (36 kgf·cm, 31 in.·lbf)
59. INSTALL AIR CLEANER ASSY
Torque: 5.0 N·m (51 kgf·cm, 44 in.·lbf)
60. INSTALL ENGINE COVER SUB–ASSY NO.1
Torque: 9.0 N·m (92 kgf·cm, 80 in.·lbf)
61. INSTALL ENGINE ROOM COVER SIDE
62. INSTALL RADIATOR SUPPORT OPENING COVER
63. INSTALL HOOD SUB–ASSY
Torque: 13 N·m (132 kgf·cm, 10 ft·lbf)
64. INSPECT HOOD SUB–ASSY (See page 75–2)
65. ADJUST HOOD SUB–ASSY (See page 75–2)
66. ADD TRANSAXLE OIL (See page 41–5)
67. INSPECT TRANSAXLE OIL (See page 41–2)
68. INSTALL FRONT WHEELS
Torque: 103 N·m (1,050 kgf·cm, 76 ft·lbf)
69. INSTALL STEERING INTERMEDIATE SHAFT (See page 50–9)
70. INSTALL STEERING COLUMN HOLE COVER SUB–ASSY NO.1 (See page)See page 50–9)
71. INSTALL STEERING INTERMEDIATE SHAFT ASSY NO.2 (See page 50–9)
72. INSTALL COLUMN HOLE COVER SILENCER SHEET (See page 50–9)
73. PLACE FRONT WHEELS FACING STRAIGHT AHEAD
74. STEERING WHEEL CENTER POINT
75. ADD POWER STEERING FLUID
76. BLEED POWER STEERING FLUID (See page 51–4)
77. CHECK POWER STEERING FULUID LEVEL IN RESERVER (See page 51–4)
78. INSPECT FLUID LEAK (See page 51–4)
79. INSPECT FRONT WHEEL ALIGNMENT (See page 26–6)
80. INSTALL ENGINE UNDER COVER LH
81. INSTALL ENGINE UNDER COVER RH
82. CHECK ABS SPEED SENSOR SIGNAL
(a) w/ VSC (See page 05–756)
(b) w/o VSC (See page 05–699)
83. HEADLIGHT AIM ONLY (W/ DISCHARGE HEAD LAMP) (See page 65–19)

MANUAL TRANSAXLE ASSY (1CD–FTV)

410DV–01

COMPONENTS

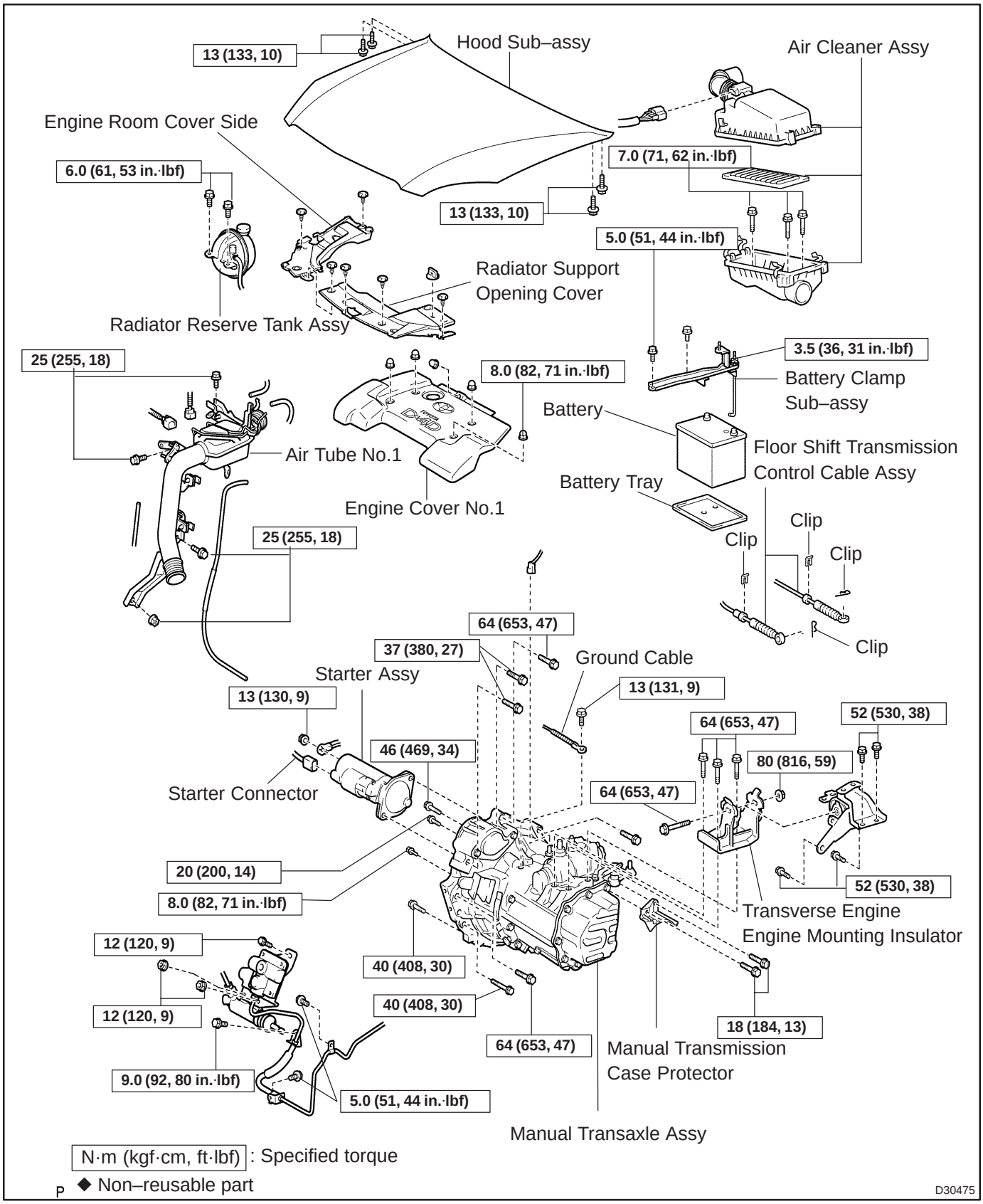

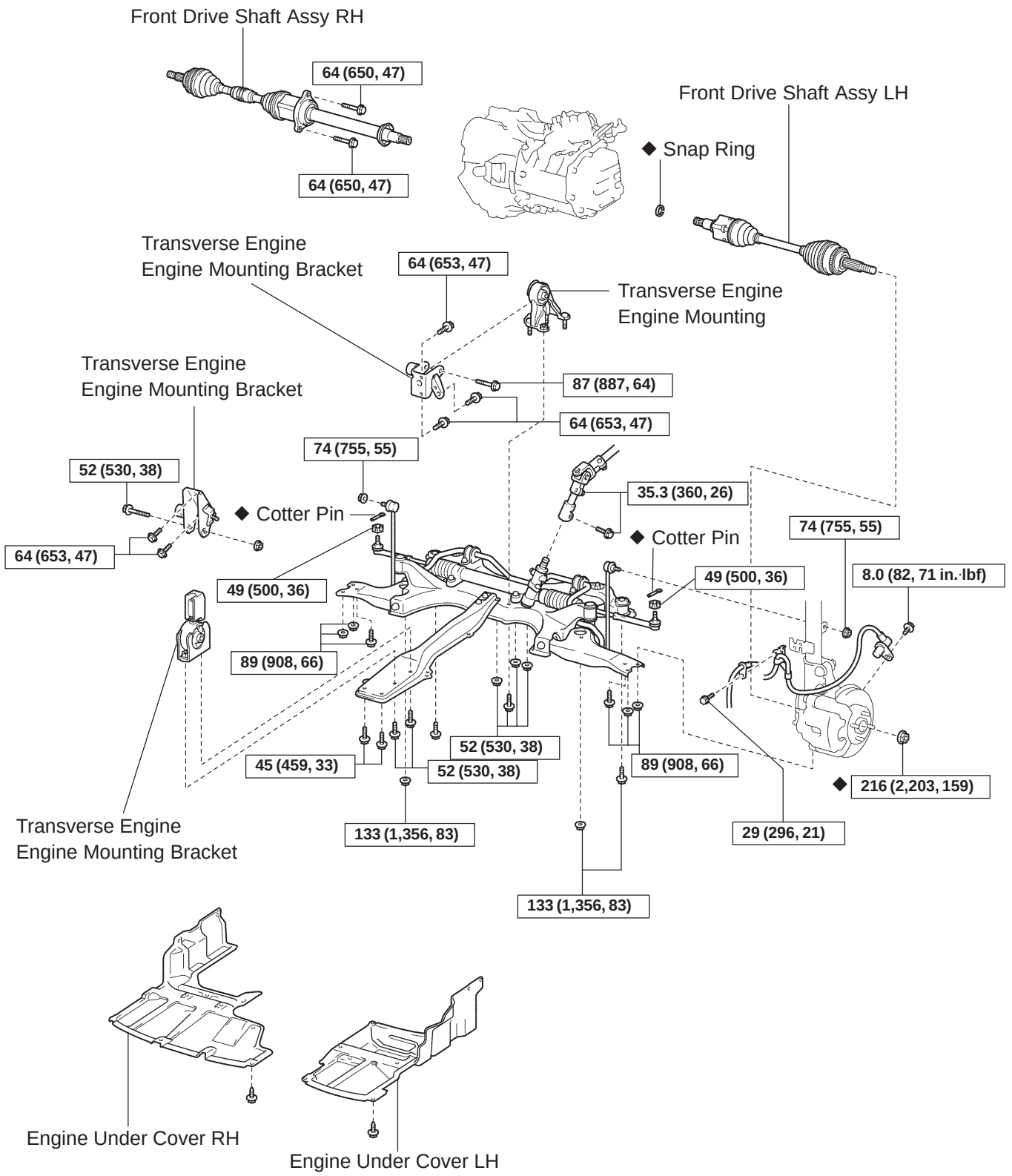

N·m (kgf·cm, ft·lbf) : Specified torque

◆ Non–reusable part

D30476

REPLACEMENT

1. INSPECT CENTER FRONT WHEEL
2. REMOVE COLUMN HOLE COVER SILENCER SHEET (See page 50–9)
3. SEPARATE STEERING INTERMEDIATE SHAFT ASSY NO.2 (See page 50–9)
4. REMOVE STEERING COLUMN HOLE COVER SUB–ASSY NO.1 (See page 50–9)
5. REMOVE STEERING INTERMEDIATE SHAFT (See page 50–9)
6. REMOVE FRONT WHEELS
7. REMOVE ENGINE UNDER COVER RH
8. REMOVE ENGINE UNDER COVER LH
9. DRAIN TRANSAXLE OIL
   Torque: 49 N·m (500 kgf·cm, 36 ft·lbf)
10. REMOVE HOOD SUB–ASSY
11. REMOVE RADIATOR SUPPORT OPENING COVER
12. REMOVE ENGINE ROOM COVER SIDE
13. REMOVE ENGINE COVER NO.1
14. REMOVE AIR CLEANER ASSY
15. REMOVE BATTERY CLAMP SUB–ASSY
16. REMOVE BATTERY
17. REMOVE BATTERY TRAY
18. REMOVE AIR TUBE NO.1 (See page 14–286)

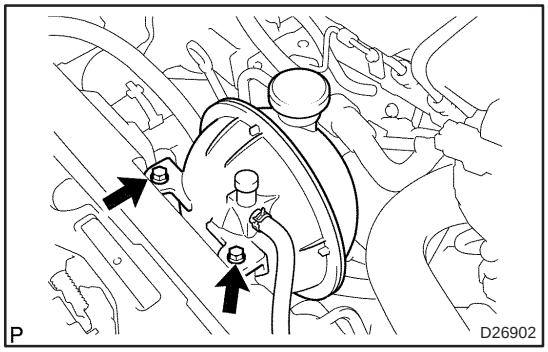

19. SEPARATE RADIATOR RESERVE TANK ASSY
(a) Remove the 2 bolts, separate the radiator reserve tank assy.

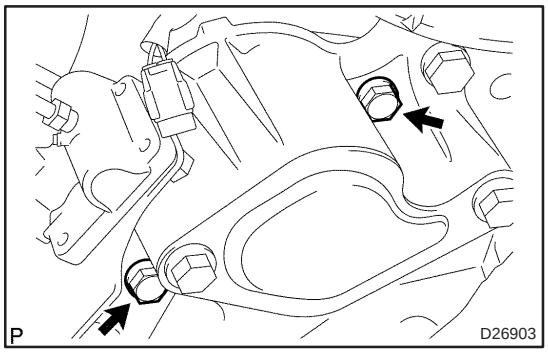

20. REMOVE STARTER ASSY
(a) Remove the nut, disconnect the starter wire.
(b) Disconnect the connector.
(c) Remove the 2 bolts and starter assy.

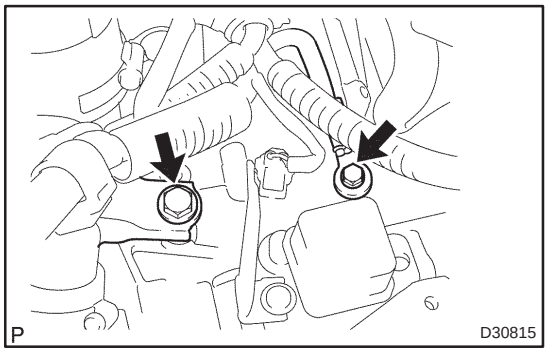

21. DISCONNECT WIRE HARNESS

(a) Remove the bolt, disconnect the ground cable.

(b) Remove the bolt, separate the air tube.

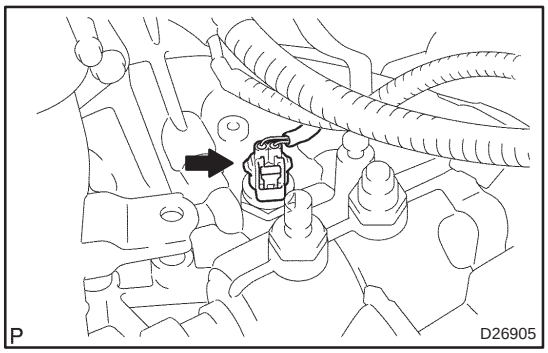

22. DISCONNECT CONNECTOR

(a) Disconnect the back–up lamp switch connector.

23. REMOVE CLUTCH ACCUMULATOR ASSY (See page 42–22)

SST 09023–00100

24. REMOVE CLUTCH RELEASE CYLINDER ASSY (See page 42–17)

SST 09023–00100

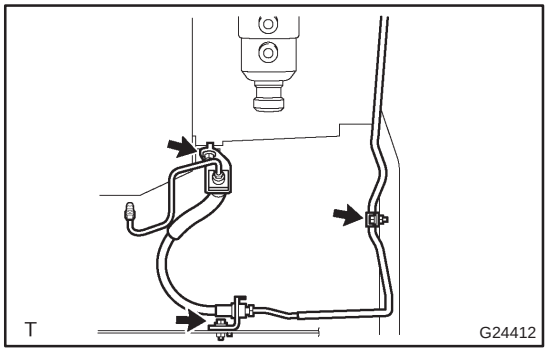

25. SEPARATE ACCUMULATOR TO FLEXIBLE HOSE TUBE

(a) Remove the 3 bolts, separate the flexible hose tube with brackets from the transaxle.

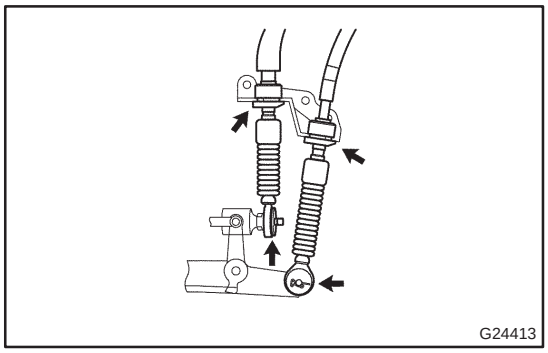

26. SEPARATE TRANSMISSION CONTROL CABLE ASSY

(a) Remove the 2 clips, separate the 2 cables from the transaxle.

(b) Remove the 2 clips, separate the 2 cables from the bracket.

27. REMOVE FRONT DRIVE SHAFT ASSY LH (See page 30–6)

SST 09520–01010, 09520–24010 (09520–32040)

28. REMOVE FRONT DRIVE SHAFT ASSY RH (See page 30–6)

29. REMOVE HEIGHT CONTROL SENSOR SUB–ASSY FR RH (W/ DISCHARGE HEAD LAMP) (See page 65–28)

30. DISCONNECT STEERING GEAR OUTLET RETURN TUBE (See page 51–36)
SST 09023–12700

31. DISCONNECT PRESSURE FEED TUBE ASSY (See page 51–36)
SST 09023–12700

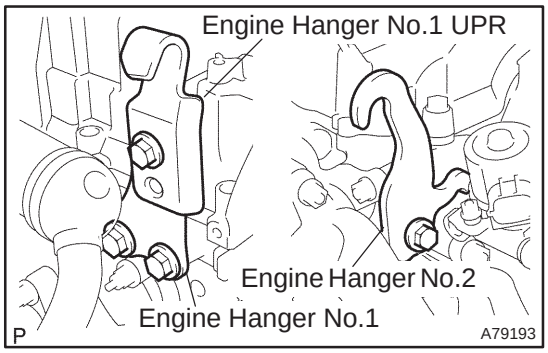

32. SUSPEND ENGINE ASSY

(a) Install the 2 engine hangers with the 2 bolts.
Parts No.:
No.1 engine hanger UPR (yellow) 12284–27020
No.1 engine hanger UPR (black) 12284–27030
No.1 engine hanger 12281–27050
No.2 engine hanger (yellow) 12282–27060
No.2 engine hanger (black) 12282–27070
Bolt: 91642–81025
Torque: 37 N·m (377 kgf·cm, 27 ft·lbf)

(b) Attach the engine chain hoist to the hanger.

CAUTION:
Do not attempt to hang the engine by hooking the chain to any other part.

33. REMOVE FRONT SUSPENSION CROSSMEMBER SUB–ASSY (See page 26–26)

34. SUPPORT MANUAL TRANSAXLE ASSY

(a) Support the transaxle with a transmission jack.

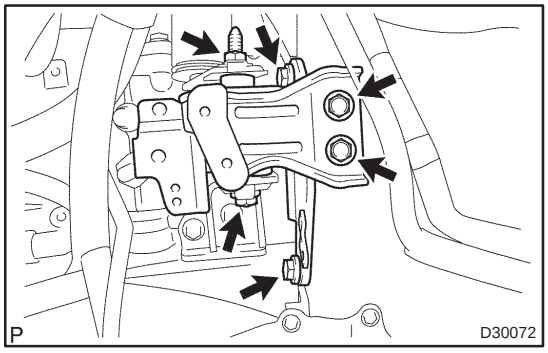

35. REMOVE TRANSVERSE ENGINE ENGINE MOUNTING INSULATOR

(a) Remove the 5 bolts, nut and engine mounting insulator LH from the body.

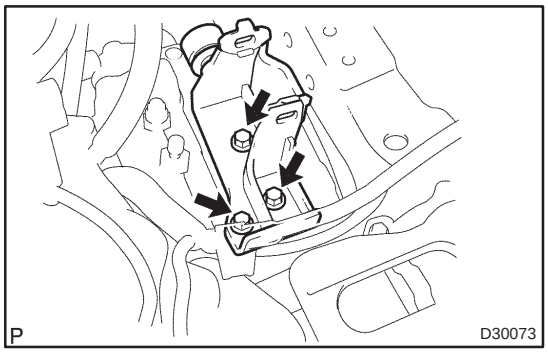

36. REMOVE TRANSVERSE ENGINE ENGINE MOUNTING BRACKET

(a) Remove the 3 bolts and engine mounting bracket LH from the transaxle.

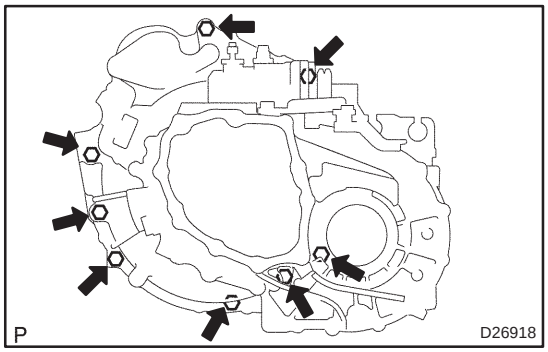

37. REMOVE MANUAL TRANSAXLE ASSY

(a) Remove the 8 bolts.

(b) Remove the transaxle from the engine.

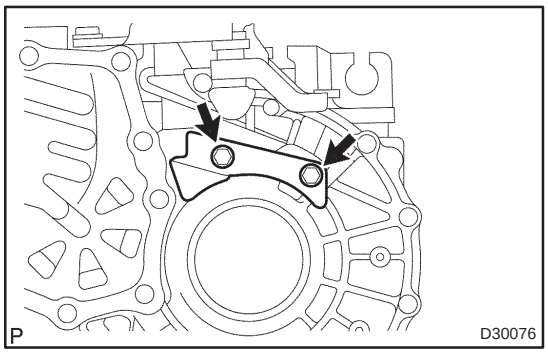

38. REMOVE MANUAL TRANSMISSION CASE PROTECTOR

(a) Remove the 2 bolts and case protector.

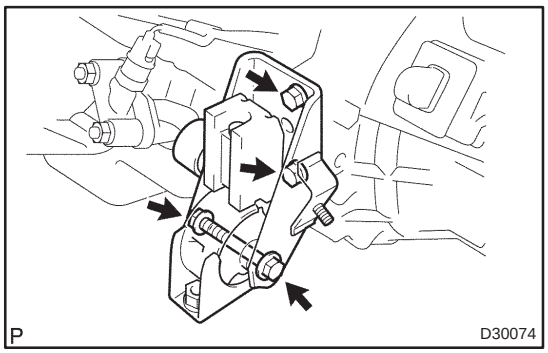

39. REMOVE TRANSVERSE ENGINE ENGINE MOUNTING BRACKET

(a) Remove the bolt, nut and engine mounting insulator FR from the engine mounting bracket.

(b) Remove the 2 bolts and engine mounting bracket FR from the transaxle.

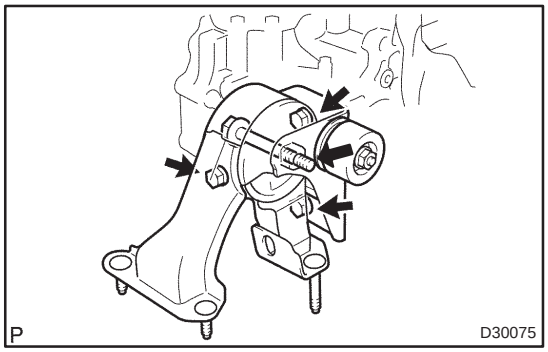

40. REMOVE TRANSVERSE ENGINE ENGINE MOUNTING BRACKET

(a) Remove the bolt and engine mounting insulator RR from the engine mounting bracket.

(b) Remove the 3 bolts and engine mounting bracket RR from the transaxle.

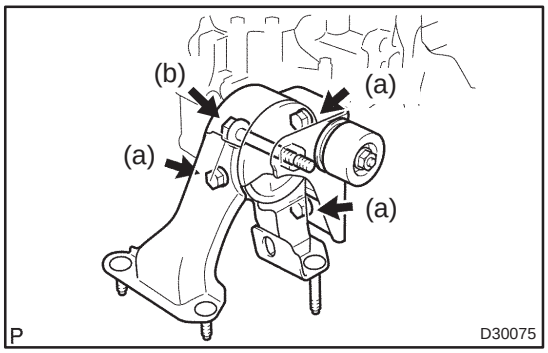

41. INSTALL TRANSVERSE ENGINE ENGINE MOUNTING BRACKET

(a) Install the engine mounting bracket RR and 3 bolts to the transaxle.

Torque: 64 N·m (653 kgf·cm, 47 ft·lbf)

(b) Install the engine mounting insulator RR and bolt to the engine mounting bracket.

Torque: 87 N·m (887 kgf·cm, 64 ft·lbf)

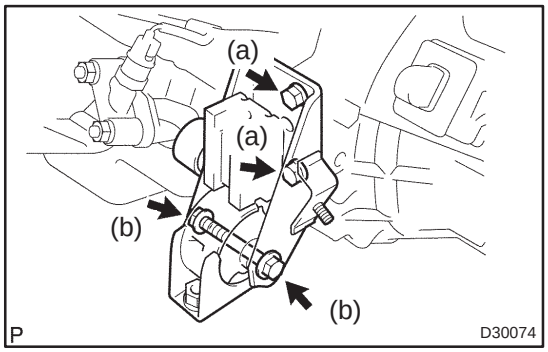

42. INSTALL TRANSVERSE ENGINE ENGINE MOUNTING BRACKET

(a) Install the engine mounting bracket FR and 2 bolts to the transaxle.
Torque: 64 N·m (653 kgf·cm, 47 ft·lbf)

(b) Install the engine mounting insulator FR, bolt and nut to the engine mounting bracket.
Torque: 52 N·m (530 kgf·cm, 38 ft·lbf)

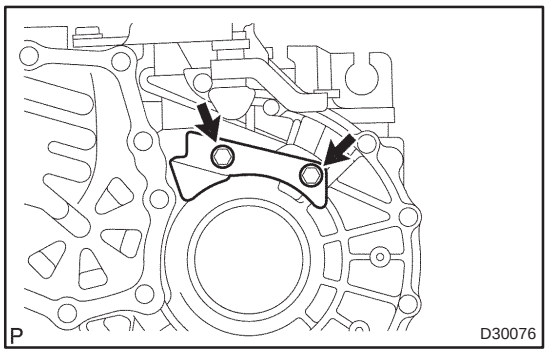

43. INSTALL MANUAL TRANSMISSION CASE PROTECTOR

(a) Install the case protector with the 2 bolts.
Torque: 18 N·m (184 kgf·cm, 13 ft·lbf)

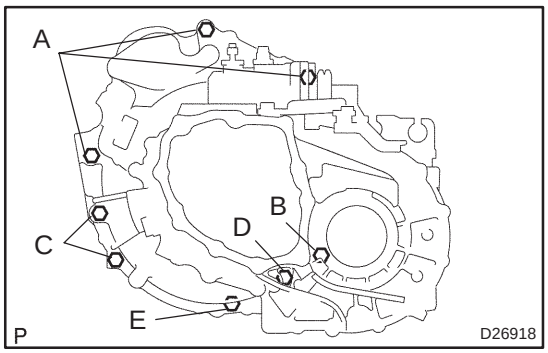

44. INSTALL MANUAL TRANSAXLE ASSY

(a) Align the input shaft with the clutch disc and install the transaxle to the engine.

(b) Install the 8 bolts.
Torque:
Bolt A: 64 N·m (653 kgf·cm, 47 ft·lbf)
Bolt B: 46 N·m (469 kgf·cm, 34 ft·lbf)
Bolt C: 40 N·m (408 kgf·cm, 30 ft·lbf)
Bolt D: 20 N·m (200 kgf·cm, 14 ft·lbf)
Bolt E: 8.0 N·m (82 kgf·cm, 71 in.·lbf)

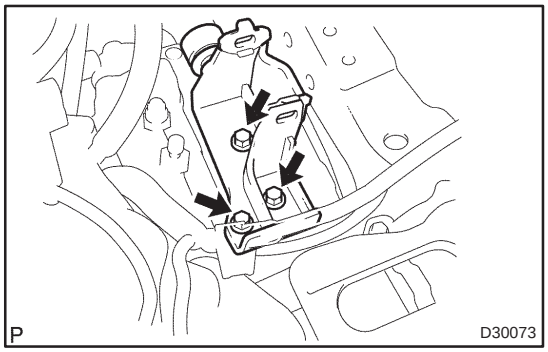

45. INSTALL TRANSVERSE ENGINE ENGINE MOUNTING BRACKET

(a) Install the engine mounting bracket LH to the transaxle with the 3 bolts.
Torque: 64 N·m (653 kgf·cm, 47 ft·lbf)

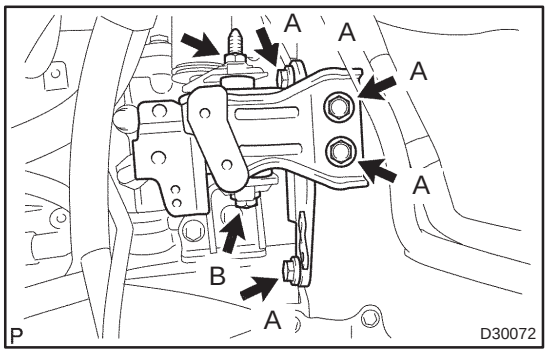

46. INSTALL TRANSVERSE ENGINE ENGINE MOUNTING INSULATOR

(a) Install the engine mounting insulator LH with the 5 bolts and nut.
Torque:
Bolt A: 52 N·m (530 kgf·cm, 38 ft·lbf)
Bolt B: 80 N·m (816 kgf·cm, 59 ft·lbf)

47. INSTALL FRONT SUSPENSION CROSSMEMBER SUB–ASSY (See page 26–26)
SST 09670–00010

48. CONNECT PRESSURE FEED TUBE ASSY (See page 51–36)
SST 09023–12700

49. CONNECT STEERING GEAR OUTLET RETURN TUBE (See page 51–36)
SST 09023–12700

50. INSTALL HEIGHT CONTROL SENSOR SUB–ASSY FR RH (W/ DISCHARGE HEAD LAMP) (See page 65–28)

51. INSTALL FRONT DRIVE SHAFT ASSY LH (See page 30–6)

52. INSTALL FRONT DRIVE SHAFT ASSY RH (See page 30–6)

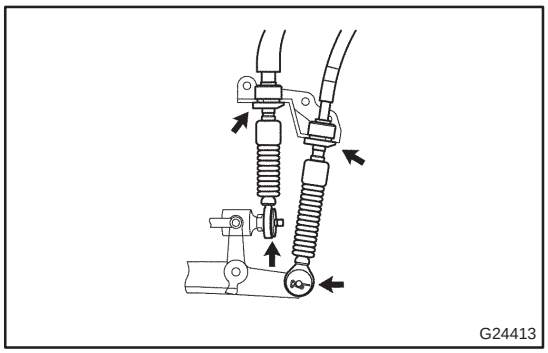

53. CONNECT TRANSMISSION CONTROL CABLE ASSY
(a) Connect the 2 cable ends, install the 2 clips.
(b) Install the 2 clips to the control cable bracket.

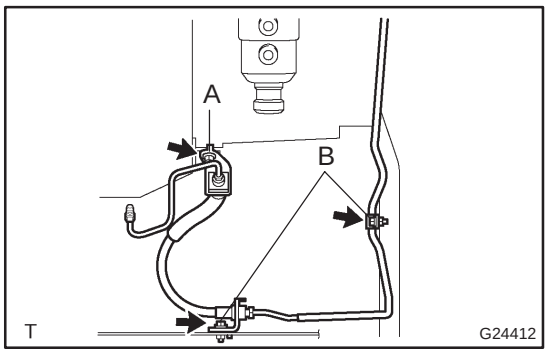

54. INSTALL ACCUMULATOR TO FLEXIBLE HOSE TUBE
(a) Install the flexible hose tube with the 3 bolts.
Torque:
Bolt A: 12 N·m (120 kgf·cm, 9 ft·lbf)
Bolt B: 5.0 N·m (51 kgf·cm, 44 in.·lbf)
Bolt C: 9.0 N·m (92 kgf·cm, 80 in.·lbf)

55. INSTALL CLUTCH RELEASE CYLINDER ASSY (See page 42–17)
SST 09023–00100

56. INSTALL CLUTCH ACCUMULATOR ASSY (See page 42–22)
SST 09023–00100

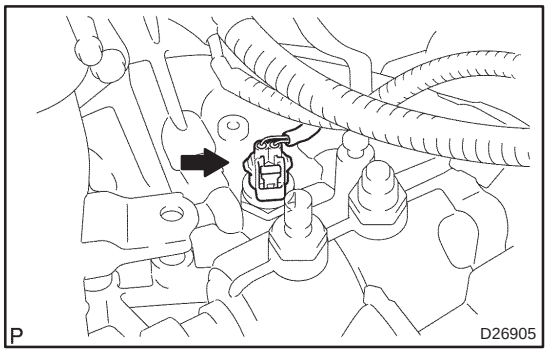

57. CONNECT CONNECTOR
(a) Connect the back–up lamp switch connector.

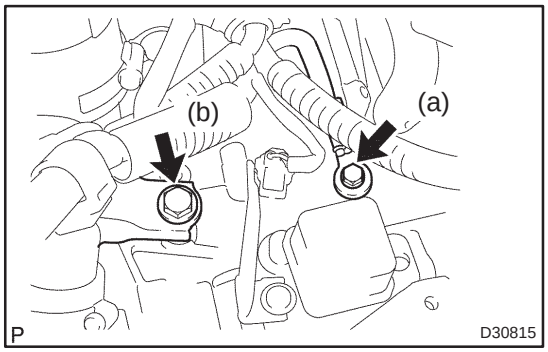

58. CONNECT WIRE HARNESS

(a) Install the ground cable with bolt.
Torque: 13 N·m (131 kgf·cm, 9 ft·lbf)

(b) Install the air tube with bolt.
Torque: 25 N·m (255 kgf·cm, 18 ft·lbf)

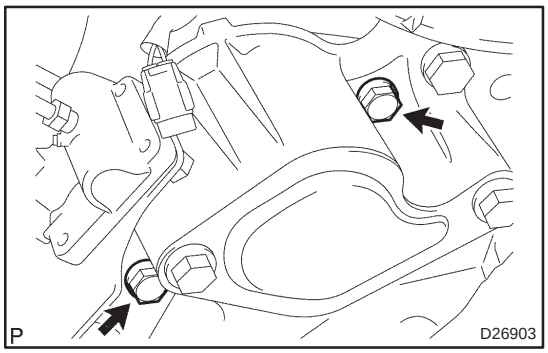

59. INSTALL STARTER ASSY

(a) Connect the starter connector.

(b) Install the starter assy to the transaxle with the 2 bolts.
Torque: 37 N·m (380 kgf·cm, 27 ft·lbf)

(c) Install the starter wire to starter assy with the nut.
Torque: 13 N·m (130 kgf·cm, 9 ft·lbf)

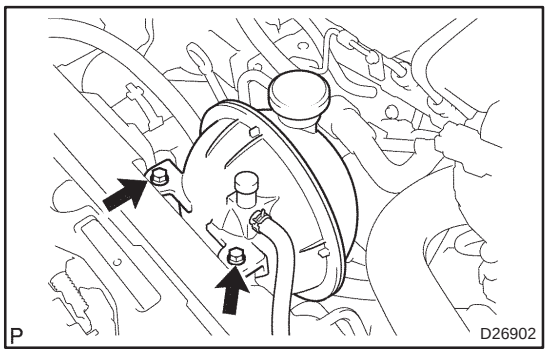

60. CONNECT RADIATOR RESERVE TANK ASSY

(a) Install the radiator reserve tank assy with the 2 bolts.
Torque: 6.0 N·m (61 kgf·cm, 53 in.·lbf)

61. INSTALL AIR TUBE NO.1 (See page 14–286)
62. INSTALL BATTERY TRAY
63. INSTALL BATTERY
64. INSTALL BATTERY CLAMP SUB–ASSY
Torque:
Bolt: 5.0 N·m (51 kgf·cm, 44 in.·lbf)
Nut: 3.5 N·m (36 kgf·cm, 31 in.·lbf)
65. INSTALL AIR CLEANER ASSY
Torque: 7.0 N·m (71 kgf·cm, 62 in.·lbf)
66. INSTALL ENGINE COVER NO.1
Torque: 8.0 N·m (82 kgf·cm, 71 in.·lbf)
67. INSTALL STEERING INTERMEDIATE SHAFT (See page 50–9)
68. INSTALL STEERING COLUMN HOLE COVER SUB–ASSY NO.1 (See page 50–9)
69. INSTALL STEERING INTERMEDIATE SHAFT ASSY NO.2 (See page 50–9)
70. INSTALL COLUMN HOLE COVER SILENCER SHEET (See page 50–9)
71. PLACE FRONT WHEELS FACING STRAIGHT AHEAD
72. STEERING WHEEL CENTER POINT
73. INSTALL ENGINE ROOM COVER SIDE
74. INSTALL RADIATOR SUPPORT OPENING COVER

75. INSTALL HOOD SUB–ASSY
Torque: 13 N·m (133 kgf·cm, 10 ft·lbf)
76. INSPECT HOOD SUB–ASSY (See page 75–2)
77. ADJUST HOOD SUB–ASSY (See page 75–2)
78. ADD TRANSAXLE OIL (See page 41–5)
79. INSPECT TRANSAXLE OIL (See page 41–2)
80. ADD POWER STEERING FLUID
81. BLEED POWER STEERING FLUID (See page 51–4)
82. CHECK POWER STEERING FULUID LEVEL IN RESERVER (See page 51–4)
83. INSPECT FLUID LEAK (See page 51–4)
84. INSTALL FRONT WHEELS
Torque: 103 N·m (1,050 kgf·cm, 76 ft·lbf)
85. INSPECT FRONT WHEEL ALIGNMENT (See page 26–6)
86. INSTALL ENGINE UNDER COVER RH
87. INSTALL ENGINE UNDER COVER LH
88. CHECK ABS SPEED SENSOR SIGNAL
(a) w/ VSC (See page 05–756)
(b) w/o VSC (See page 05–699)
89. HEADLIGHT AIM ONLY (W/ DISCHARGE HEAD LAMP) (See page 65–19)

CLUTCH SYSTEM (MTM)

4200B–04

PROBLEM SYMPTOMS TABLE

HINT:

Use the table below to help find the cause of the problem. The numbers indicate the likelihood of the possible cause in descending order. Check each part in the order shown. Replace these parts as necessary.

Symptom	Suspect Area	See page
Clutch grabs/chatters	1. Engine mounting (Loosen)	–
	2. Clutch disc assy (Runout is excessive)	42–26
	3. Clutch disc assy (Oily)	42–26
	4. Clutch disc assy (Worn out)	42–26
	5. Clutch disc torsion rubber (Damaged)	42–26
	6. Clutch disc assy (Glazed)	42–26
	7. Diaphragm spring (Out of tip alignment)	42–26
Clutch pedal spongy	1. Clutch Line (Air in line)	–
	2. Master cylinder (Damaged)	42–13
	3. Release cylinder rubber (Damaged)	42–17
Clutch noisy	1. Clutch release bearing assy (Worn, dirty, or damaged)	42–26
	2. Clutch disc torsion rubber (Damaged)	42–26
Clutch slips	1. Clutch pedal (Free play out of adjustment)	42–2
	2. Clutch disc assy (Oily)	42–26
	3. Clutch disc assy (Worn out)	42–26
	4. Diaphragm spring (Damaged)	42–26
	5. Pressure plate (Distortion)	42–26
	6. Flywheel sub–assy (Distortion)	–
Clutch does not disengage	1. Clutch pedal (Free play out of adjustment)	42–2
	2. Clutch line (Air in line)	–
	3. Master cylinder (Damaged)	42–13
	4. Release cylinder cup (Damaged)	42–17
	5. Clutch disc assy (Out of true)	42–26
	6. Clutch disc assy (Runout of excessive)	42–26
	7. Clutch disc assy (Lining broken)	42–26
	8. Clutch disc assy (Dirty or burned)	42–26
	9. Clutch disc assy (Oily)	42–26
	10.Clutch disc assy (Lack of spline grease)	42–26

CLUTCH PEDAL SUB–ASSY (MTM)

ADJUSTMENT

4200D–04

1. INSPECT AND ADJUST CLUTCH PEDAL SUB–ASSY

(a) Turn over the floor carpet.

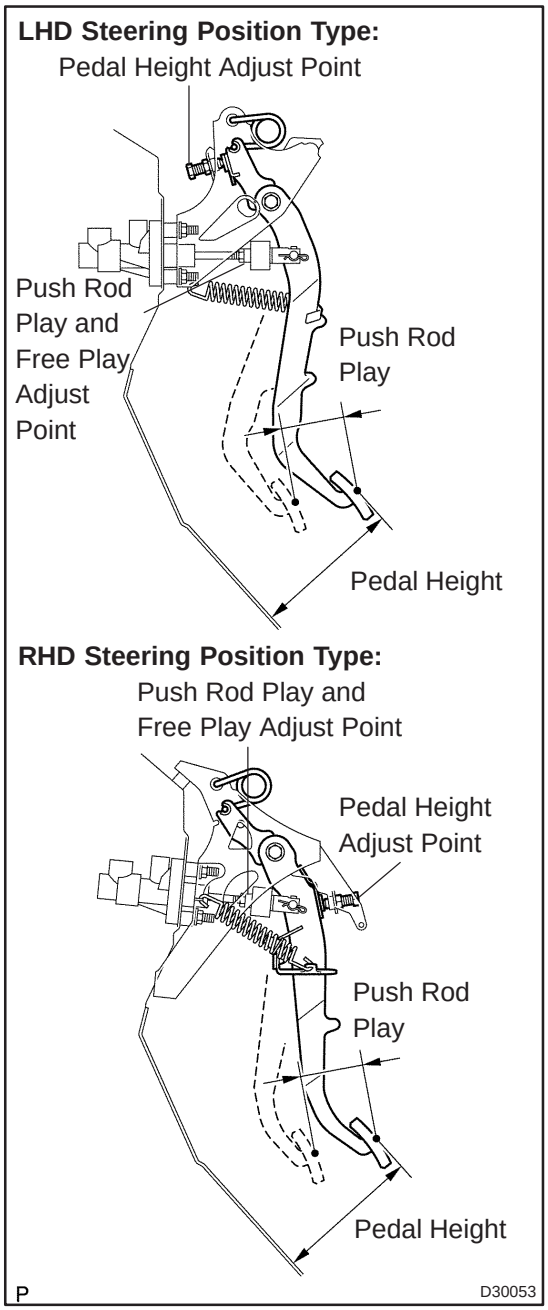

(b) Check that the pedal height is correct.

Pedal height from asphalt sheet:
LHD Steering Position Type:
1CD–FTV Engine Type
154.0 to 164.0 mm (6.063 to 6.457 in.)
Others:
139.6 to 149.6 mm (5.496 to 5.890 in.)
RHD Steering Position Type:
1CD–FTV Engine Type
158.4 to 168.4 mm (6.236 to 6.630 in.)
Others:
148.4 to 158.4 mm (5.843 to 6.236 in.)

(c) Adjust the pedal height.

(1) Loosen the lock nut and turn the stopper bolt until the height is correct. Tighten the lock nut.

Torque: 25 N·m (250 kgf·cm, 18 ft·lbf)

(d) Check that the pedal free play and push rod play are correct.

(1) Depress the pedal until clutch resistance is felt.

Pedal free play: 5.0 to 15.0 mm (0.197 to 0591 in.)

(2) Gently depress the pedal until the resistance begins to increase a little.

Push rod play at pedal top:
1.0 to 5.0 mm (0.039 to 0.197 in.)

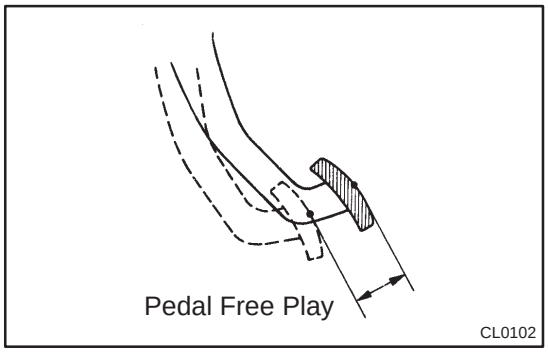

(e) Adjust the pedal free play and push rod play.
  (1) Loosen the lock nut and turn the push rod until the free play and push rod play are correct.
  (2) Tighten the lock nut.
  (3) After adjusting the pedal free play, check the pedal height.
  (4) Connect the air duct and install the lower finish panel.

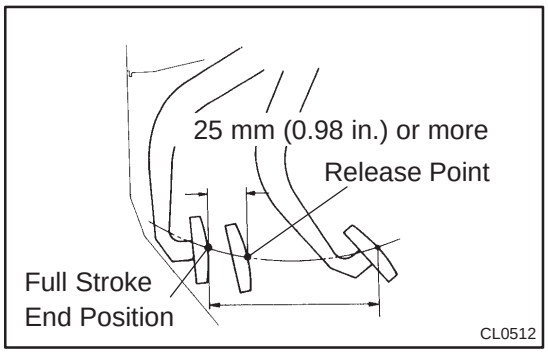

(f) Check the clutch release point.
  (1) Pull the parking brake lever and install wheel stopper.
  (2) Start the engine and idle.
  (3) Without depressing the clutch pedal, slowly adjust the shift lever to the reverse position until the gears contact.
  (4) Gradually depress the clutch pedal and measure the stroke distance from the point that the gear noise stops (release point) up to the full stroke end position.

Standard distance: 25 mm (0.98 in.) or more
(From pedal stroke end position to release point)

If the distance is not as specified, perform the following operations.

- Check pedal height.
- Check push rod play and pedal free play.
- Bleed the clutch line.
- Check the clutch cover assy and disc assy.

4202T–02

COMPONENTS

LHD Steering Position Type:
w/o Turn Over:

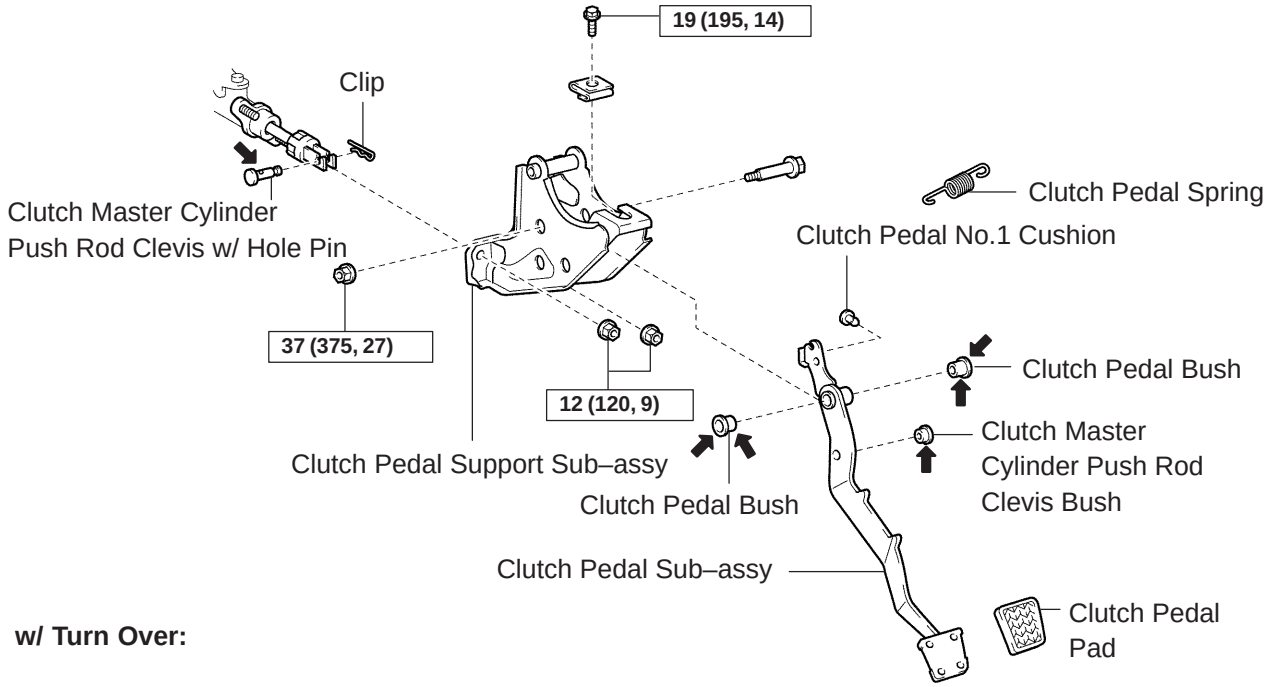

w/ Turn Over:

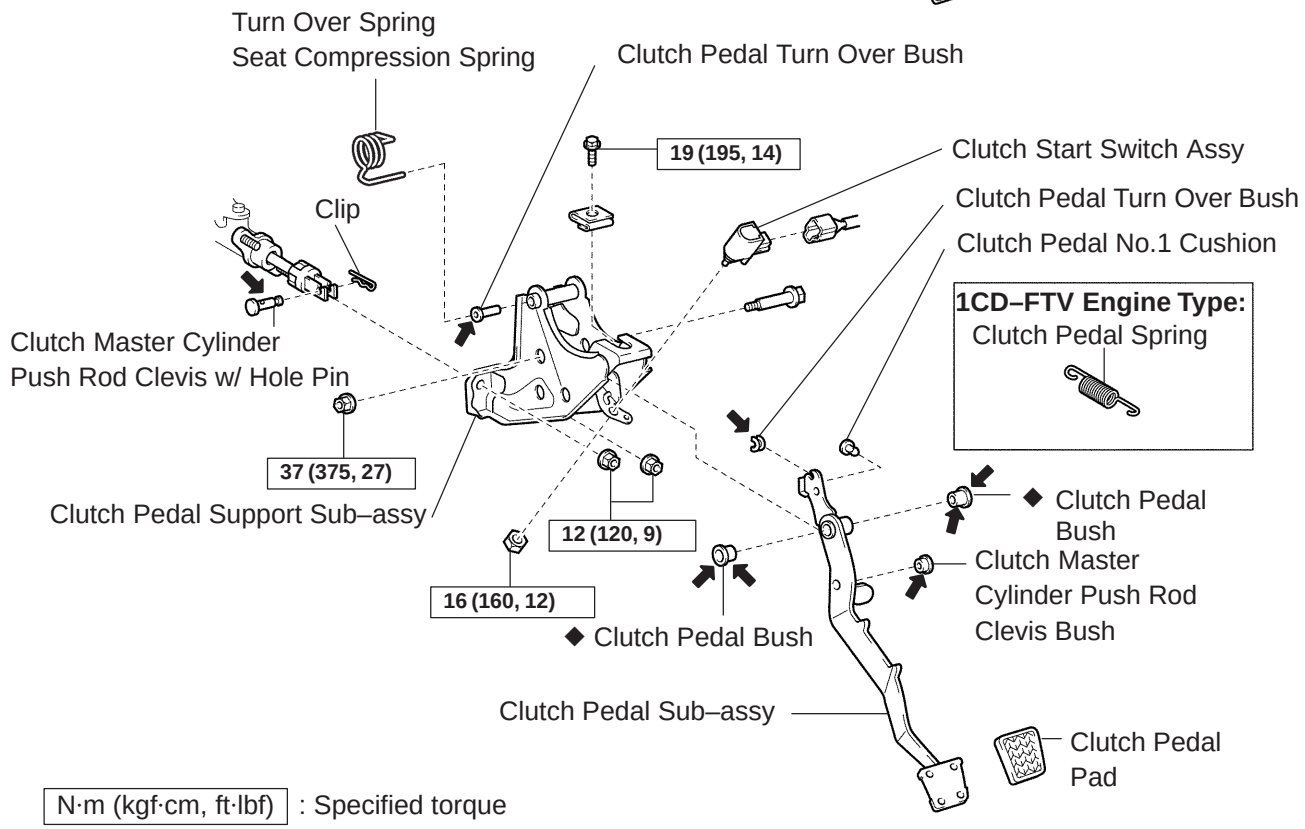

N·m (kgf·cm, ft·lbf) : Specified torque

◆ Non–reusable part

⬅ MP Grease

D30054

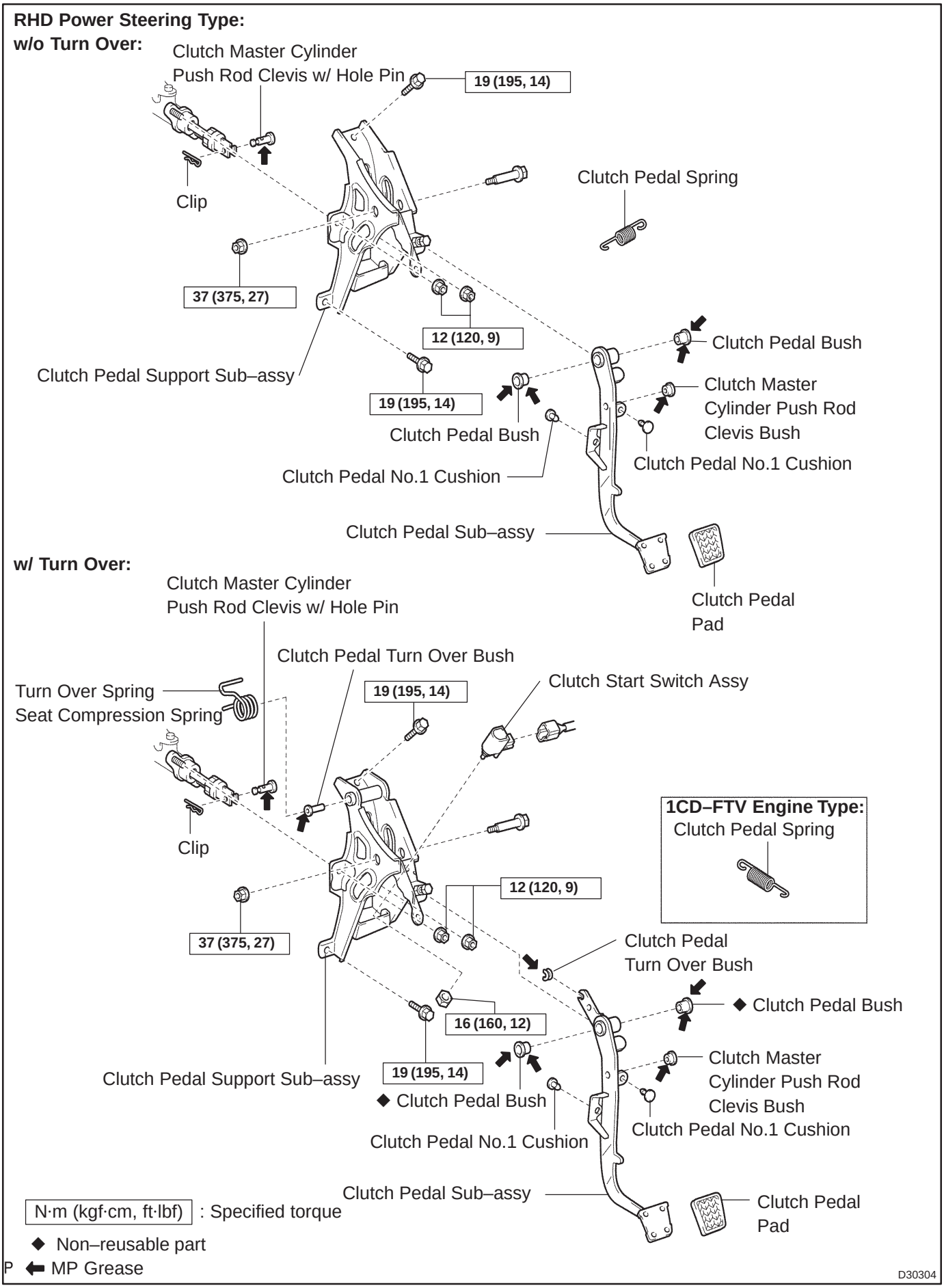
RHD Power Steering Type:
w/o Turn Over:
Clutch Master Cylinder
Push Rod Clevis w/ Hole Pin
19 (195, 14)
Clip
Clutch Pedal Spring
37 (375, 27)
12 (120, 9)
Clutch Pedal Bush
Clutch Pedal Support Sub–assy
19 (195, 14)
Clutch Master
Cylinder Push Rod
Clevis Bush
Clutch Pedal Bush
Clutch Pedal No.1 Cushion
Clutch Pedal No.1 Cushion
Clutch Pedal Sub–assy
Clutch Pedal
Pad
w/ Turn Over:
Clutch Master Cylinder
Push Rod Clevis w/ Hole Pin
Clutch Pedal Turn Over Bush
Turn Over Spring
Seat Compression Spring
19 (195, 14)
Clutch Start Switch Assy
Clip
1CD–FTV Engine Type:
Clutch Pedal Spring
12 (120, 9)
37 (375, 27)
Clutch Pedal
Turn Over Bush
◆ Clutch Pedal Bush
16 (160, 12)
Clutch Master
Cylinder Push Rod
Clevis Bush
19 (195, 14)
Clutch Pedal Support Sub–assy
◆ Clutch Pedal Bush
Clutch Pedal No.1 Cushion
Clutch Pedal No.1 Cushion
Clutch Pedal Sub–assy
Clutch Pedal
Pad
N·m (kgf·cm, ft·lbf) : Specified torque
◆ Non–reusable part
P ⬅ MP Grease
D30304

4206D–01

REPLACEMENT

1. REMOVE INSTRUMENT PANEL SUB–ASSY LOWER (LHD STEERING POSITION TYPE) (See page 71–11)
2. REMOVE COMBINATION METER ASSY (RHD STEERING POSITION TYPE) (See page 71–21)
3. REMOVE CLUTCH PEDAL SPRING

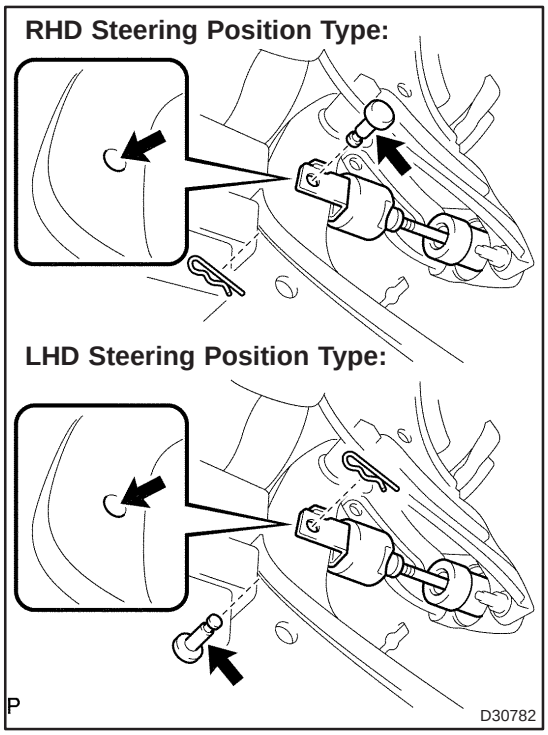

4. REMOVE CLUTCH MASTER CYLINDER PUSH ROD CLEVIS W/HOLE PIN

(a) Remove the clip and hole pin.

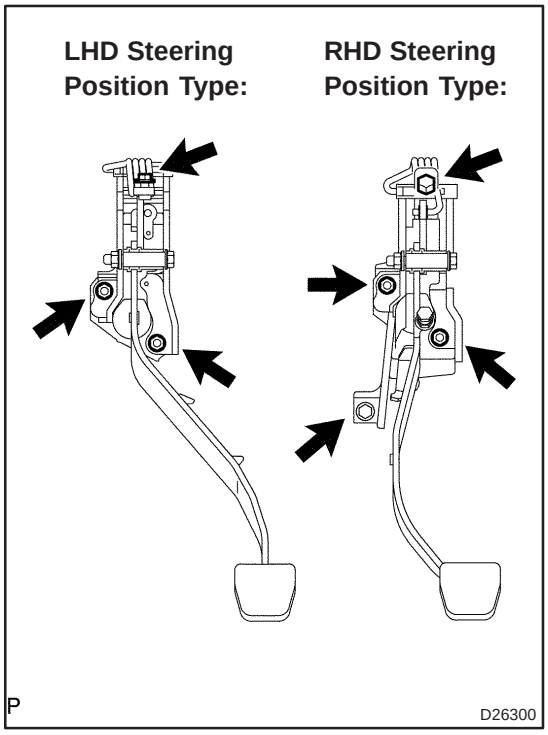

5. REMOVE CLUTCH PEDAL SUPPORT SUB–ASSY

(a) LHD steering position type:
Remove the 2 nuts, bolt and clutch pedal support assy.

(b) RHD steering position type:
Remove the 2 bolts, 2 nuts and clutch pedal support assy.

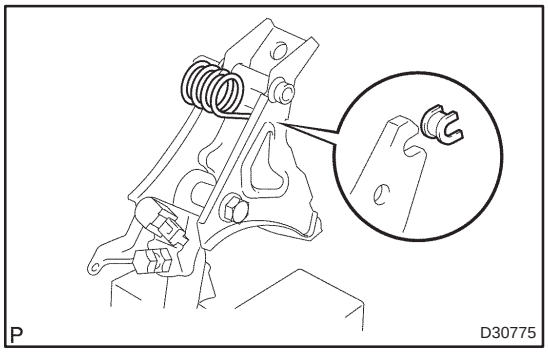

6. REMOVE TURN OVER SPRING SEAT COMPRESSION SPRING (W/ TURN OVER)

(a) Mount the clutch pedal in a soft jaw vise.

(b) Using a screwdriver, remove the spring.

7. REMOVE CLUTCH PEDAL TURNOVER BUSH (W/ TURN OVER)

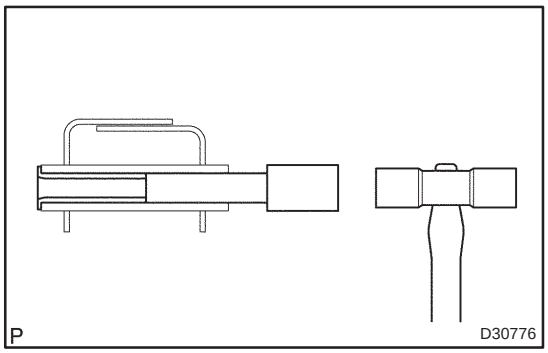

8. REMOVE CLUTCH PEDAL TURNOVER BUSH (W/ TURN OVER)

(a) Using a 8 mm hexagon wrench and a hammer, remove the turn over bush.

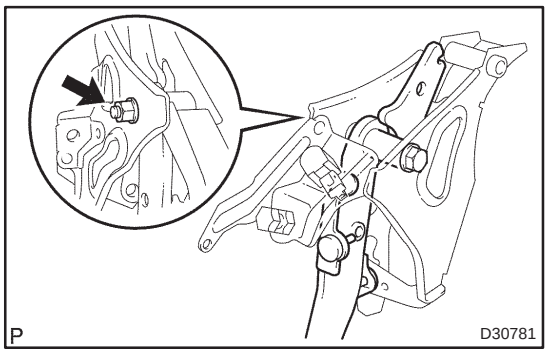

9. REMOVE CLUTCH PEDAL SUB–ASSY

(a) Remove the bolt and nut.

(b) Remove the clutch pedal from the clutch pedal support.

10. REMOVE CLUTCH PEDAL PAD

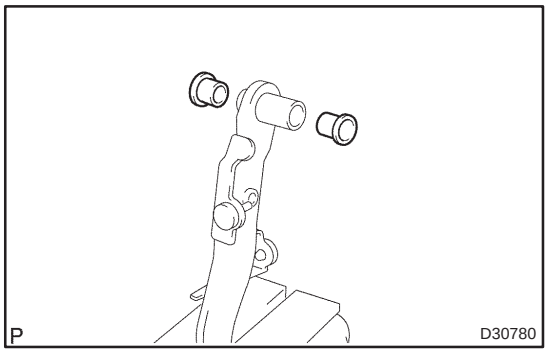

11. REMOVE CLUTCH PEDAL BUSH

(a) Remove the 2 bushes from the clutch pedal.

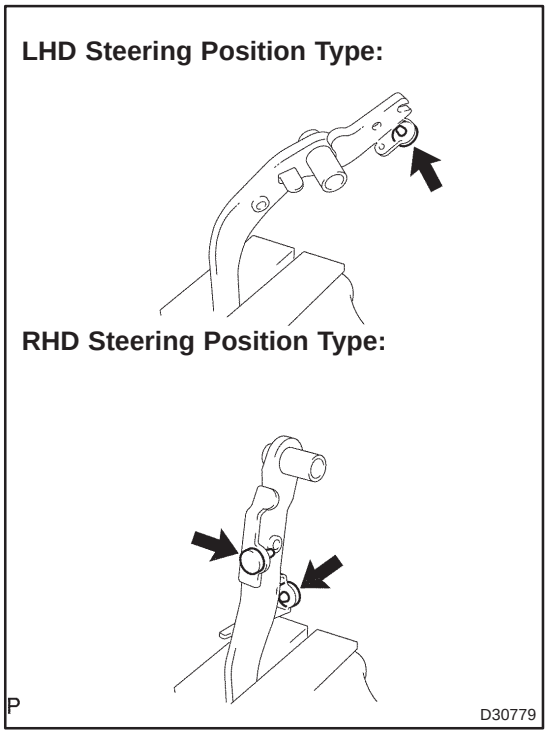

12. REMOVE CLUTCH PEDAL NO.1 CUSHION

(a) LHD steering position type:
Using needle–nose pliers, remove the No.1 cushion from the clutch pedal.

(b) RHD steering position type:
Using needle–nose pliers, remove the 2 No.1 cushions from the clutch pedal.

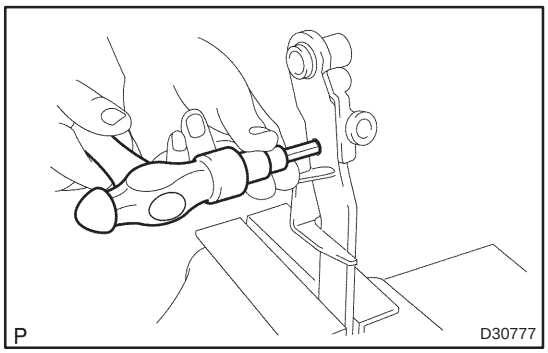

13. REMOVE CLUTCH MASTER CYLINDER PUSH ROD CLEVIS BUSH

(a) Using a 8 mm hexagon wrench and a hammer, remove the clevis bush from the clutch pedal.

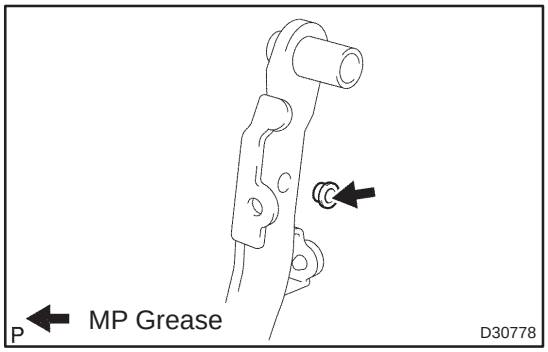

14. INSTALL CLUTCH MASTER CYLINDER PUSH ROD CLEVIS BUSH

(a) Apply MP grease to the inside of a new clevis bush.

(b) Install the clevis bush to the clutch pedal.

HINT:

Install the clevis bush from the right side of the vehicle.

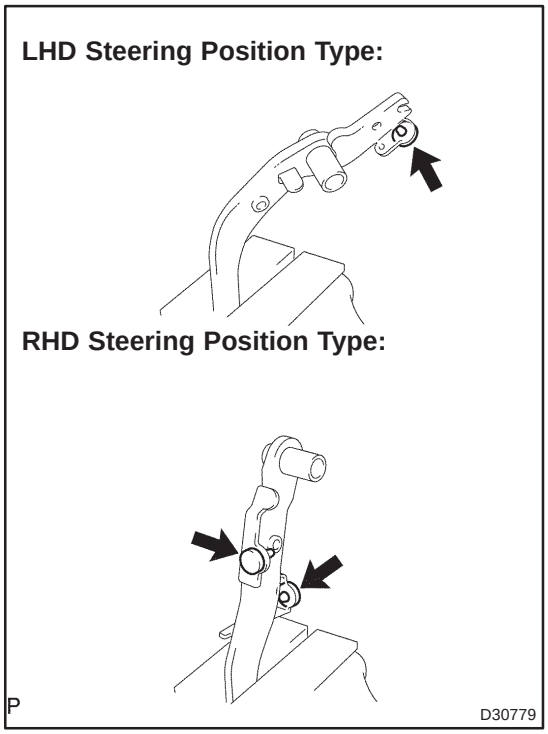

15. INSTALL CLUTCH PEDAL NO.1 CUSHION

(a) LHD steering position type:
Using needle–nose pliers, install the No.1 cushion to the clutch pedal.

(b) RHD steering position type:
Using needle–nose pliers, install the 2 No.1 cushions to the clutch pedal.

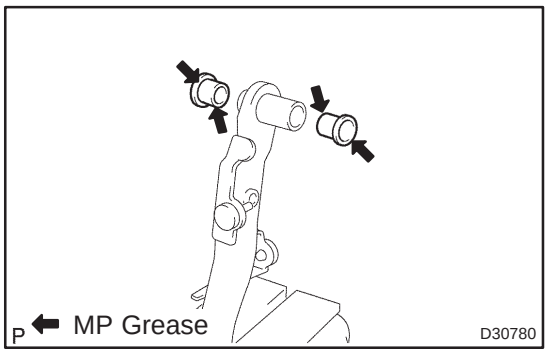

16. INSTALL CLUTCH PEDAL BUSH

(a) Apply MP grease to the inner, outer and end surface of 2 new bushes.

(b) Install the 2 bushes to the clutch pedal.

17. INSTALL CLUTCH PEDAL PAD

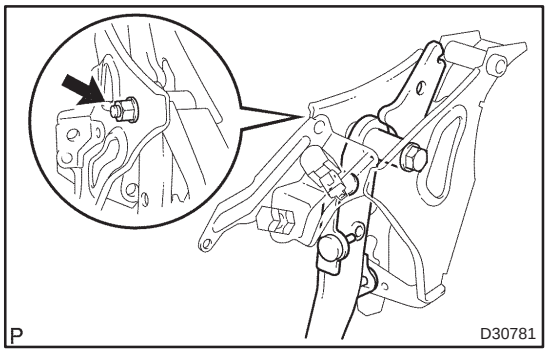

18. INSTALL CLUTCH PEDAL SUB–ASSY

(a) Install the clutch pedal to the clutch pedal support with the bolt and nut.
Torque: 37 N·m (375 kgf·cm, 27 ft·lbf)

HINT:
Install the bolt from the right side of the vehicle.

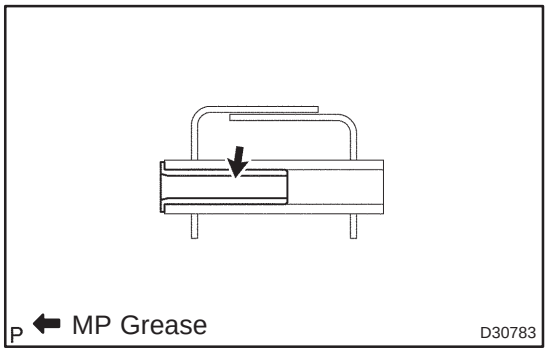

19. INSTALL CLUTCH PEDAL TURNOVER BUSH (W/ TURN OVER)

(a) Apply MP grease to the inside of the turn over bush.

(b) Install the turn over bush to the clutch pedal support.

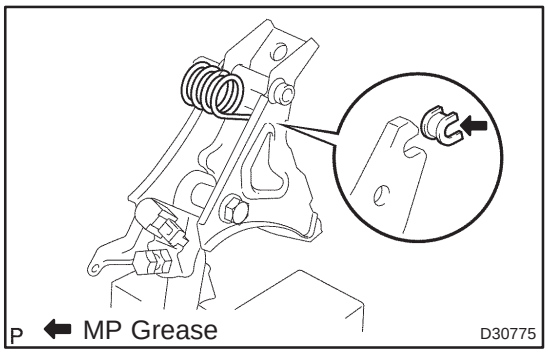

20. INSTALL CLUTCH PEDAL TURNOVER BUSH (W/ TURN OVER)

(a) Apply MP grease to the inside of the turn over bush.

(b) Install the turn over bush to the clutch pedal.

21. INSTALL TURN OVER SPRING SEAT COMPRESSION SPRING (W/ TURN OVER)

(a) Apply MP grease to the contact surface of the bush and spring.

(b) Install the spring to the clutch pedal and clutch pedal support.

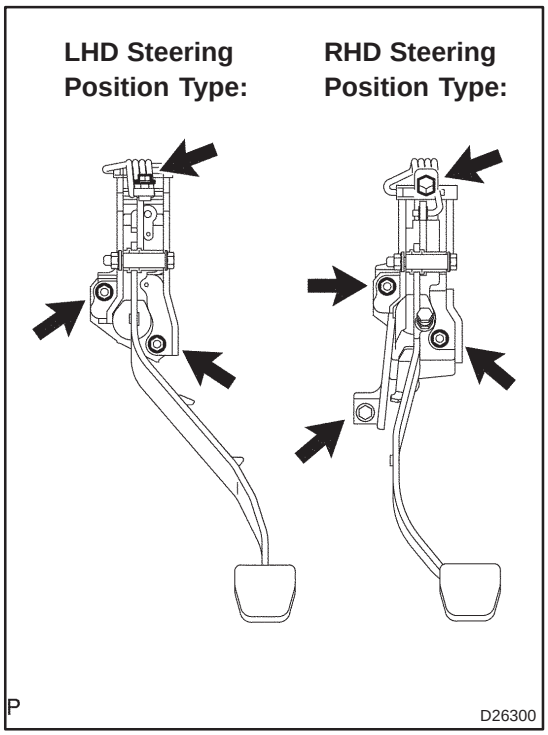

22. INSTALL CLUTCH PEDAL SUPPORT SUB–ASSY

(a) LHD steering position type:
Install the clutch pedal support to the vehicle with the 2 nuts and bolt.
Torque:
Bolt: 19 N·m (195 kgf·cm, 14 ft·lbf)
Nut: 12 N·m (120 kgf·cm, 9 ft·lbf)

(b) RHD steering position type:
Install the clutch pedal support to the vehicle with the 2 bolts and 2 nuts.
Torque:
Bolt: 19 N·m (195 kgf·cm, 14 ft·lbf)
Nut: 12 N·m (120 kgf·cm, 9 ft·lbf)

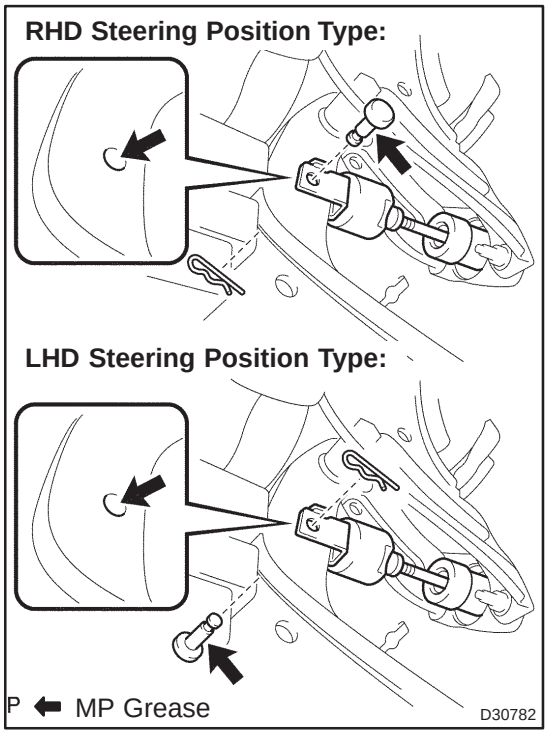

23. INSTALL CLUTCH MASTER CYLINDER PUSH ROD CLEVIS W/HOLE PIN

(a) Apply MP grease to the contact surface of the hole pin and clevis bush.

(b) Connect the clevis to the clutch pedal with the hole pin.

HINT:

- RHD steering position type:
  Install the hole pin from the right side of the vehicle.
- LHD steering position type:
  Install the hole pin from the left side of the vehicle.

(c) Install the clip to the hole pin.

24. INSTALL CLUTCH PEDAL SPRING

25. INSTALL COMBINATION METER ASSY (RHD STEERING POSITION TYPE) (See page 71–21)

26. INSTALL INSTRUMENT PANEL SUB–ASSY LOWER (LHD STEERING POSITION TYPE) (See page 71–11)

27. INSPECT AND ADJUST CLUTCH PEDAL SUB–ASSY (See page 42–2)

CLUTCH MASTER CYLINDER ASSY (MTM)

4202V–03

COMPONENTS

LHD Steering Position Type:

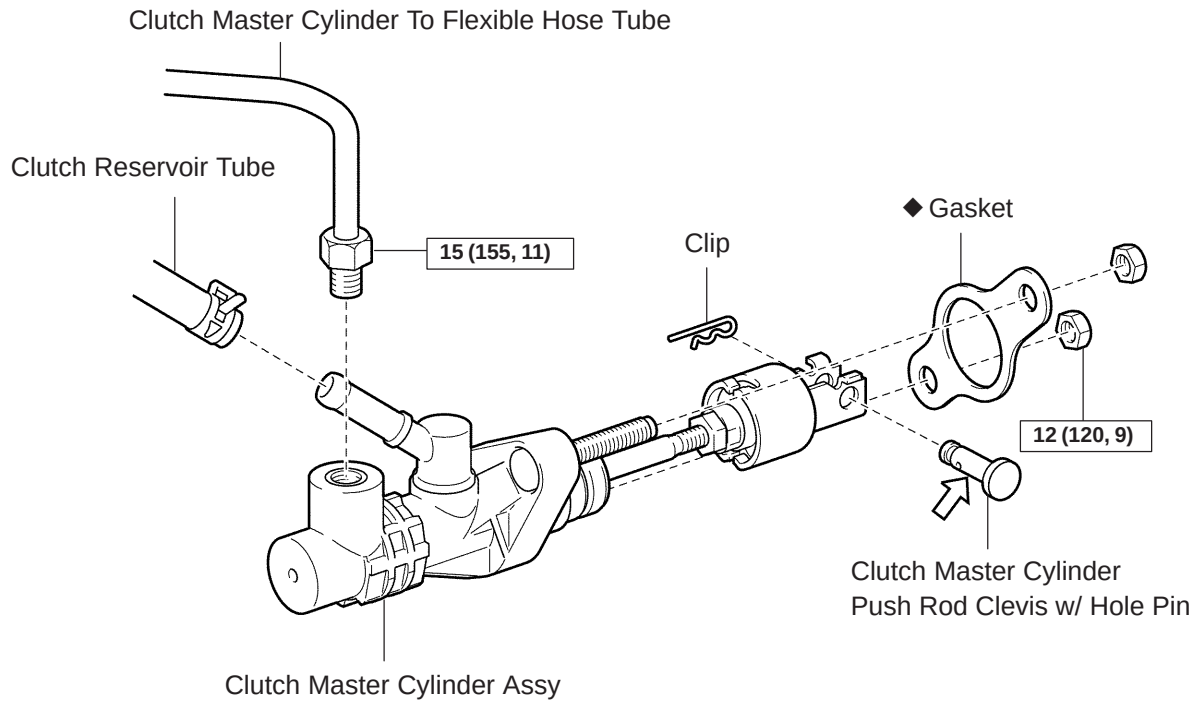

RHD Steering PositionType:

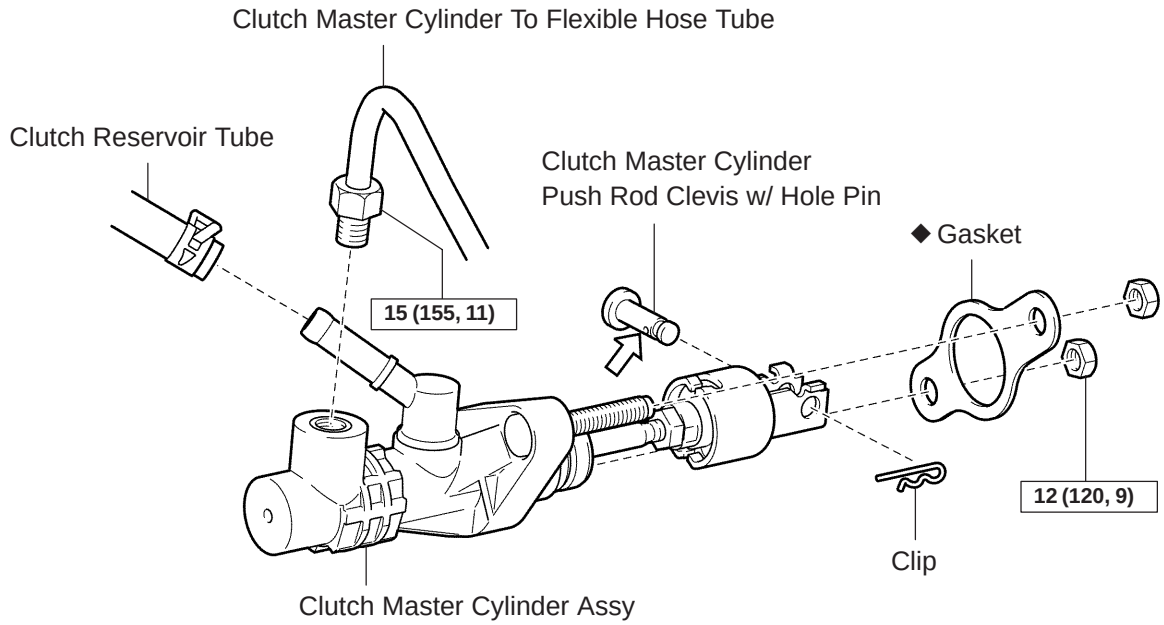

N·m (kgf·cm, ft·lbf) : Specified torque
◆ Non–reusable part
⇦ MP grease

P

D30477

REPLACEMENT

1. DRAIN CLUTCH FLUID
2. REMOVE BRAKE MASTER CYLINDER SUB–ASSY (LHD STEERING POSITION TYPE) (See page 32–13)
3. REMOVE BRAKE BOOSTER ASSY (LHD STEERING POSITION TYPE) (See page 32–19)

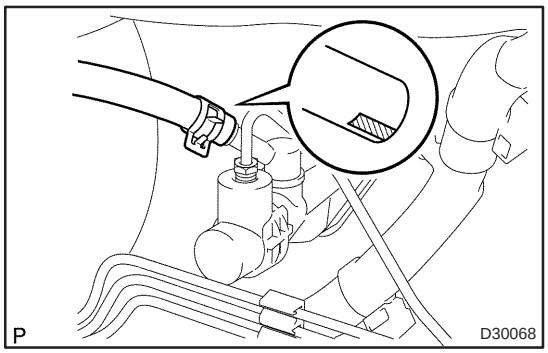

4. DISCONNECT CLUTCH RESERVOIR TUBE

(a) Loosen the clip and disconnect the clutch reservoir tube from the clutch master cylinder assy.

HINT:
Use a container to catch the fluid.

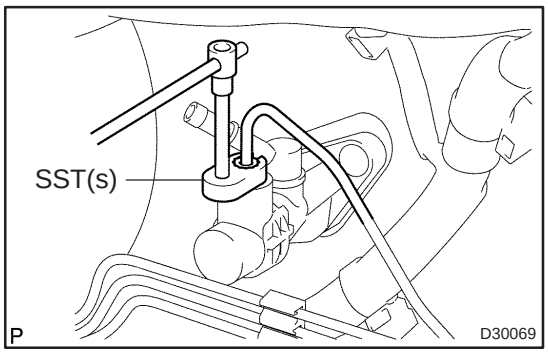

5. DISCONNECT CLUTCH MASTER CYLINDER TO FLEXIBLE HOSE TUBE

(a) Using SST(s), disconnect the flexible hose tube.
SST 09023–00100

HINT:
Use a container to catch the fluid.

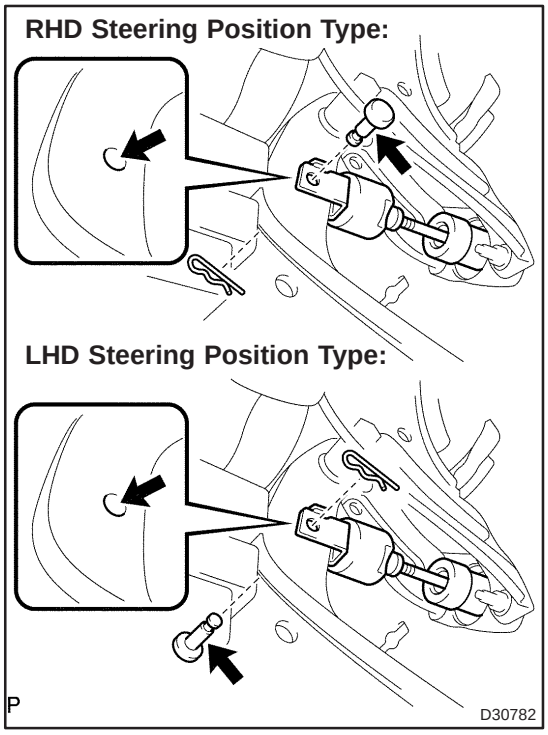

6. REMOVE CLUTCH MASTER CYLINDER PUSH ROD CLEVIS W/HOLE PIN

(a) Remove the clip and hole pin.

7. REMOVE CLUTCH MASTER CYLINDER ASSY

(a) Remove the 2 nuts clutch master cylinder assy and gasket.

8. INSTALL CLUTCH MASTER CYLINDER ASSY

(a) Install the clutch master cylinder assy and gasket with the 2 nuts.

Torque: 12 N·m (120 kgf·cm, 9 ft·lbf)

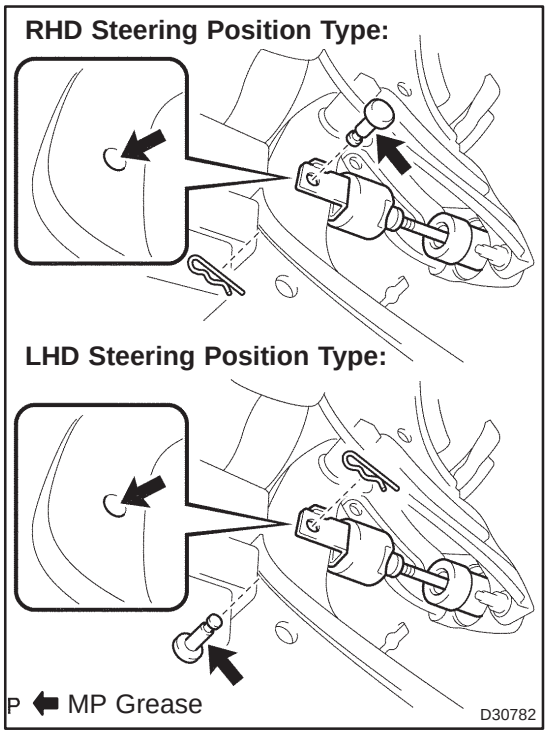

9. INSTALL CLUTCH MASTER CYLINDER PUSH ROD CLEVIS W/HOLE PIN

(a) Apply MP grease to the contact surface of the hole pin and clevis bush.

(b) Connect the clevis to the clutch pedal assy with the hole pin.

HINT:

- RHD steering position type:
  Install the hole pin from the right side of the vehicle.
- LHD steering position type:
  Install the hole pin from the left side of the vehicle.

(c) Install the clip to the hole pin.

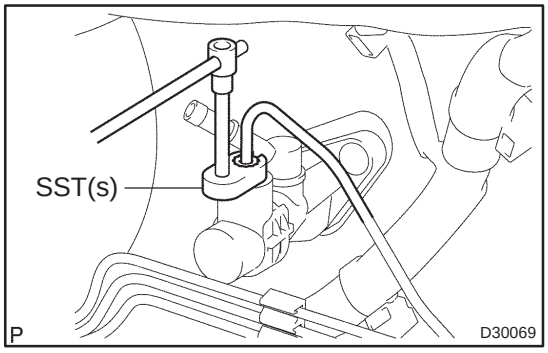

10. CONNECT CLUTCH MASTER CYLINDER TO FLEXIBLE HOSE TUBE

(a) Using SST(s), connect the flexible hose tube.

SST 09023–00100

Torque: 15 N·m (155 kgf·cm, 11 ft·lbf)

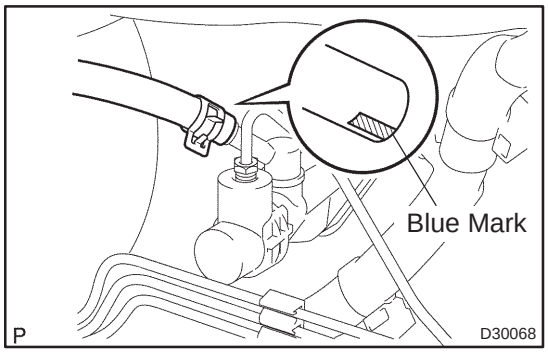

11. CONNECT CLUTCH RESERVOIR TUBE

(a) Connect the clutch reservoir tube with the clip to the clutch master cylinder assy.

NOTICE:

Connect the clutch reservoir tube so as not be twisted.

12. INSTALL BRAKE BOOSTER ASSY (LHD STEERING POSITION TYPE) (See page 32–19)

13. INSTALL BRAKE MASTER CYLINDER SUB–ASSY (LHD STEERING POSITION TYPE) (See page 32–13)

14. BLEED BRAKE LINE (LHD STEERING POSITION TYPE) (See page 32–4)

15. BLEED CLUTCH PIPE LINE

(a) Fill the brake reservoir tank with the clutch fluid and bleed clutch system.
Torque: 8.4 N·m (85 kgf·cm, 73 in.·lbf)

16. CHECK AND ADJUST BRAKE PEDAL HEIGHT (LHD STEERING POSITION TYPE) (See page 32–6)

17. INSPECT AND ADJUST CLUTCH PEDAL SUB–ASSY (See page 42–2)

18. CHECK BRAKE FLUID LEAKAGE (LHD STEERING POSITION TYPE)

19. CHECK CLUTCH FLUID LEAKAGE

20. CHECK FLUID LEVEL IN RESERVOIR

CLUTCH RELEASE CYLINDER ASSY (MTM)

4202X–03

COMPONENTS

1CD–FTV Engine Type:

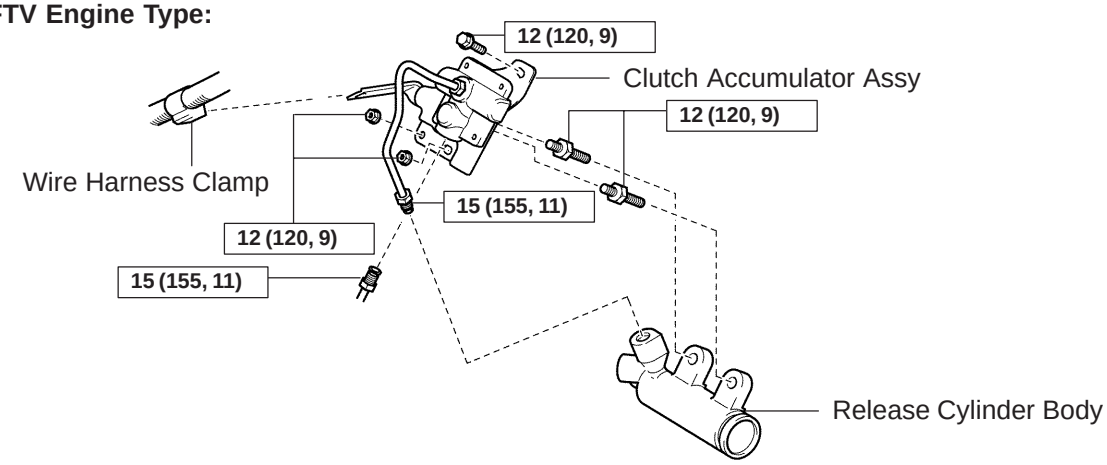

1AZ–FSE/1AZ–FE Engine Type:

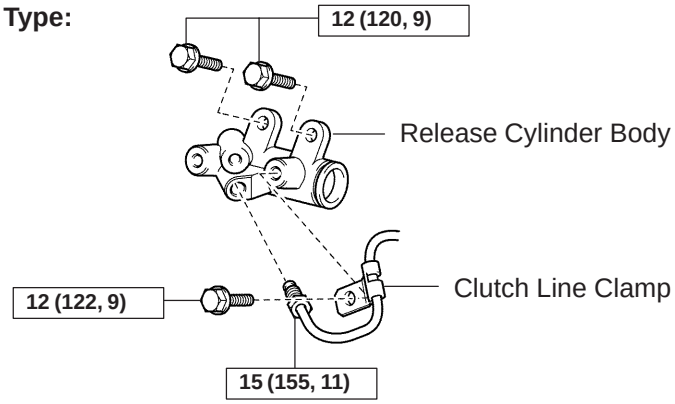

1ZZ–FE/3ZZ–FE Engine Type:

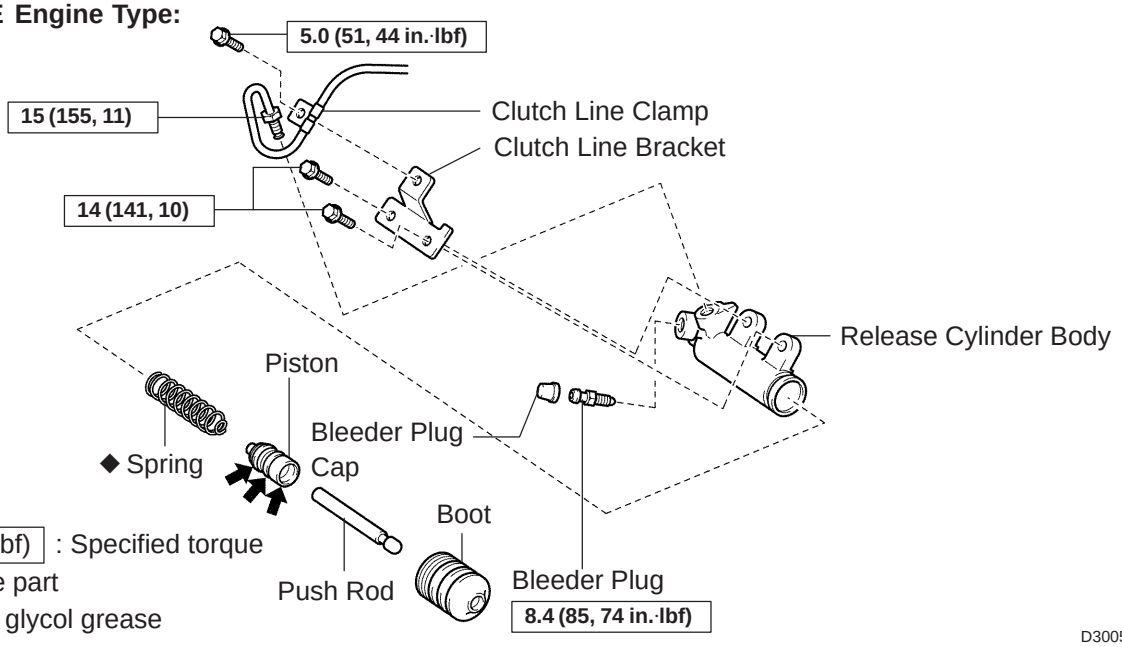

N·m (kgf·cm, ft·lbf) : Specified torque
◆ Non–reusable part
⬅ Lithium soap glycol grease

P

D30055

OVERHAUL

1. REMOVE BATTERY (1CD–FTV ENGINE TYPE)

2. REMOVE AIR TUBE NO.1 (1CD–FTV ENGINE TYPE) (See page 14–286)

1ZZ–FE/3ZZ–FE Engine Type:

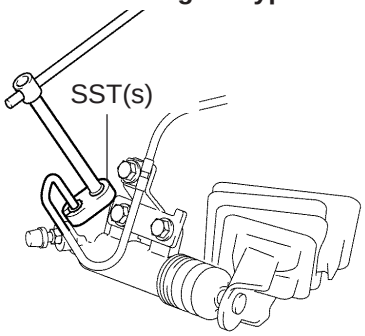

1AZ–FE/1AZ–FSE Engine Type:

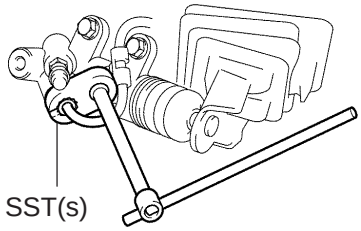

P D30487

3. DISCONNECT CLUTCH RELEASE CYLINDER TO FLEXIBLE HOSE TUBE (EXCEPT 1CD–FTV ENGINE TYPE)

(a) Using SST(s), disconnect the flexible hose tube.
SST 09023–00100

HINT:
Use a container to catch the fluid.

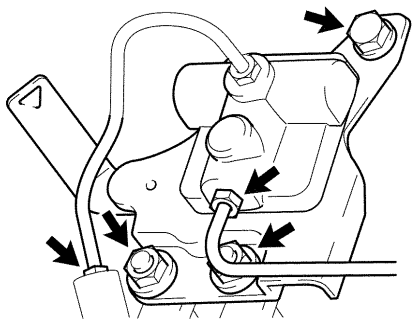

P D30814

4. REMOVE CLUTCH ACCUMULATOR ASSY (1CD–FTV ENGINE TYPE)

(a) Disconnect the wire harness clamp.

(b) Using SST(s), disconnect the 2 flexible hose tubes.
SST 09023–00100

HINT:
Use a container to catch the fluid.

(c) Remove the 2 nuts, bolt and clutch accumulator assy.

1ZZ–FE/3ZZ–FE Engine Type:

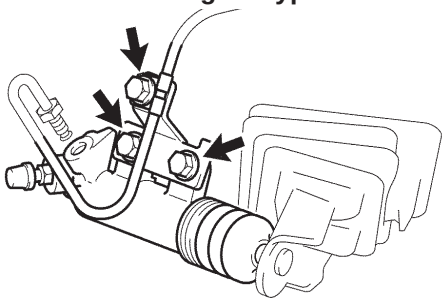

1AZ–FE/1AZ–FSE Engine Type:

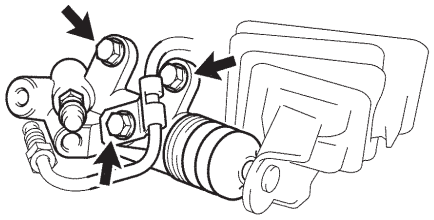

P D30488

5. REMOVE CLUTCH RELEASE CYLINDER ASSY (EXCEPT 1CD–FTV ENGINE TYPE)

(a) 1ZZ–FE/3ZZ–FE Engine Type:
Remove the 3 bolts, clutch release cylinder assy, and clutch line bracket.

(b) 1AZ–FE/1AZ–FSE Engine Type:
Remove the 3 bolts and clutch release cylinder assy.

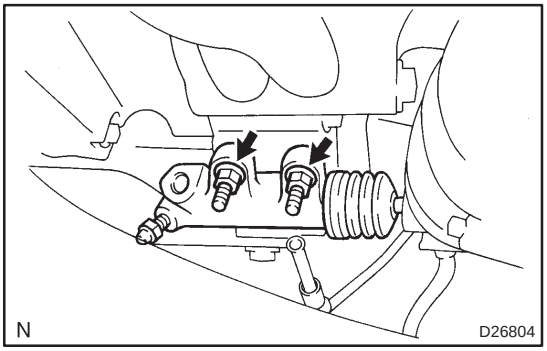

N D26804

6. REMOVE CLUTCH RELEASE CYLINDER ASSY (1CD–FTV ENGINE TYPE)

(a) Using a 12 mm deep socket wrench, remove the 2 bolts and clutch release cylinder assy.

7. REMOVE CLUTCH RELEASE CYLINDER KIT

(a) Remove the boot from the cylinder body.
(b) Remove the push rod from the cylinder body.
(c) Remove the piston from the cylinder body.

NOTICE:

Be careful not to damage the inside of the cylinder body.

(d) Remove the spring from the cylinder body.
(e) Remove the bleeder plug cap from the bleeder plug.

8. REMOVE RELEASE CYLINDER BLEEDER PLUG

9. INSTALL RELEASE CYLINDER BLEEDER PLUG
Torque: 8.3 N·m (85 kgf·cm, 73 in.·lbf)

10. INSTALL CLUTCH RELEASE CYLINDER KIT

(a) Install the bleeder plug cap to the bleeder plug.

(b) Install a new spring to the cylinder body.

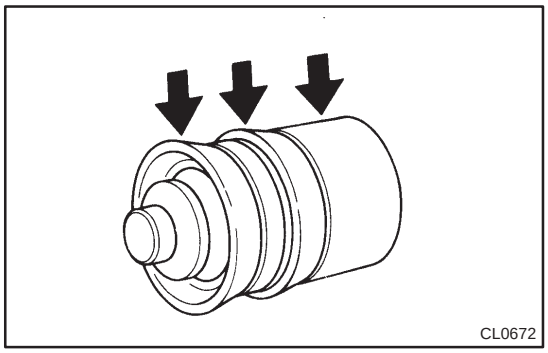

(c) Coat the parts with lithium soap base glycol grease, as shown in the illustration.

(d) Install the piston to the cylinder body.

NOTICE:

Be careful not to damage the inside of the cylinder body.

(e) Install the push rod to the cylinder body.

(f) Install the boot to the cylinder body.

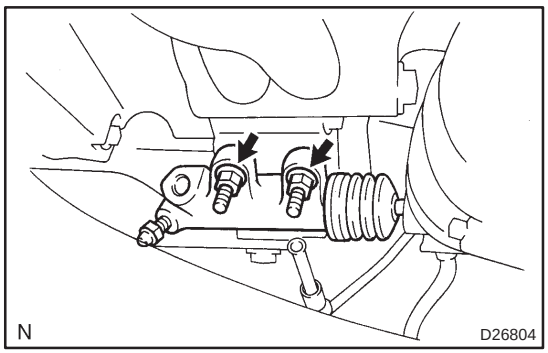

11. INSTALL CLUTCH RELEASE CYLINDER ASSY (1CD–FTV ENGINE TYPE)

(a) Using a 12 mm deep socket wrench, install the clutch release cylinder assy with the 2 bolts.

Torque: 12 N·m (120 kgf·cm, 9 ft·lbf)

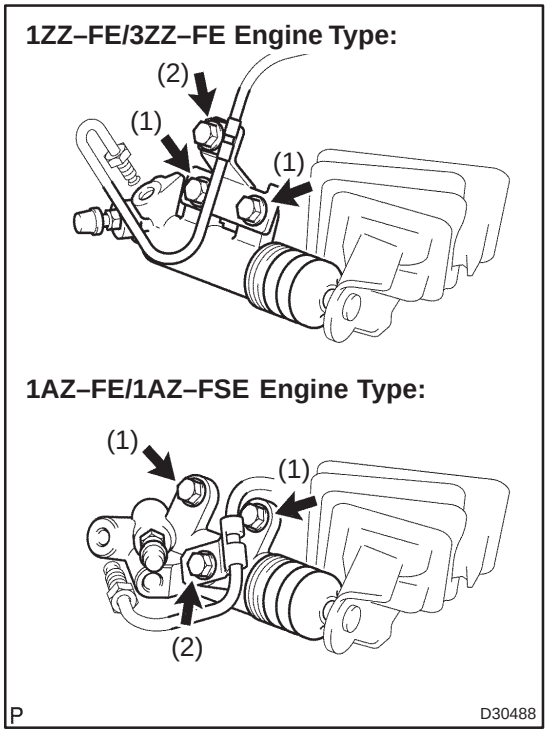

12. INSTALL CLUTCH RELEASE CYLINDER ASSY (EXCEPT 1CD–FTV ENGINE TYPE)

(a) 1ZZ–FE/3ZZ–FE Engine Type:

(1) Install the clutch release cylinder and clutch line bracket with the 2 bolts.

Torque: 14 N·m (141 kgf·cm, 10 ft·lbf)

(2) Install the flexible hose tube with the bolt.

Torque: 5.0 N·m (51 kgf·cm, 44 in.·lbf)

(b) 1AZ–FE/1AZ–FSE Engine Type:

(1) Install the clutch release cylinder with the 2 bolts.

Torque: 12 N·m (120 kgf·cm, 9 ft·lbf)

(2) Install the flexible hose tube with the bolt.

Torque: 12 N·m (122 kgf·cm, 9 ft·lbf)

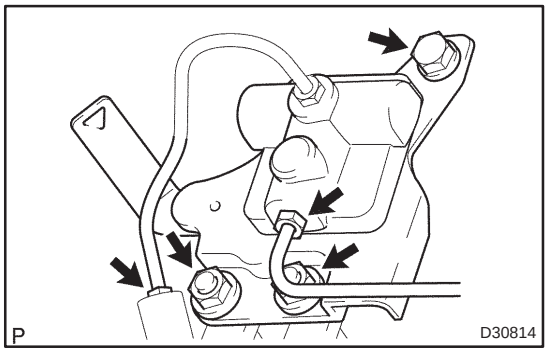

13. INSTALL CLUTCH ACCUMULATOR ASSY (1CD–FTV ENGINE TYPE)

(a) Install the clutch accumulator assy with the 2 nuts and bolt.
Torque: 12 N·m (120 kgf·cm, 9 ft·lbf)

(b) Using SST(s), connect the 2 flexible hose tubes.
SST 09023–00100
Torque: 15 N·m (155 kgf·cm, 11 ft·lbf)

(c) Connect the wire harness clamp.

1ZZ–FE/3ZZ–FE Engine Type:

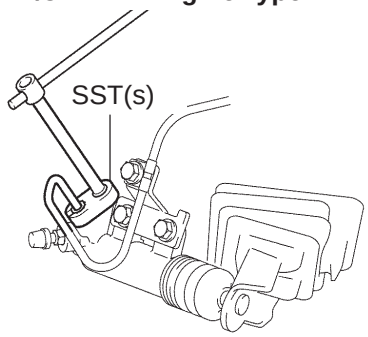

1AZ–FE/1AZ–FSE Engine Type:

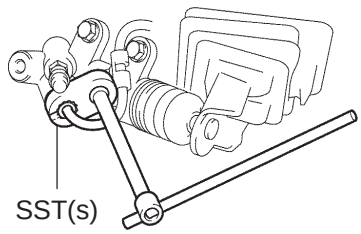

P D30487

14. CONNECT CLUTCH RELEASE CYLINDER TO FLEXIBLE HOSE TUBE (EXCEPT 1CD–FTV ENGINE TYPE)

(a) Using SST(s), connect the flexible hose tube.
SST 09023–00100
Torque: 15 N·m (155 kgf·cm, 11 ft·lbf)

15. INSTALL AIR TUBE NO.1 (1CD–FTV ENGINE TYPE) **(See page 14–286)**

16. INSTALL BATTERY (1CD–FTV ENGINE TYPE)

17. BLEED CLUTCH PIPE LINE

(a) Fill the brake reservoir tank with the brake fluid and bleed clutch system.
Torque: 8.3 N·m (85 kgf·cm, 73 in.·lbf)

18. CHECK CLUTCH FLUID LEAKAGE

CLUTCH ACCUMULATOR ASSY (1CD–FTV)

4202Z–03

COMPONENTS

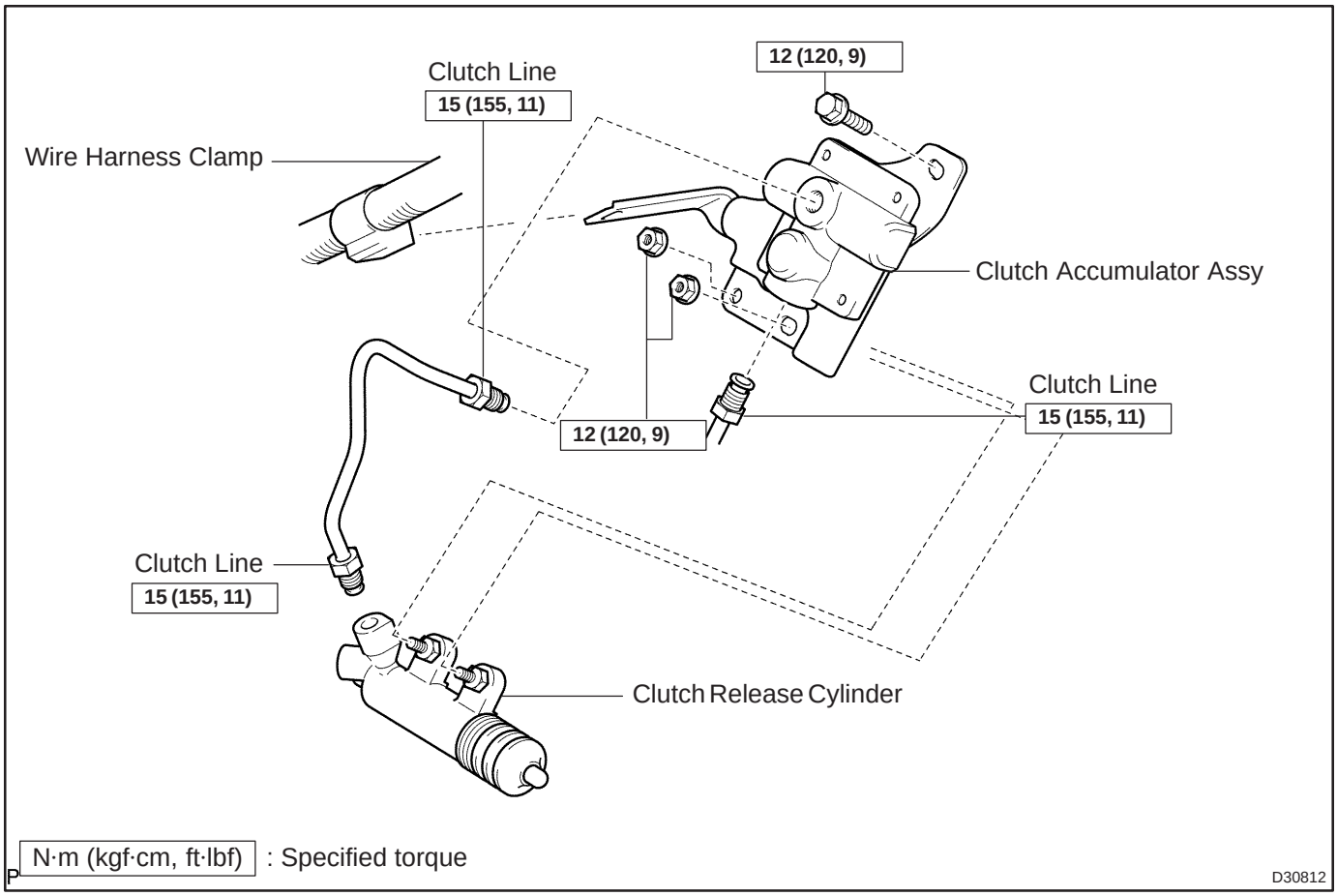

4206G–01

REPLACEMENT

1. REMOVE BATTERY
2. REMOVE AIR TUBE NO.1 (See page 14–286)

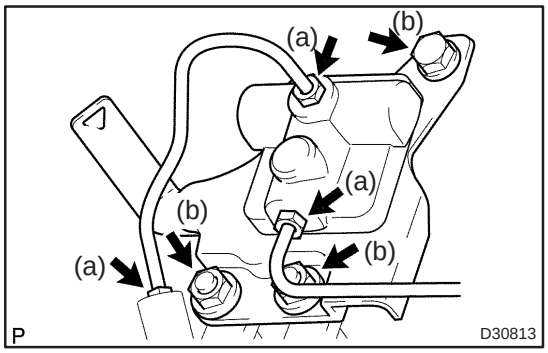

3. REMOVE CLUTCH ACCUMULATOR ASSY

(a) Using SST(s), disconnect the flexible hose tube.
SST 09023–00100

HINT:
Use a container to catch the fluid.

(b) Remove a bolt, 2 nuts and clutch accumulator assy.

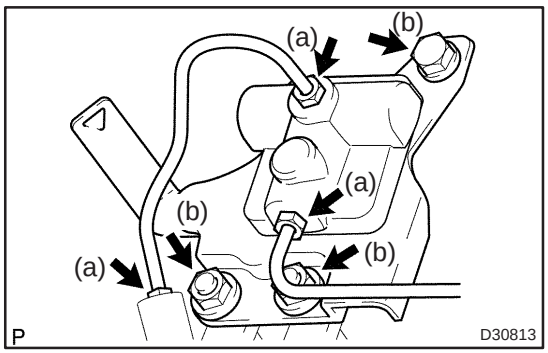

4. INSTALL CLUTCH ACCUMULATOR ASSY

(a) Using SST(s), connect the 2 flexible hose tubes to the clutch accumulator assy.
SST 09023–00100

(b) Install the clutch accumulator assy with the 2 nuts and a bolt.
Torque: 12 N·m (120 kgf·cm, 9 ft·lbf)

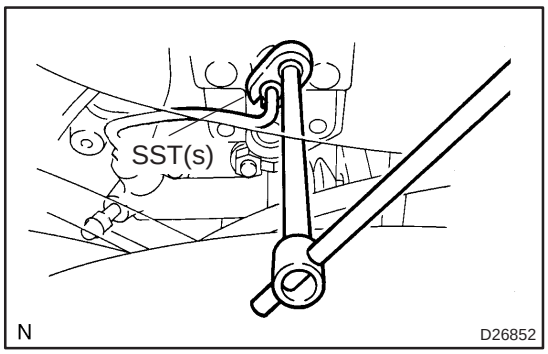

(c) Using SST(s), tighten the flexible hose tube.
SST 09023–00100
Torque: 15 N·m (155 kgf·cm, 11 ft·lbf)

5. INSTALL AIR TUBE NO.1 (See page 14–286)
6. INSTALL BATTERY
7. BLEED CLUTCH PIPE LINE

(a) Fill the brake reservoir tank with the brake fluid and bleed clutch system.
Torque: 8.3 N·m (85 kgf·cm, 73 in.·lbf)

8. CHECK CLUTCH FLUID LEAKAGE

CLUTCH UNIT (MTM)

COMPONENTS

4206H–01

1ZZ–FE/3ZZ–FE Engine Type:

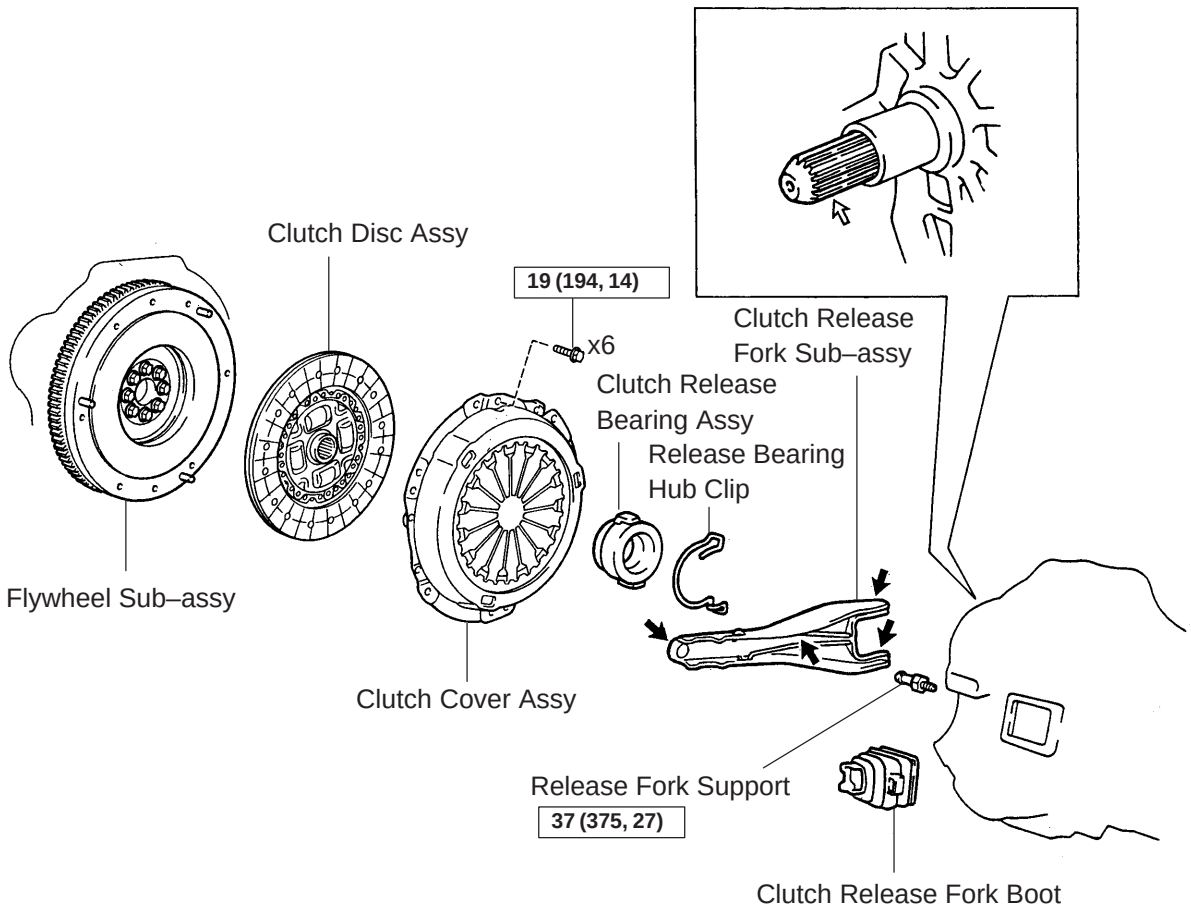

N·m (kgf·cm, ft·lbf) : Specified torque
◆ Non–reusable part
⇦ Clutch spline grease
⬅ Release hub grease

D26321

1AZ–FSE/1AZ–FE Engine Type:

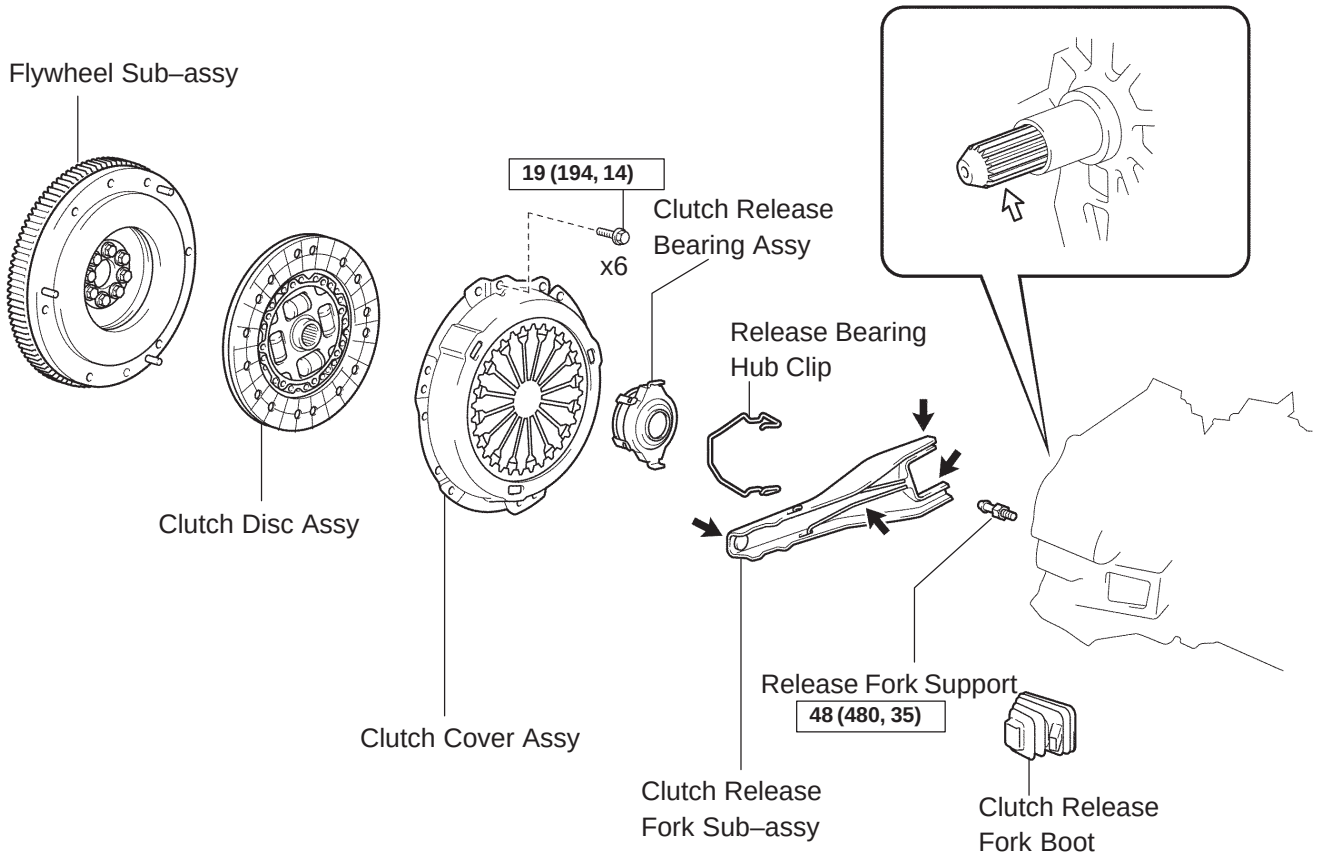

N·m (kgf·cm, ft·lbf) : Specified torque
◆ Non–reusable part
⇦ Clutch spline grease
⬅ Release hub grease

P D30056

1CD–FTV Engine Type:

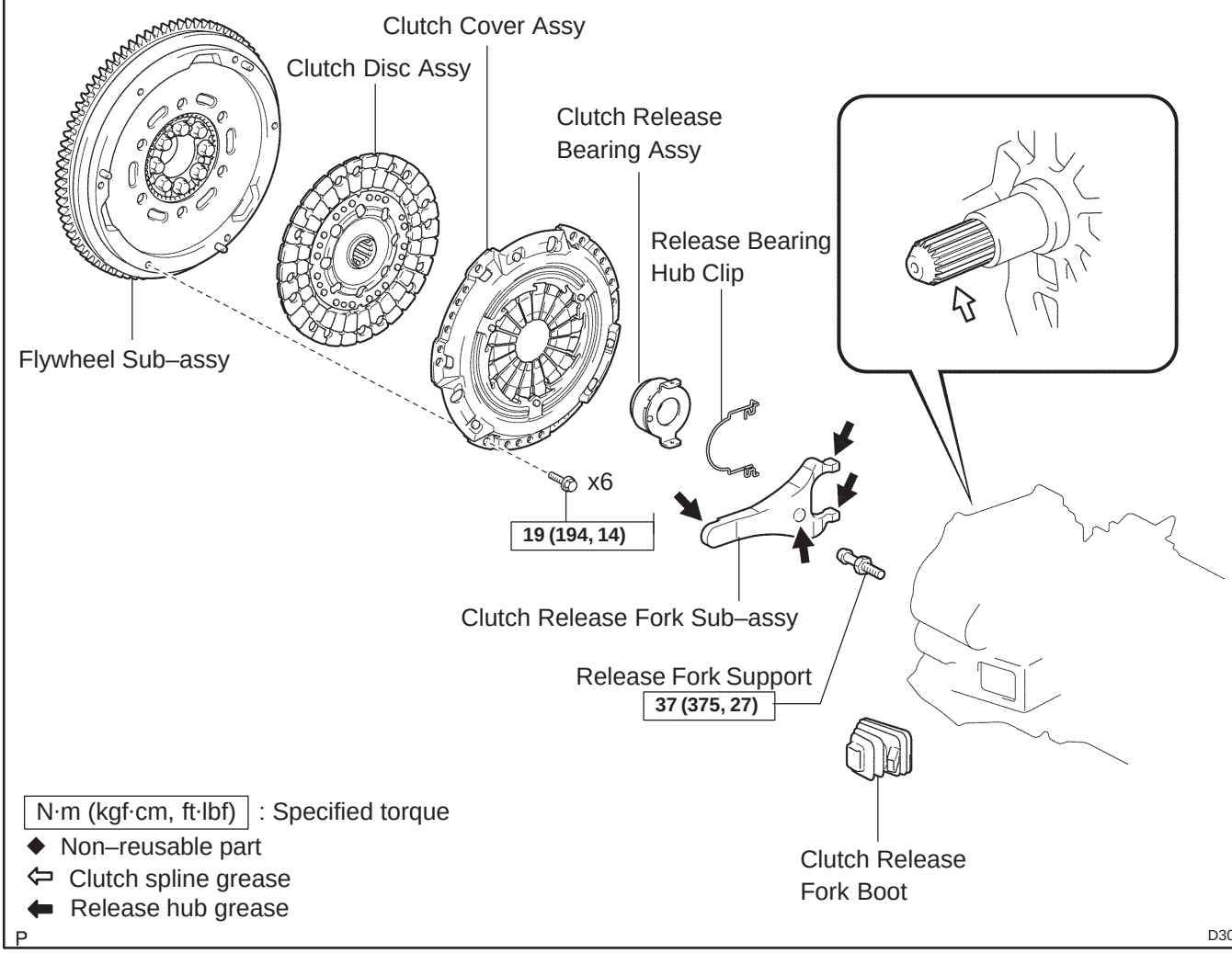

4200G–05

OVERHAUL

1. REMOVE MANUAL TRANSAXLE ASSY

(a) 1ZZ–FE, 3ZZ–FE Engine (See page 41–15)

(b) 1AZ–FE, 1AZ–FSE Engine (See page 41–24)

(c) 1CD–FTV Engine (See page 41–33)

EXCEPT 1CD–FTV Engine Type:

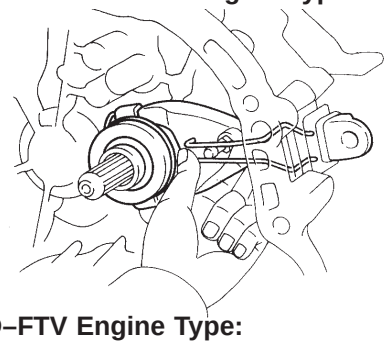

1CD–FTV Engine Type:

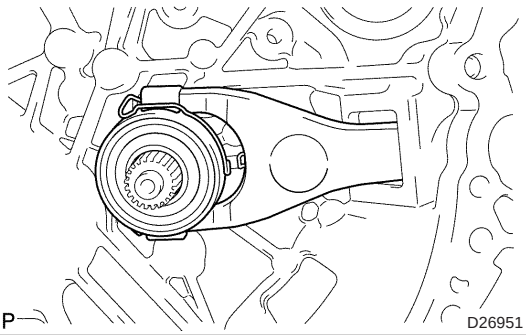

2. REMOVE CLUTCH RELEASE FORK SUB–ASSY

(a) Remove the clutch release fork with clutch release bearing from the transaxle assy.

3. REMOVE CLUTCH RELEASE BEARING ASSY

(a) Remove the clutch release bearing assy from the clutch release fork.

4. REMOVE RELEASE FORK SUPPORT

(a) Remove the release fork support from the transaxle assy.

5. REMOVE RELEASE BEARING HUB CLIP

6. REMOVE CLUTCH RELEASE FORK BOOT

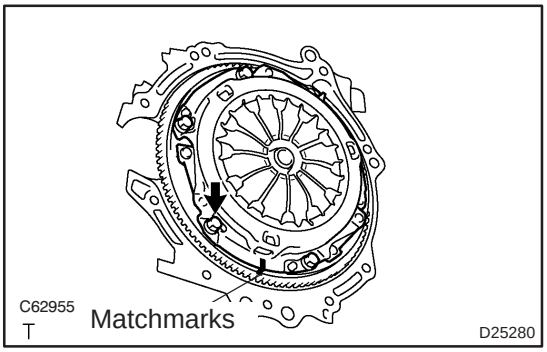

7. REMOVE CLUTCH COVER ASSY

(a) Align matchmarks on the clutch cover assy with the one on the flywheel sub–assy.

(b) Loosen each set bolt one turn at a time until the spring tension is released.

(c) Remove the set bolts, and pull off the clutch cover assy.

NOTICE:

Do not drop the clutch disc assy.

8. REMOVE CLUTCH DISC ASSY

NOTICE:

Keep the lining part of the clutch disc assy, the pressure plate and surface of the flywheel sub–assy away from oil and foreign attachment.

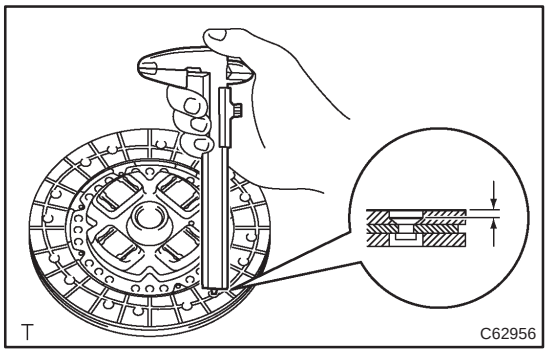

9. INSPECT CLUTCH DISC ASSY

(a) Using vernier calipers, measure the rivet head depth.

Maximum rivet depth: 0.3 mm (0.012 in.)

Replace the clutch disc assy as necessary.

(b) Install the clutch disc assy to the transaxle assy.

NOTICE:

Take care not to insert the clutch disc assy in the wrong direction.

(c) Using a dial gage, check the clutch disc assy runout.

Minimum runout: 0.8 mm (0.031 in.)

Replace the clutch disc assy as necessary.

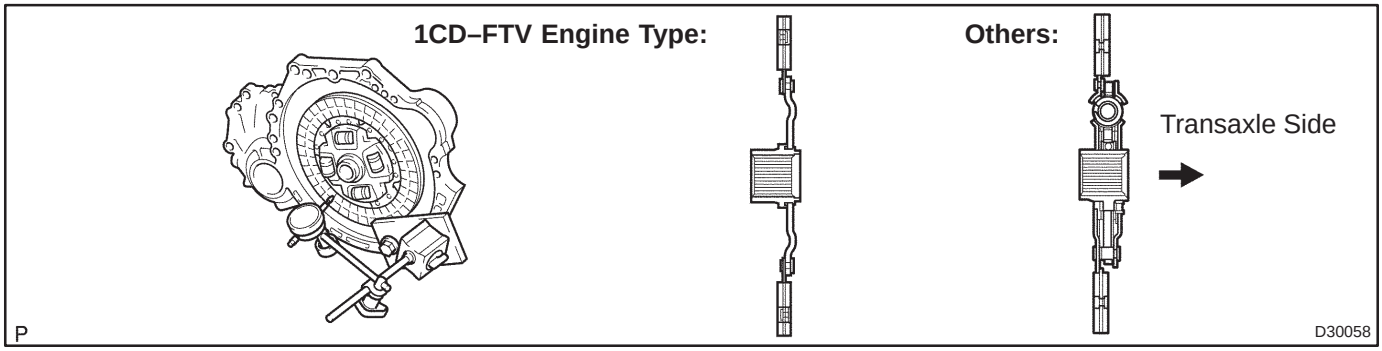

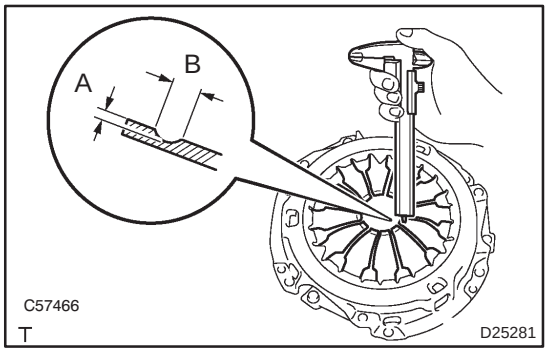

10. INSPECT CLUTCH COVER ASSY

(a) Using vernier calipers, inspect the diaphragm spring for the depth and width of wear.

Maximum:

A (Depth): 0.5 mm (0.020 in.)

B (Width): 6.0 mm (0.236 in.)

Replace the clutch cover assy as necessary.

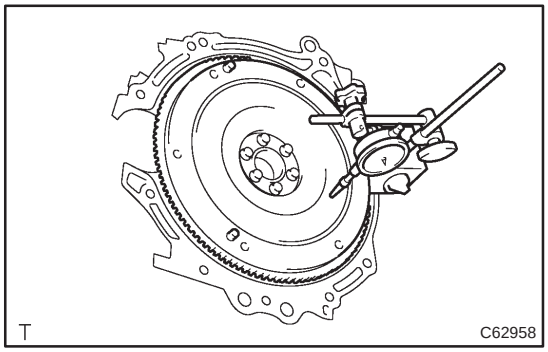

11. INSPECT FLYWHEEL SUB–ASSY

(a) Using a dial gage, inspect the flywheel sub–assy runout.

Maximum runout: 0.1 mm (0.004 in.)

Replace the flywheel sub–assy as necessary.

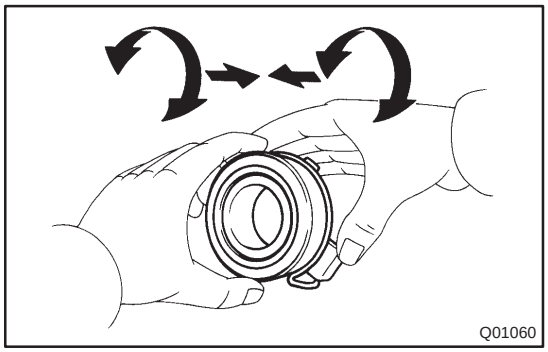

12. INSPECT CLUTCH RELEASE BEARING ASSY

(a) Turn the release bearing by hand while applying force in the axial direction.

HINT:

The bearing is permanently lubricated and requires no cleaning or lubrication.

Replace the release bearing assy as necessary.

13. INSTALL CLUTCH DISC ASSY

(a) Insert SST(s) in the clutch disc assy, then insert them in the flywheel sub–assy.

SST 09301–00220

NOTICE:

Take care not to insert the clutch disc assy in the wrong direction.

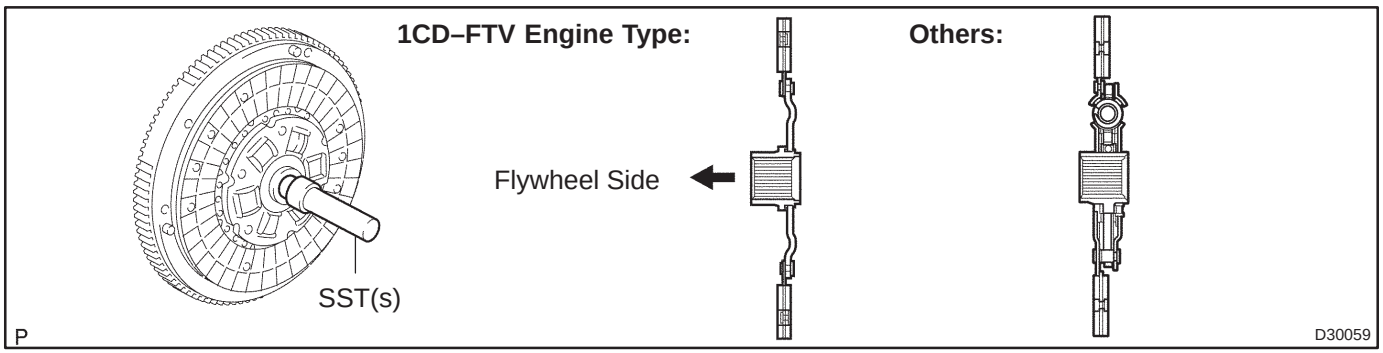

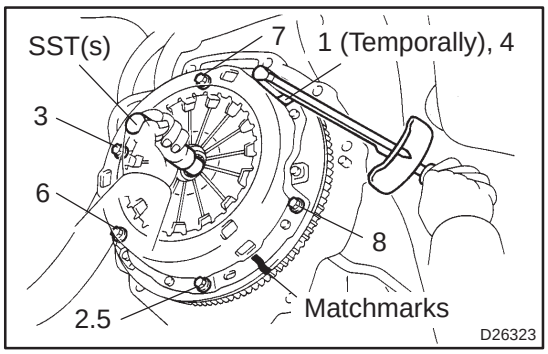

14. INSTALL CLUTCH COVER ASSY

(a) Align matchmarks on the clutch cover assy and flywheel sub–assy.

(b) Following the procedures shown in the illustration, tighten the 6 bolts, in the order starting from the bolt located near the knock pin on the top.

Torque: 19 N·m (195 kgf·cm, 14 ft·lbf)

HINT:

- Following the order in the illustration, tighten the bolts at a time evenly.
- Move SST(s) up and down, right and left lightly, after checking that the disc is in the center, and then tighten the bolts.

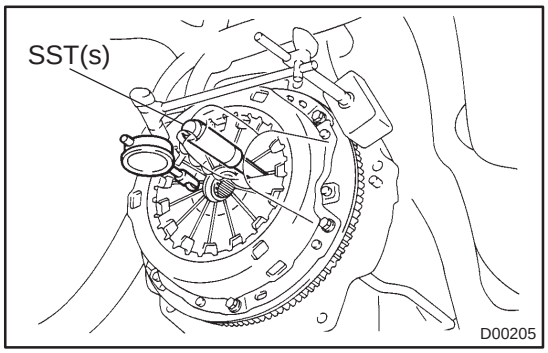

15. INSPECT AND ADJUST CLUTCH COVER ASSY

(a) Using a dial indicator with roller instrument, check the diaphragm spring tip alignment.

Maximum non–alignment: 0.5 mm (0.020 in.)

If the alignment is not as specified, adjust the diaphragm spring tip alignment using SST(s).

SST 09333–00013

16. INSTALL RELEASE FORK SUPPORT

(a) Install the release fork support to the transaxle assy.

Torque:

1ZZ–FE/3ZZ–FE/1CD–FTV Engine Type: 37 N·m (375 kgf·cm, 27 ft·lbf)

1AZ–FSE/1AZ–FE Engine Type: 47 N·m (480 kgf·cm, 35 ft·lbf)

17. INSTALL RELEASE BEARING HUB CLIP

EXCEPT 1CD–FTV Engine Type:

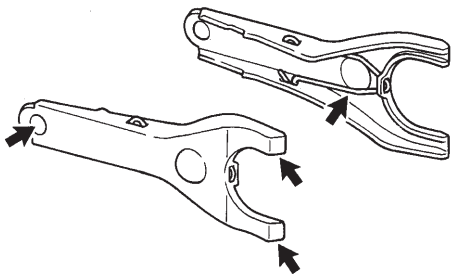

1CD–FTV Engine Type:

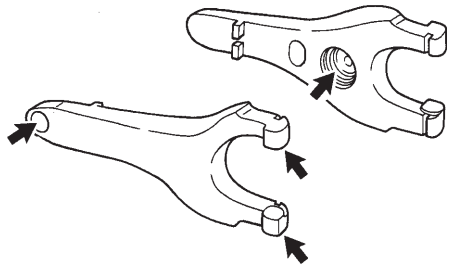

18. INSTALL CLUTCH RELEASE FORK SUB–ASSY

(a) Apply the release hub grease to the release fork and release bearing assy contact, release fork and push rod contact, and release fork pivot points.

Sealant:

Part No. 08887–01806, RELEASE HUB GREASE or equivalent

(b) Install the release fork to the release bearing assy.

19. INSTALL CLUTCH RELEASE BEARING ASSY

(a) Apply the clutch spline grease to the input shaft spline.

Sealant:

Part No. 08887–01706, CLUTCH SPLINE GREASE or equivalent

(b) Install the bearing to the release fork, and then install them to the transaxle assy.

NOTICE:

After the installation, move the folk forward and backward to check that the release bearing slides smoothly.

20. INSTALL CLUTCH RELEASE FORK BOOT

21. INSTALL MANUAL TRANSAXLE ASSY

(a) 1ZZ–FE, 3ZZ–FE Engine (See page 41–15)

(b) 1AZ–FE, 1AZ–FSE Engine (See page 41–24)

(c) 1CD–FTV Engine (See page 41–33)

STEERING SYSTEM

5000C–14

PRECAUTION

1. HANDLING PRECAUTIONS ON STEERING SYSTEM

(a) Be careful to replace the parts properly because they could affect the performance of the steering system and result in a driving hazard.

2. HANDLING PRECAUTIONS ON SRS AIRBAG SYSTEM

(a) The vehicle is equipped with SRS (Supplemental Restraint System) such as the driver airbag and front passenger airbag. Failure to carry out service operation in the correct sequence could cause the SRS to unexpectedly deploy during servicing, possibly leading to a serious accident. Before servicing (including removal or installation of parts, inspection or replacement), be sure to read the precautionary notices in the supplemental restraint system (See page 60–1).

3. HANDLING PRECAUTIONS ON STEERING COLUMN

(a) Do not give an impact to the steering column assy, especially the motor and the torque sensor. If a great impact is given (dropping it to the floor, etc.), replace it with a new one.

(b) When removing the steering column assy, do not pull the harness.

(c) When having replaced the steering column assy and/or the ECU, calibrate the zero point of the steering torque sensor.

(d) In the case of disconnecting a connector related to the power steering system, turn the ignition switch ON, set the steering wheel in the straight–ahead position and turn the ignition switch OFF before disconnecting the connector.

(e) In the case of connecting a connector related to the power steering system, make sure that the ignition switch is OFF at first. After connecting the connector, set the steering wheel assy in the straight–ahead position, and then turn the ignition switch ON.

NOTICE:

Never turn on the ignition switch when the steering wheel assy is set in order than the straight–ahead position.

(f) If the above operation is not done, the zero point of the steering torque sensor is shifted away from the proper position, making difference in the steering effort between right and left. If this happens, perform the zero point calibration of the steering torque sensor (See page 05–1042).

5000D–14

PROBLEM SYMPTOMS TABLE

HINT:

Use the table below to help you find the cause of the problem. The numbers indicate the likelihood of the cause in the descending order. Check each part in the order shown. Repair or replace these parts as necessary.

Oil pressure power steering:

Symptom	Suspect Area	See page
Hard steering	11. Tires (Improperly inflated)	28–1
	12. Power steering fluid level (Low)	51–4
	13. Drive belt (Loose)	51–4
	14. Front wheel alignment (Incorrect)	26–6
	15. Steering system joints (Worn)	–
	16. Suspension arm ball joints (Worn)	26–24
	17. Steering column (Binding)	–
	18. Power steering vane pump	51–9 51–19
	19. Power steering gear	51–36
Poor return	1. Tires (Improperly inflated)	28–1
	2. Front wheel alignment (Incorrect)	26–6
	3. Steering column (Binding)	–
	4. Power steering gear	51–36
Excessive play	1. Steering system joints (Worn)	–
	2. Suspension arm ball joints (Worn)	26–24
	3. Intermediate shaft, Sliding yoke (Worn)	–
	4. Front wheel bearing (Worn)	30–22
	5. Power steering gear	51–36
Abnormal noise	1. Power steering fluid level (Low)	51–4
	2. Steering system joints (Worn)	–
	3. Power steering vane pump	51–9 51–19
	4. Power steering gear	51–36

Electric power steering:

Symptom	Suspect Area	See page
Hard steering	1. Tires (Improperly inflated) 2. Front wheel alignment (Incorrect) 3. Steering system joints (Worn) 4. Suspension arm ball joints (Worn) 5. Steering column (Binding) 6. Steering column (Electric power steering)	28–1 26–6 – 26–24 – 50–9
Poor return	1. Tires (Improperly inflated) 2. Front wheel alignment (Incorrect) 3. Steering column (Binding) 4. Steering column (Electric power steering)	28–1 26–6 – 50–9
Excessive play	1. Steering system joints (Worn) 2. Suspension arm ball joints (Worn) 3. Intermediate shaft, Sliding yoke (Worn) 4. Front wheel bearing (Worn) 5. Steering column (Electric power steering)	– 26–24 – 30–22 50–9
Abnormal noise	1. Steering system joints (Worn) 2. Steering column (Electric power steering)	– 50–9

HINT:

When the problem occurs on the Electric Power Steering system, refer to the DI section (See page 05–1042).

5000E–04

ON–VEHICLE INSPECTION

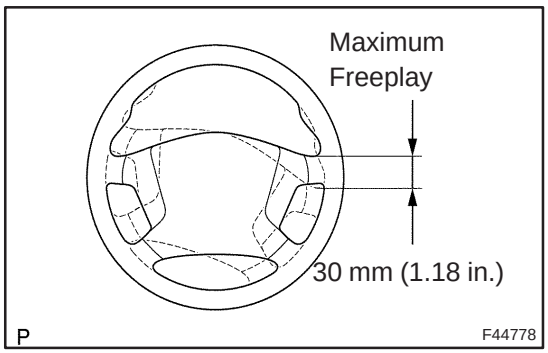

1. CHECK STEERING WHEEL FREEPLAY

(a) Stop the vehicle and face the tires straight ahead.

(b) Rock the steering wheel gently up and down with a finger lightly, check the steering wheel freeplay.

Maximum freeplay: 30 mm (1.18 in.)

STEERING COLUMN ASSY

COMPONENTS

5006X–01

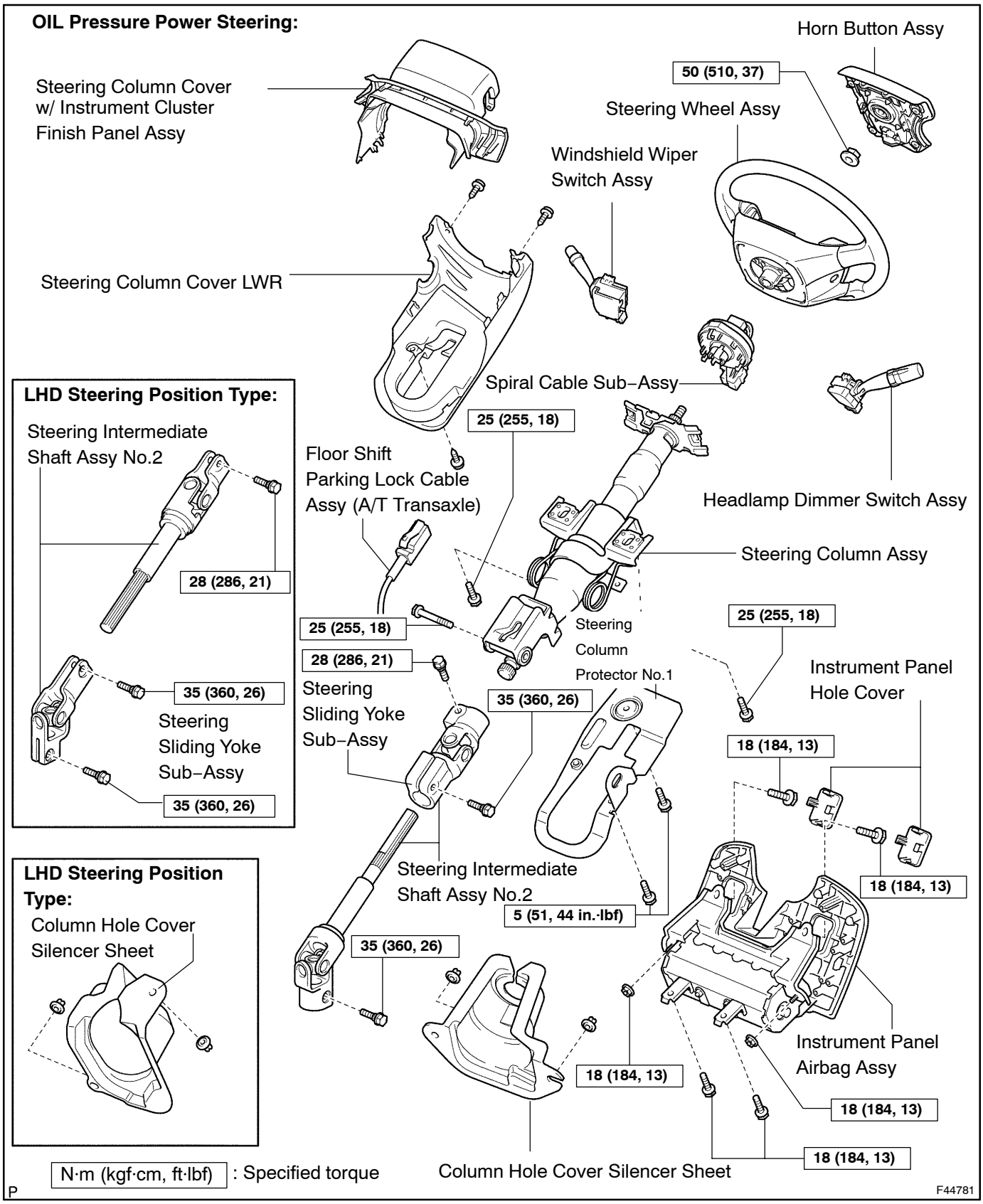

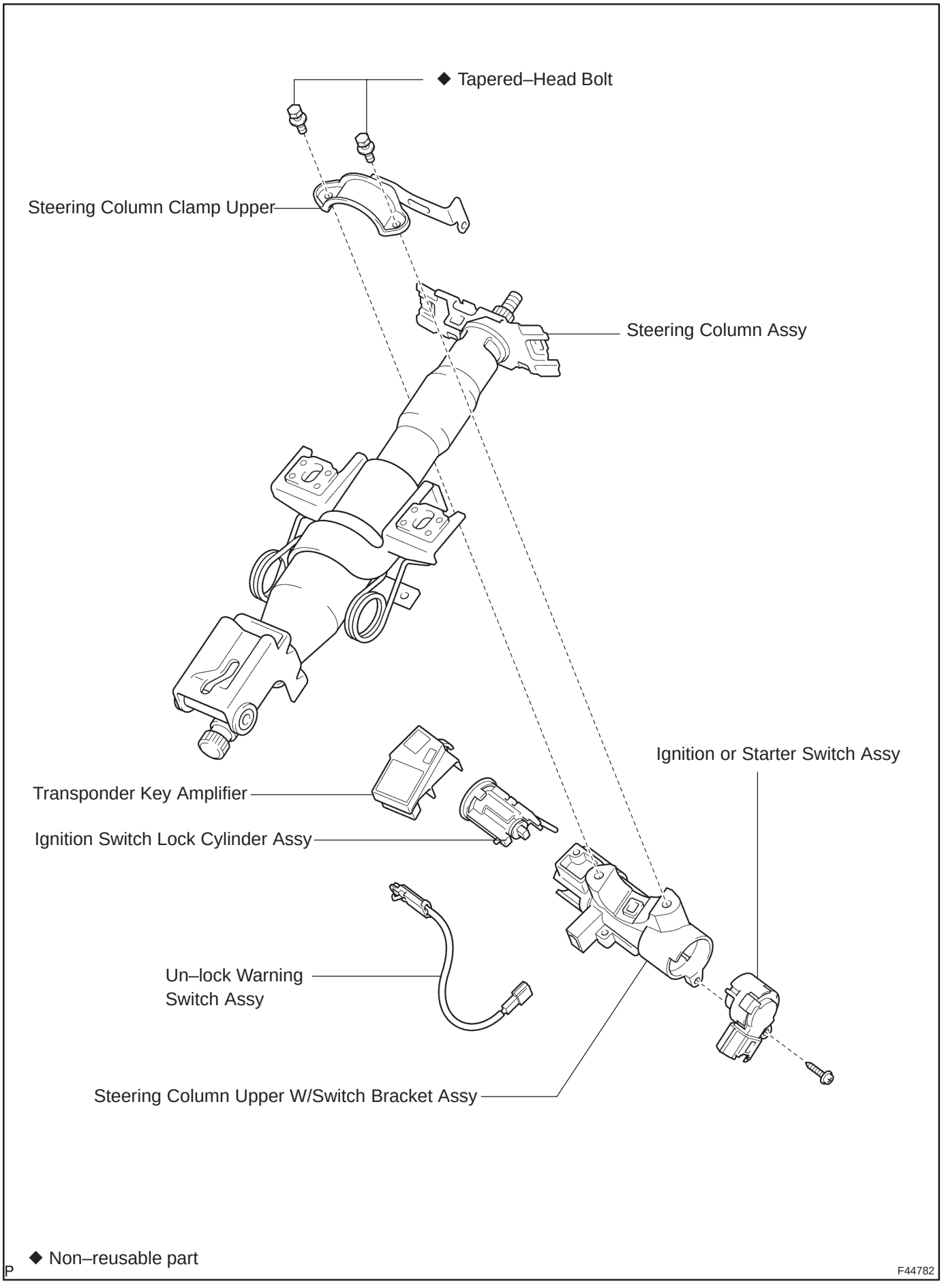
◆ Tapered–Head Bolt
Steering Column Clamp Upper
Steering Column Assy
Ignition or Starter Switch Assy
Transponder Key Amplifier
Ignition Switch Lock Cylinder Assy
Un–lock Warning
Switch Assy
Steering Column Upper W/Switch Bracket Assy
◆ Non–reusable part
P
F44782

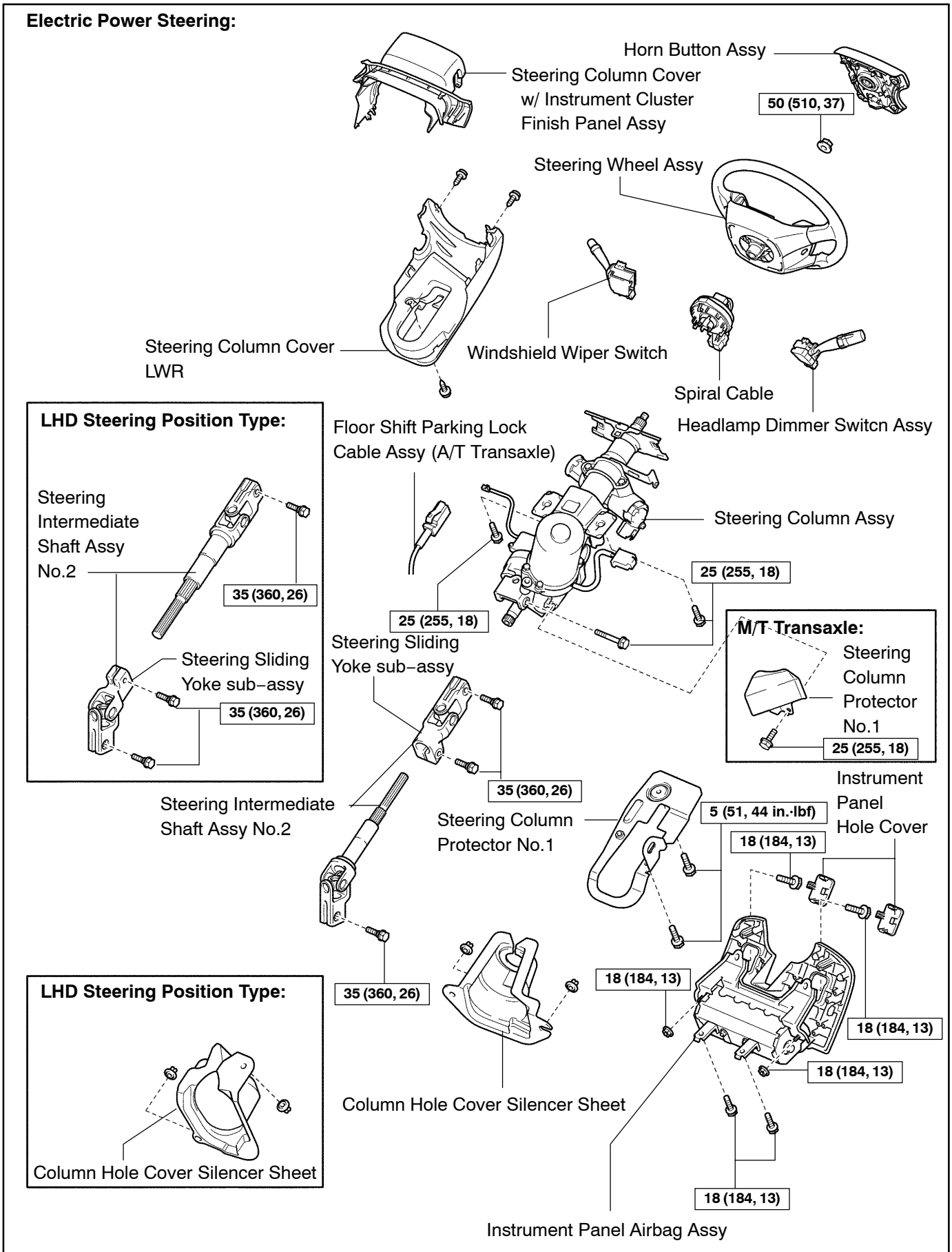
Electric Power Steering:
Horn Button Assy
Steering Column Cover w/ Instrument Cluster Finish Panel Assy
50 (510, 37)
Steering Wheel Assy
Steering Column Cover LWR
Windshield Wiper Switch
Spiral Cable
Headlamp Dimmer Switcn Assy
LHD Steering Position Type:
Steering Intermediate Shaft Assy No.2
35 (360, 26)
Steering Sliding Yoke sub–assy
35 (360, 26)
Floor Shift Parking Lock Cable Assy (A/T Transaxle)
Steering Column Assy
25 (255, 18)
25 (255, 18)
M/T Transaxle:
Steering Column Protector No.1
25 (255, 18)
Steering Sliding Yoke sub–assy
35 (360, 26)
Steering Intermediate Shaft Assy No.2
Steering Column Protector No.1
5 (51, 44 in.·lbf)
18 (184, 13)
Instrument Panel Hole Cover
35 (360, 26)
18 (184, 13)
18 (184, 13)
18 (184, 13)
LHD Steering Position Type:
Column Hole Cover Silencer Sheet
Column Hole Cover Silencer Sheet
18 (184, 13)
Instrument Panel Airbag Assy
N·m (kgf·cm, ft·lbf) : Specified torque
P
F44779

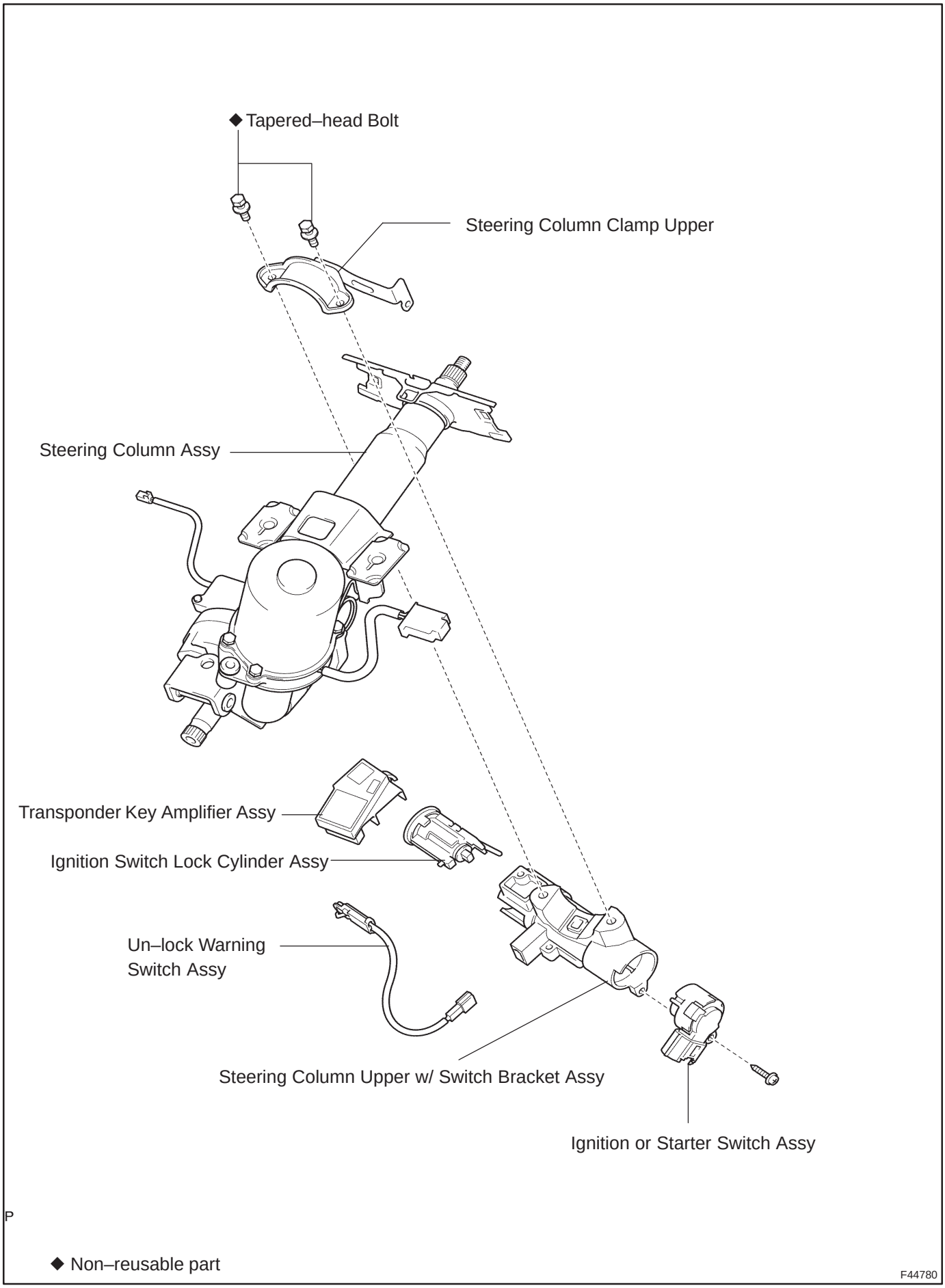
◆ Tapered–head Bolt
Steering Column Clamp Upper
Steering Column Assy
Transponder Key Amplifier Assy
Ignition Switch Lock Cylinder Assy
Un–lock Warning
Switch Assy
Steering Column Upper w/ Switch Bracket Assy
Ignition or Starter Switch Assy
◆ Non–reusable part
F44780

5006Y–01

OVERHAUL

1. PRECAUTION (See page 60–1)
2. INSPECT PLACE FRONT WHEELS FACING STRAIGHT AHEAD
3. DISCONNECT BATTERY NEGATIVE TERMINAL (See page 60–1)

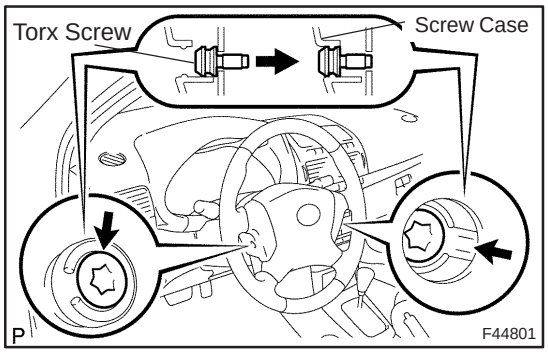

4. REMOVE HORN BUTTON ASSY

NOTICE:

If the airbag connector is disconnected with the ignition switch at ON, DTCs is recorded.

(a) Using a torx socket wrench, loosen the 2 torx screws until the groove along the screw circumference catches on the screw case.

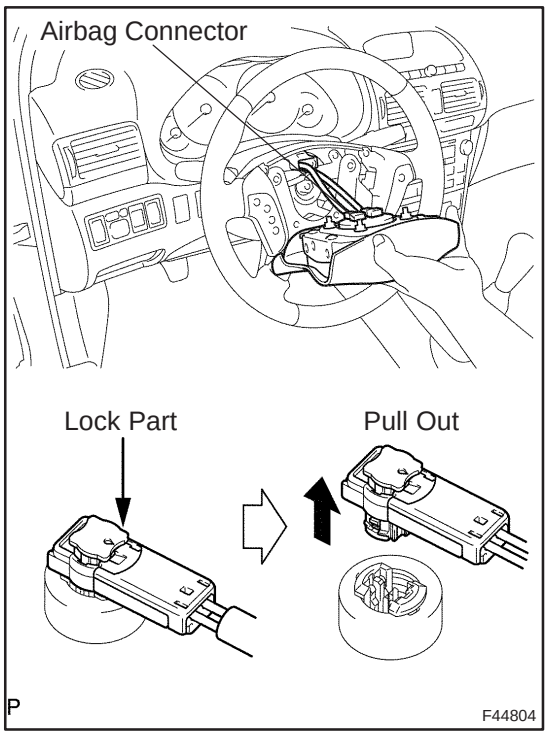

(b) Pull out the horn button assy from the steering wheel and disconnect the airbag connector.

(c) Disconnect the terminal.

NOTICE:

When removing the horn button assy, take care not to pull the airbag wire harness.

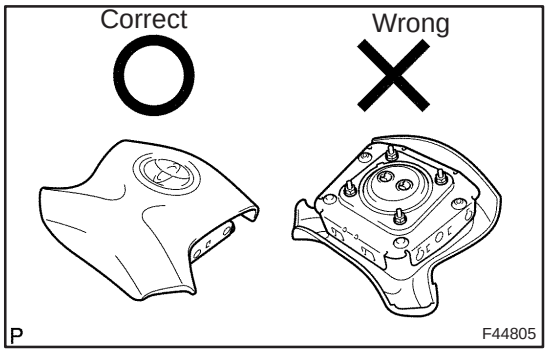

CAUTION:

- **When storing the horn button assy, keep the upper surface of the horn button assy facing upward.**
- **Never disassemble the horn button assy.**

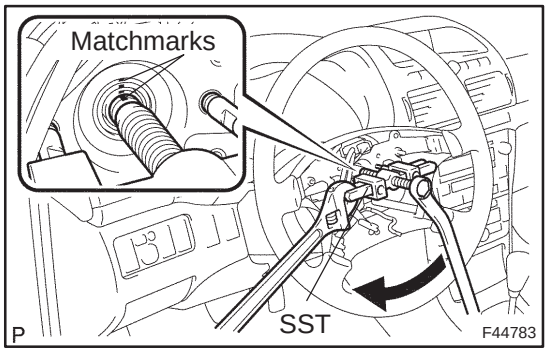

5. REMOVE STEERING WHEEL ASSY

(a) Remove the steering wheel assy set nut.

(b) Place matchmarks on the steering wheel assy and steering main shaft assy.

(c) Using SST, remove the steering wheel assy.

SST 09950–50013 (09951–05010, 09952–05010, 09953–05020, 09954–05021)

6. REMOVE INSTRUMENT PANEL UNDER COVER SUB–ASSY NO.1 (See page 71–11)

7. REMOVE INSTRUMENT PANEL HOLE COVER (See page 60–54)

8. REMOVE INSTRUMENT PANEL AIR BAG ASSY (See page 60–54)

9. REMOVE INSTRUMENT CLUSTER FINISH PANEL GARNISH NO.1 (ELECTRIC POWER STEERING) (See page 71–11)

10. REMOVE INSTRUMENT CLUSTER FINISH PANEL GARNISH NO.2 (ELECTRIC POWER STEERING) (See page 71–11)

11. REMOVE INSTRUMENT PANEL REGISTER ASSY CTR (ELECTRIC POWER STEERING) (See page 71–11)

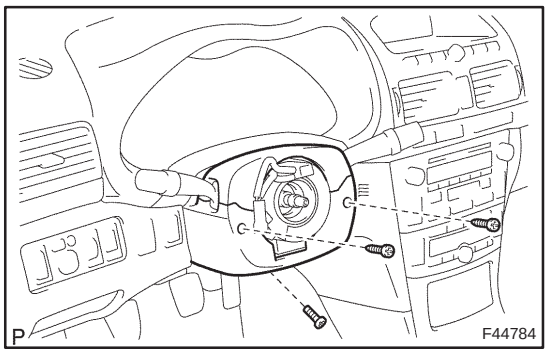

12. REMOVE STEERING COLUMN COVER LWR

(a) Remove the 3 screws and steering column cover LWR.

13. REMOVE STEERING COLUMN COVER W/INSTRUMENT CLUSTER FINISH PANEL ASSY

(a) Disengage the 2 clips and remove the steering column cover w/instrument cluster finish panel assy.

14. REMOVE COMBINATION METER ASSY (ELECTRIC POWER STEERING) (See page 71–11)

15. REMOVE INSTRUMENT PANEL REGISTER ASSY NO.1 (ELECTRIC POWER STEERING) (See page 71–11)

16. REMOVE INSTRUMENT PANEL REGISTER ASSY NO.2 (ELECTRIC POWER STEERING) (See page 71–11)

17. REMOVE GLOVE COMPARTMENT DOOR ASSY (ELECTRIC POWER STEERING) (See page 71–11)

18. REMOVE FRONT PILLAR GARNISH LH (ELECTRIC POWER STEERING) (See page 71–11)

19. REMOVE FRONT PILLAR GARNISH RH (ELECTRIC POWER STEERING) (See page 71–11)

20. DISCONNECT PASSENGER AIRBAG CONNECTOR (ELECTRIC POWER STEERING) (See page 71–11)

21. REMOVE INSTRUMENT PANEL SUB–ASSY UPPER W/INSTR PNL PASS L/DOOR AIR BAG ASSY (ELECTRIC POWER STEERING) (See page 71–11)

22. REMOVE HEADLAMP DIMMER SWITCH ASSY (See page 65–27)

23. REMOVE WINDSHIELD WIPER SWITCH ASSY (See page 66–24)

24. REMOVE SPIRAL CABLE SUB–ASSY (See page 60–26)

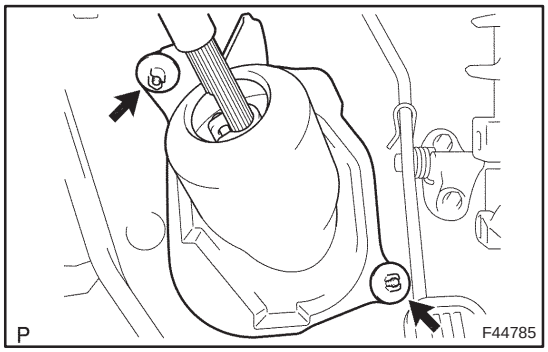

25. REMOVE COLUMN HOLE COVER SILENCER SHEET

(a) Remove the 2 nuts and column hole cover silencer sheet.

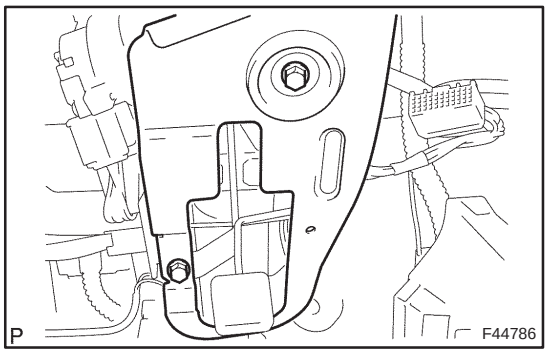

26. REMOVE STEERING COLUMN PROTECTOR NO.1

(a) Separate the wire harness clamp from the steering column protector No.1.

(b) Remove the 2 bolts and steering column protector No.1.

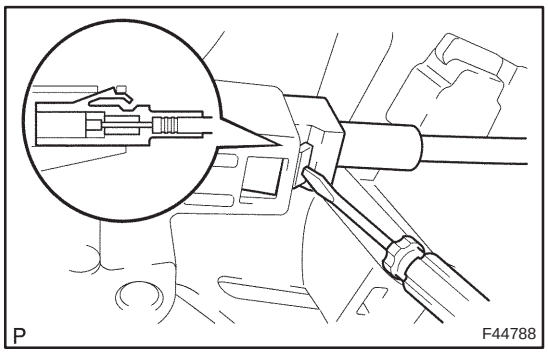

27. DISCONNECT FLOOR SHIFT PARKING LOCK CABLE ASSY (A/T TRANSAXLE)

(a) Turn the ignition switch to ON.

(b) Using a screwdriver, disengage the claw and separate the floor shift parking lock cable.

28. DISCONNECT POWER STEERING ECU ASSY (ELECTRIC POWER STEERING)

NOTICE:

Thoroughly check the procedures for removing and installing the power steering ECU assy when replacing it. Do the same for the removing and installing the steering column assy.

(a) Mark the clamp position on the torque sensor wire harness in order to reinstall the wire harness as shown in the illustration.

(b) Disconnect the torque sensor wire harness from the clamp.

NOTICE:

In case the clamp will be reused, pay attention so as not to damage it.

(c) Disconnect the 2 connectors.

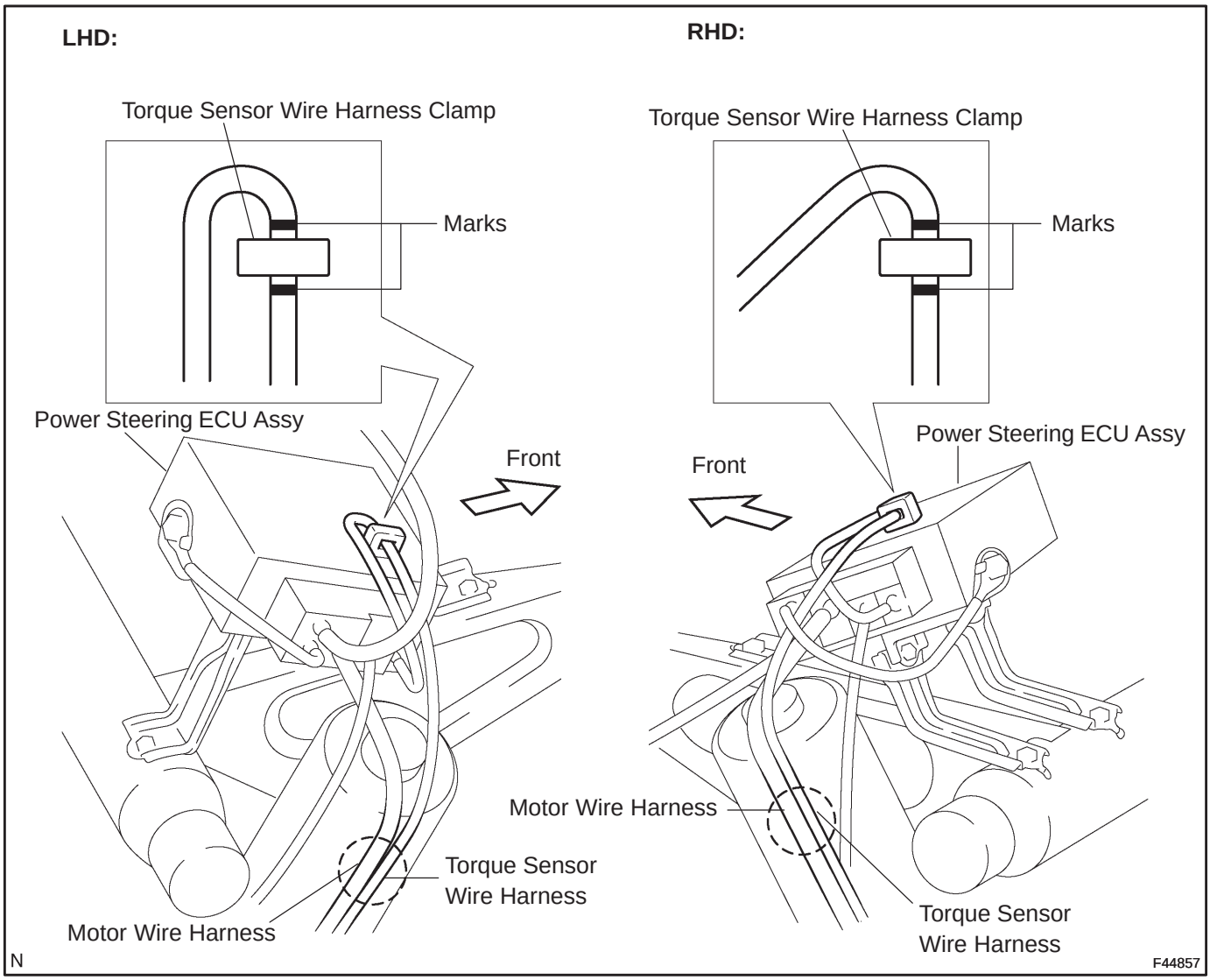

29. REMOVE STEERING COLUMN ASSY

(a) Disconnect the wire harness and wire harness clamps.

(b) Loosen the 3 steering column assy set bolts.

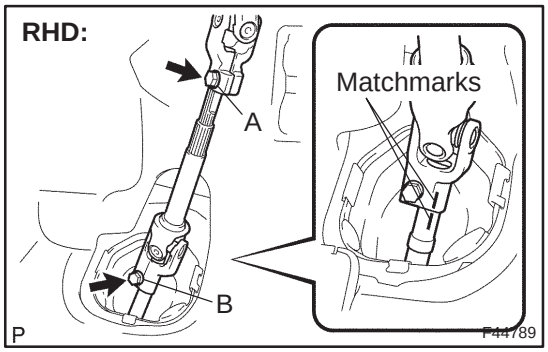

(c) RHD:
Place matchmarks on the intermediate shaft assy No. 2 and steering intermediate shaft.

(d) RHD:
Loosen the bolt A and remove the bolt B, then disconnect the intermediate shaft assy No.2.

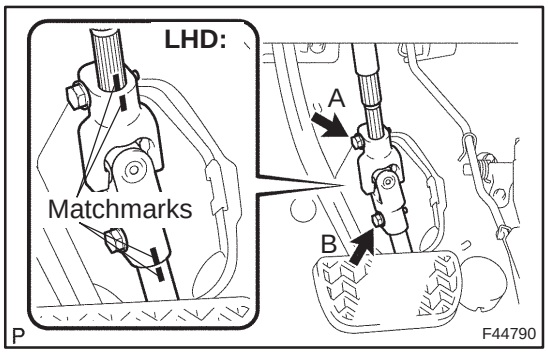

(e) LHD:
Place matchmarks on the steering sliding yoke sub–assy and steering intermediate shaft.

(f) LHD:
Loosen the bolt A and remove the bolt B, then disconnect the steering sliding yoke sub–assy.

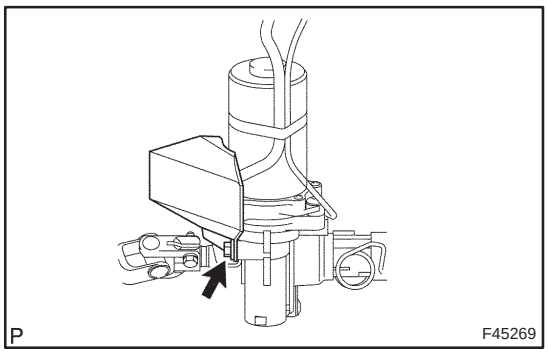

(g) RHD, M/T:
Remove the bolt and protector.

(h) Remove the 3 bolts and steering column assembly.

30. REMOVE STEERING INTERMEDIATE SHAFT ASSY NO.2 (RHD STEERING POSITION TYPE)

(a) Remove the bolt A and steering intermediate shaft assy No. 2.

31. REMOVE STEERING SLIDING YOKE SUB–ASSY (LHD STEERING POSITION TYPE)

(a) Remove the bolt A and steering sliding yoke sub–assy.

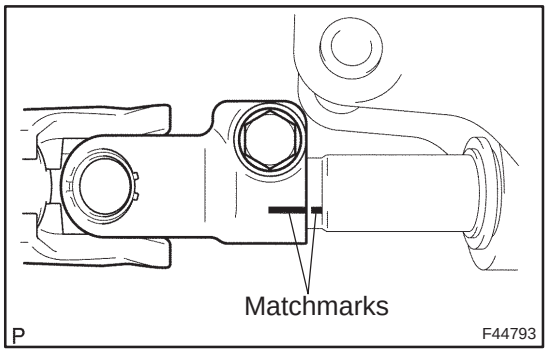

32. REMOVE STEERING SLIDING YOKE SUB–ASSY (RHD STEERING POSITION TYPE)

(a) Place matchmarks on the steering sliding yoke sub–assy and steering main shaft.

(b) Remove the bolt and steering sliding yoke sub–assy.

(c) W/VSC:
Remove the steering sensor (See page 32–65).

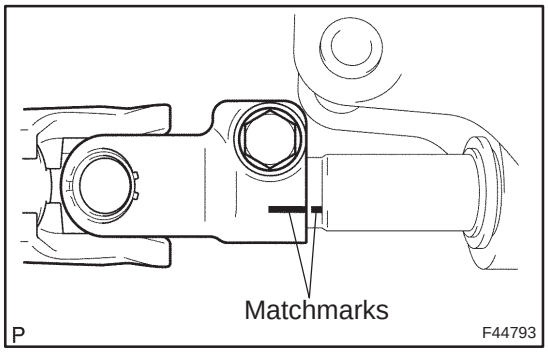

33. REMOVE STEERING INTERMEDIATE SHAFT ASSY NO.2 (LHD STEERING POSITION TYPE)

(a) Place matchmarks on the steering intermediate shaft assy No. 2 and steering main shaft.

(b) Remove the bolt and steering intermediate shaft assy No. 2.

(c) W/VSC:
Remove the steering sensor (See page 32–65).

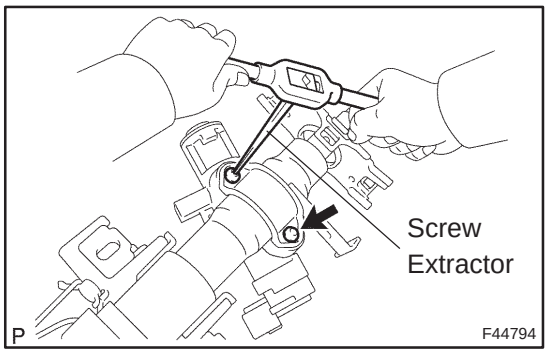

34. REMOVE STEERING COLUMN UPPER W/SWITCH BRACKET ASSY

(a) Using a centering punch, mark the center of the 2 tapered–head bolts.

(b) Using a 3 – 4 mm (0.12 – 0.16 in.)drill, drill into the 2 bolts.

(c) Using a screw extractor, remove the 2 bolts and steering column upper with switch bracket assy.

NOTICE:
Do not give the strong force to the motor part.

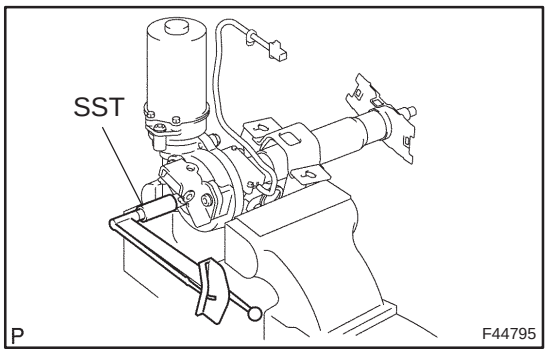

35. INSPECT STEERING COLUMN ASSY (ELECTRIC POWER STEERING)

(a) Using SST and a torque wrench, check the rotating torque.
SST 09616–00011
Rotating torque (1 turn for 2 sec.):
0.4 – 1.1 N·m (4 – 11 kgf·cm, 3.5 – 9.5 in.·lbf)

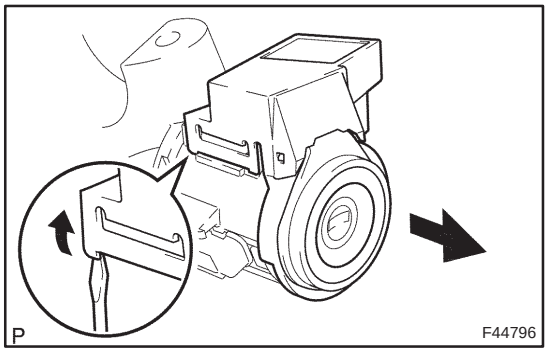

36. REMOVE TRANSPONDER KEY AMPLIFIER

(a) Widen the claw hung on the upper bracket by approx. 1.0 mm (0.039 in.) using a screwdriver.

(b) Pull the transponder key amplifier toward the rear of the vehicle with the claw open.

NOTICE:
Take care not to use excessive force to prevent the case from being damaged.

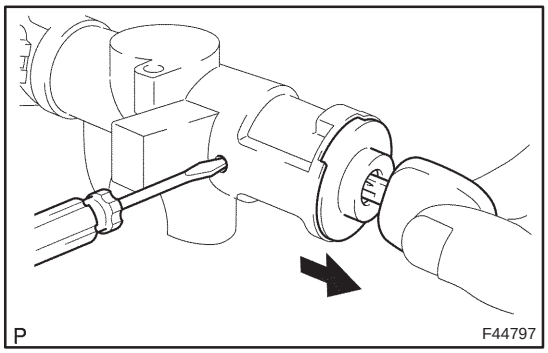

37. REMOVE IGNITION SWITCH LOCK CYLINDER ASSY

(a) Place the ignition switch lock cylinder assy at the ACC position.

(b) Push down the stop pin with a screwdriver, and pull out the cylinder assy.

38. REMOVE UN–LOCK WARNING SWITCH ASSY

(a) Slide the unlock warning switch assy out of the steering column upper bracket.

39. REMOVE IGNITION OR STARTER SWITCH ASSY

(a) Remove the 2 screws and ignition or starter switch assy.

40. INSTALL IGNITION OR STARTER SWITCH ASSY

(a) Install the ignition or starter switch assy to the steering column upper w/switch bracket assy with the 2 screws.

41. INSTALL UN–LOCK WARNING SWITCH ASSY

(a) Install the un–lock warning switch assy.

(b) Connect the un–lock warning switch assy connector to the ignition or starter switch assy.

42. INSTALL IGNITION SWITCH LOCK CYLINDER ASSY

(a) Make sure of the ignition switch lock cylinder assy at the ACC position.

(b) Install the ignition switch lock cylinder assy.

43. INSPECT STEERING LOCK OPERATION

(a) Check that the steering lock mechanism is activated when removing the key.

(b) Check that the steering lock mechanism is deactivated when inserting the key and turning it to ACC position.

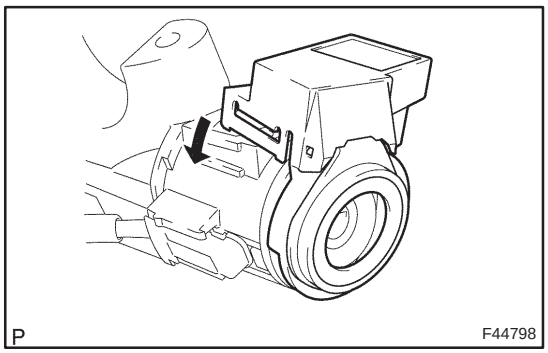

44. INSTALL TRANSPONDER KEY AMPLIFIER

(a) Align the transponder key amplifier with the installation position of the upper bracket with the amplifier inclined.

(b) Push the transponder key amplifier up and connect it to the upper bracket.

NOTICE:

Take care not to push the amplifier up with excessive force to prevent it from being damaged.

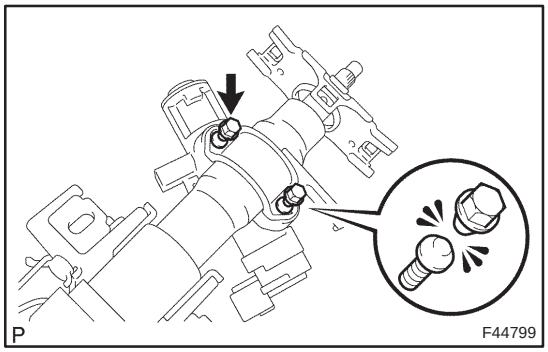

45. INSTALL STEERING COLUMN UPPER W/SWITCH BRACKET ASSY

(a) Temporarily install the steering column upper with switch bracket assy and steering column upper clamp with 2 new tapered–head bolts.

(b) Tighten the 2 tapared–head bolts until the bolt heads break off.

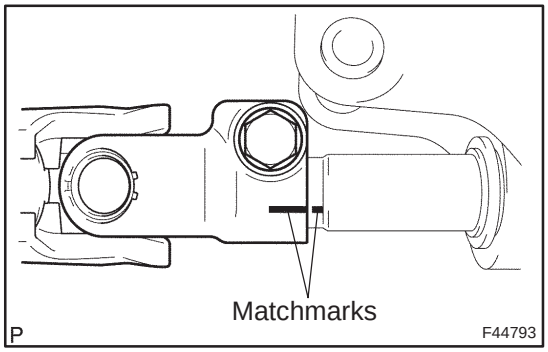

46. INSTALL STEERING SLIDING YOKE SUB–ASSY (RHD STEERING POSITION TYPE)

(a) W/VSC:
Install the steering sensor (See page 32–65).

(b) Align matchmarks on the steering sliding yoke and steering main shaft.

(c) Oil Pressure Power Steering

(1) Install the steering sliding yoke with the bolt.

Torque: 28 N·m (286 kgf·cm, 21 ft·lbf)

(d) Electric Pressure Power Steering
(1) Install the steering sliding yoke with the bolt.
Torque: 35 N·m (360 kgf·cm, 26 ft·lbf)

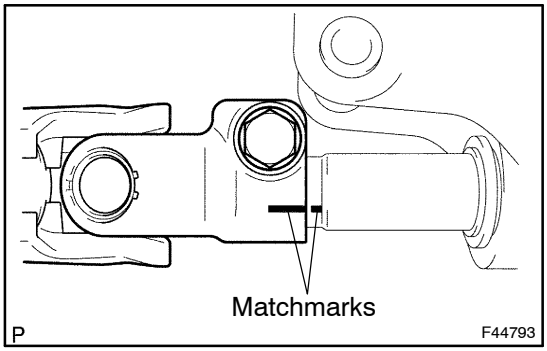

47. INSTALL STEERING INTERMEDIATE SHAFT ASSY NO.2 (LHD STEERING POSITION TYPE)
(a) W/VSC:
Install the steering sensor (See page 32–65).
(b) Align matchmarks on the steering intermediate shaft assy No. 2 and steering main shaft.
(c) Oil Pressure Power Steering
(1) Install the steering intermediate shaft assy No. 2 with the bolt.
Torque: 28 N·m (286 kgf·cm, 21 ft·lbf)
(d) Electric Pressure Power Steering
(1) Install the steering intermediate shaft assy No. 2 with the bolt.
Torque: 35 N·m (360 kgf·cm, 26 ft·lbf)

48. INSTALL STEERING INTERMEDIATE SHAFT ASSY NO.2 (RHD STEERING POSITION TYPE)
(a) Temporarily install the steering intermediate shaft assy No. 2 with the bolt A.

49. INSTALL STEERING SLIDING YOKE SUB–ASSY (LHD STEERING POSITION TYPE)
(a) Temporarily install the steering sliding yoke with the bolt A.

50. INSTALL STEERING COLUMN ASSY
(a) Install the steering column assembly with the 3 bolts.
Torque: 25 N·m (255 kgf·cm, 18 ft·lbf)

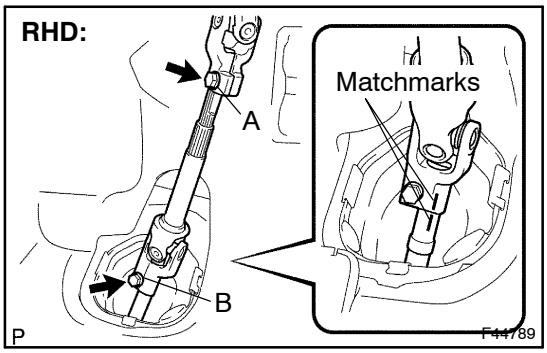

(b) RHD:
Align the matchmarks on the intermediate shaft assy No. 2 and steering intermediate shaft.
(c) RHD:
Install the bolt B and tighten the bolt A.
Torque: 35 N·m (360 kgf·cm, 26 ft·lbf)

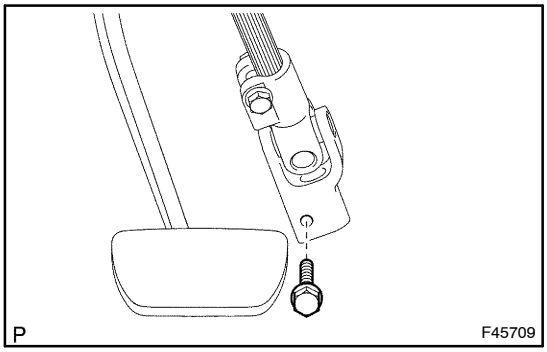

HINT:
When replacing the intermediate shaft assy No. 2 with a new one, set the front tires in the straight ahead position and make the bolt hole for the intermediate shaft assy No. 2 and extension face straight rearward as illustrated, and install the bolt.

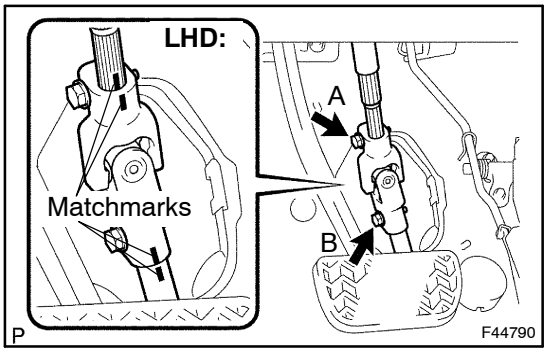

(d) LHD:
Align matchmarks on the sliding yoke and steering intermediate shaft.

(e) LHD:
Install the bolt B and tighten the bolt A.
Torque: 35 N·m (360 kgf·cm, 26 ft·lbf)

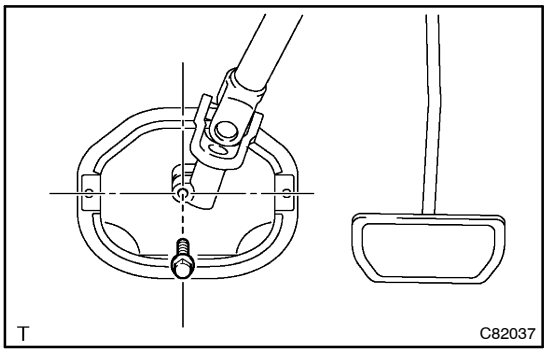

HINT:
When replacing the sliding yoke with a new one, set the front tires in the straight ahead position and make the bolt hole for the yoke and extension face straight rearward as illustrated, and install the bolt.

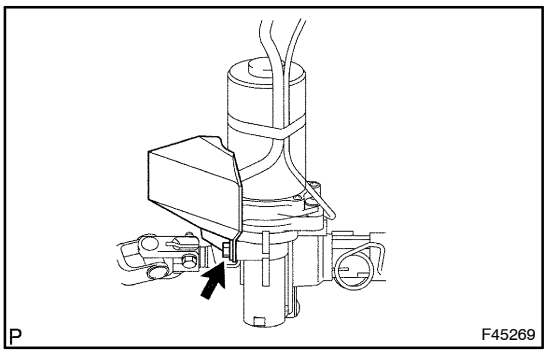

(f) RHD, M/T:
Install the protector with the bolt.
Torque: 25 N·m (255 kgf·cm, 18 ft·lbf)

51. INSTALL FLOOR SHIFT PARKING LOCK CABLE ASSY (A/T TRANSAXLE) **(See page 40–74)**

52. CONNECT POWER STEERING ECU ASSY (ELECTRIC POWER STEERING)

(a) Connect the 2 connectors.

(b) Align the marks on the torque sensor wire harness with the clamp, as shown in the illustration.

NOTICE:

- **When reusing the clamp, check that there is no damage on it.**
- **When reinstalling the wire harness, make sure there is no twist in the harness or with other wire harness.**

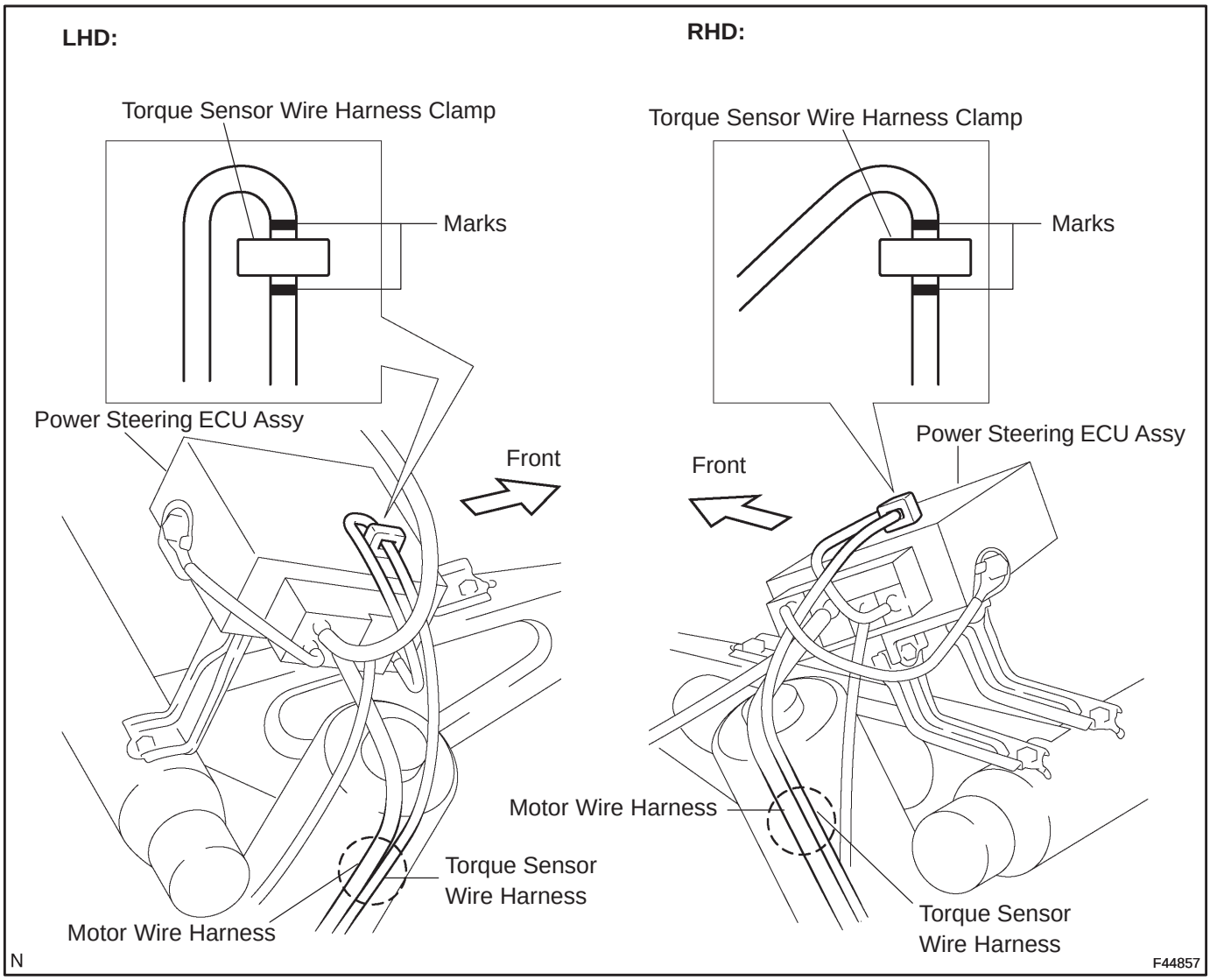

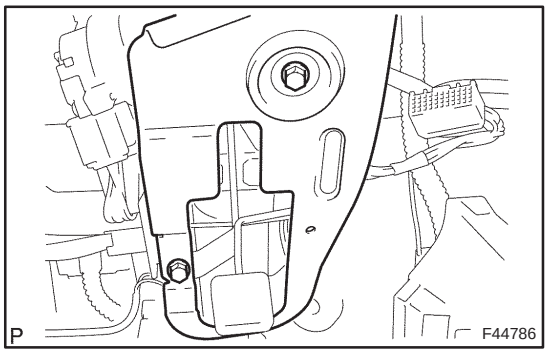

53. INSTALL STEERING COLUMN PROTECTOR NO.1

(a) Install the steering column protector with the 2 bolts.
Torque: 5 N·m (51 kgf·cm, 44 ft·lbf)

(b) Connect the wire harness clamp to the steering colum protector No.1.

54. INSTALL INSTRUMENT PANEL AIR BAG ASSY (See page 60–54)
55. INSTALL COLUMN HOLE COVER SILENCER SHEET
56. PLACE FRONT WHEELS FACING STRAIGHT AHEAD
57. INSTALL SPIRAL CABLE SUB–ASSY (See page 60–26)

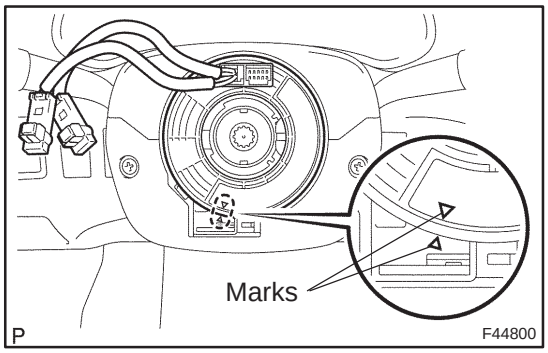

58. CENTER SPIRAL CABLE
(a) Check that the front wheels are facing straight ahead.
(b) Turn the cable counterclockwise by hand until it becomes harder to turn.
(c) Then rotate the cable clockwise about 2.5 turns to align the marks.

HINT:
The cable will rotate about 2.5 turns to either left or right of the center.

59. INSTALL STEERING WHEEL ASSY
(a) Align matchmarks on the steering wheel and main shaft assembly.
(b) Install the steering wheel set nut.
Torque: 50 N·m (510 kgf·cm, 37 ft·lbf)
(c) Connect the connector.

60. INSTALL HORN BUTTON ASSY
NOTICE:
- **Never use airbag parts from another vehicle. When replacing parts, replace with new ones.**
- **Make sure the horn button assy is installed with the specified torque.**
- **If the horn button assy has been dropped, or there are cracks, dents or other defects in the case or connector, replace the horn button assy with a new one.**
- **When installing the horn button assy, take care that the wirings do not interfere with other parts and that they are not pinched between other parts.**

(a) Connect the terminal.
(b) Connect the airbag connector.

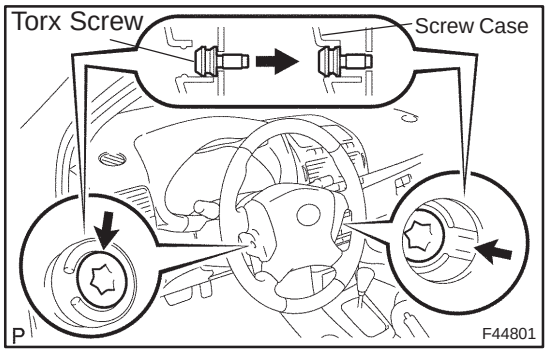

(c) Install the steering horn button assy after confirming that the circumference groove of the torx screws is caught on the screw case.
(d) Using a torx socket wrench, torque the 2 screws.
Torque: 8.8 N·m (90 kgf·cm, 78 in.·lbf)

61. STEERING WHEEL CENTER POINT
62. CONNECT BATTERY NEGATIVE TERMINAL
63. INSPECT SRS WARNING LIGHT(See page 05–1184)
64. PERFORM CALIBRATION OF TORQUE SENSOR ZERO POINT (ELECTRIC POWER STEERING) (See page 05–1045)

POWER STEERING ECU ASSY

5006Z–01

REPLACEMENT

1. PRECAUTION (See page 60–1)
2. DISCONNECT BATTERY NEGATIVE TERMINAL (See page 60–1)
3. REMOVE INSTRUMENT CLUSTER FINISH PANEL GARNISH NO.1 (See page 71–11)
4. REMOVE INSTRUMENT CLUSTER FINISH PANEL GARNISH NO.2 (See page 71–11)
5. REMOVE INSTRUMENT PANEL REGISTER ASSY CTR (See page 71–11)
6. REMOVE STEERING COLUMN COVER LWR (See page 50–9)
7. REMOVE STEERING COLUMN COVER W/INSTRUMENT CLUSTER FINISH PANEL ASSY (See page 50–9)
8. REMOVE COMBINATION METER ASSY (See page 71–11)
9. REMOVE INSTRUMENT PANEL REGISTER ASSY NO.1 (See page 71–11)
10. REMOVE INSTRUMENT PANEL REGISTER ASSY NO.2(See page 71–11)
11. REMOVE GLOVE COMPARTMENT DOOR ASSY (See page 71–11)
12. REMOVE FRONT PILLAR GARNISH LH (See page 71–11)
13. REMOVE FRONT PILLAR GARNISH RH (See page 71–11)
14. DISCONNECT PASSENGER AIRBAG CONNECTOR(See page 71–11)
15. REMOVE INSTRUMENT PANEL SUB–ASSY UPPER W/INSTR PNL PASS L/DOOR AIR BAG ASSY (See page 71–11)

16. REMOVE POWER STEERING ECU ASSY

NOTICE:

Thoroughly check the procedures for removing and installing the power steering ECU assy when replacing it. Do the same for the removing and installing the steering column assy.

(a) Mark the clamp position on the torque sensor wire harness in order to reinstall the wire harness as shown in the illustration.

(b) Disconnect the torque sensor wire harness from the clamp.

NOTICE:

In case the clamp will be reused, pay attention so as not to damage it.

(c) Disconnect the 4 connectors.

(d) LHD:

(1) Remove the 2 bolts,screw and power steering ECU assy.

(e) RHD:

(1) Remove the 2 bolts,2 screw and power steering ECU assy.

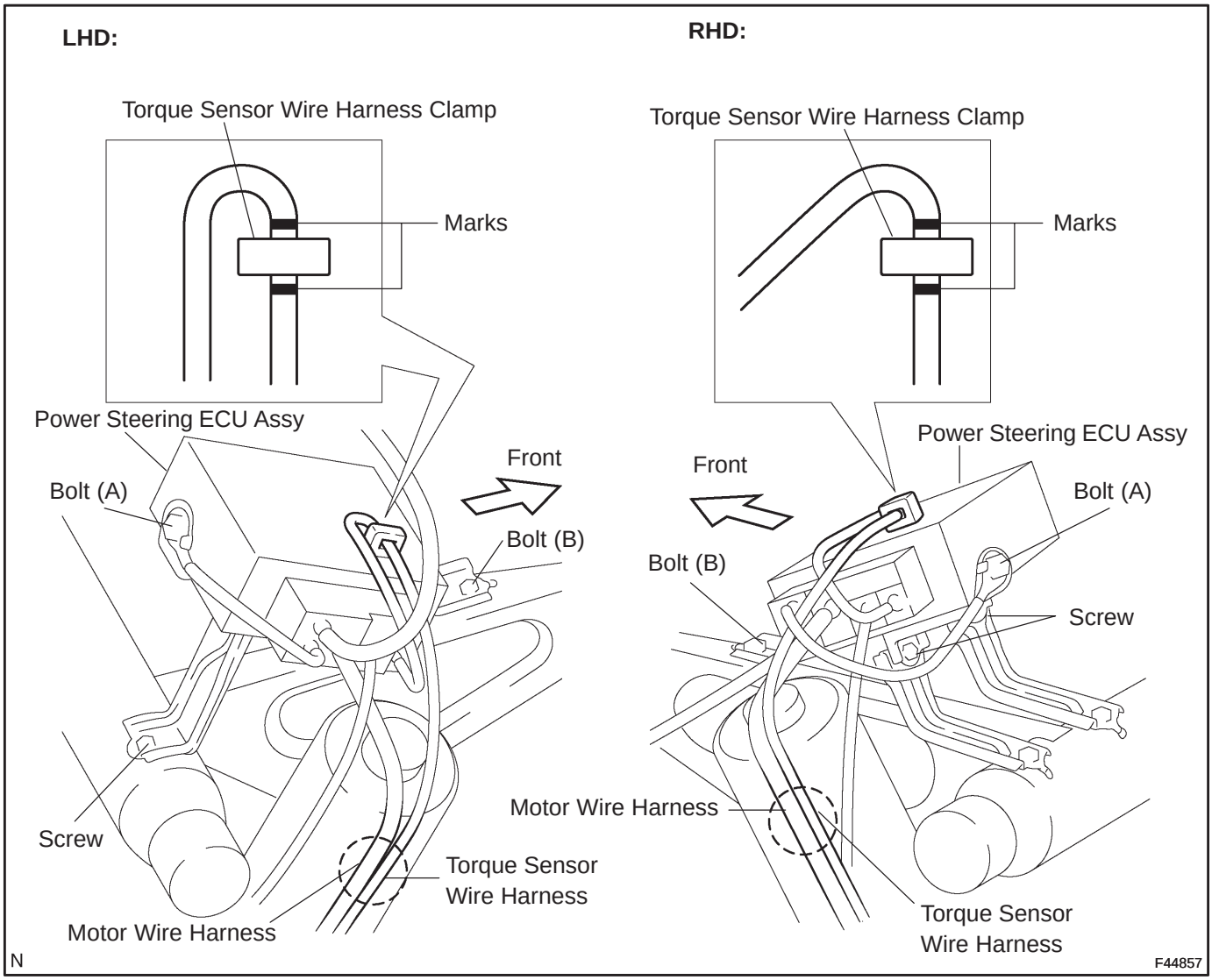

17. INSTALL POWER STEERING ECU ASSY

(a) LHD:
Install the power steering ECU assy with the 2 bolts and screw.
Torque:
BOLT (A): 8.0 N·m (82 kgf·cm, 71 in.·lbf)
BOLT (B): 15.5 N·m (158 kgf·cm, 11 ft·lbf)

(b) RHD:
Install the power steering ECU assy with the 2 bolts and 2 screws.
Torque:
BOLT (A): 8.0 N·m (82 kgf·cm, 71 in.·lbf)
BOLT (B): 15.5 N·m (158 kgf·cm, 11 ft·lbf)

(c) Connect the 4 connectors.

(d) Align the marks on the torque sensor wire harness with the clamp, as shown in the illustration.

NOTICE:

- **When reusing the clamp, check that there is no damage on it.**
- **When reinstalling the wire harness, make sure there is no twist in the harness or with other wire harness.**

18. CONNECT BATTERY NEGATIVE TERMINAL

19. INSPECT SRS WARNING LIGHT (See page 05–1184)

20. PERFORM CALIBRATION OF TORQUE SENSOR ZERO POINT (See page 05–1045)

POWER STEERING SYSTEM

5100F–06

PRECAUTION

1. HANDLING PRECAUTIONS ON STEERING SYSTEM

(a) Care must be taken to replace parts properly because they could affect the performance of the steering system and result in a driving hazard.

2. HANDLING PRECAUTIONS ON SRS AIRBAG SYSTEM

(a) The vehicle is equipped with SRS (Supplemental Restraint System) such as the driver airbag and front passenger airbag. Failure to carry out service operation in the correct sequence could cause the SRS to unexpectedly deploy during servicing, possibly leading to a serious accident. Before servicing (including removal or installation of parts, inspection or replacement), be sure to read the precautionary notices in the supplemental restraint system (See page 60–1).

5100G–06

PROBLEM SYMPTOMS TABLE

HINT:

Use the table below to help you find the cause of the problem. The numbers indicate the likelihood of the cause in the descending order. Check each part in the order shown. Replace parts if necessary.

Hydraulic Power Steering System:

Symptom	Suspect Area		See page
Hard steering	3. Tires (Improperly inflated)		28–1
	4. Power steering fluid level (Low)		51–4
	5. Drive belt (Loose)		
	6. Front wheel alignment (Incorrect)		26–6
	7. Steering system joints (Worn)		–
	8. Suspension arm ball joints (Worn)		26–24
	9. Steering column (Binding)		–
	10. Power steering vane pump	AZ Series:	51–9
		1CD–FTV:	51–19
	11. Power steering gear		51–4
			51–36
Poor return	1. Tires (Improperly inflated)		28–1
	2. Front wheel alignment (Incorrect)		26–6
	3. Steering column (Binding)		–
	4. Power steering gear		51–4
			51–36
Excessive play	1. Steering system joints (Worn)		–
	2. Suspension arm ball joints (Worn)		26–24
	3. Intermediate shaft, Sliding yoke (Worn)		–
	4. Front wheel bearing (Worn)		30–2
	5. Power steering gear		51–4
			51–36
Abnormal noise	1. Power steering fluid level (Low)		51–4
	2. Steering system joints (Worn)		–
	3. Power steering vane pump	AZ Series:	51–9
		1CD–FTV:	51–19
	4. Power steering gear		51–4
			51–36

Electronic Power Steering System:

Symptom	Suspect Area	See page
Hard steering	1. Tires (Improperly inflated)	28–1
	2. Front wheel alignment (Incorrect)	26–6
	3. Steering system joints (Worn)	–
	4. Suspension arm ball joints (Worn)	26–24
	5. Steering column (Binding)	–
	6. Steering column (Electric power steering system)	50–9
	7. Steering gear (torque)	51–28
Poor return	1. Tires (Improperly inflated)	28–1
	2. Front wheel alignment (Incorrect)	26–6
	3. Steering column (Binding)	–
	4. Steering column (Electric power steering system)	50–9
	5. Steering gear (torque)	51–28
Excessive play	1. Steering system joints (Worn)	–
	2. Suspension arm ball joints (Worn)	26–24
	3. Intermediate shaft, Sliding yoke (Worn)	–
	4. Front wheel bearing (Worn)	30–2
	5. Steering column (Electric power steering system)	50–9
	6. Steering gear (torque)	51–28
Abnormal noise	1. Steering system joints (Worn)	–
	2. Steering column (Electric power steering system)	50–9
	3. Steering gear (torque)	51–28

HINT:

When the problem occurs on the Electric Power Steering system, refer to the DI section (See page 05–1042).

510DE–02

ON–VEHICLE INSPECTION

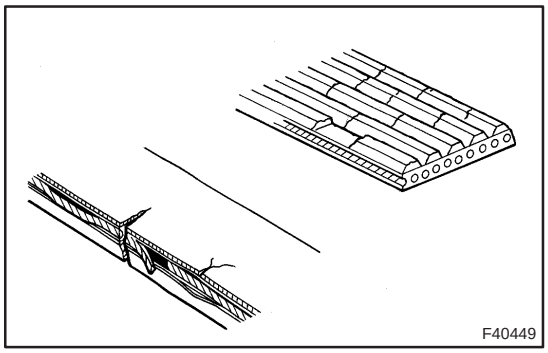
F40449

1. INSPECT DRIVE BELT

(a) Visually check the belt for excessive wear, frayed cords, etc.

If any defect is found, replace the drive belt.

HINT:

Cracks on the rib side of a belt are considered acceptable. If the missing chunks from the ribs are found on the belt, it should be replaced.

2. BLEED POWER STEERING SYSTEM

(a) Check the fluid level.

(b) Jack up the front of the vehicle and support it with the stands.

(c) Turn the steering wheel.

(1) With the engine stopped, turn the wheel slowly from lock to lock several times.

(d) Lower the vehicle.

(e) Start the engine.

(1) Run the engine at idle for a few minutes.

(f) Turn the steering wheel.

(1) With the engine idling, turn the wheel to right full lock position and keep it there for 2 to 3 seconds, then turn the wheel to left full lock position and keep it there for 2 to 3 seconds.

(2) Repeat (1) several times.

(g) Stop the engine.

(h) Check for foaming or emulsification.

If the system has to be bled twice specifically because of foaming or emulsification, check for fluid leaks in the system.

(i) Recheck the fluid level.

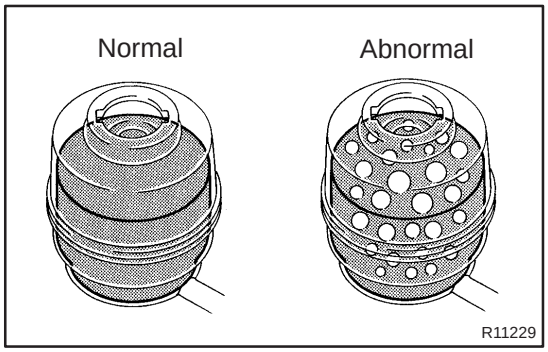

R11229

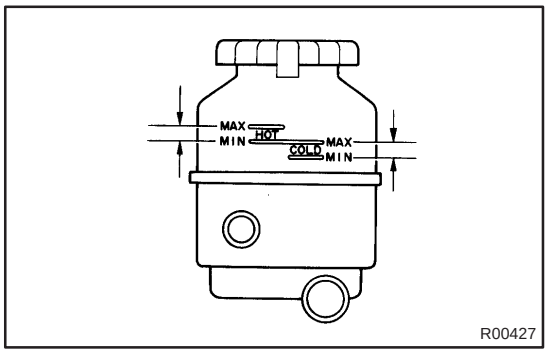

R00427

3. CHECK FLUID LEVEL

(a) Keep the vehicle level.

(b) With the engine stopped, check the fluid level in the oil reservoir.

If necessary, add fluid.

Fluid: ATF DEXRON® II or III

HINT:

If the fluidis hot, check that the fluid level is within the HOT LEVEL range on the oil reservoir. If the fluid is cold, check that it is within the COLD LEVEL range.

(c) Start the engine and run it at idle.
(d) Turn the steering wheel from lock to lock several times to boost fluid temperature.
Fluid temperature: 80˚C (176˚F)

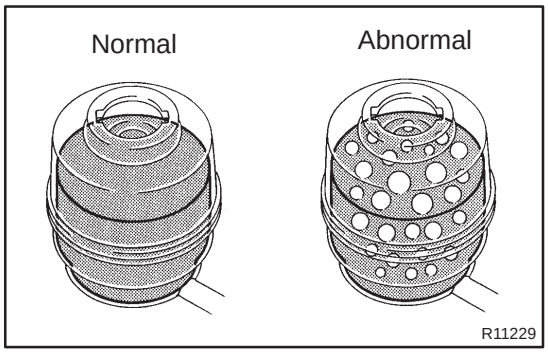

(e) Check for foaming or emulsification.
If there is foaming or emulsification, bleed the power steering system.

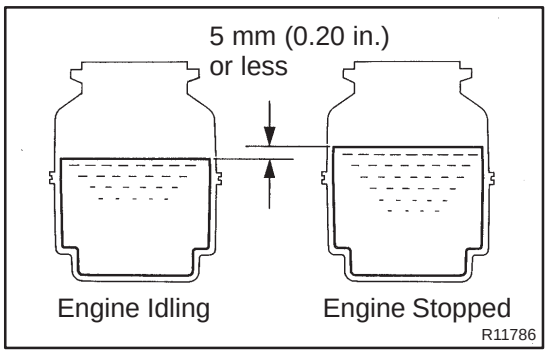

(f) With the engine idling, measure the fluid level in the oil reservoir.
(g) Stop the engine.
(h) Wait a few minutes and remeasure the fluid level in the oil reservoir.
Maximum fluid level rise: 5 mm (0.20 in.)
If a problem is found, bleed power steering system.
(i) Check the fluid level.

4. CHECK STEERING FLUID PRESSURE

(a) AZ Series:
Disconnect the pressure feed tube assy from the vane pump assy (See page 51–9).
(b) 1CD–FTV:
Disconnect the pressure feed tube assy from the vane pump assy (See page 51–19).
(c) AZ Series:
Connect SST(s), as shown in the illustration on the next page.
SST 09640–10010 (09641–01010, 09641–01030, 09641–01060)

NOTICE:
Check that the valve of SST(s) is in the open position.

(d) 1CD–FTV:
Connect SST(s), as shown in the illustration on the next page.
SST 09640–10010 (09641–01010, 09641–01020, 09641–01030)

NOTICE:
Check that the valve of SST(s) is in the open position.

(e) Bleed the power steering system.
(f) Start the engine and run it at idle.
(g) Turn the steering wheel from lock to lock several times to boost fluid temperature.
Fluid temperature: 80 ˚C (176 ˚F)

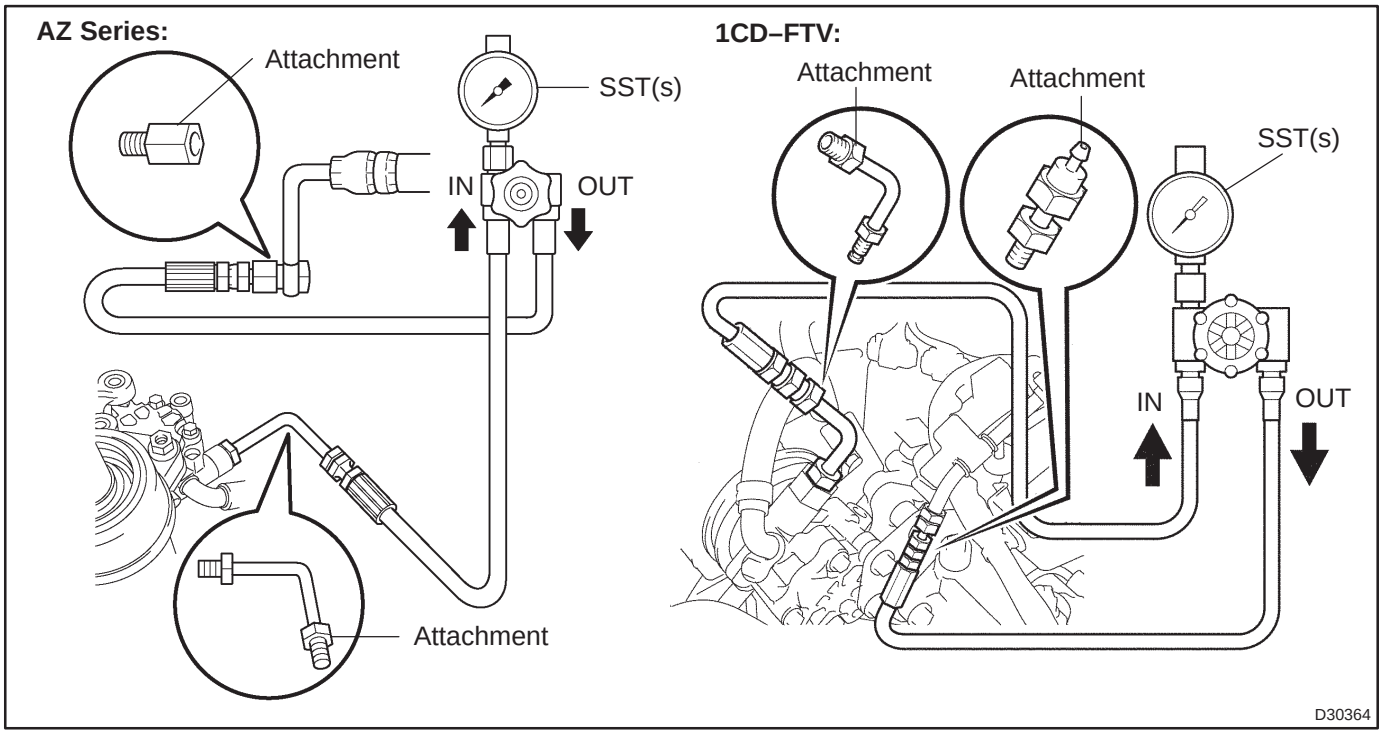

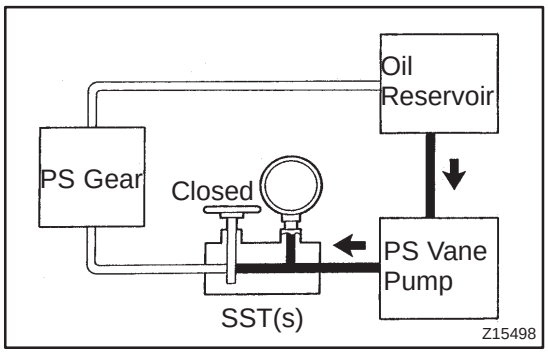

(h) With the engine idling, close the valve of SST(s) and observe the reading on SST(s).

Minimum fluid pressure:

AZ Series:

8,300 to 9,000 kPa (85 to 92 kgf/cm^2, 1,204 to 1,305 psi)

1CD–FTV:

8,800 to 9,500 kPa (90 to 97 kgf/cm^2, 1,276 to 1,378 psi)

NOTICE:

- **Do not keep the valve closed for more than 10 seconds.**
- **Do not let the fluid temperature become too high.**

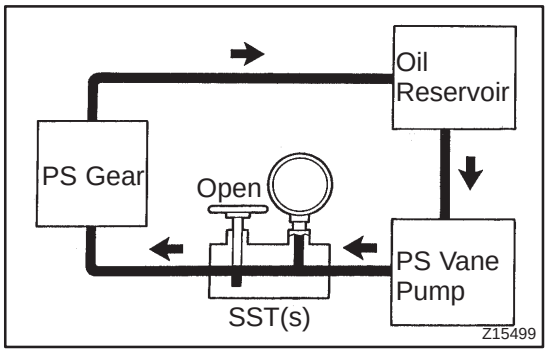

(i) With the engine idling, open the valve fully.

(j) Measure the fluid pressure at engine speeds of 1,000 rpm and 3,000 rpm.

Fluid pressure difference:

490 kPa (5 kgf/cm^2, 71 psi) or less

NOTICE:

Do not turn the steering wheel.

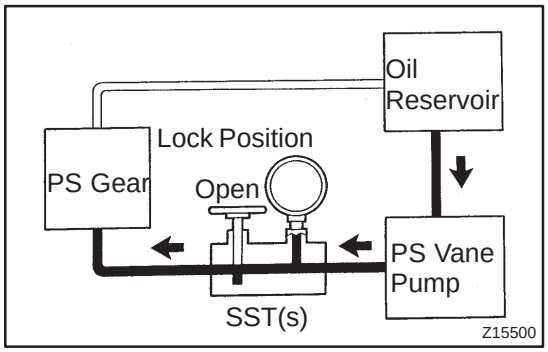

(k) With the engine idling and valve fully opened, turn the steering wheel to full lock position.
Minimum fluid pressure:
AZ Series:
8,300 to 9,000 kPa (85 to 92 kgf/cm^2, 1,204 to 1,305 psi)
1CD–FTV:
8,800 to 9,500 kPa (90 to 97 kgf/cm^2, 1,276 to 1,378 psi)

NOTICE:

- **Do not maintain lock position for more than 10 seconds.**
- **Do not let the fluid temperature become too high.**

(l) Remove SST(s).
(m) AZ Series:
Connect the pressure feed tube assy to the vane pump assy (See page 51–9).
(n) 1CD–FTV:
Connect the pressure feed tube assy to the vane pump assy (See page 51–19).
(o) Bleed the power steering system.

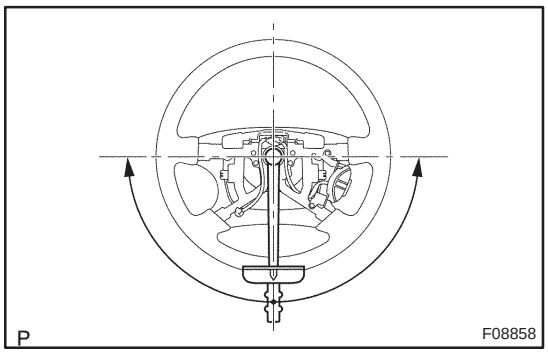

5. CHECK STEERING EFFORT
(a) Center the steering wheel.
(b) Remove the steering wheel pad (See page 60–17).
(c) Start the engine and run it at idle.
(d) Measure the steering effort in both directions.
Steering effort (Reference):
5.5 N·m (56 kgf·cm, 49 in.·lbf)

HINT:
Take the tire type, pressure and contact surface into consideration before making your diagnosis.

(e) Torque the steering wheel set nut.
Torque: 50 N·m (510 kgf·cm, 37 ft·lbf)
(f) Install the steering wheel pad (See page 60–17).

VANE PUMP ASSY (AZ Series)

COMPONENTS

510DF–02

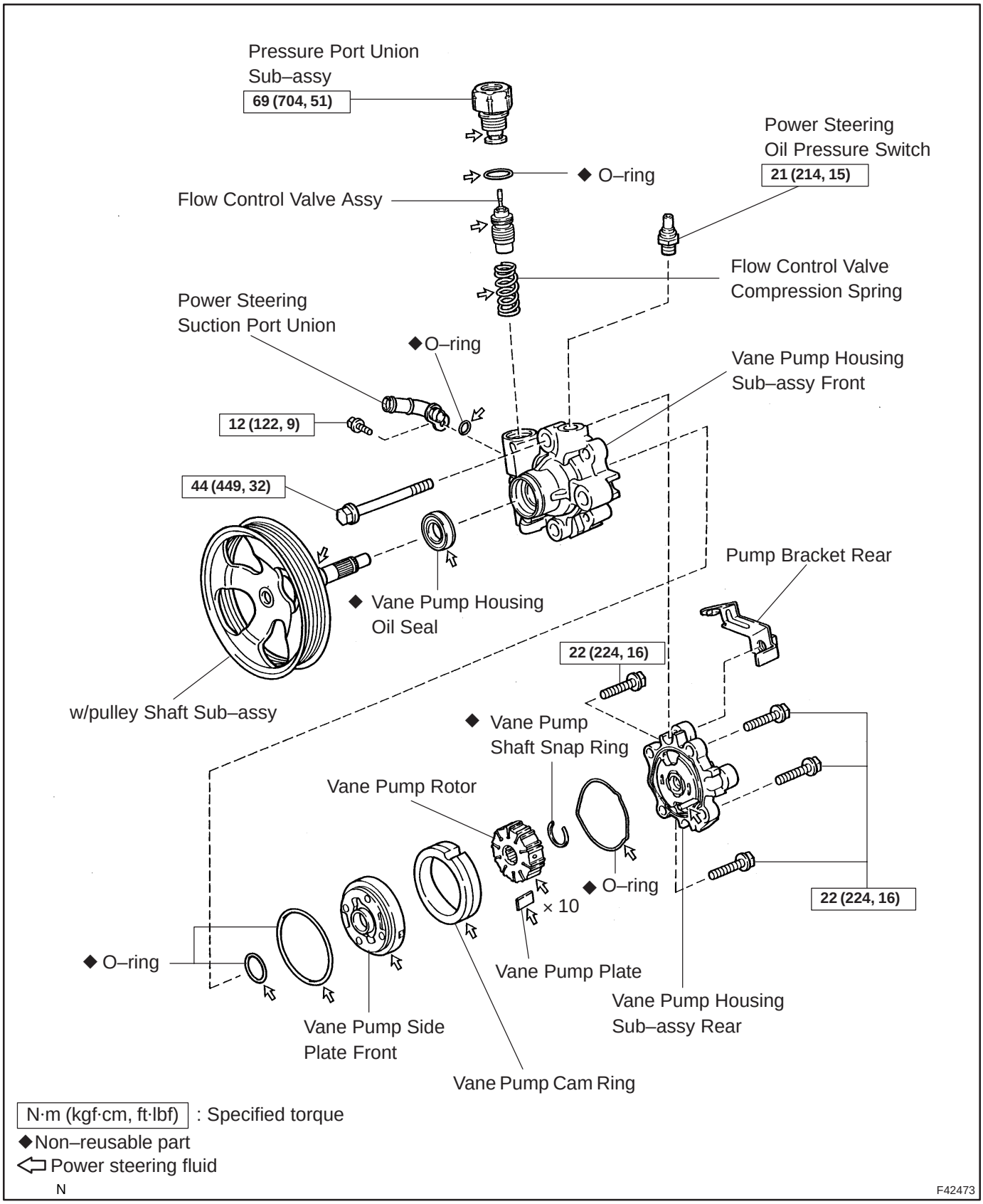

N·m (kgf·cm, ft·lbf) : Specified torque
◆Non–reusable part
⇦ Power steering fluid

N

F42473

510DG–02

OVERHAUL

NOTICE:

- **When using a vise, do not over tighten.**
- **When installing, coat the parts indicated by the arrows with power steering fluid (See page 51–8).**

1. REMOVE FRONT WHEEL RH

2. REMOVE ENGINE UNDER COVER RH

3. REMOVE FAN AND GENERATOR V BELT

1AZ–FE: (See page 14–105)

1AZ–FSE: (See page 14–185)

4. DISCONNECT OIL RESERVOIR TO PUMP HOSE NO.1

(a) Remove the clip and disconnect the oil reservoir to pump hose No.1.

NOTICE:

Take care not to spill fluid on the V belt.

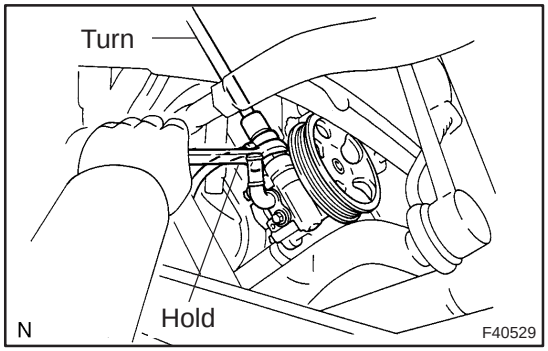

5. DISCONNECT PRESSURE FEED TUBE ASSY

(a) Remove the bolt and separate the pressure feed tube assy from the pump bracket rear.

(b) Using a spanner (27 mm) to hold the pressure port union, remove the union bolt and gasket.

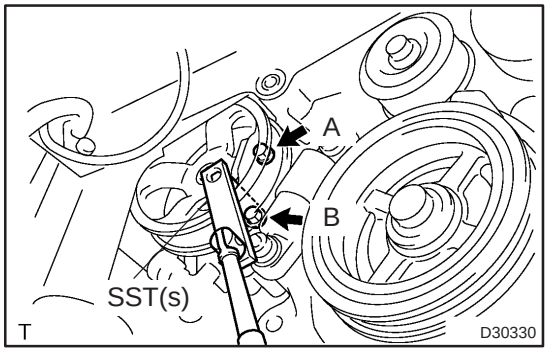

6. REMOVE VANE PUMP ASSY

(a) Disconnect the connector from the oil pressure switch.

(b) Using SST(s) and a deep socket (14 mm), loosen the bolt A.

SST 09249–63010

(c) Remove the bolt B and vane pump assy.

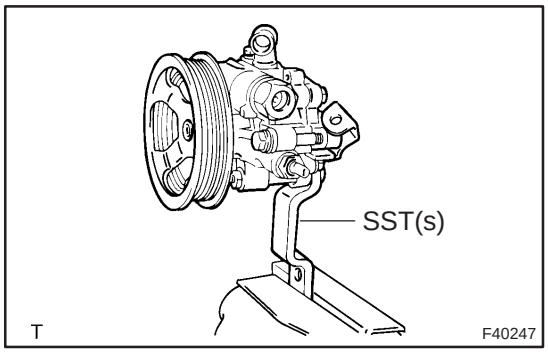

7. FIX VANE PUMP ASSY

(a) Using SST(s), hold the vane pump assy in a vise.

SST 09630–00014 (09631–00132)

8. REMOVE PUMP BRACKET REAR

(a) Remove the bolt and vane pump bracket rear.

9. REMOVE POWER STEERING SUCTION PORT UNION

(a) Remove the bolt and the suction port union.

(b) Remove the O–ring from the suction port union.

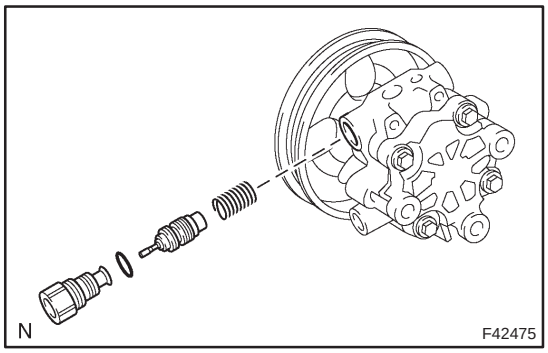

10. REMOVE FLOW CONTROL VALVE ASSY

(a) Remove the pressure port union sub–assy.

(b) Remove the O–ring from the pressure port union sub–assy.

(c) Remove the flow control valve assy and the compression spring.

11. REMOVE POWER STEERING OIL PRESSURE SWITCH

NOTICE:

If the oil pressure switch is dropped or damaged, replace it with a new one.

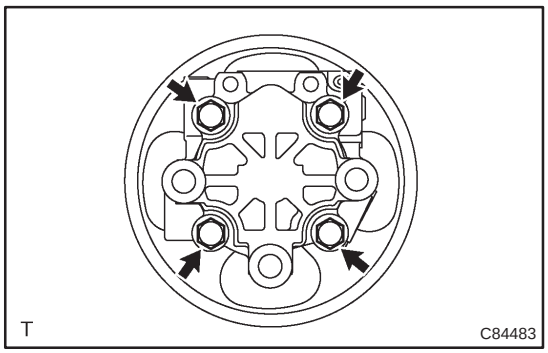

12. REMOVE VANE PUMP HOUSING SUB–ASSY REAR

(a) Remove the 4 bolts and housing sub–assy rear from the housing sub–assy front.

(b) Remove the O–ring from the housing sub–assy rear.

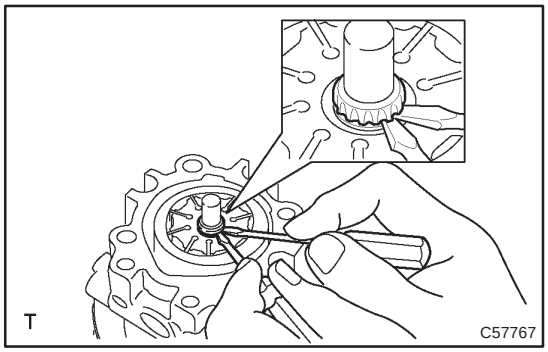

13. REMOVE W/PULLEY SHAFT SUB–ASSY

(a) Using 2 screwdrivers, remove the snap ring from the w/ pulley shaft sub–assy.

(b) Remove the w/pulley shaft sub–assy.

14. REMOVE VANE PUMP ROTOR

(a) Remove the 10 vane pump plates.

(b) Remove the vane pump rotor.

15. REMOVE VANE PUMP CAM RING

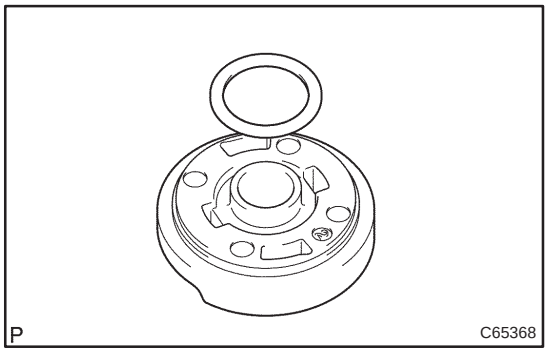

16. REMOVE VANE PUMP SIDE PLATE FRONT

(a) Remove the side plate front from the housing sub–assy front.

(b) Remove the O–ring from the side plate front.

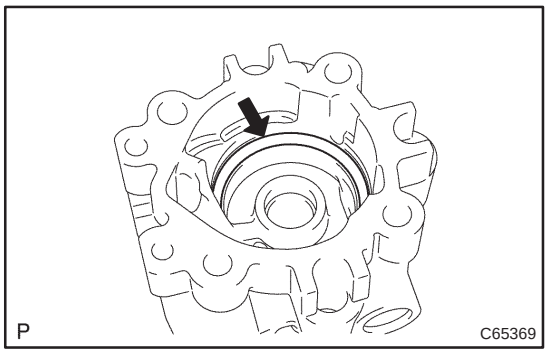

(c) Remove the O–ring from the housing sub–assy front.

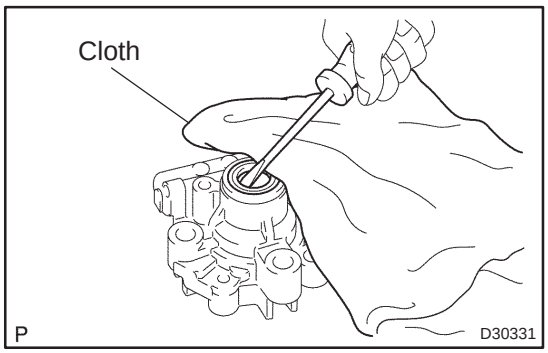

17. REMOVE VANE PUMP HOUSING OIL SEAL

(a) Using a screwdriver, remove the housing oil seal.

NOTICE:

Be careful not to damage the pump housing.

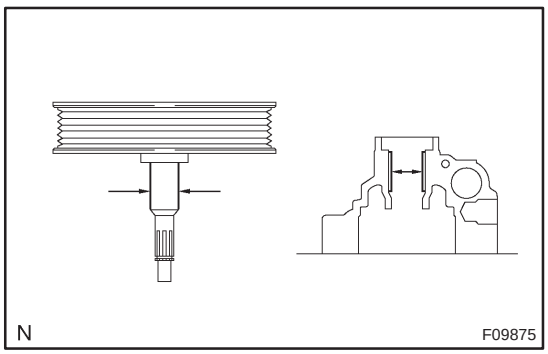

18. INSPECT VANE PUMP SHAFT AND BUSH IN HOUSING FRONT

(a) Using a micrometer and a caliper gauge, measure the oil clearance.

Maximum clearance: 0.07 mm (0.0028 in.)

If it is more than the maximum, replace the vane pump assy.

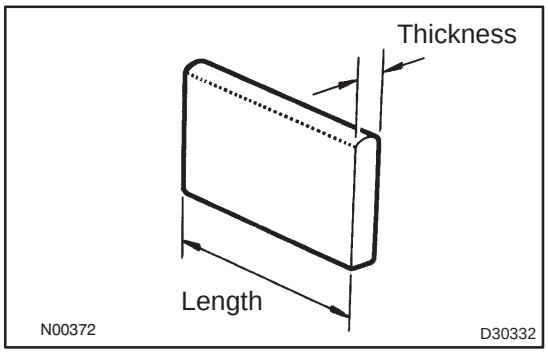

19. INSPECT VANE PUMP ROTOR AND VANE PUMP PLATES

(a) Using a micrometer, measure the thickness of the vane pump plates.

Minimum thickness:

1.405 to 1.411 mm (0.05531 to 0.05555 in.)

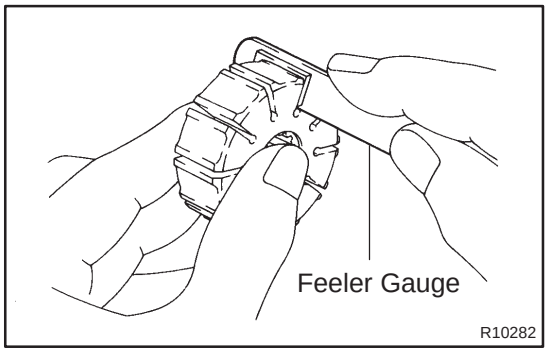

(b) Using a feeler gauge, measure the clearance between a side face of the vane pump rotor groove and vane plate.
Maximum clearance: 0.03 mm (0.0012 in.)

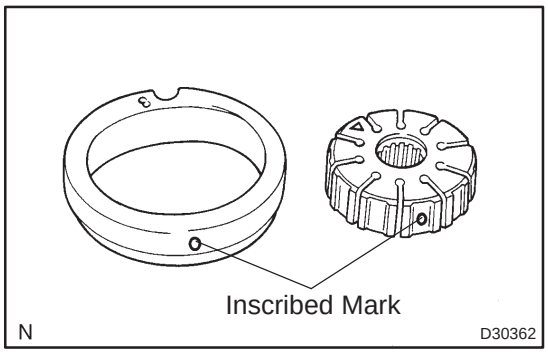

If it is more than the maximum, replace the vane pump plate and/or vane pump rotor with the one having the same mark as stamped on the cam ring.

Inscribed mark: 0, 1, 2, 3 or 4

HINT:

There are 5 different marks for vane pump plate.

Mark	Part number	Length mm (in.)
0	44345–02110	12.001 to 12.003 (0.47247 to 0.47255)
1	44345–02120	11.999 to 12.000 (0.47240 to 0.47244)
2	44345–02130	11.997 to 11.998 (0.47232 to 0.47236)
3	44345–02140	11.995 to 11.996 (0.47224 to 0.47228)
4	44345–02150	11.993 to 11.994 (0.47216 to 0.47220)

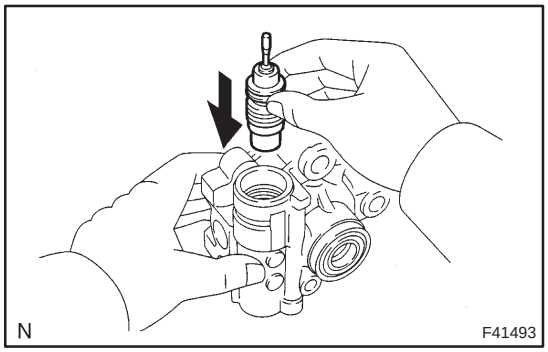

20. INSPECT FLOW CONTROL VALVE ASSY

(a) Coat the flow control valve assy with power steering fluid and check that it falls smoothly into the flow control valve hole by its own weight.

If necessary, replace the vane pump assy.

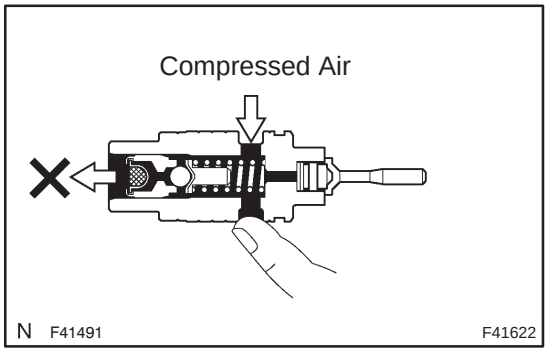

(b) Check the flow control valve assy for leakage. Close one of the holes and apply compressed air of 392 to 490 kPa (4 to 5 kgf·cm^2, 57 to 71 psi) into the opposite side hole, and confirm that air does not come out from the end holes.

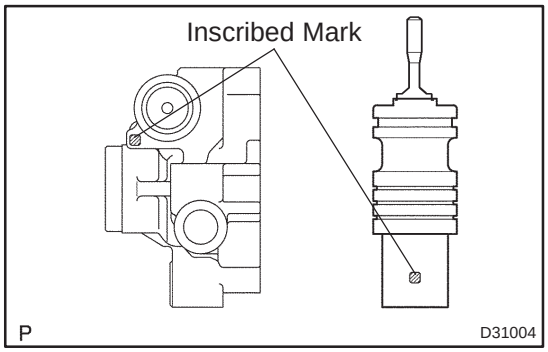

If necessary, replace the flow control valve assy with the one having the same letter as inscribed on the housing sub–assy front.

Inscribed mark: A, B, C, D, E or F

HINT:

There are 6 different marks for flow control valve assy.

Mark	Part number
A	44330–05130
B	44330–05140
C	44330–05150
D	44330–05160
E	44330–05170
F	44330–05180

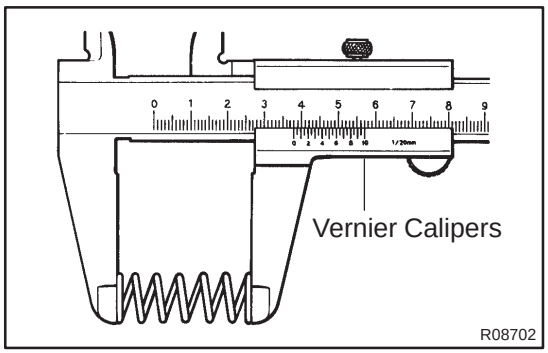

21. INSPECT FLOW CONTROL VALVE COMPRESSION SPRING

(a) Using vernier calipers, measure the free length of the compression spring.

Minimum free length: 36.9 mm (1.453 in.)

If it is less than the minimum, replace the compression spring.

22. INSPECT PRESSURE PORT UNION SUB–ASSY

(a) If the union seat in the pressure port union sub–assy is remarkably damaged, it may cause fluid leakage. Replace the pressure port union sub–assy.

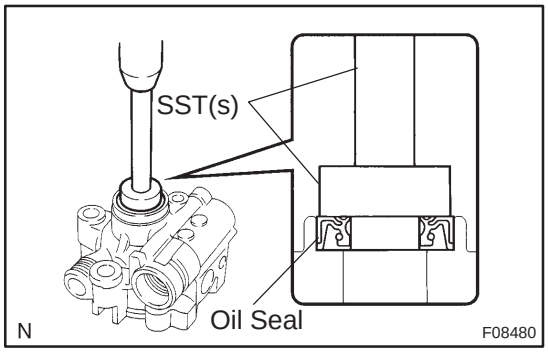

23. INSTALL VANE PUMP HOUSING OIL SEAL

(a) Coat a new housing oil seal lip with power steering fluid.

(b) Using SST(s) and a press, install a new housing oil seal.

SST 09950–60010 (09951–00280), 09950–70010 (09951–07100)

NOTICE:

Make sure that the oil seal is installed facing in the correct direction.

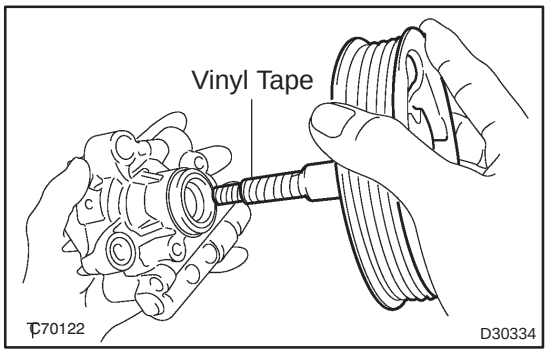

24. INSTALL W/PULLEY SHAFT SUB–ASSY

(a) Coat inside bushing surface of the housing sub–assy front with power steering fluid.

(b) Gradually insert the w/pulley shaft sub–assy.

NOTICE:

Do not damage the oil seal lip.

HINT:

Tape the shaft before inserting.

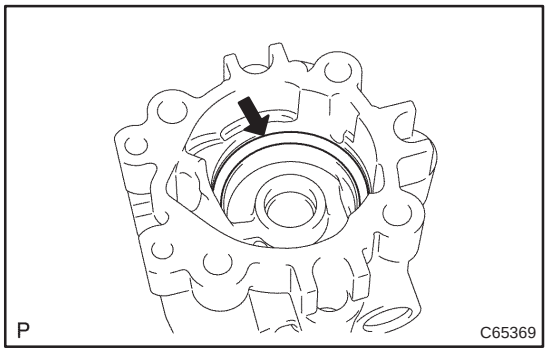

25. INSTALL VANE PUMP SIDE PLATE FRONT

(a) Coat a new O–ring with power steering fluid and install it into the housing sub–assy front.

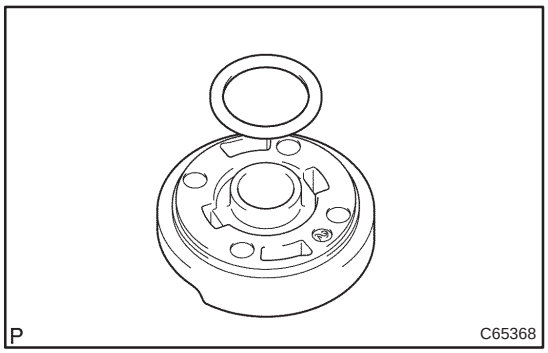

(b) Coat a new O–ring with power steering fluid and install it onto the side plate front.

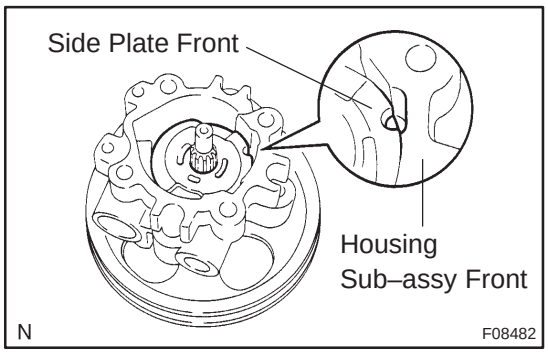

(c) Align the dent of the side plate front with that of the housing sub–assy front, and install the side plate front.

NOTICE:

Make sure that the side plate front is installed facing in the correct direction.

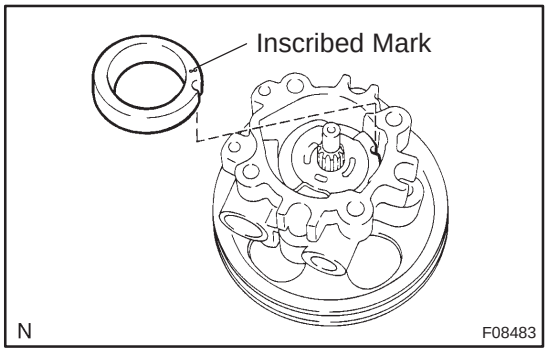

26. INSTALL VANE PUMP CAM RING

(a) Align the dent of the cam ring with that of the side plate front, and install the cam ring with the inscribed mark facing upward.

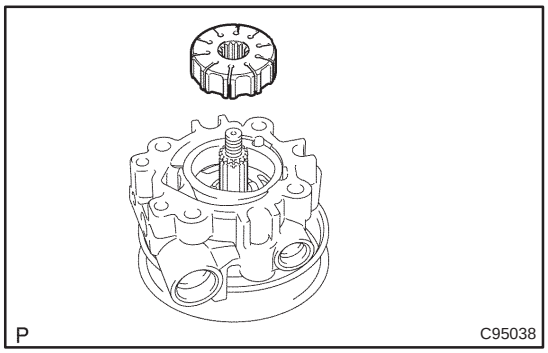

27. INSTALL VANE PUMP ROTOR

(a) Install the vane pump rotor.

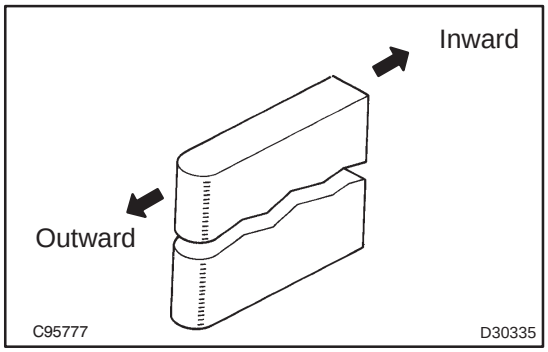

(b) Coat 10 vane pump plates with power steering fluid.
(c) Install the vane pump plates with the round end facing outward.

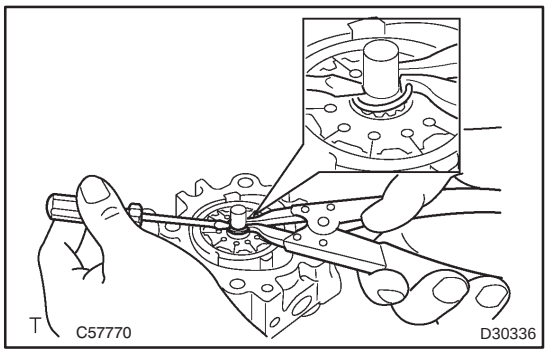

28. INSTALL VANE PUMP SHAFT SNAP RING

(a) Using a screwdriver and a snap ring expander, install a new snap ring to the w/pulley shaft sub–assy.

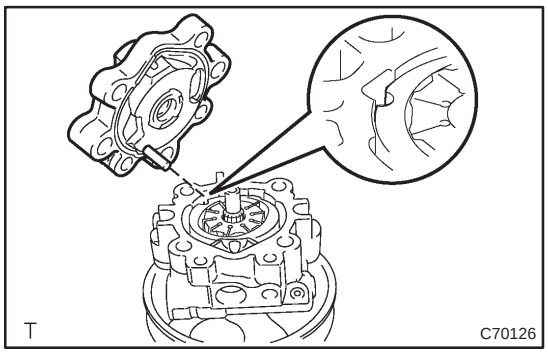

29. INSTALL VANE PUMP HOUSING SUB–ASSY REAR

(a) Coat a new O–ring with power steering fluid and install it onto the housing sub–assy rear.
(b) Align the straight pin of the housing sub–assy rear with the dents of the cam ring, side plate front and housing sub–assy front, and install the vane pump housing sub–assy rear with the 4 bolts.
Torque: 22 N·m (224 kgf·cm, 16 ft·lbf)

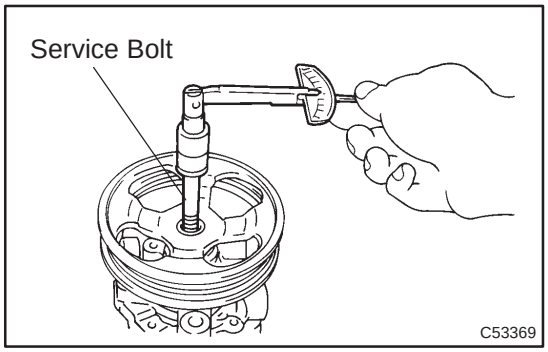

30. INSPECT PRELOAD

(a) Check that the pump rotates smoothly without abnormal noise.
(b) Temporarily install the service bolt.
Recommended service bolt:
Thread diameter: 10 mm (0.39 in.)
Thread pitch: 1.25 mm (0.0492 in.)
Bolt length: 50 mm (1.97 in.)
(c) Using a torque wrench, check the pump rotating torque.
Rotating torque:
0.27 N·m (2.8 kgf·cm, 2.4 ft·lbf) or less

If the rotating torque is not as specified, check the housing oil seal.

31. INSTALL POWER STEERING OIL PRESSURE SWITCH

(a) Coat a new O–ring with power steering fluid and install it to the oil pressure switch.
(b) Install the oil pressure switch onto the vane pump assy.
Torque: 21 N·m (214 kgf·cm, 15 ft·lbf)

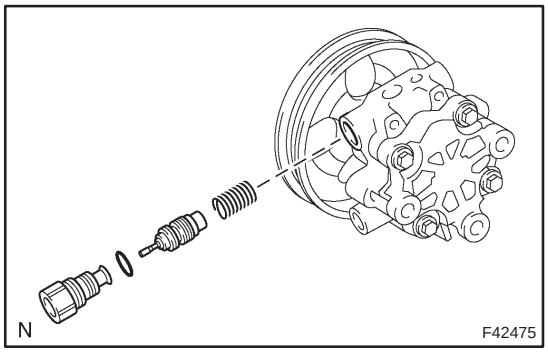

32. INSTALL FLOW CONTROL VALVE ASSY

(a) Coat the compression spring and the flow control valve assy with power steering fluid.

(b) Install the compression spring and the flow control valve assy.

(c) Coat a new O–ring with power steering fluid and install it onto the pressure port union sub–assy.

(d) Install the pressure port union sub–assy.

Torque: 69 N·m (704 kgf·cm, 51 ft·lbf)

33. INSTALL POWER STEERING SUCTION PORT UNION

(a) Coat a new O–ring with power steering fluid, and install it to the suction port union.

(b) Install the suction port union with the bolt.

Torque: 12 N·m (122 kgf·cm, 9 ft·lbf)

34. INSTALL PUMP BRACKET REAR

(a) Install the vane pump bracket rear with the bolt.

Torque: 44 N·m (449 kgf·cm, 32 ft·lbf)

HINT:

Make sure that the stopper of the bracket touches the vane pump body, then torque the bolt.

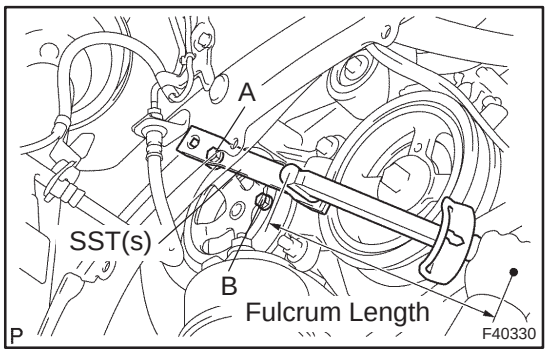

35. INSTALL VANE PUMP ASSY

(a) Temporarily tighten the bolt A to the vane pump assy.

(b) Install the vane pump assy and the bolt B.

Torque: 37 N·m (377 kgf·cm, 27 ft·lbf)

(c) Using SST(s) and a deep socket (14 mm), tighten the bolt A.

SST 09249–63010

Torque: 26 N·m (264 kgf·cm, 19 ft·lbf)

HINT:

- Use a torque wrench with a fulcrum length of 345 mm (13.58 in.).
- This torque value is effective when SST(s) is parallel to a torque wrench.

(d) Connect the connector to the oil pressure switch.

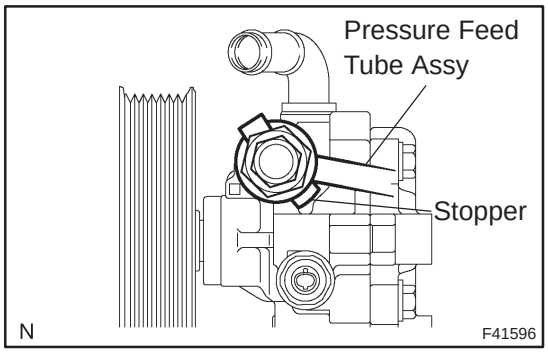

36. CONNECT PRESSURE FEED TUBE ASSY

(a) Install the pressure feed tube assy and gasket to the vane pump assy with the union bolt.

HINT:

Make sure the stopper of the pressure feed tube assy touches the pump housing front as shown in the illustration.

(b) Using a spanner (27 mm) to hold the pressure port union, torque the union bolt.

Torque: 52 N·m (525 kgf·cm, 38 ft·lbf)

(c) Install the pressure feed tube assy with bolt to the pump bracket rear.

Torque: 8.0 N·m (82 kgf·cm, 71 in.·lbf)

37. CONNECT OIL RESERVOIR TO PUMP HOSE NO.1

(a) Connect the oil reservoir to pump hose No.1 with the clip.

NOTICE:

Take care not to spill fluid on the V belt.

38. INSTALL FAN AND GENERATOR V BELT

1AZ–FE: (See page 14–105)

1AZ–FSE: (See page 14–185)

39. INSTALL ENGINE UNDER COVER RH

40. INSTALL FRONT WHEEL RH

Torque: 103 N·m (1,050 kgf·cm, 76 ft·lbf)

41. ADD POWER STEERING FLUID (See page 51–4)

42. BLEED POWER STEERING FLUID (See page 51–4)

43. CHECK POWER STEERING FULUID LEVEL IN RESERVER (See page 51–4)

44. INSPECT FLUID LEAK

VANE PUMP ASSY (1CD–FTV)

COMPONENTS

5106Z–04

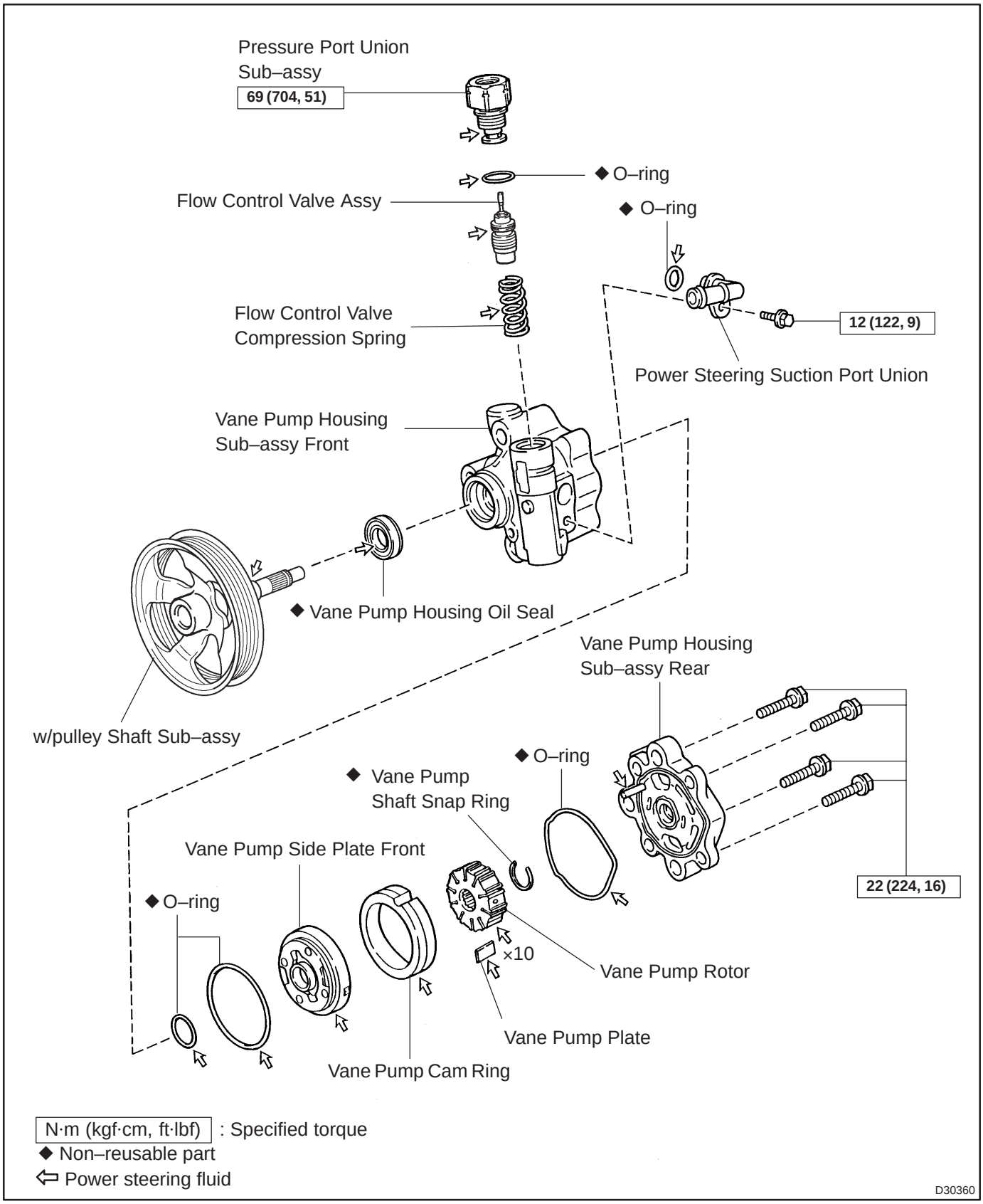

OVERHAUL

NOTICE:

- **When using a vise, do not overtighten.**
- **When installing, coat the parts indicated by the arrows with power steering fluid (See page 51–18).**

1. REMOVE V (COOLER COMPRESSOR TO CRANKSHAFT PULLEY) BELT NO.1 (See page 55–46)

2. REMOVE ENGINE COVER NO.1

(a) Remove the bolt, 4 nuts and the engine cover No. 1.

3. DISCONNECT OIL RESERVOIR TO PUMP HOSE NO.1

(a) Remove the clip and disconnect the oil reservoir to pump hose No. 1.

NOTICE:

Take care not to spill fluid on the V belt.

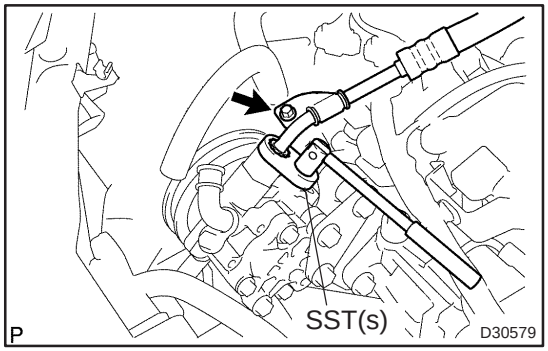

4. DISCONNECT PRESSURE FEED TUBE ASSY

(a) Remove the bolt and sepatate the tube clamp.

(b) Using SST(s), disconnect the pressure feed tube assy from the vane pump assy.
SST 09023–12700

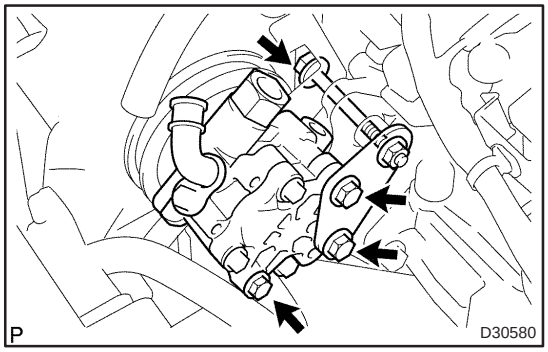

5. REMOVE VANE PUMP ASSY

(a) Remove the 4 bolts, the vane pump assy and the vane pump bracket rear.

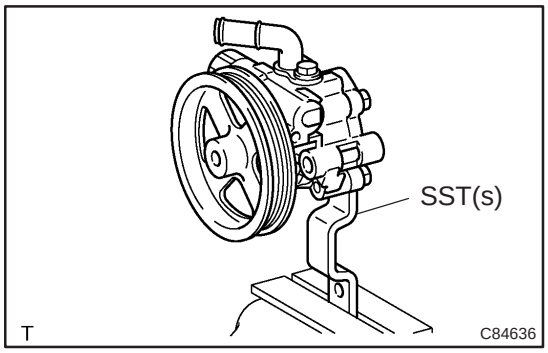

6. FIX VANE PUMP ASSY

(a) Using SST(s), hold the vane pump assy in a vise.
SST 09630–00014 (09631–00132)

7. REMOVE POWER STEERING SUCTION PORT UNION

(a) Remove the bolt and the suction port union.

(b) Remove the O–ring from the suction port union.

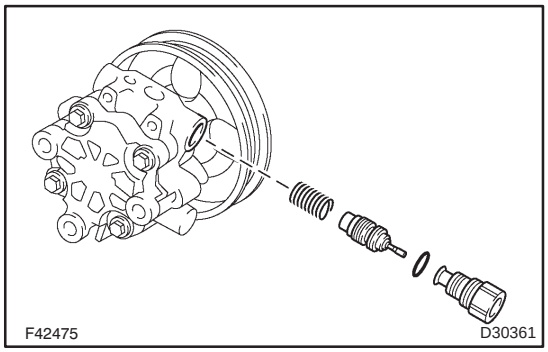

8. REMOVE FLOW CONTROL VALVE ASSY

(a) Remove the pressure port union sub–assy.

(b) Remove the O–ring from the pressure port union sub–assy.

(c) Remove the flow control valve assy and the compression spring.

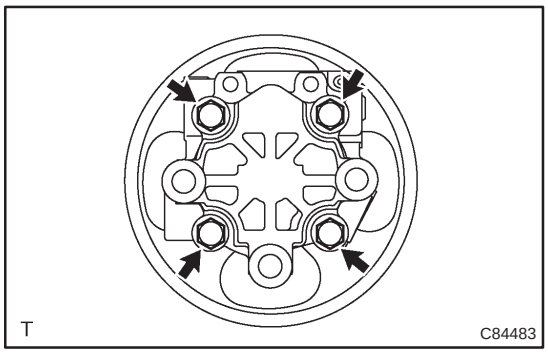

9. REMOVE VANE PUMP HOUSING SUB–ASSY REAR

(a) Remove the 4 bolts and housing sub–assy rear from the housing sub–assy front.

(b) Remove the O–ring from the housing sub–assy rear.

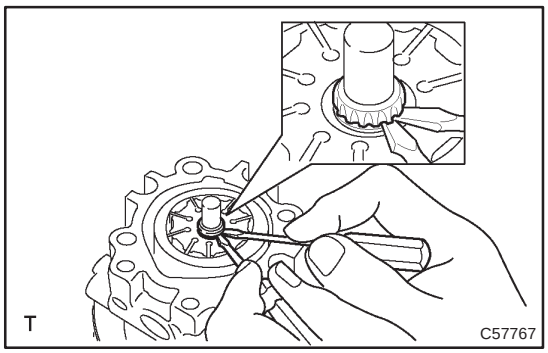

10. REMOVE W/PULLEY SHAFT SUB–ASSY

(a) Using 2 screwdrivers, remove the snap ring from the w/ pulley shaft sub–assy.

(b) Remove the w/pulley shaft sub–assy.

11. REMOVE VANE PUMP ROTOR

(a) Remove the 10 vane pump plates.

(b) Remove the vane pump rotor.

12. REMOVE VANE PUMP CAM RING

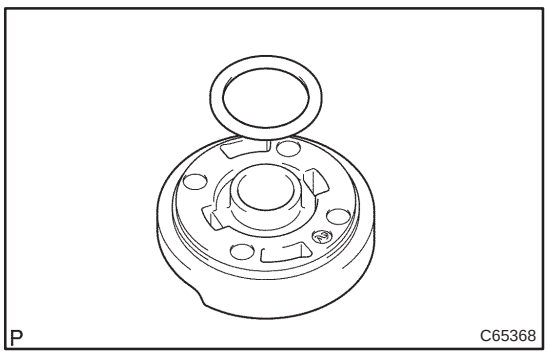

13. REMOVE VANE PUMP SIDE PLATE FRONT

(a) Remove the side plate front from the housing sub–assy front.

(b) Remove the O–ring from the side plate front.

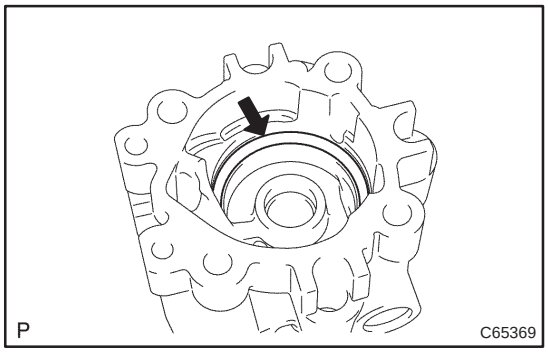

(c) Remove the O–ring from the housing sub–assy front.

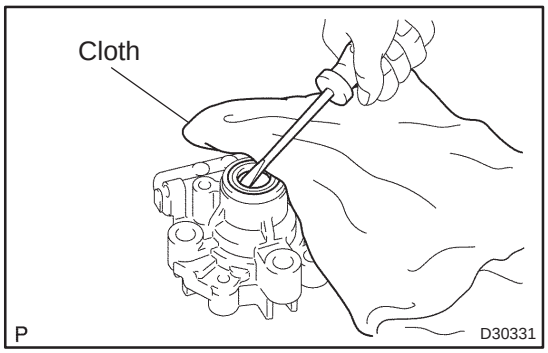

14. REMOVE VANE PUMP HOUSING OIL SEAL

(a) Using a screwdriver, remove the housing oil seal.

NOTICE:

Be careful not to damage the pump housing.

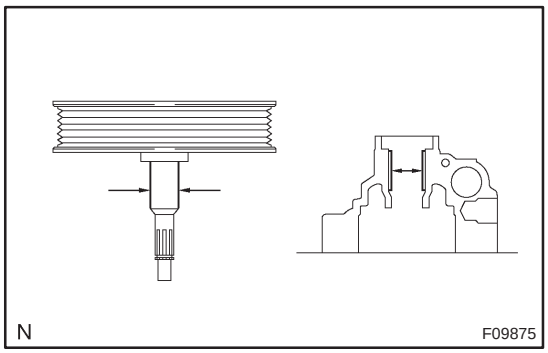

15. INSPECT VANE PUMP SHAFT AND BUSH IN HOUSING FRONT

(a) Using a micrometer and a caliper gauge, measure the oil clearance.

Maximum clearance: 0.07 mm (0.0028 in.)

If it is more than the maximum, replace the vane pump assy.

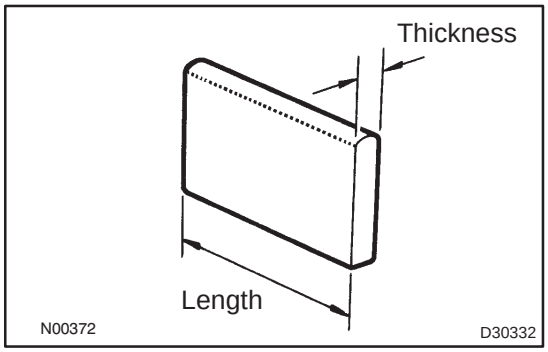

16. INSPECT VANE PUMP ROTOR AND VANE PUMP PLATES

(a) Using a micrometer, measure the thickness of the vane pump plates.

Minimum thickness:
1.405 to 1.411 mm (0.05531 to 0.05555 in.)

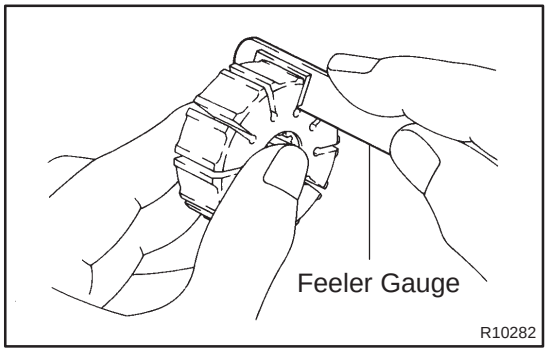

(b) Using a feeler gauge, measure the clearance between a side face of the vane pump rotor groove and vane plate.

Maximum clearance: 0.03 mm (0.0012 in.)

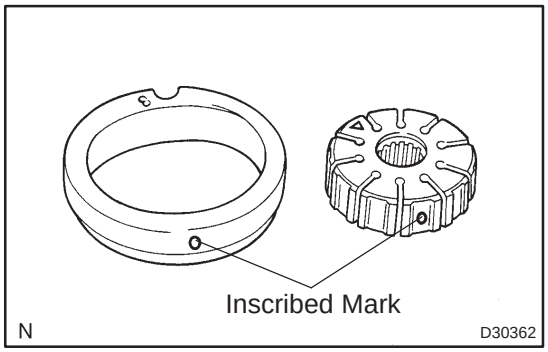

If it is more than the maximum, replace the vane pump plate and/or vane pump rotor with the one having the same mark as stamped on the cam ring.

Inscribed mark: 0, 1, 2, 3 or 4

HINT:

There are 5 different marks for vane pump plate.

Mark	Part number	Length mm (in.)
0	44345–02110	12.001 to 12.003 (0.47247 to 0.47255)
1	44345–02120	11.999 to 12.000 (0.47240 to 0.47244)
2	44345–02130	11.997 to 11.998 (0.47232 to 0.47236)
3	44345–02140	11.995 to 11.996 (0.47224 to 0.47228)
4	44345–02150	11.993 to 11.994 (0.47216 to 0.47220)

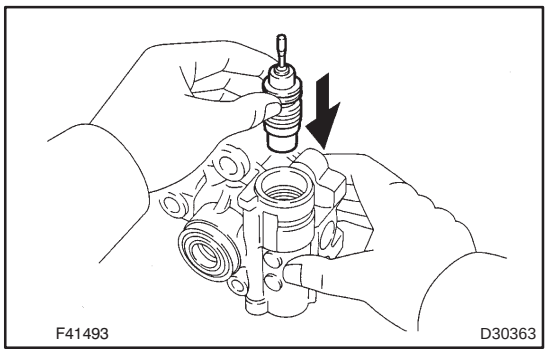

17. INSPECT FLOW CONTROL VALVE ASSY

(a) Coat the flow control valve assy with power steering fluid and check that it falls smoothly into the flow control valve hole by its own weight.

If necessary, replace the vane pump assy.

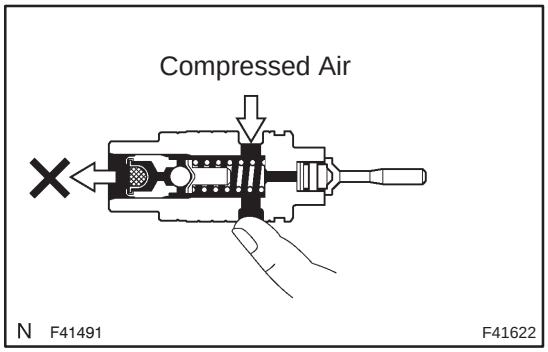

(b) Check the flow control valve assy for leakage. Close one of the holes and apply compressed air of 392 to 490 kPa (4 to 5 kgf·cm^2, 57 to 71 psi) into the opposite side hole, and confirm that air does not come out from the end holes.

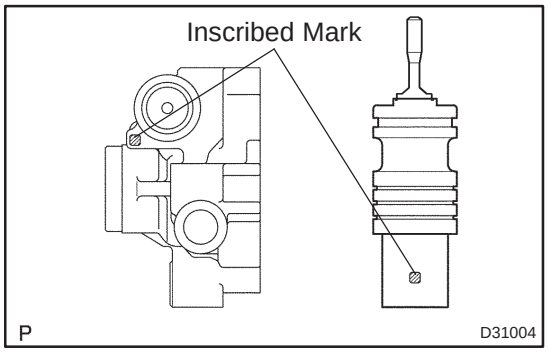

If necessary, replace the flow control valve assy with the one having the same letter as inscribed on the housing sub–assy front

Inscribed mark: A, B, C, D, E or F

HINT:

There are 6 different marks for flow control valve assy.

Mark	Part number
A	44330–05190
B	44330–05200
C	44330–05210
D	44330–05220
E	44330–05230
F	44330–05240

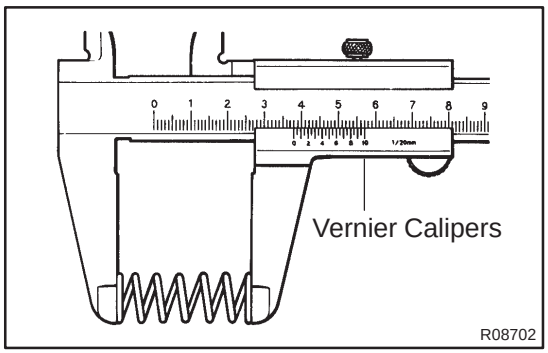

18. INSPECT FLOW CONTROL VALVE COMPRESSION SPRING

(a) Using vernier calipers, measure the free length of the compression spring.

Minimum free length: 36.9 mm (1.453 in.)

If it is less than the minimum, replace the compression spring.

19. INSPECT PRESSURE PORT UNION SUB–ASSY

(a) If the union seat in the pressure port union sub–assy is remarkably damaged, it may cause fluid leakage. Replace the pressure port union sub–assy.

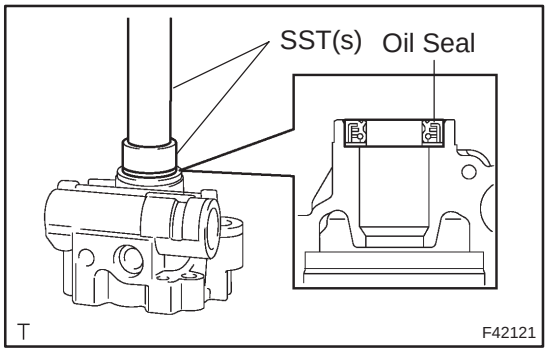

20. INSTALL VANE PUMP HOUSING OIL SEAL

(a) Coat a new housing oil seal lip with power steering fluid.

(b) Using SST(s) and a press, install a new housing oil seal.

SST 09950–60010 (09951–00280), 09950–70010 (09951–07100)

NOTICE:

Make sure that the oil seal is installed facing in the correct direction.

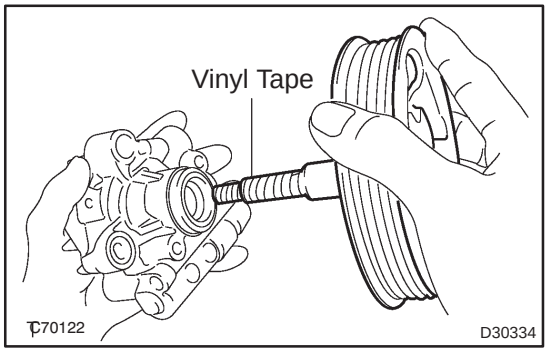

21. INSTALL W/PULLEY SHAFT SUB–ASSY

(a) Coat inside bushing surface of the housing sub–assy front with power steering fluid.

(b) Gradually insert the w/pulley shaft sub–assy.

NOTICE:

Do not damage the oil seal lip.

HINT:

Tape the shaft before inserting.

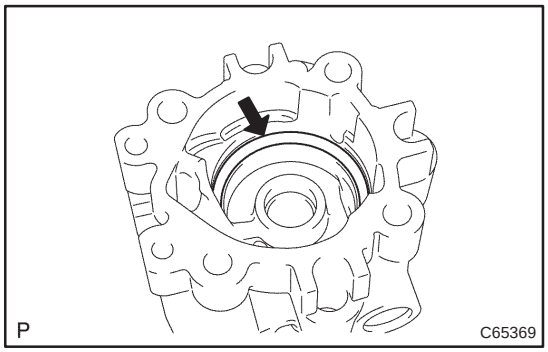

22. INSTALL VANE PUMP SIDE PLATE FRONT

(a) Coat a new O–ring with power steering fluid and install it inSto the housing sub–assy front.

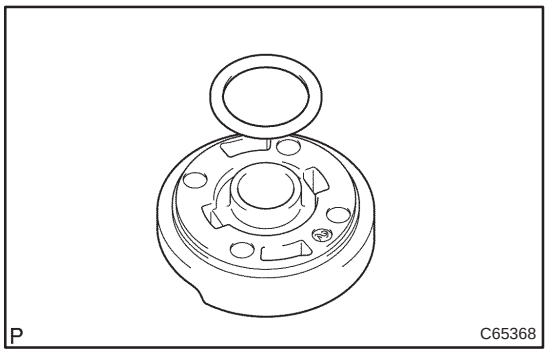

(b) Coat a new O–ring with power steering fluid and install it onto the side plate front.

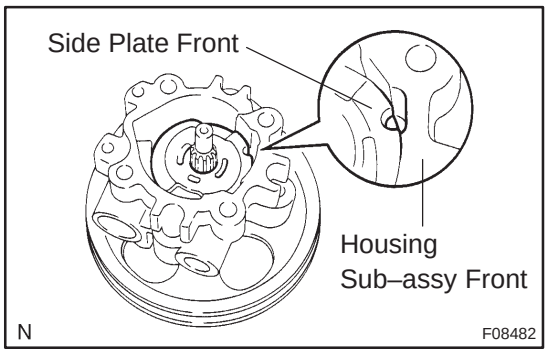

(c) Align the dent of the side plate front with that of the housing sub–assy front, and install the side plate front.

NOTICE:

Make sure that the side plate front is installed facing in the correct direction.

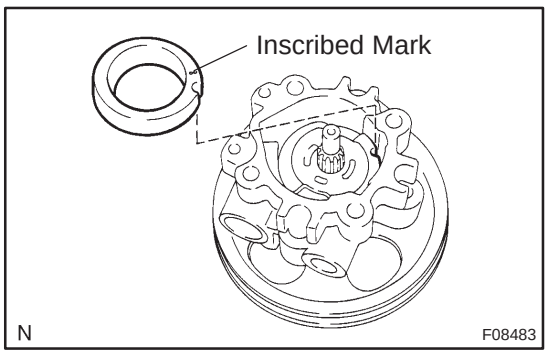

23. INSTALL VANE PUMP CAM RING

(a) Align the dent of the cam ring with that of the side plate front, and install the cam ring with the inscribed mark facing upward.

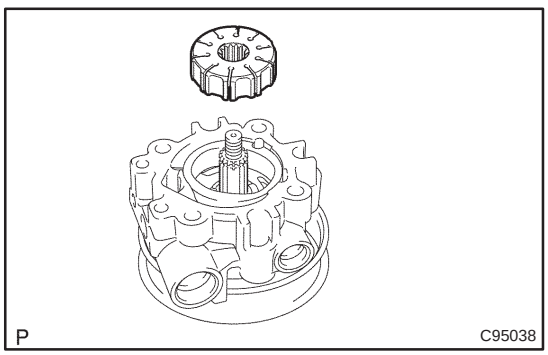

24. INSTALL VANE PUMP ROTOR

(a) Install the vane pump rotor.

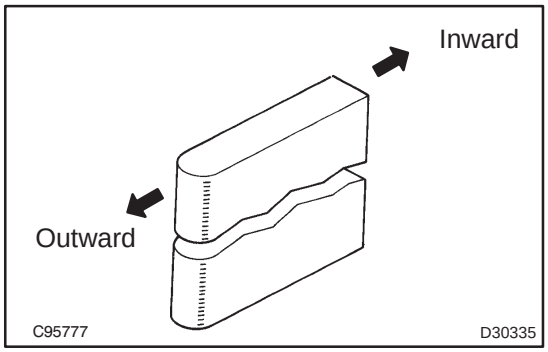

(b) Coat 10 vane pump plates with power steering fluid.
(c) Install the vane pump plates with the round end facing outward.

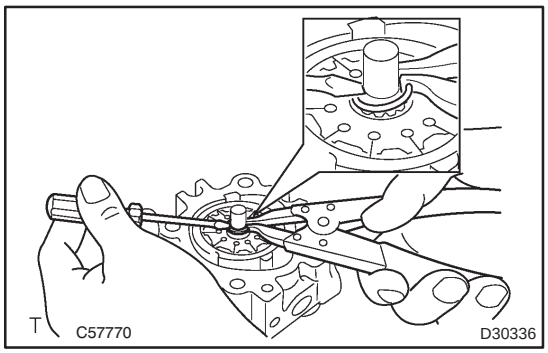

25. INSTALL VANE PUMP SHAFT SNAP RING

(a) Using a screwdriver and a snap ring expander, install a new snap ring to the w/pulley shaft sub–assy.

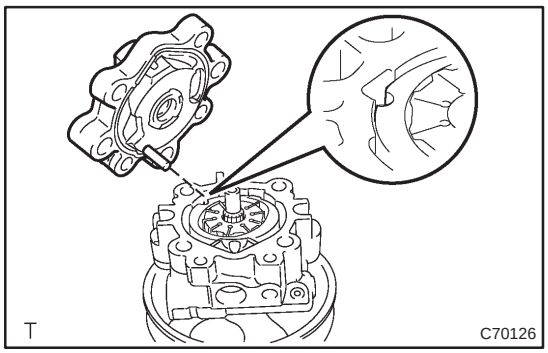

26. INSTALL VANE PUMP HOUSING SUB–ASSY REAR

(a) Coat a new O–ring with power steering fluid and install it onto the housing sub–assy rear.
(b) Align the straight pin of the housing sub–assy rear with the dents of the cam ring, side plate front and housing sub–assy front, and install the vane pump housing sub–assy rear with the 4 bolts.
Torque: 22 N·m (224 kgf·cm, 16 ft·lbf)

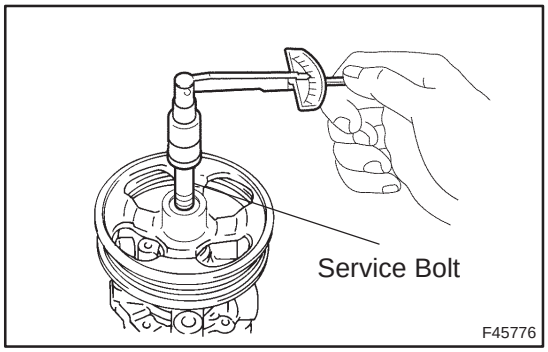

27. INSPECT PRELOAD

(a) Check that the pump rotates smoothly without abnormal noise.
(b) Temporarily install the service bolt.
Recommended service bolt:
Thread diameter: 10 mm (0.39 in.)
Thread pitch: 1.25 mm (0.0492 in.)
Bolt length: 50 mm (1.97 in.)
(c) Using a torque wrench, check the pump rotating torque.
Rotating torque:
0.27 N·m (2.8 kgf·cm, 2.4 ft·lbf) or less

If the rotating torque is not as specified, check the housing oil seal.

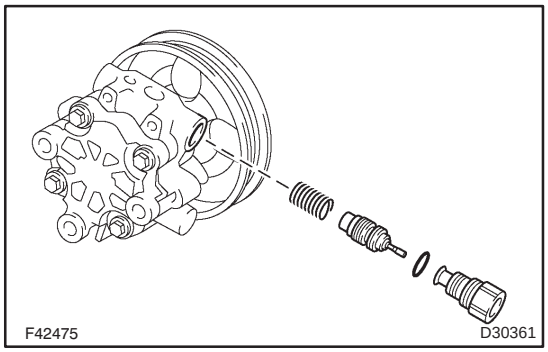

28. INSTALL FLOW CONTROL VALVE ASSY

(a) Coat the compression spring and the flow control valve assy with power steering fluid.

(b) Install the compression spring and the flow control valve assy.

(c) Coat a new O–ring with power steering fluid and install it onto the pressure port union sub–assy.

(d) Install the pressure port union sub–assy.

Torque: 69 N·m (704 kgf·cm, 51 ft·lbf)

29. INSTALL POWER STEERING SUCTION PORT UNION

(a) Coat a new O–ring with power steering fluid, and install it to the suction port union.

(b) Install the suction port union with the bolt.

Torque: 12 N·m (122 kgf·cm, 9 ft·lbf)

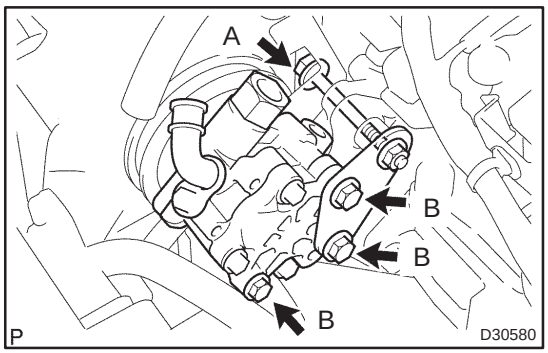

30. INSTALL VANE PUMP ASSY

(a) Install the vane pump assy and vane pump bracket rear with the 4 bolts.

Torque:
Bolt A: 72 N·m (734 kgf·cm, 53 ft·lbf)
Bolt B: 39 N·m (398 kgf·cm, 29 ft·lbf)

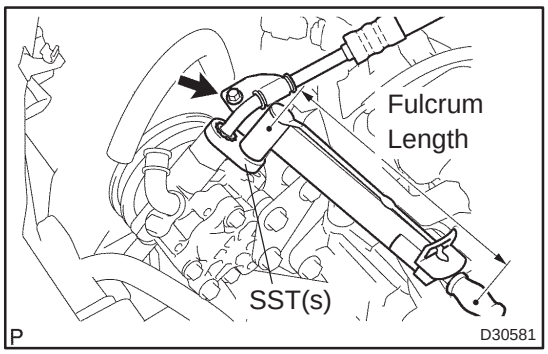

31. CONNECT PRESSURE FEED TUBE ASSY

(a) Using SST(s), connect the pressure feed tube assy.

SST 09023–12700

Torque: 41 N·m (414 kgf·cm, 30 ft·lbf)

HINT:

- Use a torque wrench with a fulcrum length of 345 mm (13.58 in.).
- This torque value is effective when SST(s) is parallel to a torque wrench.

(b) Install the tube clamp with the bolt.

Torque: 8.0 N·m (82 kgf·cm, 71 in.·lbf)

32. CONNECT OIL RESERVOIR TO PUMP HOSE NO.1

(a) Connect the oil reservoir to pump hose No. 1 with the clip.

NOTICE:

Take care not to spill fluid on the V belt.

33. INSTALL V (COOLER COMPRESSOR TO CRANKSHAFT PULLEY) BELT NO.1 (See page 55–46)

34. ADJUST V (COOLER COMPRESSOR TO CRANKSHAFT PULLEY) BELT NO.1 (See page 55–46)

35. ADD POWER STEERING FLUID (See page 51–4)

36. BLEED POWER STEERING FLUID (See page 51–4)

37. CHECK POWER STEERING FULUID LEVEL IN RESERVER (See page 51–4)

38. INSPECT FLUID LEAK

STEERING GEAR ASSY

COMPONENTS

510DI–02

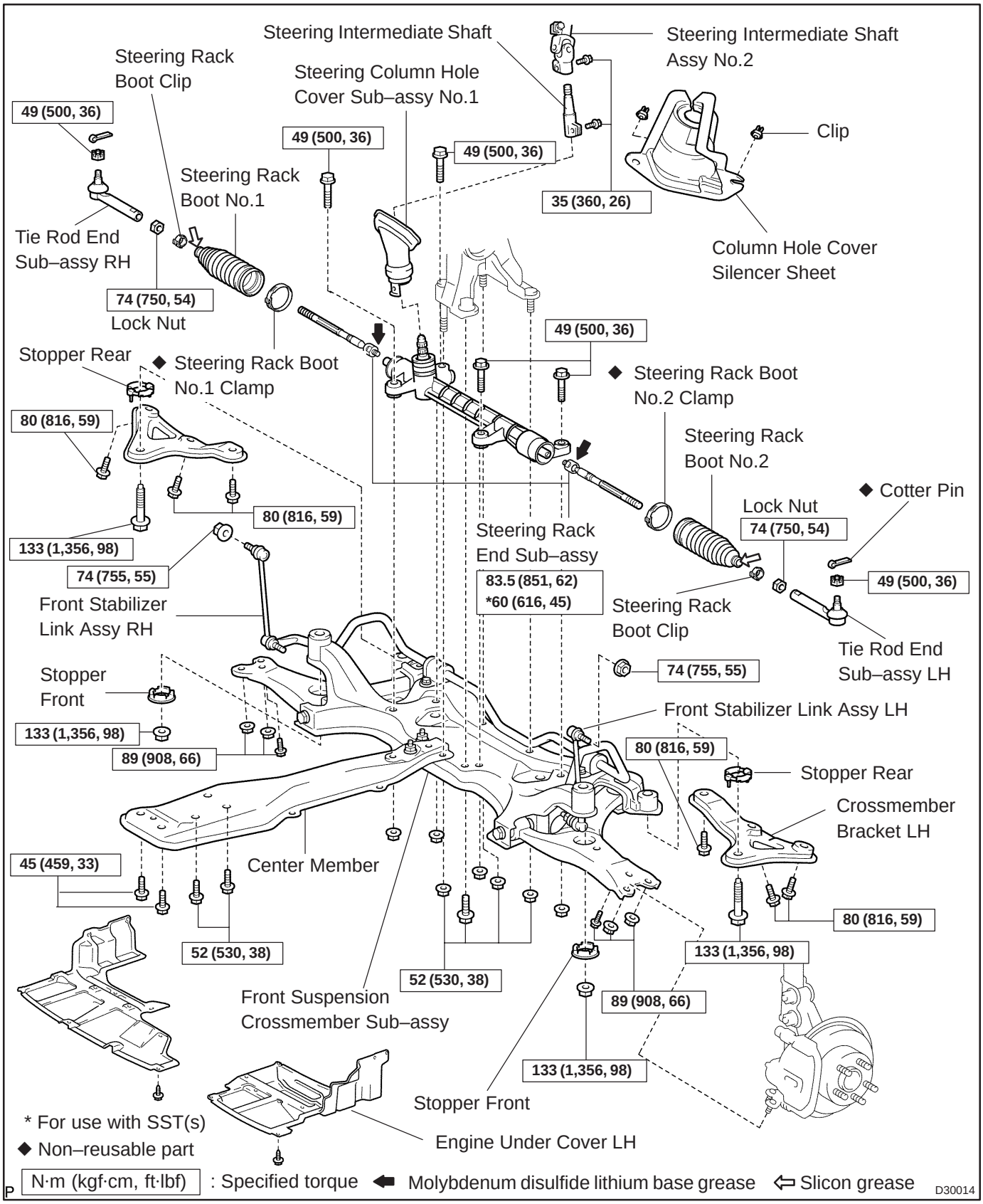

510DJ–02

OVERHAUL

NOTICE:

When installing, coat the parts indicated by the arrows with power steering fluid or molybdenum disulfide lithium base grease (See page 51–27).

1. INSPECT CENTER FRONT WHEEL

2. REMOVE COLUMN HOLE COVER SILENCER SHEET (See page 50–9)

3. SEPARATE STEERING INTERMEDIATE SHAFT ASSY NO.2 (See page 51–36)

4. SEPARATE STEERING COLUMN HOLE COVER SUB–ASSY NO.1

5. REMOVE FRONT WHEELS

6. REMOVE ENGINE UNDER COVER LH

7. REMOVE ENGINE UNDER COVER RH

8. SEPARATE TIE ROD END SUB–ASSY LH (See page 30–6)

SST 09628–62011

9. SEPARATE TIE ROD END SUB–ASSY RH

SST 09628–62011

HINT:

Perform the same procedure on the other side.

10. REMOVE HEIGHT CONTROL SENSOR SUB–ASSY FR RH (W/ DISCHARGE HEAD LAMP) (See page 65–28)

11. SEPARATE FRONT STABILIZER LINK ASSY LH (See page 30–6)

12. SEPARATE FRONT STABILIZER LINK ASSY RH

HINT:

Perform the same procedure on the other side.

13. SEPARATE FRONT SUSPENSION ARM SUB–ASSY LOWER NO.1 LH (See page 30–6)

14. SEPARATE FRONT SUSPENSION ARM SUB–ASSY LOWER NO.1 RH

HINT:

Perform the same procedure on the other side.

15. REMOVE HOOD SUB–ASSY

16. REMOVE CYLINDER HEAD COVER SUB–ASSY

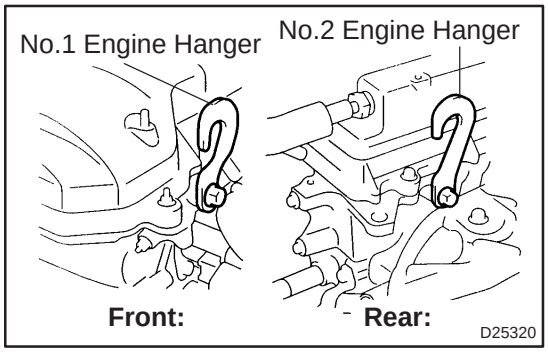

17. SUSPEND ENGINE ASSEMBLY

(a) Remove the 2 PCV hoses.

(b) Install the 2 engine hangers in the correct direction.

No.1 engine hanger: 12281–22021
No.2 engine hanger: 12281–15040
Bolt: 90512–B1016
Torque: 38 N·m (387 kgf·cm, 28 ft·lbf)

(c) Attach the engine chain hoist to the hangers.

CAUTION:

Do not attempt t hang the ingine by hooking the chain to any other part.

18. REMOVE FRONT SUSPENSION CROSSMEMBER SUB–ASSY (See page 51–36)

19. REMOVE STEERING COLUMN HOLE COVER SUB–ASSY NO.1

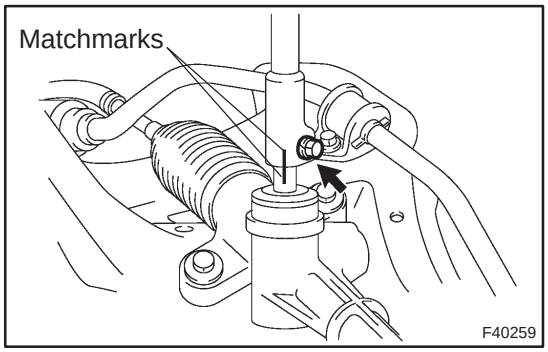

20. REMOVE STEERING INTERMEDIATE SHAFT

(a) Place matchmarks on the intermediate shaft and the pinion shaft.

(b) Remove the bolt and the steering intermediate shaft.

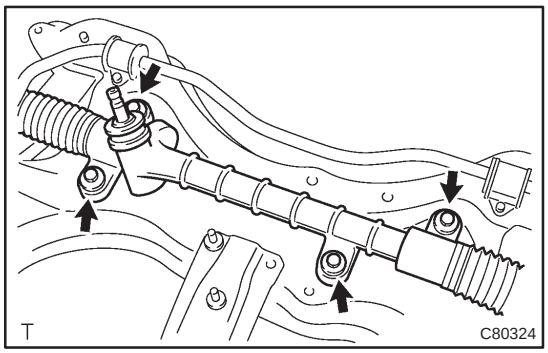

21. REMOVE STEERING GEAR ASSY

(a) Remove the 4 bolts, the 4 nuts and the steering gear assy from the crossmember sub–assy.

NOTICE:

Because the nut has its own stopper, do not turn the nut and torque the bolt with the nut fixed.

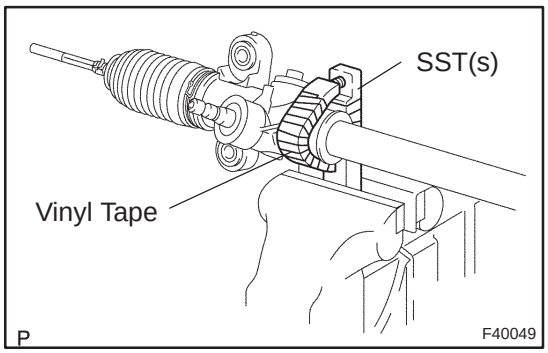

22. FIX STEERING GEAR ASSY

(a) Using SST(s), secure the steering gear assy in a vise.
SST 09612–00012

HINT:

Tape the SST(s) before use.

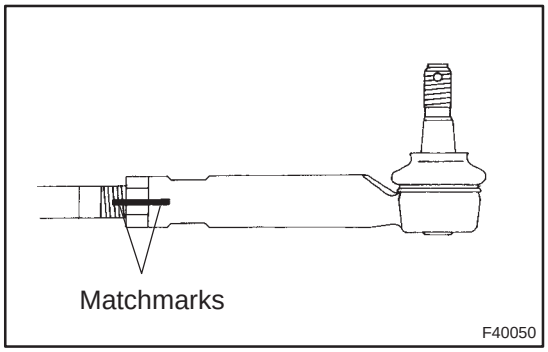

23. REMOVE TIE ROD END SUB–ASSY LH

(a) Place matchmarks on the tie rod end sub–assy and the rack end sub–assy.

(b) Loosen the lock nut and remove the tie rod end sub–assy and the lock nut.

24. REMOVE TIE ROD END SUB–ASSY RH

HINT:

Perform the same procedure on the other side.

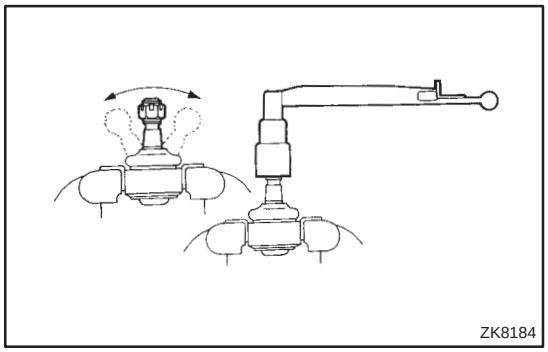

25. INSPECT TIE ROD END SUB–ASSY LH

(a) Secure the tie rod end sub–assy in a vise.
(b) Install the nut to the stud bolt.
(c) Flip the ball joint stud back and forth 5 times.
(d) Using a torx wrench, turn the nut continuously at a rate of 2 to 4 seconds per turn and take the torque reading on the 5th turn.

Turning torque:
0.29 to 1.96 N·m (3 to 20 kgf·cm, 2.57 to 17.35 in.·lbf)

26. INSPECT TIE ROD END SUB–ASSY RH

HINT:
Perform the same procedure on the other side.

27. REMOVE STEERING RACK BOOT CLIP

(a) Using a pliers, remove the 2 boot clips from each rack boots.

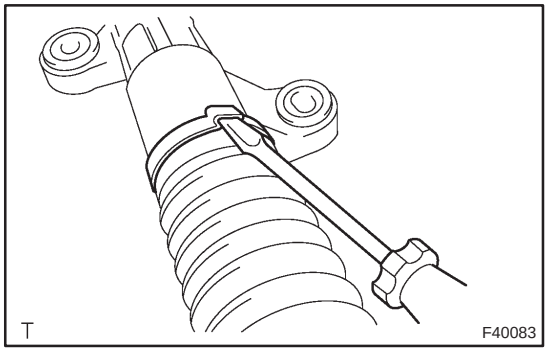

28. REMOVE STEERING RACK BOOT NO.2 CLAMP

(a) Using a screwdriver, unstake the rack boot No.2 clamp.

NOTICE:
Be careful not to damage the boot.

29. REMOVE STEERING RACK BOOT NO.1 CLAMP

HINT:
Perform the same procedure on the other side.

30. REMOVE STEERING RACK BOOT NO.2

31. REMOVE STEERING RACK BOOT NO.1

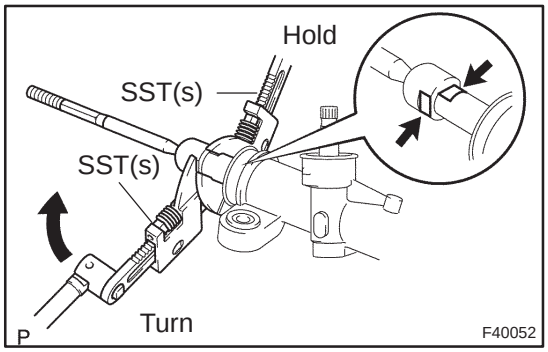

32. REMOVE STEERING RACK END SUB–ASSY

(a) Using SST(s), hold the steering rack steadily and using another SST(s), remove the rack end sub–assy.
SST 09922–10010

NOTICE:
Use SST(s) 09922–10010 in the direction shown in the illustration.

HINT:
Perform the same procedure on the other side.

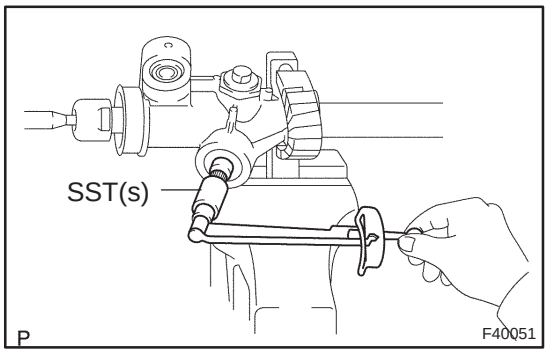

33. INSPECT TOTAL PRELOAD

(a) Temporarily install the RH and LH rack end sub–assy.
(b) Using SST(s) and a torque wrench, check the preload.
SST 09616–00011

Preload (turning):
0.6 to 1.1 N·m (6 to 11 kgf·cm, 5.3 to 9.7 in.·lbf)

If it is not within specification, replace the steering gear assy.

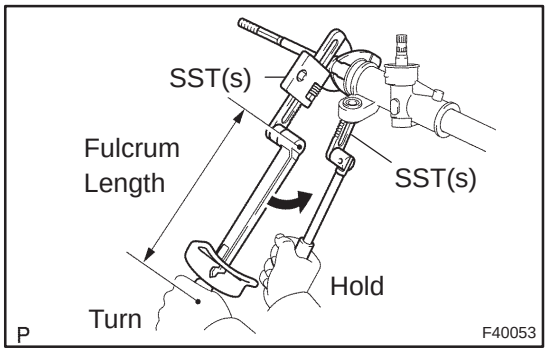

34. INSTALL STEERING RACK END SUB–ASSY

(a) Using SST(s), hold the steering rack steadily and using another SST(s), torque the rack end sub–assy.
SST 09922–10010
Torque: 60 N·m (616 kgf·cm, 45 ft·lbf)

NOTICE:
Use SST(s) 09922–10010 in the direction shown in the illustration.

HINT:
- Use a torque wrench with a fulcrum length of 345 mm (13.58 in.)
- Perform the same procedure on the other side.

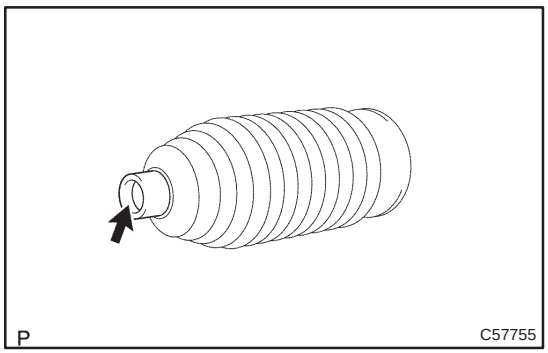

35. INSTALL STEERING RACK BOOT NO.2

(a) Apply silicon grease to the inside small caliber of rack boot No.2.
(b) Install the rack boot No.2 to the groove on the rack housing.

NOTICE:
Be careful not to damage or twist the boot.

36. INSTALL STEERING RACK BOOT NO.1

HINT:
Perform the same procedure on the other side.

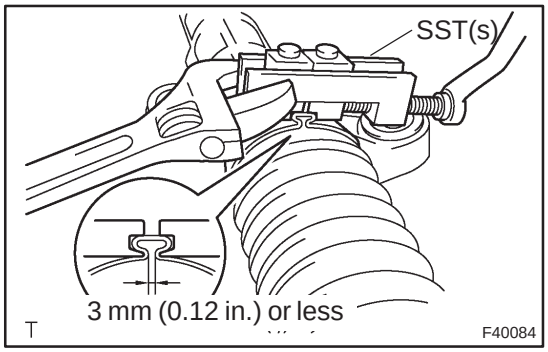

37. INSTALL STEERING RACK BOOT NO.2 CLAMP

(a) Install a new rack boot No.2 clamp to the rack boot No.2.
(b) Using SST(s), stake the rack boot No.2 clamp as shown in the illustration.
SST 09521–24010

38. INSTALL STEERING RACK BOOT NO.1 CLAMP

SST 09521–24010

HINT:
Perform the same procedure on the other side.

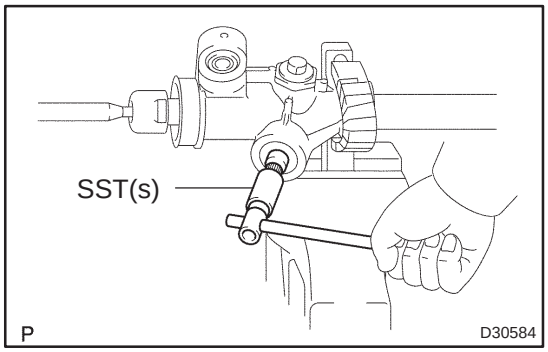

39. INSTALL STEERING RACK BOOT CLIP

(a) Using a pliers, install the 2 rack boot clips to each rack boots.

(b) Using SST(s), check that the rack boot No.2 is strechy.
SST 09616–00011

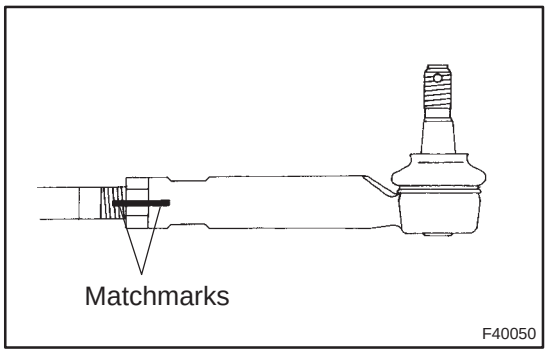

40. INSTALL TIE ROD END SUB–ASSY LH

(a) Screw the lock nut and the tie rod end sub–assy to the rack end sub–assy until the matchmarks are aligned.
Torque: 74 N·m (750 kgf·cm, 54 ft·lbf)

HINT:
After adjusting toe–in, torque the lock nut
(See page 26–6).

41. INSTALL TIE ROD END SUB–ASSY RH

HINT:
Perform the same procedure on the other side.

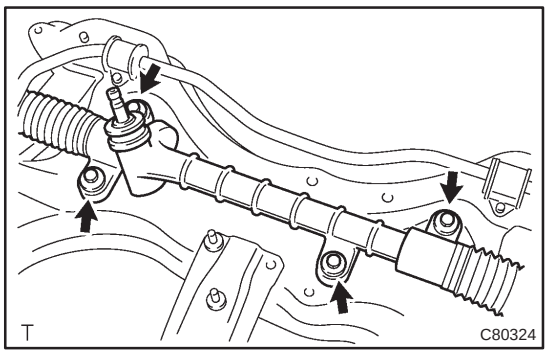

42. INSTALL STEERING GEAR ASSY

(a) Install the steering gear assy onto the crossmember sub–assy with the 4 bolts and the nuts.
Torque: 49 N·m (500 kgf·cm, 36 ft·lbf)

NOTICE:
Because the nut has its own stopper, do not turn the nut and torque the bolt with the nut fixed.

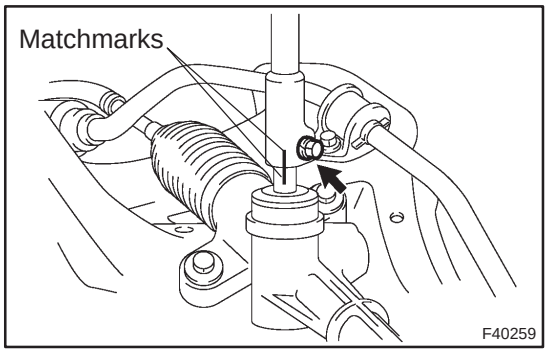

43. INSTALL STEERING INTERMEDIATE SHAFT

(a) Align the matchmarks on the steering intermediate shaft and the steering pinion shaft.

(b) Install the bolt.
Torque: 35 N·m (360 kgf·cm, 26 ft·lbf)

44. INSTALL STEERING COLUMN HOLE COVER SUB–ASSY NO.1

45. INSTALL FRONT SUSPENSION CROSSMEMBER SUB–ASSY (See page 51–36)

46. INSTALL FRONT SUSPENSION ARM SUB–ASSY LOWER NO.1 LH (See page 30–6)
47. INSTALL FRONT SUSPENSION ARM SUB–ASSY LOWER NO.1 RH
HINT:
Perform the same procedure on the other side.
48. INSTALL FRONT STABILIZER LINK ASSY LH (See page 30–6)
49. INSTALL FRONT STABILIZER LINK ASSY RH
HINT:
Perform the same procedure on the other side.
50. INSTALL HEIGHT CONTROL SENSOR SUB–ASSY FR RH (W/ DISCHARGE HEAD LAMP) (See page 65–28)
51. INSTALL TIE ROD END SUB–ASSY LH (See page 30–6)
52. INSTALL TIE ROD END SUB–ASSY RH
HINT:
Perform the same procedure on the other side.
53. INSTALL FRONT WHEELS
Torque: 103 N·m (1,050 kgf·cm, 76 ft·lbf)
54. INSTALL STEERING COLUMN HOLE COVER SUB–ASSY NO.1
55. INSTALL STEERING INTERMEDIATE SHAFT ASSY NO.2 (See page 51–36)
56. INSTALL COLUMN HOLE COVER SILENCER SHEET (See page 50–9)
57. INSTALL CYLINDER HEAD COVER SUB–ASSY
58. INSPECT HOOD SUB–ASSY (See page 75–2)
59. ADJUST HOOD SUB–ASSY (See page 75–2)
60. INSPECT AND ADJUST FRONT WHEEL ALIGNMENT (See page 26–6)
61. INSTALL ENGINE UNDER COVER LH
62. INSTALL ENGINE UNDER COVER RH
63. HEADLIGHT AIM ONLY (W/ DISCHARGE HEAD LAMP) (See page 65–19)

RACK & PINION POWER STEERING GEAR ASSY

COMPONENTS

510DK–02

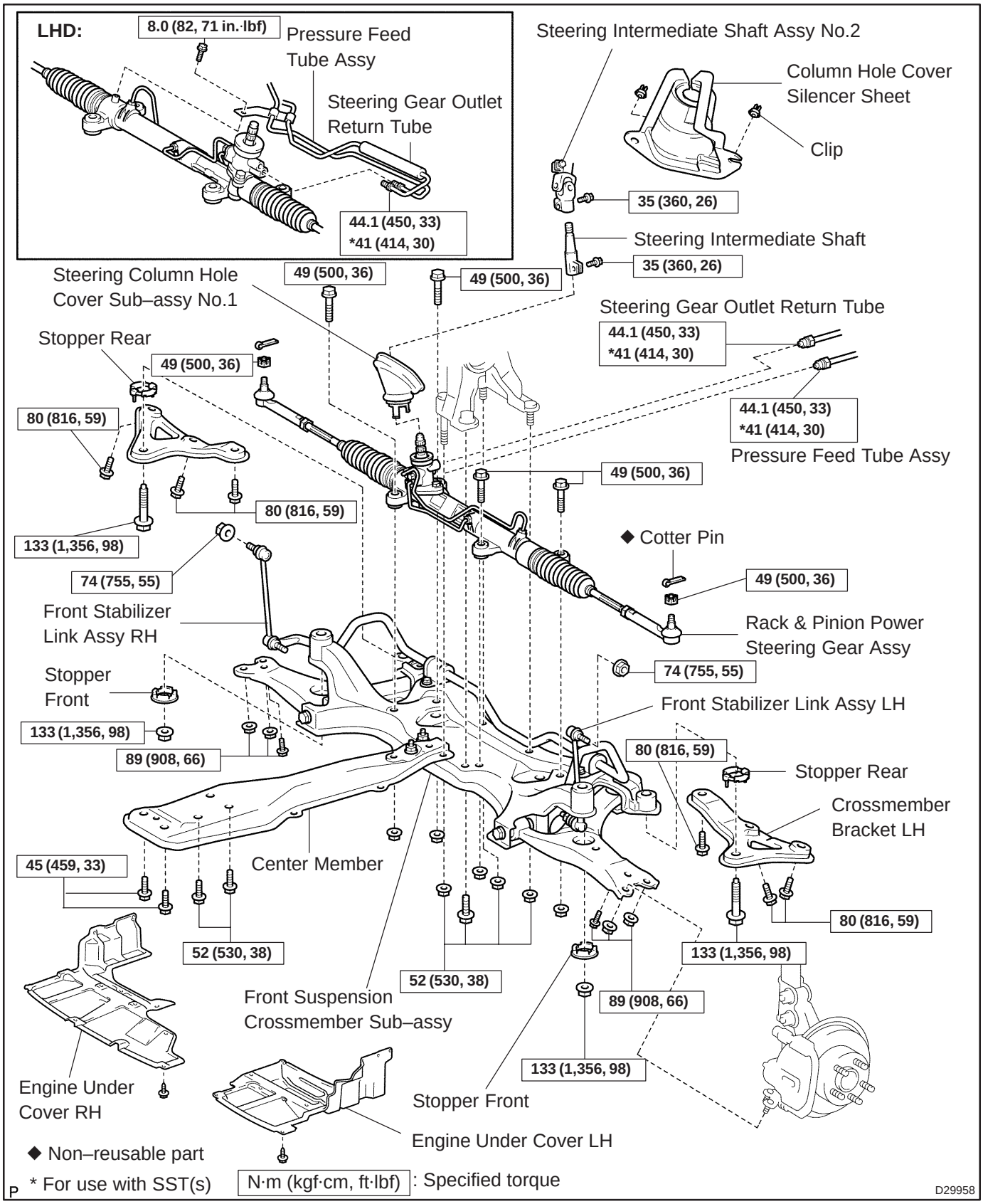

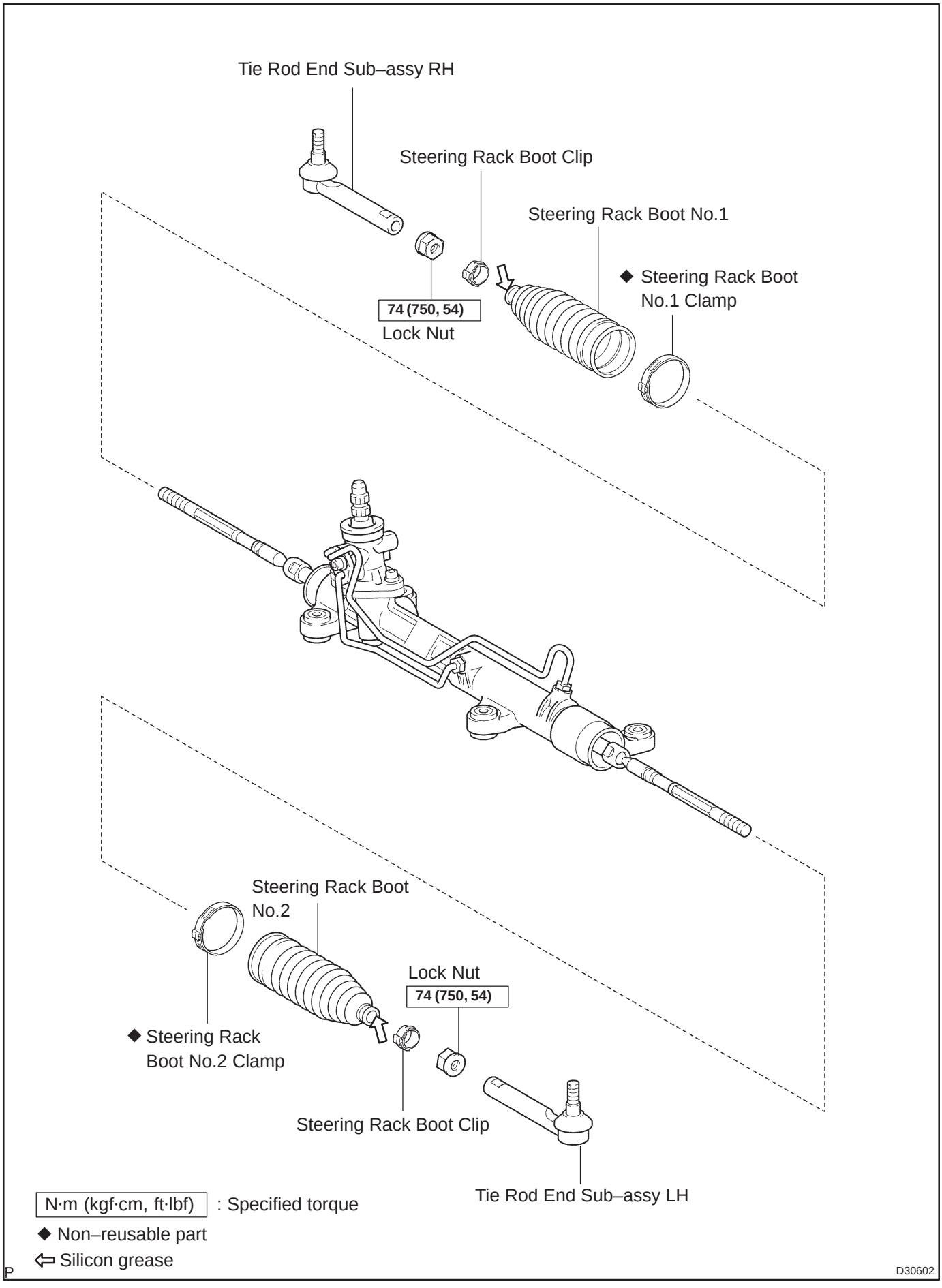
Tie Rod End Sub–assy RH
Steering Rack Boot Clip
Steering Rack Boot No.1
◆ Steering Rack Boot No.1 Clamp
74 (750, 54)
Lock Nut
Steering Rack Boot No.2
Lock Nut
74 (750, 54)
◆ Steering Rack Boot No.2 Clamp
Steering Rack Boot Clip
Tie Rod End Sub–assy LH
N·m (kgf·cm, ft·lbf) : Specified torque
◆ Non–reusable part
⇦ Silicon grease
P
D30602

510DL–02

OVERHAUL

NOTICE:

When installing, coat the parts indicated by the arrows with power steering fluid or molybdenum disulfide lithium base grease (See page 51–34).

1. INSPECT CENTER FRONT WHEEL

2. REMOVE COLUMN HOLE COVER SILENCER SHEET (See page 50–9)

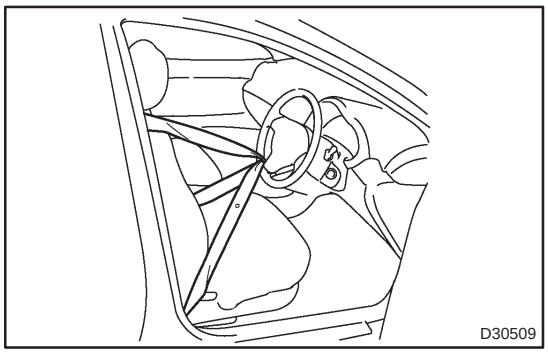

3. SEPARATE STEERING INTERMEDIATE SHAFT ASSY NO.2

(a) To prevent form rotating the steering wheel, fix the wheel with the seat belt.

HINT:

The operation is useful to prevent the damage of the spiral cable.

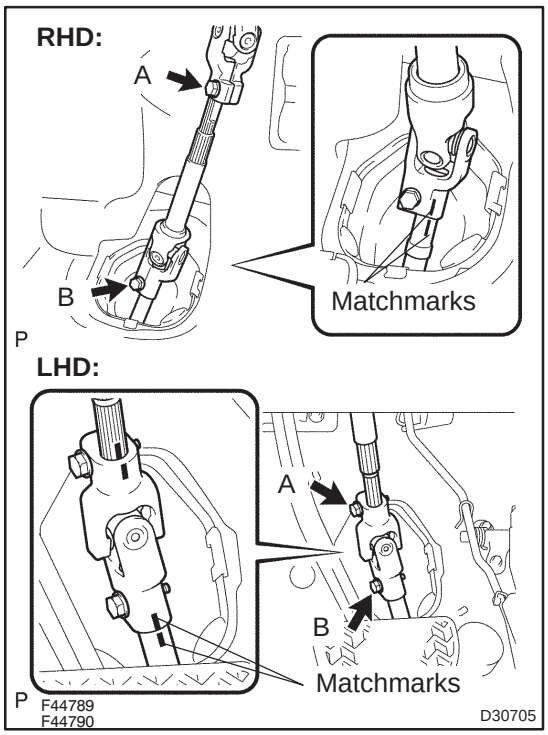

(b) Place matchmarks on the intermediate shaft assy No.2 and the intermediate shaft.

(c) Loosen the bolt A and remove the bolt B, then separate the intermediate shaft assy No.2.

4. SEPARATE STEERING COLUMN HOLE COVER SUB–ASSY NO.1

5. REMOVE FRONT WHEELS

6. REMOVE ENGINE UNDER COVER LH

7. REMOVE ENGINE UNDER COVER RH

8. SEPARATE TIE ROD END SUB–ASSY LH (See page 30–6)

SST 09628–62011

9. SEPARATE TIE ROD END SUB–ASSY RH

SST 09628–62011

HINT:

Perform the same procedure on the other side.

10. REMOVE HEIGHT CONTROL SENSOR SUB–ASSY FR RH (W/ DISCHARGE HEAD LAMP) (See page 65–28)

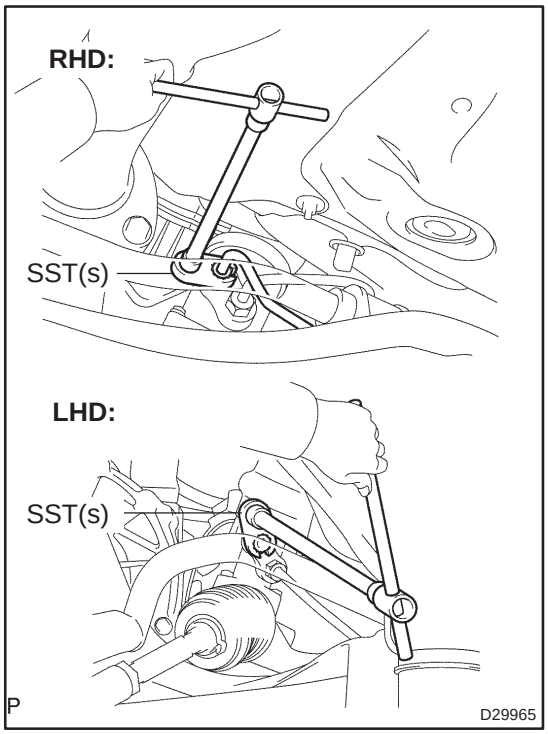

11. DISCONNECT STEERING GEAR OUTLET RETURN TUBE

(a) Using SST(s), disconnect the outlet return tube.
SST 09023–12700

(b) LHD:
Remove the bolt and separate the tube clamp from the power steering gear assy.

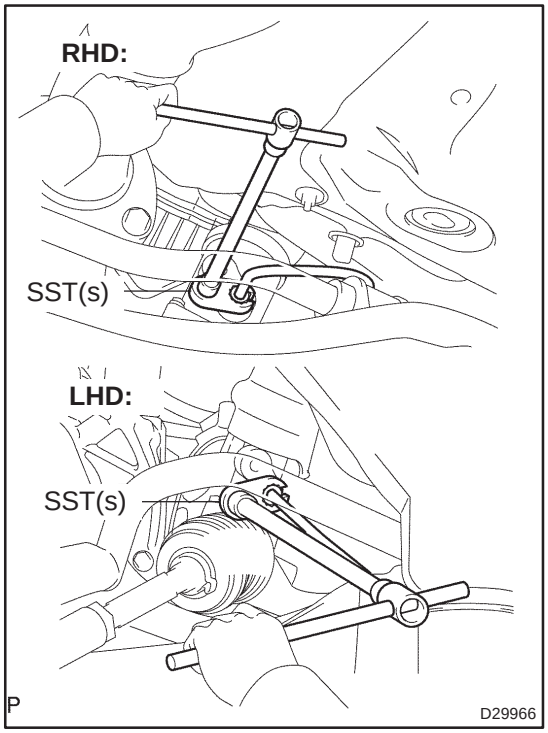

12. DISCONNECT PRESSURE FEED TUBE ASSY

(a) Using SST(s), disconnect the pressure feed tube assy.
SST 09023–12700

13. SEPARATE FRONT STABILIZER LINK ASSY LH (See page 30–6)

14. SEPARATE FRONT STABILIZER LINK ASSY RH

HINT:
Perform the same procedure on the other side.

15. SEPARATE FRONT SUSPENSION ARM SUB–ASSY LOWER NO.1 LH (See page 30–6)

16. SEPARATE FRONT SUSPENSION ARM SUB–ASSY LOWER NO.1 RH

HINT:

Perform the same procedure on the other side.

17. REMOVE HOOD SUB–ASSY

18. REMOVE CYLINDER HEAD COVER SUB–ASSY

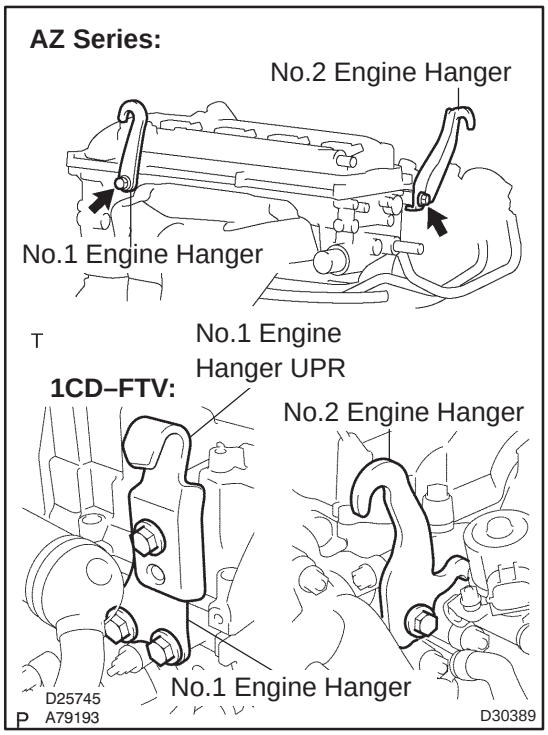

19. SUSPEND ENGINE ASSEMBLY

(a) Install the 2 or 3 engine hangers with the bolts in the correct direction.

Parts No. :

	AZ Series:	1CD–FTV:
No.1 Engine Hanger	12281–28010	12281–27050
No.1 Engine Hanger UPR	–	Yellow:12284–27020 Black:12284–27030
No.2 Engine Hanger	12282–28010	Yellow:12282–27060 Black:12282–27070
Bolt	91512–61020	91642–81025

Torque:
AZ Series:
38 N·m (390 kgf·cm, 28 ft·lbf)
1CD–FTV:
37 N·m (375 kgf·cm, 27 ft·lbf)

(b) Attach the engine chain hoist to the engine hangers.

CAUTION:
Do not attempt to hang the engine by hooking the chain to any other parts.

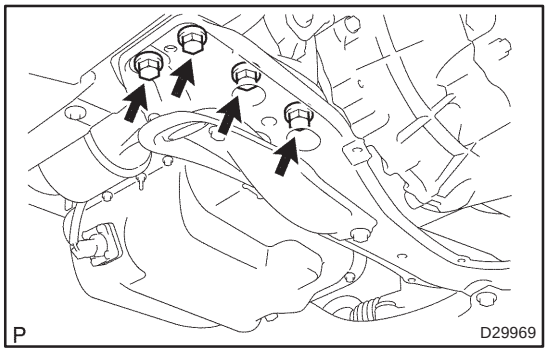

20. REMOVE FRONT SUSPENSION CROSSMEMBER SUB–ASSY

(a) Remove the 4 bolts and separate the center member.

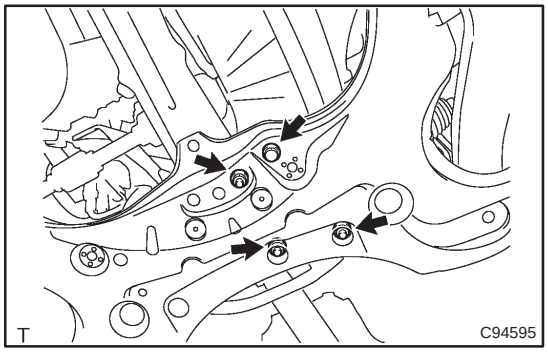

(b) Remove the bolt and the 3 nuts, separate the engine mounting insulator RR from the crossmember sub–assy.

(c) Using a transmission jack, support the crossmember sub–assy.

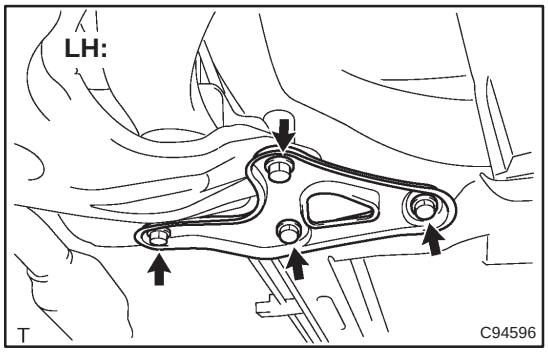

(d) Remove the 4 bolts and the crossmember bracket LH.
(e) Remove the stopper rear from the crossmember bracket LH.

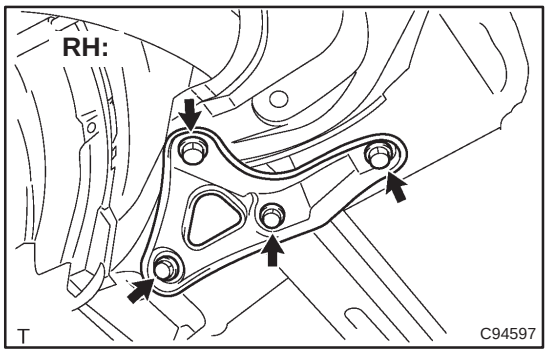

(f) Remove the 4 bolts and the crossmember bracket RH.
(g) Remove the stopper rear from the crossmember bracket RH.

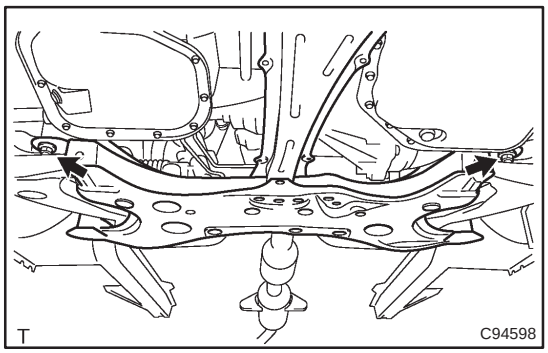

(h) Remove the 2 nuts and the crossmember sub–assy w/ power steering gear assy.
(i) Remove the 2 stopper front from the crossmember sub–assy.

21. REMOVE STEERING COLUMN HOLE COVER SUB–ASSY NO.1

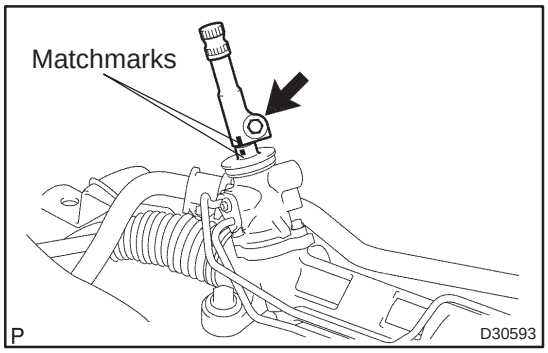

22. REMOVE STEERING INTERMEDIATE SHAFT
(a) Place matchmarks on the intermediate shaft and the pinion shaft.
(b) Remove the bolt and the intermediate shaft.

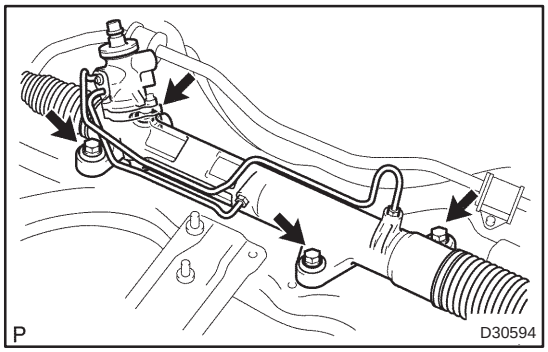

23. REMOVE RACK & PINION POWER STEERING GEAR ASSY

(a) Remove the 4 bolts, the nuts and the power steering gear assy from the crossmember sub–assy.

NOTICE:

Because the nut has its own stopper, do not turn the nut and torque the bolt with the nut fixed.

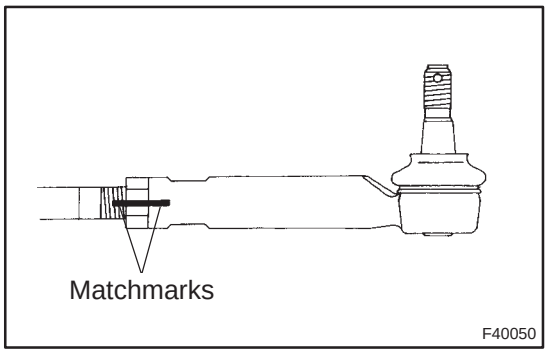

24. REMOVE TIE ROD END SUB–ASSY LH

(a) Place matchmarks on the tie rod end sub–assy and the rack end.

(b) Loosen the lock nut, and remove the tie rod end sub–assy and the lock nut.

25. REMOVE TIE ROD END SUB–ASSY RH

HINT:

Perform the same procedure on the other side.

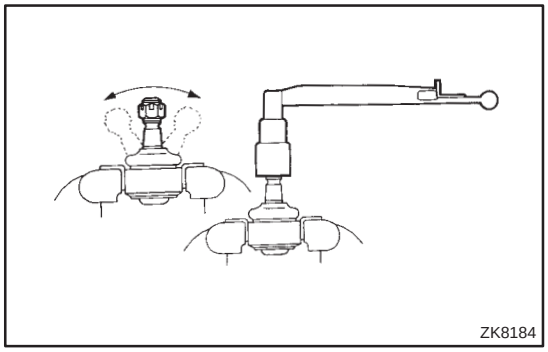

26. INSPECT TIE ROD END SUB–ASSY LH

(a) Secure the tie rod end sub–assy in a vise.

(b) Install the nut to the stud bolt.

(c) Flip the ball joint stud back and forth 5 times.

(d) Using a torx wrench, turn the nut continuously at a rate of 2 to 4 seconds per turn and take the torque reading on the 5th turn.

Turning torque:

0.49 to 3.43 N·m (5.0 to 35 kgf·cm, 4.34 to 30.38 in. lbf)

27. INSPECT TIE ROD END SUB–ASSY RH

HINT:

Perform the same procedure on the other side.

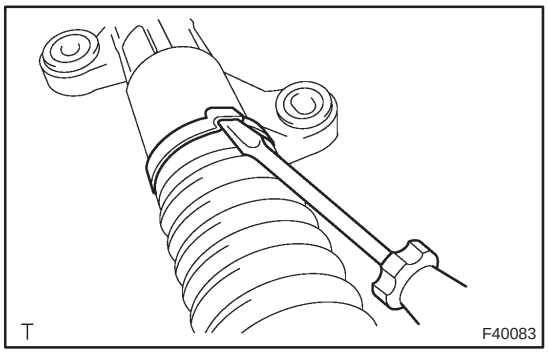

28. REMOVE STEERING RACK BOOT NO.2 CLAMP

(a) Using a screwdriver, remove the rack boot No.2 clamp.

NOTICE:

Be careful not to damage the boot.

29. REMOVE STEERING RACK BOOT NO.1 CLAMP

HINT:

Perform the same procedure on the other side.

30. REMOVE STEERING RACK BOOT CLIP

HINT:

Perform the same procedure on the rack boot clamps.

31. REMOVE STEERING RACK BOOT NO.2

32. REMOVE STEERING RACK BOOT NO.1

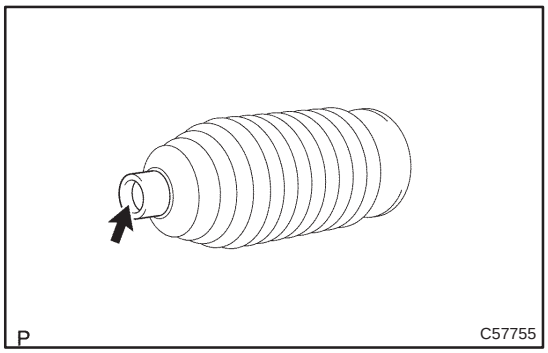

33. INSTALL STEERING RACK BOOT NO.2

(a) Apply silicon grease to the inside small caliber of rack boot No.2.

(b) Install the rack boot No.2 to the groove on the rack housing.

NOTICE:

Be careful not to damage or twist the boot.

34. INSTALL STEERING RACK BOOT NO.1

HINT:

Perform the same procedure on the other side.

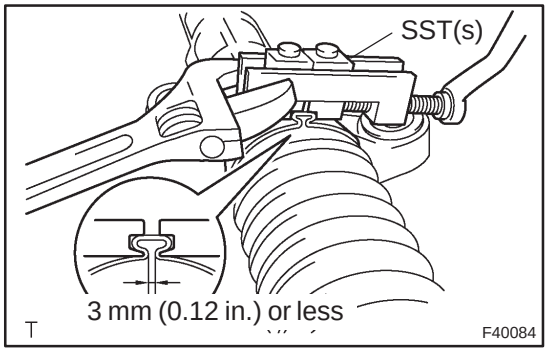

35. INSTALL STEERING RACK BOOT NO.2 CLAMP

(a) Install a new rack boot No.2 clamp.

(b) Using SST(s), stake the rack boot No.2 clamp as shown in the illustration.

SST 09521–24010

36. INSTALL STEERING RACK BOOT NO.1 CLAMP

SST 09521–24010

HINT:

Perform the same procedure on the other side.

37. INSTALL STEERING RACK BOOT CLIP

SST 09521–24010

HINT:

Perform the same procedure on the rack boot clamps.

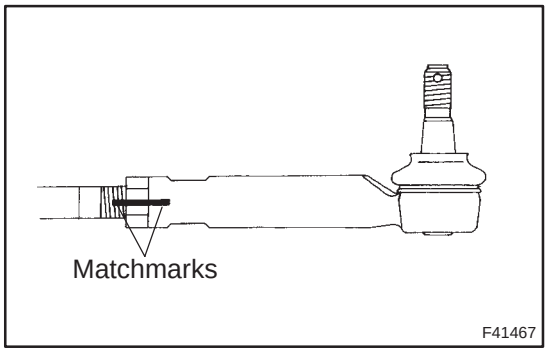

38. INSTALL TIE ROD END SUB–ASSY LH

(a) Screw the lock nut and the tie rod end sub–assy to the rack end until the matchmarks are aligned.
Torque: 74 N·m (750 kgf·cm, 54 ft·lbf)

HINT:
After adjusting toe–in, torque the lock nut
(See page 26–6).

39. INSTALL TIE ROD END SUB–ASSY RH

HINT:
Perform the same procedure on the other side.

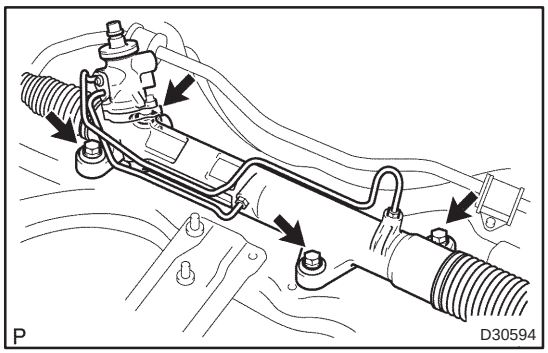

40. INSTALL RACK & PINION POWER STEERING GEAR ASSY

(a) Install the power steering gear assy with the 4 bolts and the nuts.
Torque: 49 N·m (500 kgf·cm, 36 ft·lbf)

NOTICE:

- **The 4 bushings must be securely installed to the power steering gear assy.**
- **When tightening the bolts for power steering gear, the bushings should not be bitten in.**
- **Because the nut has its own stopper, do not turn the nut and torque the bolt with the nut fixed.**

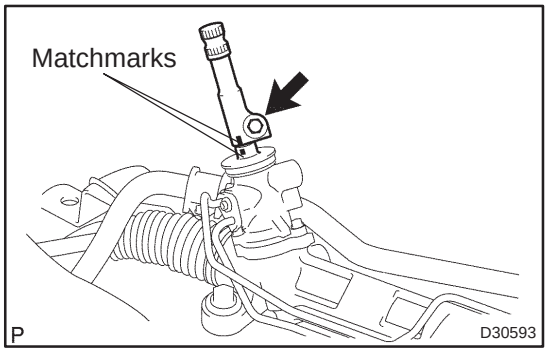

41. INSTALL STEERING INTERMEDIATE SHAFT

(a) Align the matchmarks on the intermediate shaft with the pinion shaft.

(b) Install the bolt.
Torque: 35 N·m (360 kgf·cm, 26 ft·lbf)

42. INSTALL STEERING COLUMN HOLE COVER SUB–ASSY NO.1

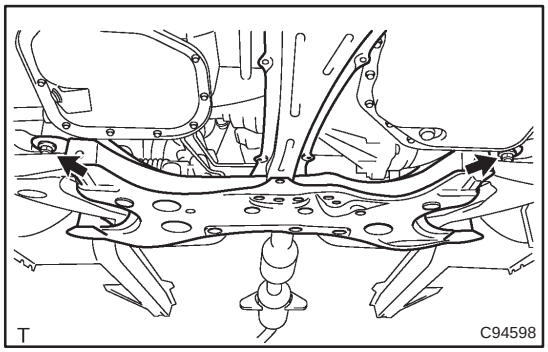

43. INSTALL FRONT SUSPENSION CROSSMEMBER SUB–ASSY

(a) Using a transmission jack, support the crossmember sub–assy w/power steering gear assy.

(b) Install the 2 stopper front onto the crossmember sub–assy.

(c) Install the crossmember sub–assy with the 2 nuts.
Torque: 133 N·m (1,356 kgf·cm, 98 ft·lbf)

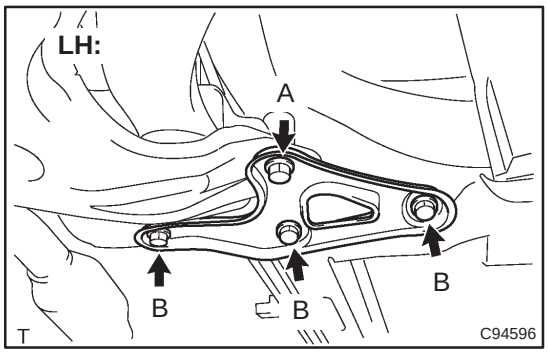

(d) Install the stopper rear onto the crossmember bracket LH.

(e) Install the crossmember bracket LH with the 4 bolts.
Torque:
Bolt A: 133 N·m (1,356 kgf·cm, 98 ft·lbf)
Bolt B: 80 N·m (816 kgf·cm, 59 ft·lbf)

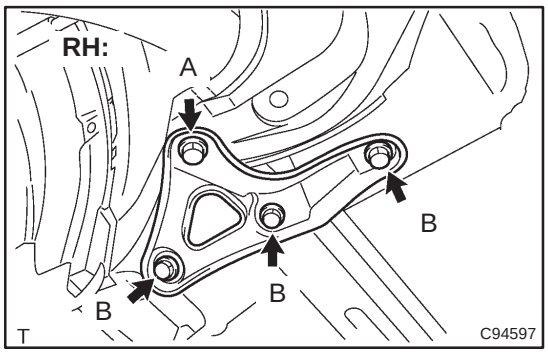

(f) Install the stopper rear onto the crossmember bracket RH.

(g) Install the crossmember bracket RH with the 4 bolts.
Torque:
Bolt A: 133 N·m (1,356 kgf·cm, 98 ft·lbf)
Bolt B: 80 N·m (816 kgf·cm, 59 ft·lbf)

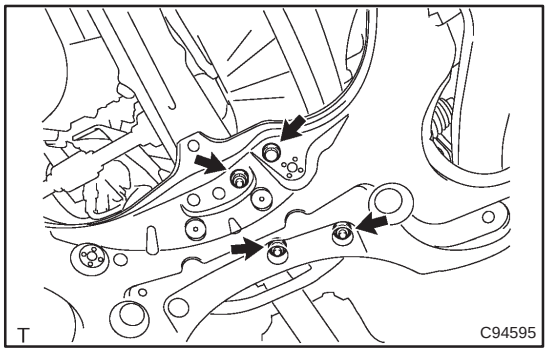

(h) Install the engine mounting insulator RR to the crossmember sub–assy with the bolt and the 3 nuts.
Torque: 52 N·m (530 kgf·cm, 38 ft·lbf)

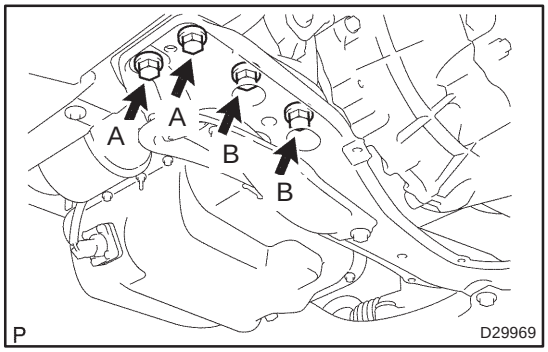

(i) Install the center member with the 4 bolts.
Torque:
Bolt A: 45 N·m (459 kgf·cm, 33 ft·lbf)
Bolt B: 52 N·m (530 kgf·cm, 38 ft·lbf)

44. INSTALL FRONT SUSPENSION ARM SUB–ASSY LOWER NO.1 LH (See page 30–6)

45. INSTALL FRONT SUSPENSION ARM SUB–ASSY LOWER NO.1 RH

HINT:

Perform the same procedure on the other side.

46. INSTALL FRONT STABILIZER LINK ASSY LH (See page 30–6)

47. INSTALL FRONT STABILIZER LINK ASSY RH

HINT:

Perform the same procedure on the other side.

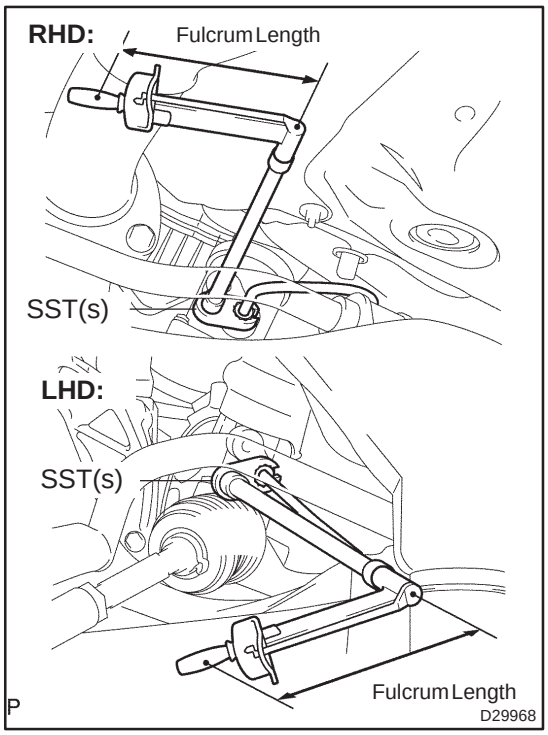

48. CONNECT PRESSURE FEED TUBE ASSY

(a) Using SST(s), connect the pressure feed tube assy.

SST 09023–12700

Torque: 41 N·m (414 kgf·cm, 30 ft·lbf)

HINT:

- Use a torque wrench with a fulcrum length of 345 mm (13.58 in.).
- This torque value is effective when SST(s) is parallel to a torque wrench.

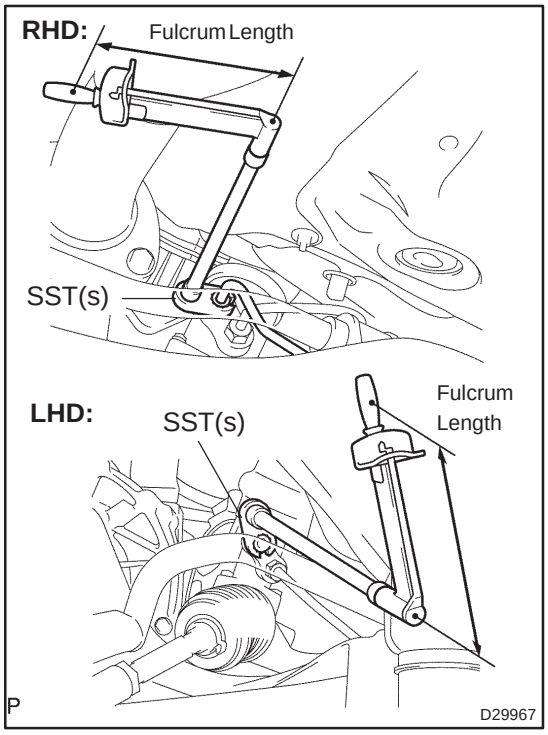

49. CONNECT STEERING GEAR OUTLET RETURN TUBE

(a) Using SST(s), connect the outlet return tube.

SST 09023–12700

Torque: 41 N·m (414 kgf·cm, 30 ft·lbf)

HINT:

- Use a torque wrench with a fulcrum length of 345 mm (13.58 in.).
- This torque value is effective when SST(s) is parallel to a torque wrench.

(b) LHD:

Install the tube clamp with bolt to the power steering gear assy.

Torque: 8.0 N·m (82 kgf·cm, 71 in.·lbf)

50. INSTALL HEIGHT CONTROL SENSOR SUB–ASSY FR RH (W/ DISCHARGE HEAD LAMP) (See page 65–28)

51. INSTALL TIE ROD END SUB–ASSY LH (See page 30–6)

52. INSTALL TIE ROD END SUB–ASSY RH

HINT:

Perform the same procedure on the other side.

53. INSTALL FRONT WHEELS

Torque: 103 N·m (1,050 kgf·cm, 76 ft·lbf)

54. INSTALL STEERING COLUMN HOLE COVER SUB–ASSY NO.1

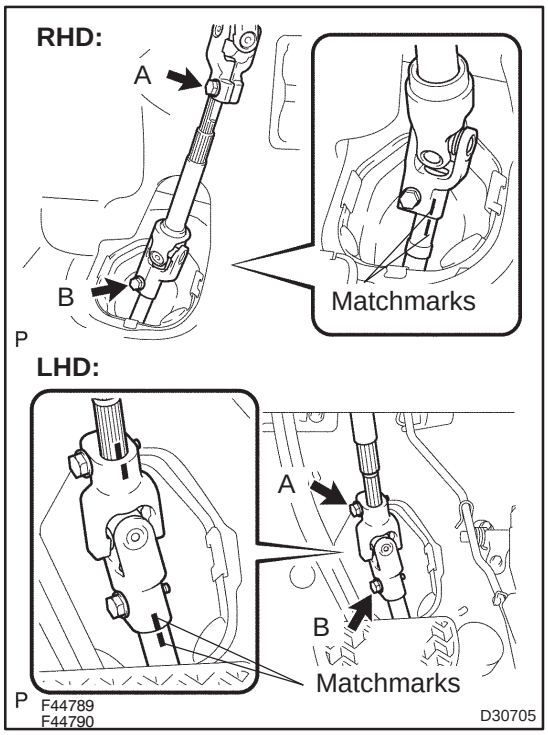

55. INSTALL STEERING INTERMEDIATE SHAFT ASSY NO.2

(a) Align the matchmarks on the intermediate shaft assy No.2 and the intermediate shaft.

(b) Install the bolt B and tighten the bolt A.

Torque: 35 N·m (360 kgf·cm, 26 ft·lbf)

56. INSTALL COLUMN HOLE COVER SILENCER SHEET (See page 50–9)

57. INSTALL CYLINDER HEAD COVER SUB–ASSY

58. ADD POWER STEERING FLUID (See page 51–4)

59. BLEED POWER STEERING FLUID (See page 51–4)

60. CHECK POWER STEERING FULUID LEVEL IN RESERVER (See page 51–4)

61. INSPECT FLUID LEAK

62. INSPECT HOOD SUB–ASSY (See page 75–2)

63. ADJUST HOOD SUB–ASSY (See page 75–2)

64. INSPECT AND ADJUST FRONT WHEEL ALIGNMENT (See page 26–6)

65. INSTALL ENGINE UNDER COVER LH

66. INSTALL ENGINE UNDER COVER RH

67. HEADLIGHT AIM ONLY (W/ DISCHARGE HEAD LAMP) (See page 65–19)

AIR CONDITIONING SYSTEM

PRECAUTION

5507E–03

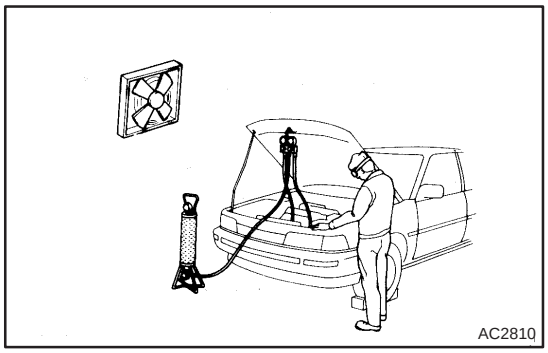

1. DO NOT HANDLE REFRIGERANT IN AN ENCLOSED AREA OR NEAR AN OPEN FLAME

2. ALWAYS WEAR EYE PROTECTION

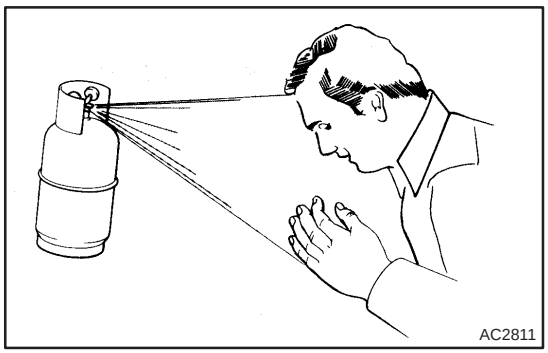

3. BE CAREFUL NOT TO GET LIQUID REFRIGERANT IN YOUR EYES OR ON YOUR SKIN

If liquid refrigerant gets in your eyes or on your skin.

(a) Wash the area with lots of cold water.

CAUTION:

Do not rub your eyes or skin.

(b) Apply clean petroleum jelly to the skin.

(c) Go immediately to a hospital or see a physician for professional treatment.

4. NEVER HEAT CONTAINER OR EXPOSE IT TO NAKED FLAME

5. BE CAREFUL NOT TO DROP CONTAINER AND NOT TO APPLY PHYSICAL SHOCKS TO IT

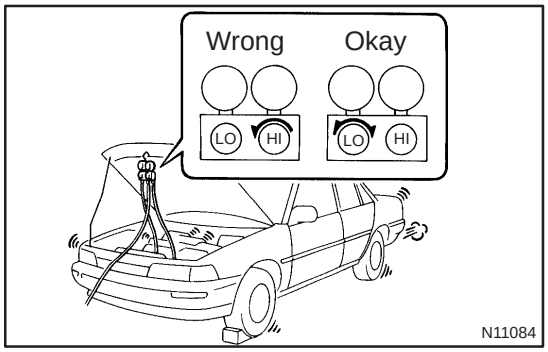

6. DO NOT OPERATE COMPRESSOR WITHOUT ENOUGH REFRIGERANT IN REFRIGERANT SYSTEM

If there is not enough refrigerant in the refrigerant system, oil lubrication will be insufficient and compressor may burnout may occur, so take care to avoid this, necessary care should be taken.

7. DO NOT OPEN HIGH PRESSURE MANIFOLD VALVE WHILE COMPRESSOR IS OPERATING

Open and close the only low pressure valve. If the high pressure valves are opened, refrigerant flows in the reverse direction and cause the charging cylinder to rupture.

8. BE CAREFUL NOT TO OVERCHARGE SYSTEM WITH REFRIGERANT

If refrigerant is overcharged, it causes problems such as insufficient cooling, poor fuel economy, engine overheating, etc.

9. DO NOT OPERATE ENGINE AND COMPRESSOR WITH NO REFRIGERANT IS FILLED

CAUTION:

This may damage the inside of the compressor because the compressor parts always moves regardless of whether the A/C system is turned on or off.

550ZC–01

ON–VEHICLE INSPECTION

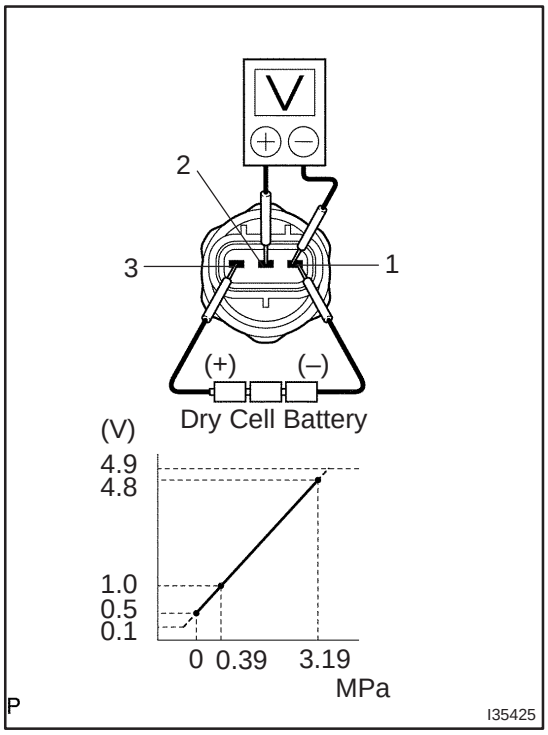

1. INSPECT AIR CONDITIONER PRESSURE SENSOR

(a) Disconnect the pressure SW connector.

(b) Install the manifold gauge set (See page 55–38).

(c) Connect the positive (+) lead from the three 1.5 V dry cell batteries to terminal 3 and negative (–) lead to terminal 1.

(d) Check the voltage between terminals 2 and 1 of pressure sensor.

Standard:

The voltage varies with on the refrigerant pressure as shown in the chart.

2. INSPECT AIR CONDITIONING CONTROL ASSY

(a) Disconnect the connector from air conditioning control assy and inspect the connector on wire harness side, as shown in the table.

Wire Harness Side:

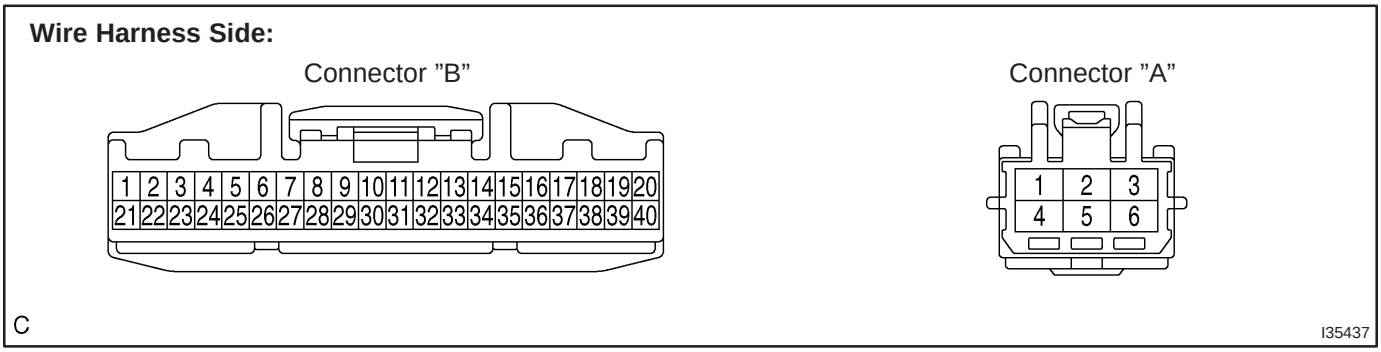

Symbols (Terminal No.)	Condition	Specified condition
IG (B1) – GND (B40)	Ignition switch: LOCK → ON	0 → 10 to 14 V
+B (B2) – GND (B40)	Always	10 to 14 V
GND (B40) – Body ground	Always	Continuity

If circuit is not as specified, try replacing the air conditioning control assy with a new one. If the circuit is not as specified, inspect the circuits connected to the other parts.

(b) Connect the connector to air conditioning control assy and inspect wire harness side connector from the back side, as shown in the table.

From Back Side:

Connector "B"

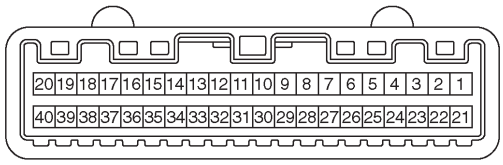

Connector "A"

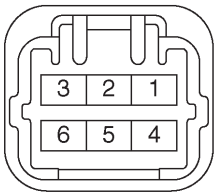

C

I36091

Symbols (Terminal No.)	Condition	Specified condition
HI (A4) – GND (A1)	Ignition switch ON Turn blower dial: OFF → HI	No continuity → Continuity
M2 (A5) – GND (A1)	Ignition switch: ON Turn blower dial: OFF → M2	No continuity → Continuity
M1 (A6) – GND (A1)	Ignition switch: ON Turn blower dial: OFF → M1	No continuity → Continuity
GND (A1) – Body ground	Ignition switch: ON Turn blower dial: OFF → LO	No continuity → Continuity
RDEFIN (B4) – GND (B40) (*1)	Ignition switch : ON Rear DEF switch: ON	10 to 14 V
S5–2 (B5) – GND (B40)	Ignition switch: ON	5.0 V
S5–3 (B6) – GND (B40)	Ignition switch: ON	5.0 V
S5 (B7) – GND (B40)	Ignition switch: ON	5.0 V
MPX+ (B9) – GND (B40)	Communication circuit	–
FRS (B10) – GND (B40)	Ignition switch: ON R/F switch: RECIRCURATION → FRESH	10 to 14 → 0 V
REC (B11) – GND (B40)	Ignition switch: ON R/F switch: FRESH → RECIRCURATION	10 to 14 → 0 V
AOD (B12) – GND (B40)	Ignition switch: ON Mode control dial: DEF	10 to 14 V
AOF (B13) – GND (B40)	Ignition switch: ON Mode control dial: FACE	10 to 14 V
MGV (B14) – GND (B40) (*2)	Start engine Hot gas heater: Operate	10 to 14 → 0 V
AMH (B15) – GND (B40)	Ignition switch: ON Temperature control dial: MAX HOT	10 to 14 V
AMC (B16) – GND (B40)	Ignition switch: ON Temperature control dial: MAX COOL	10 to 14 V
SOL+ (B17) – GND (B40)	Start engine Compressor: Operate	Pulse generation
ILL+ (B21) – GND (B40)	Ignition switch: ON Turn light control switch: OFF → ON	0 → 10 to 14 V
HOTGASIN (B22) – GND (B40) (*2)	Ignition switch: ON Heater switch: ON	10 to 14 V
CFAN (B23) – GND (B40)	Start engine Condenser fan: operate	10 to 14 → 0 V
RPTC1 (B28) – GND (B40)	PTC heater: Operate	Above 7.5 V
MPX– (B29) – GND (B40)	Communication circuit	–
TE (B31) – GND (B40)	Evaporator temperature: 0°C (32°F) → 15°C (59°F)	2.0 to 2.4 → 1.4 to 1.8 V

Symbols (Terminal No.)	Condition	Specified condition
PRE (B32) – GND (B40)	Start engine Refrigerant pressure: 0 Pa (0 kgf/cm^2, 0 psi) → 3,138 MPa (32.0 kgf/cm^2, 455 psi)	0.5 to 4.8 V
TPM (B33) – GND (B40)	Ignition switch: ON Mode control dial: DEF → FACE	1 → 4 V
TP (B34) – GND (B40)	Ignition switch: ON Temperature control dial: MAX HOT → MAX COOL	1 → 4 V
HRIN (B35) – GND (B40)	Ignition switch: ON Front blower: Operate	Below 1.0 V
SG–2 (B36) – Body ground	Always	Continuity
SG–3 (B37) – Body ground	Always	Continuity
SG (B38) – Body ground	Always	Continuity
SG–4 (B39) – Body ground	Always	Continuity
GND (B40) – Body ground	Always	Continuity
PBLT (B24) – GND (B40)	Ignition switch: ON Seat belt signal: OFF → ON	10 to 14 → Below 1.0 V
PBKIG (B25) – GND (B40)	Ignition switch: ON Parking brake switch: OFF → ON	10 to 14 → Below 1.0 V
ALT (B26) – GND (B40)	Start engine	Pulse generation

(*1) Petrol only

(*2) Diesel (standard) only

If circuit is not as specified, try replacing the air conditioning control assy with a new one. If circuit is not as specified, inspect the circuits connected to other parts.

550RQ–02

PROBLEM SYMPTOMS TABLE

Use the table below to help you find the cause of the problem. The numbers indicate the priority of the likely cause of the problem. Check each part in order. If necessary, replace these parts.

Symptom	Suspect Area	See page
Whole functions of the A/C system does not operate.	4. ECU–B fuse 5. A/C amplifier assy 6. Wire harness or connector	– 55–3 –
Air Flow Control : No blower operation	1. Blower resistor 2. Heater relay 3. Blower w/ fan motor sub–assy 4. A/C amplifier assy 5. Wire harness or connector	55–7 55–7 55–7 55–3 –
Air Flow Control : No blower control	1. Blower w/fan motor sub–assy 2. Blower resistor 3. A/C amplifier assy 4. Wire harness or connector	55–7 55–7 55–3 –
Air Flow Control : Insufficient air out	1. Blower w/fan motor sub–assy 2. Blower resistor 3. A/C amplifier assy 4. Wire harness or connector	55–7 55–7 55–3 –
Temperature Control : No cool air comes out	1. Volume of refrigerant 2. Drive belt tension 3. Refrigerant pressure 4. Cooler compressor assy 5. Pressure sensor 6. Condenser fan 7. Air mix damper servo sub–assy 8. A/C amplifier assy 9. Wire harness or connector	55–24 55–46 55–24 55–7 55–3 – 55–7 55–3 –
Temperature Control : No warm air comes out	1. Engine coolant volume 2. Cooler thermistor No.1 3. Air mix damper servo sub–assy 4. A/C amplifier assy 5. Heater radiator unit sub–assy 6. Wire harness or connector	55–7 55–3 55–7 55–3 – –
Temperature Control : Output air is warmer or cooler than the set temperature or response is slow.	1. A/C amplifier assy 2. Air mix damper servo sub–assy 3. Air mix level	55–3 55–7 –
Temperature Control : No temperature control	1. A/C amplifier assy 2. Air mix damper servo sub–assy 3. Air mix level	55–3 55–7 –
No air inlet control	1. Recirculation damper servo sub–assy 2. A/C amplifier assy 3. Wire harness or connector	55–7 55–3 –
No air outlet control	1. A/C amplifier assy 2. Mode damper servo sub–assy 3. Mode lever	55–3 55–7 –
Engine idle up does not occur, or is continuous	1. Idle up switch 2. Cooler compressor assy 3. A/C amplifier assy 4. Wire harness or connector	55–7 55–7 55–3 –
Brightness does not changes when rheostat volume or light control switch it turned.	1. Illumination light system 2. A/C amplifier assy 3. Wire harness or connector	– 55–3 –

INSPECTION

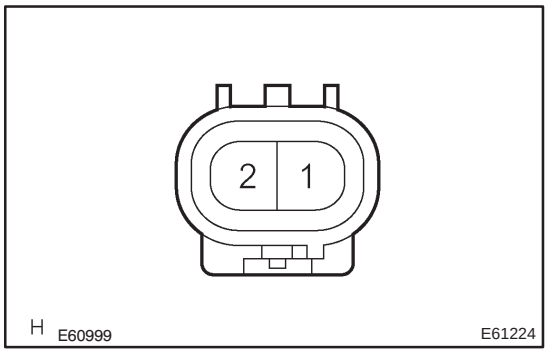

1. INSPECT COMPRESSOR (MANUAL AIR CONDITIONING)

(a) Measure the resistance between terminals 1 and 2.
Resistance: 10 to 11 Ω at 25°C (77°F)

If the resistance is not as specified, replace the compressor assy.

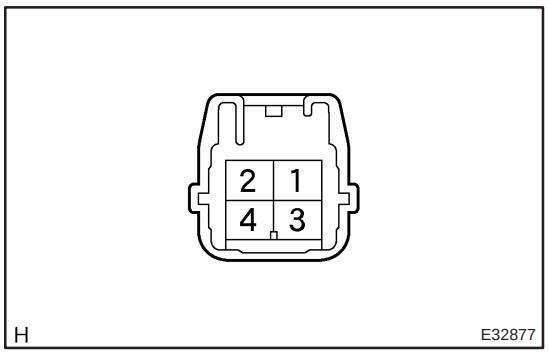

2. INSPECT BLOWER RESISTOR (MANUAL AIR CONDITIONING)

(a) Measure resistance between terminals, as shown in the table.

Tester connection	Specified condition
1 – 2	1.404 to 1.716 Ω
1 – 3	0.504 to 0.616 Ω
1 – 4	3.024 to 3.696 Ω

If resistance is not as specified, replace the blower resistor.

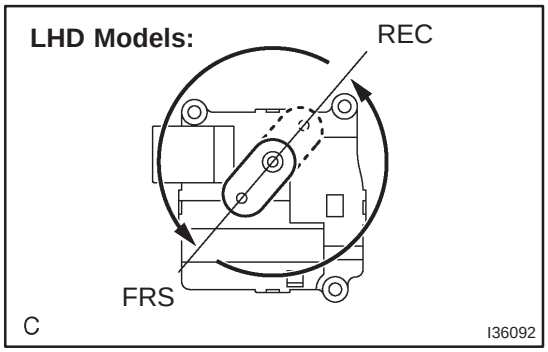

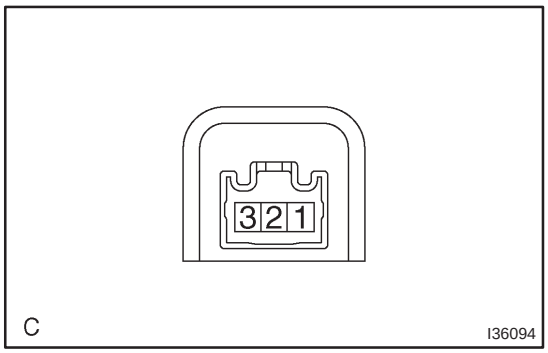

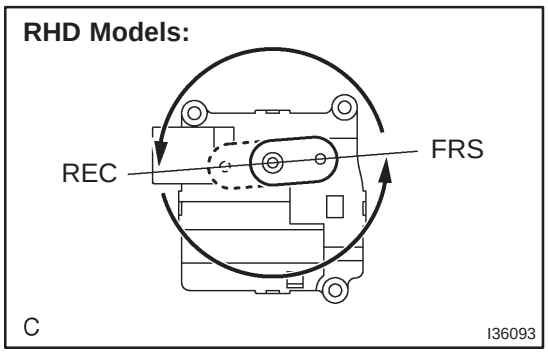

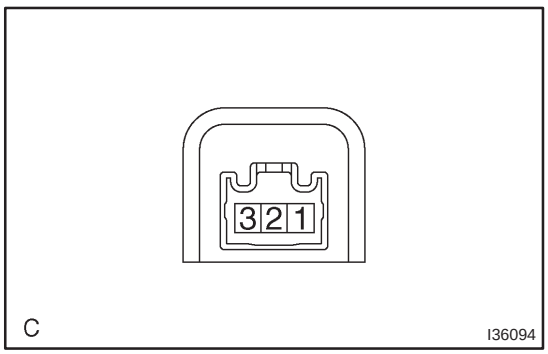

3. INSPECT RECIRCULATION DAMPER SERVO SUB–ASSY (MANUAL AIR CONDITIONING)

(a) Inspect servomotor operation.

(1) Connect the positive (+) lead from the battery to terminal 3 and negative (–) lead to terminal 2, then check that the arm turns to ”FRS” side smoothly.

(2) Connect the positive (+) lead from the battery to terminal 3 and negative (–) lead to terminal 1, then check that the arm turns to ”REC” side smoothly.

If operations are not as specified, replace the mode damper servomotor.

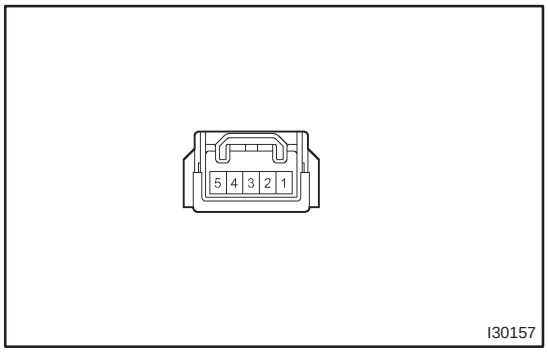

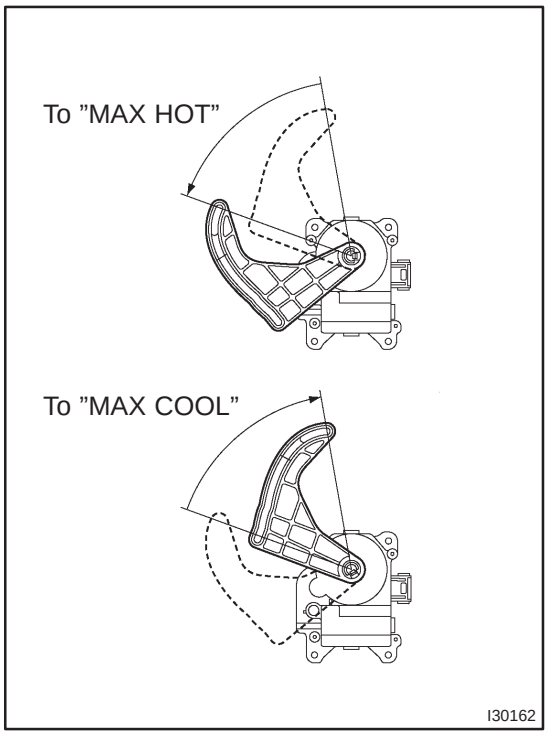

4. INSPECT AIRMIX DAMPER SERVO SUB–ASSY (MANUAL AIR CONDITIONING)

(a) Inspect servomotor operation.

(1) Connect the positive (+) lead from the battery to terminal 4 and negative (–) lead to terminal 5, then check that the arm turns to ”MAX COOL” side smoothly.

(2) Connect the positive (+) lead from the battery to terminal 5 and negative (–) lead to terminal 4, then check that the arm turns to ”MAX HOT” side smoothly.

If operations are not as specified, replace the servomotor.

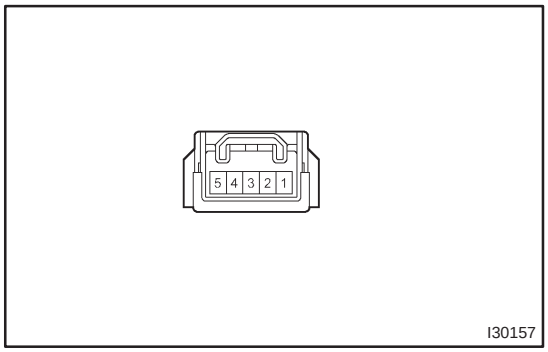

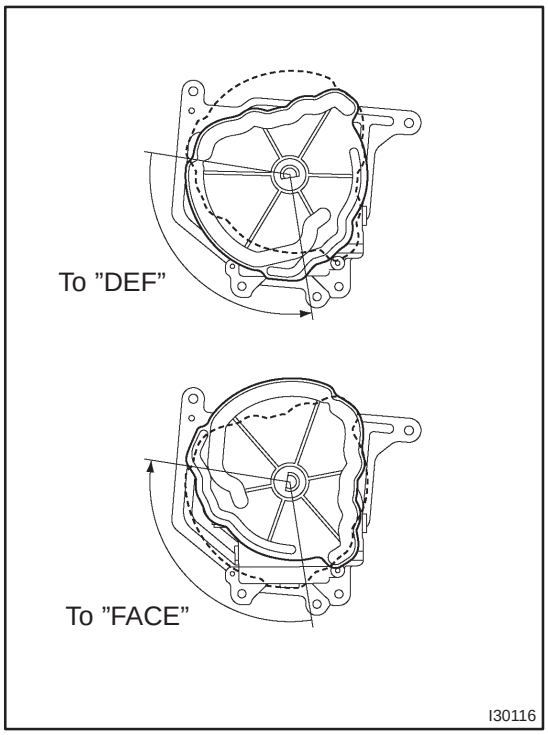

5. INSPECT MODE DAMPER SERVO SUB–ASSY (MANUAL AIR CONDITIONING)

(a) Inspect servomotor operation.

(1) Connect the positive (+) lead from the battery to terminal 4 and negative (–) lead to terminal 5, then check that the arm turns to ”DEF” side smoothly.

(2) Connect the positive (+) lead from the battery to terminal 5 and negative (–) lead to terminal 4, then check that the arm turns to ”FACE” side smoothly.

If operations are not as specified, replace the servomotor.

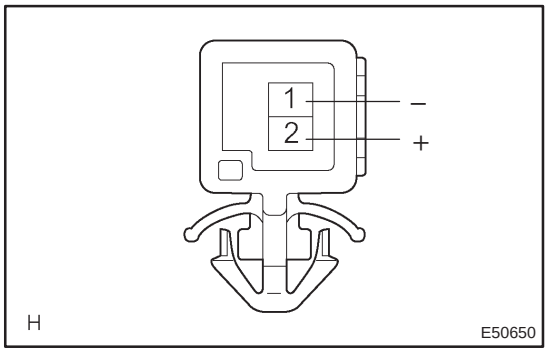

6. INSPECT COOLER THERMISTOR NO.1 (MANUAL AIR CONDITIONING)

(a) Check the resistance between terminal 1 and 2 of cooler thermistor No. 1 at each temperature, as shown in the graph.

Standard: 1,500 Ω at 25°C (77°F)

HINT:

As the temperature increases, the resistance decreases.

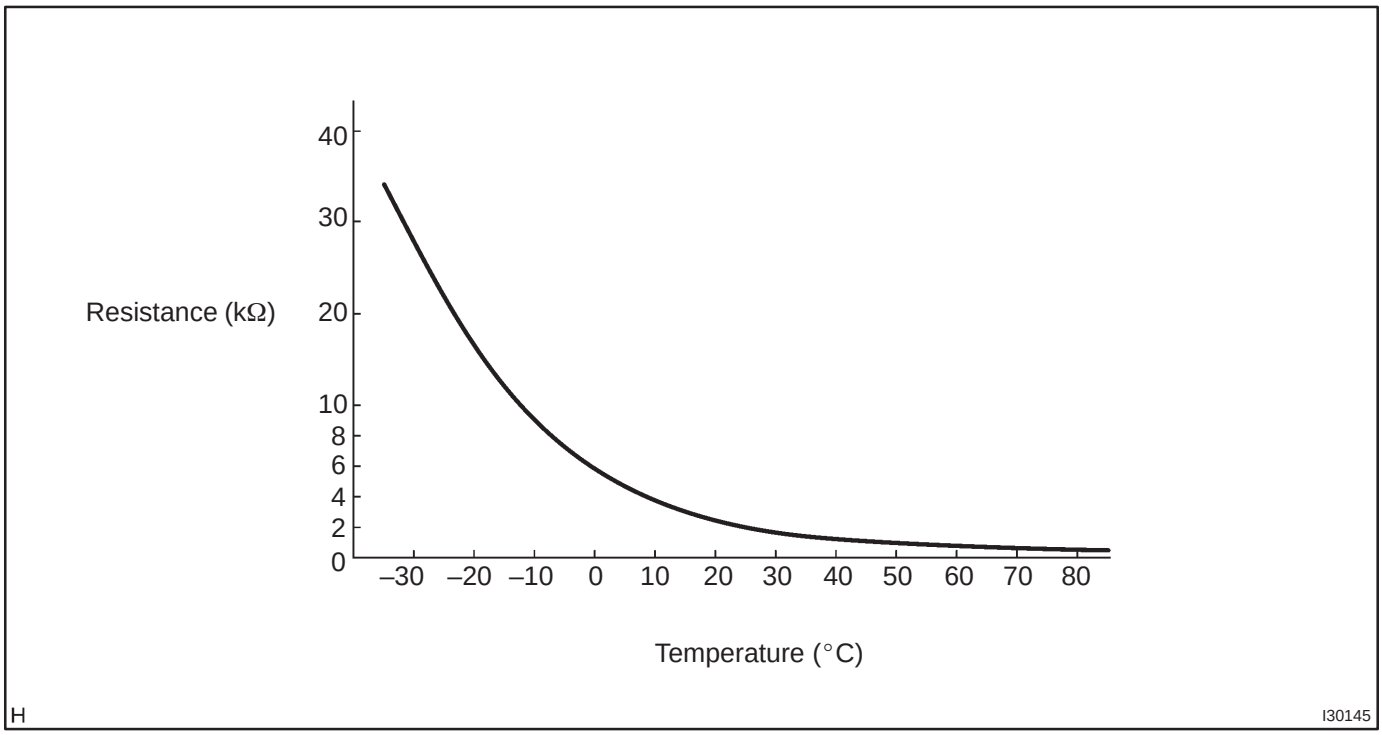

If resistance value is not as specified, replace the sensor.

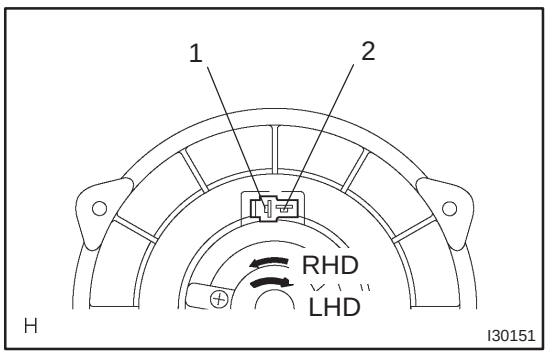

7. INSPECT BLOWER W/FAN MOTOR SUB–ASSY (MANUAL AIR CONDITIONING)

(a) Connect the positive (+) lead from the battery to terminal 1 and negative (–) to terminal 2, then check that the motor operation smoothly.

If operation is not as specified, replace the blower motor.

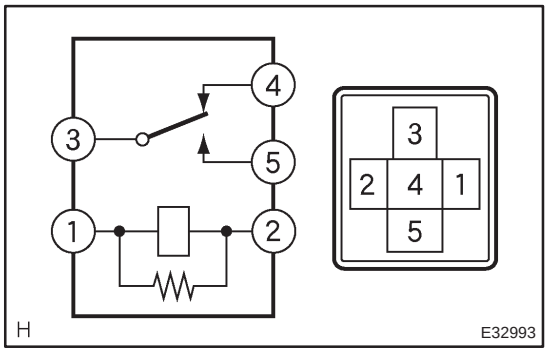

8. INSPECT HEATER RELAY (MANUAL AIR CONDITIONING)

Terminal No.	Specified condition
3–5	No continuity
	Less than 1 Ω (When battery voltage applied to terminals 1 and 2.)
3–4	Less than 1 Ω
	No continuity (When battery voltage applied to terminals 1 and 2.)
1–2	Constant continuity

If continuity is not as specified, replace the rear cooler relay.

ELECTRICAL TYPE POWER HEATER SYSTEM

PROBLEM SYMPTOMS TABLE

550ZE–01

Use the table below to help you find the cause of the problem. The numbers indicate the priority of the likely cause of the problem. Check each part in order. If necessary, replace these parts.

Symptom	Suspect Area	See page
PTC heater does not operate, when perform in these conditions: • Engine coolant temp.: 70°C (158°F) or below • Engine speed: 650 rpm or above • Temperature control selector: MAX. HOT • Ambient temperature: Below 10°C (50°F)	1. HTR1 Fuse 2. HTR2 Fuse 3. HTR1 relay 4. HTR2 relay 5. PTC heater 6. ECM 7. Wire harness	– – – – 55–14 – –

550ZF–01

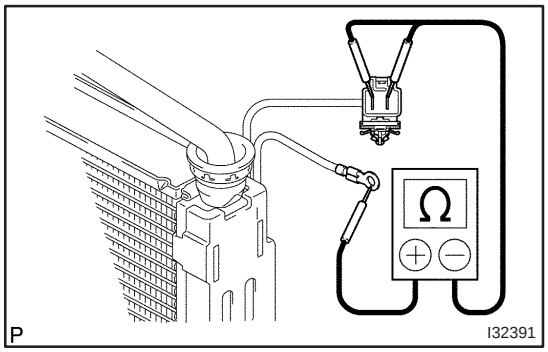

INSPECTION

1. INSPECT HEATER ASSY

(a) Check continuity.

(1) Using an ohmmeter, check for continuity between each terminal of connector and earth wire.

If no continuity, replace the heater radiator.

COMBUSTION TYPE POWER HEATER SYSTEM

550ZG–01

ON–VEHICLE INSPECTION

NOTICE:

- **If the glow plug breaks, the ECU detects the breakage and stops the automatic operation, so the burner heater does not activate. (For other failures, similarly activated.)**
- **The cause of failures (such as voltage malfunction, overheating malfunction, short–circuit or breakage of functional components, etc.) and repair methods are shown by connecting the DTC tester and reading the DTC.**

1. DIAGNOSTICS FUNCTION

(a) Connect the DTC tester between the connector A (Vehicle harness) of DTC check harness and connector B (Power heater harness).

(b) Start the engine.

(c) Pressing the DTC calling button displays a 3–digit number DTC.

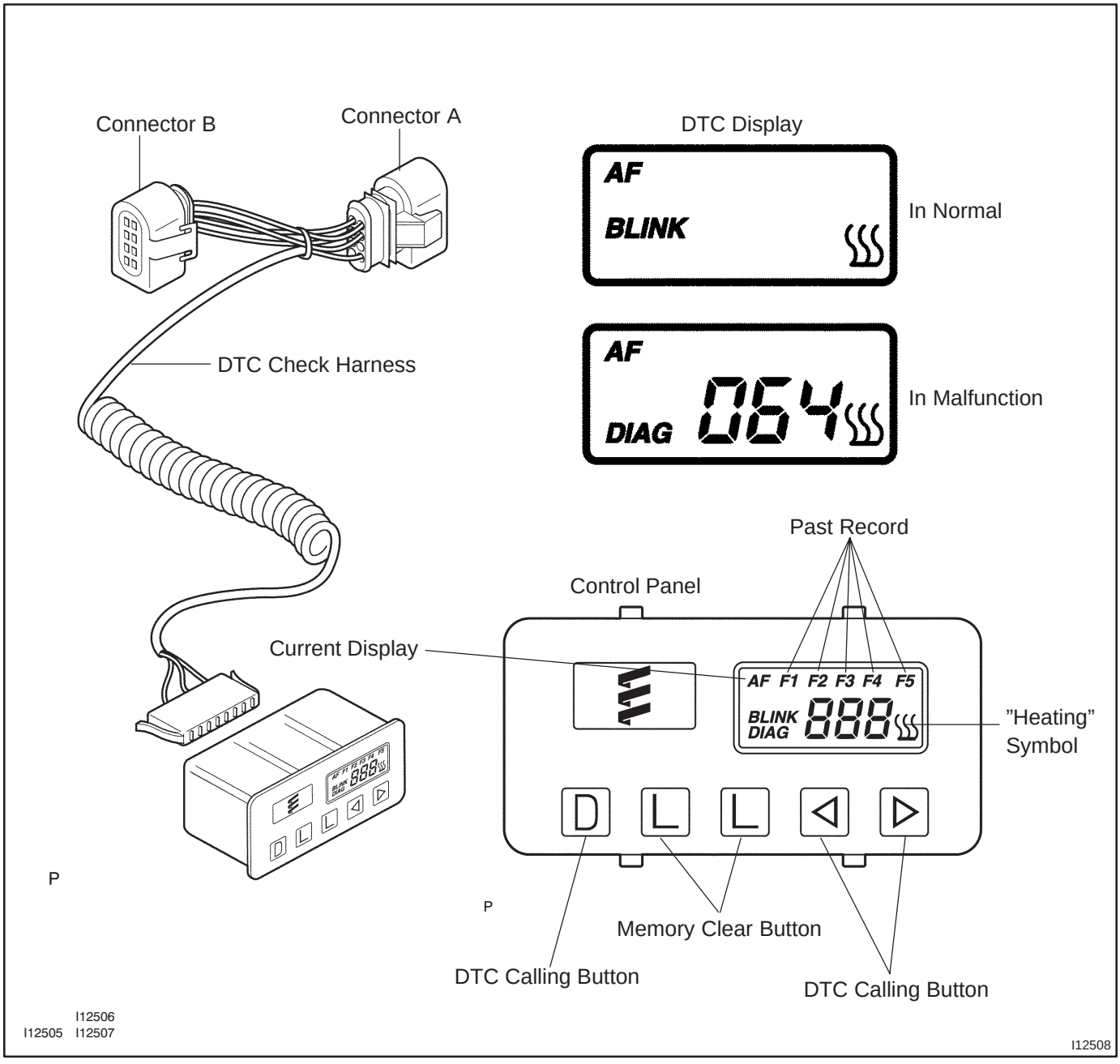

2. DESCRIPTION OF DISPLAY AND BUTTONS

(a) AF: Current Value Malfunction (Blinking at current failure)
Diag: DTC (Example: 064 Flame sensor break)
Memory Clear button: Deletion of faulty memory (Press both buttons together for longer than 2 seconds)
> Button: Scroll up of faulty memory (The past 5 codes can be stored.)
< Button: Scroll down of faulty memory (The past 5 codes can be stored.)

3. FAULTY MEMORY

(a) The ECU is able to store up to 5 pieces of faulty memory. If it is full, the new data is written over F5.

4. WIRING DIAGRAM

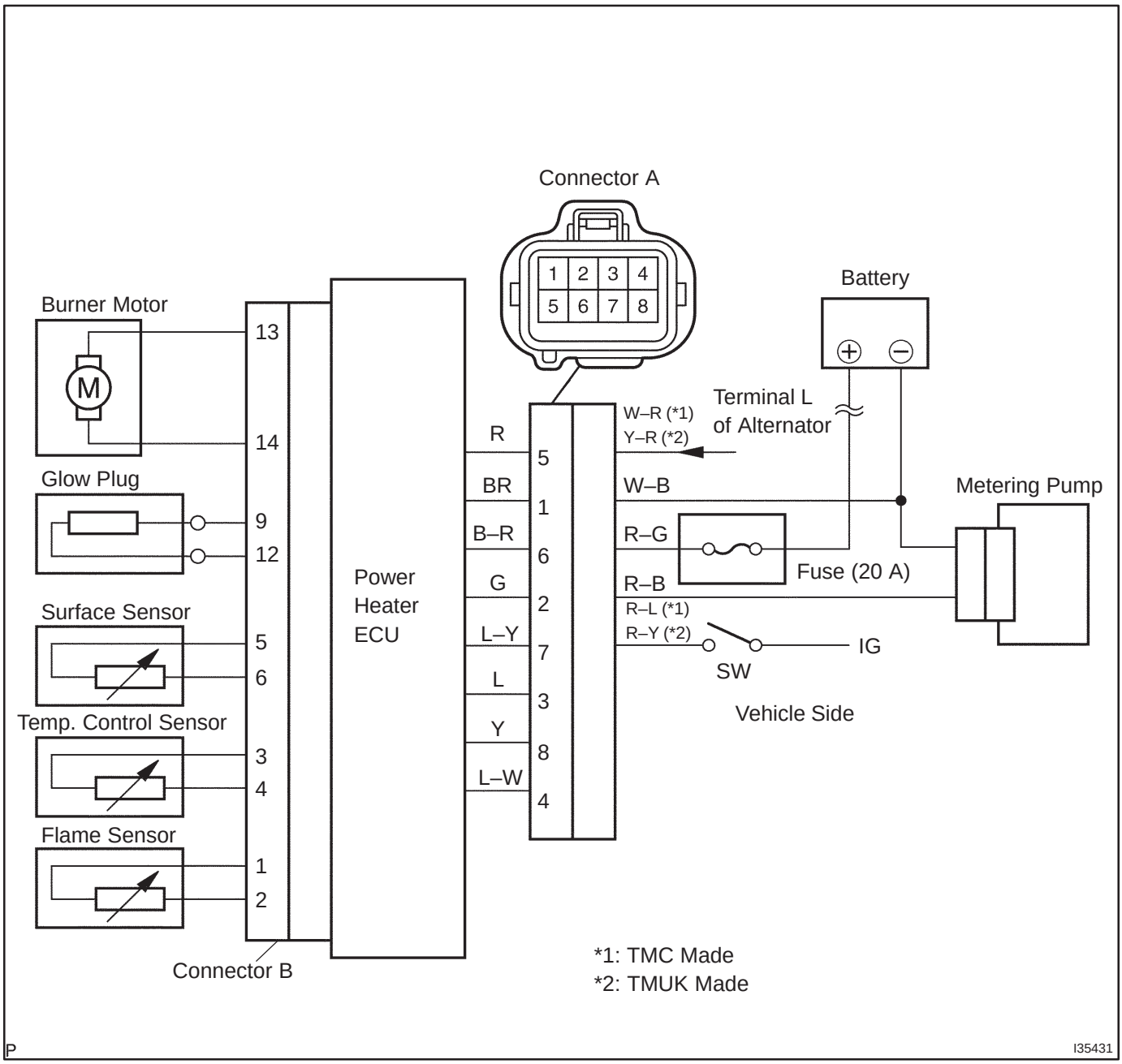

5. DIAGNOSTIC TROUBLE CODE CHART

If a malfunction code is displayed during the DTC check, check the circuit listed for the code in the table below and proceed to the appropriate page.

DTC No.	Description of fault	Comment / Remedy
000	No malfunction	–
010 011	Overvoltage shutoff Undervoltage shutoff	Voltage between 1 and 5 at connector A > 16 V Voltage between 1 and 5 at connector A < 10.2 V (Voltage values must be present > 20 seconds) Check battery, regulator and electrical leads.
012	Overheating	Check temperature at temperature or overheating sensor > 125 °C Check water circuit.
014	Possible overheating detected (Hardware threshold value)	Difference of measured values at temperature sensor > 15 °C (min. 70 °C water temperature and metering pump in operation); Check temperature sensor and overheating sensor, replace if necessary.
017	Overheating detected (Hardware threshold value)	Temperature at temperature or overheating sensor > 130 °C, emergency OFF if DTC No. 012 or 014s not applicable; Check water circuit, temperature sensor and overheating sensor, replace if necessary.
020	Glow plug break	Check glow plug, replace if necessary.
021	Glow plug output overload	Check glow plug, replace if necessary.
030	Combustion air blower motor EMF outside perm. range.	Blower impeller or burner motor fammed (frozen solid, dirty, etc.) Remedy jam, replace burner motor if necessary.
031	Combustion air blower motor break	Check the lead to combustion air motor (burner motor) for continuity, replace if necessary.
032	Combustion air blower motor short–circuit	Check combustion air blower motor (burner motor), replace if necessary. Check supply lead (chafed, etc.).
047	Metering pump short–circuit	Check the supply lead to metering pump for short–circuit, check metering pump, replace if necessary.
048	Metering pump break	Check the supply lead to metering pump for continuity, remedy break, replace metering pump if necessary.
051	Cold blow time exceeded	At start, if flame sensor above 70 °C, > 240 sec.; Check exhaust gas combustion air supply, check flame sensor, replace if necessary.
052	Safety time exceeded	When all perm. start attempts used up; Check the fuel delivery and fuel supply. Check exhaust gas and combustion air ducts.
054	Flame cutout, High setting	Check the fuel delivery and fuel supply. Check exhaust gas combustion air ducts. If combustion OK → Check the flame sensor, replace if necessary.
056	Flame cutout, LOW setting	
060	Temperature control sensor break	Check connecting leads. Resistance value between 2 and 10 connector B > 2 MΩ (if break)
061	Temperature control sensor short–circuit	Check connecting leads. Resistance value between 2 and 10 at connector B < 2 MΩ (If short– circuit)
064	Flame sensor break	Check connecting leads. Resistance value between 7 and 14 at connector B > 3,040 Ω (If break)
065	Flame sensor short–circuit	Check connecting leads. Resistance value between 7 and 14 at connector B > 780 Ω (If short–circuit)

DTC No.	Description of fault	Comment / Remedy
071	Surface sensor break	Check connecting leads. Resistance value between 4 and 11 at connector B > 2 MΩ (If break)
072	Surface sensor short–circuit	Check connecting leads. Resistance value between 4 and 11 at connector B > 50 Ω (If short–circuit)
090 092 093	Control unit detective (Internal fault / Reset) Control unit detective (ROM error) Control unit detective (RAM error)	Control unit malfunction due to interference voltage from vehicle electrical system; possible causes low batteries, chargers, other sources of interference; eliminate interference voltages. Internal faults detected in microprocessor / memory detected. Replace control unit.
097	Internal control unit faults	Other faults which cannot lead to DTC No. 90, 92 and 93, replace control unit.

550ZH–01

INSPECTION

1. INSPECT HEATER ASSY

(a) Inspect the water temperature sensor.

(1) Using an ohmmeter, measure the resistance between the terminals 3 and 4 of heater wire.

Resistance: Refer to the graph

If the resistance is not as specified, replace the heater wire.

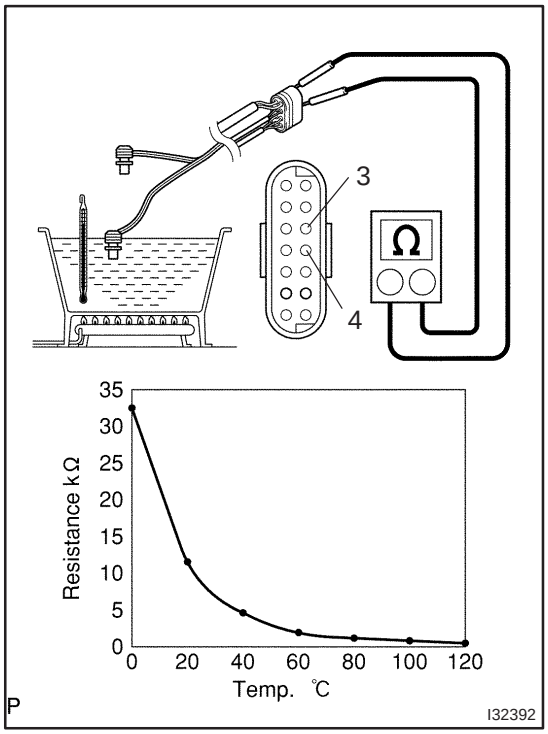

(b) Inspect the overheat sensor.

(1) Using an ohmmeter, measure the resistance between the terminals 5 and 6 of heater wire.

Resistance: Refer to the graph

If the resistance is not as specified, replace the heater wire.

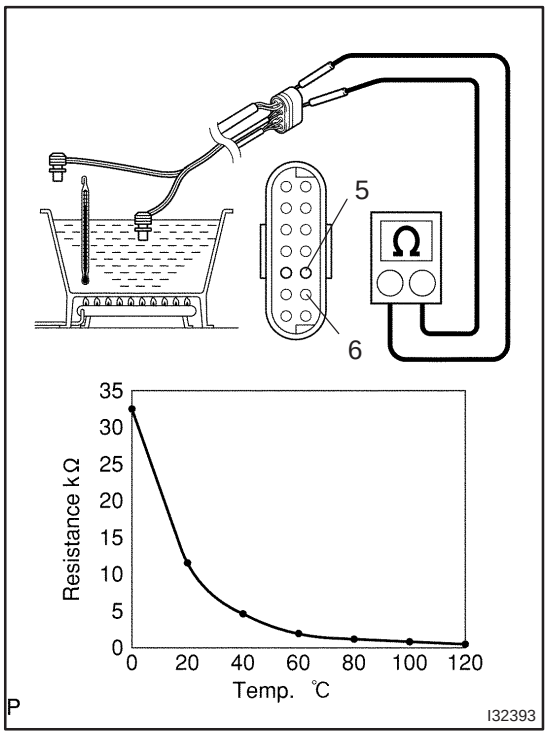

(c) Inspect the glow plug.

(1) Using an ohmmeter, check the continuity by measure the resistance between terminals 9 and 12 of heater wire.

Standard resistance: about 0.5 Ω (20°C, reference value)

If the resistance is over 1 Ω, replace the heater wire.

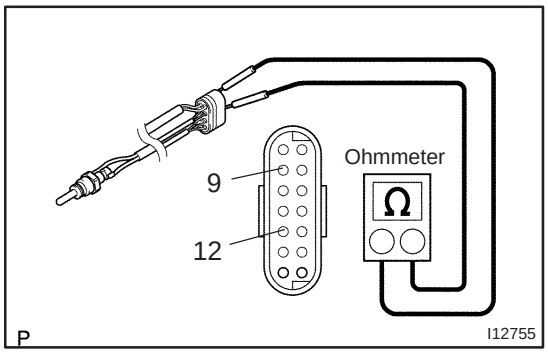

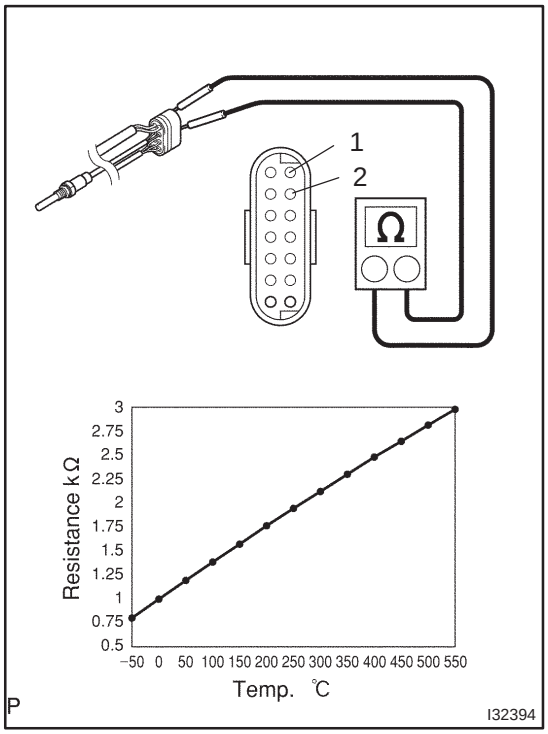

(d) Inspect the flame sensor.

(1) Using an ohmmeter, measure the resistance between terminals 1 and 2 of heater wire.

Resistance: Refer to the graph

If the resistance is not as specified, replace the heater wire.

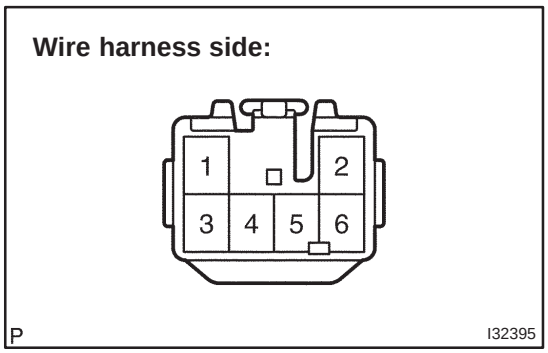

2. INSPECT HETER SWITCH ASSY

(a) Disconnect the connector from the power heater switch and inspect the connector on the wire harness side, as shown in the chart.

Tester connection	Condition	Specified condition
2 – Ground	Constant	Continuity
4 – Ground	Constant	Continuity
3 – Ground	Turn ignition switch ON	Battery voltage
3 – Ground	Turn ignition switch OFF	No voltage
1 – Ground	Turn light control switch TAIL or HEAD	Battery voltage
1 – Ground	Turn light control switch OFF	No voltage

- If the circuit is as specified, replace the power heater switch.
- If the circuit is not as specified, inspect the circuits connected to other parts.

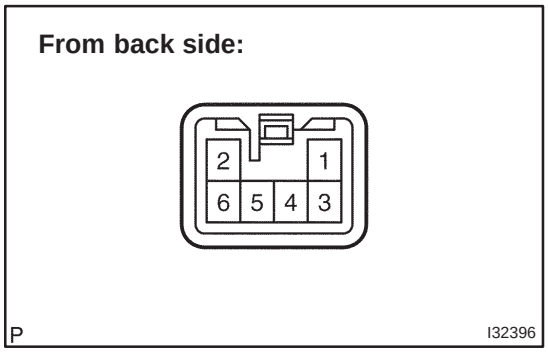

(b) Connect the connector to the power heater switch and inspect the connector from the back side, as shown in the chart.

Tester connection	Condition	Specified condition
6 – Ground	Turn the ignition switch ON and power heater switch ON	Battery voltage
6 – Ground	Turn the ignition switch ON and power heater switch OFF	No voltage

- If the circuit is not as specified, replace the power heater switch.

HOT GAS TYPE POWER HEATER SYSTEM

550ZI–01

ON–VEHICLE INSPECTION

1. INSPECT AIR CONDITIONING CONTROL ASSY

(a) Disconnect the connector from air conditioning control assy and inspect the connector on wire harness side, as shown in the table.

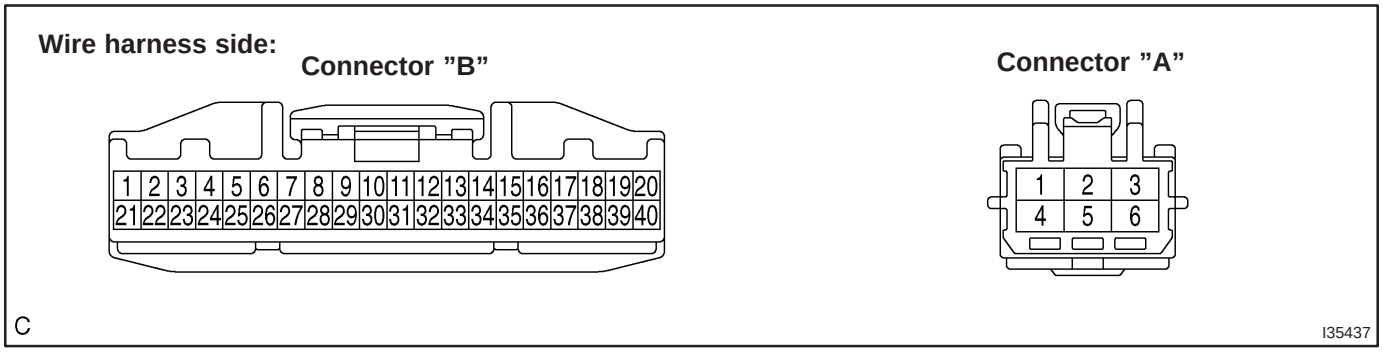

Symbols (Terminal No.)	Wiring Color	Condition	STD Voltage (V)
SOL+ (B17) – GND (B40)	R – W–B	Start engine Compressor: Operate	Pulse generation
MGV (B14) – GND (B40) (*1)	R–Y – W–B	Start engine Compressor: Operate	Pulse generation
HOT GAS IN (B22) – GND (B40) (*1)	R–Y – W–B	IG SW: ON Hot Gas SW: ON	Battery positive voltage

If circuit is not as specified, try replacing the air conditioning control assy with a new one. If the circuit is not as specified, inspect the circuits connected to the other parts.

(b) Connect the connector to air conditioning control assy and inspect wire harness side connector from the back side, as shown in the table.

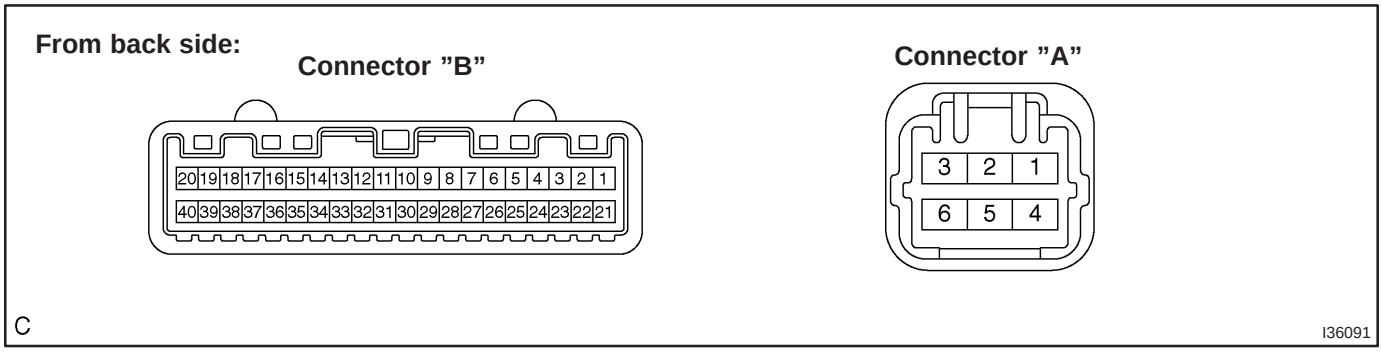

Symbols (Terminal No.)	Condition	Specified condition
HI (A4) – GND (A1)	Ignition switch ON Turn blower dial: OFF → HI	No continuity →Continuity
M2 (A5) – GND (A1)	Ignition switch ON Turn blower dial: OFF → M2	No continuity →Continuity
M1 (A6) – GND (A1)	Ignition switch ON Turn blower dial: OFF → M1	No continuity →Continuity
GND (A1) – Body ground	Ignition switch ON Turn blower dial: OFF → LO	No continuity →Continuity

550ZJ–01

INSPECTION

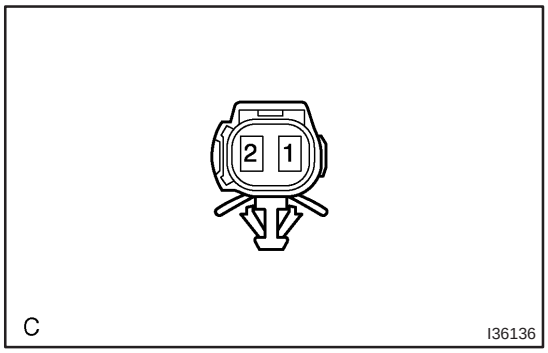

1. INSPECT W/RECEIVER CONDENSER ASSY

(a) Apply voltage between terminals and check that the refrigerant passages switch.

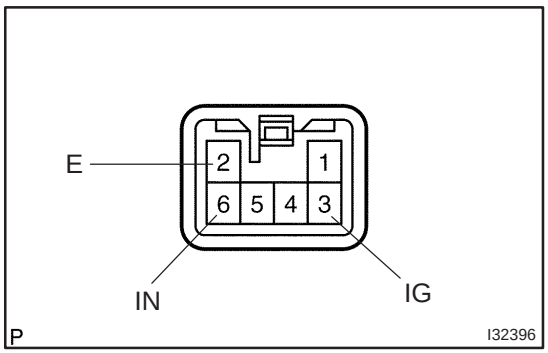

2. INSPECT HETER SWITCH ASSY

(a) Check that the continuity to the follwing terminals.

Standard:

Heater switch condition	Connecting terminals	Standard value
ON	IG – IN	Continuity
OFF	IG – IN	No continuity
ON	IG – E	Continuity
OFF	IG – E	No continuity

REFRIGERANT

ON–VEHICLE INSPECTION

550Z7–01

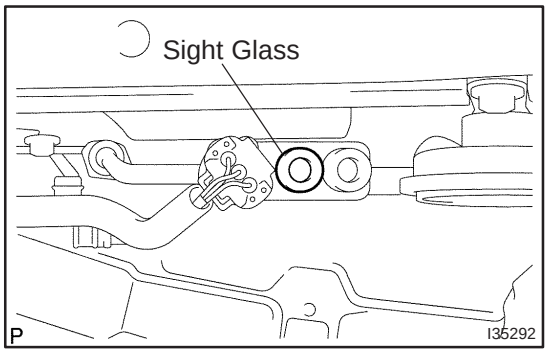

1. RHD AZ Engine series:
INSPECT REFRIGERANT VOLUME

(a) Observe the sight glass on the cooler refrigerant liquid pipe A.

Test conditions:

- All doors are fully open.
- Temperature control dial is at ”MAX. COOL”.
- Engine is running at 1,500 rpm.
- Blower speed control switch is at ”HI”.
- A/C switch is ON.

Item	Symptom	Amount of refrigerant	Corrective Actions
1	Bubbles exist	Insufficient*	(1) Check for gas leakage and repair if necessary (2) Add refrigerant until bubbles disappear
2	No bubbles exist	Empty, insufficient or excessive	Refer to 3 and 4
3	No temperature difference between compressor inlet and outlet	Empty or nearly empty	(1) Check for gas leakage and repair if necessary (2) Add refrigerant until bubbles disappear
4	Considerable temperature difference between compressor inlet and outlet	Proper or excessive	Refer to 5 and 6
5	Immediately after air conditioning is turned off, refrigerant remains clear	Excessive	(1) Discharge refrigerant (2) Vacuum and supply proper amount of new refrigerant
6	Immediately after air conditioning is turned off, refrigerant foams and then becomes clear	Proper	–

*: Bubbles in the sight glass with ambient temperatures higher than usual can be considered normal if cooling is sufficient.

2. w/o Hot gas heater:
INSPECT REFRIGERANT PRESSURE WITH MANIFOLD GAUGE SET

(a) This is a method to specify the trouble area by using a manifold gauge set. Read the manifold gauge pressure when the following conditions are fullfilled.
Test conditions:

- Engine has been warmed up.
- All doors are fully open.
- A/C switch is ON.
- Engine is running at 1,500 rpm.
- Air inlet mode selector switch is at RECIRE.
- Temperature control dial is at ”MAX. COOL”.
- Blower speed control switch is at ”HI”.
- Temperature at the air inlet is 30 – 35 ˚C (86 – 95 ˚F).

Gauge readings (Reference)

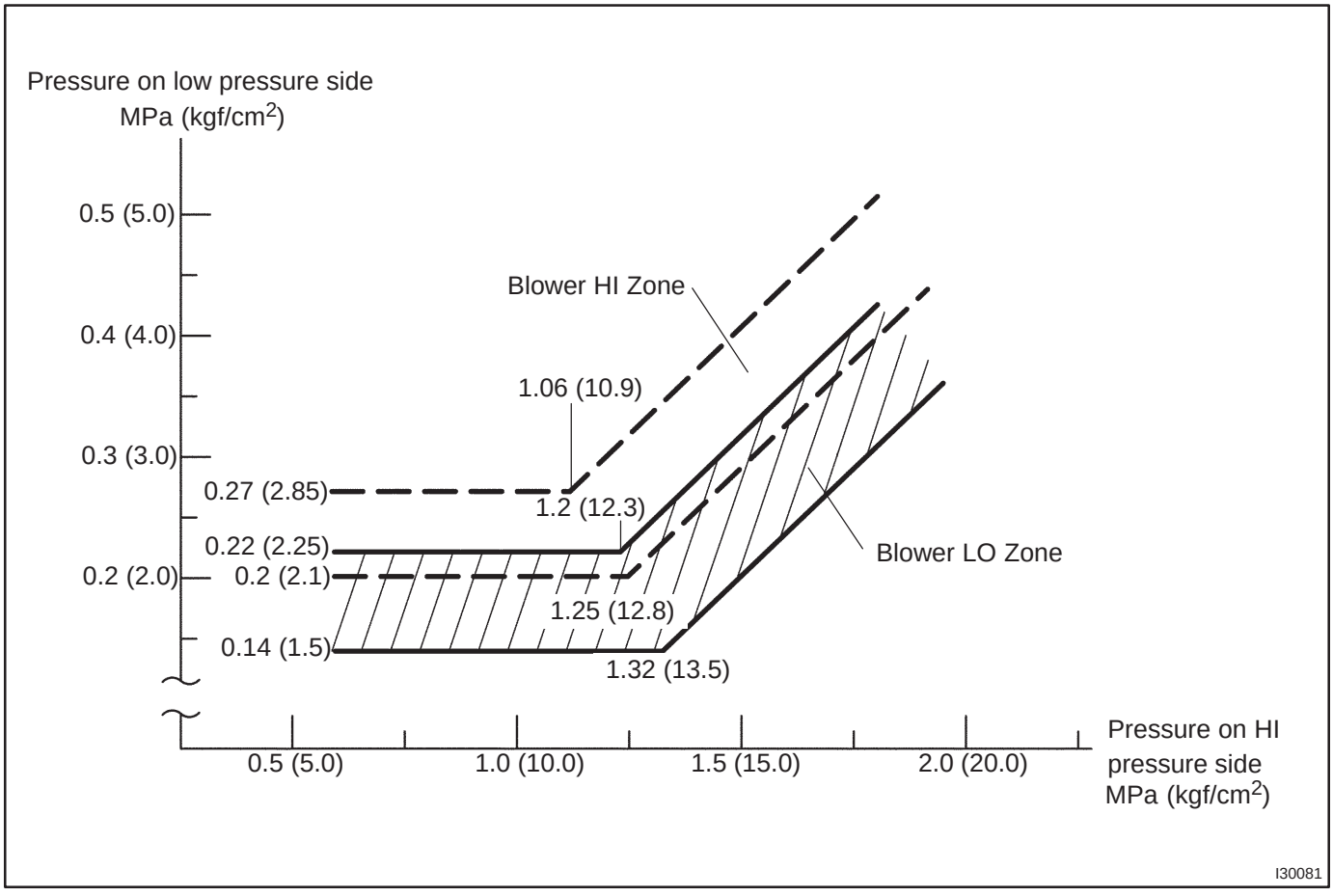

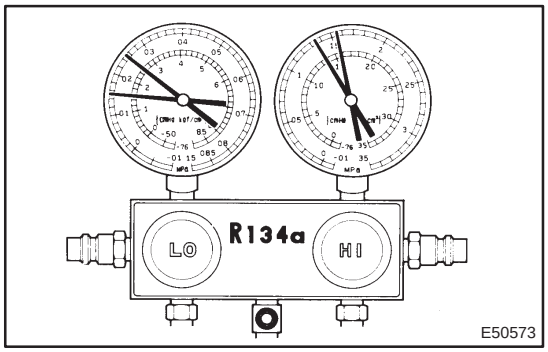

(1) When the refrigerant volume is proper:

Gauge reading:
Low pressure side:
0.15 – 0.25 MPa (1.5 – 2.5 kgf/cm^2)
High pressure side:
1.37 – 1.57 MPa (14 – 16 kgf/cm$^{2)}$

(2) When there is moisture in the refrigeration system:

Condition : Air conditioning system periodically repeats proper and improper function.

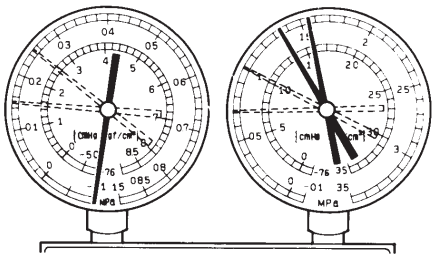

Symptom	Probable cause	Diagnosis	Remedy
During operation, pressure on low pressure side cycles between normal and vacuum	Moisture in refrigeration system freezes at expansion valve orifice, causing a temporary stop of cycle. However, when it melts, normal state is restored	• Drier is overly saturated • Moisture in refrigeration system freezes at expansion valve orifice and blocks circulation of refrigerant	(1) Replace cooler drier (2) Remove moisture in cycle by repeatedly vacuuming (3) Supply proper amount of new refrigerant

(3) When cooling is insufficient:

Condition: Air conditioning system does not function effectively.

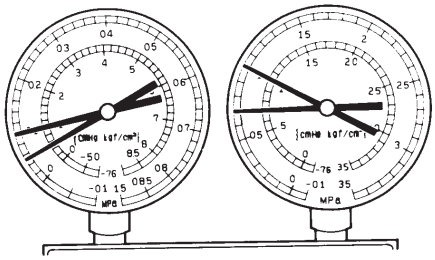

I22118

Symptom	Probable cause	Diagnosis	Corrective Actions
• Pressure is low on both low and high pressure sides • RHD AZ engine series: Bubbles are seen through sight glass continuously • Cooling performance is insufficient	Gas leakage in refrigeration system	• Insufficient refrigerant • Refrigerant leakage	(1) Check for gas leakage and repair if necessary (2) Supply proper amount of new refrigerant (3) If indicated pressure value is close to 0 when connected to the gauge, vacuum after inspecting and repairing the location of leakage.

(4) When the circulation of the refrigerant is poor:

Condition: Air conditioning system does not function effectively.

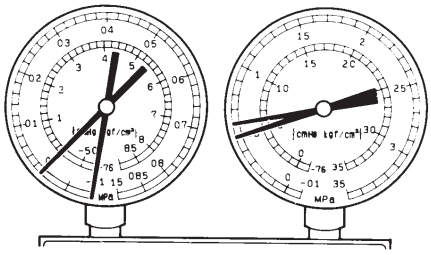

I22119

Symptom	Probable cause	Diagnosis	Corrective Action
• Pressure is low on both low and high pressure sides • Frost exists on piping from condenser to A/C unit	Refrigerant flow is obstructed by dirt in condenser	Condenser is clogged	Replace condenser

(5) When the refrigerant does not circulate:

Condition: Air conditioning system does not function. (Sometimes it may function)

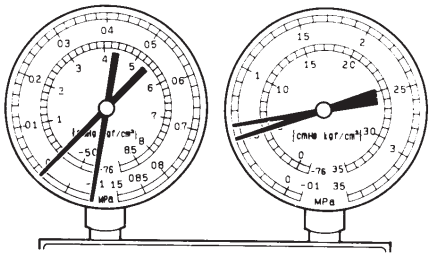

I22120

Symptom	Probable cause	Diagnosis	Corrective Actions
• Vacuum is indicated on low pressure side, and extreamly low pressure is indicated on high pressure side • Frost or dew is seen on piping on both sides of condenser or expansion valve	• Refrigerant flow is obstructed by moisture or dirt in refrigeration system • Refrigerant flow is obstructed by gas leak from expansion valve	Refrigerant does not circulate	(1) Check the expansion valve (2) Clean out dirt on expansion valve by blowing air (3) Replace condenser (4) Vacuum and supply proper amount of new refrigerant (5) For gas leakage from expansion valve, replace expansion valve

(6) When the refrigerant is overcharged or cooling of condenser is insufficient:

Condition : Air conditioning system does not function effectively.

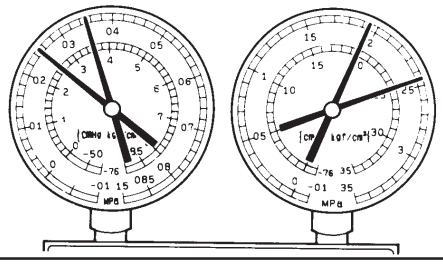

I22121

Symptom	Probable cause	Diagnosis	Remedy
• Pressure is extreamly high on both low and high pressure sides • RHD AZ engine series: No air bubbles are seen through sight glass even when engine rpm lowers	• Excessive refrigerant • Cooling performance of condenser is insufficient	• Excessive refrigerant • Cooling performance of condenser is insufficient	(1) Clean condenser (2) Check condenser fan motor operation (3) If (1) and (2) are in normal state, check the amount of refrigerant and supply proper amount of refrigerant

(7) When there is air in the refrigeration system:

Condition: Air conditioning system does not function.

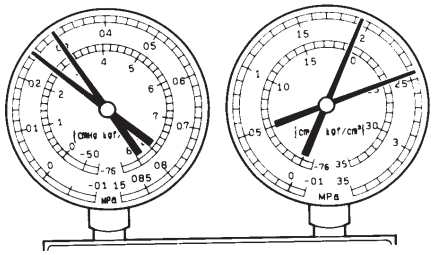

NOTE : These gauge indications occur when the refrigeration system opens and the refrigerant is charged without vacuuming.

I22122

Symptom	Probable cause	Diagnosis	Corrective Actions
• Pressure is extreamly high on both low and the high pressure sides • The low pressure piping is too hot to touch • RHD AZ engine series: Bubbles can be seen through sight glass	Air in refrigeration system	• There is air in refrigeration system • Vacuuming is insufficient	(1) Check it compressor oil is dirty or insufficient (2) Vacuum and supply new refrigerant

(8) When the expansion valve malfunctions:

Condition : Air conditioning system does not function effectively.

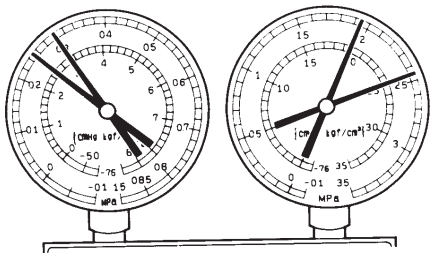

I22123

Symptom	Probable cause	Diagnosis	Corrective Actions
• Pressure is extreamly high on both low and high pressure sides • Frost or dew is on piping on low pressure side	Trouble with expansion valve	• Excessive refrigerant in low pressure piping • Expansion valve opened too wide	Replace expansion valve

(9) When the compressor is defective:

Condition : Air conditioning system does not function.

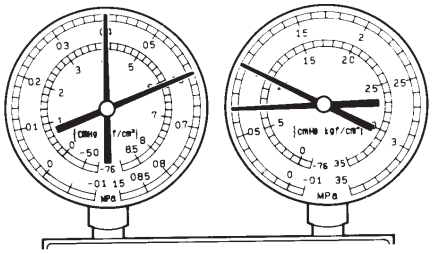

I22124

Symptom	Probable cause	Diagnosis	Corrective Actions
• Pressure is extreamly high on both low and high pressure sides • Pressure is extreamly low on high pressure side	Internal leak from compressor	• Compression failure • Leakage from damaged valve or broken sliding parts	Repair or replace compressor

3. w/ Hot gas heater:
INSPECT REFRIGERANT VOLUME

(a) This is a method to specify the trouble area by using a manifold gauge set. Read the the manifold gauge pressure when these conditions are established.
Test conditions:
- Engine is at idle.
- Blower speed control switch is at ”HI”.
- Temperature control dial is at ”MAX. COOL”.
- Engine has been warmed up.
- All doors are fully open.
- Hood is fully open.
- Air inlet mode selector damper is at RECIRE.
- Air outlet damper is at FACE.
- Outside temperature is 15 – 35 ˚C (59– 95 ˚F).

(b) Check refrigerant volume according to the graph below.

Range	Amount of refrigerant	Corrective actions
Except range below	Insufficient or excessive	Supply refrigerant until low pressure become within the standard ±50 g (±1.76 oz.), or remove refrigerant and then supply proper amount of refrigerant
Standard ±50 g (±1.76 oz.)	Proper	–

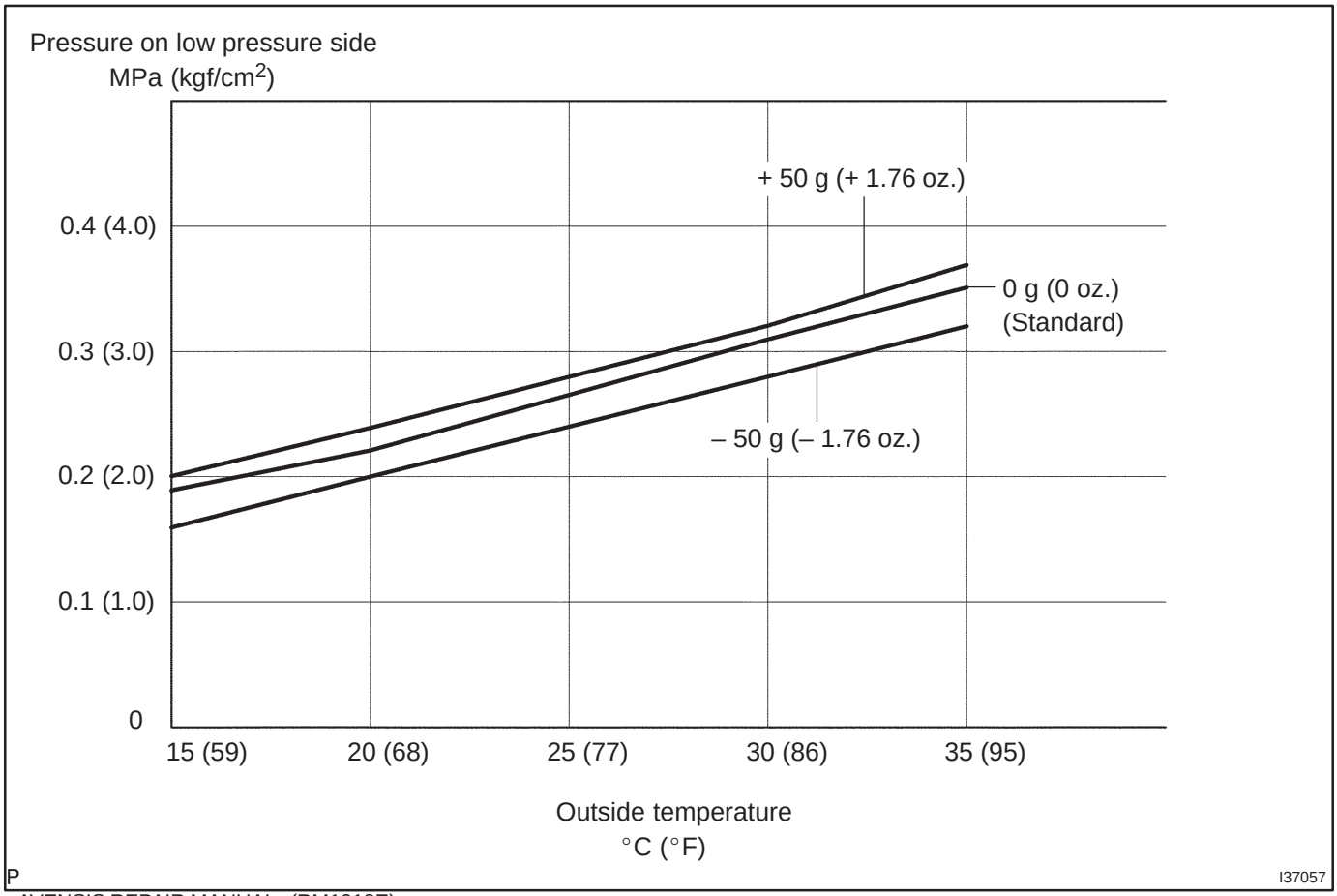

4. w/ Hot gas heater:
INSPECT REFRIGERANT PRESSURE WITH MANIFOLD GAUGE SET

(a) This is a method to specify the trouble area by using a manifold gauge set. Read the manifold gauge pressure when the following conditions are fullfilled.
Test conditions:

- Engine has been warmed up.
- All doors are fully open.
- A/C switch is ON.
- Engine is at idle.
- Air inlet mode selector damper is at RECIRE.
- Temperature control dial is at ”MAX. COOL”.
- Blower speed control switch is at ”HI”.
- Air outlet damper is at FACE.
- Temperature at the air inlet is 30 – 35 ˚C (86 – 95 ˚F).
- Sunshine is shut off.

Gauge readings (Reference)

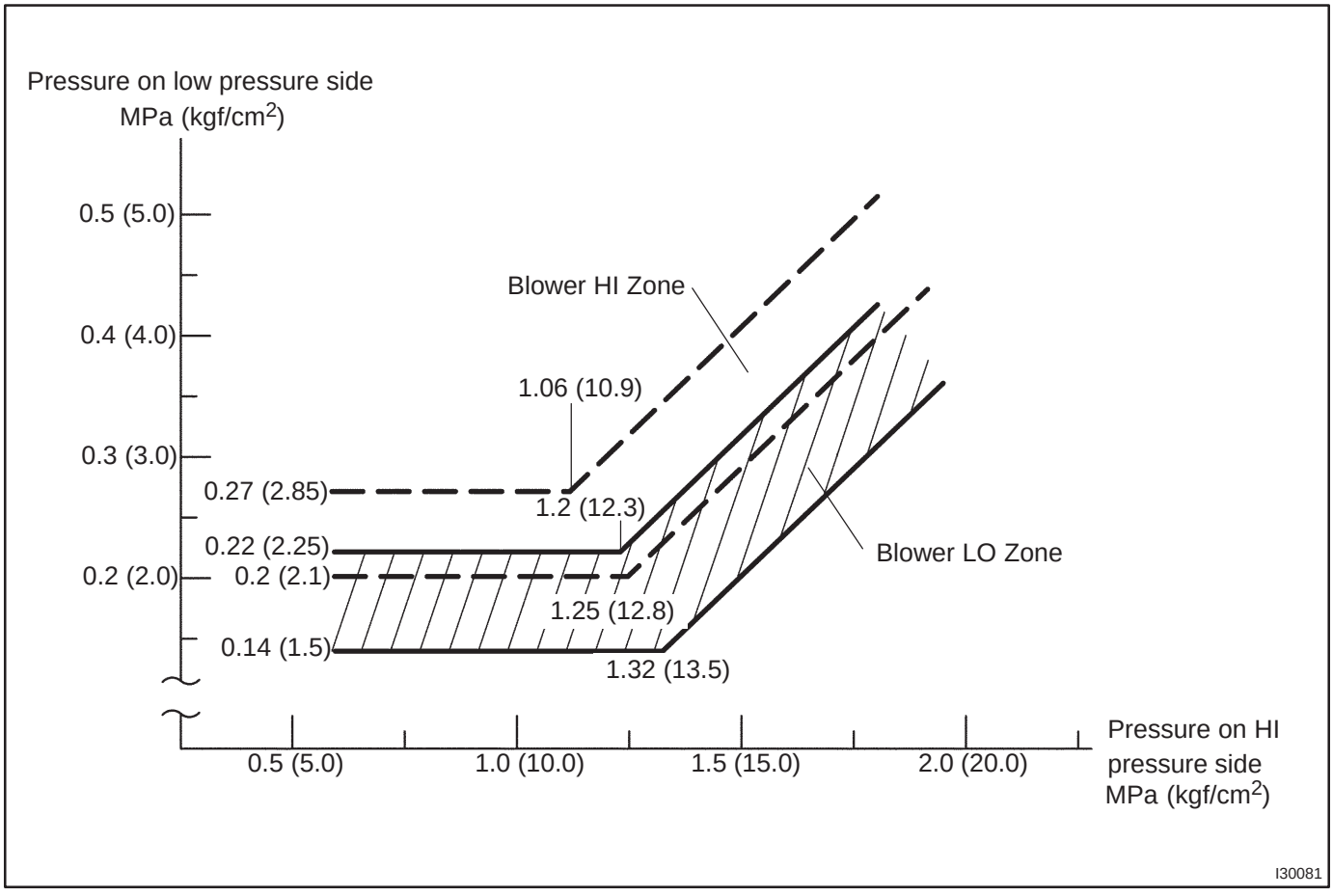

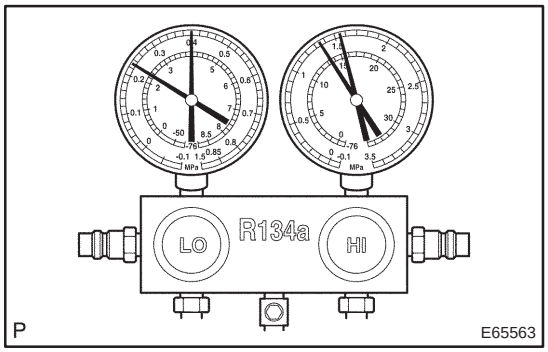

(1) When the refrigerant volume is proper:
Gauge reading:
Low pressure side:
0.28 – 0.4 MPa (2.8 – 4.0 kgf/cm^2)
High pressure side:
1.3 – 1.6 MPa (13 – 16 kgf/cm$^{2)}$

(2) When there is moisture in the refrigeration system:

Condition : Air conditioning system periodically repeats proper and improper function.

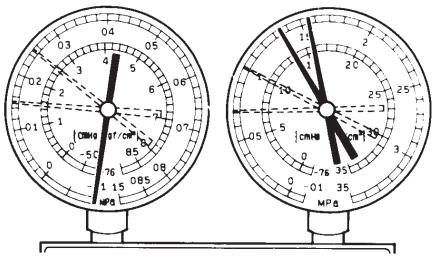

Symptom	Probable cause	Diagnosis	Remedy
During operation, pressure on low pressure side cycles between normal and vacuum	Moisture in refrigeration system freezes at refrigerant filter orifice, causing a temporary stop of cycle. However, when it melts, normal state is restored	• Drier is overly saturated • Moisture in refrigeration system freezes at refrigerant filter orifice and blocks circulation of refrigerant	(1) Replace cooler drier (2) Remove moisture in cycle by repeatedly vacuuming (3) Supply proper amount of new refrigerant

(3) When cooling is insufficient:

Condition : Air conditioning system does not function effectively.

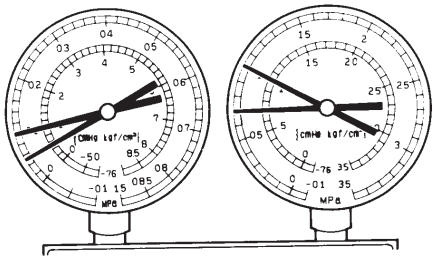

I22118

Symptom	Probable cause	Diagnosis	Corrective Actions
• Pressure is low on both low and high pressure sides • Cooling performance is insufficient	Gas leakage in refrigeration system	• Insufficient refrigerant • Refrigerant leakage	(1) Check for gas leakage and repair if necessary (2) Supply proper amount of new refrigerant (3) If indicated pressure value is close to 0 when connected to the gauge, vacuum after inspecting and repairing the location of leakage.

(4) When the circulation of the refrigerant is poor:

Condition : Air conditioning system does not function effectively.

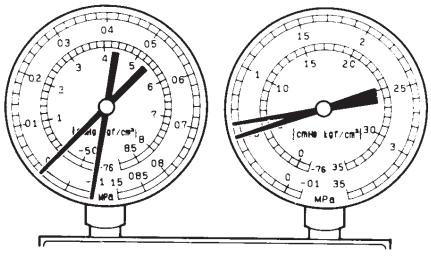

I22119

Symptom	Probable cause	Diagnosis	Corrective Action
• Pressure is low on both low and high pressure sides • Frost exists on piping from condenser to unit	Refrigerant flow is obstructed by dirt in condenser	Condenser is clogged	Replace condenser

(5) When the refrigerant does not circulate:

Condition : Air conditioning system does not function. (Sometimes it may function)

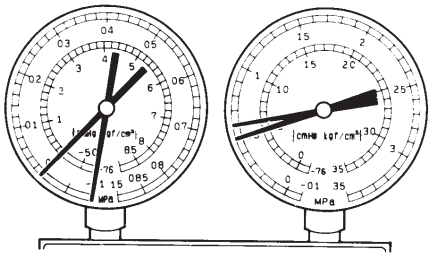

I22120

Symptom	Probable cause	Diagnosis	Corrective Actions
• Vacuum is indicated on low pressure side, and extreamly low pressure is indicated on high pressure side • Frost or dew is seen on piping on both sides of condenser or refrigerant filter	• Refrigerant flow is obstructed by moisture or dirt in refrigeration system • Refrigerant filter is clogged	Refrigerant does not circulate	(1) Check the refrigerant filter (2) Clean out dirt on refrigerant filter by blowing air (3) Replace condenser (4) Vacuum air and supply proper amount of new refrigerant (5) If refrigerant filter is damaged, replace it

(6) When the refrigerant is overcharged or cooling of condenser is insufficient:

Condition : Air conditioning system does not function effectively.

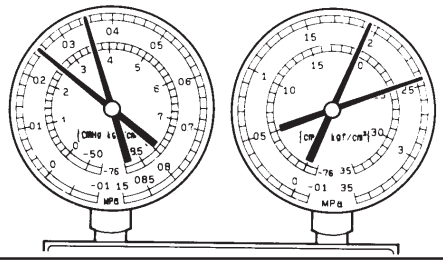

I22121

Symptom	Probable cause	Diagnosis	Remedy
• Pressure is extreamly high on both low and high pressure sides	• Excessive refrigerant • Cooling performance of condenser is insufficient	• Excessive refrigerant • Cooling performance of condenser is insufficient • Magnet valve assy is defective	(1) Clean condenser fins (2) Check condenser fan motor operation (3) If (1) and (2) are in normal state, vacuum and supply proper amount of refrigerant (4) If pressure is still high even after supplying refrigerant, replace the magnet valve assy

(7) When there is air in the refrigeration system:

Condition : Air conditioning system does not function.

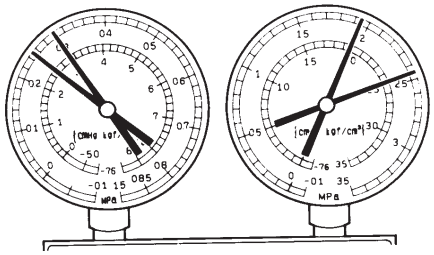

NOTE : These gauge indications occur when the refrigeration system opens and the refrigerant is charged without vacuuming.

I22122

Symptom	Probable cause	Diagnosis	Corrective Actions
Pressure is extreamly high on both low and the high pressure sides	Air in refrigeration system	• There is air in refrigeration system • Vacuuming is insufficient	(1) Check if compressor oil is dirty or insufficient (2) Vacuum air and supply new refrigerant

(8) When the refrigerant filter is defective:

Condition : Air conditioning system does not function effectively.

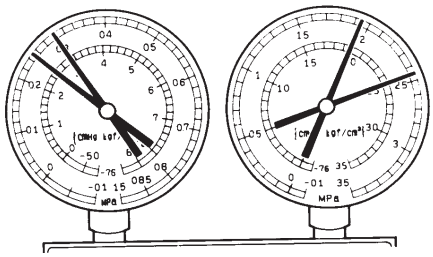

I22123

Symptom	Probable cause	Diagnosis	Corrective Actions
• Pressure is extreamly high on low pressure side • Pressure is extreamly high on high pressure side	Trouble with refrigerant filter	Excessive refrigerant	Replace refrigerant filter

(9) When the compressor is defective:

Condition : Air conditioning system does not function.

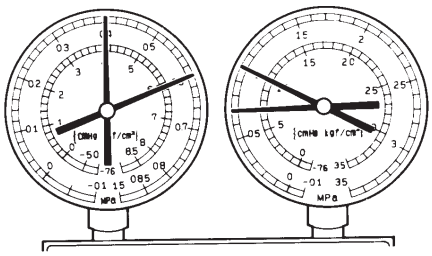

I22124

Symptom	Probable cause	Diagnosis	Corrective Actions
• Pressure is extreamly high on low pressure side • Pressure is extreamly low on high pressure side	Internal leak from compressor	• Compression failure • Leakage from damaged valve or broken sliding parts	Replace or replace compressor

(10) When the magnet valve assy is defective:

Condition : Air conditioning system does not function effectively.

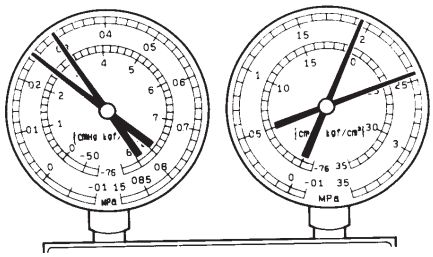

I22123

Symptom	Probable cause	Diagnosis	Corrective Actions
• Pressure is extreamly high on low pressure side	Internal leak from magnet valve assy	Magnet valve assy failure	Replace magnet valve assy

550Z8–01

REPLACEMENT

1. DISCHARGE REFRIGERANT FROM REFRIGERATION SYSTEM

(a) Turn the A/C switch ON.

(b) Operate the cooler compressor at the engine rpm of approx. 1,000 for 5 to 6 minuites to circulate the refrigerant and collect the compressor oil remaining in each component into the cooler compressor as much as possible.

(c) Shut off the engine.

(d) Let the refrigerant gas out.

SST 07110–58060 (07117–58080, 07117–58090, 07117–78050, 07117–88060, 07117–88070, 07117–88080)

2. CHARGE REFRIGERANT

(a) Using a vacuum pump, perform vacuuming.

(b) Charge refrigerant, HFC–134a (R134a).

Standard: 440 ± 30 g (15.51 ± 1.06 oz.)

SST 07110–58060 (07117–58060, 07117–58070, 07117–58080, 07117–58090, 07117–78050, 07117–88060, 07117–88070, 07117–88080)

RHD AZ Engine series:

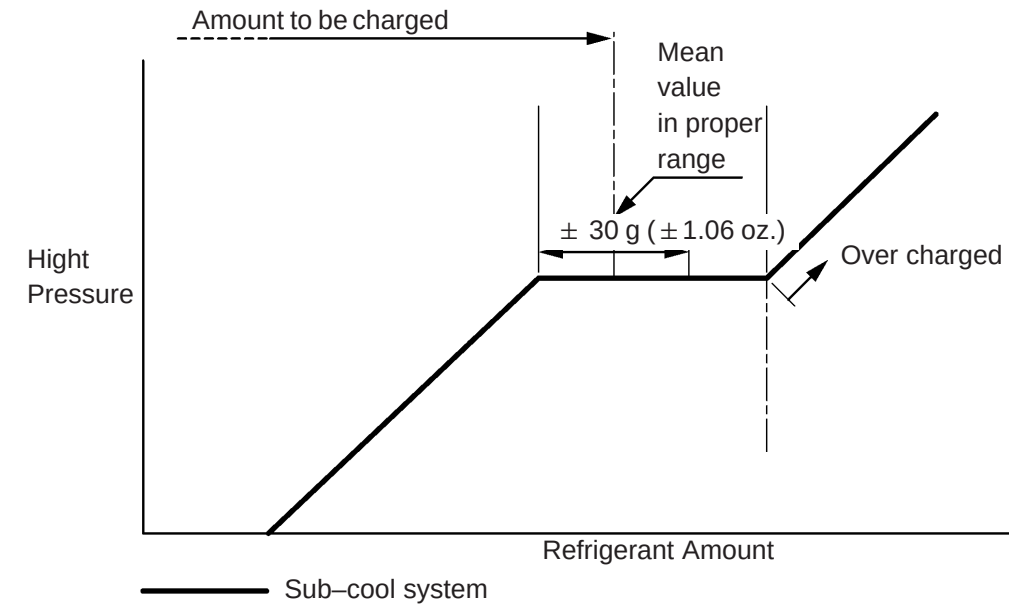

P I30082 I37091

3. WARM UP ENGINE

4. INSPECT LEAKAGE OF REFRIGERANT

(a) Using a gas leak detector, check for leakage of the refrigerant.

NOTICE:

1CD–FTV Hot gas heater:

Since the system uses a refrigerant filter (fixed valve), sound of the refrigerant circulation (hissing sound) can be heard for approx. 30 seconds after turning the A/C off. This is merely a sound of balancing the low pressure with the high pressure, not a sound of abnormality.

REFRIGERANT LINE

COMPONENTS

550YO–01

LHD:

3ZZ–FE:

1ZZ–FE:

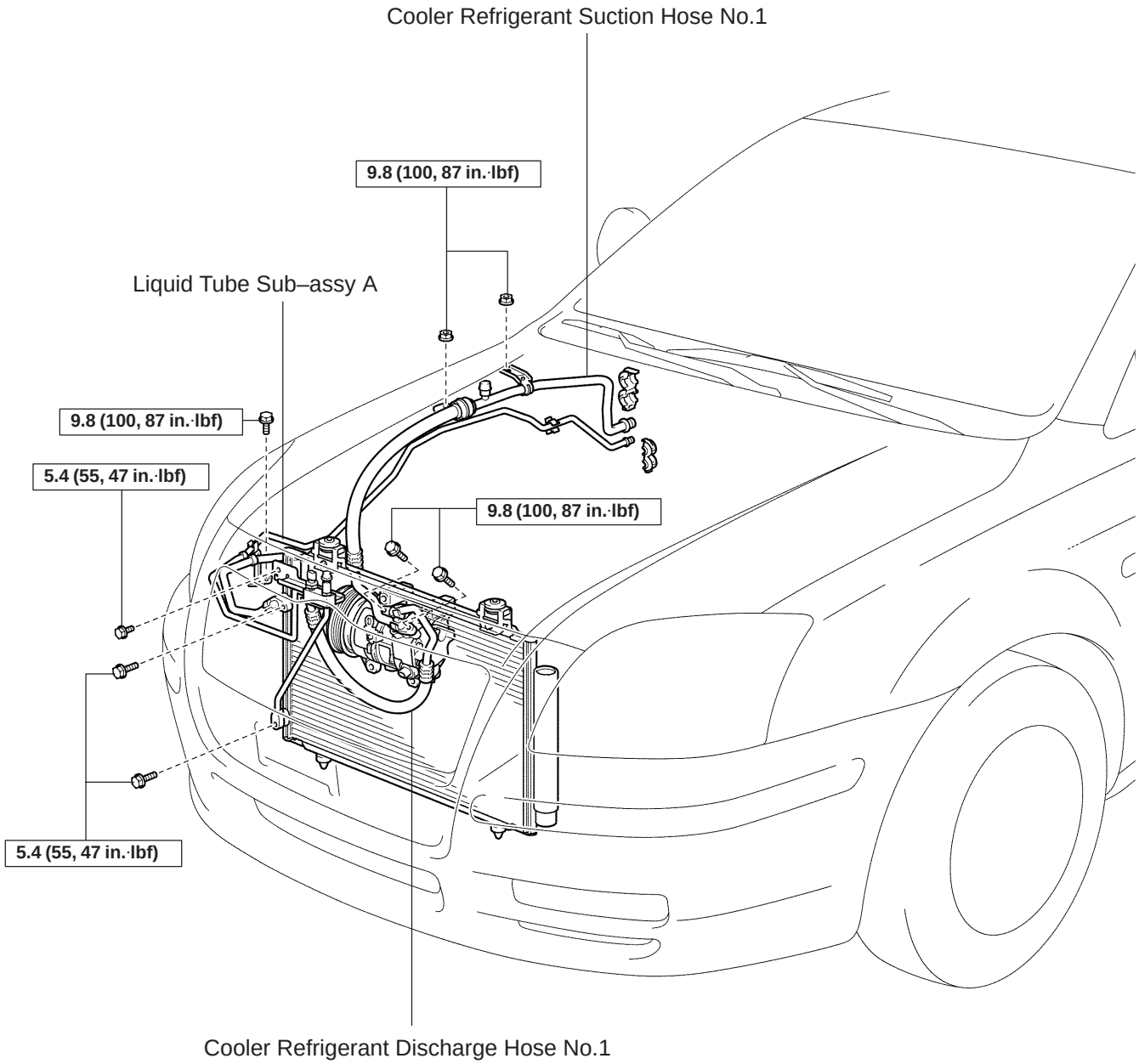

N·m (kgf·cm, ft·lbf) : Specified torque

P

I34975

RHD:

3ZZ–FE:

1ZZ–FE:

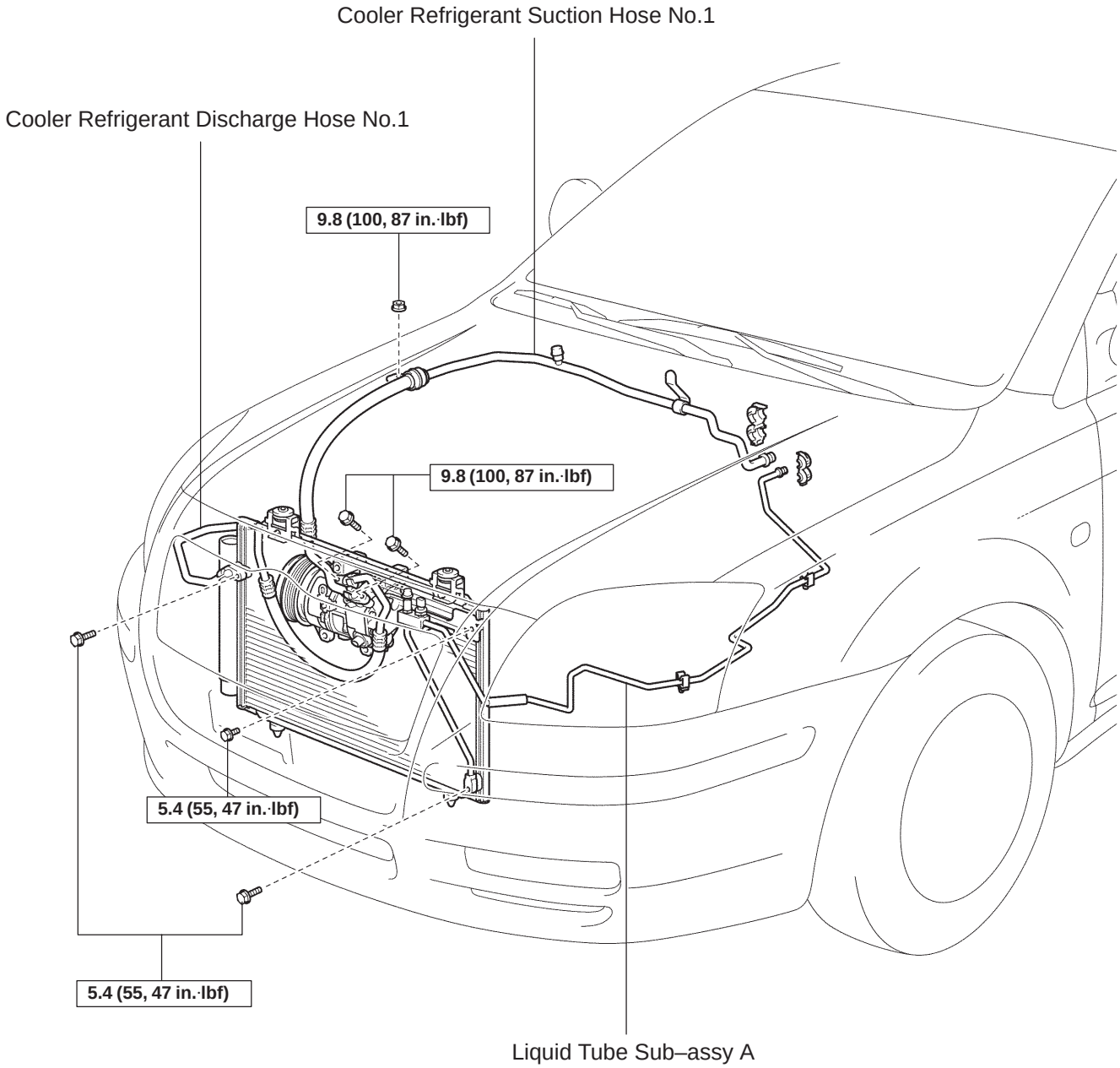

N·m (kgf·cm, ft·lbf) : Specified torque

P

I34976

LHD:

1AZ–FSE:

1AZ–FE:

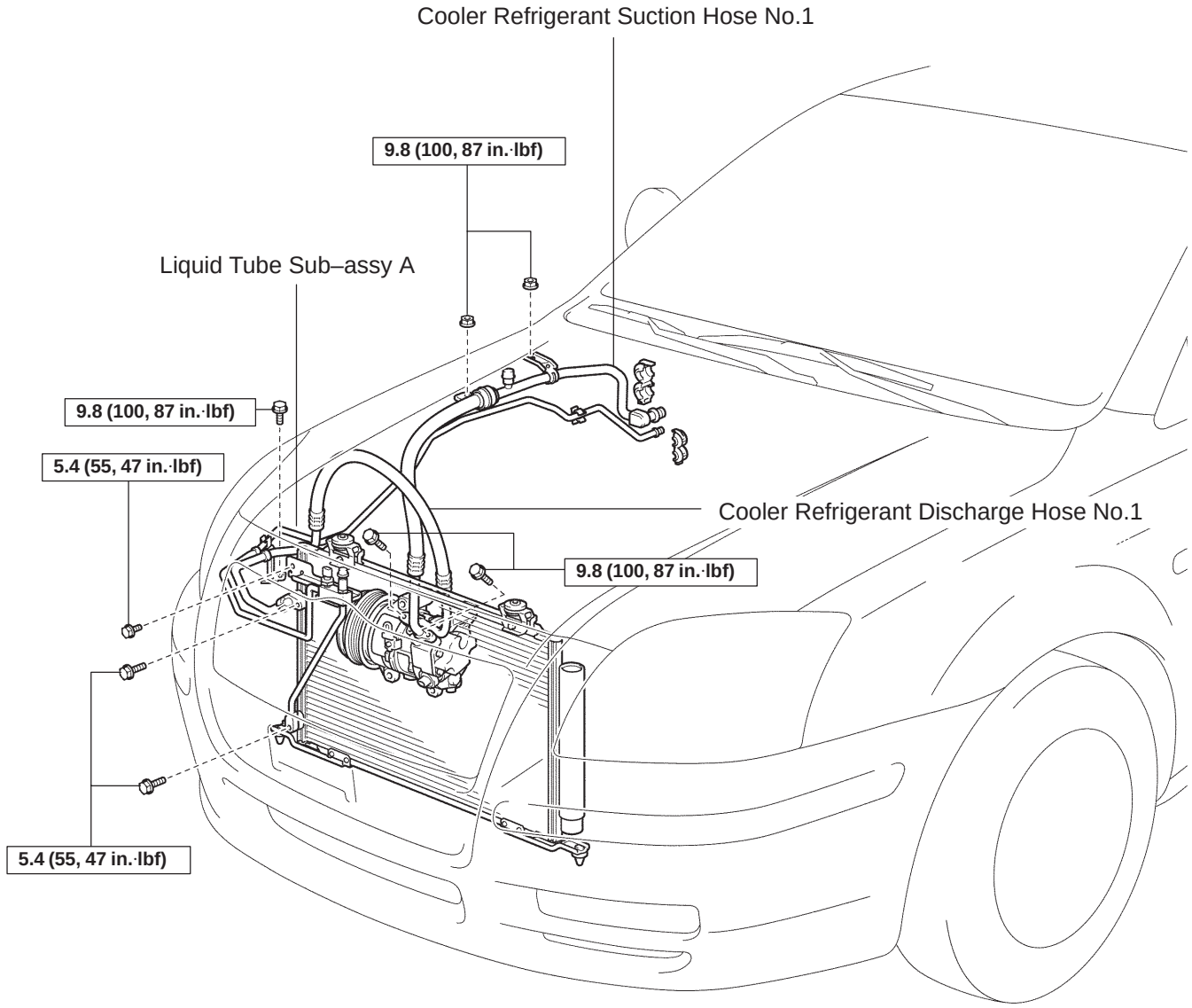

N·m (kgf·cm, ft·lbf) : Specified torque

P

I34977

RHD:

1AZ–FSE:

1AZ–FE:

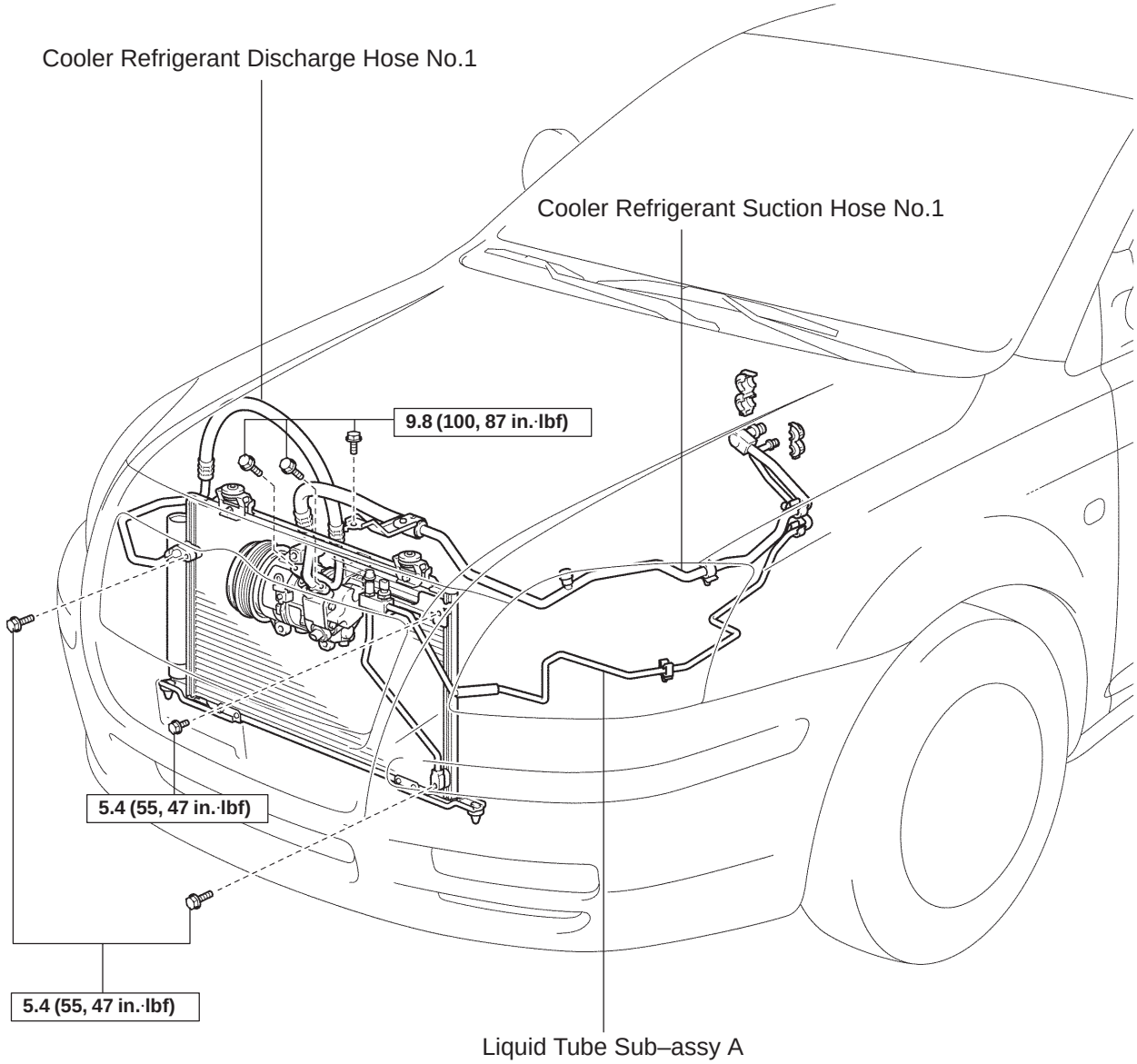

N·m (kgf·cm, ft·lbf) : Specified torque

P

I34978

LHD:

1CD–FTV:

w/o Hot Gas Heater:

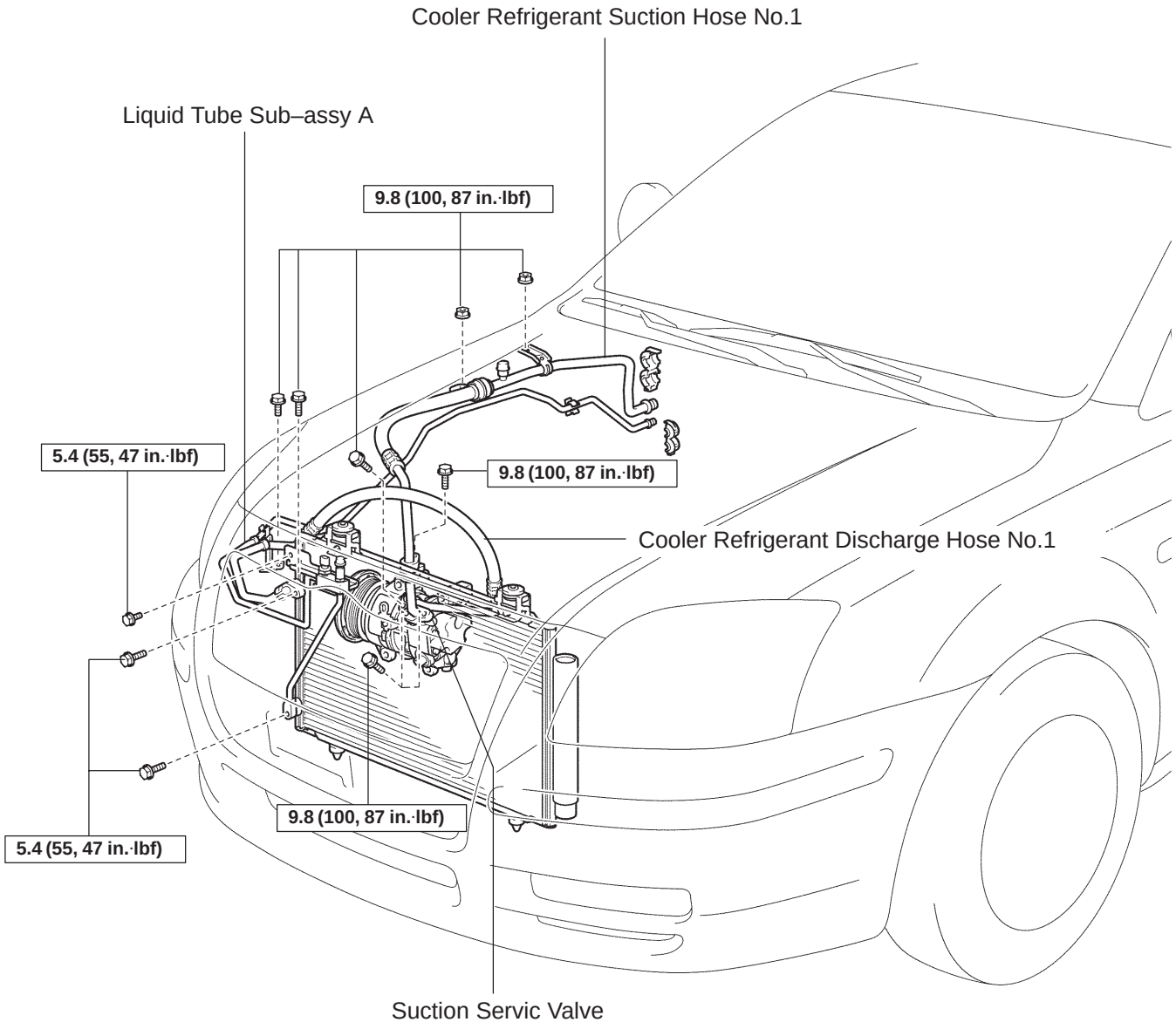

N·m (kgf·cm, ft·lbf) : Specified torque

P

I34979

LHD:

1CD–FTV:

w/ Hot Gas Heater:

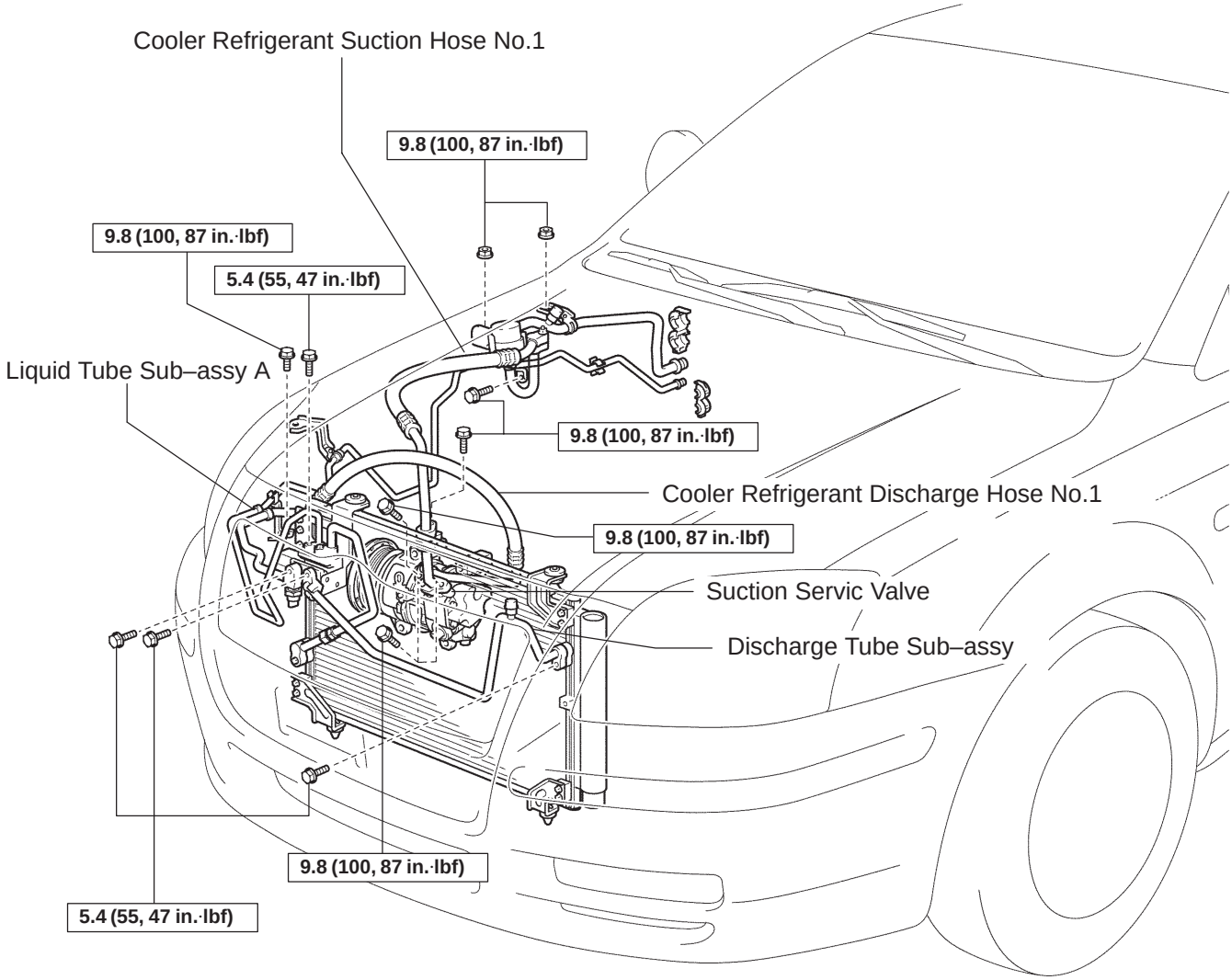

N·m (kgf·cm, ft·lbf) : Specified torque

P

I34980

RHD:

1CD–FTV:

w/ Hot Gas Heater:

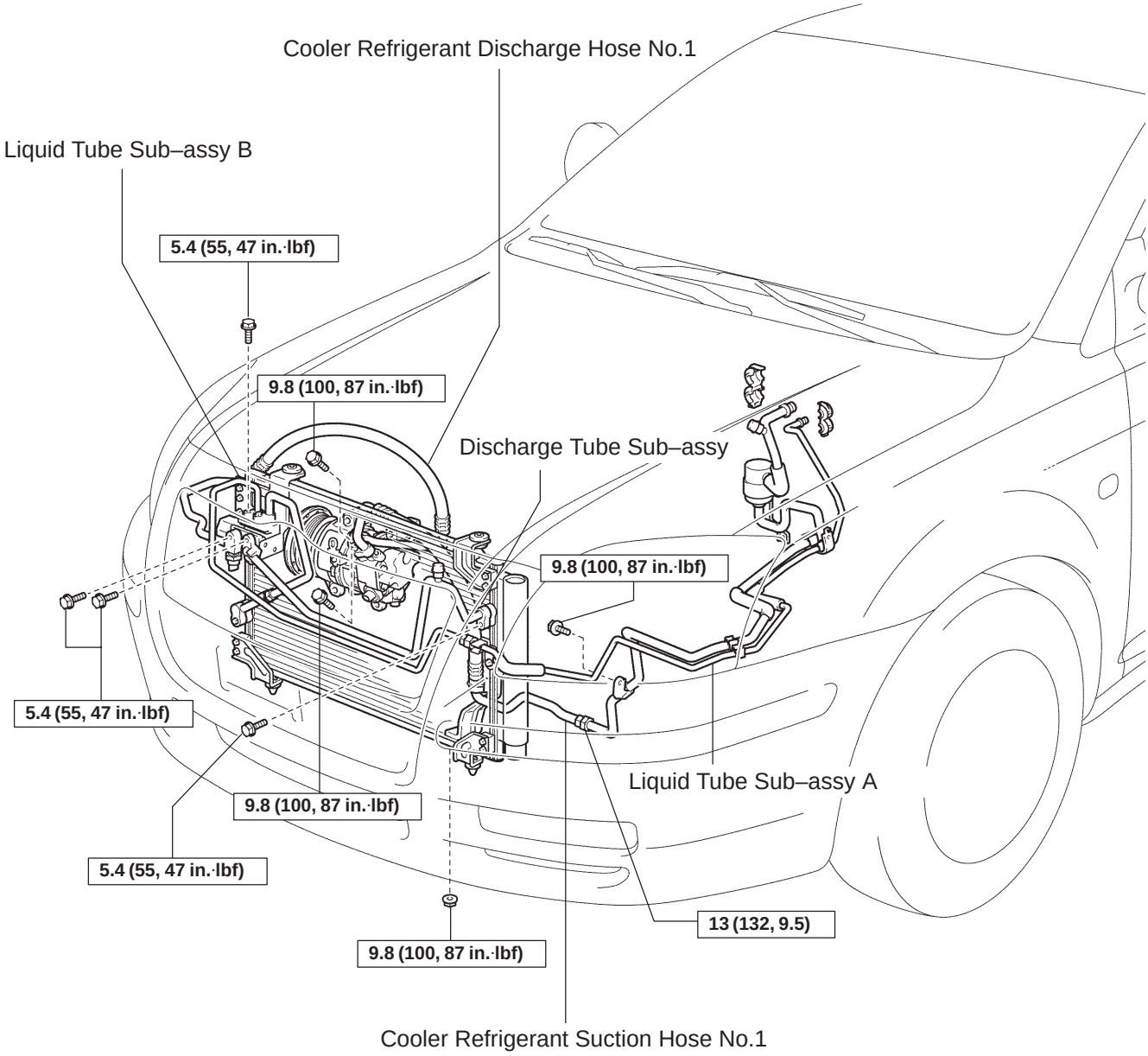

N·m (kgf·cm, ft·lbf) : Specified torque

P

I34981

V (COOLER COMPRESSOR TO CRANKSHAFT PULLEY) BELT NO.1

550YP–01

REPLACEMENT

1. **REMOVE RADIATOR SUPPORT OPENING COVER**
2. **REMOVE ENGINE ROOM COVER SIDE**
3. **REMOVE ENGINE UNDER COVER RH**

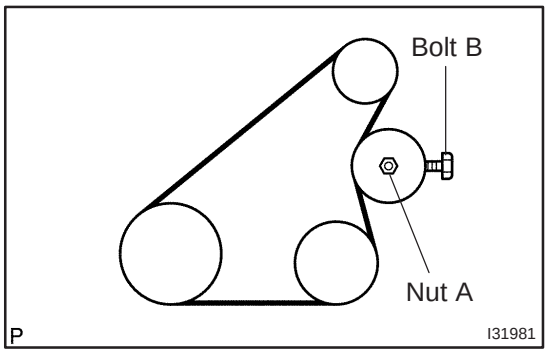

4. REMOVE V (COOLER COMPRESSOR TO CRANKSHAFT PULLEY) BELT NO.1

(a) Loosen the nut A.

(b) Loosen the bolt B and remove the V (cooler compressor to crankshaft pulley) belt No. 1.

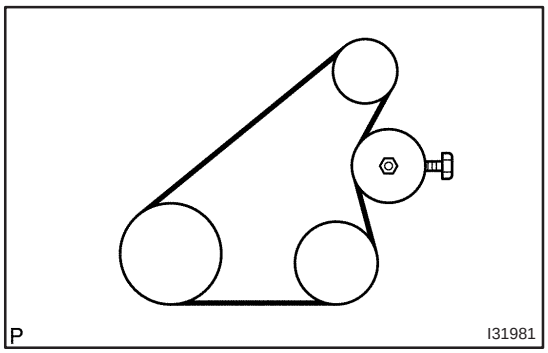

5. INSTALL V (COOLER COMPRESSOR TO CRANKSHAFT PULLEY) BELT NO.1

(a) Temporarily install a new V (cooler compressor to crankshaft pulley) belt No. 1 as shown in the illustration.

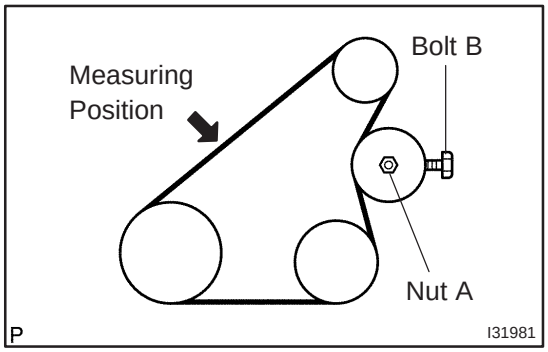

6. ADJUST V (COOLER COMPRESSOR TO CRANKSHAFT PULLEY) BELT NO.1

(a) Tighten the nut A.
Torque: 2.5 N·m (25 kgf·cm, 22 ft·lbf)

(b) Apply drive belt tension by turning bolt B.
Belt deflection:
New belt: 11 – 13 mm (0.43 – 0.51 in.)
Used belt: 13.5 – 16.5 mm (0.53 – 0.64 in.)

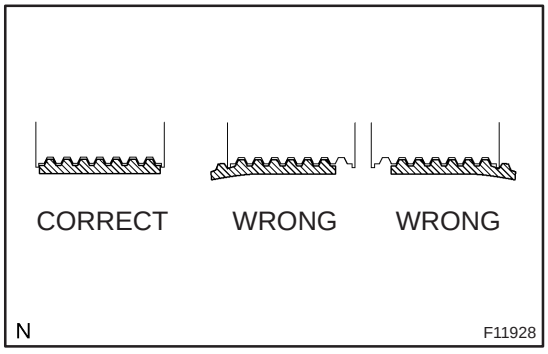

HINT:

- The new belt refers to a belt which is used for less than 5 minutes on the running engine.
- The used belt refers to a belt which is used for 5 minutes, or more on the running engine.
- After installing the drive belt, check that the belt fits properly in the ribbed grooves.
- Check that the drive belt does not slip off the groove at the end of the pulley by hand.

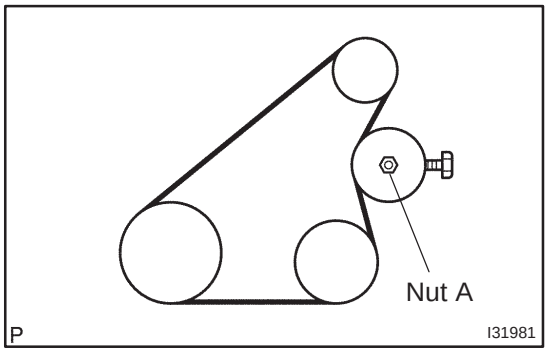

7. FULLY TIGHTEN V (COOLER COMPRESSOR TO CRANKSHAFT PULLEY) BELT NO.1

(a) Tighten the nut A.

Torque: 39 N·m (390 kgf·cm, 29 ft·lbf)

AIR CONDITIONING CONTROL ASSY

COMPONENTS

550YT–01

Manual A/C:

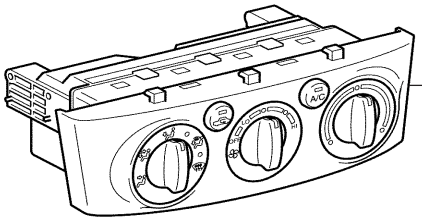

Air Conditioning Control Assy

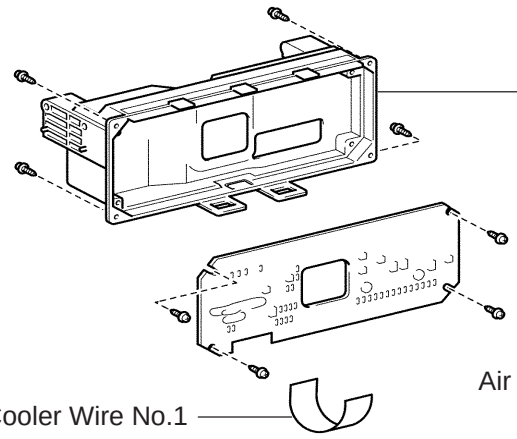

Heater Control Housing

Air Conditioning Panel Sub–assy

Cooler Wire No.1

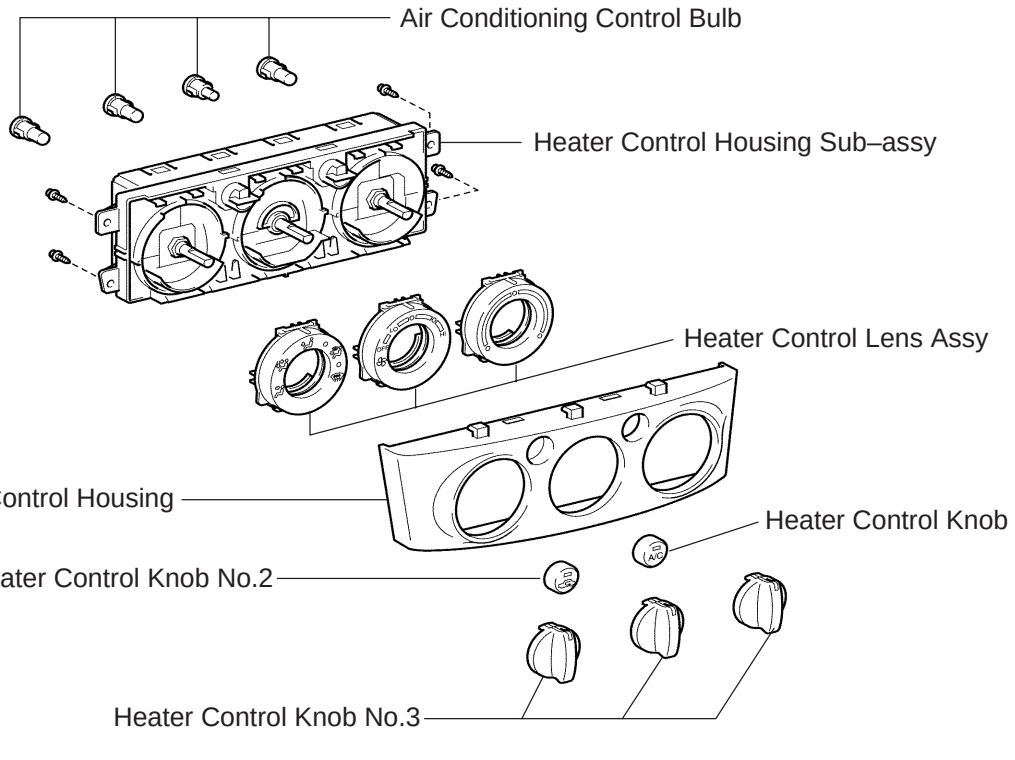

Air Conditioning Control Bulb

Heater Control Housing Sub–assy

Heater Control Lens Assy

Heater Control Housing

Heater Control Knob

Heater Control Knob No.2

Heater Control Knob No.3

P

I35273

Auto A/C:

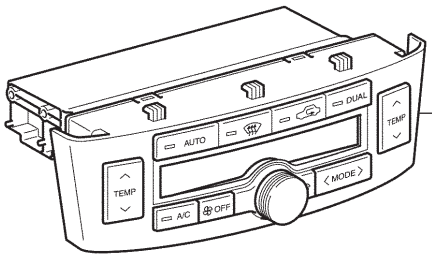

Air Conditioning Control Assy

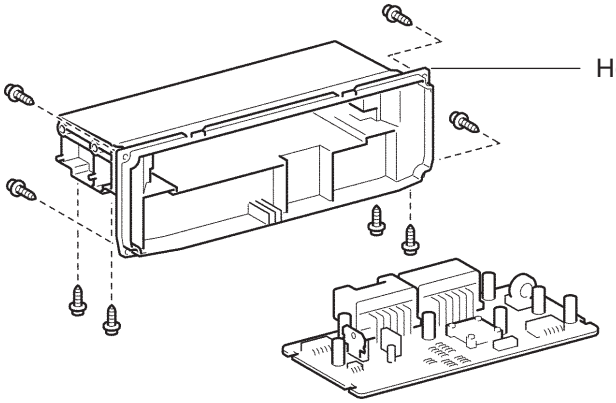

Heater Control Housing

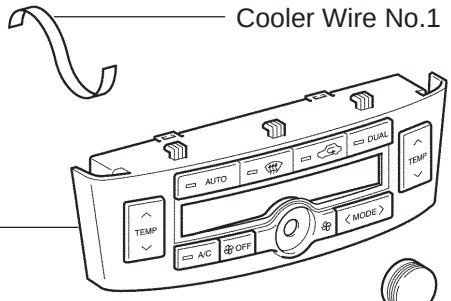

Cooler Wire No.1

Air Conditioning Panel Sub–assy



Control Knob Sub–assy

P

I35274

550YU–01

OVERHAUL

HINT:

COMPONENTS: See page 55–48

1. **REMOVE INSTRUMENT CLUSTER FINISH PANEL GARNISH NO.2 (See page 71–11)**
2. **REMOVE INSTRUMENT PANEL REGISTER ASSY CTR (See page 71–11)**
3. **REMOVE CONSOLE PANEL SUB–ASSY UPPER (See page 71–11)**
4. **REMOVE RADIO RECEIVER ASSEMBLY W/BRACKET (See page 67–5)**
5. **REMOVE RADIO BRACKET NO.1 (See page 67–5)**
6. **REMOVE RADIO BRACKET NO.2 (See page 67–5)**

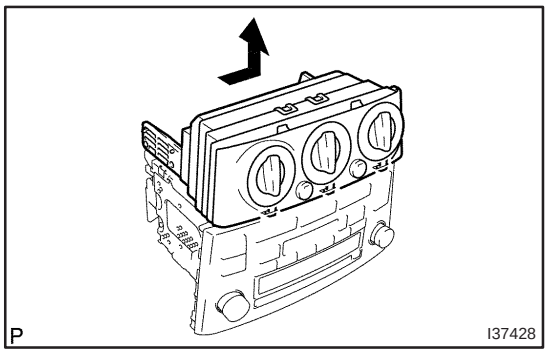

7. REMOVE AIR CONDITIONING CONTROL ASSY

(a) Remove the air conditioning control assy as shown in the illustration.

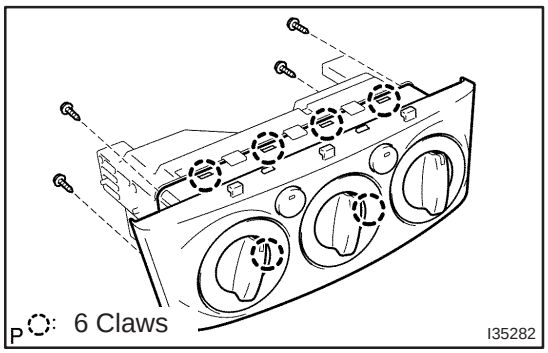

8. REMOVE AIR CONDITIONING PANEL SUB–ASSY

(a) Remove the 4 screws.

(b) Manual A/C:

Release the 6 claw fittings and disconnect the air conditioning panel sub–assy.

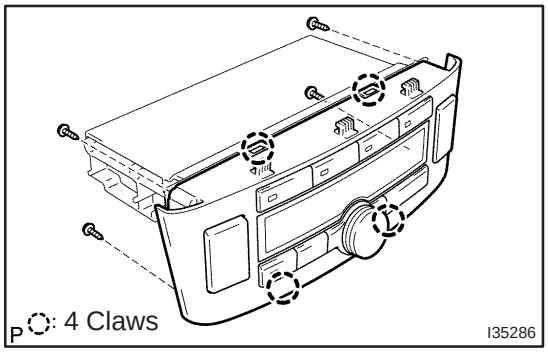

(c) Auto A/C:

Release the 4 claw fittings and disconnect the air conditioning panel sub–assy.

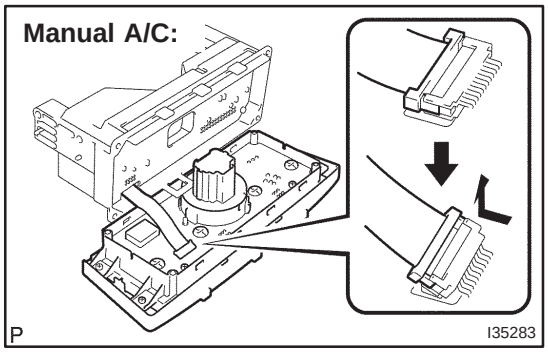

(d) Disconnect the cooler wire No.1 as shown in the illustration.

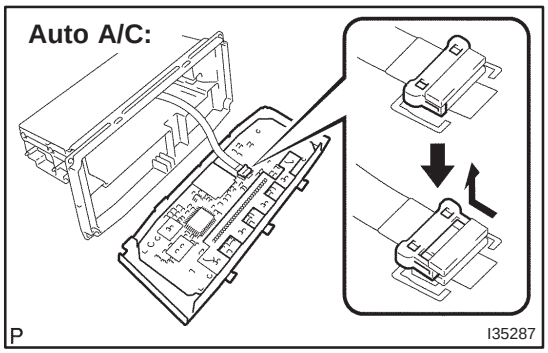

9. REMOVE HEATER CONTROL KNOB NO.3 (MANUAL AIR CONDITIONING)
10. REMOVE CONTROL KNOB SUB–ASSY (AUTO AIR CONDITIONING)
11. REMOVE HEATER CONTROL KNOB (MANUAL AIR CONDITIONING)
12. REMOVE HEATER CONTROL KNOB NO.2 (MANUAL AIR CONDITIONING)

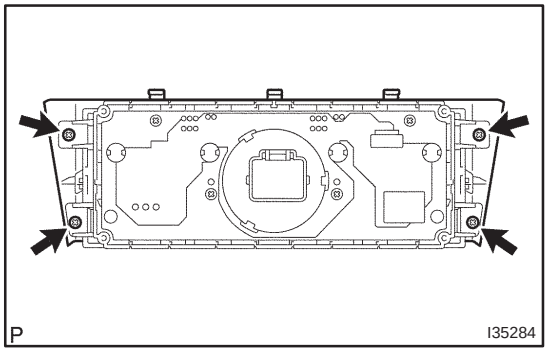

13. REMOVE HEATER CONTROL HOUSING (MANUAL AIR CONDITIONING)

(a) Release the 4 claw fittings and remove the 4 screws and the heater control housing.

14. REMOVE HEATER CONTROL LENS ASSY (MANUAL AIR CONDITIONING)
15. REMOVE HEATER CONTROL LENS ASSY (MANUAL AIR CONDITIONING)
16. REMOVE HEATER CONTROL LENS ASSY (MANUAL AIR CONDITIONING)

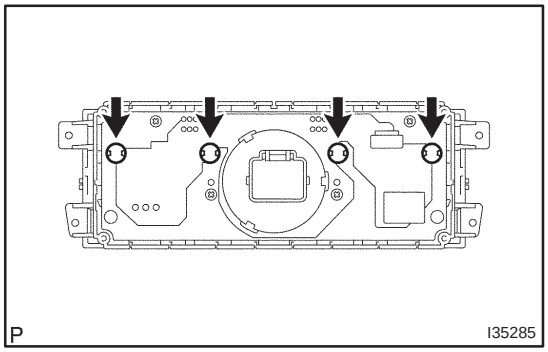

17. REMOVE AIR CONDITIONING CONTROL BULB (MANUAL AIR CONDITIONING)

(a) Remove the 4 air conditioning control bulbs.

18. REMOVE HEATER CONTROL HOUSING SUB–ASSY (MANUAL AIR CONDITIONING)

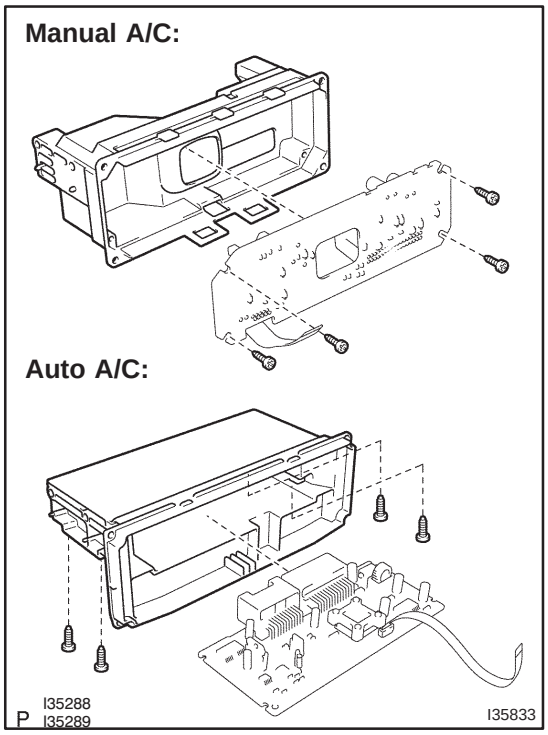

19. REMOVE HEATER CONTROL HOUSING

(a) Remove the 4 screws and the heater control housing.

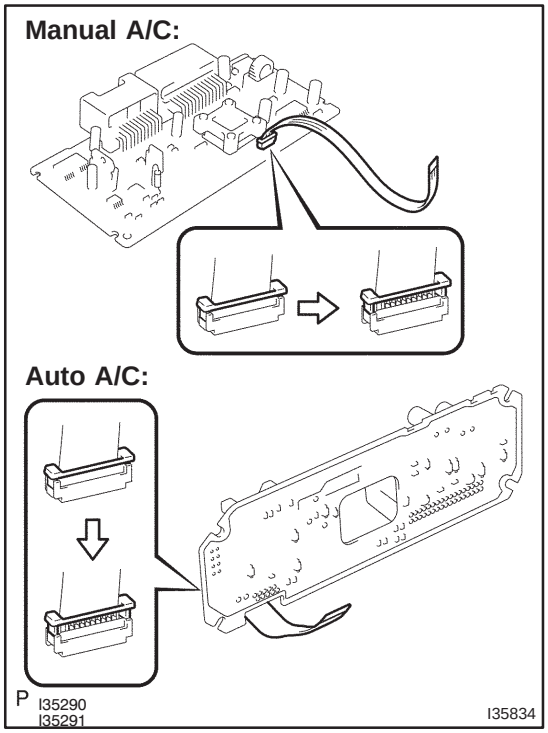

20. REMOVE COOLER WIRE NO.1

(a) Remove the cooler wire No.1 as shown in the illustration.

AIR CONDITIONING RADIATOR ASSY

COMPONENTS

550YV–01

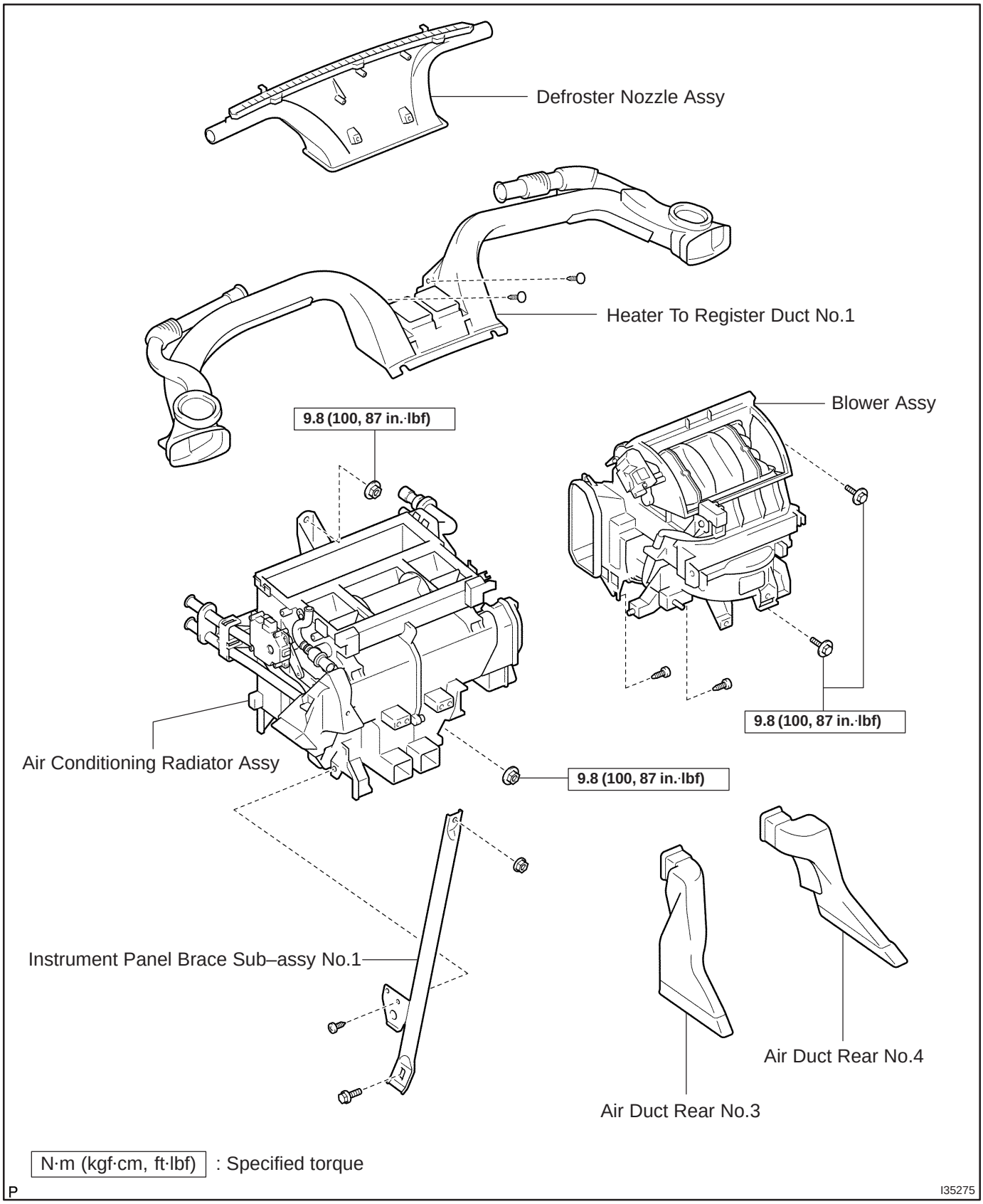

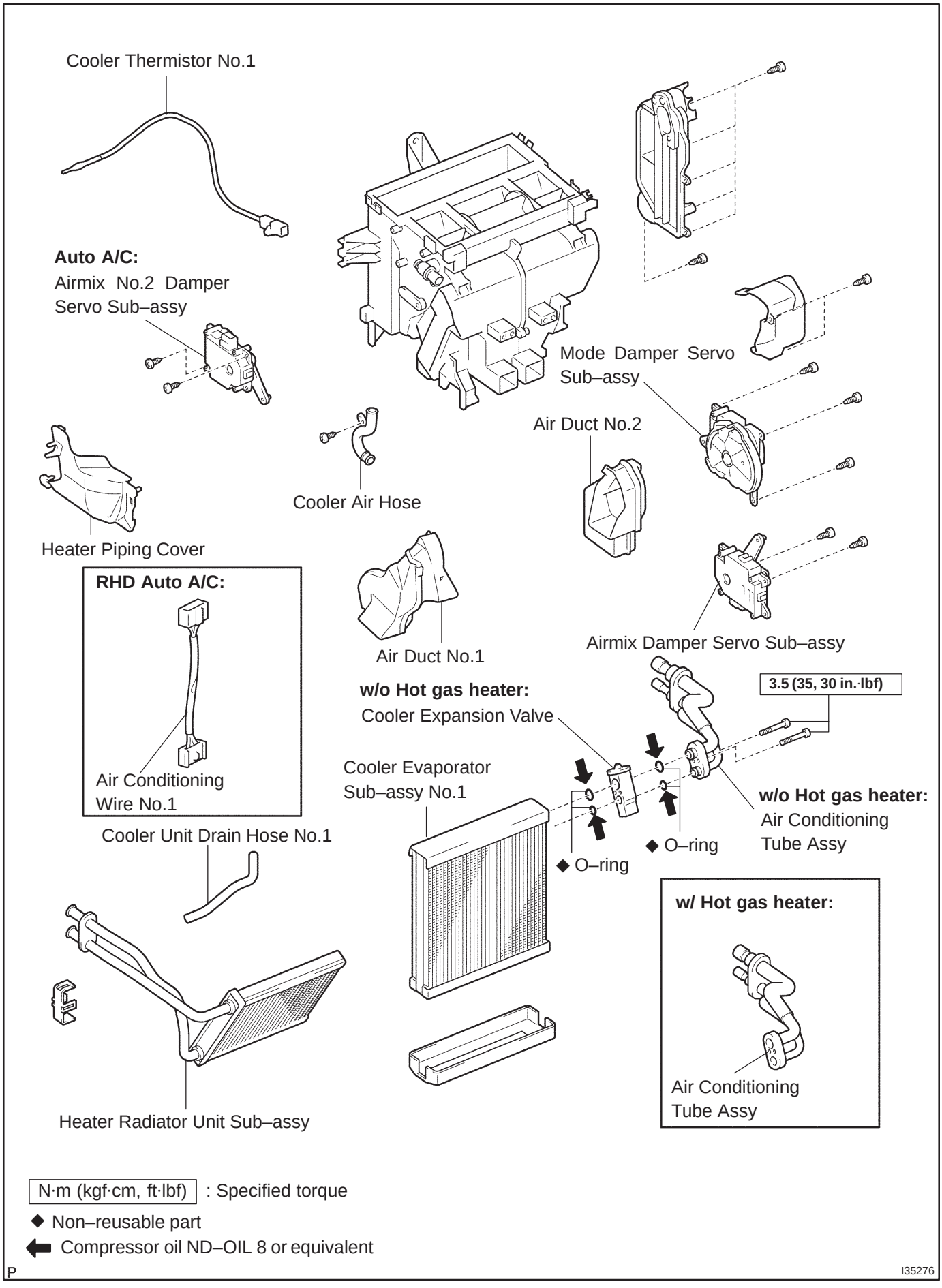
Cooler Thermistor No.1
Auto A/C:
Airmix No.2 Damper Servo Sub–assy
Mode Damper Servo Sub–assy
Air Duct No.2
Cooler Air Hose
Heater Piping Cover
RHD Auto A/C:
Air Conditioning Wire No.1
Air Duct No.1
Airmix Damper Servo Sub–assy
w/o Hot gas heater:
Cooler Expansion Valve
3.5 (35, 30 in.·lbf)
Cooler Evaporator Sub–assy No.1
w/o Hot gas heater:
Air Conditioning Tube Assy
◆ O–ring
◆ O–ring
Cooler Unit Drain Hose No.1
w/ Hot gas heater:
Air Conditioning Tube Assy
Heater Radiator Unit Sub–assy
N·m (kgf·cm, ft·lbf) : Specified torque
◆ Non–reusable part
Compressor oil ND–OIL 8 or equivalent
P
I35276

550YW–01

OVERHAUL

HINT:

COMPONENTS: See page 55–53

1. DISCHARGE REFRIGERANT FROM REFRIGERATION SYSTEM (See page 55–38)

SST 07110–58060 (07117–58080, 07117–58090, 07117–78050, 07117–88060, 07117–88070, 07117–88080)

2. DISCONNECT COOLER REFRIGERANT SUCTION HOSE NO.1

(a) Install SST on the piping clamp.

SST 09870–00025

HINT:

Make sure the direction of the piping clamp claw and SST by checking the illustration shown on the caution label.

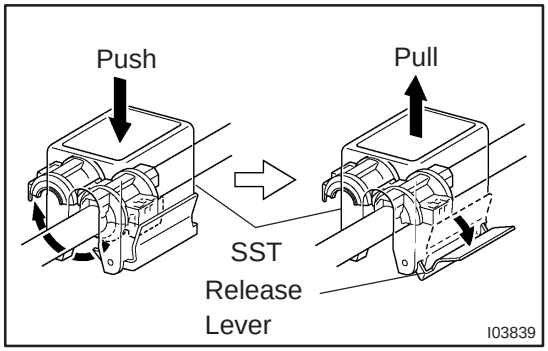

(b) Push down SST and release the clamp lock.

NOTICE:

Be careful not to deform the tube when pushing SST.

(c) Pull SST slightly and push the release lever, and then remove the piping clamp with SST.

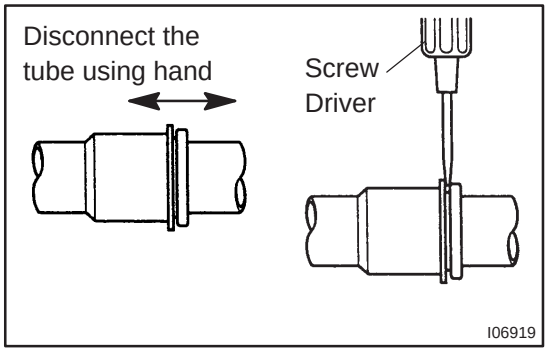

(d) Disconnect the cooler refrigerant suction hose No.1.

NOTICE:

- **Do not use a screwdriver or similar tool to disconnect the tube.**
- **Seal the opening of the disconnected parts using vinyl tape to prevent moisture and foreign matter from entering.**

3. DISCONNECT LIQUID TUBE SUB–ASSY A

SST 09870–00015

HINT:

Disconnection of the liquid tube sub–assy A is the same as the cooler refrigerant suction hose No.1.

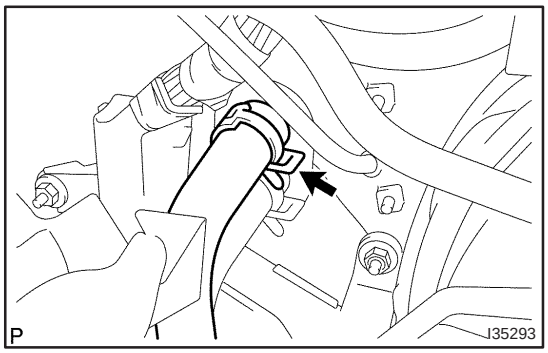

4. DISCONNECT HEATER INLET WATER HOSE

(a) Using pliers, grip the claws of the clip and slide the clip to disconnect the heater inlet water hose.

5. DISCONNECT HEATER OUTLET WATER HOSE

HINT:

Disconnection of the heater outlet water hose is the same way as the heater inlet water hose.

6. REMOVE INSTRUMENT PANEL LOWER ASSY (See page 71–11)

HINT:

Refer to the instructions for removal of the instrument panel lower assy.

7. REMOVE ECM (See page 10–65)

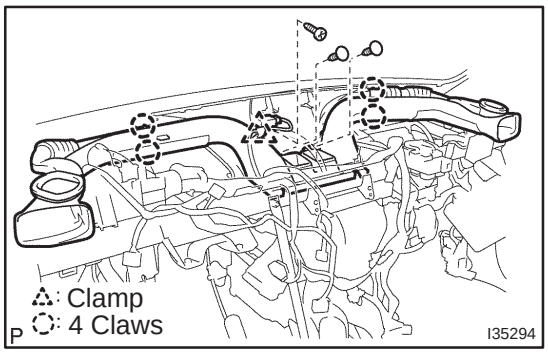

8. REMOVE HEATER TO REGISTER DUCT NO.1

(a) Remove the 2 clips and screw.

(b) Release the 4 claw fittings and the clip and remove the heater to register duct No.1.

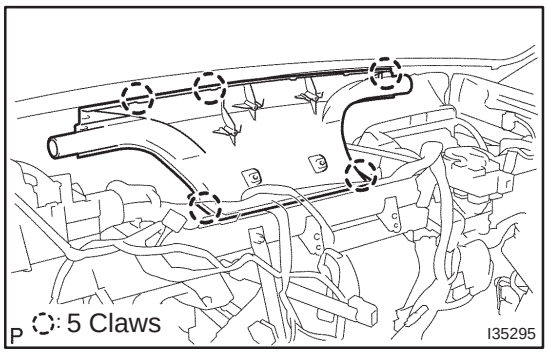

9. REMOVE DEFROSTER NOZZLE ASSY

(a) Release the 5 claw fittings and remove the defroster nozzle assy.

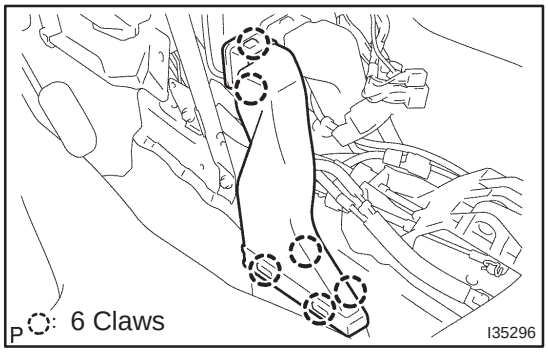

10. REMOVE AIR DUCT REAR NO.3

(a) Release the 6 claw fittings and remove the air duct rear No.3.



11. REMOVE AIR DUCT REAR NO.4

(a) Release the 6 claw fittings and remove the air duct rear No.4.

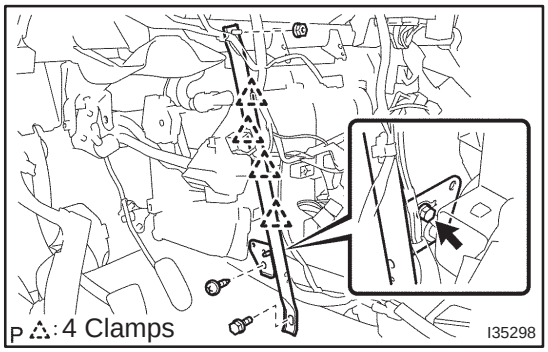

12. REMOVE INSTRUMENT PANEL BRACE SUB–ASSY NO.1

(a) Disconnect the 4 clamps.

(b) Remove the 2 bolts, the screw, the nut and the instrument panel brace sub–assy No.1.

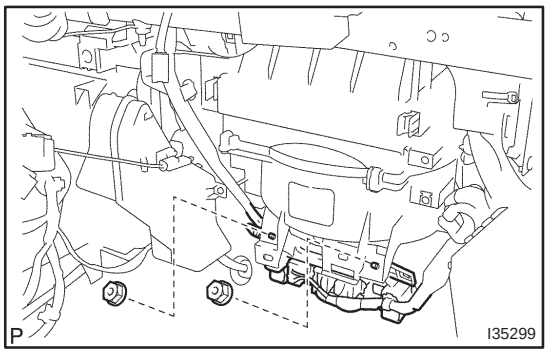

13. REMOVE AIR CONDITIONER UNIT ASSY

(a) Disconnect the connectors and the clip.

(b) Remove the 2 nuts.

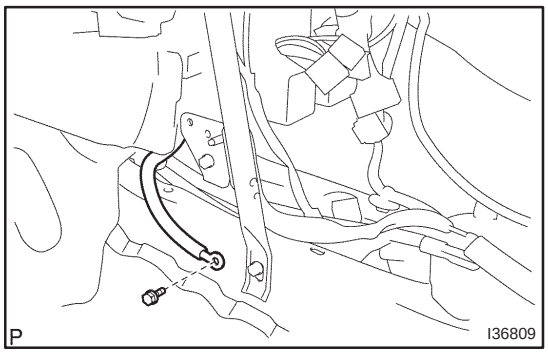

(c) PTC Heater model:
Remove the bolt.

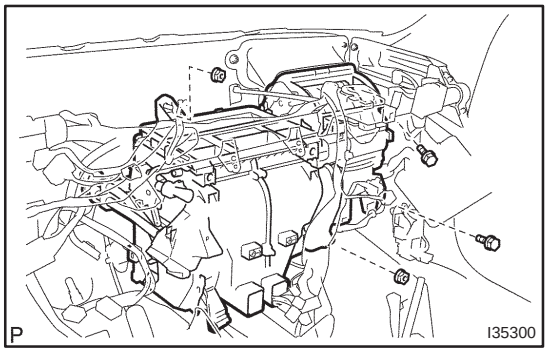

(d) Remove the 2 bolts, the 2 nuts and the air conditioner unit assy.

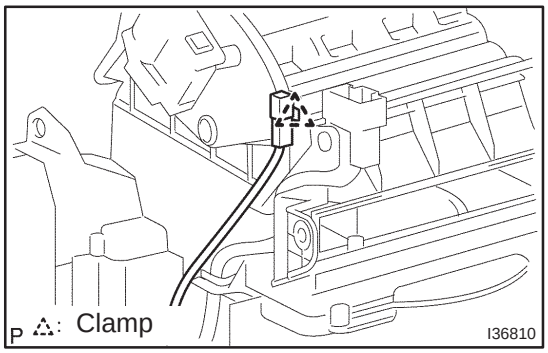

14. REMOVE AIR CONDITIONING RADIATOR ASSY

(a) Disconnect the clamp.

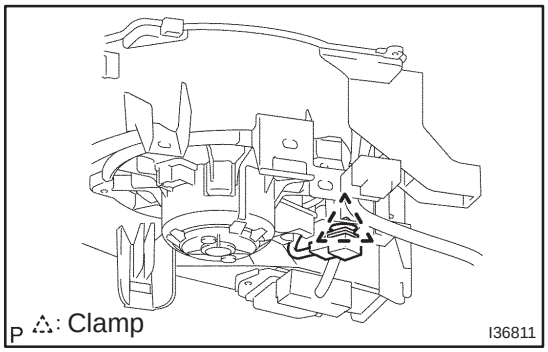

(b) RHD Auto A/C:
Disconnect the clamp.

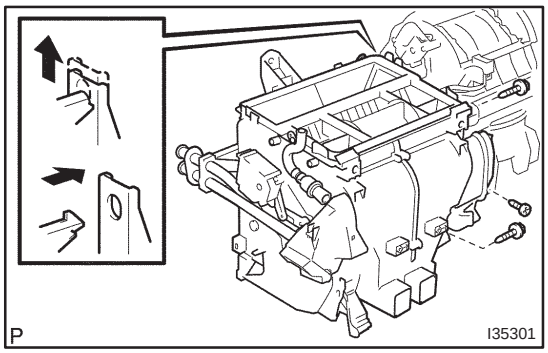

(c) Remove the 3 screws and air conditioning radiator assy.

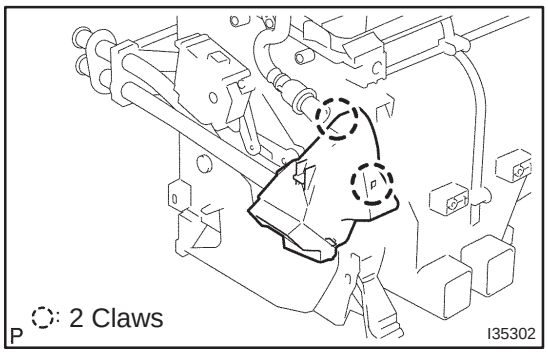

15. REMOVE AIR DUCT NO.1

(a) Release the 2 claw fittings and remove the air duct No.1.

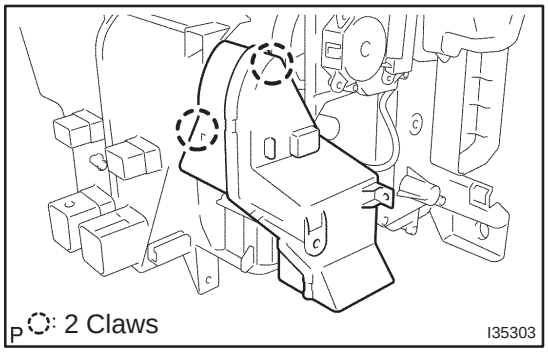

16. REMOVE AIR DUCT NO.2

(a) Release the 2 claw fittings and remove the air duct No.2.

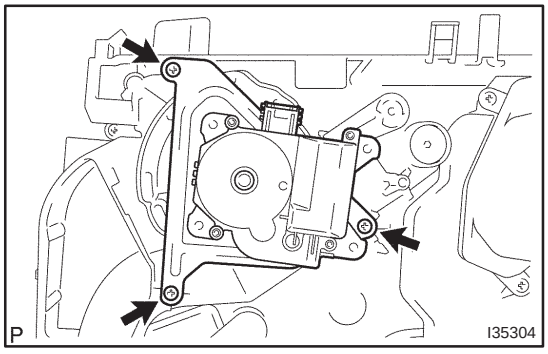

17. REMOVE MODE DAMPER SERVO SUB–ASSY

(a) Remove the 3 screws and the mode damper servo sub–assy.

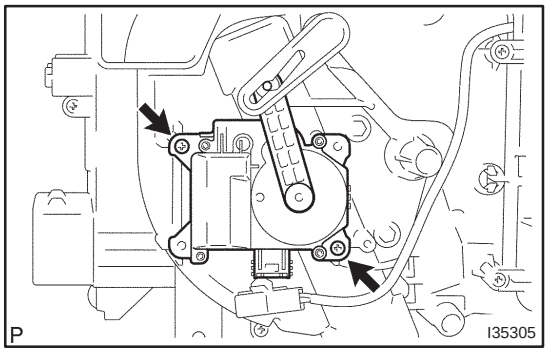

18. REMOVE AIRMIX DAMPER SERVO SUB–ASSY

(a) Remove the 2 screws and the airmix damper servo sub–assy.

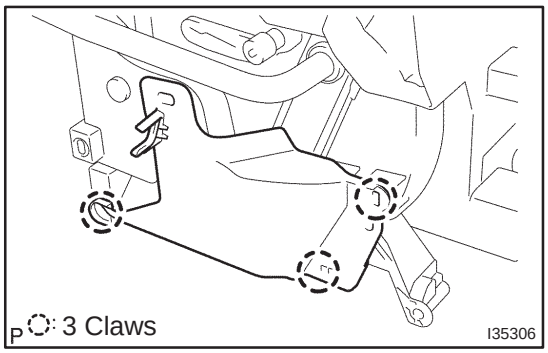

19. REMOVE HEATER PIPING COVER

(a) Release the 3 claw fittings and remove the heater piping cover.

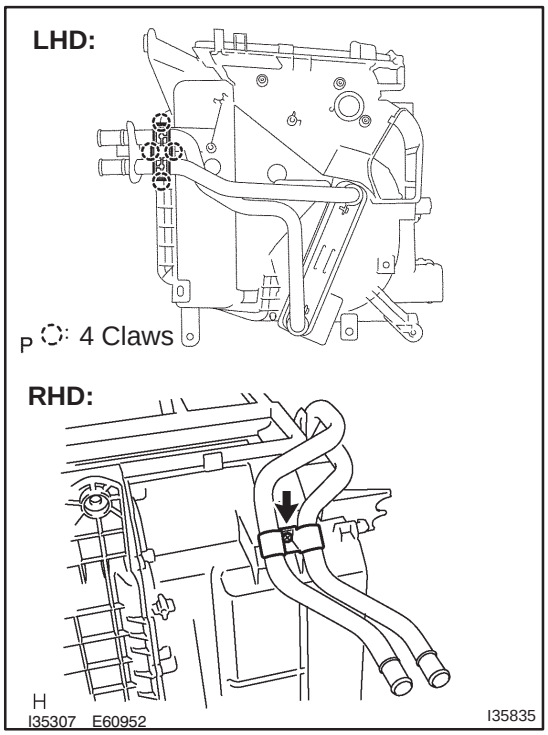

20. REMOVE HEATER RADIATOR UNIT SUB–ASSY

(a) LHD:
Release the 4 claw fittings and remove the clamp.

(b) RHD:
Remove the screw and the clamp.

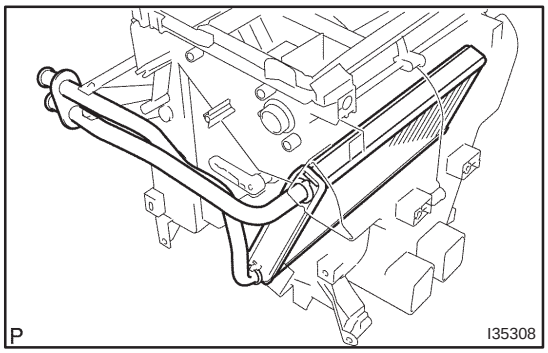

(c) Remove the heater radiator unit sub–assy.

21. REMOVE AIR CONDITIONING WIRENO1 (AUTO AIR CONDITIONING)

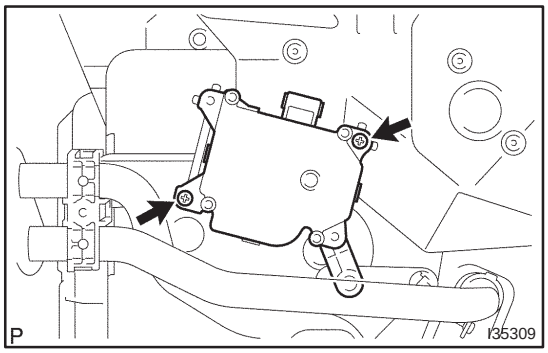

22. REMOVE AIRMIX NO.2 DAMPER SERVO SUB–ASSY (AUTO AIR CONDITIONING)

(a) Remove the 2 screws and the airmix No.2 damper servo sub–assy.

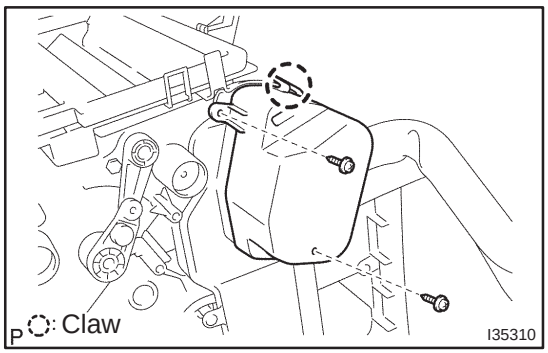

23. REMOVE AIR CONDITIONING TUBE ASSY

(a) Remove the 2 screws.

(b) Release the claw fitting and remove the cover.

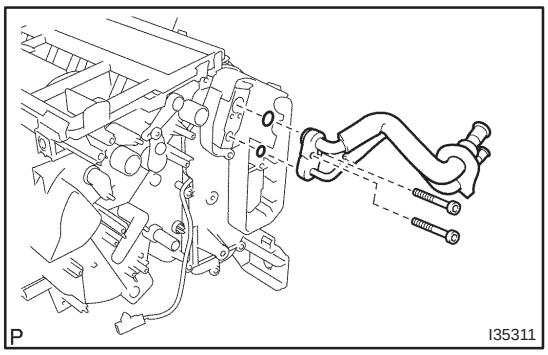

(c) Using a hexagon wrench 4.0 mm (0.15 in.), remove the 2 hexagon bolts and the air conditioning tube assy.

(d) w/o Hot gas heater:
Remove the 2 O–rings from the air conditioning tube assy.

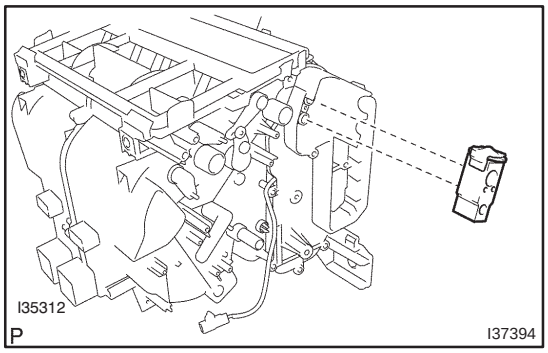

24. REMOVE COOLER EXPANSION VALVE (W/O HOT GAS HEATER)

(a) Remove the cooler expansion valve from the cooler evaporator sub–assy No.1.

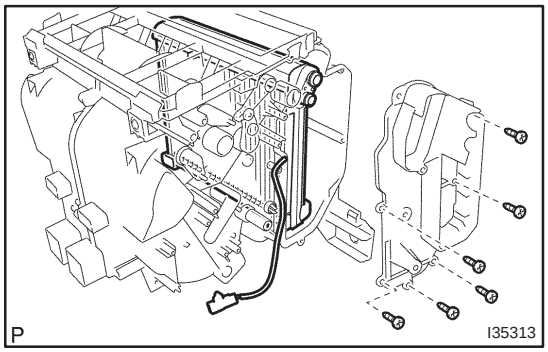

25. REMOVE COOLER THERMISTOR NO.1

(a) Remove the 6 screws and the cover.

(b) Remove the cooler thermistor No.1 and the cooler evaporator sub–assy No.1 from the case.

(c) Remove the cooler thermistor No.1 from the cooler evaporator sub–assy No.1.

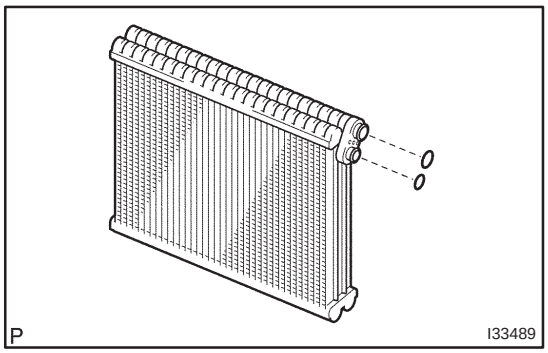

26. REMOVE COOLER EVAPORATOR SUB–ASSY NO.1

(a) Remove the 2 O–rings from the cooler evaporator sub–assy No.1.

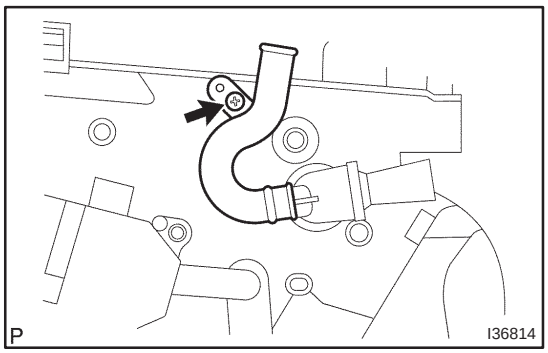

27. REMOVE COOLER AIR HOSE

(a) Remove the screw and the cooler air hose.

28. REMOVE AIR DUCT ASSY HEATER

29. REMOVE COOLER AIR HOSE (AUTO AIR CONDITIONING)

30. REMOVE COOLER UNIT DRAIN HOSE NO.1

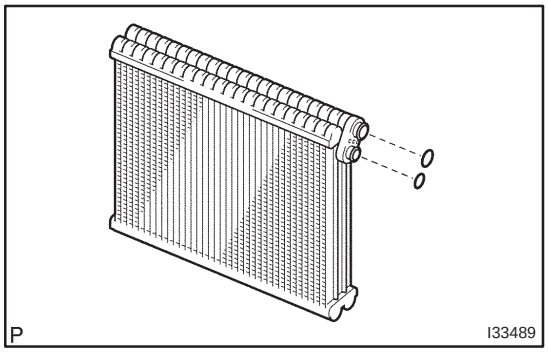

31. INSTALL COOLER EVAPORATOR SUB–ASSY NO.1

(a) Sufficiently apply compressor oil to 2 new O–rings and the fitting surface of the cooler expansion valve.
Compressor oil: ND–OIL 8 or equivalent

(b) Install the 2 O–rings on the cooler evaporator sub–assy No.1.

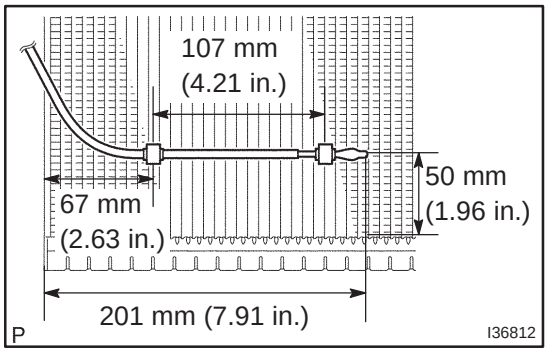

32. INSTALL COOLER THERMISTOR NO.1

(a) Install the cooler thermistor No.1 as shown in the illustration.

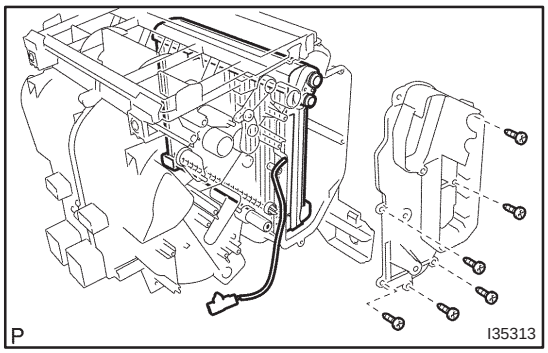

(b) Install the cooler evaporator sub–assy No.1 on the case.

(c) Install the cover with the 6 screws.

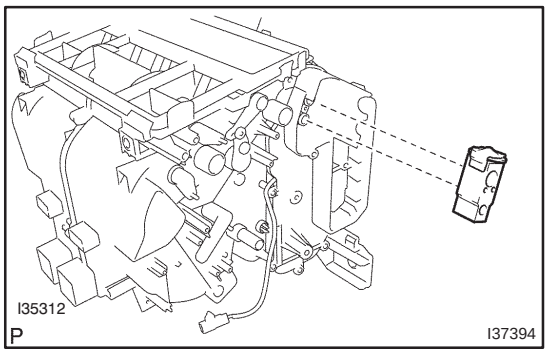

33. INSTALL COOLER EXPANSION VALVE (W/O HOT GAS HEATER)

(a) Install the cooler expansion valve.

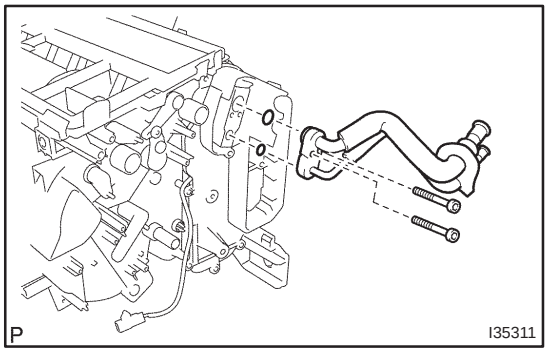

34. INSTALL AIR CONDITIONING TUBE ASSY

(a) w/o Hot gas heater:
Sufficiently apply compressor oil to 2 new O–rings and the fitting surface of the air conditioning tube assy.
Compressor oil: ND–OIL 8 equivalent

(b) w/o Hot gas heater:
Install the 2 O–rings on the air conditioning tube assy.

(c) Using a hexagon wrench 4.0 mm (0.15 in.), install the air conditioning tube assy with the 2 hexagon bolts.
Torque: 3.5 N·m (35 kgf·cm, 30 in.·lbf)

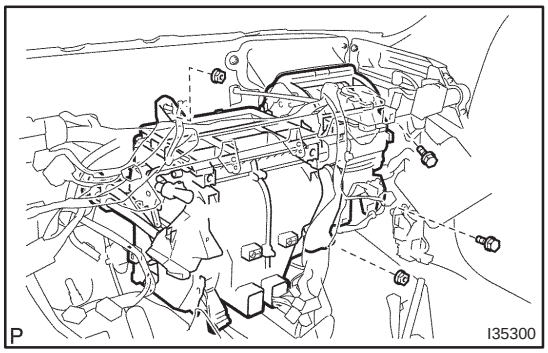

35. INSTALL AIR CONDITIONER UNIT ASSY

(a) Install the air conditioner unit assy with the 2 bolts and 2 nuts.
Torque: 9.8 N·m (100 kgf·cm, 87 in.·lbf)

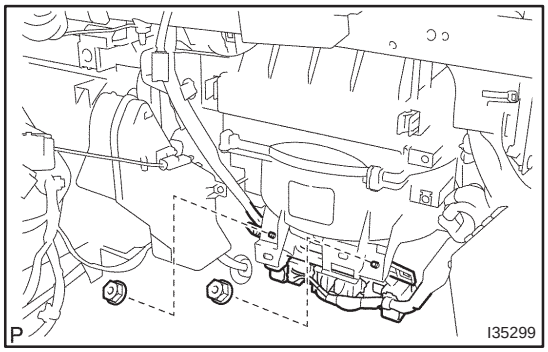

(b) Install the 2 nuts.
(c) Connect the connectors and the clip.

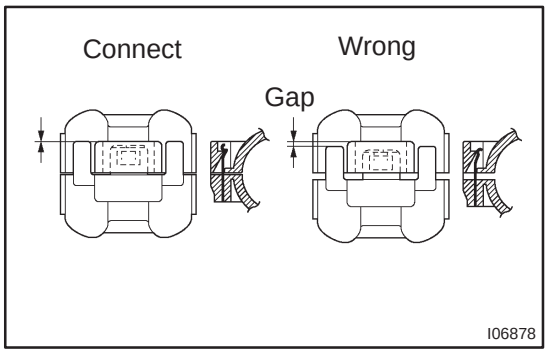

36. INSTALL COOLER REFRIGERANT SUCTION HOSE NO.1

(a) Remove the attached vinyl tape from the hose.
(b) Sufficiently apply compressor oil to a new O–ring and the fitting surface of the cooler refrigerant suction hose No.1.
Compressor oil: ND–OIL 8 or equivalent
(c) Install the 2 O–rings on the cooler refrigerant suction hose No.1.
(d) Install the cooler refrigerant suction hose No.1 and piping clamp.

HINT:
After the connection, check the claw fitting of the piping clamp.

37. INSTALL LIQUID TUBE SUB–ASSY A

(a) Remove the attached vinyl tape from the tube.
(b) Sufficiently apply compressor oil to a new O–ring and the fitting surface of the liquid tube sub–assy A.
Compressor oil: ND–OIL 8 or equivalent
(c) Install the 2 O–rings on the liquid tube sub–assy A.
(d) Install the liquid tube sub–assy A and the piping clamp.

HINT:
After the connection, check the claw fittings of the piping clamp.

38. ADD ENGINE COOLANT
3ZZ–FE/1ZZ–FE: (See page 16–7)
1AZ–FSE: (See page 16–31)
1AZ–FE: (See page 16–19)
1CD–FTV: (See page 16–44)

39. CHECK FOR ENGINE COOLANT LEAKS
3ZZ–FE/1ZZ–FE: (See page 16–1)
1AZ–FSE: (See page 16–25)
1AZ–FE: (See page 16–13)
1CD–FTV: (See page 16–37)

40. CHARGE REFRIGERANT (See page 55–38)
SST 07110–58060 (07117–58060, 07117–58070, 07117–58080, 07117–58090, 07117–78050, 07117–88060, 07117–88070, 07117–88080)
Specified amount: 440 ± 30 g (15.51 ± 1.06 oz.)

41. WARM UP ENGINE (See page 55–38)

42. INSPECT LEAKAGE OF REFRIGERANT (See page 55–38)

BLOWER ASSY

COMPONENTS

550YQ–01

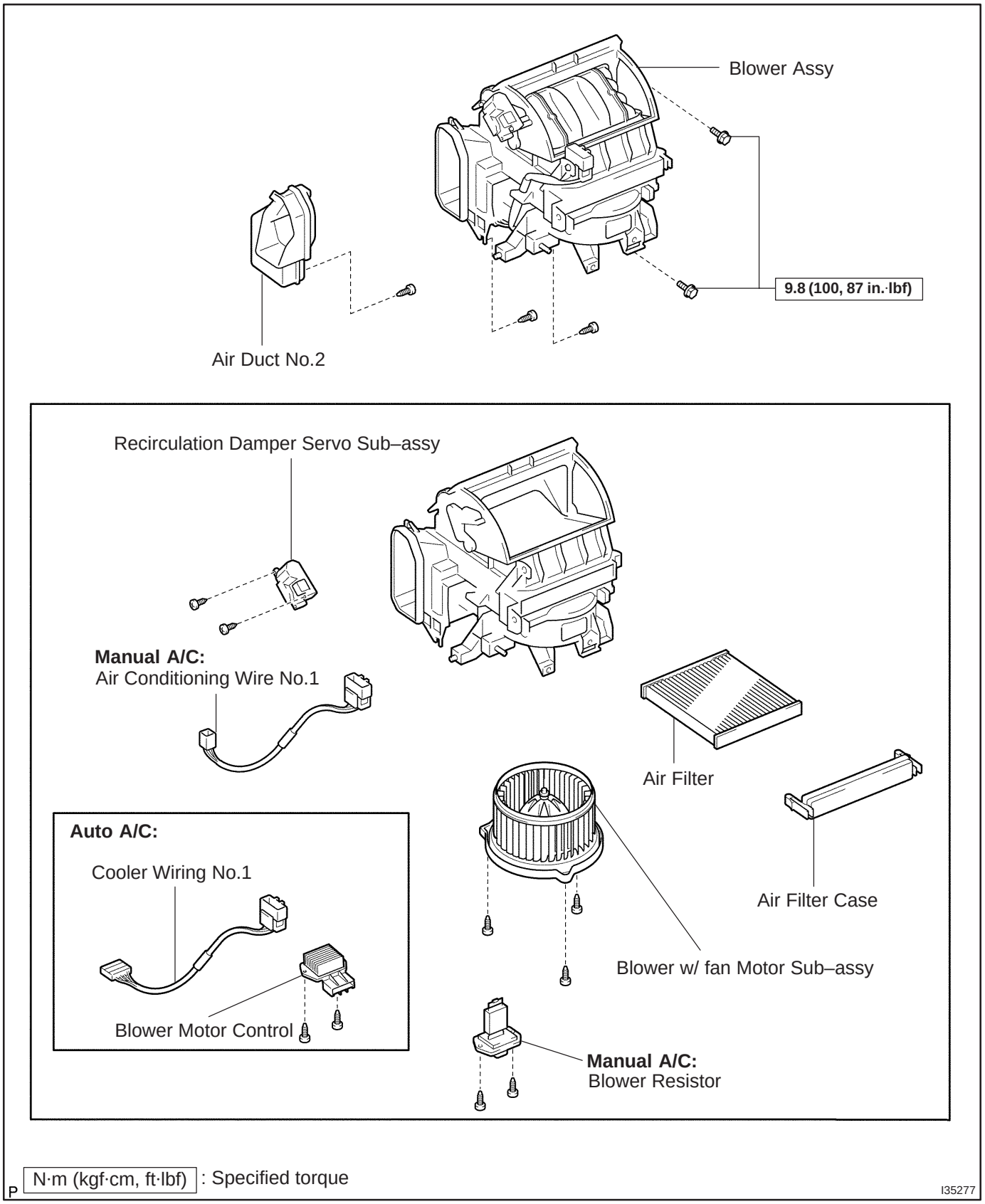

OVERHAUL

HINT:

COMPONENTS: See page 55–64

1. REMOVE INSTRUMENT PANEL LOWER ASSY (See page 71–11)

HINT:

Refer to the instructions for removal of the instrument panel lower assy.

2. REMOVE ECM (See page 10–65)

3. REMOVE AIR DUCT NO.2 (See page 55–55)

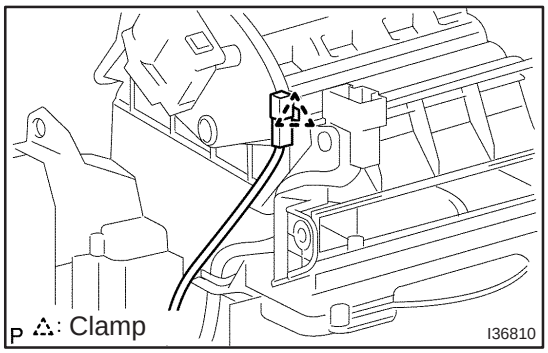

4. REMOVE BLOWER ASSY

(a) Disconnect the connector and the clamp.

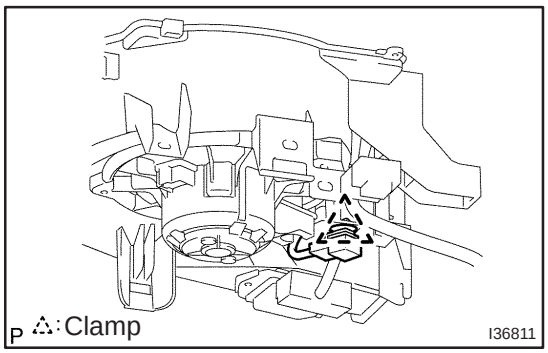

(b) RHD Auto A/C:
Disconnect the connector and the clamp.

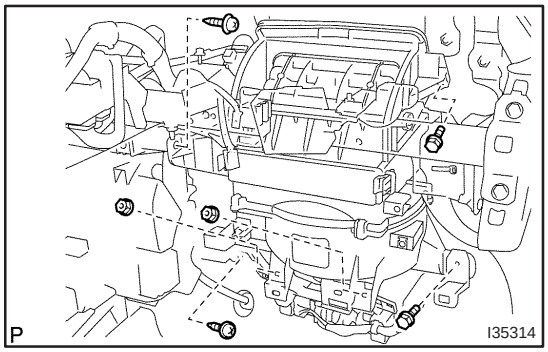

(c) Disconnect the connectors.

(d) Remove the 2 nuts.

(e) Remove the 2 bolts and the 2 screws.

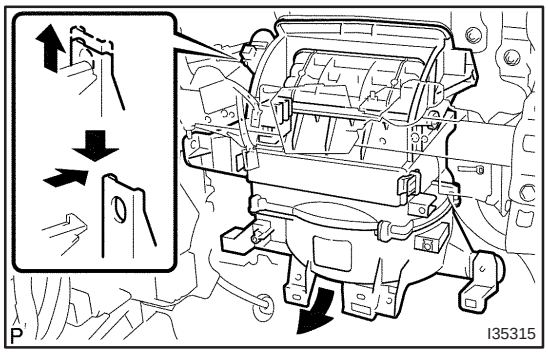

(f) Release the claw fitting and remove the blower assy.

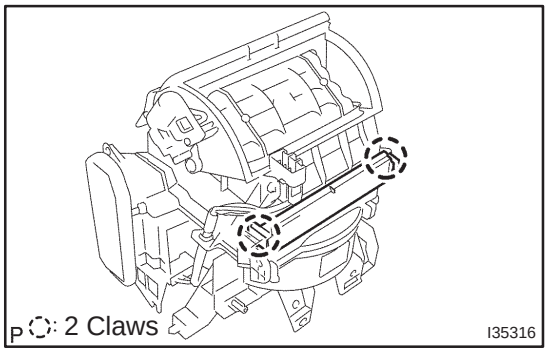

5. REMOVE AIR FILTER CASE

(a) Release the 2 claw fittings and remove the air filter case.

6. REMOVE AIR FILTER

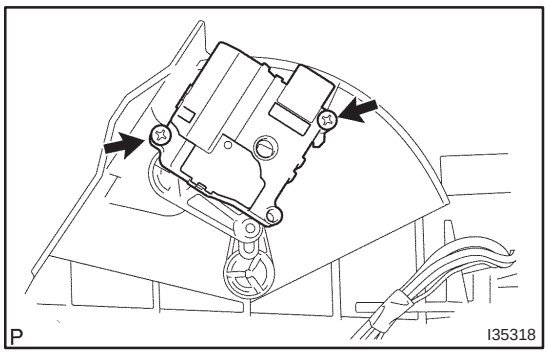

7. REMOVE RECIRCULATION DAMPER SERVO SUB–ASSY

(a) Remove the 2 screws and the recirculation damper servo sub–assy.

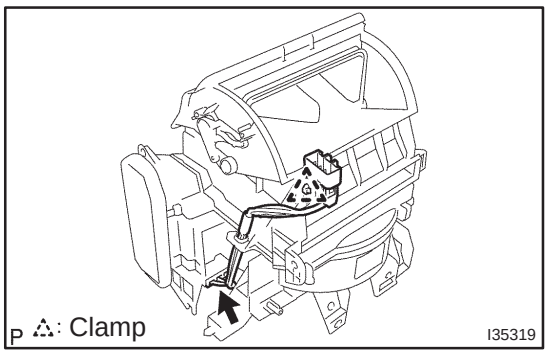

8. REMOVE AIR CONDITIONING WIRENO1 (MANUAL AIR CONDITIONING)

(a) Disconnect the connector.

(b) Release the clump and remove the air conditioning wire No.1.

9. REMOVE COOLER WIRING NO.1 (AUTO AIR CONDITIONING)

HINT:

Disconnection of the cooler wiring No.1 is the same as the air conditioning wire No.1.

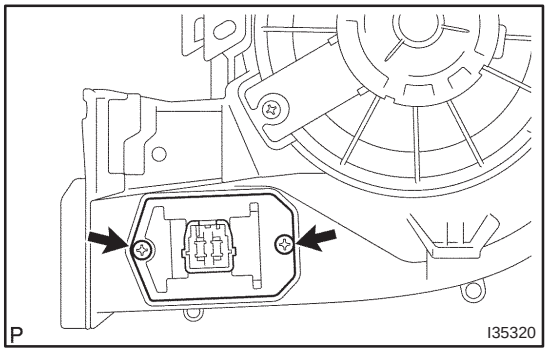

10. REMOVE BLOWER RESISTOR (MANUAL AIR CONDITIONING)

(a) Remove the 2 screws and the blower resistor.

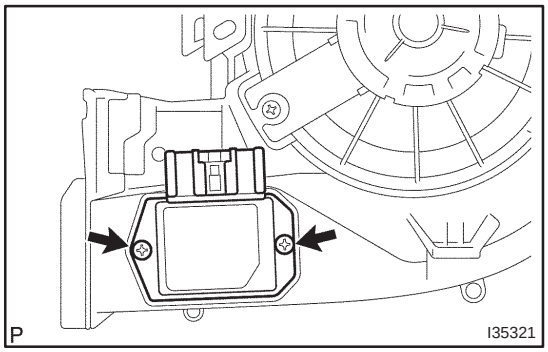

11. REMOVE BLOWER MOTOR CONTROL (AUTO AIR CONDITIONING)

(a) Remove the 2 screws and the blower motor control.

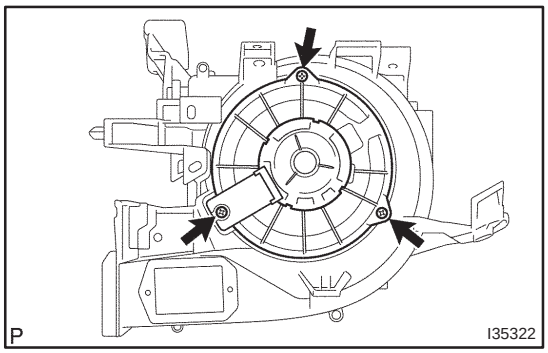

12. REMOVE BLOWER W/FAN MOTOR SUB–ASSY

(a) Remove the 3 screws and the blower w/ fun motor sub–assy.

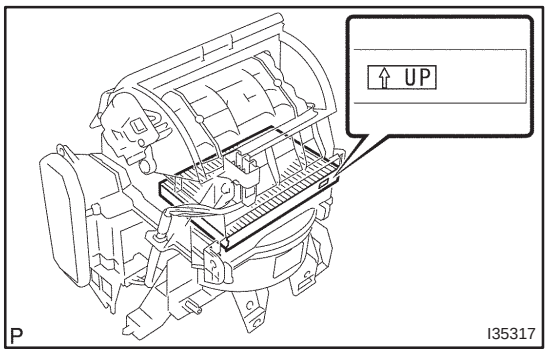

13. INSTALL AIR FILTER

(a) Install the air filter as shown in the illustration.

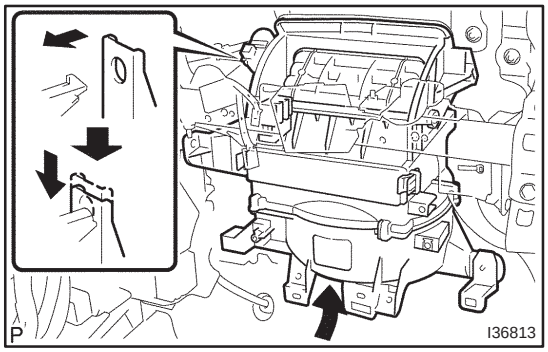

14. INSTALL BLOWER ASSY

(a) Install the blower assy with the claw fitting.

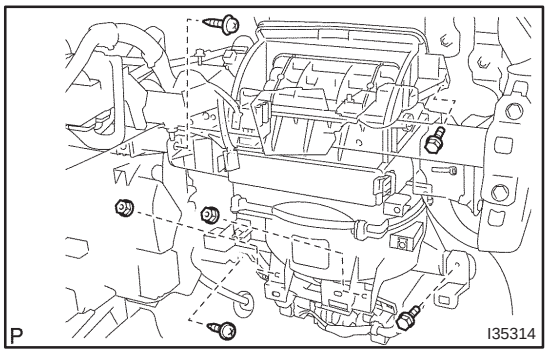

(b) Install the blower assy with the 2 bolts and the 2 screws.
Torque: 9.8 N·m (100 kgf·cm, 87 in.·lbf) (Bolt)

(c) Install the 2 nuts.

(d) Connect the connectors.

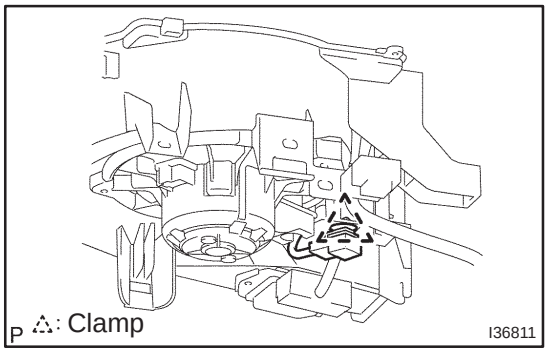

(e) RHD Auto A/C:
Connect the connector and the clamp.

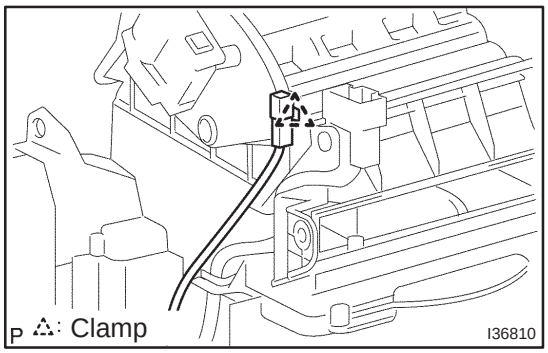

(f) Connect the connector and the clamp.

W/PULLEY COMPRESSOR ASSY (3ZZ–FE)

550YX–01

ON–VEHICLE INSPECTION

1. INSPECT W/PULLEY COMPRESSOR ASSY

(a) Check the operation.

(1) Start the engine.

(2) Inspect the weight hub.

Standard: The weight hub rotates along with the pulley

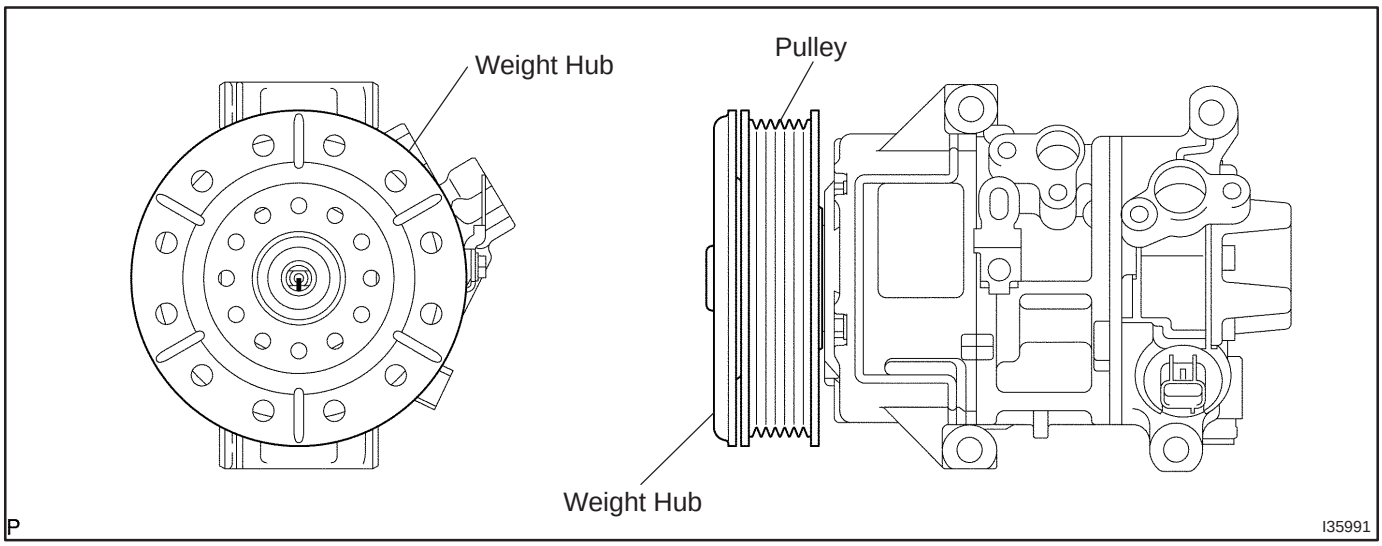

550YY–01

REPLACEMENT

1. DISCHARGE REFRIGERANT FROM REFRIGERATION SYSTEM (See page 55–38)

SST 07110–58060 (07117–58080, 07117–58090, 07117–78050, 07117–88060, 07117–88070, 07117–88080)

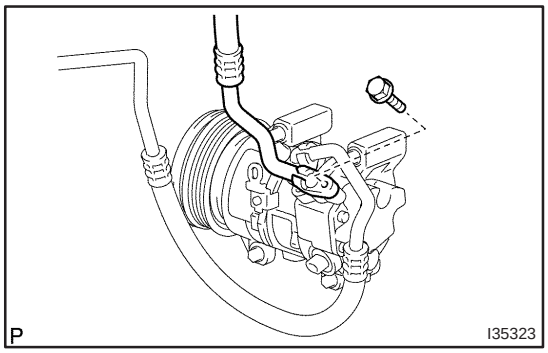

2. DISCONNECT COOLER REFRIGERANT SUCTION HOSE NO.1

(a) Remove the bolt and disconnect the cooler refrigerant suction hose No.1 from the w/pulley compressor assy.

(b) Remove the O–ring from the cooler refrigerant suction hose No.1.

NOTICE:

Seal the opening of the disconnected parts using vinyl tape to prevent moisture and foreign matters from entering.

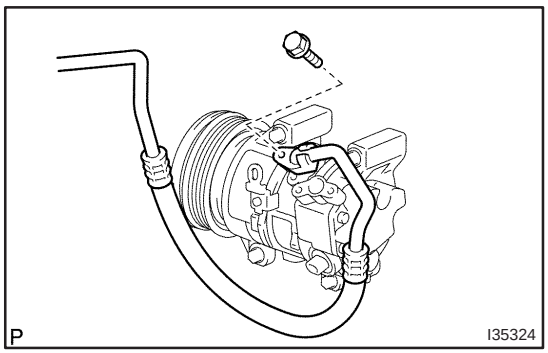

3. DISCONNECT COOLER REFRIGERANT DISCHARGE HOSE NO.1

(a) Remove the bolt and disconnect the cooler refrigerant discharge hose No.1 from the w/pulley compressor assy.

(b) Remove the O–ring from the cooler refrigerant discharge hose No.1.

NOTICE:

Seal the opening of the disconnected parts using vinyl tape to prevent moisture and foreign matters from entering.

4. REMOVE RADIATOR SUPPORT OPENING COVER (See page 14–5)

5. REMOVE ENGINE ROOM COVER SIDE (See page 14–5)

6. REMOVE ENGINE UNDER COVER SUB–ASSY NO.1 (See page 14–5)

7. REMOVE FAN AND GENERATOR V BELT (See page 14–5)

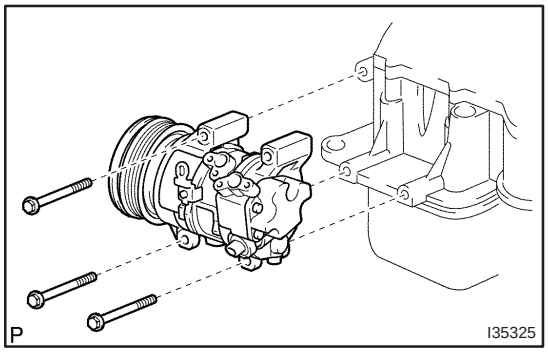

8. REMOVE W/PULLEY COMPRESSOR ASSY

(a) Disconnect the connector.

(b) Remove the 3 bolts and the w/pulley compressor assy.

9. INSPECT COMPRESSOR OIL

(a) When replacing the w/pulley compressor assy with a new one, after gradually removing the refrigerant gas from the service valve, drain the following amount of oil from the new w/pulley compressor assy before installation.

Standard:

(Oil capacity inside new w/pulley compressor assy: 90 + 15 cc (3.0 + 0.5 fl. oz.)) – (Remaining oil amount in the removed w/pulley compressor assy) = (Oil amount to be removed when replacing)

NOTICE:

- **When checking the compressor oil level, observe the precautions on the cooler removal/installation.**
- **Since compressor oil remains in the pipes of the vehicle, if a new w/pulley compressor assy is installed without removing some oil inside, the oil amount becomes excessive, preventing heat exchange in the refrigerant cycle and causing refrigerant failure.**
- **If the remaining oil in the removed w/pulley compressor assy is too small in volume, check for oil leakage.**
- **Be sure to use ND–OIL 8 for compressor oil.**

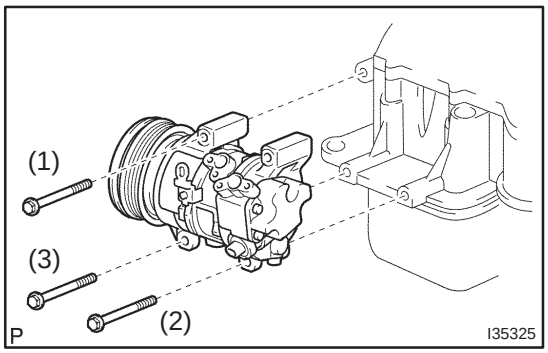

10. INSTALL W/PULLEY COMPRESSOR ASSY

(a) Install the w/pulley compressor assy with the 3 bolts.
Torque: 29 N·m (300 kgf·cm, 21 ft·lbf)

NOTICE:

Tighten the bolts in the order shown in the illustration to install the w/pulley compressor assy.

(b) Connect the connector.

11. INSTALL COOLER REFRIGERANT DISCHARGE HOSE NO.1

(a) Remove the attached vinyl tape from the hose.
(b) Sufficiently apply compressor oil to a new O–ring and the fitting surface of the w/pulley compressor assy.
Compressor oil: ND–OIL 8 or equivalent
(c) Install the O–ring on the cooler refrigerant discharge hose No.1.

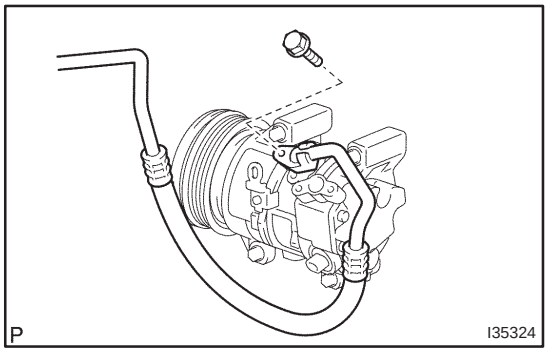

(d) Install the cooler refrigerant discharge hose No.1 on the w/pulley compressor assy with the bolt.
Torque: 9.8 N·m (100 kgf·cm, 87 in.·lbf)

12. INSTALL COOLER REFRIGERANT SUCTION HOSE NO.1

(a) Remove the attached vinyl tape from the hose.
(b) Sufficiently apply compressor oil to a new O–ring and the fitting surface of the w/pulley compressor assy.
Compressor oil: ND–OIL 8 or equivalent
(c) Install the O–ring on the cooler refrigerant suction hose No.1.

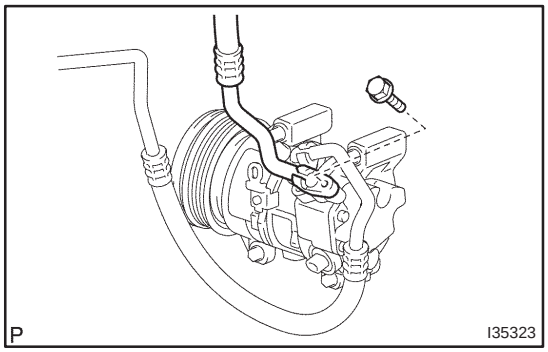

(d) Install the cooler refrigerant suction hose No.1 on the w/ pulley compressor assy with the bolt.
Torque: 9.8 N·m (100 kgf·cm, 87 in.·lbf)

13. CHARGE REFRIGERANT (See page 55–38)
SST 07110–58060 (07117–58060, 07117–58070, 07117–58080, 07117–58090, 07117–78050, 07117–88060, 07117–88070, 07117–88080)
Specified amount: 440 ± 30 g (15.51 ± 1.06 oz.)

14. WARM UP ENGINE (See page 55–38)

15. INSPECT LEAKAGE OF REFRIGERANT (See page 55–38)

W/PULLEY COMPRESSOR ASSY (1ZZ–FE)

550YZ–01

ON–VEHICLE INSPECTION

1. INSPECT W/PULLEY COMPRESSOR ASSY

(a) Check the operation.

(1) Start the engine.

(2) Inspect the weight hub.

Standard: The weight hub rotates along with the pulley

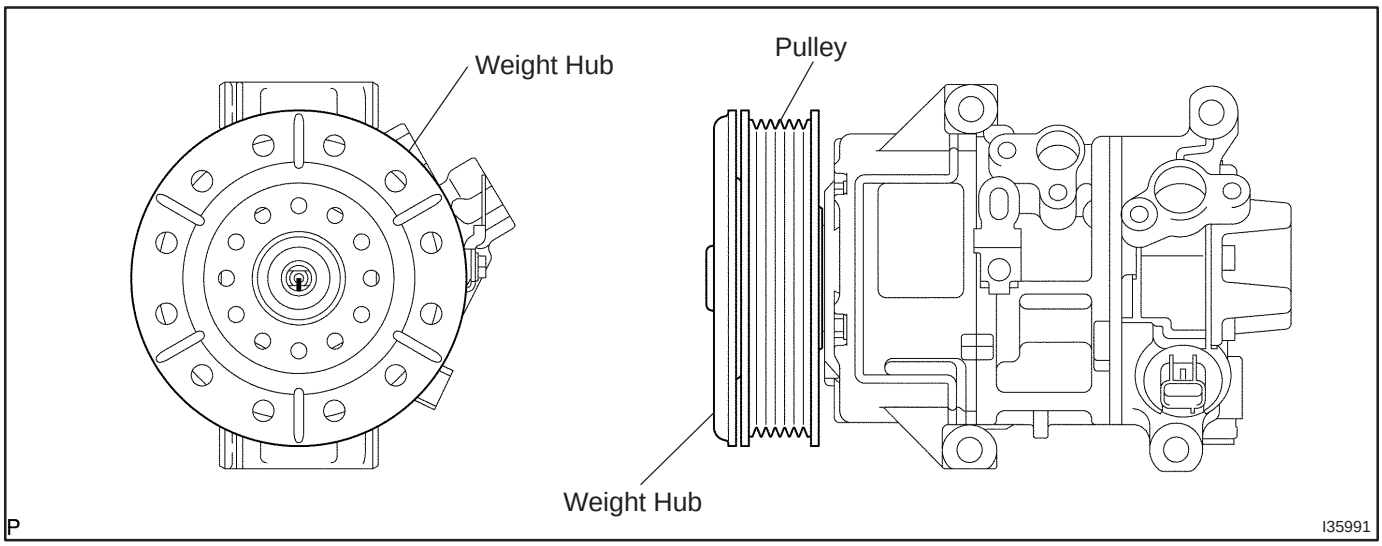

550Z0–01

REPLACEMENT

1. DISCHARGE REFRIGERANT FROM REFRIGERATION SYSTEM (See page 55–38)

SST 07110–58060 (07117–58080, 07117–58090, 07117–78050, 07117–88060, 07117–88070, 07117–88080)

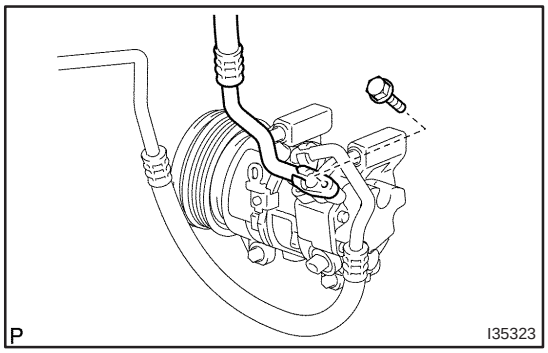

2. DISCONNECT COOLER REFRIGERANT SUCTION HOSE NO.1

(a) Remove the bolt and disconnect the cooler refrigerant suction hose No.1 from the w/pulley compressor assy.

(b) Remove the O–ring from the cooler refrigerant suction hose No.1.

NOTICE:

Seal the opening of the disconnected parts using vinyl tape to prevent moisture and foreign matters from entering.

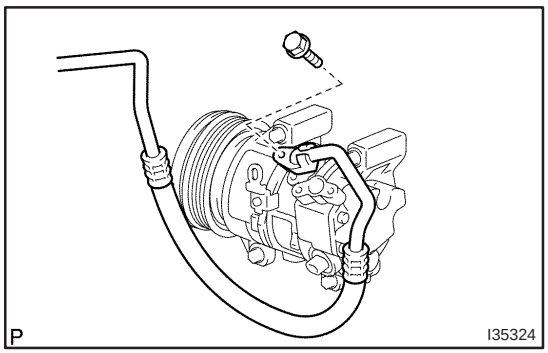

3. DISCONNECT COOLER REFRIGERANT DISCHARGE HOSE NO.1

(a) Remove the bolt and disconnect the cooler refrigerant discharge hose No.1 from the w/pulley compressor assy.

(b) Remove the O–ring from the cooler refrigerant discharge hose No.1.

NOTICE:

Seal the opening of the disconnected parts using vinyl tape to prevent moisture and foreign matters from entering.

4. REMOVE RADIATOR SUPPORT OPENING COVER (See page 14–5)

5. REMOVE ENGINE ROOM COVER SIDE (See page 14–5)

6. REMOVE ENGINE UNDER COVER SUB–ASSY NO.1 (See page 14–5)

7. REMOVE FAN AND GENERATOR V BELT (See page 14–5)

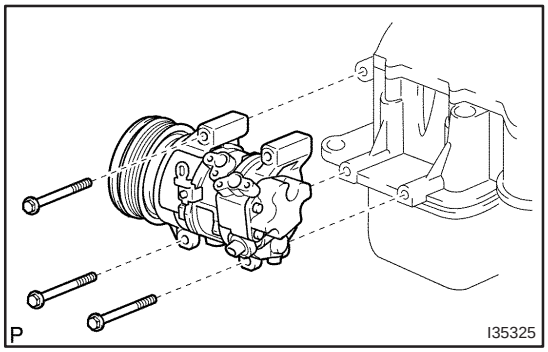

8. REMOVE W/PULLEY COMPRESSOR ASSY

(a) Disconnect the connector.

(b) Remove the 3 bolts and the w/pulley compressor assy.

9. INSPECT COMPRESSOR OIL

(a) When replacing the w/pulley compressor assy with a new one, after gradually removing the refrigerant gas from the service valve, drain the following amount of oil from the new w/pulley compressor assy before installation.

Standard:

(Oil capacity inside new w/pulley compressor assy: 90 + 15 cc (3.0 + 0.5 fl. oz.)) – (Remaining oil amount in the removed w/pulley compressor assy) = (Oil amount to be removed when replacing)

NOTICE:

- **When checking the compressor oil level, observe the precautions on the cooler removal/installation.**
- **Since compressor oil remains in the pipes of the vehicle, if a new w/pulley compressor assy is installed without removing some oil inside, the oil amount becomes excessive, preventing heat exchange in the refrigerant cycle and causing refrigerant failure.**
- **If the remaining oil in the removed w/pulley compressor assy is too small in volume, check for oil leakage.**
- **Be sure to use ND–OIL 8 for compressor oil.**

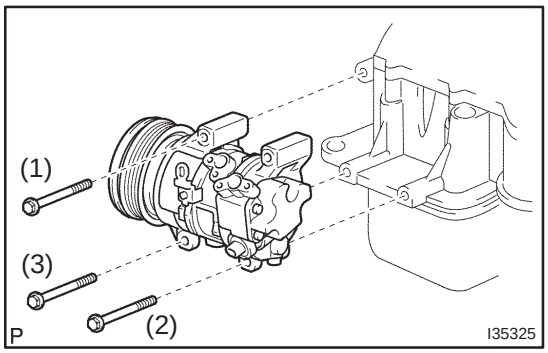

10. INSTALL W/PULLEY COMPRESSOR ASSY

(a) Install the w/pulley compressor assy with the 3 bolts.
Torque: 29 N·m (300 kgf·cm, 21 ft·lbf)

NOTICE:

Tighten the bolts in the order shown in the illustration to install the w/pulley compressor assy.

(b) Connect the connector.

11. INSTALL COOLER REFRIGERANT DISCHARGE HOSE NO.1

(a) Remove the attached vinyl tape from the hose.
(b) Sufficiently apply compressor oil to a new O–ring and the fitting surface of the w/pulley compressor assy.
Compressor oil: ND–OIL 8 or equivalent
(c) Install the O–ring on the cooler refrigerant discharge hose No.1.

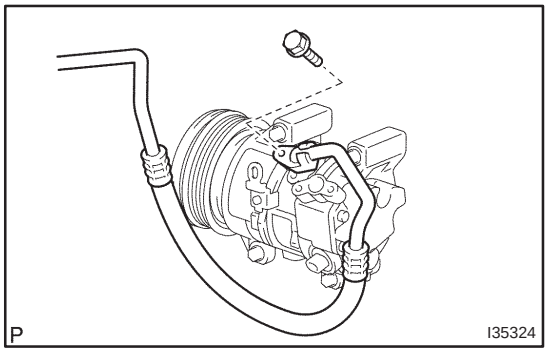

(d) Install the cooler refrigerant discharge hose No.1 on the w/pulley compressor assy with the bolt.
Torque: 9.8 N·m (100 kgf·cm, 87 in.·lbf)

12. INSTALL COOLER REFRIGERANT SUCTION HOSE NO.1

(a) Remove the attached vinyl tape from the hose.
(b) Sufficiently apply compressor oil to a new O–ring and the fitting surface of the w/pulley compressor assy.
Compressor oil: ND–OIL 8 or equivalent
(c) Install the O–ring on the cooler refrigerant suction hose No.1.

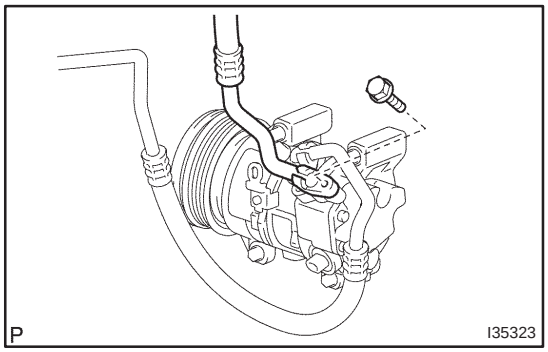

(d) Install the cooler refrigerant suction hose No.1 on the w/ pulley compressor assy with the bolt.
Torque: 9.8 N·m (100 kgf·cm, 87 in.·lbf)

13. CHARGE REFRIGERANT (See page 55–38)
SST 07110–58060 (07117–58060, 07117–58070, 07117–58080, 07117–58090, 07117–78050, 07117–88060, 07117–88070, 07117–88080)
Specified amount: 440 ± 30 g (15.51 ± 1.06 oz.)

14. WARM UP ENGINE (See page 55–38)

15. INSPECT LEAKAGE OF REFRIGERANT (See page 55–38)

W/PULLEY COMPRESSOR ASSY (1AZ–FSE)

550Z1–01

ON–VEHICLE INSPECTION

1. INSPECT W/PULLEY COMPRESSOR ASSY

(a) Check the operation.

(1) Start the engine.

(2) Inspect the weight hub.

Standard: The weight hub rotates along with the pulley

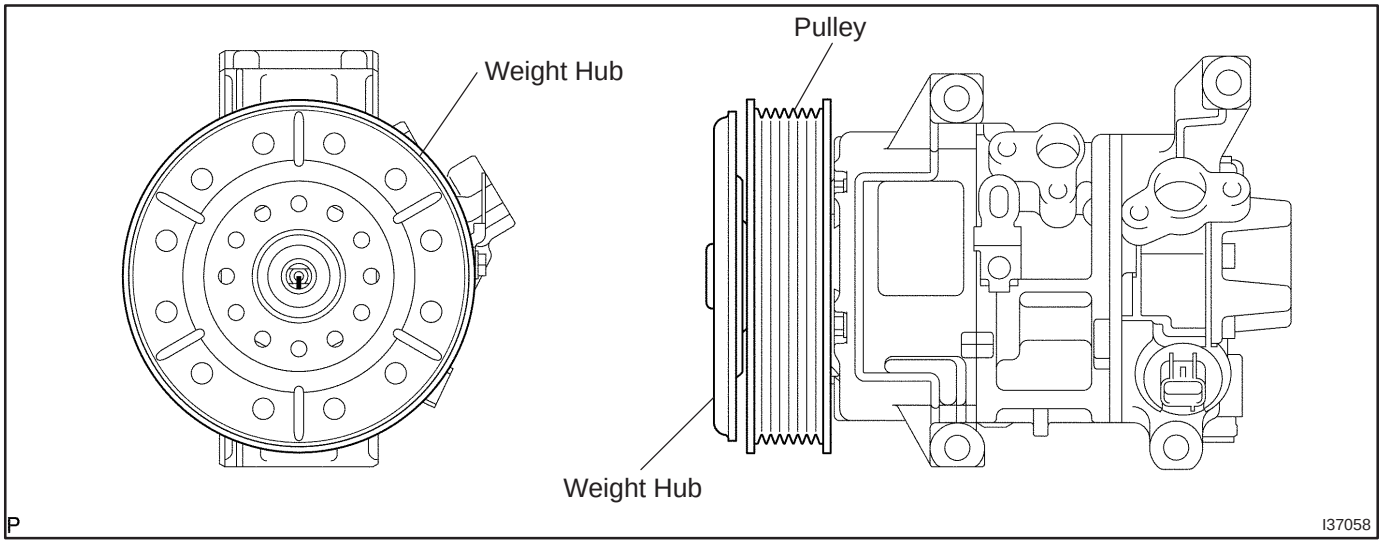

550Z2–01

REPLACEMENT

1. DISCHARGE REFRIGERANT FROM REFRIGERATION SYSTEM (See page 55–38)

SST 07110–58060 (07117–58080, 07117–58090, 07117–78050, 07117–88060, 07117–88070, 07117–88080)

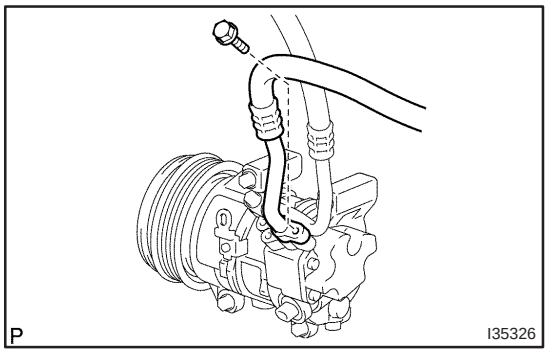

2. DISCONNECT COOLER REFRIGERANT SUCTION HOSE NO.1

(a) Remove the bolt and disconnect the cooler refrigerant suction hose No.1 from the w/pulley compressor assy.

(b) Remove the O–ring from the cooler refrigerant suction hose No.1.

NOTICE:

Seal the opening of the disconnected parts using vinyl tape to prevent moisture and foreign matters from entering.

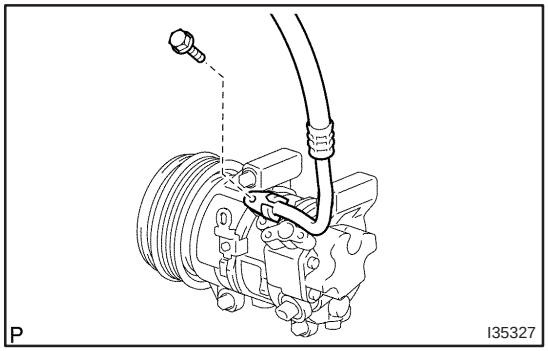

3. DISCONNECT COOLER REFRIGERANT DISCHARGE HOSE NO.1

(a) Remove the bolt and disconnect the cooler refrigerant discharge hose No.1 from the w/pulley compressor assy.

(b) Remove the O–ring from the cooler refrigerant discharge hose No.1.

NOTICE:

Seal the opening of the disconnected parts using vinyl tape to prevent moisture and foreign matters from entering.

4. REMOVE RADIATOR SUPPORT OPENING COVER (See page 14–185)

5. REMOVE ENGINE ROOM COVER SIDE (See page 14–185)

6. REMOVE ENGINE UNDER COVER RH (See page 14–185)

7. REMOVE FAN AND GENERATOR V BELT (See page 14–185)

SST 09249–63010

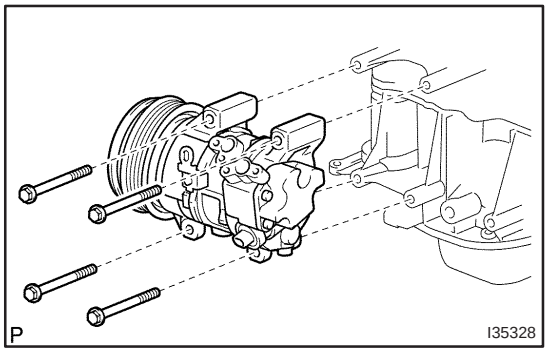

8. REMOVE W/PULLEY COMPRESSOR ASSY

(a) Disconnect the connector.

(b) Remove the 4 bolts and the w/pulley compressor assy.

9. INSPECT COMPRESSOR OIL

(a) When replacing the w/pulley compressor assy with a new one, after gradually removing the refrigerant gas from the service valve, drain the following amount of oil from the new w/pulley compressor assy before installation.

Standard:

(Oil capacity inside new w/pulley compressor assy: 90 + 15 cc (3.0 + 0.5 fl. oz.)) – (Remaining oil amount in the removed w/pulley compressor assy) = (Oil amount to be removed when replacing)

NOTICE:

- **When checking the compressor oil level, observe the precautions on the cooler removal/installation.**
- **Since compressor oil remains in the pipes of the vehicle, if a new w/pulley compressor assy is installed without removing some oil inside, the oil amount becomes excessive, preventing heat exchange in the refrigerant cycle and causing refrigerant failure.**
- **If the remaining oil in the removed w/pulley compressor assy is too small in volume, check for oil leakage.**
- **Be sure to use ND–OIL 8 for compressor oil.**

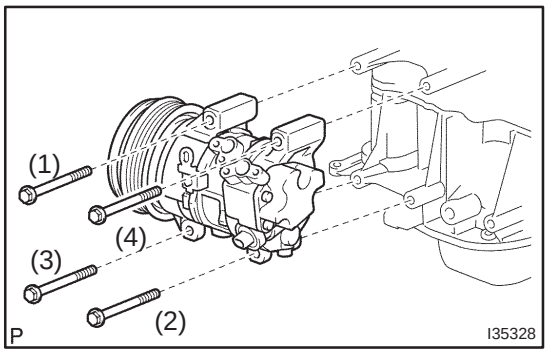

10. INSTALL W/PULLEY COMPRESSOR ASSY

(a) Install the w/pulley compressor assy with the 4 bolts.
Torque: 29 N·m (300 kgf·cm, 21 ft·lbf)

NOTICE:

Tighten the bolts in the order shown in the illustration to install the w/pulley compressor assy.

(b) Connect the connector.

11. INSTALL FAN AND GENERATOR V BELT (See page 14–185)

SST 09249–63010

12. INSTALL COOLER REFRIGERANT DISCHARGE HOSE NO.1

(a) Remove the attached vinyl tape from the hose.
(b) Sufficiently apply compressor oil to a new O–ring and the fitting surface of the w/pulley compressor assy.
Compressor oil: ND–OIL 8 or equivalent
(c) Install the O–ring on the cooler refrigerant discharge hose No.1.

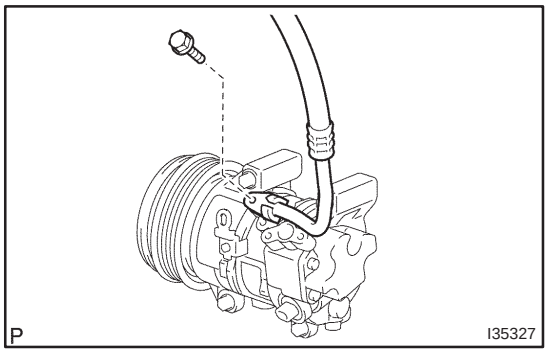

(d) Install the cooler refrigerant discharge hose No.1 on the w/pulley compressor assy with the bolt.
Torque: 9.8 N·m (100 kgf·cm, 87 in.·lbf)

13. INSTALL COOLER REFRIGERANT SUCTION HOSE NO.1

(a) Remove the attached vinyl tape from the hose.
(b) Sufficiently apply compressor oil to a new O–ring and the fitting surface of the w/pulley compressor assy.
Compressor oil: ND–OIL 8 or equivalent
(c) Install the O–ring on the cooler refrigerant suction hose No.1.

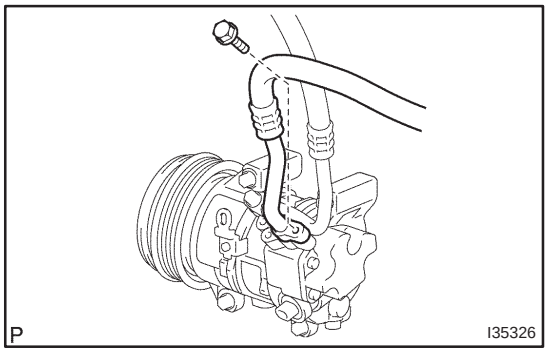

(d) Install the cooler refrigerant suction hose No.1 on the w/ pulley compressor assy with the bolt.
Torque: 9.8 N·m (100 kgf·cm, 87 in.·lbf)

14. CHARGE REFRIGERANT (See page 55–38)
SST 07110–58060 (07117–58060, 07117–58070, 07117–58080, 07117–58090, 07117–78050, 07117–88060, 07117–88070, 07117–88080)
Specified amount: 440 ± 30 g (15.51 ± 1.06 oz.)

15. WARM UP ENGINE (See page 55–38)

16. INSPECT LEAKAGE OF REFRIGERANT (See page 55–38)

W/PULLEY COMPRESSOR ASSY (1AZ–FE)

550Z3–01

ON–VEHICLE INSPECTION

1. INSPECT W/PULLEY COMPRESSOR ASSY

(a) Check the operation.

(1) Start the engine.

(2) Inspect the weight hub.

Standard: The weight hub rotates along with the pulley

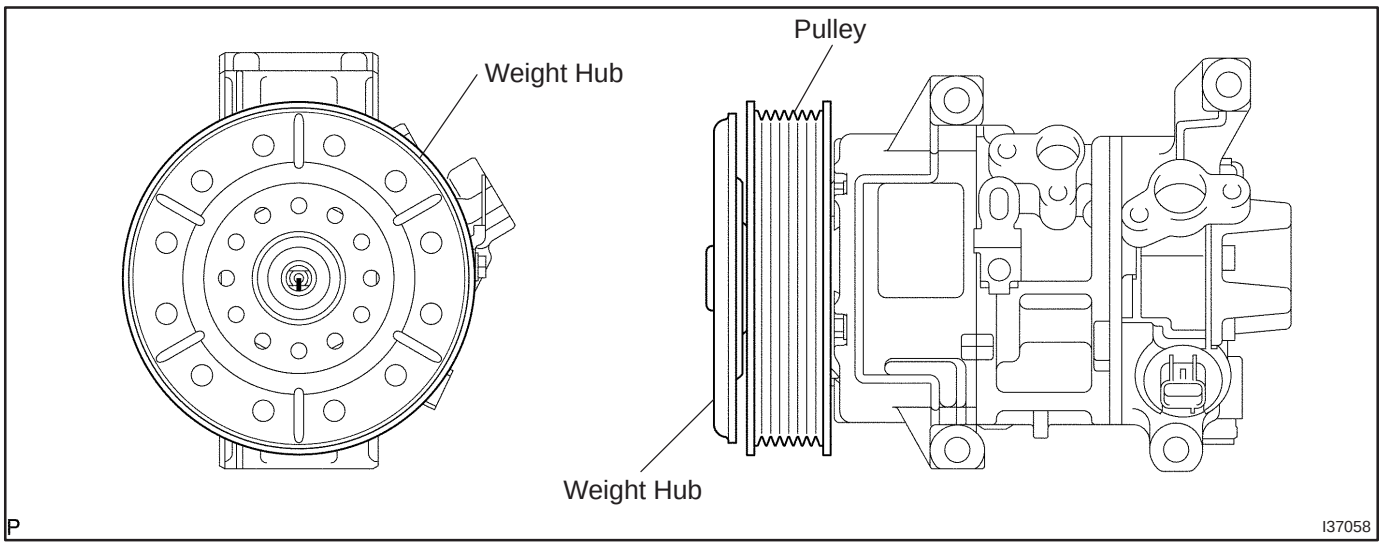

550Z4–01

REPLACEMENT

1. DISCHARGE REFRIGERANT FROM REFRIGERATION SYSTEM (See page 55–38)

SST 07110–58060 (07117–58080, 07117–58090, 07117–78050, 07117–88060, 07117–88070, 07117–88080)

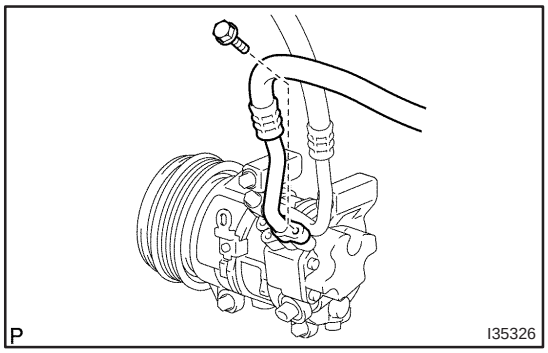

2. DISCONNECT COOLER REFRIGERANT SUCTION HOSE NO.1

(a) Remove the bolt and disconnect the cooler refrigerant suction hose No.1 from the w/pulley compressor assy.

(b) Remove the O–ring from the cooler refrigerant suction hose No.1.

NOTICE:

Seal the opening of the disconnected parts using vinyl tape to prevent moisture and foreign matters from entering.

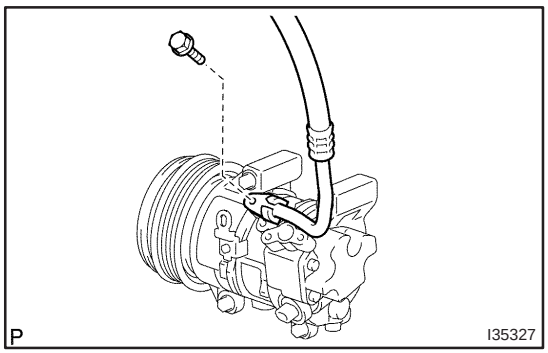

3. DISCONNECT COOLER REFRIGERANT DISCHARGE HOSE NO.1

(a) Remove the bolt and disconnect the cooler refrigerant discharge hose No.1 from the w/pulley compressor assy.

(b) Remove the O–ring from the cooler refrigerant discharge hose No.1.

NOTICE:

Seal the opening of the disconnected parts using vinyl tape to prevent moisture and foreign matters from entering.

4. REMOVE RADIATOR SUPPORT OPENING COVER (See page 14–105)

5. REMOVE ENGINE ROOM COVER SIDE (See page 14–105)

6. REMOVE ENGINE UNDER COVER RH (See page 14–105)

7. REMOVE FAN AND GENERATOR V BELT (See page 14–105)

SST 09249–63010

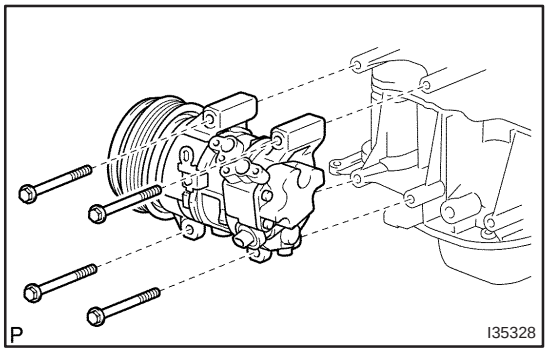

8. REMOVE W/PULLEY COMPRESSOR ASSY

(a) Disconnect the connector.

(b) Remove the 4 bolts and the w/pulley compressor assy.

9. INSPECT COMPRESSOR OIL

(a) When replacing the w/pulley compressor assy with a new one, after gradually removing the refrigerant gas from the service valve, drain the following amount of oil from the new w/pulley compressor assy before installation.

Standard:

(Oil capacity inside new w/pulley compressor assy: 90 + 15 cc (3.0 + 0.5 fl. oz.)) – (Remaining oil amount in the removed w/pulley compressor assy) = (Oil amount to be removed when replacing)

NOTICE:

- **When checking the compressor oil level, observe the precautions on the cooler removal/installation.**
- **Since compressor oil remains in the pipes of the vehicle, if a new w/pulley compressor assy is installed without removing some oil inside, the oil amount becomes excessive, preventing heat exchange in the refrigerant cycle and causing refrigerant failure.**
- **If the remaining oil in the removed w/pulley compressor assy is too small in volume, check for oil leakage.**
- **Be sure to use ND–OIL 8 for compressor oil.**

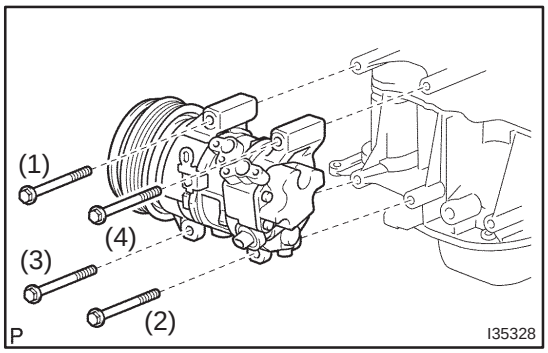

10. INSTALL W/PULLEY COMPRESSOR ASSY

(a) Install the w/pulley compressor assy with the 4 bolts.
Torque: 29 N·m (300 kgf·cm, 21 ft·lbf)

NOTICE:

Tighten the bolts in the order shown in the illustration to install the w/pulley compressor assy.

(b) Connect the connector.

11. INSTALL FAN AND GENERATOR V BELT (See page 14–105)

SST 09249–63010

12. INSTALL COOLER REFRIGERANT DISCHARGE HOSE NO.1

(a) Remove the attached vinyl tape from the hose.
(b) Sufficiently apply compressor oil to a new O–ring and the fitting surface of the w/pulley compressor assy.
Compressor oil: ND–OIL 8 or equivalent
(c) Install the O–ring on the cooler refrigerant discharge hose No.1.

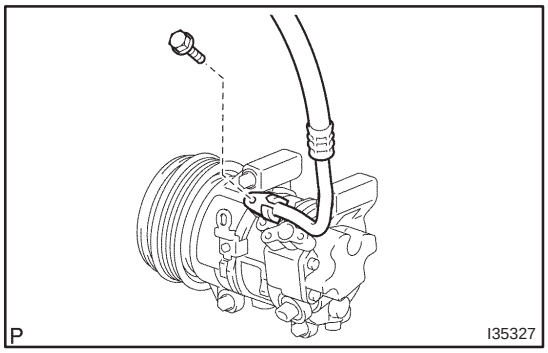

(d) Install the cooler refrigerant discharge hose No.1 on the w/pulley compressor assy with the bolt.
Torque: 9.8 N·m (100 kgf·cm, 87 in.·lbf)

13. INSTALL COOLER REFRIGERANT SUCTION HOSE NO.1

(a) Remove the attached vinyl tape from the hose.
(b) Sufficiently apply compressor oil to a new O–ring and the fitting surface of the w/pulley compressor assy.
Compressor oil: ND–OIL 8 or equivalent
(c) Install the O–ring on the cooler refrigerant suction hose No.1.

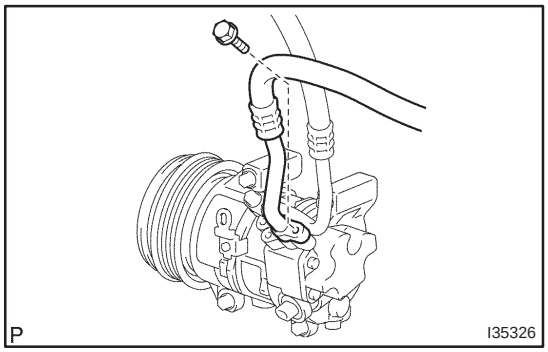

(d) Install the cooler refrigerant suction hose No.1 on the w/ pulley compressor assy with the bolt.
Torque: 9.8 N·m (100 kgf·cm, 87 in.·lbf)

14. CHARGE REFRIGERANT (See page 55–38)
SST 07110–58060 (07117–58060, 07117–58070, 07117–58080, 07117–58090, 07117–78050, 07117–88060, 07117–88070, 07117–88080)

15. WARM UP ENGINE (See page 55–38)

16. INSPECT LEAKAGE OF REFRIGERANT (See page 55–38)

W/PULLEY COMPRESSOR ASSY (1CD–FTV)

550Z5–01

ON–VEHICLE INSPECTION

1. INSPECT W/PULLEY COMPRESSOR ASSY

(a) Check the operation.

(1) Start the engine.

(2) Inspect the weight hub.

Standard: The weight hub rotates along with the pulley

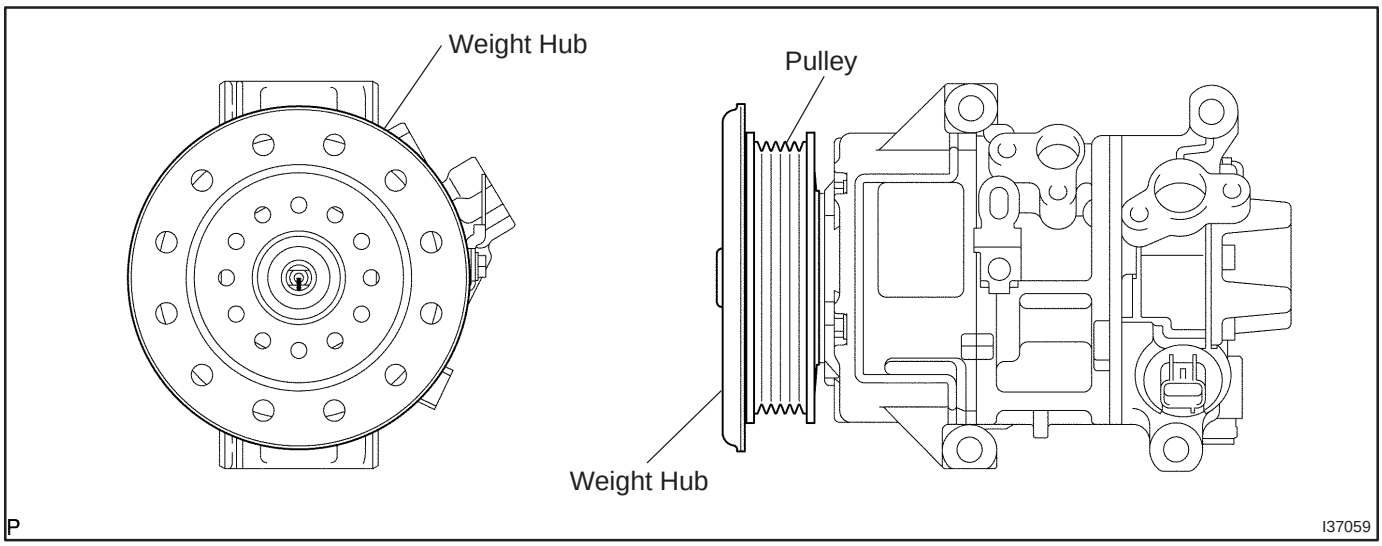

550Z6–01

REPLACEMENT

1. DISCHARGE REFRIGERANT FROM REFRIGERATION SYSTEM (See page 55–38)

SST 07110–58060 (07117–58080, 07117–58090, 07117–78050, 07117–88060, 07117–88070, 07117–88080)

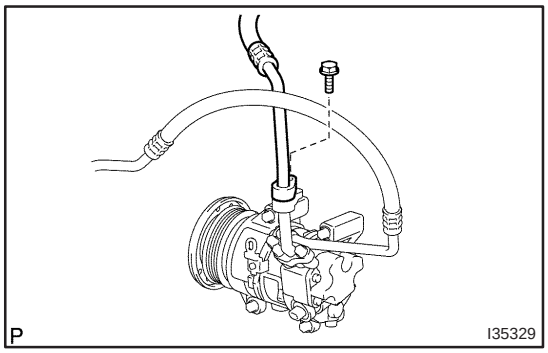

2. DISCONNECT COOLER REFRIGERANT SUCTION HOSE NO.1 (LHD STEERING POSITION TYPE)

(a) Remove the bolt and disconnect the cooler refrigerant suction hose No.1 from the suction servic valve.

(b) Remove the O–ring from the cooler refrigerant suction hose No.1.

NOTICE:

Seal the opening of the disconnected parts using vinyl tape to prevent moisture and foreign matters from entering.

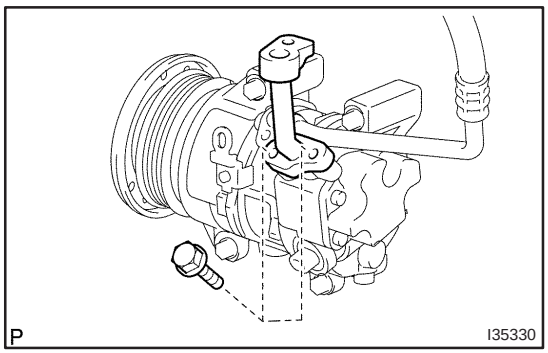

3. REMOVE SUCTION SERVIC VALVE (LHD STEERING POSITION TYPE)

(a) Remove the 2 bolts and disconnect the suction service valve from the w/pulley compressor assy.

(b) Remove the O–ring from the suction service valve.

NOTICE:

Seal the opening of the disconnected parts using vinyl tape to prevent moisture and foreign matters from entering.

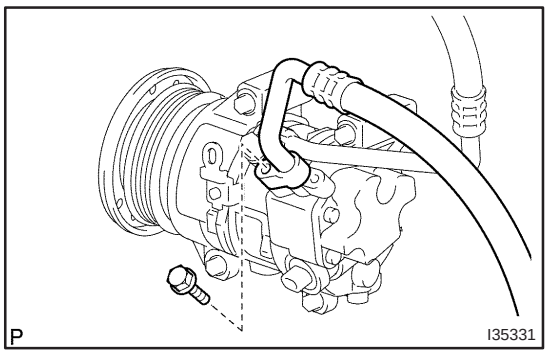

4. DISCONNECT COOLER REFRIGERANT SUCTION HOSE NO.1 (RHD STEERING POSITION TYPE)

(a) Remove the bolt and disconnect the cooler refrigerant suction hose No.1 from the w/pulley compressor assy.

(b) Remove the O–ring from the cooler refrigerant suction hose No.1.

NOTICE:

Seal the opening of the disconnected parts using vinyl tape to prevent moisture and foreign matters from entering.

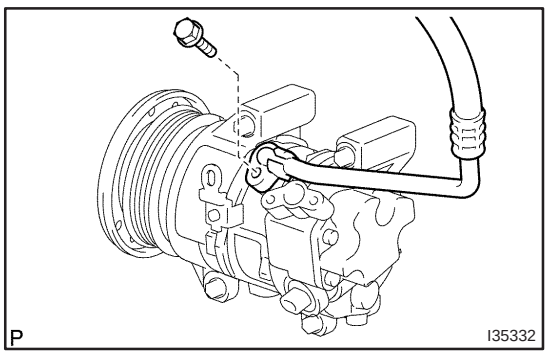

5. DISCONNECT COOLER REFRIGERANT DISCHARGE HOSE NO.1

(a) Remove the bolt and disconnect the cooler refrigerant discharge hose No.1 from the w/pulley compressor assy.

(b) Remove the O–ring from the cooler refrigerant discharge hose No.1.

NOTICE:

Seal the opening of the disconnected parts using vinyl tape to prevent moisture and foreign matters from entering.

6. REMOVE RADIATOR SUPPORT OPENING COVER

7. REMOVE ENGINE ROOM COVER SIDE

8. REMOVE ENGINE UNDER COVER RH

9. REMOVE V (COOLER COMPRESSOR TO CRANKSHAFT PULLEY) BELT NO.1 (See page 55–46)

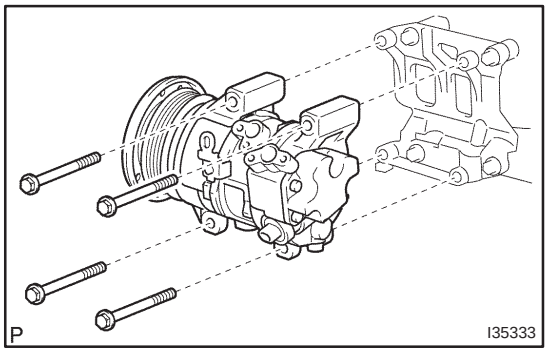

10. REMOVE W/PULLEY COMPRESSOR ASSY

(a) Disconnect the connector.

(b) Remove the 4 bolts and the w/pulley compressor assy.

11. INSPECT COMPRESSOR OIL

(a) When replacing the w/pulley compressor assy with a new one, after gradually removing the refrigerant gas from the service valve, drain the following amount of oil from the new w/pulley compressor assy before installation.

Standard:

(Oil capacity inside new w/pulley compressor assy: 90 + 15 cc (3.0 + 0.5 fl. oz.)) – (Remaining oil amount in the removed w/pulley compressor assy) = (Oil amount to be removed when replacing)

NOTICE:

- **When checking the compressor oil level, observe the precautions on the cooler removal/installation.**
- **Since compressor oil remains in the pipes of the vehicle, if a new w/pulley compressor assy is installed without removing some oil inside, the oil amount becomes excessive, preventing heat exchange in the refrigerant cycle and causing refrigerant failure.**
- **If the remaining oil in the removed w/pulley compressor assy is too small in volume, check for oil leakage.**
- **Be sure to use ND–OIL 8 for compressor oil.**

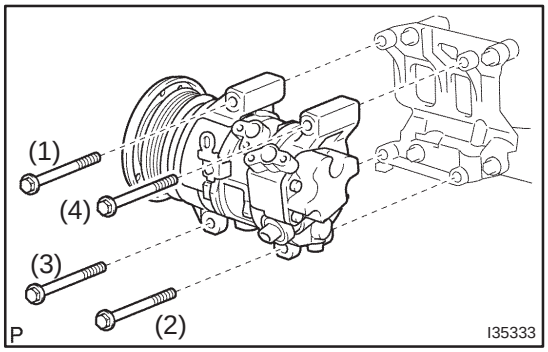

12. INSTALL W/PULLEY COMPRESSOR ASSY

(a) Install the w/pulley compressor assy with the 4 bolts.

Torque: 29 N·m (300 kgf·cm, 21 ft·lbf)

NOTICE:

Tighten the bolts in the order shown in the illustration to install the w/pulley compressor assy.

(b) Connect the connector.

13. INSTALL V (COOLER COMPRESSOR TO CRANKSHAFT PULLEY) BELT NO.1
(See page 55–46)

14. ADJUST V (COOLER COMPRESSOR TO CRANKSHAFT PULLEY) BELT NO.1
(See page 55–46)

15. FULLY TIGHTEN V (COOLER COMPRESSOR TO CRANKSHAFT PULLEY) BELT NO.1
(See page 55–46)

16. INSTALL COOLER REFRIGERANT DISCHARGE HOSE NO.1

(a) Remove the attached vinyl tape from the hose.

(b) Sufficiently apply compressor oil to a new O–ring and the fitting surface of the w/pulley compressor assy.
Compressor oil: ND–OIL 8 or equivalent

(c) Install the O–ring on the cooler refrigerant discharge hose No.1.

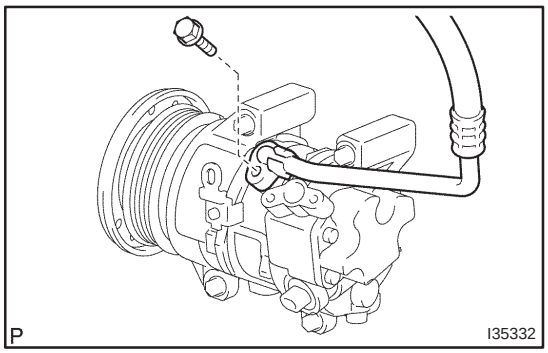

(d) Install the cooler refrigerant discharge hose No.1 on the w/pulley compressor assy with the bolt.
Torque: 9.8 N·m (100 kgf·cm, 87 in.·lbf)

17. INSTALL COOLER REFRIGERANT SUCTION HOSE NO.1 (RHD STEERING POSITION TYPE)

(a) Remove the attached vinyl tape from the hose.

(b) Sufficiently apply compressor oil to a new O–ring and the fitting surface of the w/pulley compressor assy.
Compressor oil: ND–OIL 8 or equivalent

(c) Install the O–ring on the cooler refrigerant suction hose No.1.

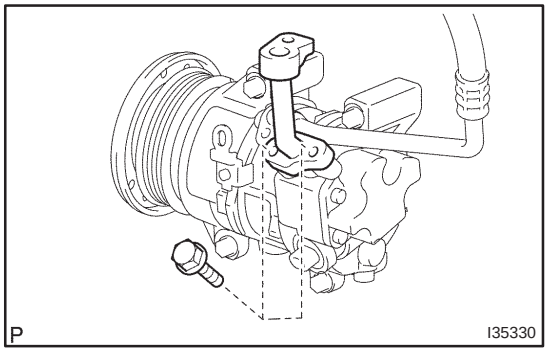

(d) Install the cooler refrigerant suction hose No.1 on the w/pulley compressor assy with the bolt.
Torque: 9.8 N·m (100 kgf·cm, 87 in.·lbf)

18. INSTALL SUCTION SERVIC VALVE (LHD STEERING POSITION TYPE)

(a) Remove the attached vinyl tape from the hose.

(b) Sufficiently apply compressor oil to a new O–ring and the fitting surface of the w/pulley compressor assy.
Compressor oil: ND–OIL 8 or equivalent

(c) Install the O–ring on the suction service valve.

(d) Install the suction servic valve on the w/pulley compressor assy with the 2 bolts.
Torque: 9.8 N·m (100 kgf·cm, 87 in.·lbf)

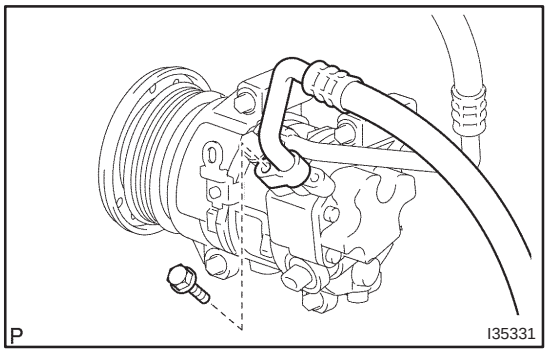

19. INSTALL COOLER REFRIGERANT SUCTION HOSE NO.1 (LHD STEERING POSITION TYPE)

(a) Remove the attached vinyl tape from the hose.

(b) Sufficiently apply compressor oil to a new O–ring and the fitting surface of the w/pulley compressor assy.
Compressor oil: ND–OIL 8 or equivalent

(c) Install the O–ring on the cooler refrigerant suction hose No.1.

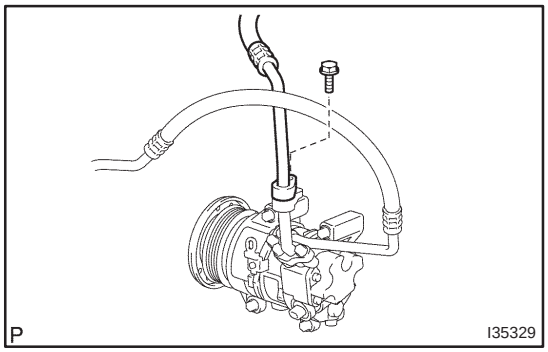

(d) Install the cooler refrigerant suction hose No.1 on the suction servic valve with the 2 bolts.
Torque: 9.8 N·m (100 kgf·cm, 87 in.·lbf)

20. CHARGE REFRIGERANT (See page 55–38)
SST 07110–58060 (07117–58060, 07117–58070, 07117–58080, 07117–58090, 07117–78050, 07117–88060, 07117–88070, 07117–88080)
Specified amount: 440 ± 30 g (15.51 ± 1.06 oz.)
21. WARM UP ENGINE (See page 55–38)
22. INSPECT LEAKAGE OF REFRIGERANT (See page 55–38)

W/RECEIVER CONDENSER ASSY

550Z9–01

ON–VEHICLE INSPECTION

1. INSPECT W/RECEIVER CONDENSER ASSY

(a) If the fin of the w/receiver condenser assy is dirty, clean it with water and dry it with compressed air.

NOTICE:

Do not damage the fin of the condenser assy.

(b) If the fin of the w/receiver condenser assy is bent, straighten it using a screwdriver or pliers.

2. INSPECT CONDENSER FOR LEAKAGE OF REFRIGERANT

(a) Using a halogen leak detector, check pipe joints for gas leakage.

(b) If gas leakage is detected in a joint, check the torque of the joint.

550ZA–01

COMPONENTS

w/o Hot gas heater:

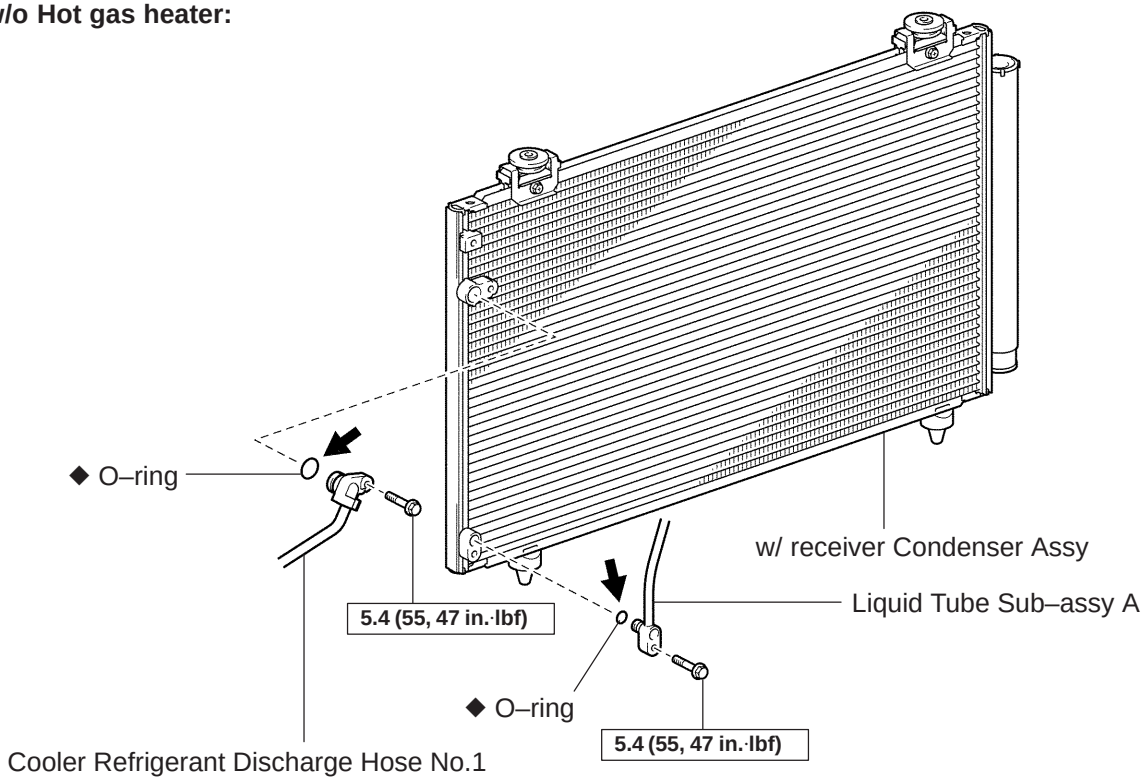

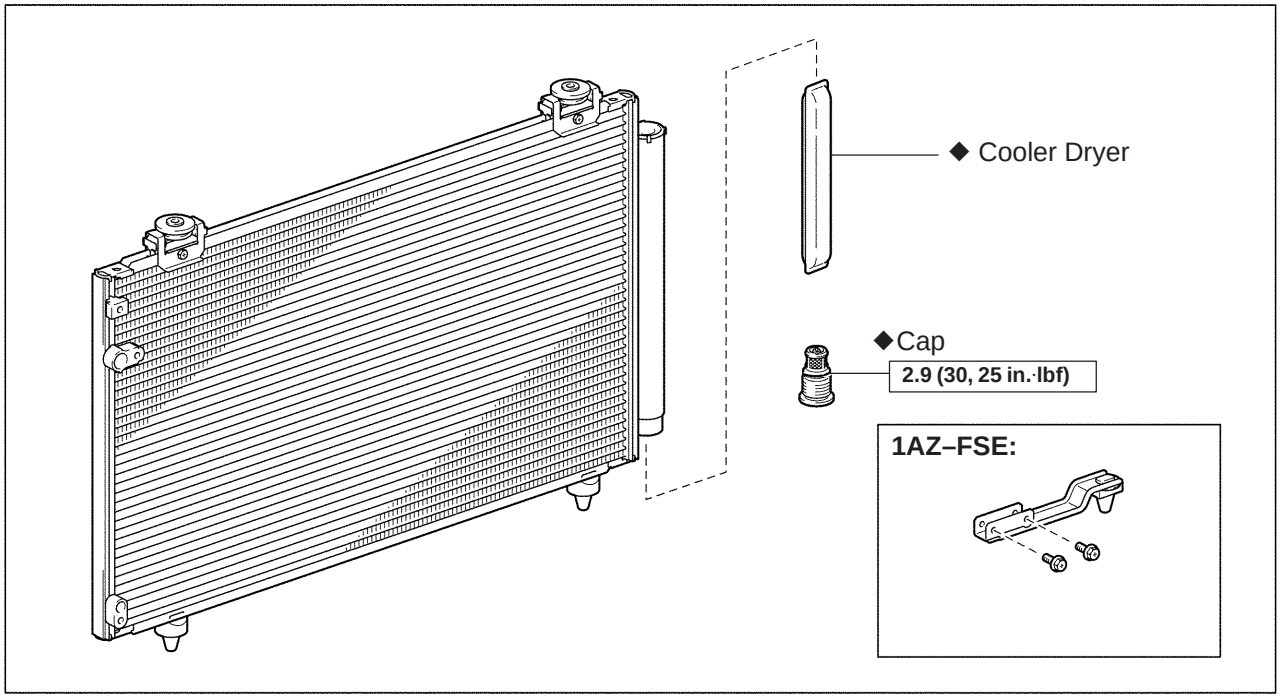

N·m (kgf·cm, ft·lbf) : Specified torque

◆ Non–reusable part

P ⬅ Compressor oil ND–OIL 8 or equivalent

I35278

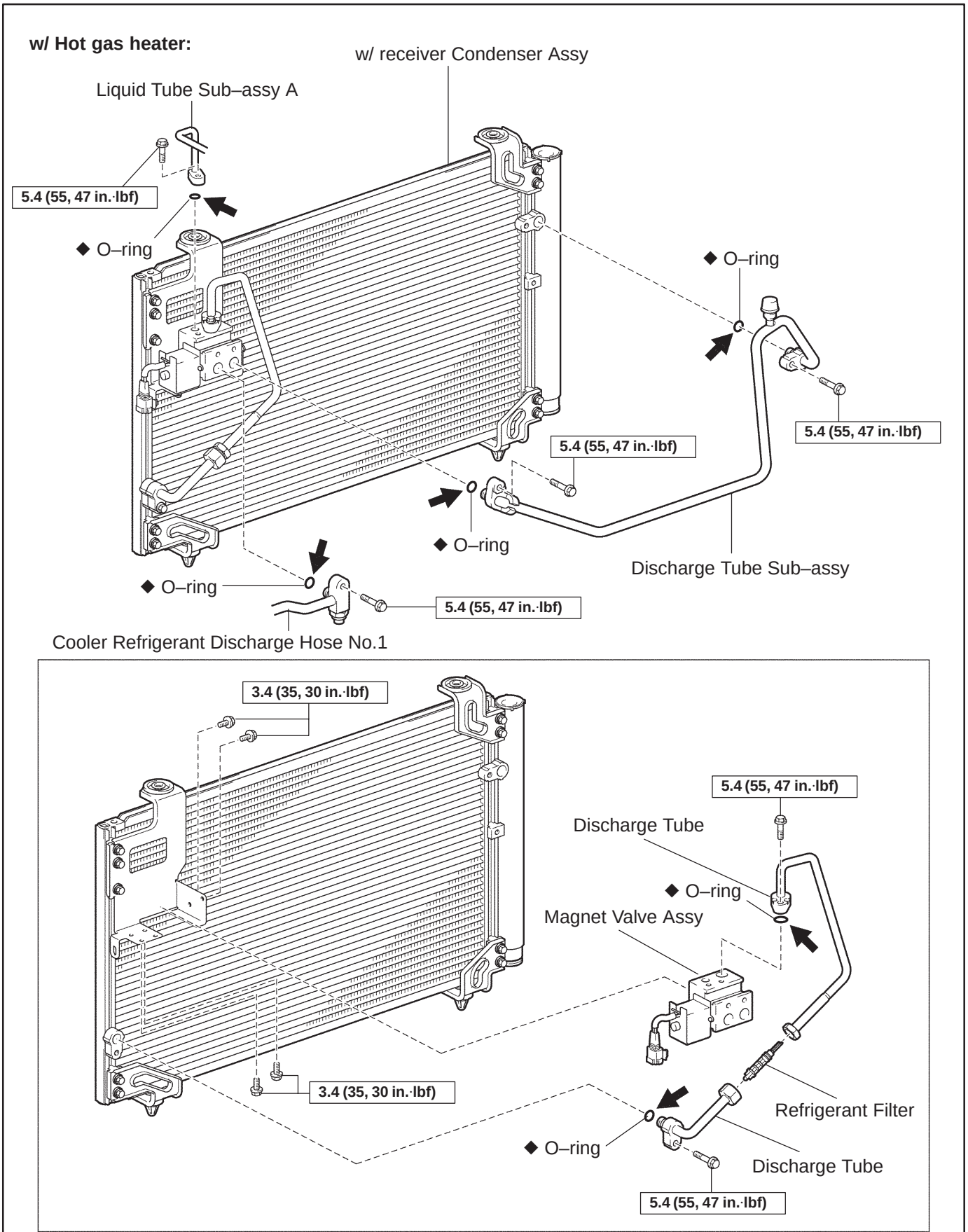

N·m (kgf·cm, ft·lbf) : Specified torque
◆ Non–reusable part
⬅ Compressor oil ND–OIL 8 or equivalent

P

I35279

550ZB–01

OVERHAUL

HINT:

COMPONENTS: See page 55–91

1. DISCHARGE REFRIGERANT FROM REFRIGERATION SYSTEM (See page 55–38)

SST 07110–58060 (07117–58080, 07117–58090, 07117–78050, 07117–88060, 07117–88070, 07117–88080)

2. REMOVE FRONT BUMPER COVER (See page 76–3)

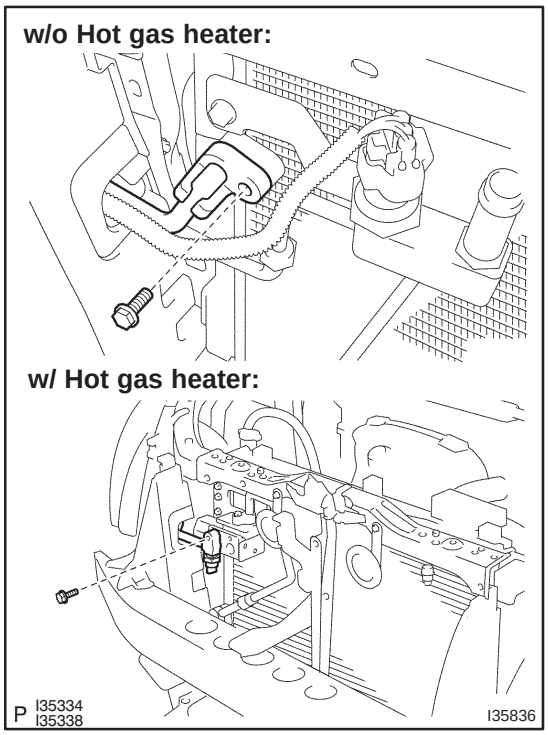

3. DISCONNECT COOLER REFRIGERANT DISCHARGE HOSE NO.1

(a) Remove the bolt and disconnect the cooler refrigerant discharge hose No.1 from the w/ receiver condenser assy.

(b) Remove the O–ring from the cooler refrigerant discharge hose No.1.

NOTICE:

Seal the opening of the disconnected parts using vinyl tape to prevent moisture and foreign matters from entering.

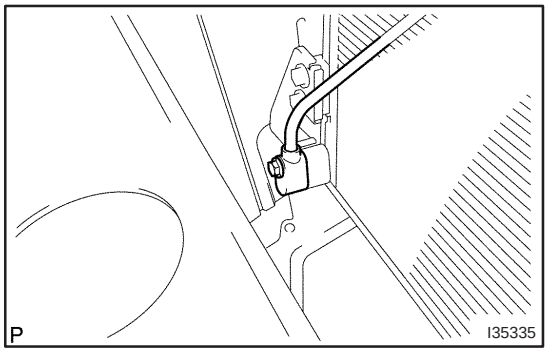

4. DISCONNECT LIQUID TUBE SUB–ASSY A

(a) w/o Hot gas heater:
Remove the bolt and disconnect the liquid tube sub–assy A from the w/ receiver condenser assy.

(b) w/o Hot gas heater:
Remove the O–ring from the liquid tube sub–assy A.

NOTICE:

Seal the opening of the disconnected parts using vinyl tape to prevent moisture and foreign matters from entering.

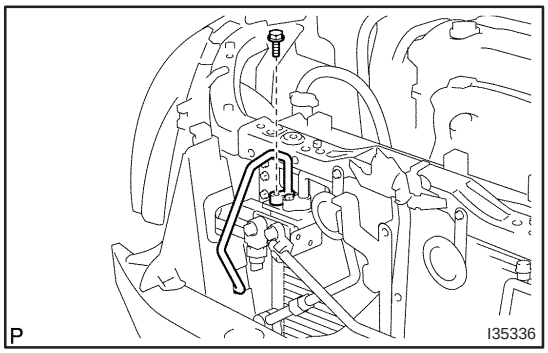

(c) w/ LHD Hot gas heater:
Disconnect the liquid tube sub–assy A assy from the liquid tube sub–assy B.

(d) w/ LHD Hot gas heater:
Remove the O–ring from the liquid tube sub–assy A.

NOTICE:

Seal the opening of the disconnected parts using vinyl tape to prevent moisture and foreign matters from entering.

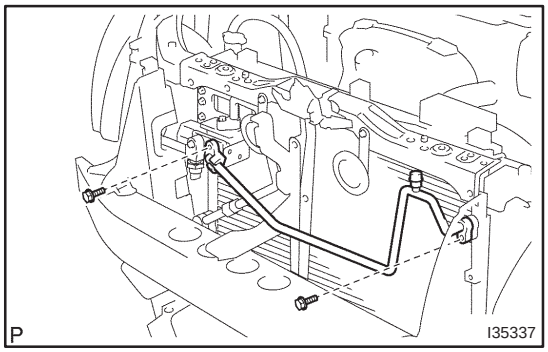

5. REMOVE DISCHARGE TUBE SUB–ASSY (W/ HOT GAS HEATER)

(a) Remove the 2 bolts and disconnect the discharge tube sub–assy from the w/ receiver condenser assy.

(b) Remove 2 O–rings from the discharge tube sub–assy.

NOTICE:

Seal the opening of the disconnected parts using vinyl tape to prevent moisture and foreign matters from entering.

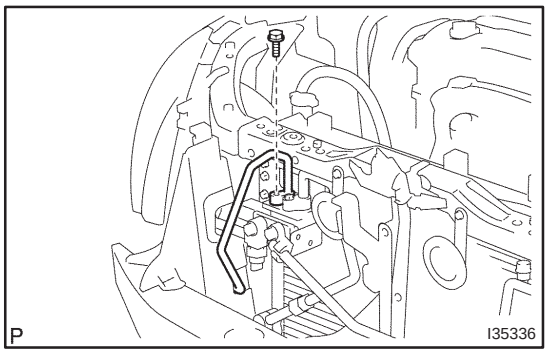

6. REMOVE LIQUID TUBE SUB–ASSY B (RHD(1CD–FTV) STEERING POSITION TYPE)

(a) Remove the bolt and disconnect the liquid tube sub–assy B from w/ receiver condenser assy.

(b) Remove the O–ring from the liquid tube sub–assy B.

NOTICE:

Seal the opening of the disconnected parts using vinyl tape to prevent moisture and foreign matters from entering.

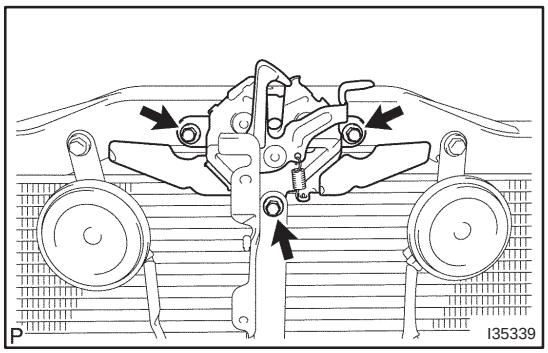

7. REMOVE HOOD LOCK ASSY

(a) Remove the 3 bolts and the hood lock assy.

8. REMOVE HIGH PITCHED HORN ASSY (See page 69–5)

9. REMOVE LOW PITCHED HORN ASSY (See page 69–4)

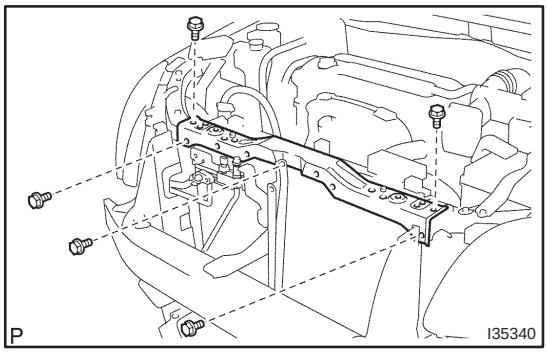

10. REMOVE HOOD LOCK SUPPORT BRACE

(a) Remove the 5 bolts and the hood lock support brace.

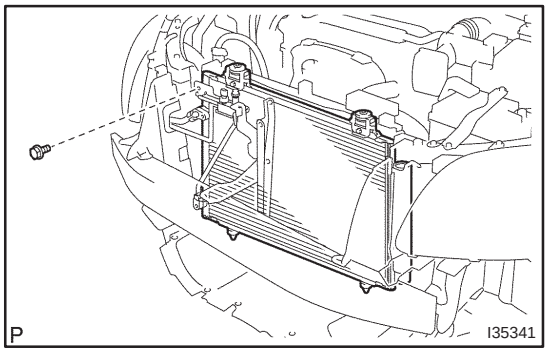

11. REMOVE W/RECEIVER CONDENSER ASSY

(a) Remove the bolt and the w/ receiver condenser assy.

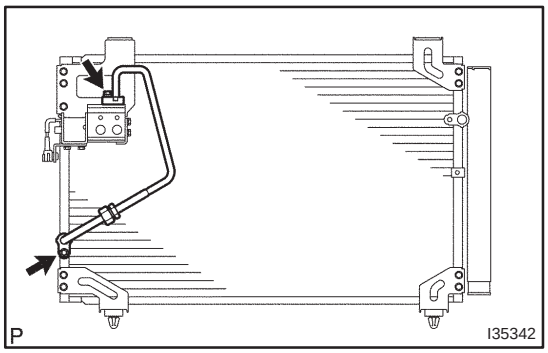

12. REMOVE DISCHARGE TUBE (W/ HOT GAS HEATER)

(a) Remove the 2 bolts and the discharge tube.

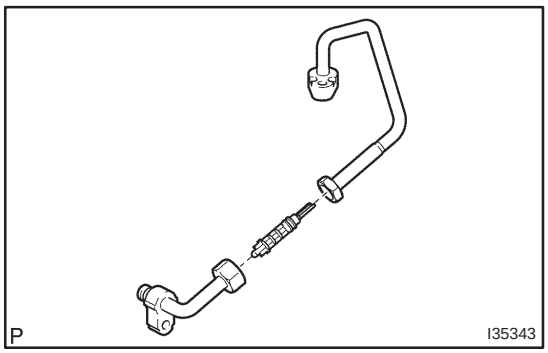

13. REMOVE REFRIGERANT FILTER (W/ HOT GAS HEATER)

(a) Disconnect the discharge tube and remove the refrigerant filter.

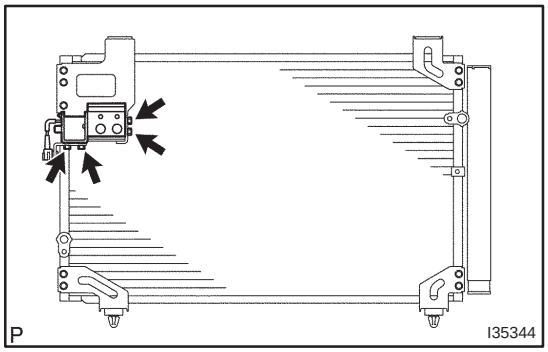

14. REMOVE MAGNET VALVE ASSY (W/ HOT GAS HEATER)

(a) Remove the 4 bolts and the magnet valve assy.

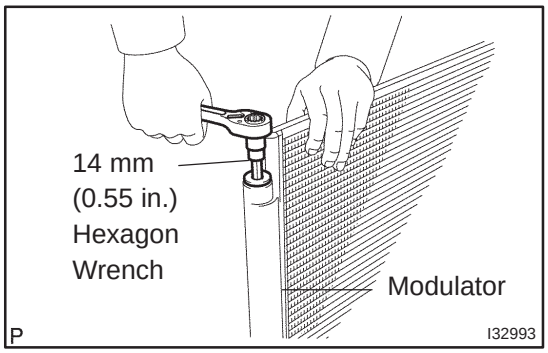

15. REMOVE COOLER DRYER (W/O HOT GAS HEATER)

(a) 1AZ–FSE:
Remove the 2 bolts and bracket.

(b) Using a hexagon wrench 14 mm (0.55 in.), remove the cap from the modulator.

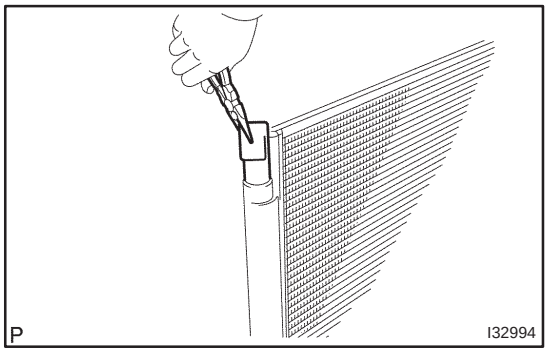

(c) Using needle nose pliers, remove the cooler dryer.

16. REMOVE COOLER CONDENSER CUSHION NO.1

17. REMOVE COOLER CONDENSER CUSHION NO.2

18. REMOVE CONDENSER BRACKET COLLAR NO.1

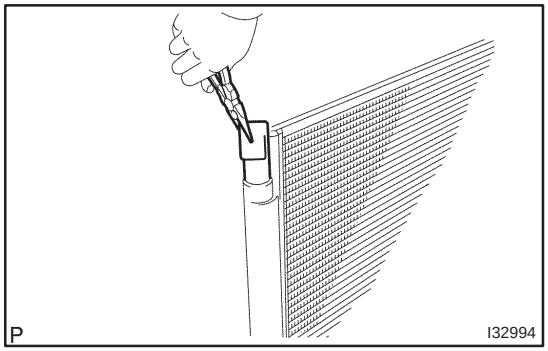

19. INSTALL COOLER DRYER (W/O HOT GAS HEATER)

(a) Using needle nose pliers, install the new cooler dryer.

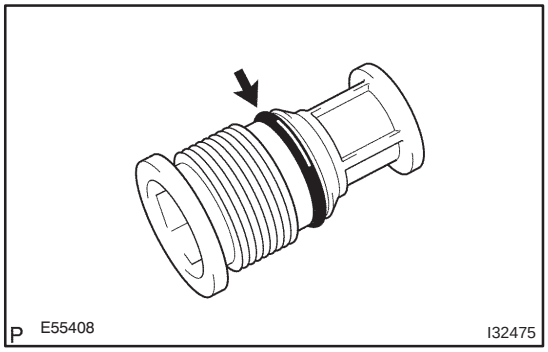

(b) Sufficiently apply compressor oil to the fitting surfaces of the O–ring.
Compressor oil: ND–OIL 8 or equivalent

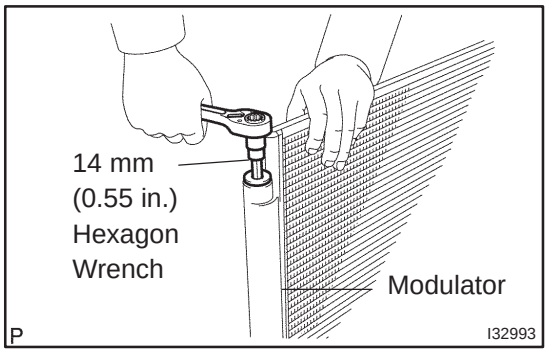

(c) Using a hexagon wrench 14 mm (0.55 in.), install the new cap on the modulator.
Torque: 2.9 N·m (30 kgf·cm, 25 in.·lbf)

(d) 1AZ–FSE:
Install the bracket with the 2 bolts.

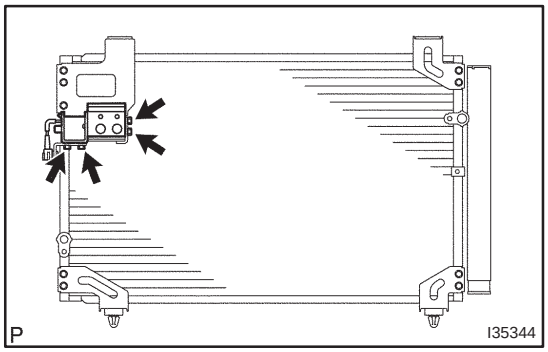

20. INSTALL MAGNET VALVE ASSY (W/ HOT GAS HEATER)

(a) Install the magnet valve assy with the 4 bolts.
Torque: 3.4 N·m (35 kgf·cm, 30 in.·lbf)

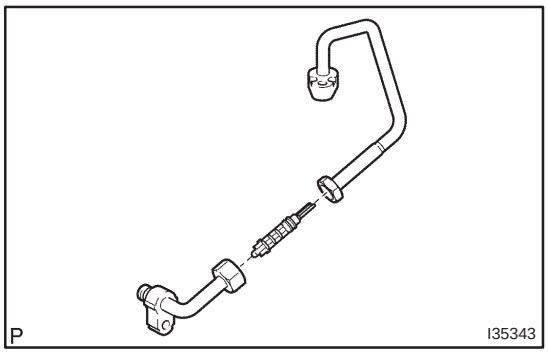

21. INSTALL REFRIGERANT FILTER (W/ HOT GAS HEATER)

(a) Install the refrigerant filter to the discharge tube.

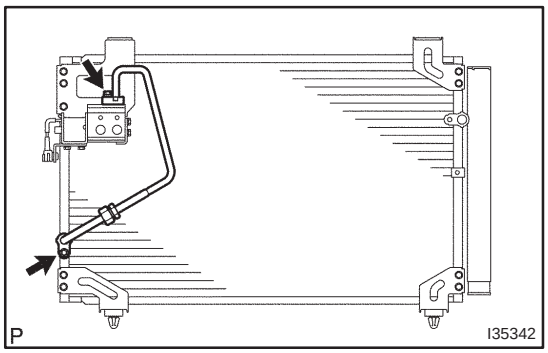

22. INSTALL DISCHARGE TUBE (W/ HOT GAS HEATER)

(a) Install the discharge tube with the 2 bolts.
Torque: 5.4 N·m (55 kgf·cm, 47 in.·lbf)

23. INSTALL LIQUID TUBE SUB–ASSY B (RHD(1CD–FTV) STEERING POSITION TYPE)

(a) Remove the attached vinyl tape from the tube and the connecting part of the w/ receiver condenser assy.
(b) Sufficiently apply compressor oil to a new O–ring and the fitting surface of the pipe joint.
Compressor oil: ND–OIL 8 or equivalent
(c) Install the O–ring on the liquid tube sub–assy B.

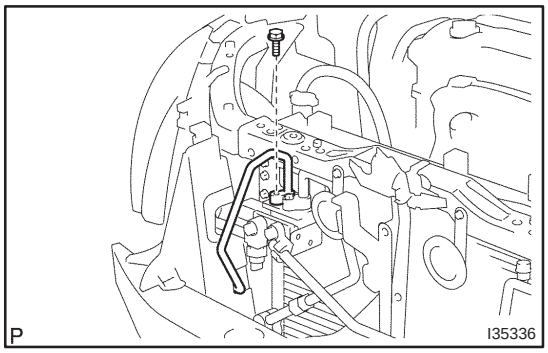

(d) Install the liquid tube sub–assy B on the w/ receiver condenser assy with the bolt.
Torque: 5.4 N·m (55 kgf·cm, 47 in.·lbf)

24. INSTALL DISCHARGE TUBE SUB–ASSY (W/ HOT GAS HEATER)

(a) Remove the attached vinyl tape from the tube and the connecting part of the w/ receiver condenser assy.
(b) Sufficiently apply compressor oil to a new 2 O–rings and the fitting surface of the pipe joint.
Compressor oil: ND–OIL 8 or equivalent
(c) Install the O–ring on the discharge tube sub–assy.

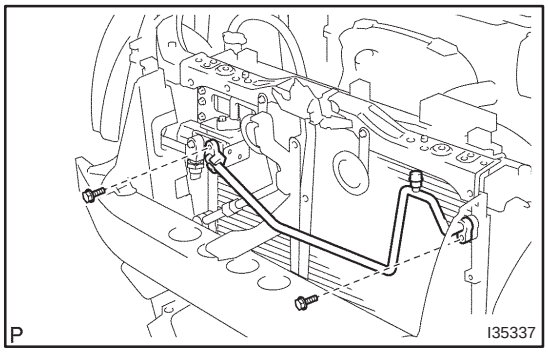

(d) Install the discharge tube sub–assy on the w/ receiver condenser assy with the bolt.
Torque: 5.4 N·m (55 kgf·cm, 47 in.·lbf)

25. INSTALL LIQUID TUBE SUB–ASSY A

(a) Remove the attached vinyl tape from the tube and the connecting part of the w/ receiver condenser assy.

(b) Sufficiently apply compressor oil to a new O–ring and the fitting surface of the pipe joint.
Compressor oil: ND–OIL 8 or equivalent

(c) Install the O–ring on the liquid tube sub–assy A.

(d) w/o Hot gas heater:
Install the liquid tube sub–assy A on the w/ receiver condenser assy core with the bolt.
Torque: 5.4 N·m (55 kgf·cm, 47 in.·lbf)

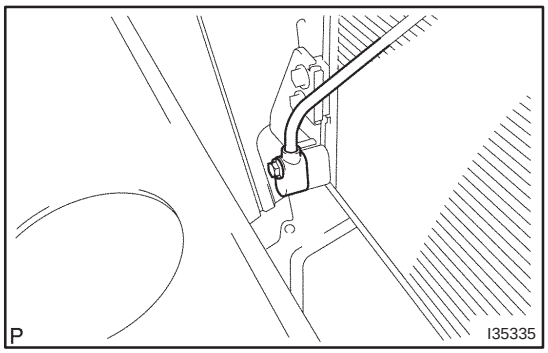

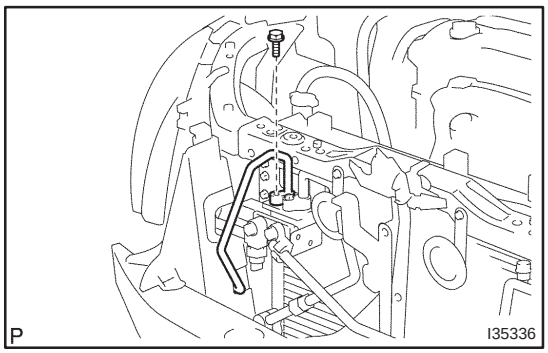

(e) w/ LHD Hot gas heater:
Install the liquid tube sub–assy A on the w/ receiver condenser assy with the bolt.
Torque: 5.4 N·m (55 kgf·cm, 47 in.·lbf)

26. INSTALL COOLER REFRIGERANT DISCHARGE HOSE NO.1

(a) Remove the attached vinyl tape from the tube and the connecting part of the w/ receiver condenser assy.

(b) Sufficiently apply compressor oil to the O–ring and the fitting surface of the hose joint.
Compressor oil: ND–OIL 8 or equivalent

(c) Install the O–ring on the cooler refrigerant discharge hose No.1.

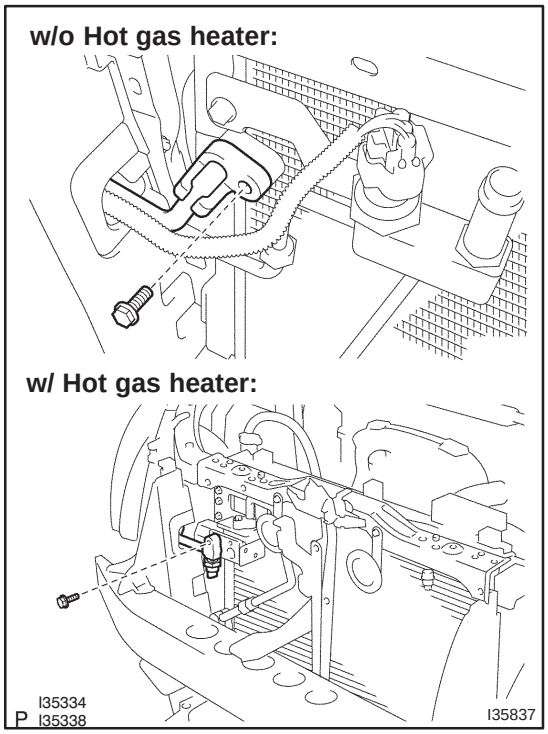

(d) Install the cooler refrigerant discharge hose No.1 on the w/ receiver condenser assy with the bolt.
Torque: 5.4 N·m (55 kgf·cm, 47 in.·lbf)

27. **INSTALL FRONT BUMPER COVER (See page 76–3)**
28. **CHARGE REFRIGERANT (See page 55–38)**
    SST 07110–58060 (07117–58060, 07117–58070, 07117–58080, 07117–58090, 07117–78050, 07117–88060, 07117–88070, 07117–88080), 07117–48130, 07117–48140
    Specified amount: 440 ± 30 g (15.51 ± 1.06 oz.)
29. **WARM UP ENGINE (See page 55–38)**
30. **INSPECT LEAKAGE OF REFRIGERANT (See page 55–38)**

HEATER ASSY

550YS–01

REPLACEMENT

1. REMOVE AIR CLEANER ASSY (See page 11–82)
2. REMOVE FUEL FILTER ASSY (See page 11–82)

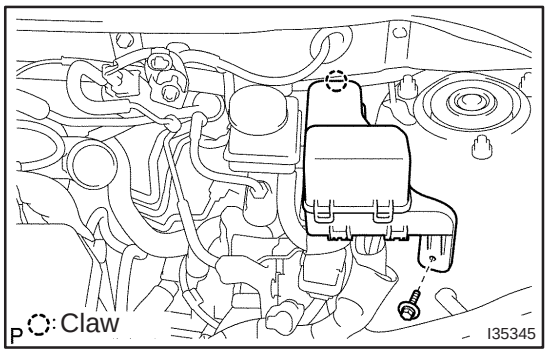

3. REMOVE AIR DUCT NO.3

(a) Release the claw fitting and remove the bolt and the engine room relay No.2 block.

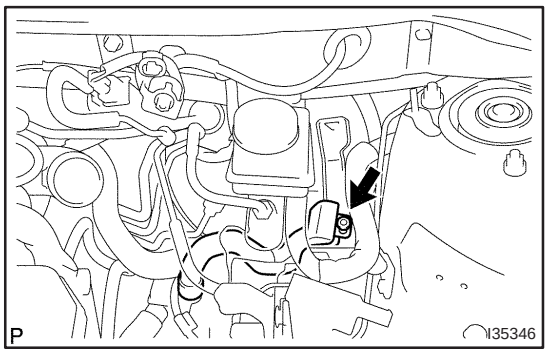

(b) Remove the clip and the air duct No.3.

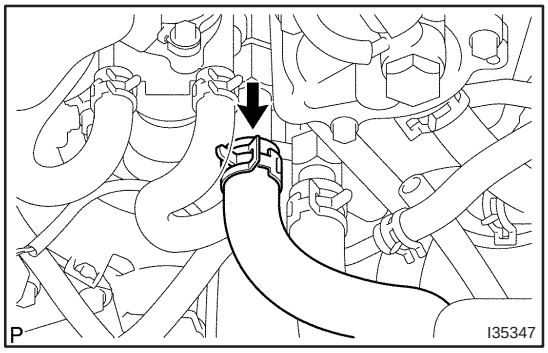

4. DISCONNECT HEATER INLET WATER HOSE

(a) Using pliers, grip the claws of the clip and slide the clip to disconnect the heater inlet water hose.

HINT:

Prepare a support plate and waste to catch the leaked coolant.

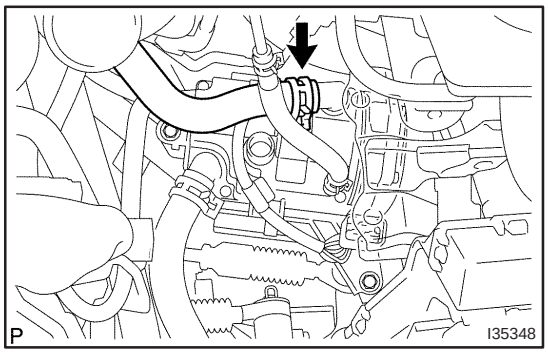

5. DISCONNECT HEATER WATER INLET HOSE A

(a) Using pliers, grip the claws of the clip and slide the clip to disconnect the heater inlet water hose A.

HINT:

Prepare a support plate and waste to catch the leaked coolant.

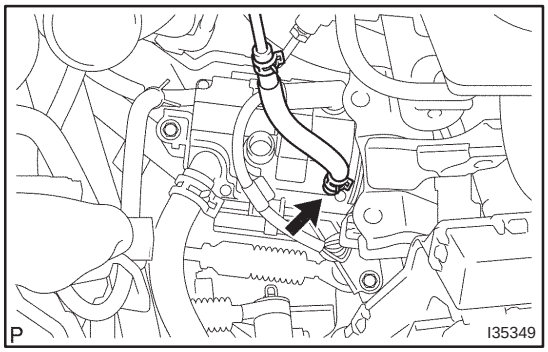

6. REMOVE HEATER ASSY

(a) Using pliers, grip the claws of the clip and slide the clip to disconnect the heater fuel hose.

HINT:

Prepare a support plate and waste to catch the leaked fuel.

(b) Disconnect the connector.

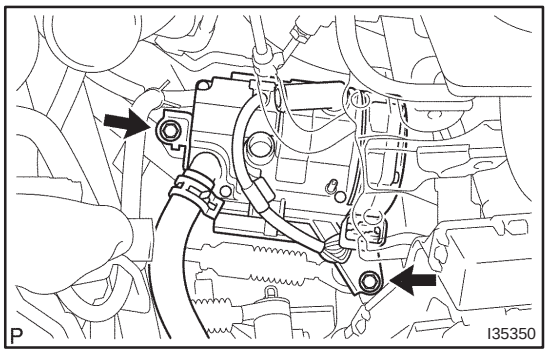

(c) Remove the 2 bolts and the heater assy.

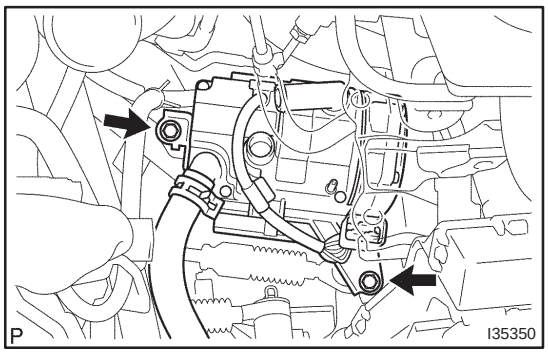

7. INSTALL HEATER ASSY

(a) Install the heater assy with the 2 bolts.

Torque: 7.5 N·m (76 kgf·cm, 66 in.·lbf)

(b) Connect the connector.

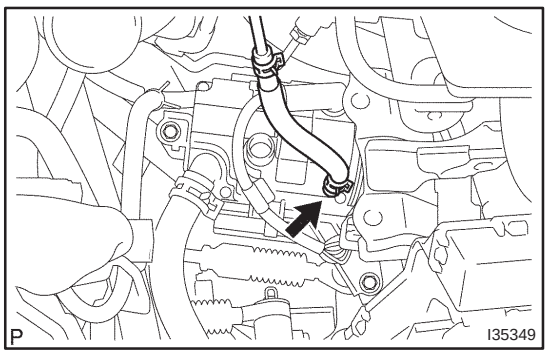

(c) Install the heater fuel hose.

HINT:

Prepare a support plate and waste to catch the leaked fuel.

8. INSTALL FUEL FILTER ASSY (See page 11–82)
9. INSTALL AIR CLEANER ASSY (See page 11–82)
10. ADD ENGINE COOLANT (See page 16–44)
11. CHECK FOR ENGINE COOLANT LEAKS (See page 16–37)
12. CHECK FUEL LEAK (See page 11–56)

SUPPLEMENTAL RESTRAINT SYSTEM

600JU–01

PRECAUTION

CAUTION:

- **AVENSIS is equipped with SRS, which comprises of a driver airbag, front passenger airbag, side airbag, curtain shield airbag and driver knee airbag. Failure to carry out service operations in the correct sequence could cause the SRS to unexpectedly deploy during servicing, possibly leading to serious accident. Further, if a mistake is made in servicing the SRS, it is possible that the SRS may fail to operate when required. Before performing servicing (including removal or installation of parts, inspection or replacement), be sure to read the following items carefully, then follow the correct procedures indicated in the repair manual.**
- **Work must be started 90 seconds after the ignition switch is turned to the ”LOCK” position and the negative (–) terminal cable is disconnected from the battery.**
  (The SRS is equipped with a back–up power source so that if work is started within 90 seconds after disconnecting the negative (–) terminal cable of the battery, the SRS may be deployed.)
- **Do not expose the horn button assy, instrument panel passenger airbag assy, instrument panel airbag assy, airbag sensor assy center, airbag front sensor, front seat airbag assy, side airbag sensor assy, curtain shield airbag assy, airbag sensor rear or seat position airbag sensor directly to hot air or flames.**

NOTICE:

- **Malfunction symptoms of the SRS are difficult to confirm, so DTCs are the most important information source of information when troubleshooting. When troubleshooting the SRS, always inspect DTCs before disconnecting the battery.**
- **Even in the case of a minor collision when the SRS does not deploy, the horn button assy, instrument panel passenger airbag assy, instrument panel airbag assy, airbag sensor assy center, airbag front sensor, front seat airbag assy, side airbag sensor assy, curtain shield airbag assy, airbag sensor rear and seat position sensor must be inspected (See page 60–11).**
- **Before repairs work, remove the airbag sensor if any kind of shock is likely to occur to the sensor during operation.**
- **Never use SRS parts from another vehicle. When replacing the parts, replace them with new ones.**
- **Never disassemble nor repair the horn button assy, instrument panel passenger airbag assy, instrument panel airbag assy, airbag sensor assy center, airbag front sensor, front seat airbag assy, side airbag sensor assy, curtain shield airbag assy, airbag sensor rear or seat position airbag sensor in order to reuse it.**
- **If the horn button assy, instrument panel passenger airbag assy, instrument panel airbag assy, airbag sensor assy center, airbag front sensor, front seat airbag assy, side airbag sensor assy, curtain shield airbag assy, airbag sensor rear or seat position airbag sensor has been dropped, or if there are any cracks, dents or other defects in the case, bracket or connector, replace it with a new one.**
- **Use a volt/ohmmeter with high impedance (10 kΩ/V minimum) for troubleshooting the electrical circuits circuits.**
- **Information labels are attached to the periphery of the SRS components. Follow the instructions the notice.**
- **After work on the SRS is completed, perform the SRS warning light check (See page 05–1184).**

- **When the negative (–) terminal cable is disconnected from the battery, the memory of the clock and audio system will be canceled. So before starting work, make a record of the contents memorized in the audio memory system. When work is finished, reset the audio systems as they were before and adjust the clock. To avoid erasing the memory in each memory system, never use a back–up power supply from outside the vehicle.**
- **If the vehicle is equipped with a mobile communication system, refer to the precaution in the INTRODUCTION section.**

1. SRS CONNECTORS

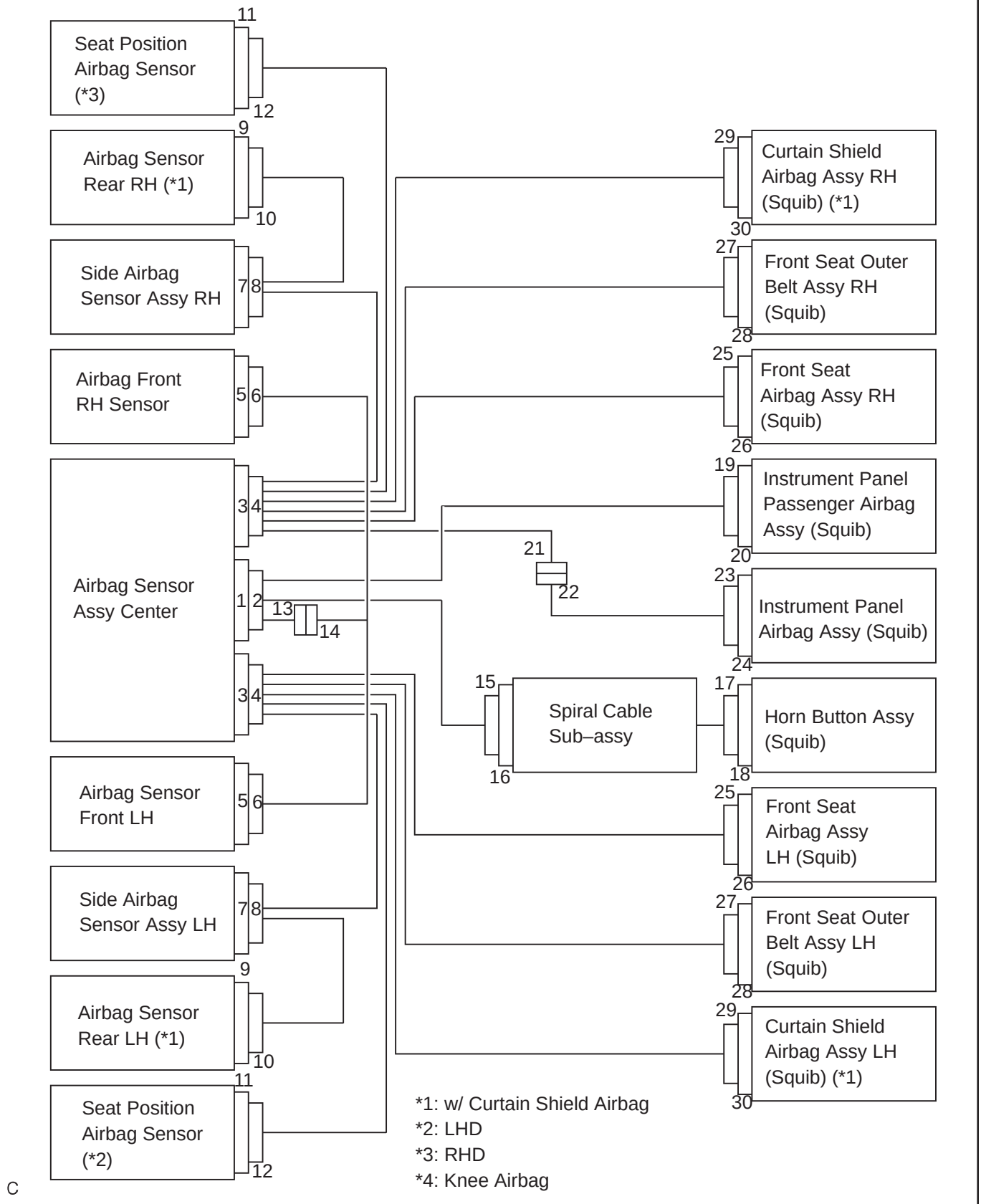

No.	Item	Application
(1)	Terminal Twin–Lock Mechanism	Connectors 2, 4, 6, 8, 10, 12, 13, 14, 15, 19, 21, 22, 25
(2)	Activation Prevention Mechanism	Connectors 2, 4, 16, 18, 20, 22, 24, 26, 28, 30
(3)	Electrical Connection Check Mechanism	Connectors 1, 2, 3, 4
(4)	Half Connection Prevention Mechanism	Connectors 6, 8, 10, 14, 15, 19, 21, 25
(5)	Connector Lock Mechanism	Connectors 17, 23, 27, 29

(a) All connectors for the SRS are colored in yellow to distinguish them from other connectors. The connectors having special functions and specifically designed for the SRS are used in the locations shown on the previous page to ensure high reliability. These connectors use durable gold–plated terminals.

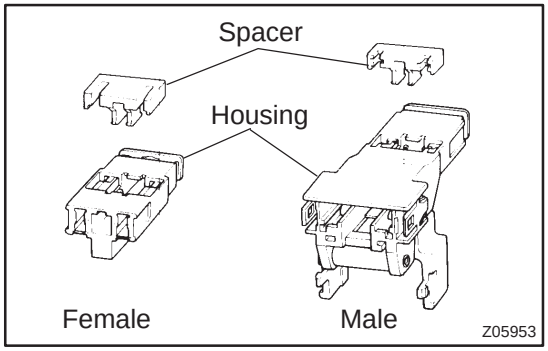

(1) Terminal twin–lock mechanism:
Each connector has a two–piece component consisting of a housing and a spacer. This design enables the terminal to be locked securely by two locking devices (the retainer and the lance) to prevent terminals from coming out.

(2) Activation prevention mechanism:
Each connector contains a short spring plate. When the connector is disconnected, the short spring plate automatically connects positive (+) terminal and negative (–) terminal of the squib.

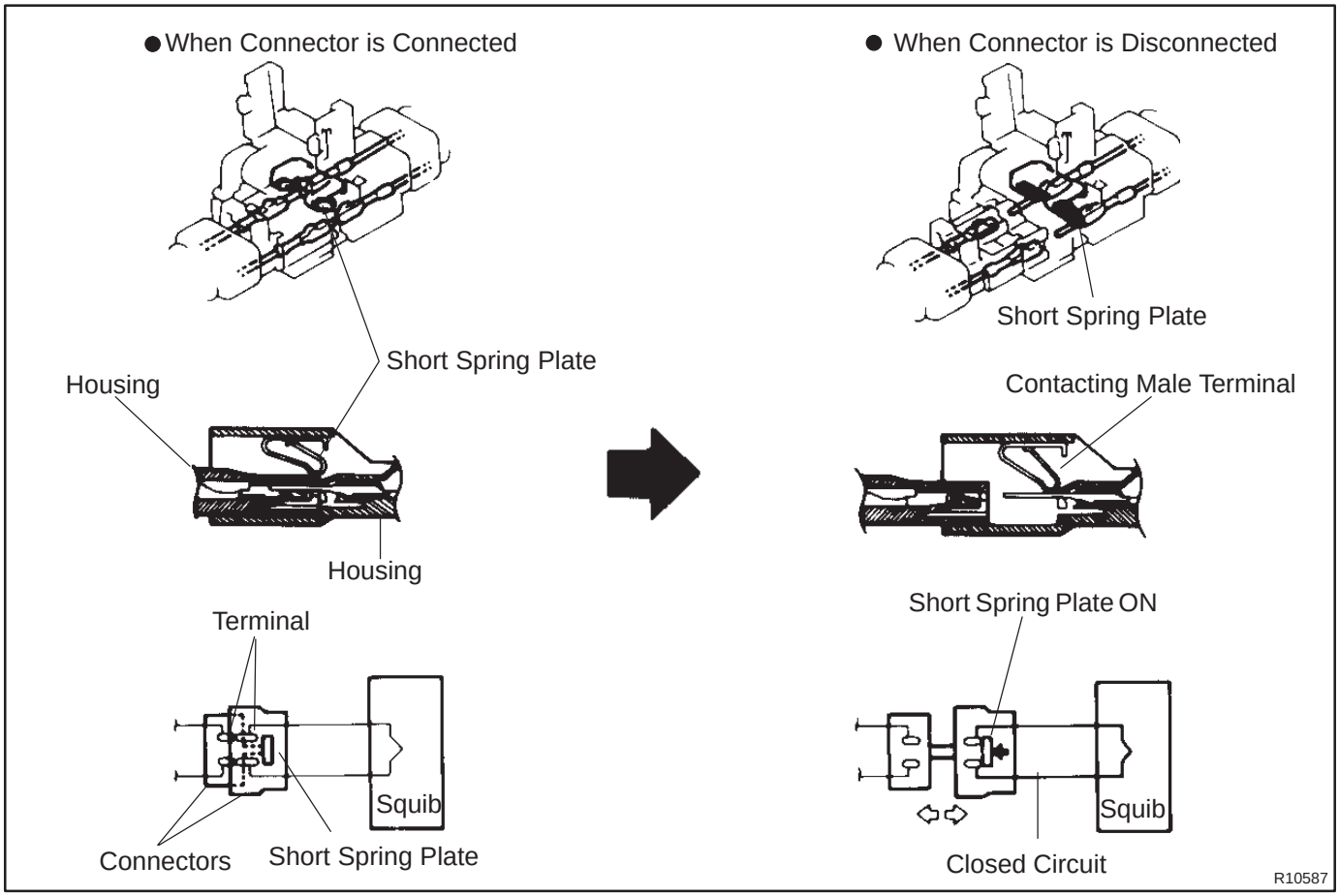

HINT:
The type of connector is shown in the diagram on the previous page.

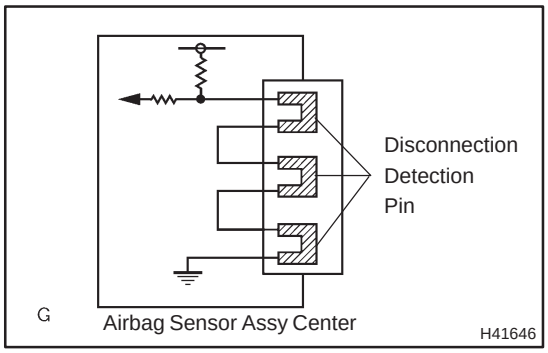

(3) Electrical connection check mechanism:
This mechanism electrically checks that the connectors are connected correctly and completely. The electrical connection check mechanism is designed so that the disconnection detection pin connects with the diagnosis terminals when the connector housing lock is locked.

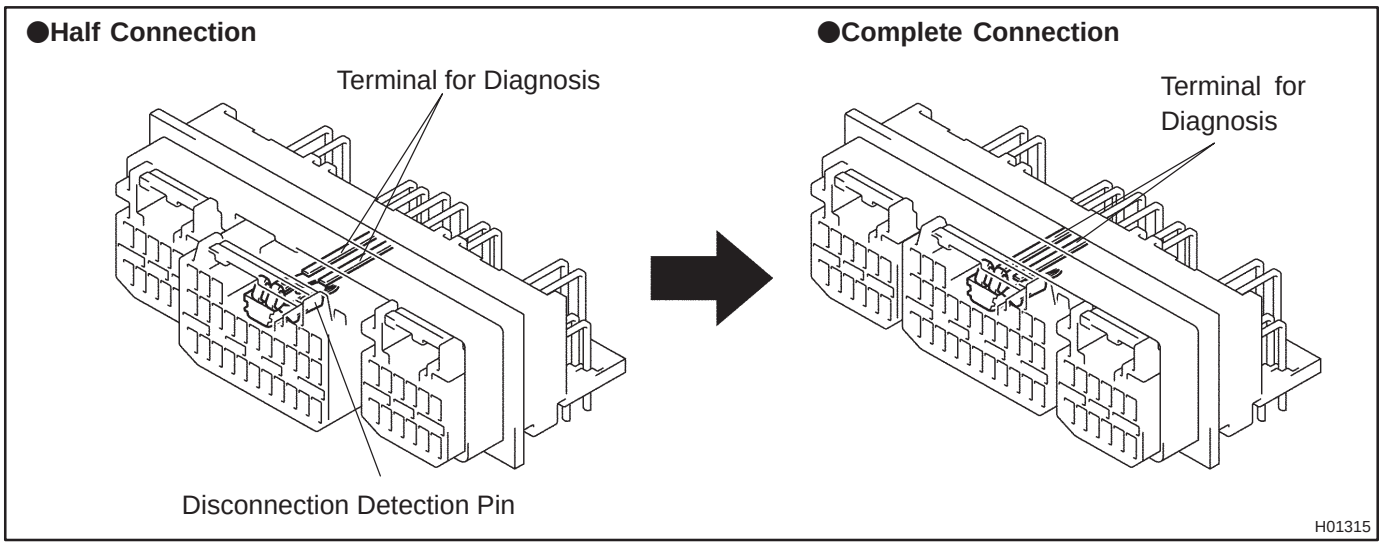

HINT:
The connectors shown in this illustration are connectors, ”1”, ”2”, ”3” and ”4” in the step 1.

(4) Half connection prevention mechanism:
If the connector is not completely connected, the connector is disconnected due to the spring operation to the extent that no continuity exists.

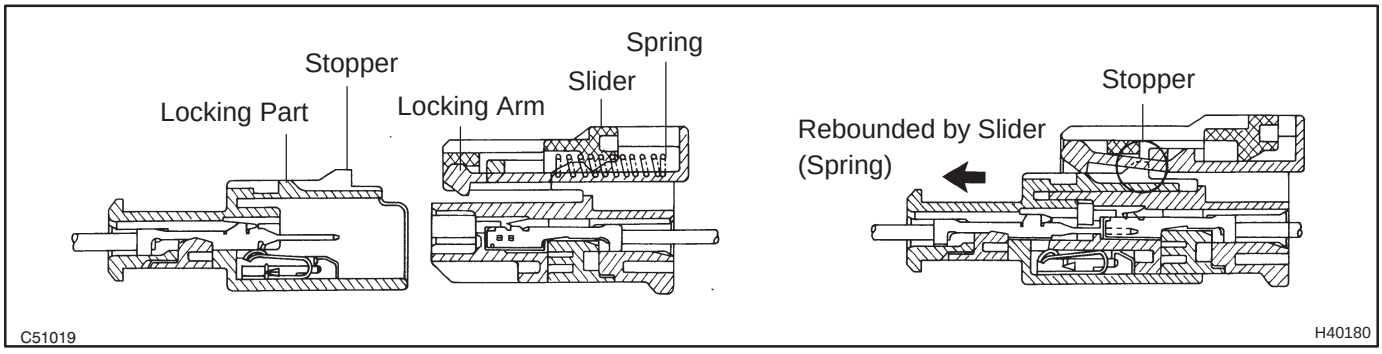

(5) Connector lock mechanism:
Locking the connector lock button connects the connector securely.

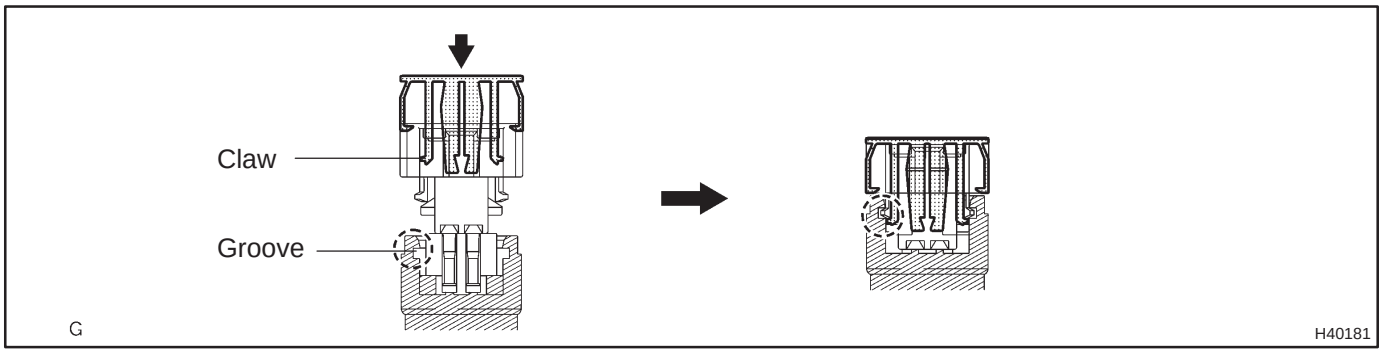

Fig.1

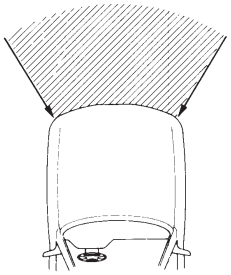

Fig.2

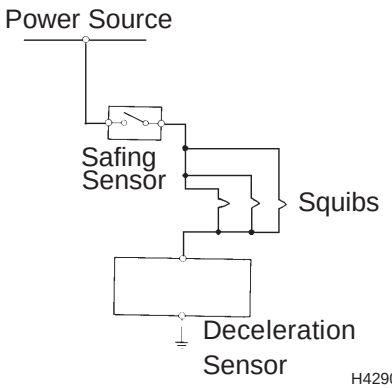

(b) When the vehicle is involved in a frontal collision in the hatched area (Fig. 1) and the shock is larger than the predetermined level, the SRS is activated automatically. The safing sensor is designed to go on at a smaller deceleration rate than the airbag sensor. As illustrated in the Fig. 2, ignition is caused when current flows to the squib, which happens when the safing sensor and the deceleration sensor go on simultaneously. When a deceleration force acts on the sensors, 3 squibs in the driver airbag, front passenger airbag and knee airbag ignite and generate gas. The gas discharging into the driver airbag, front passenger airbag and knee airbag rapidly increases the pressure inside the bags, breaking the horn button assy and instrument panel. The inflation of the bag then ends, and the bags deflate as the gas is discharged through discharge holes at the bag's rear or side.

2. DISCONNECTION OF CONNECTORS FOR HORN BUTTON ASSY AND CURTAIN SHIELD AIR-BAG ASSY

HINT:

Tape up the screwdriver tip before use.

(a) Release the yellow part of the connector using a screwdriver.

(b) Insert a screwdriver tip between the connector and the base, and then lever up connector.

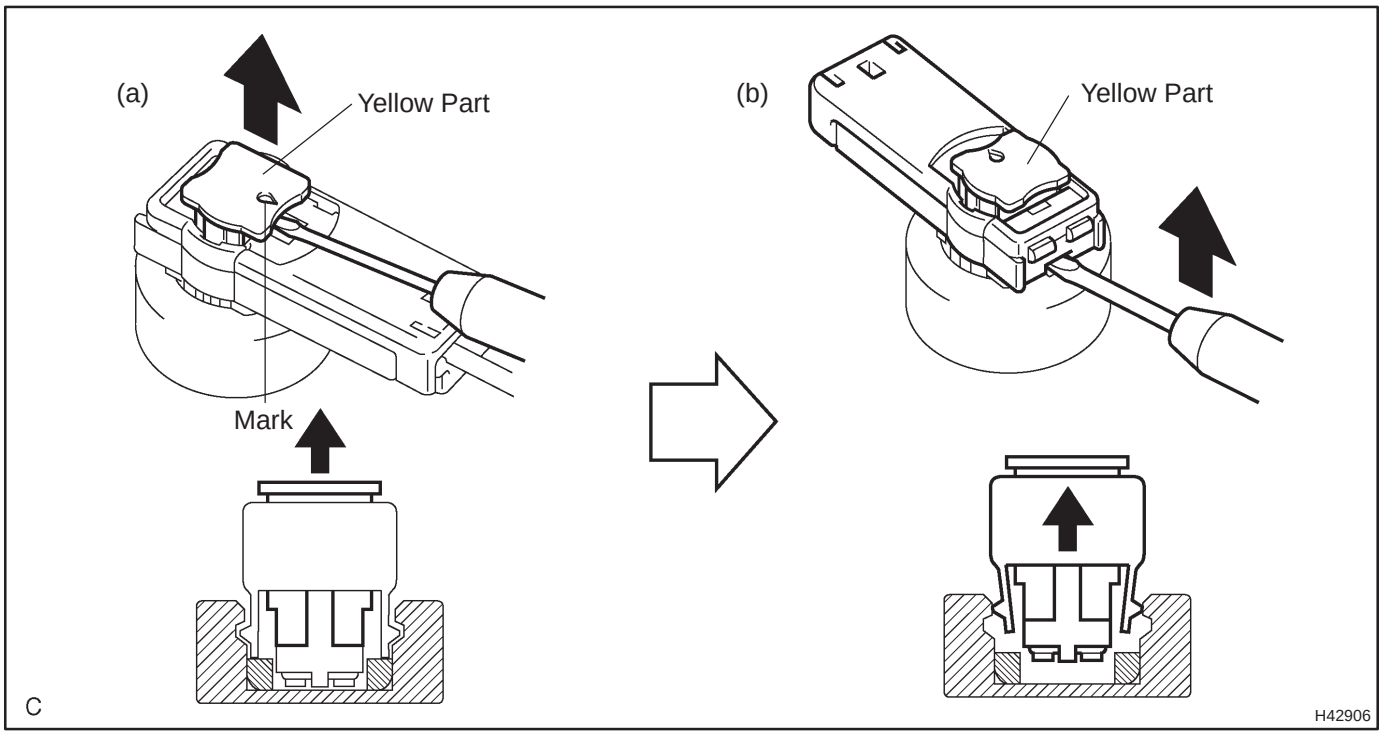

3. DISCONNECTION OF CONNECTORS FOR HORN BUTTON ASSY AND CURTAIN SHIELD AIR-BAG ASSY

(a) Connect the connector.

(b) Push down securely on the yellow part of the connector.

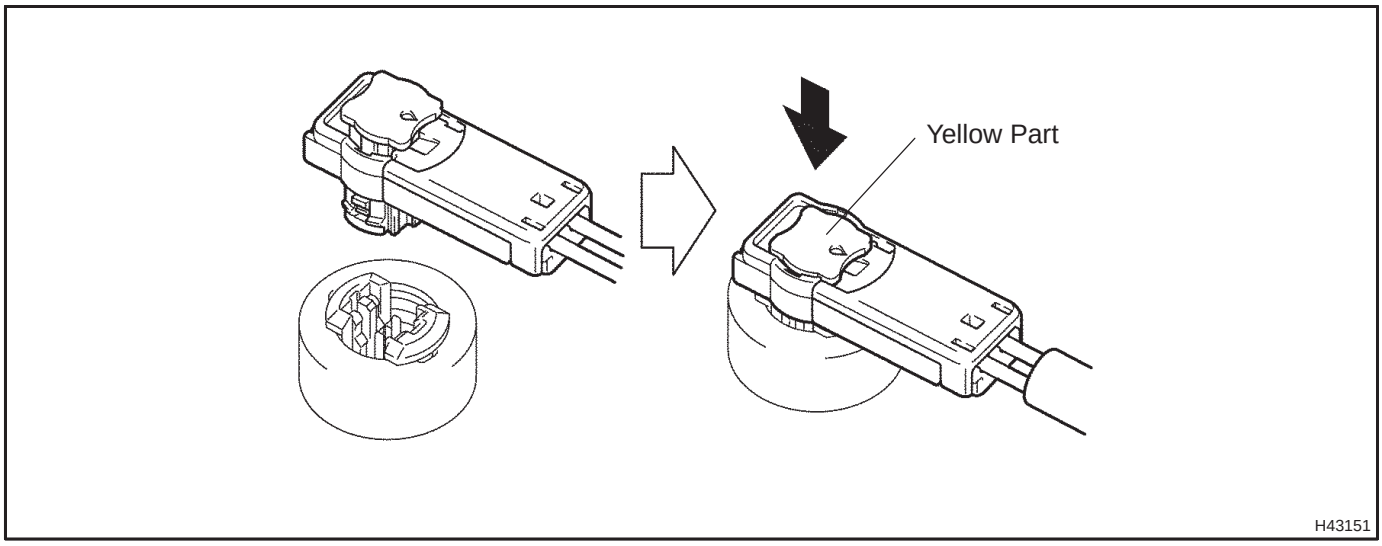

4. DISCONNECTION OF CONNECTORS FOR INSTRUMENT PANEL AIRBAG ASSY

HINT:

Tape up the screwdriver tip before use.

(a) Release the black part of the connector using a screwdriver.

(b) Insert a screwdriver tip between the connector and the base, and then lever up connector.

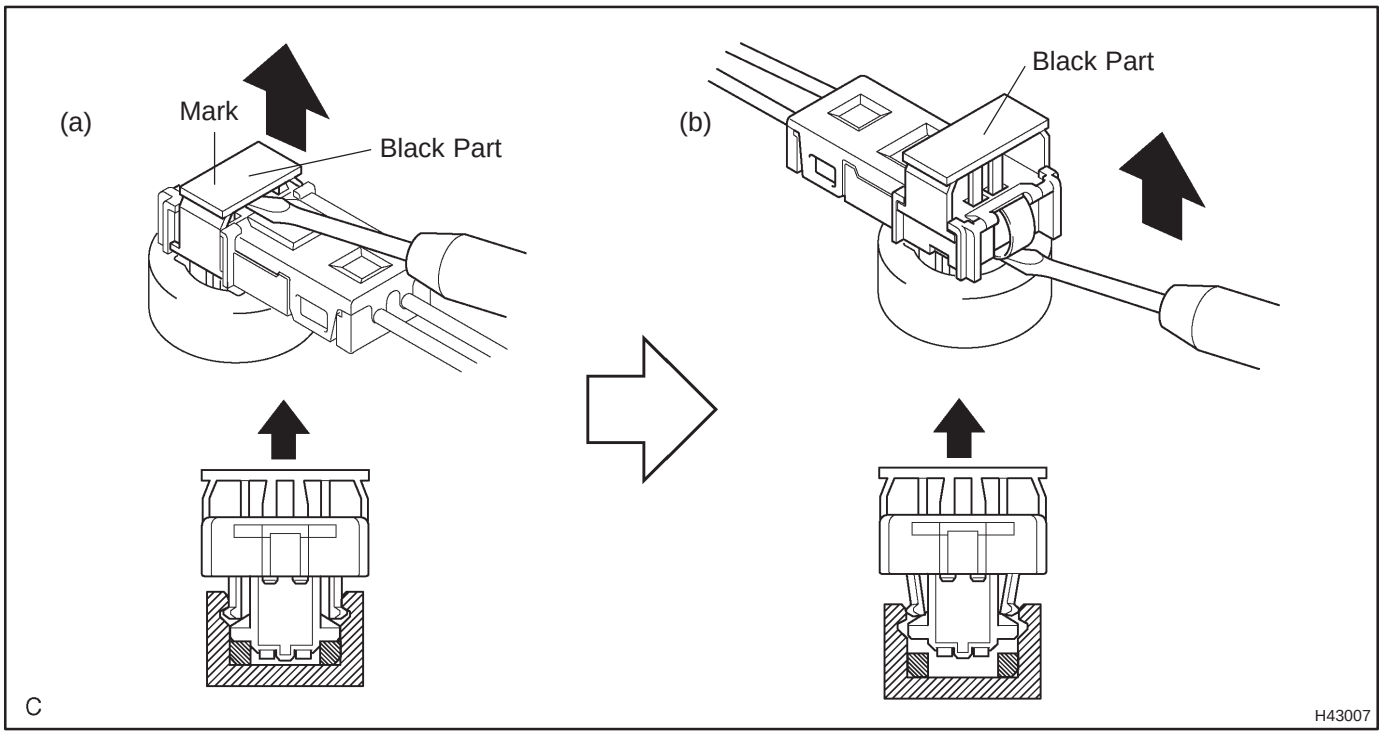

5. DISCONNECTION OF CONNECTORS FOR INSTRUMENT PANEL AIRBAG ASSY

(a) Connect the connector.

(b) Push down securely on the yellow part of the connector.

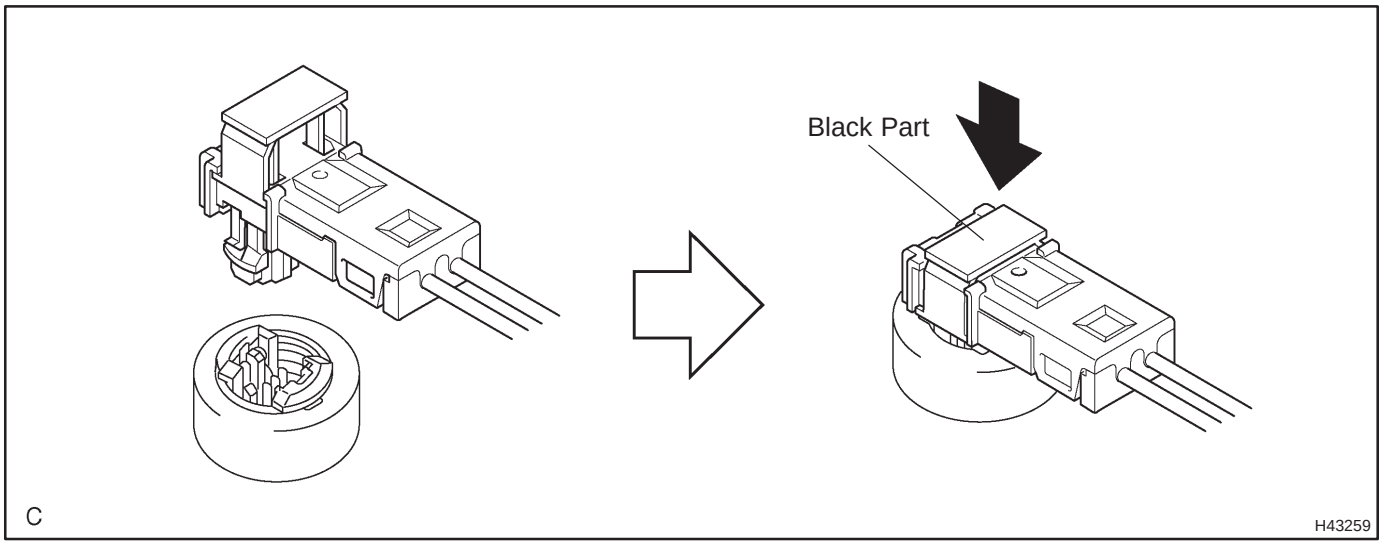

6. DISCONNECTION OF CONNECTOR FRONT SEAT AIRBAG ASSY

(a) Place a finger on the slider.
(b) Slide the slider to release lock.
(c) Disconnect the connector.

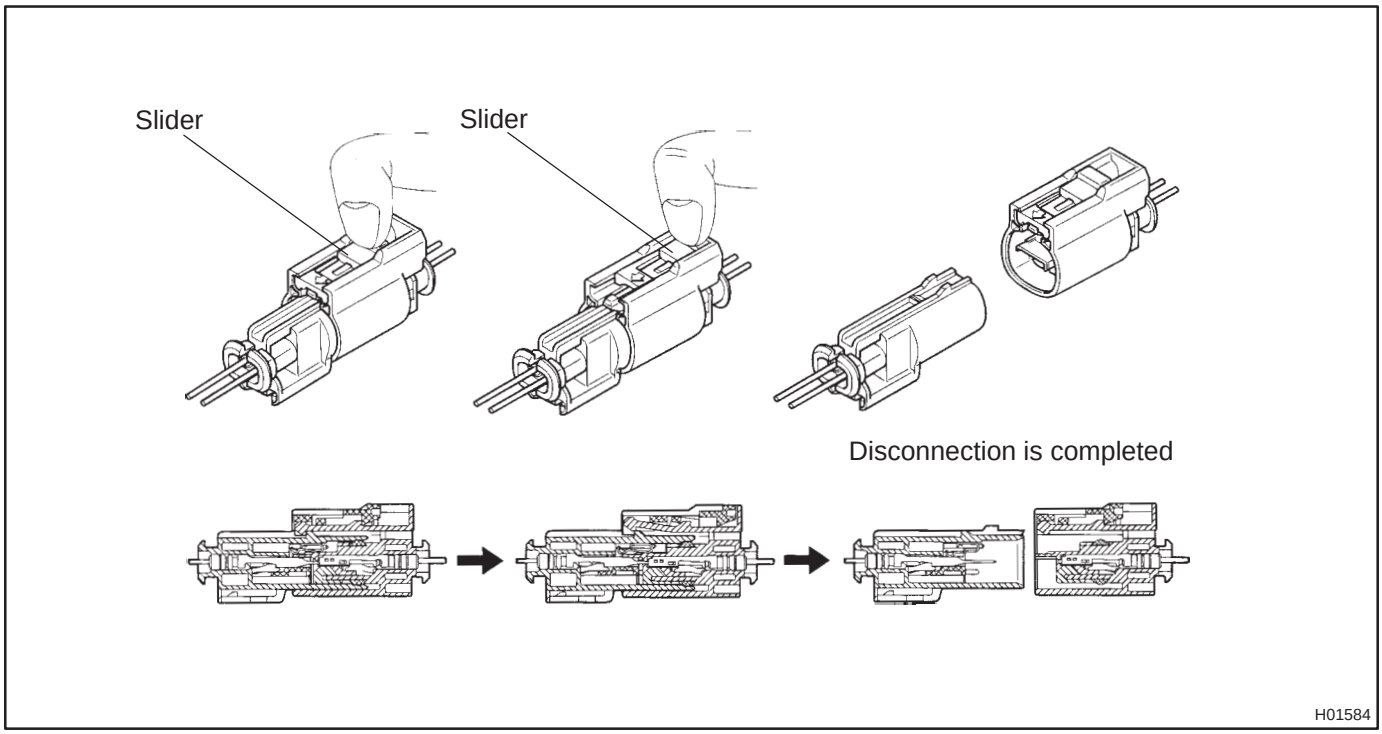

7. CONNECTION OF CONNECTOR FOR FRONT SEAT AIRBAG ASSY

(a) Align the lock part of the male connector and the slider of the female connector in the same direction as shown in the illustration, connect them without rubbing together.
(b) Be sure to insert the connectors until they are locked. After connecting them, pull them slightly to check that they are locked. (When locking, make sure that the slider returns to its original position and a click sound can be heard.)

HINT:
When connecting them, the slider slides. Be sure not to touch the slider while connecting, as it may result in an insecure fit.

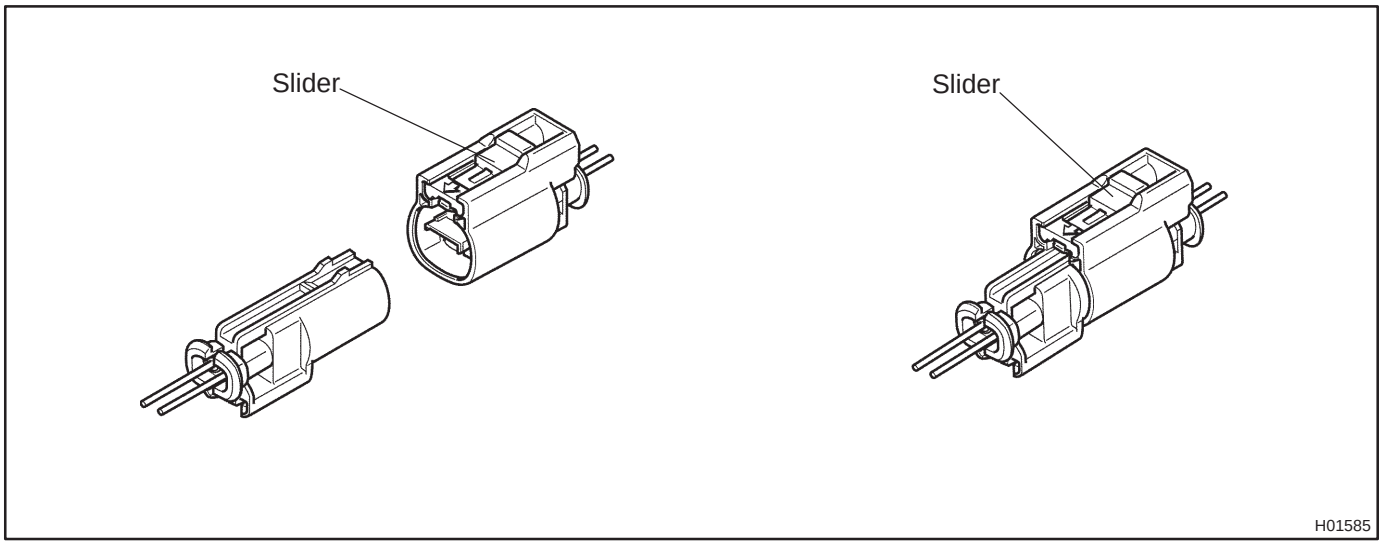

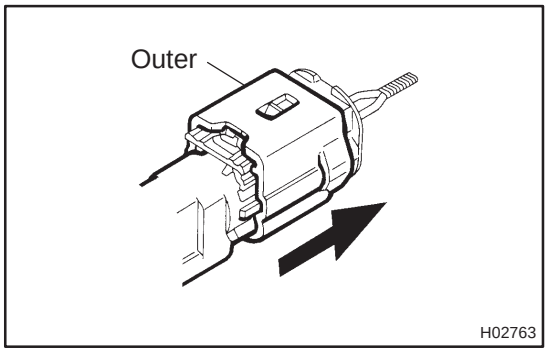

8. DISCONNECTION OF AIRBAG FRONT SENSOR, SIDE AIRBAG SENSOR AND AIRBAG SENSOR REAR CONNECTOR

(a) While holding both outer flank sides of the outer, slide the outer to the direction shown by the arrow.

(b) When the connector lock is released, the connectors are disconnected.

HINT:

Be sure to hold both outer flank sides. If the top and bottom sides are held, it will obstruct disconnection.

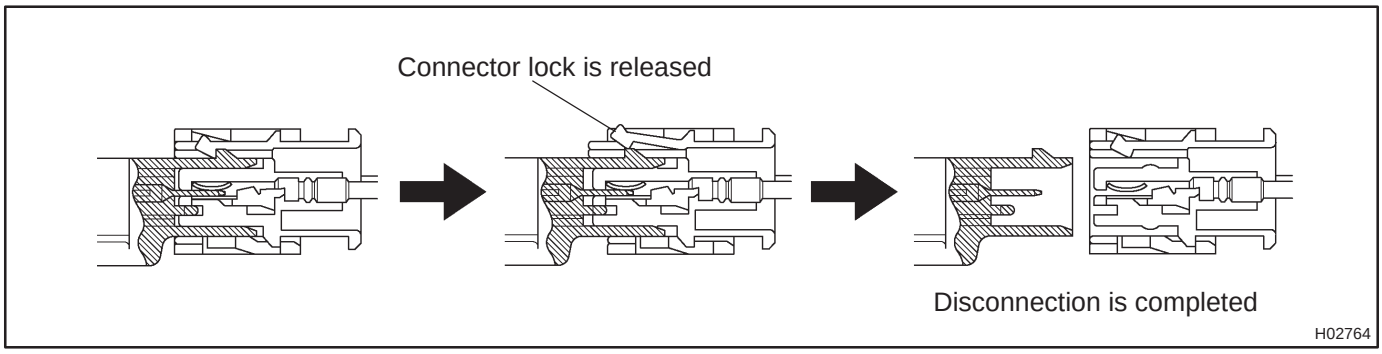

9. CONNECTION OF CONNECTORS FOR AIRBAG FRONT SENSOR, SIDE AIRBAG SENSOR AND AIRBAG SENSOR REAR

(a) Align the male connector (on the side of sensor) and female connector in the same direction as shown in the illustration and connect them without rubbing together.

(b) Be sure to insert the connectors until they are locked. After connecting them, pull them slightly to check that they are locked. (When locking, make sure that the outer returns to its original position and a click sound can be heard.)

HINT:

When connecting them, the outer slides. Be sure not to hold the outer while connecting, as it may result in an insecure fit.

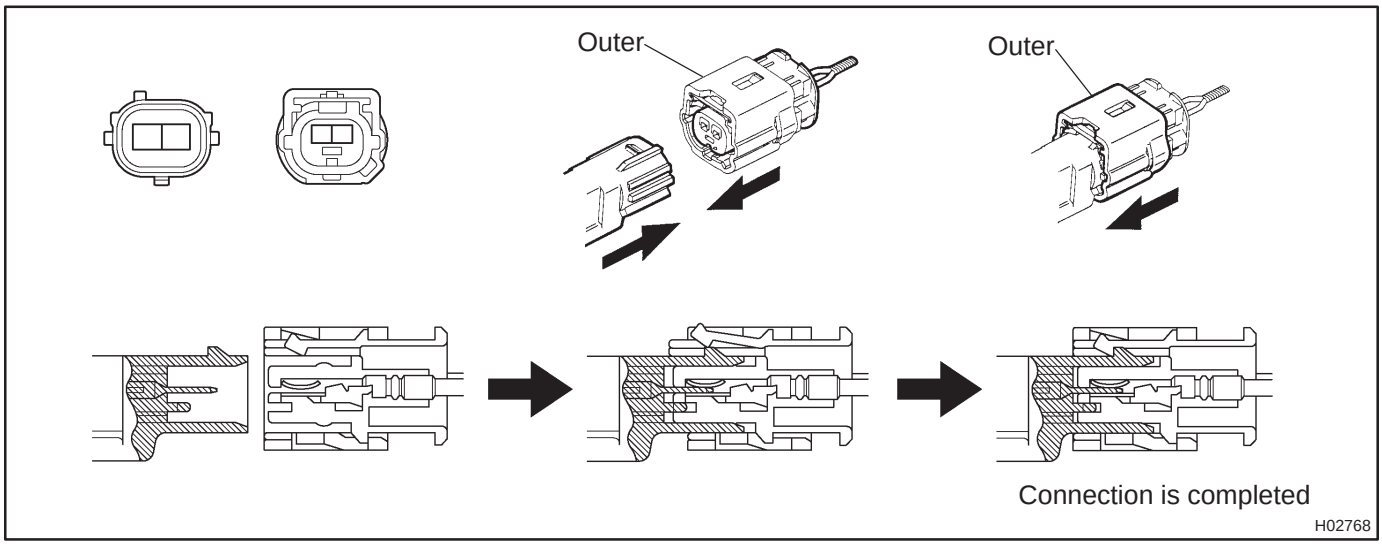

600JV–01

ON–VEHICLE INSPECTION

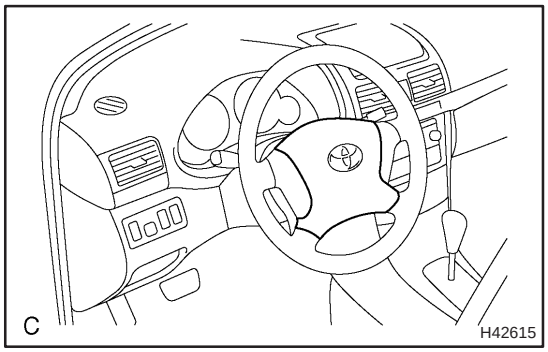

1. HORN BUTTON ASSY (VEHICLES NOT INVOLVED IN COLLISION)

(a) Do a diagnostic system check (See page 05–1184).

(b) Do a visual check which includes the following items with the horn button assy installed in the vehicle:
Cuts, minute cracks or marked discoloration on the horn button assy top surface and in the grooved portion.

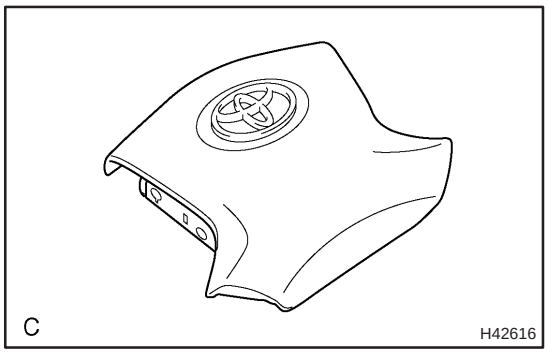

2. HORN BUTTON ASSY (VEHICLE INVOLVED IN COLLISION AND AIRBAG IS NOT DEPLOYED)

(a) Do a diagnostic system check (See page 05–1184).

(b) Do a visual check of the horn button assy removed from the vehicle:

- Cuts, minute cracks or marked discoloration on the horn button assy top surface and in the grooved portion.
- Cuts and cracks in wire harness, and chipping in connectors.
- Deformation of the horn button assy.

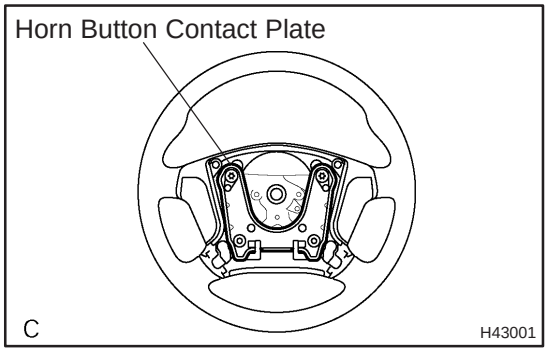

- The deformation of the horn button contact plate of the steering wheel assy.

HINT:

- If the horn button contact plate of the steering wheel assy is deformed, replace it with a new one. Always replace the steering wheel assy with a new one.
- Never repair it in order for reuse or replacement.

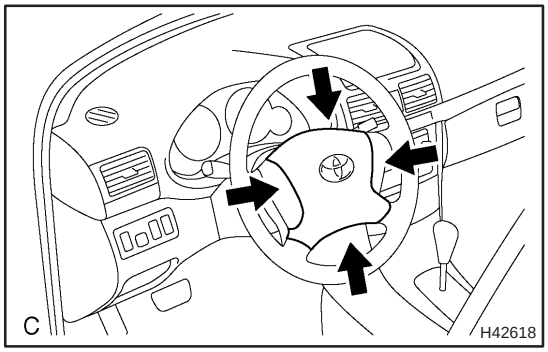

- There should be no interference between the horn button assy and steering wheel assy, and the clearance should be uniform all the way around when the new horn button assy is installed on the steering wheel assy.

CAUTION:

For removal and installation procedures of the horn button assy, see "Replacement" on page 60–17, and be sure to follow the correct procedure.

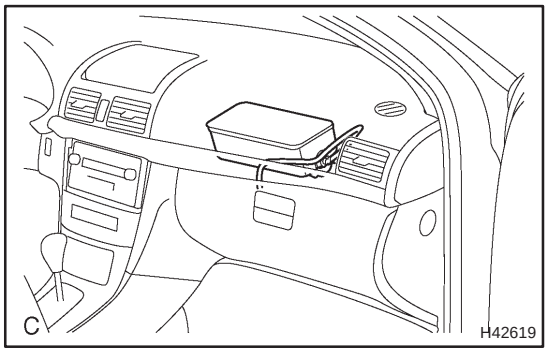

3. INSTRUMENT PANEL PASSENGER AIRBAG ASSY (VEHICLE NOT INVOLVED IN COLLISION)

(a) Do a diagnostic system check (See page 05–1184).

(b) Do a visual check which includes the following items with the instrument panel passenger airbag assy installed in the vehicle:

Cuts, minute cracks or marked discoloration on the instrument panel around the instrument panel passenger airbag assy.

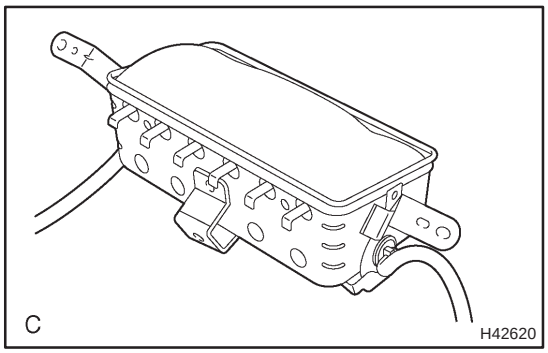

4. INSTRUMENT PANEL PASSENGER AIRBAG ASSY (VEHICLE INVOLVED IN COLLISION AND AIRBAG IS NOT DEPLOYED)

(a) Do a diagnostic system check (See page 05–1184).

(b) Do a visual check of the instrument panel passenger airbag assy removed from the vehicle:

- Cuts, minute cracks or marked discoloration on the instrument panel passenger airbag assy.
- Cuts and cracks in wire harness, and chipping in connectors.
- Deformation or cracks on the instrument panel and instrument panel reinforcement.

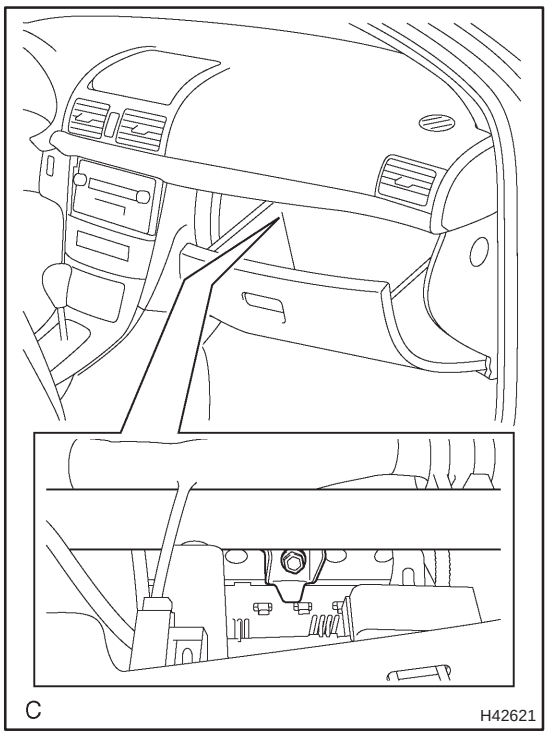

HINT:

- If the instrument panel or instrument panel reinforcement is deformed or cracked, never repair it. Always replace it with a new one.
- Never repair it in order for reuse.

CAUTION:

For removal and installation of procedures the instrument panel passenger airbag assy, see "Replacement" on page 60–29, and be sure to follow the correct procedure.

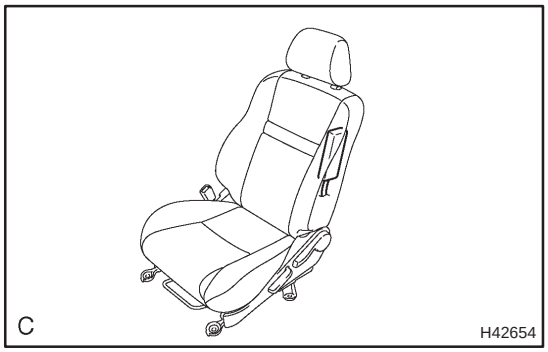

5. FRONT SEAT AIRBAG ASSY (VEHICLE NOT INVOLVED IN COLLISION)

(a) Do a diagnostic system check (See page 05–1184).

(b) Do a visual check which includes the following items with the front seat airbag assy installed in the vehicle:
Cuts, minute cracks or marked discoloration on the front seat back assy around the front seat airbag assy.

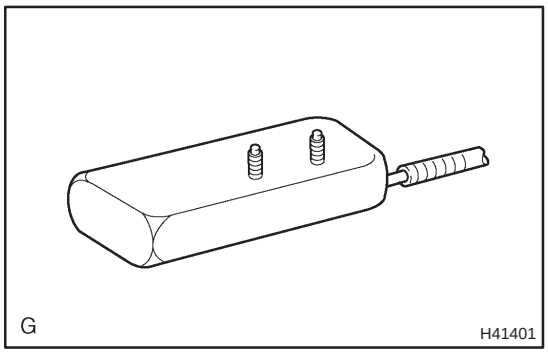

6. FRONT SEAT AIRBAG ASSY (VEHICLE INVOLVED IN COLLISION AND AIRBAG IS NOT DEPLOYED)

(a) Do a diagnostic system check (See page 05–1184).

(b) Do a visual check which includes the following items with the front seat airbag assy removed from the vehicle:
- Cuts, minute cracks or marked discoloration on the front seat airbag assy.
- Cuts and cracks in wire harness, and chipping in connectors.

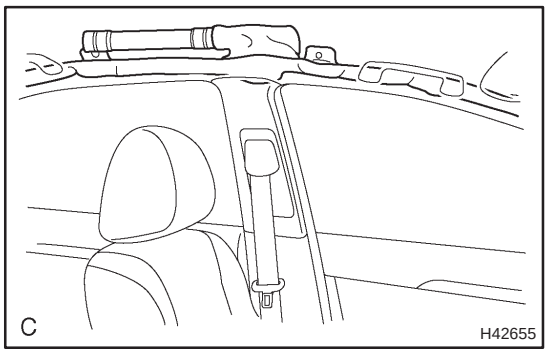

7. CURTAIN SHIELD AIRBAG ASSY (VEHICLE NOT INVOLVED IN COLLISION)

(a) Do a diagnostic system check (See page 05–1184).

(b) Do a visual check of the curtain shield airbag assy installed in the vehicle:
Cuts, minute cracks or marked discoloration on the front pillar garnish and roof headlining assy around the curtain shield airbag assy.

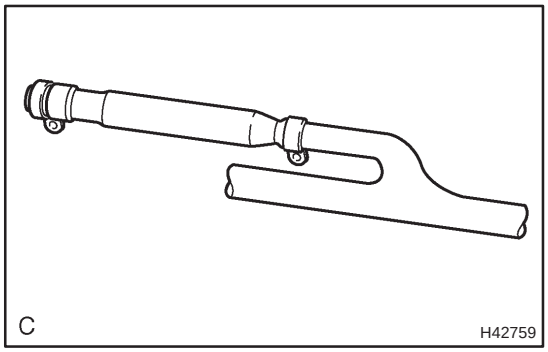

8. CURTAIN SHIELD AIRBAG ASSY (VEHICLE INVOLVED IN COLLISION AND AIRBAG IS NOT DEPLOYED)

(a) Do a diagnostic system check (See page 05–1184).

(b) Do a visual check which includes the following items with the curtain shield airbag assy removed from the vehicle:
- Cuts, minute cracks or marked discoloration on the curtain shield airbag assy.
- Cuts and cracks in wire harness, and chipping in the connectors.

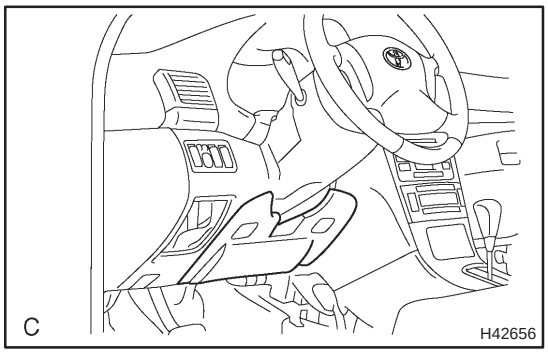

9. INSTRUMENT PANEL AIRBAG ASSY (VEHICLE INVOLVED IN COLLISION)

(a) Do a diagnostic system check (See page 05–1184).

(b) Do a visual check of the instrument panel airbag assy installed in the vehicle:
Cuts, minute cracks of marked discoloration on the instrument panel airbag assy.

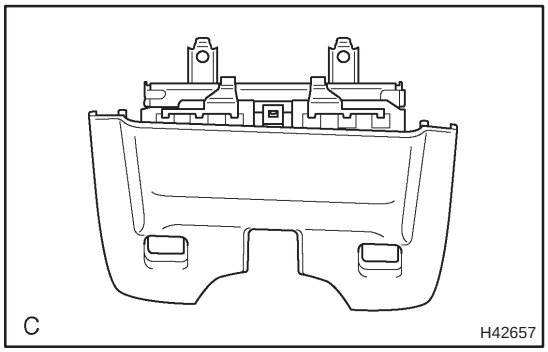

10. INSTRUMENT PANEL AIRBAG ASSY (VEHICLE INVOLVED IN COLLISION AND AIRBAG IS NOT DEPLOYED)

(a) Do a diagnostic system check (See page 05–1184).

(b) Do a visual check of the instrument panel airbag assy removed from the vehicle:

- Cuts, minute cracks or marked discoloration on the instrument panel airbag assy.

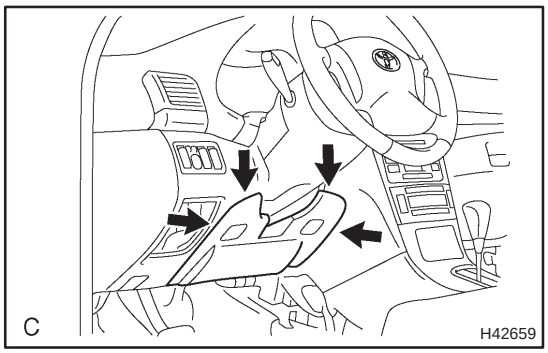

HINT:

- Never repair it in order for reuse or replacement.
- There should be no interference between the horn button assy and steering wheel assy, and the clearance should be uniform all the around when the new horn button assy is installed on the steering wheel assy.

CAUTION:

For removal and installation procedures of the horn button assy, see "Replacement" on page 60–54, and be sure to follow the correct procedure.

11. AIRBAG SENSOR ASSY CENTER (VEHICLE NOT INVOLVED IN COLLISION)

(a) Do a diagnostic system check (See page 05–1184).

12. AIRBAG SENSOR ASSY CENTER (VEHICLE INVOLVED IN COLLISION AND AIRBAG IS NOT DEPLOYED)

(a) Do a diagnostic system check (See page 05–1184).

13. AIRBAG SENSOR ASSY CENTER (VEHICLE INVOLVED IN COLLISION AND AIRBAG IS DEPLOYED)

(a) Replace the airbag sensor assy center (See page 60–62).

14. AIRBAG FRONT SENSOR (VEHICLE NOT INVOLVED IN COLLISION)

(a) Do a diagnostic system check (See page 05–1184).

15. AIRBAG FRONT SENSOR (VEHICLE INVOLVED IN COLLISION)

(a) Do a diagnostic system check (See page 05–1184).

(b) When the headlamp of the vehicle or its periphery is damaged, check if there is any damage to the airbag front sensor. If there are any defects as mentioned below, replace the airbag front sensor with a new one:

If there are any defects as mentioned below, replace the airbag front sensor with a new one:

- Cracks, dents or chips in the case.
- Cracks, dents, chips and scratches in the connector.
- Peeling off of the label or damage to the serial number.

16. AIRBAG FRONT SENSOR (VEHICLE INVOLVED IN COLLISION AND AIRBAG IS DEPLOYED)

(a) Replace the airbag front sensor assy (See page 60–64).

17. SIDE AIRBAG SENSOR ASSY (VEHICLES NOT INVOLVED IN COLLISION)

(a) Do a diagnostic system check (See page 05–1184).

18. SIDE AIRBAG SENSOR ASSY (VEHICLE INVOLVED IN COLLISION AND AIRBAG IS NOT DEPLOYED)

(a) Do a diagnostic system check (See page 05–1184).

(b) When the center pillar of the vehicle or its periphery is damaged, check if there is any damage to the side airbag sensor. If there are any defects as mentioned below, replace the side airbag sensor with a new one:

If there are any defects as mentioned below, replace the side airbag sensor with a new one:

- Cracks, dents or chips in the case.
- Cracks, dents, chips and scratches in the connector.
- Peeling off of the label or damage to the serial number.

19. SIDE AIRBAG SENSOR ASSY (VEHICLE INVOLVED IN COLLISION AND AIRBAG IS DEPLOYED)

(a) Replace the front seat airbag assy and side airbag sensor assy (See page 60–66).

20. AIRBAG SENSOR REAR (VEHICLE NOT INVOLVED IN COLLISION)

(a) Do a diagnostic system check (See page 05–1184).

21. AIRBAG SENSOR REAR (VEHICLE INVOLVED IN COLLISION AND AIRBAG IS NOT DEPLOYED)

(a) Do a diagnostic system check (See page 05–1184).

(b) When the quarter panel of the vehicle or its periphery is damaged, check if there is any damage to the airbag sensor rear. If there are any defects as mentioned below, replace the airbag sensor rear with a new one:

If there are any defects as mentioned below, replace the airbag sensor rear with a new one:

- Cracks, dents or chips in the case.
- Cracks, dents, chips and scratches in the connector.
- Peeling off of the label or damage to the serial number.

22. AIRBAG SENSOR REAR (VEHICLE INVOLVED IN COLLISION AND AIRBAG IS DEPLOYED)

(a) Replace the curtain shield airbag assy and airbag sensor rear (See page 60–68).

23. SEAT POSITION AIRBAG SENSOR (VEHICLES NOT INVOLVED IN COLLISION)

(a) Do a diagnostic system check (See page 05–1184).

24. SEAT POSITION AIRBAG SENSOR (VEHICLE INVOLVED IN COLLISION)

(a) Do a diagnostic system check (See page 05–1184).

(b) Do a visual check for damage to the seat position airbag sensor even if the airbag was not deployed:

- Cracks, dents or chips in the case.
- Cracks, dents, chips and scratches in the connector.

25. WIRE HARNESS AND CONNECTOR (VEHICLE NOT INVOLVED IN COLLISION)

(a) Do a diagnostic system check (See page 05–1184).

26. WIRE HARNESS AND CONNECTOR (VEHICLE INVOLVED IN COLLISION)

(a) Do a diagnostic system check (See page 05–1184).

(b) Check for breaks in all wires of the SRS wire harness, and exposed conductors.

(c) Check to see if the SRS wire harness connectors are cracked or chipped.

HINT:

The SRS wire harness is integrated with the engine room main wire, instrument panel wire floor wire, floor wire No.2 harness assembly.

STEERING WHEEL ASSY

COMPONENTS

6009O–06

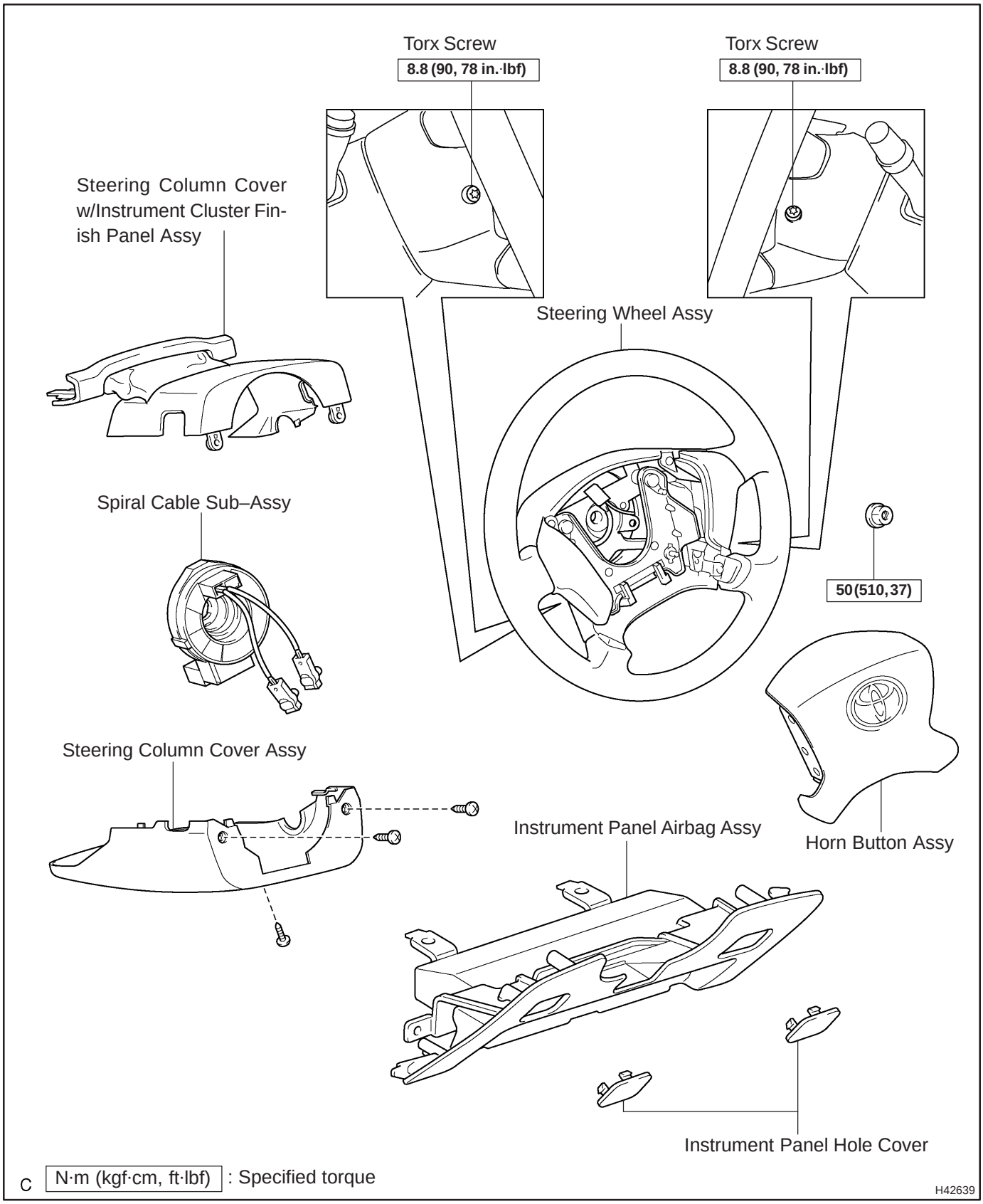

6009P–04

REPLACEMENT

1. PRECAUTION (See page 60–1)
2. DISCONNECT BATTERY NEGATIVE TERMINAL (See page 60–1)

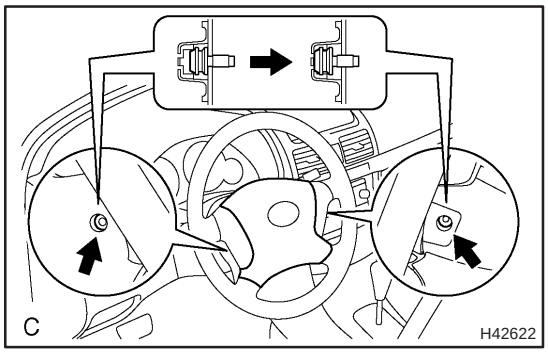

3. REMOVE HORN BUTTON ASSY

(a) Place the front wheels facing straight ahead.

(b) Using a torx socket wrench (T30), loosen the 2 torx screws until the groove along the screw circumference catches on the screw case.

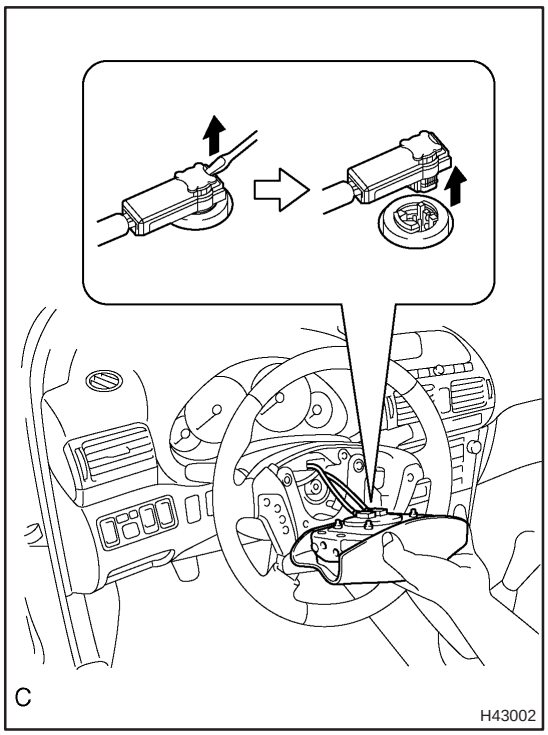

(c) Pull out the horn button assy from the steering wheel assy and support the horn button assy with one hand as shown in the illustration.

NOTICE:

When removing the horn button assy, do not pull the airbag wire harness.

(d) Using a screwdriver, disconnect the airbag connectors.

(e) Disconnect the horn connector.

(f) Remove the horn button assy.

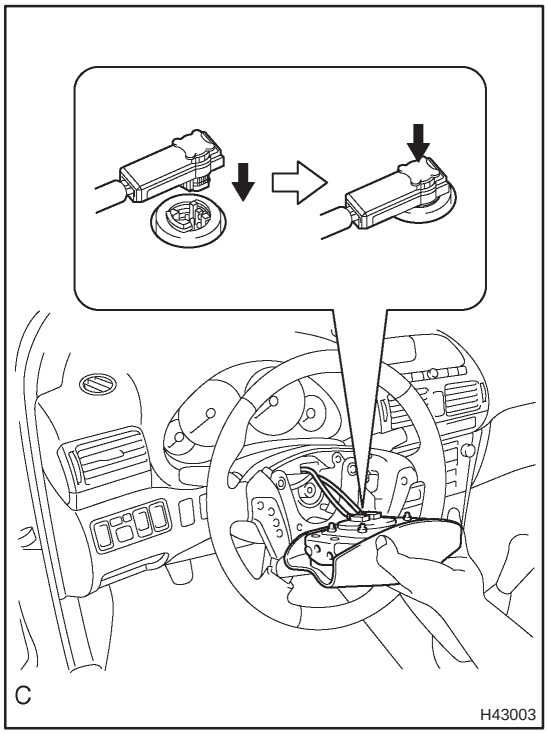

4. INSTALL HORN BUTTON ASSY

(a) Support the horn button assy with the hand as shown in the illustration.

(b) Connect the airbag connectors.

(c) Connect the horn connector.

(d) Confirm that the circumference groove of the torx screw fits in the screw case, and place the horn button assy onto the steering wheel assy.

(e) Using a torx socket wrench (T 30), install the 2 screws.
Torque: 8.8 N·m (90 kgf·cm, 78 in.·lbf)

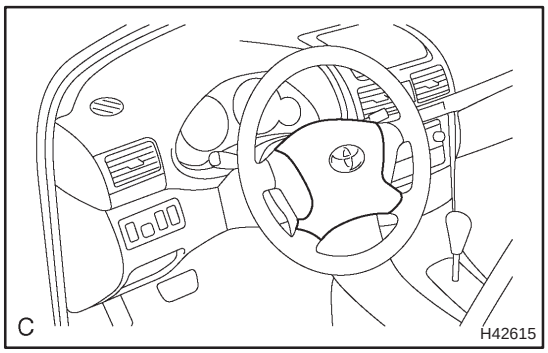

5. INSPECT HORN BUTTON ASSY (See page 60–11)

(a) Do a visual check which includes the following items with the horn button assy installed in the vehicle:
Cuts, minute cracks or marked discoloration on the horn button assy top surface and in the grooved portion.

6. INSPECT SRS WARNING LIGHT (See page 05–1184)

600JW–01

DISPOSAL

HINT:

When scrapping a vehicle equipped with the SRS or disposing of a horn button assy, be sure to deploy the airbag first in accordance with the procedure described below. If any abnormality occurs with the airbag deployment, contact the SERVICE DEPT. of TOYOTA MOTOR SALES, U.S.A., INC.

CAUTION:

- **Never dispose of the horn button assy that has an undeployed airbag.**
- **The airbag produces an extremely exploding sound when it is deployed, so perform the operation outdoors and where it will not create a nuisance to nearby residents.**

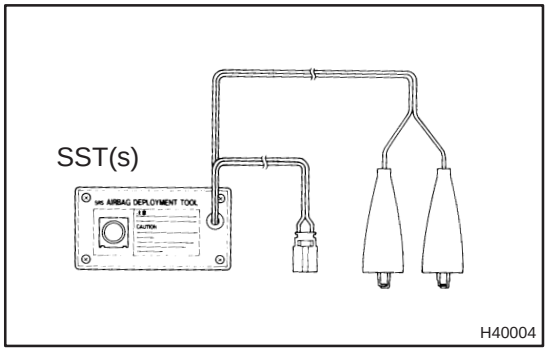

- **When deploying the airbag, always use the specified SST(s) (SRS Airbag Deployment Tool). Perform the operation in a place away from electrical noise.**
- **When deploying the airbag, perform the operation at least 10 m (33 ft) away from the horn button assy.**
- **The horn button assy is extremely hot when the airbag is deployed, so do not touch it for at least 30 minutes after deployment.**
- **Use gloves and safety glasses when handling the horn button assy with the deployed airbag.**
- **Do not apply water, etc. to the horn button assy with the deployed airbag.**
- **Always wash your hands with water after completing the operation.**

1. DISPOSE OF HORN BUTTON ASSY (WHEN SCRAPPING VEHICLE DEPLOYMENT METHOD)

HINT:

Prepare a battery as the power source to deploy the airbag.

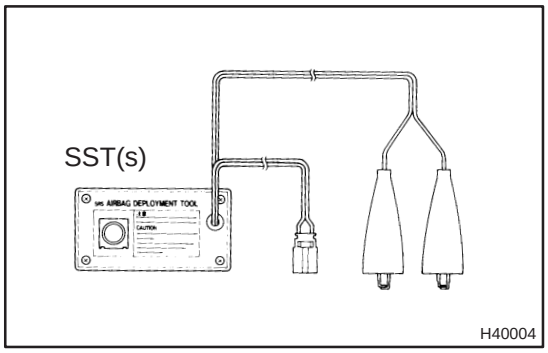

(a) Check the function of the SST(s).

CAUTION:

When deploying the airbag, always use the specified SST(s): SRS Airbag Deployment Tool.

SST 09082–00700

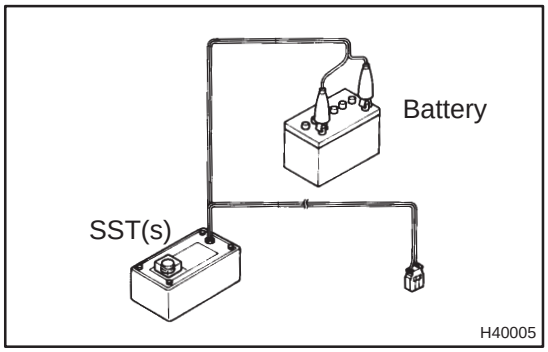

(1) Connect the SST(s) to the battery.
Connect the red clip of the SST(s) to the battery positive (+) terminal and the black clip of the SST(s) to the battery negative (–) terminal.

HINT:
Do not connect the yellow connector of the SST(s) which is to be connected with the supplemental restraint system.

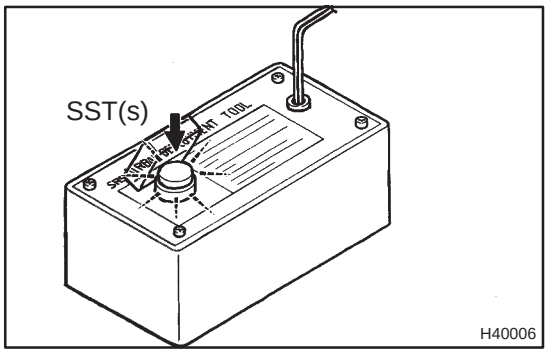

(2) Check the function of the SST(s).
Press the SST(s) activation switch, and check that the LED of the SST(s) activation switch comes on.

CAUTION:
If the LED comes on when the activation switch is not being pressed, SST(s) malfunction is posible, so be sure not to use the SST(s).

(3) Disconnect the SST(s) from the battery.

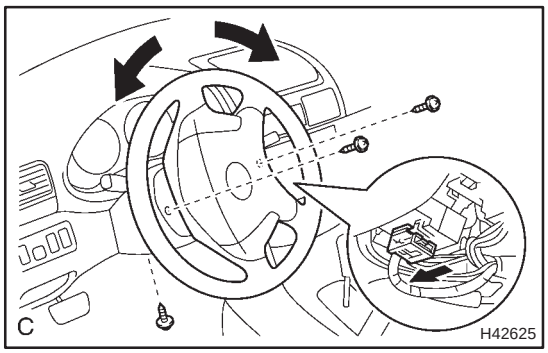

(b) Install the SST(s).

CAUTION:
Check that there is no looseness in the steering wheel assy and horn button assy.

(1) Remove the instrument panel hole (See page 60–54).

(2) Remove the instrument panel airbag assy (See page 60–54).

(3) While turning the steering wheel right and left, remove the 3 screws and steering column cover.

(4) Disconnect the airbag connector of the spiral cable sub–assy.

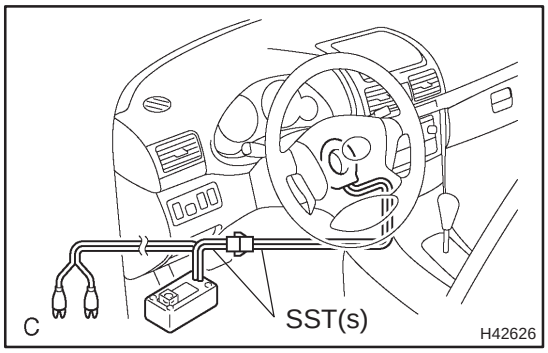

(5) Connect the connector of the SST(s) to the airbag connector of the spiral cable sub–assy.

SST 09082–00700, 09082–00780

NOTICE:
To avoid damaging the SST(s) connector and wire harness, do not lock the secondary lock of the twin lock.

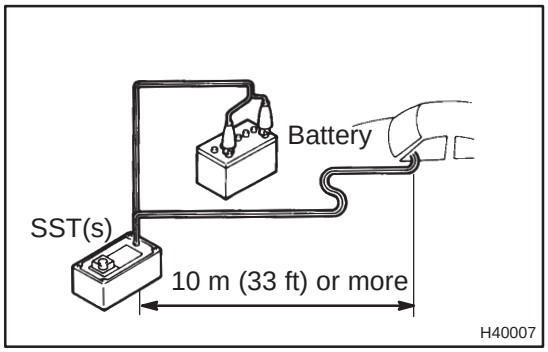

(6) Move the SST(s) at least 10 m (33 ft) away from the front of the vehicle.

(7) Close all the doors and windows in the vehicle.

NOTICE:

Take care not to damage the SST(s) wire harness.

(8) Connect the red clip of the SST(s) to the battery positive (+) terminal and the black clip of the SST(s) to the negative (–) terminal.

(c) Deploy the airbag.

(1) Check that no one is inside the vehicle or within a 10 m (33 ft) radius of the vehicle.

(2) Press the activation switch of the SST(s) and deploy the airbag.

HINT:

The airbag is deployed as the LED of the SST(s) activation switch comes on.

(d) Dispose of the horn button assy.

CAUTION:

- **The horn button assy is extremely hot when the airbag is deployed, so do not touch it for at least 30 minutes after deployment.**
- **When moving the vehicle which has the horn button assy with the deployed airbag for scrapping, use gloves and safety glasses.**
- **Use gloves and safety glasses when handling the horn button assy with the deployed airbag.**
- **Always wash your hands with water after completing the operation.**
- **Do not apply water, etc. to the horn button assy with the deployed airbag.**

HINT:

When scrapping a vehicle, deploy the airbag and scrap the vehicle with the horn button assy still installed.

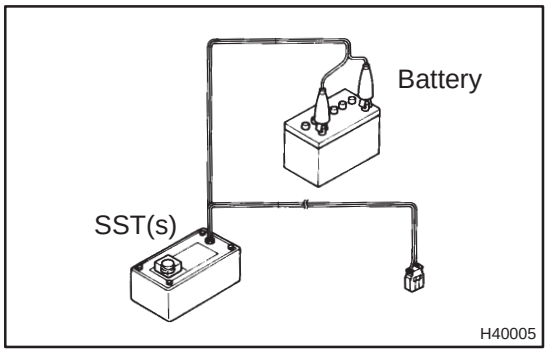

2. DISPOSE OF HORN BUTTON ASSY (WHEN DISPOSING OF AIRBAG ASSEMBLY DEPLOYMENT METHOD)

NOTICE:

- **When disposing of the horn button assy only, never use the customer's vehicle to deploy the airbag.**
- **Be sure to follow the procedure detailed below when deploying the airbag.**

HINT:

Have a battery as the power source to deploy the airbag.

(a) Check the function of the SST(s) (See step 1–(a)).

(b) Remove the horn button assy (See page 60–17).

CAUTION:

- **When removing the horn button assy, work must be started 90 seconds after the ignition switch is turned to the "LOCK" position and the negative (–) terminal cable is disconnected from the battery.**
- **When storing the horn button assy, keep the upper surface of the airbag deployment side facing upward.**

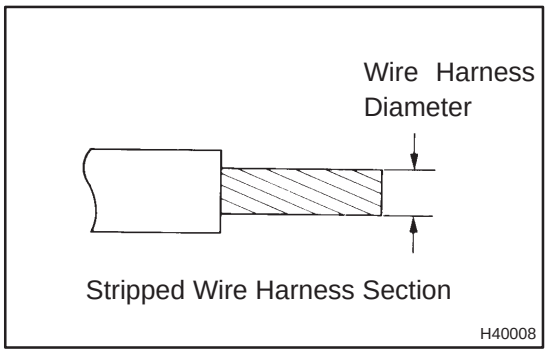

(c) Using a service–purpose wire harness for the vehicle, tie down the horn button assy to the disc wheel.

Wire harness: Stripped wire harness section 1.25 mm^2 or more (0.0019 in^2. or more)

CAUTION:

If a wire harness which is too thin or an alternative object is used to tie down the horn button assy, it may be snapped by the shock when the airbag is deployed. This is highly dangerous. Always use a wire harness for vehicle use which has a diameter of at least 1.25 mm^2 (0.0019 in^2).

HINT:

To calculate the square of the stripped wire harness section:

Square = 3.14 x (Diameter)^2 divided by 4

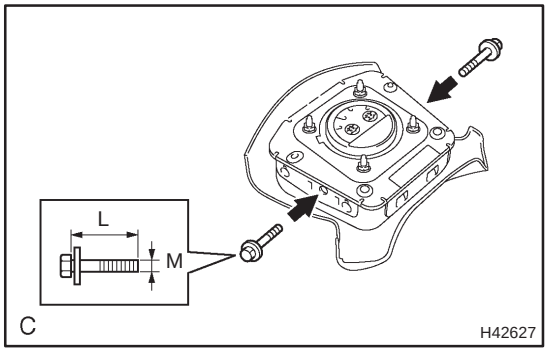

(1) Install the 2 bolts with washers in the 2 bolts holes of the horn button assy.

Bolt:

L: 35.0 mm (1.378 in.)

M: 6.0 mm (0.236 in.)

Pitch: 1.0 mm (0.039 in.)

NOTICE:

- **Tighten the bolts by hand until the bolts become difficult to turn.**
- **Do not tighten the bolts too much.**

(2) After connecting the SST(s) below to each other, connect them to the horn button assy.

SST 09082–00802 (09082–10801, 09082–30801)

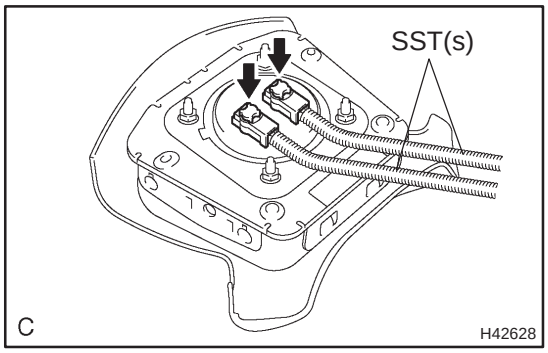

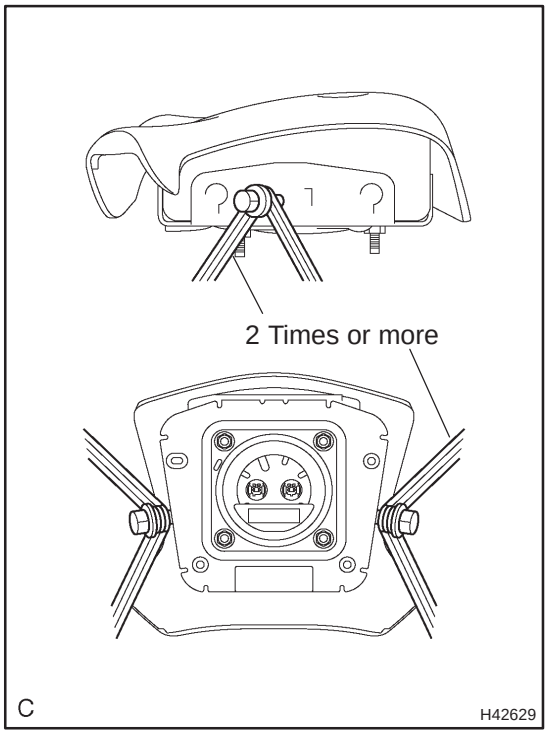

(3) Using 3 wire harnesses, wind each wire harness at least 2 times each around the bolts installed on the left and right sides of the horn button assy.

CAUTION:

- **Tightly wind the wire harness around the bolts so that there is no slack.**
- **If there is slack in the wire harness, the horn button assy may become loose due to the shock when the airbag is deployed. This is highly dangerous.**

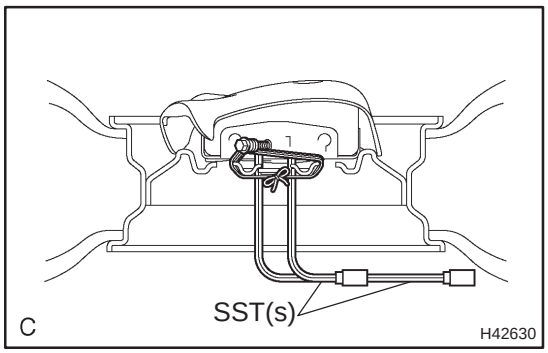

(4) Face the upper surface of the horn button assy upward. Separately tie the left and right sides of the horn button assy to the disc wheel through the hub nut holes. Position the SST(s) connector so that it hangs downward through a hub hole in the disc wheel.

CAUTION:

- **Make sure that the wire harness is tight. It is highly dangerous when looseness in the wire harness results in the horn button assy coming free due to the shock from the airbag deployment.**
- **Always tie down the horn button assy with the pad side facing upward. It is highly dangerous if the horn button assy is tied down with the metal surface facing upward as the wire harness will be cut by the shock caused by the airbag deployment and the horn button assy will be thrown into the air.**

NOTICE:

The disc wheel will be marked by the airbag deployment, so use a redundant disc wheel.

(d) Install the SST(s).

CAUTION:

Place the disc wheel on the level ground.

(1) Connect the connector of the SST(s).

SST 09082–00700

NOTICE:

To avoid damaging the SST(s) connector and wire harness, do not lock the secondary lock of the twin lock. Also, secure some slack for the SST(s) wire harness inside the disc wheel.

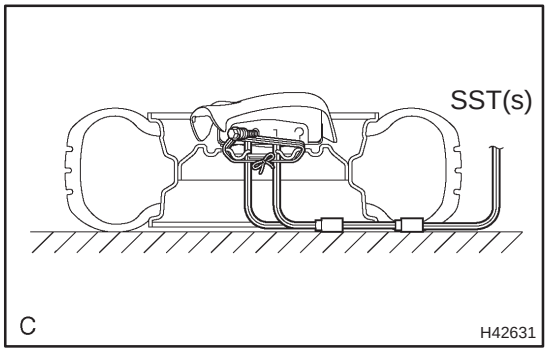

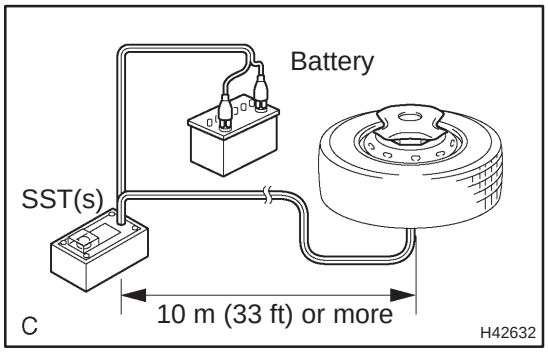

(2) Move the SST(s) to at least 10 m (33 ft) away from the horn button assy tied down to the disc wheel.

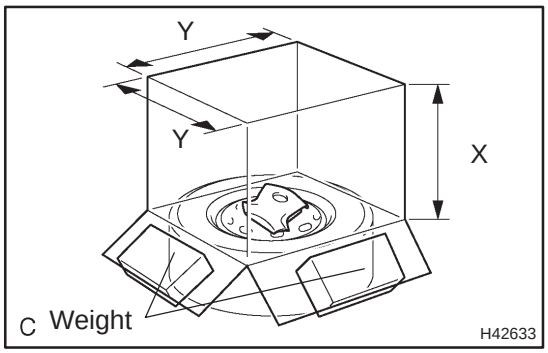

(e) Cover the horn button assy with a cardboard box or tires.

- Covering method using a cardboard box:
  Cover the horn button assy with the cardboard box and weigh the cardboard box down in 4 places with at least 190 N (20 kg, 44 lb).

Size of cardboard box:
Must exceed the following dimensions:
X = 460 mm (18.11 in.)
Y = 650 mm (25.59 in.)

NOTICE:

- **When the dimension Y of the cardboard box exceeds the diameter of the disc wheel with tire to which the horn button assy is tied, X should be the following size.**
  X = 460 mm (18.11 in.) + width of tire
- **If a cardboard box smaller than the specified size is used, the cardboard box will be broken by the shock from the airbag deployment.**

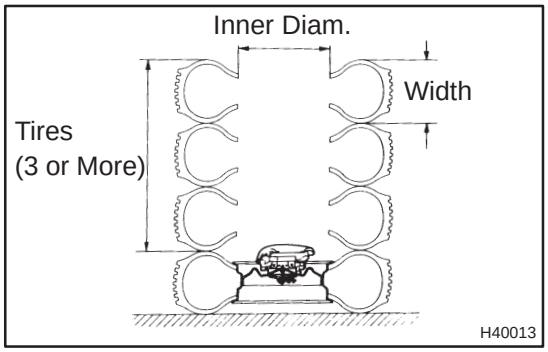

- Covering method using tires:
  Place at least 3 tires with no disc wheels on top of the tire with disc wheel to which the horn button assy is tied.

Tire size: Must exceed the following dimensions
Width: 185 mm (7.28 in.)
Inner diameter: 360 mm (14.17 in.)

CAUTION:
Do not use tires with disc wheels.

NOTICE:

- **The tires may be marked by the airbag deployment, so use a redundant tires.**
- **Do not place the SST(s) connector under the tire because the SST(s) connector could be damaged.**

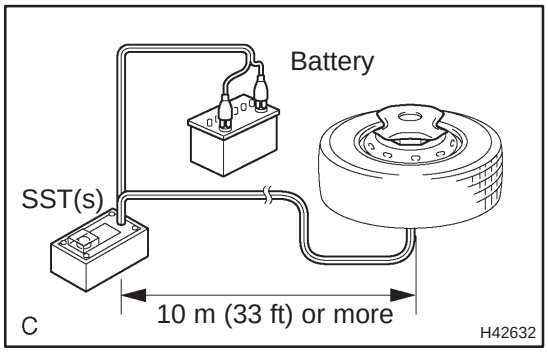

(f) Deploy the airbag.
(1) Connect the red clip of the SST(s) to the battery positive (+) terminal and the black clip of the SST(s) to the battery negative (–) terminal.
(2) Check that no one is within a 10 m (33 ft) radius of the disc wheel which the horn button assy is tied to.
(3) Press the activation switch of the SST(s) and deploy the airbag.

HINT:
The airbag is deployed as the LED of the SST(s) activation switch comes on.

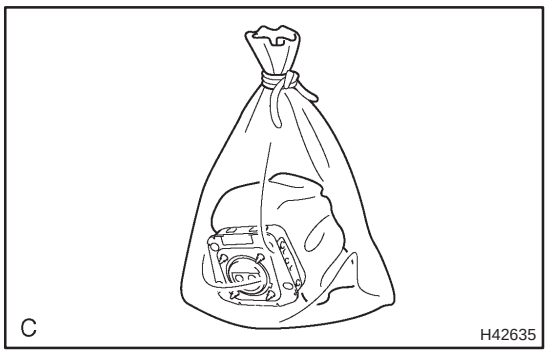

(g) Dispose of the horn button assy.

CAUTION:
- **The horn button assy is extremely hot when the airbag is deployed, so do not touch it for at least 30 minutes after deployment.**
- **Use gloves and safety glasses when handling the horn button assy with the deployed airbag.**
- **Do not apply water, etc. to the horn button assy with the deployed airbag.**
- **Always wash your hands with water after completing the operation.**

(1) Remove the horn button assy from the disc wheel.
(2) Place the horn button assy in a plastic bag, tie the end tightly and dispose of it as other general parts disposal.

SPIRAL CABLE SUB–ASSY

6009S–04

REPLACEMENT

HINT:

COMPONENTS: See page 60–16

1. **PRECAUTION (See page 60–1)**
2. **DISCONNECT BATTERY NEGATIVE TERMINAL (See page 60–1)**
3. **PLACE FRONT WHEELS FACING STRAIGHT AHEAD**
4. **REMOVE HORN BUTTON ASSY (See page 60–17)**
5. **REMOVE STEERING WHEEL ASSY (See page 50–9)**
   SST 09950–50013 (09951–05010, 09952–05010, 09953–05020, 09954–05021)
6. **REMOVE INSTRUMENT PANEL HOLE COVER (See page 60–54)**
7. **REMOVE INSTRUMENT PANEL AIR BAG ASSY (See page 60–54)**

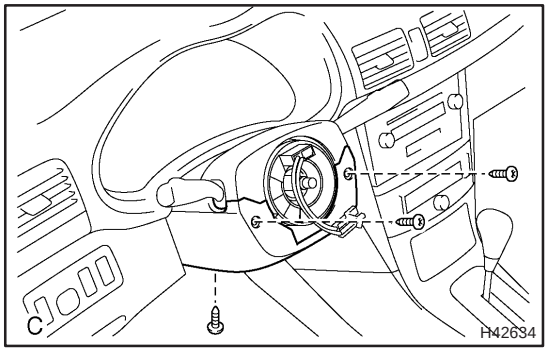

8. **REMOVE STEERING COLUMN COVER SUB–ASSY LOWER**

(a) Remove the 3 screws and the steering column cover sub–assy lower.

9. **REMOVE STEERING COLUMN COVER W/INSTRUMENT CLUSTER FINISH PANEL ASSY**

(a) Remove the steering column cover w/instrument cluster finish panel assy.

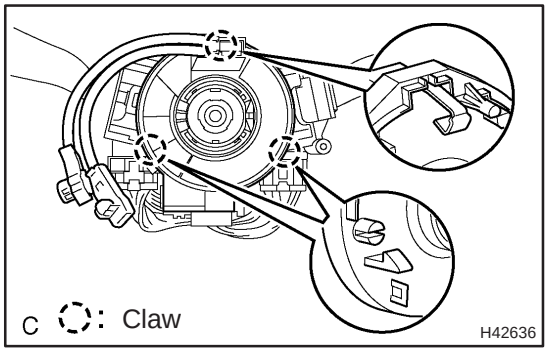

10. **REMOVE SPIRAL CABLE SUB–ASSY**

(a) Disconnect the airbag connector and the connector from the spiral cable sub–assy.

(b) Disengage the 3 claws and remove the spiral cable sub–assy.

11. **INSPECT SPIRAL CABLE SUB–ASSY (See page 60–11)**

(a) If the following condition is identified, replace the spiral cable sub–assy with a new one.
Condition:
Scratches or cracks on the connector
Cracks, dents or chips in the spiral cable sub–assy

12. **PLACE FRONT WHEELS FACING STRAIGHT AHEAD**

(a) Check that the front wheels are facing straight ahead.

13. INSTALL SPIRAL CABLE SUB–ASSY

(a) Set the turn signal switch to the neutral position.

NOTICE:

Make sure of the neutral position since the pin of the turn signal switch may be snapped.

(b) Install the spiral cable sub–assy.

NOTICE:

When replacing the spiral cable sub–assy with a new one, remove the lock pin before installing the steering wheel assy.

(c) Connect the airbag connector and the connector.

(d) Install the steering column cover with the 3 screws.

14. ADJUST SPIRAL CABLE SUB–ASSY

(a) Check that the ignition switch is off.

(b) Check that the battery negative terminal is disconnected.

NOTICE:

Do not start the operation for 90 seconds after removing the terminal.

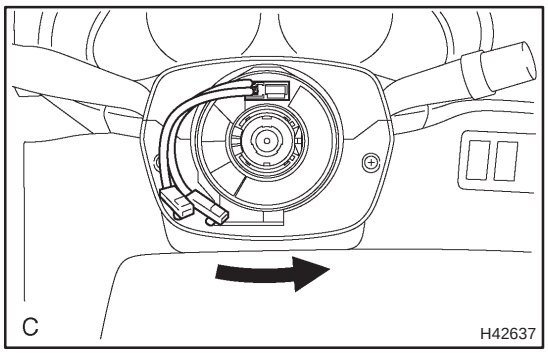

(c) Turn the spiral cable sub–assy counterclockwise slowly by hand until it feels firm.

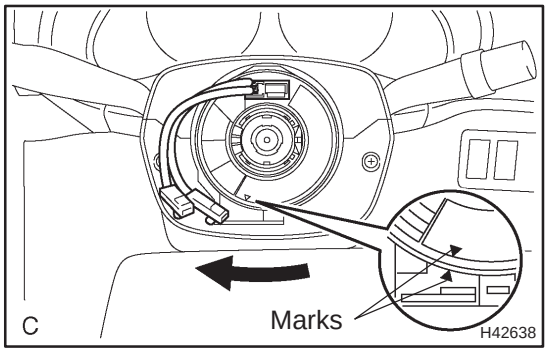

(d) Then rotate the spiral cable sub–assy clockwise about 2.5 turns to align the marks.

HINT:

The spiral cable sub–assy will rotate about 2.5 turns to both left and right of the center.

15. INSTALL STEERING COLUMN COVER SUB–ASSY LOWER (See page 50–9)

16. INSTALL INSTRUMENT PANEL AIR BAG ASSY (See page 60–54)

17. INSTALL STEERING WHEEL ASSY (See page 50–9)

18. INSPECT STEERING WHEEL CENTER POINT

19. INSTALL HORN BUTTON ASSY (See page 60–17)

20. INSPECT HORN BUTTON ASSY (See page 60–11)

21. INSPECT SRS WARNING LIGHT (See page 05–1184)

INSTRUMENT PANEL PASSENGER AIR BAG ASSY

600JX–01

COMPONENTS

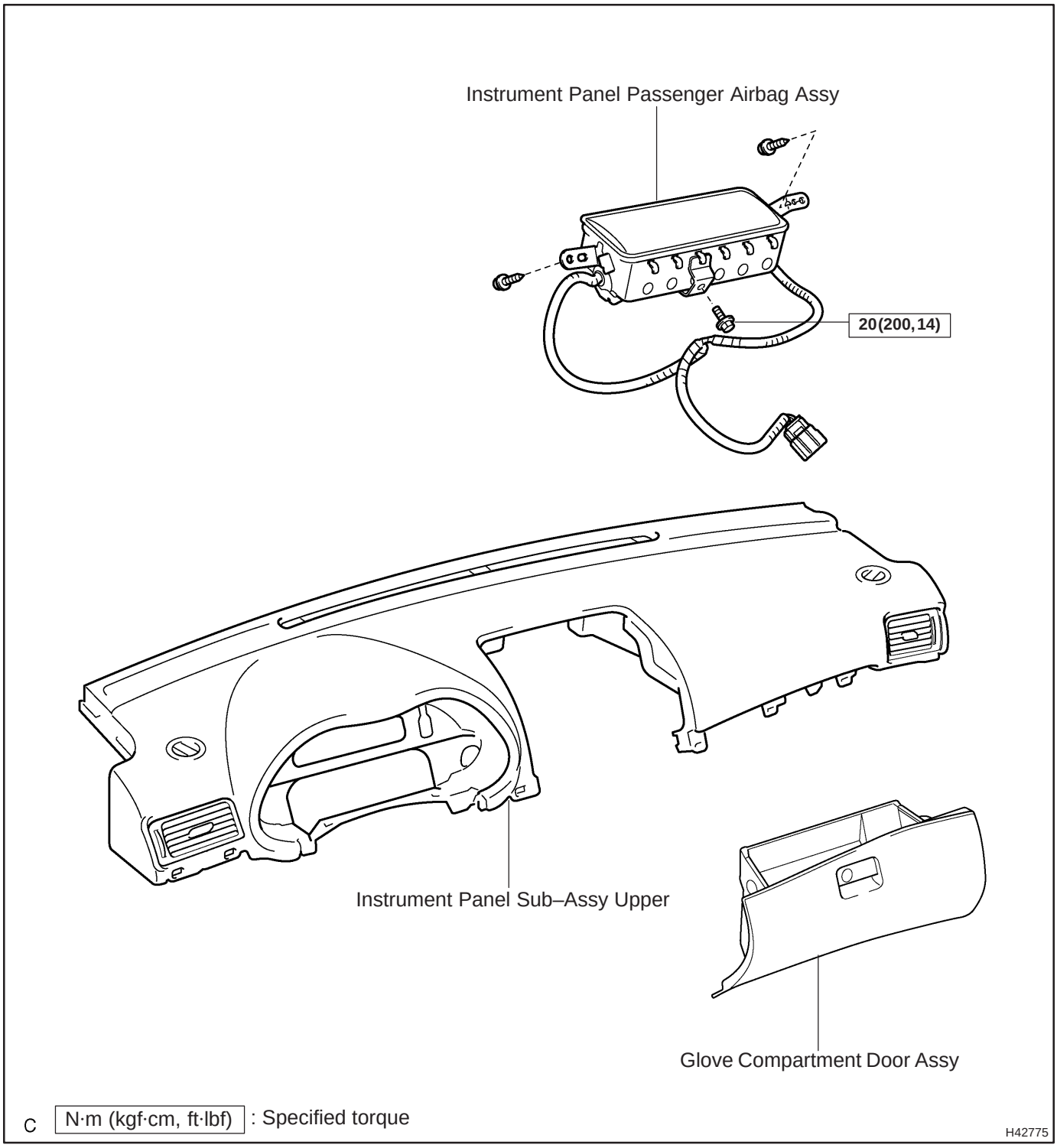

REPLACEMENT

1. PRECAUTION (See page 60–1)
2. DISCONNECT BATTERY NEGATIVE TERMINAL (See page 60–1)
3. REMOVE GLOVE COMPARTMENT DOOR ASSY (See page 71–11)

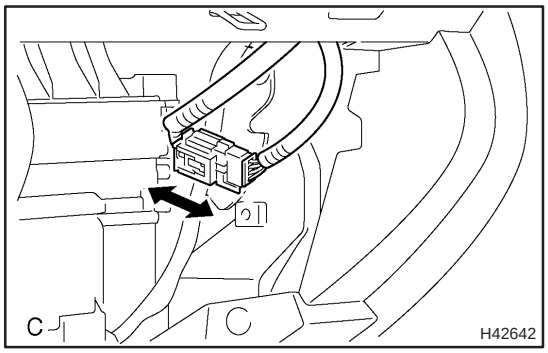

4. DISCONNECT PASSENGER AIRBAG CONNECTOR
(a) Remove the passenger airbag connector clip.
(b) Disconnect the passenger airbag connector.

5. REMOVE INSTRUMENT PANEL SUB–ASSY UPPER W/INSTR PNL PASS L/DOOR AIR BAG ASSY (See page 71–11)

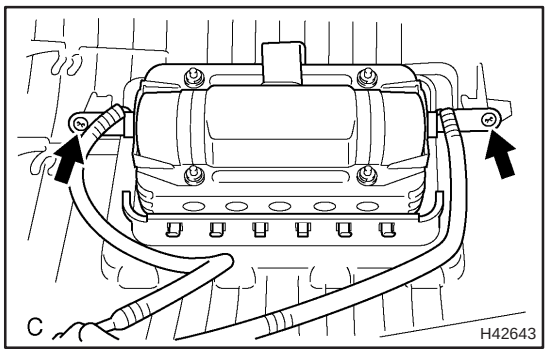

6. REMOVE INSTRUMENT PANEL PASSENGER AIR BAG ASSY
(a) Remove the 2 screws.

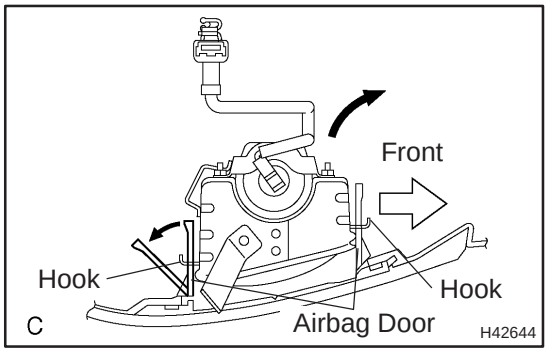

(b) Release the rear side wall of the airbag door from the hook by slightly deflecting it and roll the instrument panel passenger airbag assy forward.
(c) Release the front side wall of the airbag door from the other hook and remove the instrument panel passenger airbag assy.

7. INSTALL INSTRUMENT PANEL PASSENGER AIR BAG ASSY
8. INSPECT INSTRUMENT PANEL PASSENGER AIR BAG ASSY (See page 60–11)
9. INSTALL INSTRUMENT PANEL SUB–ASSY UPPER W/INSTR PNL PASS L/DOOR AIR BAG ASSY (See page 71–11)
10. INSPECT SRS WARNING LIGHT (See page 05–1184)

600JZ–01

DISPOSAL

HINT:

When scrapping a vehicle equipped with SRS or disposing of an instrument panel passenger airbag assy, be sure to deploy the airbag first in accordance with the procedure described below. If any abnormality occurs with the airbag deployment, contact the SERVICE DEPT. of TOYOTA MOTOR SALES, U.S.A., INC.

CAUTION:

- **Never dispose of the instrument panel passenger assy that has an undeployed airbag.**
- **The airbag produces an extremely exploding sound when it is deployed, so perform the operation outdoors and where it will not create a nuisance to nearby residents.**

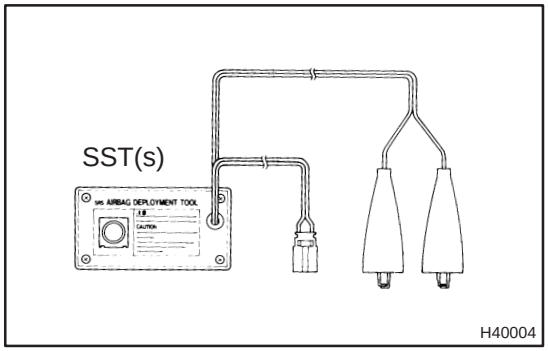

- **When deploying the airbag, always use the specified SST(s) (SRS Airbag Deployment Tool). Perform the operation in a place away from electrical noise.**
- **When deploying the airbag, perform the operation at least 10 m (33 ft) away from the instrument panel passenger airbag assy.**
- **The instrument panel passenger airbag assy is extremely hot when the airbag is deployed, so do not touch it for at least 30 minutes after deployment.**
- **Use gloves and safety glasses when handling the instrument panel passenger airbag assy with the deployed airbag.**
- **Do not apply water, etc. to the instrument panel passenger airbag assy with the deployed airbag.**
- **Always wash your hands with water after completing the operation.**

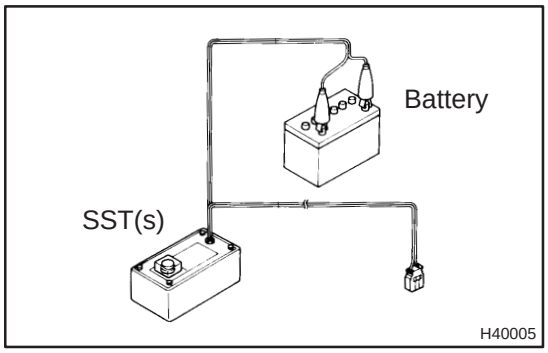

1. DISPOSE OF INSTRUMENT PANEL PASSENGER AIR BAG ASSY (WHEN SCRAPPING VEHICLE DEPLOYMENT METHOD)

HINT:

Prepare a battery as the power source to deploy the airbag.

(a) Check functioning of the SST(s) (See step 1–(a) on page 60–19).

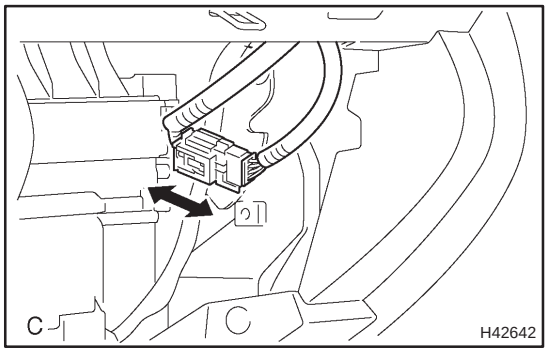

(b) Disconnect the airbag connector.

(1) Remove the glove compartment door assy (See step 71–11).

NOTICE:

When handling the airbag connector, take care not to damage the airbag wire harness.

(2) Disconnect the airbag connector.

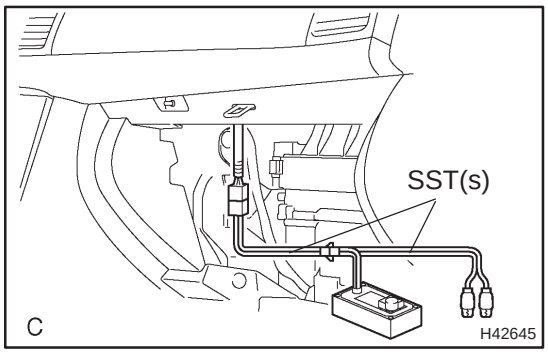

(c) Install the SST(s).

(1) Connect the connector of the SST(s) to the instrument panel passenger airbag assy connector.

SST 09082–00700, 09082–00780

NOTICE:

To avoid damaging the SST(s) connector and wire harness, do not lock the secondary lock of the twin lock.

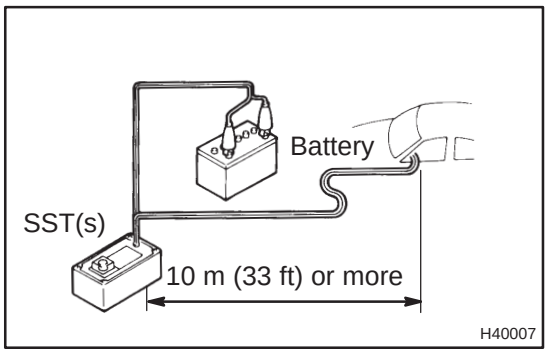

(2) Move the SST(s) to at least 10 m (33 ft) away from the front of the vehicle.

(3) Close all the doors and windows in the vehicle.

NOTICE:

Take care not to damage the SST(s) wire harness.

(4) Connect the red clip of the SST(s) to the battery positive (+) terminal and the black clip of the SST(s) to the negative (–) terminal.

(d) Deploy the airbag.
(1) Check that no one is inside the vehicle or within a 10 m (33 ft) radius of the vehicle.
(2) Press the activation switch of the SST(s) and deploy the airbag.

HINT:
The airbag is deployed as the LED of the SST(s) activation switch comes on.

(e) Dispose of the instrument panel passenger airbag assy.

CAUTION:
- **The instrument panel passenger airbag assy is extremely hot when the airbag is deployed, so do not touch it for at least 30 minutes after deployment.**
- **Use gloves and safety glasses when handling the instrument panel passenger airbag assy with the deployed airbag.**
- **When moving the vehicle for scrapping which has the instrument panel passenger airbag assy with the deployed airbag, use gloves and safety glasses.**
- **Do not apply water, etc. to the instrument panel passenger airbag assy with the deployed airbag.**
- **Always wash your hands with water after completing the operation.**

HINT:
When scrapping a vehicle, deploy the airbag and scrap the vehicle with the instrument panel passenger airbag assy still installed.

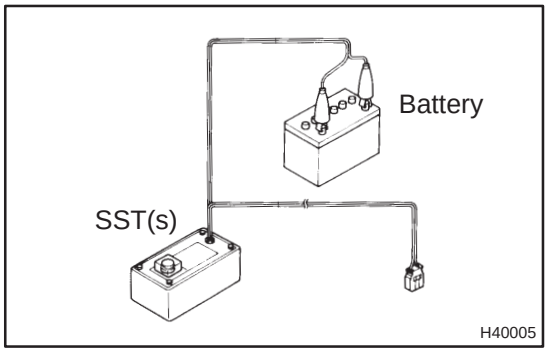

2. DISPOSE OF INSTRUMENT PANEL PASSENGER AIR BAG ASSY (WHEN DISPOSING OF AIRBAG ASSEMBLY DEPLOYMENT METHOD)

NOTICE:
- **When disposing of the instrument panel passenger airbag assy only, never use the customer's vehicle to deploy the airbag.**
- **Be sure to follow the procedure detailed below when deploying the airbag.**

HINT:
Prepare a battery as the power source to deploy the airbag.

(a) Check the function of the SST(s) (See step 1–(a) on page 60–19).

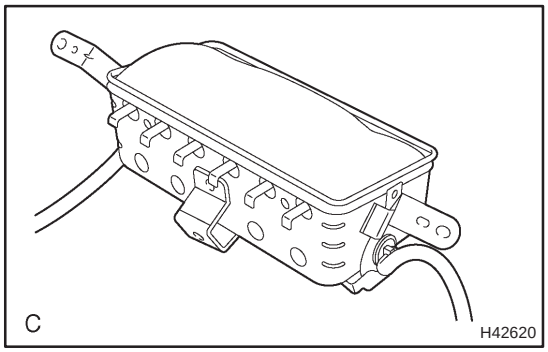

(b) Remove the instrument panel passenger airbag assy (See page 60–29).

CAUTION:

- **When removing the instrument panel passenger airbag assy, work must be started 90 seconds after the ignition switch is turned to the "LOCK" position and the negative (–) terminal cable is disconnected from the battery.**
- **When storing the instrument panel passenger airbag assy, keep the upper surface of the airbag deployment side facing upward.**

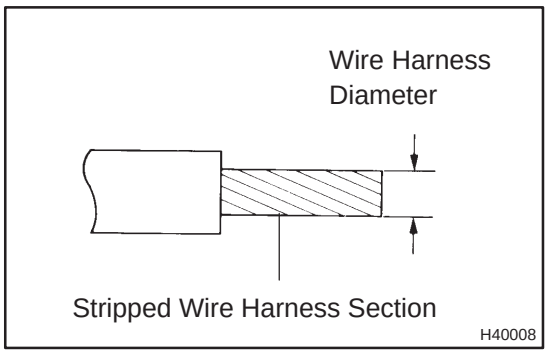

(c) Using a service–purpose wire harness for the vehicle, tie down the instrument panel passenger airbag assy to the tire.

Wire harness: Stripped wire harness section 1.25 mm^2 or more (0.0019 $in.^2$ or more)

CAUTION:

If a wire harness which is too thin or an alternative object is used to tie down the instrument panel passenger airbag assy, it may be snapped by the shock when the airbag is deployed. This is highly dangerous. Always use a wire harness for vehicle use which has a diameter of at least 1.25 mm^2 (0.0019 $in.^2$).

HINT:

- To calculate the square of the stripped wire harness section:
  Square = 3.14 x $(Diameter)^2$ divided by 4
- Position the instrument panel passenger airbag assy inside the tire with the airbag deployment side facing inside.
  Tire size: Must exceed the following dimensions
  Width: 185 mm (7.28 in.)
  Inner diameter: 360 mm (14.17 in.)

CAUTION:

- **Make sure that the wire harness is tight. It is highly dangerous when looseness in the wire harness results in the instrument panel passenger airbag assy coming free due to the shock from the airbag deployment.**
- **Always tie down the instrument panel passenger airbag assy with the airbag deployment side facing inside the tire.**

NOTICE:
The tire will be marked by the airbag deployment, so use a redundant tire.

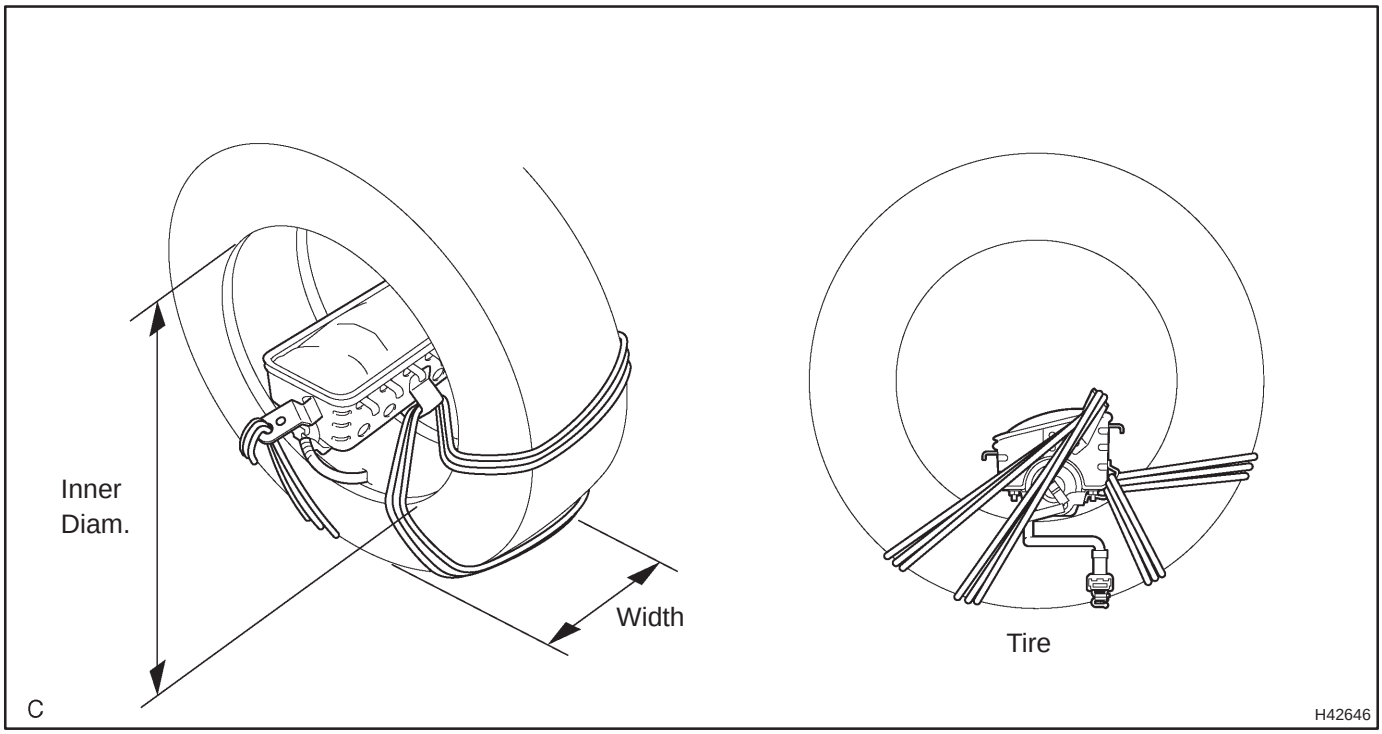

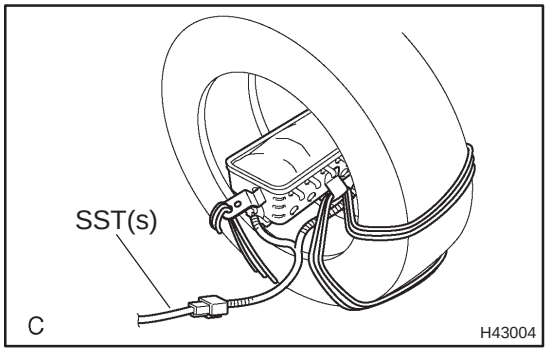

(d) Install the SST(s).
Connect the connector of the SST(s) to the instrument panel passenger airbag assy.
SST 09082–00780

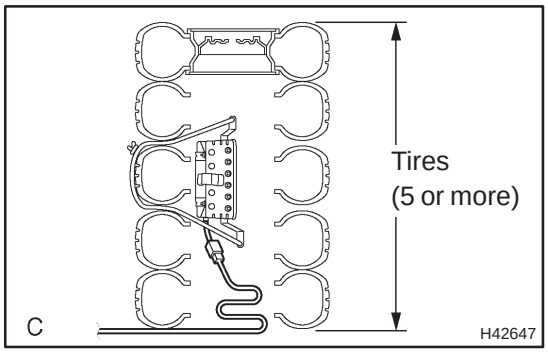

(e) Place tires.
(1) Place at least 2 tires under the tire to which the instrument panel passenger airbag assy is tied.
(2) Place at least 2 tires over the tire to which the instrument panel passenger airbag assy is tied. The top tire should have the disc wheel installed.

NOTICE:
Do not place the SST(s) connector under the fire because the SST connector could be damaged.

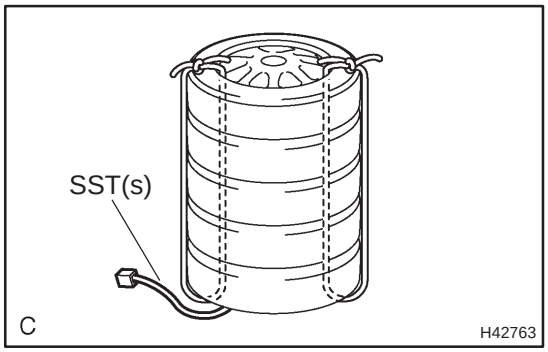

(3) Tie the tires together with 2 wire harnesses.

CAUTION:

Make sure that the wire harness is tight. It is very dangerous when looseness in the wire harness result in the tires coming free due to the shock from the airbag deployment.

HINT:

Place the SST(s) connector and the wire harness inside tires. Secure at least 1 m (3 ft) of slack for the wire harness.

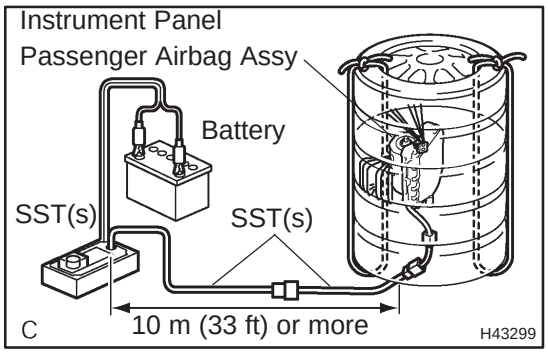

(f) Install the SST(s).

Connect the connector of the SST(s).

SST 09082–00700

NOTICE:

To avoid damaging the SST(s) connector and wire harness, do not lock the secondary lock of the twin lock. Also, secure some slack for the SST(s) wire harness inside the tire.

(g) Deploy the airbag.

(1) Connect the red clip of the SST(s) to the battery positive (+) terminal and the black clip of the SST to the battery negative (–) terminal.

(2) Check that no one is within a 10 m (33 ft) radius of the tire to which the instrument panel passenger airbag assy is tied.

(3) Press the activation switch of the SST(s) and deploy the airbag.

HINT:

The airbag is deploys as the LED of the SST(s) activation switch comes on.

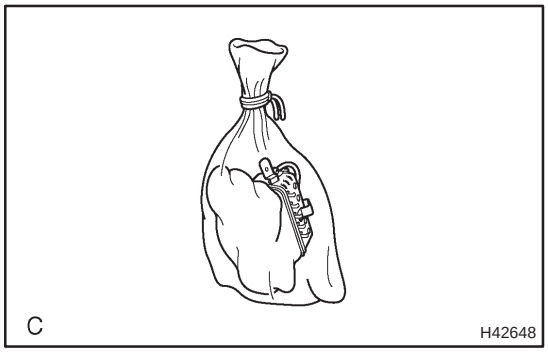

(h) Dispose of the instrument panel passenger airbag assy.

CAUTION:

- **The instrument panel passenger airbag assy is very hot when the airbag is deployed, so leave it alone for at least 30 minutes after deployment.**
- **Use gloves and safety glasses when handling the instrument panel passenger airbag assy with the deployed airbag.**
- **Do not apply water, etc. to the instrument panel passenger airbag assy with the deployed airbag.**
- **Always wash your hands with water after completing the operation.**

(1) Remove the instrument panel passenger airbag assy from the tire.

(2) Place the instrument panel passenger airbag assy in a plastic bag, tie the end tightly and dispose of it in the same way as other general parts disposal.

CURTAIN SHIELD AIR BAG ASSY LH

COMPONENTS

600K0–01

Sedan/Liftback Models:

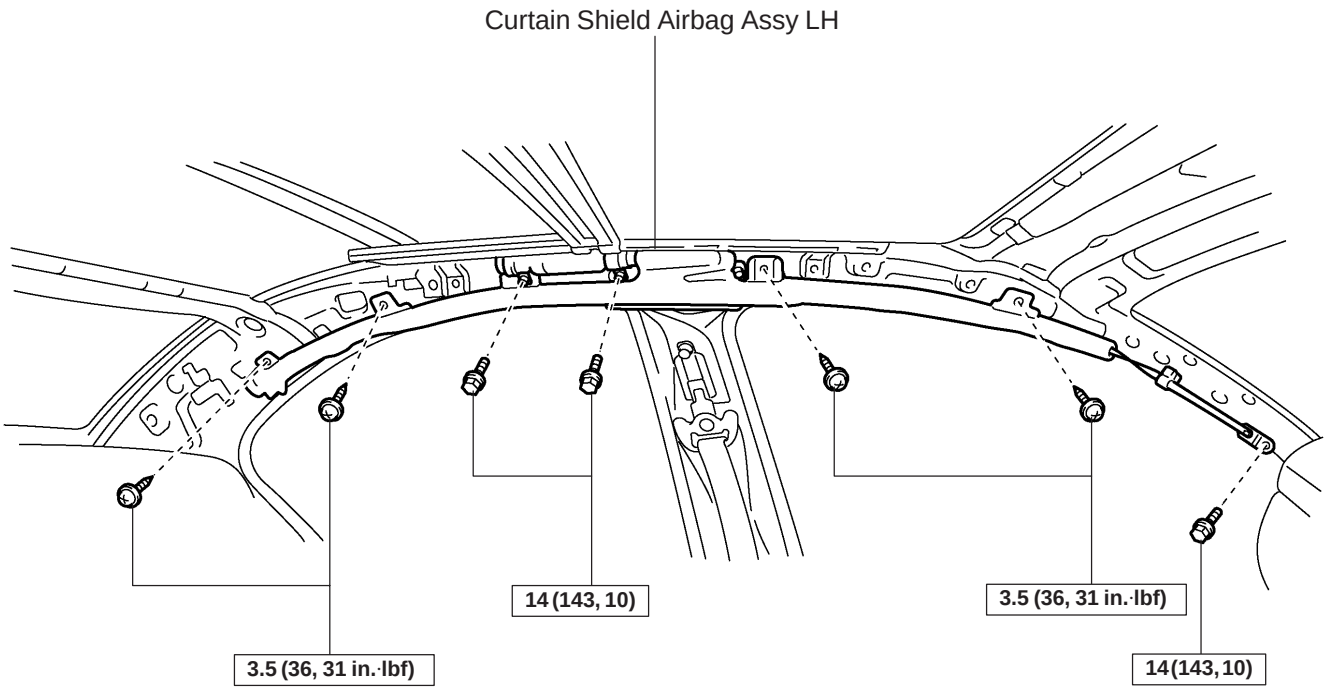

C N·m (kgf·cm, ft·lbf) : Specified torque

H42754

Wagon Models:

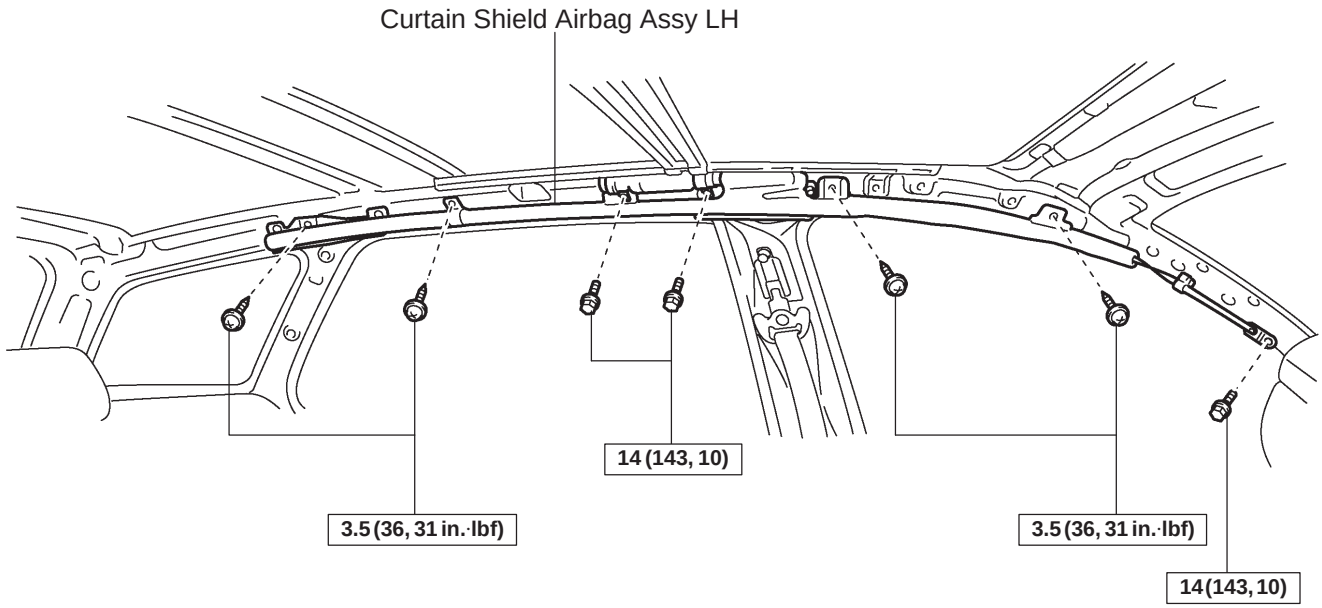

C N·m (kgf·cm, ft·lbf) : Specified torque

H42756

600K1–01

REPLACEMENT

HINT:

Replacement procedure of the RH side is the same as that for with LH side.

1. **PRECAUTION (See page 60–1)**
2. **DISCONNECT BATTERY NEGATIVE TERMINAL (See page 60–1)**
3. **REMOVE ROOF HEADLINING ASSY (SEDAN MODELS) (See page 76–36)**
4. **REMOVE ROOF HEADLINING ASSY (LIFTBACK MODELS) (See page 76–45)**
5. **REMOVE ROOF HEADLINING ASSY (WAGON MODELS) (See page 76–54)**

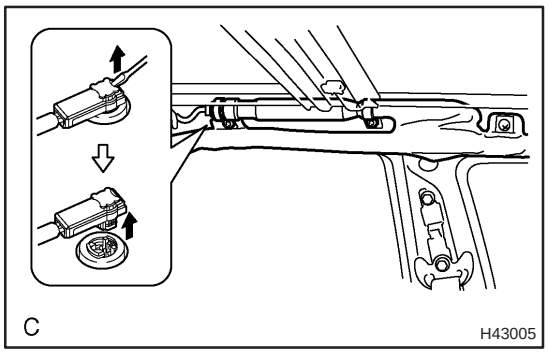

6. **REMOVE CURTAIN SHIELD AIR BAG ASSY LH (SEDAN/LIFTBACK MODELS)**

(a) Using a screwdriver, disconnect the connector of the curtain shield airbag assy LH.

(b) After removing the 4 screws and the 3 bolts in order as follows, remove the curtain shield airbag assy LH.

A → B → C → D → E → F → G

Sedan/Liftback Models:

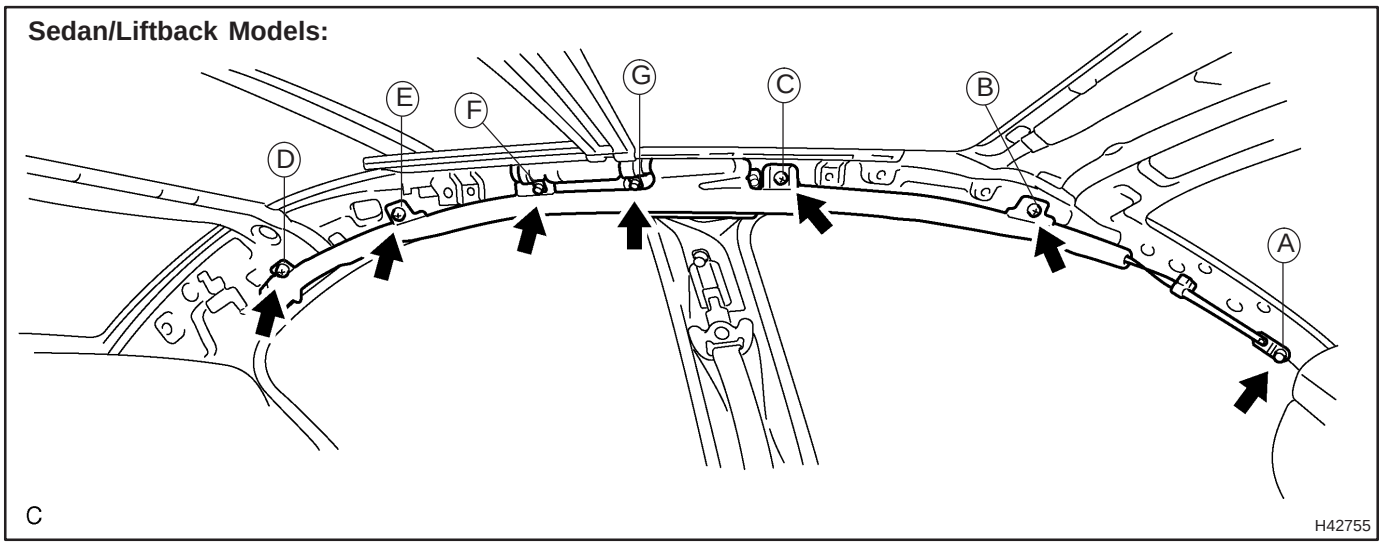

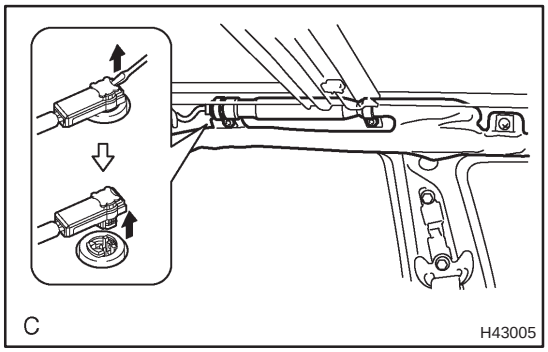

7. REMOVE CURTAIN SHIELD AIR BAG ASSY LH (WAGON MODELS)

(a) Using a screwdriver, disconnect the connector of the curtain shield airbag assy LH.

(b) After removing the 4 screws and the 3 bolts in order as follows, remove the curtain shield airbag assy LH.
A → B → C → D → E → F → G

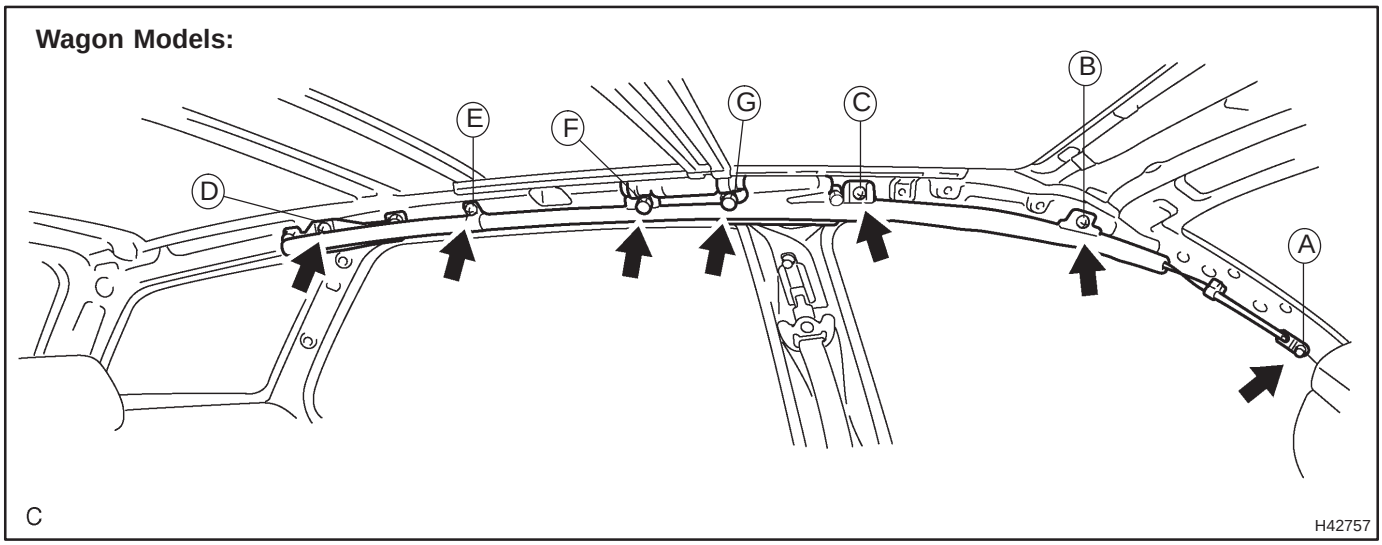

8. INSTALL CURTAIN SHIELD AIR BAG ASSY LH (SEDAN/LIFTBACK MODELS)

(a) Install the curtain shield airbag assy LH with the 3 bolts and 4 screws in order as follows.
G → F → E → D → C → B → A
Torque:
Bolt A, G, F: 14 N·m (143 kgf·cm, 10 ft·lbf)
Bolt B, C, E, D: 3.5 N·m (36 kgf·cm, 31 in.·lbf)

(b) Connect the curtain shield airbag assy LH connector.

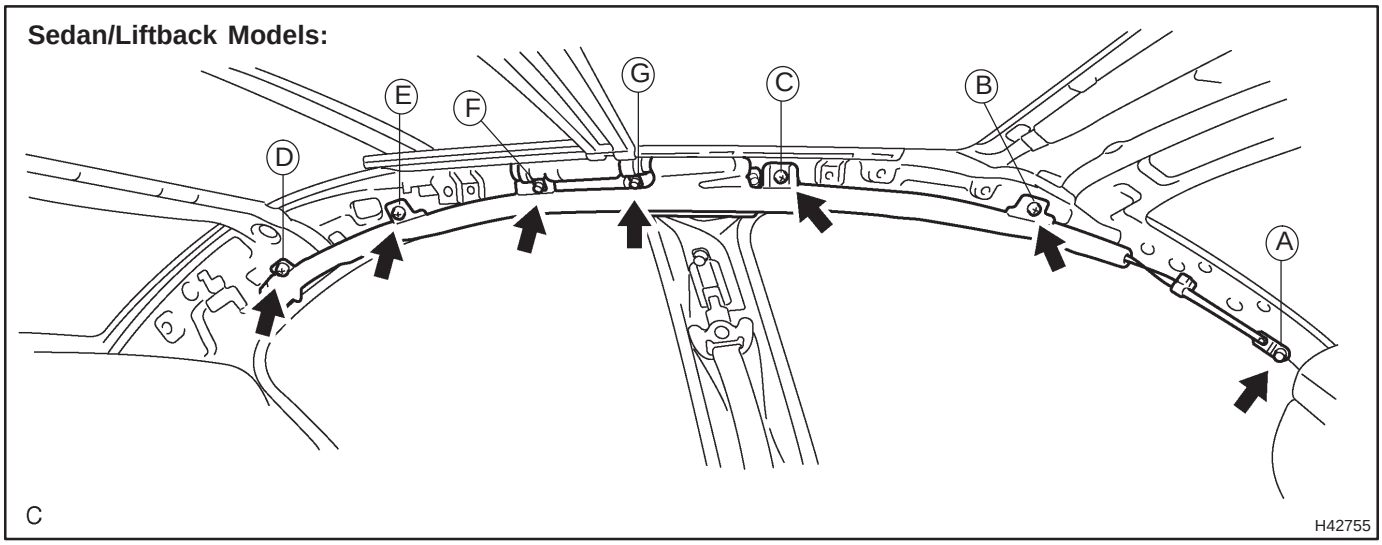

9. INSTALL CURTAIN SHIELD AIR BAG ASSY LH (WAGON MODELS)

(a) Install the curtain shield airbag assy LH with the 3 bolts and 4 screws in order as follows.
G → F → E → D → C → B → A
Torque:
Bolt A, G, F: 14 N·m (143 kgf·cm, 10 ft·lbf)
Bolt B, C, E, D: 3.5 N·m (36 kgf·cm, 31 in.·lbf)

(b) Connect the curtain shield airbag assy LH connector.

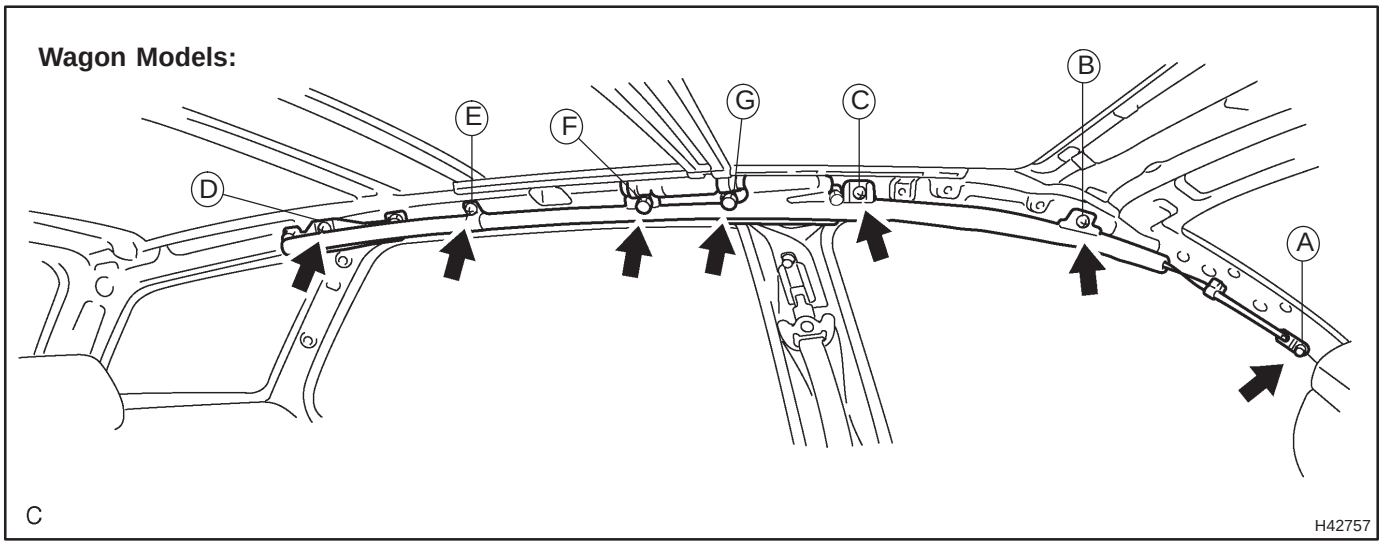

10. INSPECT CURTAIN SHIELD AIR BAG ASSY LH (See page 60–11)
11. INSTALL ROOF HEADLINING ASSY (SEDAN MODELS) (See page 76–36)
12. INSTALL ROOF HEADLINING ASSY (LIFTBACK MODELS) (See page 76–45)
13. INSTALL ROOF HEADLINING ASSY (WAGON MODELS) (See page 76–54)
14. INSPECT SRS WARNING LIGHT (See page 05–1184)

6009Y–02

DISPOSAL

HINT:

- Disposal procedure of the RH side is the same as that for the LH side.
- When scrapping a vehicle equipped with SRS or disposing of the curtain shield airbag assy LH, be sure to deploy the airbag first in accordance with the procedure described below. If any abnormality occurs with the airbag deployment, contact the SERVICE DEPT. of TOYOTA MOTOR SALES, U.S.A., INC.

CAUTION:

- **Never dispose of the curtain shield airbag assy LH that has an undeployed airbag.**
- **The airbag produces an exploding sound when it is deployed, so perform the operation outdoors and where it will not create a nuisance to nearby residents.**

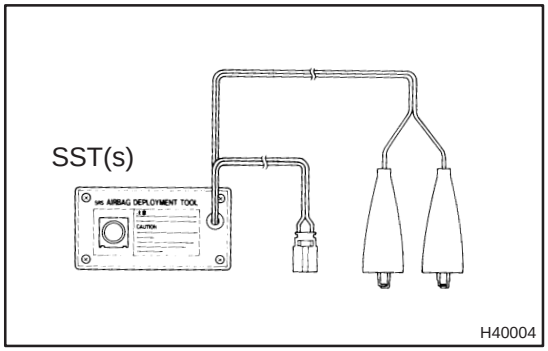

- **When deploying the airbag, always use the specified SST(s) (SRS Airbag Deployment Tool). Perform the operation in a place away from electrical noise.**
- **When deploying the airbag, perform the operation at least 10 m (33 ft) away from the curtain shield airbag assy LH.**
- **The curtain shield airbag assy LH is extremely hot when the airbag is deployed, so do not touch it for at least 30 minutes after deployment.**
- **Use gloves and safety glasses when handling the curtain shield airbag assy LH with the deployed airbag.**
- **Do not apply water, etc. to the curtain shield airbag assy LH with the deployed airbag.**
- **Always wash your hands with water after completing the operation.**

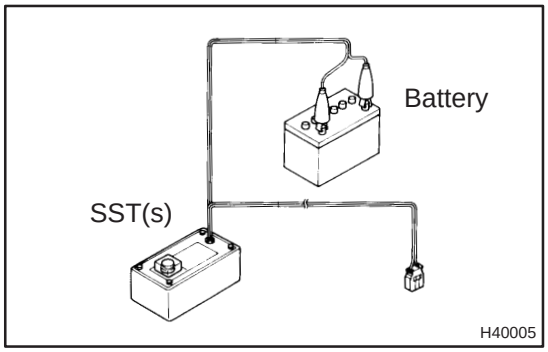

1. DISPOSE OF CURTAIN SHIELD AIR BAG ASSY LH (WHEN SCRAPPING VEHICLE DEPLOYMENT METHOD)

HINT:

Prepare a battery as the power source to deploy the airbag.

(a) Check the function of the SST(s) (See step 1–(a) on page 60–17).

(b) Disconnect the airbag connector.

(1) Sedan Models:
Remove the roof headlining assy (See page 76–36).

(2) Liftback Models:
Remove the roof headlining assy (See page 76–45).

(3) Wagon Models:
Remove the roof headlining assy (See page 76–54).

(4) Using a screwdriver, disconnect the curtain shield airbag LH connector.

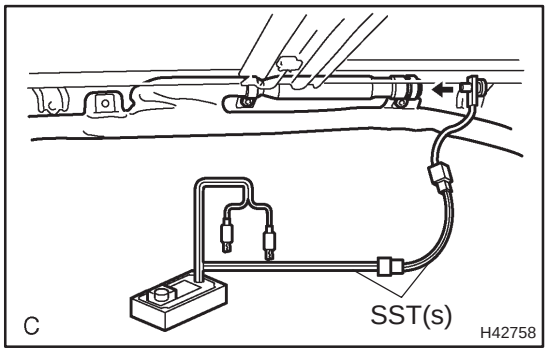

(c) Install the SST(s).

(1) Connect the connectors of the SST(s) to the curtain shield airbag assy LH connector.

SST 09082–00700, 09082–00802 (09082–10801, 09082–20801)

NOTICE:

To avoid damaging the SST(s) connector and wire harness, do not lock the secondary lock of the twin lock.

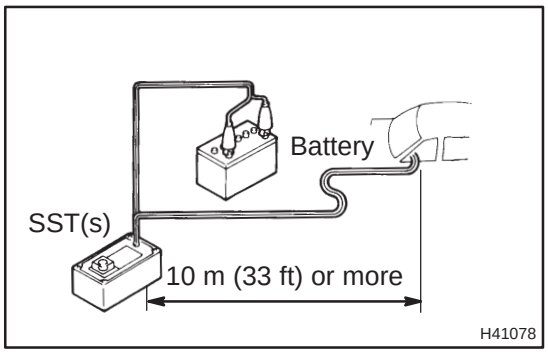

(2) Move the SST(s) to at least 10 m (33 ft) away from the rear of the vehicle.

(3) Close all the doors and windows in the vehicle.

NOTICE:

Take care not to damage the SST(s) wire harness.

(4) Connect the red clip of the SST(s) to the battery positive (+) terminal and the black of the SST(s) clip to the negative (–) terminal.

(d) Deploy the airbag.

(1) Check that no one is inside the vehicle or within a 10 m (33 ft) radius of the vehicle.

(2) Press the activation switch of the SST(s) and deploy the airbag.

HINT:

The airbag is deploys as the LED of the SST(s) activation switch comes on.

(e) Dispose of the curtain shield airbag assy LH.

CAUTION:

- **The curtain shield airbag assy LH is extremely hot when the airbag is deployed, so do not touch it for at least 30 minutes after deployment.**
- **Use gloves and safety glasses when handling the curtain shield airbag assy LH with the deployed airbag.**
- **When moving the vehicle for scrapping which has the curtain shield airbag assy LH with the deployed airbag, use gloves and safety glasses.**
- **Do not apply water, etc. to the curtain shield airbag assy LH with the deployed airbag.**
- **Always wash your hands with water after completing the operation.**

HINT:

When scrapping a vehicle, deploy the airbag and scrap the vehicle with the curtain shield airbag assy LH being installed.

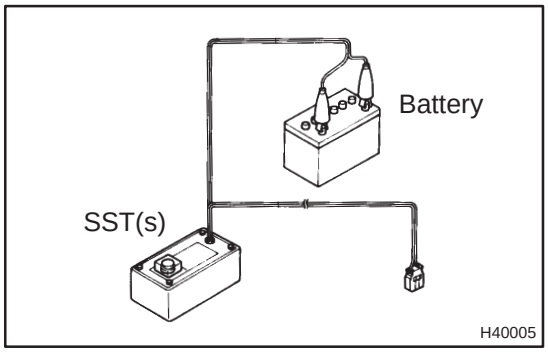

2. DISPOSE OF CURTAIN SHIELD AIR BAG ASSY LH (WHEN DISPOSING OF AIRBAG ASSEMBLY DEPLOYMENT METHOD)

NOTICE:

- **When disposing of the curtain shield airbag assy LH, never use the customer's vehicle to deploy the airbag.**
- **Be sure to follow the procedure detailed below when deploying the airbag.**

HINT:

Prepare a battery as the power source to deploy the airbag.

(a) Check the performance of the SST(s) (See step 1–(a) on page 60–19).

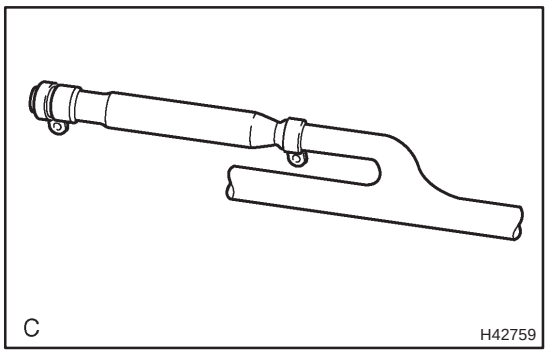

(b) Remove the curtain shield airbag assy LH (See page 60–38).

CAUTION:

When removing the curtain shield airbag assy LH, work must be started 90 seconds after the ignition switch is turned to the "LOCK" position and the negative (–) terminal cable is disconnected from the battery.

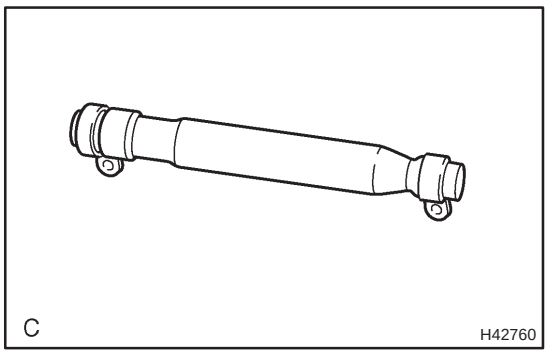

(c) Cut off the deployment section of the curtain shield airbag assy LH.

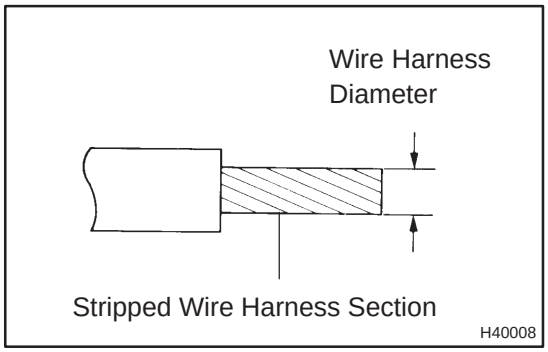

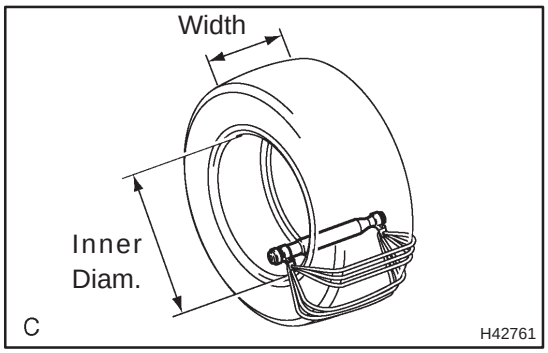

(d) Using a service–purpose wire harness for the vehicle, tie down the curtain shield airbag assy LH to the tire.
Wire harness: Stripped wire harness section 1.25 mm^2 or more (0.0019 in.^{2} or more)

CAUTION:
If a wire harness which is too thin or an alternative object is used to tie down the curtain shield airbag assy LH, it may be snapped by the shock when the airbag is deployed. Always use a wire harness for vehicle use which has a diameter of at least 1.25 mm^2 (0.0019 in.^{2}).

HINT:

- To calculate the square of the stripped wire harness section:
  Square = 3.14 x (Diameter)^2 divided by 4
- Position the curtain shield airbag assy LH inside the tire as shown in the illustration.
  Tire size: Must exceed the following dimensions
  Width: 185 mm (7.28 in.)
  Inner diameter: 360 mm (14.17 in.)

CAUTION:

- **Make sure that the wire harness is tight. It is highly dangerous when looseness in the wire harness results in the curtain shield airbag assy LH coming free due to the shock from the airbag deployment.**

NOTICE:
The tire will be marked by the airbag deployment, so use a redundant tire.

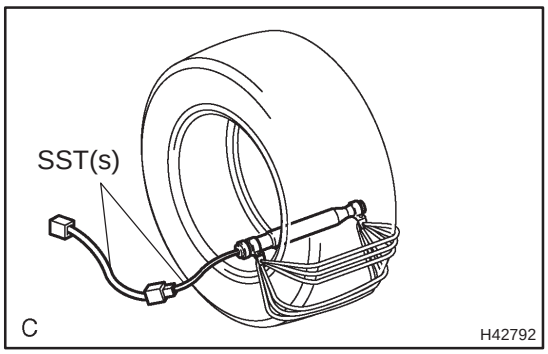

(e) Install the SST(s).
Connect the connectors of the SST(s) to the curtain shield airbag assy LH.
SST 09082–00802 (09082–10801, 09082–20801)

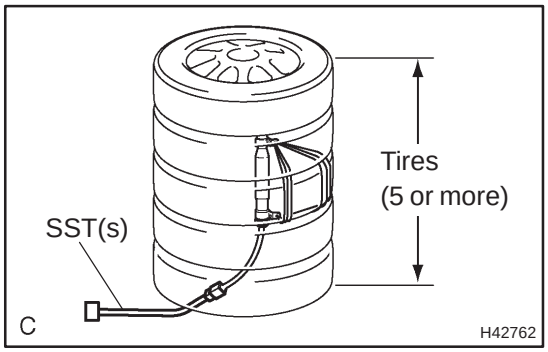

(f) Place the tires.

CAUTION:

Do not place the deployment direction of the curtain shield airbag assy LH facing toward the ground.

(1) Place at least 2 tires under the tire to which the curtain shield airbag assy LH is tied.

(2) Place at least 2 tires over the tire to which the curtain shield airbag assy is tied. The top tire should have the wheel installed.

NOTICE:

Do not place the SST(s) connector under the tire because the SST connector could be damaged.

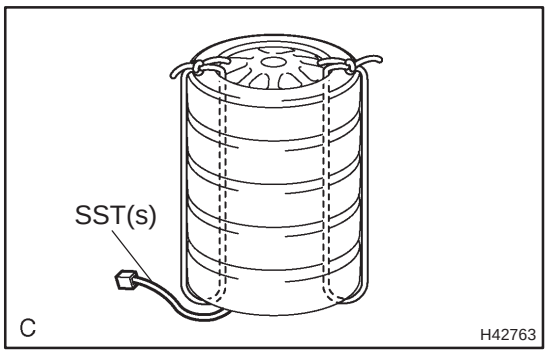

(3) Tie the tires together with 2 wire harnesses.

CAUTION:

Make sure that the wire harness is tight. It is highly dangerous when looseness in the wire harness results in the tires coming free due to the shock from the airbag deployment.

HINT:

Place the SST(s) connector and the wire harness inside tires. Secure at least 1 m (3 ft) of slack for the wire harness.

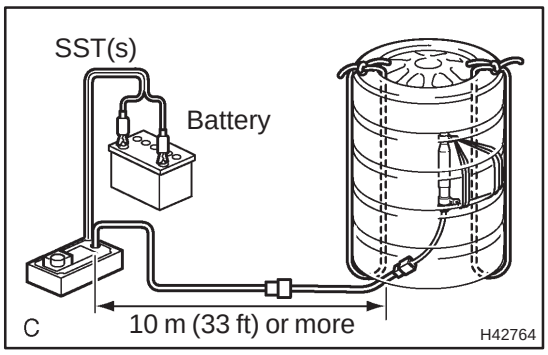

(g) Install the SST(s).

Connect one SST(s) connector to the SST(s) connector connected to the curtain shield airbag.

SST 09082–00700

NOTICE:

To avoid damaging the SST(s) connector and wire harness, do not lock the secondary lock of the twin lock. Also, secure some slack for the SST(s) wire harness inside the tire.

(h) Deploy the airbag.

(1) Connect the red clip of the SST(s) to the battery positive (+) terminal and the black clip of the SST(s) to the battery negative (–) terminal.

(2) Check that no one is within a 10 m (33 ft) radius of the tire to which the curtain shield airbag assy LH is tied.

(3) Press the activation switch of the SST(s) and deploy the airbag.

HINT:

The airbag deploys as the LED of the SST(s) activation switch comes on.

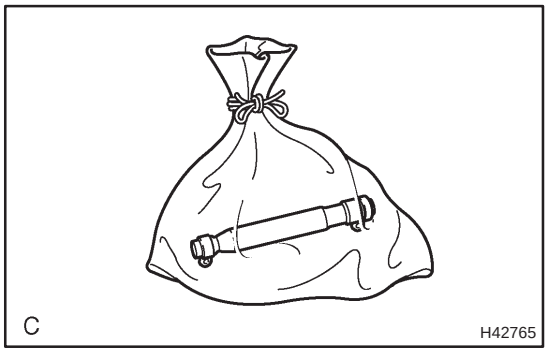

(i) Dispose of the curtain shield airbag assy LH.

CAUTION:

- **The curtain shield airbag assy LH is extremely hot when the airbag is deployed, so do not touch it for at least 30 minutes after deployment.**
- **Use gloves and safety glasses when handling the curtain shield airbag assy LH with the deployed airbag.**
- **Always wash your hands with water after completing the operation.**
- **Do not apply water, etc. to the curtain shield airbag assy LH with the deployed airbag.**

(1) Remove the curtain shield airbag assy LH from the tire.

(2) Place the curtain shield airbag assy LH in a plastic bag, tie the end tightly and dispose of it in the same way as for other general parts disposal.

FRONT SEAT AIRBAG ASSY LH

600K2–01

DISPOSAL

HINT:

- Disposal procedure of the RH side is the same as that for the LH side.
- When scrapping a vehicle equipped with SRS or disposing of the front seat airbag assy LH, be sure to deploy the airbag first in accordance with the procedure described below. If any abnormality occurs with the airbag deployment, contact the SERVICE DEPT. of TOYOTA MOTOR SALES, U.S.A., INC.

CAUTION:

- **Never dispose of the front seat airbag assy LH that has undeployed airbag.**
- **The airbag produces an exploding sound when it is deployed, so perform the operation outdoors and where it will not create a nuisance to nearby residents.**

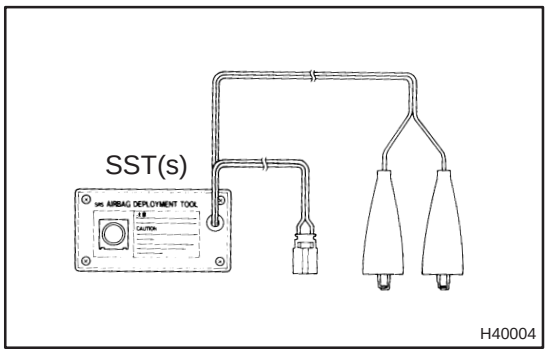

- **When deploying the airbag, always use the specified SST(s) (SRS Airbag Deployment Tool). Perform the operation in a place away from electrical noise.**
- **When deploying the airbag, perform the operation at least 10 m (33 ft) away from the airbag assy.**
- **The front seat airbag assy LH is extremely hot when the airbag is deployed, so do not touch it for at least 30 minutes after deployment.**
- **Use gloves and safety glasses when handling the front seat airbag assy LH with the deployed airbag.**
- **Always wash your hands with water after completing the operation.**
- **Do not apply water, etc. to the front seat airbag assy LH with the deployed airbag.**

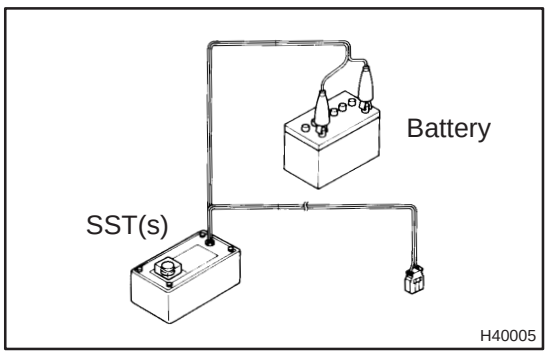

1. DISPOSE OF FRONT SEAT AIRBAG ASSY LH (WHEN SCRAPPING VEHICLE DEPLOYMENT METHOD)

HINT:

Prepare a battery as the power source to deploy the airbag.

(a) Check the function of the SST(s) (See step 1– (a) on page 60–19).

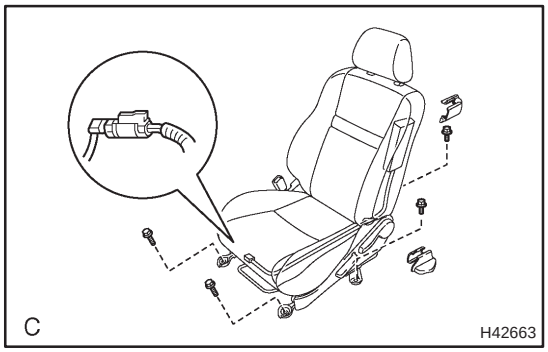

(b) Remove the front seat assy LH (See page 72–16).

(c) Disconnect the front seat airbag connector.

NOTICE:

When handling the airbag connector, take care not to damage the airbag wire harness.

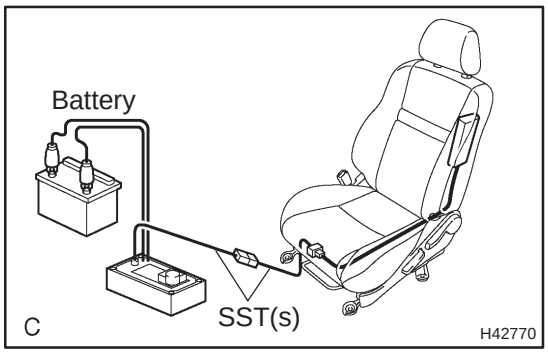

(d) Install the SST(s).

(1) Connect the connectors of the SST(s) to the front seat airbag connector.

SST 09082–00700, 09082–00750

NOTICE:

To avoid damaging the SST(s) connector and wire harness, do not lock the secondary lock of the twin lock.

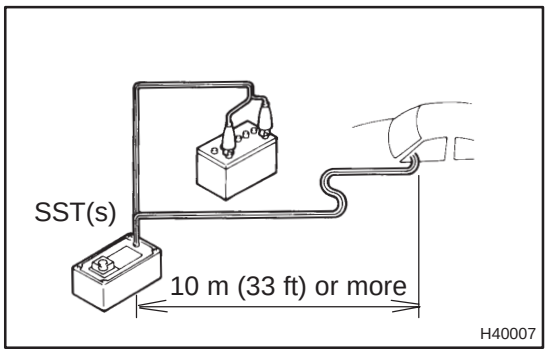

(2) Move the SST(s) at least 10 m (33 ft) away from the front of the vehicle.

(3) Close all the doors and windows of the vehicle.

NOTICE:

Take care not to damage the SST(s) wire harness.

(4) Connect the red clip of the SST(s) to the battery positive (+) terminal and the black clip of the SST(s) to the battery negative (–) terminal.

(e) Deploy the airbag.

(1) Check that no one is inside the vehicle or within a 10 m (33 ft) radius of the vehicle.

(2) Press the activation switch in the SST(s) and deploy the airbag.

HINT:

The airbag is deploys as the LED of the SST(s) activation switch comes on.

(f) Dispose the front seat airbag assy LH.

CAUTION:

- **The front seat airbag assy LH is extremely hot when the airbag is deployed, so do not touch it for at least 30 minutes after deployment.**
- **Use gloves and safety glasses when handling the front seat airbag assy LH with the deployed airbag.**
- **When moving the vehicle for scrapping which has the front seat airbag assy LH with the deployed airbag, use gloves and safety glasses.**
- **Do not apply water, etc. to the front seat airbag assy LH with the deployed airbag.**
- **Always wash your hands with water after completing the operation.**

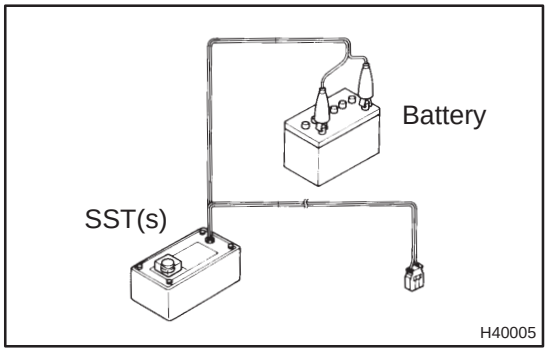

HINT:
When scrapping a vehicle, deploy the airbag and scrap the vehicle with the front seat airbag assy LH being installed.

2. DISPOSE OF FRONT SEAT AIRBAG ASSY LH (WHEN DISPOSING OF AIRBAG ASSEMBLY DEPLOYMENT METHOD)

NOTICE:

- **When disposing of the front seat airbag assy LH only, never use the customer's vehicle to deploy the airbag.**
- **Be sure to follow the procedure detailed below when deploying the airbag.**

HINT:
Prepare a battery as the power source to deploy the airbag.

(a) Check the function of the SST(s) (See step 1– (a) on page 60–19).

(b) Remove the front seat airbag assy LH.

(1) Remove the front seat assy LH (See page 72–16).

(2) Remove the 2 nuts and the front seat airbag assy LH from the seatback assembly.

CAUTION:

- **When removing the front seat airbag assy LH, work must be started 90 seconds after the ignition switch is turned to the "LOCK" position and the negative (–) terminal cable is disconnected from the battery.**
- **When storing the front seat airbag assy LH, keep the upper surface of the airbag deployment side facing upward.**

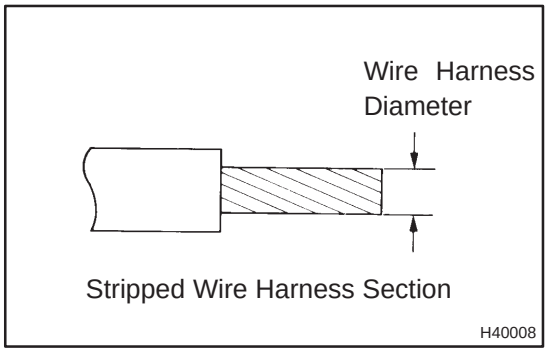

(c) Using a service–purpose wire harness for the vehicle, tie down the front seat airbag assy LH to the tire.
Wire harness: Stripped wire harness section 1.25 mm^2 or more (0.0019 in^2 or more)

HINT:
To calculate the square of the stripped wire harness section:
Square = 3.14 x $(Diameter)^2$ divided by 4

CAUTION:
If a wire harness which is too thin or an alternative object is used to tie down the front seat airbag assy LH, it may be snapped by the shock when the airbag is deployed. This is highly dangerous. Always use a wire harness for vehicle use which has a diameter at least 1.25 mm^2 (0.0019 in^2).

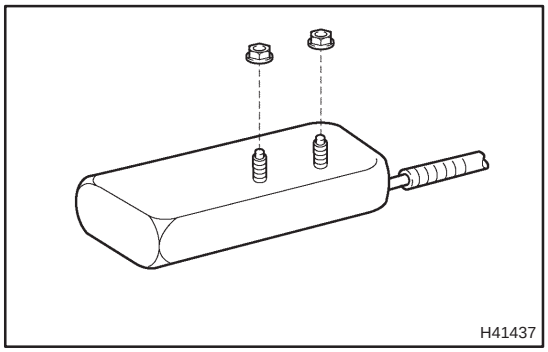

(1) Install the 2 nuts in the front seat airbag assy LH.

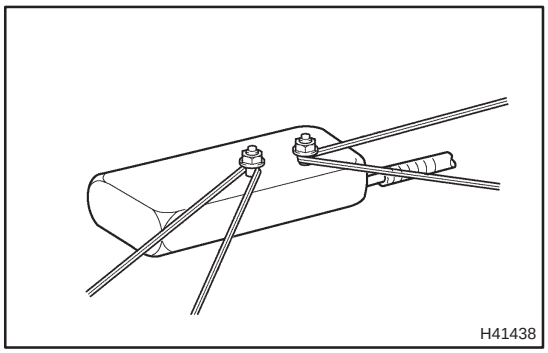

(2) Wind the wire harness around the stud bolts of the front seat airbag assy LH as shown in the illustration.

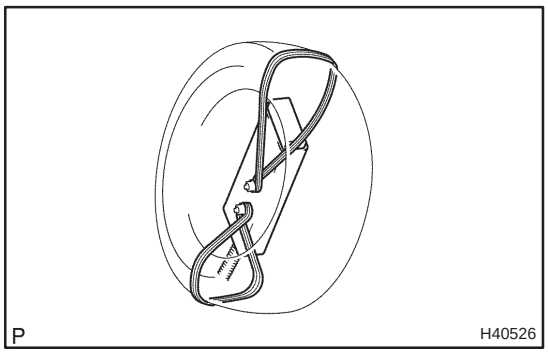

(3) Position the front seat airbag assy LH inside the tire with the airbag deployment direction facing inside.

Tire size: Must exceed the following dimensions
Width: 185 mm (7.28 in.)
Inner diameter: 360 mm (14.17 in.)

CAUTION:

- **Make sure the wire harness is tight. It is highly dangerous when looseness in the wire harness results in the front seat airbag assy LH coming free due to the shock from the airbag deployment.**
- **Always tie down the front seat airbag assy LH with the airbag deployment direction facing inside the tire.**

NOTICE:

The tire will be marked by the airbag deployment, so use a redundant tire.

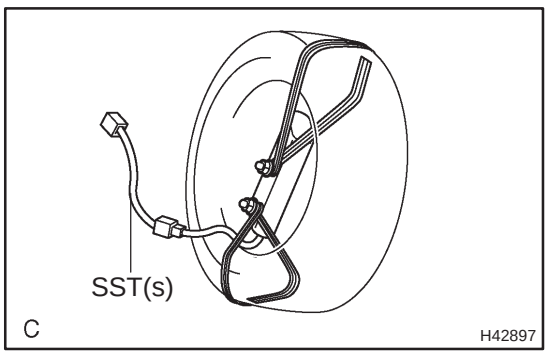

(d) Install the SST(s).
Connect the connector of SST(s) to the front seat airbag assy LH connect.
SST 09082–00750

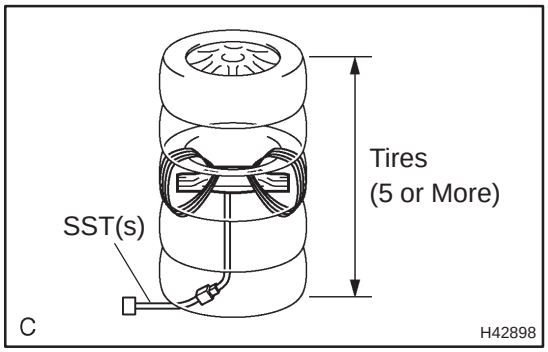

(e) Place the tires.
(1) Place at least 2 tires under the tire to which the front seat airbag assy LH is tied.
(2) Place at least 2 tires over the tire to which the front seat airbag assy LH is tied. The top tire should have the disc wheel installed.

NOTICE:
Do not place the SST(s) connector under the tire because the SST(s) connector could be damaged.

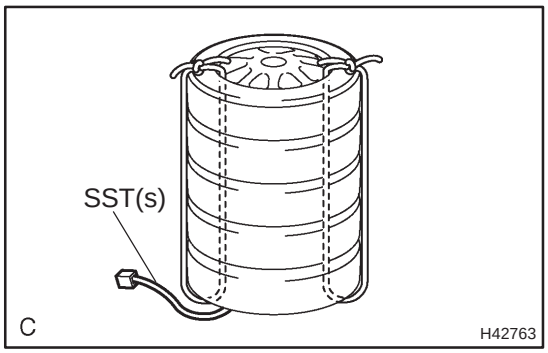

(3) Tie the tires together with 2 wire harnesses.

CAUTION:
Make sure that the wire harness is tight. It is highly dangerous when looseness in the wire harness results in the tires coming free due to the shock from the airbag deployment.
HINT:
Place the SST(s) connector and the wire harness inside tires. Secure at least 1 m (3 ft) of slack for the wire harness.

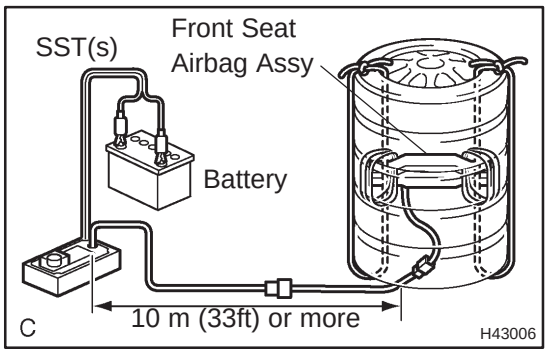

(f) Install the SST(s).
Connect the connector of the SST(s).
SST 09082–00700

NOTICE:
To avoid damaging the SST(s) connector and wire harness, do not lock the secondary lock of the twin lock. Also, secure some slack for the SST(s) wire harness inside the tire.

(g) Deploy the airbag.
(1) Connect the red clip of the SST(s) to the battery positive (+) terminal and the black clip of the SST(s) to the battery negative (–) terminal.
(2) Check that no one is within a 10 m (33 ft) radius of the tire to which the front seat airbag assy LH is tied.
(3) Press the activation switch of the SST(s) and deploy the airbag.

HINT:
The airbag is deployed as the LED of the SST(s) activation switch comes on.

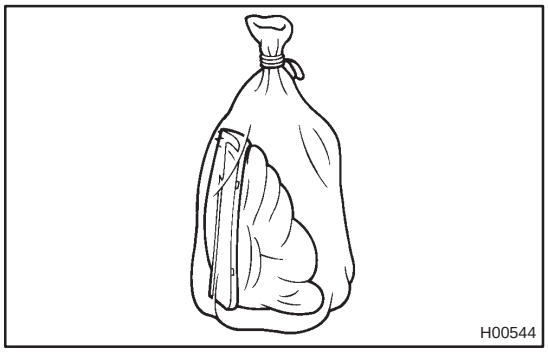

(h) Dispose of the front seat airbag assy LH.

CAUTION:

- **The front seat airbag assy LH is extremely hot when the airbag is deployed, so do not touch it for at least 30 minutes after deployment.**
- **Use gloves and safety glasses when handling the front seat airbag assy LH with the deployed airbag.**
- **Always wash your hands with water after completing the operation.**
- **Do not apply water etc. to the front seat airbag assy LH with the deployed airbag.**

(1) Remove the front seat airbag assy LH from the tire.

(2) Place the front seat airbag assy LH in a plastic bag, tie the end tightly and dispose of it in the same way as other general parts disposal.

INSTRUMENT PANEL AIR BAG ASSY

600K3–01

COMPONENTS

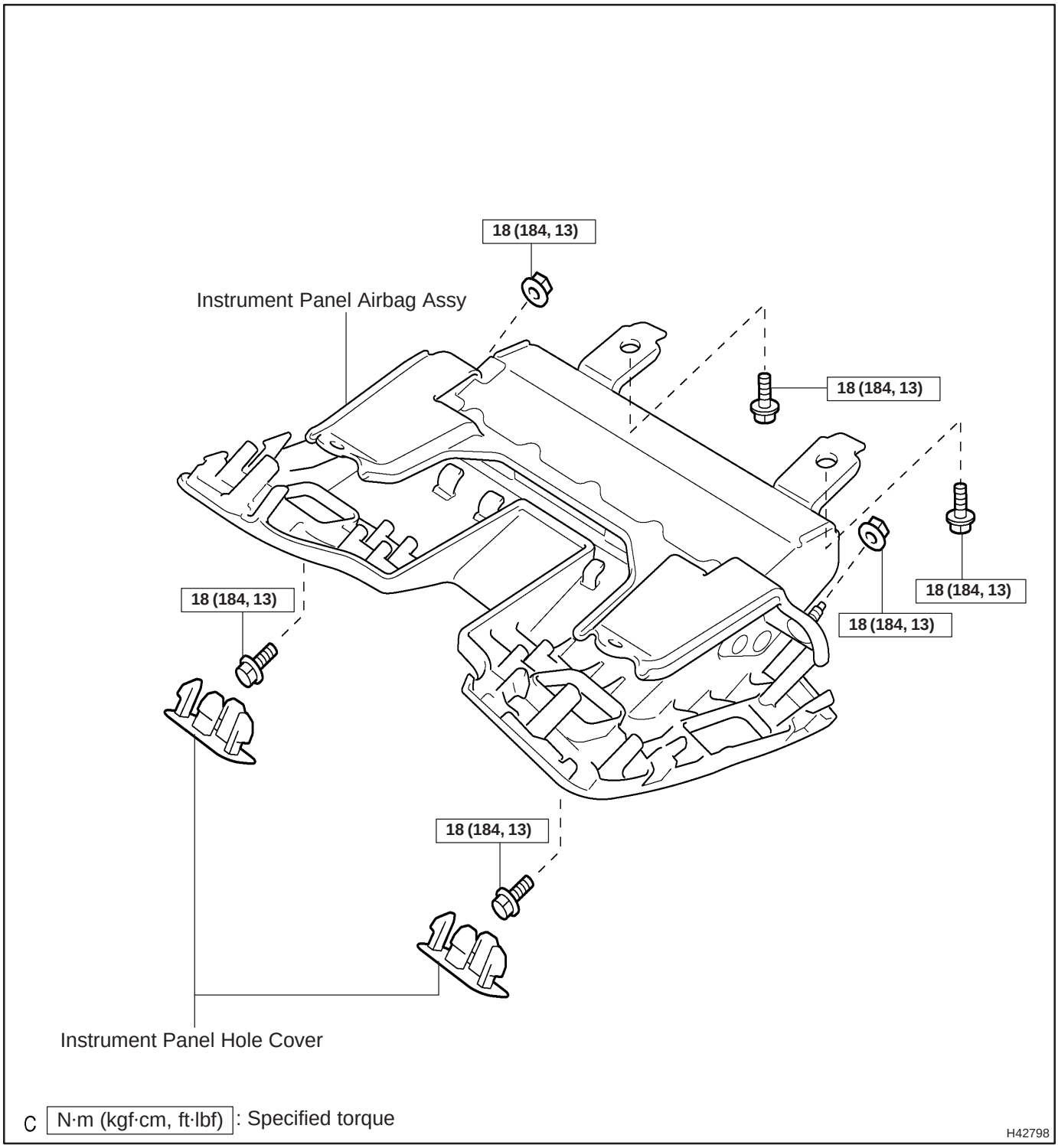

600K4–01

REPLACEMENT

1. PRECAUTION (See page 60–1)

2. DISCONNECT BATTERY NEGATIVE TERMINAL (See page 60–1)

3. REMOVE INSTRUMENT PANEL HOLE COVER

(a) Using a screwdriver, remove the 2 instrument panel hole cover.

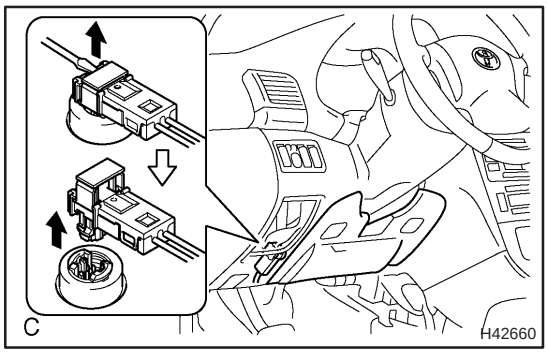

4. REMOVE INSTRUMENT PANEL AIR BAG ASSY

(a) Using a screwdriver disconnect the airbag connector.

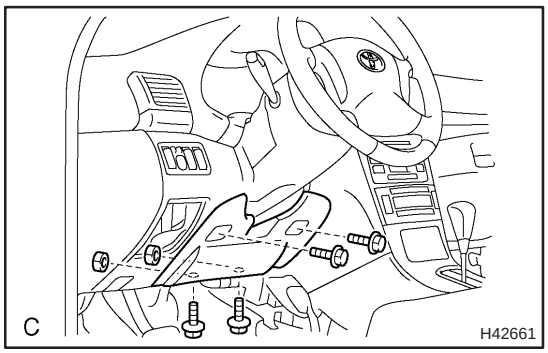

(b) Remove the 4 bolts, 2 nuts and the instrument panel airbag assy.

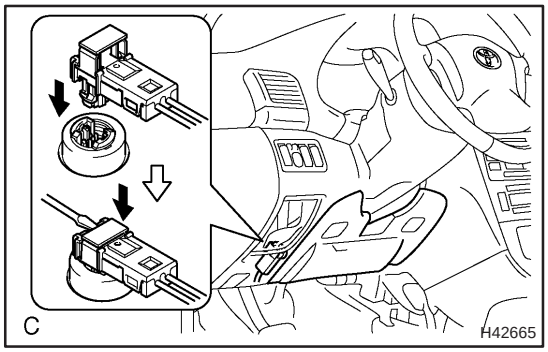

5. INSTALL INSTRUMENT PANEL AIR BAG ASSY

(a) Install the instrument panel airbag assy.

(b) Connect the airbag connector.

(c) Install the 4 bolts and the 2 nuts.

Torque: 18.0 N·m (184 kgf·cm, 13 ft·lbf)

(d) Install the instrument panel hole cover.

6. INSPECT INSTRUMENT PANEL AIR BAG ASSY (See page 60–11)

7. INSPECT SRS WARNING LIGHT (See page 05–1184)

600K5–01

DISPOSAL

HINT:

When scrapping a vehicle equipped with the SRS or disposing of the instrument panel airbag assy, be sure to deploy the airbag first in accordance with the procedure described below. If any abnormality occurs with the airbag deployment, contact the SERVICE DEPT. of TOYOTA MOTOR SALES, U.S.A., INC.

CAUTION:

- **Never dispose of the instrument panel airbag assy that has an undeployed airbag.**
- **The airbag produces an extremely loud exploding sound when it is deployed, so perform the operation outdoors and where it will not create a nuisance to nearby residents.**

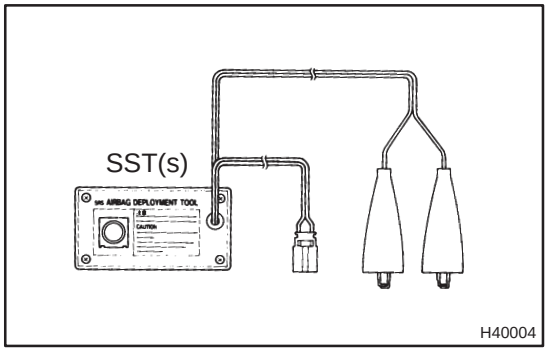

- **When deploying the airbag, always use the specified SST(s) (SRS Airbag Deployment Tool). Perform the operation in a place away from electrical noise.**
- **When deploying the airbag, perform the operation at least 10 m (33 ft) away from the instrument panel airbag assy.**
- **The instrument panel airbag assy is extremely hot when the airbag is deployed, so do not touch it for at least 30 minutes after deployment.**
- **Use gloves and safety glasses when handling the instrument panel airbag assy with the deployed airbag.**
- **Do not apply water, etc. to the instrument panel airbag assy with the deployed airbag.**
- **Always wash your hands with water after completing the operation.**

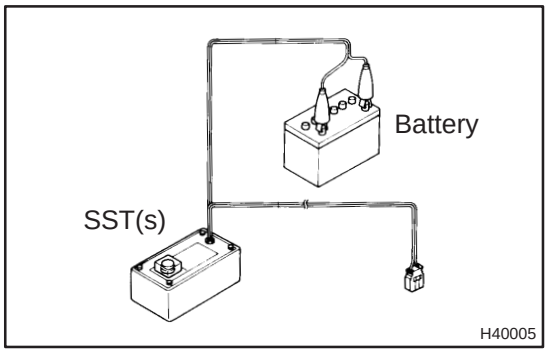

1. DISPOSE OF INSTRUMENT PANEL AIR BAG ASSY (WHEN SCRAPPING VEHICLE DEPLOYMENT METHOD)

HINT:

Prepare a battery as the power source to deploy the airbag.

(a) Check performance of the SST(s) (See step 1–(a) on page 60–17).

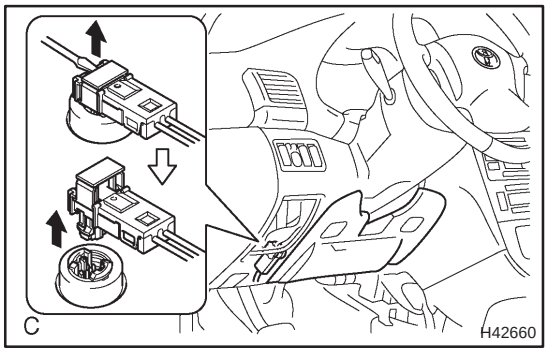

(b) Disconnect the airbag connector.
(1) Using a screwdriver, disconnect the instrument panel airbag connector.

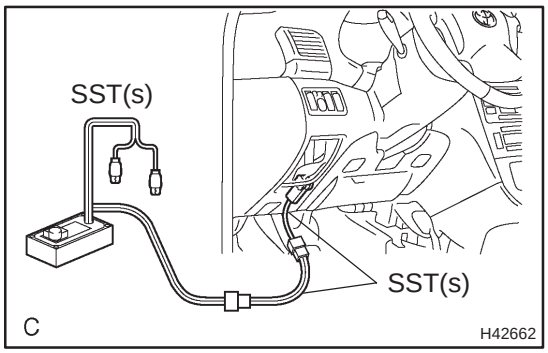

(c) Install the SST(s).
(1) Connect the connectors of the SST(s) to the instrument panel airbag assy.
SST 09082–00700, 09082–00802 (09082–10801, 09082–20801)

NOTICE:
Take care not to damage the SST(s) wire harness.

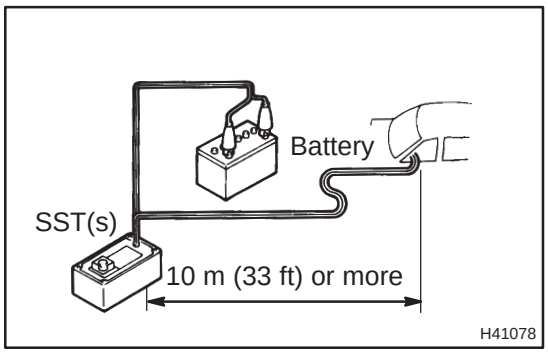

(2) Move the SST(s) to at least 10 m (33 ft) away from the rear of the vehicle.
(3) Close all the doors and windows in the vehicle.

NOTICE:
Take care not to damage the SST(s) wire harness.
(4) Connect the red clip of the SST(s) to the battery positive (+) terminal and the black clip of the SST(s) to the negative (–) terminal.

(d) Deploy the airbag.
(1) Check that no one is inside the vehicle or within a 10 m (33 ft) radius of the vehicle.
(2) Press the activation switch of the SST(s) and deploy the airbag.

HINT:
The airbag deploys as the LED of the SST(s) activation switch comes on.

(e) Dispose of the instrument panel airbag assy.

CAUTION:

- **The instrument panel airbag assy is extremely hot when the airbag is deployed, so do not touch it for at least 30 minutes after deployment.**
- **Use gloves and safety glasses when handling the instrument panel airbag assy with the deployed airbag.**
- **When moving the vehicle for scrapping which has the instrument panel airbag assy with the deployed airbag, use gloves and safety glasses.**
- **Do not apply water, etc. to the instrument panel airbag assy with the deployed airbag.**
- **Always wash your hands with water after completing the operation.**

HINT:

When scrapping a vehicle, deploy the airbag and scrap the vehicle with the instrument panel airbag assy still installed.

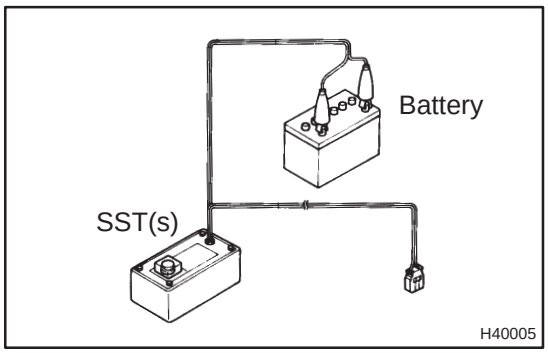

2. DISPOSE OF INSTRUMENT PANEL AIR BAG ASSY (WHEN DISPOSING OF AIRBAG ASSEMBLY DEPLOYMENT METHOD)

NOTICE:

- **When disposing of the instrument panel airbag assy only, never use the customer's vehicle to deploy the airbag.**
- **Be sure to follow the procedure detailed below when deploying the airbag.**

HINT:

Prepare a battery as the power source to deploy the airbag.

(a) Check the performance of the SST(s) (See step 1–(a) on page 60–19).

(b) Using a screwdriver, remove the 2 instrument panel hole cover.

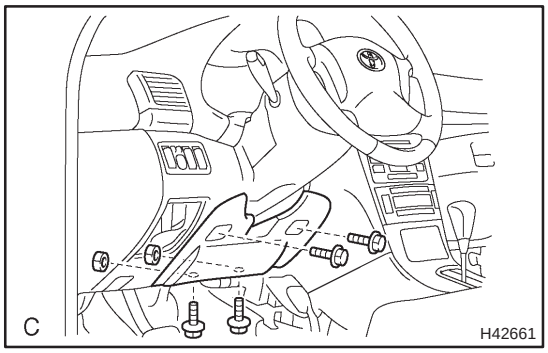

(c) Remove the instrument panel airbag assy (See page 60–54).

CAUTION:

- **When removing the instrument panel airbag assy, work must be started 90 seconds after the ignition switch is turned to the "LOCK" position and the negative (–) terminal cable is disconnected from the battery.**
- **When storing the instrument panel airbag assy, keep the upper surface of the airbag deployment side facing upward.**

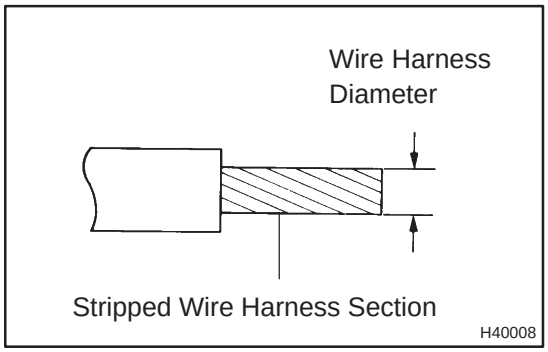

(d) Using a service–purpose wire harness for the vehicle, tie down the instrument panel airbag assy to the tire.
Wire harness: Stripped wire harness section 1.25 mm^2 or more (0.0019 $in.^2$ or more)

CAUTION:
If the wire harness which is too thin or an alternative object is used to tie down the instrument panel airbag assy, it may be snapped by the shock when the airbag is deployed. Always use a wire harness for vehicle use which has a diameter of at least 1.25 mm^2 (0.0019 $in.^2$).

HINT:

- To calculate the square of the stripped wire harness section:
  Square = 3.14 x $(Diameter)^2$ divided by 4
- Position the instrument panel airbag assy inside the tire with the airbag deployment side facing inside.
  Tire size: Must exceed the following dimensions
  Width: 185 mm (7.28 in.)
  Inner diameter: 360 mm (14.17 in.)

CAUTION:

- **Make sure that the wire harness is tight. It is highly dangerous when looseness in the wire harness results in the instrument panel airbag assy coming free due to the shock from the airbag deployment.**
- **Always tie down the instrument panel airbag assy with the airbag deployment side facing inside the tire.**

NOTICE:
The tire will be marked by the airbag deployment, so use a redundant tire.

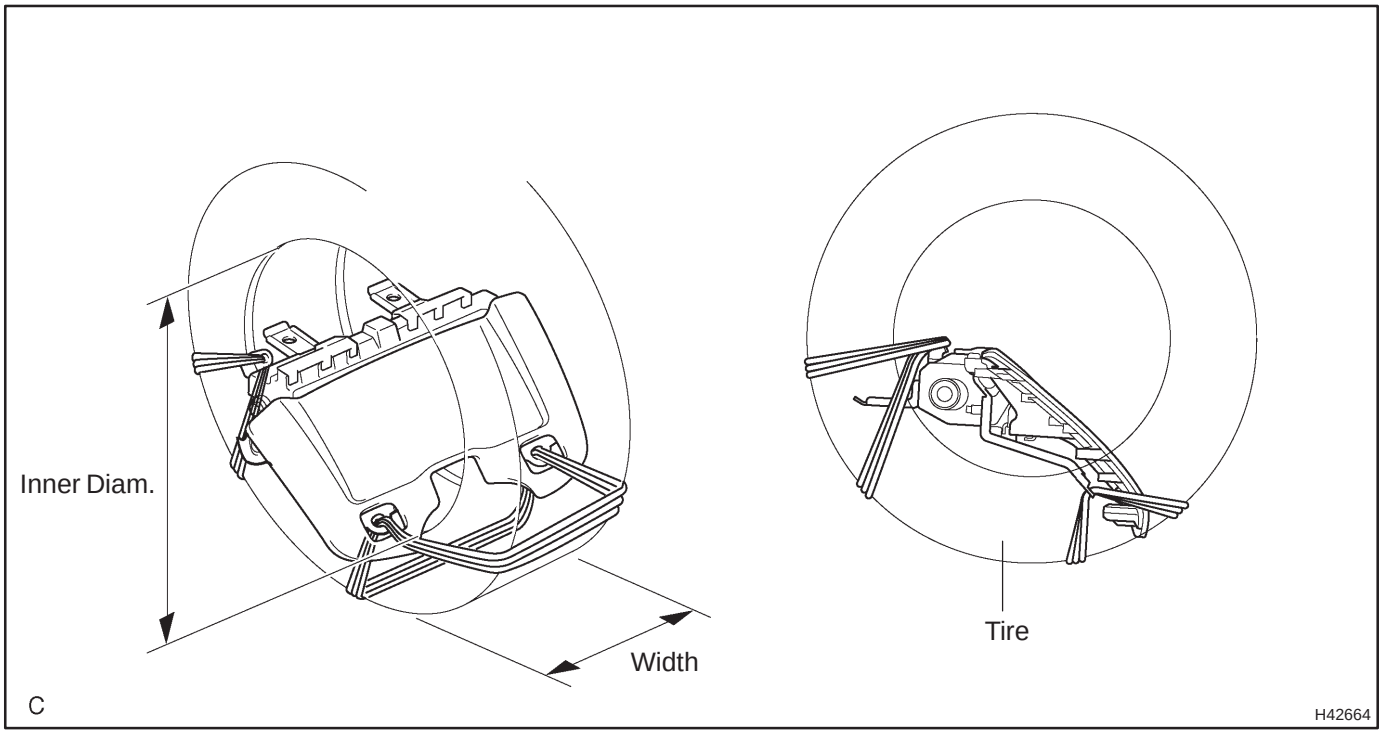

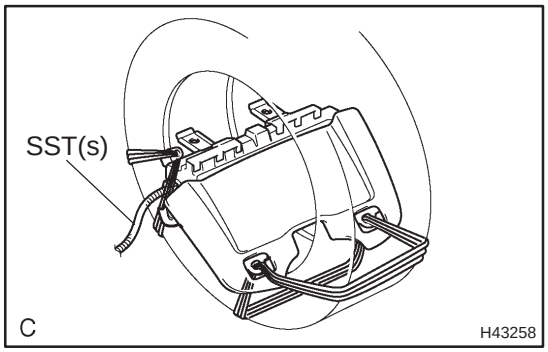

(e) Install the SST(s).
Connect the connector of the SST(s) to the instrument panel airbag assy.
SST 09082–00770

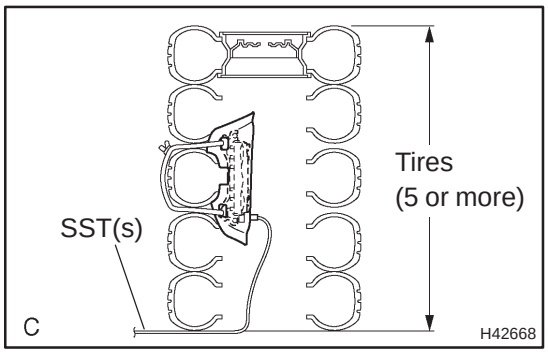

(f) Place the tires.
(1) Place at least 2 tires under the tire to which the instrument panel airbag assy is tied.
(2) Place at least 2 tires over the tire to which the instrument panel airbag assy is tied. The top tire should have the disc wheel installed.

NOTICE:
Do not place the SST(s) connector under the tire because the SST(s) connector could be damaged.

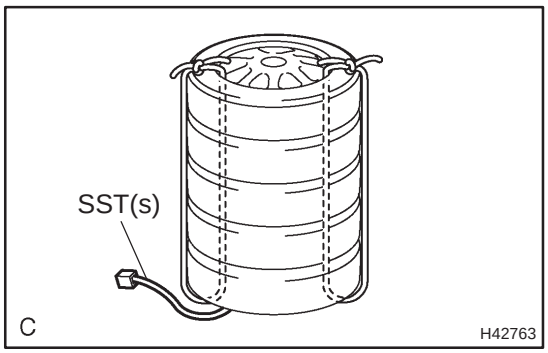

(3) Tie the tires together with 2 wire harnesses.

CAUTION:
Make sure that the wire harness is tight. It is highly dangerous when looseness in the wire harness results in the tires coming free due to the shock from the airbag deployment.

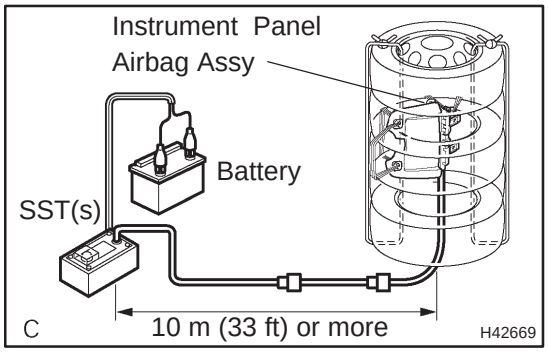

(g) Install the SST(s).
Connect the connectors of the SST(s).
SST 09082–00700, 09082–00802 (09082–10801, 09082–20801)

NOTICE:
To avoid damaging the SST(s) connector and wire harness, do not lock the secondary lock of the twin lock. Also, secure some slack for the SST(s) wire harness inside the tire.

(h) Deploy the airbag.
(1) Connect the red clip of the SST(s) to the battery positive (+) terminal and the black clip of the SST(s) to the battery negative (–) terminal.
(2) Check that no one is within a 10 m (33 ft) radius of the tire to which the instrument panel airbag assy lower No.1 is tied.
(3) Press the activation switch of the SST(s) and deploy the airbag.

HINT:
The airbag is deployed as the LED of the SST(s) activation switch comes on.

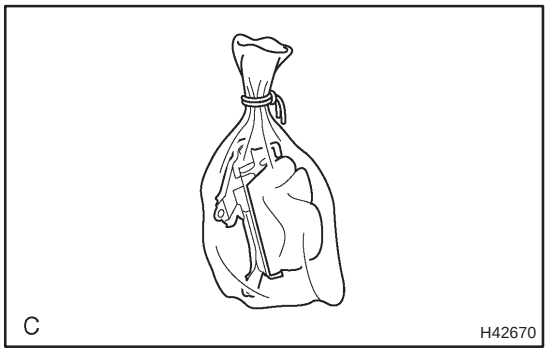

(i) Dispose of the instrument panel airbag assy.

CAUTION:

- **The instrument panel airbag assy is extremely hot when the airbag is deployed, so do not touch it for at least 30 minutes after deployment.**
- **Use gloves and safety glasses when handling the instrument panel airbag assy with the deployed airbag.**
- **Always wash your hands with water after completing the operation.**
- **Do not apply water etc. to the instrument panel airbag assy with the deployed airbag.**

(1) Remove the instrument panel airbag assy from the tire.

(2) Place the instrument panel airbag assy in a plastic bag, tie the end tightly and dispose of it in the same way as for other general parts disposal.

AIR BAG SENSOR ASSY CENTER

600A0–04

COMPONENTS

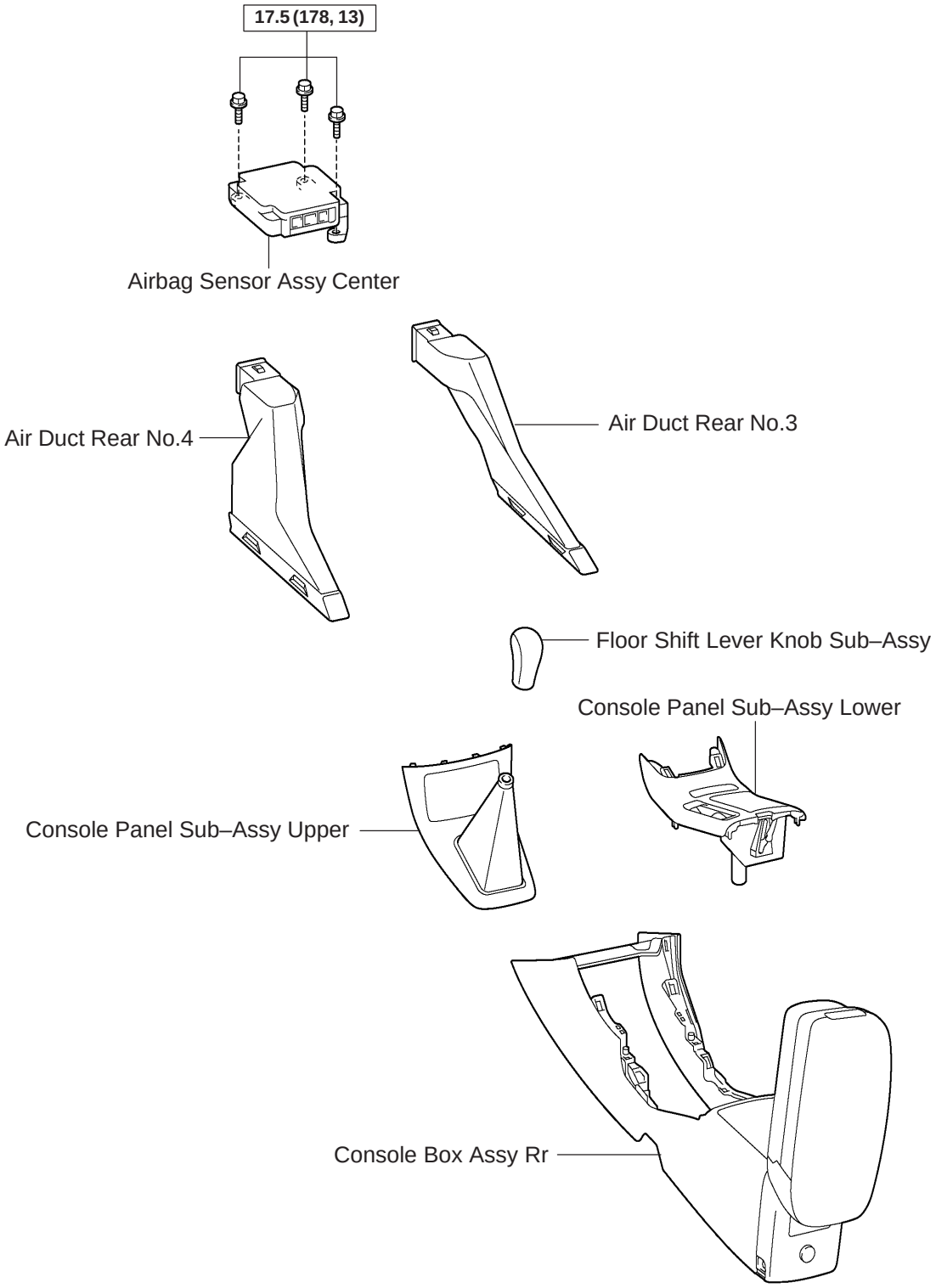

C N·m (kgf·cm, ft·lbf) : Specified torque

H42700

600A1–04

REPLACEMENT

1. **PRECAUTION (See page 60–1)**
2. **DISCONNECT BATTERY NEGATIVE TERMINAL (See page 60–1)**
3. **REMOVE SHIFT LEVER KNOB SUB–ASSY (M/T TRANSAXLE) (See page 71–11)**
4. **REMOVE CONSOLE PANEL SUB–ASSY UPPER (See page 71–11)**
5. **REMOVE CONSOLE PANEL SUB–ASSY LOWER (See page 71–11)**
6. **REMOVE CONSOLE BOX ASSY RR (See page 71–11)**
7. **REMOVE AIR DUCT REAR NO.3 (See page 71–11)**
8. **REMOVE AIR DUCT REAR NO.4 (See page 71–11)**

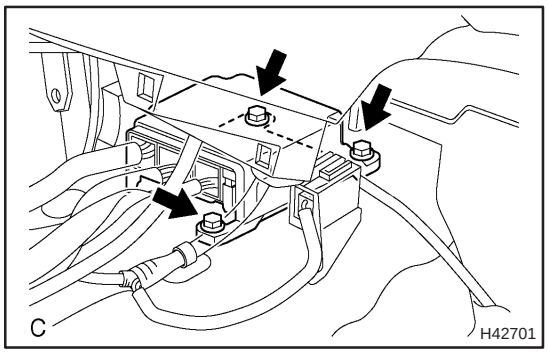

9. **REMOVE AIR BAG SENSOR ASSY CENTER**

(a) Disconnect the 3 connectors from the airbag sensor assy center.

(b) Remove the 3 bolts and airbag sensor assy center.

10. **INSTALL AIR BAG SENSOR ASSY CENTER**

(a) Check that the ignition switch is off.

(b) Check that the battery negative (–) terminal is disconnected.

NOTICE:

Do not start the operation for 90 seconds after removing the terminal.

(c) Temporarily install the airbag sensor assy center with the 3 bolts.

NOTICE:

- **If the airbag sensor assy center has been dropped, or there are any cracks, dents or other defects in the case, bracket or connector, replace the airbag sensor assy center with a new one.**
- **When installing the airbag sensor assy center, take care that the SRS wiring does not interfere with other parts and is not pinched between other parts.**

(d) Tighten the 3 bolts to the specified torque.

Torque: 17.5 N·m (178 kgf·cm, 13 ft·lbf)

(e) Connect the connectors to the airbag sensor assy center.

(f) Check that no play is identified.

(g) Check that the water–proof sheet is properly set.

11. **INSPECT SRS WARNING LIGHT (See page 05–1184)**

AIR BAG SENSOR FRONT LH

COMPONENTS

600A2–06

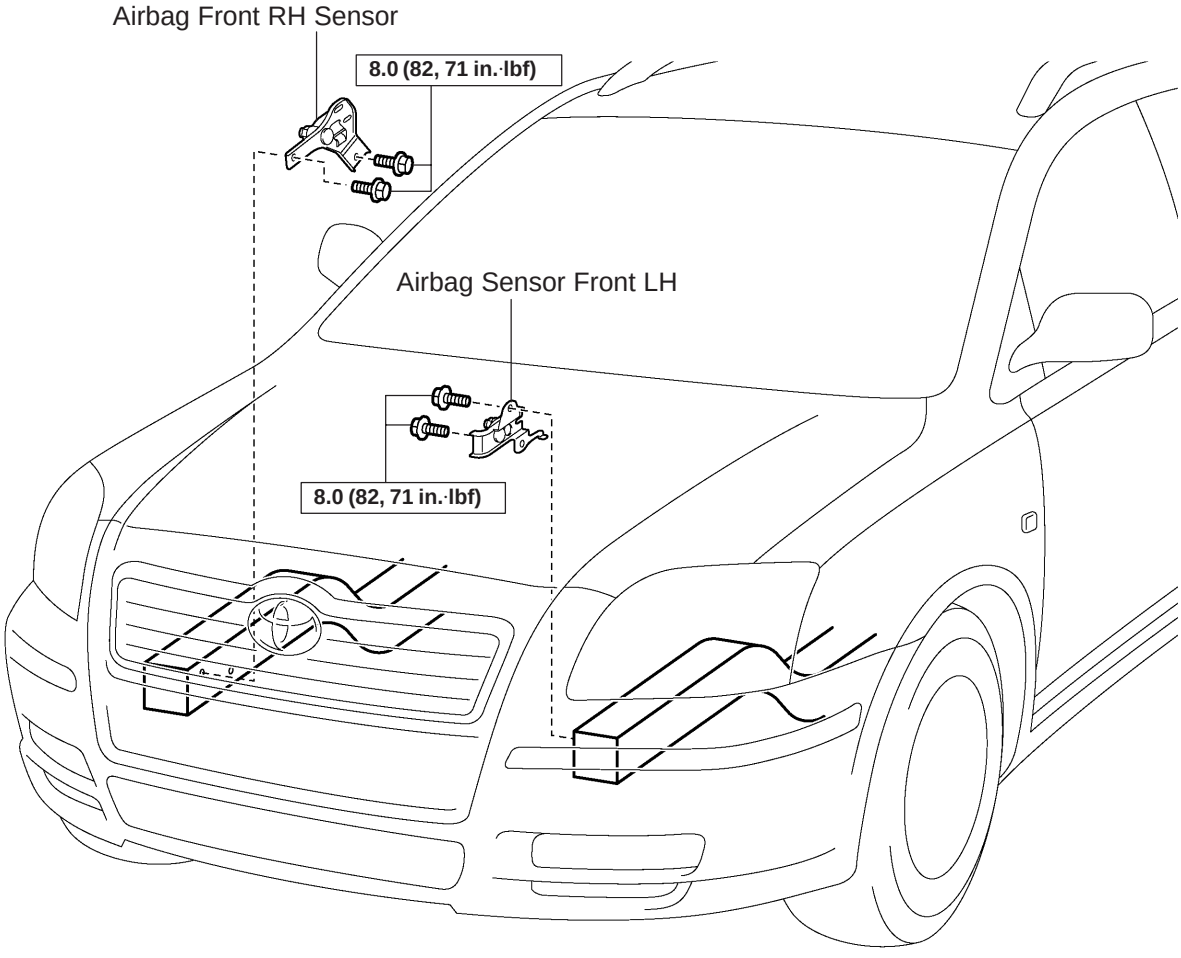

N·m (kgf·cm, ft·lbf) : Specified torque

C

H42698

600K6–01

REPLACEMENT

HINT:

Replacement procedure of the RH side is the same as that for with LH side.

1. PRECAUTION (See page 60–1)

2. DISCONNECT BATTERY NEGATIVE TERMINAL (See page 60–1)

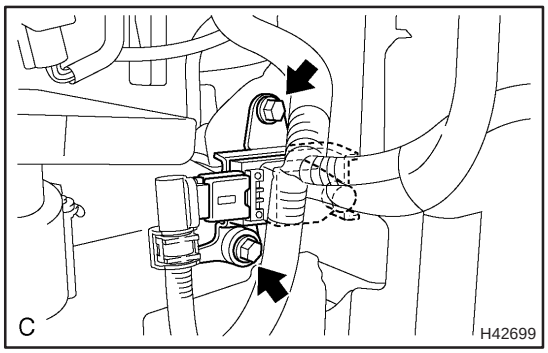

3. REMOVE AIR BAG SENSOR FRONT LH

(a) Remove the 2 bolts and airbag sensor front LH.

(b) Disconnect the connector from the airbag sensor front LH.

4. INSTALL AIR BAG SENSOR FRONT LH

(a) Check that the ignition switch is off.

(b) Check that the battery negative (–) is terminal is disconnected.

NOTICE:

Do not start the operation for 90 seconds after removing the terminal.

(c) Install the airbag sensor front LH with the 2 bolts.

Torque: 8.0 N·m (82 kgf·cm, 71 in.·lbf)

NOTICE:

- **If the airbag sensor front LH has been dropped, or there are any cracks, dents or other defects in the case, bracket or connector, replace the airbag sensor front LH with a new one.**
- **When installing the airbag sensor front LH, take care that the SRS wiring does not interfere with other parts and is not pinched between other parts.**

(d) Connect the connector to the airbag sensor front LH.

(e) Check that no play is identified.

5. INSPECT SRS WARNING LIGHT (See page 05–1184)

SIDE AIR BAG SENSOR ASSY LH

600A6–03

COMPONENTS

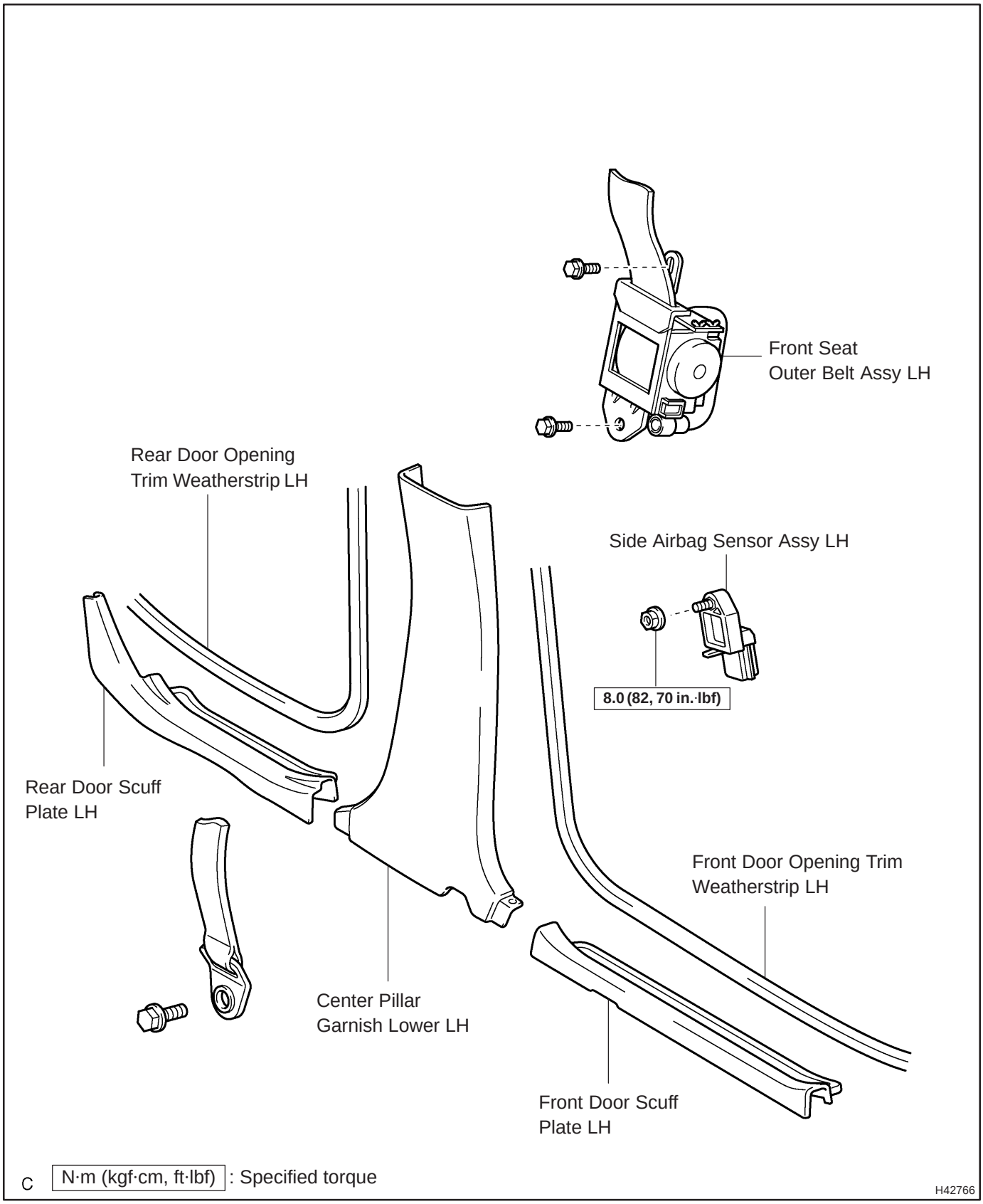

600A7–03

REPLACEMENT

HINT:

Replacement procedure of the RH side is the same as that for with LH side.

1. **PRECAUTION (See page 60–1)**
2. **DISCONNECT BATTERY NEGATIVE TERMINAL (See page 60–1)**
3. **REMOVE FRONT DOOR SCUFF PLATE LH (See page 76–36)**
4. **REMOVE REAR DOOR SCUFF PLATE LH (See page 76–36)**
5. **REMOVE FRONT DOOR WEATHERSTRIP LH (See page 76–36)**
6. **REMOVE REAR DOOR WEATHERSTRIP LH (See page 76–36)**
7. **REMOVE CENTER PILLAR GARNISH LOWER LH (See page 76–36)**
8. **REMOVE FRONT SEAT OUTER BELT ASSY LH (See page 61–7)**

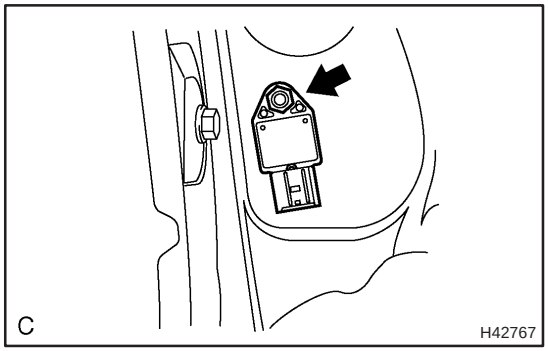

9. REMOVE SIDE AIR BAG SENSOR ASSY LH

(a) Remove the bolt and the side airbag sensor assy LH.

(b) Disconnect the connector from the side airbag sensor assy LH.

10. INSTALL SIDE AIR BAG SENSOR ASSY LH

(a) Check that the ignition switch is off.

(b) Check that the battery negative (–) terminal is disconnected.

NOTICE:

Do not start the operation for 90 seconds after removing the terminal.

(c) Install the side airbag sensor assy LH with the nut.

Torque: 8.0 N·m (82 kgf·cm, 70 in.·lbf)

NOTICE:

- **If the side airbag sensor assy LH has been dropped, or there are any cracks, dents or other defects in the case, bracket or connector, replace the side airbag sensor assy LH with a new one.**
- **When installing the side airbag sensor assy LH, take care that the SRS wiring does not interfere with other parts and is not pinched between other parts.**

(d) Connect the connector of the side airbag sensor assy LH.

(e) Check that no play is identified.

11. **INSTALL FRONT SEAT OUTER BELT ASSY LH (See page 61–7)**
12. **INSPECT SRS WARNING LIGHT (See page 05–1184)**

AIR BAG SENSOR REAR LH

COMPONENTS

600K7–01

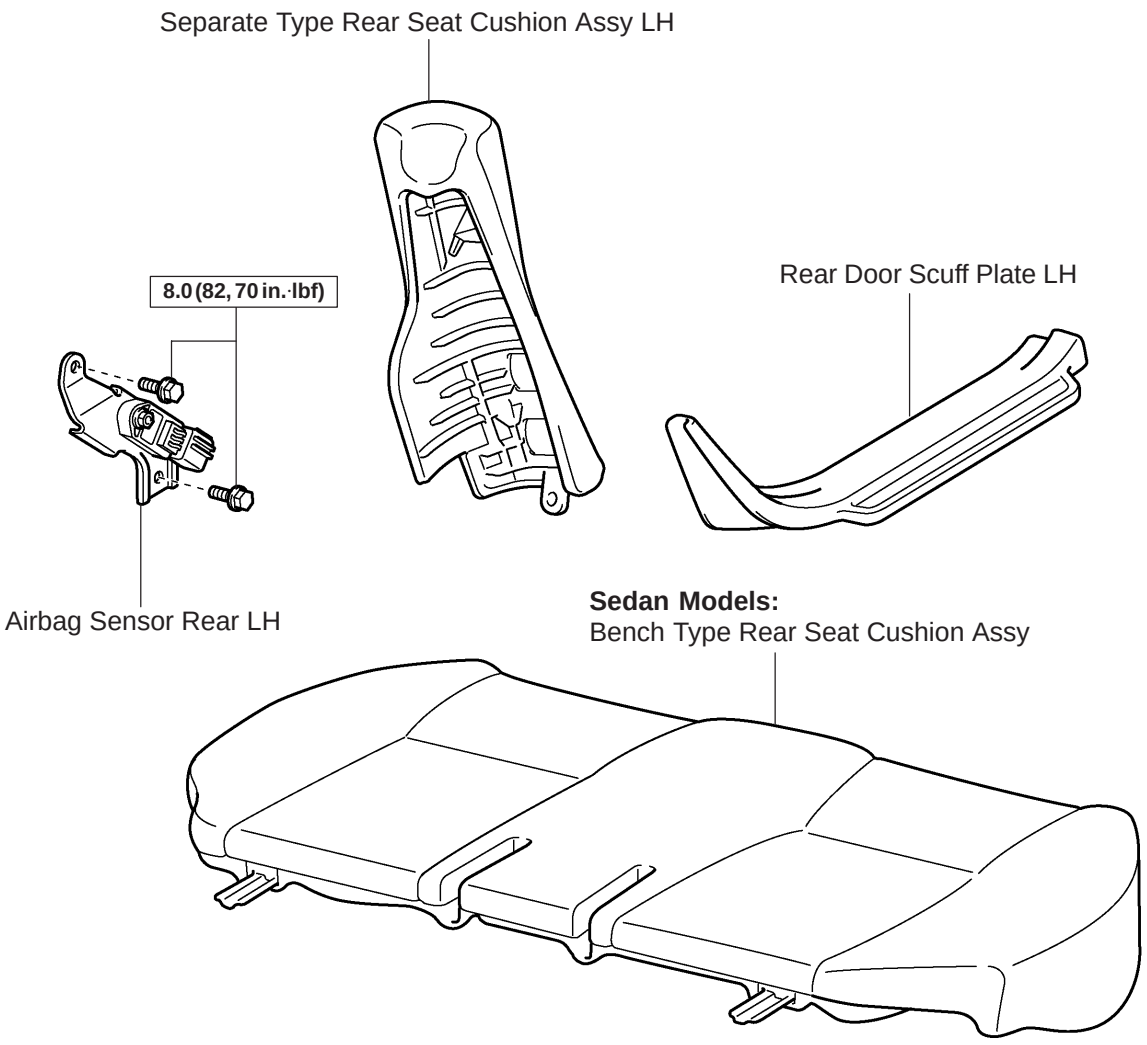

C

H42768

600K8–01

REPLACEMENT

HINT:

Replacement procedure of the RH side is the same as that for the LH side.

1. **PRECAUTION (See page 60–1)**
2. **DISCONNECT BATTERY NEGATIVE TERMINAL (See page 60–1)**
3. **REMOVE REAR DOOR SCUFF PLATE LH (See page 76–36)**
4. **REMOVE REAR SEAT CUSHION ASSEMBLY (SEDAN MODELS) (See page 76–36)**
5. **REMOVE REAR SIDE SEAT BACK ASSY LH (See page 76–36)**

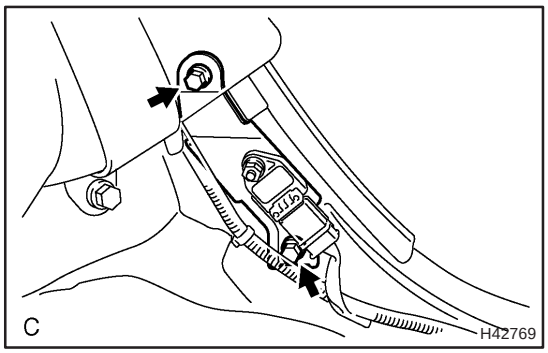

6. **REMOVE AIR BAG SENSOR REAR LH**

(a) Disconnect the connector of the airbag sensor rear LH.

(b) Remove the 2 bolts and the airbag sensor rear LH.

7. **INSTALL AIR BAG SENSOR REAR LH (See page 60–11)**

(a) Check that the ignition switch is off.

(b) Check that the battery negative (–) terminal is disconnected.

NOTICE:

Do not start the operation for 90 seconds after removing the terminal.

(c) Install the airbag sensor rear LH with the 2 bolts.

Torque: 8.0 N·m (82 kgf·cm, 70 ft·lbf)

NOTICE:

- **If the airbag sensor rear LH has been dropped, or there are any cracks, dents or other defects in the case, bracket or connector, replace the airbag sensor rear LH with a new one.**
- **When installing the airbag sensor rear LH, take care that the SRS wiring does not interfere with other parts and is not pinched between other parts.**

(d) Connect the connector of the airbag sensor rear LH.

(e) Check that no play is identified.

8. **INSPECT SRS WARNING LIGHT (See page 05–1184)**

SEAT POSITION AIR BAG SENSOR

600AA–04

COMPONENTS

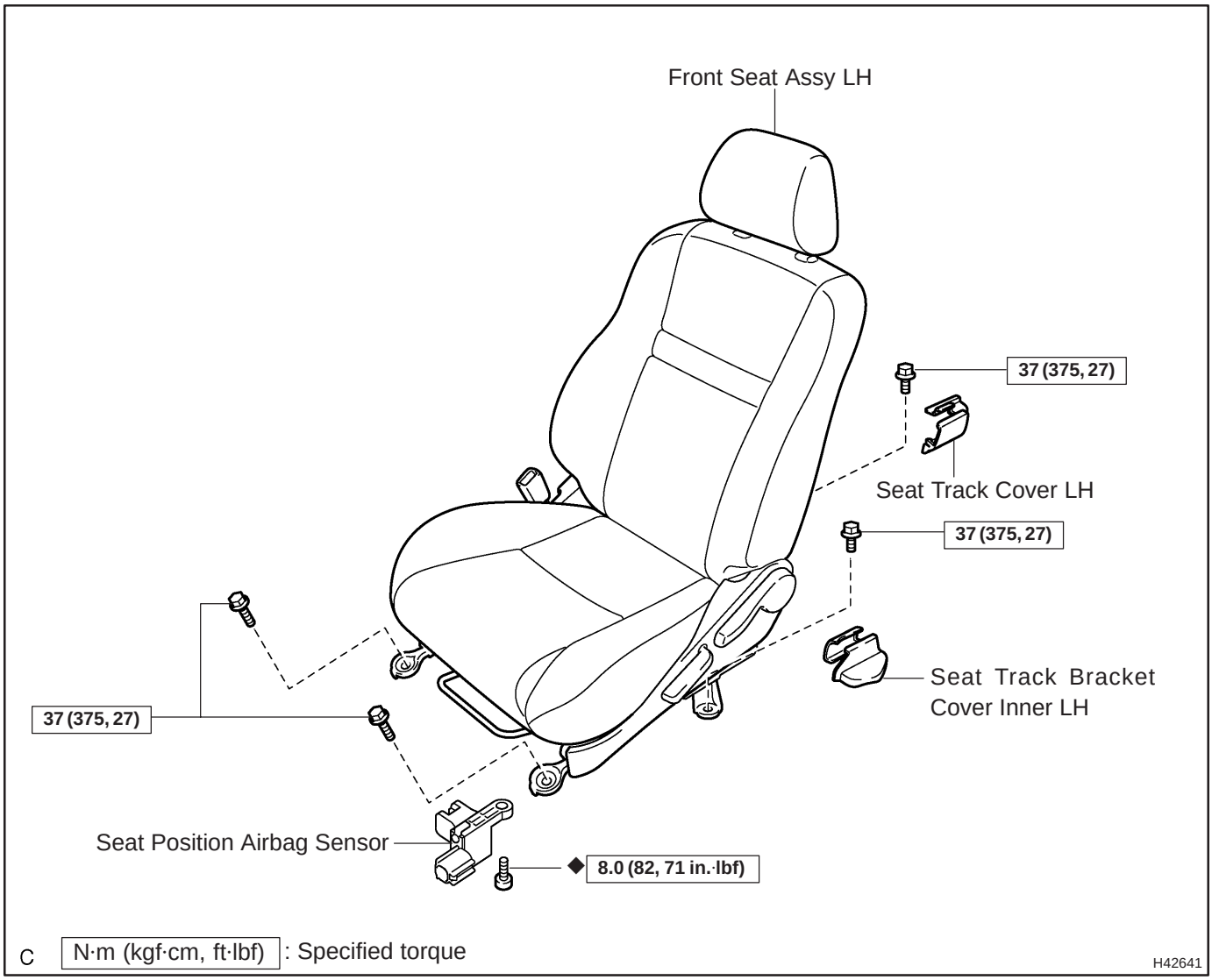

REPLACEMENT

HINT:

Replacement procedure of the RH side is the same as that of the LH side.

1. **PRECAUTION (See page 60–1)**
2. **DISCONNECT BATTERY NEGATIVE TERMINAL (See page 60–1)**
3. **REMOVE SEAT TRACK COVER LH (See page 72–16)**
4. **REMOVE SEAT TRACK BRACKET COVER INNER LH (See page 72–16)**
5. **REMOVE FRONT SEAT ASSY LH (See page 72–16)**

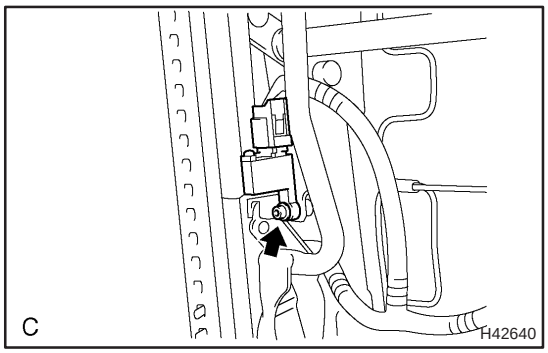

6. **REMOVE SEAT POSITION AIR BAG SENSOR**

(a) Disconnect the connector of the seat position airbag sensor.

(b) Using a torx socket wrench (T30), remove the torx screw and seat position airbag sensor.

7. **INSTALL SEAT POSITION AIR BAG SENSOR**

(a) Check that the ignition switch is off.

(b) Check that the battery negative (–) terminal is disconnected.

NOTICE:

Do not start the operation for 90 seconds after removing the terminal.

(c) Using a torx socket wrench (T30), install the seat position airbag sensor with the torx screw.

Torque: 8.0 N·m (82 kgf·cm, 71 in.·lbf)

NOTICE:

- **If the seat position airbag sensor has been dropped, or there are any cracks, dents or other defects in the case, bracket or connector, replace the seat position airbag sensor with a new one.**
- **When installing the seat position airbag sensor, take care that the SRS wiring does not interfere with other parts and is not pinched between other parts.**

(d) Connect the connector of the seat position airbag sensor.

(e) Check that no play is identified.

8. **INSTALL FRONT SEAT ASSY LH (See page 72–16)**

Torque: 37 N·m (375 kgf·cm, 27 ft·lbf)

9. **SRS WARNING LIGHT (See page 05–1184)**

SEAT BELT WARNING SYSTEM

610CJ–02

LOCATION

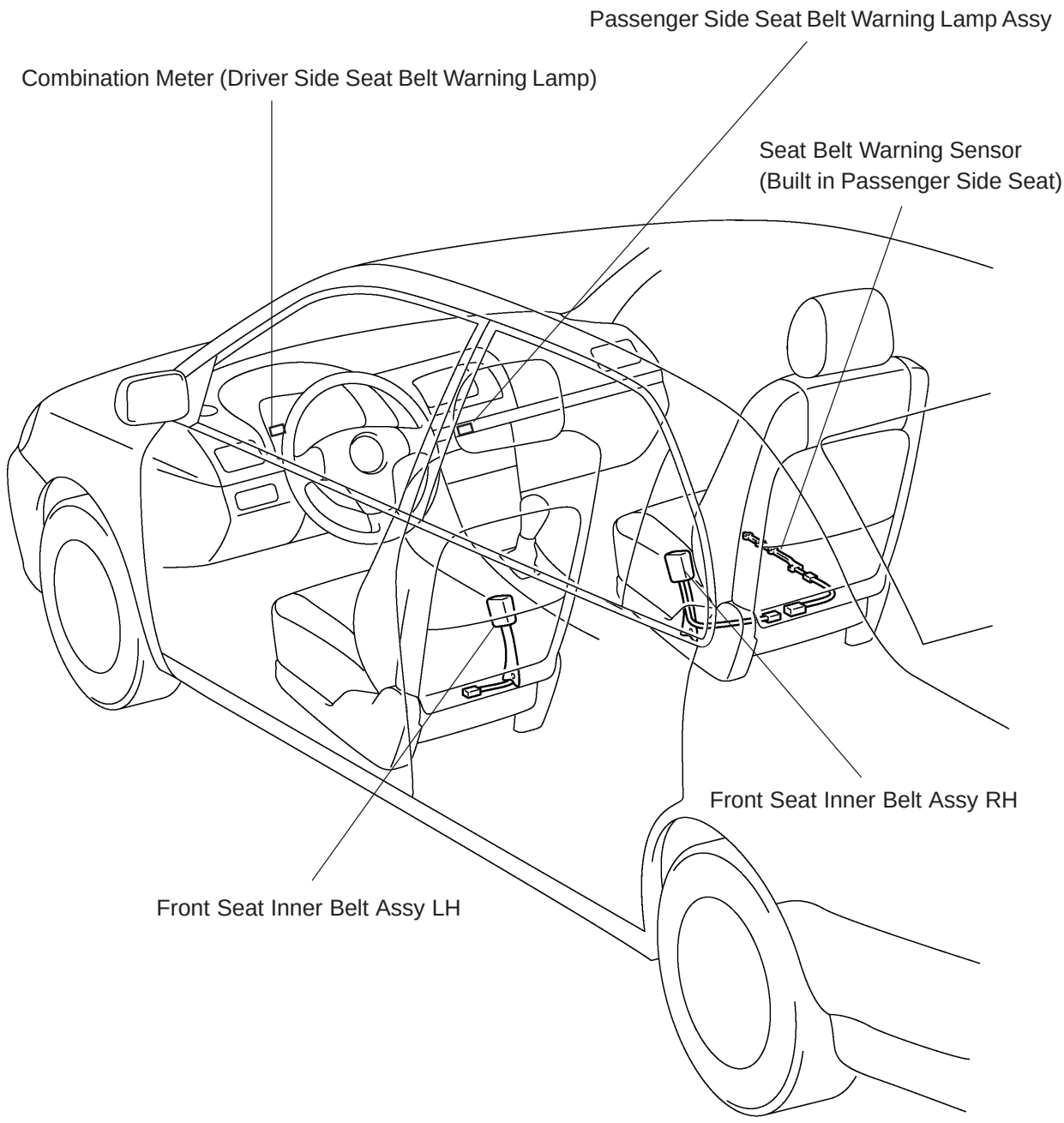

T

B66559

610CK–02

PROBLEM SYMPTOMS TABLE

Symptom	Suspected Area	See Page
Driver side seat belt warning lamp does not light up	1. Fuse 2. Combination meter 3. Airbag sensor assy center 4. Front seat inner belt assy LH 5. Wire harness	— 71–21 60–62 61–3 —
Passenger side seat belt warning lamp does not light up	1. Fuse 2. Passenger side seat belt warning lamp assy 3. Front seat inner belt assy RH 4. Wire harness	— 61–3 61–3 —

610CL–02

INSPECTION

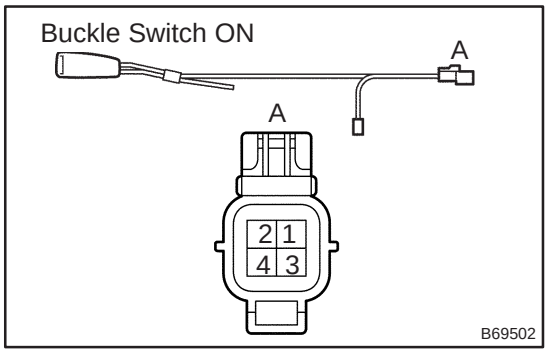

1. Driver side:
INSPECT FRONT SEAT INNER BELT ASSY

(a) Inspect the buckle switch.
(1) Fasten the seat belt (Buckle switch is ON).
(2) Check the resistance between the terminals.

Standard:

Tester Connection	Specified Condition
A–1 – A–3	1,330 Ω

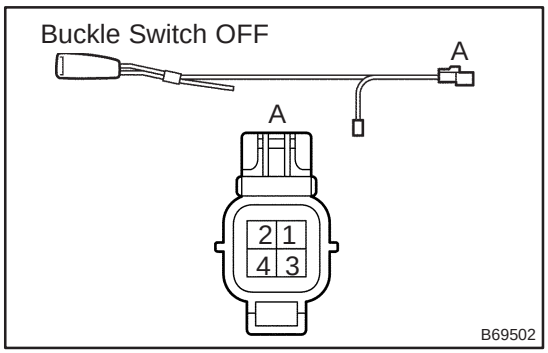

(3) Release the seat belt (Buckle switch is OFF).
(4) Check the resistance between the terminals.

Standard:

Tester Connection	Specified Condition
A–1 – A–3	330 Ω

If the result is not as specified, replace the inner belt assy.

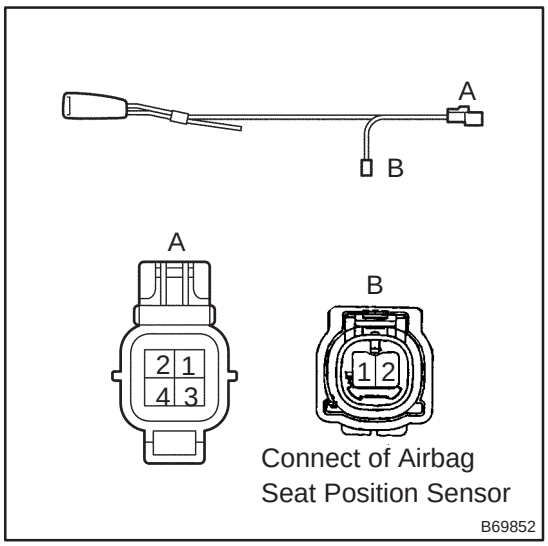

(b) Inspect the circuit for the airbag seat position sensor.
(1) Check the resistance between the terminals of connector A and the connector of the airbag seat position sensor.

Standard:

Tester Connection	Specified Condition
A–2 – B–1 (Connector for airbag seat position sensor)	Below 1 Ω
A–4 – B–2 (Connector for airbag seat position sensor)	

If the result is not as specified, replace the inner belt assy.

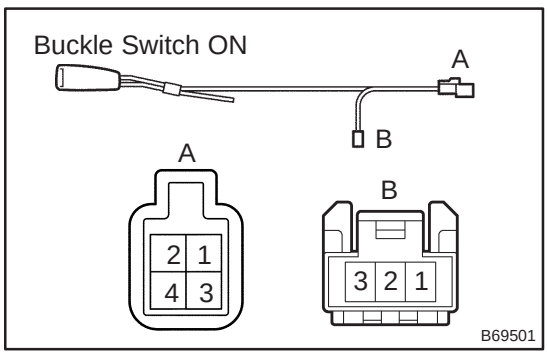

2. Passenger side:
INSPECT FRONT SEAT INNER BELT ASSY

(a) Inspect the buckle switch.
(1) Fasten the seat belt (Buckle switch is ON).
(2) Check the resistance between the terminals.

Standard:

Tester Connection	Specified Condition
A–1 – B–3	Below 1 Ω
A–3 – B–1	Below 1 Ω

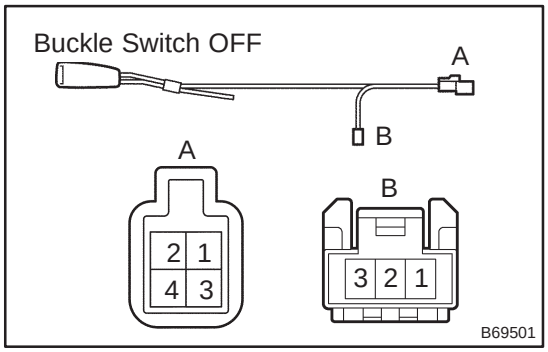

(3) Release the seat belt (Buckle switch is OFF).
(4) Check the resistance between the terminals.

Standard:

Tester Connection	Specified Condition
A–1 – B–3	10 kΩ or higher
A–3 – B–1	Below 1 Ω

If the result is not as specified, replace the inner belt assy.

FRONT SEAT BELT

610E8–01

PRECAUTION

CAUTION:

Replace the faulty parts of the seat belt systems (outer belt, inner belt, bolts, nuts, adjustable shoulder anchor, tether anchor hardware, sill–bar, etc.)

Seat belt systems not in use at the time of a collision should also be inspected and replaced if found to be damaged or working improperly.

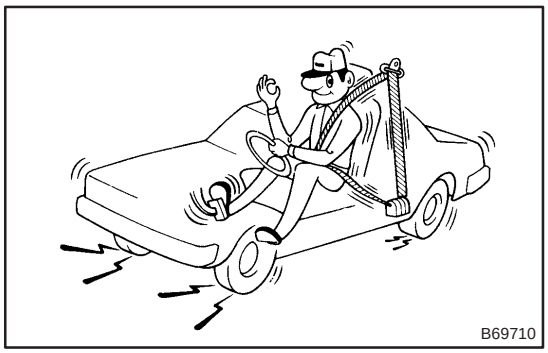

1. RUNNING TEST (IN SAFE AREA)

(a) Fasten the front seat belts.

(b) Drive the car at 16 km/h (10 mph) and slam on the brakes. Check the belt locks and cannot be extended at this time.

HINT:

Conduct this test in a safe area. If the belt does not lock, remove the belt assembly and perform the following static check. Also whenever installing a new belt assembly, verify the proper operation before installation.

610CM–02

COMPONENTS

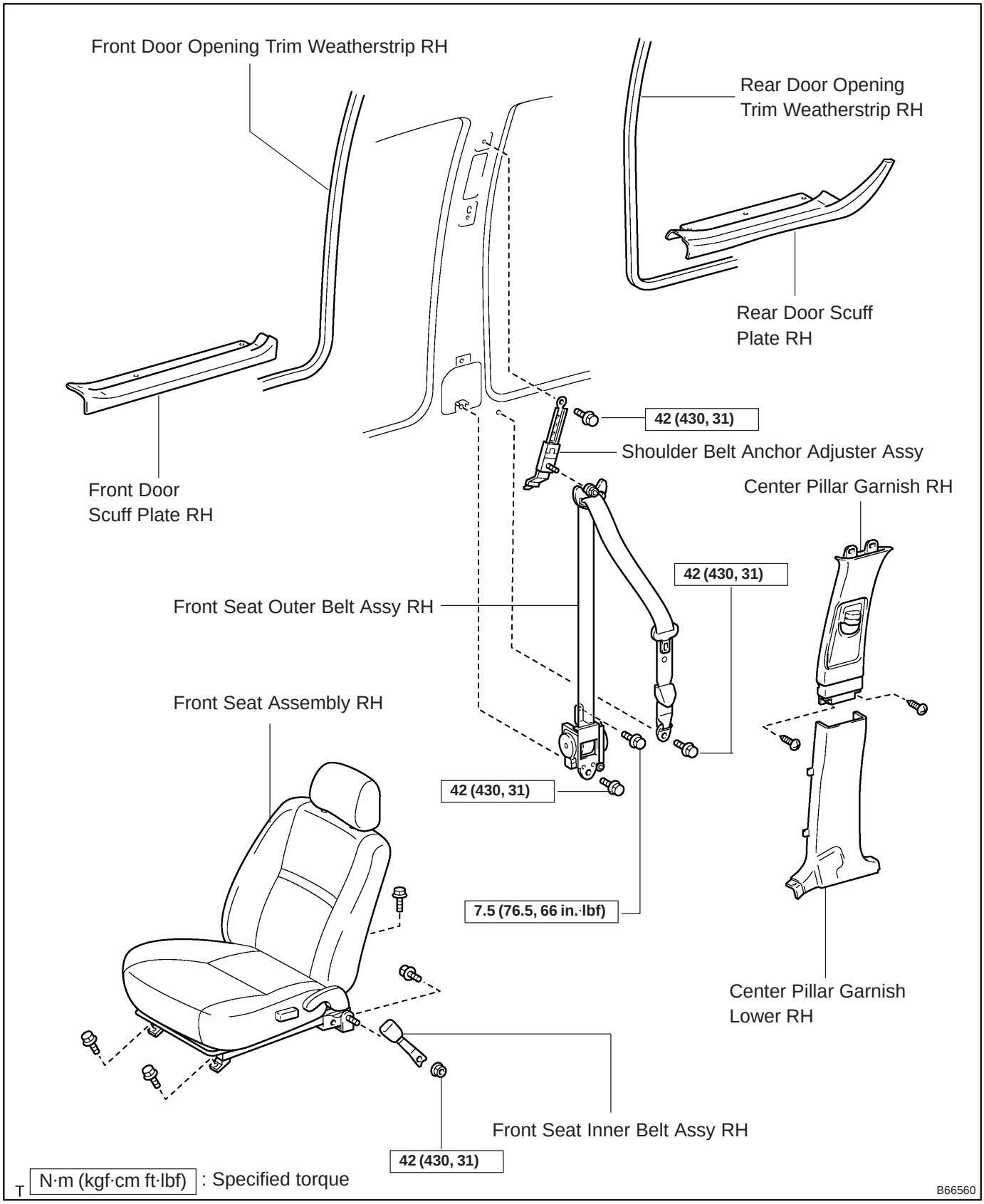

REPLACEMENT

HINT:

- The installation is in the reverse order of the removal. However, when there is a special point concerning the installation, it is indicated.
- Use the same procedures on the LH side as on the RH side.

1. DISCONNECT BATTERY NEGATIVE TERMINAL

2. REMOVE FRONT SEAT ASSEMBLY RH

3. REMOVE FRONT SEAT INNER BELT ASSY RH

4. REMOVE FRONT DOOR SCUFF PLATE RH (See page 76–36, 76–45, 76–54)

5. REMOVE REAR DOOR SCUFF PLATE RH (See page 76–36, 76–45, 76–54)

6. REMOVE FRONT DOOR WEATHERSTRIP RH

7. REMOVE REAR DOOR WEATHERSTRIP RH

8. REMOVE CENTER PILLAR GARNISH LOWER RH (See page 76–36, 76–45, 76–54)

9. REMOVE CENTER PILLAR GARNISH UPPER RH (See page 76–36, 76–45, 76–54)

10. REMOVE FRONT SEAT OUTER BELT ASSY RH

NOTICE:

- **Removal operation concerning the seat belt with the pretensioner must be started when 90 seconds or more time has passed after the ignition switch is turned OFF and the battery negative terminal is disconnected.**
- **Carefully read the notices for the ”pretensioner” in the SRS airbag system section and the front seat outer belt assy section.**

(a) Remove the nut and the outer belt on the shoulder anchor side.

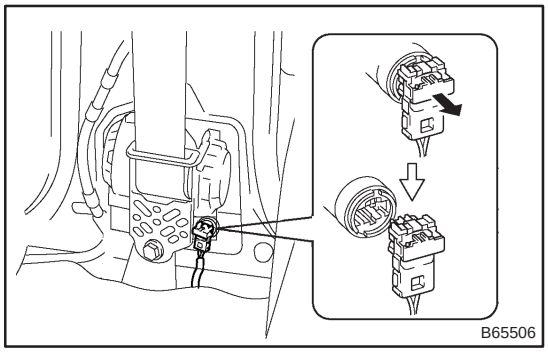

(b) Disconnect the pretensioner connector, as shown in the illustration.

(c) Remove the 2 bolts on the retractor side and throughly remove the outer belt.

11. REMOVE FRONT SHOULDER BELT ANCHOR ADJUSTER ASSY

(a) Remove the bolt and anchor adjuster.

12. INSTALL FRONT SHOULDER BELT ANCHOR ADJUSTER ASSY

(a) Install the adjuster with the bolt.

Torque: 42 N·m (430 kgf·cm, 31 ft·lbf)

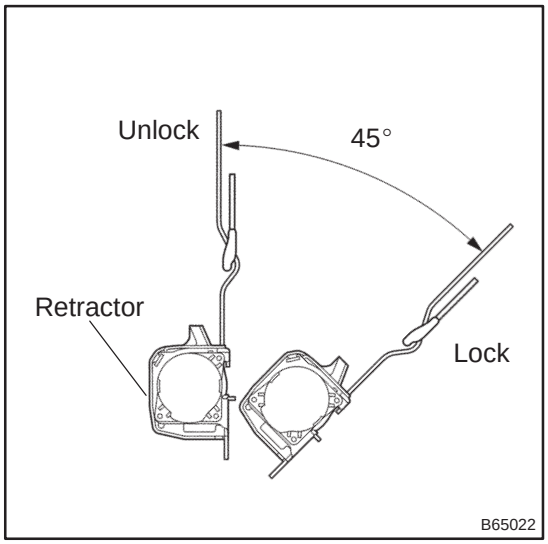

13. INSTALL FRONT SEAT OUTER BELT ASSY RH

NOTICE:

Do not disassemble the retractor.

(a) Check the degree of tilt when beginning to lock the ELR.

(1) Check that the belt does not lock within 15° of tilt in all directions but locks with over 45° of tilt when gently moving the retractor.

If operation is not as specified, replace the outer belt assy.

(b) Install the outer belt with the 2 bolts on the retractor side.

Torque:

7.5 N·m (76.5 kgf·cm, 66 in.·lbf) for upper bolt

42 N·m (430 kgf·cm, 31 ft·lbf) for lower bolt

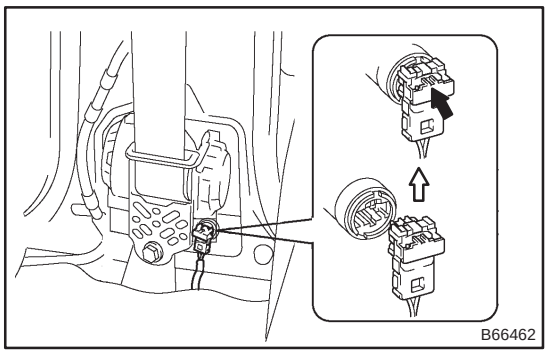

(c) Connect the pretensioner connector, as shown in the illustration.

(d) Install the outer belt with the nut on the shoulder anchor side.

Torque: 42 N·m (430 kgf·cm, 31 ft·lbf)

(e) Install the outer belt with the bolt on the floor anchor side.

Torque: 42 N·m (430 kgf·cm, 31 ft·lbf)

(f) Install the floor anchor cover.

(g) Check the ELR lock.

NOTICE:

The check should be performed with the assembly installed.

(1) Check that the belt locks by pulling it out quickly after installation.

If operation is not as specified, replace the outer belt assy.

(h) Check the fastening function of the child restraint system.

NOTICE:

The check should be performed with the assembly installed.

(1) Check that the belt cannot be pulled out any more but rewinds after being pulled out fully.

(2) Check that the belt can be pulled out and rewound after the belt has been fully rewound.

If operation is not as specified, replace the outer belt assy.

14. INSTALL FRONT SEAT INNER BELT ASSY RH

(a) Install the inner belt with the nut.

Torque: 42 N·m (430 kgf·cm, 31 ft·lbf)

DISPOSAL

HINT:

When scrapping vehicles equipped with a seat belt pretensioner or disposing of a front seat outer belt (with seat belt pretensioner), always first activate the seat belt pretensioner in accordance with the procedures described below. If any abnormality occurs in activation of the seat belt pretensioner, contact the SERVICE DEPT. of the DISTRIBUTOR. When disposing of a front seat outer belt assy (with seat belt pretensioner) that was activated in a collision, follow the same procedure listed in step 1–(e) in ”DISPOSAL”.

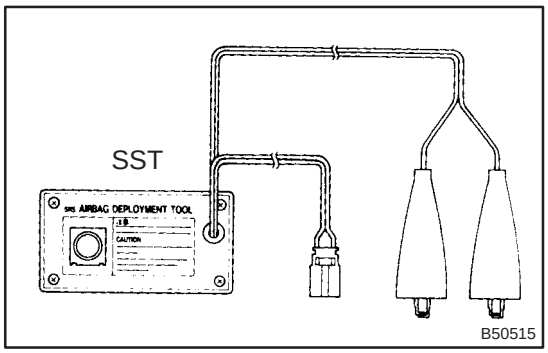

CAUTION:

- **Never dispose of a front seat outer belt assy with an inactivated pretensioner.**
- **The seat belt pretensioner produces a sizeable exploding sound when it activates, so perform the operation outdoors so as not to disturb nearby residents.**
- **When activating a front seat outer belt (with seat belt pretensioner), control operation at least 10 m (33 ft) away from the front seat outer belt.**
- **Use gloves and safety glasses when handling a front seat belt with an activated pretensioner.**
- **Always wash your hands with water after completing activation.**
- **Do not apply water, etc. to a front seat outer belt with an activated pretensioner.**
- **When activating the seat belt pretensioner, always use the specified SST (SRS airbag deployment tool). Perform operation in a place away from electrical interference.**

  SST 09082–00700

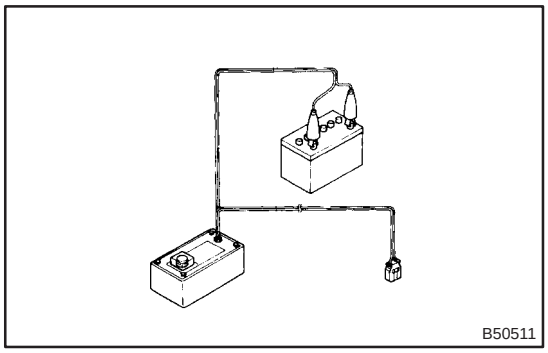

1. DISPOSE OF FRONT SEAT OUTER BELT ASSY RH (WHEN INSTALLED IN VEHICLE)

HINT:

Check that the battery positive voltage is above 12 V.

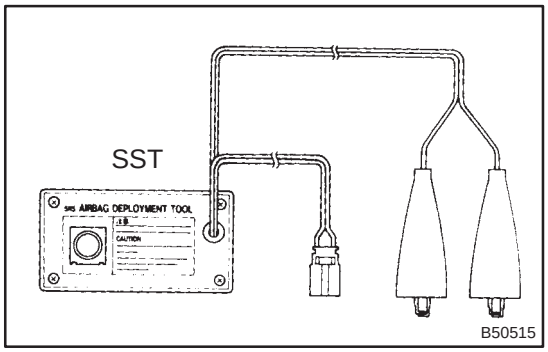

(a) Check the functioning of SST.
SST 09082–00700, 09082–00770

CAUTION:
When activating the seat belt pretensioner, always use the specified SST.

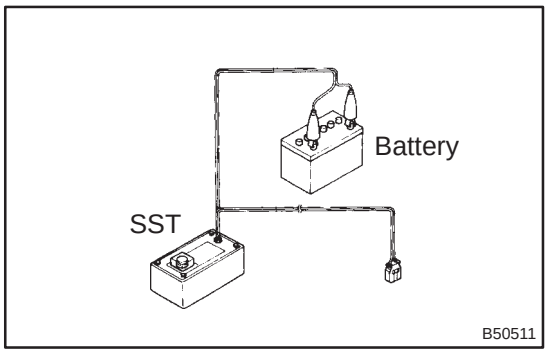

(1) Connect the SST red clip to the battery positive (+) terminal and the black clip to the battery negative (–) terminal.

HINT:
Do not connect the yellow connector which should be connected to the seat belt pretensioner.

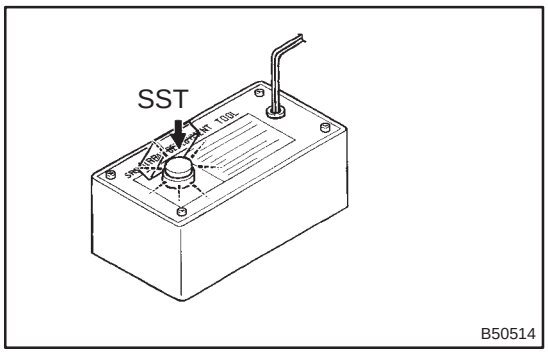

(2) Press the SST activation switch and check that the LED of the SST activation switch lights up.

CAUTION:
If the LED lights up when the activation switch is not pressed, the SST may have a malfunction, in which case that SST should be used.

(b) Disconnect the SST from the battery.
(c) Disconnect the pretensioner connector.
(1) Disconnect the battery negative (–) terminal.
(2) Check the SRS airbag system (See page 60–1).
(3) Remove the front door scuff plate RH (See page 76–36, 76–45, 76–54).
(4) Remove the rear door scuff plate RH (See page 76–36, 76–45, 76–54).
(5) Remove the front door weatherstrip RH.
(6) Remove the rear door weatherstrip RH.
(7) Remove the center pillar garnish lower RH (See page 76–36, 76–45, 76–54).

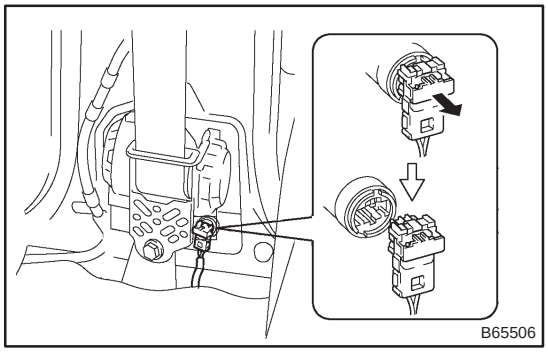

(8) Disconnect the pretensioner connector, as shown in the illustration.

(d) Connect SST.
SST 09082–00700, 09082–00770
(1) Install the floor anchor of the seat belt.

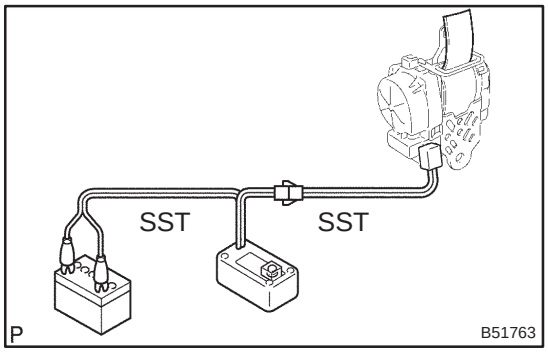

(2) Connect SST, then connect them to the seat belt pretensioner.

NOTICE:

To avoid damaging the SST connector and wire harness, do not lock the secondary lock of the twin lock.

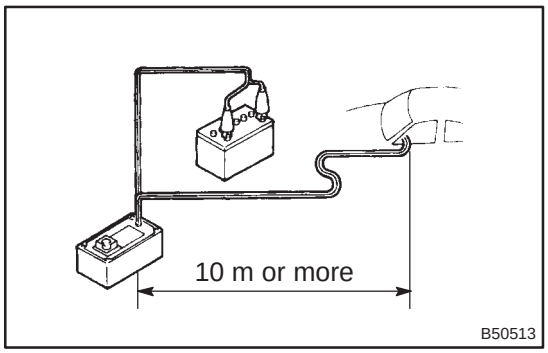

(3) Move the SST at least 10 m (33 ft) away from the front of the vehicle.

(4) Close all the doors and windows of the vehicle.

NOTICE:

Take care not to damage the SST wire harness.

(5) Connect the SST red clip to the battery positive (+) terminal and the black clip to the negative (–) terminal.

(e) Activate the seat belt pretensioner.

(1) Confirm that no one is inside the vehicle or within 10 m (33 ft) of the vehicle.

(2) Press the SST activation switch and activate the seat belt pretensioner.

HINT:

The seat belt pretensioner operates simultaneously with the LED light for the SST activation switch.

(f) Dispose of the outer belt (with the seat belt pretensioner).

CAUTION:

- **The outer belt is very hot when the seat belt pretensioner is activated, so leave it untouched for at least 30 minutes after it has been activated.**
- **Use gloves and safety glasses when handling the outer belt with a pretensioner that has been activated.**
- **Always wash your hands with water after completing operation.**
- **Do not apply water, etc. to an outer belt with a pretensioner that has been activated.**

HINT:

When scrapping a vehicle, activate the seat belt pretensioner, and then scrap the vehicle with the activated outer belt being installed.

2. DISPOSE OF FRONT SEAT OUTER BELT ASSY RH (WHEN NOT INSTALLED IN VEHICLE)

NOTICE:

- **When disposing of the front seat outer belt (with the seat belt pretensioner) only, never use the customer's vehicle to activate the seat belt pretensioner.**
- **Be sure to follow the procedures listed below when activating the seat belt pretensioner.**

(a) Remove the outer belt (See page 61–7).

HINT:

Cut the belt near the seat belt retractor.

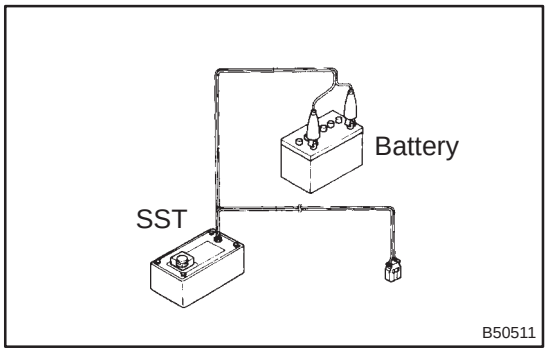

(b) Check the functioning of SST (See step 1–(a)).
SST 09082–00700, 09082–00770

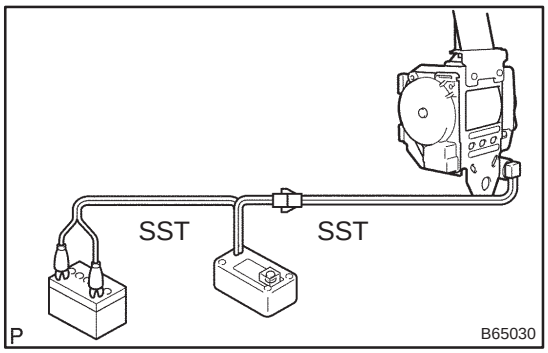

(c) Connect SST.
SST 09082–00700, 09082–00770
(1) Connect SST, then connect them to the seat belt pretensioner.

NOTICE:
To avoid damaging the SST connector and wire harness, do not lock the secondary lock of the twin lock.

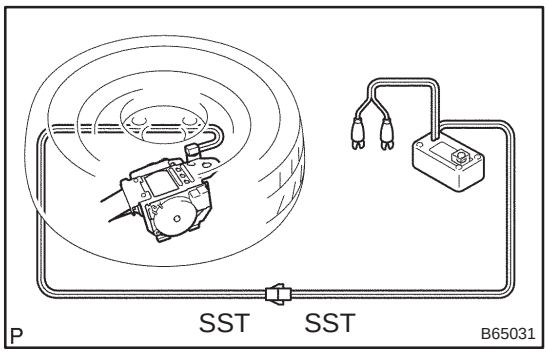

(2) Place the outer belt on the ground and cover it with a wheel and tire.

NOTICE:
Set up the front seat outer belt assy as shown in the illustration.

(3) Move the SST at least 10 m (33 ft) away from the wheel.

NOTICE:
Take care not to damage the SST wire harness.

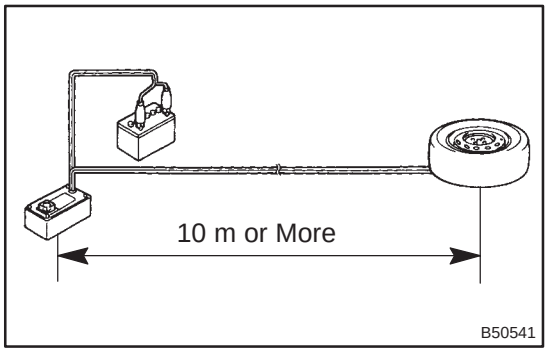

(d) Activate the seat belt pretensioner.
(1) Connect the SST red clip to the battery positive (+) terminal and the black clip to the battery negative (–) terminal.
(2) Check that no one is within 10 m (33 ft) of the wheel.
(3) Press the SST activation switch and activate the seat belt pretensioner.

HINT:
The seat belt pretensioner operates simultaneously with the LED light for the SST activation switch.

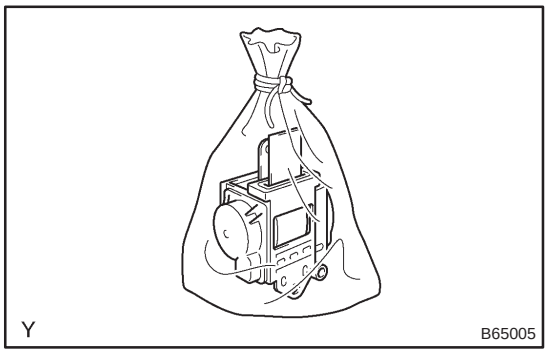

(e) Dispose of the outer belt (with the seat belt pretensioner).

CAUTION:
- **The outer belt assy is very hot when the seat belt pretensioner is activated, so leave it untouched for at least 30 minutes after it has been activated.**
- **Use gloves and safety glasses when handling the outer belt with the pretensioner that has been activated.**
- **Always wash your hands with water after completing operation.**

- **Do not apply water, etc. to an outer belt with the pretensioner that has been activated.**
  (1) Remove the wheel and SST.
  (2) Place the outer belt in a plastic bag, tie the end tightly and dispose of it in the same way as other general parts.

REAR SEAT BELT (SEDAN MODELS)

COMPONENTS

610CP–02

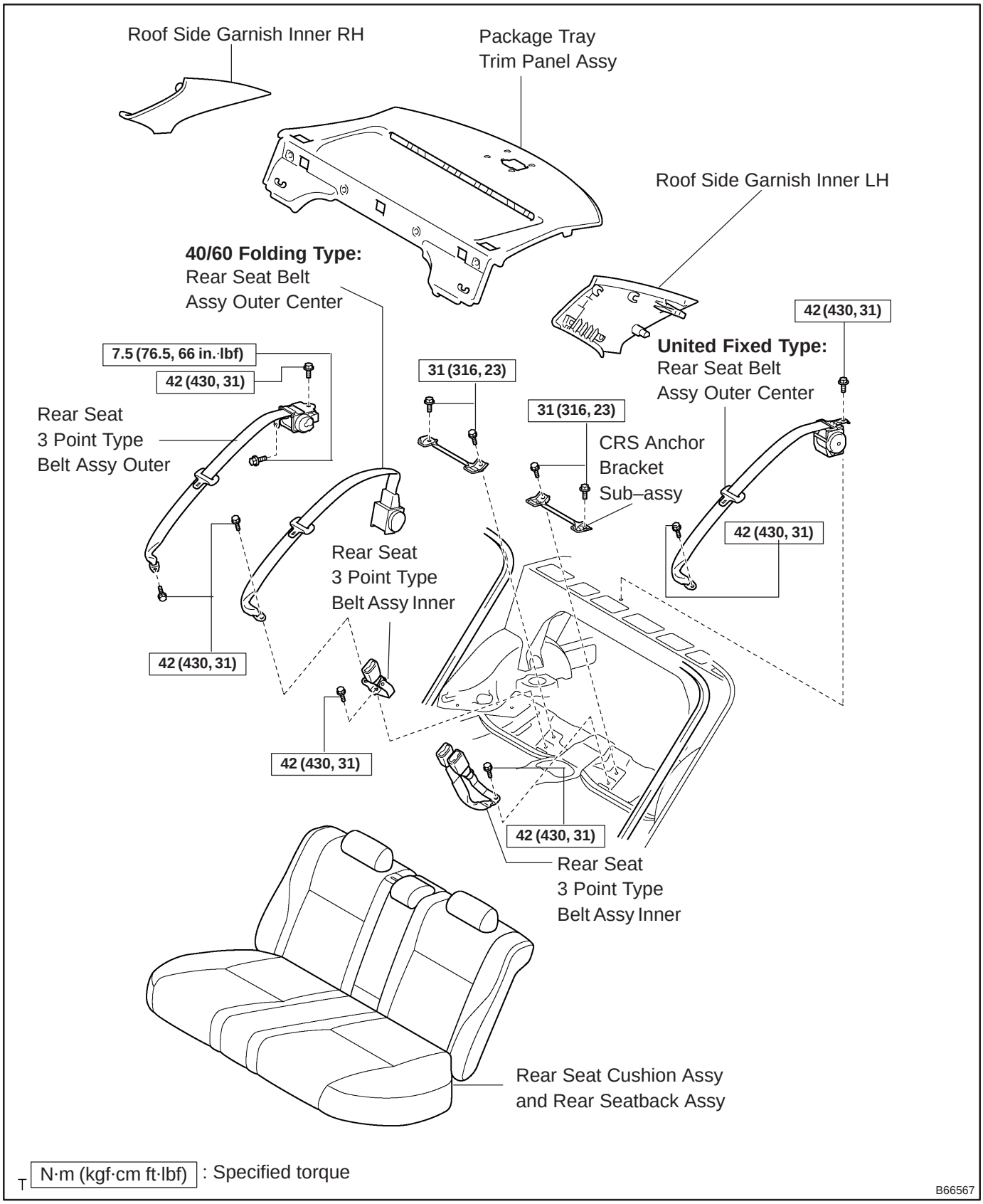

REPLACEMENT

HINT:

- The installation is in the reverse order of the removal. However, when there is a special point concerning the installation, it is indicated.
- Use the same procedures on the LH side as on the RH side.

1. REMOVE REAR DOOR SCUFF PLATE RH (See page 76–36)
2. REMOVE REAR DOOR SCUFF PLATE LH (See page 76–36)
3. REMOVE REAR DOOR OPENING TRIM WEATHERSTRIP RH
4. REMOVE REAR DOOR OPENING TRIM WEATHERSTRIP LH
5. REMOVE REAR SEAT ASSY (See page 72–27, 72–32)
6. REMOVE ROOF SIDE GARNISH INNER RH (See page 76–36)
7. REMOVE ROOF SIDE GARNISH INNER LH (See page 76–36)
8. REMOVE PACKAGE TRAY TRIM PANEL ASSY (See page 76–36)
9. REMOVE REAR SEAT 3 POINT TYPE BELT ASSY OUTER
(a) Remove the bolt and belt on the floor anchor side.
(b) Remove the 2 bolts and belt on the retractor side.
10. REMOVE REAR SEAT BELT ASSY OUTER CENTER
(a) United fixed type:
Remove the bolt and belt on the floor anchor side.
(b) United fixed type:
Remove the bolt and belt on the retractor side.
(c) 40/60 folding type:
Remove the rear seatback board RH (See page 72–27).
(d) 40/60 folding type:
Remove the rear seat shoulder belt cover (See page 72–27).
(e) 40/60 folding type:
Remove the bolt on the retractor side and remove the belt completely.
(f) Remove the bolt and belt outer center on the floor anchor side.
11. REMOVE REAR SEAT 3 POINT TYPE BELT ASSY INNER
(a) Remove the bolt and belt.
12. REMOVE REAR SEAT 3 POINT TYPE BELT ASSY INNER
(a) Remove the bolt and belt.
13. REMOVE CHILD RESTRAINT SEAT ANCHOR BRACKET SUB–ASSY RH
(a) Remove the 2 bolts and anchor bracket.
14. INSTALL CHILD RESTRAINT SEAT ANCHOR BRACKET SUB–ASSY RH
(a) Install the child restraint seat anchor bracket with the 2 bolts.
Torque: 31 N·m (316 kgf·cm, 23 ft·lbf)

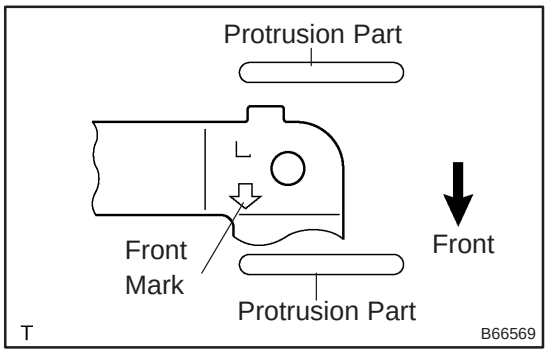

15. INSTALL REAR SEAT 3 POINT TYPE BELT ASSY INNER
(a) Install the belt assy with the bolt as shown in the illustration.
Torque: 42 N·m (430 kgf·cm, 31 ft·lbf)

NOTICE:
Make sure that the anchor part does not run onto the protrusion part of the floor panel.

16. INSTALL REAR SEAT BELT ASSY OUTER CENTER (UNITED FIXED TYPE REAR SEAT)

(a) Install the belt with the bolt on the retractor side.
Torque: 42 N·m (430 kgf·cm, 31 ft·lbf)

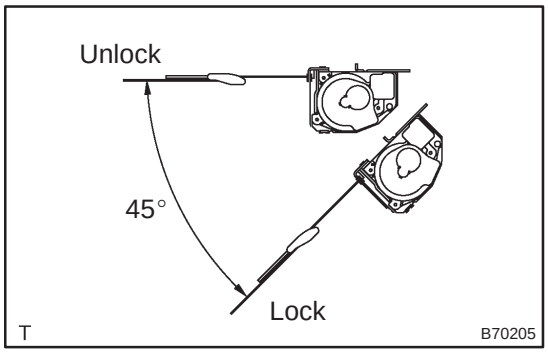

(b) Check the degree of tilt when the belt begins to lock the ELR.

NOTICE:

Do not disassemble the retractor.

(1) Check that the belt does not lock within 15° of tilt in all directions but locks with over 45° of tilt when gently moving the retractor.

If operation is not as specified, replace the seat belt assy.

(c) Install the belt with the bolt on the floor anchor side.
Torque: 42 N·m (430 kgf·cm, 31 ft·lbf)

(d) Check the ELR lock.

NOTICE:

The check should be performed with the assembly installed.

(1) Check that the belt locks by pulling it out quickly after installation.

HINT:

The seat belt does not lock when it is pulled out to a length of 955 mm (37.60 in.) or less.

If operation is not as specified, replace the belt assy.

(e) Check the fastening function of the child restraint system.

NOTICE:

The check should be performed with the assembly installed.

(1) Check that the belt cannot be pulled out any more but rewinds after being pulled out fully.

(2) Check that the belt can be pulled out and rewound after the belt has been fully rewound.

If operation is not as specified, replace the belt assy.

17. INSTALL REAR SEAT BELT ASSY OUTER CENTER (40/60 FOLDING TYPE REAR SEAT)

(a) Install the belt assy with the bolt on the retractor side.
Torque: 42 N·m (430 kgf·cm, 31 ft·lbf)

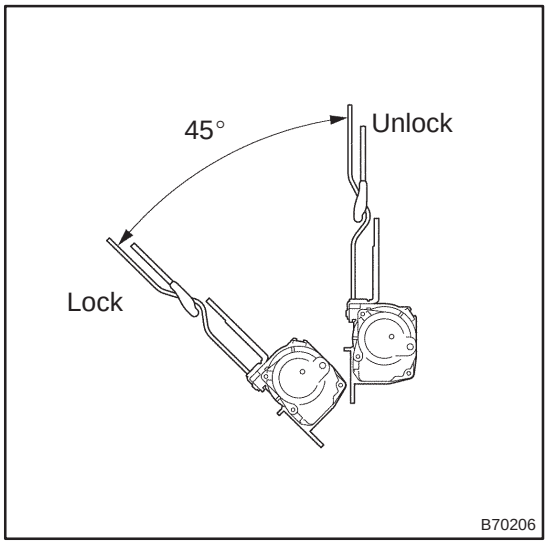

(b) Check the degree of tilt when the belt begins to lock the ELR.

NOTICE:

Do not disassemble the retractor.

(1) Check that the belt does not lock within 15° of tilt in all directions but locks with over 45° of tilt when gently moving the retractor.

If operation is not as specified, replace the belt assy.

(c) Install the belt with the bolt on the floor anchor side.

Torque: 42 N·m (430 kgf·cm, 31 ft·lbf)

(d) Check the ELR lock.

NOTICE:

The check should be performed with the assembly installed.

(1) Check that the belt locks by pulling it out quickly after installation.

HINT:

The seat belt does not lock when it is pulled out to a length of 955 mm (37.60 in.) or less.

If operation is not as specified, replace the belt assy.

(e) Check the fastening function of the child restraint system.

NOTICE:

The check should be performed with the assembly installed.

(1) Check that the belt cannot be pulled out any more but rewinds after being pulled out fully.

(2) Check that the belt can be pulled out and rewound after the belt has been fully rewound.

If operation is not as specified, replace the belt assy.

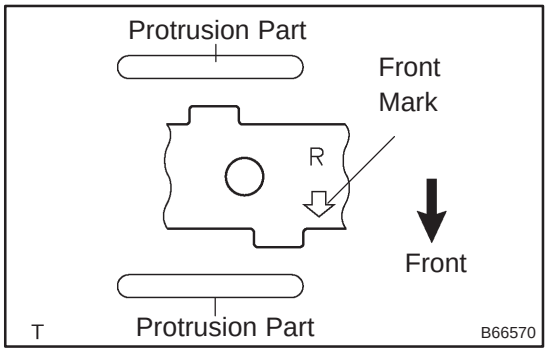

18. INSTALL REAR SEAT 3 POINT TYPE BELT ASSY INNER

(a) Install the floor anchor and belt with the bolt as shown in the illustration.

Torque: 42 N·m (430 kgf·cm, 31 ft·lbf)

NOTICE:

Make sure that the anchor part does not run onto the protrusion part of the floor panel.

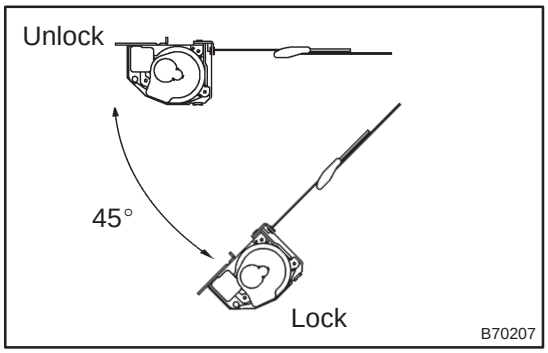

19. INSTALL REAR SEAT 3 POINT TYPE BELT ASSY OUTER

(a) Install the belt with the bolt on the retractor side.

Torque:

7.5 N·m (76.5 kgf·cm, 66 in.·lbf) for front bolt

42 N·m (430 kgf·cm, 31 ft·lbf) for upper bolt

(b) Check the degree of tilt when the belt begins to lock the ELR.

NOTICE:

Do not disassemble the retractor.

(1) Check that the belt does not lock within 15° of tilt in all directions but locks with over 45° of tilt when gently moving the retractor.

If operation is not as specified, replace the belt assy.

(c) Install the belt with the bolt on the floor anchor side.

Torque: 42 N·m (430 kgf·cm, 31 ft·lbf)

NOTICE:

Make sure that the anchor part does not run onto the protrusion part of the floor panel.

(1) Check that the belt locks by pulling it out quickly after installation.

If operation is not as specified, replace the belt assy.

(d) Check the ELR lock.

NOTICE:

The check should be performed with the assembly installed.

(1) Check that the belt locks by pulling it out quickly after installation.

If operation is not as specified, replace the belt assy.

(e) Check the fastening function of the child restraint system.

NOTICE:

The check should be performed with the assembly installed.

(1) Check that the belt cannot be pulled out any more but rewinds after being pulled out fully.

(2) Check that the belt can be pulled out and rewound after the belt has been fully rewound.

If operation is not as specified, replace the belt assy.

20. INSTALL REAR SEAT ASSY (See page 72–27, 72–32)

REAR SEAT BELT (LIFTBACK MODELS)

COMPONENTS

610E9–01

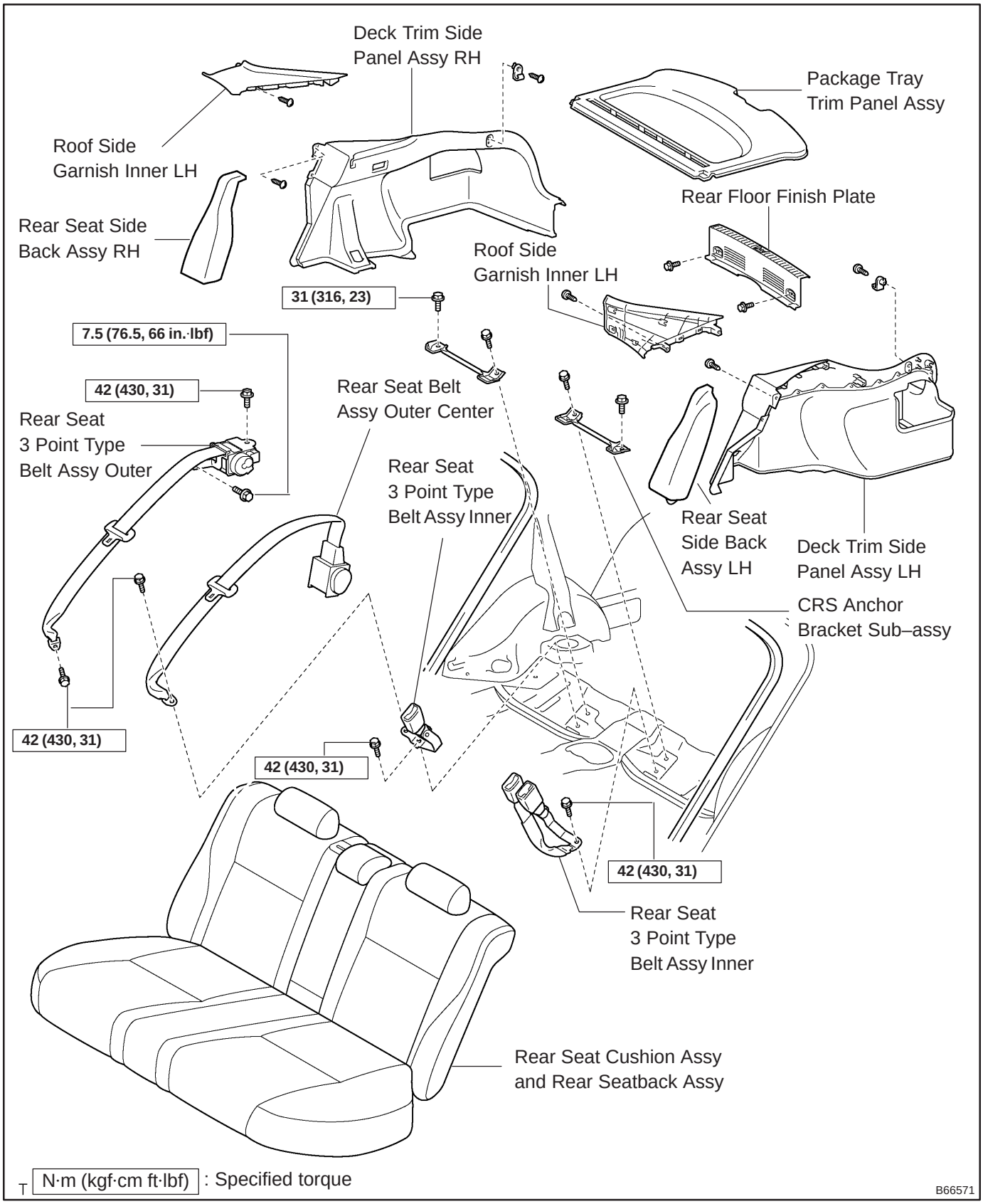

610EA–01

REPLACEMENT

HINT:

- The installation is in the reverse order of the removal. However, when there is a special point concerning the installation, it is indicated.
- Use the same procedures on the LH side as on the RH side.

1. REMOVE REAR DOOR SCUFF PLATE RH (See page 76–45)
2. REMOVE REAR DOOR OPENING TRIM WEATHERSTRIP RH
3. REMOVE REAR SEAT ASSY (See page 72–21)
4. REMOVE PACKAGE TRAY TRIM PANEL ASSY (See page 76–45)
5. REMOVE BACK DOOR WEATHERSTRIP
6. REMOVE REAR FLOOR FINISH PLATE (See page 76–45)
7. REMOVE ROOF SIDE GARNISH INNER RH (See page 76–45)
8. REMOVE DECK TRIM SIDE PANEL ASSY RH (See page 76–45)
9. REMOVE REAR SEAT 3 POINT TYPE BELT ASSY OUTER
(a) Remove the bolt and belt on the floor anchor side.
(b) Remove the 2 bolts and belt on the retractor side.
10. REMOVE REAR SEAT BELT ASSY OUTER CENTER
(a) Remove the rear seatback board RH (See page 72–21).
(b) Remove the rear seat shoulder belt cover (See page 72–21).
(c) Remove the bolt on the retractor side and remove the belt completely.
(d) Remove the bolt and belt assy outer center on the floor anchor side.
11. REMOVE REAR SEAT 3 POINT TYPE BELT ASSY INNER
(a) Remove the bolt and belt.
12. REMOVE REAR SEAT 3 POINT TYPE BELT ASSY INNER
(a) Remove the bolt and belt.
13. REMOVE CHILD RESTRAINT SEAT ANCHOR BRACKET SUB–ASSY RH
(a) Remove the 2 bolts and anchor bracket.
14. INSTALL CHILD RESTRAINT SEAT ANCHOR BRACKET SUB–ASSY RH
(a) Install the child restraint seat anchor bracket with the 2 bolts.
Torque: 31 N·m (316 kgf·cm, 23 ft·lbf)

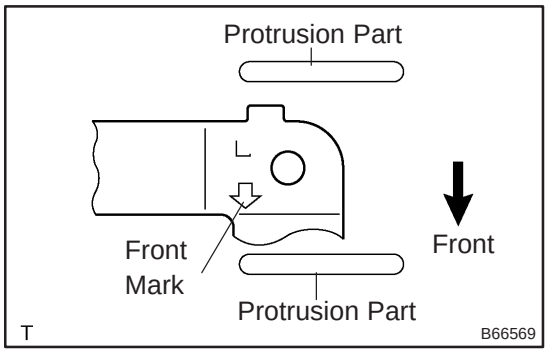

15. INSTALL REAR SEAT 3 POINT TYPE BELT ASSY INNER
(a) Install the belt with the bolt as shown in the illustration.
Torque: 42 N·m (430 kgf·cm, 31 ft·lbf)

NOTICE:
Make sure that the anchor part does not run onto the protrusion part of the floor panel.

16. INSTALL REAR SEAT BELT ASSY OUTER CENTER
(a) Install the belt with the bolt on the retractor side.
Torque: 42 N·m (430 kgf·cm, 31 ft·lbf)

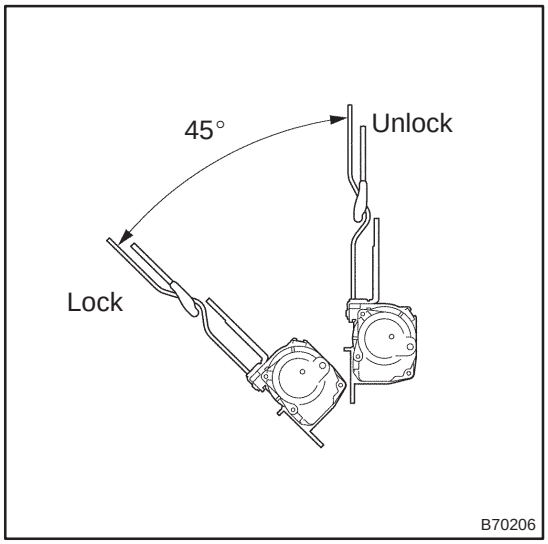

(b) Check the degree of tilt when the belt begins to lock the ELR.

NOTICE:

Do not disassemble the retractor.

(1) Check that the belt does not lock within 15° of tilt in all directions but locks with over 45° of tilt when gently moving the retractor.

If operation is not as specified, replace the belt assy.

(c) Install the belt with the bolt on the floor anchor side.

Torque: 42 N·m (430 kgf·cm, 31 ft·lbf)

(d) Check the ELR lock.

NOTICE:

The check should be performed with the assembly installed.

(1) Check that the belt locks by pulling it out quickly after installation.

HINT:

The seat belt does not lock when it is pulled out to a length of 955 mm (37.60 in.) or less.

If operation is not as specified, replace the belt assy.

(e) Check the fastening function of the child restraint system.

NOTICE:

The check should be performed with the assembly installed.

(1) Check that the belt cannot be pulled out any more but rewinds after being pulled out fully.

(2) Check that the belt can be pulled out and rewound after the belt has been fully rewound.

If operation is not as specified, replace the belt assy.

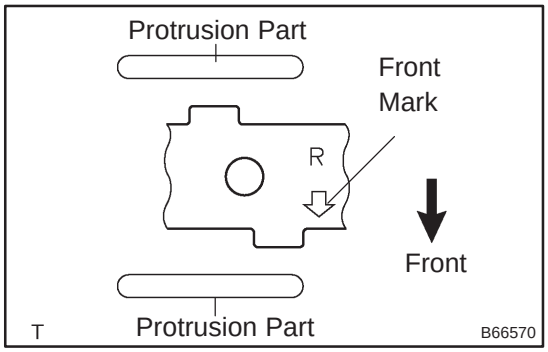

17. INSTALL REAR SEAT 3 POINT TYPE BELT ASSY INNER

(a) Install the floor anchor and belt with the bolt as shown in the illustration.

Torque: 42 N·m (430 kgf·cm, 31 ft·lbf)

NOTICE:

Makesure that the anchor part does not run onto the protrusion part of the floor panel.

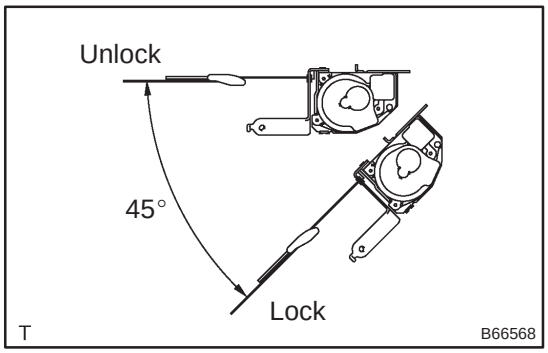

18. INSTALL REAR SEAT 3 POINT TYPE BELT ASSY OUTER

(a) Install the belt with the bolt on the retractor side.

Torque:

7.5 N·m (76.5 kgf·cm, 66 in.·lbf) for front bolt

42 N·m (430 kgf·cm, 31 ft·lbf) for upper bolt

(b) Check the degree of tilt when the belt begins to lock the ELR.

NOTICE:

Do not disassemble the retractor.

(1) Check that the belt does not lock within 15° of tilt in all directions but locks with over 45° of tilt when gently moving the retractor.

If operation is not as specified, replace the belt assy.

(c) Install the belt with the bolt on the floor anchor side.

Torque: 42 N·m (430 kgf·cm, 31 ft·lbf)

NOTICE:

Make sure that the anchor part does not run onto the protrusion part of the floor panel.

(1) Check that the belt locks by pulling it out quickly after installation.

If operation is not as specified, replace the belt assy.

(d) Check the ELR lock.

NOTICE:

The check should be performed with the assembly installed.

(1) Check that the belt locks by pulling it out quickly after installation.

If operation is not as specified, replace the belt assy.

(e) Check the fastening function of the child restraint system.

NOTICE:

The check should be performed with the assembly installed.

(1) Check that the belt cannot be pulled out any more but rewinds after being pulled out fully.

(2) Check that the belt can be pulled out and rewound after the belt has been fully rewound.

If operation is not as specified, replace the belt assy.

19. INSTALL REAR SEAT ASSY (See page 72–21)

REAR SEAT BELT (WAGON MODELS)

610EB–01

COMPONENTS

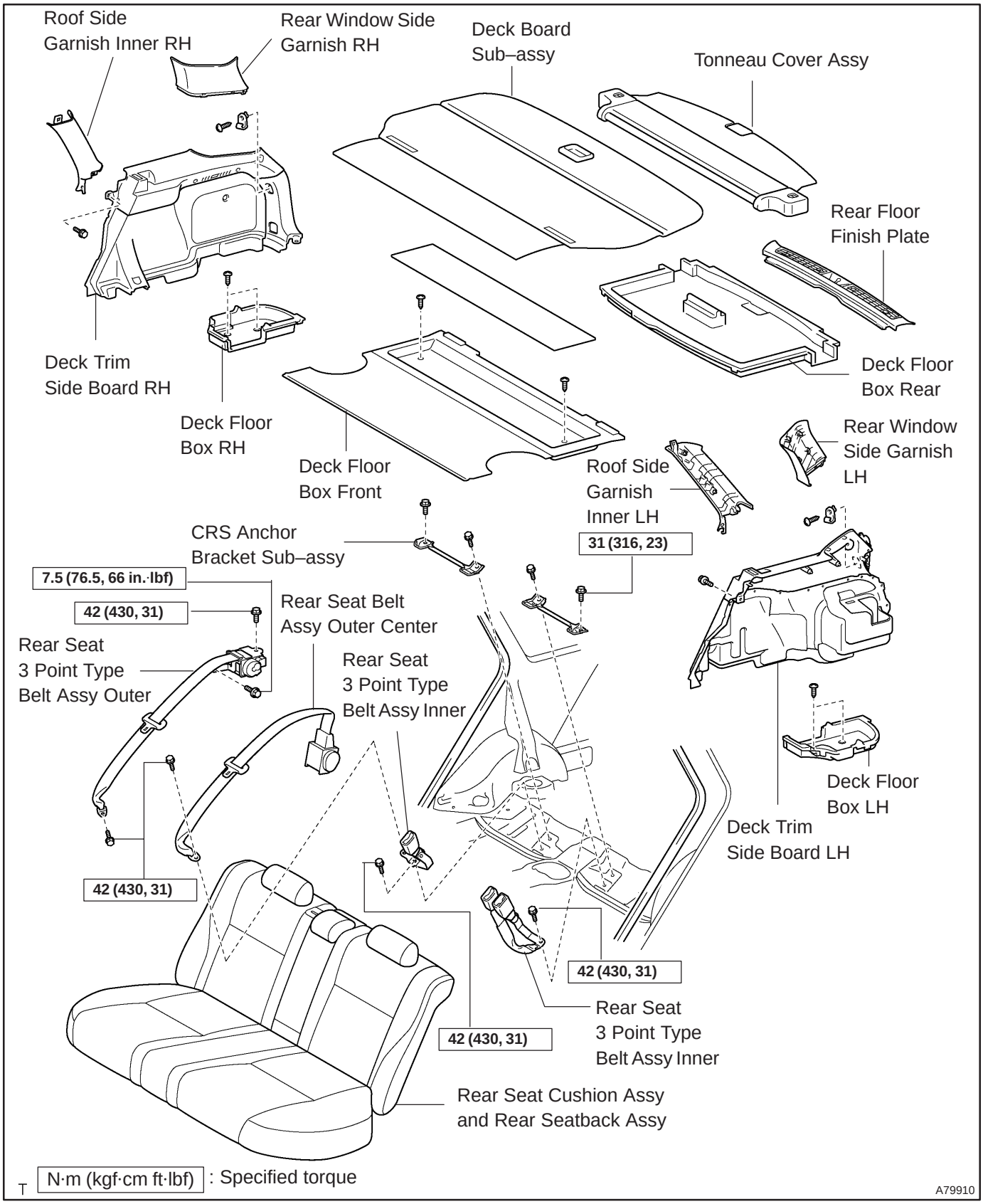

610EC–01

REPLACEMENT

HINT:

- The installation is in the reverse order of the removal. However, when there is a special point concerning the installation, it is indicated.
- Use the same procedures on the LH side as on the RH side.

1. REMOVE REAR DOOR SCUFF PLATE RH (See page 76–54)
2. REMOVE REAR DOOR OPENING TRIM WEATHERSTRIP RH
3. REMOVE REAR SEAT ASSY (See page 72–21)
4. REMOVE TONNEAU COVER ASSY
5. REMOVE BACK DOOR WEATHERSTRIP
6. REMOVE DECK BOARD SUB–ASSY (See page 76–54)
7. REMOVE DECK FLOOR BOX REAR (See page 76–54)
8. REMOVE DECK FLOOR BOX FRONT (See page 76–54)
9. REMOVE DECK FLOOR BOX RH (See page 76–54)
10. REMOVE REAR FLOOR FINISH PLATE (See page 76–54)
11. REMOVE DECK TRIM SIDE BOARD RH (See page 76–54)
12. REMOVE REAR SEAT 3 POINT TYPE BELT ASSY OUTER
(a) Remove the bolt and belt on the floor anchor side.
(b) Remove the 2 bolts and belt on the retractor side.
13. REMOVE REAR SEAT BELT ASSY OUTER CENTER
(a) Remove the rear seatback board RH (See page 72–21).
(b) Remove the rear seat shoulder belt cover (See page 72–21).
(c) Remove the bolt on the retractor side and remove the belt outer center completely.
(d) Remove the bolt and belt outer center on the floor anchor side.
14. REMOVE REAR SEAT 3 POINT TYPE BELT ASSY INNER
(a) Remove the bolt and belt.
15. REMOVE REAR SEAT 3 POINT TYPE BELT ASSY INNER
(a) Remove the bolt and belt.
16. REMOVE CHILD RESTRAINT SEAT ANCHOR BRACKET SUB–ASSY RH
(a) Remove the 2 bolts and anchor bracket.
17. INSTALL CHILD RESTRAINT SEAT ANCHOR BRACKET SUB–ASSY RH
(a) Install the child restraint seat anchor bracket with the 2 bolts.
Torque: 31 N·m (316 kgf·cm, 23 ft·lbf)

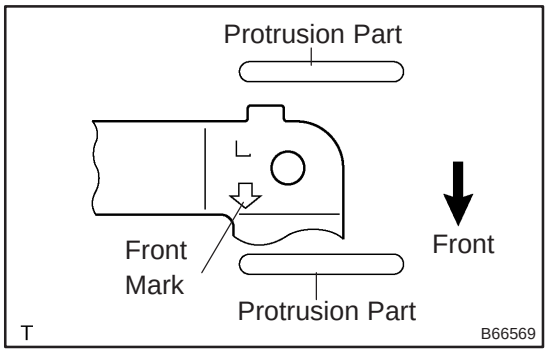

18. INSTALL REAR SEAT 3 POINT TYPE BELT ASSY INNER
(a) Install the belt with the bolt as shown in the illustration.
Torque: 42 N·m (430 kgf·cm, 31 ft·lbf)

NOTICE:

- **Makesure that the anchor part does not run onto the protrusion part of the floor panel.**
- **Do not disassemble the retractor.**

19. INSTALL REAR SEAT BELT ASSY OUTER CENTER
(a) Install the belt with the bolt on the retractor side.
Torque: 42 N·m (430 kgf·cm, 31 ft·lbf)

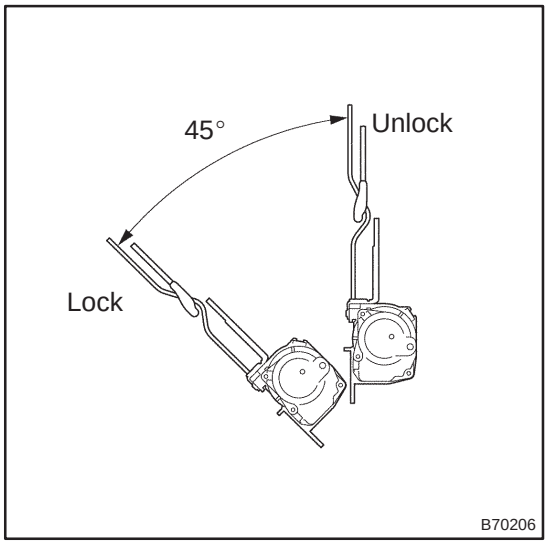

(b) Check the degree of tilt when the belt begins to lock the ELR.

NOTICE:

Do not disassemble the retractor.

(1) Check that the belt does not lock within 15° of tilt in all directions but locks with over 45° of tilt when gently moving the retractor.

If operation is not as specified, replace the belt assy.

(c) Install the belt with the bolt on the floor anchor side.

Torque: 42 N·m (430 kgf·cm, 31 ft·lbf)

(d) Check the ELR lock.

NOTICE:

The check should be performed with the assembly installed.

(1) Check that the belt locks by pulling it out quickly after installation.

HINT:

The seat belt does not lock when it is pulled out to a length of 955 mm (37.60 in.) or less.

If operation is not as specified, replace the belt assy.

(e) Check the fastening function of the child restraint system.

NOTICE:

The check should be performed with the assembly installed.

(1) Check that the belt cannot be pulled out any more but rewinds after being pulled out fully.

(2) Check that the belt can be pulled out and rewound after the belt has been fully rewound.

If operation is not as specified, replace the belt assy.

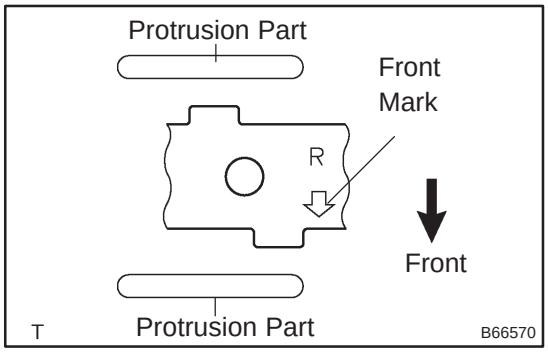

20. INSTALL REAR SEAT 3 POINT TYPE BELT ASSY INNER

(a) Install the floor anchor and belt with the bolt as shown in the illustration.

Torque: 42 N·m (430 kgf·cm, 31 ft·lbf)

NOTICE:

Make sure that the anchor part does not run onto the protrusion part of the floor panel.

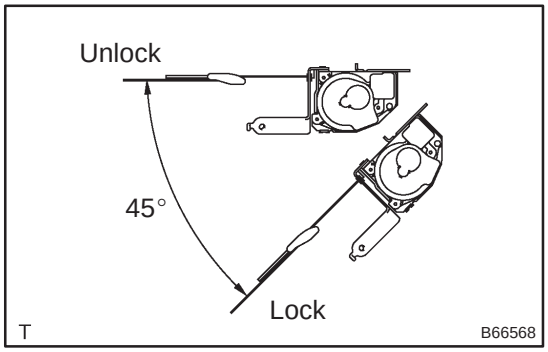

21. INSTALL REAR SEAT 3 POINT TYPE BELT ASSY OUTER

(a) Install the belt with the bolt on the retractor side.

Torque:

7.5 N·m (76.5 kgf·cm, 66 in.·lbf) for front bolt

42 N·m (430 kgf·cm, 31 ft·lbf) for upper bolt

(b) Check the degree of tilt when the belt begins to lock the ELR.

NOTICE:

Do not disassemble the retractor.

(1) Check that the belt does not lock within 15° of tilt in all directions but locks with over 45° of tilt when gently moving the retractor.

If operation is not as specified, replace the belt assy.

(c) Install the belt outer with the bolt on the floor anchor side.
Torque: 42 N·m (430 kgf·cm, 31 ft·lbf)

NOTICE:
The check should be performed with the assembly installed.

(1) Check that the belt locks by pulling it out quickly after installation.

If operation is not as specified, replace the belt assy.

(d) Check the ELR lock.

NOTICE:
The check should be performed with the assembly installed.

(1) Check that the belt locks by pulling it out quickly after installation.

If operation is not as specified, replace the belt assy.

(e) Check the fastening function of the child restraint system.

NOTICE:
The check should be performed with the assembly installed.

(1) Check that the belt cannot be pulled out any more but rewinds after being pulled out fully.

(2) Check that the belt can be pulled out and rewound after the belt has been fully rewound.

If operation is not as specified, replace the belt assy.

22. INSTALL REAR SEAT ASSY (See page 72–21)

LIGHTING SYSTEM

650NC–02

PRECAUTION

1. PRECAUTION OF HEADLIGHT BULB REPLACEMENT

(a) When any defects such as deformation, crack, dent, chipping, etc. are identified on the discharge headlight (especially, on the light control ECU), replace it with a new one.

(b) Even if the operation seems to be normal, the fail–safe function may be defective.

(c) Be careful not to scratch on drop bulbs of the discharge headlamp and halogen bulbs (for headlamp and fog lamp), as they have pressurized gas inside and can be easily broken.

(d) Touching the HV socket of the discharge headlight with the headlight dimmer switch ON could generate momentary high voltage of 20,000 V and lead to a serious injury.

(e) Never connect a tester to the high voltage socket of the discharge headlight for measurement, as this leads to a serious injury because of high voltage.

(f) When performing operation related to the discharge headlight, keep it away from water including rain, turn off the light control switch, and disconnect the battery terminal and the connector of the light control ECU in advance to avoid electric shock.

(g) When performing operation related to the discharge headlight, start it after assembling is completed and never turn the lights on without a bulb installed.

(h) Do not turn the discharge headlight on using another power source except vehicle's.

650SQ–01

PROBLEM SYMPTOMS TABLE

1. HEADLIGHT SYSTEM

Symptom	Suspect Area	See page
Only one headlamp comes on.	1. Bulb 2. H–LP LL, H–LP RL fuse 3. Light control computer (w/ HID) 4. Harness or connector	– – – –
Headlamp does not come on (All).	1. H–LP LL, H–LP RL fuse 2. H–HP relay 3. Headlamp dimmer switch assy 4. Harness or connector 5. Integration relay (w/ Daytime running light system)	– – 65–9 – –
”HI–Beam” does not come on (All).	1. Bulb 2. H–LP HI LH, H–LP HI RH fuse 3. DIM relay (w/ Daytime running light system) 4. Headlamp dimmer switch assy 5. Harness or connector 6. Integration relay (w/ Daytime running light system)	– – – 65–9 – –
”HI–Beam” does not come on (One side).	1. Bulb 2. Harness or connector	– –
”Flash” does not come on. (Headlamp and Hi–Beam is normal)	1. Headlamp dimmer switch assy 2. Harness or connector 3. Integration relay (w/ Daytime running light system)	65–9 – –
Headlamp is dark.	1. Bulb 2. Harness or connector	– –
Tail lamp does not come on (All).	1. TAIL fuse 2. TAIL relay 3. Headlamp dimmer switch assy 4. Harness or connector 5. Integration relay (w/ Daytime running light system)	– – 65–9 – –
Only one tail lamp comes on.	1. Bulb 2. Harness or connector	– –
Rear combination light does not come on.	1. Bulb 2. Harness or connector	– –
Daytime running light system does not operate.	1. Headlamp dimmer switch assy 2. Ignition switch 3. Harness or connector 4. Integration relay	65–9 – – –

2. FOG LAMP SYSTEM

Symptom	Suspect Area	See page
Front fog lamp does not come on with light control switch in TAIL or HEAD position.	1. FR FOG fuse 2. FR FOG relay 3. Headlamp dimmer switch assy 4. Harness or connector	– – 65–9 –
Only one front fog lamp does not come on.	1. Bulb 2. Harness or connector	– –
Rear fog lamp does not come on with light control switch in HEAD position.	1. RR FOG fuse 2. RR FOG relay 3. Headlamp dimmer switch assy 4. Harness or connector	– – 65–9 –
Only one rear fog lamp does not come on.	1. Bulb 2. Harness or connector	– –

3. TURN SIGNAL AND HAZARD WARNING SYSTEM

Symptom	Suspect Area	See page
”Hazard” and ”Turn” do not come on.	1. HAZARD fuse 2. GAUGE2 fuse 3. IG1 relay 4. Ignition switch 5. Turn signal flasher relay 6. Harness or connector	– – – – 65–5 –
Hazard warning light does not come on. (Turn is normal)	1. Hazard warning switch 2. Harness or connector	65–9 –
Turn signal does not come on. (Hazard is normal)	1. Headlamp dimmer switch (turn signal switch) 2. Harness or connector	65–9 –
Turn signal does not come on in one direction.	1. Headlamp dimmer switch (turn signal switch) 2. Harness or connector	65–9 –
Only one bulb does not come on.	1. Bulb 2. Harness or connector	– –

4. ILLUMINATED ENTRY SYSTEM

Symptom	Suspect Area	See page
Illumination lamp of Multiplex body ECU control does not come on.	1. Ignition switch 2. Door courtesy switch 3. Door lock position switch 4. Harness or connector 5. Integration relay	– 65–9 05–1534 – –
Illumination lamp of Multiplex body ECU control does not go off.	1. Ignition switch 2. Door courtesy switch 3. Door lock position switch 4. Harness or connector 5. Integration relay	– 65–9 05–1534 – –

5. HEADLIGHT BEAM LEVEL CONTROL SYSTEM (W/O HID)

Symptom	Suspect Area	See page
Headlight beam level control system does not operate (All).	1. TAIL relay 2. Headlamp leveling switch 3. Harness or connector	– 65–9 –
Headlight beam level control system does not operate (One side).	1. Headlamp leveling switch 2. Headlight beam level control actuator 3. Harness or connector	65–9 65–5 –

6. HEADLIGHT BEAM LEVEL CONTROL SYSTEM (W/ HID)

Symptom	Suspect Area	See page
Headlight beam level control system does not operate (All).	1. GAUGE2 fuse 2. Ignition switch 3. Speed sensor signal circuit 4. Height control sensor sub–assy 5. Headlamp leveling ECU assy 6. Harness or connector	– – – 65–9 65–5 –
Headlight beam level control system does not operate (One side).	1. Headlamp leveling ECU assy 2. Headlight beam level control actuator 3. Harness or connector	65–5 65–5 –
Beam level warning light comes on.	1. Height control sensor sub–assy 2. Headlamp leveling ECU assy 3. Harness or connector	65–9 65–5 –

7. OTHERS

Symptom	Suspect Area	See page
Vanity light does not operate.	1. Bulb 2. Harness s or connector	– –
Instrument panel illumination does not operate (All).	1. TAIL relay 2. PANEL fuse 3. Harness or connector 4. Integration relay (w/ DRL)	– – – –
Stop light does not operate (All).	1. STOP fuse 2. Stop light switch 3. Harness or connector	– – –
Back up lamp does not come on (All).	1. GAUGE fuse 2. IG1 relay 3. Back up lamp switch assy (M/T) 4. Park/neutral position switch (A/T) 5. Harness or connector	– – – – –

650ND–02

ON–VEHICLE INSPECTION

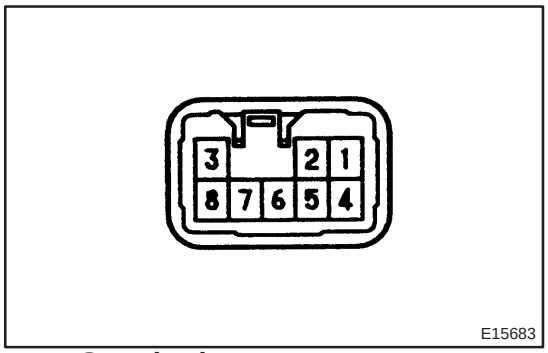

1. INSPECT TURN SIGNAL FLASHER CIRCUIT

(a) Measure voltage between the terminal as shown in the chart below.

Standard:

Tester connection	Condition	Specified condition
1 – body ground	Turn ignition switch ON	10 to 14 V
1 – body ground	Turn ignition switch OFF	No voltage
4 – body ground	Always	10 to 14 V
7 – body ground	Always	Continuity

(b) Connect the connector to turn the signal flasher and the ignition switch ON, and inspect the wire harness side connector from the back side as shown in the chart.

Standard:

Tester connection	Condition	Specified condition
2 – body ground	Hazard switch OFF → ON	0V → 10 to 14 V (60 to 120 time per minutes)
2 – body ground	Turn signal switch (right turn) OFF → ON	0V → 10 to 14 V (60 to 120 time per minutes)
3 – body ground	Hazard switch OFF → ON	0V → 10 to 14 V (60 to 120 time per minutes)
3 – body ground	Turn signal switch (left turn) OFF → ON	0V → 10 to 14 V (60 to 120 time per minutes)
5 – body ground	Turn signal switch (left turn) OFF → ON	10 to 14 V → 0 V
6 – body ground	Turn signal switch (right turn) OFF → ON	10 to 14 V → 0 V
8 – body ground	Hazard switch OFF → ON	10 to 14 V → 0 V

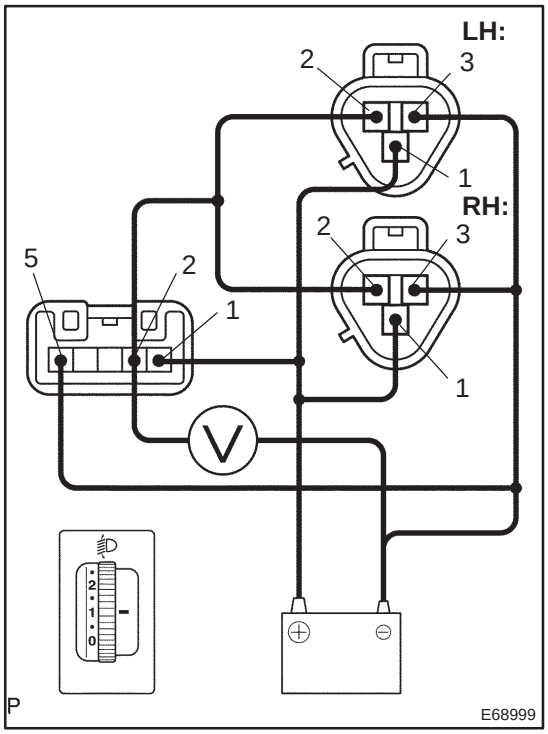

2. INSPECT HEADLAMP ASSEMBLY (HEADLIGHT BEAM LEVEL CONTROL ACTUATOR OPERATION)

(a) Disconnect the connector from the headlamp assy.

(b) Connect the positive (+) lead from the battery to the terminal 3 of each of the headlight beam level control actuator and negative (–) lead from the battery to the terminal 1 of the each of the headlight beam level control actuator.

(c) Connect the positive (+) lead from the battery to the terminal 1 of headlamp levering switch and negative (–) lead from the battery to the terminal 5 of the headlamp levering switch.

(d) Connect the terminal 2 of the headlamp leveling switch and the terminal 2 of the each of headlight beam level control actuator.

(e) Measure voltage between the terminal 2 of the headlamp leveling switch and the battery negative (–) terminal when headlamp levering switch is operated.

Standard:

Switch position	Specified condition (V)
0	8.5 to 11.8
1	7.4 to 10.3
2	6.3 to 8.8
3	5.2 to 7.3
4	4.1 to 5.8
5	3.0 to 4.3

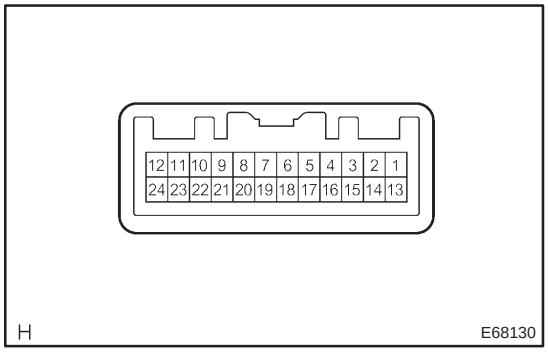

3. HEADLAMP LEVELING ECU ASSY

(a) Measure voltage between the terminal as shown in the chart below.

Standard:

Tester connection	Condition	Specified condition
1 – body ground	Turn ignition switch ON	10 to 14 V
1 – body ground	Turn ignition switch OFF	No voltage
10 – body ground	Headlamp switch is HEAD	Below 1 V
24 – body ground	Always	Continuity

(b) Connect the connector to the headlamp leveling ECU assy, then turn the ignition switch ON and light control switch into HEAD position. Inspect the wire harness side connector from the back side as shown in the chart.

Standard:

Tester connection	Condition	Specified condition
2 – body ground	Always	5 V
3 – body ground	3 secs. after vehicle height change for 10 secs.	1.0 to 13 V
4 – body ground	3 secs. after vehicle height change for 10 secs.	1.0 to 13 V
5 – body ground	Always	0 to 5 V
6 – body ground	Always	0 to 5 V
10 – body ground	Headlamp Switch is OFF → ON	10 to 14 V → Below 1 V
11 – body ground	Beam level warning light OFF → ON	10 to 14 V → Below 1 V
12 – body ground	Turn the vehicle wheel	Puls generation
13 – body ground	Always	10 to 14 V
14 – body ground	Always	10 to 14 V
15 – body ground	Always	5 V
20 – body ground	Always	Below 1 V
21 – body ground	Always	Below 1 V
22 – body ground	Always	Below 1 V
23 – body ground	Always	Below 1 V

4. HEADLAMP AUTO LEVERING OPERATION CHECK

(a) Check that the initialization (determination of the initial position) for the leveling motor is performed at the engine–start.

(b) Check that the warning indicator in the combination meter assy illuminates for approximately 3 seconds at the engine–start and then goes off.

(c) Check that the reflector works when:
Keeping the rear of the vehicle up or down while the engine is running with the vehicle stopped and the headlamp dimmer switch in the HEAD position.

NOTICE:

Make sure to change the vehicle's height slowly.

5. FAIL–SAFE FUNCTION

(a) Headlamp Leveling Control ECU

HINT:

The Headlamp Leveling Control ECU performs the fail–safe when detecting following troubles. At this the warning indicator light on the combination meter lights up.

Trouble Area	Condition	Headlight levering motor
1. Height control sensor	• Signal level error • Out of voltage	Stop leveling operation
2. Headlamp leveling control ECU	• Watchdock detection • High voltage	Stop leveling operation

(b) Light control computer

Condition	Content
Output open	Lighting of the headlamp stops, the condition is maintained until switch is turned ON again (headlamp dimmer switch OFF → ON).
Short between output terminals	Lighting of the headlamp stops, the condition is maintained until switch is turned ON again (headlamp dimmer switch OFF → ON).
Leakage between output terminal and body ground	Lighting of the headlamp stops, the condition is maintained until switch is turned ON again (headlamp dimmer switch OFF → ON).
Low lamp voltage	Lighting of the headlamp stops, the condition is maintained until switch is turned ON again (headlamp dimmer switch OFF → ON).
High lamp voltage	Lighting of the headlamp stops, the condition is maintained until switch is turned ON again (headlamp dimmer switch OFF → ON).
Bulb flushing	• The condition is maintained more than 60 seconds. • Lighting of the headlamp stops, the condition is maintained until switch is turned ON again (headlamp dimmer switch OFF → ON).
High input voltage	Lighting of the headlamp stops. As soon as the voltage comes within the range of operation voltage (9 – 16 V), it lights up again.
Low input voltage	When voltage become 9.0 V → 7.5 V, lighting condition is maintained until possible voltage (Below 6 V) to keep lighting and lighting of the headlamp stops. As soon as the voltage becomes within the range of operation voltage (more than 9 V), it lights up again.

INSPECTION

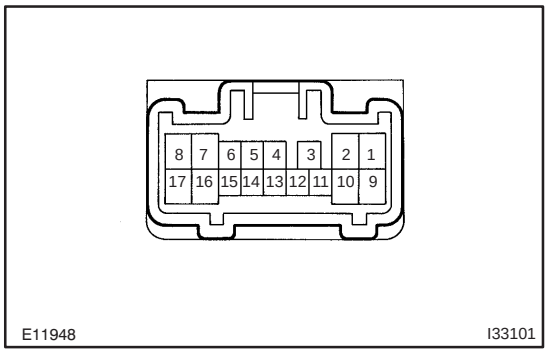

1. HEADLAMP DIMMER SWITCH ASSY

(a) Inspect light control switch continuity.

(1) Check that there is continuity between the terminals at each switch position as shown in the chart.

Standard:

Switch operation	Tester connection	Specified condition
OFF	–	No continuity
TAIL	14 – 16	Continuity
HEAD	13 – 16 – 14	Continuity

(b) Inspect headlight dimmer switch continuity.

(1) Check that there is continuity between the terminals at each switch position as shown in the chart.

Standard:

Switch operation	Tester connection	Specified condition
FLASH	7 – 8 – 16	Continuity
LOW BEAM	16 – 17	Continuity
HI BEAM	7 – 16	Continuity

(c) Inspect turn signal switch continuity.

(1) Check that there is continuity between the terminals at each switch position as shown in the chart.

Standard:

Switch operation	Tester connection	Specified condition
Right turn	2 – 3	Continuity
Neutral	–	No continuity
Left turn	1 – 2	Continuity

(d) Inspect front fog light switch continuity.

(1) Check that there is continuity between the terminals at each switch position as shown in the chart.

Standard:

Switch operation	Tester connection	Specified condition
OFF	–	No continuity
Front fog switch ON	10 – 11	Continuity
Rear fog switch ON	10 – 12	Continuity

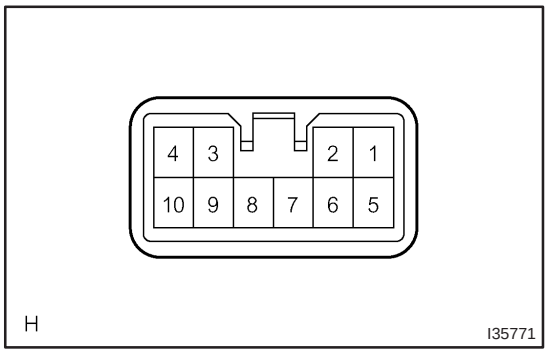

2. HAZARD WARNING SIGNAL SWITCH ASSY

(a) Check that there is continuity between the terminals at each switch position as shown in the chart.

Standard:

Switch operation	Tester connection	Specified condition
OFF	1 – 4	No continuity
ON	1 – 4	Continuity
Illumination circuit	8 – 9	Continuity

(b) Inspect illumination operation.
(1) Connect the positive (+) lead from the battery to the terminal 8 and negative (–) lead to the terminal 9, then check that the illumination comes on.

3. FRONT DOOR COURTESY LAMP SWITCH ASSY

(a) Check that there is continuity between the terminal and the switch body when the switch is operated.
Standard:
ON (When shaft is pressed): No continuity
OFF (When shaft is not pressed): Continuity

4. REAR DOOR COURTESY LAMP SWITCH ASSY

(a) Check that there is continuity between the terminal and the switch body when the switch is operated.
Standard:
ON (When shaft is pressed): No continuity
OFF (When shaft is not pressed): Continuity

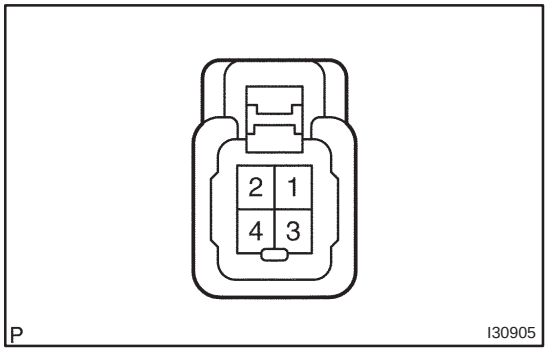

5. BACK DOOR LOCK ASSY (WAGON MODELS)

(a) Inspect back door courtesy lamp switch operation.
(1) Check that there is continuity between the terminal 1 and the terminal 2 when the back door is open and closed.
Standard:
Back door is open: No continuity
Back door is closed: Continuity

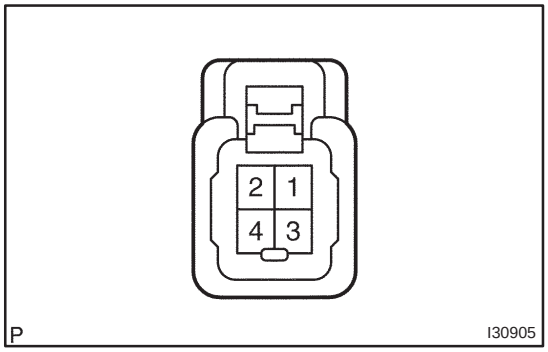

6. BACK DOOR LOCK ASSY (LIFTBACK MODELS)

(a) Inspect back door courtesy lamp switch operation.
(1) Check that there is continuity between the terminal 1 and the terminal 2 when the back door is open and closed.
Standard:
Back door is open: No continuity
Back door is closed: Continuity

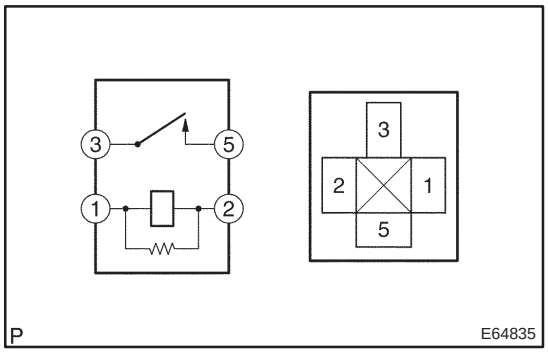

7. HEADLAMP RELAY

(a) Inspect relay continuity.
Standard:

Condition	Tester connection	Specified condition
Always	1 – 2	Continuity
Always	3 – 5	No continuity
Apply B+ between the terminal 1 and 2	3 – 5	Continuity

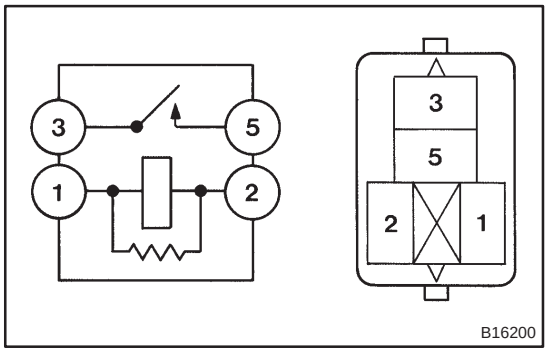

8. TAIL LAMP RELAY

(a) Inspect relay continuity.

Standard:

Condition	Tester connection	Specified condition
Always	1 – 2	Continuity
Always	3 – 5	No continuity
Apply B+ between the terminal 1 and 2	3 – 5	Continuity

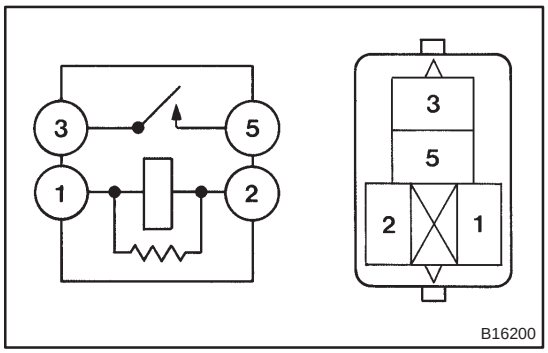

9. FOG LAMP RELAY

(a) Inspect relay continuity.

Standard:

Condition	Tester connection	Specified condition
Always	1 – 2	Continuity
Always	3 – 5	No continuity
Apply B+ between the terminal 1 and 2	3 – 5	Continuity

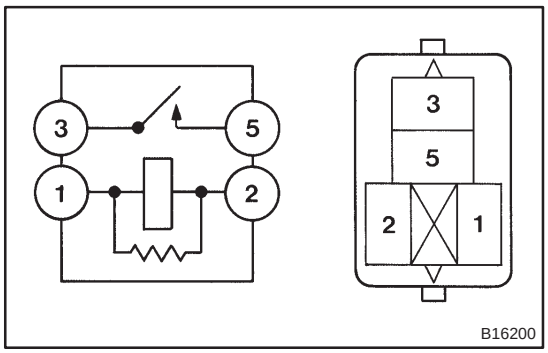

10. REAR FOG LAMP RELAY

(a) Inspect relay continuity.

Standard:

Condition	Tester connection	Specified condition
Always	1 – 2	Continuity
Always	3 – 5	No continuity
Apply B+ between the terminal 1 and 2	3 – 5	Continuity

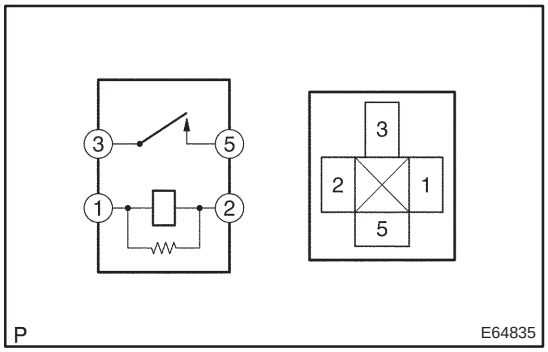

11. RUNNING LIGHT RELAY

(a) Inspect relay continuity.

Standard:

Condition	Tester connection	Specified condition
Always	1 – 2	Continuity
Always	3 – 5	No continuity
Apply B+ between the terminal 1 and 2	3 – 5	Continuity

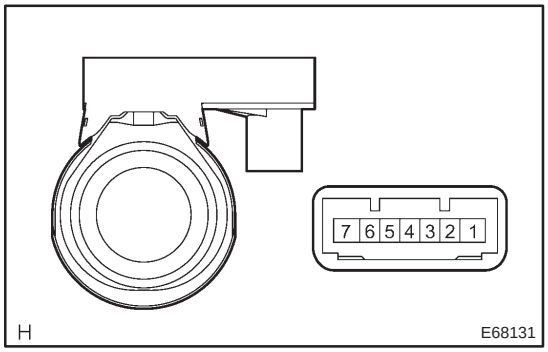

12. TRANSPONDER KEY AMPLIFIER

(a) Inspect key cylinder operation.

(1) Connect the battery positive (+) lead to the terminal 2 and the battery negative (–) lead to the terminal 6, and check that the indicator light comes on.

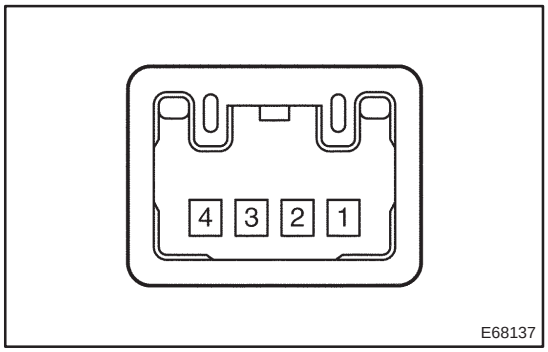

13. MAP LAMP ASSY

(a) Check the continuity between the terminals at each switch position as shown in the chart.

Standard:

Switch operation	Tester connection	Specified condition
OFF	–	No continuity
DOOR	2 – 4	Continuity
ON	3 – 4	Continuity

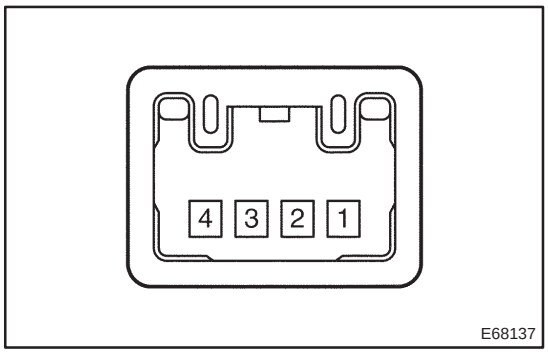

14. ROOM LAMP ASSY NO.2

(a) Check the continuity between the terminals at each switch position as shown in the chart.

Standard:

Switch operation	Tester connection	Specified condition
OFF	–	No continuity
DOOR	2 – 4	Continuity
ON	3 – 4	Continuity

15. COURTESY LAMP ASSY

(a) Check that the continuity exists between the terminals.

Standard: There is continuity

16. LUGGAGE COMPARTMENT LAMP ASSY NO.1

(a) Check that the continuity exists between the terminals.

Standard: There is continuity

17. GLOVE BOX LAMP ASSY

(a) Check that the continuity exists between the terminals when switch is operated.

Standard:

ON (When shaft is pressed): No continuity

OFF (When shaft is not pressed): Continuity

18. LH VISOR ASSY

(a) Inspect vanity light continuity.

(1) Check that the continuity exists between the terminal 1 and the terminal 2 when the light is operated.

Standard:

OFF (closed): No continuity

ON (opened): Continuity

19. RH VISOR ASSY

(a) Inspect vanity light continuity.

(1) Check that the continuity exists between the terminal 1 and the terminal 2 when the light is operated.

Standard:

OFF (closed): No continuity

ON (opened): Continuity

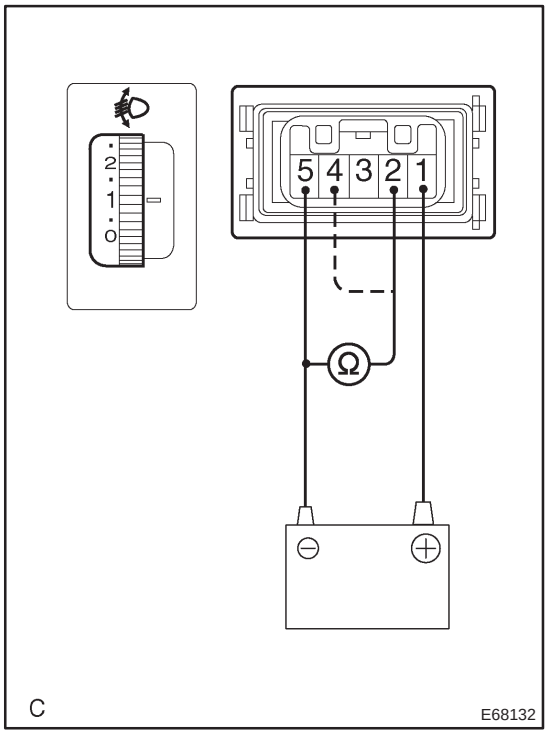

20. HEADLAMP LEVELING SWITCH

(a) Connect the battery positive (+) lead to the terminal 1 and the battery negative (–) lead to the terminal 5.

(b) Measure the resistance between the terminal 2 and the battery negative (–) lead when headlamp leveling switch is operated.

(c) Measure the resistance between the terminal 4 and the battery negative (–) lead when headlamp leveling switch is operated.

Standard:

Switch position	Resistance (Ω)
0	1.0 – 1.2
1	1.6 – 1.9
2	2.3 – 2.6
3	2.9 – 3.3
4	3.5 – 3.9
5	4.1 – 4.6

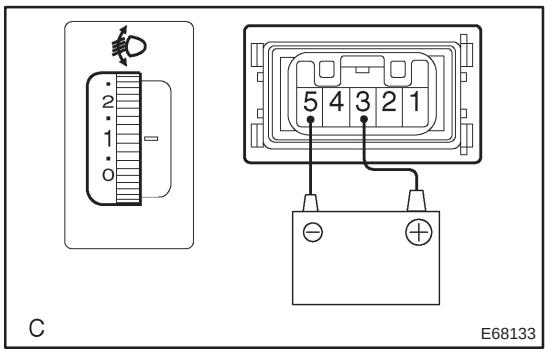

(d) Inspect switch illumination.

(1) Connect the battery positive (+) lead to the terminal 3 and the battery negative (–) lead to the terminal 5, and check that the illumination comes on.

21. STOP LAMP SWITCH ASSY (W/O CRUISE CONTROL)

(a) Check the continuity between each of the terminals when switch is operated.

Standard:

ON (When shaft is pushed): No continuity

OFF (When shaft is not pushed): Continuity

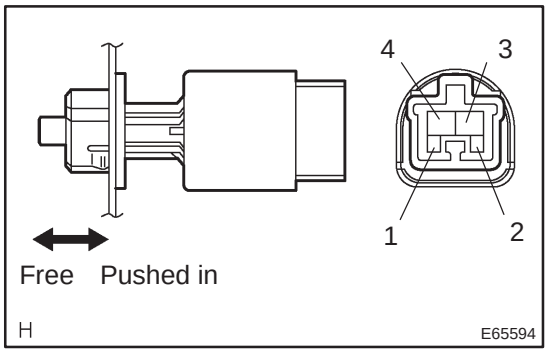

22. STOP LAMP SWITCH ASSY (W/ CRUISE CONTROL)

(a) Check the continuity between the terminals at each switch position as shown in the chart.

Standard:

Switch position	Tester connection	Specified condition
Switch pin free	1 – 2	No continuity
Switch pin free	3 – 4	Continuity
Switch pin pushed in	1 – 2	Continuity
Switch pin pushed in	3 – 4	No continuity

23. BACK UP LAMP SWITCH ASSY

(a) Check the continuity between each of the terminals when switch is operated.

Standard:

ON (When shaft is pushed): Continuity

OFF (When shaft is not pushed): No continuity

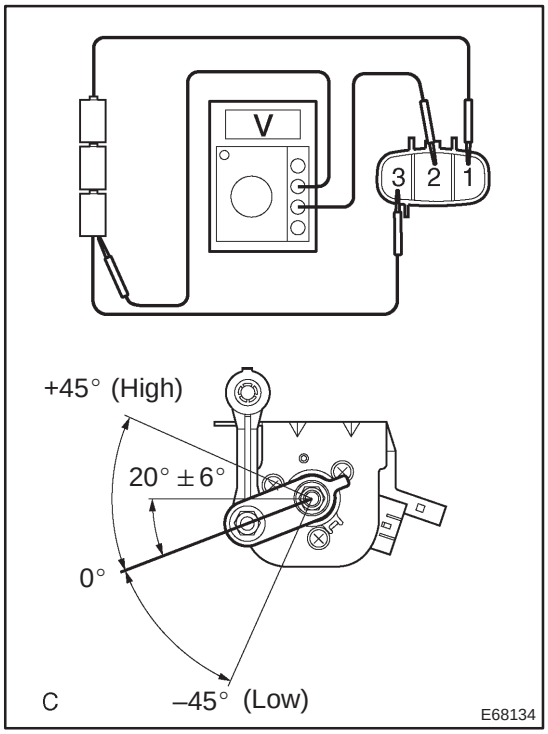

24. HEIGHT CONTROL SENSOR SUB–ASSY FR RH

(a) Connect the 3 dry cell batteries (1.5 V) in series.

(b) Connect the positive (+) lead from the battery to the terminal 1 and negative (–) lead from the battery to the terminal 3.

(c) Measure voltage between the terminal 2 and the terminal 3 when slowly move the link up and down.

Standard:

Link angle	Standard voltage
+45° (High)	4.5 V
0° (Normal)	2.5 V
–45° (Low)	0.5 V

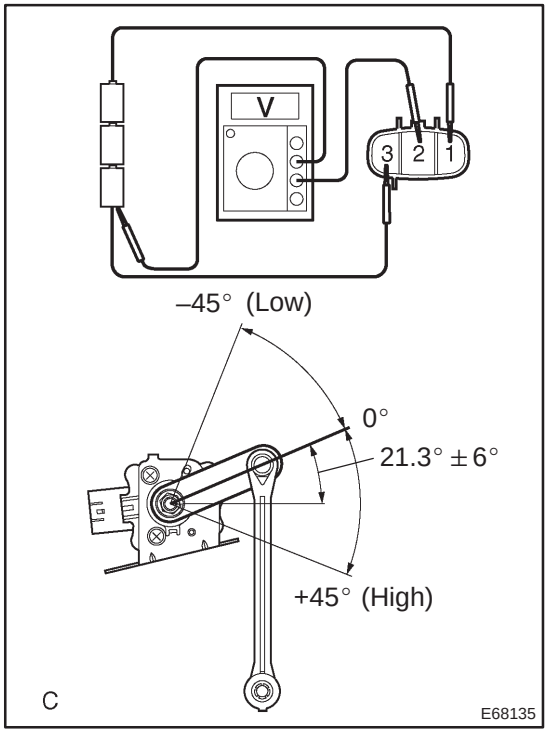

25. HEIGHT CONTROL SENSOR SUB–ASSY REAR RH

(a) Connect the 3 dry cell batteries (1.5 V) in series.

(b) Connect the positive (+) lead from the battery to the terminal 1 and negative (–) lead from the battery to the terminal 3.

(c) Measure voltage between the terminal 2 and the terminal 3 when slowly move the link up and down.

Standard:

Link angle	Standard voltage
+45° (High)	4.5 V
0° (Normal)	2.5 V
–45° (Low)	0.5 V

HEADLAMP UNIT LH

COMPONENTS

650ST–01

Halogen Headlamp:

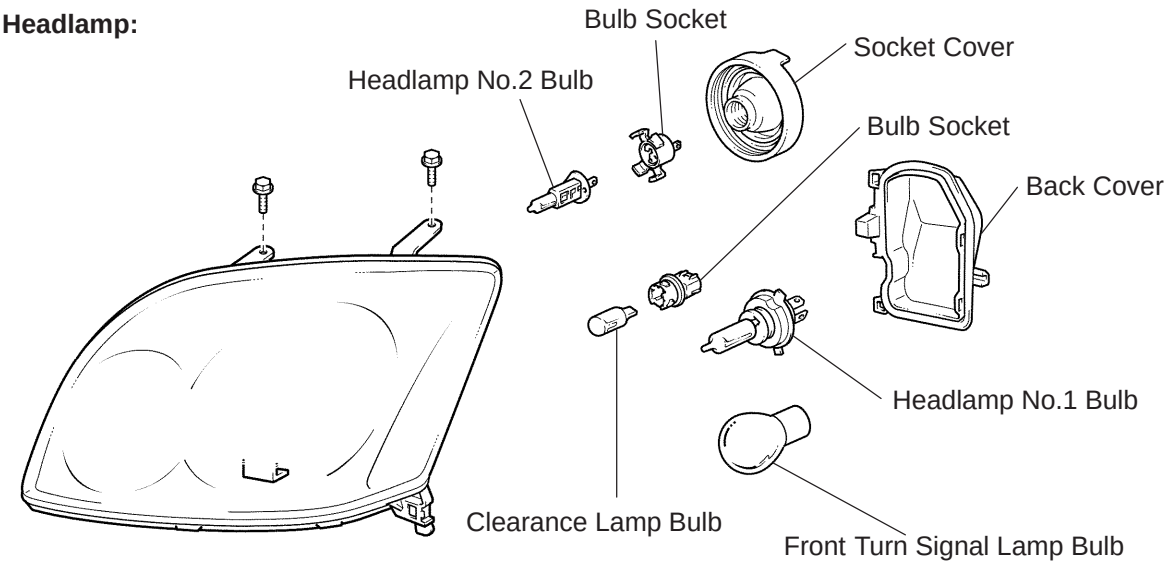

Discharge Headlamp:

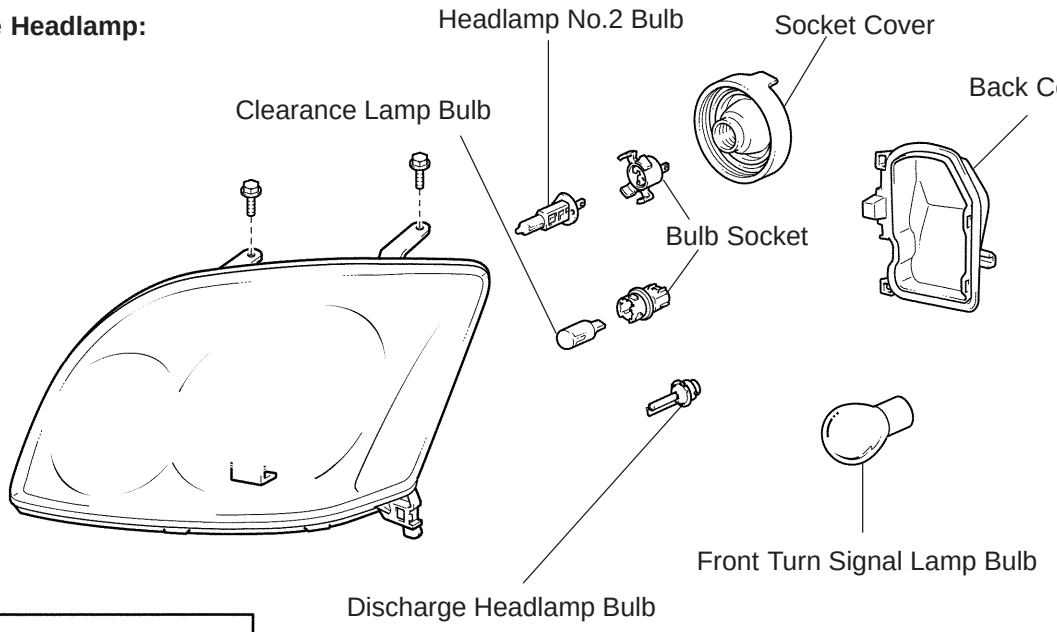

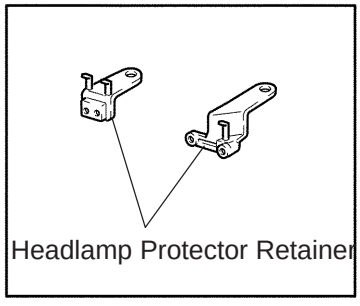

P

I35226

650SU–01

REPLACEMENT

1. REMOVE FRONT SPOILER COVER LH (See page 76–3)
2. REMOVE FRONT SPOILER COVER RH (See page 76–3)
3. REMOVE FRONT BUMPER COVER (See page 76–3)

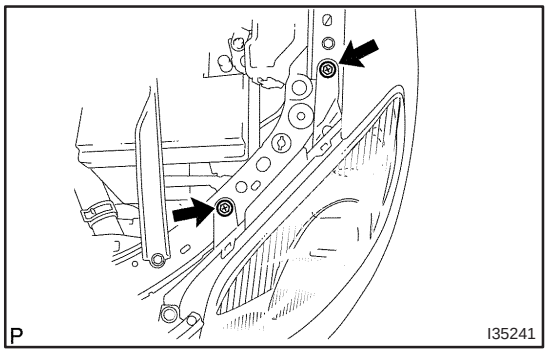

4. REMOVE HEAD LIGHT ASSY

(a) Disconnect the connector.

(b) Remove the 2 screws.

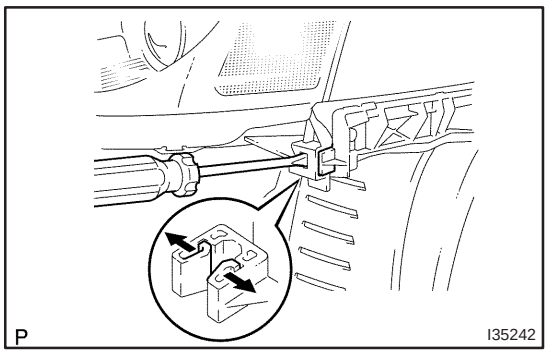

(c) Remove the headlamp assy and disengage the claw as shown in the illustration.

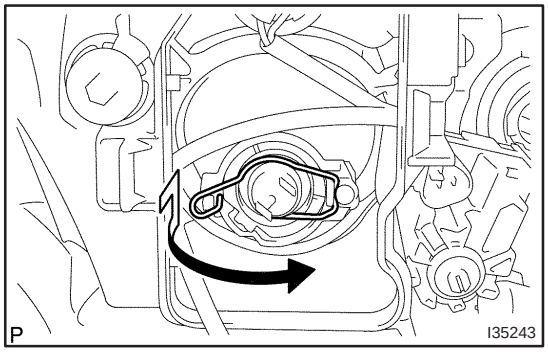

5. REMOVE HEADLAMP, NO.1 BULB (HALOGEN HEAD LAMP)

(a) Release the lock of the set spring and remove the headlamp bulb No.1.

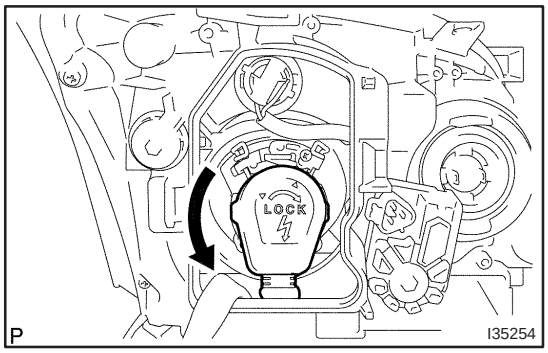

6. REMOVE DISCHARGE HEADLAMP BULB (DISCHARGE HEAD LAMP)

(a) Rotate the bulb socket cover in the direction of the arrow and pull it of backward of the vehicle.

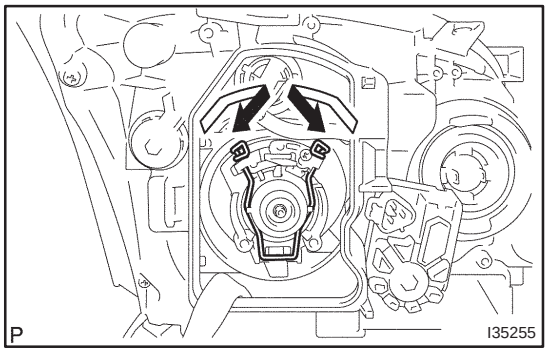

(b) Release the lock of the set spring and remove the discharge headlamp bulb.

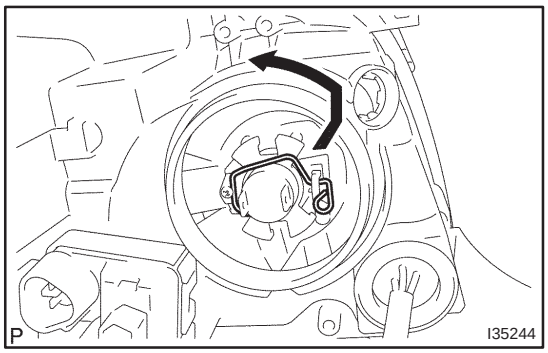

7. REMOVE HEADLAMP, NO.2 BULB

(a) Remove the headlamp socket cover.

(b) Release the lock of the set spring and remove the headlamp bulb No.2.

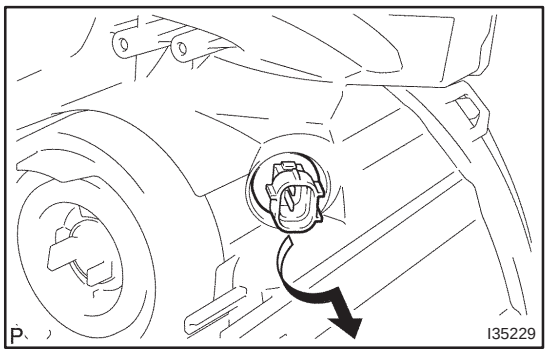

8. REMOVE CLEARANCE LAMP BULB

(a) Remove the clearance lamp socket and the clearance lamp bulb as shown in the illustration.

(b) Remove the clearance lamp bulb from the clearance lamp socket.

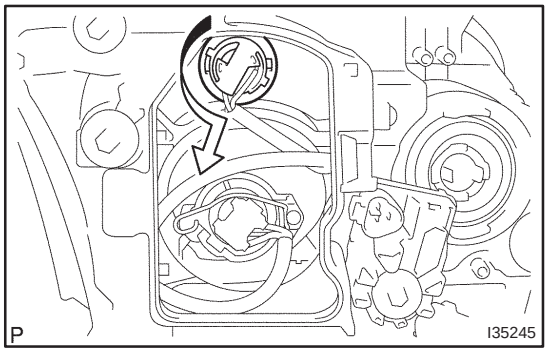

9. REMOVE FRONT TURN SIGNAL LAMP BULB

(a) Remove the front turn signal lamp socket and the front turn signal lamp bulb as shown in the illustration.

10. REMOVE HEADLAMP PROTECTOR RETAINER

HINT:

When only the installation part of the headlamp unit assy LH is damaged, it can be repaired inexpensively by using a headlamp protector retainer. In this case, however, the headlamp unit assy LH itself should not be damaged.

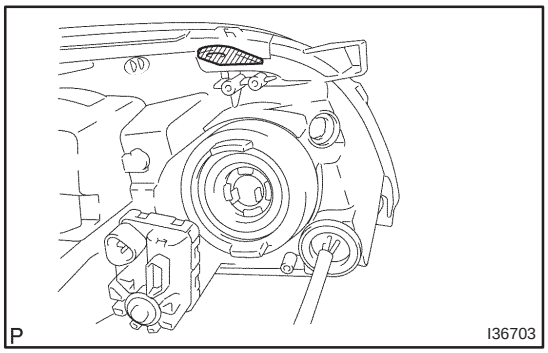

(a) Cut off the part shaded in the illustration and file it smooth.

NOTICE:

After cutting off the part roughly, place the headlamp protector retainer against the bosses, and gradually file any interfering part until the proper condition for installation is made.

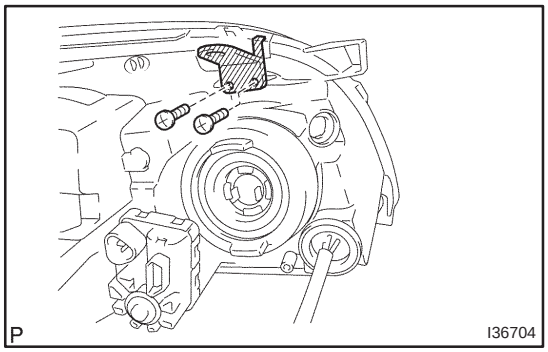

(b) Install the headlamp protector retainer with the 2 screws.

11. HEADLIGHT AIM ONLY (See page 65–19)

ADJUSTMENT

1. HEADLIGHT AIM ONLY

HINT:

- Perform aiming adjustment with Low–beam.
- Since the Low–beam light and the High–beam light is a unit, if aiming on either side is connect, the other side should also be connect.
  However, check both beams just to make sure.

(a) Prepare vehicle in the following conditions.

- Check that any damage or deformation does not exist on the body around the headlights.
- Fuel tank is full.
- The tire inflation pressure is at the specified level.
- Vehicle is parked at a level surface.
- A person having an average weight sits in the driver's seat.
- Vehicle is bounced up and down to stabilize the suspension to the normal position.

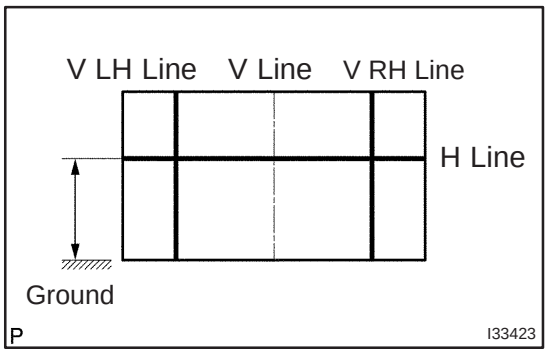

(b) Prepare a thick white paper (Draw base lines).

HINT:

- Stand the paper perpendicular as against a wall.
- The base lines differ for "Low–beam inspection" and "High–beam inspection".
  (1) V line (Vehicle Center position)
  Draw a vertical line down the center of the paper in order to align it with the center of the vehicle.
  (2) H line (Headlight height)
  Draw horizontal line across the paper at the same height from the ground as the center mark for the Low–beam lights.
  (3) V LH line, V RH line (Center mark position of right and left headlights)
  Draw vertical lines, for left & right, at the same position as the center mark for the Low–beam lights.

HINT:

Follow the same procedures when adjusting the High–beam lights.

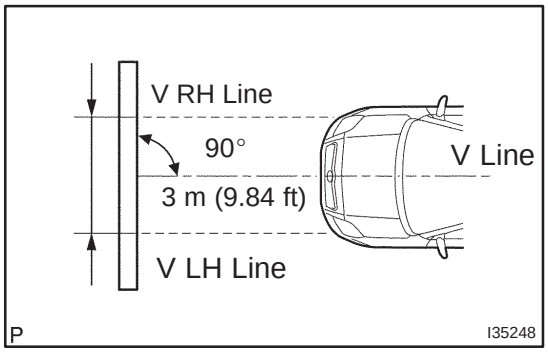

(c) Check the headlight aiming.

(1) Align the paper with the center of the vehicle.

- Make a distance of 3 m (9.84 ft) between the headlights and the paper, and put the paper against a wall with the H line being at the same height as the center mark.
- Align the center of the vehicle with the V line on the paper, and ensure that the paper is at a 90° angle in accordance to the V line.

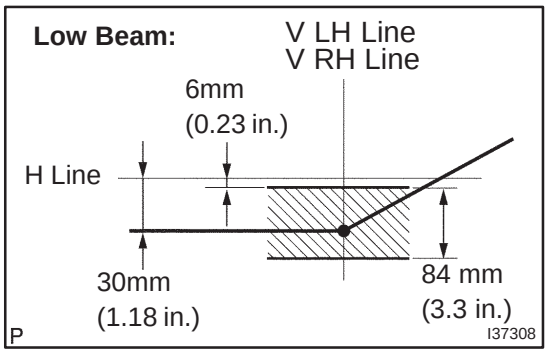

(2) Start the engine.

(3) Turn on the headlights and check that the aim is with in the specified valves shown in the illustration.

NOTICE:

- **When covering the headlights, finish it within 3 minuites.**
- **The headlight lens is made of synthetic resin, so it is easily.**

HINT:

When checking the aiming of the High–beam, shut off the Low–beam or disconnect the Low–beam headlight connector.

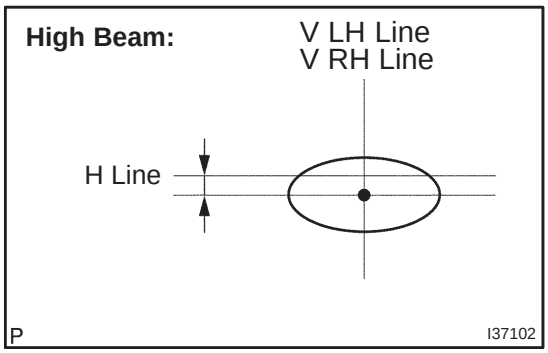

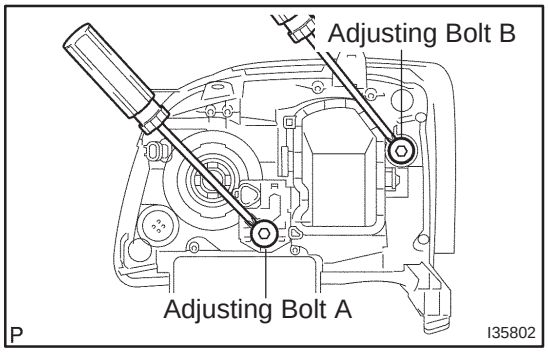

(d) Adjust the aim in the vertical direction:

Using a screwdriver, adjust the headlight aim within the specified range by turning the aiming screw A.

NOTICE:

- **Adjust the headlight aim by turning the screw in the tightening direction.**
- **When the screw is tightened excessively, loosen it once and re–tighten it to adjust the headlight aim.**

HINT:

The optical axis aim moves downward when turning the screwdriver clockwise, and it moves upward when turning the screwdriver counterclockwise.

(e) Adjust the aim in the horizontal direction:

Using a screwdriver, adjust the headlight aim within the specified range by turning the aiming screw B.

NOTICE:

- **Adjust the headlight aim by turning the screw in the tightening direction.**
- **When the screw is tightened excessively, loosen it once and re–tighten it to adjust the headlight aim.**

SIDE TURN SIGNAL LAMP ASSY LH

650SW–01

REPLACEMENT

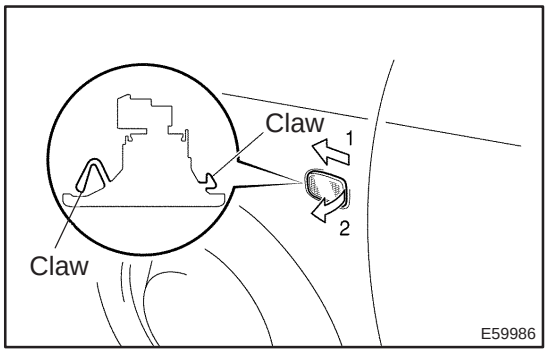

1. REMOVE SIDE TURN SIGNAL LAMP ASSY LH

(a) Disengage the claw by pulling it forward.

(b) Take the socket off and remove the side turn signal lamp assy LH.

FOG LAMP ASSY LH

650SX–01

REPLACEMENT

1. REMOVE FRONT BUMPER COVER (See page 76–3)

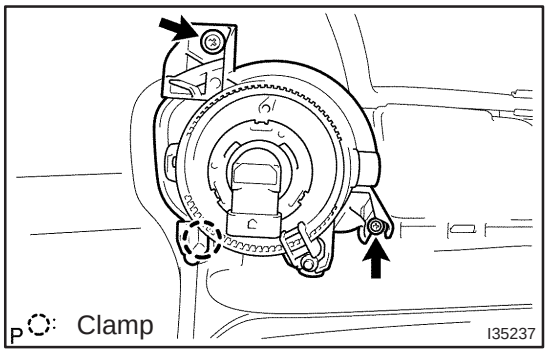

2. REMOVE FOG LAMP ASSY LH

(a) Disconnect the connector.

(b) Remove the 2 screws.

(c) Release the claw fitting, then remove the fog lamp assy LH.

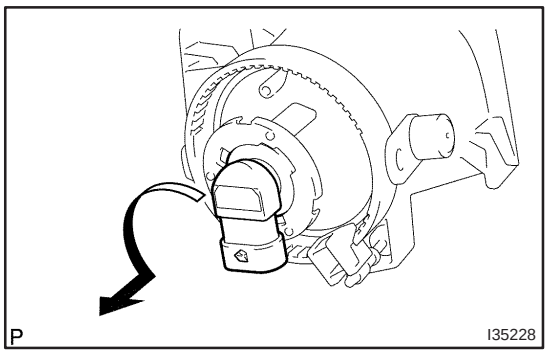

(d) Remove the fog lamp bulb as shown in the illustration.

3. ADJUST FOG LIGHT AIM (See page 65–23)

4. CHECK FOG LIGHT AIM

ADJUSTMENT

1. PUT VEHICLE THESE CONDITIONS

(a) Tire inflation pressure is within the specified value. (See page 28–1)

(b) Start the engine.

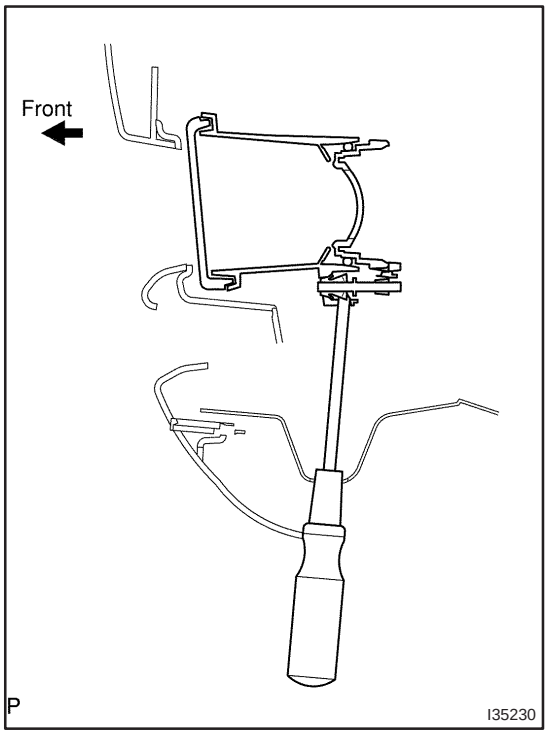

2. ADJUST FOG LIGHT AIM

(a) The fog light aim can be adjusted by turning the aiming screw in the vertical direction.

HINT:

The optical aim moves upward when turning the screwdriver clockwise and moves downward when turning the screwdriver center clockwise.

3. CHECK FOG LIGHT AIM

REAR COMBINATION LAMP ASSY LH

650SZ–01

REPLACEMENT

1. REMOVE REAR COMBINATION LAMP ASSY LH

(a) Remove the service hole cover LH.

(b) Disconnect the connector.

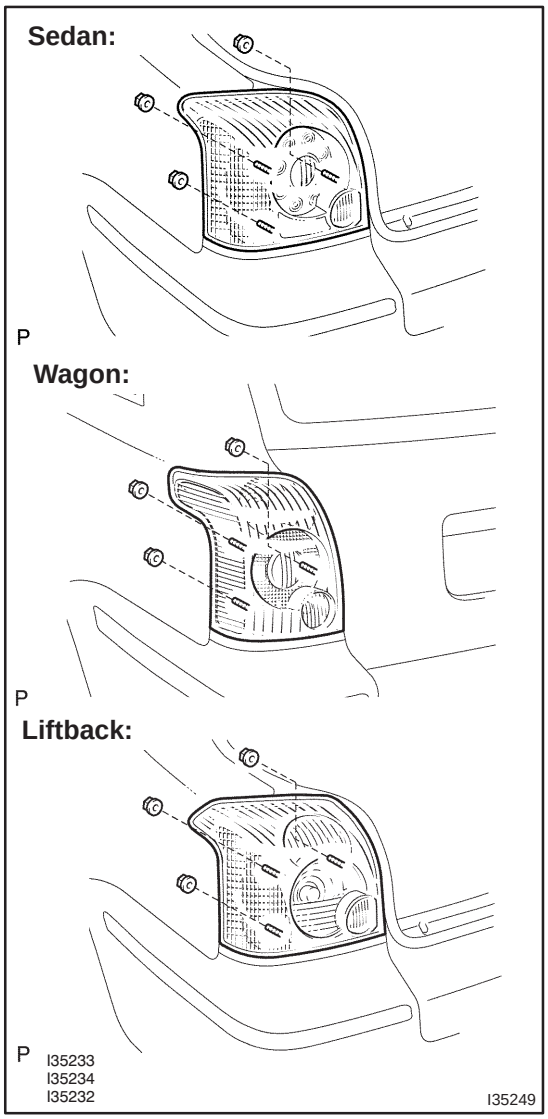

(c) Remove the 3 nuts and the rear combination lamp assy LH.

(d) SEDAN:
Remove the combination lamp socket and the 6 lamp bulbs.

(e) WAGON:
Remove the combination lamp socket and the 3 lamp bulbs.

(f) LIFTBACK:
Remove the combination lamp socket and the 4 lamp bulbs.

LICENSE PLATE LAMP ASSY

650T0–02

REPLACEMENT

1. REMOVE BACK DOOR TRIM BOARD ASSY (See page LIFTBACK 75–40, WAGON 75–45)
2. REMOVE LUGGAGE COMPARTMENT DOOR GARNISH SUB–ASSY OUTSIDE (SEDAN MODELS) (See page 76–27)
3. REMOVE BACK DOOR GARNISH SUB–ASSY OUTSIDE (LIFTBACK MODELS) (See page 76–28)
4. REMOVE BACK DOOR GARNISH SUB–ASSY OUTSIDE (WAGON MODELS) (See page 76–29)

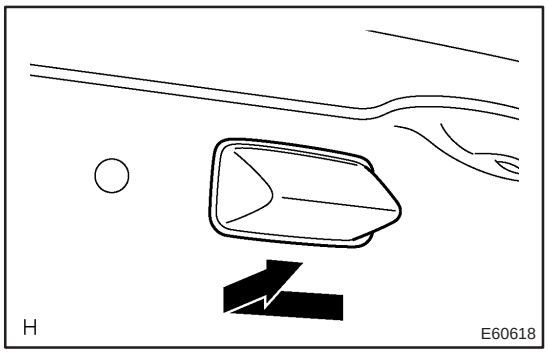

5. REMOVE LICENSE PLATE LAMP ASSY

(a) Pull the license plate lamp assy to the side of vehicle as shown in the illustration and release the claw.

(b) Disconnect the connector and remove the license plate lamp assy.

(c) Remove the license plate lamp bulb.

CENTER STOP LAMP ASSY

650T1–01

REPLACEMENT

1. REMOVE REAR SPOILER (WAGON MODELS) (See page 76–30)
2. REMOVE BACK DOOR TRIM BOARD ASSY (LIFTBACK MODELS) (See page 75–40)

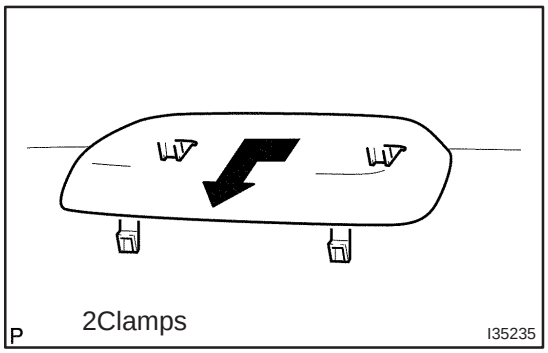

3. REMOVE CENTER STOP LAMP ASSY (SEDAN MODELS)

(a) Remove the center stop lamp assy as shown in the illustration.

(b) Disconnect the connector.

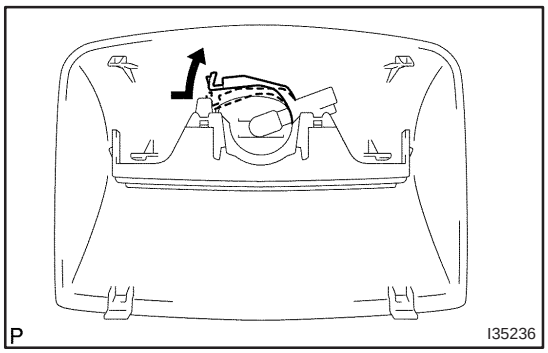

(c) Remove the center stop lamp bulb as shown in the illustration.

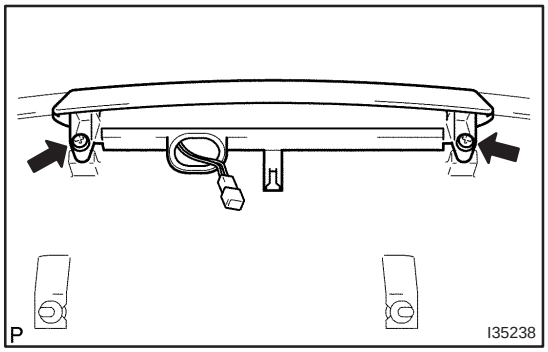

4. REMOVE CENTER STOP LAMP ASSY (WAGON MODELS)

(a) Remove the 2 screws and center stop lamp assy.

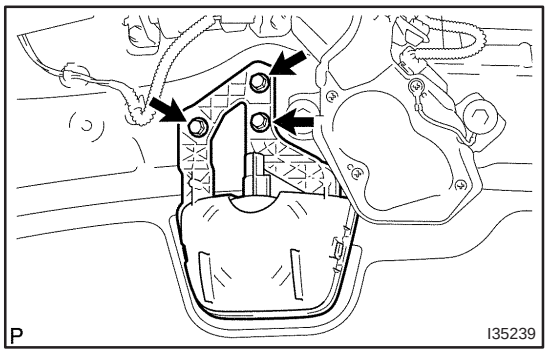

5. REMOVE CENTER STOP LAMP ASSY (LIFTBACK MODELS)

(a) Disconnect the connector.

(b) Remove the 3 screws and center stop lamp assy.

(c) Remove the center stop lamp socket and the bulb.

HEADLAMP DIMMER SWITCH ASSY

650T2–01

REPLACEMENT

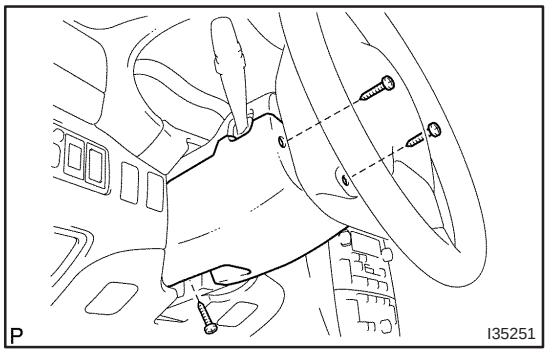

1. SEPARATE STEERING COLUMN COVER LWR

(a) Remove the 3 screws and steering column cover LWR.

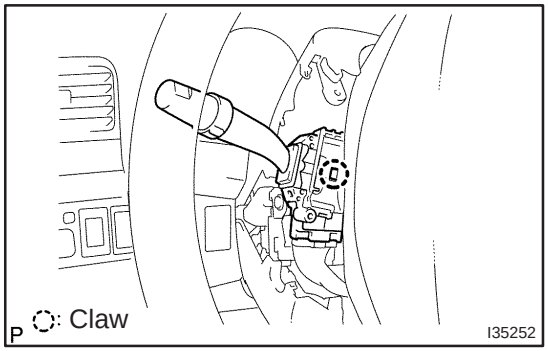

2. REMOVE HEADLAMP DIMMER SWITCH ASSY

(a) Disconnect the connector.

(b) Release the claw and pull out the headlamp dimmer switch assy.

HEIGHT CONTROL SENSOR SUB–ASSY FR RH

650T3–01

REPLACEMENT

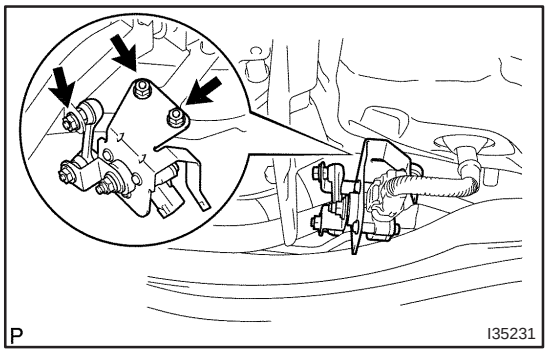

1. REMOVE HEIGHT CONTROL SENSOR SUB–ASSY FR RH

(a) Disconnect the connector.

(b) Remove the 3 nuts and height control sensor sub–assy front RH.

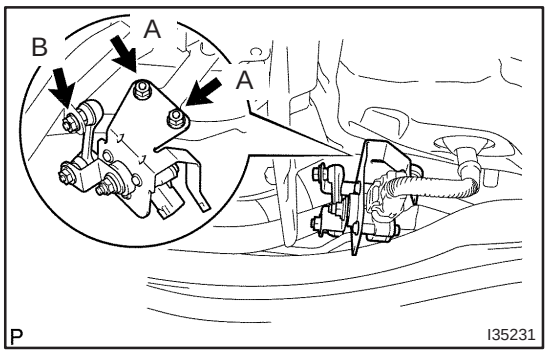

2. INSTALL HEIGHT CONTROL SENSOR SUB–ASSY FR RH

(a) Install the height control sensor sub–assy front RH with the 3 nuts.

Torque:
A: 7.9 N·m (81 kgf·cm, 70 in.·lbf)
B: 5.8 N·m (59 kgf·cm, 51 in.·lbf)

(b) Connect the connector.

3. HEADLIGHT AIM ONLY (See page 65–19)

HEIGHT CONTROL SENSOR SUB–ASSY REAR RH

650T4–01

REPLACEMENT

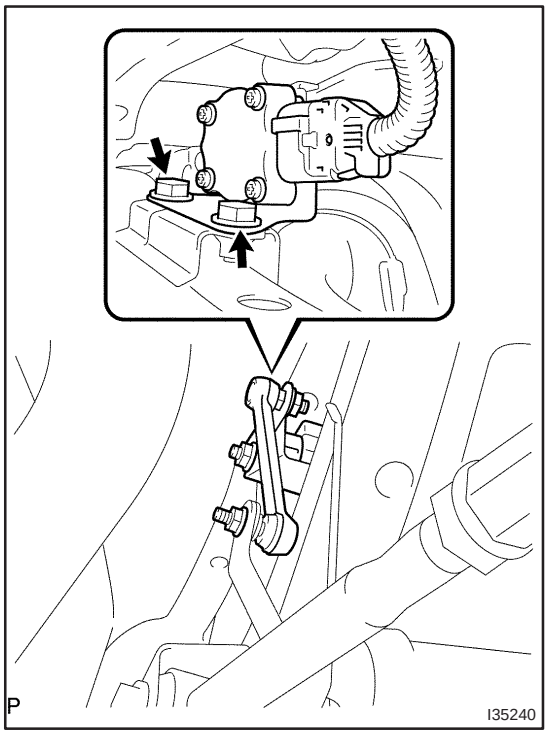

1. REMOVE HEIGHT CONTROL SENSOR SUB–ASSY REAR RH

(a) Disconnect the connector.

(b) Remove the 2 bolts, the nut and height control sensor sub–assy rear RH.

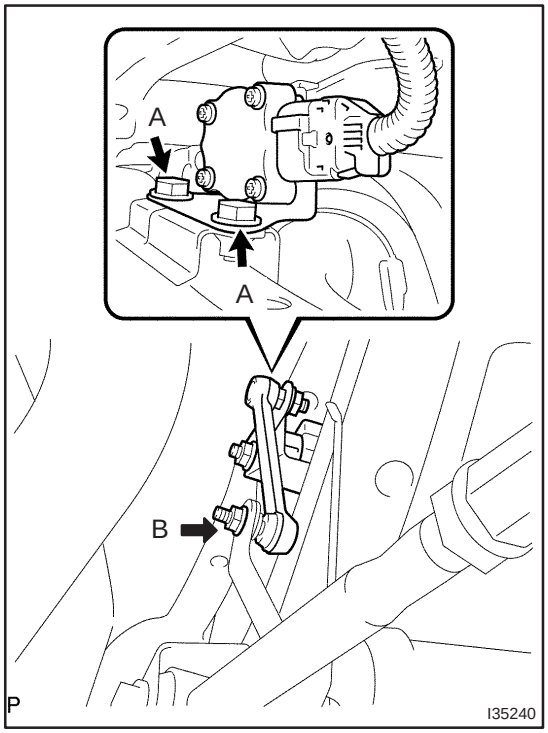

2. INSTALL HEIGHT CONTROL SENSOR SUB–ASSY REAR RH

(a) Install the height control sensor sub–assy rear RH with the 2 bolts and the nut.

Torque:
Bolt (A): 7.9 N·m (81 kgf·cm, 70 in.·lbf)
Nut (B): 5.8 N·m (59 kgf·cm, 51 in.·lbf)

(b) Connect the connector.

3. HEADLIGHT AIM ONLY (See page 65–19)

HEADLAMP LEVELING ECU ASSY

650T5–01

REPLACEMENT

1. **REMOVE GLOVE COMPARTMENT DOOR ASSY (LHD STEERING POSITION TYPE) (See page 71–11)**
2. **REMOVE FUSE BOX OPENING COVER (RHD STEERING POSITION TYPE) (See page 71–11)**

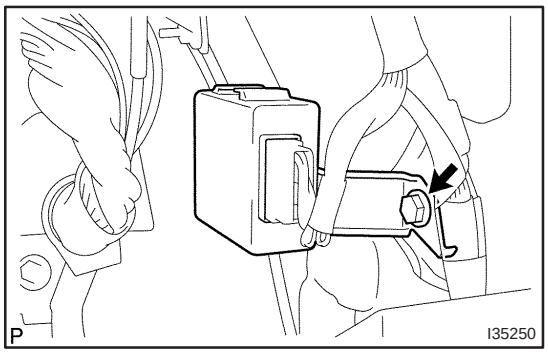

3. **REMOVE LIGHT CONTROL ECU**

(a) Disconnect the connector.

(b) Remove the bolt and headlamp leveling ECU assy.

4. **INSTALL LIGHT CONTROL ECU**

(a) Install the headlamp leveling ECU assy with the bolt.

(b) Connect the connector.

WIPER AND WASHER SYSTEM

6605E–03

PRECAUTION

1. PRECAUTION OF WASHER NOZZLE ADJUSTMENT

(a) Do not clean or adjust the washer nozzle with a safety pin, etc. because;
  (1) the washer nozzle tip is made of resin and could be damaged.
  (2) adjustment is not necessary because the washer nozzle is a jet type.

(b) If the washer nozzle is clogged with wax etc., remove the objects and clean the nozzle hole with a soft resin brush, etc.

660CK–01

PROBLEM SYMPTOMS TABLE

1. FRONT WIPER AND WASHER SYSTEM (W/O AUTO WIPER SYSTEM)

Symptom	Suspect Area	See page
Front wipers and washers do not operate.	1. IG relay 2. WIP fuse 3. Windshield wiper switch assy 4. Wire harness or connector	– – 66–6 –
Front wipers do not operate in LO or HI.	1. Windshield wiper switch assy 2. Windshield wiper motor assy 3. Wire harness or connector	66–6 66–6 –
Front wipers do not operate in INT.	1. Windshield wiper switch assy 2. Windshield wiper motor assy 3. Wire harness or connector	66–6 66–6 –
Front washer motor does not operate.	1 Windshield washer switch assy 2. Windshield washer motor assy 3. Wire harness or connector	66–6 66–6 –
Front wipers does not operate when washer switch in ON.	1. Windshield wiper switch assy 2. Windshield wiper motor assy 3. Wire harness or connector	66–6 66–6 –
Washer fluid does not operate.	Washer hose and nozzle	–
● When front wiper switch is in HI position, the wiper blade is in contact with the body. ● When the front wiper switch is OFF, the wiper blade does not retract or the retract position is wrong.	1. Windshield wiper motor assy 2. Front wiper arm installation position	66–6 66–13

2. FRONT WIPER AND WASHER SYSTEM (W/ AUTO WIPER SYSTEM)

Symptom	Suspect Area	See page
Front wipers and washer do not operate.	1. IG1 relay 2. WIP fuse 3. Windshield wiper switch assy 4. Windshield wiper relay assy 5. Wire harness or connector	– – 66–6 66–6 –
Front wipers does not operate in LO (Auto wiper system is normal).	Windshield wiper switch assy	66–6
Front wipers does not operate in HI (Auto wiper system is normal).	1. Windshield wiper switch assy 2. Wire harness or connector	66–6 –
Front washer motor does not operate.	1. Windshield wiper switch assy 2. Windshield washer motor assy 3. Wire harness or connector	66–6 66–6 –
Auto wiper system does not operate.	1. Windshield wiper switch assy 2. Windshield wiper relay assy 3. Rain sensor 4. Wire harness or connector	66–6 66–6 66–4 –

3. REAR WIPER AND WASHER SYSTEM

Symptom	Suspect Area	See page
Rear wiper and washers do not operate.	1. AMI fuse 2. RR WIP fuse 3. Windshield wiper switch assy 4. Wire harness or connector	– – 66–6 –
Rear wiper does not operate in INT.	1. Windshield wiper switch assy 2. Rear wiper motor assy 3. Wire harness or connector	66–6 66–6 –
Rear washer motor does not operate.	1. Windshield washer switch assy 2. Rear washer motor assy 3. Wire harness or connector	66–6 66–6 –
Rear wiper does not operate when washer switch is in ON.	1. Windshield wiper switch assy 2. Rear wiper motor assy 3. Wire harness or connector	66–6 66–6 –
Rear washer fluid does not operate.	Washer hose and nozzle	–
• When rear wiper switch is in ON position, the wiper blade is in contact with the body. • When the wiper switch is OFF, the wiper blade does not retract or the retract position is wrong.	1. Rear wiper motor assy 2. Rear wiper blade installation position	66–6 66–17

4. HEADLAMP CLEANER SYSTEM

Symptom	Suspect Area	See page
Headlamp cleaner system does not operate.	1. H/CLN fuse 2. Headlamp cleaner switch assy 3. Windshield wiper switch assy (w/ HID) 4. Headlamp cleaner control relay 5. Intergeneration Relay 6. Wire harness or connector	– 66–6 66–6 66–6 – –

660CL–01

ON–VEHICLE INSPECTION

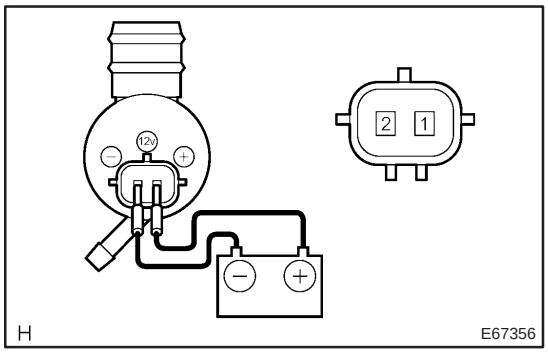

1. WINDSHIELD WASHER MOTOR AND PUMP ASSY

(a) Operation Check

(1) Pour the washer fluid into the washer jar with the washer motor and the pump installed to the washer jar assy.

(2) Connect the battery (+) to the terminal 1 of the windshield washer motor and pump assy, the battery (–) to the terminal 2 of the windshield washer motor and pump assy. Check that the washer fluid comes out from the washer jar.

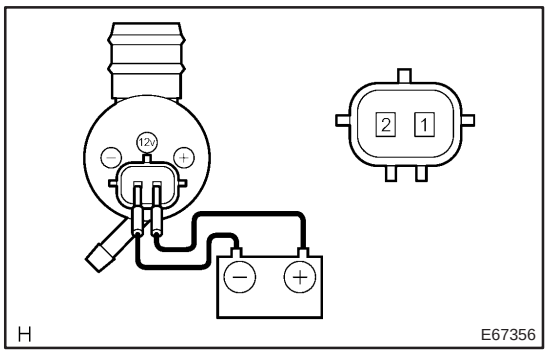

2. REAR WASHER MOTOR ASSY

(a) Operation Check

(1) Pour the washer fluid into the washer jar with the washer motor and the pump installed to the washer jar assy.

(2) Connect the battery (+) to the terminal 1 of the rear washer motor assy, the battery (–) to the terminal 2 of the rear washer motor assy. Check that the washer fluid comes out from the washer jar.

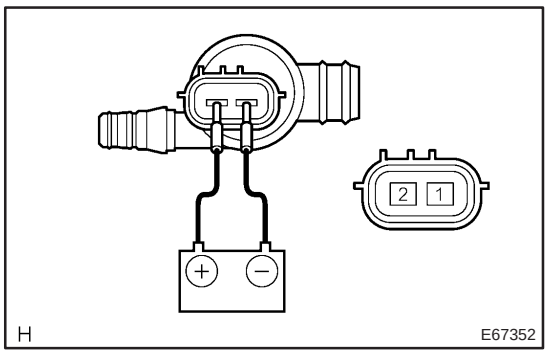

3. HEADLAMP CLEANER MOTOR AND PUMP ASSY

(a) Operation Check

(1) Pour the washer fluid into the washer jar with the washer motor and the pump installed to the washer jar assy.

(2) Connect the battery (+) to the terminal 2 of the headlamp cleaner motor and pump assy, the battery (–) to the terminal 1 of the headlamp cleaner motor and pump assy. Check that the washer fluid comes out from the washer jar.

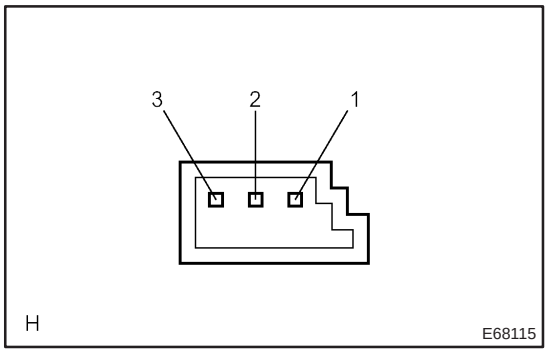

4. RAIN SENSOR

(a) Check voltage of each terminal of the connector

Standard:

Tester connection	Condition	Specified voltage
2 – 3	Rain sensor is covered by hand	Signal waveform

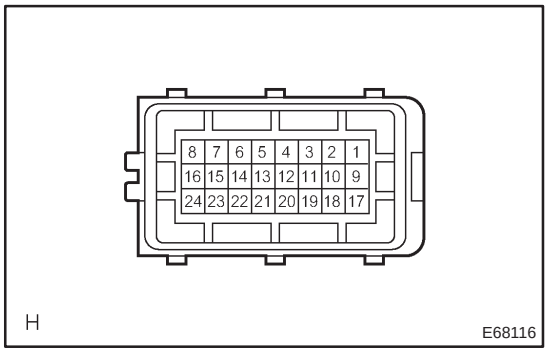

5. WINDSHIELD WIPER RELAY ASSY

(a) Check voltage of each terminal of the connector

Standard:

Tester connection	Condition	Specified voltage
1 (+B) – Body ground	Ignition switch OFF → ON	0 → 10 to 14 V
2 (RSI) – Body ground	Rain sensor is covered by hand	Signal waveform
4 (WF) – Body ground	Front washer switch OFF → ON	10 to 14 V → 0 V
8 (+2) – Body ground	Front wiper is in high speed operation (When front wiper switch is in AUTO position)	10 to 14 V
9 (F1) – Body ground	Front wiper switch OFF → AUTO	10 to 14 V → 0 V
11 (F2) – Body ground	Front wiper switch OFF → AUTO	0 → 10 to 14 V
12 (WF) – Body ground	Front washer switch OFF→ ON	10 to 14 V → 0 V
16 (+1) – Body ground	Front wiper is in 10 speed operation (when front wiper switch is in AUTO position)	10 to 14 V
17 (+S) – Body ground	Always	Below 1 V
19 (SP) – Body ground	Ignition switch OFF → ON	0 V → 10 to 14 V
20 (VR1) – Body ground	Ignition switch OFF → ON	0 V → 10 to 14 V
22 (E) – Body ground	Always	Below 1 V
23 (SG) – Body ground	Always	Below 1 V
24 (VP2) – Body ground	Ignition switch is ON and rain sensor adjust switch is in (+) position → (–) position	Signal waveform

6. AUTO WIPER SYSTEM OPERATION CHECK

(a) Spray once at the area where the rain sensor is placed, then the wiper blades immediately will carry out a wiping cycle. If the water is continuos sprayed to the rain sensor area of the windscreen, the wiper blades first should carry out interval mode, then change to low speed and finally reach high speed after a few seconds.

By stopping spraying water to the screen the wiper blade changing back their speed until they stop wiping.

INSPECTION

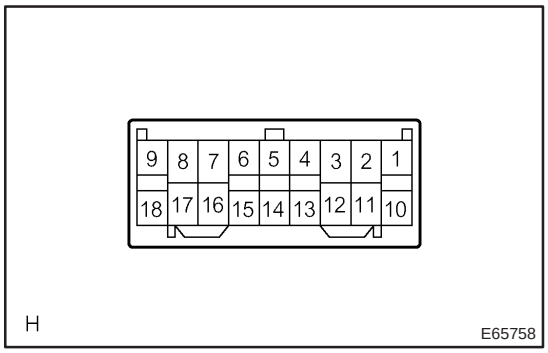

1. WINDSHIELD WIPER SWITCH ASSY (W/O RAIN SENSING WIPER)

(a) Continuity Check

(1) Check the continuity between each of the terminals of the connector.

Standard:

Front Wiper Switch

Switch position	Tester connection	Specified condition
MIST	7 (+1) – 17 (+B)	Continuity
OFF	7 (+1) – 16 (+S)	Continuity
INTO	7 (+1) – 16 (+S)	Continuity
LO	7 (+1) – 17 (+B)	Continuity
HI	8 (+2) – 17 (+B)	Continuity

Rear Wiper Switch (w/ Rear Wiper)

Switch position	Tester connection	Specified condition
OFF	–	No Continuity
INTO	2 (EW) – 4 (C1R)	Continuity
ON	2 (EW) – 10 (+1R)	Continuity

Front Washer Switch

Switch position	Tester connection	Specified condition
OFF	–	No continuity
ON	2 (EW) – 11 (WF)	Continuity

Rear Washer Switch (w/ Rear Wiper)

Switch position	Tester connection	Specified condition
OFF	–	No continuity
ON (Rear wiper switch OFF position side)	2 (EW) – 3 (WR)	Continuity
ON (Rear wiper switch ON position side)	2 (EW) – 3 (WR), 2 (EW) – 10 (+1R)	Continuity

(b) Intermittent Operation Check

(1) Connect the voltmeter (+) terminal to the terminal 7 (+1) of the connector and the voltmeter (–) terminal to the terminal 2 (EW) of the connector.

(2) Connect the battery (+) to the terminal 17 (+B) of the connector and the battery (–) to the terminal 2 (EW) and the terminal 16 (+S) of the connector.

(3) Turn the wiper switch into INT position.

(4) Connect the battery (+) to the terminal 16 (+S) of the connector for 5 seconds.

(5) Connect the battery (–) to the terminal 16 (+S) of the connector. Operate the intermittent wiper relay and check voltage between terminal 7 (+1) and terminal 2 (EW).

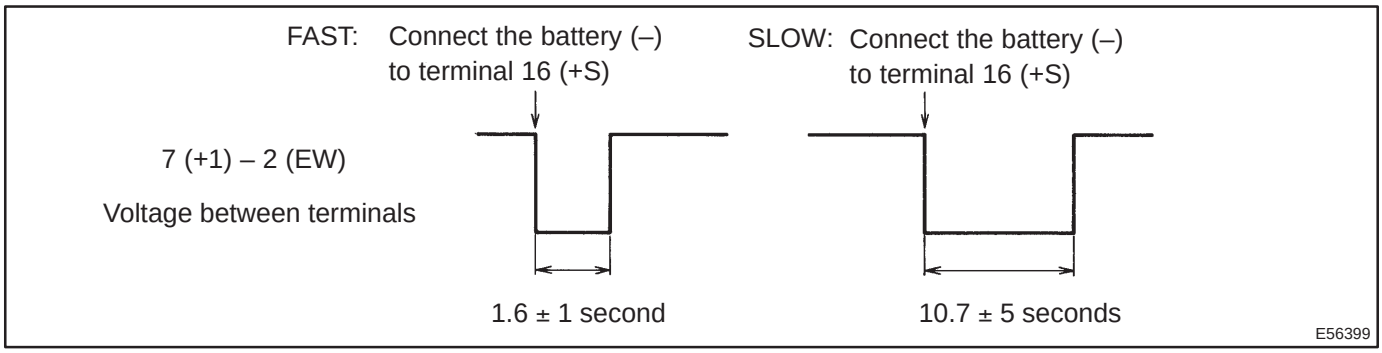

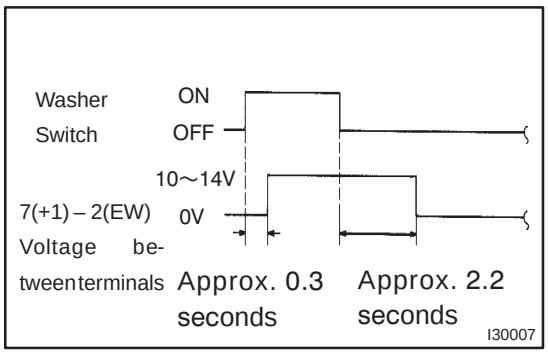

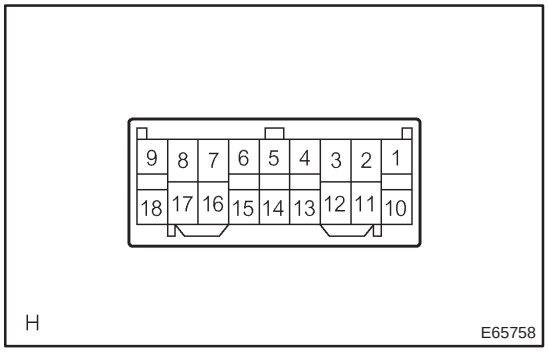

(c) Operation Check (Front Wiper)

(1) Turn the wiper switch into OFF position.

(2) Connect the battery (+) to the terminal 17 (+B) of the connector, the battery (–) to the terminal 16 (+S) and the terminal 2 (EW) of the connecter.

(3) Connect the voltmeter (+) terminal to the terminal 7 (+1) of the connector and the voltmeter (–) terminal to the terminal 2 (EW) of the connector. Turn the washer switch ON and OFF, and check voltage between terminal 7 (+1) and terminal 2 (EW).

2. WINDSHIELD WIPER SWITCH ASSY (W/ RAIN SENSING WIPER)

(a) Continuity Check

(1) Check continuity of each terminal of the connector.

Standard:

Front Wiper Switch

Switch position	Tester condition	Specified condition
MIST	7 (+1) – 17 (+B)	Continuity
OFF	7 (+1) – 16 (+S)	Continuity
AUTO	7 (+1) – 16 (+S), 13 (AUTO) – 15 (E)	Continuity
LO	7 (+1) – (17+B)	Continuity
HI	8 (+2) – 17 (+B)	Continuity

Rear Wiper Switch (w/ Rear Wiper)

Switch position	Tester condition	Specified condition
OFF	–	No continuity
INT	2 (EW) – 4 (CIR)	Continuity
ON	2 (EW) – 10 (+1R)	Continuity

Front Washer Switch

Switch position	Tester condition	Specified condition
OFF	–	No continuity
ON	2 (EW) – 11 (WF)	Continuity

Rear Washer Switch (w/ Rear Wiper)

Switch position	Tester condition	Specified condition
OFF	–	No continuity
ON (Rear wiper switch OFF position side)	2 (EW) – 3 (WR)	Continuity
ON (Rear wiper switch ON position side)	2 (EW) – 10 (+1R)	Continuity

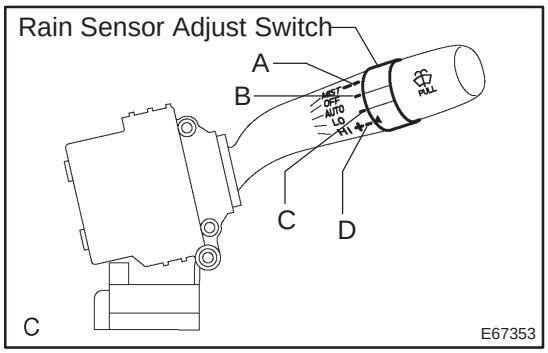

(b) Rain Sensor Adjust Switch Operation Check

(1) Check resistance between terminal of the terminal 12 (VR1) and the terminal 14 (VR2) when rain sensor adjust switch is operated.

Switch position	Resistance (Ω)
A position	∞
B position	432 to 528
C position	216 to 264
D position	0

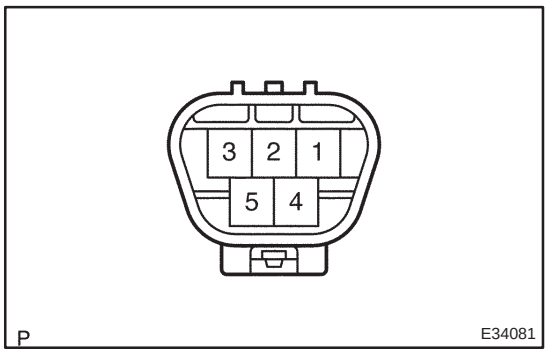

3. WINDSHIELD WIPER MOTOR ASSY (LHD STEERING POSITION TYPE)

(a) LO Operation Check

(1) Connect the battery (+) to the terminal 1 (+1) of the connector and the battery (–) to the terminal 5 (E) of the connector, and check that the motor operates with low speed (LO).

(b) HI Operation Check

(1) Connect the battery (+) to the terminal 4 (+2) of the connector and the battery (–) to the terminal 5 (E) of the connector, and check that the motor operates with high speed (HI).

(c) Automatic Stop Operation Check

(1) Connect the battery (+) to the terminal 1 (+1) of the connector and the battery (–) to the terminal 5 (E) of the connector. With the motor being rotated at low speed (LO), disconnect the terminal 1 (+1) to stop the wiper motor operation at any position except the automatic stop position.

(2) Using SST, connect the terminal 1 (+1) and the terminal 3 (S), and the battery (+) to the terminal 2 (B) to restart the motor operation at low speed.

SST 09843–18040

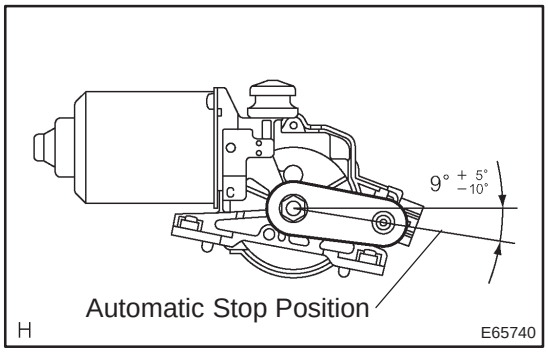

(3) Check the automatic stop position.
Standard: See the illustration.

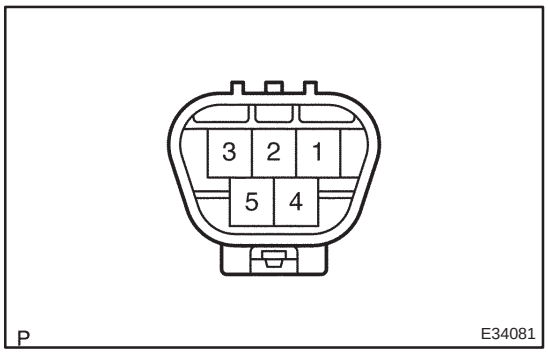

4. WINDSHIELD WIPER MOTOR ASSY (RHD STEERING POSITION TYPE)

(a) LO Operation Check
(1) Connect the battery (+) to the terminal 5 (+1) of the connector and the battery (–) to the terminal 4 (E) of the connector, and check that the motor operates with low speed (LO).

(b) HI Operation Check
(1) Connect the battery (+) to the terminal 3 (+2) of the connector and the battery (–) to the terminal 4 (E) of the connector, and check that the motor operates with high speed (HI).

(c) Automatic Stop Operation Check
(1) Connect the battery (+) to the terminal 5 (+1) of the connector and the battery (–) to the terminal 4 (E) of the connector. With the motor being rotated at low speed (LO), disconnect the terminal 5 (+1) to stop the wiper motor operation at any position except the automatic stop position.
(2) Using SST, connect the terminal 5 (+1) and the terminal 1 (S), and the battery (+) to the terminal 2 (B) to restart the motor operation at low speed.
SST 09843–18040

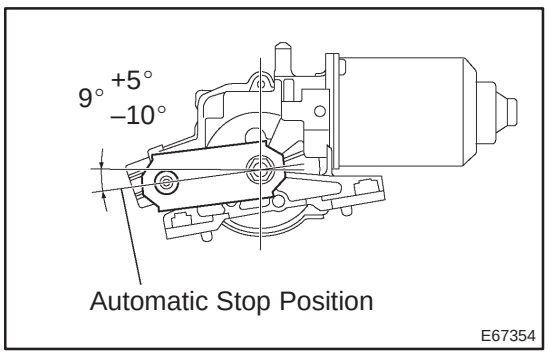

(3) Check the automatic stop position.
Standard: See the illustration.

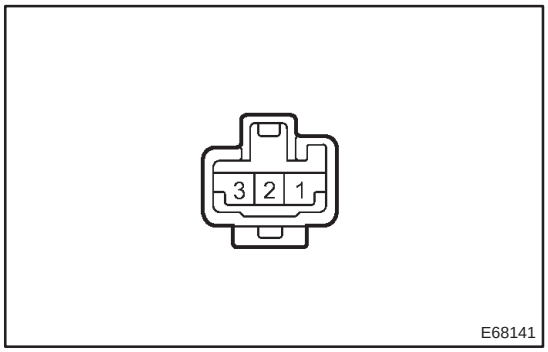

5. REAR WIPER MOTOR ASSY

(a) Connect the battery (+) to the terminal 1 (+B) of the connector, the battery (–) to the terminal 3 (LS) of the connector and rear wiper motor assy body, and check that the rear wiper motor assy operate.

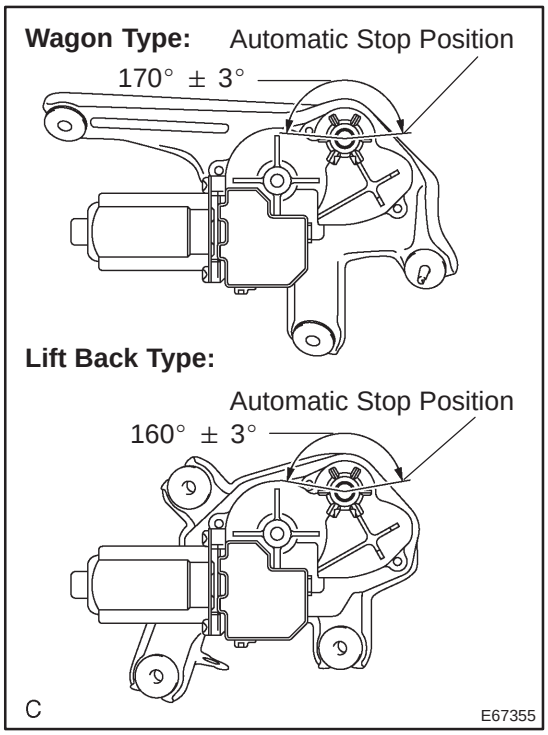

(b) Automatic Stop Position Operation Check

(1) Connect the battery (+) to the terminal 1 (+B) of the connector, the battery (–) to the terminal 3 (LS) of the connector and rear wiper motor assy body. With the motor being rotated disconnect the terminal 3 (LS) from the battery (–), then check that the wiper motor stops automatically at the automatic stop position.

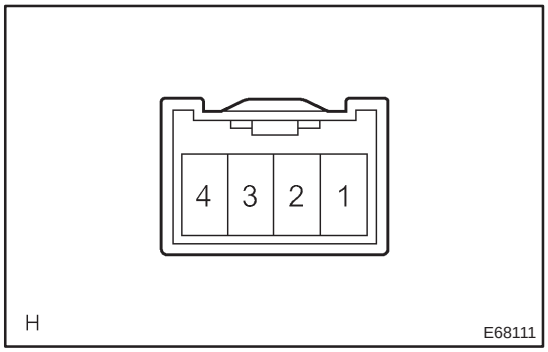

6. HEADLAMP CLEANER SWITCH ASSY

(a) Check that there is continuity between terminal at each switch position as shown in the chart.

Switch operation	Tester connection	Specified condition
OFF	1 (E) – 4 (R)	No continuity
ON	1 (E) – 4 (R)	Continuity
Illumination circuit	2 (ILL) – 3 (ILL+)	Continuity

(b) Inspect illumination operation.

(1) Connect the positive (+) lead from the battery to the terminal 3 and negative (–) lead to the terminal 2, then check that the illumination comes on.

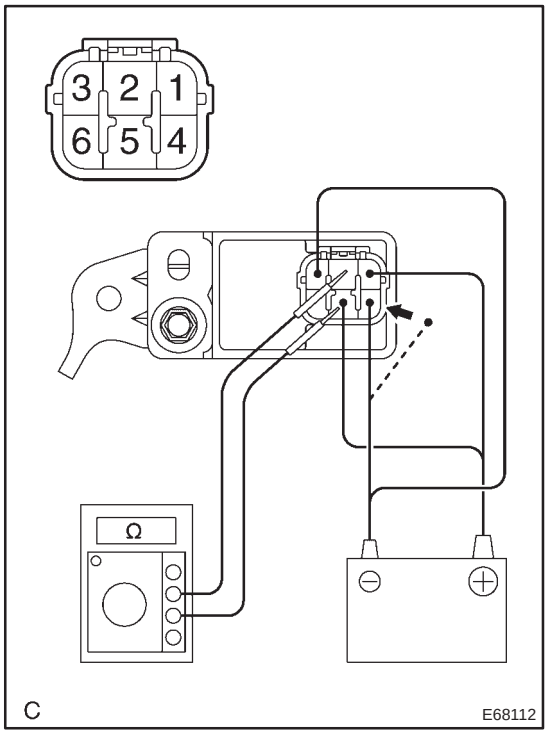

7. HEADLAMP CLEANER CONTROL RELAY

(a) w/o HID:

Inspect headlamp cleaner control relay operation

(1) Check that no continuity exists between the terminals 2 and the terminal 3.

(2) Connect the positive (+) lead from the battery to the terminal 1 and the terminal 5, and the negative (–) lead from the battery to the terminal 3.

(3) Connect the negative (–) lead from the battery to the terminal 4, and check that continuity exists between the terminal 2 and the terminal 5 for 0.8 to 0.9 seconds, then no continuity exists.

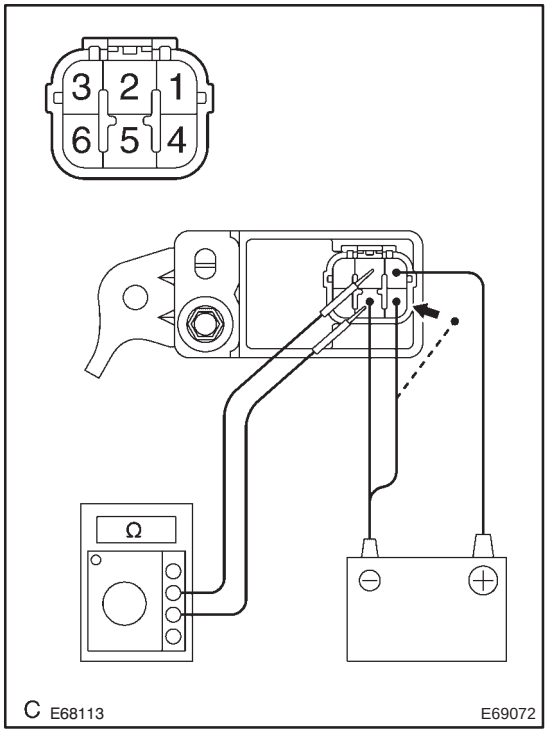

(b) w/ HID:

Inspect headlamp cleaner control relay operation

(1) Check that no continuity exists between the terminal 2 and the terminal 5.

(2) Connect the positive (+) lead from the battery to the terminal 1, and the negative (–) lead from the battery to the terminal 5.

(3) Connect the negative (–) lead from the battery to the terminal 4, and check that continuity exists between the terminal 2 and the terminal 5 for 0.7 to 0.9 seconds, then no continuity exists.

(4) Disconnect the positive (+) lead from the battery from the terminal 1, and connect the positive (+) lead from the battery to the terminal 1 again.

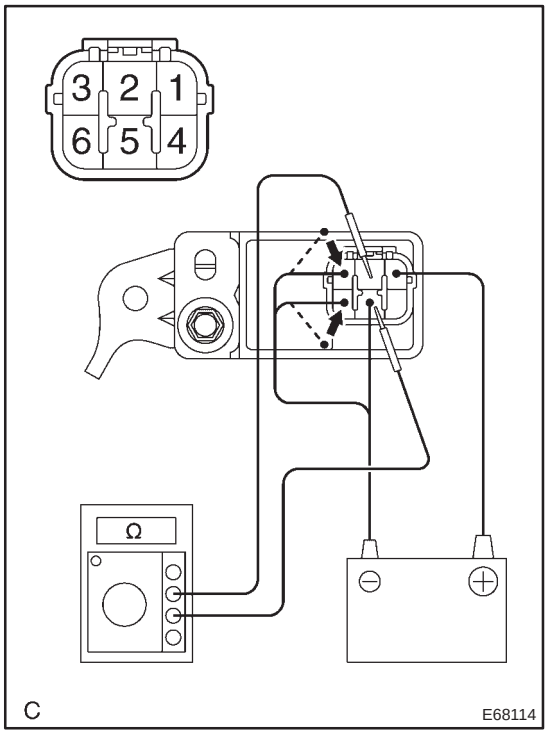

(5) Connect the negative (–) lead from the battery to the terminal 3.

(6) Connect the negative (–) lead from the battery to the terminal 6, and check that continuity exists between the terminal 2 and the terminal 5 for 0.7 to 0.9 seconds, then no continuity exists.

WINDSHIELD WIPER MOTOR ASSY

REPLACEMENT

660CN–01

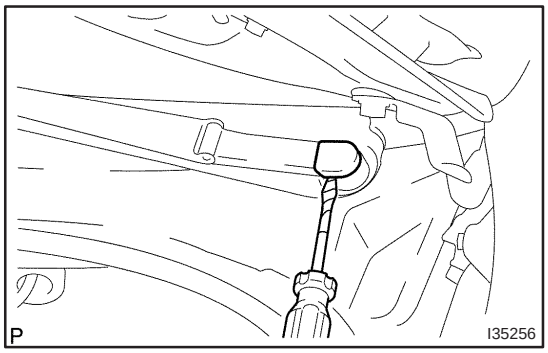

1. REMOVE FRONT WIPER ARM HEAD CAP

(a) Using a small screwdriver, remove the 2 front wiper arm head cap.

HINT:

Tape up the screwdriver tip before use.

2. REMOVE FR WIPER ARM RH

(a) Operate the wiper, and stop the windshield wiper motor assy to the automatic stop position.

(b) Remove the nut and the FR wiper arm RH.

3. REMOVE FR WIPER ARM LH

(a) Remove the nut and the FR wiper arm LH.

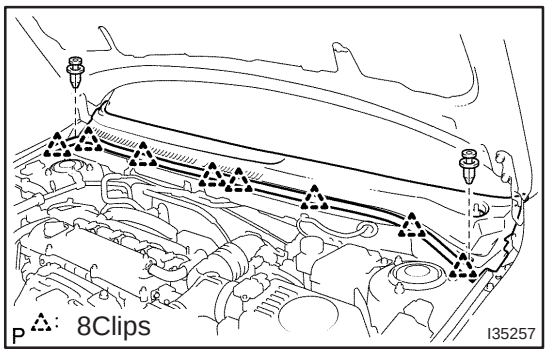

4. REMOVE COWL TOP VENTILATOR LOUVER

(a) Disengage the 8 clips, and remove the hood cowl top seal.

(b) Remove the 2 clips, and the cowl top ventilator louver.

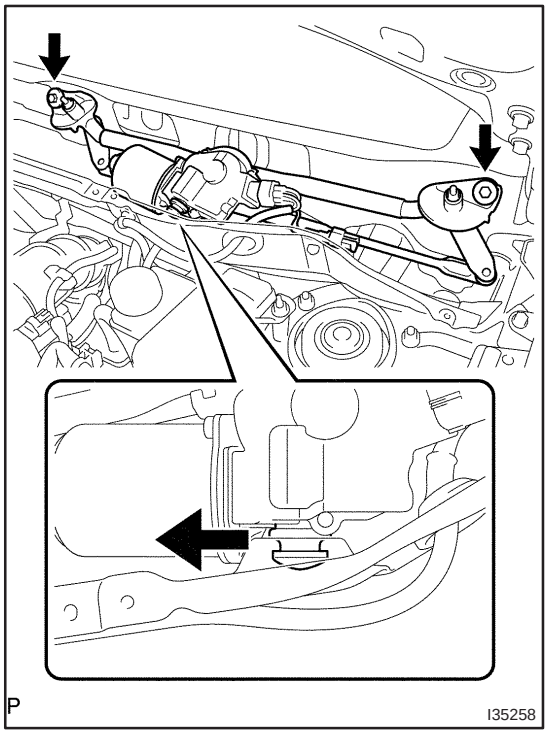

5. REMOVE WINDSHIELD WIPER MOTOR & LINK ASSY

(a) Disconnect the connector, and remove the 2 bolts.

(b) Slide the wiper link assy to vehicle's passengers side. Disengage the meshing of the rubber pin, and remove the wiper motor & link assy.

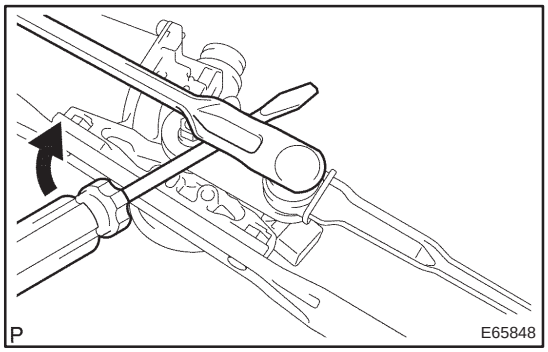

6. REMOVE WINDSHIELD WIPER MOTOR ASSY

(a) Using a screwdriver, disengage the meshing of 2 rods at the crank arm pivot of the windshield wiper motor assy.

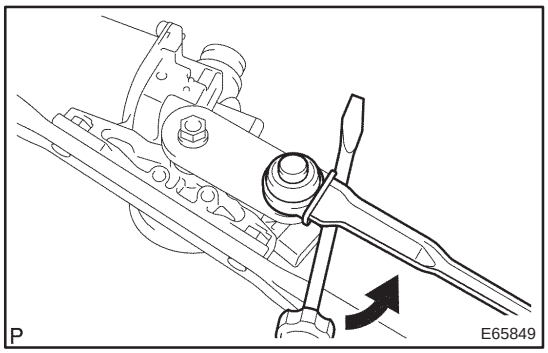

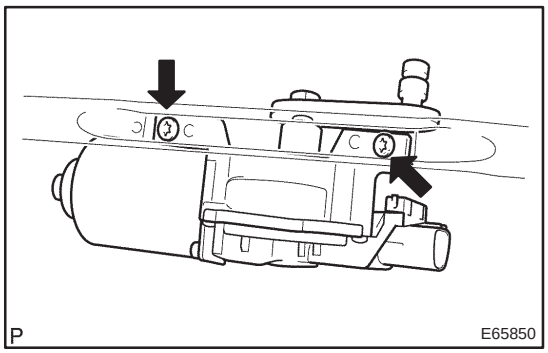

(b) Remove the 2 torx bolts and the windshield wiper motor assy.

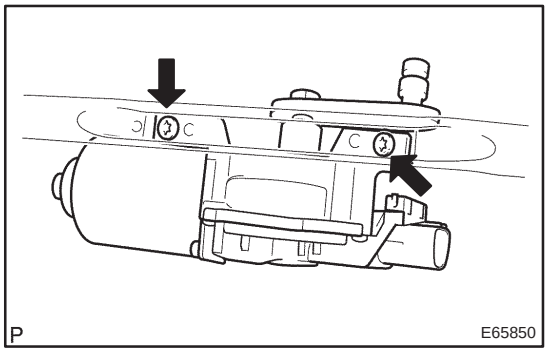

7. INSTALL WINDSHIELD WIPER MOTOR ASSY

(a) Apply MP grease to the crank arm pivot of the windshield wiper motor assy.

(b) Install the windshield wiper motor assy to the windshield wiper link assy with the 2 torx bolts.

Torque: 7.5 N·m (76 kgf·cm, 66 in.·lbf)

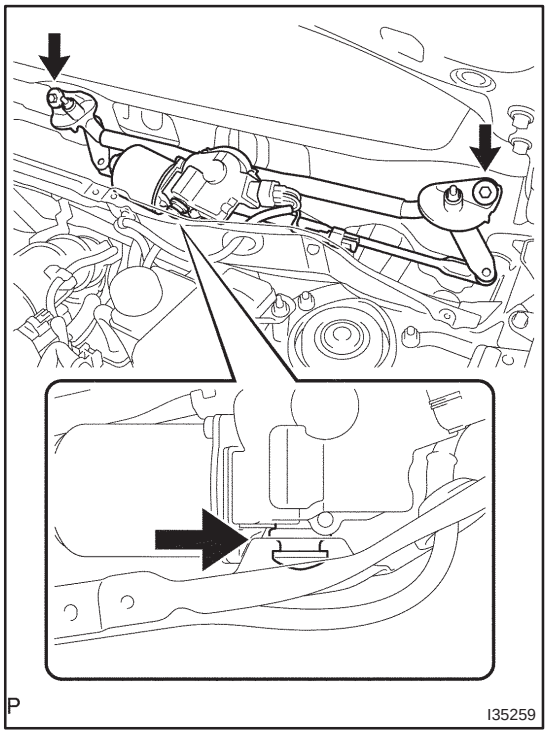

8. INSTALL WINDSHIELD WIPER MOTOR & LINK ASSY

(a) Install the meshing of the rubber pin.

(b) Install the windshield wiper motor & link assy with the 2 bolts.

Torque: 5.5 N·m (56 kgf·cm, 49 in.·lbf)

(c) Connect the connector.

9. INSTALL FR WIPER ARM LH

(a) Operate the wiper, and stop the windshield wiper motor assy to the automatic stop position.

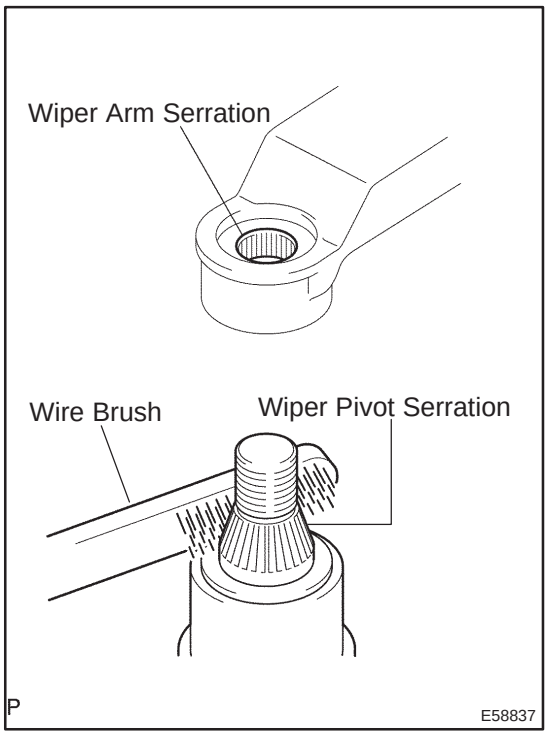

(b) Scrape off the serration part of the wiper arm with a round file or equivalent.

(c) Clean the wiper pivot serration with a wire brush.

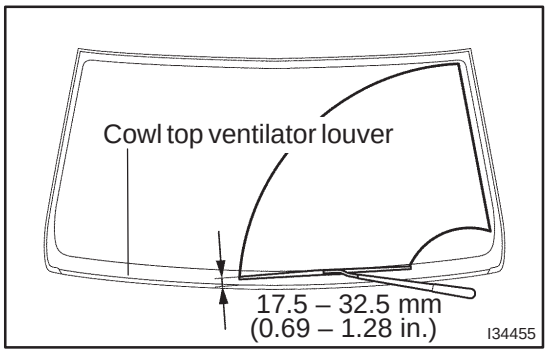

(d) Install the front wiper arm LH with the nut to the position shown in the illustration.

Torque: 21 N·m (210 kgf·cm, 15 ft·lbf)

HINT:

Hold down the arm hinge by hand to fasten the nut.

10. INSTALL FR WIPER ARM RH

(a) Scrape off the serration part of the wiper arm with a round file or equivalent.

(b) Clean the wiper pivot serration with a wire brush.

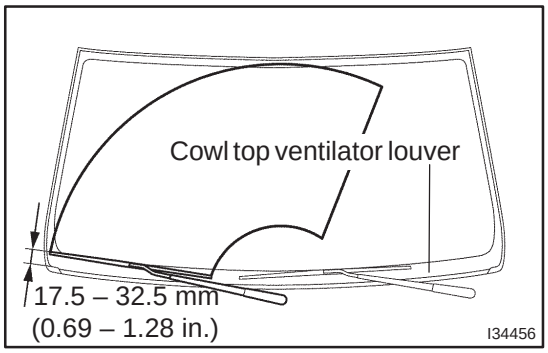

(c) Install the front wiper arm RH with the nut to the position shown in the illustration.

Torque: 21 N·m (210 kgf·cm, 15 ft·lbf)

HINT:

Hold down the arm hinge by hand to fasten the nut.

(d) Operate the wiper while running the water or the washer fluid over the window, and check the wiping condition and that the front wiper does not hit against the vehicle body.

REAR WIPER MOTOR ASSY

660CO–02

REPLACEMENT

1. REMOVE REAR WIPER ARM ASSY

(a) Remove the nut and the rear wiper arm.

2. REMOVE BACK DOOR TRIM BOARD ASSY (See page LIFTBACK 75–40, WAGON 75–45)

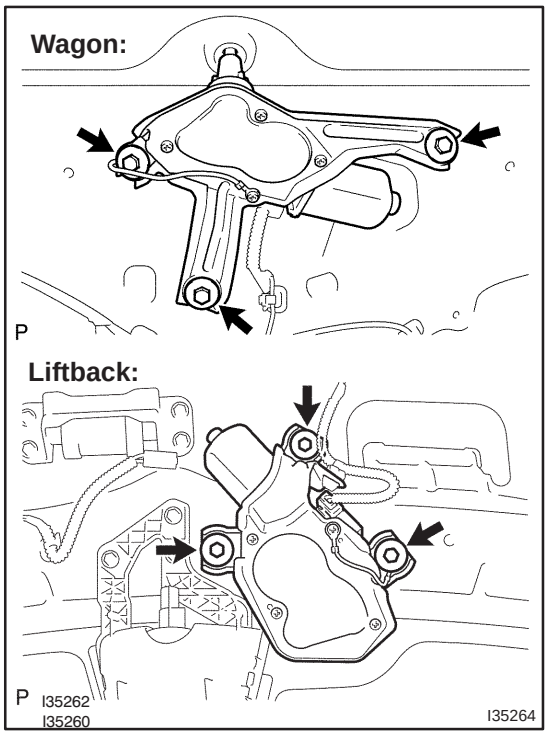

3. REMOVE REAR WIPER MOTOR ASSY

(a) Remove the 3 bolts.

(b) Disconnect the connector, and remove the rear wiper motor assy.

4. INSTALL REAR WIPER MOTOR ASSY

(a) Install the rear wiper motor assy with the 3 bolts.
Torque: 5.5 N·m (56 kgf·cm, 49 in.·lbf)

(b) Connect the connector.

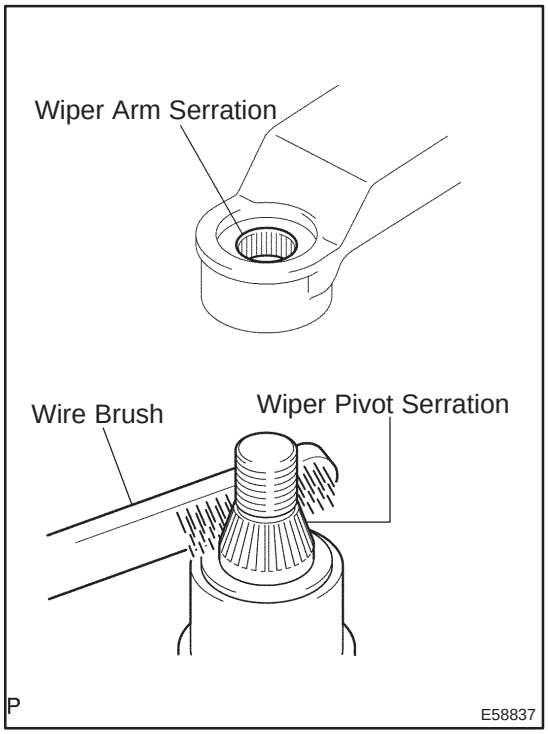

5. INSTALL REAR WIPER ARM ASSY

(a) Scrape off the serration part of the wiper arm with a round file or equivalent.

(b) Clean the rear wiper pivot serration with a brush.

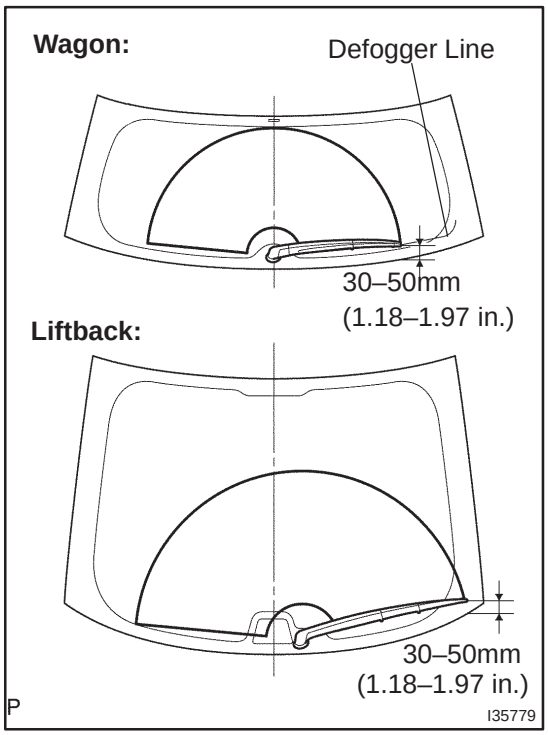

(c) Stop the rear wiper motor assy to the automatic stop position. Install the rear wiper arm to the position as shown in the illustration.

Torque: 5.5 N·m (56 kgf·cm, 49 in.·lbf)

WIPER RUBBER LH

660CP–01

REPLACEMENT

1. REMOVE FR WIPER BLADE LH

(a) Remove the front wiper blade LH from the front wiper arm LH.

NOTICE:

Do not fold down the front wiper arm with the front wiper blade being removed from it.

2. REMOVE WIPER RUBBER LH

(a) Remove the front wiper rubber LH from the front wiper blade.

(b) Remove the 2 wiper rubber backing plates from the wiper rubber LH.

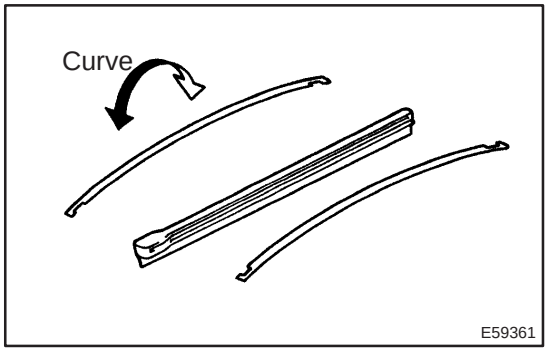

3. INSTALL WIPER RUBBER LH

(a) Install the 2 wiper rubber backing plates to the wiper rubber LH.

NOTICE:

Be careful about the right side and the wrong side of the backing plates.

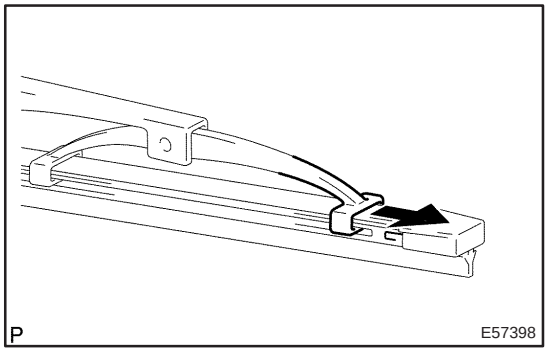

(b) Install the wiper rubber LH so that the head part (Larger side) of the wiper rubber faces the arm axle side.

NOTICE:

Push the front wiper blade into the grooves of the wiper rubber to engage them completely.

REAR WIPER RUBBER

660CQ–01

REPLACEMENT

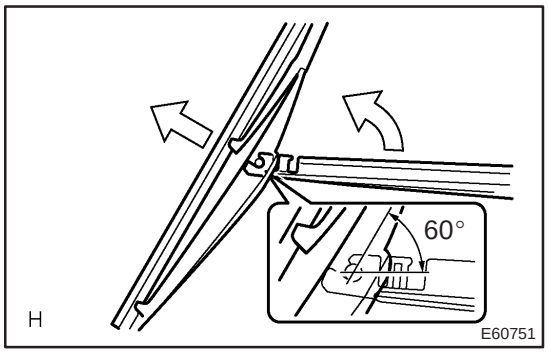

1. REMOVE REAR WIPER BLADE ASSY

(a) Remove the rear wiper arm head cap.

(b) Raise the rear wiper blade to the position as shown in the illustration where the meshing of the claw is disengaged with the click sound.

NOTICE:

Be careful not to break the claw.

(c) Pull the rear wiper blade straight from the wiper arm toward the left side of the vehicle.

NOTICE:

Do not fold the rear wiper arm with the rear wiper blade being removed from it.

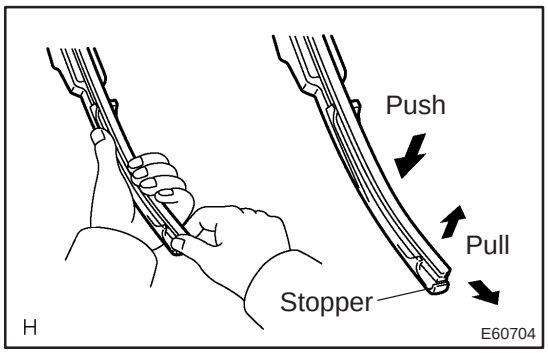

2. REMOVE REAR WIPER RUBBER

(a) Pull the end of the rubber protruded from the blade stopper as shown in the illustration.

NOTICE:

Do not pull out the wiper rubber forcibly. Otherwise, the backing plates are deformed or blade claw is damaged.

HINT:

Pushing the position close to the middle of the blade raises the rubber, making easier to pull the rubber out.

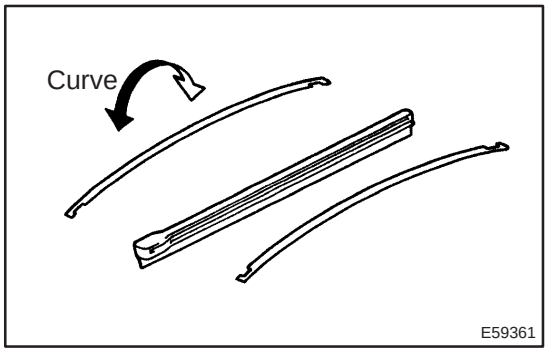

3. INSTALL REAR WIPER RUBBER

(a) Install the 2 wiper rubber backing plates to the rear wiper rubber.

NOTICE:

Be sure to install the wiper rubber backing plates in the right direction.

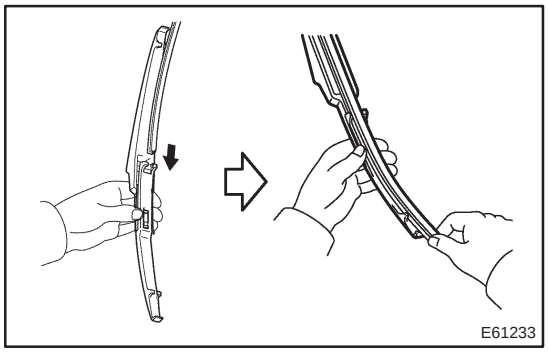

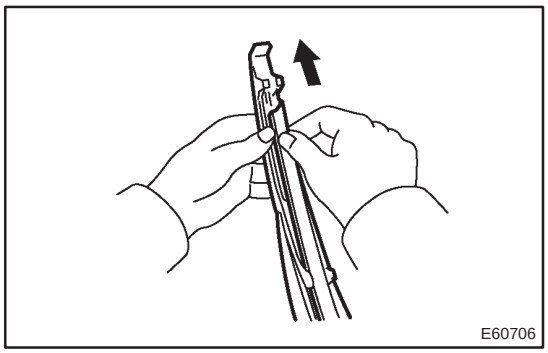

(b) Insert the rear wiper rubber from the claw position of the middle of the rear wiper blade into the end position.

(c) After passing the rear wiper rubber through the rear end side claw, protrude it from the rear end stopper and pass it through the front tip side claw.

WASHER NOZZLE SUB–ASSY

660CU–01

ADJUSTMENT

1. REMOVE WASHER NOZZLE SUB–ASSY

(a) With the engine running, check that the point where the washer fluid hits the windshield and the rear window is within the range indicated by the hatched line.

Front:

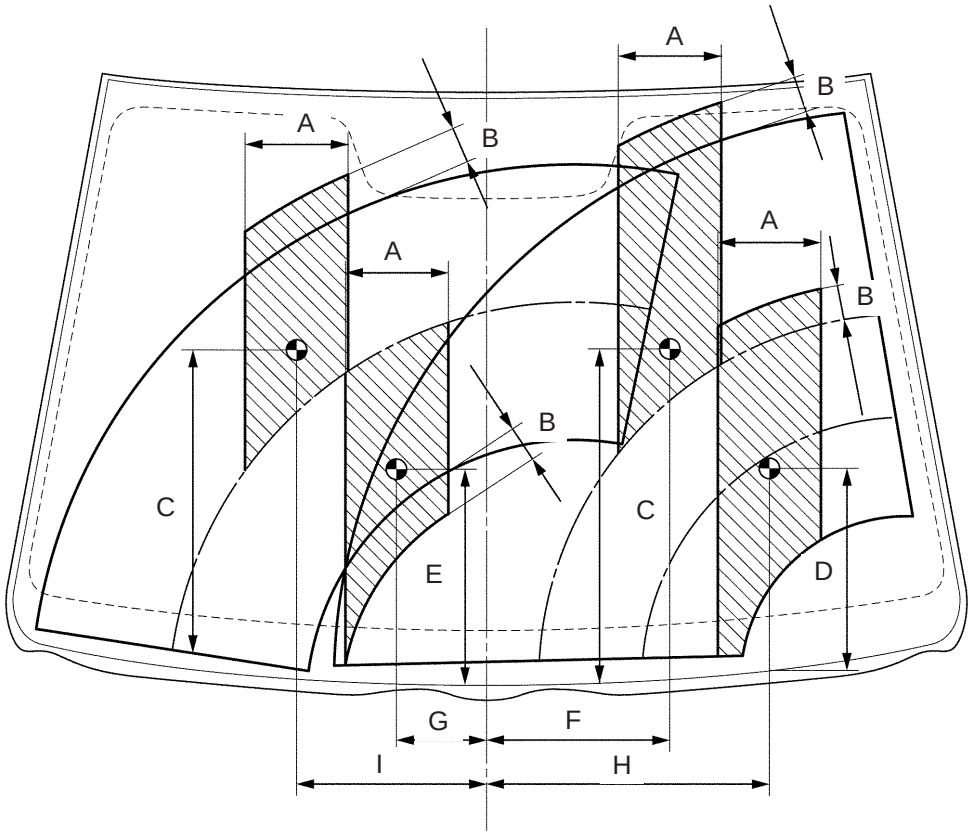

A: 150 mm (5.91 in.)
B: 50 mm (1.97 in.)
C: 480 mm (18.90 in.)
D: 295 mm (11.61 in.)
E: 310 mm (12.21 in.)
F: 275 mm (10.83 in.)
G: 130 mm (5.12 in.)
H: 420 mm (16.54 in.)
I: 280 mm (11.02 in.)

P

I35778

Rear (Wagon):

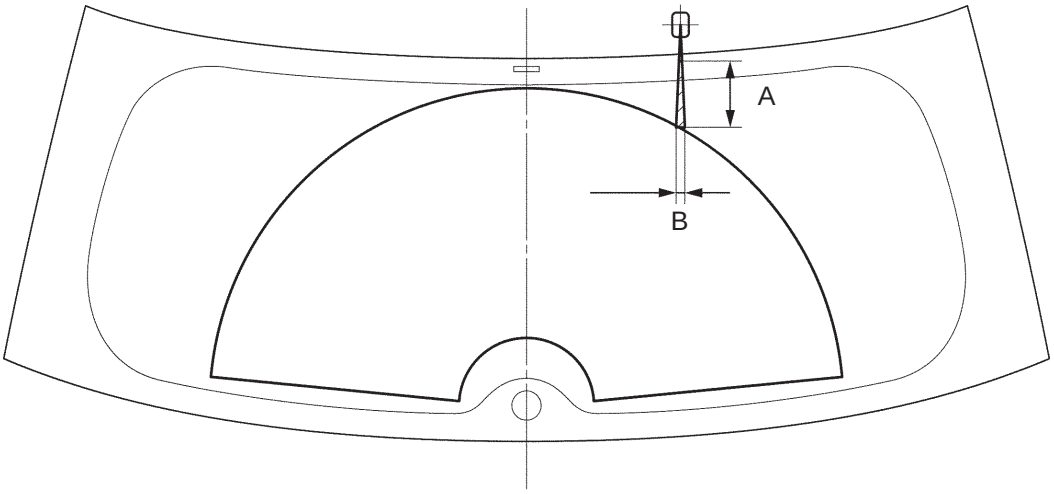

A: 80.3 mm (3.16 in.)
B: 8.3 mm (0.33 in.)

P

Rear (Liftback):

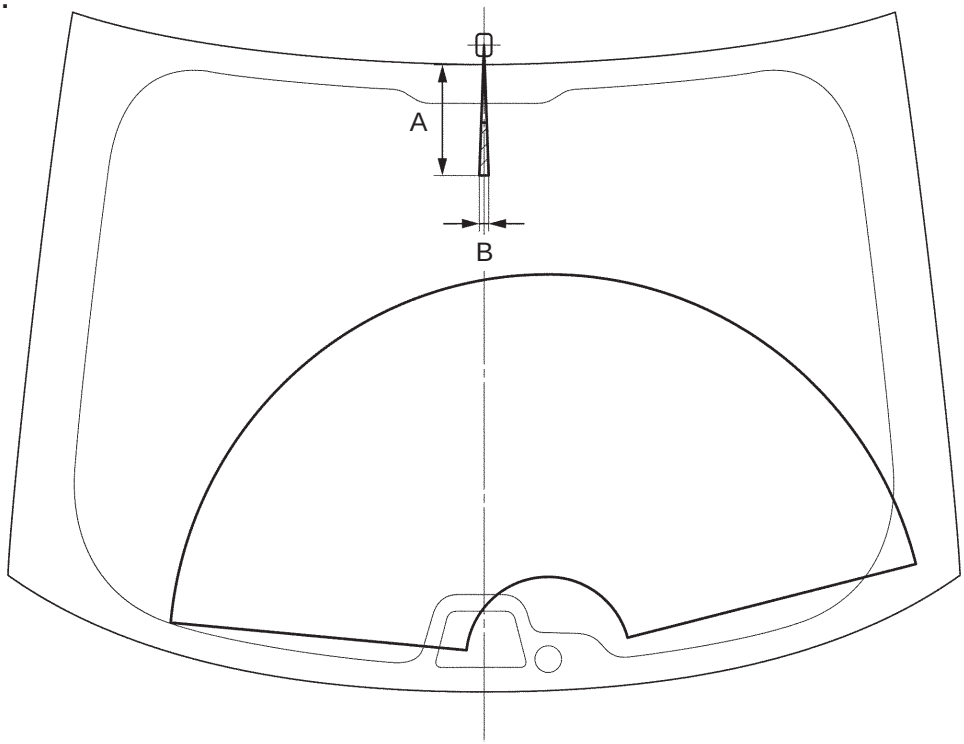

A: 66.5 mm (2.62 in.)
B: 9.8 mm (0.39 in.)

P

I35780
I35781

I35926

WINDSHIELD WIPER SWITCH ASSY

660CR–01

REPLACEMENT

1. REMOVE STEERING COLUMN COVER LWR (See page 65–27)

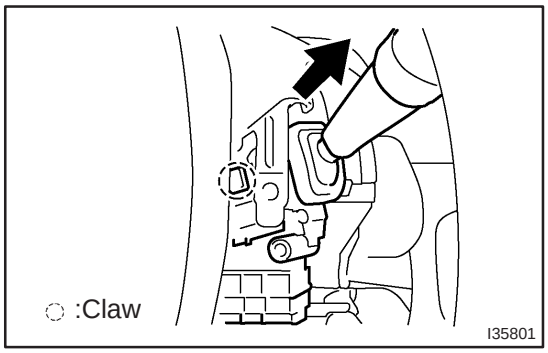

2. REMOVE WINDSHIELD WIPER SWITCH ASSY

(a) Disconnect the connector.

(b) Using a screwdriver, disengage the claw and pull out the windshield wiper switch assy.

NOTICE:

The claw will be broken if pressed hard.

HINT:

Tape up the screwdriver tip before use.

HEADLAMP WASHER ACTUATOR SUB–ASSY LH

660CS–01

REPLACEMENT

1. REMOVE FRONT BUMPER COVER (See page 76–3)

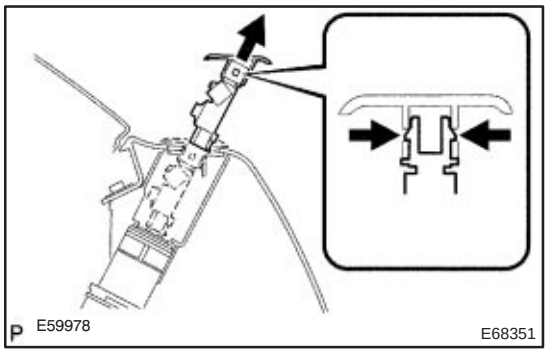

2. REMOVE HEADLAMP WASHER ACTUATOR SUB–ASSY LH

(a) Separate the headlamp cleaner hose from the headlamp washer actuator sub–assy.

(b) Pull out the headlamp cleaner washer nozzle.

(c) Disengage the 2 claws, remove the headlamp cleaner washer nozzle.

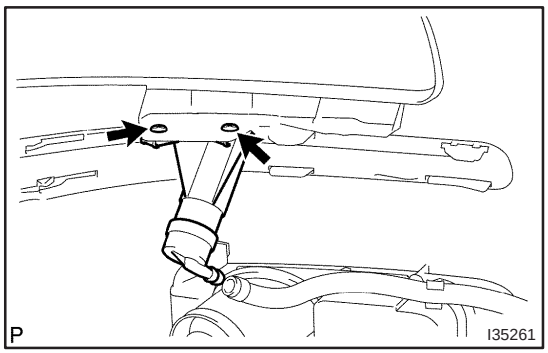

(d) Remove the 2 bolts.

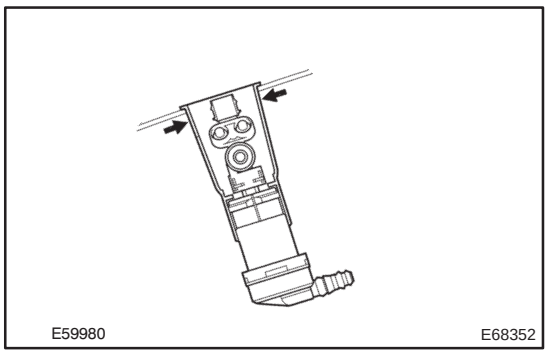

(e) Deform the upper part of the headlamp washer actuator sub–assy LH, to remove it.

RAIN SENSOR

660CT–02

REPLACEMENT

1. REMOVE INNER REAR VIEW MIRROR STAY HOLDER COVER

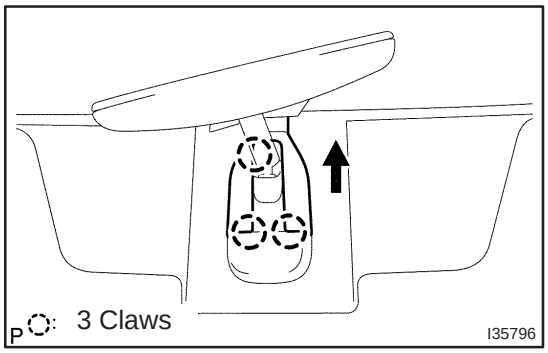

2. REMOVE RAIN SENSOR

(a) Disengage the 3 claws and remove the mirror stay holder cover.

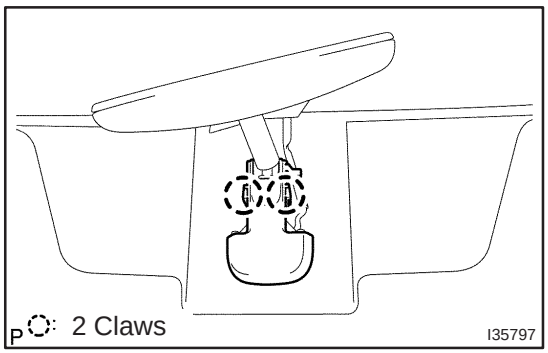

(b) Disengage the 2 claws and remove the rain sensor cover.
(c) Disconnect the connector.

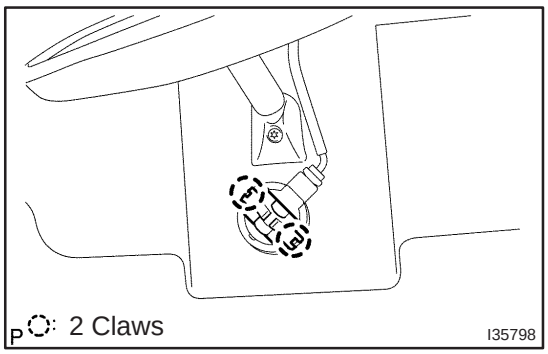

(d) Disengage the 2 claws and remove the rain sensor spring cover.

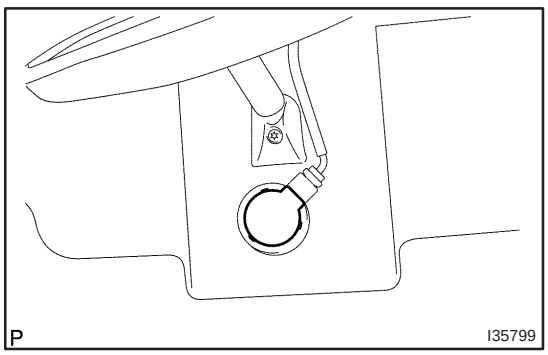

(e) Remove the rain sensor.

3. INSTALL RAIN SENSOR

(a) Install the rain sensor and rain sensor spring cover.
(b) Connect the connector and install the rain sensor cover and the mirror stay holder cover.

NOTICE:

- **Check if there is any SilGel, which of the rain sensor that has been removed, left on the windshield glass and remove it if there is any.**
- **Clean the dirt on the glass with a cloth etc.**
- **When installing a new rain sensor, peel the transparent protective cap off the SilGel first.**
- **Be careful not to let any air bubble in the rain sensor when installing it.**

AUDIO & VISUAL SYSTEM

670S4–01

PRECAUTION

1. OBSERVE HANDLING AND OPERATIONAL PRECAUTIONS

(a) Please explain to the customer that when the negative terminal is disconnected from the battery, the channel information memory of the AM/FM broadcast stations in the radio receiver is cleared. If necessary, make a note of the recorded channel information before the negative terminal is disconnected, then reset the information after the negative terminal is reconnected.

(b) The removal/installation of the radio receiver should be performed after all the cassette tapes and audio CDs are ejected from the radio receiver.

HINT:

If the cassette tapes and the audio CDs cannot be ejected due to the malfunction of the radio receiver, do not try to drag them out by force. Bring the vehicle to the repair plant.

(c) Fasten the earth bolt securely when the antenna cord is removed or installed.

HINT:

Failing to fasten the earth bolt securely causes noise at the time of radio wave reception.

(d) Do not touch the cone paper of the speaker.

670S5–01

COMPONENTS

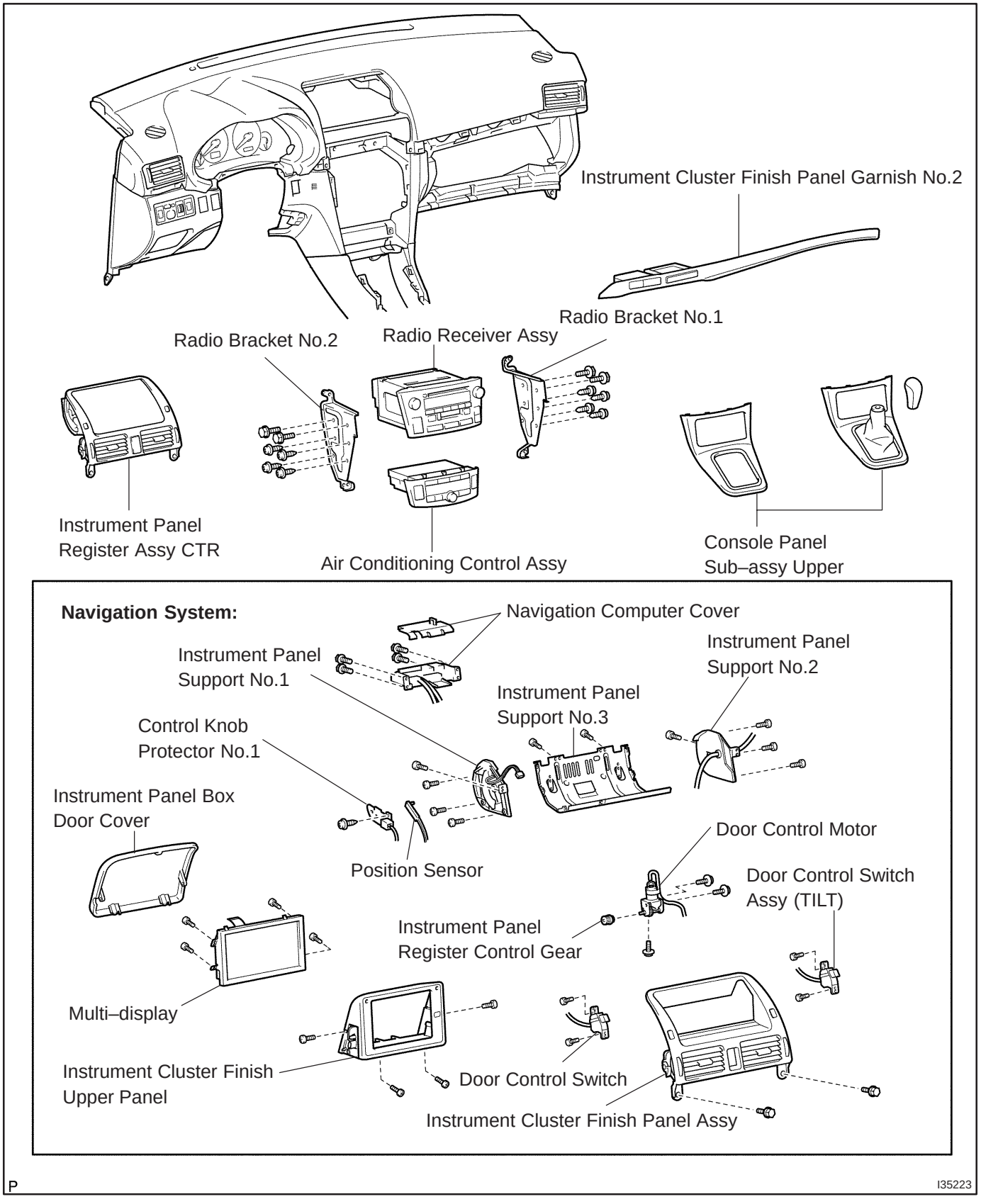

P

I35223

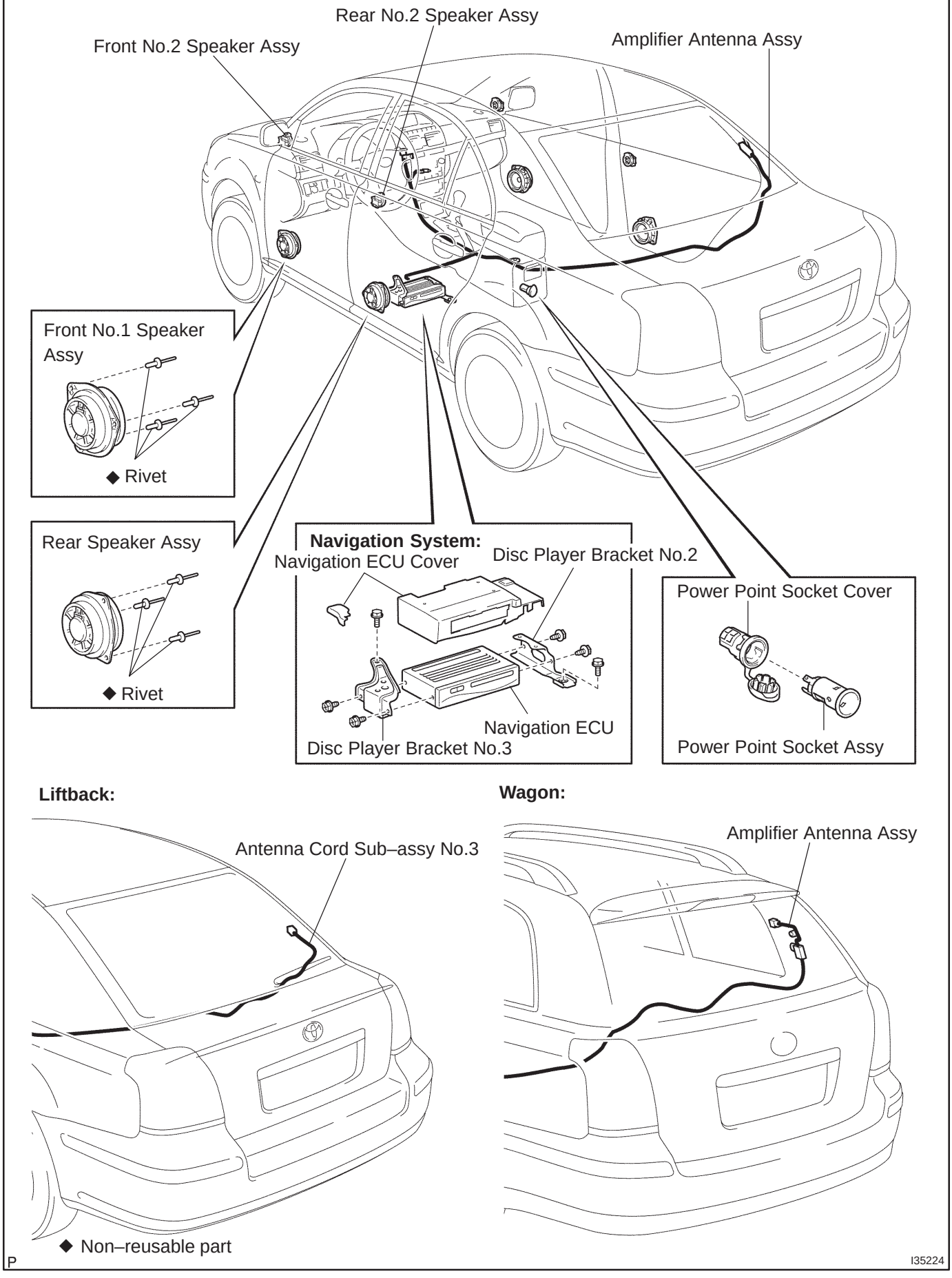
Rear No.2 Speaker Assy
Front No.2 Speaker Assy
Amplifier Antenna Assy
Front No.1 Speaker Assy
◆ Rivet
Rear Speaker Assy
◆ Rivet
Navigation System:
Navigation ECU Cover
Disc Player Bracket No.2
Navigation ECU
Disc Player Bracket No.3
Power Point Socket Cover
Power Point Socket Assy
Liftback:
Antenna Cord Sub–assy No.3
◆ Non–reusable part
Wagon:
Amplifier Antenna Assy
P
I35224

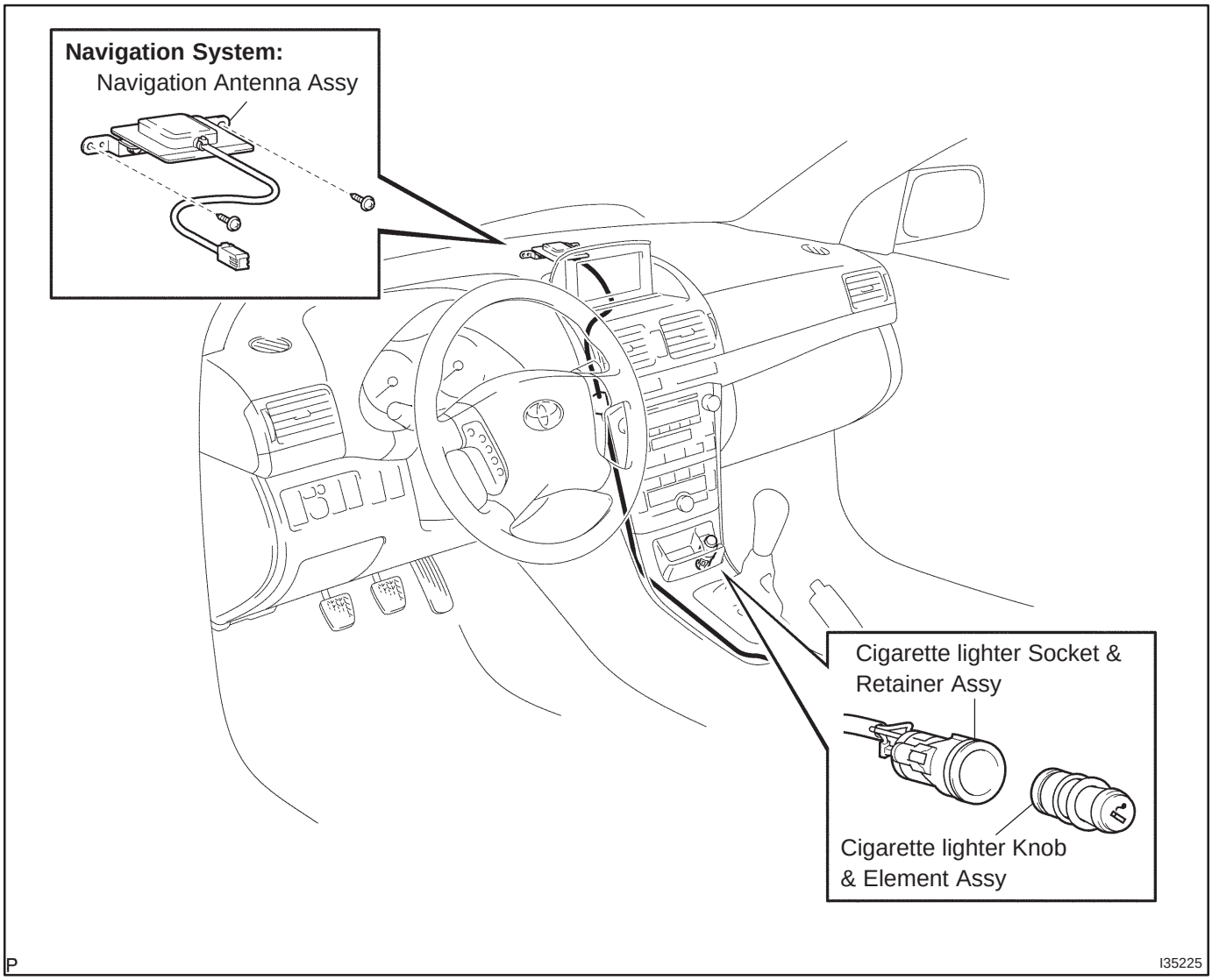
Navigation System:
Navigation Antenna Assy
Cigarette lighter Socket &
Retainer Assy
Cigarette lighter Knob
& Element Assy
P
I35225

RADIO RECEIVER ASSY

670S6–02

REPLACEMENT

1. DISCONNECT BATTERY NEGATIVE TERMINAL (See page 60–1)
2. REMOVE INSTRUMENT CLUSTER FINISH PANEL GARNISH NO.2 (See page 71–11)
3. REMOVE INSTRUMENT PANEL REGISTER ASSY CTR (See page 71–11)
4. REMOVE CONSOLE PANEL SUB–ASSY UPPER (See page 71–11)

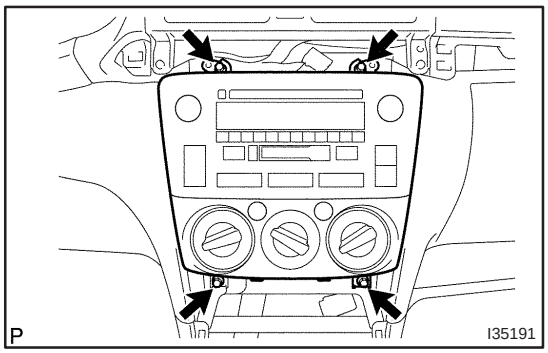

5. REMOVE RADIO RECEIVER ASSEMBLY W/BRACKET

(a) Remove the 4 bolts.

(b) Disconnect the connector and remove the radio receiver assy w/ bracket.

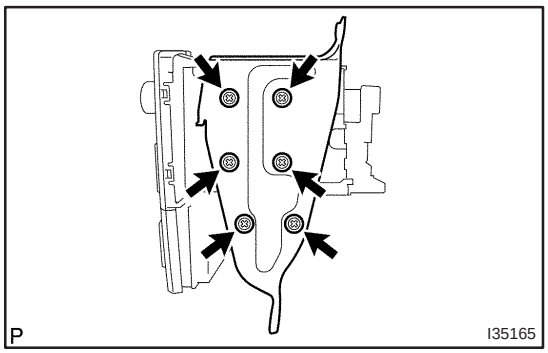

6. REMOVE RADIO BRACKET NO.1

(a) Remove the 6 screws and radio bracket No.1.

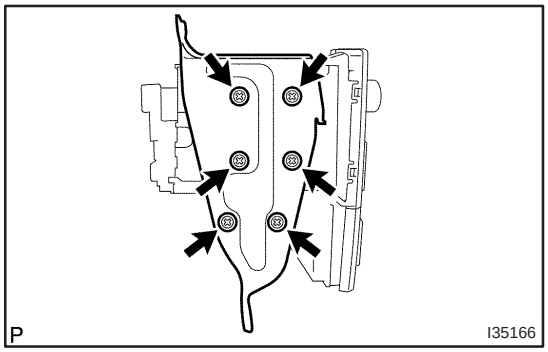

7. REMOVE RADIO BRACKET NO.2

(a) Remove the 6 screws and radio bracket No.2.

8. REMOVE AIR CONDITIONING CONTROL ASSY (See page 55–50)
9. REMOVE RADIO RECEIVER ASSY

MULTI–DISPLAY (CRT DISPLAY) DISPLAY

670S7–01

REPLACEMENT

1. REMOVE INSTRUMENT CLUSTER FINISH PANEL GARNISH NO.2 (See page 71–11)

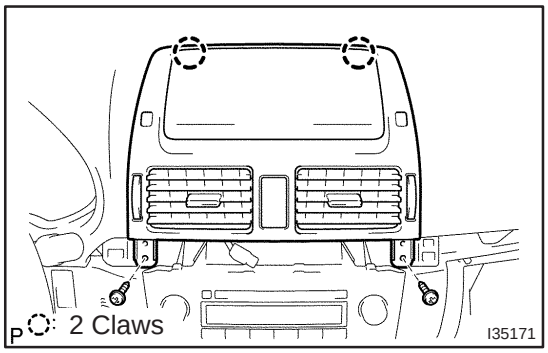

2. REMOVE INSTRUMENT PANEL REGISTER ASSY CTR

(a) Remove the 2 screws.
(b) Disengage the 2 claws and remove the instrument panel register assy CTR.
(c) Disconnect the connectors.

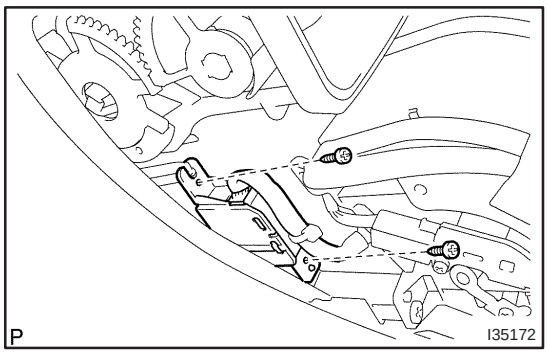

3. REMOVE DOOR CONTROL SWITCH

(a) Remove the 2 screws and separate the door control switch.

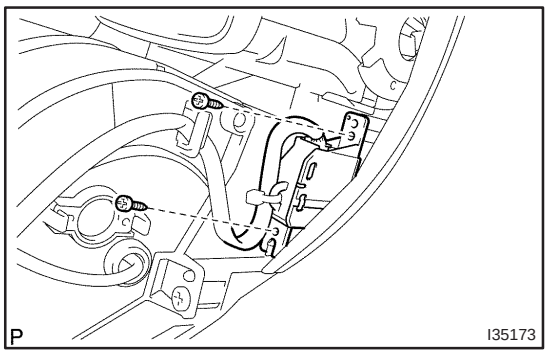

4. REMOVE DOOR CONTROL SWITCH ASSY

(a) Remove the 2 screws and separate the door control switch assy (TILT).

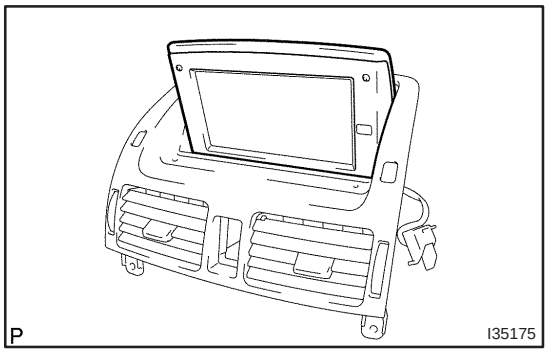

5. REMOVE INSTRUMENT CLUSTER FINISH PANEL ASSY

(a) Make the multi–display upright.

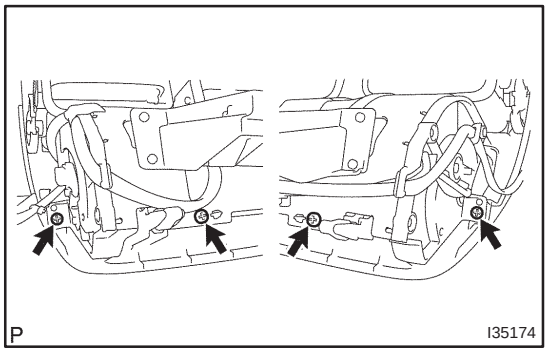

(b) Remove the 4 screws and the instrument cluster finish panel assy.

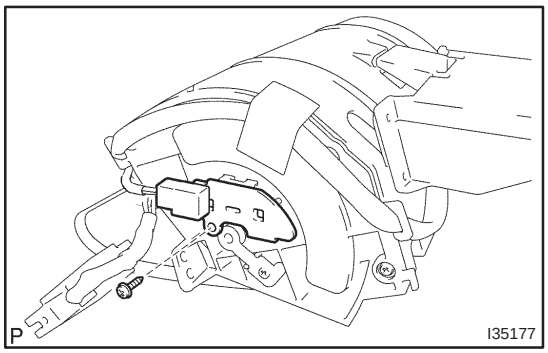

6. REMOVE CONTROL KNOB PROTECTOR NO.1

(a) Remove the screw and control knob protector No.1.

(b) Separate the position sensor.

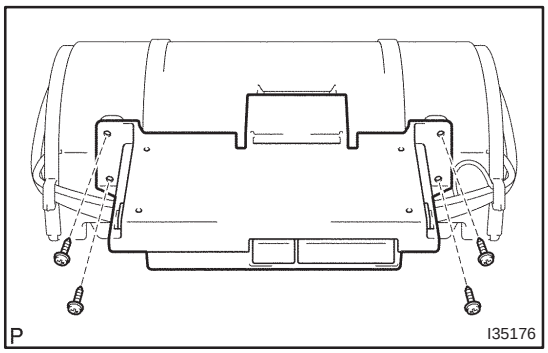

7. REMOVE MULTI–DISPLAY (CRT DISPLAY) DISPLAY

(a) Remove the 4 screws and separate the navigation computer cover.

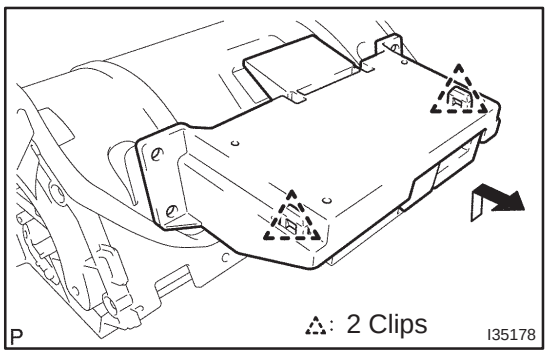

(b) Disengage the 2 clips, slide them in the arrow direction shown in the illustration to remove the navigation computer cover.

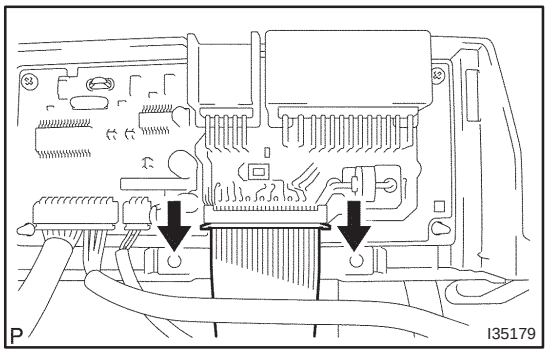

(c) Slide the lock of the connector in the arrow direction shown in the illustration to disconnect the flexible flat cable.

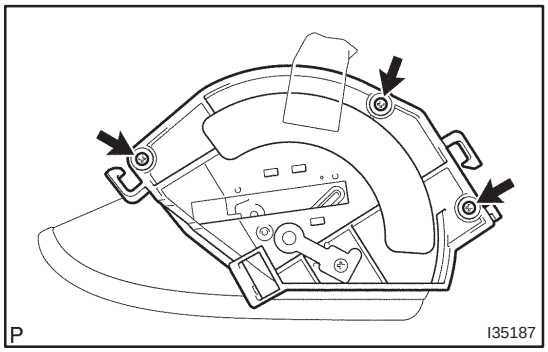

(d) Remove the 3 screws and instrument panel support No.1.
(e) Remove the 3 screws and instrument panel support No.2.
(f) Remove the instrument panel support No.3.

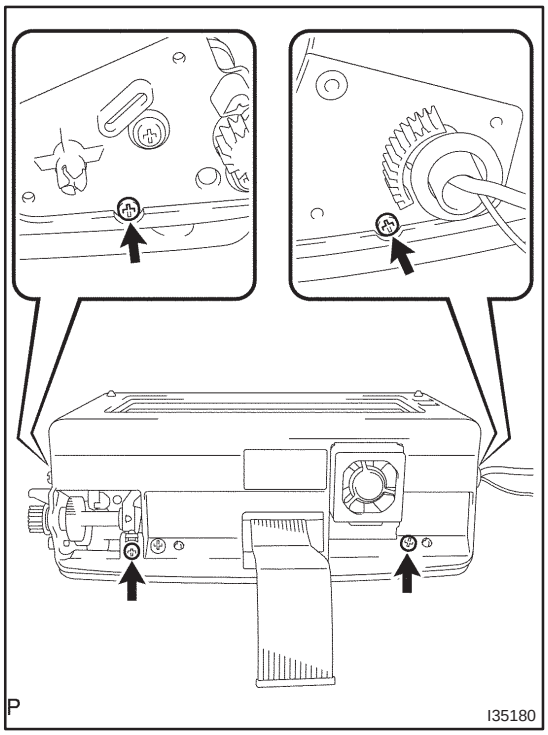

(g) Remove the 4 screws and slide the instrument panel box door cover upward of the screen to remove it.

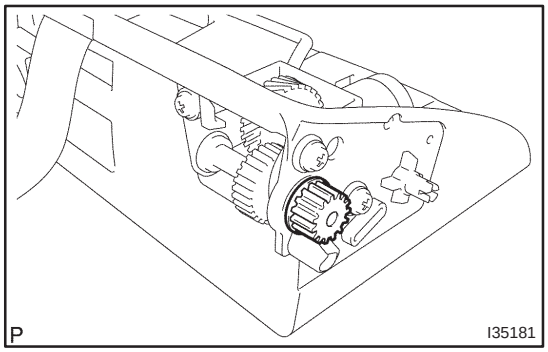

(h) Remove the instrument panel register control gear.

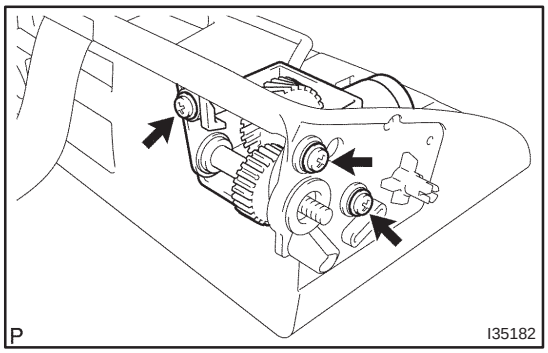

(i) Remove the 3 screws and door control motor.

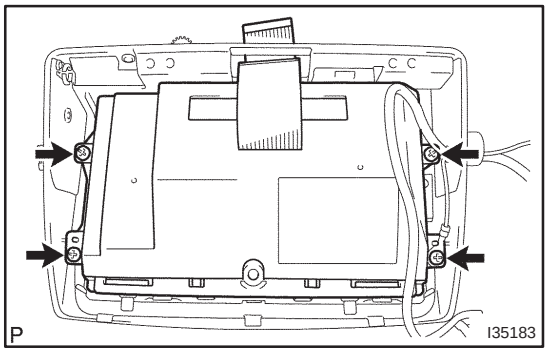

(j) Remove the 4 screws and the multi–display.

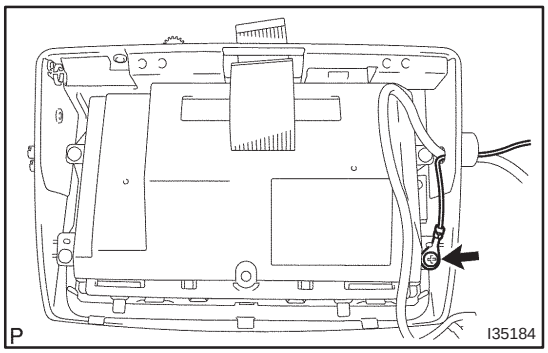

8. INSTALL MULTI–DISPLAY (CRT DISPLAY) DISPLAY

(a) Install the multi–display with the 4 screws.

NOTICE:

Tighten each screw together with the earth wire.

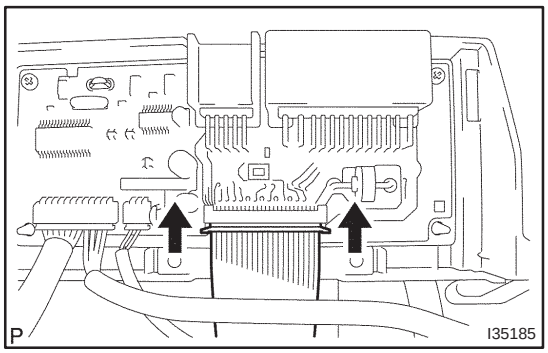

(b) Insert the flexible flat cable as deep as possible and install it by sliding the lock of the connector in the arrow direction shown in the illustration.

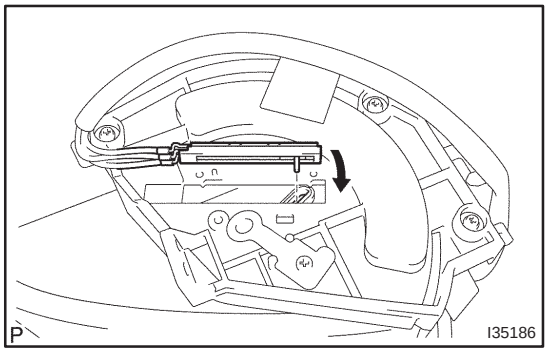

9. INSTALL CONTROL KNOB PROTECTOR NO.1

(a) Fit the protrusion of the position sensor into the groove shown in the illustration to fix.

(b) Install the control knob protector No.1.

FRONT NO.1 SPEAKER ASSY

670S8–01

REPLACEMENT

1. REMOVE REAR DOOR WINDOW REGULATOR HANDLE ASSY (W/O POWER WINDOW) (See page 75–8)
2. REMOVE FRONT DOOR LOWER FRAME BRACKET GARNISH LH (See page 75–8)
3. REMOVE FRONT DOOR TRIM BASE LH (See page 75–8)
4. REMOVE FUEL LID OPENER SWITCH (See page 75–8)
5. REMOVE POWER WINDOW REGULATOR SWITCH ASSY (W/ POWER WINDOW) (See page 75–8)
6. REMOVE FRONT DOOR TRIM BOARD SUB–ASSY LH (See page 75–8)

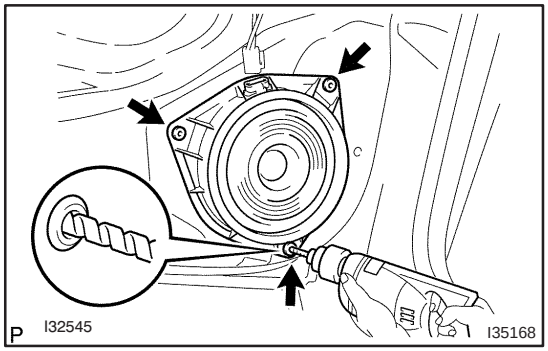

7. **REMOVE FRONT NO.1 SPEAKER ASSY**

(a) Disconnect the connector.

(b) Using a drill of less then ϕ 4 mm (0.16 in.), drill out the 3 rivet heads and remove the front No.1 speaker assy from the front door panel.

(c) Gently and vertically put the drill to the rivet, and cut the rivet flanges.

NOTICE:

- **Prizing the hole with a drill can lead to damage to the rivet hole or breaking the drill.**
- **Take care as the cut rivet is hot.**

(d) Even if flange is taken off, continue drilling and push out remaining fragments with the drill.

(e) Using a vacuum cleaner, remove the drilled rivet and their dust from the inside of the front door panel.

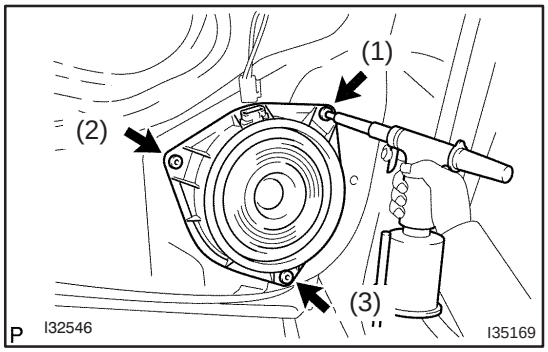

8. **INSTALL FRONT NO.1 SPEAKER ASSY**

(a) Using an air riveter or a hand riveter, install 3 new strike rivets to install the front No.1 speaker assy on the front door panel.

NOTICE:

- **Install the new strike rivet in order shown in the illustration to install the front No.1 speaker assy.**

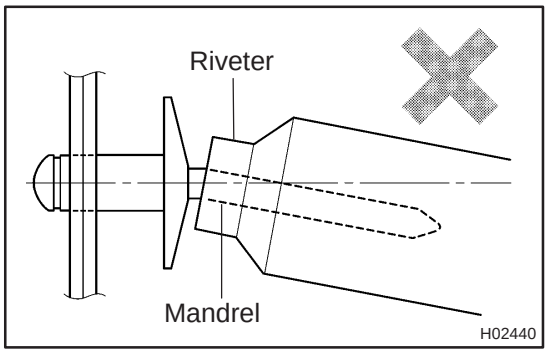

- **Do not prize a riveter, as the riveter could be damaged, loosened and the mandrel could be bent.**

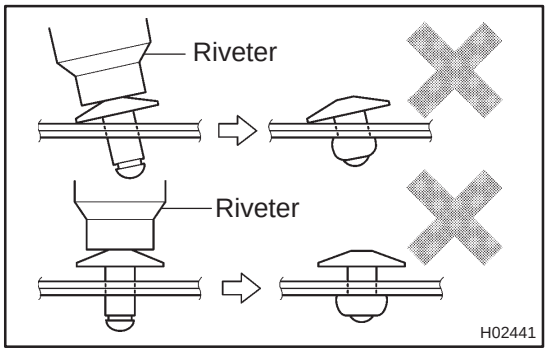

- **Do not tilt the riveter or disconnect the rivet from the materials while handling the riveter, as the materials are not tightened firmly.**

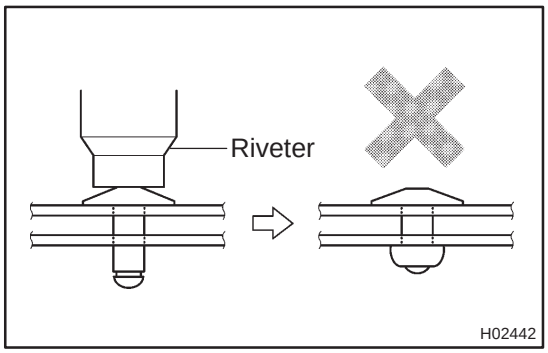

- **Install the rivet while there is no clearance between the materials to tighten the materials firmly.**

(b) Connect the connector.

FRONT NO.2 SPEAKER ASSY

REPLACEMENT

670S9–01

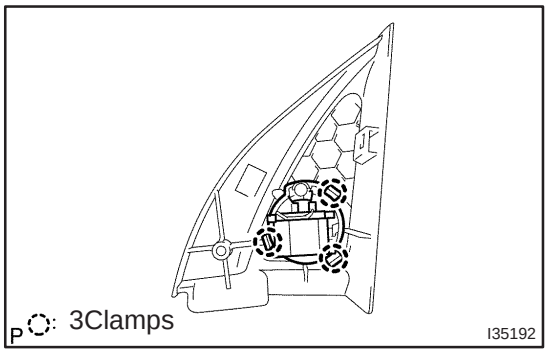

1. REMOVE FRONT NO.2 SPEAKER ASSY

(a) Remove the front door lower frame bracket garnish.

(b) Disconnect the connector.

(c) Disengage the 3 claws and remove the front No.2 speaker assy.

REAR SPEAKER ASSY

670SA–01

REPLACEMENT

1. REMOVE REAR DOOR WINDOW REGULATOR HANDLE ASSY (See page 75–22)
2. REMOVE REAR DOOR TRIM BASE LH (See page 75–22)
3. REMOVE POWER WINDOW REGULATOR SWITCH ASSY REAR (W/ POWER WINDOW) (See page 75–22)
4. REMOVE REAR DOOR TRIM BOARD SUB–ASSY LH (See page 75–22)

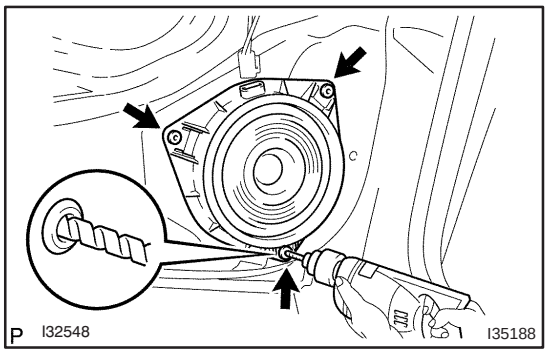

5. REMOVE REAR SPEAKER ASSY

(a) Disconnect the connector.

(b) Using a drill of less then ϕ 4 mm (0.16 in.), drill out the 3 rivet heads and remove the rear speaker assy from the rear door panel.

(c) Gently and vertically put the drill to the rivet, and cut the rivet flanges.

NOTICE:

- **Prizing the hole with a drill can lead to damage to the rivet hole or breaking the drill.**
- **Take care as the cut rivet is hot.**

(d) Even if flange is taken off, continue drilling and push out remaining fragments with the drill.

(e) Using a vacuum cleaner, remove the drilled rivets and their dust from the inside of the rear door panel.

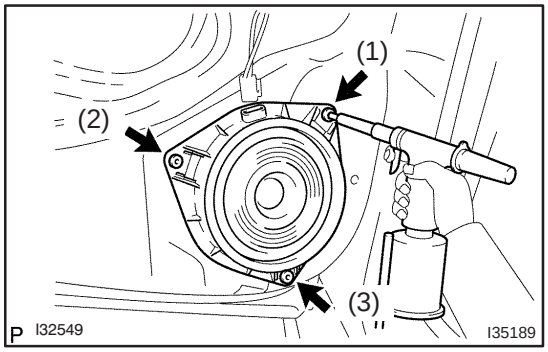

6. INSTALL REAR SPEAKER ASSY

(a) Using an air riveter or a hand riveter, install 3 new strike rivets to install the rear speaker assy on the rear door panel.

NOTICE:

- **Install the new strike rivet in order shown in the illustration to install the rear speaker assy.**

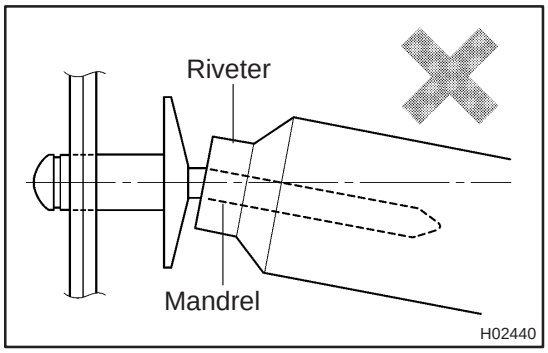

- **Do not prize a riveter, as the riveter could be damaged, loosened and the mandrel could be bent.**

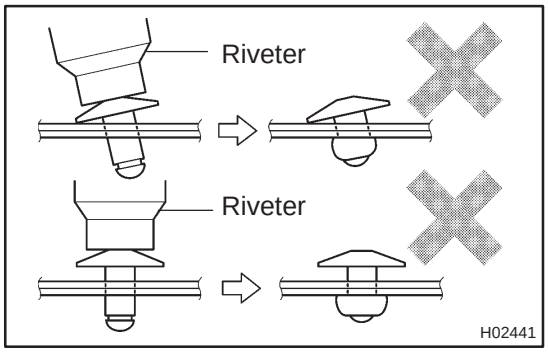

- **Do not tilt the riveter or disconnect the rivet from the materials while handling the riveter, as the materials are not tightened firmly.**

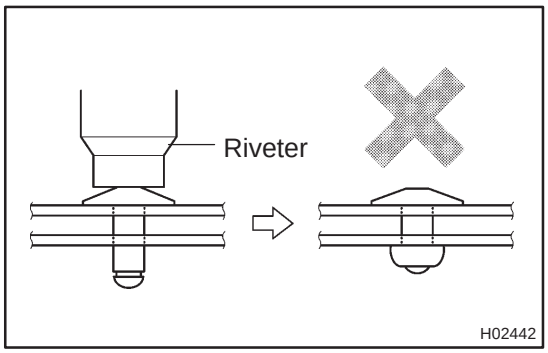

- **Install the rivet while there is no clearance between the materials to tighten the materials firmly.**

(b) Connect the connector.

REAR SPEAKER ASSY NO.2

670SB–01

REPLACEMENT

1. **REMOVE REAR DOOR WINDOW REGULATOR HANDLE ASSY (W/O POWER WINDOW) (See page 75–22)**
2. **REMOVE POWER WINDOW REGULATOR SWITCH ASSY REAR (W/ POWER WINDOW) (See page 75–22)**
3. **REMOVE REAR DOOR TRIM BASE LH (See page 75–22)**
4. **REMOVE REAR DOOR TRIM BOARD SUB–ASSY LH (See page 75–22)**

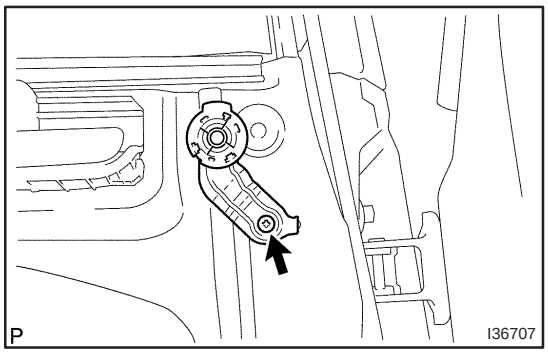

5. **REMOVE REAR SPEAKER ASSY NO.2**

(a) Disconnect the connector.

(b) Remove the screw and the rear No.2 speaker assy.

AMPLIFIER ANTENNA ASSY (SEDAN MODELS)

670SC–03

REPLACEMENT

1. DISCONNECT BATTERY NEGATIVE TERMINAL (See page 60–1)
2. REMOVE INSTRUMENT CLUSTER FINISH PANEL GARNISH NO.2 (See page 71–11)
3. REMOVE INSTRUMENT PANEL REGISTER ASSY CTR (W/ NAVIGATION SYSTEM) (See page 67–6)
4. REMOVE SHIFT LEVER KNOB SUB–ASSY (M/T TRANSAXLE) (See page 41–11)
5. REMOVE CONSOLE PANEL SUB–ASSY UPPER (See page 71–11)
6. REMOVE RADIO RECEIVER ASSEMBLY W/BRACKET (See page 67–5)
7. REMOVE CONSOLE BOX ASSY RR (See page 71–11)
8. REMOVE HEATER TO REGISTER DUCT NO.2 (See page 71–11)
9. REMOVE FRONT SEAT ASSY RH (See page POWER SEAT 72–11, MANUAL SEAT 72–16)
10. REMOVE FRONT DOOR SCUFF PLATE RH (See page 76–36)
11. REMOVE REAR DOOR SCUFF PLATE RH (See page 76–36)
12. REMOVE COWL SIDE TRIM BOARD RH (See page 76–36)
13. REMOVE FRONT DOOR OPENING TRIM WEATHERSTRIP RH (See page 76–36)
14. REMOVE REAR DOOR OPENING TRIM WEATHERSTRIP RH (See page 76–36)
15. REMOVE REAR SEAT CUSHION ASSEMBLY (See page 72–32)
16. REMOVE REAR SEATBACK ASSY (See page 40/60 FOLDING 72–27, UNITED FIXED 72–32)
17. REMOVE ROOF SIDE GARNISH INNER RH (See page 76–36)
18. REMOVE FLOOR CARPET ASSY FRONT

19. REMOVE AMPLIFIER ANTENNA ASSY

(a) Disconnect the connectors.

(b) w/ Navigation:
Remove the 2 bolts, nut and screw.
w/o Navigation:
Remove the 2 bolts and nut.

(c) w/ Navigation:
Remove the 11 clamps and amplifier antenna assy.
w/o Navigation:
Remove the 10 clamps and amplifier antenna assy.

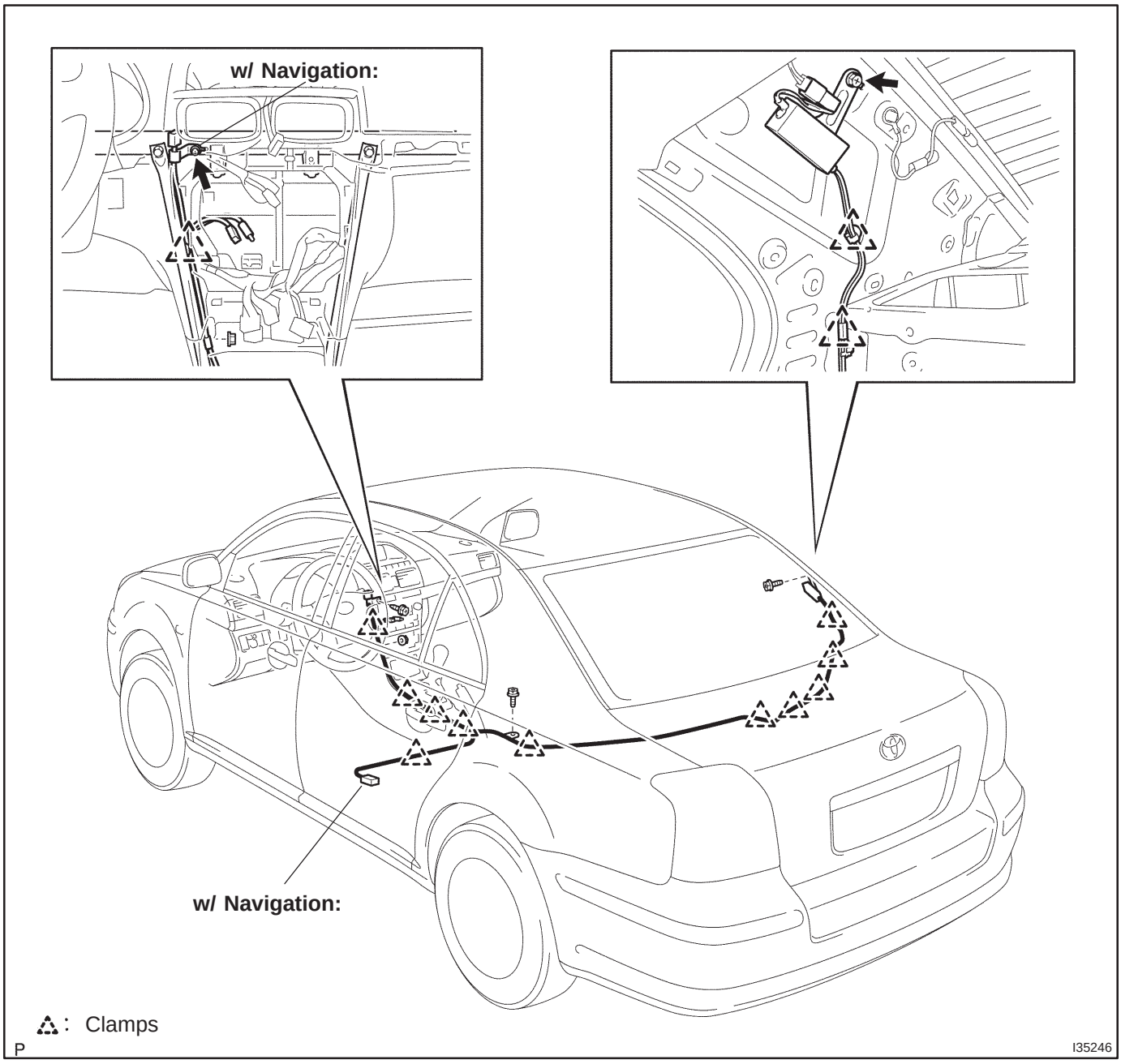

20. INSTALL AMPLIFIER ANTENNA ASSY

(a) Install the 2 bolts.
Torque: 7.0 N·m (71 kgf·cm, 62 in.·lbf)

(b) w/ Navigation:
Install the nut and screw.
w/o Navigation:
Install the nut.

(c) w/ Navigation:
Install the 11 clamps and the amplifier antenna assy.
w/o Navigation:
Install the 10 clamps and the amplifier antenna assy.

(d) Connect the connectors.

21. REMOVE REAR SEAT CUSHION ASSEMBLY (See page 72–32)

22. REMOVE REAR SEATBACK ASSY (See page 40/60 FOLDING 72–27, UNITED FIXED 72–32)

23. REMOVE FRONT SEAT ASSY RH (See page POWER SEAT 72–11, MANUAL SEAT 72–16)

AMPLIFIER ANTENNA ASSY (WAGON MODELS)

670SD–02

REPLACEMENT

1. DISCONNECT BATTERY NEGATIVE TERMINAL (See page 60–1)
2. REMOVE INSTRUMENT CLUSTER FINISH PANEL GARNISH NO.2 (See page 71–11)
3. REMOVE INSTRUMENT PANEL REGISTER ASSY CTR (W/ NAVIGATION SYSTEM) (See page 67–6)
4. REMOVE SHIFT LEVER KNOB SUB–ASSY (M/T TRANSAXLE) (See page 41–11)
5. REMOVE CONSOLE PANEL SUB–ASSY UPPER (See page 71–11)
6. REMOVE RADIO RECEIVER ASSEMBLY W/BRACKET (See page 67–5)
7. REMOVE CONSOLE BOX ASSY RR (See page 71–11)
8. REMOVE HEATER TO REGISTER DUCT NO.2 (See page 71–11)
9. REMOVE FRONT SEAT ASSY RH (See page POWER SEAT 72–11, MANUAL SEAT 72–16)
10. REMOVE FRONT DOOR SCUFF PLATE RH (See page 76–36)
11. REMOVE REAR DOOR SCUFF PLATE RH (See page 76–36)
12. REMOVE COWL SIDE TRIM BOARD RH (See page 76–36)
13. REMOVE FRONT DOOR OPENING TRIM WEATHERSTRIP RH (See page 76–36)
14. REMOVE REAR DOOR OPENING TRIM WEATHERSTRIP RH (See page 76–36)
15. REMOVE REAR SEAT CUSHION ASSEMBLY (See page 40/60 FOLDING FLIP–UP CUSHION72–21, 40/60 FOLDING 72–27)
16. REMOVE REAR SEATBACK ASSY (See page 40/60 FOLDING FLIP–UP CUSHION72–21, 40/60 FOLDING 72–27)
17. REMOVE REAR SIDE SEAT BACK ASSY RH (See page 40/60 FOLDING FLIP–UP CUSHION72–21, 40/60 FOLDING 72–27)
18. REMOVE TONNEAU COVER ASSY
19. REMOVE BACK DOOR WEATHERSTRIP (See page 76–54)
20. REMOVE DECK BOARD SUB–ASSY (See page 76–54)
21. REMOVE DECK FLOOR BOX REAR (See page 76–54)
22. REMOVE DECK FLOOR BOX FRONT (See page 76–54)
23. REMOVE DECK FLOOR BOX RH (See page 76–54)
24. REMOVE REAR FLOOR FINISH PLATE (See page 76–54)
25. REMOVE DECK TRIM SIDE BOARD RH (See page 76–54)
26. REMOVE ROOF SIDE GARNISH INNER RH (See page 76–54)
27. REMOVE FLOOR CARPET ASSY FRONT

28. REMOVE AMPLIFIER ANTENNA ASSY

(a) Disconnect the connectors.

(b) w/ Navigation:
Remove the 3 bolts, nut and screw.
w/o Navigation:
Remove the 3 bolts and nut.

(c) w/ Navigation:
Remove the 15 clamps and the amplifier antenna assy.
w/o Navigation:
Remove the 14 clamps and the amplifier antenna assy.

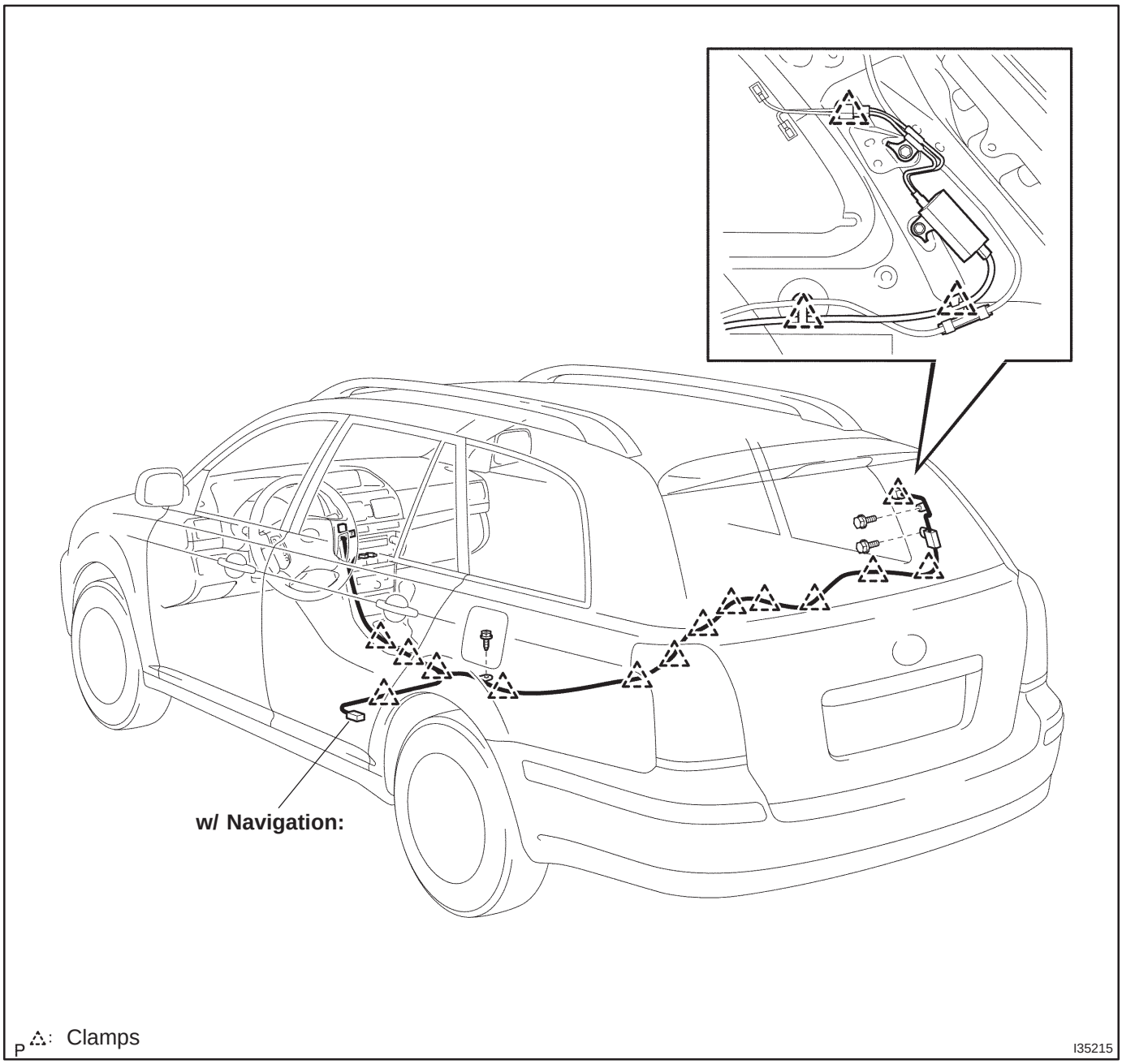

29. INSTALL AMPLIFIER ANTENNA ASSY

(a) Install the 3 bolts.
Torque: 7.0 N·m (71 kgf·cm, 62 in.·lbf)

(b) w/ Navigation:
Install the nut and screw.
w/o Navigation:
Install the nut.

(c) w/ Navigation:
Install the 15 clamps and the amplifier antenna assy.
w/o Navigation:
Install the 14 clamps and the amplifier antenna assy.

(d) Connect the connectors.

30. INSTALL REAR SEATBACK ASSY
(See page 40/60 FOLDING FLIP–UP CUSHION72–21, 40/60 FOLDING 72–27)

31. REMOVE FRONT SEAT ASSY RH (See page POWER SEAT 72–11, MANUAL SEAT 72–16)

AMPLIFIER ANTENNA ASSY (LIFTBACK MODELS)

670SE–01

REPLACEMENT

1. REMOVE ROOF HEADLINING ASSY (See page 76–45)

2. REMOVE AMPLIFIER ANTENNA ASSY

(a) Disconnect the connectors.
(b) Remove the bolt.
(c) Remove the 3 clamps and the amplifier antenna assy.

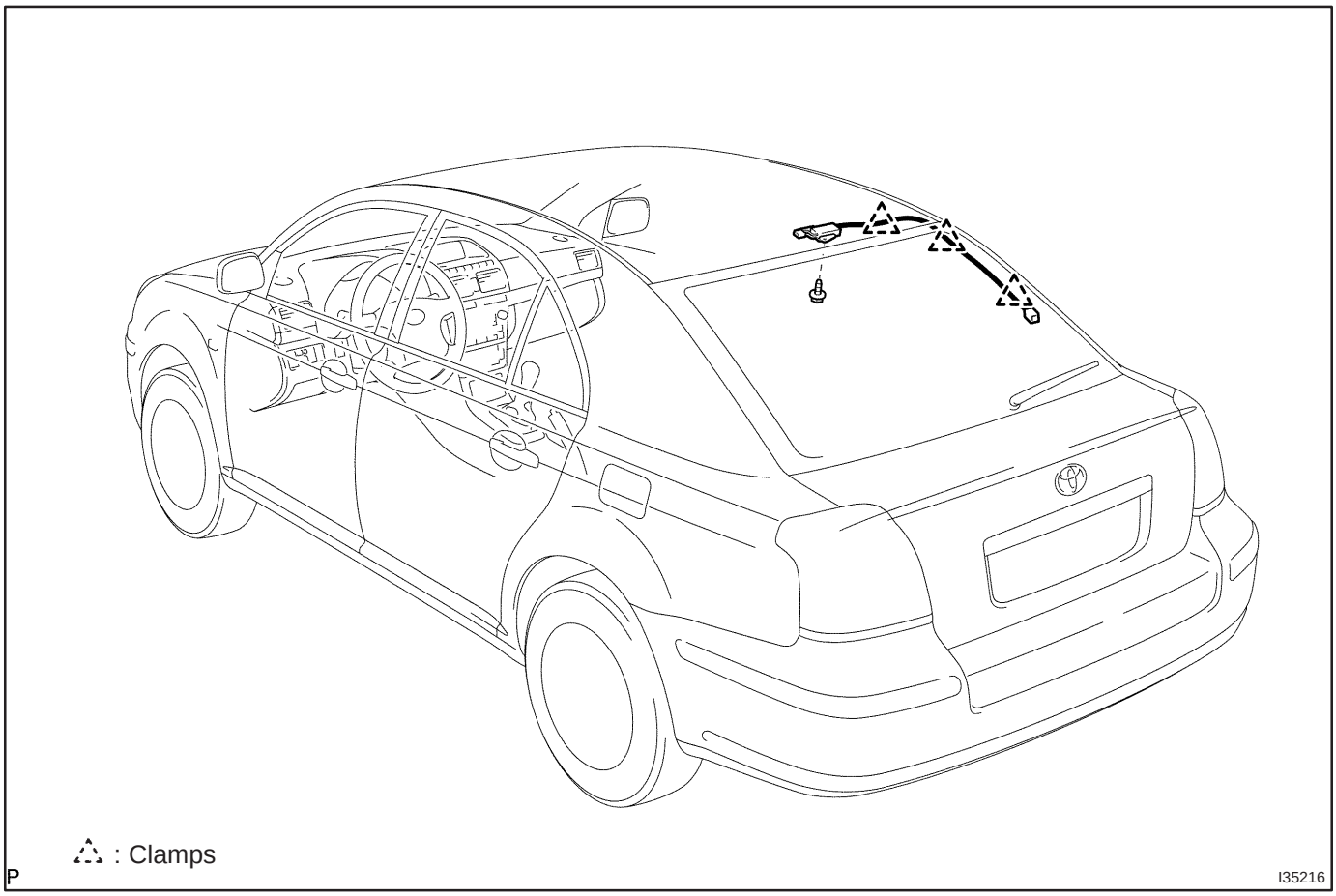

3. INSTALL AMPLIFIER ANTENNA ASSY

(a) Install the bolt.
Torque: 7.0 N·m (71 kgf·cm, 62 in.·lbf)
(b) Install the 3 clamps and the amplifier antenna assy.
(c) Disconnect the connectors.

4. INSTALL ROOF HEADLINING ASSY (See page 76–45)

ANTENNA CORD SUB–ASSY

670SF–01

REPLACEMENT

1. **REMOVE ROOF HEADLINING ASSY (See page 76–45)**
2. **REMOVE BACK DOOR TRIM PANEL ASSY UPPER (See page 75–40)**
3. **REMOVE ANTENNA CORD SUB–ASSY**

(a) Disconnect the connectors.
(b) Remove the bolt.
(c) Remove the clamp and draw out the antenna cord sub–assy from the interior and the back door.

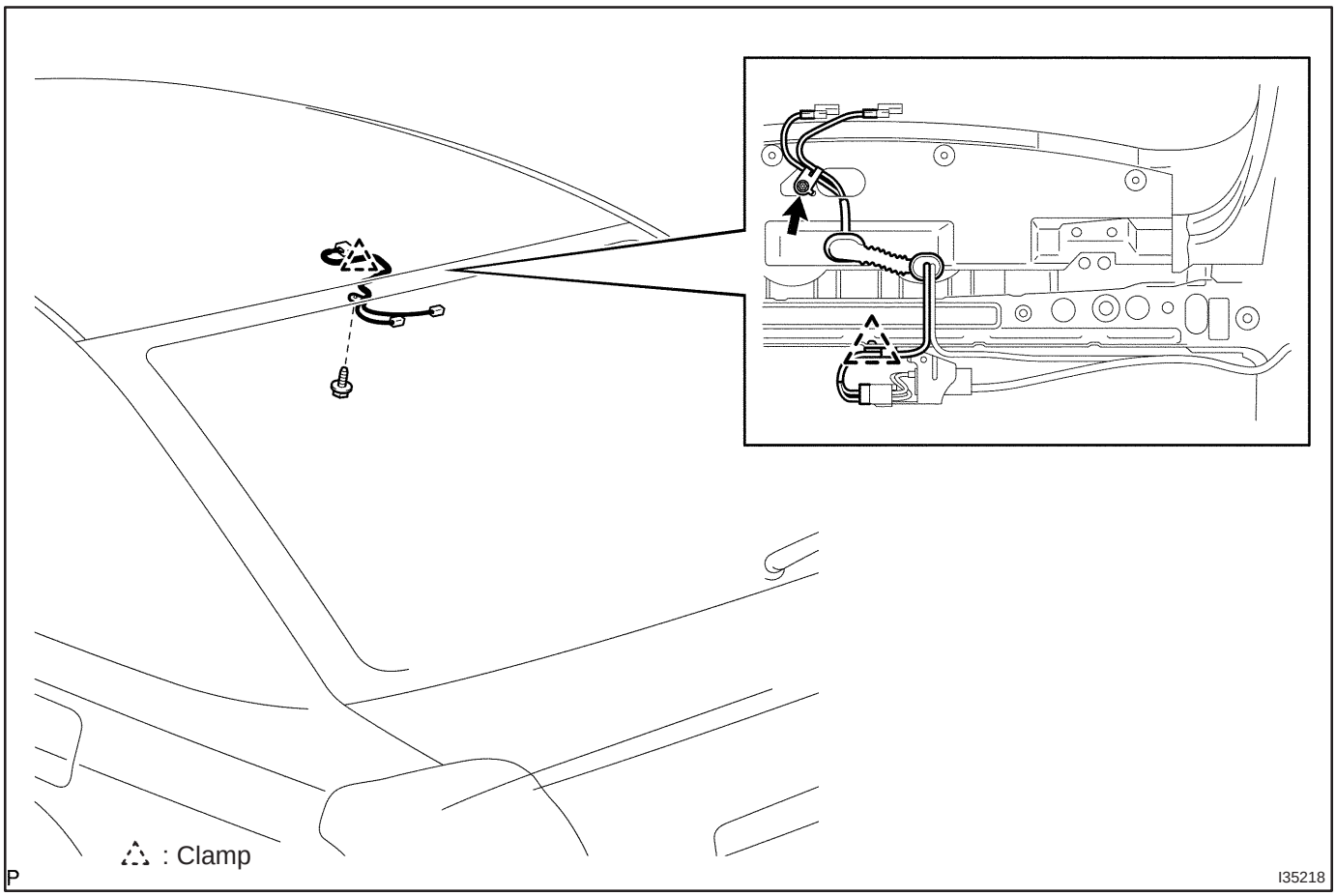

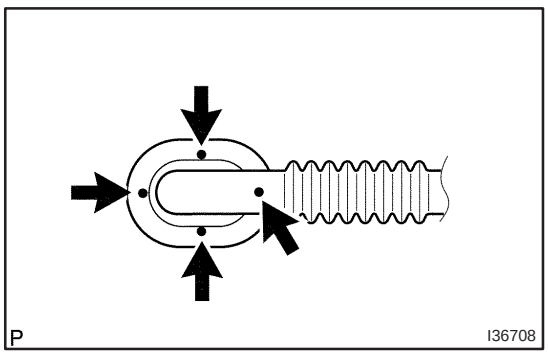

4. **INSTALL ANTENNA CORD SUB–ASSY**

(a) Press the 4 points of the grommet shown in the illustration, and install the antenna cord sub–assy.
(b) Install the bolt.
Torque: 7.0 N·m (71 kgf·cm, 62 in.·lbf)
(c) Connect the connectors.

5. **INSTALL ROOF HEADLINING ASSY (See page 76–45)**

ANTENNA CORD SUB–ASSY NO.3

670SG–02

REPLACEMENT

1. DISCONNECT BATTERY NEGATIVE TERMINAL (See page 60–1)
2. REMOVE INSTRUMENT CLUSTER FINISH PANEL GARNISH NO.2 (See page 71–11)
3. REMOVE INSTRUMENT PANEL REGISTER ASSY CTR (W/ NAVIGATION SYSTEM) (See page 67–6)
4. REMOVE SHIFT LEVER KNOB SUB–ASSY (M/T TRANSAXLE) (See page 41–11)
5. REMOVE CONSOLE PANEL SUB–ASSY UPPER (See page 71–11)
6. REMOVE RADIO RECEIVER ASSEMBLY W/BRACKET (See page 67–5)
7. REMOVE CONSOLE BOX ASSY RR (See page 71–11)
8. REMOVE HEATER TO REGISTER DUCT NO.2 (See page 71–11)
9. REMOVE FRONT DOOR SCUFF PLATE RH (See page 76–36)
10. REMOVE REAR DOOR SCUFF PLATE RH (See page 76–36)
11. REMOVE COWL SIDE TRIM BOARD RH (See page 76–36)
12. REMOVE FRONT DOOR OPENING TRIM WEATHERSTRIP RH (See page 76–36)
13. REMOVE REAR DOOR OPENING TRIM WEATHERSTRIP RH (See page 76–36)
14. REMOVE REAR SEAT CUSHION ASSEMBLY
    (See page 40/60 FOLDING FLIP–UP CUSHION 72–21, 40/60 FOLDING 72–27)
15. REMOVE REAR SEATBACK ASSY
    (See page 40/60 FOLDING FLIP–UP CUSHION 72–21, 40/60 FOLDING 72–27)
16. REMOVE REAR SIDE SEAT BACK ASSY RH
    (See page 40/60 FOLDING FLIP–UP CUSHION 72–21, 40/60 FOLDING 72–27)
17. REMOVE PACKAGE TRAY TRIM PANEL ASSY (See page 76–45)
18. REMOVE REAR FLOOR FINISH PLATE (See page 76–45)
19. REMOVE DECK TRIM SIDE PANEL ASSY RH (See page 76–45)
20. REMOVE ROOF SIDE GARNISH INNER RH (See page 76–45)
21. REMOVE FRONT SEAT ASSY RH (See page POWER SEAT 72–11, MANUAL SEAT 72–16)
22. REMOVE FLOOR CARPET ASSY FRONT

23. REMOVE ANTENNA CORD SUB–ASSY NO.3

(a) Disconnect the connectors.

(b) w/ Navigation:
Remove the bolt, nut and screw.
w/o Navigation:
Remove the bolt and nut.

(c) w/ Navigation:
Remove the 11 clamps and the antenna cord sub–assy No.3.
w/o Navigation:
Remove the 10 clamps and the antenna cord sub–assy No.3.

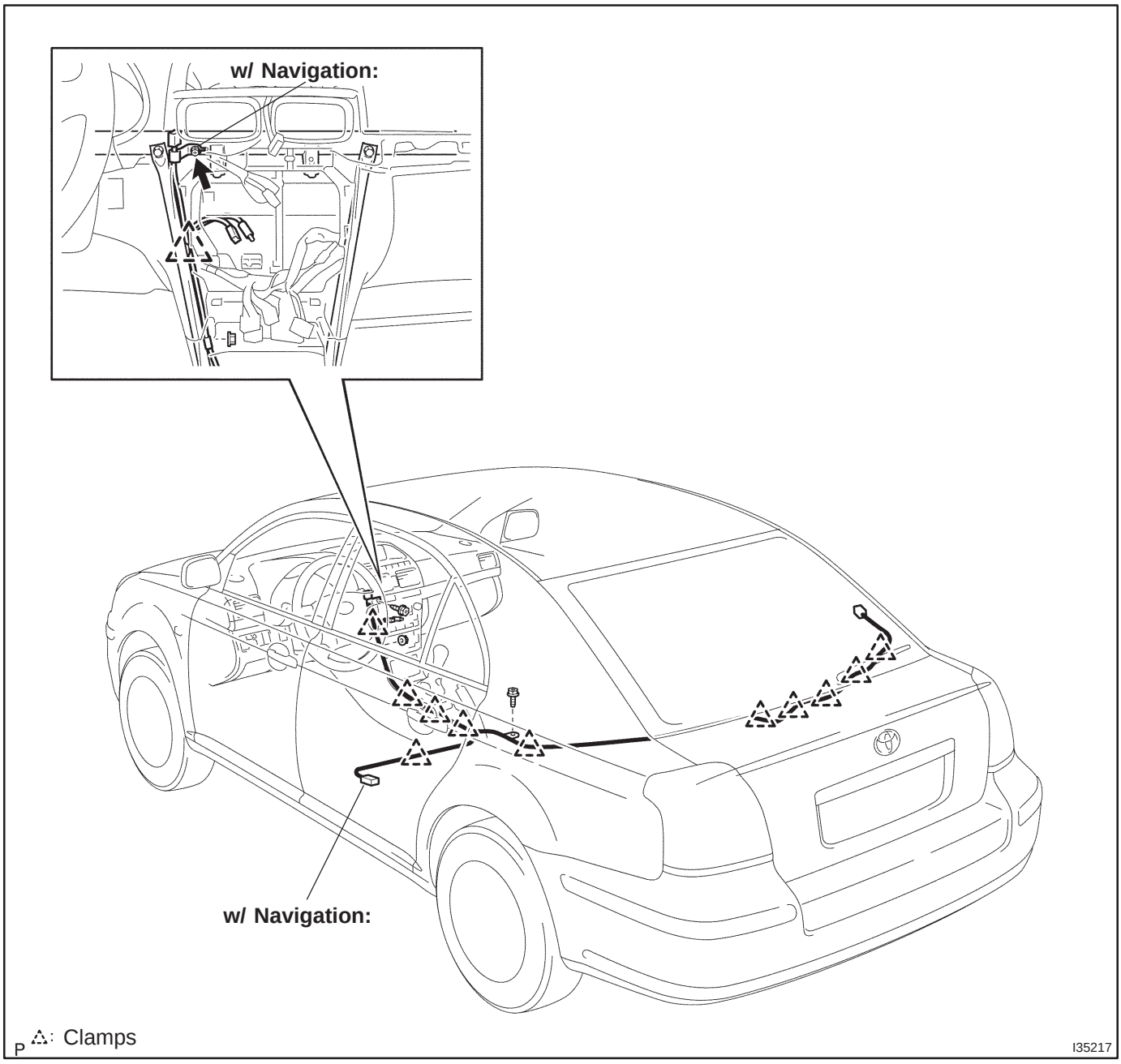

24. INSTALL ANTENNA CORD SUB–ASSY NO.3

(a) Install the bolt.
Torque: 7.0 N·m (71 kgf·cm, 62 in.·lbf)

(b) w/ Navigation:
Install the nut and screw.
w/o Navigation:
Install the nut.

(c) w/ Navigation:
Install the 11 clamps and the antenna cord sub–assy No.3.
w/o Navigation:
Install the 10 clamps and the antenna cord sub–assy No.3.

25. INSTALL REAR SEATBACK ASSY
(See page 40/60 FOLDING FLIP–UP CUSHION 72–21, 40/60 FOLDING 72–27)

26. INSTALL FRONT SEAT ASSY RH (See page POWER SEAT 72–11, MANUAL SEAT 72–16)

NAVIGATION ECU

670SH–02

REPLACEMENT

1. **DISCONNECT BATTERY NEGATIVE TERMINAL (See page 60–1)**
2. **REMOVE FRONT SEAT ASSY LH (See page POWER SEAT 72–11, MANUAL SEAT 72–16)**
3. **REMOVE NAVIGATION ECU COVER**

(a) Remove the navigation ECU cover (Front side).
(b) Remove the 3 clips and the navigation ECU cover.

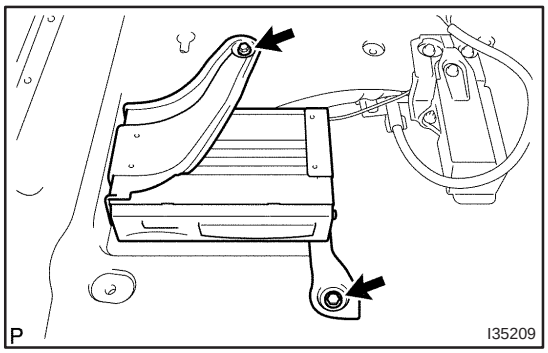

4. **REMOVE NAVIGATION COMPUTER W/BRACKET**

(a) Remove the 2 bolts.
(b) Disconnect the connectors and remove the navigation computer w/ bracket.

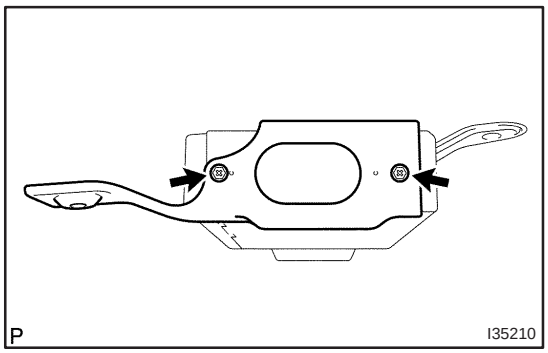

5. **REMOVE DISC PLAYER BRACKET NO.2**

(a) Remove the 2 screws and disc player bracket No.2.

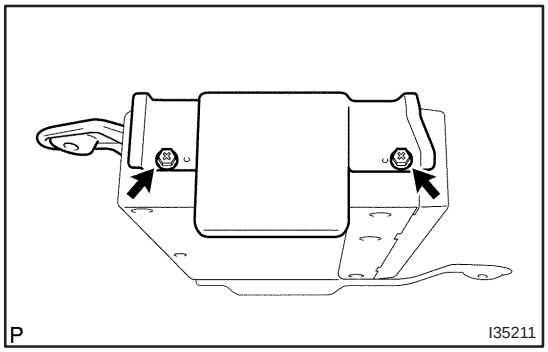

6. **REMOVE DISC PLAYER BRACKET NO.3**

(a) Remove the 2 screws and disc player bracket No.3.

7. **REMOVE NAVIGATION ECU**
8. **INSTALL FRONT SEAT ASSY LH (See page POWER SEAT 72–11, MANUAL SEAT 72–16)**

NAVIGATION ANTENNA ASSY

670SI–02

REPLACEMENT

1. **DISCONNECT BATTERY NEGATIVE TERMINAL (See page 60–1)**
2. **REMOVE INSTRUMENT PANEL SUB–ASSY UPPER W/INSTR PNL PASS L/DOOR AIR BAG ASSY (See page 71–11)**

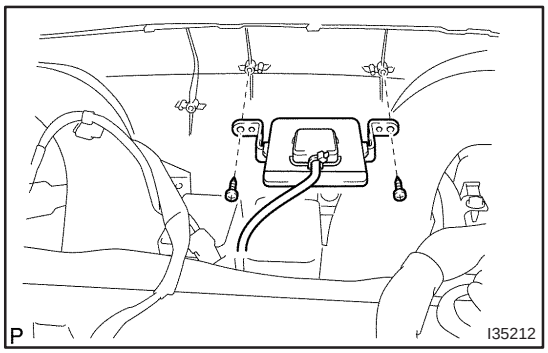

3. **REMOVE NAVIGATION ANTENNA ASSY**

(a) Disconnect the connector.

(b) Remove the 2 screws and navigation antenna assy.

4. **INSTALL INSTRUMENT PANEL SUB–ASSY UPPER W/INSTR PNL PASS L/DOOR AIR BAG ASSY (See page 71–11)**

CIGARETTE LIGHTER ASSY

670SJ–01

REPLACEMENT

1. REMOVE CONSOLE PANEL SUB–ASSY UPPER (See page 71–11)

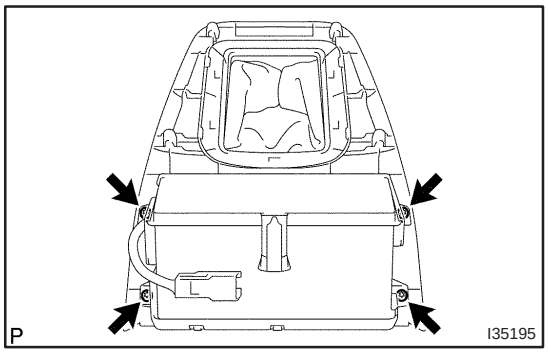

2. REMOVE FRONT ASH RECEPTACLE ASSY

(a) Using a torx socket wrench (T20), remove the 4 screws and front ash receptacle assy.

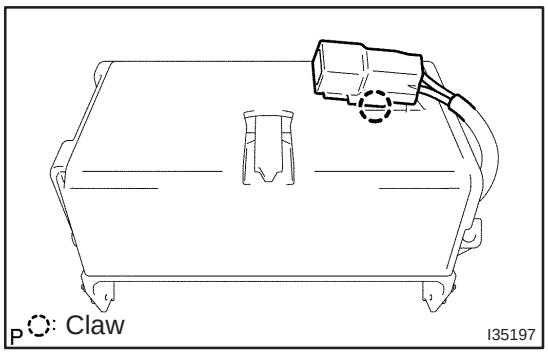

3. REMOVE FRONT ASH RECEPTACLE RETAINER SUB–ASSY

(a) Disengage the claw and disconnect the connector.

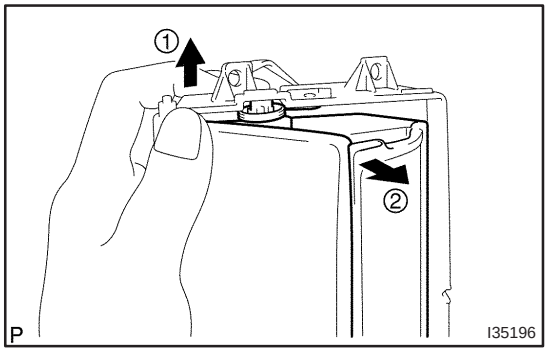

(b) Push up the corner of the outer case open and remove the retainer assy as shown in the illustration.

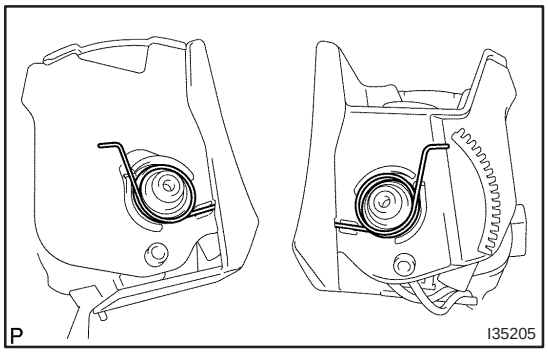

4. REMOVE CIGARETTE LIGHTER ASSY

(a) Remove the 2 springs.

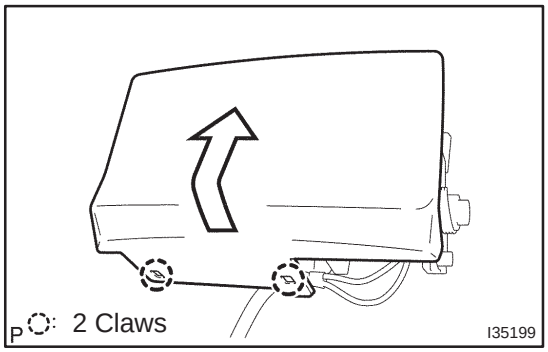

(b) Disengage the 2 claws and remove the door.
(c) Push out the cigarette lighter housing to the room side.
(d) Push out the cigarette lighter ring w/ wire harness to the room side.

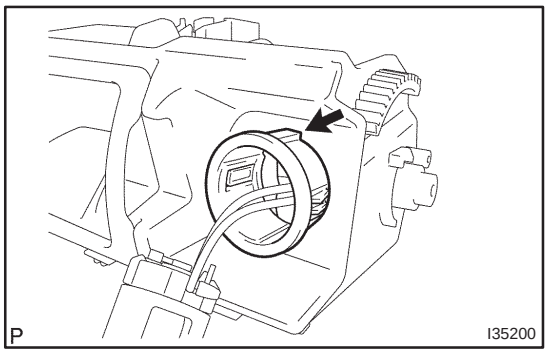

5. INSTALL CIGARETTE LIGHTER ASSY

(a) Align the claws of the cigarette lighter ring with the notches of the cigarette lighter box to fix the cigarette lighter w/ wire harness.
(b) Push the cigarette lighter housing to the out side.

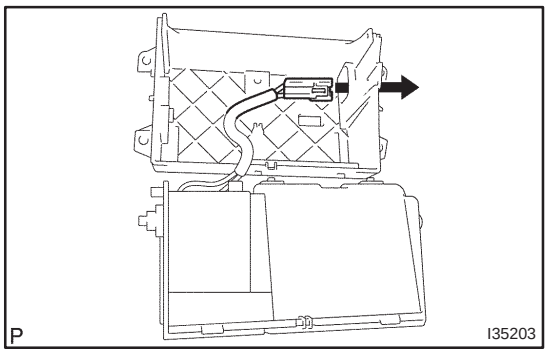

(c) Install the wire harness as shown in the illustration.

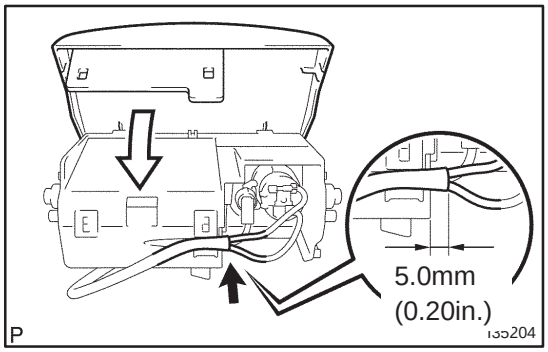

(d) Place the wire harness in the position shown in the illustration and install the door cover.

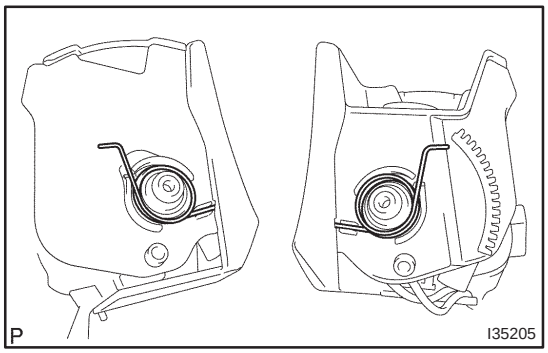

(e) Install the 2 springs.

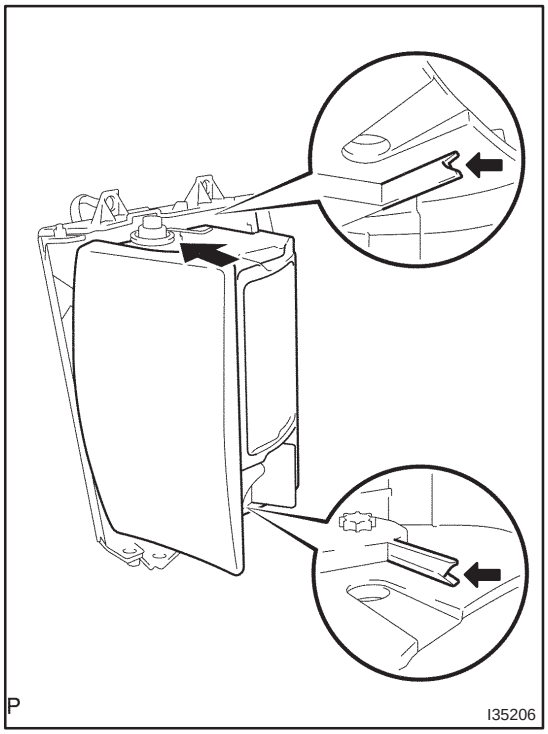

(f) Make sure that the 2 springs are hooked on the claws and install the retainer assy.

(g) Connect the connecter.

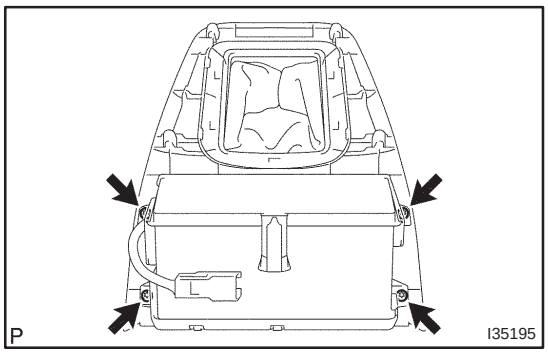

(h) Using a torx socket wrench (T20), install the 4 screws and front ash receptacle.

POWER POINT SOCKET ASSY

670SK–01

REPLACEMENT

1. REMOVE FLOOR SHIFT SHIFT LEVER KNOB SUB–ASSY (M/T TRANSAXLE) (See page 41–11)
2. REMOVE CONSOLE PANEL SUB–ASSY UPPER (See page 71–11)
3. REMOVE CONSOLE PANEL SUB–ASSY LOWER (See page 71–11)
4. REMOVE CONSOLE BOX ASSY RR (See page 71–11)
5. REMOVE CONSOLE REAR END PANEL (See page 71–11)

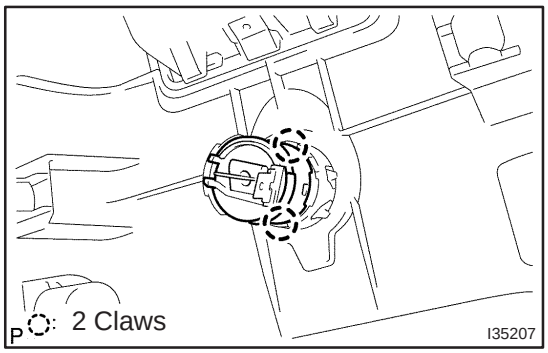

6. REMOVE POWER POINT SOCKET ASSY

(a) Disengage the 2 claws and push out the power point socket to the room side.

(b) Remove the power point socket cover from the rear consol panel.

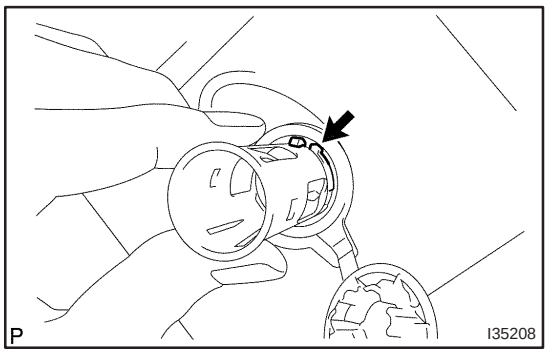

7. INSTALL POWER POINT SOCKET ASSY

(a) Install the power point socket cover to the rear consol panel.

(b) Align the claw of power point socket with the one of the socket cover, and push in the power point socket.

WINDOW GLASS (ANTENNA WIRE)

670SL–01

REPAIR

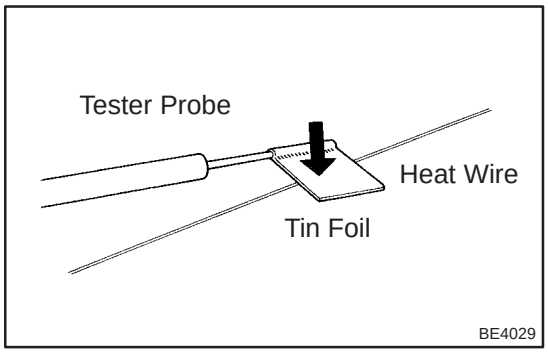

1. INSPECT WINDOW GLASS (ANTENNA WIRE)

NOTICE:

When cleaning the glass, wipe it in the direction of the wire with a soft and dry cloth. Take care not to damage the wire. Do not use detergents or glass cleaners with abrasive ingredients. When measuring voltage, wind a piece of tin foil around the tip of the tester probe and press the foil against the wire with your finger, as shown in the illustration.

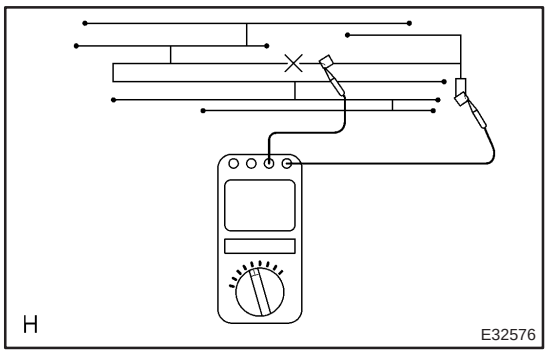

(a) Check the continuity, at the center of each antenna wire, as shown in the illustration.

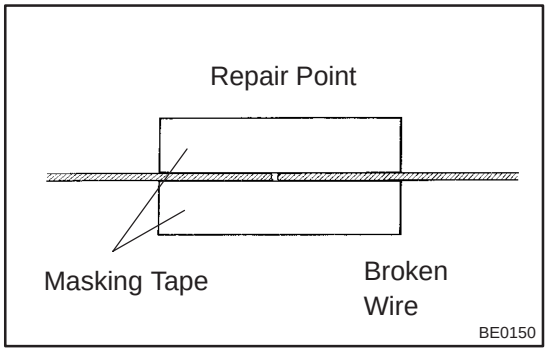

2. REPAIR WINDOW GLASS (ANTENNA WIRE)

(a) Clean the broken wire tips with a grease, wax and silicone remover.

(b) Place the masking tape along both sides of the wire to be repaired.

(c) Thoroughly mix the repair agent (Dupont paste No.4817).

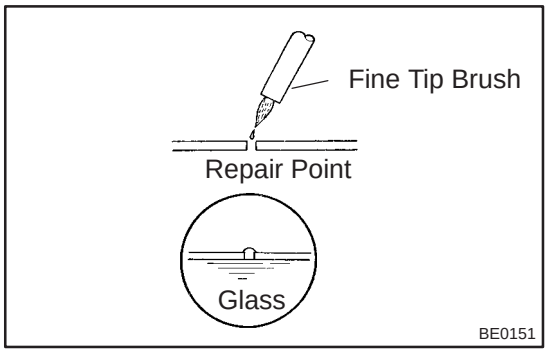

(d) Using a fine tip brush, apply a small amount of the mixture to the wire.

(e) After a few minutes, remove the masking tape.

(f) Do not repair the defogger wire for at least 24 hours afterwards.

POWER SOURCE

LOCATION

6804U–01

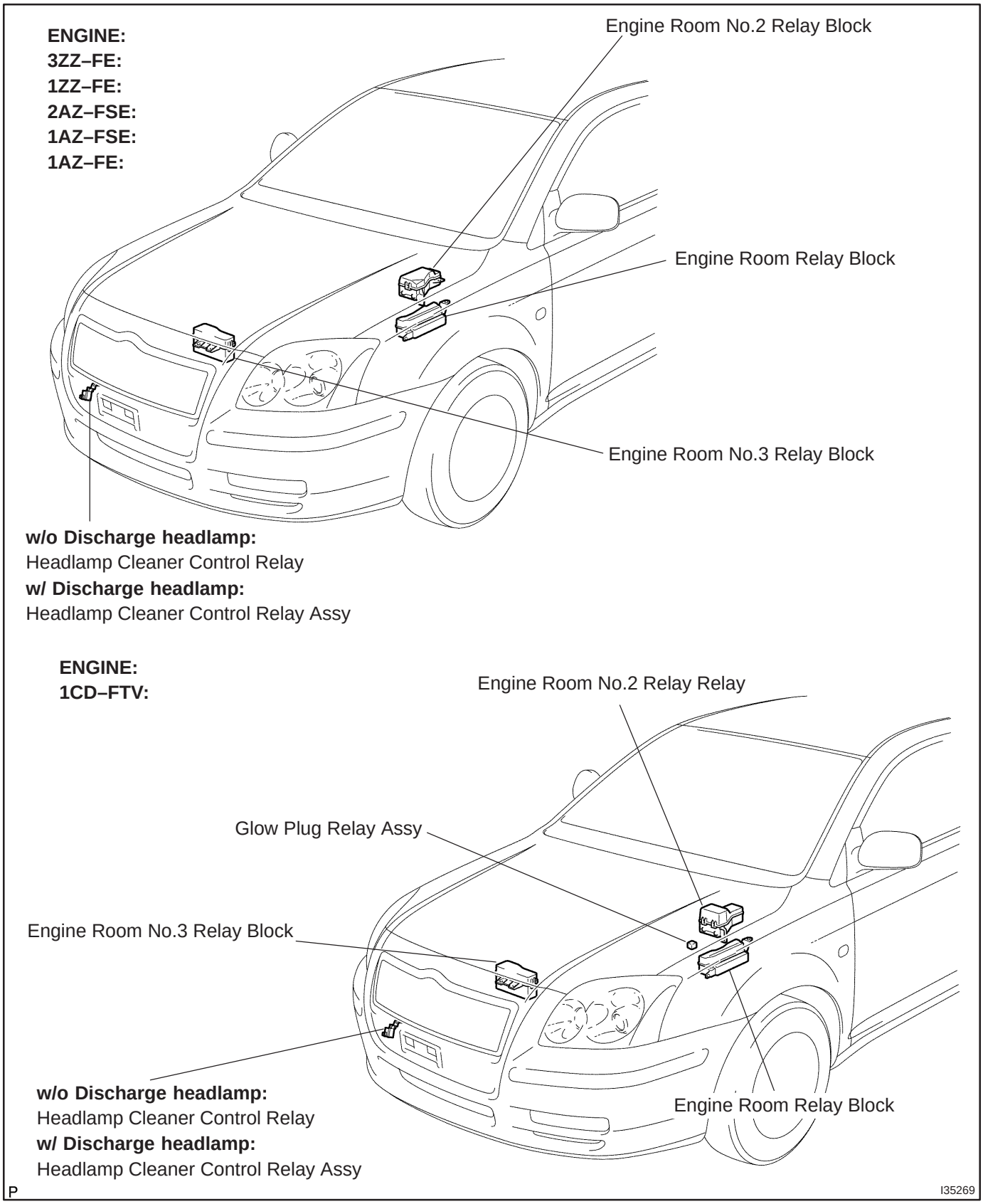

LHD:

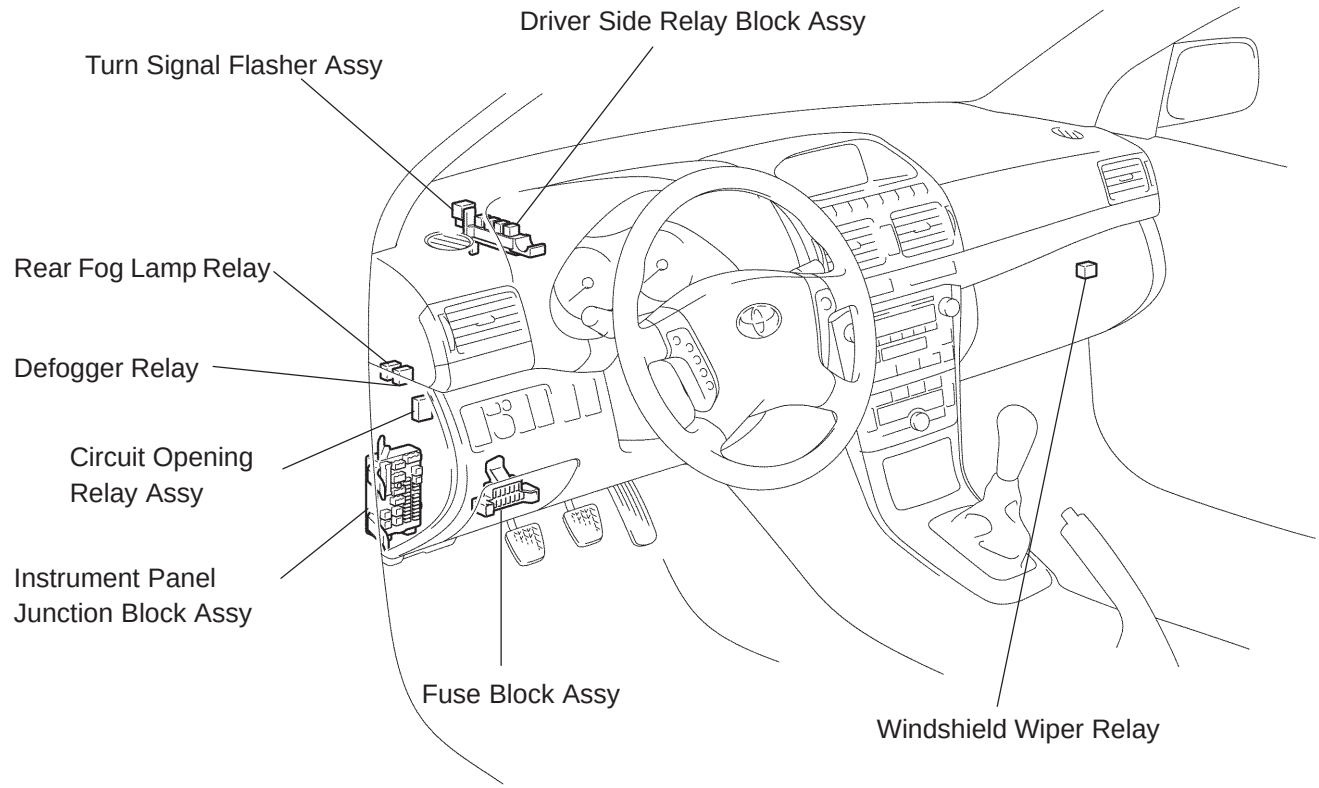

RHD:

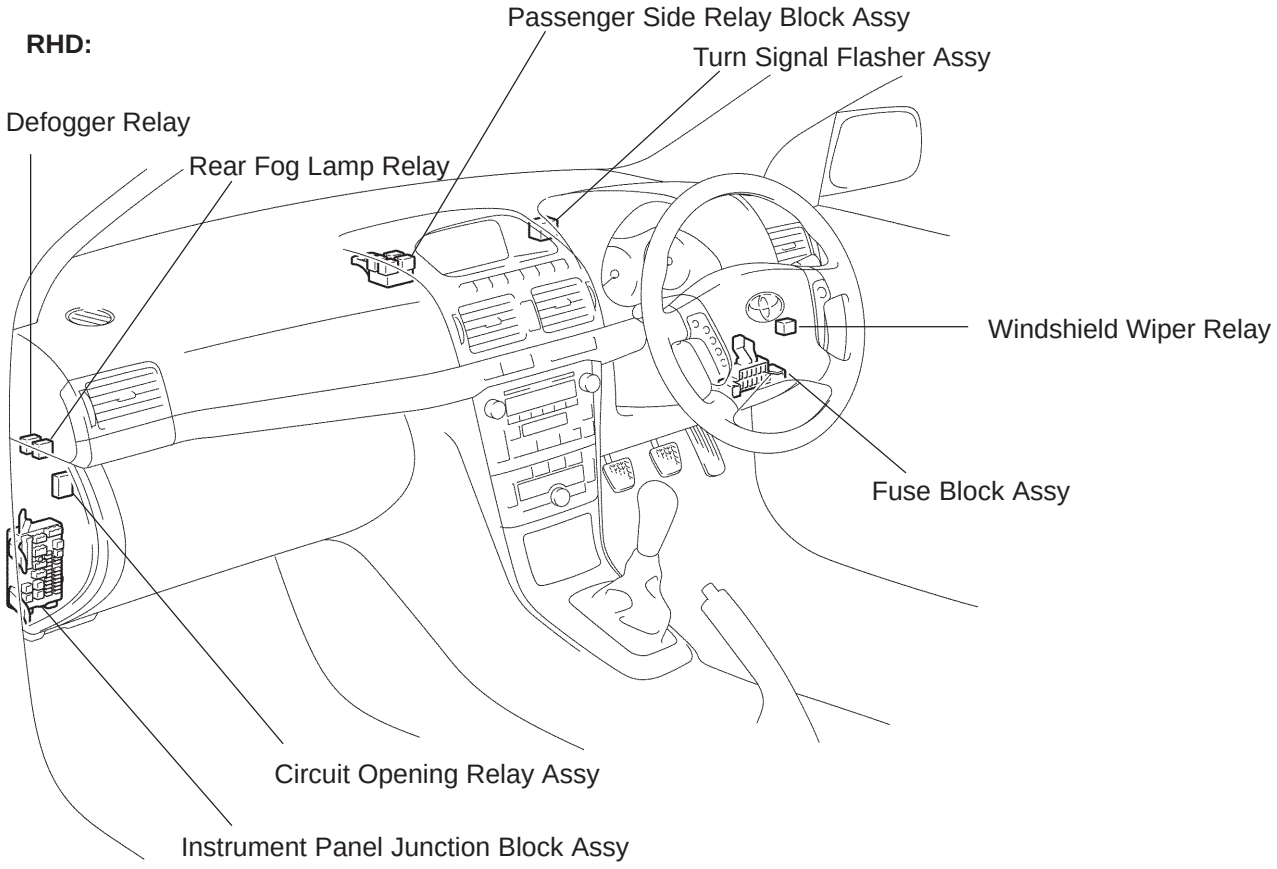

P

I35270

ENGINE:
3ZZ–FE:
1ZZ–FE:
2AZ–FSE:
1AZ–FSE:
1AZ–FE:

Engine Room Relay Block

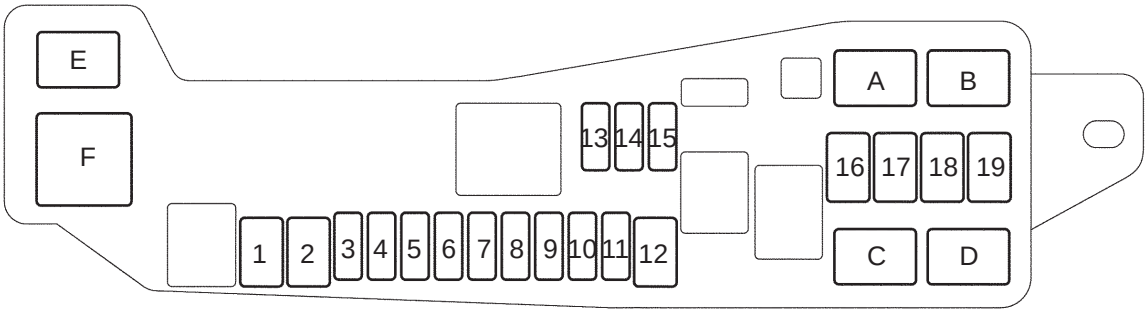

RELAY

A. FAN No.2
B. FAN No.1
C. FAN No.3
D. –
E. –
F. EMPS

FUSE

1. EMPS	50A	6. HAZARD	10A	11. AM2	30A	16. RR DEF	30A
2. –		7. ALT–S	7.5A	12. MAIN	40A	17. HTR	40A
3. A/F	20A	8. IG2	15A	13. –		18. RDI	30A
4. THROTTLE	10A	9. EFI	20A	14. –		19. CDS	30A
5. HORN	15A	10. DCC	30A	15. –			

ENGINE:
1CD–FTV:

Engine Room Relay Block

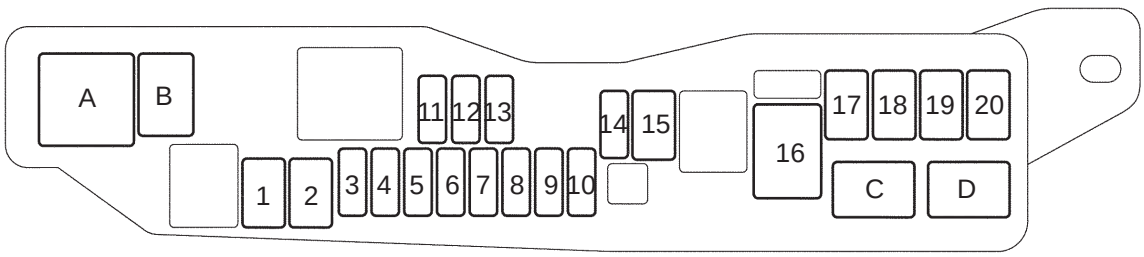

RELAY

A. FAN No.1
B. FAN No.3
C. EDU
D. EFI MAIN

FUSE

1. MAIN	40A	6. F–HTR	25A	11. –		16. RDI	40A
2. RR DEF	30A	7. HAZARD	10A	12. –		17. CDS	30A
3. PWR HTR	25A	8. AM2	30A	13. –		18. HTR	40A
4. EFI	20A	9. DCC	30A	14. *1		19. H/CLN	30A
5. HORN	15A	10. ALT–S	7.5A	15. *2		20. AM1 No.1	50A

*1 VSC 25A (w/ VSC)
ABS 25A (w/o VSC)
*2 VSC 50A (w/ VSC)
ABS 40A (w/o VSC)

I35135

ENGINE:
3ZZ–FE:
1ZZ–FE:
2AZ–FSE:
1AZ–FSE:
1AZ–FE:

Engine Room No.2 Relay Block

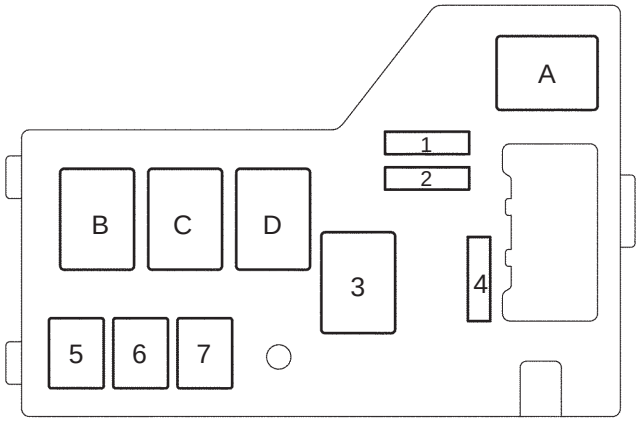

*1 ALT 120A
2AZ–FSE
1AZ–FSE
1AZ–FE

ALT 100A
3ZZ–FE
1ZZ–FE

*2 VSC 25A (w/ VSC)
ABS 25A (w/o VSC)

*3 VSC 50A (w/ VSC)
ABS 40A (w/o VSC)

RELAY
A. INJ
B. A/F
C. IG2
D. EFI

FUSE
1. EFI No.1 10A
2. EFI No.2 7.5A
3. *1
4. *2
5. H–LP CLN 30A
6. AM1 No.1 50A
7. *3

ENGINE:
ICD–FTV:

Engine Room No.2 Relay Block

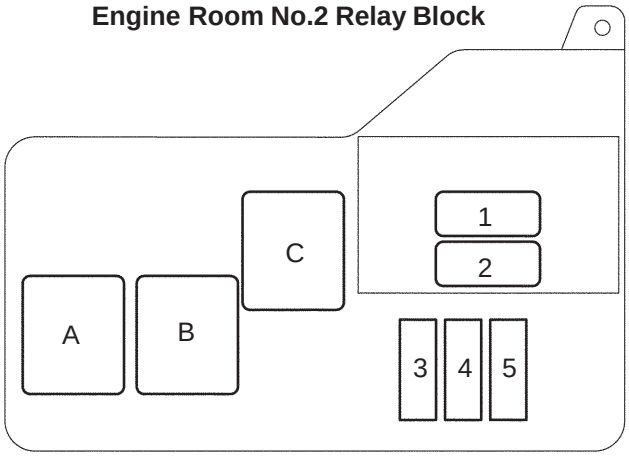

RELAY
A. HTR1
B. HTR2
C. HTR3

FUSE
1. ALT 140A
2. GLOW 80A
3. HTR1 50A
4. HTR2 50A
5. HTR3 50A

P

I35139

Instrument Panel Junction Block Assy

RELAY
A. –
B. HTR
C. SEAT HTR
D. IG1
E. TAIL

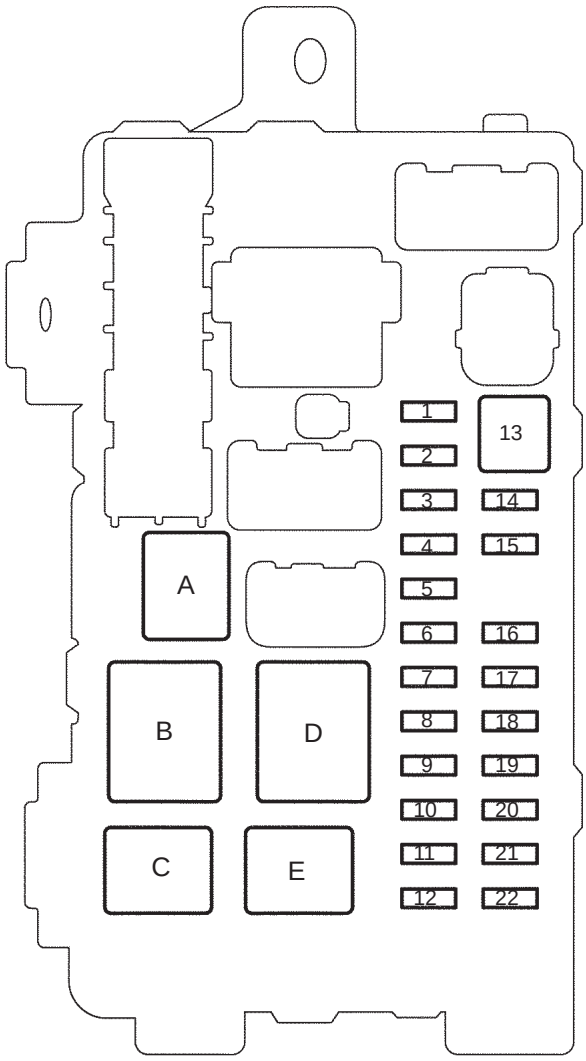

FUSE

1.	IGN	10A
2.	S/ROOF	20A
3.	RR FOG	7.5A
4.	FR FOG	7.5A
5.	AM1	25A
6.	PANEL	7.5A
7.	RR WIP	20A
8.	GAUGE2	7.5A
9.	CIG	15A
10.	HTR	10A
11.	–	
12.	RAD No.1	7.5A
13.	PWR SEAT	30A
14.	TAIL	10A
15.	OBD2	7.5A
16.	P/POINT	15A
17.	DOOR	25A
18.	WIP	25A
19.	EGU–IG	7.5A
20.	S–HTR	20A
21.	GAUGE1	10A
22.	STOP	15A

Engine Room Relay No.3 Block

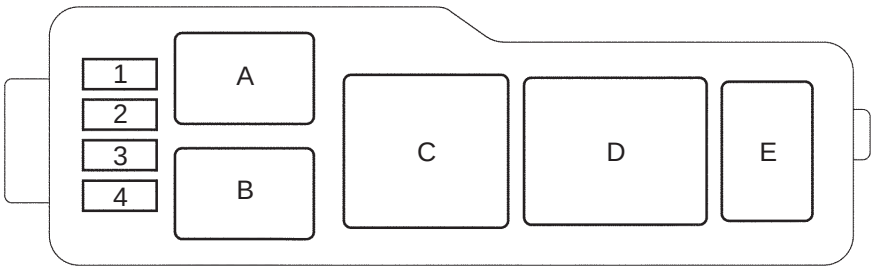

RELAY
A. HORN
B. F–HTR
C. H–LP
D. DIM
E. FAN No.2

FUSE

1.	H–LP HI LH	10A
2.	H–LP HI RH	10A
3.	H–LP LH	15A
4.	H–LP RH	15A

I35750

LHD:

Fuse Block Assy

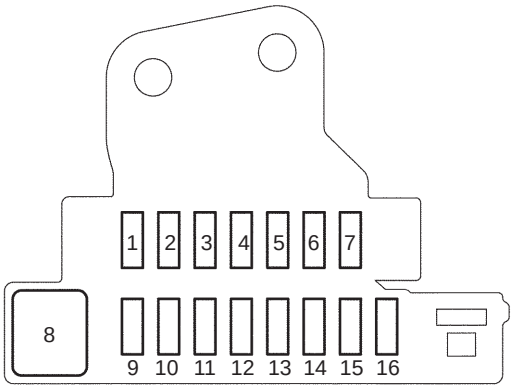

FUSE

1. –		6. DOME	7.5A	11. P–FR P/W	20A
2. DEF I/ UP	7.5A	7. ECU–B2	7.5A	12. D–RR P/W	20A
3. ST	7.5A	8. PWR SEAT	30A	13. D–FR P/W	20A
4. MIR HTR	7.5A	9. –		14. ECU–B1	7.5A
5. RAD No.2	15A	10. P–RR P/W	20A	15. FUEL OPN	10A
				16. FR DIC	20A

Drive Side Relay Block Assy

RELAY

A. ST
B. FR FOG
C. P/POINT
D. FR DEICER

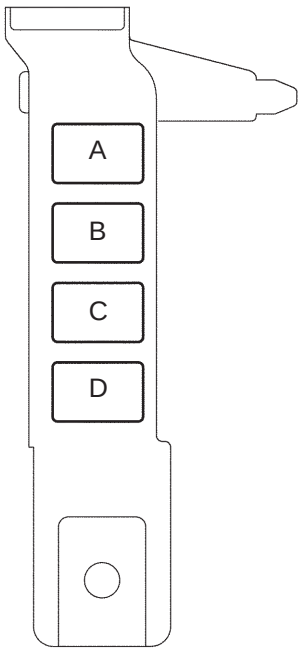

P

I35138

RHD:

Fuse Block Assy

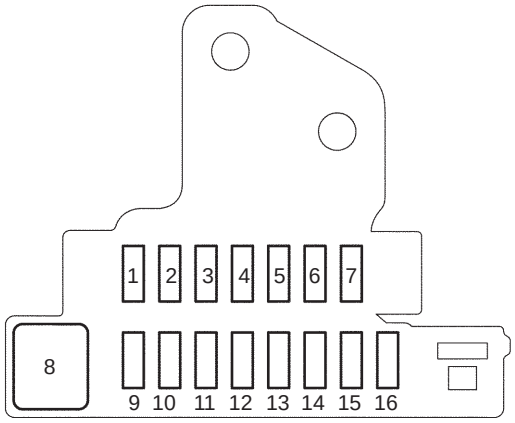

FUSE

1. –		6. DOME	7.5A	11. D–FR P/W	20A
2. DEF I/ UP	7.5A	7. ECU–B2	7.5A	12. P–RR P/W	20A
3. ST	7.5A	8. PWR SEAT	30A	13. P–FR P/W	20A
4. MIR HTR	10A	9. –		14. ECU–B1	7.5A
5. RAD No.2	15A	10. P–RR P/W	20A	15. FUEL OPN	10A
				16. FR DIC	20A

Passenger Side Relay Block Assy

RELAY
A. P/POINT
B. FR FOG
C. ST
D. FR DEICER

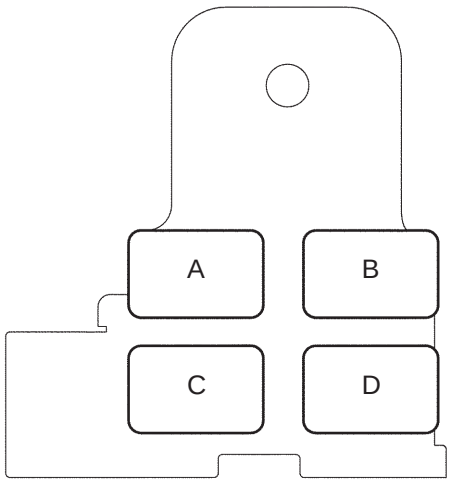

P

I35137

HORN SYSTEM

LOCATION

69064–02

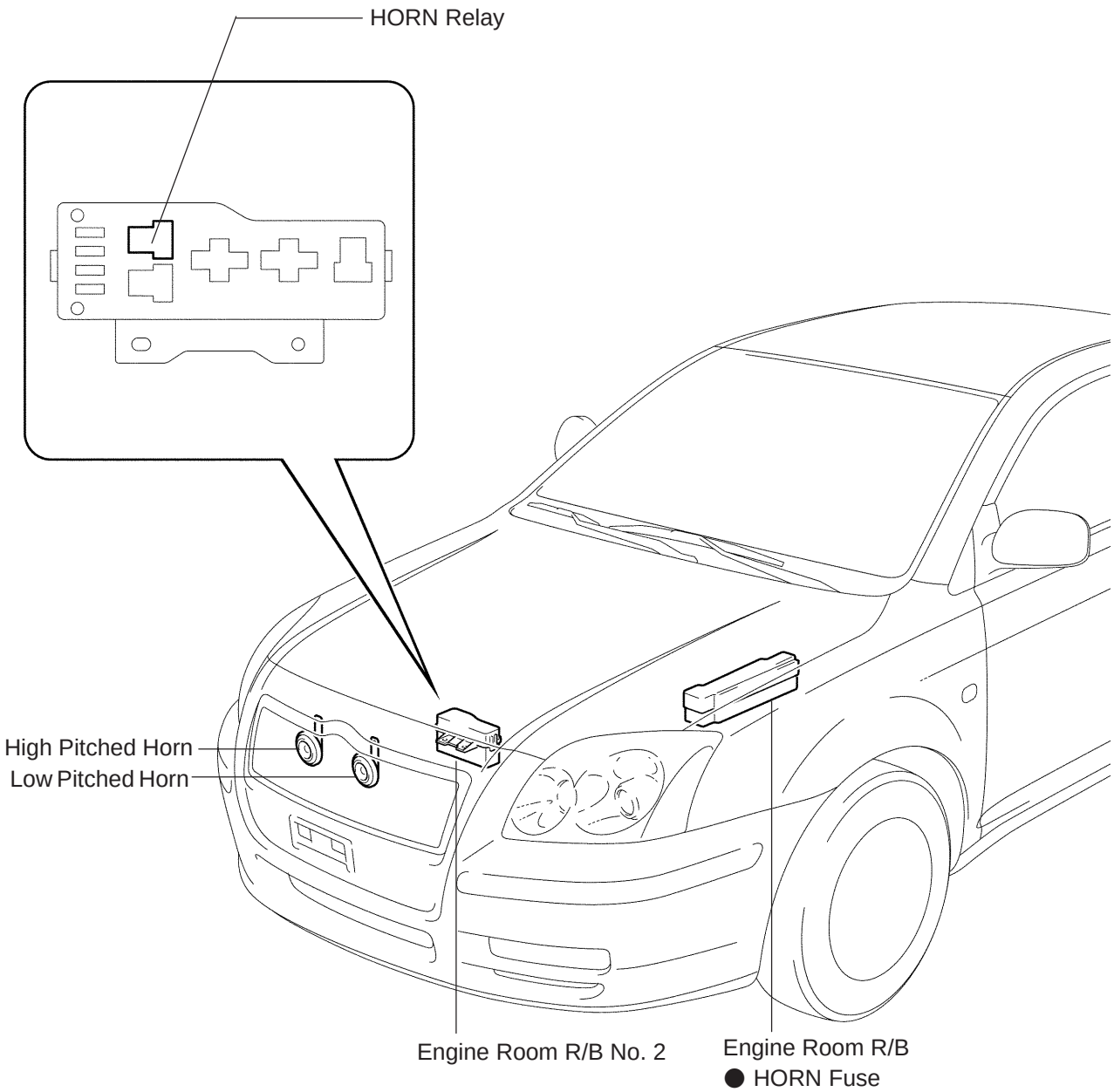

P

B67409

69065–02

PROBLEM SYMPTOMS TABLE

Symptom	Suspected Area	See Page
Horn does not sound	1. Horn button switch	–
	2. High pitched horn	69–3
	3. Low pitched horn	69–3
	4. HORN fuse	
	5. HORN relay	69–3
	6. Wire harness	–

69066–02

INSPECTION

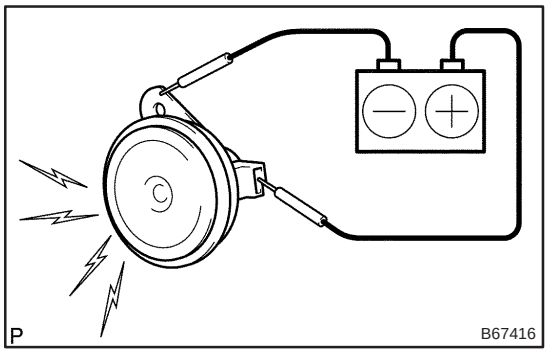

1. INSPECT LOW PITCHED HORN ASSY

(a) Check operation of the horn.

Standard:

MeasurementCondition	SpecifiedCondition
Battery positive (+) → Terminal 1 Battery positive (–) → Horn body	Horn sounds

If the result is not as specified, replace the horn assy.

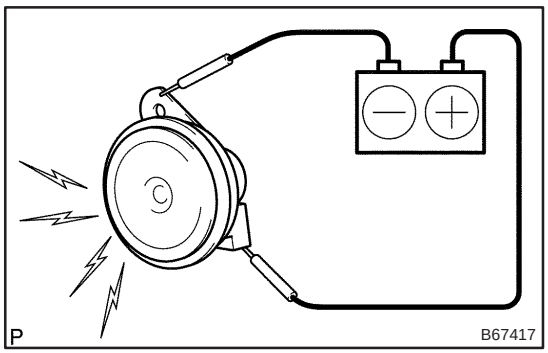

2. INSPECT HIGH PITCHED HORN ASSY

(a) Check operation of the horn.

Standard:

MeasurementCondition	SpecifiedCondition
Battery positive (+) → Terminal 1 Battery positive (–) → Horn body	Horn sounds

If the result is not as specified, replace the horn assy.

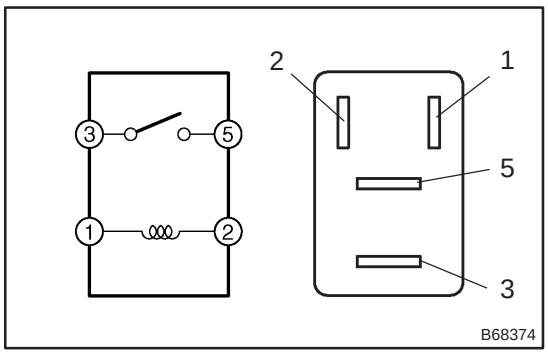

3. INSPECT HORN RELAY ASSY

(a) Remove the HORN relay from the engine room R/B No. 2.

(b) Check the horn relay resistance.

Standard:

TesterConnection	SpecifiedCondition
3 – 5	10 kΩ or higher
	Below 1 Ω (When battery voltage is applied to terminals 1 and 2)

If the result is not as specified, replace the relay assy.

LOW PITCHED HORN ASSY

69068–02

REPLACEMENT

1. REMOVE LOW PITCHED HORN ASSY

(a) Disconnect the connector.

(b) Remove the bolt and horn.

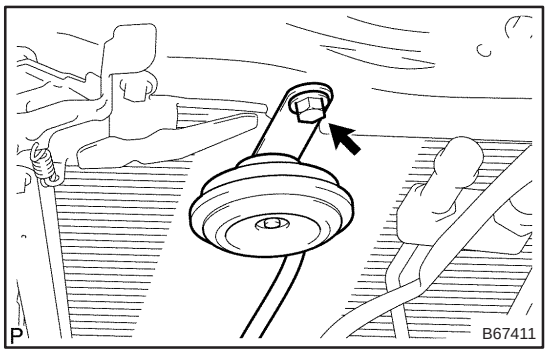

2. INSTALL LOW PITCHED HORN ASSY

(a) Place the stay onto the baffle part in the radiator support upper, and then install the horn with the bolt.

Torque: 20 N·m (204 kgf·cm, 15 ft·lbf)

(b) Connect the connector.

HIGH PITCHED HORN ASSY

69067–02

REPLACEMENT

1. REMOVE HIGH PITCHED HORN ASSY

(a) Disconnect the connector.

(b) Remove the bolt and horn.

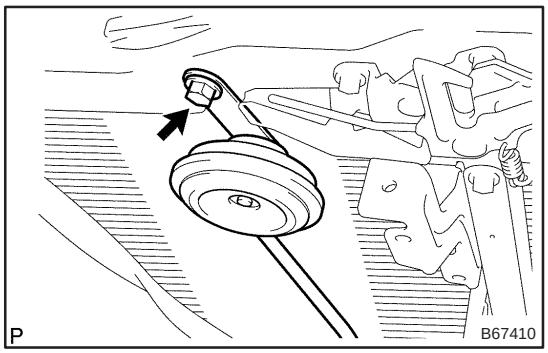

2. INSTALL HIGH PITCHED HORN ASSY

(a) Place the stay onto the baffle part in the radiator support upper, and then install the horn with the bolt.

Torque: 20 N·m (204 kgf·cm, 15 ft·lbf)

(b) Connect the connector.

POWER WINDOW CONTROL SYSTEM

700S7–01

ON–VEHICLE INSPECTION

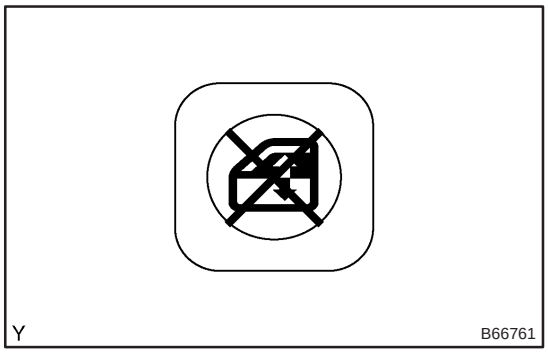

1. CHECK WINDOW LOCK SWITCH

(a) Check that the power windows except the driver side power window operation is disabled when the window lock switch of the power window master switch is pressed.

(b) Check that the power windows can be operated when the window lock switch is pressed again.

2. CHECK MANUAL UP/DOWN FUNCTION

(a) Check that the driver side window switch of the power window master switch can operate the driver side power window as follows:

Standard:

Condition	Master Switch	Switch Operation	Power Window
Ignition switch ON	Driver side	Halfway pulled UP	UP (Closed)
		Halfway pushed DOWN	DOWN (Open)

(b) Check that each power window regulator switch can operate each power window as follows.

Standard:

Condition	Regulator Switch	Switch Operation	Power Window
• Ignition switch ON • Window lock switch OFF	Passenger side	Halfway pulled UP	UP (Closed)
		Halfway pushed DOWN	DOWN (Open)
	Rear LH	Halfway pulled UP	UP (Closed)
		Halfway pushed DOWN	DOWN (Open)
	Rear RH	Halfway pulled UP	UP (Closed)
		Halfway pushed DOWN	DOWN (Open)

3. CHECK AUTO UP/DOWN FUNCTION

(a) Check that the driver side window switch of the power window master switch can operate the driver side power window as follows:

Standard:

Condition	Master Switch	Switch Operation	Power Window
Ignition switch ON	Driver side	Fully pulled UP	AUTO UP (Fully closed)
		Fully pushed DOWN	AUTO DOWN (Fully open)

(b) Check that each power window regulator switch can operate each power window as follows:

Standard:

Condition	Regulator Switch	Switch Operation	Power Window
• Ignition switch ON • Window lock switch OFF	Passenger side	Fully pulled UP	AUTO UP (Fully closed)
		Fully pushed DOWN	AUTO DOWN (Fully open)
	Rear LH	Fully pulled UP	AUTO UP (Fully closed)
		Fully pushed DOWN	AUTO DOWN (Fully open)
	Rear RH	Fully pulled UP	AUTO UP (Fully closed)
		Fully pushed DOWN	AUTO DOWN (Fully open)

4. CHECK REMOTE UP/DOWN FUNCTION

(a) Check that each switch of the power window master switch can operate each power window as follows:
Standard:

Condition	Master Switch	Switch Operation	Power Window
• Ignition switch ON • Window lock switch OFF	Passenger side	Halfway pulled UP	UP (Closed)
		Halfway pushed DOWN	DOWN (Open)
	Rear LH	Halfway pulled UP	UP (Closed)
		Halfway pushed DOWN	DOWN (Open)
	Rear RH	Halfway pulled UP	UP (Closed)
		Halfway pushed DOWN	DOWN (Open)

5. CHECK REMOTE AUTO UP/DOWN FUNCTION

(a) Check that each switch of the power window master switch can operate each power window as follows:
Standard:

Condition	Master Switch	Switch Operation	Power Window
• Ignition switch ON • Window lock switch OFF	Passenger side	Fully pulled UP	AUTO UP (Fully closed)
		Fully pushed DOWN	AUTO DOWN (Fully open)
	Rear LH	Fully pulled UP	AUTO UP (Fully closed)
		Fully pushed DOWN	AUTO DOWN (Fully open)
	Rear RH	Fully pulled UP	AUTO UP (Fully closed)
		Fully pushed DOWN	AUTO DOWN (Fully open)

6. CHECK POWER WINDOW OPERATION FUNCTION AFTER IGNITION SWITCH IS TURNED OFF

(a) When both of the following conditions are fulfilled, check that the power windows can be operated even after the ignition switch is turned OFF.
- Within 45 seconds after the ignition switch is turned OFF
- The front doors are closed

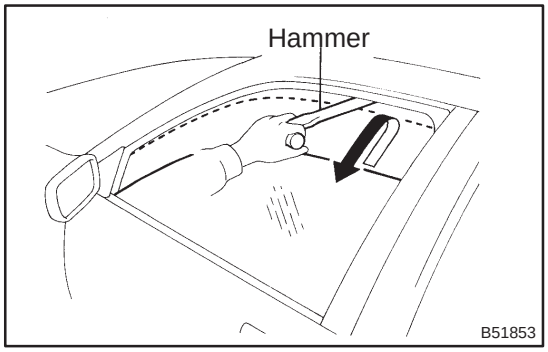

7. CHECK JAM PROTECTION

HINT:

The jam protection function prevents any part of your body from getting caught by accident between the door frame and the door glass during power window operation.

NOTICE:

If the power window motor has just been reset, raise and lower the door glass several times using MANUAL function before performing the check.

(a) Check that the door glass goes down by approx. 50 mm (1.97 in.) right when something gets caught between the door frame and the door glass during power window operation. However, when the opening between the door frame and the door glass is less than 200 mm (7.87 in.), the door glass keeps going down until the opening reaches 200 mm (7.87 in.) and stops there.

Operative conditions:
- AUTO UP
- AUTO UP function after the ignition switch is turned OFF
- MANUAL UP function after the ignition switch is turned OFF

700S8–01

LOCATION

LHD Models

Instrument Panel J/B Assy
- Integration Relay
- IG1 Relay

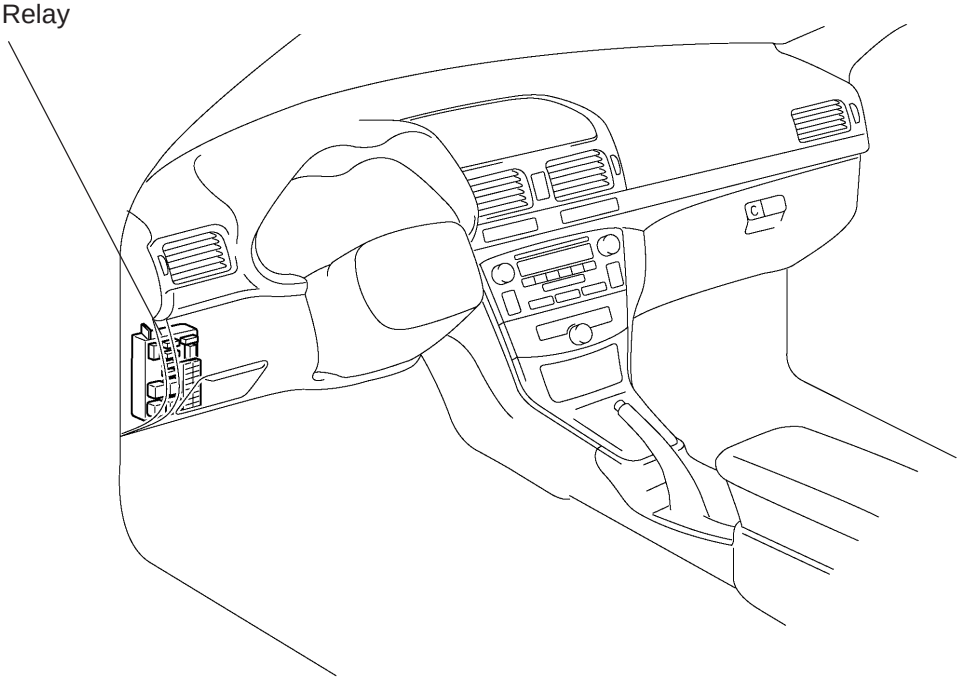

RHD Models

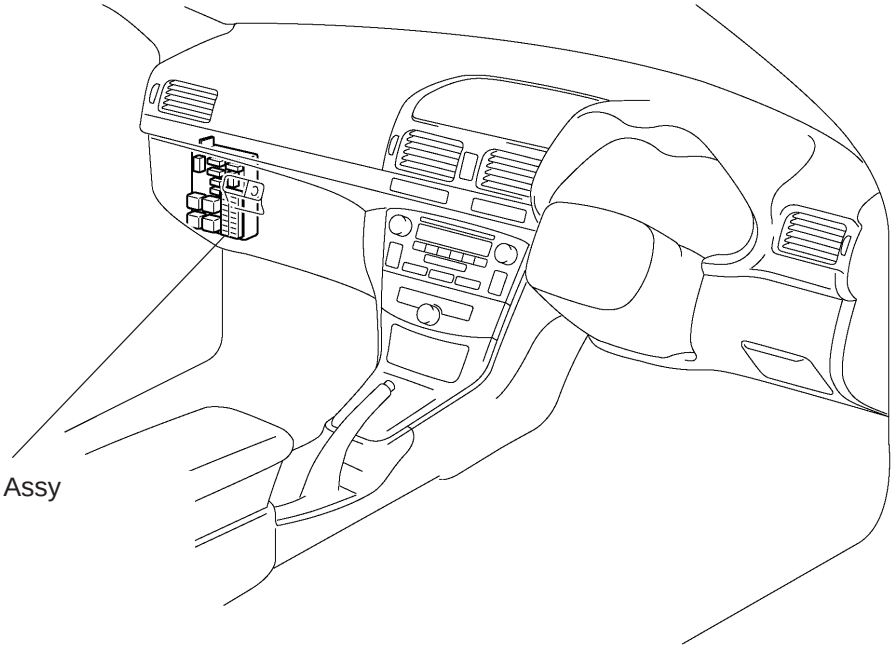

Instrument Panel J/B Assy
- Integration Relay
- IG1 Relay

Y

B67299

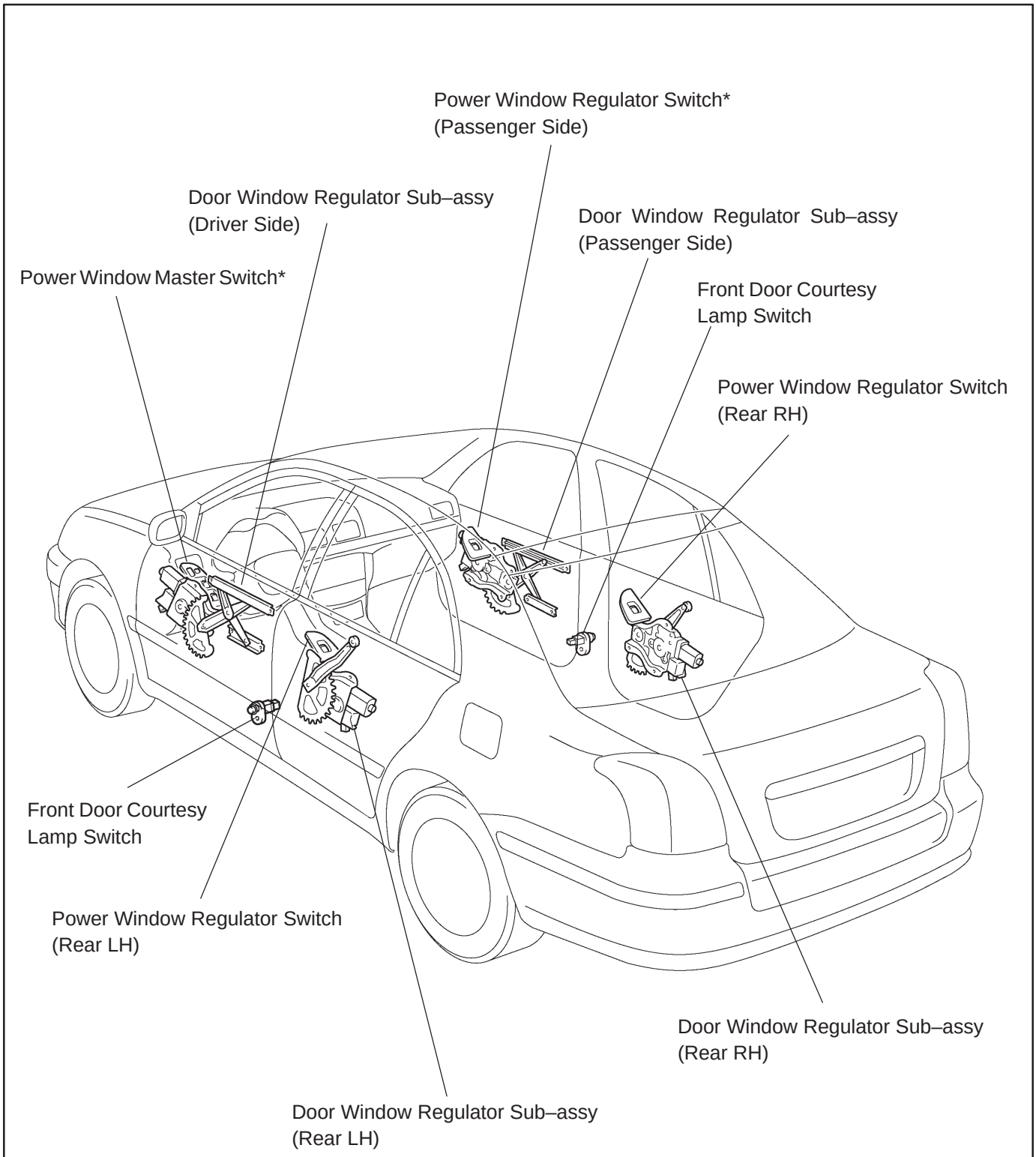

*: In the RHD vehicle, look at the same location on the opposite side as compared to the LHD vehicle.

Y

B66778

700S9–01

PROBLEM SYMPTOMS TABLE

Symptom	Suspected Area	See Page
All power windows do not operate	1. Ignition switch assy 2. IG1 relay 3. Power window regulator master switch assy 4. Instrument panel J/B assy (Integration relay) 5. Wire harness	80–2 70–6 70–6 70–6 –
Only one power window does not operate	1. D–FR P/W fuse 2. P–FR P/W fuse 3. D–RR P/W fuse 4. P–RR P/W fuse 5. Power window regulator master switch assy 6. Power window regulator switch assy 7. Door window regulator sub–assy (Power window motor) 8. Wire harness	– – – – 70–6 70–6 70–6 –
AUTO UP/DOWN function does not operate	1. Power window regulator master switch assy 2. Power window regulator switch assy 3. Door window regulator sub–assy (Power window motor)	70–6 70–6 70–6
Window lock system does not operate	1. Power window master switch assy	70–6
Window cannot be operated after ignition switch is turned OFF	1. Front door courtesy lamp switch assy 2. Instrument panel J/B assy (Integration relay)	70–6 70–6

700SA–01

INSPECTION

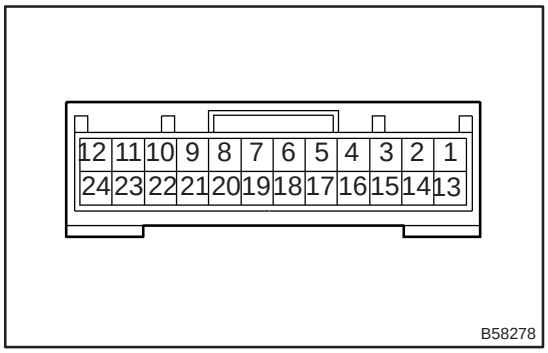

1. INSPECT POWER WINDOW REGULATOR MASTER SWITCH ASSY

(a) Inspect the resistance between the terminals of the switch, as shown in the table below.

Standard:

Power window lock switch

Tester Connection	Switch Position	Specified Condition
3 (PW) – 23 (WL)	Unlock	Below 1 Ω
	Lock	10 kΩ or higher

Driver side switch (LHD models)

Tester Connection	Switch Position	Specified Condition
2 (FLU) – 3 (PW)	AUTO UP	Below 1 Ω
3 (PW) – 14 (FLA)		
2 (FLU) – 3 (PW)	MANUAL UP	Below 1 Ω
–	OFF	–
3 (PW) – 4 (FLD)	MANUAL DOWN	Below 1 Ω
3 (PW) – 4 (FLD)	AUTO DOWN	Below 1 Ω
3 (PW) – 14 (FLA)		

Driver side switch (RHD models)

Tester Connection	Switch Position	Specified Condition
2 (FRU) – 3 (PW)	AUTO UP	Below 1 Ω
3 (PW) – 14 (FRA)		
2 (FRU) – 3 (PW)	MANUAL UP	Below 1 Ω
–	OFF	–
3 (PW) – 4 (FRD)	MANUAL DOWN	Below 1 Ω
3 (PW) – 4 (FRD)	AUTO DOWN	Below 1 Ω
3 (PW) – 14 (FRA)		

Passenger side switch (LHD models)

Tester Connection	Switch Position	Specified Condition
3 (PW) – 10 (FRU)	AUTO UP	Below 1 Ω
3 (PW) – 11 (FRA)		
3 (PW) – 10 (FRU)	MANUAL UP	Below 1 Ω
–	OFF	–
3 (PW) – 9 (FRD)	MANUAL DOWN	Below 1 Ω
3 (PW) – 9 (FRD)	AUTO DOWN	Below 1 Ω
3 (PW) – 11 (FRA)		

Passenger side switch (RHD models)

Tester Connection	Switch Position	Specified Condition
3 (PW) – 10 (FLU)	AUTO UP	Below 1 Ω
3 (PW) – 11 (FLA)		
3 (PW) – 10 (FLU)	MANUAL UP	Below 1 Ω
–	OFF	–
3 (PW) – 9 (FLD)	MANUAL DOWN	Below 1 Ω
3 (PW) – 9 (FLD)	AUTO DOWN	Below 1 Ω
3 (PW) – 11 (FLA)		

Rear LH switch

Tester Connection	Switch Position	Specified Condition
3 (PW) – 17 (RLU)	AUTO UP	Below 1 Ω
3 (PW) – 16 (RLA)		
3 (PW) – 17 (RLU)	MANUAL UP	Below 1 Ω
–	OFF	–
3 (PW) – 15 (RLD)	MANUAL DOWN	Below 1 Ω
3 (PW) – 15 (RLD)	AUTO DOWN	Below 1 Ω
3 (PW) – 16 (RLA)		

Rear RH switch

Tester Connection	Switch Position	Specified Condition
3 (PW) – 18 (RRU)	AUTO UP	Below 1 Ω
3 (PW) – 22 (RRA)		
3 (PW) – 18 (RRU)	MANUAL UP	Below 1 Ω
–	OFF	–
3 (PW) – 19 (RRD)	MANUAL DOWN	Below 1 Ω
3 (PW) – 19 (RRD)	AUTO DOWN	Below 1 Ω
3 (PW) – 22 (RRA)		

If the result is not as specified, replace the switch assy.

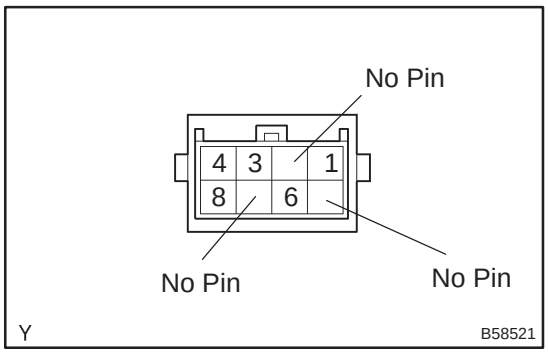

2. INSPECT POWER WINDOW REGULATOR SWITCH ASSY

HINT:

The passenger, rear LH and rear RH regulator switches are all the same.

(a) Check the resistance between the terminals of the switch connector, as shown in the table below.

Standard:

Tester Connection	Switch Position	Specified Condition
1 (UP) – 8 (WL)	AUTO UP	Below 1 Ω
3 (AUTO) – 8 (WL)		
1 (UP) – 8 (WL)	MANUAL UP	Below 1 Ω
–	OFF	–
6 (DOWN) – 8 (WL)	MANUAL DOWN	Below 1 Ω
3 (AUTO) – 8 (WL)	AUTO DOWN	Below 1 Ω
6 (DOWN) – 8 (WL)		

If the result is not as specified, replace the switch assy.

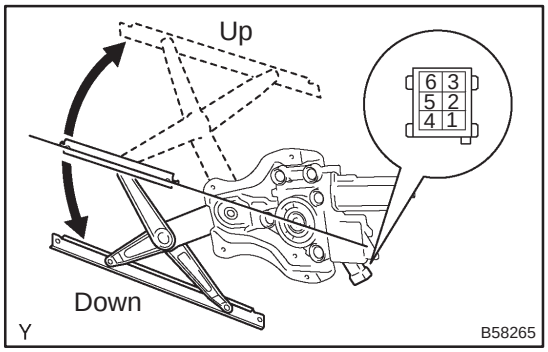

3. INSPECT FRONT DOOR WINDOW REGULATOR SUB–ASSY LH

(a) Inspect operation of the power window regulator.

(1) Apply battery voltage to the connector terminals.

(2) Check that the regulator smoothly operates.

Standard:

MeasurementCondition		SpecifiedCondition
Battery positive (+) → 6 Battery negative (–) → 4	Battery positive (+) → 2	Regulator moves upward
Battery positive (+) → 6 Battery negative (–) → 4	Battery positive (+) → 1	Regulator moves downward

(b) Inspect operation of the PTC inside the power window regulator motor.

NOTICE:

The work must be performed with the power window regulator and door glass installed in the vehicle.

(1) Set an electrical tester DC 400 A probe to the wire harness of terminal 4 or 6.

NOTICE:

Match the arrow mark of the probe with the current direction.

(2) Fully close the door glass by operating the power window switch and keep the door glass there for approximately 60 seconds.

(3) Try to operate the power window past the fully closed position using the power window switch and measure the time until the electrical current changes into 1 A from 16 to 34 A (Inspection of current shut–off).

Standard: Less than 1 second

(4) Check that the door glass goes down when the power window regulator switch is pushed DOWN.

If the result is not as specified, replace the regulator sub–assy.

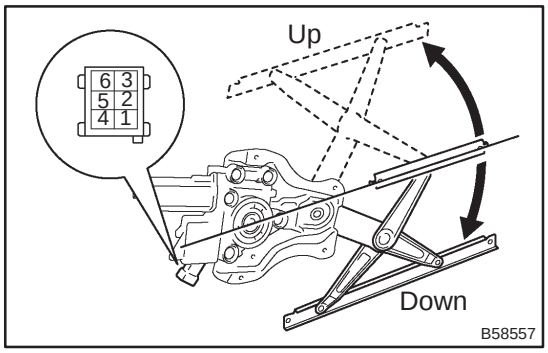

4. INSPECT FRONT DOOR WINDOW REGULATOR SUB–ASSY RH

(a) Inspect operation of the power window regulator.

(1) Apply battery voltage to the connector terminals.

(2) Check that the regulator smoothly operates.

Standard:

MeasurementCondition		SpecifiedCondition
Battery positive (+) → 6 Battery negative (–) → 4	Battery positive (+) → 2	Regulator moves upward
Battery positive (+) → 6 Battery negative (–) → 4	Battery positive (+) → 1	Regulator moves downward

(b) Inspect operation of the PTC inside the power window regulator motor.

NOTICE:

The work must be performed with the power window regulator and door glass installed in the vehicle.

(1) Set an electrical tester DC 400 A probe to the wire harness of terminal 4 or 6.

NOTICE:

Match the arrow mark of the probe with the current direction.

(2) Fully close the door glass by operating the power window switch and keep the door glass there for approximately 60 seconds.

(3) Try to operate the power window past the fully closed position using the power window switch and measure the time until the electrical current changes into 1 A from 16 to 34 A (Inspection of current shut–off).

Standard: Less than 1 second

(4) Check that the door glass goes down when the power window regulator switch is pushed DOWN.

If the result is not as specified, replace the regulator sub–assy.

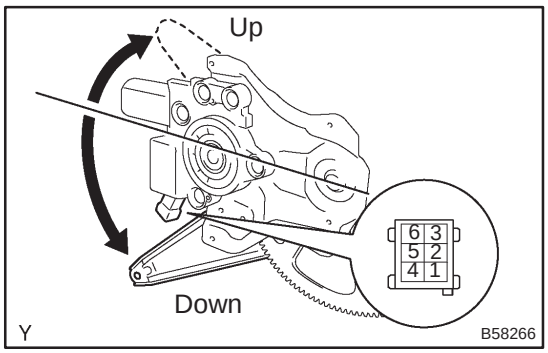

5. INSPECT REAR DOOR WINDOW REGULATOR SUB–ASSY LH

(a) Inspect operation of the power window regulator motor.

(1) Apply battery voltage to the connector terminals.

(2) Check that the regulator smoothly operates.

Standard:

Measurement Condition		Specified Condition
Battery positive (+) → 6 Battery negative (–) → 4	Battery positive (+) → 2	Regulator moves upward
Battery positive (+) → 6 Battery negative (–) → 4	Battery positive (+) → 1	Regulator moves downward

(b) Inspect operation of the PTC inside the power window regulator motor.

NOTICE:

The work must be performed with the power window regulator and door glass installed in the vehicle.

(1) Set an electrical tester DC 400 A probe to the wire harness of terminal 4 or 6.

NOTICE:

Match the arrow mark of the probe with the current direction.

(2) Fully close the door glass by operating the power window switch and keep the door glass there for approximately 60 seconds.

(3) Try to operate the power window past the fully closed position using the power window switch and measure the time until the electrical current changes into 1 A from 16 to 34 A (Inspection of current shut–off).

Standard: Less than 1 second

(4) Check that the door glass goes down when the power window regulator switch is pushed DOWN.

If the result is not as specified, replace the regulator sub–assy.

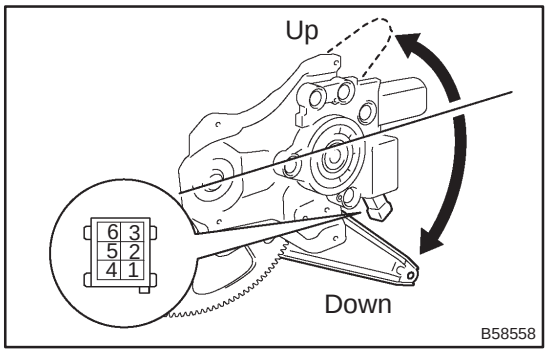

6. INSPECT REAR DOOR WINDOW REGULATOR SUB–ASSY RH

(a) Inspect operation of the power window regulator.

(1) Apply battery voltage to the connector terminals.

(2) Check that the regulator smoothly operates.

Standard:

Measurement Condition		Specified Condition
Battery positive (+) → 6 Battery negative (–) → 4	Battery positive (+) → 2	Regulator moves upward
Battery positive (+) → 6 Battery negative (–) → 4	Battery positive (+) → 1	Regulator moves downward

(b) Inspect operation of the PTC inside the power window regulator motor.

NOTICE:

The work must be performed with the power window regulator and door glass installed in the vehicle.

(1) Set a electrical tester DC 400 A probe to the wire harness of terminal 4 or 6.

NOTICE:

Match the arrow mark of the probe with the current direction.

(2) Fully close the door glass by operating the power window switch and keep the door glass there for approximately 60 seconds.

(3) Try to operate the power window past the fully closed position using the power window switch and measure the time until the electrical current changes into 1 A from 16 to 34 A (Inspection of current shut–off).

Standard: Less than 1 second

(4) Check that the door glass goes down when the power window regulator switch is pushed DOWN.

If the result is not as specified, replace the regulator sub–assy.

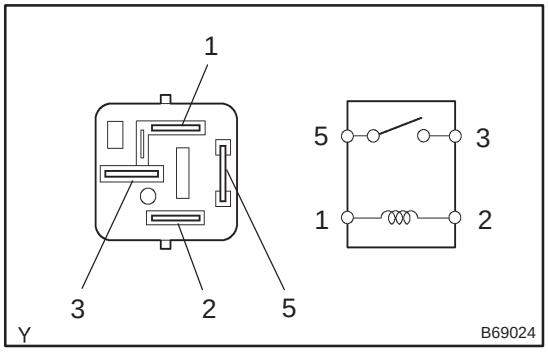

7. INSPECT IG1 RELAY

(a) Check resistance of the relay.

Standard:

Tester Connection	Specified Condition
3 – 5	10 kΩ or higher
	Below 1 Ω (When battery voltage is applied to terminals 1 and 2)

If the result is not as specified, replace the relay.

8. INSPECT INSTRUMENT PANEL JUNCTION BLOCK ASSY (INTEGRATION RELAY)

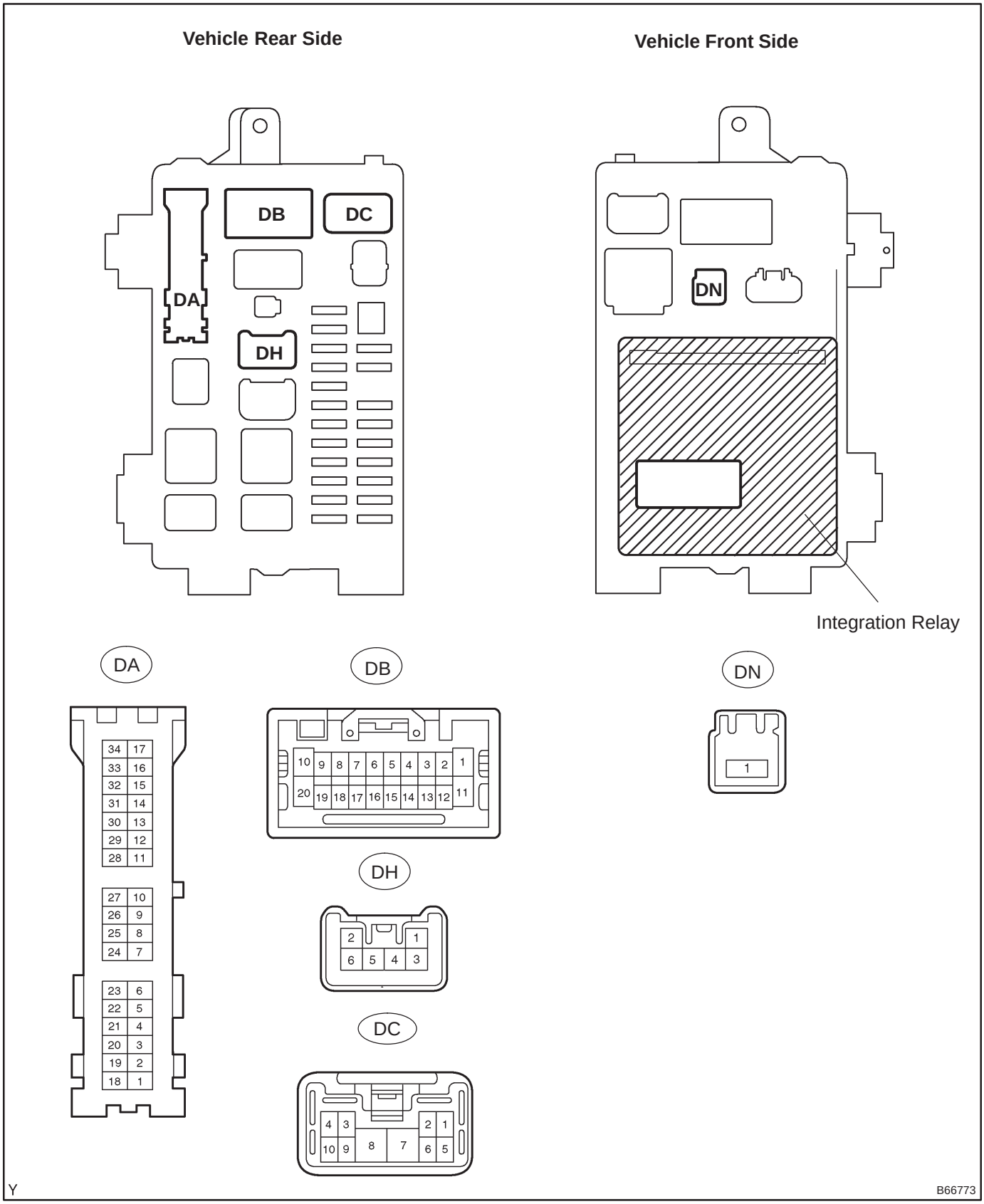

(a) Disconnect the DA, DB, DC, DH and DN J/B connectors.
(b) Check the voltage and resistance between each terminal of the wire harness side connectors and the body ground.
Standard:

Tester Connection	Condition	Specified Condition
DA–8 – Body ground	No key inserted in ignition key cylinder → Yes	10 kΩ or higher → Below 1 Ω
DA–9 – Body ground	Constant	Below 1 Ω
B–13 – Body ground	Driver side door CLOSED → OPEN	10 kΩ or higher → Below 1 Ω
DC–9 – Body ground	Passenger side door CLOSED → OPEN	10 kΩ or higher → Below 1 Ω
DH–5 – Body ground	Ignition switch ON → Others	10 to 14 V → 0 V
DN–1 – Body ground	Constant	10 to 14 V

If the result is not as specified, there may be a malfunction on the wire harness side or the J/B assy (integration relay) may have a malfunction.
(c) Reconnect the DA, DB, DC, DH and DN J/B connectors.
(d) Check the voltage of terminal 5 of the DH connector.
Standard:

Tester Connection	Condition	Specified Condition
DH–5 – Body ground	Ignition switch ON → Others	10 to 14 V → 0 V

If the result is not as specified, there may be a malfunction on the wire harness side or the J/B assy (integration relay) may have a malfunction.

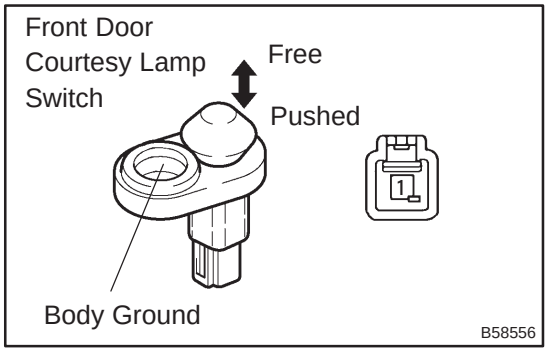

9. INSPECT FRONT DOOR COURTESY LAMP SWITCH ASSY
(a) Remove the courtesy lamp switch.
(b) Check the switch resistance.
Standard:

Tester Connection	Switch Position	Specified Condition
1 – Body ground	Switch pushed	10 kΩ or higher
	Switch free	Below 1 Ω

If the result is not as specified, replace the switch assy.

700SB–01

RESET

NOTICE:

- **The power window regulator motor must be reset when the fitting of the door glass is adjusted or when the door glass run is replaced.**
- **Whenever disconnecting the battery terminal, reset all the other systems besides the power window control system.**

1. RESET WINDOW REGULATOR SUB–ASSY (REGULATOR MOTOR)

(a) Turn the ignition switch ON.
(b) Operate the power window using the master (regulator) switch.
(c) Disconnect the battery, fuse or motor connector while the power window is operating, so that the power window motor is forced to stop.
(d) Reconnect the battery, fuse or motor connector.
(e) Pull up the power window switch until the power window is fully closed and hold the switch at least 1 second.
(f) Check that the AUTO UP/DOWN function operates completely.

WINDSHIELD GLASS

COMPONENTS

700T1–01

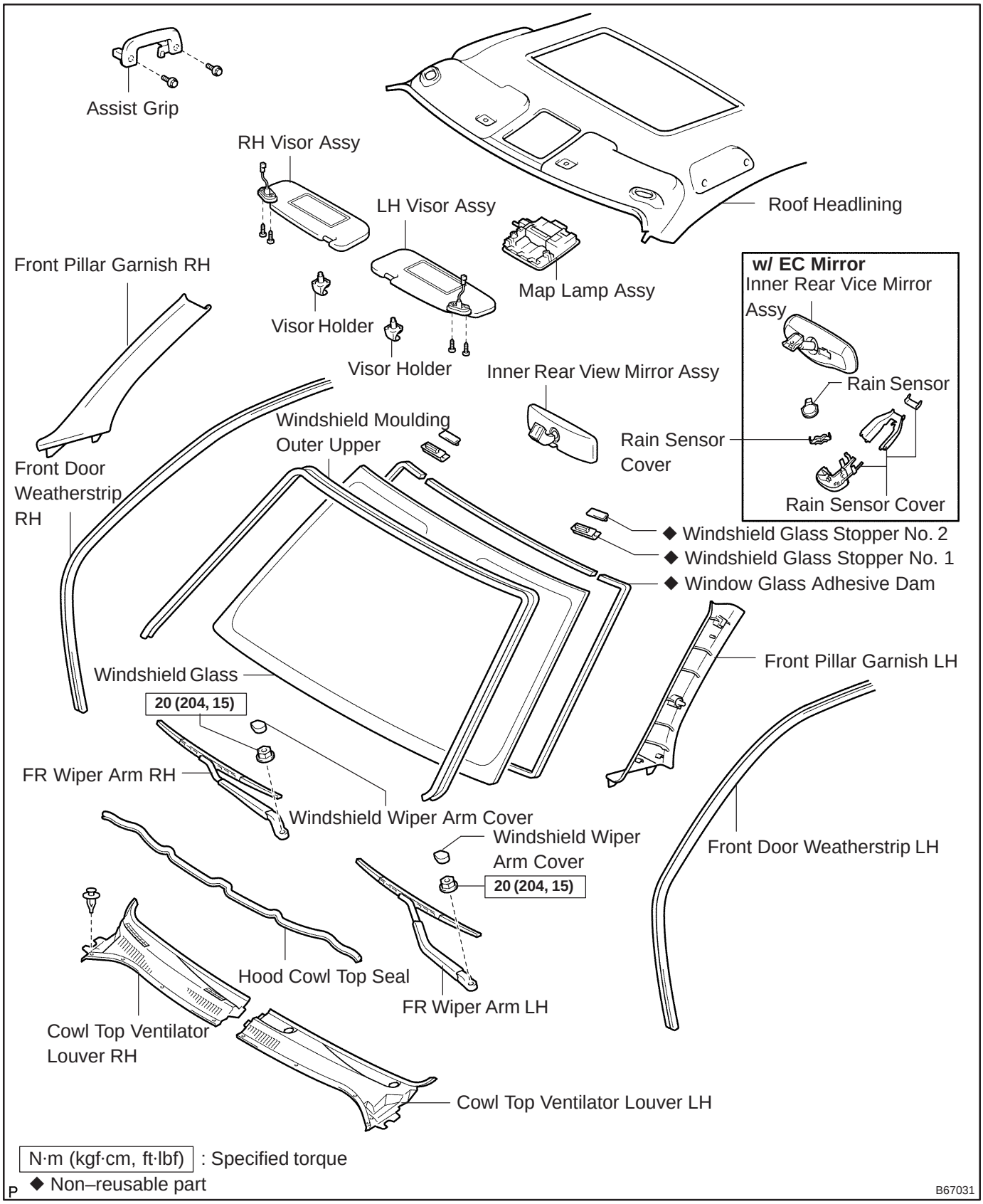

REPLACEMENT

HINT:

The installation is in the reverse order of the removal. However, when there is a special point concerning the installation, it is indicated.

1. REMOVE ROOF HEADLINING ASSY (See page 76–36 or 76–45 or 76–54)

(a) Remove the front door weatherstrip LH.
(b) Remove the front door weatherstrip RH.
(c) Remove the front pillar garnish LH.
(d) Remove the front pillar garnish RH.
(e) Remove the LH visor.
(f) Remove the RH visor.
(g) Remove the assist grip.
(h) Remove the 2 visor holders.
(i) Remove the map lamp assy.
(j) Do not remove the roof headlining assy completely partially so that the windshield glass can be removed.

2. REMOVE INNER REAR VIEW MIRROR ASSY (See page 70–64)

3. REMOVE RAIN SENSOR (See page 66–26)

4. REMOVE COWL TOP VENTILATOR LOUVER (See page66–13)

(a) Remove the 2 windshield wiper arm covers.
(b) Remove the FR wiper arm LH.
(c) Remove the FR wiper arm RH.
(d) Remove the hood to cowl top seal.
(e) Remove the cowl top ventilator louver LH.
(f) Remove the cowl top ventilator louver RH.

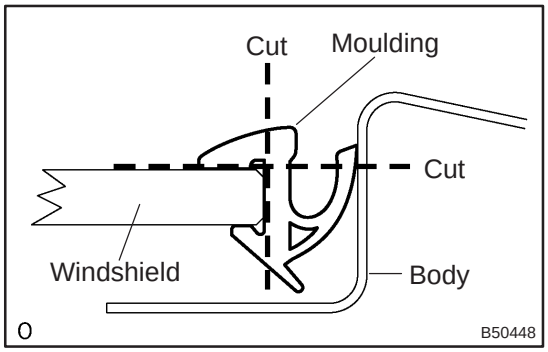

5. REMOVE WINDSHIELD MOULDING OUTER UPPER

(a) Using a knife, cut off the moulding, as shown in the illustration.

NOTICE:

Do not damage the body with the knife.

(b) Remove the remaining moulding.

HINT:

When removing, make a partial cut, then pull and remove it by hand.

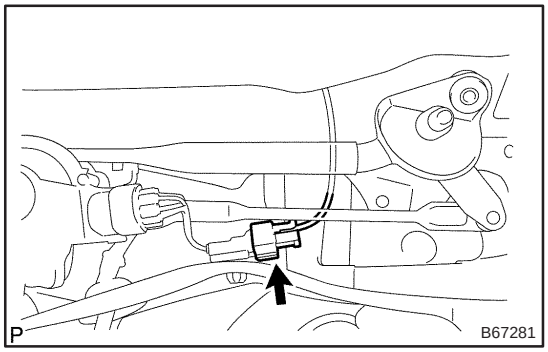

6. DISCONNECT CONNECTOR (W/ DEICER)

(a) Disconnect the deicer connector, as shown in the illustration.

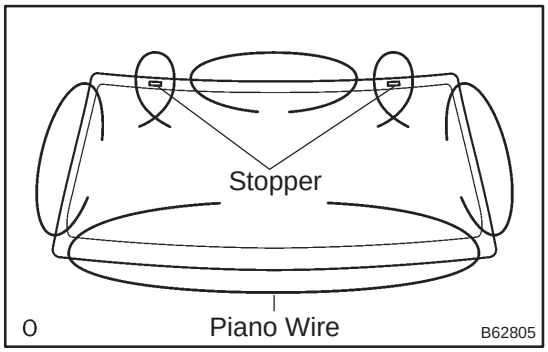

7. REMOVE WINDSHIELD GLASS

(a) Pass a piano wire between the vehicle body and glass from the interior.

(b) Tie both wire ends to wooden blocks or similar objects.

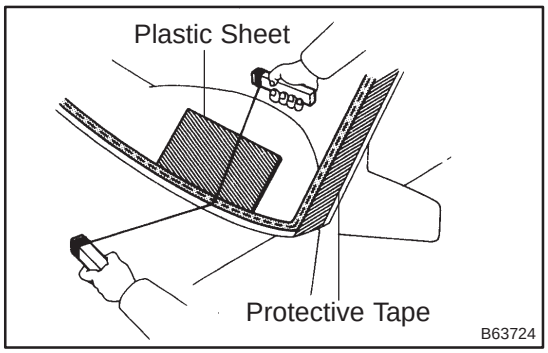

HINT:

Apply protective tape to the outer surface to prevent the surface from being scratched.

NOTICE:

- **When separating the glass, take care not to damage the paint and the interior and exterior ornaments.**
- **To prevent the safety pad from being scratched when removing the glass, place a plastic sheet between the piano wire and safety pad.**

(c) Cut off the adhesive by pulling the piano wire around the glass.

(d) Disengage the stoppers.

(e) Using a suction cup, remove the glass.

NOTICE:

Leave as much adhesive on the body as possible when removing the glass.

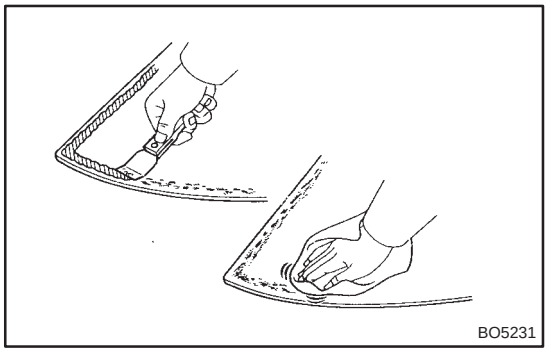

8. CLEAN WINDSHIELD GLASS

(a) Using a scraper, remove the damaged stoppers, dam and adhesive sticking to the glass.

(b) Clean the outer circumference of the glass with white gasoline.

NOTICE:

- **Do not touch the glass surface after cleaning it.**
- **Be careful not to damage the body.**
- **Even if using new glass, clean the glass with white gasoline.**

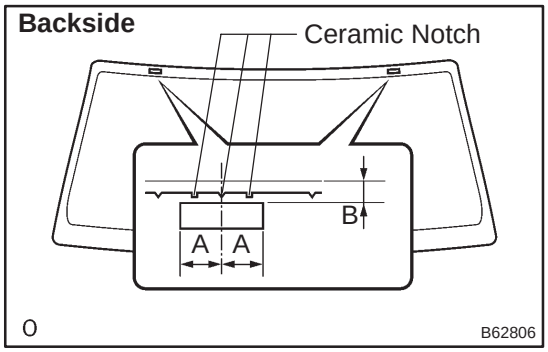

9. INSTALL WINDSHIELD GLASS STOPPER NO.2

(a) Coat the installation part of the stopper with Primer G.

NOTICE:

- **Allow the primer coating to dry for 3 minutes or more.**
- **Do not keep any of the opened Primer G for later use.**
- **Do not apply too much primer.**

(b) Install 2 new stoppers onto the glass, as shown in the illustration.

Standard dimension:

A	40.0 mm (1.575 in.)
B	7.7 mm (0.303 in.)

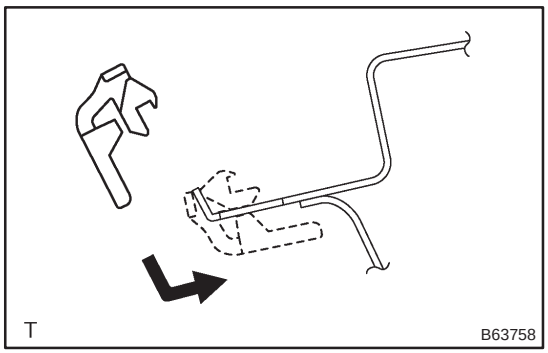

10. INSTALL WINDSHIELD GLASS STOPPER NO.1

(a) Install 2 new stoppers to the vehicle body, as shown in the illustration.

11. INSTALL WINDOW GLASS ADHESIVE DAM

(a) Coat the installation part of the window glass adhesive dam with Primer G.

NOTICE:

- **Allow the primer coating to dry for 3 minutes or more.**
- **Do not apply too much primer.**

(b) Install a new dam, applying double–sided tape all the way around the glass except where the dam is installed, as shown in the illustration.

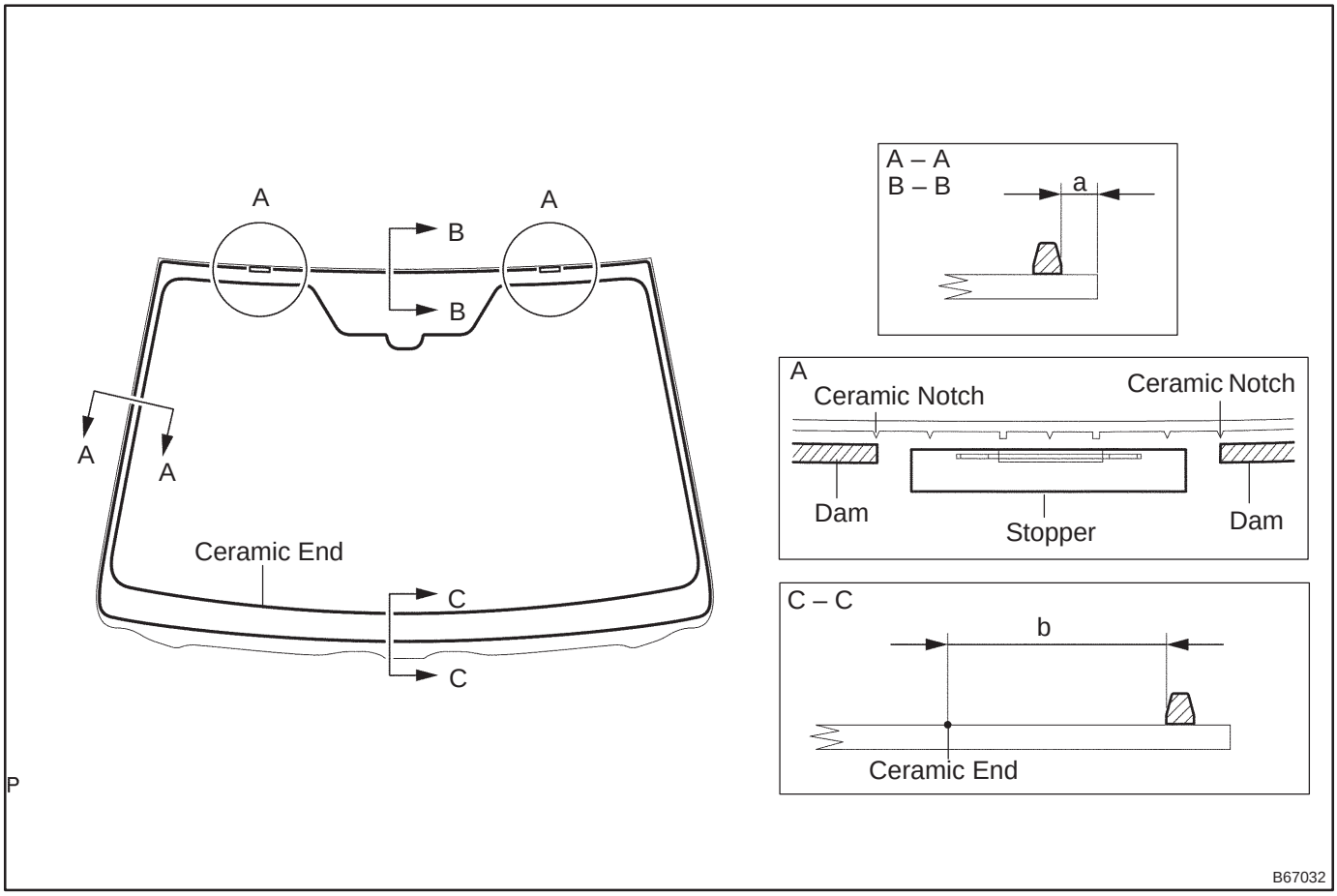

Standard dimension:

a	7.0 mm (0.276 in.)
b	56.0 mm (2.205 in.)

12. INSTALL WINDSHIELD MOULDING OUTER UPPER

(a) Using a brush or sponge, coat the edge of the glass and the contact surface with Primer G.

NOTICE:

- **Allow the primer coating to dry for 3 minutes or more.**
- **Do not coat the adhesive with Primer G.**
- **Do not keep any of the opened Primer G for later use.**

(b) Install the moulding.

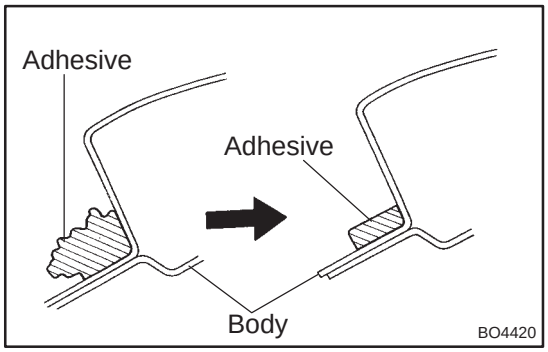

13. INSTALL WINDSHIELD GLASS

(a) Clean and shape the contact surface of the vehicle body.

(1) Using a knife, cut away any rough adhesive on the contact surface of the vehicle body to ensure the appropriate surface shape.

HINT:

Leave as much adhesive on the vehicle body as possible.

(2) Clean the contact surface of the vehicle body with a piece of shop rag saturated with cleaner.

HINT:

Even if all the adhesive has been removed, clean the vehicle body.

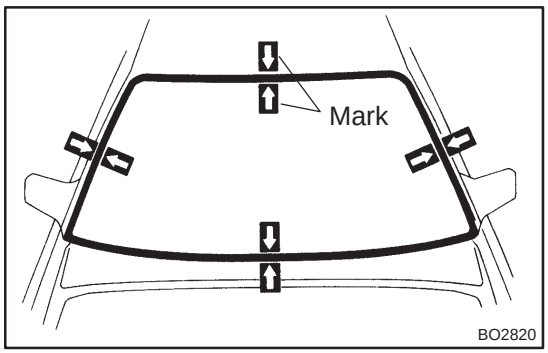

(b) Position the glass.

(1) Using a suction cup, place the glass in the correct position.

(2) Check that the whole contact surface of the glass rim is perfectly even.

(3) Place reference marks between the glass and vehicle body.

NOTICE:

Check that the stoppers are attached to the vehicle body correctly.

HINT:

When reusing the glass, check and correct the reference mark positions.

(4) Remove the glass.

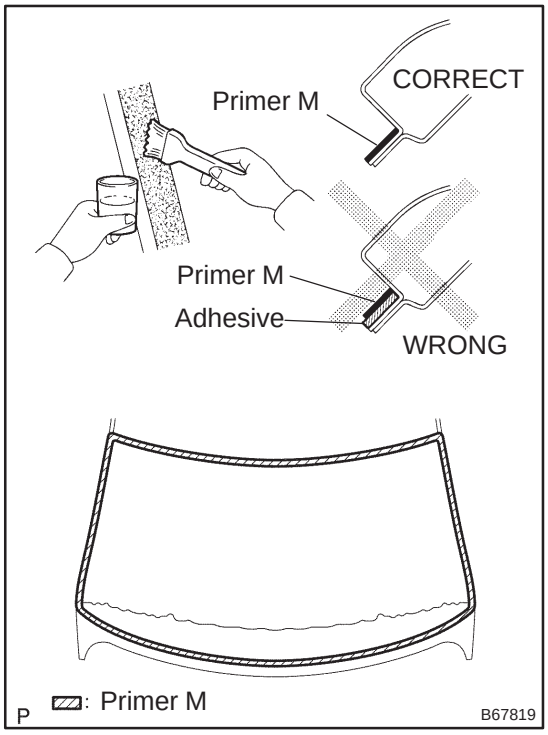

(c) Using a brush, coat the exposed part of the vehicle body on the vehicle side with Primer M.

NOTICE:

- **Allow the primer coating to dry for 3 minutes or more.**
- **Do not coat the adhesive with Primer M.**
- **Do not keep any of the opened Primer M for later use.**

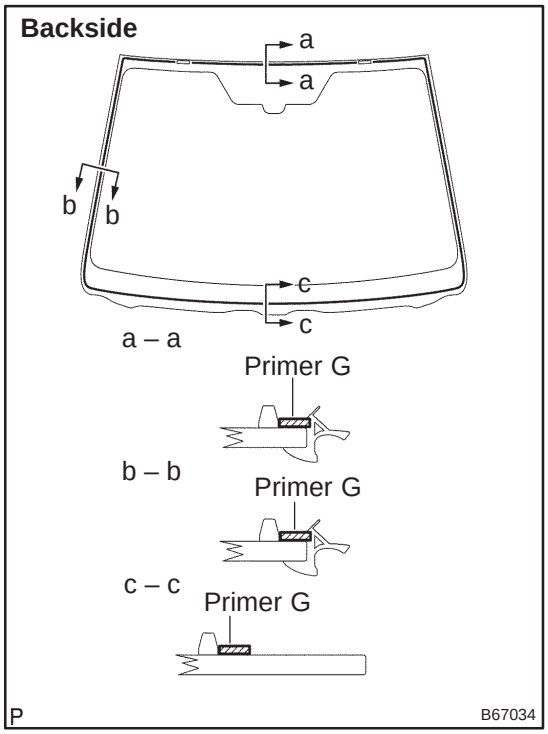

(d) Using a brush or sponge, coat the edge of the glass and the contact surface with Primer G.

HINT:

If an area other than that specified is coated by accident, wipe off the primer with a clean shop rag before it dries.

NOTICE:

- **Allow the primer coating to dry for 3 minutes or more.**
- **Do not keep any of the opened Primer G for later use.**

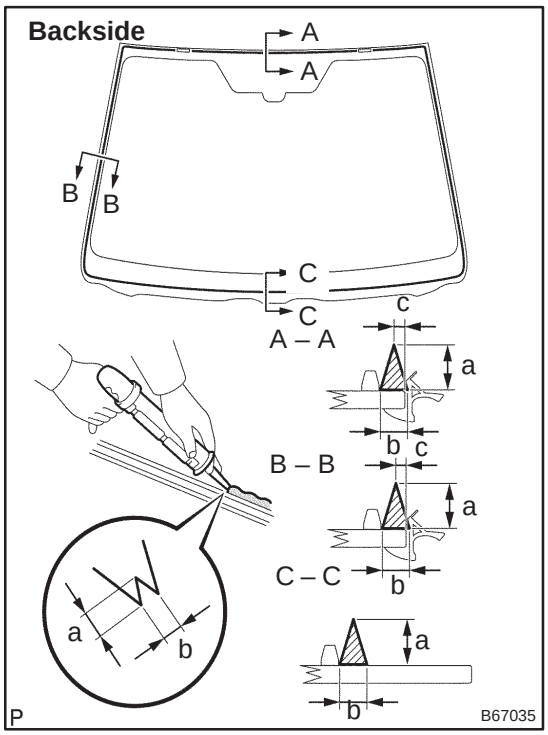

(e) Apply adhesive.

Adhesive: Part No. 08850–00801 or equivalent

(1) Cut off the tip of the cartridge nozzle, as shown in the illustration.

HINT:

After cutting off the tip, use all adhesive within the time described in the table below.

Tackfree time:

Temperature	Tackfree Time
35°C (95°F)	15 minutes
20°C (68°F)	1 hour 40 minutes
5°C (41°F)	8 hours

(2) Load the sealer gun with the cartridge.

(3) Coat the glass with adhesive, as shown in the illustration.

Standard dimension:

a	12.5 mm (0.492 in.)
b	8.0 mm (0.315 in.)
c	3.0 mm (0.118 in.)

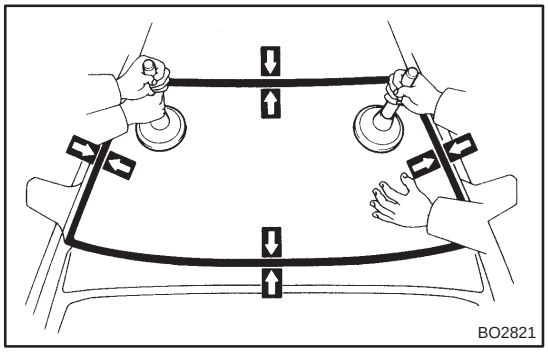

(f) Install the glass to the body.

(1) Using a suction cup, position the glass so that the reference marks are aligned, and press it in gently along the rim.

NOTICE:

- **Allow the primer coating to dry for 3 minutes or more.**
- **Check that the stoppers are attached to the vehicle body correctly.**
- **Check the clearance between the vehicle body and glass.**

(2) Lightly press the front surface of the glass to ensure a close fit.

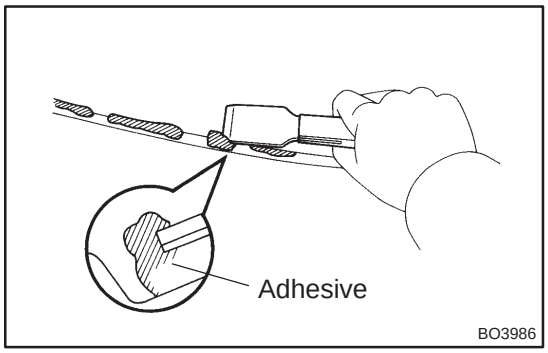

(3) Using a scraper, remove any excess or protruding adhesive.

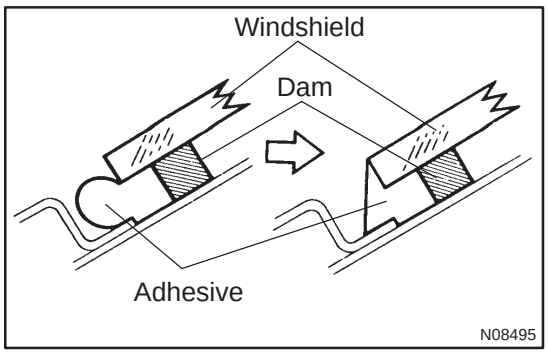

HINT:
Apply adhesive onto the glass rim.

NOTICE:
Take care not to drive the vehicle for the time described in the table below.

Minimum time:

Temperature	Minimum time prior to driving vehicle
35˚C (95˚F)	1 hour 30 minutes
20˚C (68˚F)	5 hours
5˚C (41˚F)	24 hours

14. INSPECT FOR LEAKS AND REPAIR

(a) Conduct a leak test after the adhesive has completely hardened.
(b) Seal any leaks with auto glass sealer.

QUARTER WINDOW ASSY LH (WAGON MODELS)

700T3–01

COMPONENTS

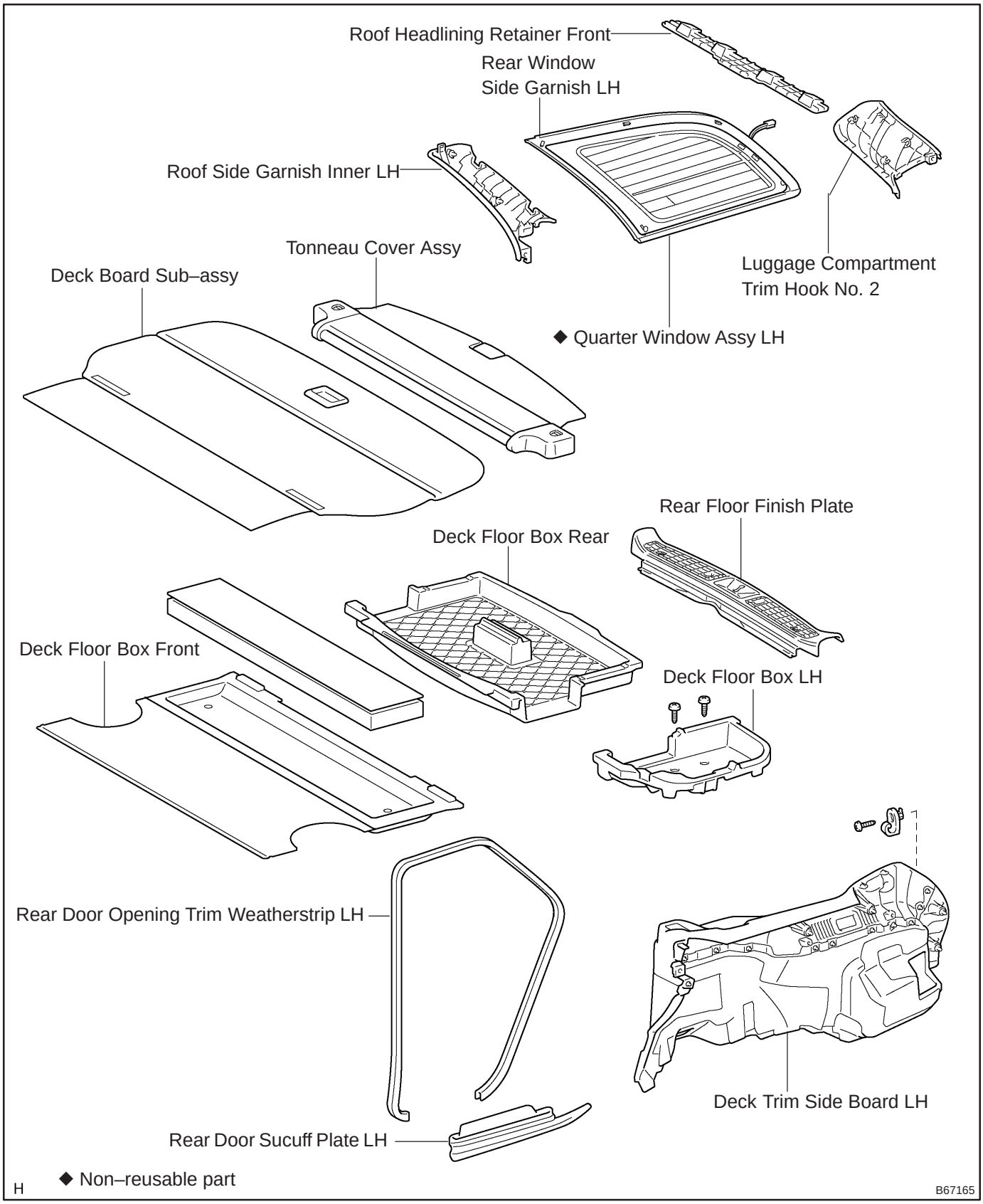

REPLACEMENT

HINT:

- The installation is in the reverse order of the removal. However, when there is a special point concerning the installation, it is indicated.
- Use the same procedures on the RH side as on the LH side.

1. REMOVE REAR WINDOW SIDE GARNISH LH (See page 76–54)

(a) Remove the rear door opening trim weatherstrip LH
(b) Remove the rear door scuff plate.
(c) Remove the tonneau cover.
(d) Remove the deck board.
(e) Remove the deck floor box rear.
(f) Remove the deck floor box.
(g) Remove the deck floor box front.
(h) Remove the rear floor finish plate.
(i) Remove the roof headlining retainer front.
(j) Remove the luggage compartment trim hook No. 2.
(k) Remove the deck trim side board.
(l) Remove the roof side garnish inner.
(m) Remove the rear window side garnish.

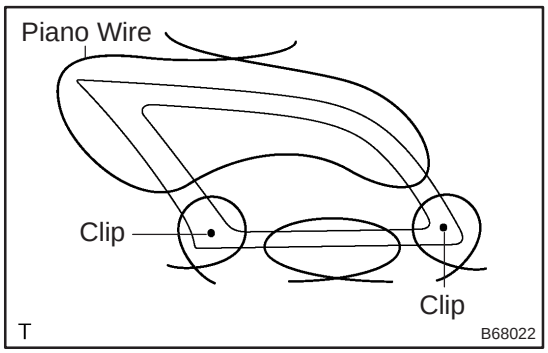

2. REMOVE QUARTER WINDOW ASSY LH

(a) Disconnect the connectors.
(b) Pass a piano wire between the vehicle body and glass from the interior.
(c) Tie both wire ends to wooden blocks or similar objects.

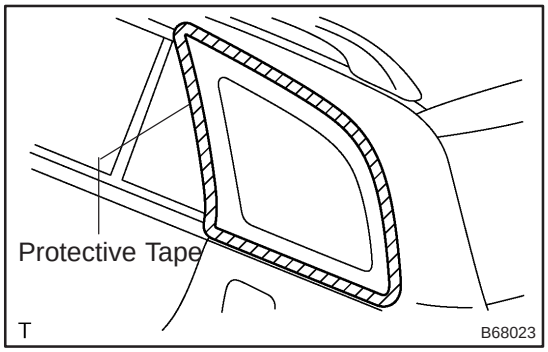

HINT:

Apply protective tape to the outer surface to prevent the surface from being scratched.

NOTICE:

When separating the glass, take care not to damage the paint and the interior and exterior ornaments.

(d) Cut off the adhesive by pulling the piano wire around the glass.
(e) Using a suction rubber, remove the glass.

NOTICE:

Leave as much adhesive on the body as possible when removing the glass.

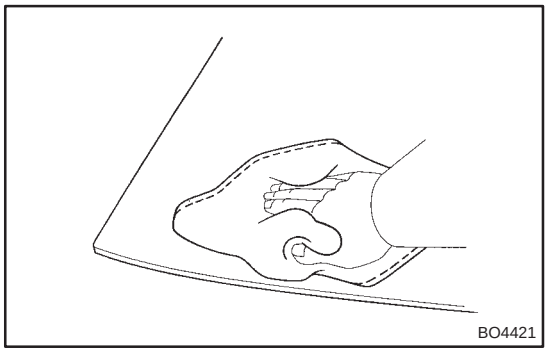

3. CLEAN QUARTER WINDOW ASSY LH

(a) Clean the outer circumference of the glass with white gasoline.

NOTICE:

- **Do not touch the glass surface after cleaning it.**

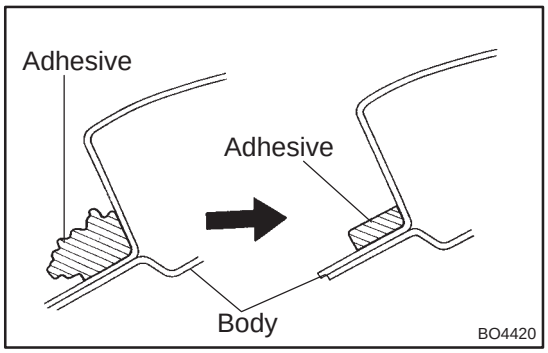

4. INSTALL QUARTER WINDOW ASSY LH

(a) Clean and shape the contact surface of the vehicle body.

(1) Using a knife, cut away any rough adhesive on the contact surface of the body to ensure the appropriate surface shape.

HINT:

Leave as much adhesive on the body as possible.

(2) Clean the contact surface of the body with a piece of shop rag saturated with cleaner.

HINT:

Even if all the adhesive has been removed, clean the body.

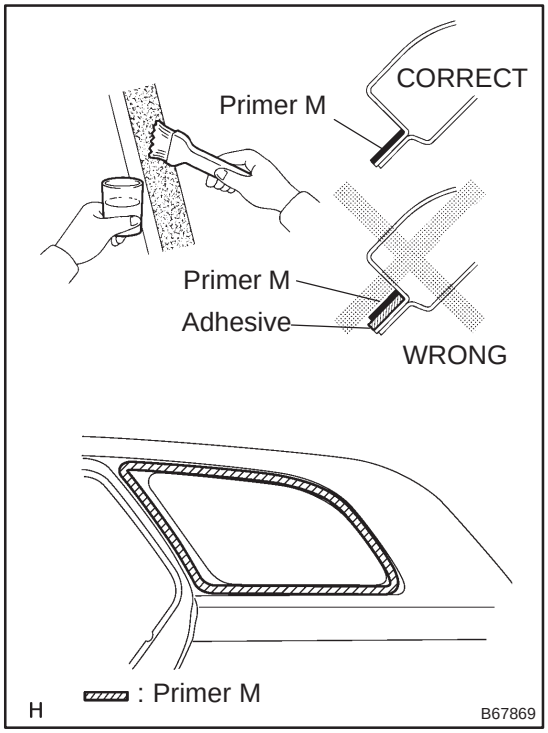

(b) Using a brush, coat the exposed part of the body on the vehicle side with Primer M.

NOTICE:

- **Allow the primer coating to dry for 3 minutes or more.**
- **Do not coat the adhesive with Primer M.**
- **Do not keep any of the opened Primer M for later use.**

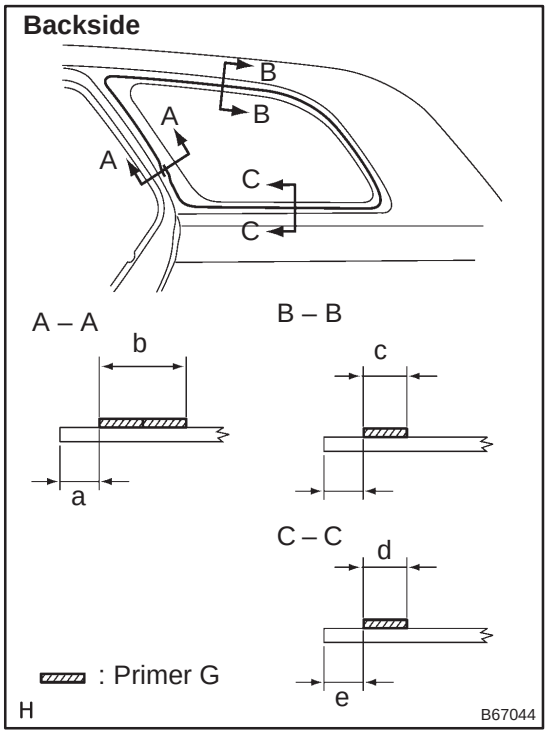

(c) Using a brush or sponge, coat the edge of the glass and the contact surface with Primer G.

Standard dimension:

a	5.5 mm (0.217 in.)
b	19.0 mm (0.748 in.)
c	11.0 mm (0.433 in.)
d	11.0 mm (0.433 in.)
e	7.5 mm (0.295 in.)

HINT:

If an area other than that specified is coated by accident, wipe off the primer with a clean shop rag before it dries.

NOTICE:

- **Allow the primer coating to dry for 3 minutes or more.**
- **Do not keep any of the opened Primer G for later use.**

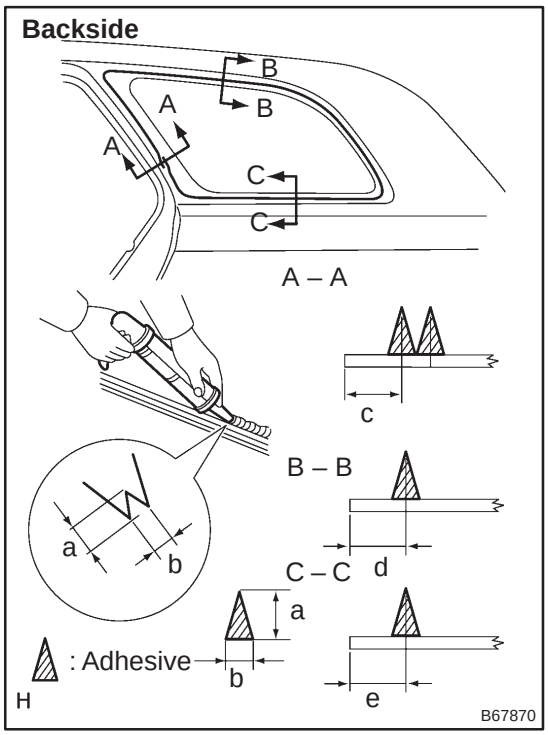

(d) Apply adhesive.

Adhesive: Part No. 08850–00801 or equivalent

(1) Cut off the tip of the cartridge nozzle, as shown in the illustration.

HINT:

After cutting off the tip, use all adhesive within the time described in the table below.

Tackfree time:

Temperature	Tackfree Time
35°C (95°F)	15 minutes
20°C (68°F)	1 hour 40 minutes
5°C (41°F)	8 hours

(2) Load the sealer gun with the cartridge.

(3) Coat the glass with adhesive, as shown in the illustration.

Standard dimension:

a	12.5 mm (0.492 in.)
b	8.0 mm (0.315 in.)
c	9.5 mm (0.374 in.)
d	11.0 mm (0.433 in.)
e	11.5 mm (0.453 in.)

(e) Install the glass to the body.

(1) Hold the quarter window in place securely with protective tape or equivalent until the adhesive hardens.

NOTICE:

- **Allow the primer coating to dry for 3 minutes or more.**
- **Check that the clips are attached to the body correctly.**
- **Check the clearance between the body and glass.**

(2) Lightly press the front surface of the glass to ensure a close fit.

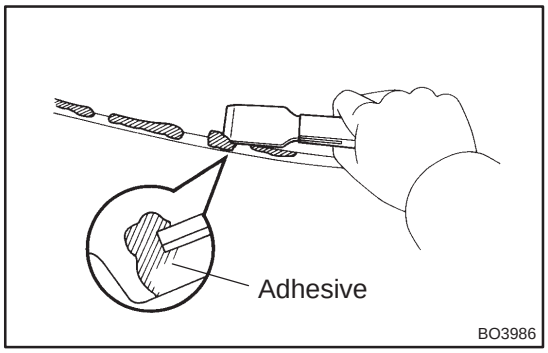

(3) Using a scraper, remove any excess or protruding adhesive.

HINT:

Apply adhesive onto the glass rim.

NOTICE:

Take care not to drive the vehicle for the time described in the table below.

Minimum time:

Temperature	Minimum time prior to driving the vehicle
35˚C (95˚F)	1 hour 30 minutes
20˚C (68˚F)	5 hours
5˚C (41˚F)	24 hours

5. INSPECT FOR LEAKS AND REPAIR

(a) Conduct a leak test after the adhesive has completely hardened.

(b) Seal any leaks with auto glass sealer.

BACK WINDOW GLASS (SEDAN MODELS)

COMPONENTS

700T5–01

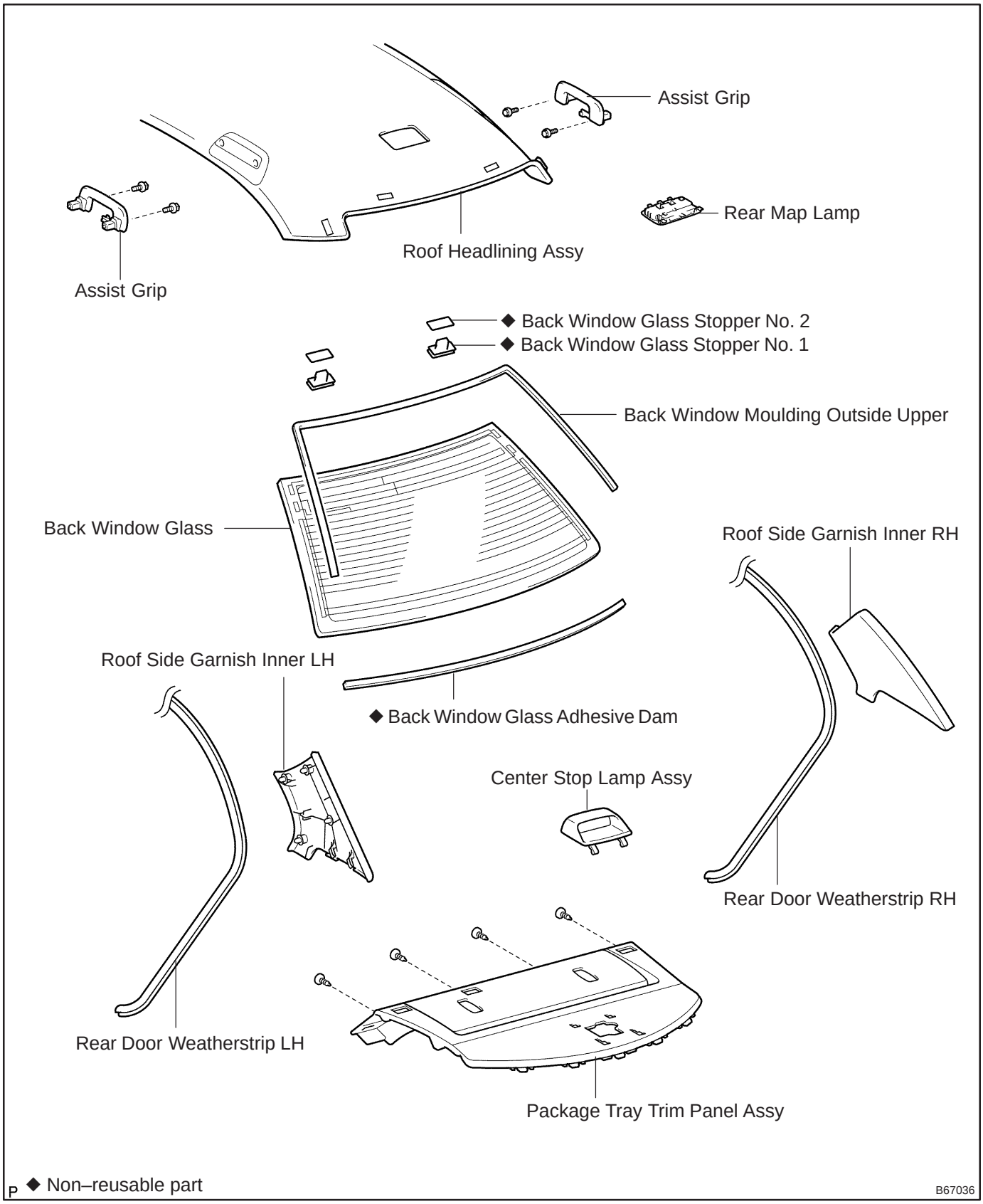

P ◆ Non–reusable part

B67036

700T6–01

REPLACEMENT

HINT:

The installation is in the reverse order of the removal. However, when there is a special point concerning the installation, it is indicated.

1. REMOVE REAR SEAT CUSHION ASSY (See page 72–27 or 72–32)

2. REMOVE REAR SEATBACK ASSY (See page 72–27 or 72–32)

3. REMOVE ROOF HEADLINING ASSY (See page 76–36)

(a) Remove the rear door weatherstrip LH.

(b) Remove the rear door weatherstrip RH.

(c) Remove the roof side garnish inner LH.

(d) Remove the roof side garnish inner RH.

(e) Remove the 2 assist grips.

(f) Remove the rear map lamp.

(g) Remove the roof headlining assy.

4. REMOVE CENTER STOP LAMP ASSY (See page 65–26)

5. REMOVE PACKAGE TRAY TRIM PANEL ASSY (See page 61–15)

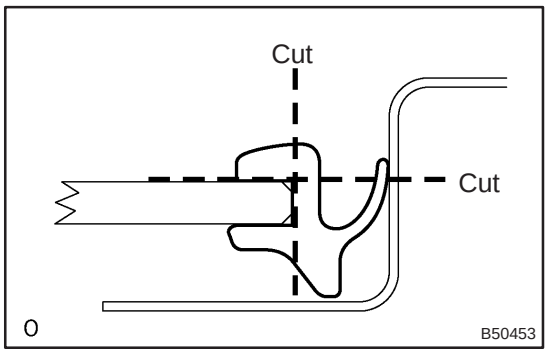

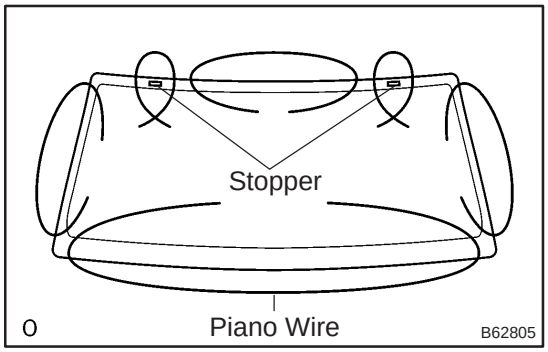

6. REMOVE BACK WINDOW MOULDING OUTSIDE UPPER

(a) Using a knife, cut off the moulding, as shown in the illustration.

NOTICE:

Do not damage the vehicle body with the knife.

(b) Remove the remaining moulding.

HINT:

When removing, make a partial cut, then pull and remove it by hand.

7. REMOVE BACK WINDOW GLASS

(a) Pass a piano wire between the vehicle body and glass from the interior.

(b) Tie both wire ends to wooden blocks or similar objects.

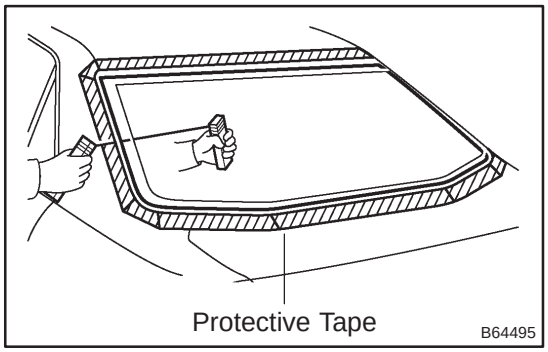

HINT:
Apply protective tape to the outer surface to prevent the surface from being scratched.

NOTICE:

- **When separating the glass, take care not to damage the paint and interior and exterior ornaments.**

(c) Cut off the adhesive by pulling the piano wire around the glass.
(d) Disengage the stoppers.
(e) Using a suction cup, remove the glass.

NOTICE:

Leave as much adhesive on the body as possible when removing the glass.

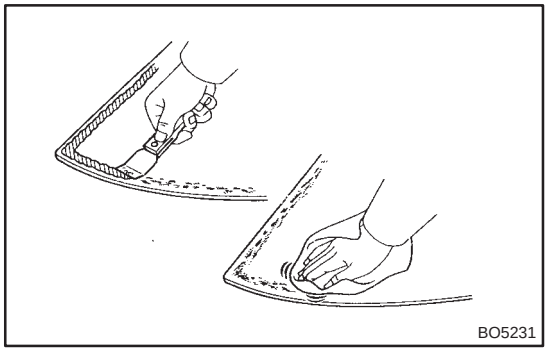

8. CLEAN BACK WINDOW GLASS

(a) Using a scraper, remove the damaged stoppers, dam and adhesive sticking to the glass.
(b) Clean the outer circumference of the glass with white gasoline.

NOTICE:

- **Do not touch the glass surface after cleaning it.**
- **Be careful not to damage the body.**
- **Even if using new glass, clean the glass with white gasoline.**

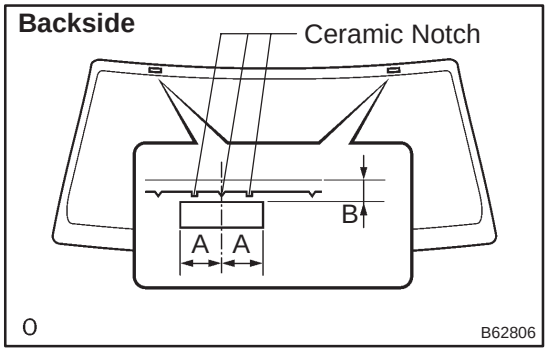

9. INSTALL BACK WINDW GLASS STOPPER NO.2

(a) Coat the installation part of the stopper with Primer G.

NOTICE:

- **Allow the primer coating to dry for 3 minutes or more.**
- **Do not keep any of the opened Primer G for later use.**
- **Do not apply too much primer.**

(b) Install 2 new stoppers onto the glass, as shown in the illustration.

Standard dimension:

A	40.0 mm (1.575 in.)
B	11.3 mm (0.445 in.)

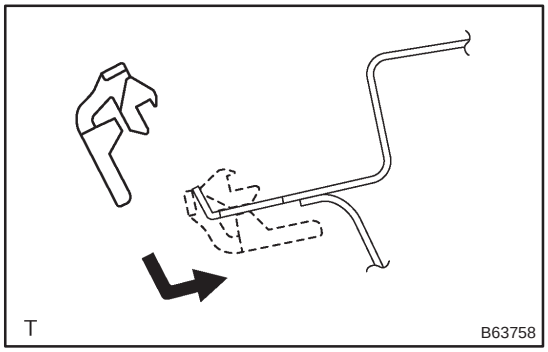

10. INSTALL BACK WINDOW GLASS STOPPER NO.1

(a) Install 2 new stoppers to the vehicle body, as shown in the illustration.

11. INSTALL BACK WINDOW MOULDING OUTSIDE UPPER

(a) Using a brush or sponge, coat the edge of the glass and the contact surface with Primer G.

NOTICE:

- **Allow the primer coating to dry for 3 minutes or more.**
- **Do not coat the adhesive with Primer G.**
- **Do not keep any of the opened Primer G for later use.**

(b) Install the moulding.

12. INSTALL BACK WINDOW GLASS ADHESIVE DAM

(a) Coat the installation part of the back window glass adhesive dam with Primer G.

NOTICE:

- **Allow the primer coating to dry for 3 minutes or more.**
- **Do not apply too much primer.**

(b) Install a new dam, applying double–sided tape all the way around the glass except where the dam is installed, as shown in the illustration

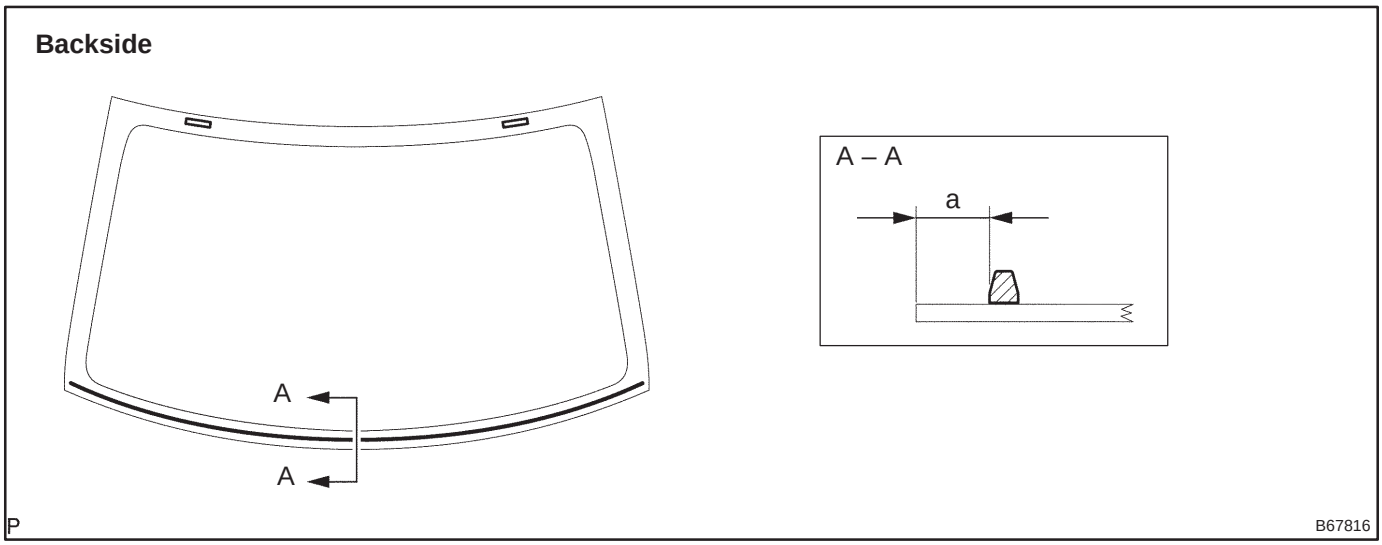

Standard dimension (a) : 14.0 mm (0.551 in.)

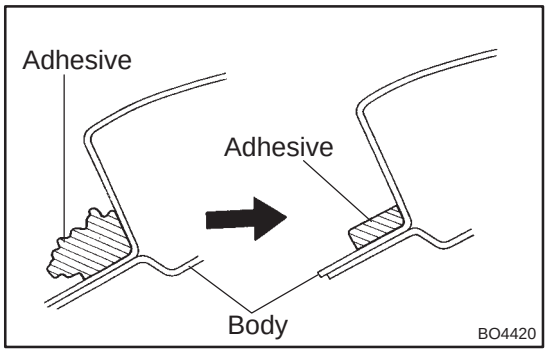

13. INSTALL BACK WINDOW GLASS

(a) Clean and shape the contact surface of the vehicle body.

(1) Using a knife, cut away any rough adhesive on the contact surface of the vehicle body to ensure the appropriate surface shape.

HINT:

Leave as much adhesive on the vehicle body as possible.

(2) Clean the contact surface of the vehicle body with a piece of shop rag saturated with cleaner.

HINT:

Even if all the adhesive has been removed, clean the vehicle body.

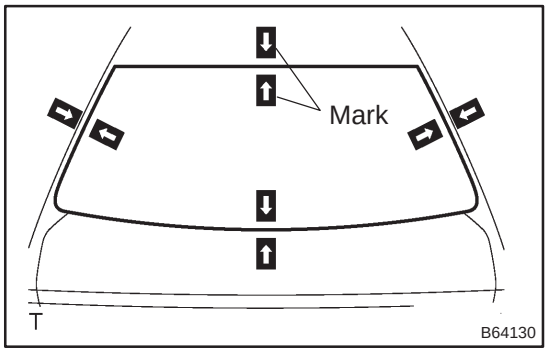

(b) Position the glass.

(1) Using a suction cup, place the glass in the correct position.

(2) Check that the whole contact surface of the glass rim is perfectly even.

(3) Place reference marks between the glass and vehicle body.

NOTICE:

Check that the stoppers are attached to the vehicle body correctly.

HINT:

When reusing the glass, check and correct the reference mark positions.

(4) Remove the glass.

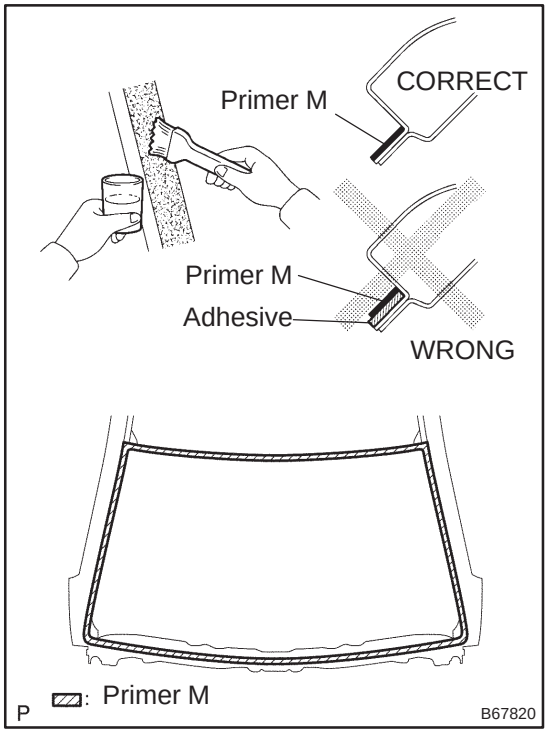

(c) Using a brush, coat the exposed part of the vehicle body with Primer M.

NOTICE:

- **Allow the primer coating to dry for 3 minutes or more.**
- **Do not coat the adhesive with Primer M.**
- **Do not keep any of the opened Primer M for later use.**

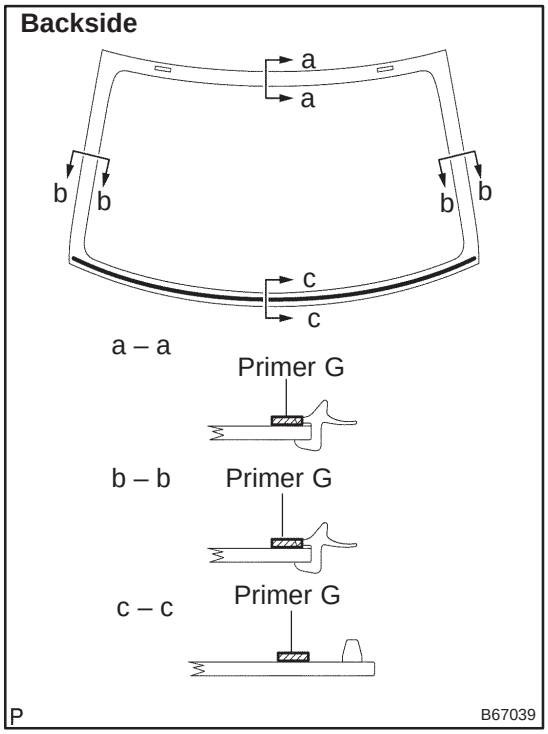

(d) Using a brush or sponge, coat the edge of the glass and the contact surface with Primer G.

HINT:

If an area other than that specified is coated by accident, wipe off the primer with a clean shop rag before it dries.

NOTICE:

- **Allow the primer coating to dry for 3 minutes or more.**
- **Do not keep any of the opened Primer G for later use.**

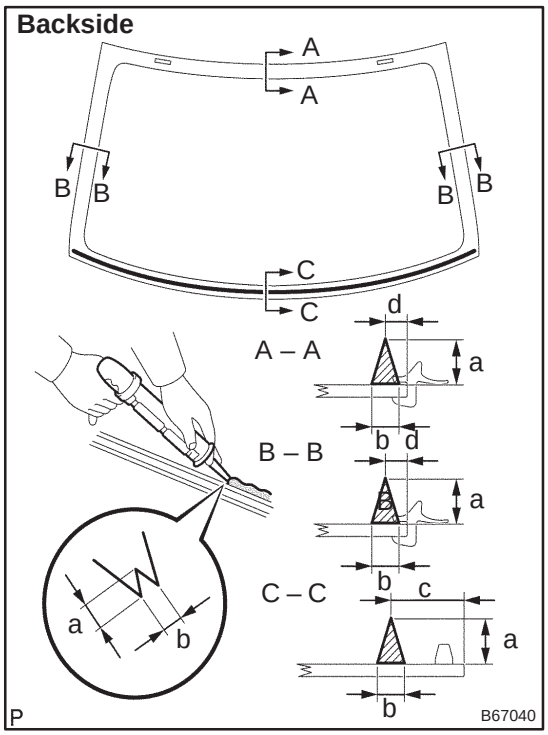

(e) Apply adhesive.

Adhesive: Part No. 08850–00801 or equivalent

(1) Cut off the tip of the cartridge nozzle, as shown in the illustration.

HINT:

After cutting off the tip, use all adhesive within the time described in the table below.

Tackfree time:

Temperature	Tackfree Time
35°C (95°F)	15 minutes
20°C (68°F)	1 hour 40 minutes
5°C (41°F)	8 hours

(2) Load the sealer gun with the cartridge.

(3) Coat the glass with adhesive, as shown in the illustration.

Standard dimension:

a	12.5 mm (0.492 in.)
b	8.0 mm (0.315 in.)
c	21.0 mm (0.827 in.)
d	6.5 mm (0.226 in.)

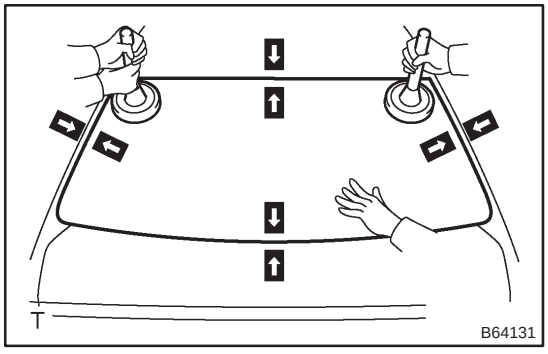

(f) Install the glass.

(1) Using a suction cup, position the glass so that the reference marks are aligned, and press it in gently along the rim.

NOTICE:

- **Allow the primer coating to dry for 3 minutes or more.**
- **Check that the stoppers are attached to the vehicle body correctly.**

- **Check the clearance between the vehicle body and glass.**

(2) Lightly press the front surface of the glass to ensure a close fit.

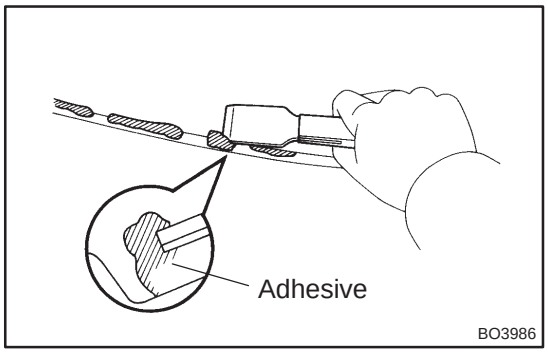

(3) Using a scraper, remove any excess or protruding adhesive.

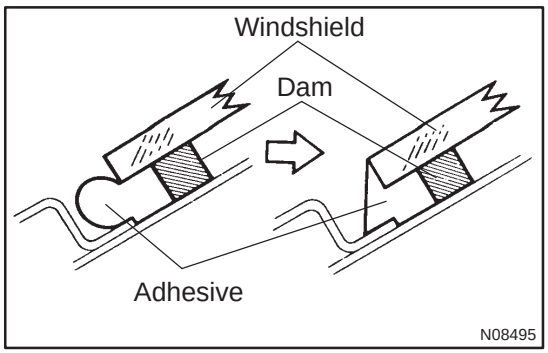

HINT:
Apply adhesive onto the glass rim.

NOTICE:
Take care not to drive the vehicle for the time described in the table below.

Minimum time:

Temperature	Minimum time prior to driving vehicle
35˚C (95˚F)	1 hour 30 minutes
20˚C (68˚F)	5 hours
5˚C (41˚F)	24 hours

14. INSPECT FOR LEAKS AND REPAIR

(a) Conduct a leak test after the adhesive has completely hardened.
(b) Seal any leaks with auto glass sealer.

BACK DOOR GLASS (LIFTBACK MODELS)

COMPONENTS

700T7–01

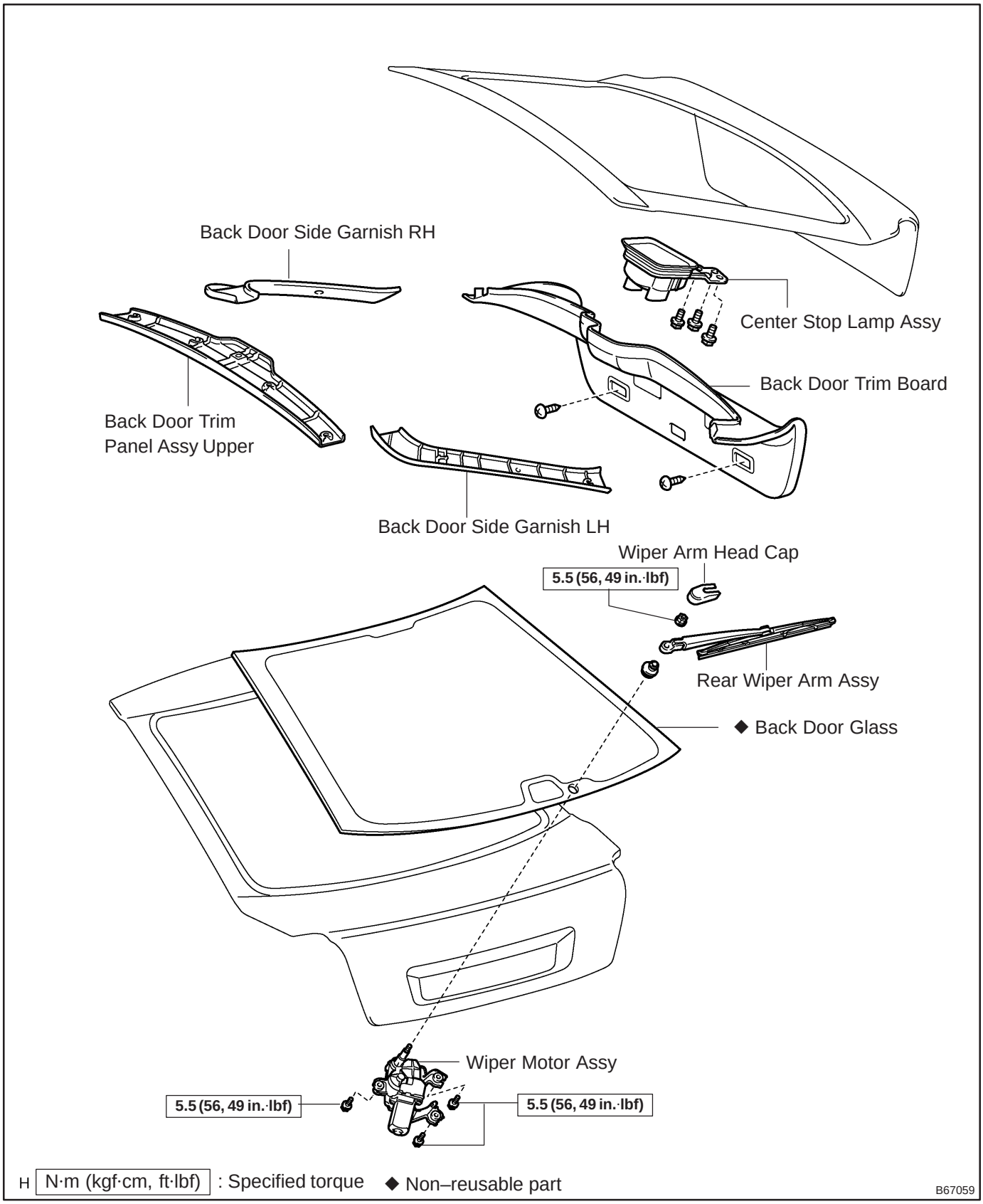

H N·m (kgf·cm, ft·lbf) : Specified torque ◆ Non–reusable part

B67059

700T8–01

REPLACEMENT

HINT:

The installation is in the reverse order of the removal. However, when there is a special point concerning the installation, it is indicated.

1. REMOVE BACK DOOR TRIM BOARD ASSY (See page 75–40)

(a) Remove the back door trim panel assy upper.
(b) Remove the back door side garnish LH.
(c) Remove the back door side garnish RH.
(d) Remove the back door trim board.

2. REMOVE CENTER STOP LAMP ASSY (See page 65–26)

3. REMOVE REAR WIPER MOTOR ASSY (See page 66–17)

(a) Remove the wiper arm head cap.
(b) Remove the rear wiper arm.
(c) Remove the wiper motor.

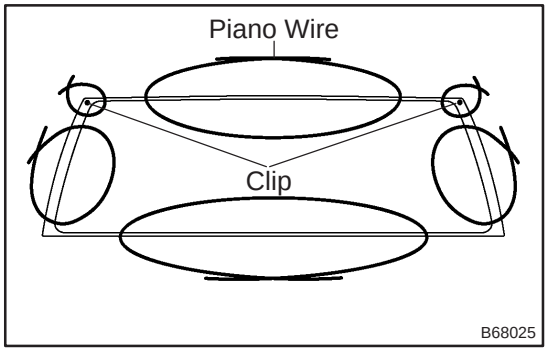

4. REMOVE BACK DOOR GLASS

(a) Pass a piano wire between the body and glass from the interior.
(b) Tie both wire ends to wooden blocks or similar objects.

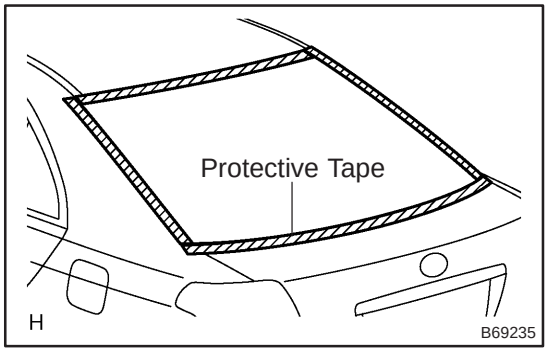

HINT:

Apply protective tape to the outer surface to prevent the surface from being scratched.

NOTICE:

When separating the glass, take care not to damage the paint and interior and exterior ornaments.

(c) Cut off the adhesive by pulling the piano wire around the glass.
(d) Using a suction rubber, remove the glass.

NOTICE:

Leave as much adhesive on the body as possible when removing the glass.

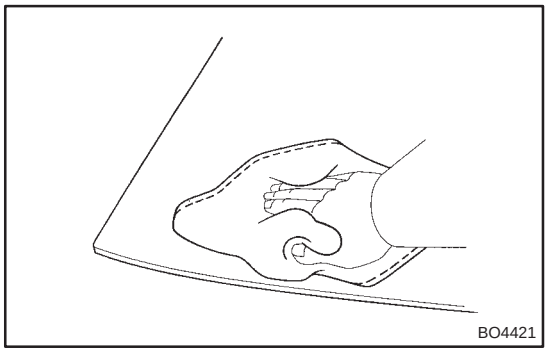

5. CLEAN BACK DOOR GLASS

(a) Clean the outer circumference of the glass with white gasoline.

NOTICE:

- **Do not touch the glass surface after cleaning it.**
- **Be careful not to damage the body.**

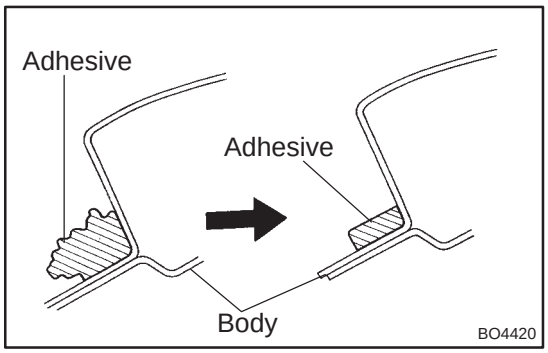

6. INSTALL BACK DOOR GLASS

(a) Clean and shape the contact surface of the vehicle body.

(1) Using a knife, cut away any rough adhesive on the contact surface of the body to ensure the appropriate surface shape.

HINT:

Leave as much adhesive on the body as possible.

(2) Clean the contact surface of the body with a piece of shop rag saturated with cleaner.

HINT:

Even if all the adhesive has been removed, clean the body.

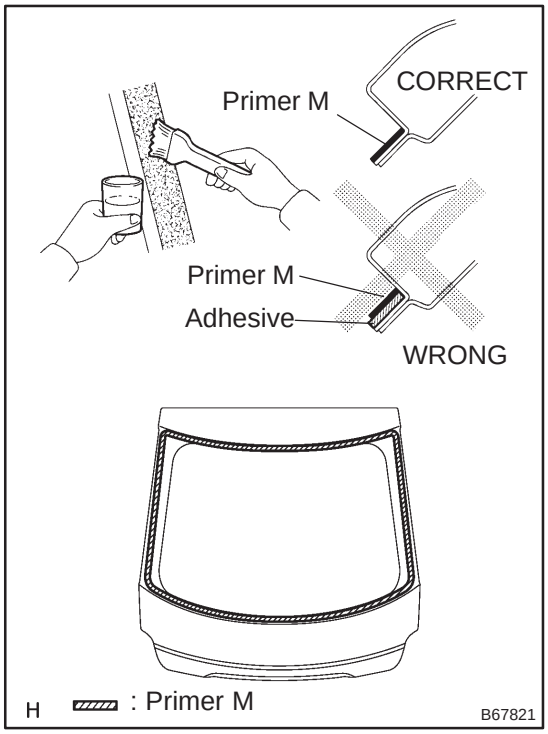

(b) Using a brush, coat the exposed part of the body on the vehicle side with Primer M.

NOTICE:

- **Allow the primer coating to dry for 3 minutes or more.**
- **Do not coat the adhesive with Primer M.**
- **Do not keep any of the opened Primer M for later use.**

(c) Using a brush or sponge, coat the edge of the glass and the contact surface with Primer G.

HINT:

If an area other than that specified is coated by accident, wipe off the primer with a clean shop rag before it dries.

NOTICE:

- **Allow the primer coating to dry for 3 minutes or more.**
- **Do not keep any of the opened Primer G for later use.**

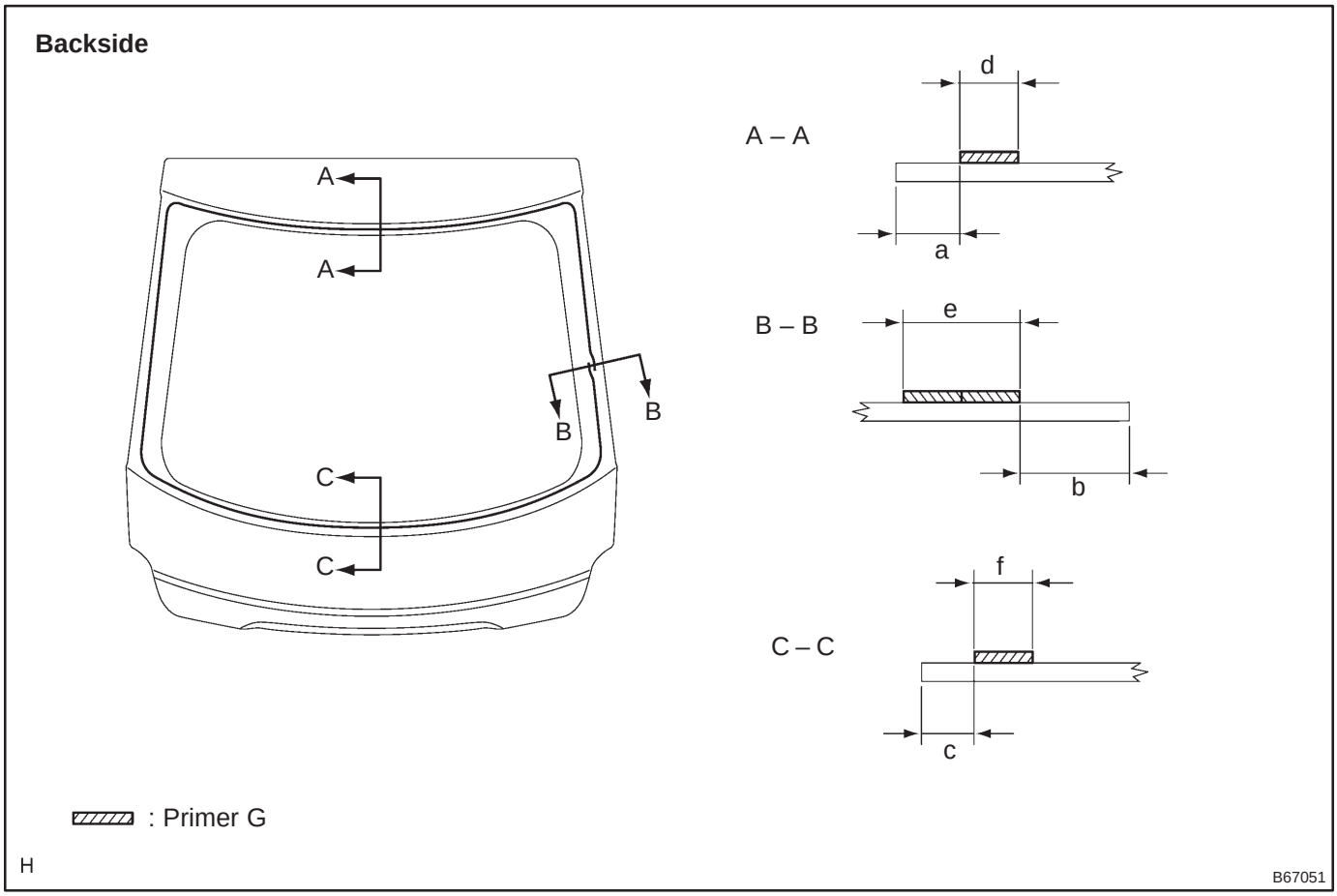

Standard dimension:

a	10.2 mm (0.402 in.)
b	23.7 mm (0.933 in.)
c	9.1 mm (0.358 in.)
d	11.0 mm (0.433 in.)
e	14.0 mm (0.551 in.)
f	11.0 mm (0.433 in.)

(d) Apply adhesive.

Adhesive: Part No. 08850–00801 or equivalent

(1) Cut off the tip of the cartridge nozzle, as shown in the illustration.

HINT:

After cutting off the tip, use all adhesive within the time described in the table below.

Tackfree time:

Temperature	Tackfree Time
35°C (95°F)	15 minutes
20°C (68°F)	1 hour 40 minutes
5°C (41°F)	8 hours

(2) Load the sealer gun with the cartridge.

(3) Coat the glass with adhesive, as shown in the illustration.

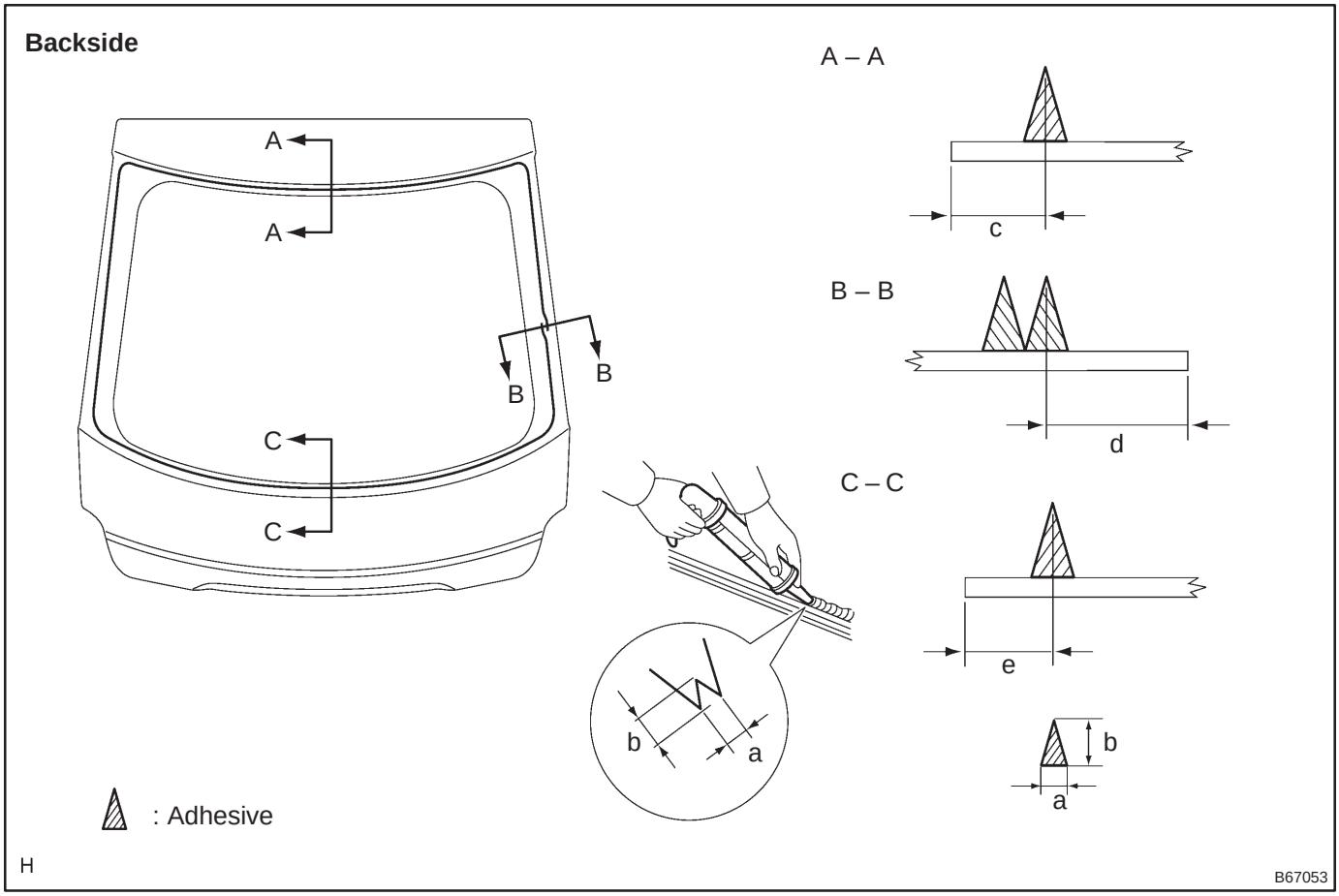

Standard dimension:

a	12.0 mm (0.472 in.)
b	8.0 mm (0.315 in.)
c	14.2 mm (0.559 in.)
d	30.7 mm (1.209 in.)
e	13.1 mm (0.516 in.)

(e) Install the glass to the body.

(1) Hold the back window glass in place securely with tape or equivalent to the body until the adhesive has hardened.

NOTICE:

- **Allow the primer coating to dry for 3 minutes or more.**
- **Check that the clips are attached to the body correctly.**
- **Check the clearance between the body and glass.**

(2) Lightly press the front surface of the glass to ensure a close fit.

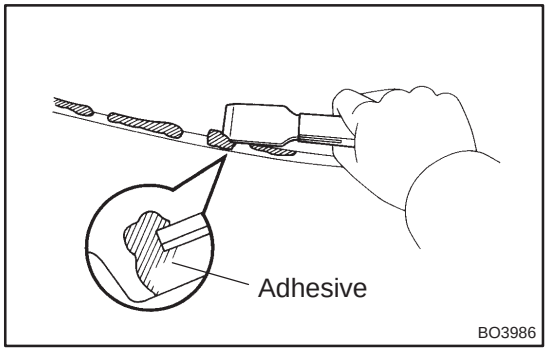

(3) Using a scraper, remove any excess or protruding adhesive.

HINT:

Apply adhesive onto the glass rim.

NOTICE:

Take care not to drive the vehicle for the time described in the table below.

Minimum time:

Temperature	Minimum time prior to driving vehicle
35˚C (95˚F)	1 hour 30 minutes
20˚C (68˚F)	5 hours
5˚C (41˚F)	24 hours

7. INSPECT FOR LEAKS AND REPAIR

(a) Conduct a leak test after the adhesive has completely hardened.

(b) Seal any leaks with auto glass sealer.

BACK DOOR GLASS (WAGON MODELS)

700T9–01

COMPONENTS

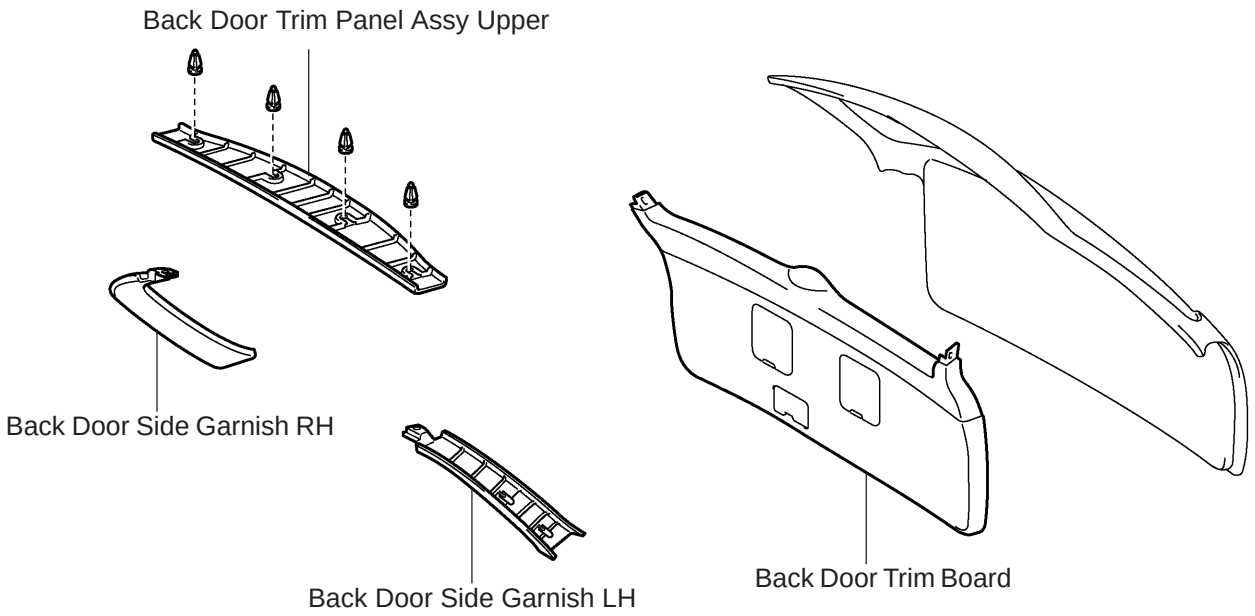

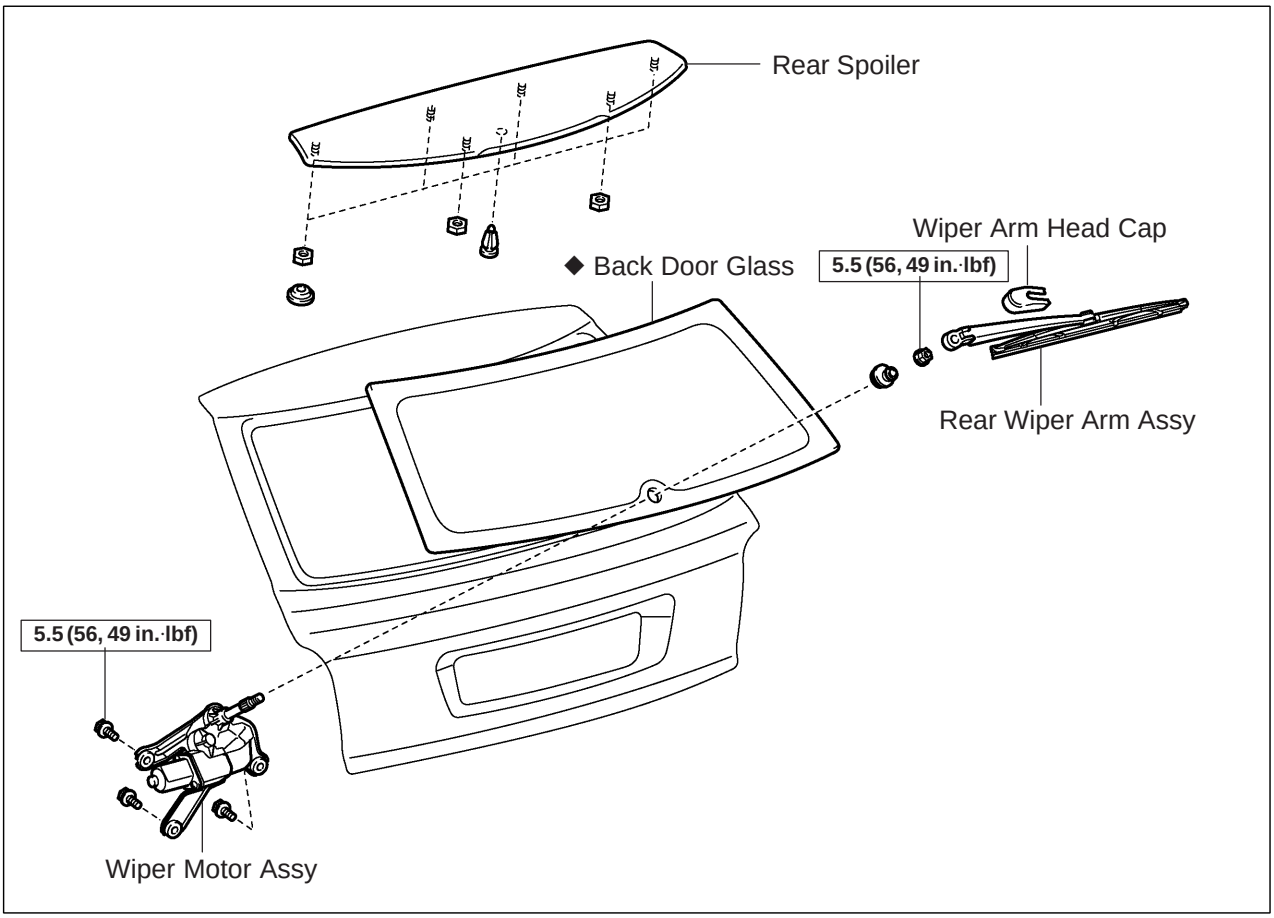

H N·m (kgf·cm, ft·lbf) : Specified torque ◆ Non–reusable part

B67062

REPLACEMENT

HINT:

The installation is in the reverse order of the removal. However, when there is a special point concerning the installation, it is indicated.

1. REMOVE BACK DOOR TRIM BOARD ASSY (See page 75–45)

(a) Remove the back door trim panel upper.
(b) Remove the back door side garnish LH.
(c) Remove the back door side garnish RH.
(d) Remove the back door trim board.

2. REMOVE REAR SPOILER (See page 76–30)

3. REMOVE REAR WIPER MOTOR ASSY (See page 66–17)

(a) Remove the wiper arm head cap.
(b) Remove the rear wiper arm.
(c) Remove the wiper motor.

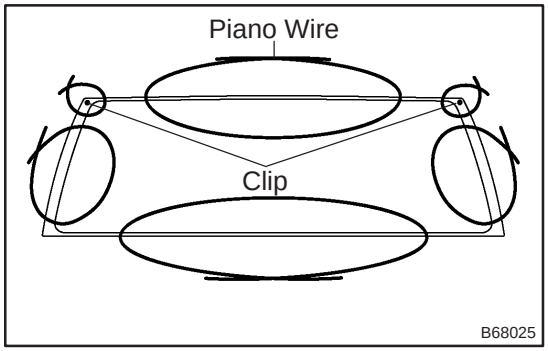

4. REMOVE BACK DOOR GLASS

(a) Pass a piano wire between the body and glass from the interior.
(b) Tie both wire ends to wooden blocks or similar objects.

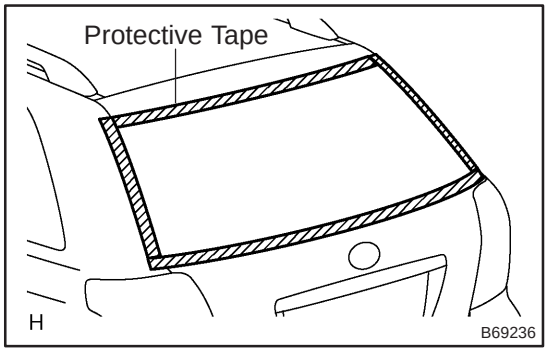

HINT:

Apply protective tape to the outer surface to prevent the surface from being scratched.

NOTICE:

When separating the glass, take care not to damage the paint and interior and exterior ornaments.

(c) Cut off the adhesive by pulling the piano wire around it.
(d) Using a suction rubber, remove the glass.

NOTICE:

Leave as much adhesive on the body as possible when removing the glass.

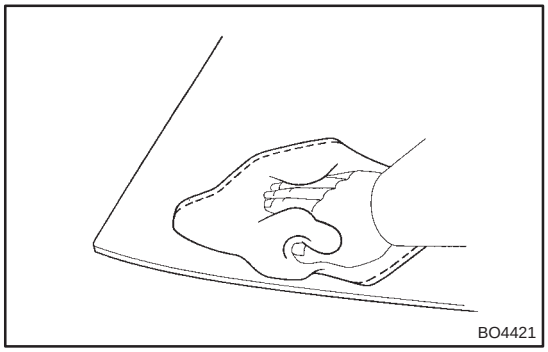

5. CLEAN BACK DOOR GLASS

(a) Clean the outer circumference of the glass with white gasoline.

NOTICE:

- **Do not touch the glass surface after cleaning it.**
- **Be careful not to damage the body.**

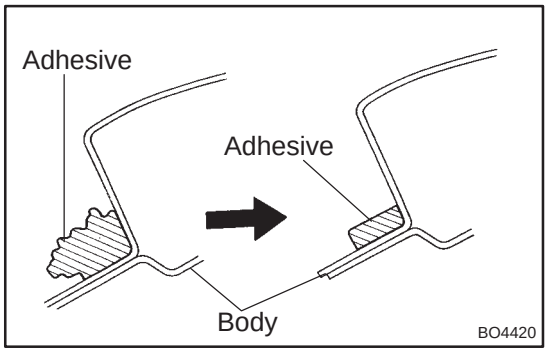

6. INSTALL BACK DOOR GLASS

(a) Clean and shape the contact surface of the vehicle body.

(1) Using a knife, cut away any rough adhesive on the contact surface of the body to ensure the appropriate surface shape.

HINT:

Leave as much adhesive on the body as possible.

(2) Clean the contact surface of the body with a piece of shop rag saturated with cleaner.

HINT:

Even if all the adhesive has been removed, clean the body.

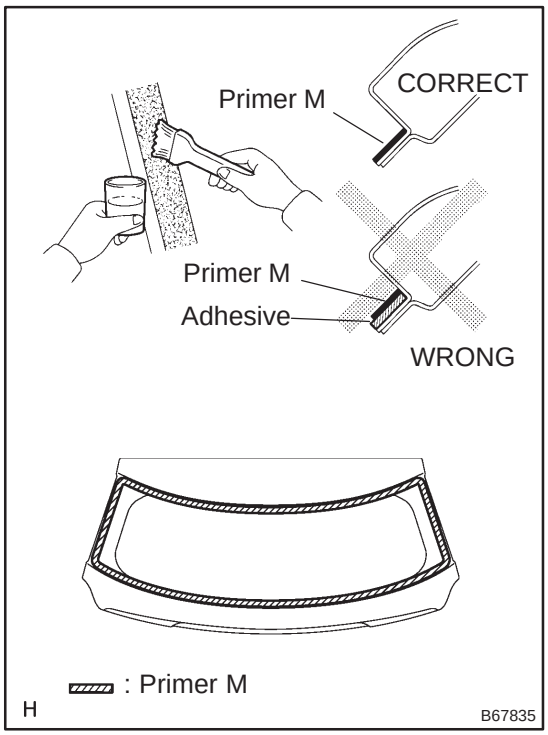

(b) Using a brush, coat the exposed part of the body on the vehicle side with Primer M.

NOTICE:

- **Allow the primer coating to dry for 3 minutes or more.**
- **Do not coat the adhesive with Primer M.**
- **Do not keep any of the opened Primer M for later use.**

(c) Using a brush or sponge, coat the edge of the glass and the contact surface with Primer G.

HINT:

If an area other than that specified is coated by accident, wipe off the primer with a clean shop rag before it dries.

NOTICE:

- **Allow the primer coating to dry for 3 minutes or more.**
- **Do not keep any of the opened Primer G for later use.**

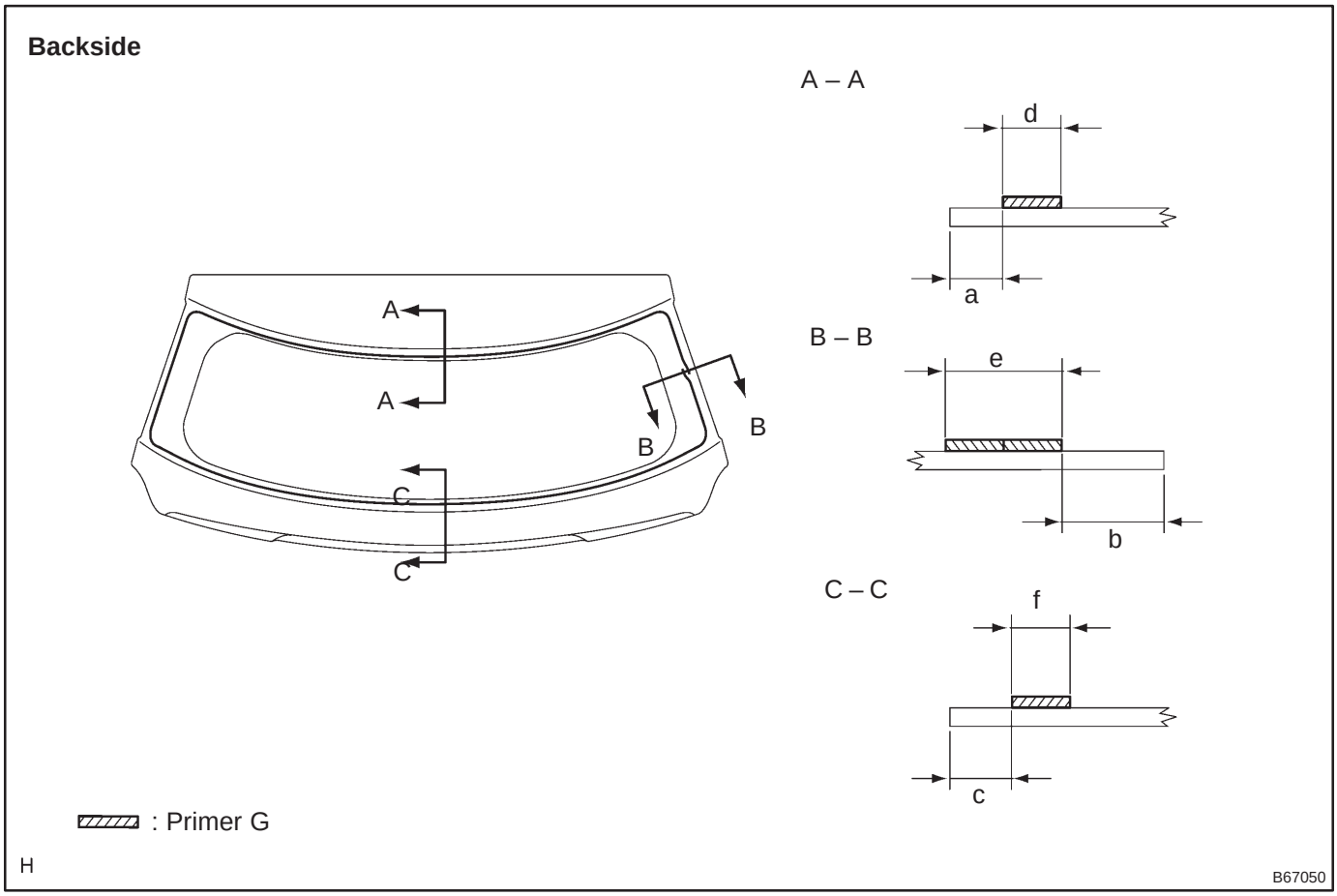

Standard dimension:

a	5.1 mm (0.201 in.)
b	20.4 mm (0.512 in.)
c	6.4 mm (0.252 in.)
d	11.0 mm (0.433 in.)
e	14.0 mm (0.551 in.)
f	11.0 mm (0.433 in.)

(d) Apply adhesive.

Adhesive: Part No. 08850–00801 or equivalent

(1) Cut off the tip of the cartridge nozzle, as shown in the illustration.

HINT:

After cutting off the tip, use all adhesive within the time described in the table below.

Tackfree time:

Temperature	Tackfree Time
35°C (95°F)	15 minutes
20°C (68°F)	1 hour 40 minutes
5°C (41°F)	8 hours

(2) Load the sealer gun with the cartridge.

(3) Coat the glass with adhesive, as shown in the illustration.

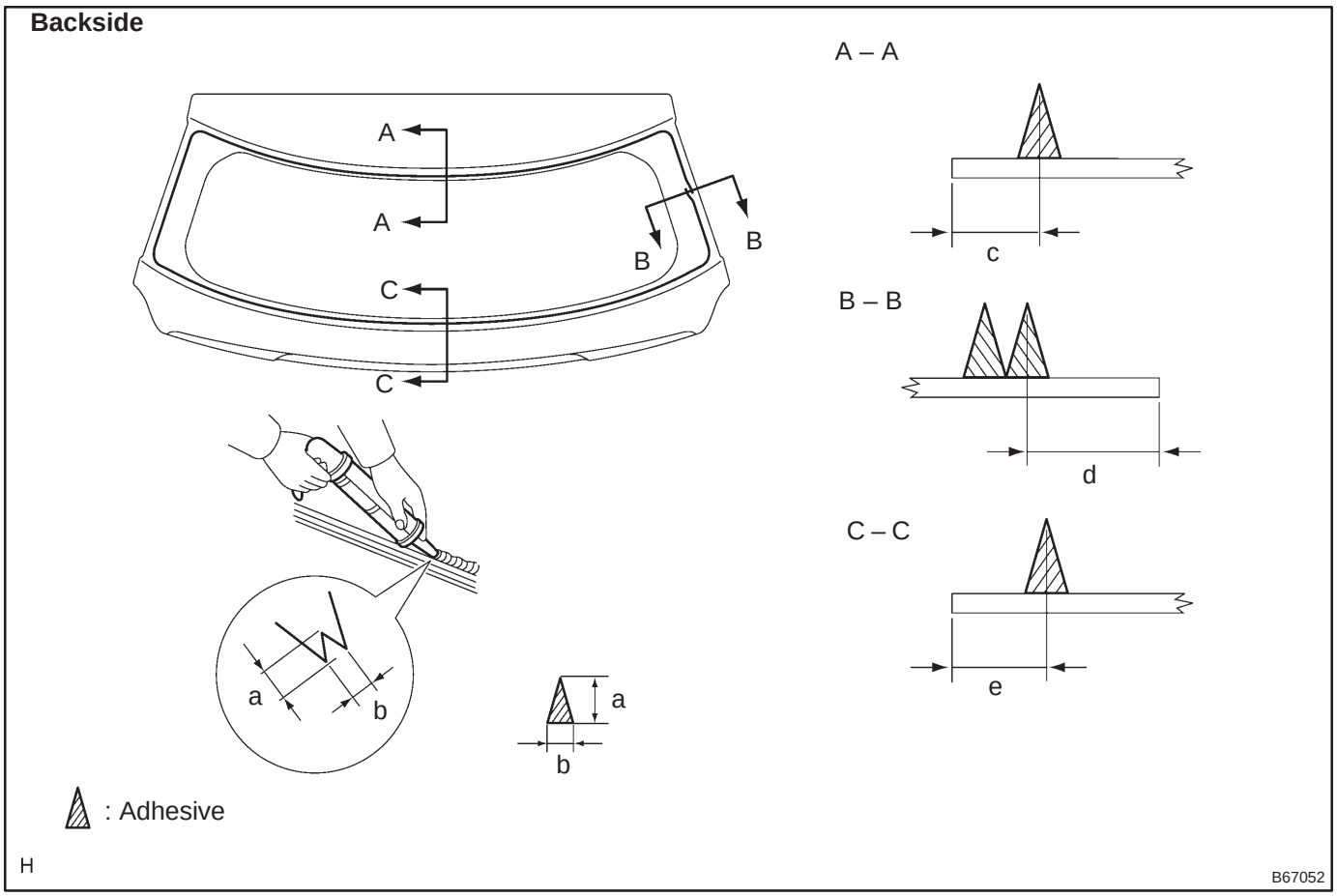

Standard dimension:

a	12.0 mm (0.472 in.)
b	8.0 mm (0.315 in.)
c	12.1 mm (0.476 in.)
d	27.4 mm (1.079 in.)
e	13.4 mm (0.528 in.)

(e) Install the glass to the body.

(1) Hold the back window glass in place securely with tape or equivalent to the body until the adhesive has hardened.

NOTICE:

- **Allow the primer coating to dry for 3 minutes or more.**
- **Check that the clips are attached to the body correctly.**
- **Check the clearance between the body and glass.**

(2) Lightly press the front surface of the glass to ensure a close fit.

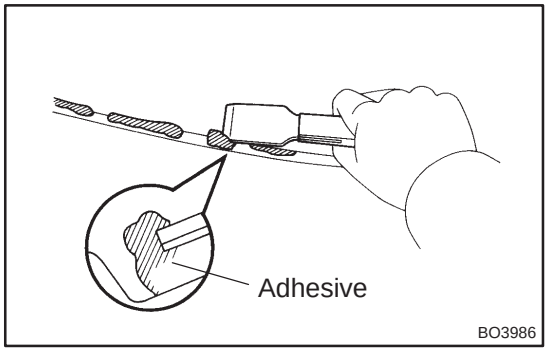

(3) Using a scraper, remove any excess or protruding adhesive.

HINT:

Apply adhesive onto the glass rim.

NOTICE:

Take care not to drive the vehicle for the time described in the table below.

Minimum time:

Temperature	Minimum time prior to driving vehicle
35˚C (95˚F)	1 hour 30 minutes
20˚C (68˚F)	5 hours
5˚C (41˚F)	24 hours

7. INSPECT FOR LEAKS AND REPAIR

(a) Conduct a leak test after the adhesive has completely hardened.

(b) Seal any leaks with auto glass sealer.

WINDOW DEFOGGER SYSTEM

LOCATION

700TB–01

LHD Models

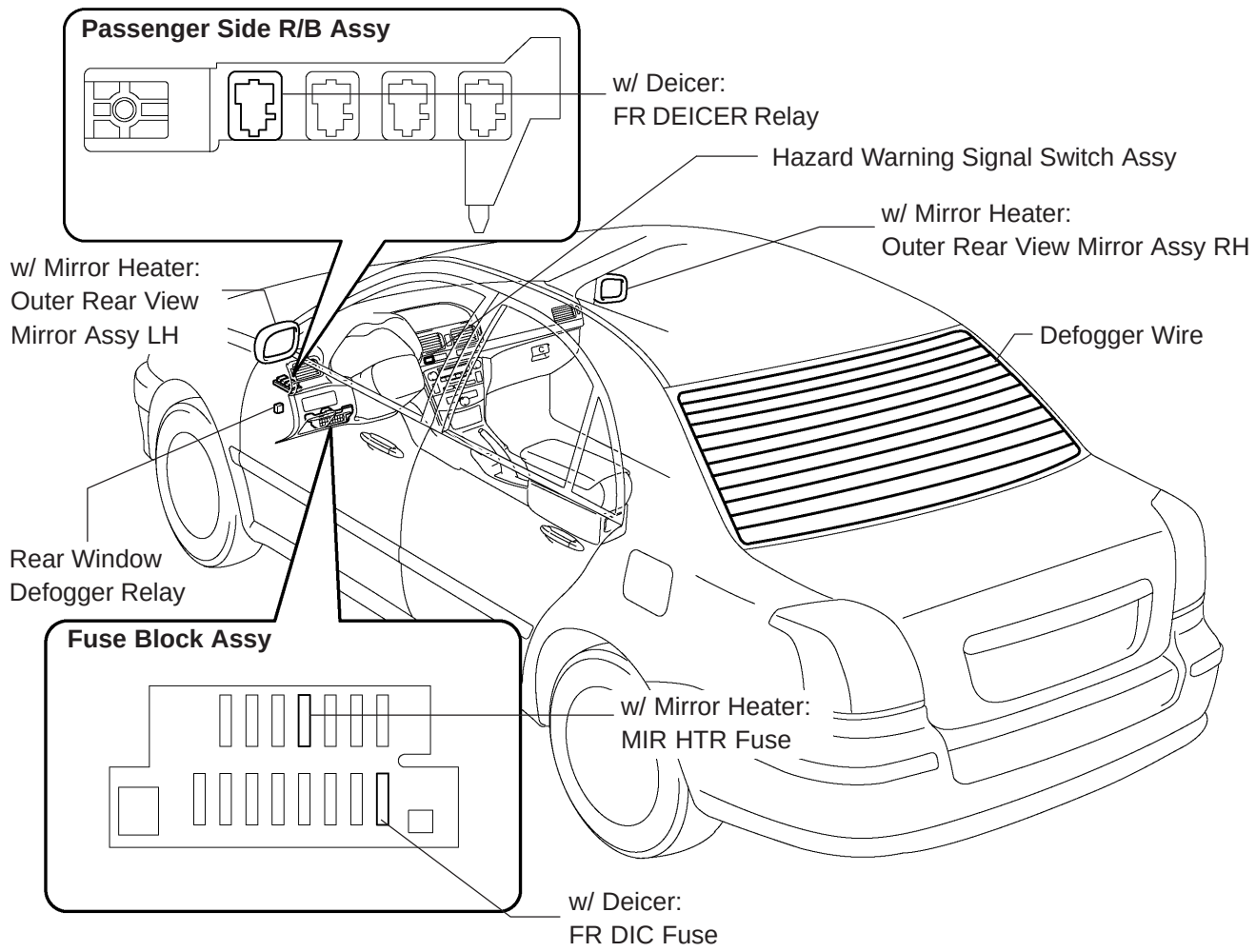

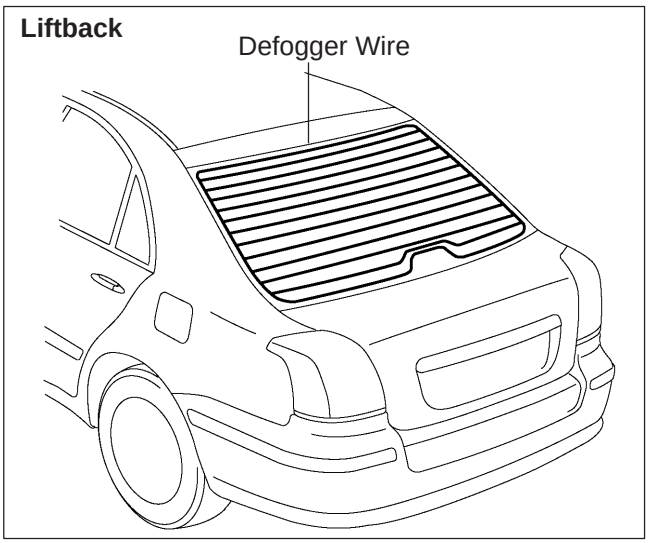

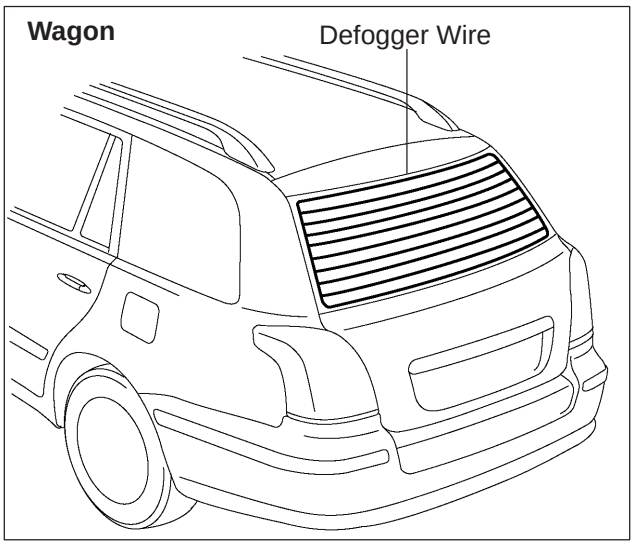

Y

B67064

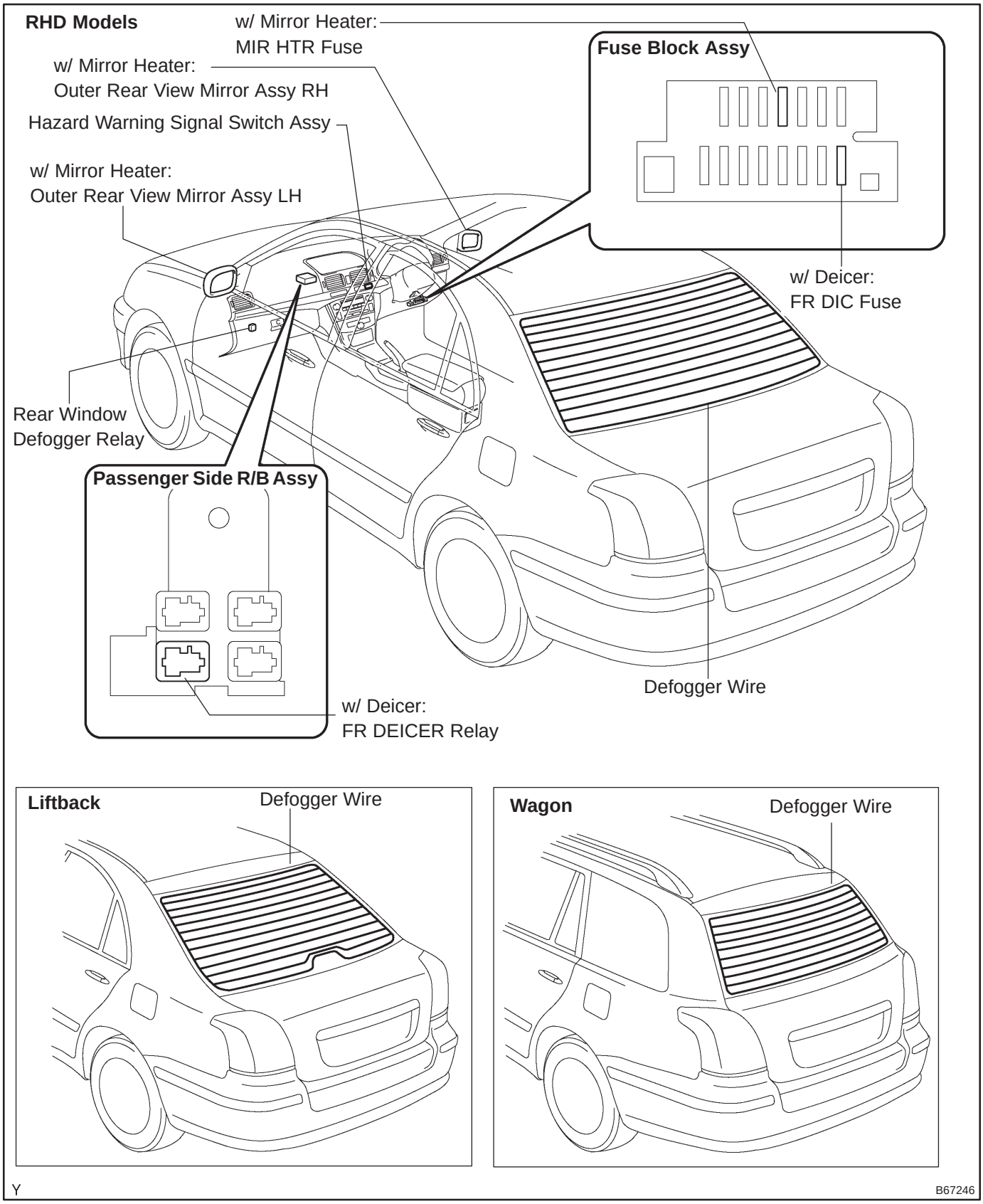
RHD Models
w/ Mirror Heater:
MIR HTR Fuse
w/ Mirror Heater:
Outer Rear View Mirror Assy RH
Hazard Warning Signal Switch Assy
w/ Mirror Heater:
Outer Rear View Mirror Assy LH
Fuse Block Assy
w/ Deicer:
FR DIC Fuse
Rear Window
Defogger Relay
Passenger Side R/B Assy
w/ Deicer:
FR DEICER Relay
Defogger Wire
Liftback
Defogger Wire
Wagon
Defogger Wire
Y
B67246

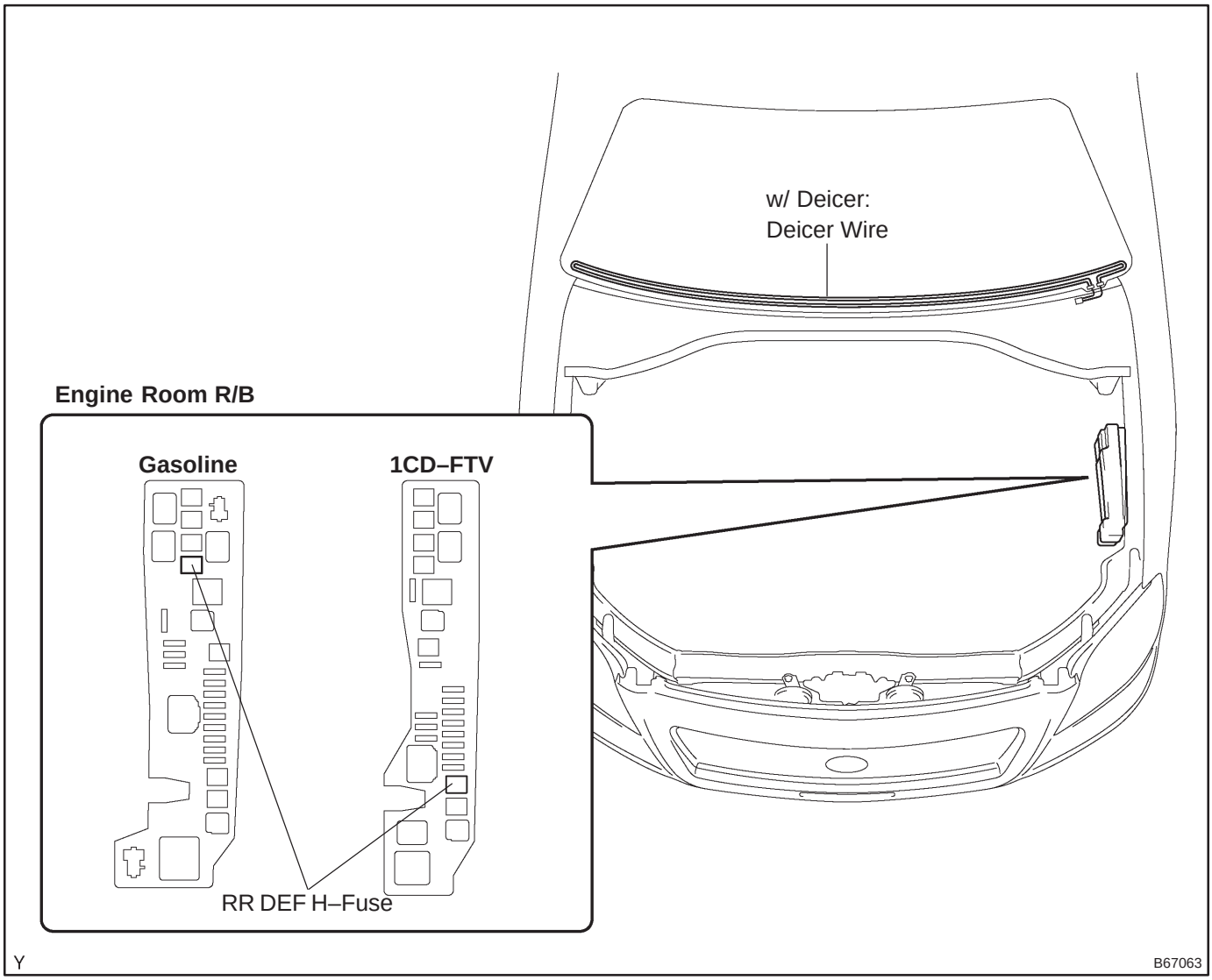
w/ Deicer:
Deicer Wire
Engine Room R/B
Gasoline
1CD–FTV
RR DEF H–Fuse
Y
B67063

700TC–01

PROBLEM SYMPTOMS TABLE

Symptom	Suspected Area	See Page
w/ Deicer: Front window deicer doos not operate. (indicator lamp ON)	1. FR DIC fuse 2. FR DICER relay 3. Front window deicer wire 4. wire harness	68–1 70–50 – –
w/ Deicer: Front window deicer doos not operate. (indicator lamp OFF)	1. FR DIC fuse 2. FR DICER relay 3. Front window deicer wire 4. Front wiper deicer switch 5. Wire harness	68–1 70–50 70–50 – –
Rear window defogger does not operate (Indicator lamp ON)	1. RR DEF H–fuse 2. Rear window defogger relay 3. Rear window defogger wire 4. wire harness	68–1 70–50 – –
Rear window defogger does not operate (Indicator lamp OFF)	1. RR DEF H–fuse 2. Rear window defogger relay 3. Hazard warning signal switch assy 4. Rear window defogger wire 5. Wire harness	68–1 70–50 70–50 – –
w/ Mirror Heater: Mirror heater does not operate (Indicator lamp ON)	1. MIR HTR fuse 2. Outer rear view mirror assy 3. Wire harness	68–1 70–50 –
w/ Mirror Heater: Mirror heater does not operate (Indicator lamp OFF)	1. MIR HTR fuse 2. Front wiper deicer switch (w/ Front wiper deicer switch) 3. Hazard warning signal switch assy (w/o front wiper deicer switch) 4. Outer rear view mirror assy 5. Wire harness	68–1 70–50 70–50 70–50 –

700TD–01

INSPECTION

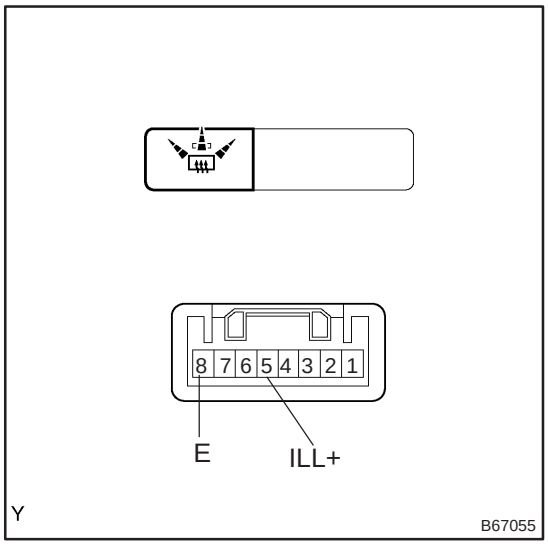

1. INSPECT REAR WINDOW DEFOGGER SWITCH (LHD Models)

(a) Check that the defogger switch illuminates.

Standard:

MeasurementCondition	SpecifiedCondition
Battery positive (+) → 5 (ILL+) Battery negative (–) → 8 (E)	Illuminates

If the result is not as specified, replace the switch assy or bulb.

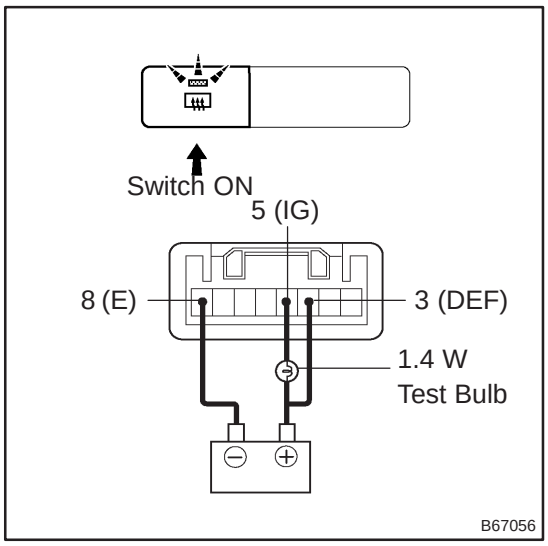

(b) Inspect operation of the defogger timer.

(1) Connect the positive (+) lead from the battery to terminal 3 and the negative (–) lead to terminal 8.

(2) Connect the positive (+) lead from the battery to terminal 4 through a 1.4 W test bulb.

(3) Push the rear window defogger switch ON, check the switch and the test bulb illuminate for 12 – 18 minutes, and then they go off.

If the result is not as specified, replace the switch assy.

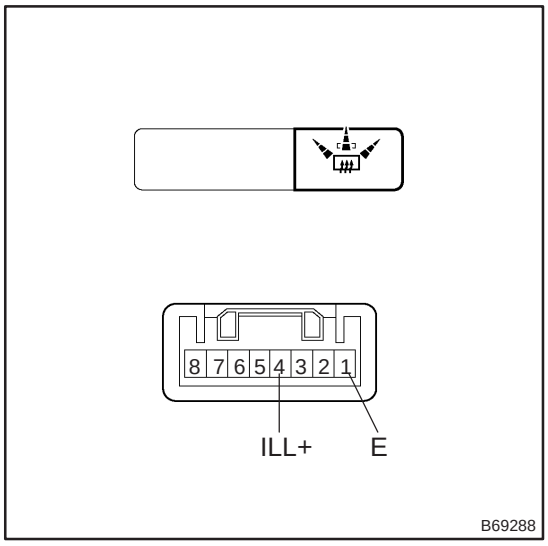

2. INSPECT REAR WINDOW DEFOGGER SWITCH (RHD Models)

(a) Check that the defogger switch illuminates.

Standard:

MeasurementCondition	SpecifiedCondition
Battery positive (+) → 4 (ILL+) Battery negative (–) → 1 (E)	Illuminates

If the result is not as specified, replace the switch assy or bulb.

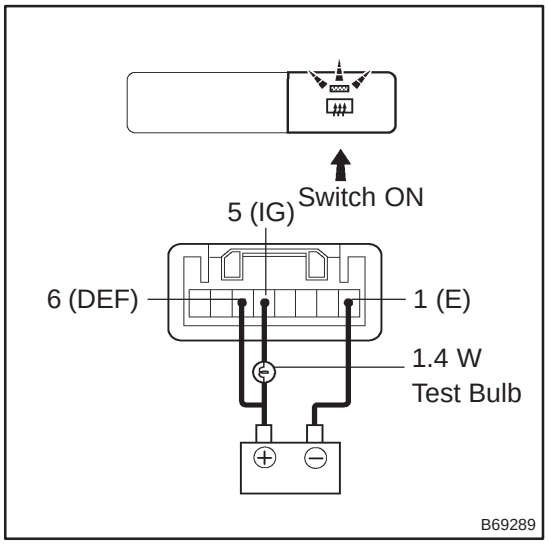

(b) Inspect operation of the defogger timer.
(1) Connect the positive (+) lead from the battery to terminal 6 and the negative (–) lead to terminal 1.
(2) Connect the positive (+) lead from the battery to terminal 5 through a 1.4 W test bulb.
(3) Push the rear window defogger switch ON, check that the switch and the test bulb illuminate for 12 – 18 minutes, and then they go off.

If the result is not as specified, replace the switch assy.

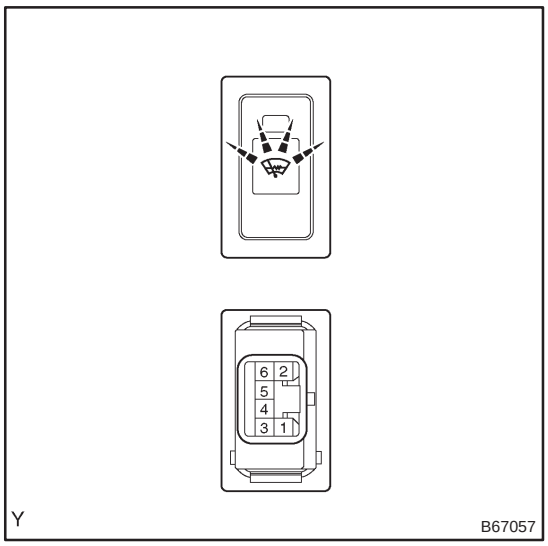

3. INSPECT FR WIPER DEICER SWITCH (W/ DEICER)

(a) check that the wiper deicer switch illuminates.

Standard:

MeasurementCondition	SpecifiedCondition
Battery positive (+) → 1 Battery negative (–) → 4	Illuminates

If the result is not as specified, replace the switch or bulb.

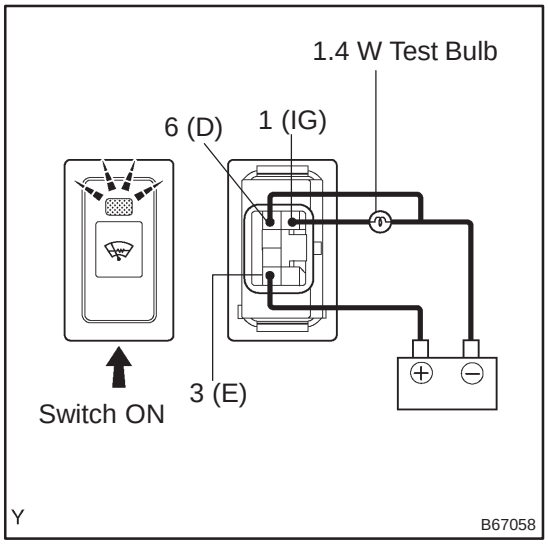

(b) Inspect operation of the wiper deicer timer.
(1) Connect the positive (+) lead from the battery to terminal 6 and the negative (–) lead to terminal 3.
(2) Connect the positive (+) lead from the battery to terminal 1 through a 1.4 W test bulb.
(3) Push the wiper deicer switch ON, check that the switch and the test bulb illuminate for 12 – 18 minutes, and then they go off.

If the result is not as specified, replace the switch.

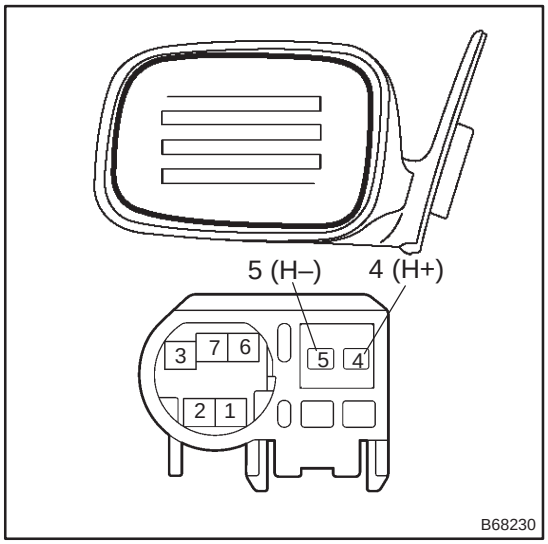

4. INSPECT OUTER REAR VIEW MIRROR ASSY LH (w/ OUTER MIRROR HEATER)

(a) Inspect operation of the mirror heater.

Standard:

MeasurementCondition	SpecifiedCondition
Battery positive (+) → H+ (4) Battery negative (–) → H– (5)	Mirror becomes warm

If the result is not as specified, replace the mirror assy.

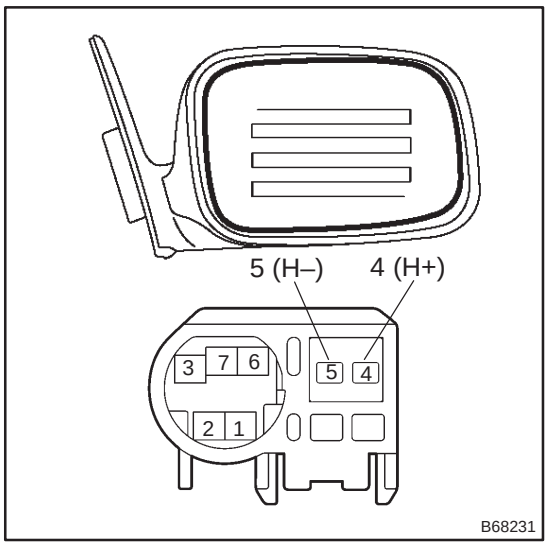

5. INSPECT OUTER REAR VIEW MIRROR ASSY RH (w/ OUTER MIRROR HEATER)

(a) Inspect operation of the mirror heater.

Standard:

MeasurementCondition	SpecifiedCondition
Battery positive (+) → H+ (4) Battery negative (–) → H– (5)	Mirror becomes warm

If the result is not as specified, replace the mirror assy.

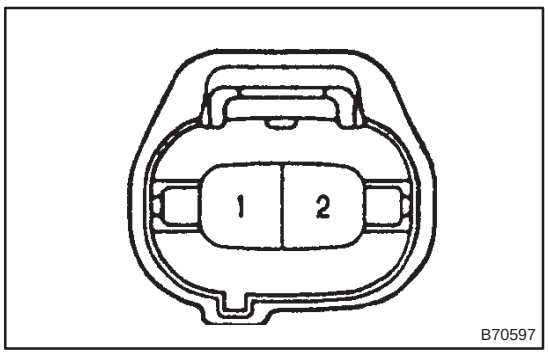

6. INSPECT FRONT WINDOW (DEICER WIRE) (W/ DEICER)

(a) Inspect the resistance of the deicer wire.

Standard:

Terminal No.	SpecifiedCondition
1 – 2	Below 1 Ω

If the result is not as specified, replace the window.

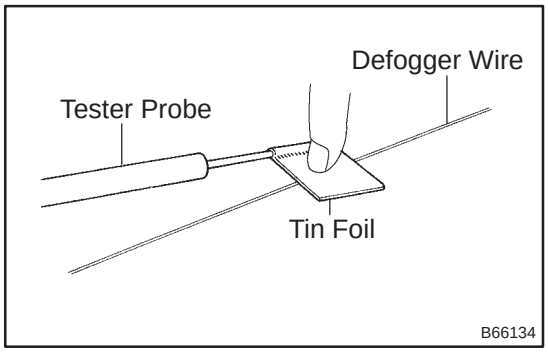

7. INSPECT BACK WINDOW (DEFOGGER WIRE)

NOTICE:

- **When cleaning the glass, wipe the glass along the wire using a soft and dry cloth. Take care not to damage the wires.**
- **Do not use detergents or glass cleaners including abrasive ingredients.**
- **When measuring voltage, wrap a piece of tin foil around the tip of the negative probe and press the foil against the wire with your finger, as shown in the illustration**

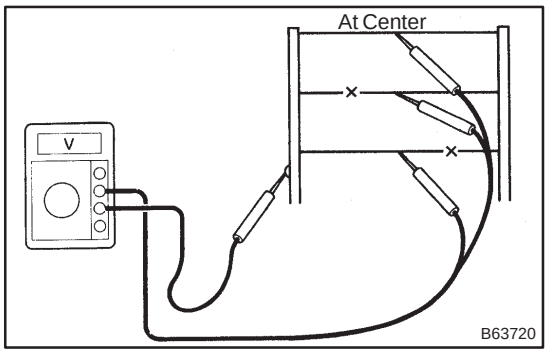

(a) Turn the ignition switch ON.
(b) Turn the defogger switch ON.
(c) Inspect the voltage at the center of each defogger wire, as shown in the illustration.

Standard:

Voltage	Criteria
Approx. 5 V	Okay, wire is not broken
Approx. 10 or 0 V	Wire is broken

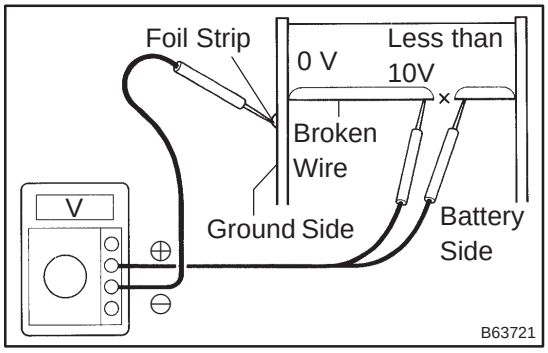

HINT:

If there is approximately 10 V, the wire may be broken between the center of the wire and the end on the battery side. If there is no voltage, the wire may be broken between the center of the wire and the end on the ground side.

(d) Place the voltmeter positive (+) lead against the defogger wire on the battery side.
(e) Place the voltmeter negative (–) lead with the foil strip against the wire on the ground side.
(f) Slide the positive (+) lead from the battery side to the ground side.
(g) The point where the voltmeter deflects from approx. 10V to 0 V is the place where the defogger wire is broken.

HINT:

If the defogger wire is not broken, the voltmeter indicates 0 V at the positive (+) end of the defogger wire but gradually increases to about 12 V as the meter probe moves to the other end.

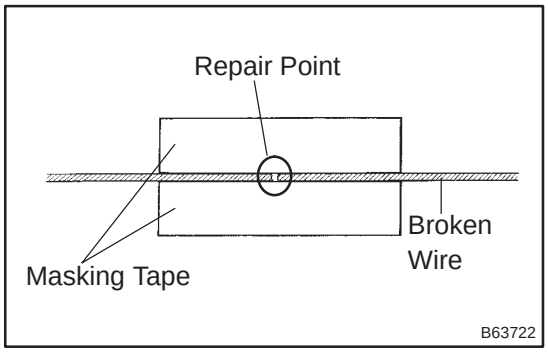

(h) If necessary, repair the defogger wire.
(1) Clean the broken wire tips with grease, wax and silicone remover.
(2) Place the masking tape along the both sides of the wire.
(3) Thoroughly mix the repair agent (Dupont paste No. 4817).

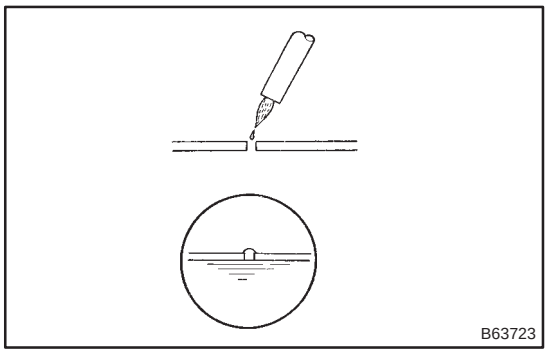

(4) Using a fine tip brush, apply a small amount of the agent to the wire.
(5) After a few minutes, remove the masking tape.

NOTICE:

Do not repair the defogger wire again for at least 24 hours.

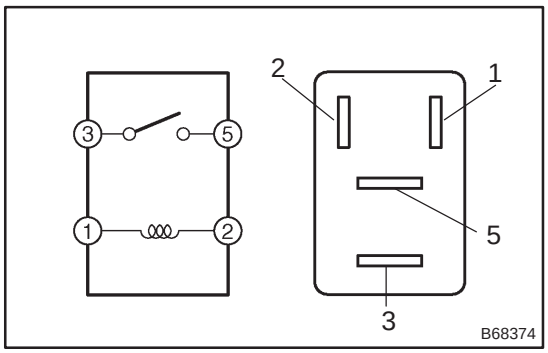

8. INSPECT FR WIPER DEICER RELAY (W/ DEICER)

(a) Inspect the resistance.

Standard:

Terminal Connection.	Specified Condition
3 – 5	10 kΩ or higher
	Below 1 Ω (When battery voltage is applied to terminals 1 and 2)

If the result is not as specified, replace the relay.

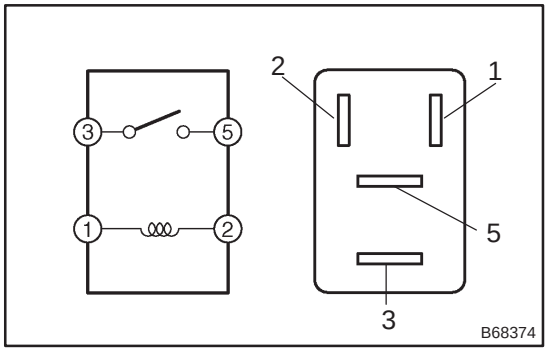

9. INSPECT DEFOGGER RELAY

(a) Inspect the resistance.

Standard:

Terminal No.	Specified Condition
3 – 5	10 kΩ or higher
	Below 1 Ω (When battery voltage is applied to terminals 1 and 2)

If the result is not as specified, replace the relay.

POWER MIRROR CONTROL SYSTEM

700TE–01

ON–VEHICLE INSPECTION

1. OPERATIONAL INSPECTION ELECTRICALLY–RETRACT DOOR MIRROR OPERATION

(a) Turn the ignition switch to the ACC position.

(b) At each position of the outer mirror body, check the operation when operating the retract switch of the outer mirror.

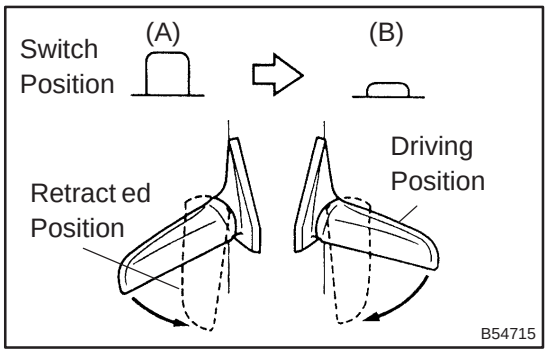

(c) Check the outer mirror operation, as shown in the illustration.

(1) Push the retract switch from the (A) position to the (B) position.

(2) Check that the right and left mirrors move from the driving position to the retracted position.

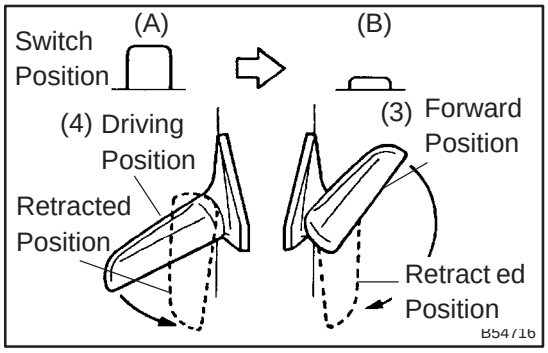

(d) Check the outer mirror operation, as shown in the illustration.

(1) Move one of the mirrors to the forward position by hand.

(2) Push the retract switch from the (A) position to the (B) position.

(3) Check that the mirror moves from the forward position to the retract position.

(4) Check that the other mirror moves from the driving position to the retracted position.

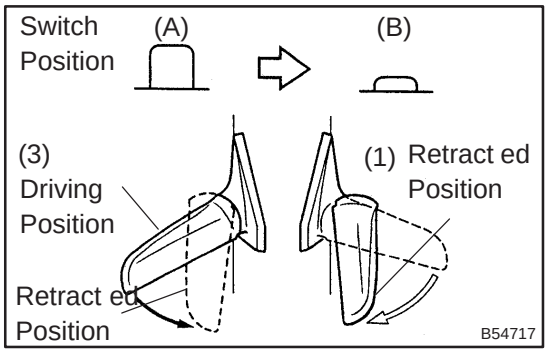

(e) Check the outer mirror operation, as shown in the illustration.

(1) Move one of the mirrors to the retracted position by hand.

(2) Push the retract switch from the (A) position to the (B) position.

(3) Check that the other mirror moves from the driving position to the retracted position.

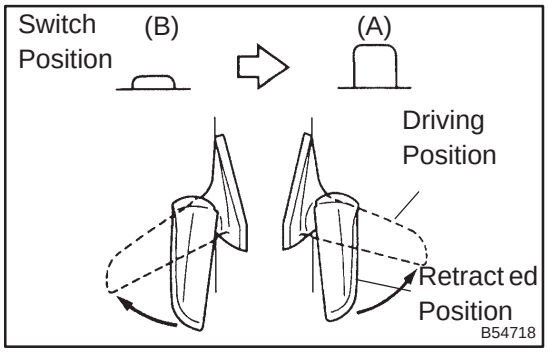

(f) Check the outer mirror operation, as shown in the illustration.
  (1) Push the retract switch from the (B) position to the (A) position.
  (2) Check that the right and left mirrors move from the retracted position to the driving position.

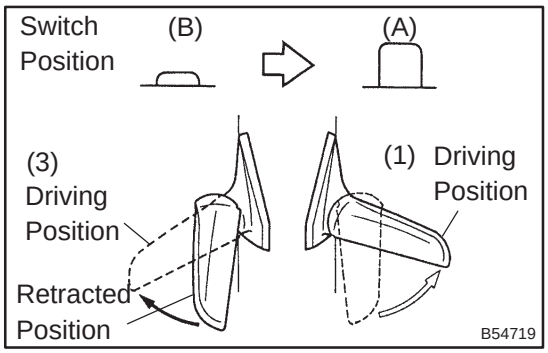

(g) Check the outer mirror operation, as shown in the illustration.
  (1) Move one of mirrors to the driving position by hand.
  (2) Push the retract switch From the (A) position to the (B) position.
  (3) Check that the other mirror moves from the retracted position to the driving position.

(h) Check operation of the outer mirror body when the ignition switch is turned OFF during operation.
  (1) When turning the ignition switch OFF during operation of the mirror body, check that the mirror body operation stops.
  (2) Check that the mirror body continues to operate when the ignition switch is turned to ACC again.

HINT:
If the retract switch is switched while the ignition switch is OFF and the ignition switch is turned to ACC again, the mirror body will operate in the opposite direction.

(i) Check operation of the outer mirror body when it is restrained by an obstacle.
  (1) Check that operation stops when restraining the mirror body movement by hand while the mirror body is moving to the retraced position or the driving position.
  (2) Switch the retract switch under the above condition, and check that the mirror body starts operation again to the opposite direction.

700TF–01

LOCATION

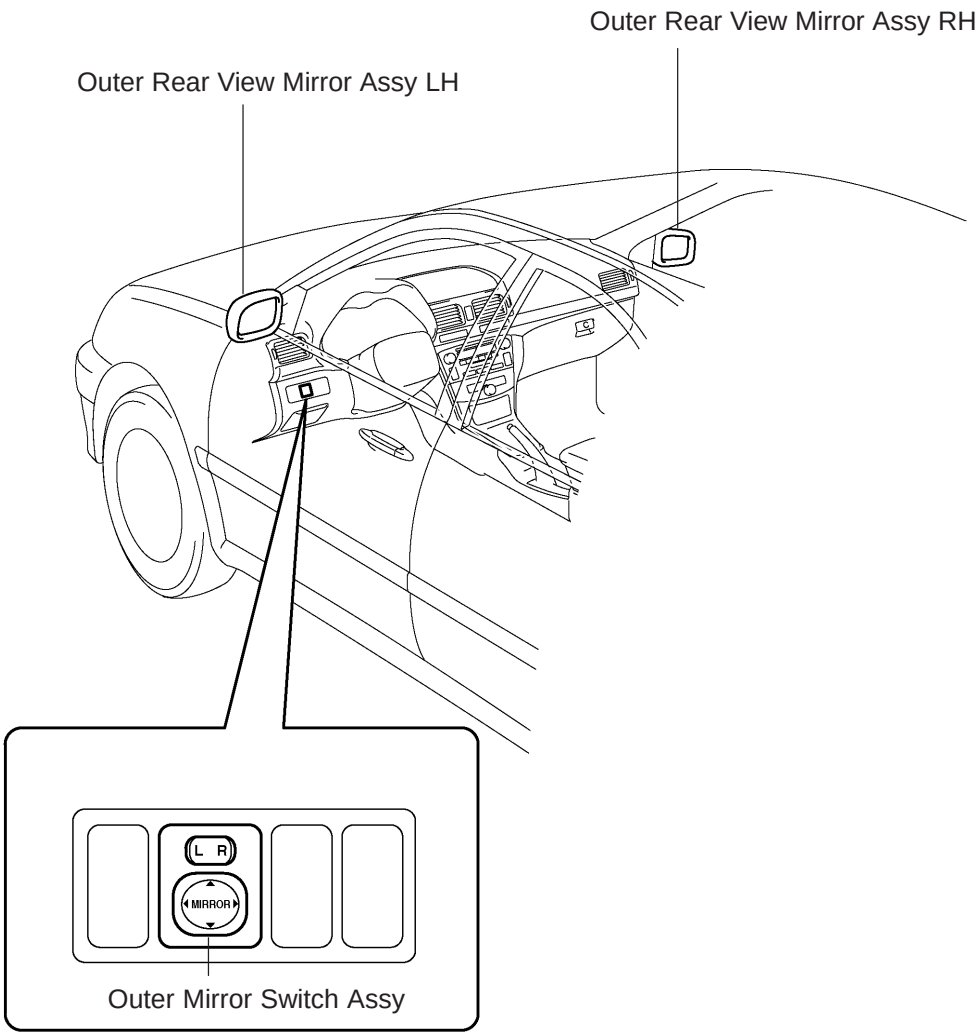

Y

B67247

700TG–01

PROBLEM SYMPTOMS TABLE

Symptom	Suspected Area	See Page
Mirror does not operate	1. Outer mirror switch assy	70–59
	2. Outer rear view mirror assy	70–59
	3. Wire harness	–
Mirror operates abnormally	1. Outer mirror switch assy	70–59
	2. Outer rear view mirror assy	70–59
	3. Wire harness	–

INSPECTION

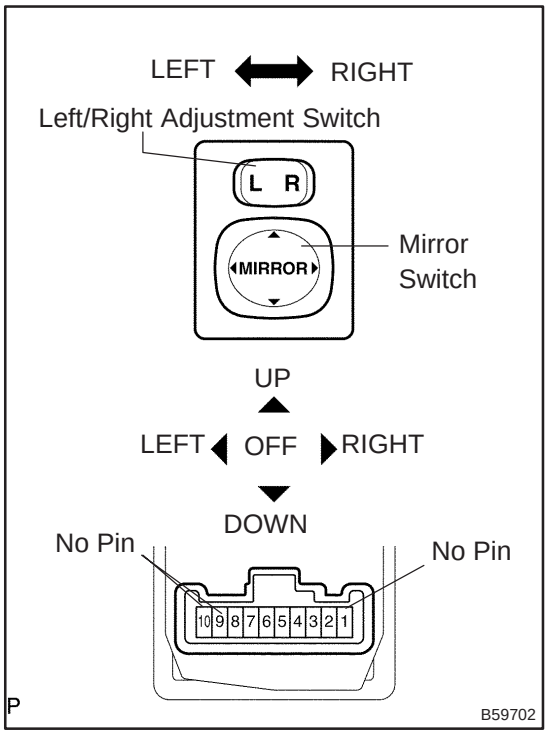

1. INSPECT OUTER MIRROR SWITCH ASSY

(a) The L side of the left/right adjustment switch:
Inspect the mirror switch resistance.
Standard (Left side):

Terminal Connection	Switch Position	Specified Condition
4 – 8	UP	Below 1 Ω
6 – 7		
4 – 7	DOWN	Below 1 Ω
6 – 8		
5 – 8	LEFT	Below 1 Ω
6 – 7		
5 – 7	RIGHT	Below 1 Ω
6 – 8		

If the result is not as specified, replace the switch assy.

(b) The R side of the left/right adjustment switch:
Inspect the mirror switch resistance.
Standard (Right side):

Terminal Connection	Switch Position	Specified Condition
3 – 8	UP	Below 1 Ω
6 – 7		
3 – 7	DOWN	Below 1 Ω
6 – 8		
2 – 8	LEFT	Below 1 Ω
6 – 7		
2 – 7	RIGHT	Below 1 Ω
6 – 8		

If the result is not as specified, replace the switch assy.

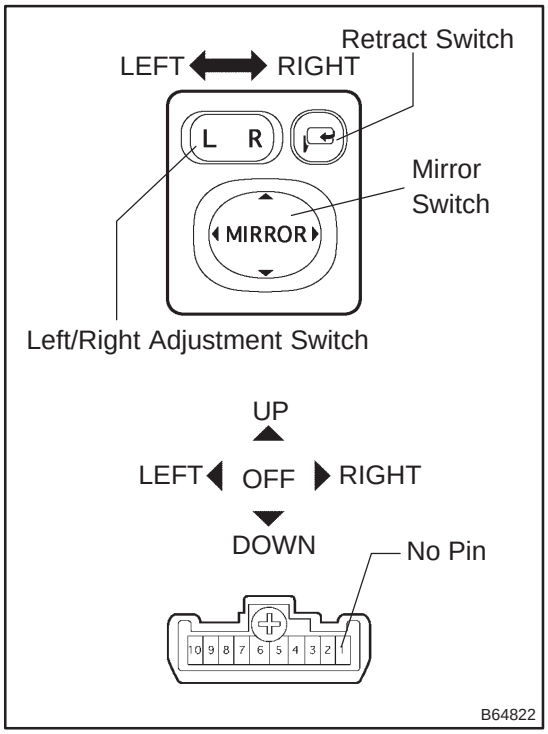

2. INSPECT OUTER MIRROR SWITCH ASSY (w/ RETRACT MIRROR)

(a) The L side of the left/right adjustment switch:
Inspect the mirror switch resistance.
Standard (Left side):

Terminal Connection	Switch Position	Specified Condition
–	OFF	10 kΩ or higher
4 – 8	UP	Below 1 Ω
6 – 7		
4 – 7	DOWN	Below 1 Ω
6 – 8		
5 – 8	LEFT	Below 1 Ω
6 – 7		
5 – 7	RIGHT	Below 1 Ω
6 – 8		

If the result is not as specified, replace the switch assy.

(b) The R side of the left/right adjustment switch:
Inspect the mirror switch resistance.
Standard (Right side):

Terminal Connection	Switch Position	Specified Condition
–	OFF	10 kΩ or higher
3 – 8	UP	Below 1 Ω
6 – 7		
3 – 7	DOWN	Below 1 Ω
6 – 8		
2 – 8	LEFT	Below 1 Ω
6 – 7		
2 – 7	RIGHT	Below 1 Ω
6 – 8		

If the result is not as specified, replace the switch assy.

(c) Inspect the retract switch resistance.
Standard:

Terminal Connection	Switch Position	Specified Condition
7 – 9	DRIVING	Below 1 Ω
8 – 10		
7 – 10	RETRACT	Below 1 Ω
8 – 9		

If the result is not as specified, replace the switch assy.

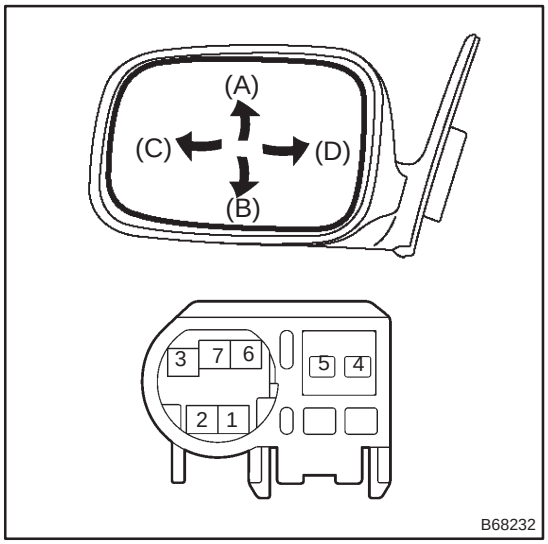

3. INSPECT OUTER REAR VIEW MIRROR ASSY LH

(a) Disconnect the mirror connector.

(b) Apply battery voltage and inspect operation of the mirror face, as shown in the table and illustration.

Standard:

Measurement Condition	Mirror Operation
Battery positive (+) → 3 (MV) Battery negative (–) → 7 (M+)	Turns upward (A)
Battery positive (+) → 7 (M+) Battery negative (–) → 3 (MV)	Turns downward (B)
Battery positive (+) → 7 (M+) Battery negative (–) → 6 (MH)	Turns left (C)
Battery positive (+) → 6 (MH) Battery negative (–) → 7 (M+)	Turns right (D)

If the result is not as specified, replace the mirror assy.

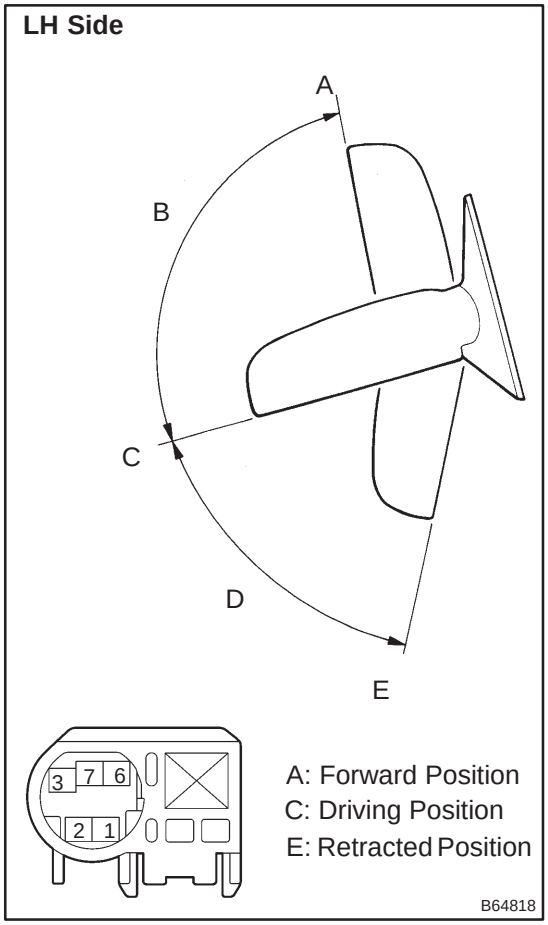

(c) Only retract mirror:

Inspect operation of the electrical retract motor.

NOTICE:

- **When repeating the inspection, cut off the battery voltage, and then perform operation in the same procedures.**
- **With the battery voltage applied, the mirror will not operate even trying to move only the mirror body.**

Standard:

Mirror Position	Measurement Condition	Mirror Operation
A (Forward position)	Battery positive (+) → 1 (MR) Battery negative (–) → 2 (MF)	Moves to retracted position (stop)
	Battery positive (+) → 2 (MF) Battery negative (–) → 1 (MR)	No operation
B (Between forward position and driving position)	Battery positive (+) → 1 (MR) Battery negative (–) → 2 (MF)	Moves to retracted position and then stops
	Battery positive (+) → 2 (MF) Battery negative (–) → 1 (MR)	Moves to forward position and then stops
C (Driving position)	Battery positive (+) → 1 (MR) Battery negative (–) → 2 (MF)	Moves to retracted position and then stops
	Battery positive (+) → 2 (MF) Battery negative (–) → 1 (MR)	No operation

Mirror Position	Measurement Condition	Mirror Operation
D (Between driving position and retracted position)	Battery positive (+) → 1 (MR) Battery negative (–) → 2 (MF)	Moves to retracted position and then stops
	Battery positive (+) → 2 (MF) Battery negative (–) → 1 (MR)	Moves to driving position and then stops
E (Retracted position)	Battery positive (+) → 1 (MR) Battery negative (–) → 2 (MF)	No operation
	Battery positive (+) → 2 (MF) Battery negative (–) → 1 (MR)	Moves to driving position and then stops

If the result is not as specified, replace the mirror assy.

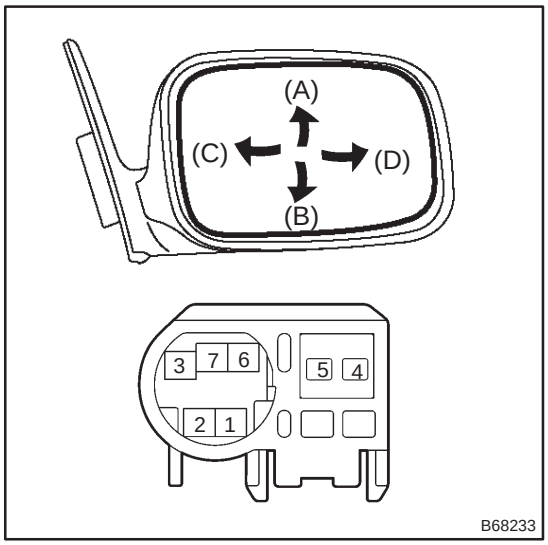

4. INSPECT OUTER REAR VIEW MIRROR ASSY RH

(a) Disconnect the mirror connector.

(b) Apply battery voltage and inspect operation of the mirror face, as shown in the table and illustration.

Standard:

Measurement Condition	Mirror Operation
Battery positive (+) → 3 (MV) Battery negative (–) → 7 (M+)	Turns upward (A)
Battery positive (+) → 7 (M+) Battery negative (–) → 3 (MV)	Turns downward (B)
Battery positive (+) → 7 (M+) Battery negative (–) → 6 (MH)	Turns right (D)
Battery positive (+) → 6 (MH) Battery negative (–) → 7 (M+)	Turns left (C)

If the result is not as specified, replace the mirror assy.

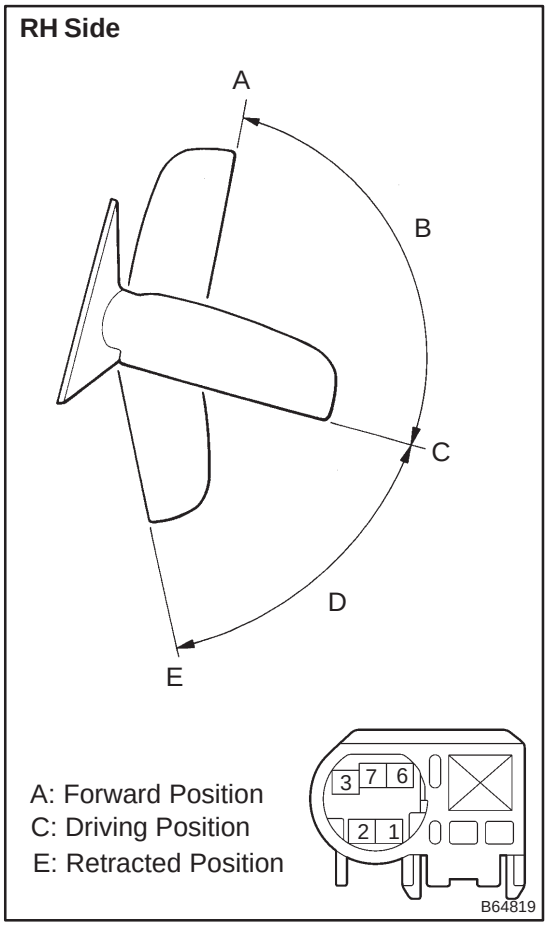

(c) Only retract mirror:
Inspect operation of the electrical retract motor.

NOTICE:

- **When repeating the inspection, cut off the battery voltage, and then perform operation in the same procedures.**
- **With the battery voltage applied, the mirror will not operate even trying to move only the mirror body.**

Standard:

Mirror Position	Measurement Condition	Mirror Operation
A (Forward position)	Battery positive (+) → 1 (MR) Battery negative (–) → 2 (MF)	Moves to retracted position and then stops
	Battery positive (+) → 2 (MF) Battery negative (–) → 1 (MR)	No operation
B (Between forward position and driving position)	Battery positive (+) → 1 (MR) Battery negative (–) → 2 (MF)	Moves to retracted position and then stops
	Battery positive (+) → 2 (MF) Battery negative (–) → 1 (MR)	Moves to forward position and then stops
C (Driving position)	Battery positive (+) → 1 (MR) Battery negative (–) → 2 (MF)	Moves to retracted position and then stops
	Battery positive (+) → 2 (MF) Battery negative (–) → 1 (MR)	No operation
D (Between driving position and retracted position)	Battery positive (+) → 1 (MR) Battery negative (–) → 2 (MF)	Moves to retracted position and then stops
	Battery positive (+) → 2 (MF) Battery negative (–) → 1 (MR)	Moves to driving position and then stops
E (Retracted position)	Battery positive (+) → 1 (MR) Battery negative (–) → 2 (MF)	No operation
	Battery positive (+) → 2 (MF) Battery negative (–) → 1 (MR)	Moves to driving position and then stops

If the result is not as specified, replace the mirror assy.

INNER REAR VIEW MIRROR ASSY

700TJ–01

REPLACEMENT

HINT:

The installation is in the reverse order of the removal. However, when there is a special point concerning the installation, it is indicated.

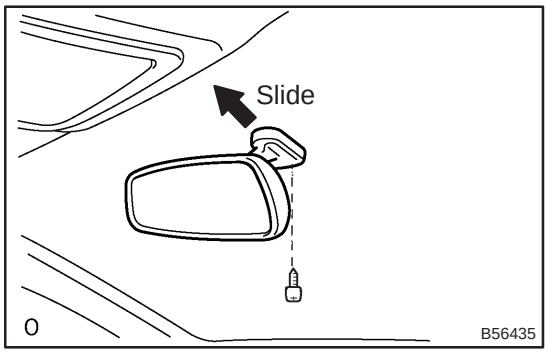

1. REMOVE INNER REAR VIEW MIRROR ASSY (EC MIRROR)

(a) Remove the inner rear view mirror cover.
(b) Remove the rain sensor covers (See page XX–XXX).
(c) Remove the screw.
(d) Disconnect the connector.
(e) Remove the rear view inner mirror.

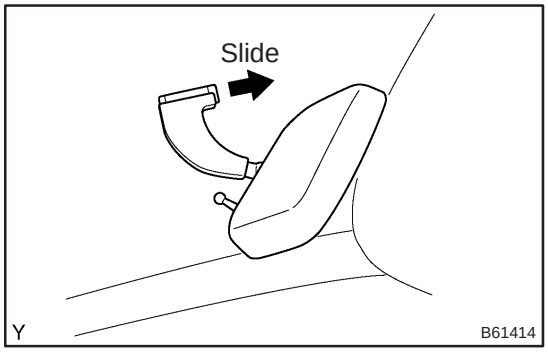

2. REMOVE INNER REAR VIEW MIRROR ASSY (NORMAL MIRROR)

(a) Remove the inner rear view mirror, as shown in the illustration.

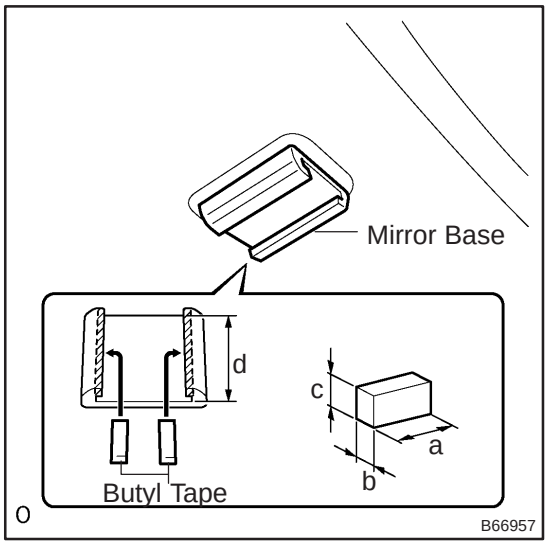

3. INSTALL INNER REAR VIEW MIRROR ASSY (NORMAL MIRROR)

(a) Prepare 2 pieces of butyl tape having the dimensions, as shown in the illustration.
(b) While extending them until they fit the length of the mirror base (24 mm, (0.944 in.)), apply them to both side of the mirror base respectively.
(c) Install inner rear view mirror.

NOTICE:

If butyl tape spreads out of the inside groove when applied, remove the excessive amount of tape so that it will not stick to the glass.

Dimension:

a	10 mm (0.393 in.)
b	4 mm (0.157 in.)
c	6 mm (0.236 in.)
d	24 mm (0.944 in.)

OUTER REAR VIEW MIRROR ASSY LH

700TI–01

REPLACEMENT

HINT:

- The installation is in the reverse order of the removal. However, when there is a special point concerning the installation, it is indicated.
- Use the same procedures on the RH side as on the LH side.

1. REMOVE FRONT DOOR HOLE COVER SUB–ASSY NO.1 LH (See page 75–8)

(a) Remove the front door lower frame bracket garnish.
(b) Remove the front door trim base.
(c) Only driver side:
Remove the fuel lid opener switch.
(d) w/ Power window:
Remove the power window regulator switch.
(e) Remove the front door trim board sub.
(f) Remove the front door inside handle.
(g) remove the front service hole cover No. 1.

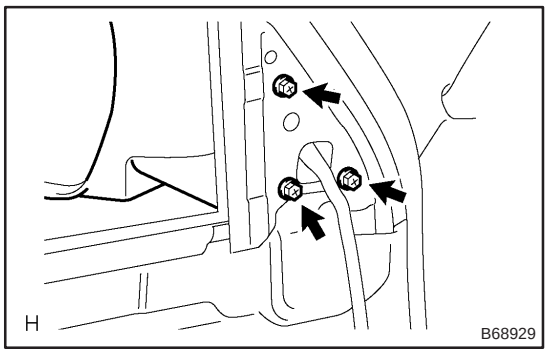

2. REMOVE OUTER REAR VIEW MIRROR ASSY LH

(a) Disconnect the connector.
(b) Remove the 3 screws and mirror .

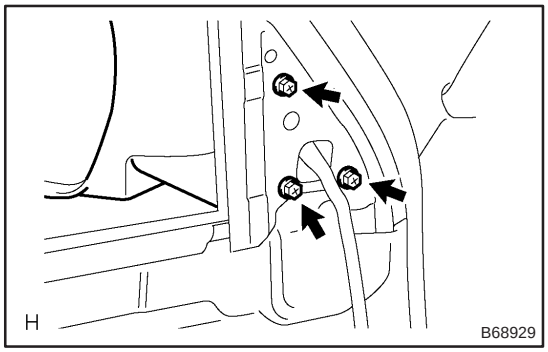

3. INSTALL OUTER REAR VIEW MIRROR ASSY LH

(a) Install the mirror with the 3 screws.
Torque: 10 N·m (102 kgf·cm, 7 ft·lbf)
(b) Connect the connector.

COMBINATION METER

710CM–02

PROBLEM SYMPTOMS TABLE

Warning Lights:

Symptom	Suspect Area	See page
Check Engine warning light does not come on.	1. Wire Harness or Connector 2. ECM 3. Combination Meter Assy	– – –
Discharge warning light does not come on.	1. Wire Harness or Connector 2. ECM 3. Combination Meter Assy	– – –
Brake warning light does not come on.	1. Wire Harness or Connector 2. Skid control ECU 3. Combination Meter Assy	– – –
ABS warning light does not come on.	1. Wire Harness or Connector 2. Skid control ECU 3. Combination Meter Assy	– – –
SRS warning light does not come on.	1. Wire Harness or Connector 2. Airbag Sensor Assy 3. Combination Meter Assy	– 05–1197 –
Open Door warning light does not come on.	1. Wire Harness or Connector 2. Front Door Courtesy Light 3. Body ECU 4. Combination Meter Assy	– – – –
Fuel Level warning light does not come on.	1. Wire Harness or Connector 2. Fuel Sender Gauge 3. Combination Meter Assy	– – –
Low Oil Pressure warning light does not come on.	1. Wire Harness or Connector 2. Low Oil Pressure Warning Switch 3. Combination Meter Assy	– – –
Engine Oil Level warning light does not come on.	1. Wire Harness or Connector 2. Oil Level Sensor 3. Combination Meter Assy	– – –
Belt warning light does not come on.	1. Wire Harness or Connector 2. Body ECU 3. Front Inner Belt Assy 4. Combination Meter Assy	– – 05–1522 –
VSC warning light does not come on.	1. Wire Harness or Connector 2. VSC Circuit 3. Combination Meter Assy	– 05–752 –

Indicator Lights:

Symptom	Suspect Area	See page
Shift indicator light do not come on.	1. Wire Harness or Connector 2. ECM 3. Neutral Start Switch Circuit 4. Combination Meter Assy	– – – –
Turn indicator light does not come on.	1. Wire Harness or Connector 2. Turn Signal and Hazard Warning System 3. Combination Meter Assy	– 65–9 –
Glow indicator light does not come on.	1. Wire Harness or Connector 2. ECM 3. Combination Meter Assy	– – –
TRC off indicator light does not come on.	1. Wire Harness or Connector 2. VSC Circuit 3. Combination Meter Assy	– 05–752 –

SLIP indicator light does not come on.	1. Wire Harness or Connector 2. Skid Control ECU 3. Combination Meter Assy	– 05–752 –
CRUISE indicator light does not come on.	1. Wire Harness or Connector 2. ECM 3. Combination Meter Assy	– – –
High Beam indicator light does not come on.	1. Wire Harness or Connector 2. Headlight Dimmer Switch 3. Combination Meter Assy	– 65–9 –
Fr FOG indicator does not come on.	1. Wire Harness or Connector 2. Fr FOG Relay 3. Fr FOG Light Switch 4. Combination Meter Assy	– – – –
Rr FOG indicator does not come on.	1. Wire Harness or Connector 2. Rr FOG Relay 3. Rr FOG Light Switch 4. Combination Meter Assy	– – – –
TAIL indicator does not come on.	1. Wire Harness or Connector 2. TAIL Relay 3. Combination Meter Assy	– – –
WATER LEVEL indicator does not come on (1KD–FTV).	1. Wire Harness or Connector 2. Water Level Sensor 3. Combination Meter Assy	– – –
EMPS indicator does not come on.	1. Wire Harness or Connector 2. EMPS ECU 3. Combination Meter Assy	– – –
A/T OIL TEMP indicator does not come on.	1. Refer to troubleshooting 2. Wire Harness or Connector 3. Combination Meter Assy	05–856 – –
ECT SNOW indicator does not come on.	1. Refer to troubleshooting 2. Wire Harness or Connector 3. Combination Meter Assy	05–980 – –
AUTO LEVELING indicator does not come on.	1. Wire Harness or Connector 2. Auto Leveling ECU 3. Combination Meter Assy	– – –

Meter Gauges:

Symptom	Suspect Area	See page
Speedometer does not operate.	1. Refer to troubleshooting	05–1510
Water temperature does not operate.	1. Refer to troubleshooting	05–1515
Tachometer does not operate.	1. Refer to troubleshooting	05–1513
Fuel Gauge does not operate or operates abnormally.	1. Refer to troubleshooting	05–1517

OTHERS:

Symptom	Suspect Area	See page
key reminder buzzer does not operate.	1. Wire Harness or Connector 2. Body ECU (KSW, DCTY) 3. Door Coutesy Switch 4. Key Unlock Warning Switch 5. Combination Meter Assy	– – – 05–1586 –
Light reminder buzzer does not operate.	1. Wire Harness or Connector 2. Body ECU (DCTY) 3. Combination Meter Assy	– – –
Seat belt Warning buzzer does not operate.	1. Perform DATA LIST with hand–held tester 2. Wire Harness or Connector 3. Seat Belt Buckle Switch 4. Combination Meter Assy	05–1499 – 61–3 –

710CN–02

ON–VEHICLE INSPECTION

1. INSPECT SPEEDOMETER

(a) Check the operation.

(1) Using a speedometer tester, inspect the speedometer for acceptable indication error and check the operation of the odometer.

Reference: km/h (Europe)

Standard indication	Acceptable range
20 km/h	21.0 – 25.0 km/h
40 km/h	41.7 – 46.2 km/h
60 km/h	62.7 – 67.2 km/h
80 km/h	83.4 – 88.4 km/h
100 km/h	104.3 – 109.3 km/h
120 km/h	125.1 – 130.6 km/h
140 km/h	145.8 – 151.8 km/h
160 km/h	166.2 – 173.2 km/h
180 km/h	186.9 – 194.5 km/h
200 km/h	207.7 – 215.7 km/h
220 km/h	228.4 – 236.8 km/h
240 km/h	249.2 – 258.0 km/h

Reference: MPH (Europe)

Standard indication	Acceptable range
20 mph	21.0 – 23.5 mph
40 mph	42.0 – 44.5 mph
60 mph	62.5 – 66.0 mph
80 mph	83.1 – 87.1 mph
100 mph	103.9 – 108.4 mph
120 mph	124.7 – 129.6 mph
140 mph	145.4 – 150.7 mph

NOTICE:

Tire wear and over or under inflation will affect the indication error.

(2) Check the deflection width of the speed meter indicator.

Reference: Below 0.5 km/h (0.3 mph)

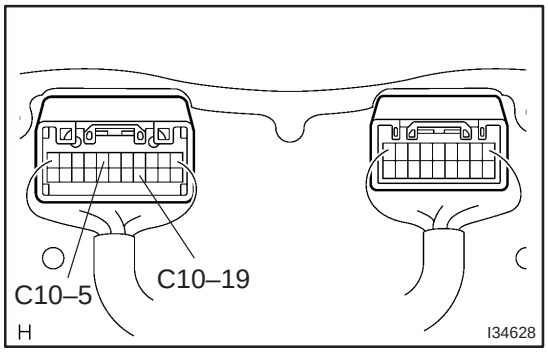

2. INSPECT OUTPUT SIGNAL OF VEHICLE SPEED

(a) Check for the signal.

(1) While driving the vehicle at the speed of 10 km/h, check the voltage between the terminal C11–15 of the combination meter assy and the body ground.

Standard: Fluctuation between 10 to 14 V or less is repeated 7 times within 1 sec.

NOTICE:

Check it with the ignition switch ON and the connector connected.

3. INSPECT TACHOMETER

(a) Check the operation

(1) Connect a tune–up test tachometer, and start the engine.

NOTICE:

- **Reversing the connection of the tachometer will damage the transistors and the insides of the diodes .**
- **When removing or installing the tachometer, be careful not to drop or subject it to heavy shocks.**

(2) Compare the result of the test with standard indication.

DC 13.5 V, 25 °C at (77 °F)

Standard indication (r/min)	Acceptable range (r/min) Data in ( ) are for reference
700	630 – 770
1,000	(900 – 1100)
2,000	(1850 – 2150)
3,000	2800 – 3200
4,000	(3800 – 4200)
5,000	4800 – 5200
6,000	(5750 – 6250)
7,000	6700 – 7300

Fuel Sender Gauge:



Ie–5–1–A I30899

4. INSPECT FUEL RECEIVER GAUGE

(a) Inspect the circuit.

(1) Disconnect the connector from the sender gauge.

(2) Turn the ignition switch to ON, then check the position of the receiver gauge needle.

Needle position: EMPTY

(3) Connect the terminal 2 and 3 on the wire harness side connector of fuel sender gauge.

(4) Turn the ignition switch to ON, then check the position of the receiver gauge needle.

Needle position: FULL

5. INSPECT FUEL LEVEL WARNING

(a) Inspect the circuit.

(1) Disconnect the connector from the sender gauge.

(2) Turn the ignition switch to ON, check the fuel level needle indicates EMPTY and fuel level warning light comes on.

6. INSPECT ENGINE COOLANT TEMPERATURE RECEIVER GAUGE WARNING LIGHT

(a) Inspect the circuit.

(1) Disconnect the connector from the sender gauge.

(2) Turn the ignition switch to ON, check the position of the water temperature receiver gauge needle.

Needle position: COOL

(3) Ground the terminal 2 on the wire harness side, then check the position of the water temperature receiver gauge needle.

Needle position: HOT

7. INSPECT SEAT BELT WARNING LIGHT & BUZZER

(a) Check the operation.
  (1) Turn the ignition switch to ON and check that the warning light comes on.
  (2) Fasten the outer belt to the inner belt and check that the warning light goes out.
  (3) Disconnect the connector from the buckle switch and ground the terminal on the wire harness side connector.
  (4) Turn the ignition switch to ON and check that the warning light comes on.

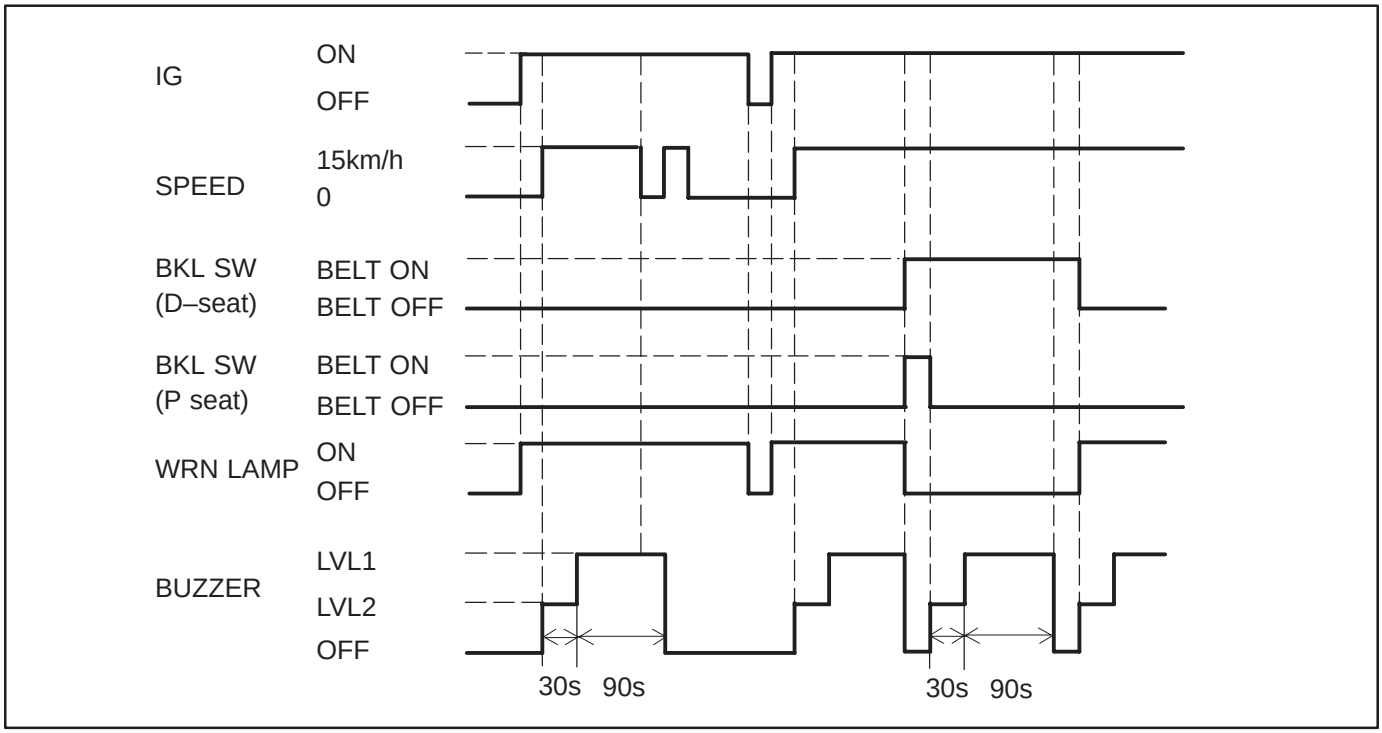

8. INSPECT LOW OIL PRESSURE WARNING LIGHT

(a) Inspect the circuit.
  (1) Disconnect the connector from the low oil pressure switch.
  (2) Turn the ignition switch to ON.
  (3) Ground the terminal of the wire harness side connector, then check the low oil pressure warning light.

  Low oil pressure warning light: Come on

9. INSPECT BRAKE WARNING LIGHT

(a) Inspect the parking brake warning light.
  (1) Disconnect the connector from the parking brake switch and ground the terminal on the wire harness side connector.
  (2) Turn the ignition switch to ON and check that the warning light comes on.

(b) Inspect the brake fluid level warning light.
  (1) Disconnect the connector from the brake fluid level warning switch and connect the terminals on the wire harness side connector.
  (2) Turn the ignition switch to ON and check that the warning light comes on.

10. INSPECT BRAKE FLUID LEVEL WARNING SWITCH

(a) Inspect the continuity.
  (1) Remove the reservoir tank cap and strainer.
  (2) Disconnect the connector.

(3) Check that the continuity exists between the terminals.

Float up (switch off): No continuity

(4) Use a syphon, etc., to take fluid out of the reservoir tank.

(5) Check that the continuity exists between the terminals.

Float down (switch on): Continuity

(6) Pour the fluid back in the reservoir tank.

(7) Reconnect the connector.

(8) Check that the buzzer stop after about 4 to 8 seconds.

11. INSPECT KEY REMINDER WARNING BUZZER

(a) Check warning buzzer function.

(1) Turn the ignition switch ON and check that the key reminder warning sounds if the ignition key is insert the key cylinder and front driver side door is opened (See Page 05–1586).

INSTRUMENT PANEL/METER

COMPONENTS

710G2–01

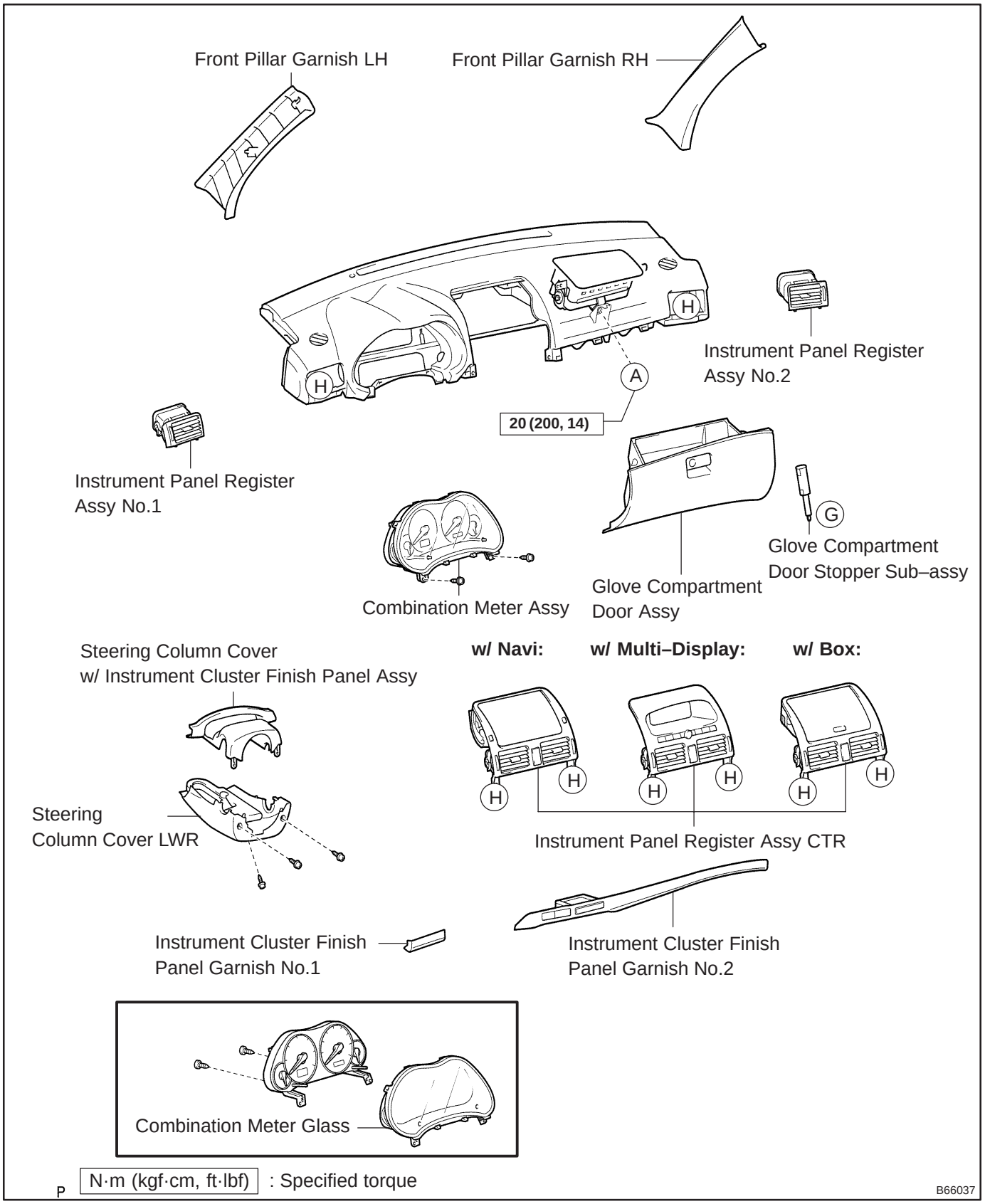

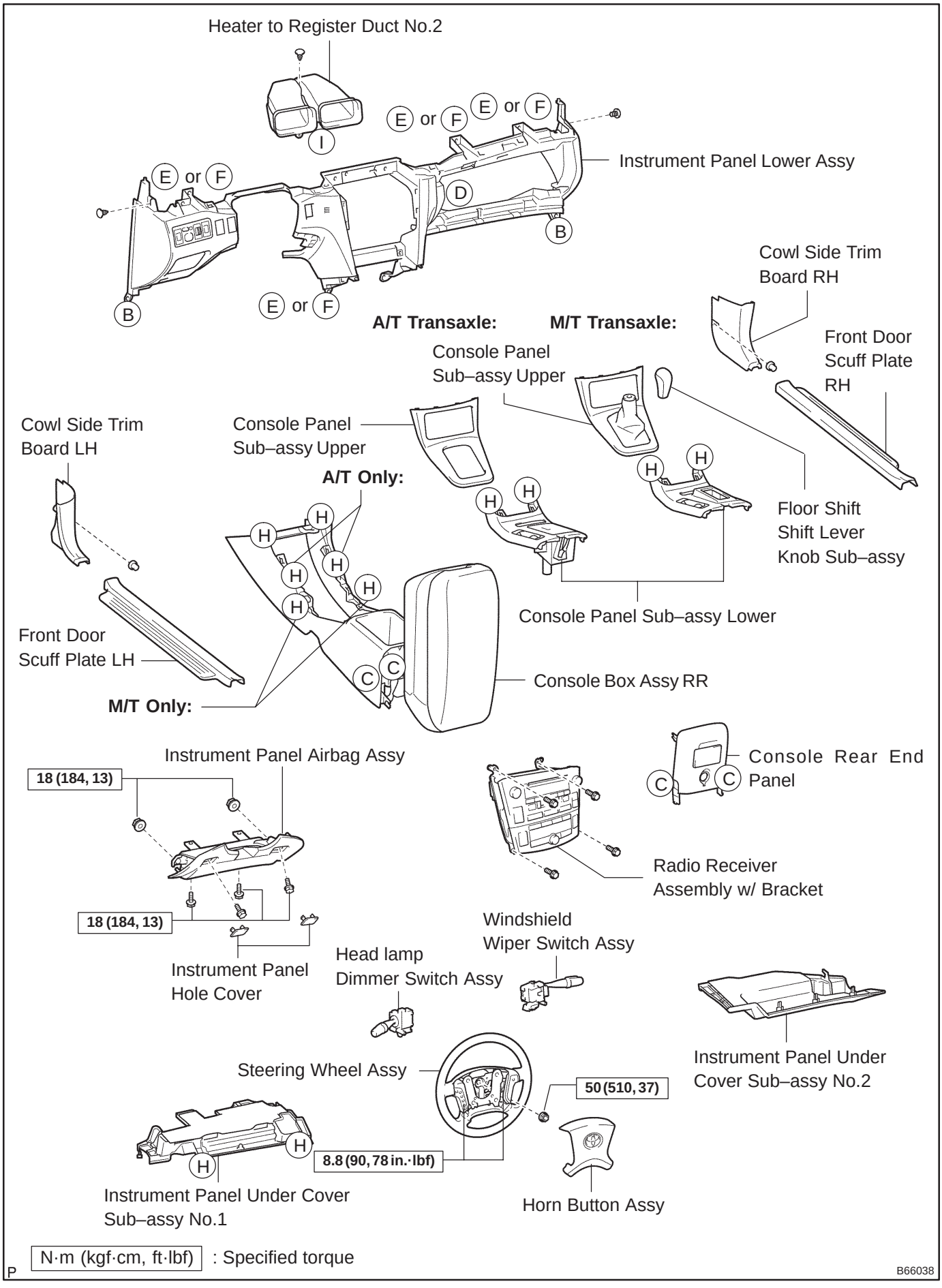
Heater to Register Duct No.2
I
E or F
E or F
Instrument Panel Lower Assy
D
B
E or F
B
E or F
A/T Transaxle:
M/T Transaxle:
Cowl Side Trim Board RH
Front Door Scuff Plate RH
Console Panel Sub–assy Upper
Cowl Side Trim Board LH
Console Panel Sub–assy Upper
A/T Only:
H
Floor Shift Shift Lever Knob Sub–assy
Console Panel Sub–assy Lower
Front Door Scuff Plate LH
C
Console Box Assy RR
M/T Only:
Instrument Panel Airbag Assy
18 (184, 13)
Console Rear End Panel
C
Radio Receiver Assembly w/ Bracket
18 (184, 13)
Windshield Wiper Switch Assy
Head lamp Dimmer Switch Assy
Instrument Panel Hole Cover
Instrument Panel Under Cover Sub–assy No.2
Steering Wheel Assy
50 (510, 37)
8.8 (90, 78 in.·lbf)
Instrument Panel Under Cover Sub–assy No.1
Horn Button Assy
N·m (kgf·cm, ft·lbf) : Specified torque
P
B66038

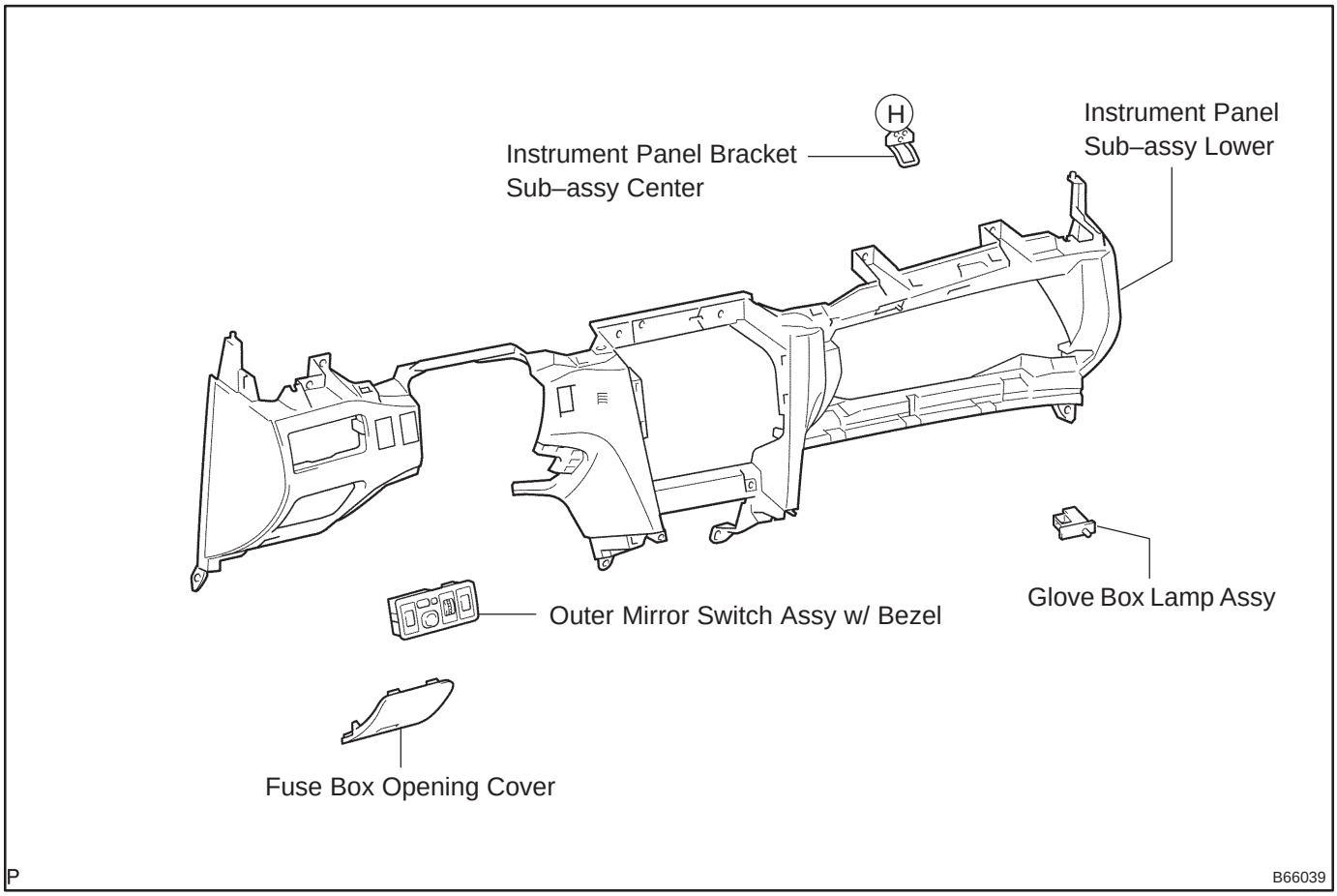
H
Instrument Panel Bracket
Sub–assy Center
Instrument Panel
Sub–assy Lower
Outer Mirror Switch Assy w/ Bezel
Glove Box Lamp Assy
Fuse Box Opening Cover
P
B66039

INSTRUMENT PANEL SUB–ASSY LOWER

710FY–01

PRECAUTION

1. PRECAUTION FOR VEHICLE WITH SRS AIRBAG AND SEAT BELT PRETENSIONER

(a) Some operations in this section may affect the SRS airbags. Prior to performing the corresponding operations, read the SRS airbag NOTICE.

710FZ–01

REPLACEMENT

HINT:

COMPONENTS: See page 71–7

1. TABLE OF BOLT, SCREW AND NUT

HINT:

The bolts, screws and nuts, which are necessary for installation and removal of the instrument panel, are shown in the illustration below with alphabets.

mm (in.) (L = Length)

Code	Shape	Code	Shape	Code	Shape
<A>	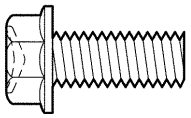 ϕ = 8 (0.31) L = 18 (0.71) B50533 91535-60816	<B>	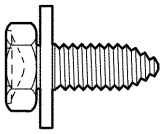 ϕ = 6 (0.24) L = 16 (0.63) 91635-60616	<C>	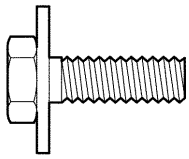 ϕ = 6 (0.24) L = 20 (0.79) B50534 91635-60625
<D>	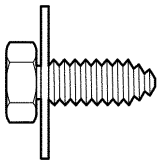 ϕ = 6 (0.24) L = 20 (0.79) B52926 90159-60125	<E>	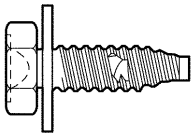 ϕ = 6 (0.24) L = 20 (0.79) B52928 90159-60546	<F>	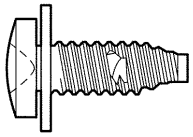 ϕ = 7 (0.28) L = 20 (0.79) B52927 90159-70004
<G>	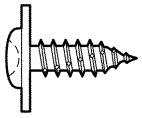 ϕ = 5 (0.20) L = 14 (0.55) B59217 90167-50022	<H>	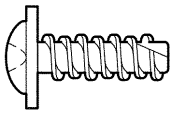 ϕ = 5 (0.20) L = 14 (0.55) B32741 93568-55014	<I>	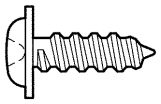 L = 16 (0.63) E33943 93560-15016

P B66036

2. DISCONNECT BATTERY NEGATIVE TERMINAL (See page 60–1)

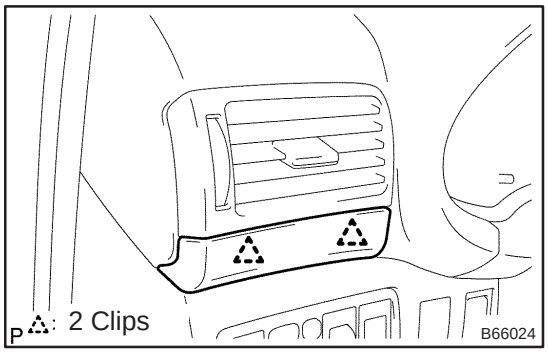

3. REMOVE INSTRUMENT CLUSTER FINISH PANEL GARNISH NO.1

(a) Disengage the 2 clips and remove the instrument cluster finish panel garnish No.1.

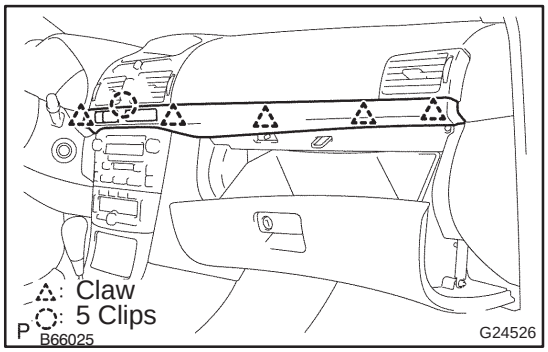

4. REMOVE INSTRUMENT CLUSTER FINISH PANEL GARNISH NO.2

(a) Disengage the 5 clips and claw, and then remove the instrument cluster finish panel garnish No.2.

(b) Disconnect the connectors.

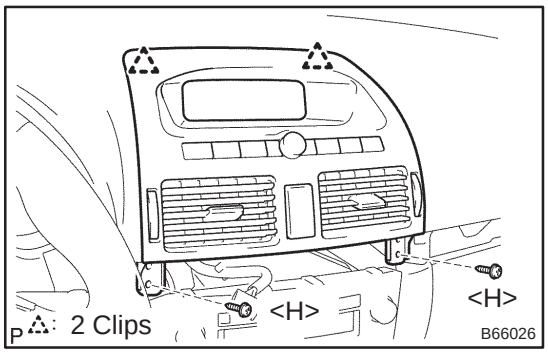

5. REMOVE INSTRUMENT PANEL REGISTER ASSY CTR

(a) Remove the 2 screws <H>.

(b) Disengage the 2 clips and remove the instrument panel register assy CTR, and then disconnect the connectors.

6. REMOVE STEERING COLUMN COVER W/INSTRUMENT CLUSTER FINISH PANEL ASSY (See page 50–9)

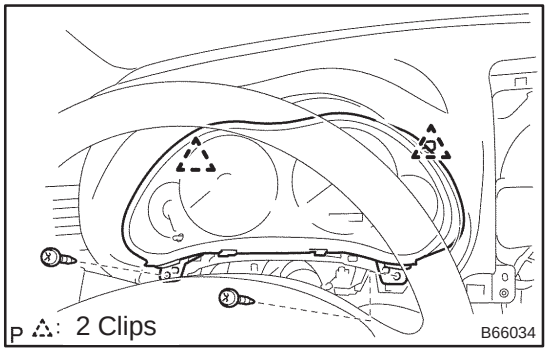

7. REMOVE COMBINATION METER ASSY

(a) Remove the 2 screws and disengage the 2 clips.

(b) Pull out the combination meter assy, and then disconnect the connectors.

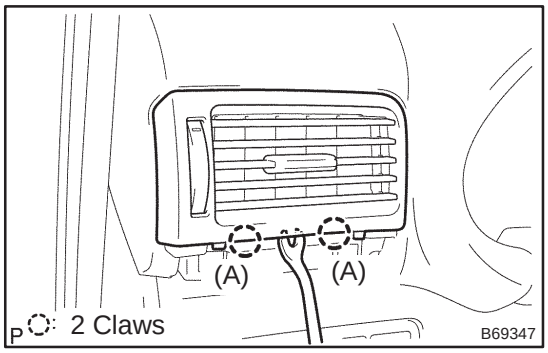

8. REMOVE INSTRUMENT PANEL REGISTER ASSY NO.1

(a) Insert a clip remover between the center of the instrument panel register assy No.1 lower and the instrument panel sub–assy upper to desengage the 2 claws (A) shown in the illustration.

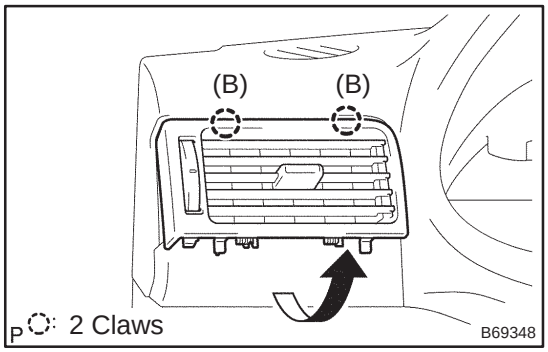

(b) Disengage the 2 claws (B) and remove the instrument panel register assy No.1.

9. REMOVE INSTRUMENT PANEL REGISTER ASSY NO.2

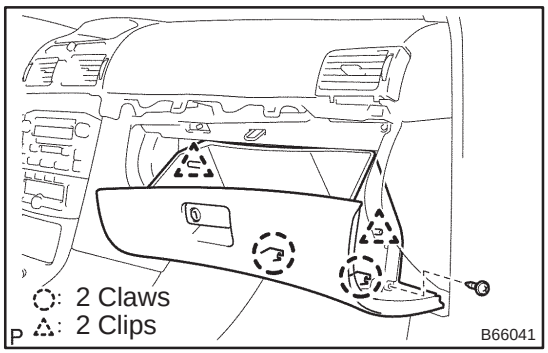

10. REMOVE GLOVE COMPARTMENT DOOR ASSY

(a) Remove the screw.

(b) Deform the upper part of the glove compartment door assy to release the stoppers.

(c) Pull the glove compartment door assy upward to remove it.

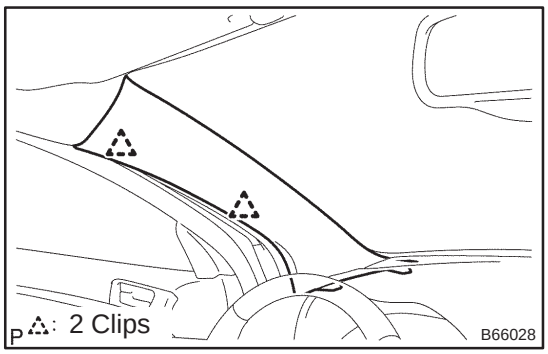

11. REMOVE FRONT PILLAR GARNISH LH

(a) Disengage the 2 clips, and remove the front pillar garnish LH.

12. REMOVE FRONT PILLAR GARNISH RH

13. DISCONNECT PASSENGER AIRBAG CONNECTOR (See page 60–29)

14. REMOVE INSTRUMENT PANEL SUB–ASSY UPPER W/INSTR PNL PASS L/DOOR AIR BAG ASSY

(a) Remove the 2 screws <H> and bolt <A>.
(b) Disengage the 2 clips and 3 claws.
(c) Pull the instrument panel sub–assy upper w/ passenger air bag assy upper rearward to remove it.
(d) Disconnect the connectors.

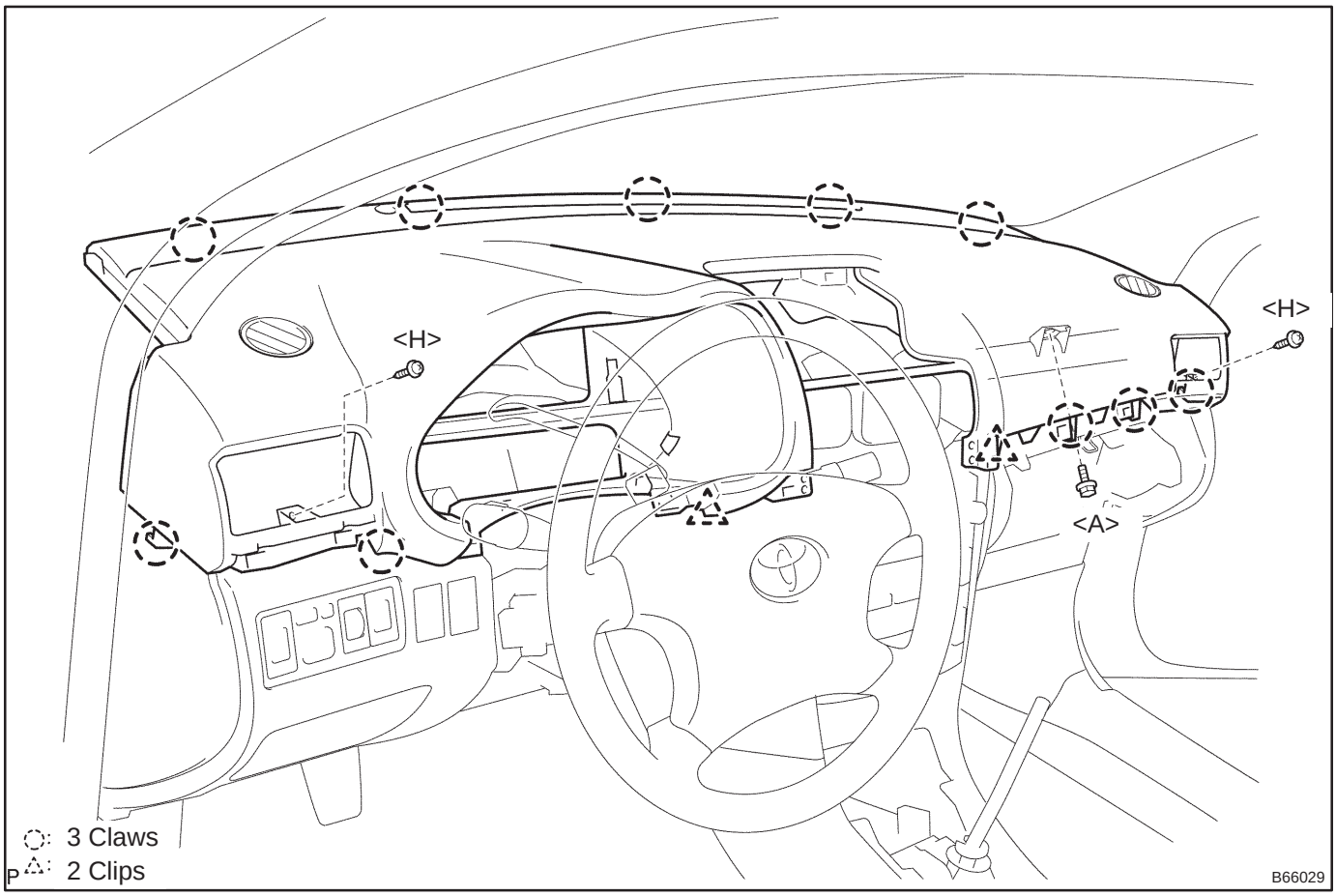

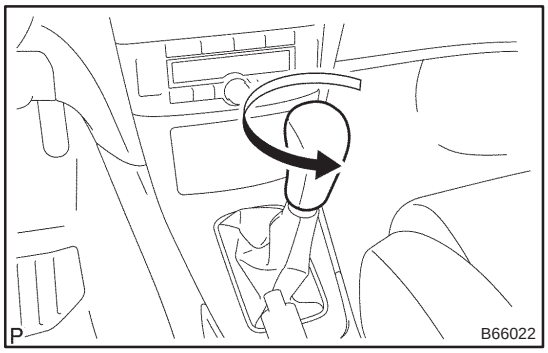

15. REMOVE FLOOR SHIFT SHIFT LEVER KNOB SUB–ASSY (M/T TRANSAXLE)

(a) Remove the floor shift shift lever knob sub–assy.

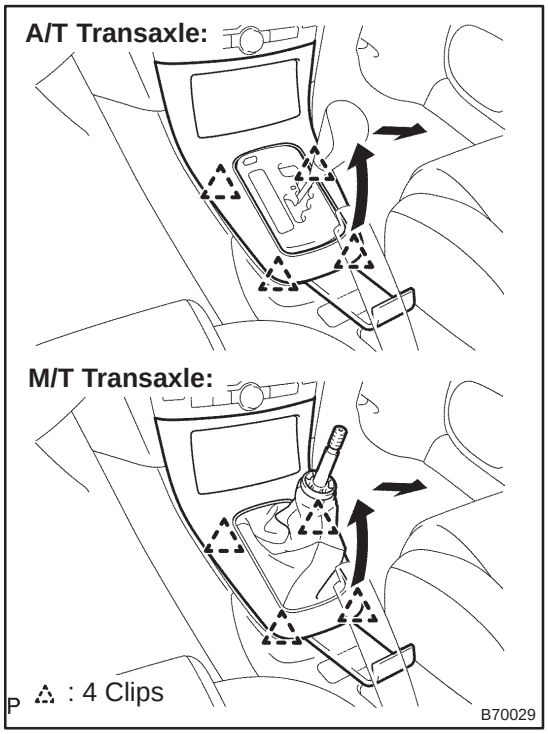

16. REMOVE CONSOLE PANEL SUB–ASSY UPPER

(a) Using a moulding remover, disengage the 4 clips.

(b) Disconnect the connectors, and remove the console panel sub–assy upper.

17. REMOVE INSTRUMENT CLUSTER FINISH PANEL SUB–ASSY CENTER (W/O RADIO) (See page 55–50)

18. REMOVE STEREO OPENING COVER W/BRACKET (W/O RADIO)

19. REMOVE RADIO RECEIVER ASSEMBLY W/BRACKET (See page 67–5)

20. REMOVE HORN BUTTON ASSY (See page 60–17)

21. REMOVE STEERING WHEEL ASSY (See page 50–9)

SST 09950–50013 (09951–05010, 09952–05010, 09953–05020, 09954–05021)

22. REMOVE HEADLAMP DIMMER SWITCH ASSY (See page 65–27)

23. REMOVE WINDSHIELD WIPER SWITCH ASSY (See page 66–24)

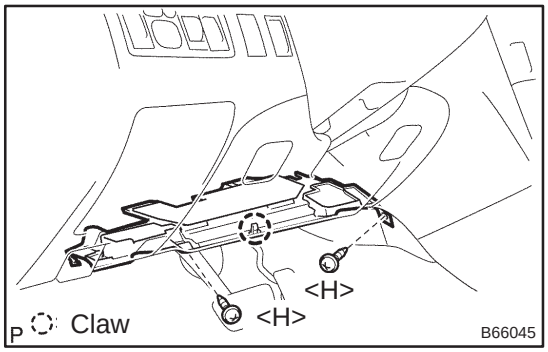

24. REMOVE INSTRUMENT PANEL UNDER COVER SUB–ASSY NO.1

(a) Remove the 2 screws <H>.

(b) Disengage the claw and remove the instrument panel under cover sub–assy No.1.

25. REMOVE INSTRUMENT PANEL HOLE COVER (See page 60–54)

26. REMOVE INSTRUMENT PANEL AIR BAG ASSY (See page 60–54)

27. REMOVE STEERING COLUMN COVER LWR (See page 50–9)

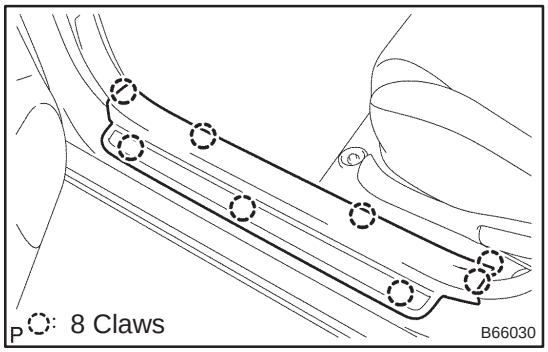

28. REMOVE FRONT DOOR SCUFF PLATE LH

(a) Disengage the 8 claws and remove the front door scuff plate LH.

29. REMOVE FRONT DOOR SCUFF PLATE RH

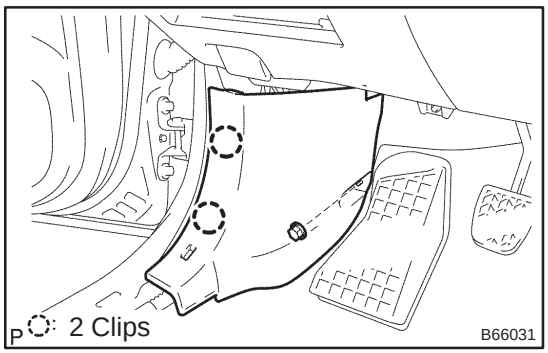

30. REMOVE COWL SIDE TRIM BOARD LH

(a) Remove the clip.

(b) Disengage the 2 clips and remove the cowl side trim board LH.

31. REMOVE COWL SIDE TRIM BOARD RH

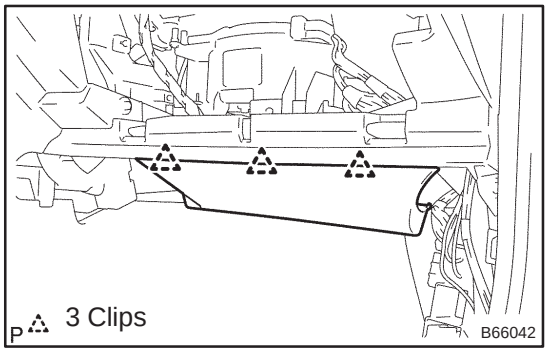

32. REMOVE INSTRUMENT PANEL UNDER COVER SUB–ASSY NO.2

(a) Disengage the 3 clips and remove the instrument panel under cover sub–assy No.2.

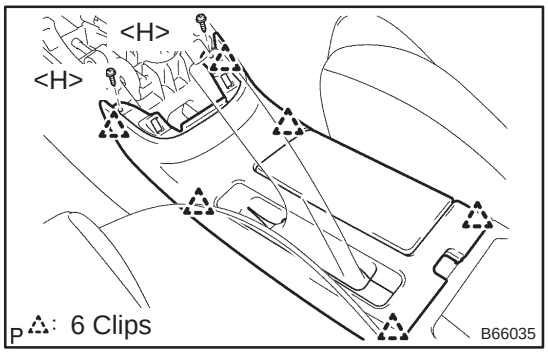

33. REMOVE CONSOLE PANEL SUB–ASSY LOWER

(a) Remove the 2 screws <H>.

(b) Disengage the 6 clips and remove the console panel sub–assy lower.

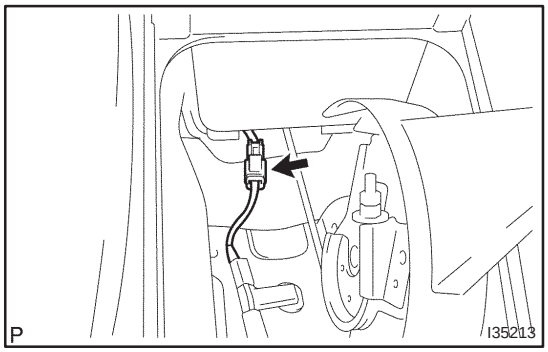

34. REMOVE CONSOLE BOX ASSY RR

(a) Disconnect the connector.

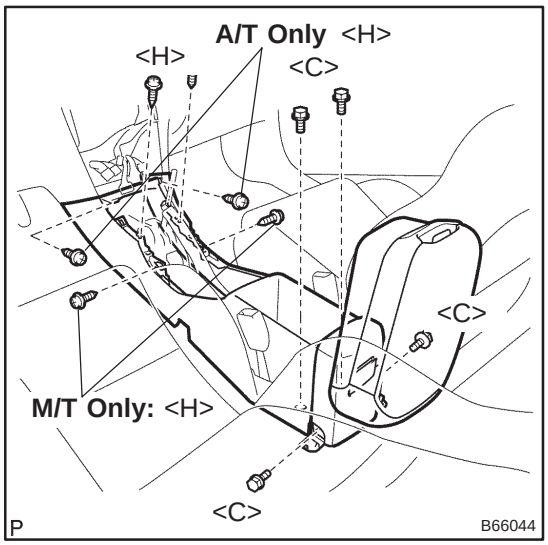

(b) Remove the 2 bolts <C>, 4 screws <H> and the console box assy RR.

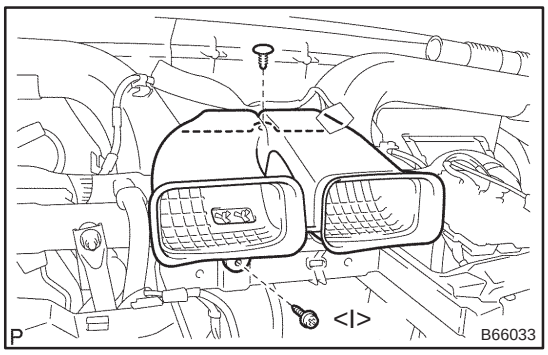

35. REMOVE HEATER TO REGISTER DUCT NO.2

(a) Remove the screw <I>, clip and the heater to register duct No.2.

36. REMOVE INSTRUMENT PANEL LOWER ASSY

(a) Disconnect the hood lock control cable.
(b) Using a clip remover, remove the 2 clips.
(c) Remove the 2 bolts <B> 7 screws <D> <E> or <F>.
(d) Disengage the wire harness 5 clamps.
(e) Remove the instrument panel lower assy.

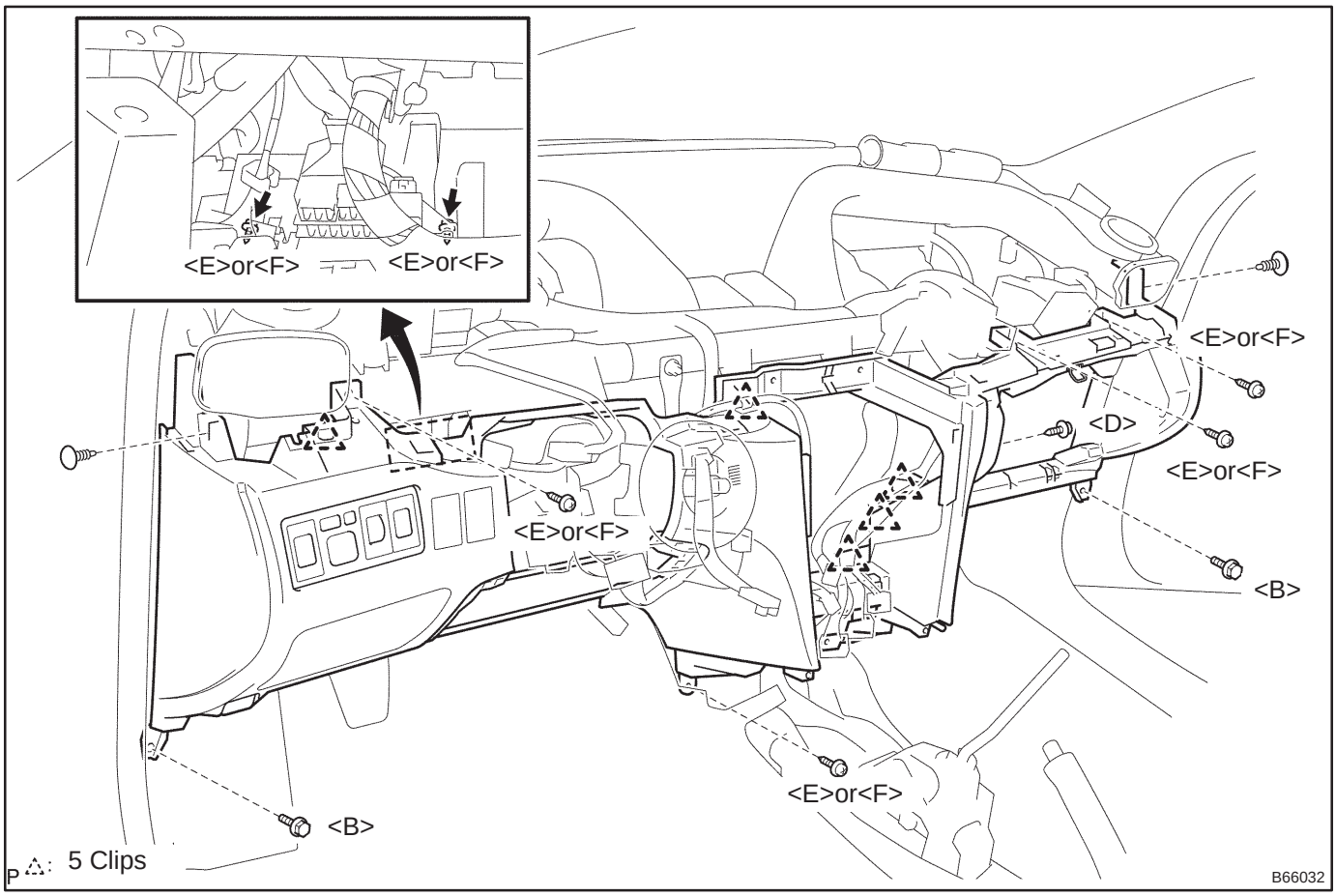

37. REMOVE OUTER MIRROR SWITCH ASSY W/BEZEL
38. REMOVE FUSE BOX OPENING COVER
39. REMOVE GLOVE BOX LAMP ASSY
40. REMOVE INSTRUMENT PANEL BRACKET SUB–ASSY CENTER

(a) Remove the screw <H> and the instrument panel bracket sub–assy center.

41. REMOVE INSTRUMENT PANEL SUB–ASSY LOWER
42. INSTALL INSTRUMENT PANEL AIR BAG ASSY (See page 60–29)

43. INSTALL INSTRUMENT PANEL SUB–ASSY UPPER W/INSTR PNL PASS L/DOOR AIR BAG ASSY

(a) Install the instrument panel sub–assy upper, 2 screws <H> and bolt <A>.
Torque: Bolt: 20 N·m (204 kgf·cm, 15 ft·lbf)

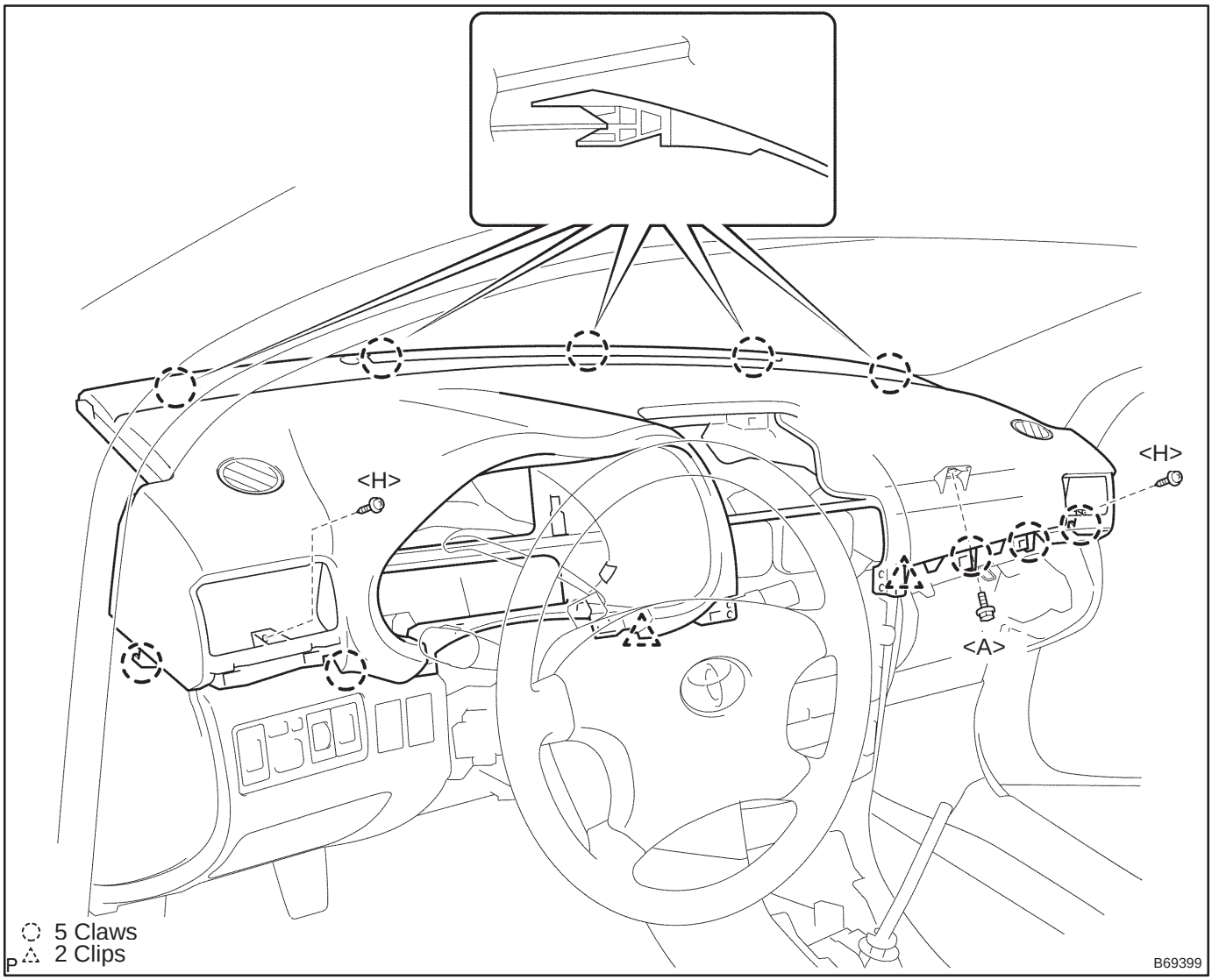

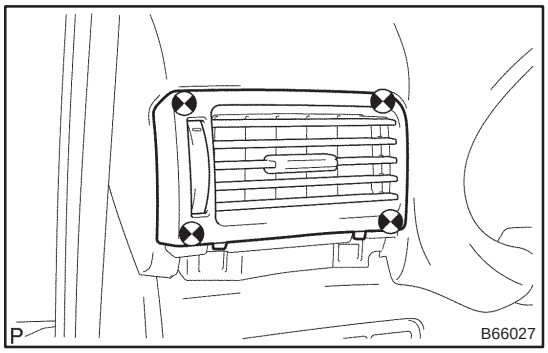

44. INSTALL INSTRUMENT PANEL REGISTER ASSY NO.1

(a) Install the istrument panel register assy No.1 by pushing the 4 positions on the face panel shown in the illustration with fingers.

NOTICE:

Do not push the fins and the knobs (center and open & shut).

45. INSTALL INSTRUMENT PANEL REGISTER ASSY NO.2

46. ADJUST SPIRAL CABLE SUB–ASSY (See page 60–26)
47. INSTALL STEERING WHEEL ASSY (See page 50–9)
48. INSTALL HORN BUTTON ASSY (See page 60–17)
49. INSPECT HORN BUTTON ASSY (See page 60–11)
50. INSPECT SRS WARNING LIGHT (See page 05–1184)

COMBINATION METER ASSY

710G0–01

OVERHAUL

1. REMOVE STEERING COLUMN COVER LWR (See page 50–9)
2. REMOVE STEERING COLUMN COVER W/INSTRUMENT CLUSTER FINISH PANEL ASSY (See page 50–9)

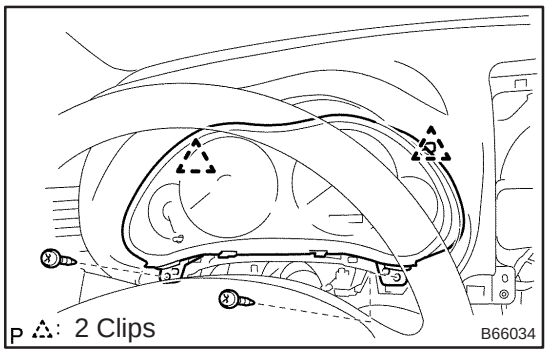

3. REMOVE COMBINATION METER ASSY

(a) Remove the 2 screws and disengage the 2 clips.

(b) Pull out the combination meter assy, then disconnect the connectors.

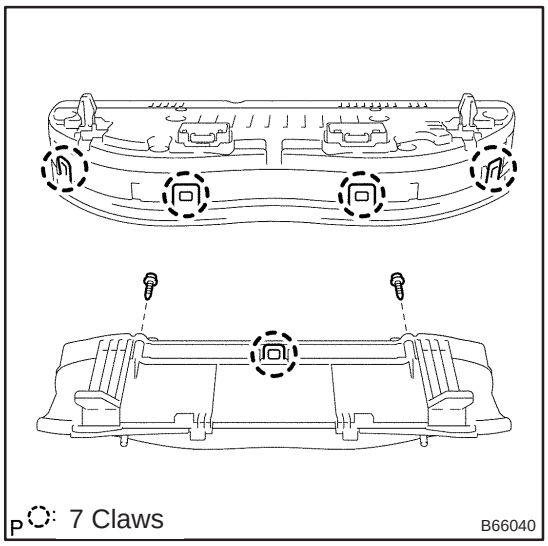

4. REMOVE COMBINATION METER GLASS

(a) Remove the 2 screws.

(b) Disengage the 7 claws and remove the combination meter glass.

MULTI–DISPLAY (CRT DISPLAY) DISPLAY

710G1–01

REPLACEMENT

1. **REMOVE INSTRUMENT CLUSTER FINISH PANEL GARNISH NO.2 (See page 71–11)**
2. **REMOVE INSTRUMENT PANEL REGISTER ASSY CTR (See page 71–11)**

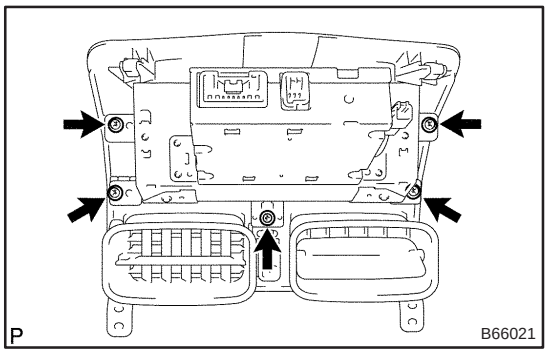

3. **REMOVE MULTI–DISPLAY (CRT DISPLAY) DISPLAY**

(a) Remove the 5 screws multi–display (crt display) display.

FRONT POWER SEAT CONTROL SYSTEM

720J1–01

LOCATION

LHD Models

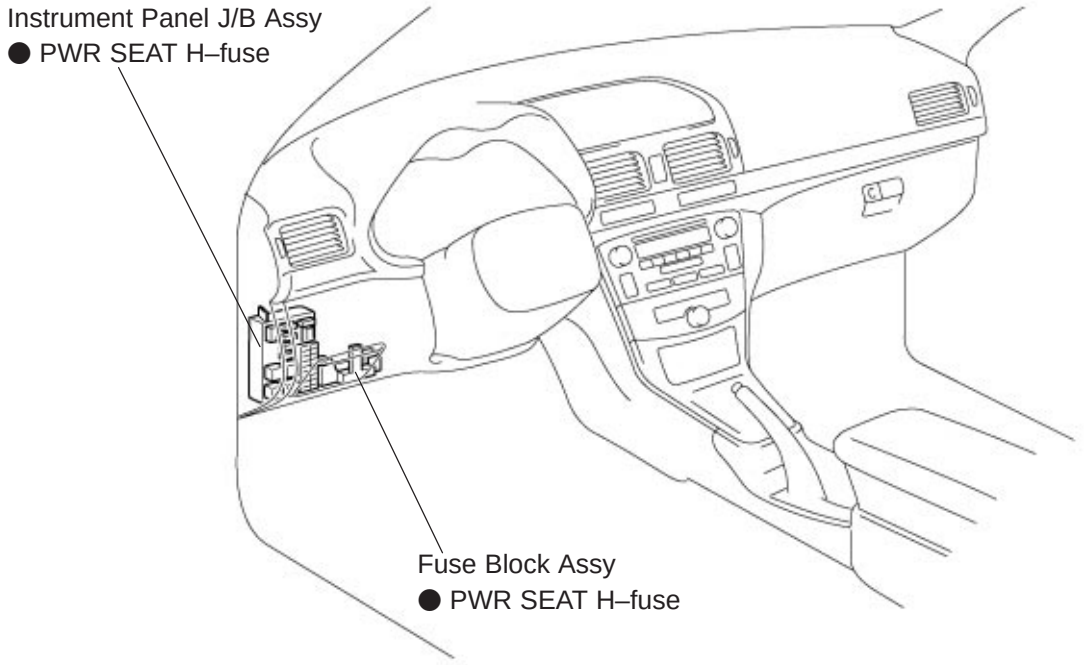

RHD Models

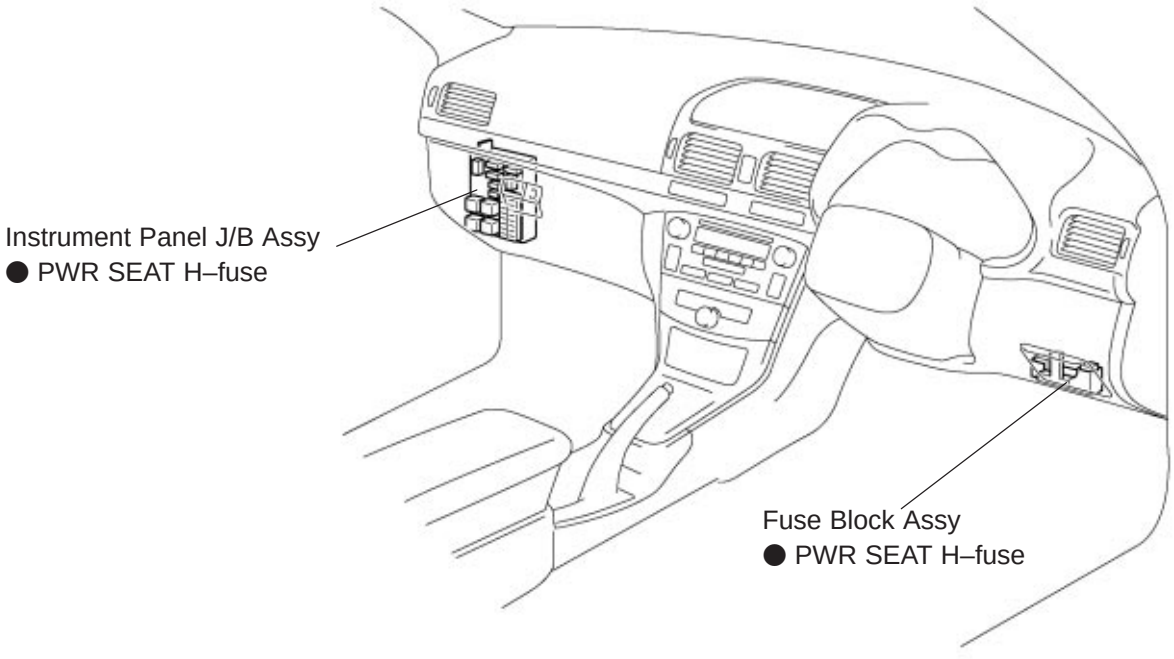

Y

B70987

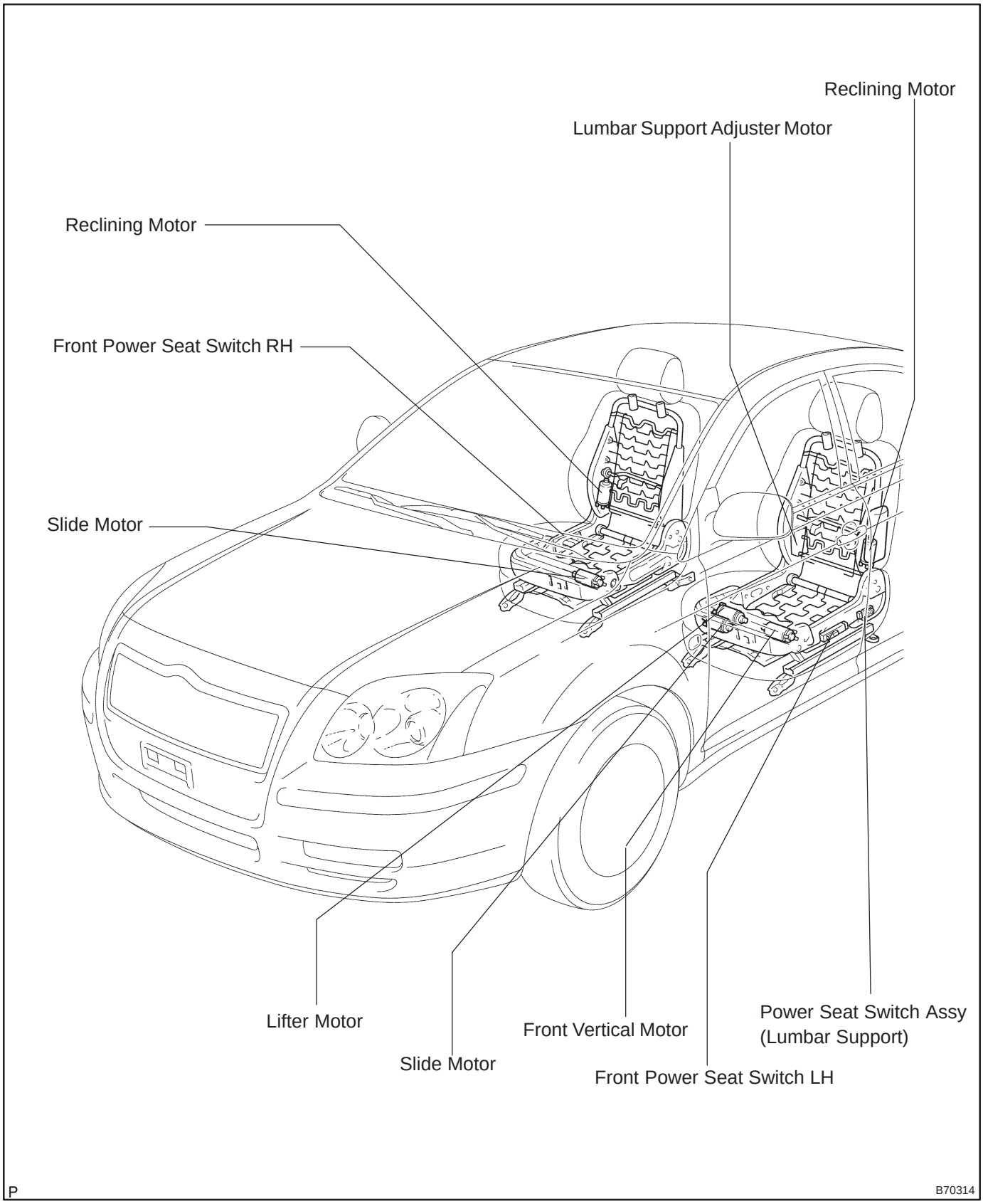
Reclining Motor
Lumbar Support Adjuster Motor
Reclining Motor
Front Power Seat Switch RH
Slide Motor
Lifter Motor
Slide Motor
Front Vertical Motor
Front Power Seat Switch LH
Power Seat Switch Assy
(Lumbar Support)
P
B70314

720J2–01

PROBLEM SYMPTOMS TABLE

Symptom	Suspected Area	See Page
Power seat does not operate	1. Front power seat switch 2. PWR SEAT H–fuse 3. Wire harness	72–6 68–1 –
Only slide operation function does not operate	1. Front power seat switch 2. Slide motor 3. Wire harness	72–6 72–6 –
Only front vertical operation function does not operate (Driver seat only)	1. Front power seat switch 2. Front vertical motor 3. Wire harness	72–6 72–6 –
Only lifter operation function does not operate (Driver seat only)	1. Front power seat switch 2. Lifter motor 3. Wire harness	72–6 72–6 –
Only reclining operation function does not operate	1. Front power seat switch 2. Reclining motor 3. Wire harness	72–6 72–6 –
Only lumbar support operation function does not operate (Driver seat only)	1. Power seat switch assy (Lumbar support) 2. Lumbar support adjuster motor 3. Wire harness	72–6 72–6 –

720J3–01

ON–VEHICLE INSPECTION

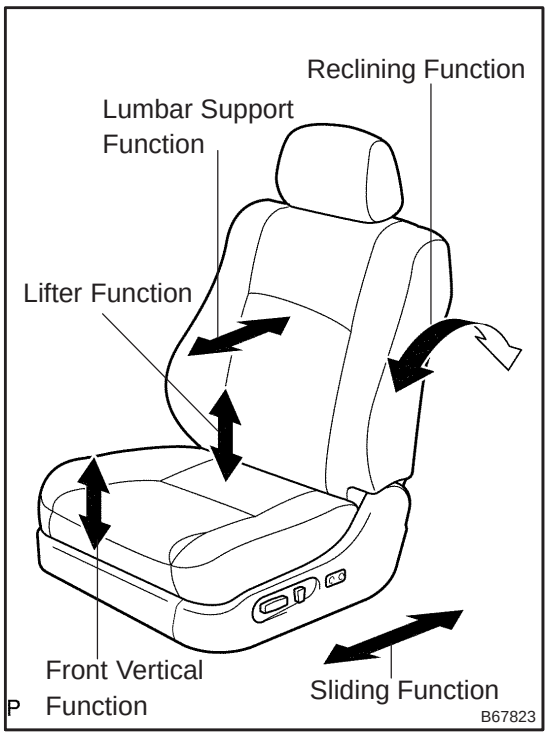

1. CHECK POWER SEAT FUNCTION

(a) Check the basic function.

(1) Check that each part functions properly (sliding, front vertical, lifter, reclining, lumbar support) when operating the power seat switches.

2. CHECK POWER SEAT MOTOR ASSY (SLIDING, FRONT VERTICAL, LIFTER, RECLINING FUNCTIONS)

(a) Check the PTC operation inside the power seat motor.

NOTICE:

- **The inspection should be performed with the seat installed in the vehicle.**
- **Perform this inspection for every maximum position.**

(1) Move the seat to any of the maximum positions by operating the power seat switch and keep the seat there for approx. 60 seconds.

(2) Try to operate the power seat past the maximum position using the power seat switch and measure the time until the electrical current is shut off (motor operation sound will stop, inspection of current shut–off).

Standard: 4 to 90 seconds

(3) Turn the power seat switch off after the inspection of current shut–off and keep that condition for approx. 60 seconds.

(4) Operate the power seat switch to move the seat to the opposite position and check that the motor operates.

3. CHECK LUMBAR SUPPORT ADJUSTER ASSY LH

(a) Inspect the PTC operation inside the lumber support motor.

NOTICE:

The inspection should be performed with the seat installed to the vehicle.

(1) Move the lumbar support to either the foremost or rearmost position by operating the lumbar support switch and keep it there for approx. 60 seconds.

(2) Try to move the lumbar support past the maximum position using the switch and measure the time until the electrical current is shut off (motor operation sound will stop, inspection of current shut–off).

Standard: 4 to 90 seconds

(3) Turn the lumbar support switch off after the inspection of current shut–off and keep that condition for approx. 60 seconds.

(4) Operate the lumbar support switch to move the lumbar support to the opposite position and check that the motor operates.

720J4–01

INSPECTION

Front Power Seat Switch

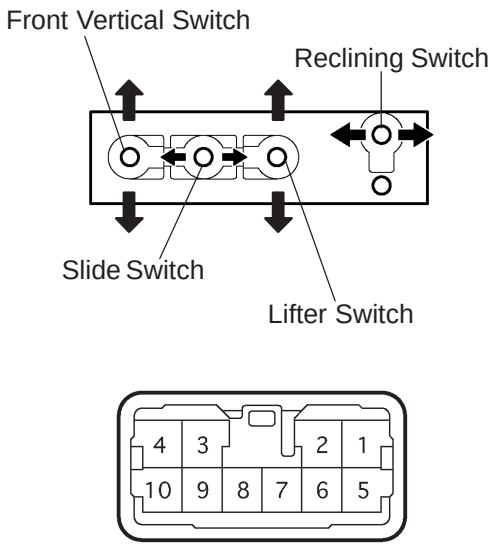

1. Driver side:

INSPECT FRONT POWER SEAT SWITCH

(a) Inspect the resistance between the terminals when each switch is operated.

Standard:

Slide switch

Tester Connection	Switch Position	Specified Condition
1 – 9	FRONT	Below 1 Ω
4 – 6		
4 – 6	OFF	
4 – 9		
1 – 6	REAR	
4 – 9		

Front vertical switch

Tester Connection	Switch Position	Specified Condition
1 – 10	UP	Below 1 Ω
4 – 5		
4 – 5	OFF	
4 – 10		
1 – 5	DOWN	
4 – 10		

Lifter switch

Tester Connection	Switch Position	Specified Condition
1 – 7	UP	Below 1 Ω
4 – 8		
4 – 7	OFF	
4 – 8		
1 – 8	DOWN	
4 – 7		

Reclining switch

Tester Connection	Switch Position	Specified Condition
1 – 3	FRONT	Below 1 Ω
2 – 4		
2 – 4	OFF	
3 – 4		
1 – 2	REAR	
3 – 4		

If the result is not as specified, replace the front power seat switch.

Front Power Seat Switch

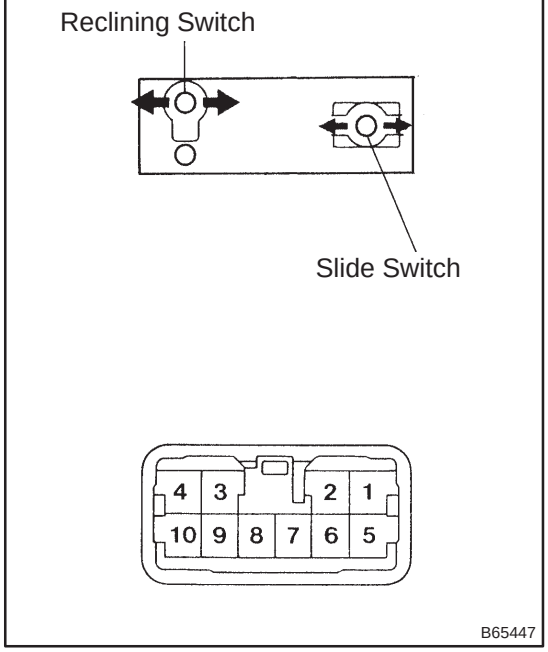

2. Passenger side:
INSPECT FRONT POWER SEAT SWITCH

(a) Inspect the resistance between the terminals when each switch is operated.

Standard:

Slide switch

Tester Connection	Switch Condition	Specified Condition
1 – 9	FRONT	Below 1 Ω
4 – 6		
4 – 6	OFF	
4 – 9		
4 – 9	REAR	
1 – 6		

Reclining switch

Tester Connection	Switch Condition	Specified Condition
1 – 3	FRONT	Below 1 Ω
2 – 4		
2 – 4	OFF	
3 – 4		
1 – 2	REAR	
3 – 4		

If the result is not as specified, replace the front power seat switch.

Power Seat Switch Assy (Lumbar Support)

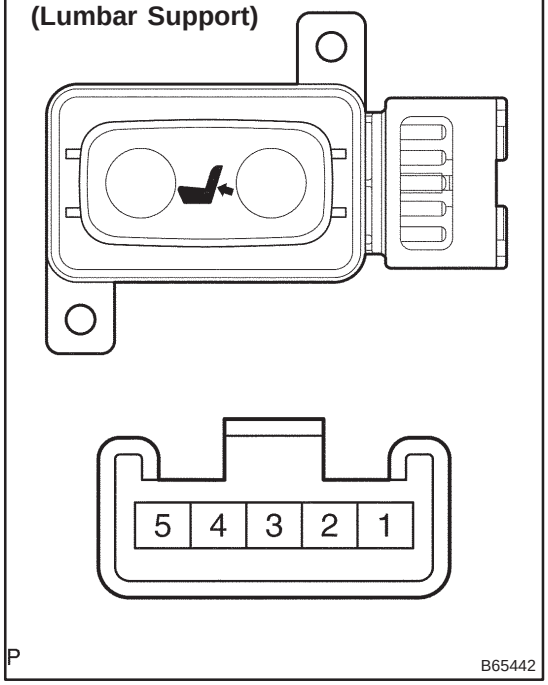

3. Driver side seat:
INSPECT POWER SEAT SWITCH ASSY (LUMBAR SUPPORT)

(a) Inspect the resistance between the terminals when the switch is operated.

Standard:

Tester Connection	Switch Condition	Specified Condition
1 – 2	HOLD	Below 1 Ω
3 – 4		
1 – 2	OFF	
4 – 5		
1 – 3	RELEASE	
4 – 5		

If the result is not as specified, replace the power seat switch assy.

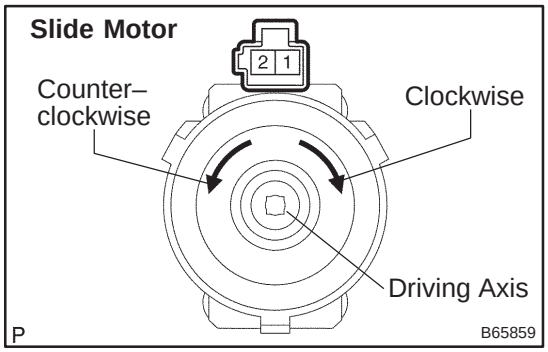

4. INSPECT POWER SEAT MOTOR ASSY

(a) Inspect operation of the slide motor.

(1) Check that the motor rotates smoothly when the battery is connected to the motor connector terminals.

Standard:

Tester Connection	Operational Direction
Battery positive voltage → 1 Battery negative voltage → 2	Clockwise
Battery positive voltage → 2 Battery negative voltage → 1	Counterclockwise

If the result is not as specified, replace the motor assy.

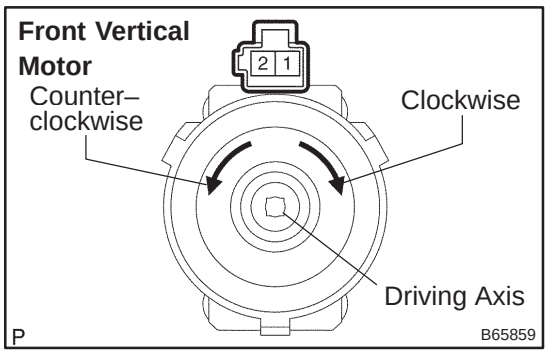

(b) Driver side seat:

Inspect operation of the front vertical motor.

(1) Check that the motor rotates smoothly when the battery is connected to the front vertical motor connector terminals.

Standard:

Tester Connection	Operational Direction
Battery positive voltage → 1 Battery negative voltage → 2	Clockwise
Battery positive voltage → 2 Battery negative voltage → 1	Counterclockwise

If the result is not as specified, replace the motor assy.

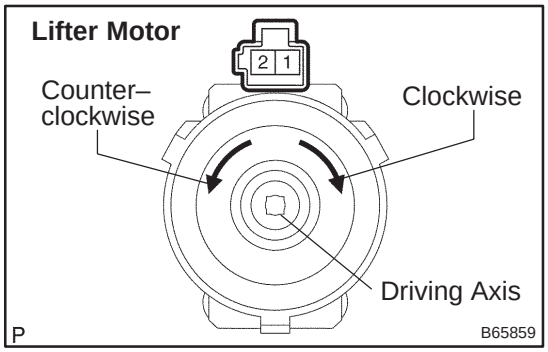

(c) Driver side seat:

Inspect operation of the lifter motor.

(1) Check that the motor rotates smoothly when the battery is connected to the lifter motor connector terminals.

Standard:

Tester Connection	Operational Direction
Battery positive voltage → 1 Battery negative voltage → 2	Clockwise
Battery positive voltage → 2 Battery negative voltage → 1	Counterclockwise

If the result is not as specified, replace the motor assy.

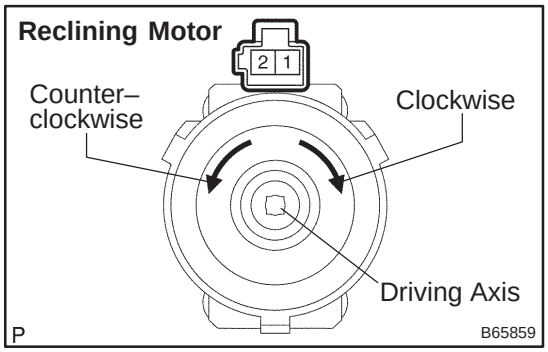

(d) Inspect operation of the reclining motor.

(1) Check that the motor rotates smoothly when the battery is connected to the reclining motor connector terminals.

Standard:

Tester Connection	Operational Direction
Battery positive voltage → 1 Battery negative voltage → 2	Clockwise
Battery positive voltage → 2 Battery negative voltage → 1	Counterclockwise

If the result is not as specified, replace the motor assy.

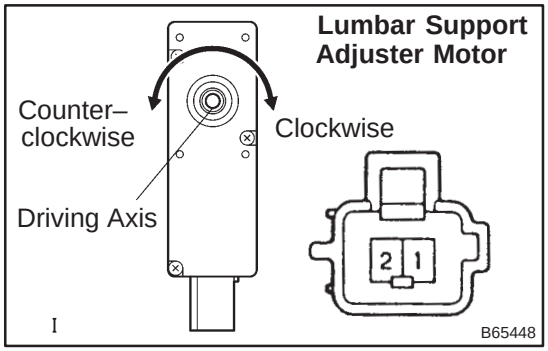

5. Driver side seat:

INSPECT LUMBAR SUPPORT ADJUSTER ASSY

(a) Inspect operation of the motor.

(1) Check that the motor rotates smoothly when the battery is connected to the lumber support adjuster motor connector terminals.

Standard:

Tester Connection	Operational Direction
Battery positive voltage → 1 Battery negative voltage → 2	Clockwise
Battery positive voltage → 2 Battery negative voltage → 1	Counterclockwise

If the result is not as specified, replace the adjuster assy.

FRONT SEAT ASSEMBLY LH (POWER SEAT TYPE)

COMPONENTS

720J5–01

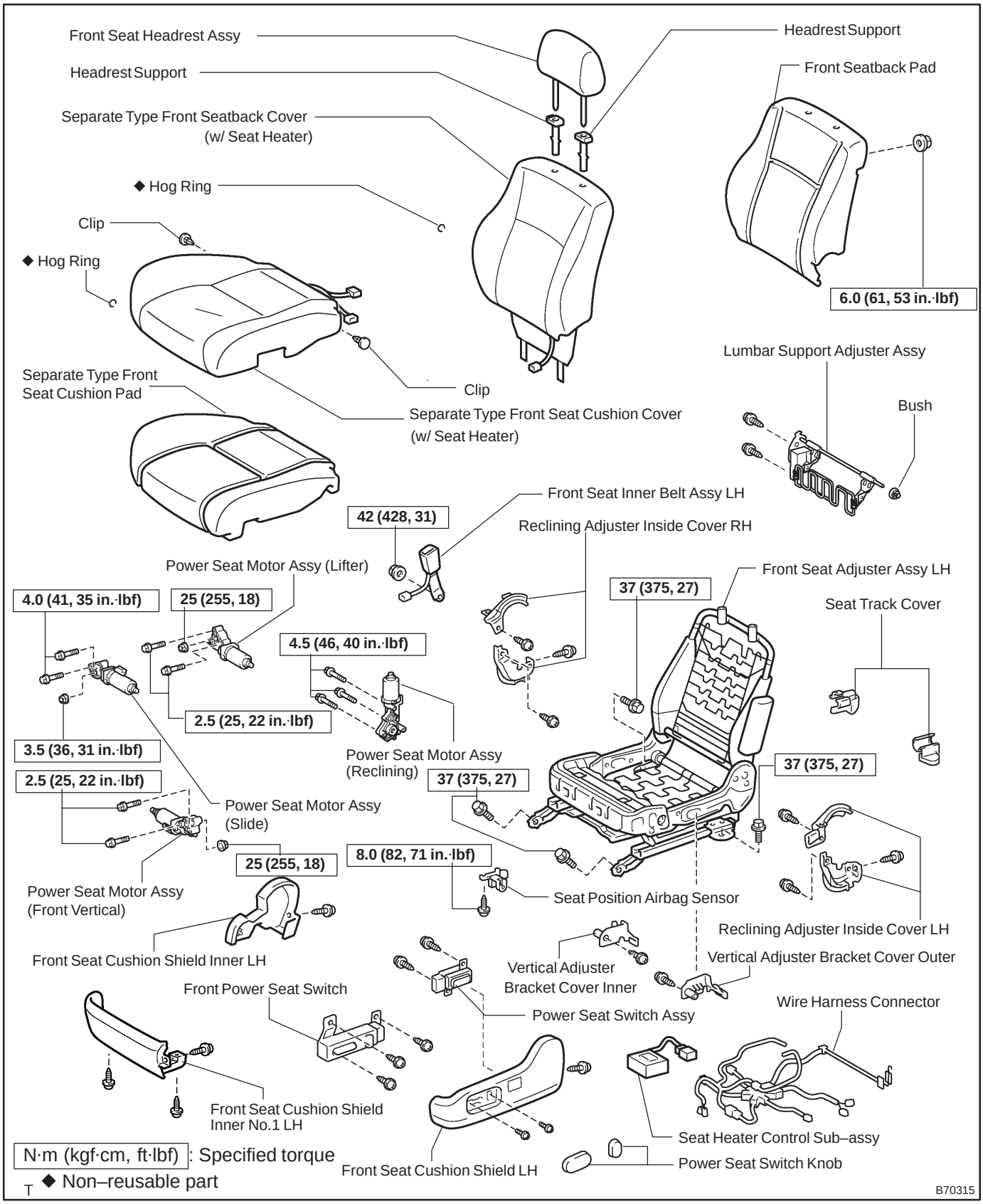

720J6–01

OVERHAUL

CAUTION:

- **Wear safety gloves, because the cutting surface of the seatback frame and seat adjuster may injure your hand.**
- **Work must be started more than 90 seconds after the ignition switch is turned to the LOCK position and the negative (–) terminal cable is disconnected from the battery.**
  (The SRS is equipped with a back–up power source. If work is started within 90 seconds from disconnecting the negative (–) terminal cable of the battery, the SRS may be deployed.)

HINT:

- The installation is in the reverse order of the removal. However, when there is a special point concerning the installation, it is indicated.
- Use the same procedures on the RH side as on the LH side.

1. REMOVE FRONT SEAT ASSY LH

(a) Remove the headrest.

(b) Using a screwdriver, remove the 2 seat track covers.

HINT:

Tape the screwdriver tip before use.

(c) Disconnect the connectors under the seat.

(d) Remove the 4 bolts and seat.

2. REMOVE FRONT SEAT CUSHION SHIELD LH

(a) Using a screwdriver, remove the 2 seat switch knobs.

HINT:

Tape the screwdriver tip before use.

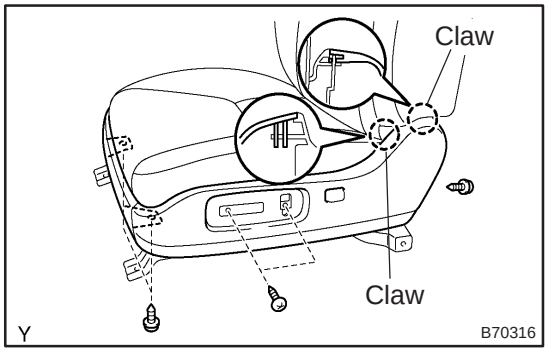

(b) Remove the 5 screws.

(c) Using a screwdriver, disengage the claws and remove the cushion shield with the inner No. 1 LH, and then disconnect the connector.

HINT:

Tape the screwdriver tip before use.

(d) Remove the 2 screws and seat switch.

3. REMOVE FRONT SEAT CUSHION SHIELD INNER NO.1 LH

(a) Remove the screw and cushion shield.

4. REMOVE FRONT POWER SEAT SWITCH

(a) Disconnect the connectors.

(b) Remove the 3 screws and seat switch.

5. REMOVE FRONT SEAT INNER BELT ASSY LH

(a) Remove the nut and inner belt.

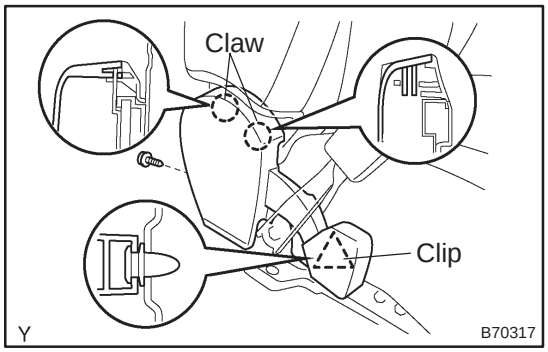

6. REMOVE FRONT SEAT CUSHION SHIELD INNER LH

(a) Remove the screw.

(b) Using a screwdriver, disengage the 2 claws and clip, and remove the cushion shield.

HINT:

Tape the screwdriver tip before use.

7. REMOVE SEPARATE TYPE FRONT SEAT CUSHION COVER

(a) Disengage the hook and remove the seat cushion cover together with the pad.

(b) Remove the hog rings and seat cushion cover.

8. REMOVE SEPARATE TYPE FRONT SEAT BACK COVER

(a) w/ Side airbag:
Remove the hog rings, nut and seatback cover bracket.

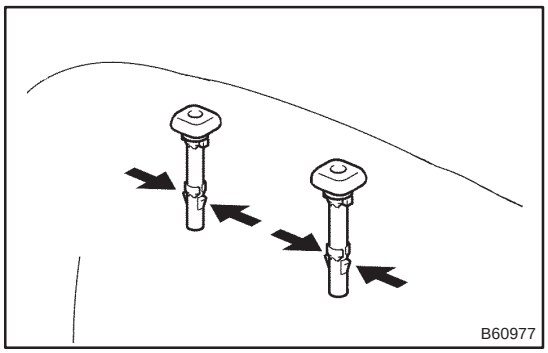

(b) Remove the 2 headrest supports.

(c) Remove the hog rings and seatback cover together with the pad.

(d) Remove the hog rings and seatback cover.

9. REMOVE SEAT POSITION AIR BAG SENSOR

(a) Remove the screw and airbag sensor.

10. REMOVE POWER SEAT MOTOR ASSY (RECLINING)

(a) Remove the 3 bolts and reclining motor.

11. REMOVE POWER SEAT MOTOR ASSY (SLIDE)

(a) Remove the 2 bolts, nut and slide motor.

12. REMOVE POWER SEAT MOTOR ASSY (LIFTER)

(a) Remove the 2 bolts, nut and lifter motor.

13. REMOVE POWER SEAT MOTOR ASSY (FRONT VERTICAL)

(a) Remove the 2 bolts, nut and vertical motor.

14. REMOVE FRONT SEAT ADJUSTER SUB–ASSY LH

(a) Remove the 2 screws and lumbar support adjuster.

(b) Remove the wire harness connector.

(c) Remove the 3 screws and 2 reclining adjuster inside covers LH.

(d) Remove the 3 screws and 2 reclining adjuster inside covers RH.

(e) Remove the screw and vertical adjuster bracket cover outer.

(f) Remove the screw and vertical adjuster bracket cover inner.

(g) w/ Seat heater:
Remove the seat heater control.

15. INSTALL POWER SEAT MOTOR ASSY (RECLINING)

(a) Install the reclining motor with the 3 bolts.
Torque: 4.5 N·m (46 kgf·cm, 40 in.·lbf)

16. INSTALL POWER SEAT MOTOR ASSY (SLIDE)

(a) Install the slide motor with the 2 bolts and nut.
Torque:
Bolt 4.0 N·m (41 kgf·cm, 35 in.·lbf)
Nut 3.5 N·m (36 kgf·cm, 31 in.·lbf)

17. INSTALL POWER SEAT MOTOR ASSY (LIFTER)

(a) Install the lifter motor with the 2 bolts and nut.
Torque:
Bolt 2.5 N·m (25 kgf·cm, 22 in.·lbf)
Nut 25 N·m (255 kgf·cm, 18 ft·lbf)

18. INSTALL POWER SEAT MOTOR ASSY (FRONT VERTICAL)

(a) Install the vertical motor with the 2 bolts and nut.
Torque:
Bolt 2.5 N·m (25 kgf·cm, 22 in.·lbf)
Nut 25 N·m (255 kgf·cm, 18 ft·lbf)

19. INSTALL SEAT POSITION AIR BAG SENSOR

(a) Install the airbag sensor with the screw.
Torque: 8.0 N·m (82 kgf·cm, 71 in.·lbf)

20. INSTALL SEPARATE TYPE FRONT SEAT BACK COVER

(a) Install the lumbar support adjuster with the 2 screws.
(b) Install the seatback pad.
(c) Cover the top of the seatback pad with the seatback cover.
(d) Install the 2 headrest supports.

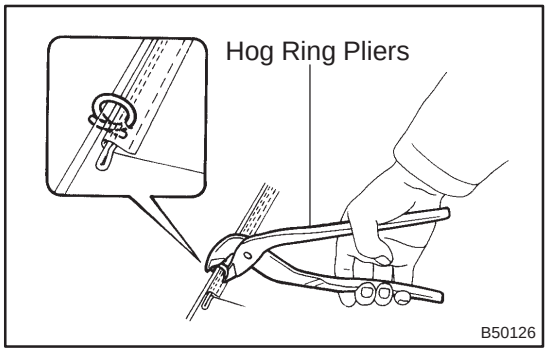

(e) Using hog ring pliers, install the seatback cover completely with new hog rings.

NOTICE:

- **Be careful not to damage the cover.**
- **When installing the hog rings, take care to prevent wrinkles as much as possible.**

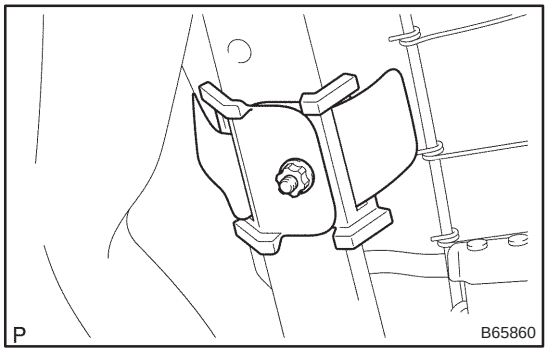

(f) w/ Side airbag:
Install the seatback cover bracket with the nut.
Torque: 6.0 N·m (61 kgf·cm, 53 in·lbf)

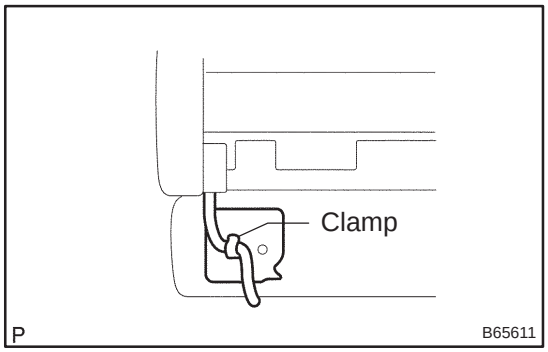

(g) w/ Side airbag:
Install the wire harness and clamp of the side airbag through the seat cushion cover end.

NOTICE:

Be careful not to damage the cover.

(h) Install the seatback board with the 2 screws.

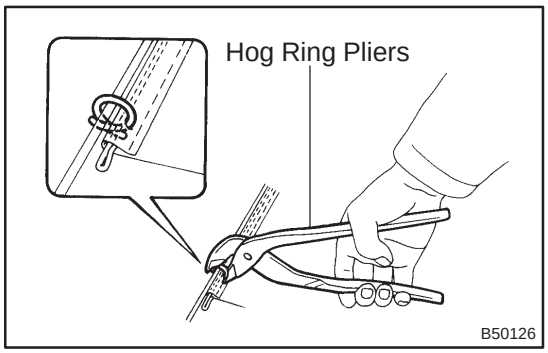

21. INSTALL SEPARATE TYPE FRONT SEAT CUSHION COVER

(a) Install the seat cushion pad to the seat cushion cover.

(b) Using hog ring pliers, install the seat cushion cover with new hog rings to the seat cushion pad.

NOTICE:

- **Be careful not to damage the cover.**
- **When installing the hog rings, take care to prevent wrinkles as much as possible.**

22. INSTALL FRONT SEAT INNER BELT ASSY LH

(a) Install the inner belt with the nut.
Torque: 42 N·m (428 kgf·cm, 31 ft·lbf)

(b) Connect the connectors.

(c) Check that the inner seat belt moves smoothly.

23. INSTALL FRONT SEAT ASSY LH

(a) Place the seat in the cabin.

(b) Connect the connectors under the seat.

(c) Install the seat with the 4 bolts.
Torque: 37 N·m (375 kgf·cm, 27 ft·lbf)

(d) Install the 4 seat track covers.

(e) Install the headrest.

24. INSPECT POWER SEAT OPERATION (See page 72–4)

FRONT SEAT ASSEMBLY LH (MANUAL SEAT TYPE)

720J7–01

COMPONENTS

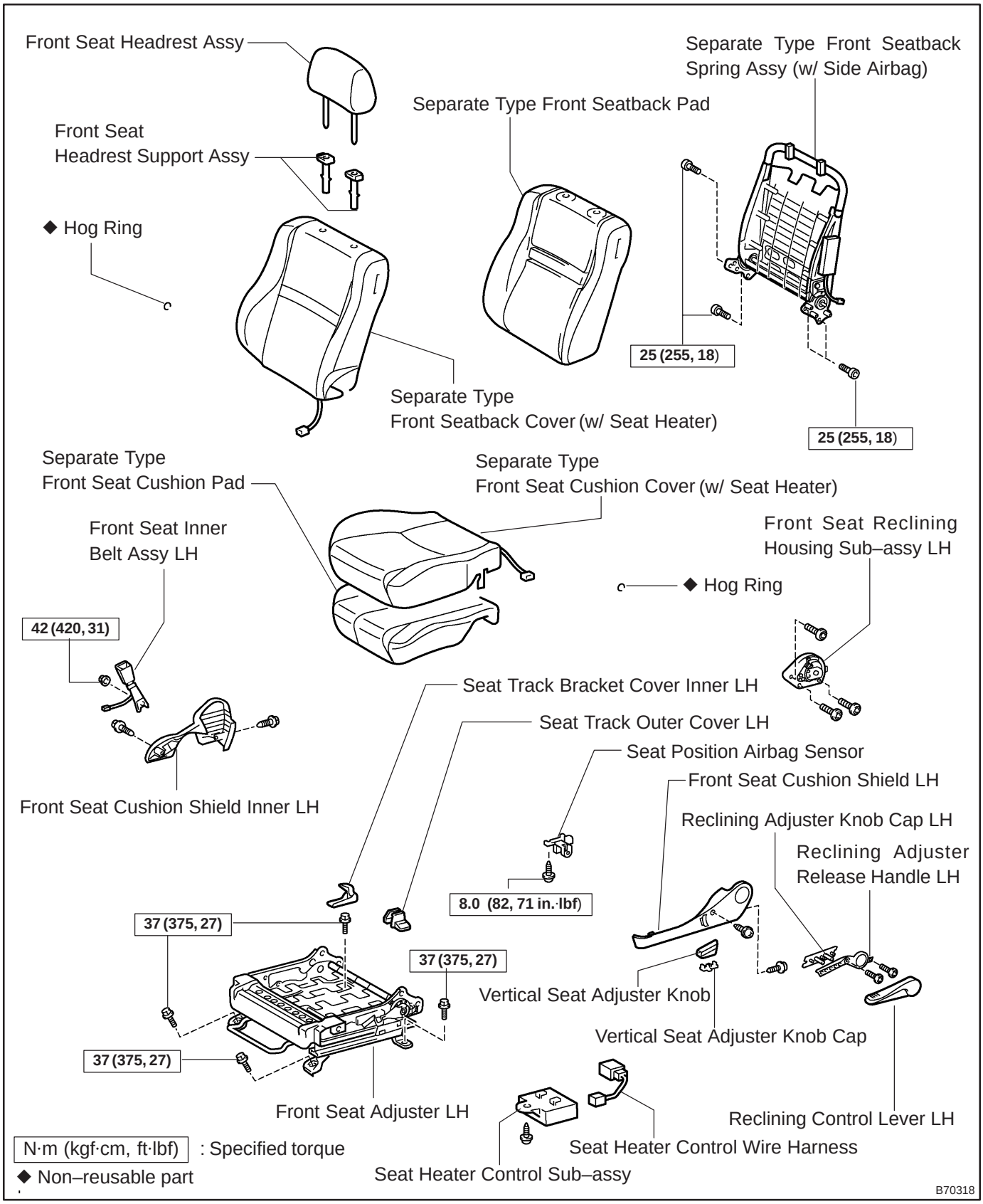

720J8–01

OVERHAUL

CAUTION:

- **Wear safety gloves, because the cutting surface of the seatback frame and seat adjuster may injure your hand.**
- **Work must be started more than 90 seconds after the ignition switch is turned to the LOCK position and the negative (–) terminal cable is disconnected from the battery.**
  (The SRS is equipped with a back–up power source. If work is started within 90 seconds from disconnecting the negative (–) terminal cable of the battery, the SRS may be deployed.)

HINT:

- The installation is in the reverse order of the removal. However, when there is a special point concerning the installation, it is indicated.
- Use the same procedures on the RH side as on the LH side.

1. REMOVE FRONT SEAT ASSEMBLY LH

(a) Remove the headrest.

(b) Using a screwdriver, remove the 2 seat track covers.

HINT:

Tape the screwdriver tip before use.

(c) Disconnect the connectors under the seat.

(d) Remove the 4 bolts and seat.

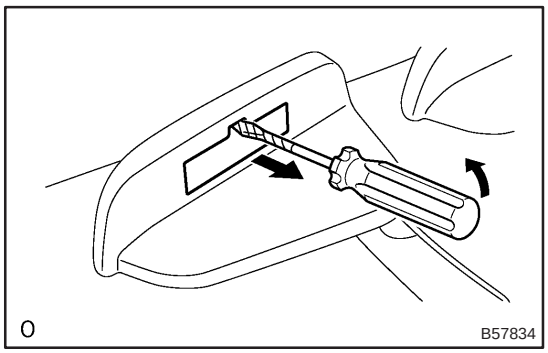

2. REMOVE VERTICAL SEAT ADJUSTER KNOB

(a) Using a screwdriver, remove the vertical seat adjuster knob cap and vertical seat adjuster knob.

HINT:

Tape the screwdriver tip before use.

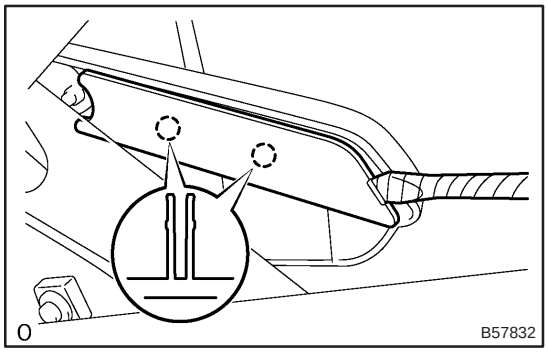

3. REMOVE RECLINING ADJUSTER RELEASE HANDLE LH

(a) Hold up the reclining adjuster release handle.

(b) Using a screwdriver, remove the hooks and reclining adjuster knob cap.

HINT:

Tape the screwdriver tip before use.

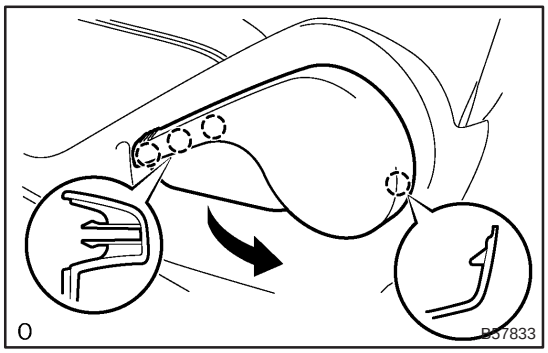

(c) Using a screwdriver, remove the hooks and reclining adjuster release handle.

HINT:

Tape the screwdriver tip before use.

4. REMOVE RECLINING CONTROL LEVER LH

(a) Using a hexagon wrench, remove the 2 bolts and reclining control lever.

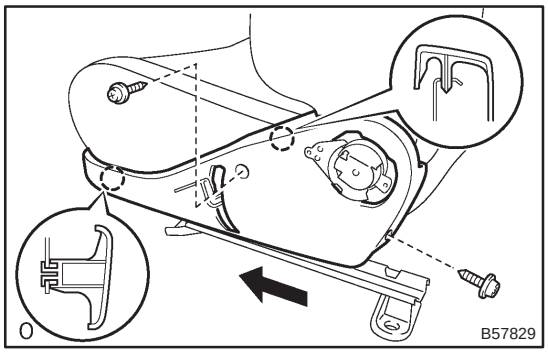

5. REMOVE FRONT SEAT CUSHION SHIELD LH

(a) Remove the 2 screws and seat cushion shield LH.

6. REMOVE FRONT SEAT INNER BELT ASSY LH

(a) Remove the nut and inner belt.

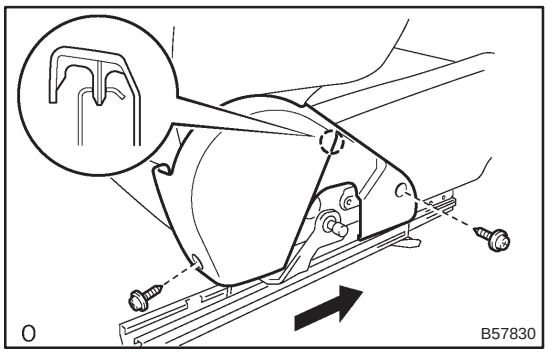

7. REMOVE FRONT SEAT CUSHION SHIELD INNER LH

(a) Remove the 2 screws and seat cushion shield.

8. REMOVE FRONT SEAT RECLINING HOUSING SUB–ASSY LH

(a) Using a hexagon wrench, remove the 3 bolts and seat reclining housing.

9. REMOVE SEPARATE TYPE FRONT SEATBACK ASSY

(a) Using a hexagon wrench, remove the 4 bolts and front seatback.

10. REMOVE SEPARATE TYPE FRONT SEATBACK COVER

(a) Disengage the seatback cover hook.
(b) Remove the 2 headrest supports.
(c) Remove the hog rings and seatback cover.

11. REMOVE SEPARATE TYPE FRONT SEATBACK SPRING ASSY

(a) Remove the pad from the seatback spring.

12. REMOVE SEPARATE TYPE FRONT SEAT CUSHION COVER

(a) Disengage the seat cushion cover hook.
(b) Remove the hog rings and seat cushion cover together with the pad from the seat cushion frame.
(c) Remove the hog rings and seat cushion pad from the seat cushion cover.

13. REMOVE FRONT SEAT ADJUSTER ASSY

(a) w/ Seat heater:
Remove the screw, seat heater control and seat heater control wire harness.

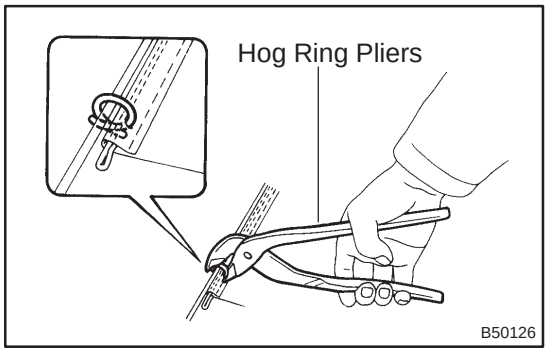

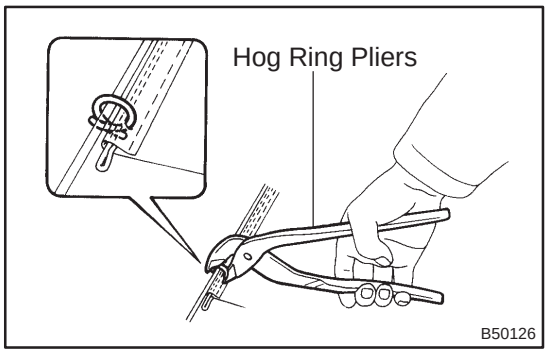

14. INSTALL SEPARATE TYPE FRONT SEAT CUSHION COVER

(a) Install the seat cushion cover with new hog rings to the seat cushion pad.

(b) Install the seat cushion cover with pad to the seat cushion frame with new hog rings.

HINT:

- Do not damage the seat cushion cover nor make it dirty.
- When installing the hog rings, take care to prevent wrinkles as much as possible.

15. INSTALL SEPARATE TYPE FRONT SEATBACK COVER

(a) Install the seatback cover with new hog rings to the seat cushion pad.

(b) Install the seatback cover with pad to the seatback frame with new hog rings.

HINT:

- Do not damage the seatback cover nor make it dirty.
- When installing the hog rings, take care to prevent wrinkles as much as possible.

16. INSTALL SEPARATE TYPE FRONT SEATBACK ASSY

(a) Using a hexagon wrench, Install the seatback with the 4 bolts.

17. INSTALL FRONT SEAT INNER BELT ASSY LH

(a) Install the inner belt with the nut.

Torque: 42 N·m (428 kgf·cm, 31 ft·lbf)

(b) Connect the connectors.

(c) Check that the inner seat belt moves smoothly.

18. INSTALL FRONT SEAT ASSEMBLY LH

(a) Place the seat in the cabin.

(b) Connect the connectors under the seat.

(c) Install the seat with the 4 bolts.

Torque: 37 N·m (375 kgf·cm, 27 ft·lbf)

(d) Install the 4 seat track covers.

(e) Install the headrest.

19. CHECK SEAT SLIDE ADJUSTER LOCKS

REAR SEAT ASSY (40/60 FOLDING FLIP–UP CUSHION)

720JB–01

COMPONENTS

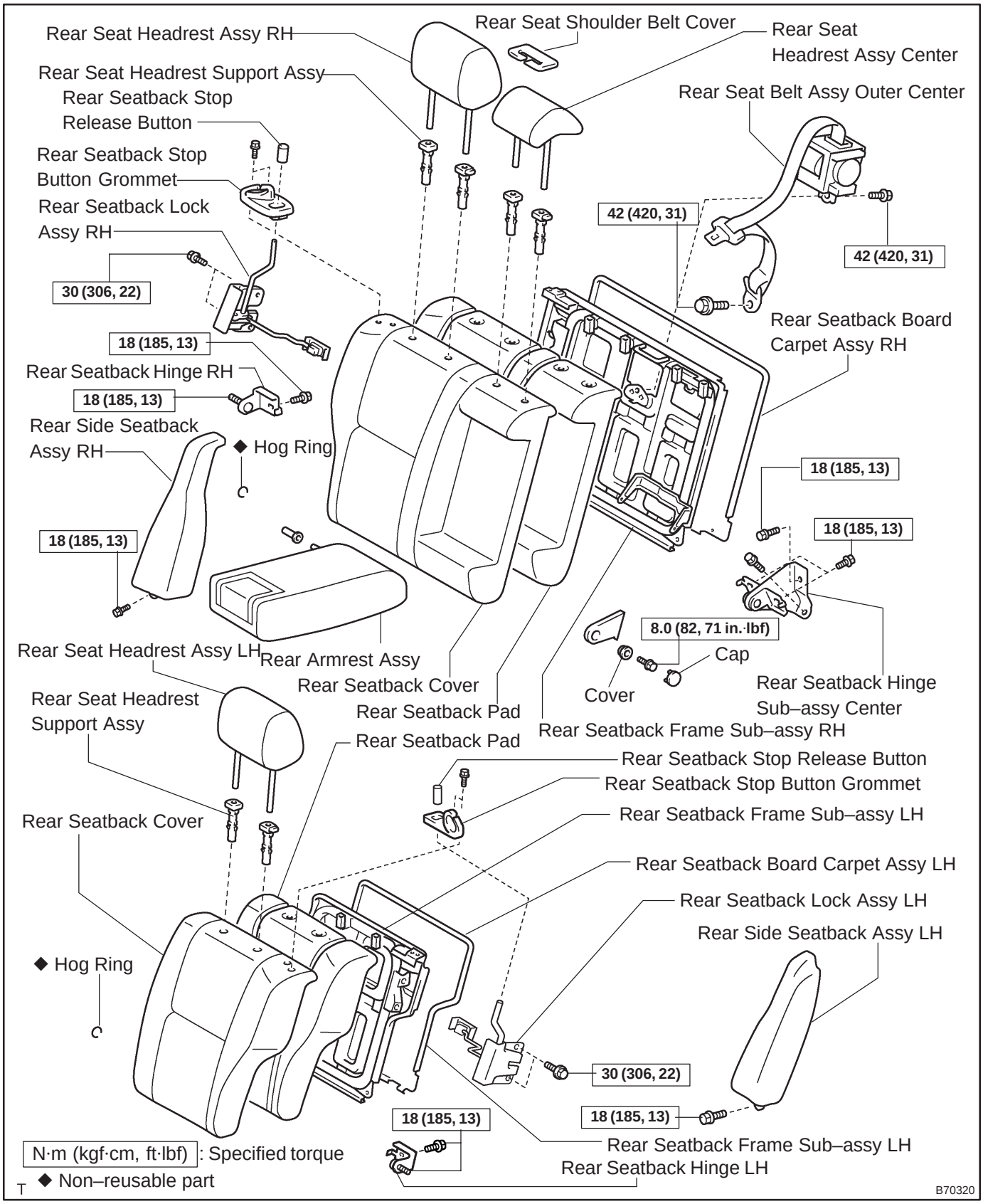

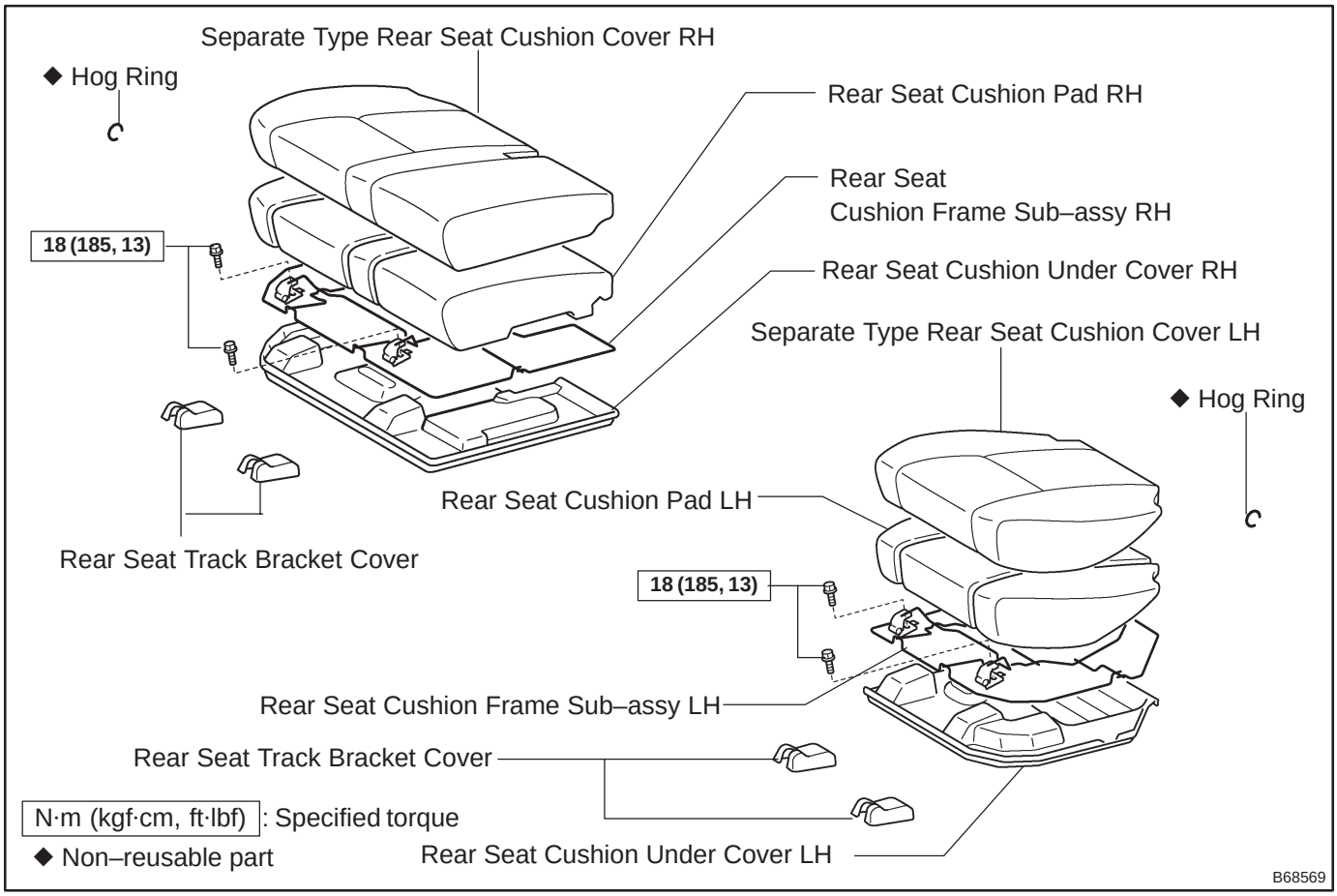
Separate Type Rear Seat Cushion Cover RH
◆ Hog Ring
C
Rear Seat Cushion Pad RH
Rear Seat
Cushion Frame Sub–assy RH
18 (185, 13)
Rear Seat Cushion Under Cover RH
Separate Type Rear Seat Cushion Cover LH
◆ Hog Ring
C
Rear Seat Cushion Pad LH
Rear Seat Track Bracket Cover
18 (185, 13)
Rear Seat Cushion Frame Sub–assy LH
Rear Seat Track Bracket Cover
N·m (kgf·cm, ft·lbf) : Specified torque
◆ Non–reusable part
Rear Seat Cushion Under Cover LH
B68569

720JC–01

OVERHAUL

HINT:

The installation is in the reverse order of the removal. However, when there is a special point concerning the installation, it is indicated.

1. REMOVE REAR SEAT HEADREST ASSY LH AND RH

2. REMOVE REAR SEAT HEADREST ASSY CENTER

3. REMOVE REAR SEAT CUSHION ASSY LH

(a) Remove the 2 hinge covers.

(b) Remove the 2 bolts and seat cushion.

4. REMOVE REAR SEAT CUSHION ASSY RH

(a) Remove the 2 hinge covers.

(b) Remove the 2 bolts and seat cushion.

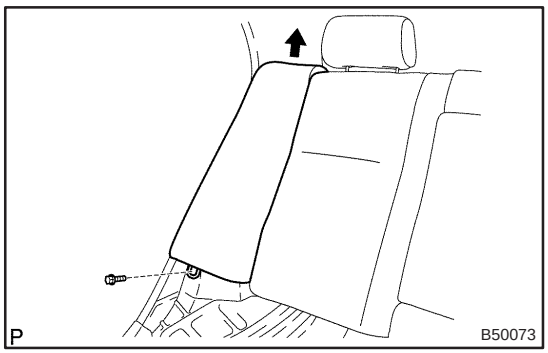

5. REMOVE REAR SIDE SEATBACK ASSY LH

(a) Remove the bolt and seatback.

6. REMOVE REAR SIDE SEATBACK ASSY RH

(a) Remove the bolt and seatback.

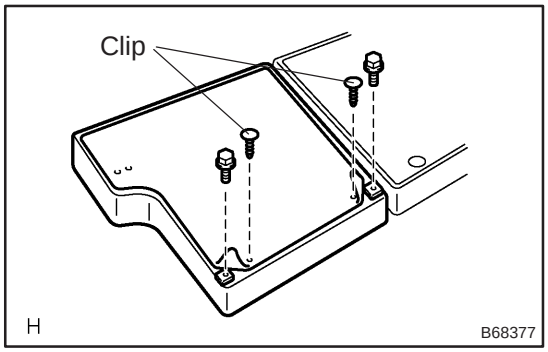

7. REMOVE REAR SEATBACK BOARD CARPET ASSY LH

(a) Using a clip remover, remove the 2 clips.

8. REMOVE REAR SEATBACK ASSY LH

(a) Remove the 2 bolts and seatback.

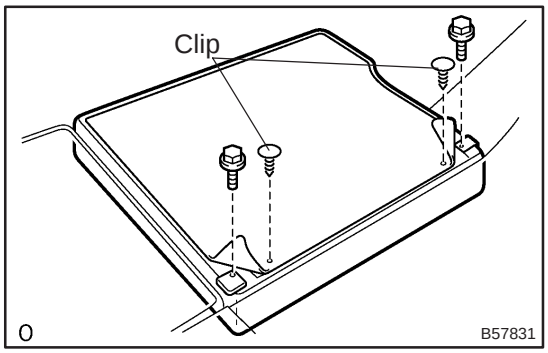

9. REMOVE REAR SEATBACK BOARD CARPET ASSY RH

(a) Using a clip remover, remove the 2 clips.

10. REMOVE REAR SEATBACK ASSY RH

(a) Remove the bolt and floor anchor for the rear seat belt assy outer center.

(b) Remove the 2 bolts and seatback.

11. REMOVE REAR SEATBACK HINGE SUB–ASSY LH

(a) Remove the bolt and seatback hinge.

12. REMOVE REAR SEATBACK HINGE SUB–ASSY RH

(a) Remove the bolt and seatback hinge.

13. REMOVE REAR SEATBACK HINGE SUB–ASSY CENTER

(a) Remove the 2 bolts and seatback hinge.

14. REMOVE REAR SEAT ARMREST ASSY CENTER

(a) Remove the screw and armrest cover.

(b) Remove the bolt and armrest.

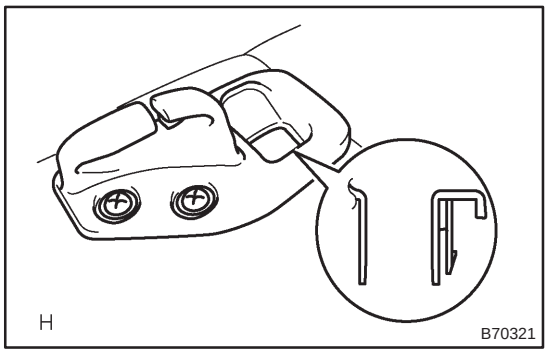

15. REMOVE SEPARATE TYPE REAR SEATBACK COVER LH

(a) Remove the 2 screws.

(b) Using a screwdriver, disengage the claw and remove the stop button grommet.

HINT:

Tape the screwdriver tip before use.

(c) Remove the 2 headrest supports.

(d) Remove the hog rings and the seatback cover together with the pad from the seatback frame.

(e) Remove the hog rings and the seatback cover from the seatback pad.

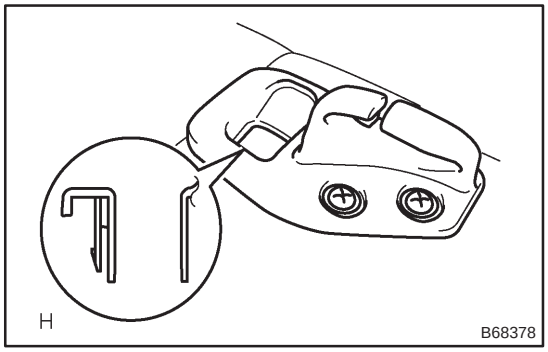

16. REMOVE SEPARATE TYPE REAR SEATBACK COVER RH

(a) Remove the 2 screws.

(b) Using a screwdriver, disengage the claw and remove the stop button grommet.

HINT:

Tape the screwdriver tip before use.

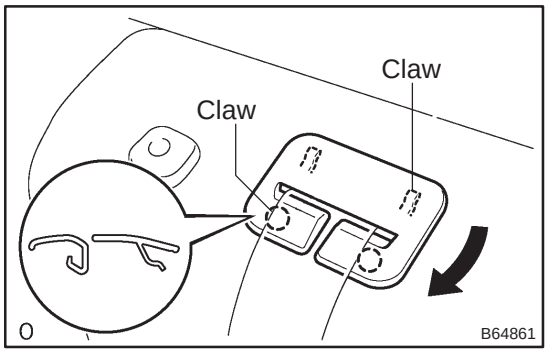

(c) Using a screwdriver, disengage the 4 claws and remove the shoulder belt cover.

HINT:

Tape the screwdriver tip before use.

(d) Remove the 4 headrest supports.

(e) Remove the hog rings and the seatback cover together with the pad from the seatback frame.

(f) Remove the hog rings and seatback cover from the seatback pad.

17. REMOVE REAR SEATBACK LOCK ASSY LH

(a) Remove the seatback lock release button.

(b) Remove the 2 bolts and seatback lock.

18. REMOVE REAR SEATBACK LOCK ASSY RH

HINT:

Use the same procedures described for the LH side.

19. REMOVE REAR SEAT BELT ASSY OUTER CENTER

(a) Remove the bolt and belt.

20. REMOVE REAR SEAT CUSHION UNDER COVER LH

(a) Disengage the cushion cover hook.

(b) Remove the cushion cover together with the pad.

(c) Remove the cushion under cover.

21. REMOVE REAR SEAT CUSHION UNDER COVER RH

HINT:

Use the same procedures described for the LH side.

22. REMOVE SEPARATE TYPE REAR SEAT CUSHION COVER LH

(a) Remove the hog rings and cushion cover from the cushion pad.

23. REMOVE SEPARATE TYPE REAR SEAT CUSHION COVER RH

(a) Remove the hog rings and cushion cover from the cushion pad.

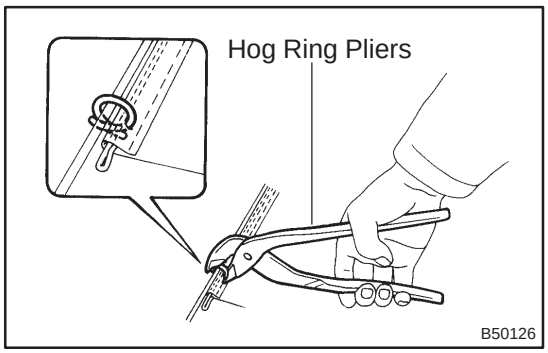

24. INSTALL SEPARATE TYPE REAR SEAT CUSHION COVER LH

(a) Install the seat cushion cover to the seat cushion pad with new hog rings.

(b) Install the seat cushion cover with the pad to the seat cushion frame and the under cover.

HINT:

When installing hog rings, take care to prevent wrinkles as much as possible.

25. INSTALL SEPARATE TYPE REAR SEAT CUSHION COVER RH

HINT:

Use the same procedures described for the LH side.

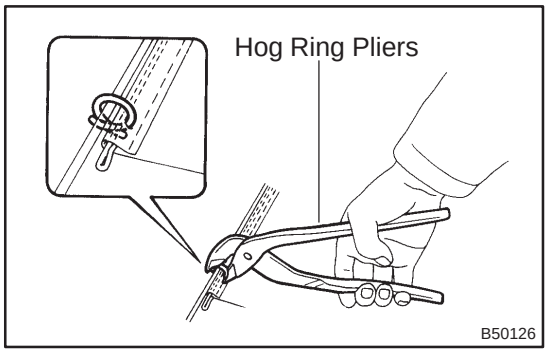

26. INSTALL SEPARATE TYPE REAR SEATBACK COVER LH

(a) Install the seatback cover to the seatback pad with new hog rings.

(b) Install the seatback cover with the pad to the seatback frame with new hog rings.

HINT:

When installing hog rings, take care to prevent wrinkles as much as possible.

27. INSTALL SEPARATE TYPE REAR SEATBACK COVER RH

HINT:

Use the same procedures described for the LH side.

28. INSTALL REAR SEATBACK LOCK ASSY LH

(a) Install the seatback lock with the 2 bolts.

Torque: 30 N·m (306 kgf·cm, 22 ft·lbf)

29. INSTALL REAR SEATBACK LOCK ASSY RH

HINT:

Use the same procedures described for the LH side.

30. INSTALL REAR SEAT BELT ASSY OUTER CENTER

(a) Install the belt with the bolt.

Torque: 42 N·m (428 kgf·cm, 31 ft·lbf)

31. INSTALL REAR SEAT ARMREST ASSY CENTER

(a) Install the armrest with the bolt.

Torque: 8.0 N·m (82 kgf·cm, 71 in.·lbf)

(b) Install the armrest cover with the screw.

32. INSTALL REAR SEATBACK HINGE SUB–ASSY CENTER

(a) Install the hinge with the 2 bolts.

Torque: 18 N·m (185 kgf·cm, 13 ft·lbf)

33. INSTALL REAR SEATBACK HINGE SUB–ASSY LH

(a) Install the hinge with the bolt.

Torque: 18 N·m (185 kgf·cm, 13 ft·lbf)

34. INSTALL REAR SEATBACK HINGE SUB–ASSY RH

HINT:

Use the same procedures described for the LH side.

35. INSTALL REAR SEATBACK ASSY LH

(a) Install the seatback with the 2 bolts.

Torque: 18 N·m (185 kgf·cm, 13 ft·lbf)

36. INSTALL REAR SEATBACK ASSY RH

(a) Install the seatback with the 2 bolts.

Torque: 18 N·m (185 kgf·cm, 13 ft·lbf)

(b) Install the floor anchor with the bolt.

Torque: 42 N·m (428 kgf·cm, 31 ft·lbf)

37. INSTALL REAR SIDE SEATBACK ASSY LH

(a) Install the seatback with the bolt.

Torque: 18 N·m (185 kgf·cm, 13 ft·lbf)

NOTICE:

Insert the side seat hook into the hole of body.

38. INSTALL REAR SIDE SEATBACK ASSY RH

HINT:

Use the same procedures described for the LH side.

39. INSTALL REAR SEAT CUSHION ASSY LH

(a) Install the cushion with the 2 bolts.

Torque: 18 N·m (184 kgf·cm, 13 ft·lbf)

(b) Install the 2 hinge covers.

40. INSTALL REAR SEAT CUSHION ASSY RH

HINT:

Use the same procedures described for the LH side.

REAR SEAT ASSY (40/60 FOLDING)

720J9–01

COMPONENTS

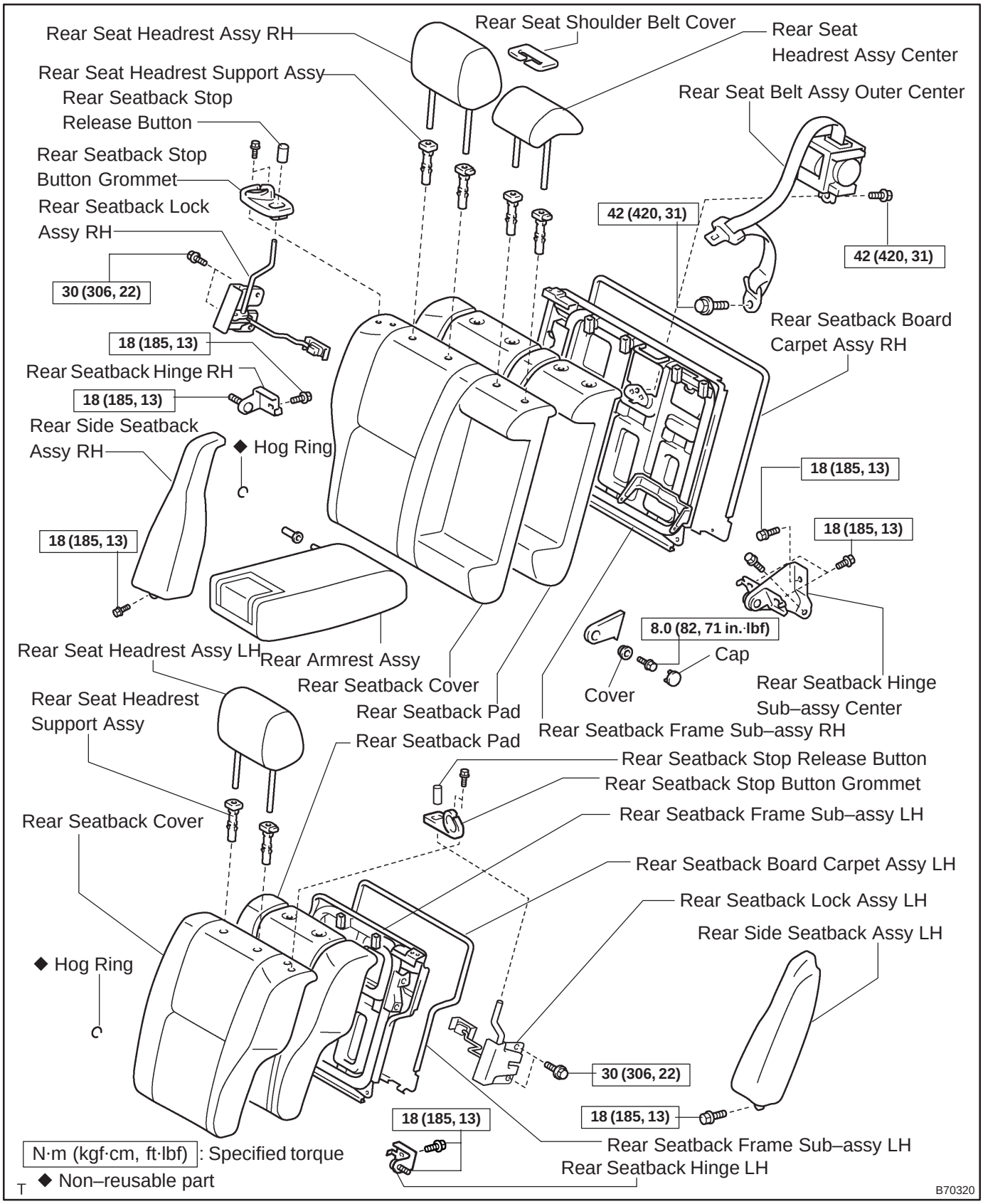

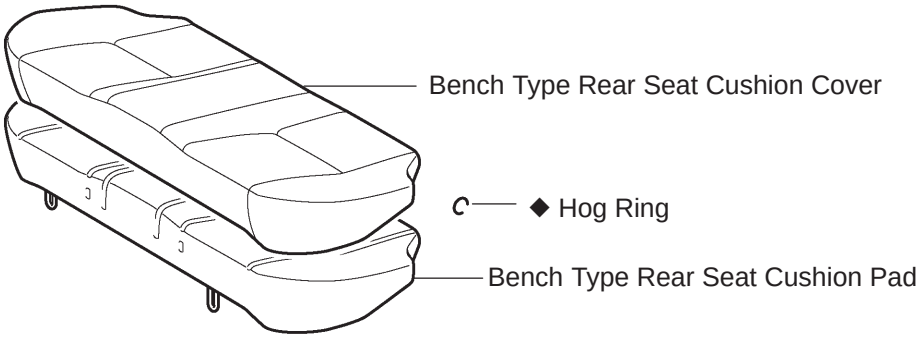

◆ Non–reusable part

B68225

OVERHAUL

HINT:

The installation is in the reverse order of the removal. However, when there is a special point concerning the installation, it is indicated.

1. REMOVE REAR SEAT HEADREST ASSY LH AND RH

2. REMOVE REAR SEAT HEADREST ASSY CENTER

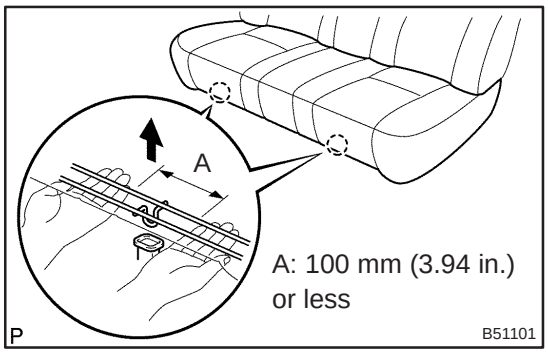

3. REMOVE REAR SEAT CUSHION ASSY

(a) Pull up the 2 front portions of the seat cushion, then remove it.

NOTICE:

In this case, hold the base of the clip up to prevent the cushion frame from being distorted.

4. REMOVE BENCH TYPE REAR SEAT CUSHION COVER

(a) Remove the hog rings and seat cushion cover.

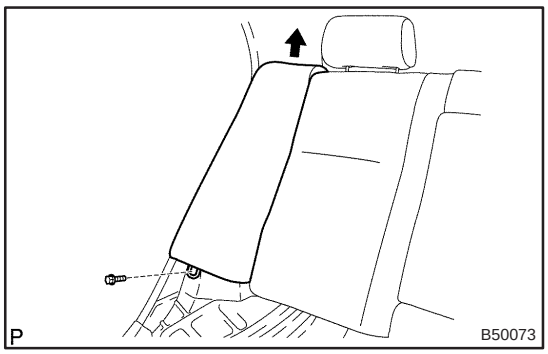

5. REMOVE REAR SIDE SEATBACK ASSY LH

(a) Remove the bolt and the seatback.

6. REMOVE REAR SIDE SEATBACK ASSY RH

(a) Remove the bolt and the seatback.

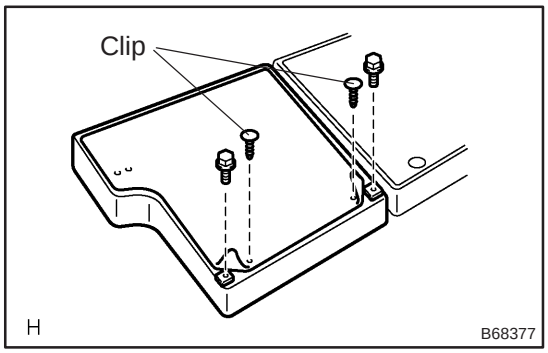

7. REMOVE REAR SEATBACK BOARD CARPET ASSY LH

(a) Using a clip remover, remove the 2 clips.

8. REMOVE REAR SEATBACK ASSY LH

(a) Remove the 2 bolts and seatback.

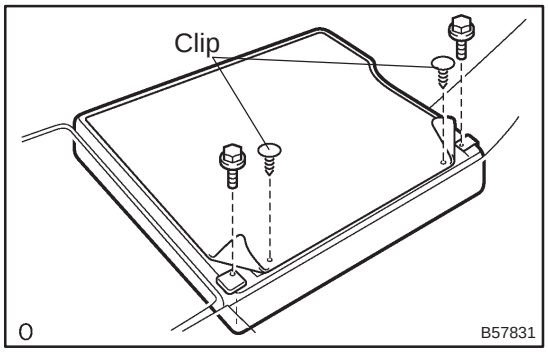

9. REMOVE REAR SEATBACK BOARD CARPET ASSY RH

(a) Using a clip remover, remove the 2 clips.

10. REMOVE REAR SEATBACK ASSY RH

(a) Remove the bolt and floor anchor for the seat belt outer center.

(b) Remove the 2 bolts and seatback assy.

11. REMOVE REAR SEATBACK HINGE SUB–ASSY LH

(a) Remove the bolt and seatback hinge.

12. REMOVE REAR SEATBACK HINGE SUB–ASSY RH

(a) Remove the bolt and seatback hinge.

13. REMOVE REAR SEATBACK HINGE SUB–ASSY CENTER

(a) Remove the 2 bolts and seatback hinge.

14. REMOVE REAR SEAT ARMREST ASSY CENTER

(a) Remove the armrest cover.

(b) Remove the bolt and armrest.

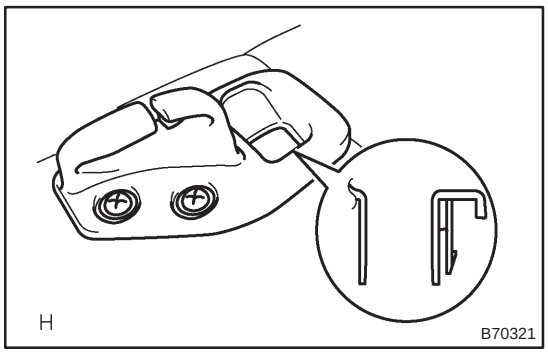

15. REMOVE SEPARATE TYPE REAR SEATBACK COVER LH

(a) Remove the 2 screws.

(b) Using a screwdriver, disengage the claw and remove the stop button grommet.

HINT:

Tape the screwdriver tip before use.

(c) Remove the 2 headrest supports.

(d) Remove the hog rings and the seatback cover together with the pad from the seatback frame.

(e) Remove the hog rings and the seatback cover from the seatback pad.

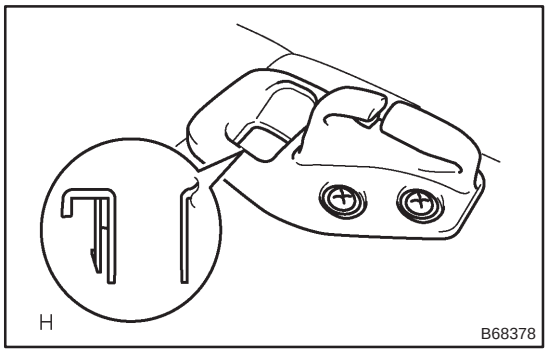

16. REMOVE SEPARATE TYPE REAR SEATBACK COVER RH

(a) Remove the 2 screws.

(b) Using a screwdriver, disengage the claw and remove the stop button grommet.

HINT:

Tape the screwdriver tip before use.

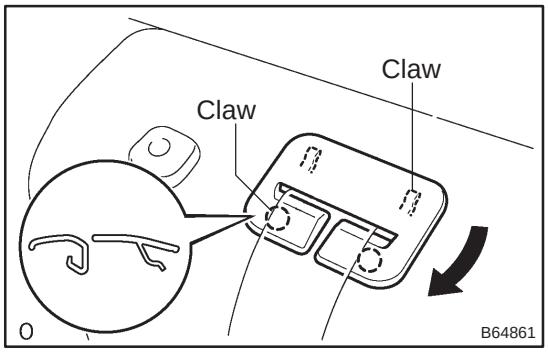

(c) Using a screwdriver, disengage the 2 claws and remove the shoulder belt cover.

HINT:

Tape the screwdriver tip before use.

(d) Remove the 4 headrest supports.

(e) Remove the hog rings and the seatback cover together with the pad from the seatback frame.

(f) Remove the hog rings and seatback cover from the seatback pad.

17. REMOVE REAR SEATBACK LOCK ASSY LH

(a) Remove the seatback lock release button.

(b) Remove the 2 bolts and seatback lock.

18. REMOVE REAR SEATBACK LOCK ASSY RH

HINT:

Use the same procedures described for the LH side.

19. REMOVE REAR SEAT BELT ASSY OUTER CENTER

(a) Remove the bolt and belt.

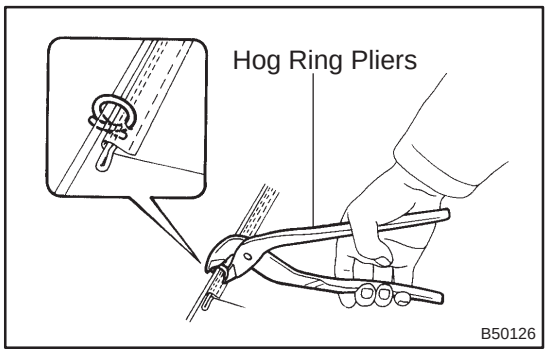

20. INSTALL BENCH TYPE REAR SEAT CUSHION COVER

(a) Install the rear seat cushion cover with new hog rings to the rear seat cushion pad.

HINT:

- Do not damage the seat cushion cover nor make it dirty.
- When installing the hog rings, take care to prevent wrinkles as much as possible.

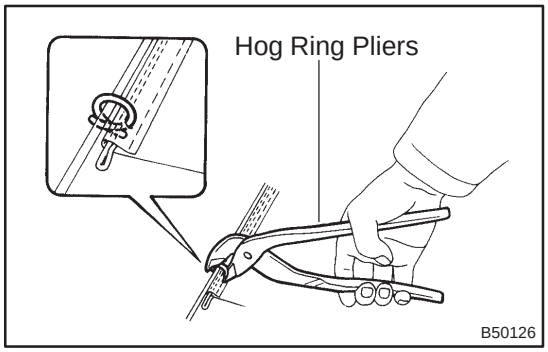

21. INSTALL SEPARATE TYPE REAR SEATBACK COVER LH

(a) Install the seatback cover to the seatback pad with new hog rings.

(b) Install the seatback cover with the pad to the seatback frame with new hog rings.

HINT:

When installing hog rings, take care to prevent wrinkles as much as possible.

22. INSTALL SEPARATE TYPE REAR SEATBACK COVER RH

HINT:

Use the same procedures described for the LH side.

23. INSTALL REAR SEAT BACK LOCK ASSY LH

(a) Install the seatback lock with the 2 bolts.

Torque: 30 N·m (306 kgf·cm, 22 ft·lbf)

24. INSTALL REAR SEATBACK LOCK ASSY RH

HINT:

Use the same procedures described for the LH side.

25. INSTALL REAR SEAT BELT ASSY OUTER CENTER

(a) Install the belt with the bolt.
Torque: 42 N·m (428 kgf·cm, 31 ft·lbf)

26. INSTALL REAR SEAT ARMREST ASSY CENTER

(a) Install the armrest with the bolt.
Torque: 8.0 N·m (82 kgf·cm, 71 in.·lbf)

(b) Install the armrest cover with the screw.

27. INSTALL REAR SEAT BACK HINGE SUB–ASSY CENTER

(a) Install the hinge with the 2 bolts.
Torque: 18 N·m (185 kgf·cm, 13 ft·lbf)

28. INSTALL REAR SEATBACK HINGE SUB–ASSY LH

(a) Install the hinge with the bolt.
Torque: 18 N·m (185 kgf·cm, 13 ft·lbf)

29. INSTALL REAR SEATBACK HINGE SUB–ASSY RH

HINT:
Use the same procedures described for the LH side.

30. INSTALL REAR SEATBACK ASSY LH

(a) Install the seatback with the 2 bolts.
Torque: 18 N·m (185 kgf·cm, 13 ft·lbf)

31. INSTALL REAR SEATBACK ASSY RH

(a) Install the seatback with the 2 bolts.
Torque: 18 N·m (185 kgf·cm, 13 ft·lbf)

(b) Install the floor anchor with the bolt.
Torque: 42 N·m (428 kgf·cm, 31 ft·lbf)

32. INSTALL REAR SIDE SEATBACK ASSY LH

(a) Install the seatback LH with the bolt.
Torque: 18 N·m (185 kgf·cm, 13 ft·lbf)

NOTICE:
Insert the side seat hook into the hole of body.

33. INSTALL REAR SIDE SEATBACK ASSY RH

HINT:
Use the same procedures described for the LH side.

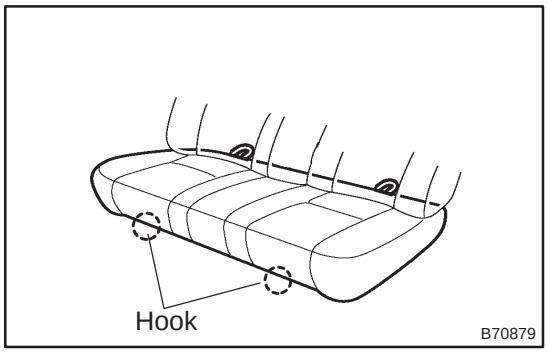

34. INSTALL REAR SEAT CUSHION ASSY

(a) Place the 2 hooks in the body firmly.

(b) Insert the frame into the 2 hooks.

REAR SEAT ASSY (UNITED FIXED)

720JD–01

COMPONENTS

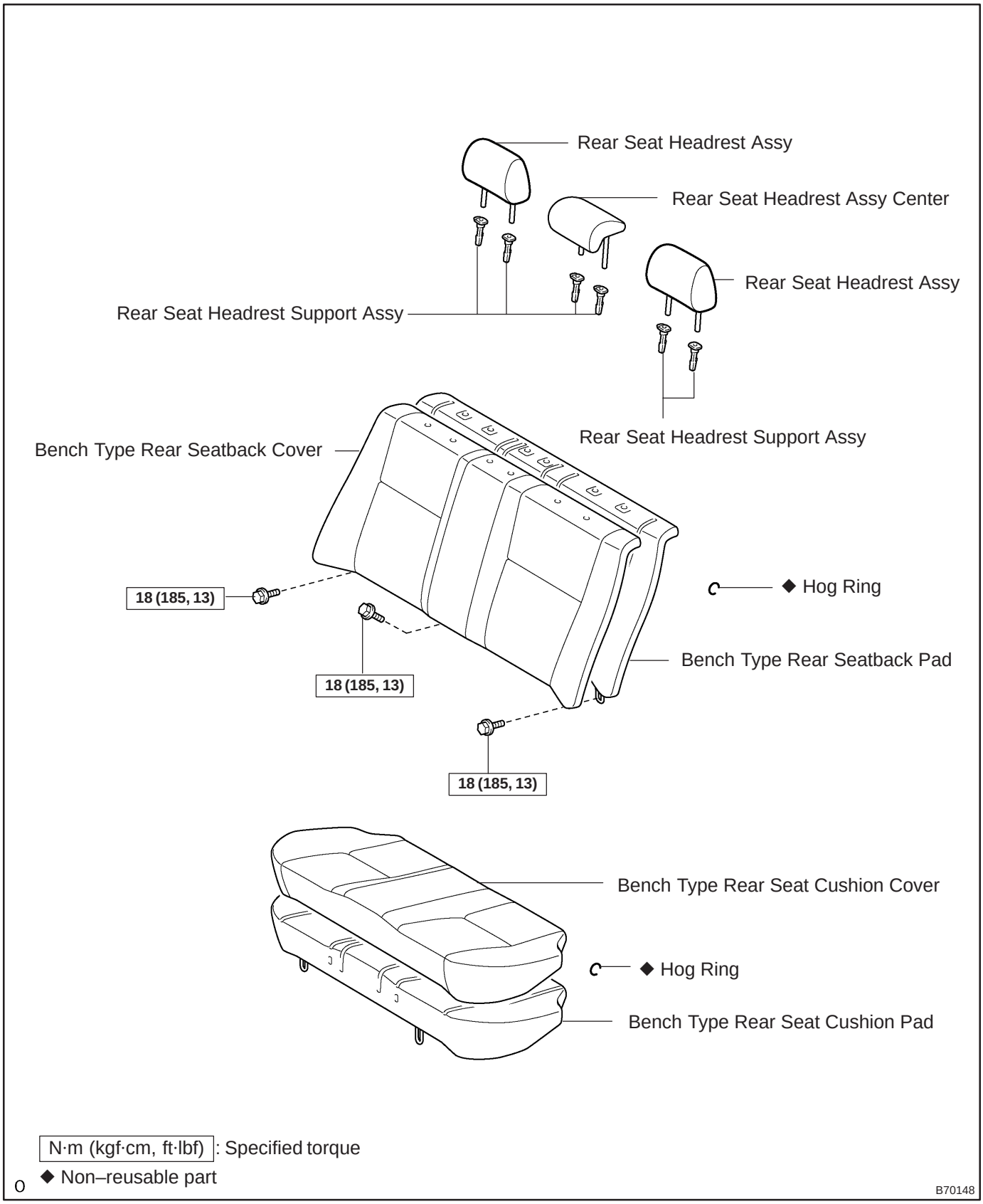

N·m (kgf·cm, ft·lbf) : Specified torque

◆ Non–reusable part

B70148

OVERHAUL

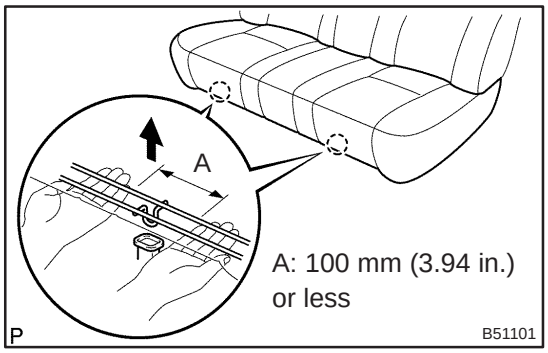

1. REMOVE REAR SEAT CUSHION ASSY

(a) Pull up the 2 front portions of the seat cushion, then remove it.

NOTICE:

In this case, hold the base of the clip up to prevent the cushion frame from being distorted.

2. REMOVE BENCH TYPE REAR SEAT CUSHION COVER

(a) Remove the hog rings and cushion cover.

3. REMOVE REAR SEATBACK ASSY

(a) Remove the 3 bolts and seatback.

4. REMOVE REAR SEAT HEADREST ASSY

5. REMOVE REAR SEAT HEADREST ASSY CENTER

6. REMOVE BENCH TYPE REAR SEATBACK COVER

(a) Remove the 6 headrest supports.

(b) Remove the hog rings and seatback cover.

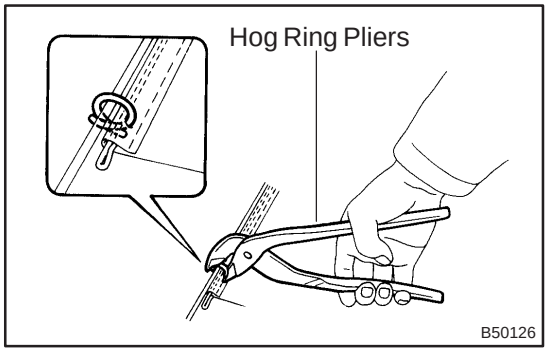

7. INSTALL BENCH TYPE REAR SEATBACK COVER

(a) Install the seatback cover with new hog rings to the rear seatback pad.

HINT:

- Do not damage the seat cushion cover nor make it dirty.
- When installing the hog rings, take care to prevent wrinkles as much as possible.

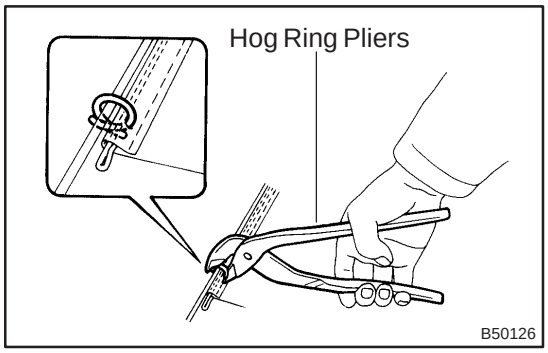

8. INSTALL BENCH TYPE REAR SEAT CUSHION COVER

(a) Install the rear seat cushion cover with new hog rings to the rear seat cushion pad.

HINT:

- Do not damage the seatback cover nor make it dirty.
- When installing the hog rings, take care to prevent wrinkles as much as possible.

9. INSTALL REAR SEATBACK ASSY

(a) Install the seatback with the 3 bolts.

Torque: 18 N·m (185 kgf·cm, 13 ft·lbf)

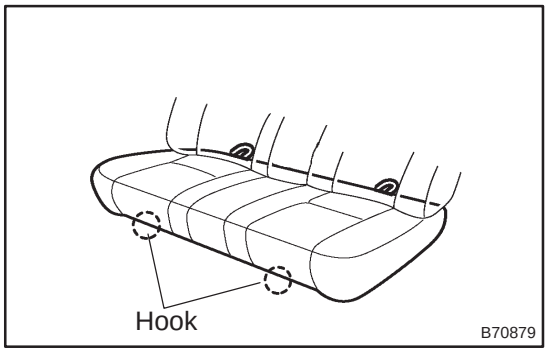

10. INSTALL REAR SEAT CUSHION ASSY

(a) Place the 2 hooks in the body firmly.

(b) Insert the frame into the 2 hooks.

SEAT HEATER SYSTEM

720JF–01

LOCATION

LHD Models

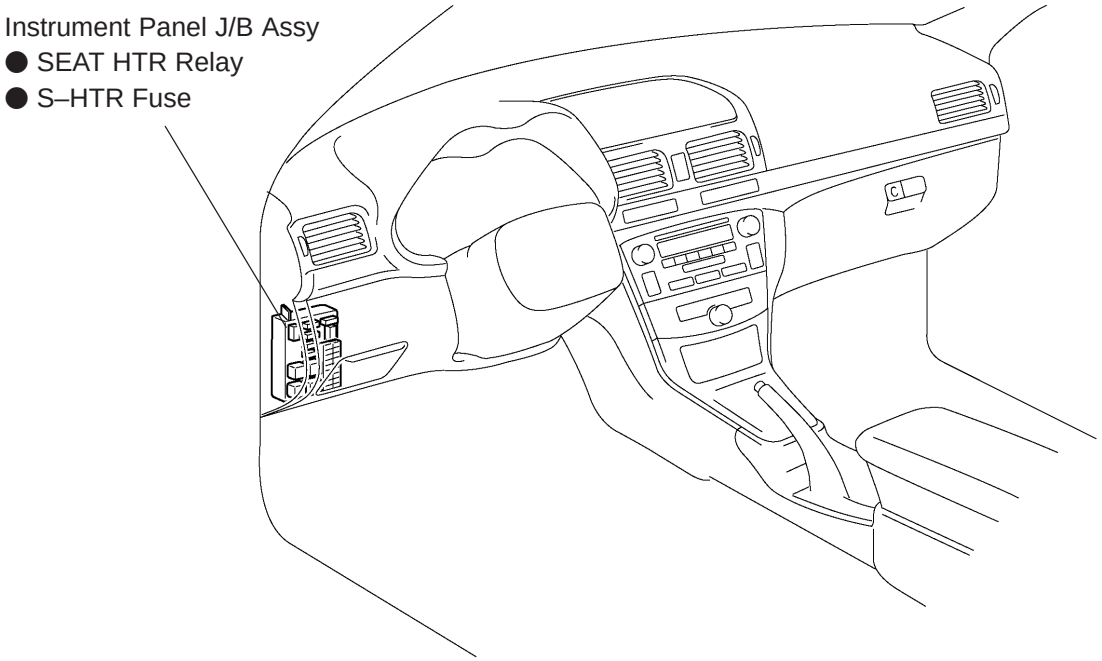

RHD Models

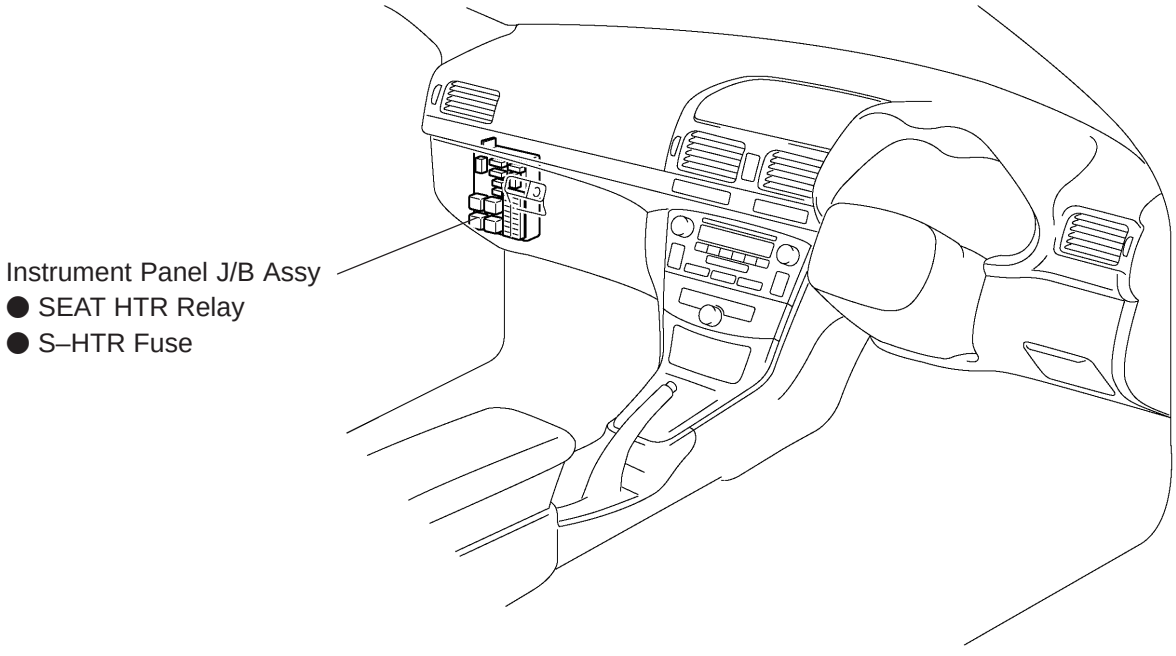

Y

B67299

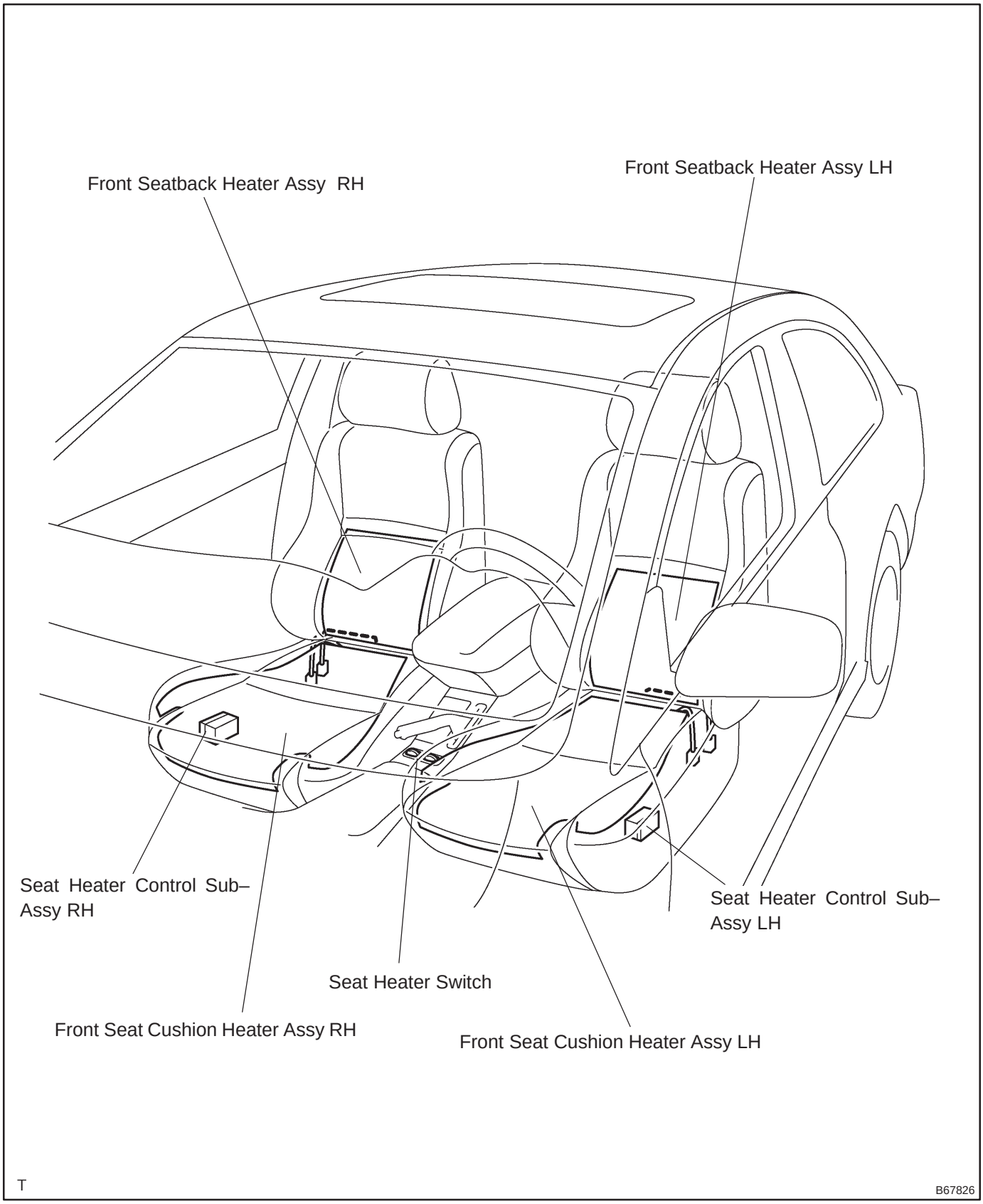
Front Seatback Heater Assy RH
Front Seatback Heater Assy LH
Seat Heater Control Sub–Assy RH
Seat Heater Control Sub–Assy LH
Seat Heater Switch
Front Seat Cushion Heater Assy RH
Front Seat Cushion Heater Assy LH
T
B67826

720JG–01

PROBLEM SYMPTOMS TABLE

Symptom	Suspected Area	See Page
Seat heaters do not operate (Seat is not warmed up)	1. SEAT HTR relay	72–34 72–37
	2. S–HTR fuse	72–34
	3. Seat heater switch	72–34 72–37
	4. Seat heater control sub–assy LH	72–34
	5. Seat heater control sub–assy RH	72–34
	6. Front seat cushion heater assy LH	72–34 72–37
	7. Front seat cushion heater assy RH	72–34 72–37
	8. Front seatback heater assy LH	72–34 72–37
	9. Front seatback heater assy RH	72–34 72–37
	10.Wire harness	–
Temperature of seat heater cannot be adjusted	1. Seat heater switch	72–34 72–37
	2. Seat heater control sub–assy LH	72–34
	3. Seat heater control sub–assy RH	72–34
	4. Wire harness	–

720JH–01

INSPECTION

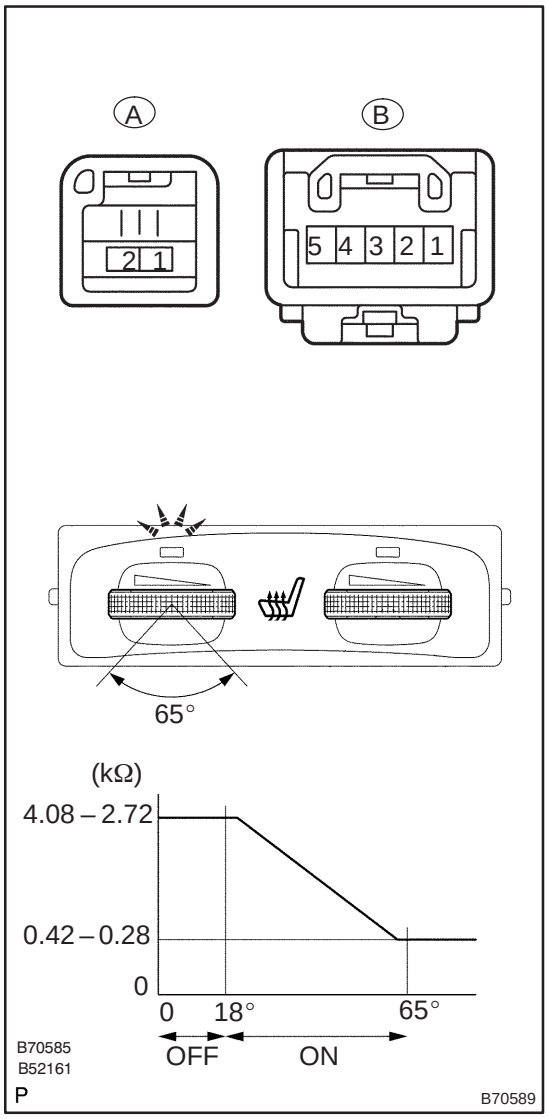

1. LH side:
INSPECT SEAT HEATER SWITCH

(a) Check the seat heater switch resistance.

Tester Connection	Switch Position	Specified Condition
B–2 – B–4	OFF	10 kΩ or higher
	ON (Minimum – Maximum)	Below 1 Ω
B–2 – B–3	OFF	10 kΩ or higher
	ON (Minimum – Maximum)	Refer to illustration

If the continuity is not as specified, replace the switch.

(b) Turn the seat heater switch ON and check the seat heater switch indicator illuminates.

Tester Connection	Specified Condition
Battery positive voltage → B–2 Battery negative voltage → B–5	Illuminates

If the result is not as specified, replace the switch.

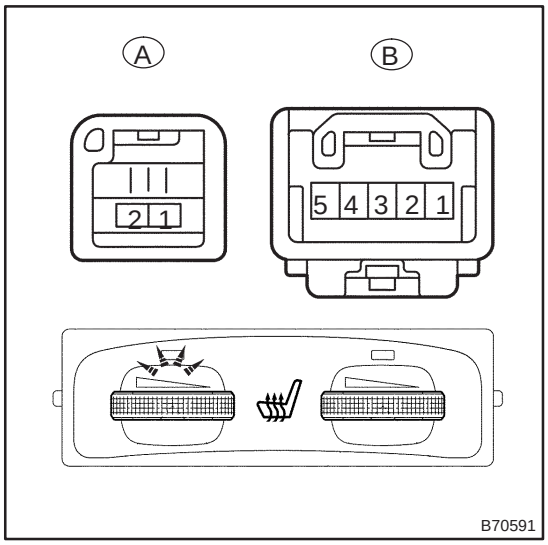

(c) Check the seat heater switch illuminates.

Tester Connection	Specified Condition
Battery positive voltage → B–1 Battery negative voltage → B–5	Illuminates

If the result is not as specified, replace the switch or bulb.

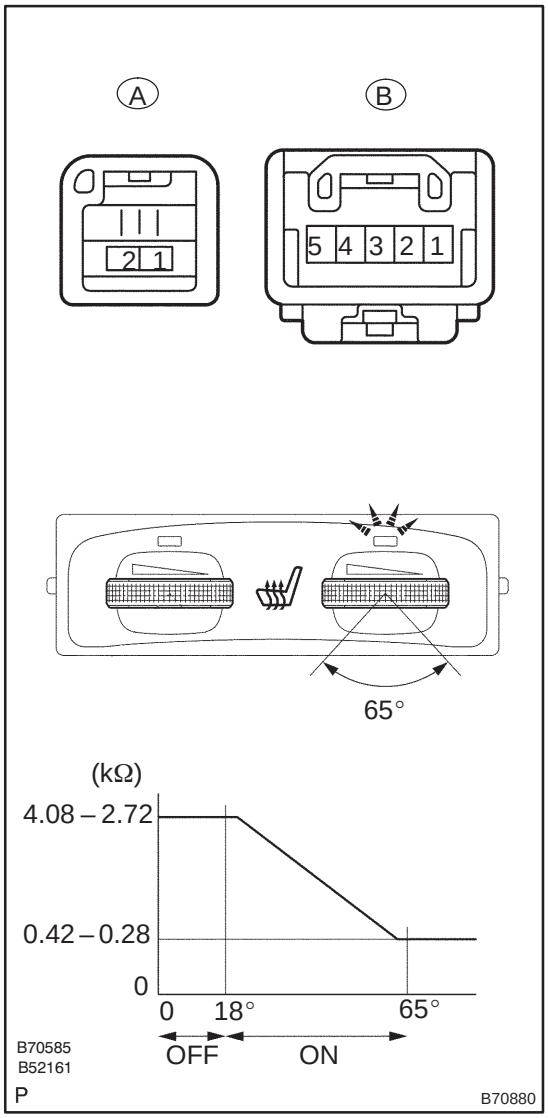

2. RH side:
INSPECT SEAT HEATER SWITCH

(a) Check the seat heater switch resistance.

Tester Connection	Switch Position	Specified Condition
B–2 – A–1	OFF	10 kΩ or higher
	ON (Minimum – Maximum)	Below 1 Ω
B–2 – A–2	OFF	10 kΩ or higher
	ON (Minimum – Maximum)	Refer to illustration

If the continuity is not as specified, replace the switch.

(b) Turn the seat heater switch ON and check the seat heater switch indicator illuminates.

Tester Connection	Specified Condition
Battery positive voltage → B–2 Battery negative voltage → B–5	Illuminates

If the result is not as specified, replace the switch.

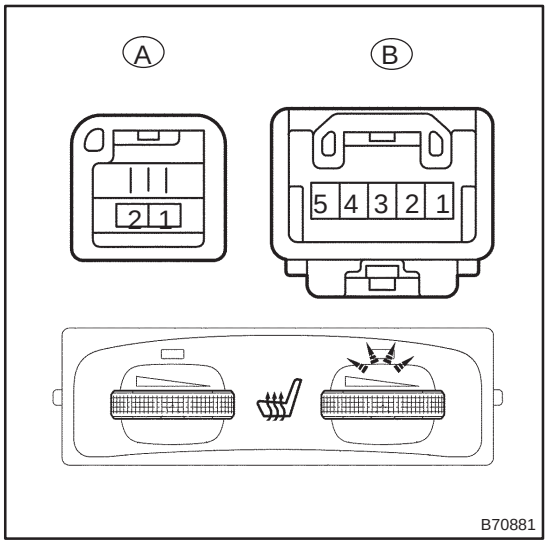

(c) Check the seat heater switch indicator illuminates.

Tester Connection	Specified Condition
Battery positive voltage → B–1 Battery negative voltage → B–5	Illuminates

If the result is not as specified, replace the switch or bulb.

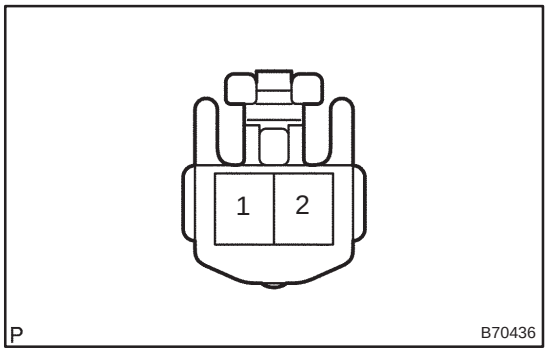

3. INSPECT SEPARATE TYPE FRONT SEATBACK COVER LH

(a) Check the resistance of the seatback heater.

Tester Connection	Specified Condition
1 – 2	Below 1 Ω

If the result is not as specified, replace the seatback cover.

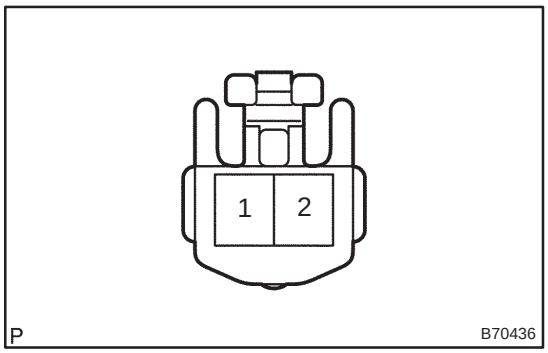

4. INSPECT SEPARATE TYPE FRONT SEATBACK COVER RH

(a) Check the resistance of the seatback heater.

Tester Connection	Specified Condition
1 – 2	Below 1 Ω

If the result is not as specified, replace the seatback cover.

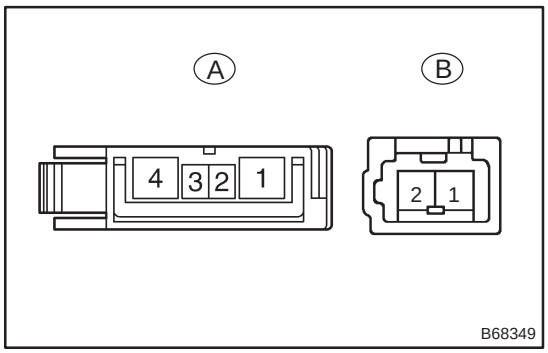

5. INSPECT SEPARATE TYPE FRONT SEAT CUSHION COVER LH

(a) Check the resistance of the seat cushion heater.

Tester Connection	Specified Condition
A–1 – B–1	Below 1 Ω
A–2 – A–3	
A–4 – B–2	

If the result is not as specified, replace the seat cushion cover.

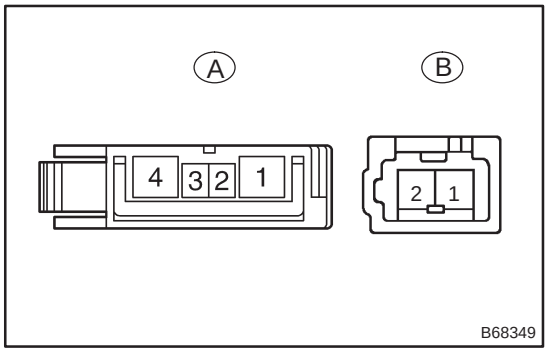

6. INSPECT SEPARATE TYPE FRONT SEAT CUSHION COVER RH

(a) Check the resistance of the seat cushion heater.

Tester Connection	Specified Condition
A–1 – B–1	Below 1 Ω
A–2 – A–3	
A–4 – B–2	

If the result is not as specified, replace the seat cushion cover.

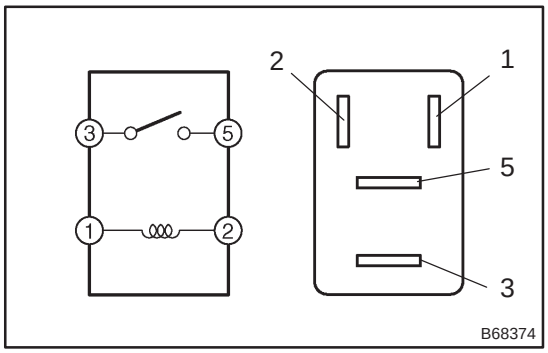

7. INSPECT RELAY (SEAT HTR)

(a) Check the resistance of the relay.

Standard:

Tester Connection	Specified Condition
3 – 5	10 kΩ or higher
	Below 1 Ω (When battery voltage is applied to terminals 1 and 2)

If the result is not as specified, replace the relay.

POWER DOOR LOCK CONTROL SYSTEM

730GV–01

ON–VEHICLE INSPECTION

1. DOOR LOCK FAIL–SAFE

(a) When a malfunction in the door control switch (manual switch, driver's door lock) has been detected, door lock/unlock operation becomes disabled.

2. CHECK ELECTRICAL DOOR LOCK OPERATION

(a) Check the basic function.

(1) Check that all doors lock when the door control switch (for manual operation) is turned to LOCK and all doors unlock when turned to UNLOCK.

(2) Check that all doors lock when the driver's door is locked from the outside using the key. Check that all doors unlock when the driver's door is unlocked from the outside using the key.

(b) Check the key lock–in prevention function.

NOTICE:

In order to prevent the key from being locked in, the inspection should be made with the driver side door glass open.

(1) Have the key inserted into the ignition key cylinder.

(2) With the driver side door open, check that all doors unlock immediately after the door lock knob for the driver side door is turned to LOCK.

(3) With the driver side door open, check that all doors unlock immediately after the door control switch (for manual operation) is turned to LOCK.

(4) With the driver side door open, turn the driver side door lock knob to LOCK and hold it for 2 seconds or more, and then close the driver side door. Then check that all doors unlock.

(c) Check the security function.

(1) Close all doors with the driver side door glass open so that the door control switch can be operated from outside the vehicle

(2) Pull out the key, open the driver side door and then close and lock the door without using the key. Then, check that all doors do not unlock when the door control switch (for manual operation) is turned to UNLOCK from outside the vehicle.

(3) Pull out the key, close and lock the driver side door by key operation. Under this condition, check that all doors do not unlock when the door control switch (for manual operation) is turned to UNLOCK from outside the vehicle.

(4) Pull out the key, close the driver side door and lock the door by wireless door lock operation. Then, check that all doors do not unlock when the door control switch (for manual operation) is turned to UNLOCK from outside the vehicle.

HINT:

Check that the security function is canceled under the following conditions.

- The ignition switch is turned ON.
- The driver side door is unlocked using the key.
- The door control switch (for manual operation) is turned to UNLOCK after the door control knob is turned to UNLOCK manually.
- The doors are unlocked with wireless operation.

(d) Check the illumination function.
  (1) Set the room light switch in the DOOR position.
  (2) With all doors locked, check that all doors unlock when the driver side door lock cylinder is turned to UNLOCK using the key and that the room right turns on.
  (3) Check that the room light turns off in approx. 15 seconds after the doors have not been opened for a while.

3. w/ Double lock:

CHECK DOUBLE LOCKING FUNCTION SYSTEM

(a) Check that the double locking system is set to ON.
  (1) Open all the windows.
  (2) Turn the ignition switch to LOCK and remove the key.
  (3) Open and close the driver side door, and make sure that all doors including the back door are closed securely.
  (4) Push the LOCK switch on the wireless transmitter twice within 5 seconds, and check that the hazard warning lights flash once at this time to show that the system is set.
  (5) Try to unlock all doors using the inside handle of the vehicle, and check that none of the doors unlock.

NOTICE:

- **The double locking system cannot be set to ON without using the wireless transmitter.**
- **The double locking system operation is not related to the back door.**

(b) Check that the double locking system is set to OFF.
  (1) Push the UNLOCK switch on the wireless transmitter while the double locking system is ON, and check that the hazard warning lights flash twice at this time to show that the system is set to OFF.
  (2) Check that the doors can be opened both by the inside handle and the outside handle.

NOTICE:

If the battery of the wireless transmitter is dead, only the driver side door can be opened using the key. However, the theft deterrent system still remains on. Therefore, be aware that the theft alarm is set off when the door is opened without the use of the wireless transmitter.

INSPECTION

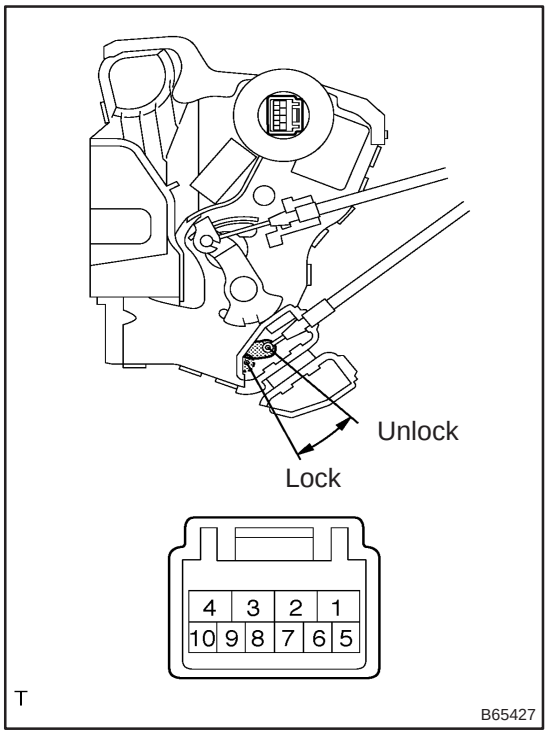

1. INSPECT FRONT DOOR W/MOTOR LOCK ASSY LH (W/O DOUBLE DOOR LOCK)

(a) Apply battery voltage to the door lock motor and check operation.

Standard:

Measurement Condition	Specified Condition
Battery positive (+) → Terminal 4 Battery negative (–) → Terminal 1	Lock
Battery positive (+) → Terminal 1 Battery negative (–) → Terminal 4	Unlock

If the result is not as specified, replace the door lock assy.

(b) Driver side only:

Check the resistance of the position switch.

Standard:

Tester Connection	Door Lock Position	Specified Condition
7 – 8	Lock	10 kΩ or higher
	Unlock	Below 1 Ω

If the result is not as specified, replace the door lock assy.

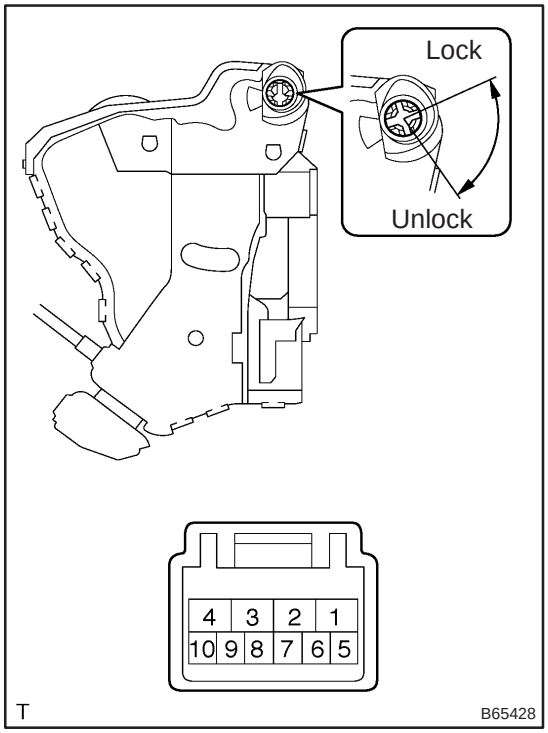

(c) Driver side only:

Check the resistance of the door lock and unlock switch.

Standard:

Tester Connection	Door Lock Position	Specified Condition
7 – 9	Lock	Below 1 Ω
7 – 9	OFF	10 kΩ or higher
7 – 10		
7 – 10	Unlock	Below 1 Ω

If the result is not as specified, replace the door lock assy.

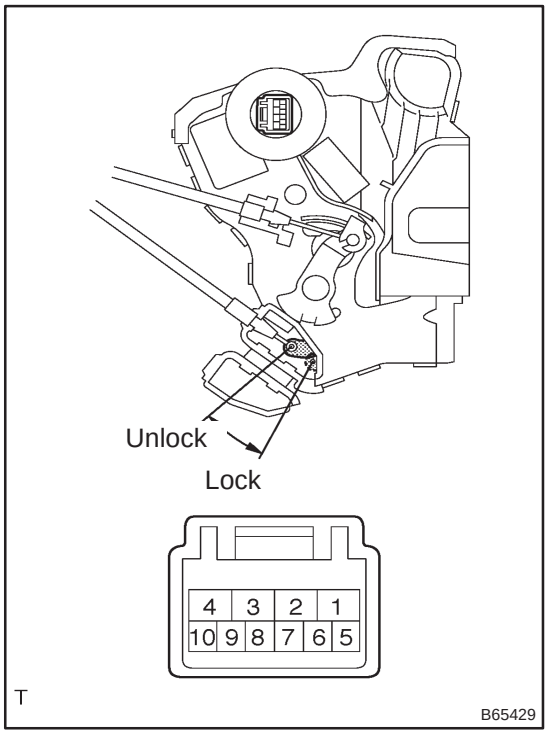

2. INSPECT FRONT DOOR W/MOTOR LOCK ASSY RH (W/O DOUBLE DOOR LOCK)

(a) Apply battery voltage to the door lock motor and check operation.

Standard:

Measurement Condition	Specified Condition
Battery positive (+) → Terminal 4 Battery negative (–) → Terminal 1	Lock
Battery positive (+) → Terminal 1 Battery negative (–) → Terminal 4	Unlock

If the result is not as specified, replace the door lock assy.

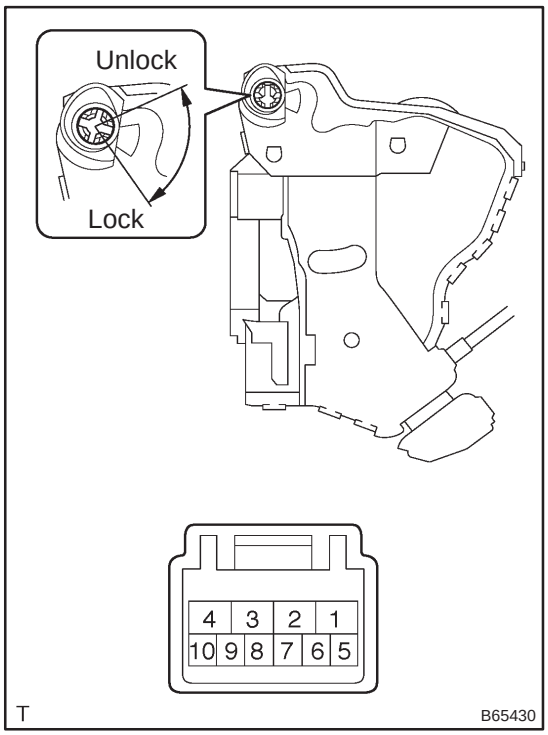

(b) Driver side only:

Check the door lock and unlock switch resistance.

Standard:

Tester Connection	Door Lock Position	Specified Condition
6 – 8	Lock	Below 1 Ω
6 – 8	OFF	10 kΩ or higher
5 – 8		
5 – 8	Unlock	Below 1 Ω

If the result is not as specified, replace the door lock assy.

(c) Driver side only:

Check the position switch resistance.

Standard:

Tester Connection	Door Lock Position	Specified Condition
7 – 8	Lock	10 kΩ or higher
	Unlock	Below 1 Ω

If the result is not as specified, replace the door lock assy.

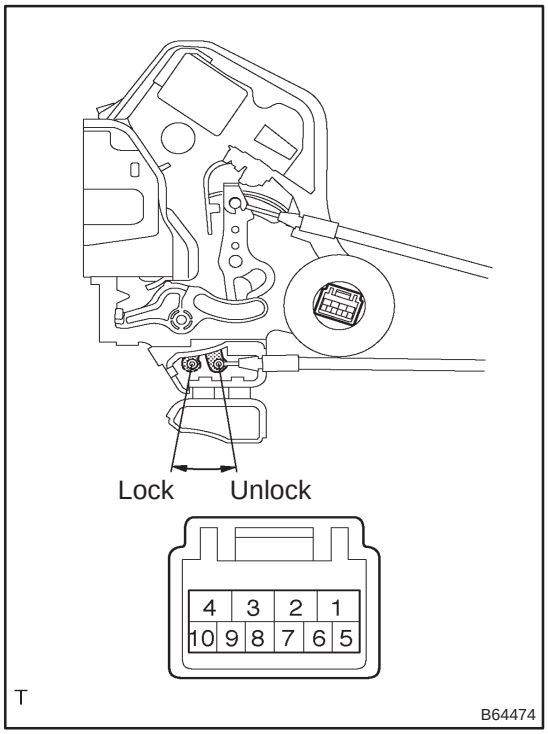

3. INSPECT REAR DOOR W/MOTOR LOCK ASSY LH (W/O DOUBLE DOOR LOCK)

(a) Apply battery voltage to the door lock motor and check operation.

Standard:

MeasurementCondition	SpecifiedCondition
Battery positive (+) → Terminal 4 Battery negative (–) → Terminal 1	Lock
Battery positive (+) → Terminal 1 Battery negative (–) → Terminal 4	Unlock

If the result is not as specified, replace the door lock assy.

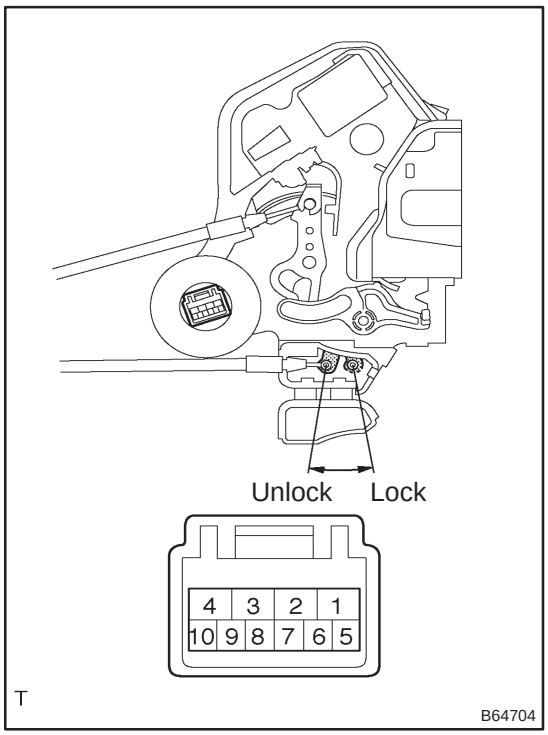

4. INSPECT REAR DOOR W/MOTOR LOCK ASSY RH (W/O DOUBLE DOOR LOCK)

(a) Apply battery voltage to the door lock motor and check operation.

Standard:

MeasurementCondition	SpecifiedCondition
Battery positive (+) → Terminal 4 Battery negative (–) → Terminal 1	Lock
Battery positive (+) → Terminal 1 Battery negative (–) → Terminal 4	Unlock

If the result is not as specified, replace the door lock assy.

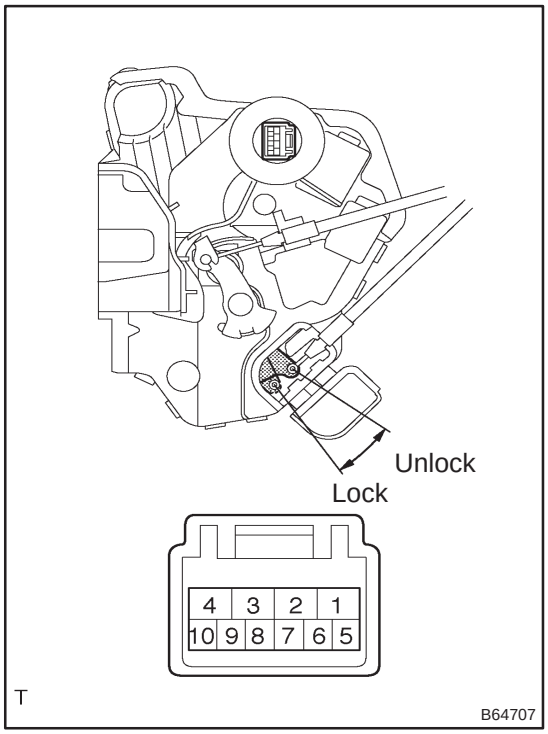

5. INSPECT FRONT DOOR W/MOTOR LOCK ASSY LH (W/ DOUBLE DOOR LOCK)

(a) Apply battery voltage to the door lock motor and check operation.

Standard:

MeasurementCondition	SpecifiedCondition
Battery positive (+) → Terminal 4 Battery negative (–) → Terminal 3	Lock
Battery positive (+) → Terminal 3 Battery negative (–) → Terminal 4	Unlock

If the result is not as specified, replace the door lock assy.

(b) Check the resistance of the position switch.

Standard:

Tester Connection	Door Lock Position	SpecifiedCondition
7 – 8	Lock	10 kΩ or higher
	Unlock	Below 1 Ω

If the result is not as specified, replace the door lock assy.

(c) Check operation of the double lock motor.

(1) Apply battery voltage to the door lock motor and set it to LOCK.

(2) Apply battery voltage to the double lock motor and check operation.

Standard:

MeasurementCondition	SpecifiedCondition
Battery positive (+) → Terminal 2 Battery negative (–) → Terminal 1	Double Locking System is ON
Battery positive (+) → Terminal 1 Battery negative (–) → Terminal 2	Double Locking System is OFF

(3) Check that the doors cannot be unlocked by operating the control cable while the double locking system is ON.

If the result is not as specified, replace the door lock assy.

(d) Check the resistance of the double lock position switch.

Standard:

Tester Connection	Double Lock Position	SpecifiedCondition
5 – 6	SET	Below 1 Ω
	UNSET	10 kΩ or higher

If the result is not as specified, replace the door lock assy.

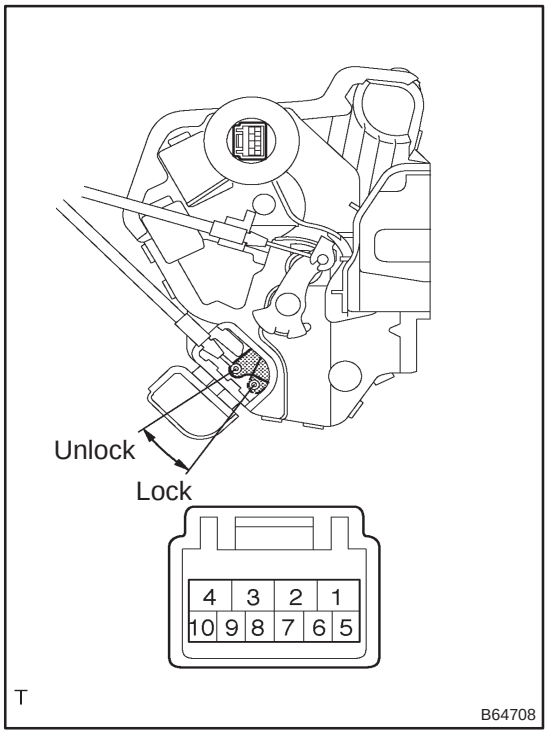

6. INSPECT FRONT DOOR W/MOTOR LOCK ASSY RH (W/ DOUBLE DOOR LOCK)

(a) Apply battery voltage to the door lock motor and check operation.

Standard:

Measurement Condition	Specified Condition
Battery positive (+) → Terminal 2 Battery negative (–) → Terminal 1	Lock
Battery positive (+) → Terminal 1 Battery negative (–) → Terminal 2	Unlock

If the result is not as specified, replace the door lock assy.

(b) Check the resistance of the position switch.

Standard:

Tester Connection	Door Lock Position	Specified Condition
7 – 8	Lock	10 kΩ or higher
	Unlock	Below 1 Ω

If the result is not as specified, replace the door lock assy.

(c) Check operation of the double lock motor.

(1) Apply battery voltage to the door lock motor and set it to LOCK.

(2) Apply battery voltage to the double lock motor and check operation.

Standard:

Measurement Condition	Specified Condition
Battery positive (+) → Terminal 4 Battery negative (–) → Terminal 3	Double Locking System is ON
Battery positive (+) → Terminal 3 Battery negative (–) → Terminal 4	Double Locking System is OFF

(3) Check that the doors cannot be unlocked by operating the control cable while the double locking system is ON.

If the result is not as specified, replace the door lock assy.

(d) Check the resistance of the double lock position switch.

Standard:

Tester Connection	Double Lock Position	Specified Condition
9 – 10	SET	Below 1 Ω
	UNSET	10 kΩ or higher

If the result is not as specified, replace the door lock assy.

(e) Check the resistance of the door lock and unlock switch.

Standard:

Tester Connection	Door Lock Position	Specified Condition
6 – 8	Lock	Below 1 Ω
6 – 8	OFF	10 kΩ or higher
5 – 8		
5 – 8	Unlock	Below 1 Ω

If the result is not as specified, replace the door lock assy.

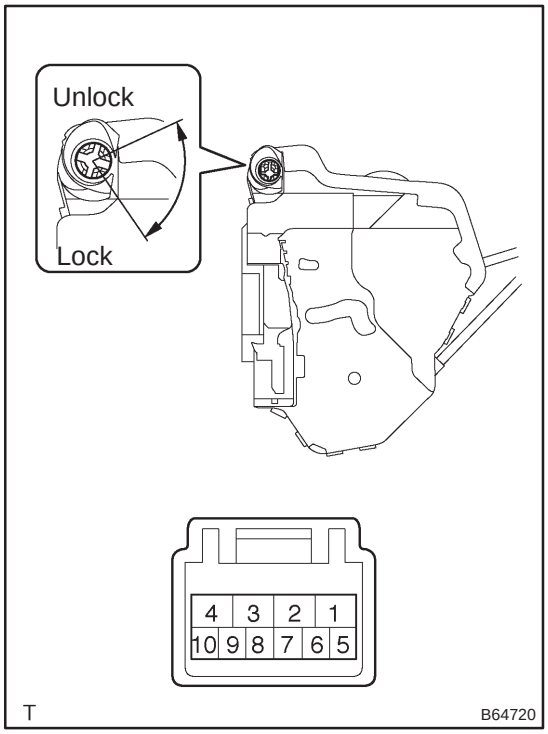

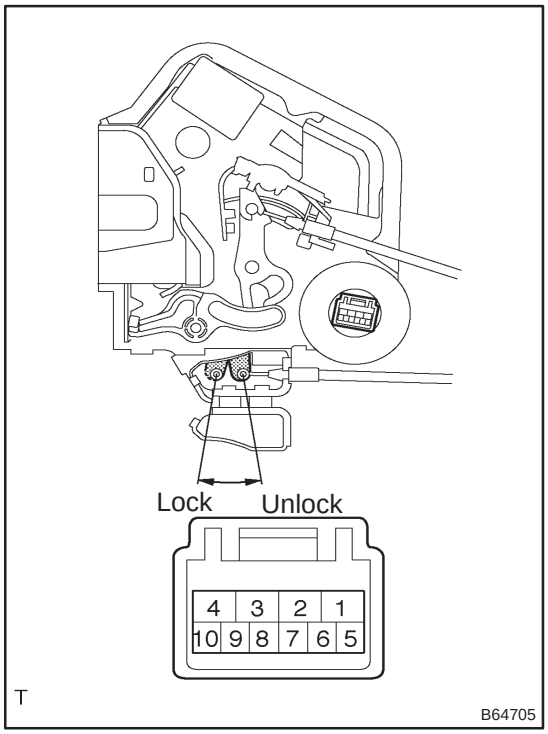

7. INSPECT REAR DOOR W/MOTOR LOCK ASSY LH (W/ DOUBLE DOOR LOCK)

(a) Apply battery voltage to the door lock motor and check operation.

Standard:

MeasurementCondition	SpecifiedCondition
Battery positive (+) → Terminal 2 Battery negative (–) → Terminal 1	Lock
Battery positive (+) → Terminal 1 Battery negative (–) → Terminal 2	Unlock

If the result is not as specified, replace the door lock assy.

(b) Check the resistance of the position switch.

Standard:

Tester Connection	Door Lock Position	SpecifiedCondition
5 – 6	Lock	Below 1 Ω
	Unlock	10 kΩ or higher

If the result is not as specified, replace the door lock assy.

(c) Check operation of the double lock motor.

(1) Apply battery voltage to the door lock motor and set it to LOCK.

(2) Apply battery voltage to the double lock motor and check operation.

Standard:

MeasurementCondition	SpecifiedCondition
Battery positive (+) → Terminal 4 Battery negative (–) → Terminal 3	Double Locking System is ON
Battery positive (+) → Terminal 3 Battery negative (–) → Terminal 4	Double Locking System is OFF

(3) Check that the doors cannot be unlocked by operating the control cable while the double locking system is ON.

If the result is not as specified, replace the door lock assy.

(d) Check the resistance of the double lock position switch.

Standard:

Tester Connection	Double Lock Position	SpecifiedCondition
9 – 10	SET	Below 1 Ω
	UNSET	10 kΩ or higher

If the result is not as specified, replace the door lock assy.

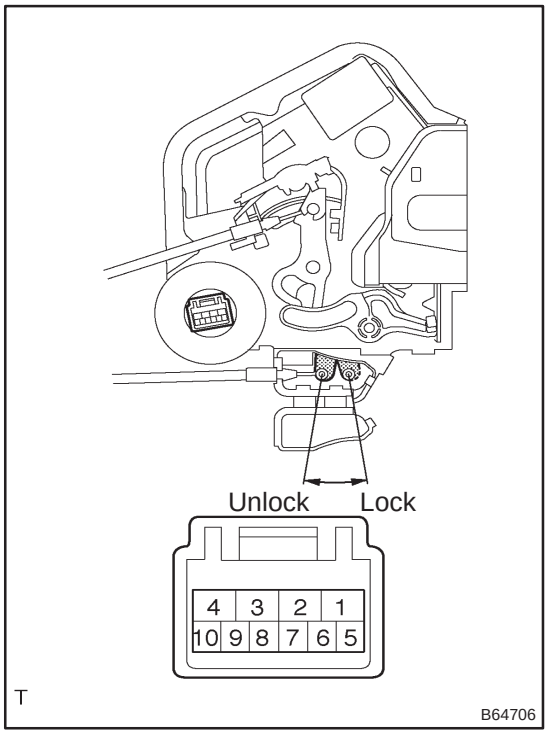

8. INSPECT REAR DOOR W/MOTOR LOCK ASSY RH (W/ DOUBLE DOOR LOCK)

(a) Apply battery voltage to the door lock motor and check operation.

Standard:

MeasurementCondition	SpecifiedCondition
Battery positive (+) → Terminal 4 Battery negative (–) → Terminal 3	Lock
Battery positive (+) → Terminal 3 Battery negative (–) → Terminal 4	Unlock

If the result is not as specified, replace the door lock assy.

(b) Check the resistance of the position switch.

Standard:

Tester Connection	Door Lock Position	SpecifiedCondition
9 – 10	Lock	Below 1 Ω
	Unlock	10 kΩ or higher

If the result is not as specified, replace the door lock assy.

(c) Check operation of the double lock motor.

(1) Apply battery voltage to the door lock motor and set it to LOCK.

(2) Apply battery voltage to the double lock motor and check operation.

Standard:

MeasurementCondition	SpecifiedCondition
Battery positive (+) → Terminal 2 Battery negative (–) → Terminal 1	Double Locking System is ON
Battery positive (+) → Terminal 1 Battery negative (–) → Terminal 2	Double Locking System is OFF

(3) Check that the doors cannot be unlocked by operating the control cable while the double locking system is ON.

If the result is not as specified, replace the door lock assy.

(d) Check the resistance of the double lock position switch.

Standard:

Tester Connection	Double Lock Position	SpecifiedCondition
5 – 6	SET	Below 1 Ω
	UNSET	10 kΩ or higher

If the result is not as specified, replace the door lock assy.

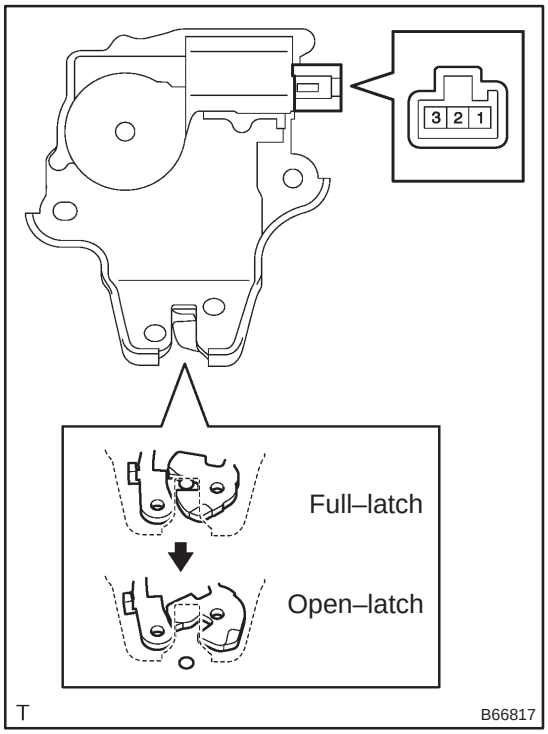

9. INSPECT BACK DOOR LOCK ASSY (SEDAN MODELS)

(a) Check operation of the door lock.

(1) Using a screwdriver, push the latch in order to put the back door lock in the locked condition (full–latch position).

(2) Apply battery voltage to the door lock and check operation of the latch.

Standard:

Measurement Condition	Specified Condition
Battery positive (+) → Terminal 1 Battery negative (–) → Terminal 3	Latch turns to open–latch position

If the result is not as specified, replace the door lock assy.

(b) Apply battery voltage to the door lock motor and check motor operation.

Standard:

Measurement Condition	Specified Condition
Battery positive (+) → Terminal 3 Battery negative (–) → Terminal 1	Clockwise (Motor in normal rotation)
Battery positive (+) → Terminal 1 Battery negative (–) → Terminal 3	Counterclockwise (Motor in reverse rotation)

If the result is not as specified, replace the door lock assy.

(c) Check the resistance of the courtesy switch.

Standard:

Tester Connection	Door Lock Latch Position	Specified Condition
2 – 3	Open–latch position	Below 1 Ω
	Full–latch position	10 kΩ or higher

If the result is not as specified, replace the door lock assy.

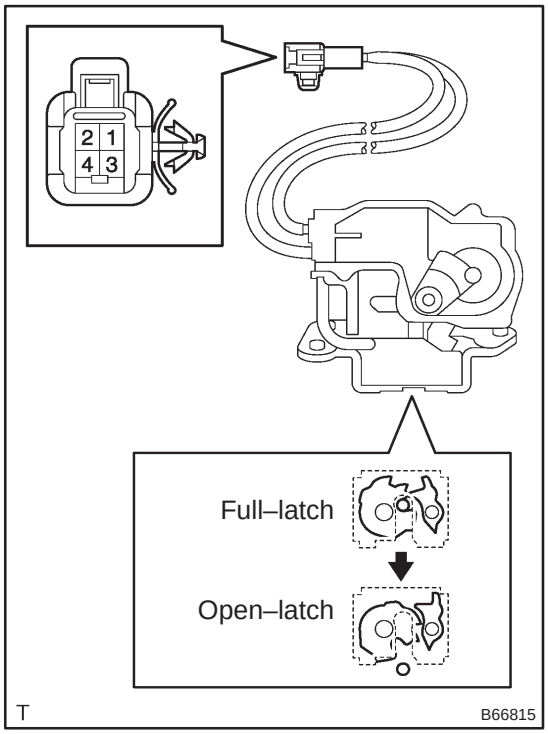

10. INSPECT BACK DOOR LOCK ASSY (WAGON MODELS)

(a) Check operation of the door lock.

(1) Using a screwdriver, push the latch in order to put the back door lock in the locked condition (full–latch position).

(2) Apply battery voltage to the door lock and check operation of the latch.

Standard:

Measurement Condition	Specified Condition
Battery positive (+) → Terminal 4 Battery negative (–) → Terminal 3	Latch turns to open–latch position

If the result is not as specified, replace the door lock assy.

(b) Apply battery voltage to the door lock motor and check motor operation.

Standard:

Measurement Condition	Specified Condition
Battery positive (+) → Terminal 4 Battery negative (–) → Terminal 3	Clockwise (Motor in normal rotation)
Battery positive (+) → Terminal 3 Battery negative (–) → Terminal 4	Counterclockwise (Motor in reverse rotation)

If the result is not as specified, replace the door lock assy.

(c) Check the resistance of the courtesy switch.

Standard:

Tester Connection	Door Lock Latch Position	Specified Condition
1 – 2	Open–latch position	Below 1 Ω
	Full–latch position	10 kΩ or higher

If the result is not as specified, replace the door lock assy.

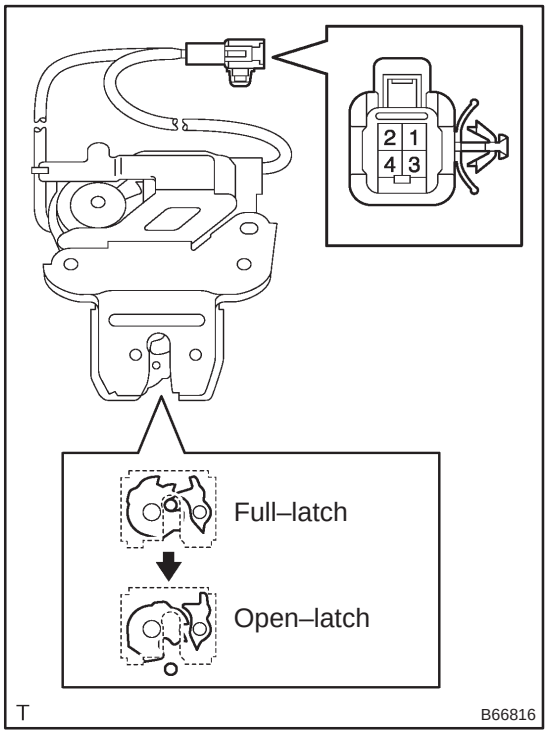

11. INSPECT BACK DOOR LOCK ASSY (LIFTBACK MODELS)

(a) Check operation of the door lock.

(1) Using a screwdriver, push the latch in order to put the back door lock in the locked condition (full–latch position).

(2) Apply battery voltage to the door lock and check operation of the latch.

Standard:

Measurement Condition	Specified Condition
Battery positive (+) → Terminal 4 Battery negative (–) → Terminal 3	Latch turns to open–latch position

If the result is not as specified, replace the door lock assy.

(b) Apply battery voltage to the door lock motor and check motor operation.

Standard:

Measurement Condition	Specified Condition
Battery positive (+) → Terminal 4 Battery negative (–) → Terminal 3	Clockwise (Motor in normal rotation)
Battery positive (+) → Terminal 3 Battery negative (–) → Terminal 4	Counterclockwise (Motor in reverse rotation)

If the result is not as specified, replace the door lock assy.

(c) Check the resistance of the courtesy switch.

Standard:

Tester Connection	Door Lock Latch Position	Specified Condition
1 – 2	Open–latch position	Below 1 Ω
	Full–latch position	10 kΩ or higher

If the result is not as specified, replace the door lock assy.

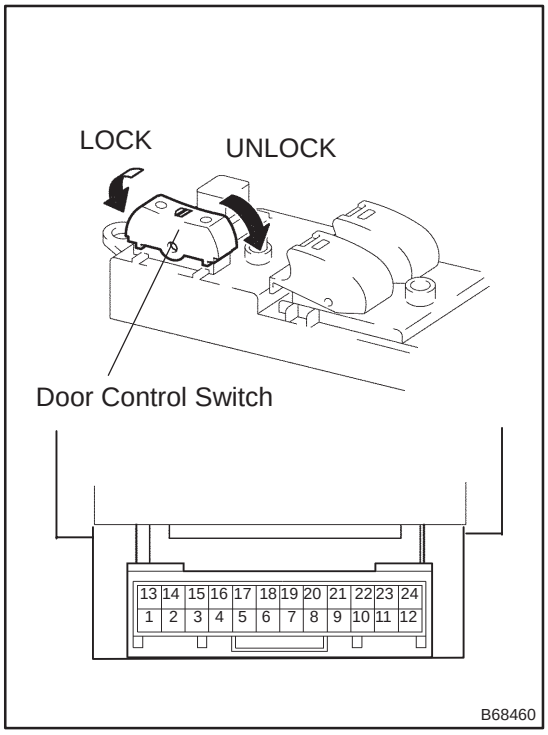

12. INSPECT POWER WINDOW REGULATOR MASTER SWITCH ASSY

(a) Check the resistance of the door control switch.

Standard:

Tester Connection	Door Lock Position	Specified Condition
7 – 8	Lock	Below 1 Ω
7 – 8	OFF	10 kΩ or higher
5 – 7		
5 – 7	Unlock	Below 1 Ω

If the result is not as specified, replace the switch assy.

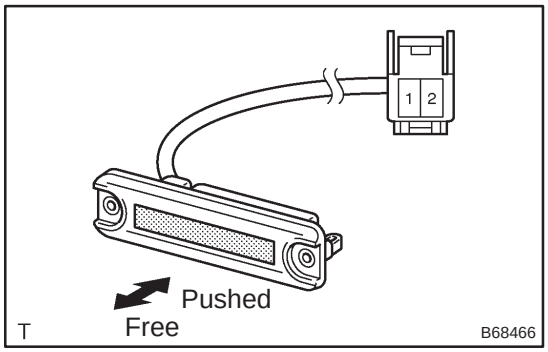

13. INSPECT BACK DOOR OPENER SWITCH ASSY

(a) Check the resistance of the switch.

Standard:

Tester Connection	Switch Position	Specified Condition
1 – 2	Free	10 kΩ or higher
	Pushed	Below 1 Ω

If the result is not as specified, replace the door lock assy.

WIRELESS DOOR LOCK CONTROL SYSTEM

730EU–02

PRECAUTION

1. NOTICES WHEN CHECKING

(a) The wireless door lock remote control function operates only when the following 3 conditions are met.
  (1) All the doors are closed.
  (2) No key is inserted in the ignition key cylinder.
  (3) The power door lock system operates normally.

HINT:

The door UNLOCK and luggage door (back door) UNLOCK functions operate even when a door is open.

(b) The wireless door lock remote control operational area differs depending on the situation.
  (1) The operational area differs depending on the operators and the ways the transmitter is held.
  (2) In certain areas, the remote control function will only operate partially for the operational area will be reduced due to the vehicle body shape and the influence of the surrounding environment.
  (3) Since the transmitter uses faint electric waves, strong electric waves or noise in the frequency used may reduce the operational area or the remote control may not function.
  (4) When the battery weakens, the operational area is reduced or the remote control may not function.

HINT:

If the door control transmitter has been left in a place that is exposed to the direct sunlight, such as on the instrument panel, it may cause the battery to weaken or cause other such problems.

ON–VEHICLE INSPECTION

1. CHECK WIRELESS DOOR LOCK CONTROL FUNCTIONS

HINT:

- The switch described in this text is a switch for transmitting signals (LOCK switch, UNLOCK switch and luggage door (back door) unlock switch) which is built in the door control transmitter.
- All the functions listed below must be checked in comparison with the remote control operational area.

(a) Put the vehicle under the conditions that allow the wireless control function to be operated (See PRECAUTION on page 73–14).

(b) Check the basic function.

(1) Check whether the LED of the transmitter lights up 3 times when each switch is pressed 3 times.

HINT:

If the LED does not light up when the switch has been pressed 3 times or more, it may have a dead battery.

(2) Check that all the doors including the luggage door (back door) lock when the LOCK switch is pressed (However, this will not happen when any door is open).

(3) w/ Double locking system:
Check that the double locking system is set when the LOCK switch is pressed within 5 seconds after the above step (However, the double locking system is not applicable to the luggage door (back door)).

CAUTION:

Never activate the double locking system when there are people in the vehicle, because all the doors cannot be opened from inside the vehicle with the system on. If you lock the doors by accident, push UNLOCK switch of the door control transmitter.

(4) Check that all the doors including the luggage door (back door) unlock when the UNLOCK switch is pressed. Also, check that the double locking system is canceled at the same time.

(5) Check that the luggage door (back door) unlocks when the luggage door (back door) unlock switch is pressed.

HINT:

The UNLOCK switch and luggage door (back door) unlock switch can unlock the doors even when any door is open.

(c) Check the chattering prevention function.

(1) Check that the corresponding operation occurs only once, and not repeated continuously while the switch is held down. However, when the switch is operated repeatedly at 1 second intervals, check that the corresponding operation is carried out.

(d) Check the automatic locking function.

(1) Check that all the doors including the luggage door (back door) lock automatically as long as none of them have been opened or locked within approx. 30 seconds after they are unlocked by pressing the switch.

(2) Check that the automatic locking function does not operate when any door including the luggage door (back door) has been opened or all of them have been locked within approx. 30 seconds after they are unlocked by pressing the switch.

(e) Check the switch operation fail–safe function.

(1) Check that the doors can not be locked by the switch while the key is in the ignition key cylinder. However, this does not apply when the system is in the recognition code registration mode.

(f) Check the repeat function.

(1) Check that all the doors attempt to automatically lock once again 1 second after the LOCK switch has been pressed while the movement of the driver side door control knob, which is in the unlocked state, is being restricted.

(g) Check the hazard warning lamps flashing function (answer–back).
  (1) When the LOCK switch is pressed, check that the hazard warning lamps flash once, simultaneously with the locking of all the doors.
  (2) When the UNLOCK switch is pressed once, check that the hazard warning lamps flash twice simultaneously with the unlocking of all the doors.
  (3) When the luggage door (back door) unlock switch is pressed once, check that the hazard warning lamps flash twice simultaneously with the unlocking of the luggage door (back door).

Wire Harness Side

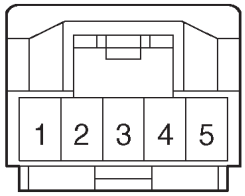

Door Control Receiver

B59092

2. CHECK DOOR CONTROL RECEIVER

(a) Disconnect the receiver connector.

(b) Check the voltage and resistance between the terminals of the wire harness side connector and the body ground.

Standard:

Tester Connection	Condition	Specified Condition
5 (+B) – Body ground	Constant	10 to 14 V
1 (GROUND) – Body ground	Constant	Below 1 Ω

If the result is not as specified, there may be a malfunction on the wire harness side.

(c) Reconnect the connector and check the voltage between the terminal and body ground.

Standard:

Tester Connection	Condition	Specified Condition
2 (RDA) – Body ground	No key in ignition key cylinder, all doors closed and each transmitter switch OFF → ON	Below 1 V → Approx. 6 to 7 V → Below 1 V

If the result is not as specified, the receiver may have a malfunction.

TRANSMITTER BATTERY

730EW–02

REPLACEMENT

1. REMOVE TRANSMITTER SUB–ASSY MODULE SET DOOR CONTROL (See page 73–18)

NOTICE:

Special caution should be taken for handling each component as they are precision electronic components.

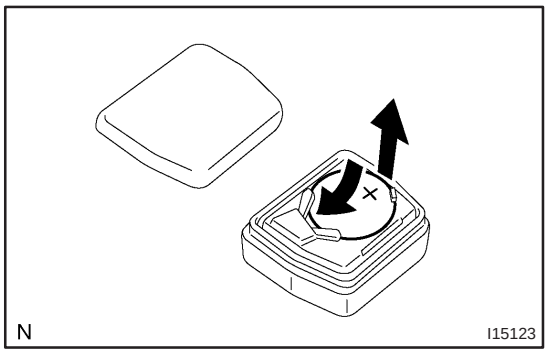

2. REMOVE TRANSMITTER BATTERY

(a) Remove the cover.

(b) Remove the transmitter battery (lithium battery).

NOTICE:

- **Do not push the terminals with your finger.**
- **Prying up the battery (lithium battery) to forcibly remove it will cause deformation of the terminals.**
- **Do not touch the battery with wet hands. Water may cause unexpected rust.**
- **Do not touch or move any components inside the transmitter as it may interfere with proper operation.**

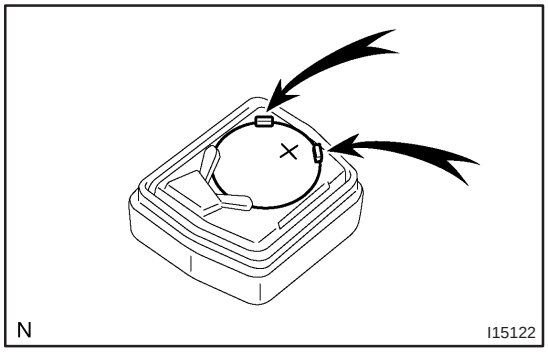

3. INSTALL TRANSMITTER BATTERY

(a) Install a new battery (lithium battery) with the positive (+) side up, as shown in the illustration.

NOTICE:

- **Be sure that the positive side and the negative side of the transmitter battery are matched–up correctly.**
- **Be careful not to bend the electrode of the transmitter battery insertion.**
- **Be careful that dust or oil does not adhere to the transmitter case.**

(b) Install the cover.

NOTICE:

If the screws are loose, it may cause faulty contact between the battery (lithium battery) and the terminals.

TRANSMITTER SUB–ASSY MODULE SET DOOR CONTROL

730EX–03

REPLACEMENT

HINT:

The installation is in the reverse order of the removal.

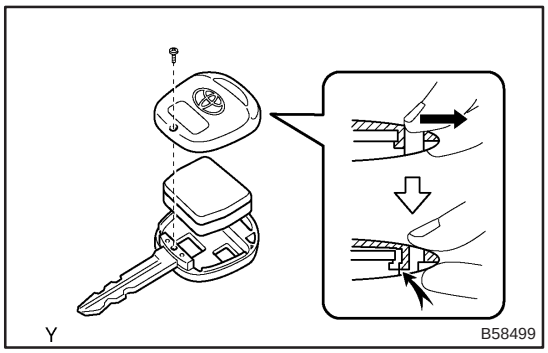

1. REMOVE TRANSMITTER SUB–ASSY MODULE SET DOOR CONTROL

NOTICE:

Special caution should be taken when handling each component as they are precise electronic components.

(a) Using a screwdriver, remove the screw.

(b) Push the cover with your finger as shown in the illustration so a gap appears. Then, pry out the cover using that gap.

NOTICE:

Do not forcibly pry up the cover.

730EZ–03

INSPECTION

1. INSPECT TRANSMITTER SUB–ASSY MODULE SET DOOR CONTROL

(a) Inspect operation of the transmitter.

(1) Remove the battery (lithium battery) from the transmitter (See page 73–17).

(2) Install a new or normal battery (lithium battery).

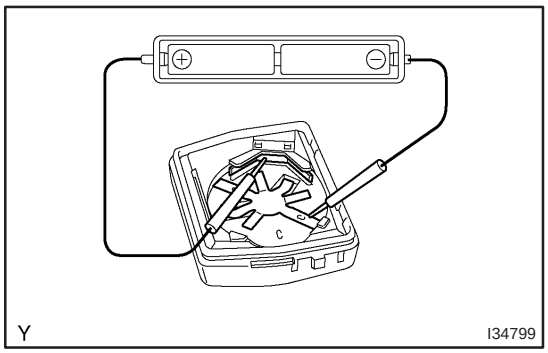

HINT:
When a new or normal battery is not available, connect 2 new 1.5 V batteries in a series, connect the battery positive (+) to the battery receptacle side terminal and battery negative (–) to the bottom terminal, then apply 3 V of voltage to the transmitter.

(3) In a location that is approx. 1 m (3.28 ft) away from the driver side outside door handle in the right direction, point the key plate of the transmitter at the vehicle and check operation of the transmitter by pressing the transmission switch on the transmitter body.

Standard:

The door lock can be operated via the remote control.

The LED lights up more than once.

HINT:

- The minimum operational distance differs, depending on the operator, the way the transmitter is held, and the location.
- Since the transmitter uses faint electric waves, the operational distance might be shortened if noise or strong electric wave occurs in the area where the frequency is used.

(4) Install the battery (lithium battery).

(b) Inspect the battery capacity.

HINT:

- The capacity of the battery can be determined only when the battery is installed in the transmitter. For a lithium battery used in the transmitter, a voltage of more than 2.5 V is shown on the tester until the energy is completely consumed, while no battery is installed in the transmitter. Therefore, it is necessary to measure the voltage while the battery is installed in the transmitter (a resistance of 1.2 kΩ is applied to the battery) when checking the amount of energy left in the battery.
- If the transmitter is faulty, the amount of energy left in the battery might not be checked correctly.

(1) Remove the battery (lithium battery) from the transmitter (See page 73–17).

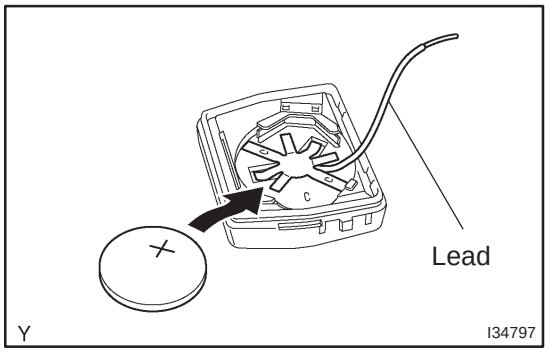

(2) Connect the lead to the negative (–) terminal of the transmitter and install the battery.

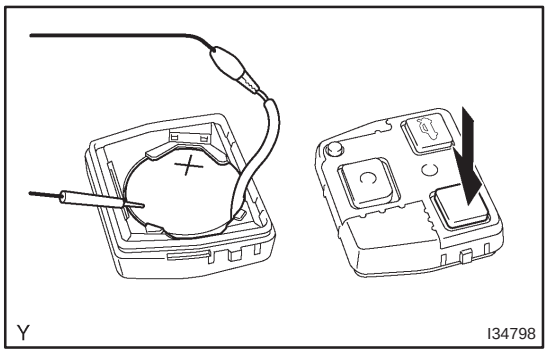

(3) Connect the tester positive (+) probe to the (+) battery (lithium battery) and the tester negative (–) probe to the lead respectively.
(4) Press one of the transmission switches on the transmitter for approx. 1 second.
(5) Press the transmission switch on the transmitter again to check the voltage.

Standard: 2.2 V or higher

HINT:

- When the temperature of the battery is low, the inspection can not be made correctly.
  When the outcome of the test is less than 2.2 V, conduct the test again after leaving the battery in a place with a temperature of 18°C (64°F) for more than 30 minutes.
- The automatic power–off function causes the voltage of the battery to be 2.5 V or more (a voltage with no resistance applied to the battery) when 0.8 seconds have passed after the switch is pressed. Therefore, make sure to read the voltage just after the switch is pressed.
- Because high voltage might be shown once or twice after the battery returns to the specified temperature, the inspection should be made with the voltage shown after the switch is pressed at least 3 times.

(6) Disconnect the lead.
(7) Set the battery (lithium battery) in the transmitter.

730EY–02

REGISTRATION

1. REGISTER RECOGNITION CODE

HINT:

- Register the recognition code when replacing the door control transmitter or the door control receiverr.
- The add mode is used to register new recognition codes while still retaining codes already registered. This mode is used when a new transmitter is added. If the number of registered codes exceeds 4, the previously registered codes will be erased in order, starting from the first registered code.
- The rewrite mode is used to erase all the previously registered recognition codes in order to register new recognition codes. This mode is used when the transmitter or the door control receiver is exchanged for a new one.
- The confirmation mode is used to confirm how many recognition codes have already been registered before an additional registration of a recognition codes.
- The all clear mode is used to erase all the registered codes and disables the wireless door lock function. This mode is used when the transmitter is lost.
- All the following registration procedures must be performed in order continuously.

Flow Chart of Recognition Code Registration

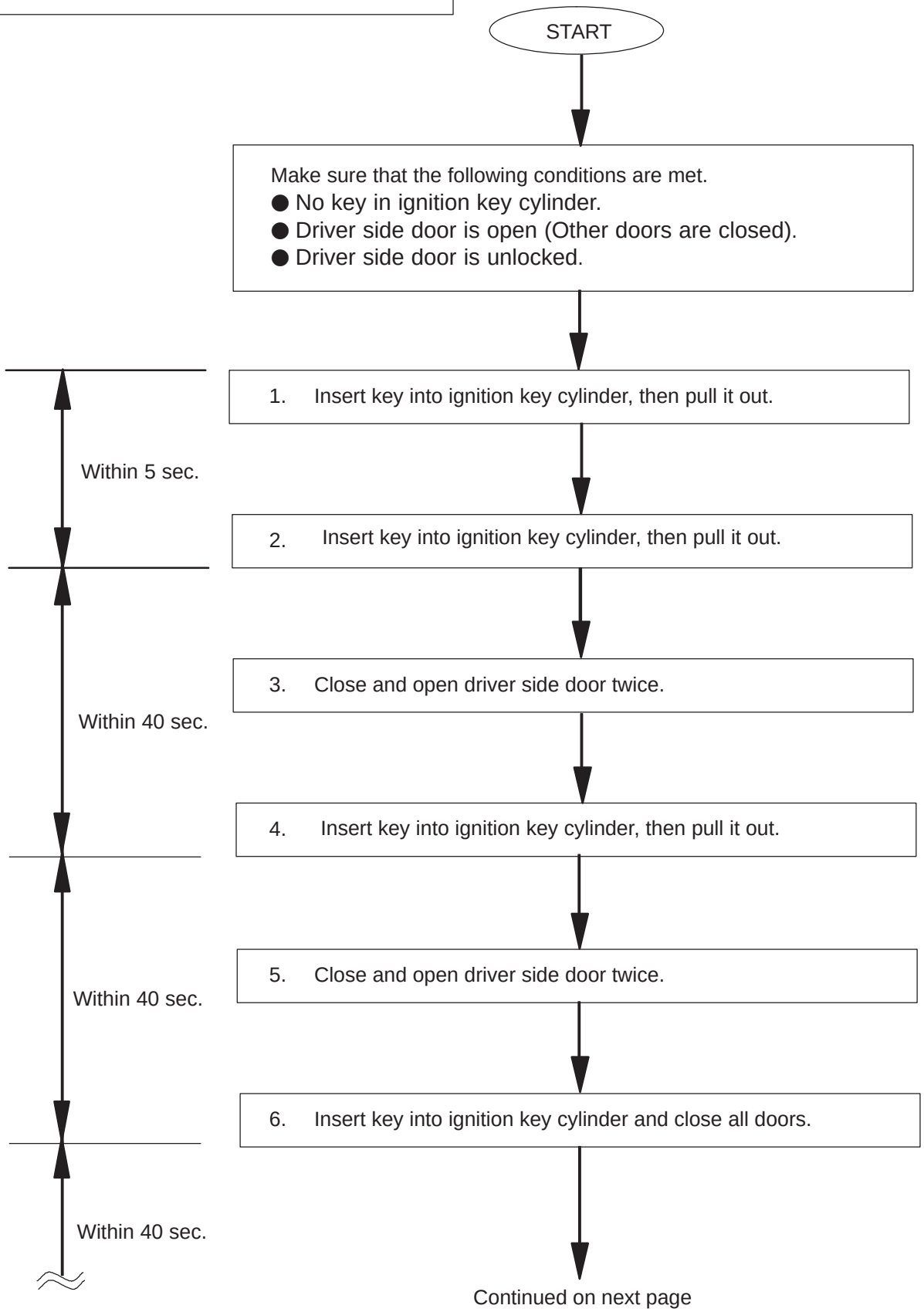

Continued from previous page

Mode Selection:

7. Turn ignition switch from LOCK to ON and back to LOCK at approximately 1 second intervals according to the number of times shown below.

Number of ON–LOCK operations of ignition switch:

Add Mode

ON–LOCK operation: 1 time

T1: Approx. 1 sec.

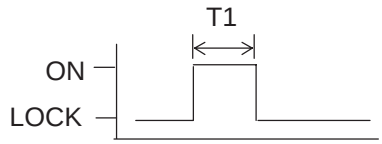

Rewrite Mode

ON–LOCK operation: 2 times

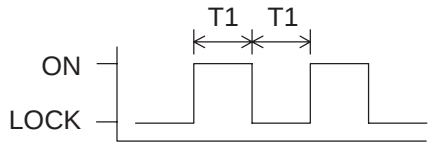

Confirmation Mode

ON–LOCK operation: 3 times

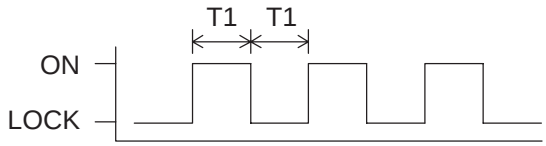

All Clear Mode

ON–LOCK operation: 5 times

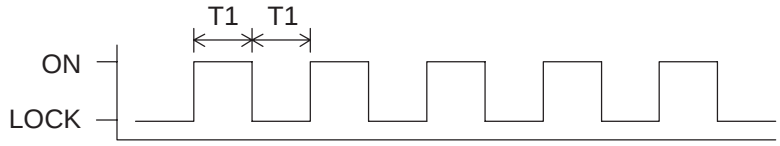

If the number of the ON–LOCK operations of the ignition switch is 0, 4 or 6 or more, there will be no response (power door lock and unlock operation) to inform which mode has been selected.

Within 40 sec.

8. Remove key from ignition key cylinder.

Within 3 sec.

Continued on next page

Within 3 sec.

Continued from previous page

Response to selected mode (Power door lock operation):

Integration relay automatically performs power door LOCK–UNLOCK operation to inform which mode has been selected.

Add Mode

LOCK–UNLOCK operation: 1 time

T1: Approx. 1 sec.
T2: Approx. 2 sec.

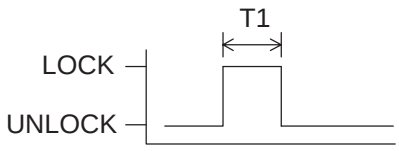

Rewrite Mode

LOCK–UNLOCK operation: 2 times

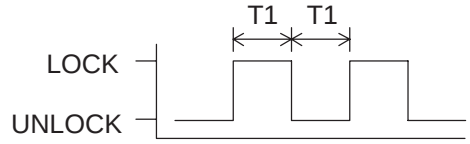

Confirmation Mode

LOCK–UNLOCK operation: The number of registered codes (1 – 5 times)

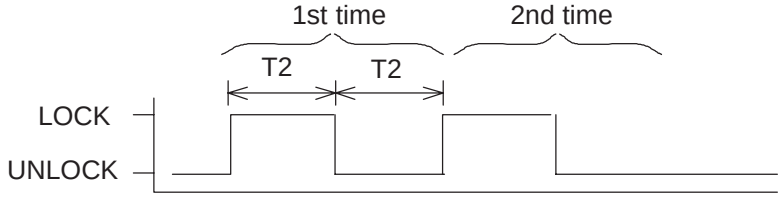

All Clear Mode

LOCK–UNLOCK operation: 5 times

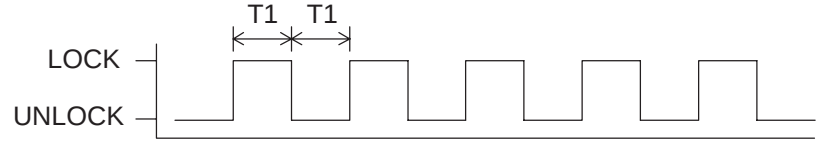

HINT:

● In the confirmation mode, when LOCK–UNLOCK operation is performed twice, the number of registered recognition codes is 2.

● In the confirmation mode, when 0 codes are registered, LOCK–UNLOCK operation is automatically performed 5 times.

Within 40 sec.

Add Mode or Rewrite Mode

Continued on next page

Confirmation Mode and All Clear Mode

Registration procedures are completed.

Continued from previous page

Within 40 sec.

9. Press either LOCK or UNLOCK switch on transmitter once.

Within 3 sec.

10. Press the same switch again.

Within 3 sec.

Response to registration completion:

Integration relay automatically performs power door LOCK–UNLOCK operation to show whether registration has been completed correctly or not.

LOCK–UNLOCK Occurs Once

Registration of recognition code has been completed.

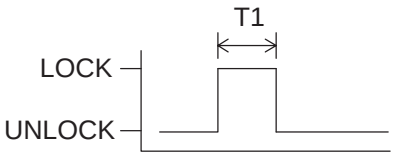

LOCK–UNLOCK Occurs Twice

Registration of recognition code has failed.

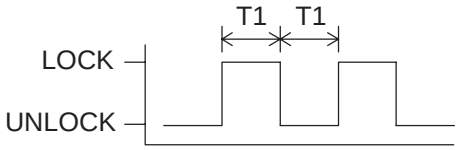

T1: Approx. 1 sec.

HINT:
If LOCK–UNLOCK operation is performed twice, registration of recognition code has failed. Perform registration procedures by beginning once again.

Within 40 sec.

If other transmitter is to be registered.

HINT:
4 recognition codes can be registered at once.

Proceed to flow chart to finish registration.

Perform either of the following.

- Open a door.
- Insert key into ignition key cylinder.

Registration of recognition codes (add mode and rewrite mode) is completed.

KEY REMINDER WARNING SYSTEM

730GU–01

ON–VEHICLE INSPECTION

1. FUNCTION CHECK

(a) Check that the key reminder warning buzzer sounds.
  (1) With the driver side door closed, insert the key into the ignition switch lock cylinder, and then turn the key to LOCK.
  (2) Then, check that the buzzer sounds intermittently when the driver side door is opened.

(b) Check that the key reminder warning buzzer stops.
  (1) Check that the buzzer stops sounding when any of the following operations is done while the buzzer is sounding.
    - Close the driver side door (front door courtesy lamp switch assy is off).
    - Turn the ignition switch ON.
    - Pull out the key from the ignition switch lock cylinder.

FUEL LID OPENER SYSTEM

LOCATION

73092–02

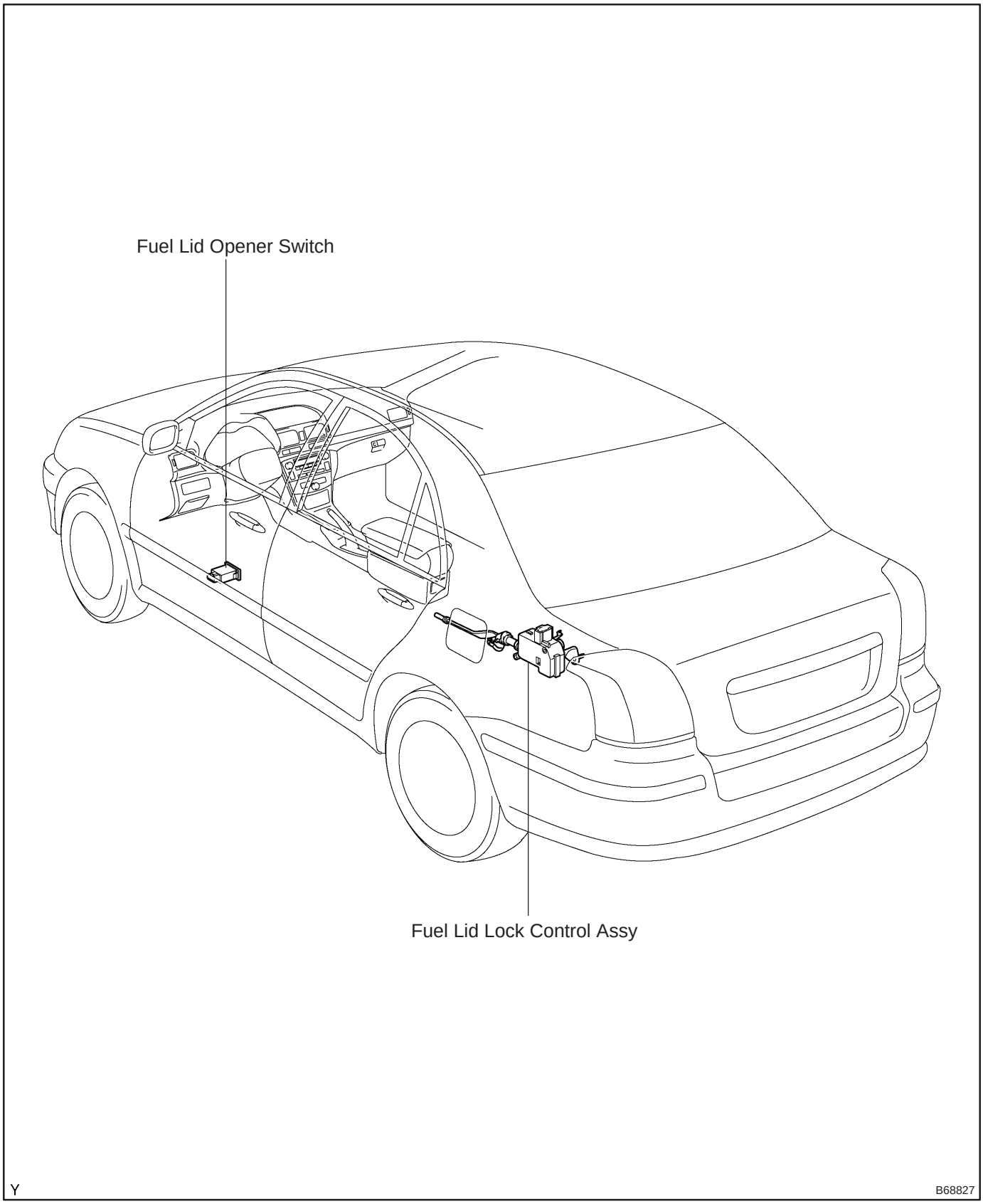

73093–02

ON–VEHICLE INSPECTION

1. CHECK FUEL LID OPENER OPERATION

(a) Check the basic function.

(1) Check that the fuel lid opens by pressing the fuel lid opener switch.

73094–02

PROBLEM SYMPTOMS TABLE

Symptom	Suspected Area	See Page
Fuel lid opener does not operate.	1. FUEL OPN fuse 2. Fuel lid opener switch 3. Fuel lid lock control assy 4. Wire harness	68–1 73–30 73–30

73095–02

INSPECTION

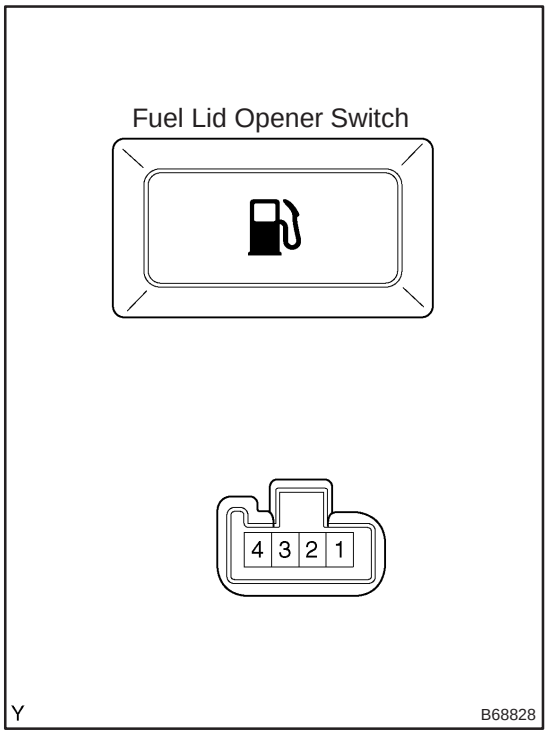

1. INSPECT FUEL LID OPENER SWITCH

(a) Check the switch resistance.

Standard:

Tester Connection	Switch Position	Specified Condition
2 – 3	OFF	10 kΩ or higher
	ON	Below 1 Ω

If the result is not as specified, replace the switch.

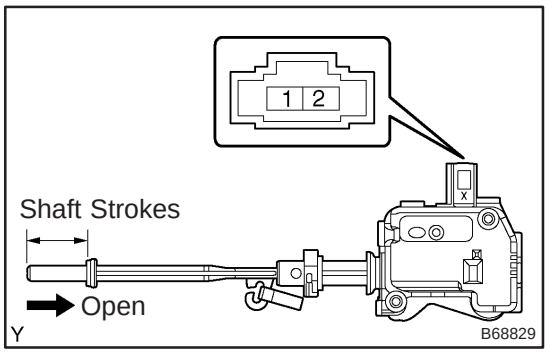

2. INSPECT FUEL LID LOCK CONTROL ASSY

(a) Apply battery voltage to the lock control and check the motor operates in the direction.

Standard:

Measurement Condition	Specified Condition
Battery positive (+) → Terminal 2 Battery negative (–) → Terminal 1	Open direction

If the result is not as specified, replace the lock control assy.

(b) Check the shaft strokes.

Standard: 18.0 mm (0.709 in.) or more

THEFT DETERRENT SYSTEM

730G8–01

ON–VEHICLE INSPECTION

1. OUTLINE OF THEFT DETERRENT SYSTEM

(a) When the theft deterrent system detects that the vehicle is being tampered with, the system sets off the alarm, causing the horns to sound and the lights to light up or blink in order to alert people around the vehicle to the theft.

(b) The theft deterrent system has an active arming mode; a disarmed state, an arming preparation state, an armed state and an alarm sounding state.

(1) Disarmed state:
- The alarm function is not operating.
- The theft deterrent system is not operating.

(2) Arming preparation state:
- The time until the system goes into the armed state.
- The theft deterrent system is not operating.

(3) Armed state:
- The theft deterrent system is operating.

HINT:

If the vehicle remains in a condition that sets off the alarm (any door remains open, engine hood remains open, ignition switch remains directly connected) after the alarm ends, the alarm will be set off repeatedly a maximum of 10 times for every one of the above specified conditions.

Alarm time: Approx. 27.5 sec. x 10

(4) Alarm sounding state:

When the theft deterrent system detects that the vehicle is being tampered with while in the armed state, the system causes the horns to sound and the lights to light up or blink in order to alert people around the vehicle to the theft.

Refer to table below for alarm method and time:

Alarm Method	Hazard Warning Lamp	Blinking (Cycle of flasher relay)
	Room Lamp	Illuminating
	Vehicle Horn	Sounding (Cycle of 0.4 sec.)
	Self–power Siren	Sounding (Cycle of 0.4 sec.)
Alarm Time	Approx. 27.5 sec. (Maximum 10 times)	

HINT:

If any of the doors are unlocked with no key in the ignition key cylinder during the armed state, a forced door lock signal will be output (See step 3).

2. ACTIVE ARMING MODE

- Active arming mode starts the alarm control right when the doors are locked.

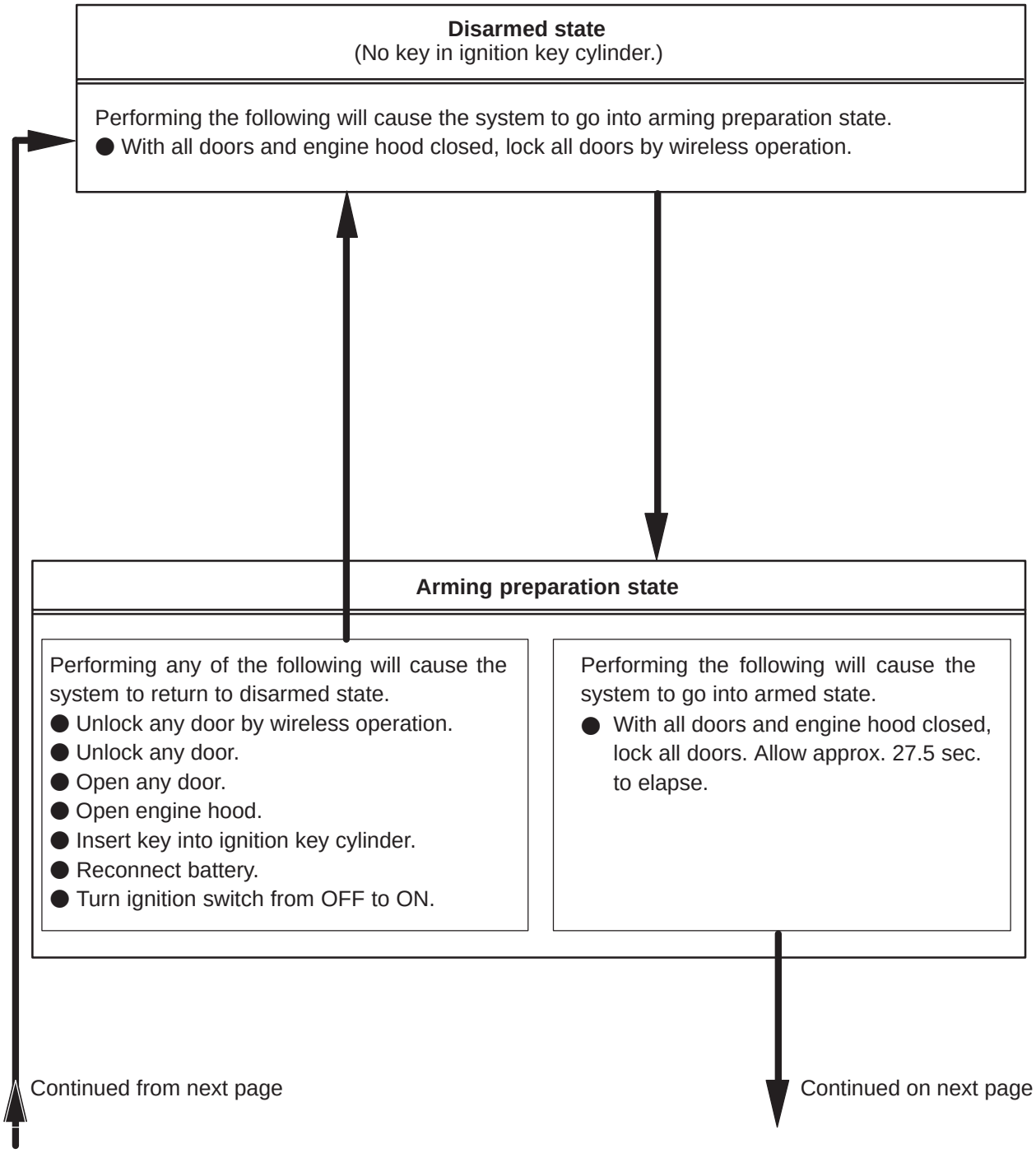

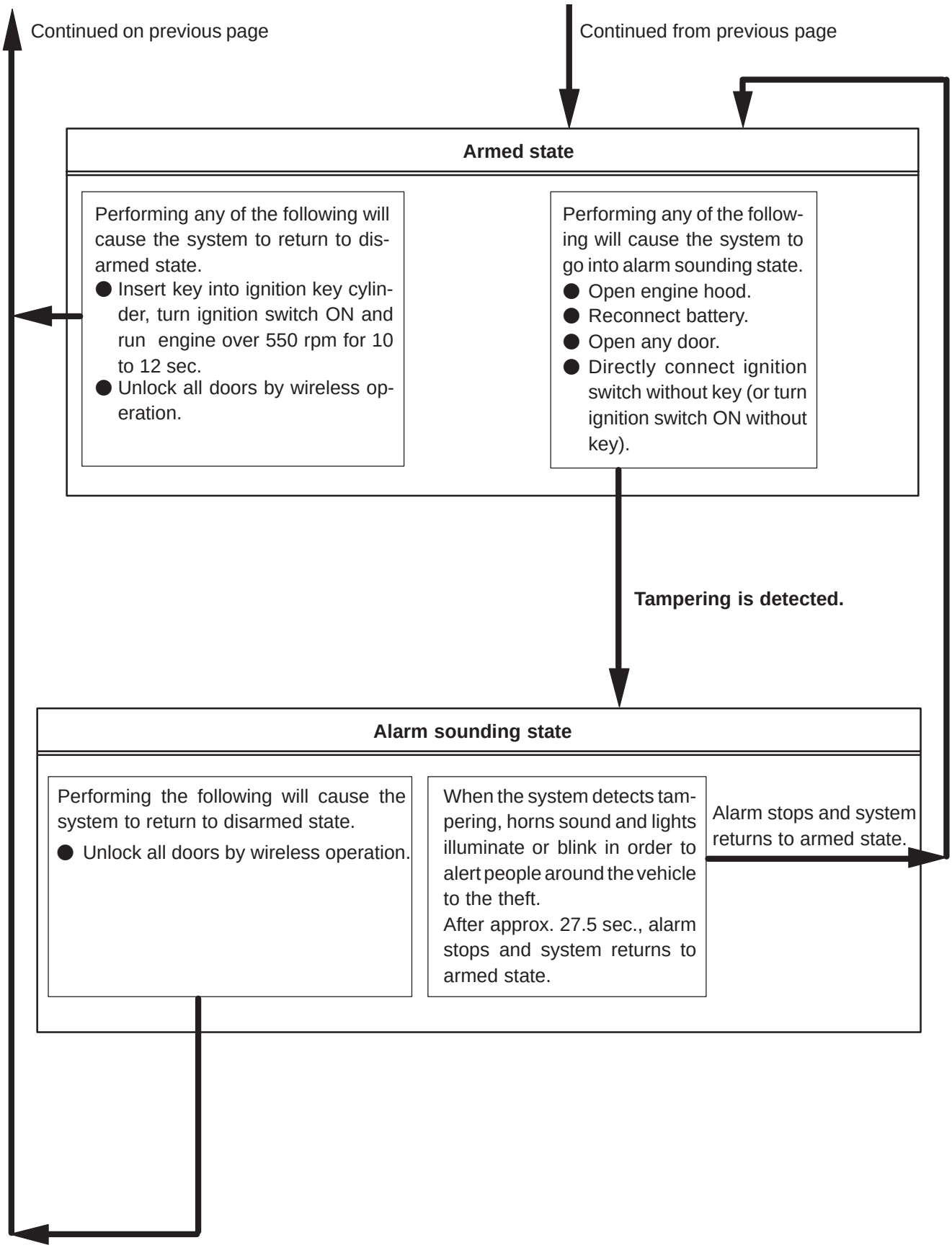
Continued on previous page
Continued from previous page
Armed state
Performing any of the following will cause the system to return to disarmed state.
● Insert key into ignition key cylinder, turn ignition switch ON and run engine over 550 rpm for 10 to 12 sec.
● Unlock all doors by wireless operation.
Performing any of the following will cause the system to go into alarm sounding state.
● Open engine hood.
● Reconnect battery.
● Open any door.
● Directly connect ignition switch without key (or turn ignition switch ON without key).
Tampering is detected.
Alarm sounding state
Performing the following will cause the system to return to disarmed state.
● Unlock all doors by wireless operation.
When the system detects tampering, horns sound and lights illuminate or blink in order to alert people around the vehicle to the theft.
After approx. 27.5 sec., alarm stops and system returns to armed state.
Alarm stops and system returns to armed state.
Alarm sounding state is canceled.

3. FORCED DOOR LOCK CONTROL

(a) The forced door lock control prevents the vehicle from being tampered with. Immediately after a door is unlocked (alarm starts), the door is forced to lock by a forced door lock signal.

(1) Conditions that force the doors to lock:

When no key is in the ignition key cylinder and 0.4 seconds have elapsed after the previous output of a forced door lock signal, the doors will be forced to lock if any of the following conditions is present.

- The theft deterrent system is in the armed state of active arming mode.
- All the doors are locked. → Any door is unlocked.
- Any door is unlocked.

HINT:

Only Europe:

Forced door lock control does not operate if any door is unlocked by key.

4. ALARM MEMORY FUNCTION

(a) If the alarm is set off (tampering is detected) while the theft deterrent system is set, the alarm memory function will record it. Whenever you cancel the theft deterrent system, the alarm memory function causes the taillights to light up for 2 seconds in order to inform you that the alarm has been set off.

(1) Conditions of the alarm memory function that cause the taillights to light up:

When the theft deterrent system has entered into the alarm sounding state (tampering has been detected) even once, the taillights will light up for 2 seconds if any of the following conditions is present.

- Switched to the disarmed state from the armed state.

5. SECURITY INDICATOR OUTPUT

(a) The theft warning ECU outputs a signal to light up the security indicator, according to the state of the theft deterrent system. However, some of the actual lighting conditions of the security indicator are different from the outputs of the theft warning ECU.

Output:

State of Theft Deterrent System	Security Indicator	
	Output Signals from Theft Warning ECU	Actual Lighting Condition
Disarmed state	OFF	OFF (Immobiliser system unset) BLINKING (Immobiliser system set)
Arming preparation state	ON	ON
Armed state	OFF	BLINKING
Alarm sounding state	ON	ON

Blinking cycle:

Time	Security Indicator
0.2 sec.	ON
1.8 sec.	OFF

HINT:

When the immobiliser system is set, the security indicator blinks during the disarmed state and the armed state, due to the output signals from the immobiliser system.

6. INTRUSION (THEFT WARNING) SENSOR

(a) Function of the intrusion sensor:

The intrusion sensor (theft warning redar sensor) senses any moving object by using ultrasonic waves and outputs the signals to communicate an intrusion to the theft warning ECU so that the theft deterrent system can set off the alarm.

When the theft deterrent system is switched to the arming preparation state, the intrusion sensor is supplied with S+B by the theft warning ECU. This causes the theft deterrent system to set off the alarm when the signal is input from the intrusion sensor in a situation such as the window glass being broken.

(b) Press the intrusion sensor OFF switch.

HINT:

The theft deterrent system can be set (switched to the arming preparation state) with the intrusion sensor OFF when an animal is left inside the vehicle.

(1) Make sure that the theft deterrent system is in the disarmed state.

(2) Press the intrusion sensor OFF switch once.

HINT:

The intrusion sensor and the OFF switch are provided on the roof console box in the vehicle front interior.

NOTICE:

The intrusion sensor returns to ON (initial state) when the doors are unlocked by the wireless operation.

7. THEFT WARNING (SELF–POWER) SIREN

(a) The theft warning siren has an internal battery. If any of the vehicle's battery or communication lines are opened, the theft warning siren detects it by itself and sounds. Although the theft warning siren usually sounds by receiving a signal from the theft warning ECU usually, the theft warning siren can sound using its internal battery in case that the vehicle's battery is opened.

(b) The theft warning ECU sends an arming signal to the theft warning siren while transferring to the armed state, as well as sending a disarming signal to the siren while transferring to the disarmed state. Additionally, the theft warning ECU can sound the theft warning siren by sending an alarm signal in the alarm sounding state.

SLIDING ROOF SYSTEM

LOCATION

7408S–01

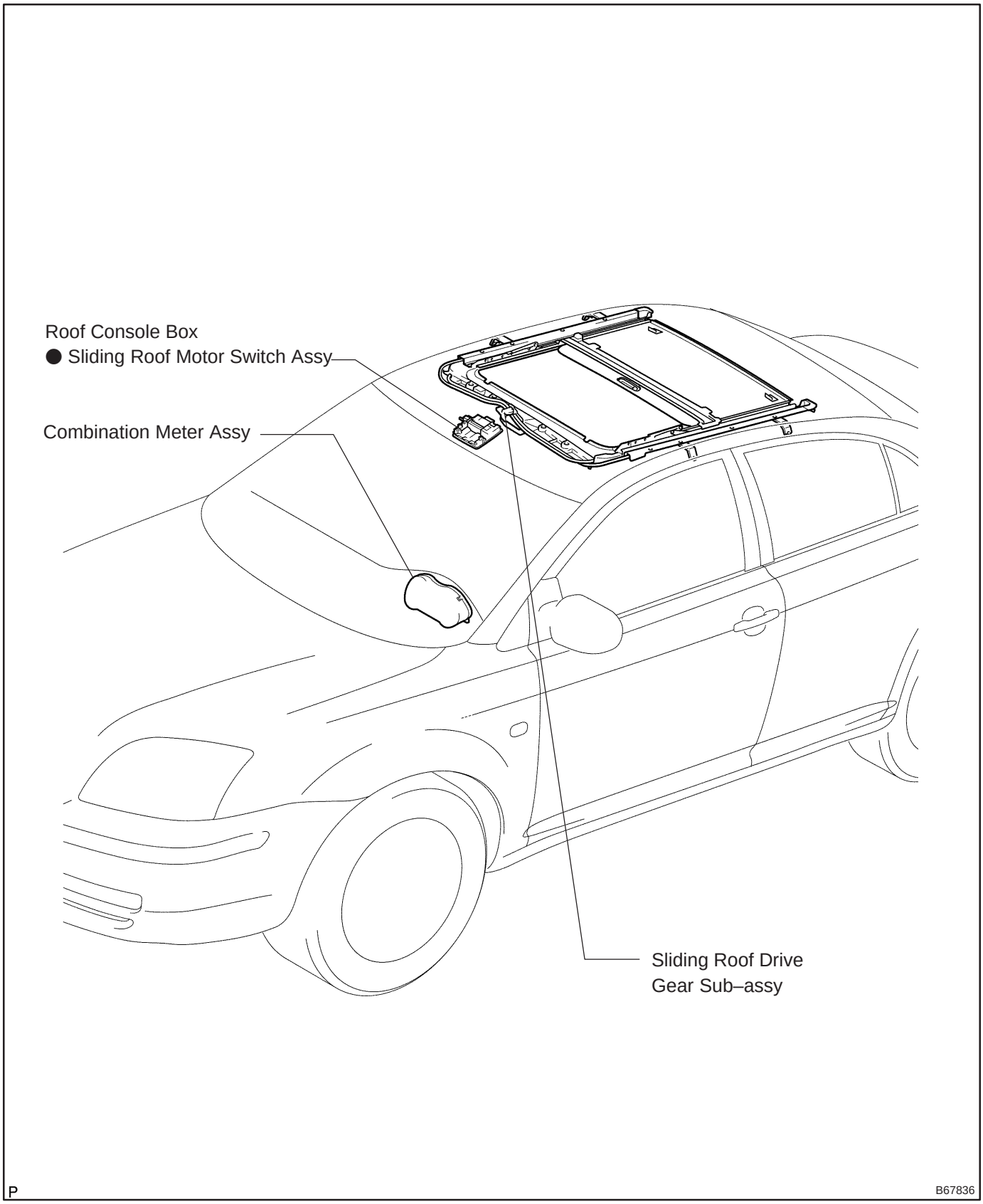

LHD Models

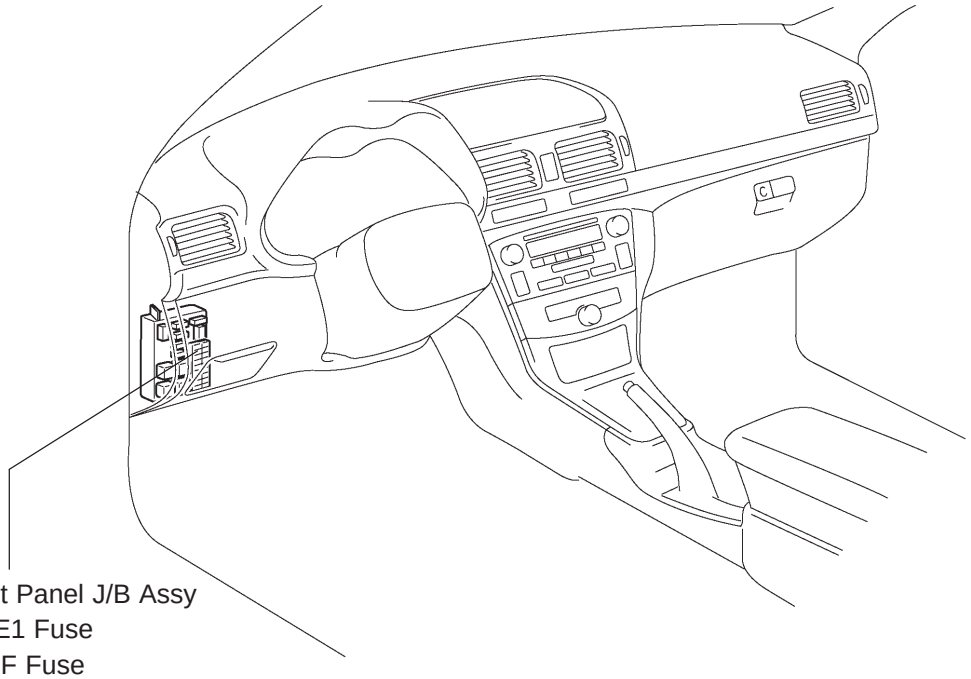

Instrument Panel J/B Assy
- GAUGE1 Fuse
- S/ROOF Fuse
- IG1 Relay
- Integration Relay

RHD Models

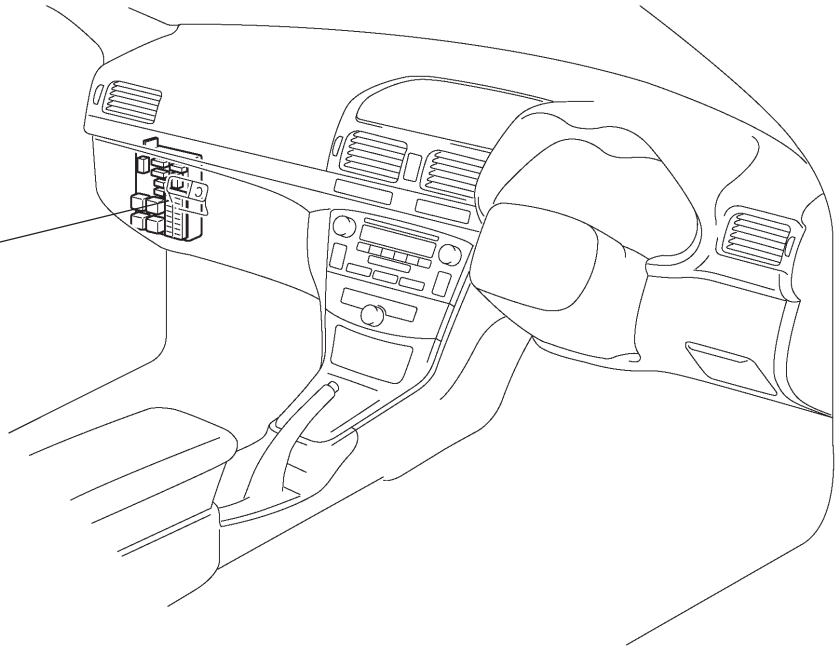

Instrument Panel J/B Assy
- GAUGE1 Fuse
- S/ROOF Fuse
- IG1 Relay
- Integration Relay

Y

B67299

7408T–01

ON–VEHICLE INSPECTION

1. CHECK WINDOW LOCK SWITCH

(a) Check that operation of the power windows excluding the driver side and the sliding roof are disabled when the window lock switch of the power window master switch is pressed.

(b) Check that the power windows and the sliding roof can be operated when the window lock switch is pressed again.

2. CHECK AUTO SLIDE–OPEN/CLOSE FUNCTION

(a) Check that the sliding roof switch can operate the sliding roof as follows when the tilt–UP/ DOWN function is not being used:

Standard:

Condition	Switch Condition	Switch Operation	Roof Glass
• Ignition switch ON • Window lock switch OFF	SLIDE OPEN	Pressed for more than 0.3 sec.	Fully open
	TILT UP		Fully closed

HINT:

The sliding roof stops partway when the sliding roof switch is pushed on either side during AUTO operation.

3. CHECK AUTO TILT UP/DOWN FUNCTION

(a) Check that the sliding roof switch can operate the sliding roof as follows when the slide–OPEN/CLOSE function is not being used:

Standard:

Condition	Switch Condition	Switch Operation	Roof Glass
• Ignition switch ON • Window lock switch OFF	TILT UP	Pressed for more than 0.3 sec.	Fully tilted up
	SLIDE OPEN		Fully closed

HINT:

The sliding roof stops partway when the sliding roof switch is pushed on either side during AUTO operation.

4. CHECK SLIDING ROOF OPERATION FUNCTION AFTER IGNITION IS TURNED OFF

(a) When both of the following conditions are fulfilled, check that the power windows and the sliding roof can be operated even after the ignition switch is turned OFF:

- Within 43 seconds after the ignition switch is turned OFF
- When the driver side door is closed

5. CHECK JAM PROTECTION FUNCTION

HINT:

The jam protection function prevents any part of your body from getting caught by accident between the vehicle body and the roof glass during sliding roof operation.

Operative condition:

- AUTO CLOSE
- AUTO CLOSE during sliding roof operation after the ignition switch is turned OFF
- AUTO TILT–DOWN
- AUTO TILT–DOWN during sliding roof operation after the ignition switch is turned OFF

CAUTION:

- **Do not check this function using a part of your body such as your hand. Also, pay thorough attention that nothing gets caught by accident during this process.**
- **If this function is checked by inserting a thin object (less than 5 mm (0.20 in.)) between the roof glass and vehicle body, it may not operate.**

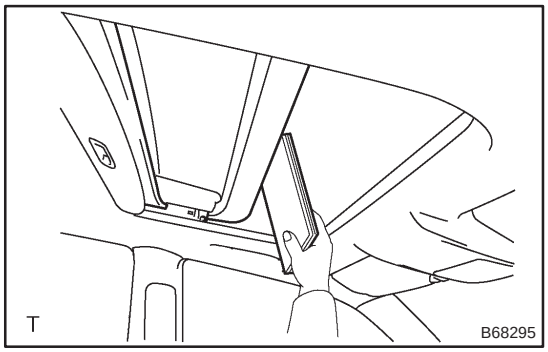

(a) When the slide–OPEN/CLOSE function is operating:
Check that the sliding roof opens approximately 200 mm (7.87 in.) right when something gets caught between the vehicle body and the roof glass during sliding roof operation.

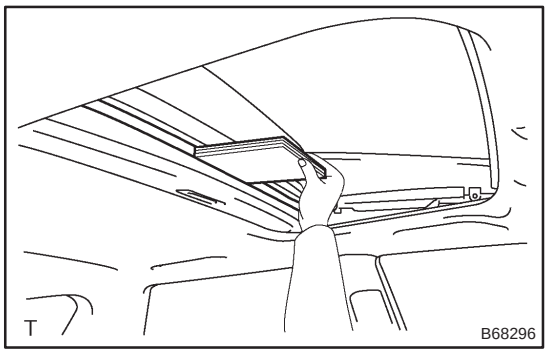

(b) When the tilt–UP/DOWN function is operating:
Check that the sliding roof fully tilts up when something gets caught between the vehicle body and the roof glass during sliding roof operation.

6. CHECK FAIL–SAFE FUNCTION

(a) If the sliding roof does not close because the jam protection function operates improperly, press the sliding roof switch on the TILT UP side and until the sliding roof fully closes. Then you can close the sliding roof using manual operation.

7408U–01

PROBLEM SYMPTOMS TABLE

Symptom	Suspected Area	See Page
AUTO function does not operate	1. Sliding roof motor assy	74–3
Sliding roof system does not operate	1. S/ROOF fuse	–
	2. GAUGE1 fuse	–
	3. IG1 relay	–
	4. Integration relay	–
	5. Sliding roof housing assy	74–15
	6. Sliding roof motor switch assy	74–6
	7. Sliding roof motor assy	74–3
	8. Wire harness	74–3
Sliding roof system stops operation halfway	1. Sliding roof motor assy	74–3
	2. Wire harness	74–3
	3. Sliding roof housing assy	74–15

7408V–01

INSPECTION

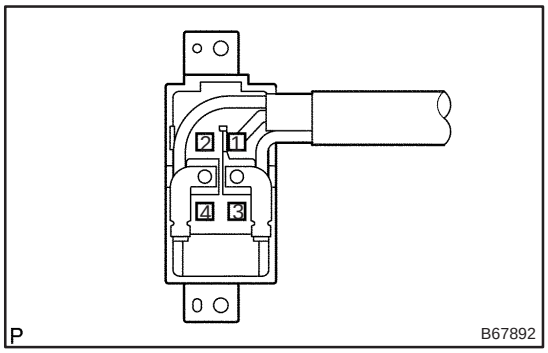

1. INSPECT SLIDING ROOF MOTOR SWITCH ASSY

(a) Remove the sliding roof motor switch (See pages 76–36, 76–45 and 76–54).

(b) Check the resistance between the terminals when operating the switch.

Standard:

Terminals No.	Switch Operation	Specified Condition
1 – 2	TILT UP is pressed	Below 1 Ω
2 – 3	SLIDE OPEN is pressed	Below 1 Ω
1, 3 – 2	OFF	10 kΩ or higher

If the result is not as specified, replace the switch assy.

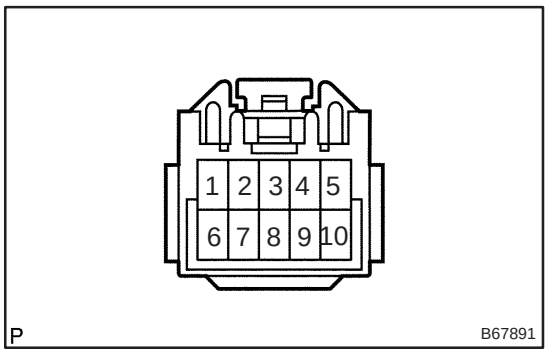

2. INSPECT SLIDING ROOF MOTOR ASSY

(a) Disconnect the sliding roof motor connector (See pages 76–36, 76–45 and 76–54).

(b) Check the resistance and voltage between the terminals of the wire harness side connector.

Standard:

Terminals No.	Condition	Specified Condition
5 ⇔ Body ground	Constant	Below 1 Ω
3 – 5	Ignition switch ON	10 to 14 V
10 – 5	Constant	10 to 14 V
6 – 5	TILT UP is pressed	Below 1 Ω
1 – 5	SLIDE OPEN is pressed	Below 1 Ω
8 – 5	Ignition switch OFF → ON, Engine idle speed	Pulse generation *

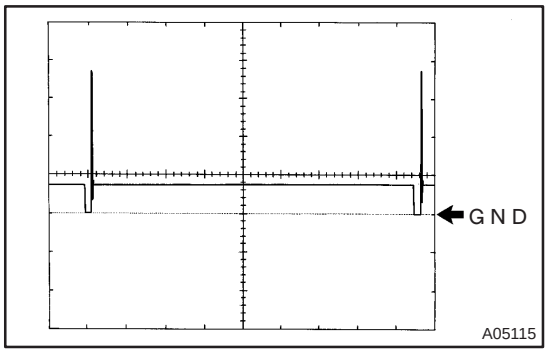

Reference (*): Using an oscilloscope

Item	Contents
Tool Setting	10 V/DIV., 20 ms/DV.
Vehicle Condition	Engine idle speed

If the result is not as specified, there may be a malfunction on the wire harness side.

7408W–01

RESET

1. RESET SLIDING ROOF MOTOR

(a) If the AUTO operation function does not operate, reset the sliding roof motor as follows:

(1) Press the sliding roof switch on the TILT UP side and hold it until the sliding roof motor stops. Then release the switch and leave it untouched for 10 seconds or more.

(2) Press the sliding roof switch on the TILT UP side again for 10 seconds or more and hold it until the sliding roof glass stops at the fully open and up position.

(3) Release the switch, press it again within 5 seconds and hold it until a series of movements indicated below have been completed:
Fully closing → Fully opening → Fully closing

HINT:

When the battery terminal is disconnected or after the jam protection function has operated, the sliding roof motor ECU may not detect the position of the roof glass. If the AUTO operation function is still disabled even after the sliding roof motor is reset, the Hall IC (built in the sliding roof motor) for detecting the roof glass position may be malfunctioning.

SLIDING ROOF

COMPONENTS

7408X–01

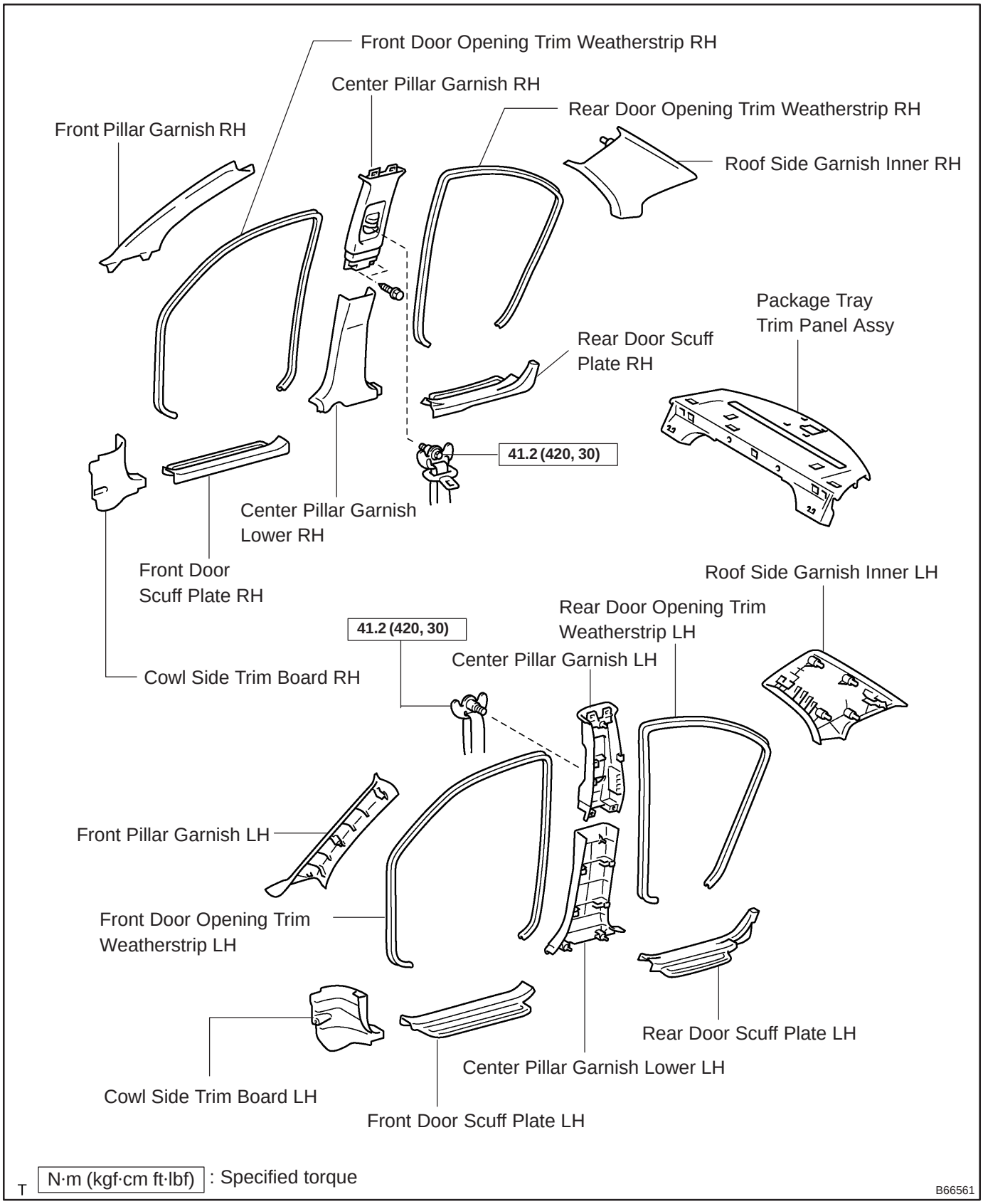

T N·m (kgf·cm ft·lbf) : Specified torque

B66561

Sedan Models

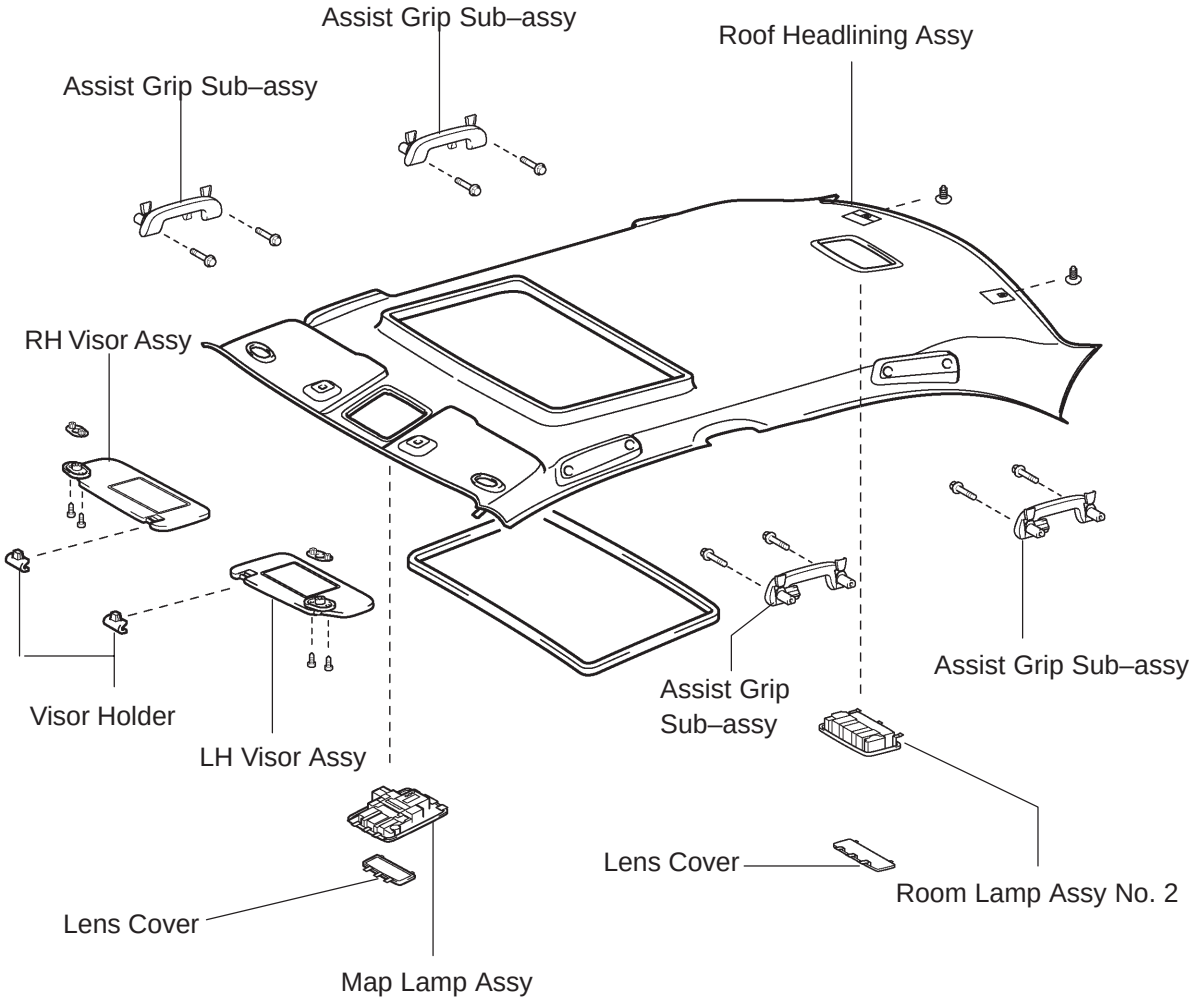

T

B66562

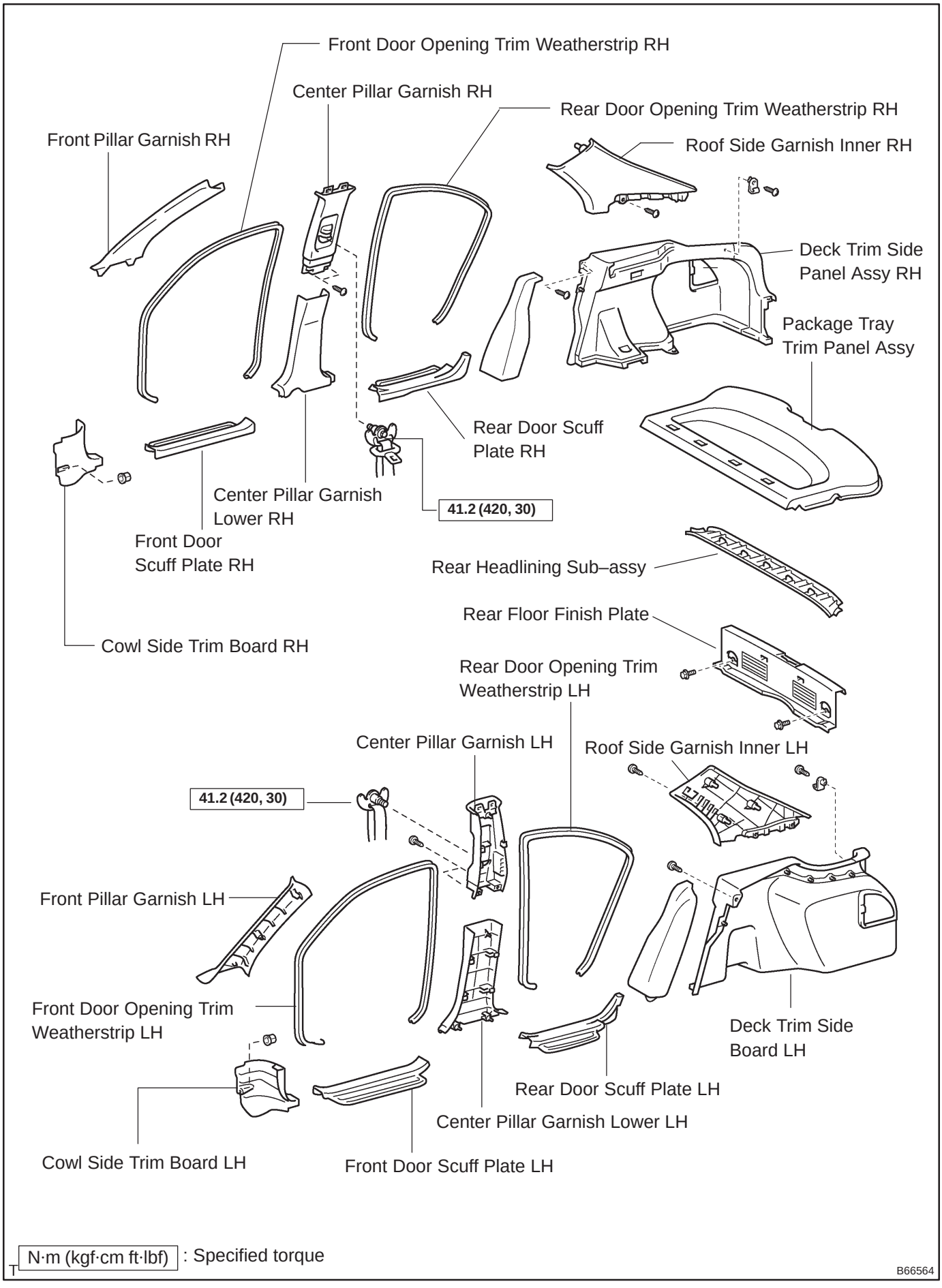
Front Door Opening Trim Weatherstrip RH
Center Pillar Garnish RH
Rear Door Opening Trim Weatherstrip RH
Front Pillar Garnish RH
Roof Side Garnish Inner RH
Deck Trim Side Panel Assy RH
Package Tray Trim Panel Assy
Rear Door Scuff Plate RH
Center Pillar Garnish Lower RH
41.2 (420, 30)
Front Door Scuff Plate RH
Rear Headlining Sub–assy
Rear Floor Finish Plate
Cowl Side Trim Board RH
Rear Door Opening Trim Weatherstrip LH
Center Pillar Garnish LH
Roof Side Garnish Inner LH
41.2 (420, 30)
Front Pillar Garnish LH
Front Door Opening Trim Weatherstrip LH
Deck Trim Side Board LH
Rear Door Scuff Plate LH
Center Pillar Garnish Lower LH
Cowl Side Trim Board LH
Front Door Scuff Plate LH
T N·m (kgf·cm ft·lbf) : Specified torque
B66564

Liftback Models

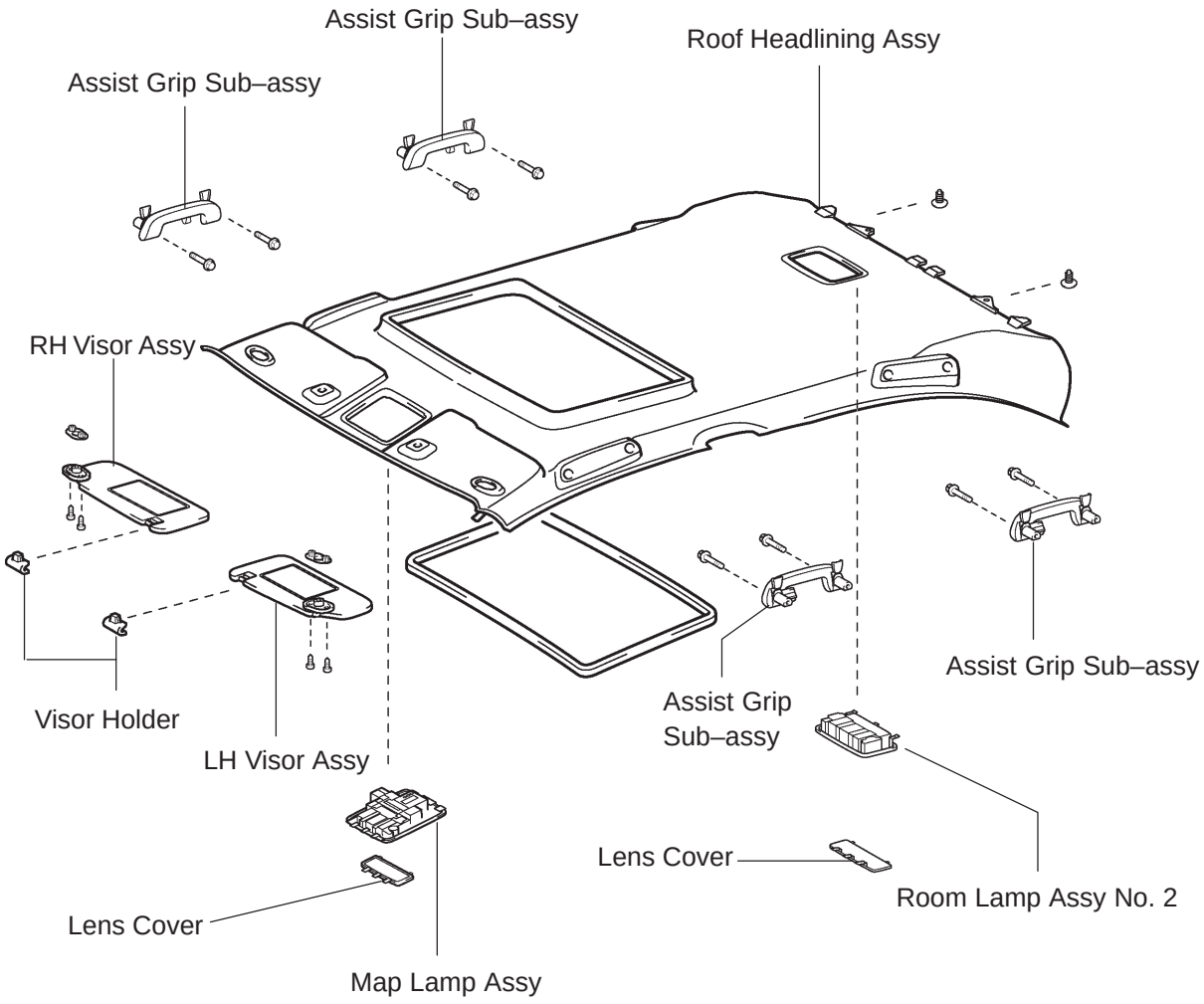

T

B66565

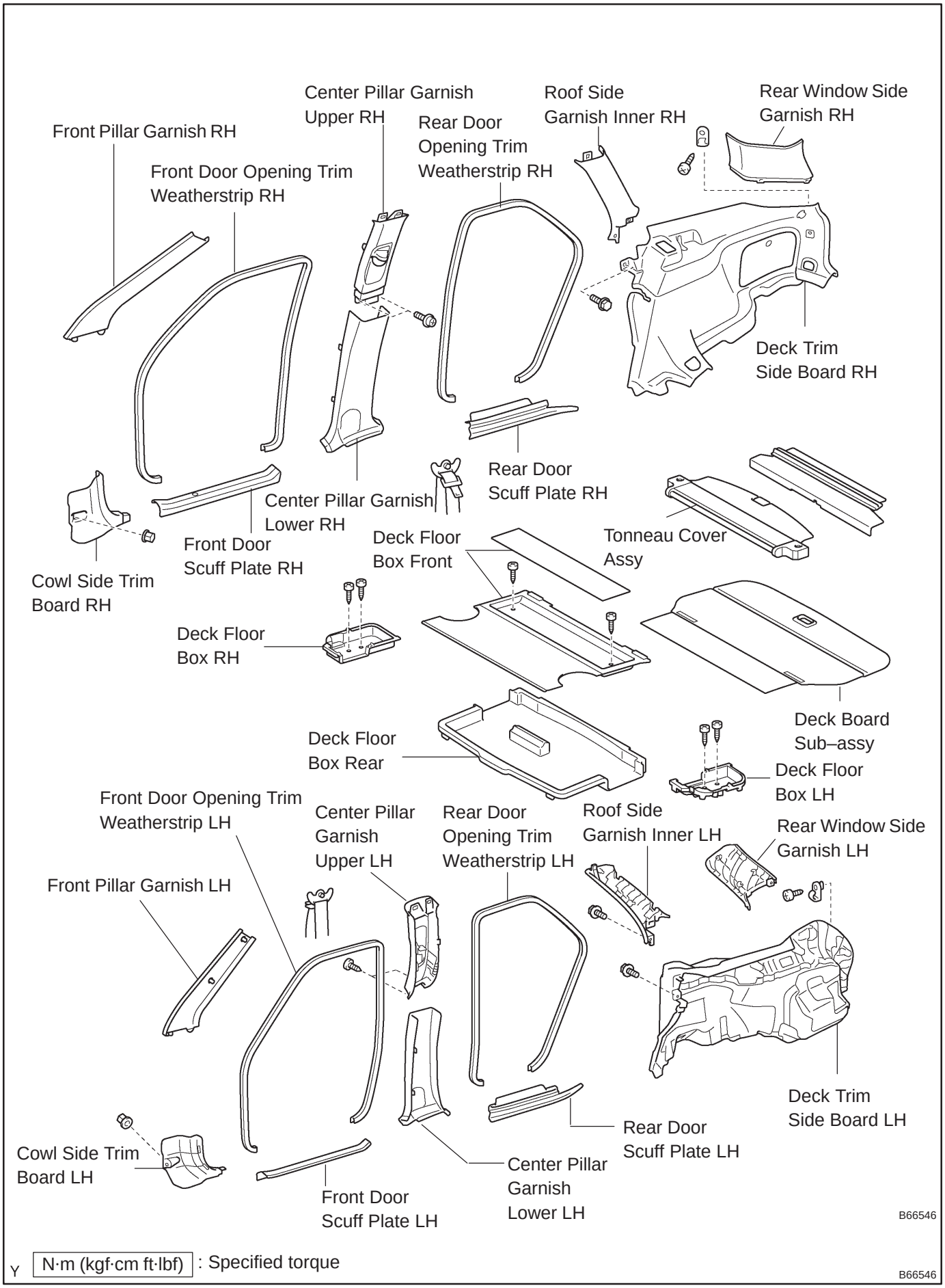

Y N·m (kgf·cm ft·lbf) : Specified torque

B66546

Wagon Models

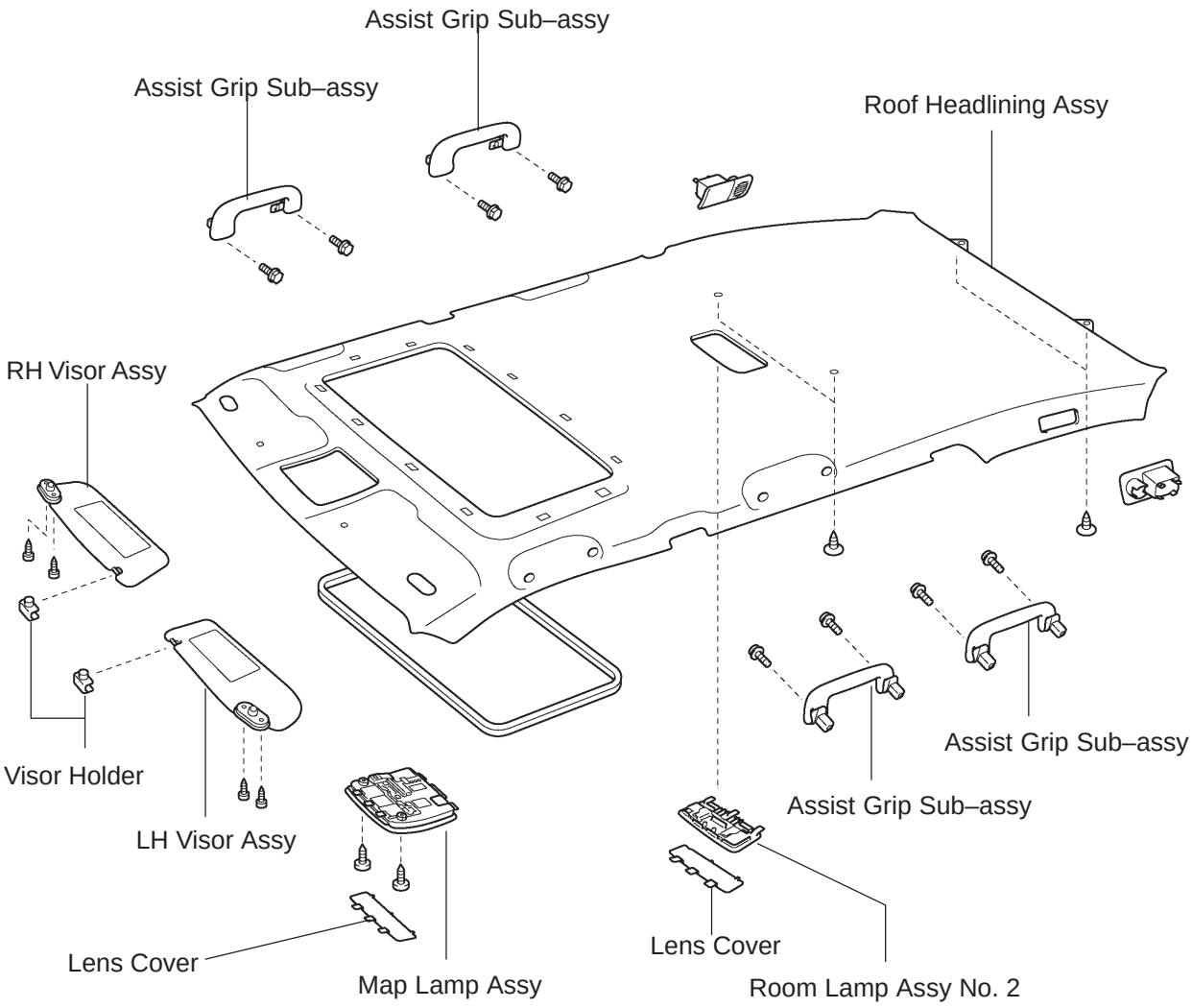

B66547

Y

B66547

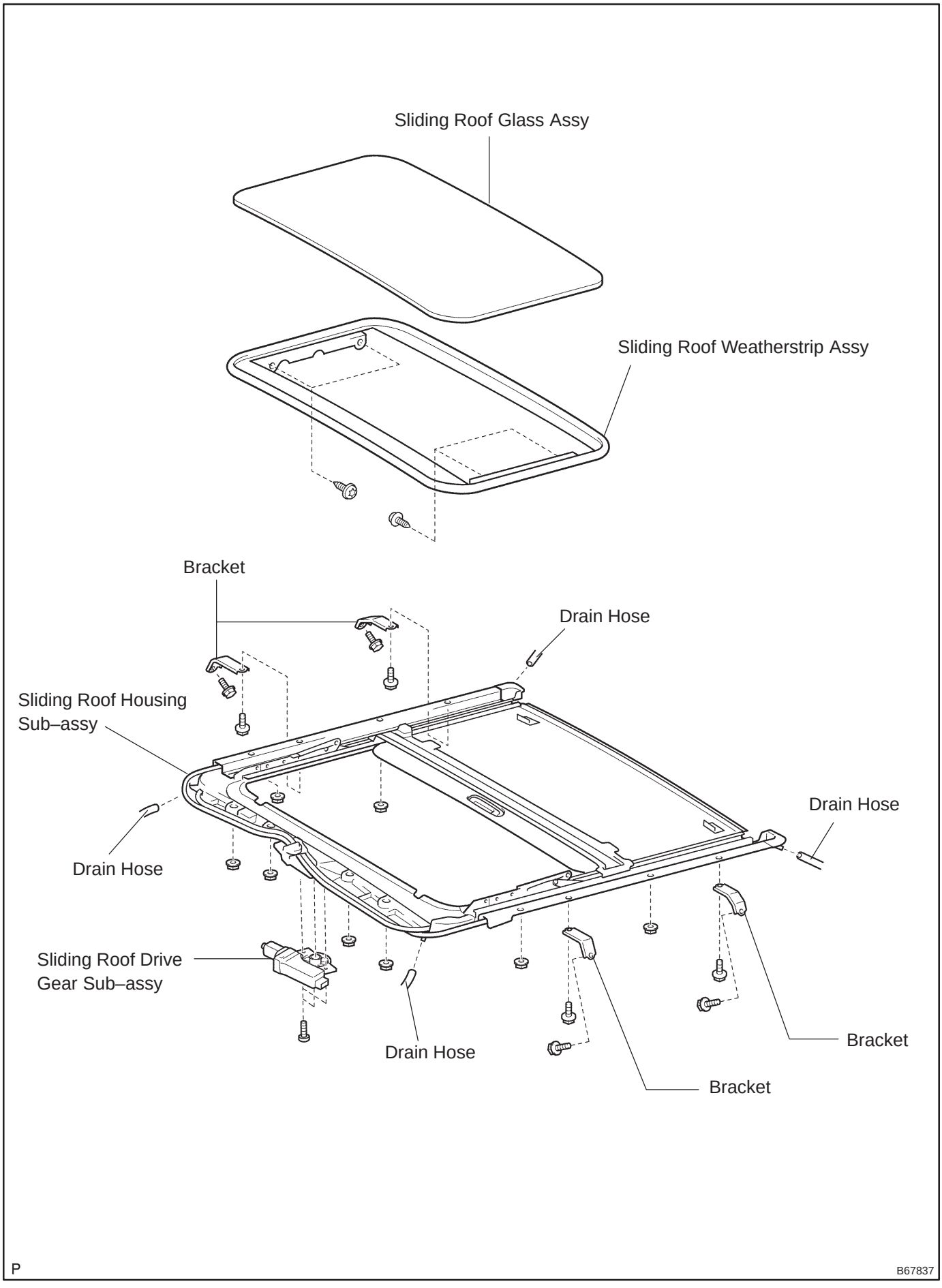
Sliding Roof Glass Assy
Sliding Roof Weatherstrip Assy
Bracket
Drain Hose
Sliding Roof Housing
Sub–assy
Drain Hose
Drain Hose
Sliding Roof Drive
Gear Sub–assy
Drain Hose
Bracket
Bracket
P
B67837

7408Y–01

REPLACEMENT

1. REMOVE ROOF HEADLINING ASSY (See pages 76–36, 76–45 and 76–54)

2. REMOVE SLIDING ROOF GLASS SUB–ASSY

(a) Using a torx driver, remove the 4 screws and glass.

3. REMOVE SLIDING ROOF HOUSING SUB–ASSY

(a) Remove the 8 bolts and 4 brackets.

(b) Remove the 8 nuts and roof housing.

4. REMOVE SLIDING ROOF DRIVE GEAR SUB–ASSY

(a) Remove the 3 bolts and drive gear.

5. INSTALL SLIDING ROOF DRIVE GEAR SUB–ASSY

(a) Install the drive gear with the 3 bolts.

6. INSTALL SLIDING ROOF HOUSING SUB–ASSY

(a) Install the roof housing with the 8 nuts.

(b) Install the 4 brackets with the 8 bolts.

7. ADJUST SLIDING ROOF GLASS SUB–ASSY

(a) Check for a difference in levels between the sliding roof (weatherstrip) and roof panel.

Dimension (Front end and rear end): 0 ± 1.5 mm (0 ± 0.059 in.)

Dimension (Corner of rear side): 0 ± 2.0 mm (0 ± 0.079 in.)

(b) Check for a difference in levels between the sliding roof (glass) and roof panel front end and rear end.

Dimension (Front end and rear end): 6.0 mm (0.236 in.)

(c) Adjust the roof panel.

(1) Loosen the adjusting screw to adjust the sliding roof panel position, and tighten the screw in the position where the sliding roof panel is fixed.

Torque: 4.0 N·m (40 kgf·cm, 35 in.·lbf)

(d) Inspect for leaks.

(1) Adjusting the sliding roof, check that there are no water leaks.

8. INSTALL SLIDING ROOF GLASS SUB–ASSY

(a) Install the glass with the 4 screws.

9. CHECK FOR WATER LEAKS

10. RESET SLIDING ROOF POSITION (See page 74–7)

11. INSTALL ROOF HEADLINING ASSY (See pages 76–36, 76–45 and 76–54)

HOOD

COMPONENTS

750MT–01

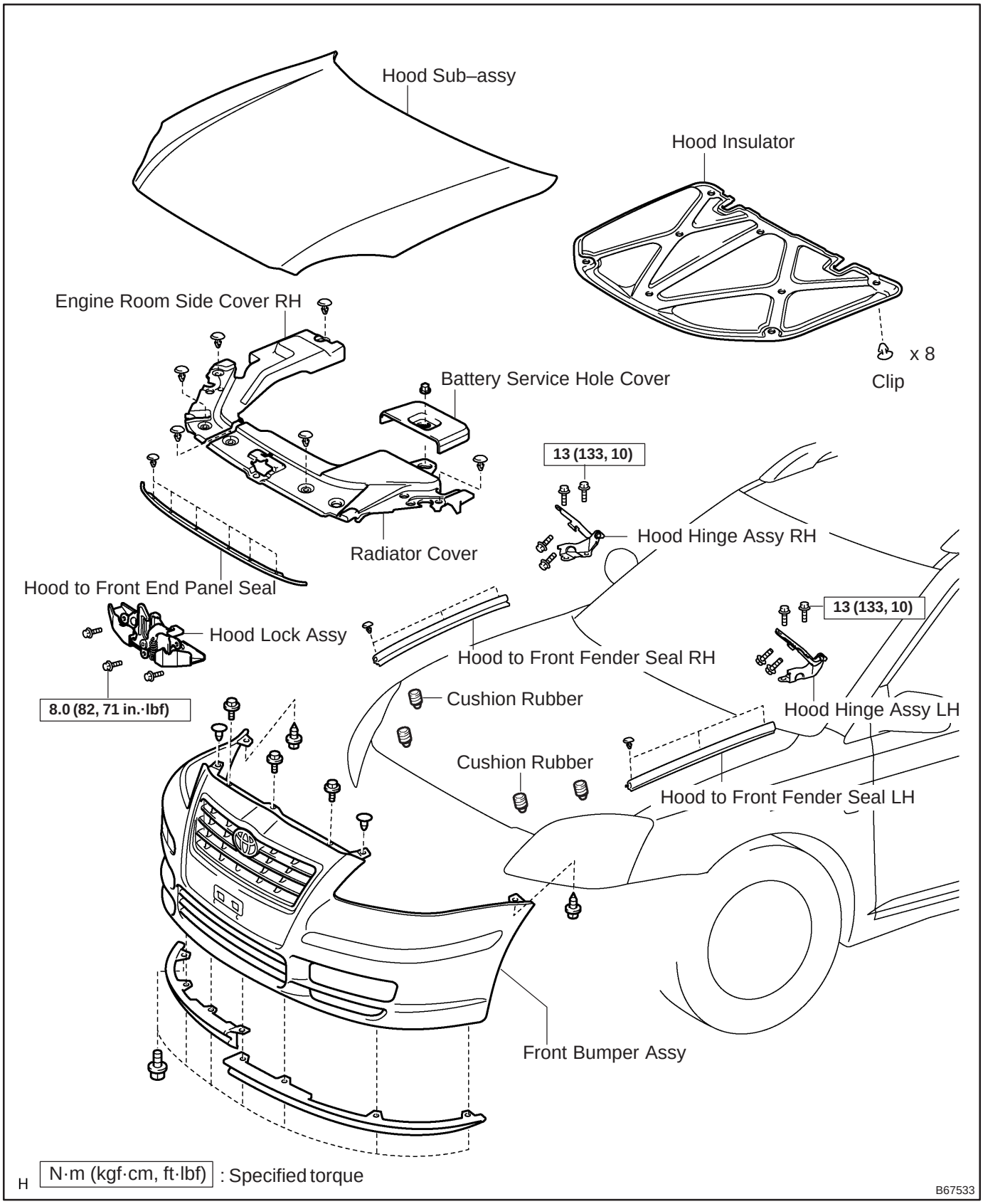

750MU–01

ADJUSTMENT

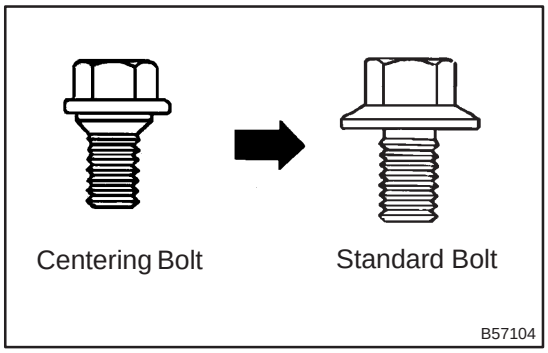

HINT:
Because a centering bolt is used as a hood hinge mounting bolt and hood lock mounting bolt, the hood and hood lock can not be adjusted with them on. Substitute a bolt with a washer for the centering bolt.

1. INSPECT HOOD SUB–ASSY

(a) Check that the clearance is within the standard range.

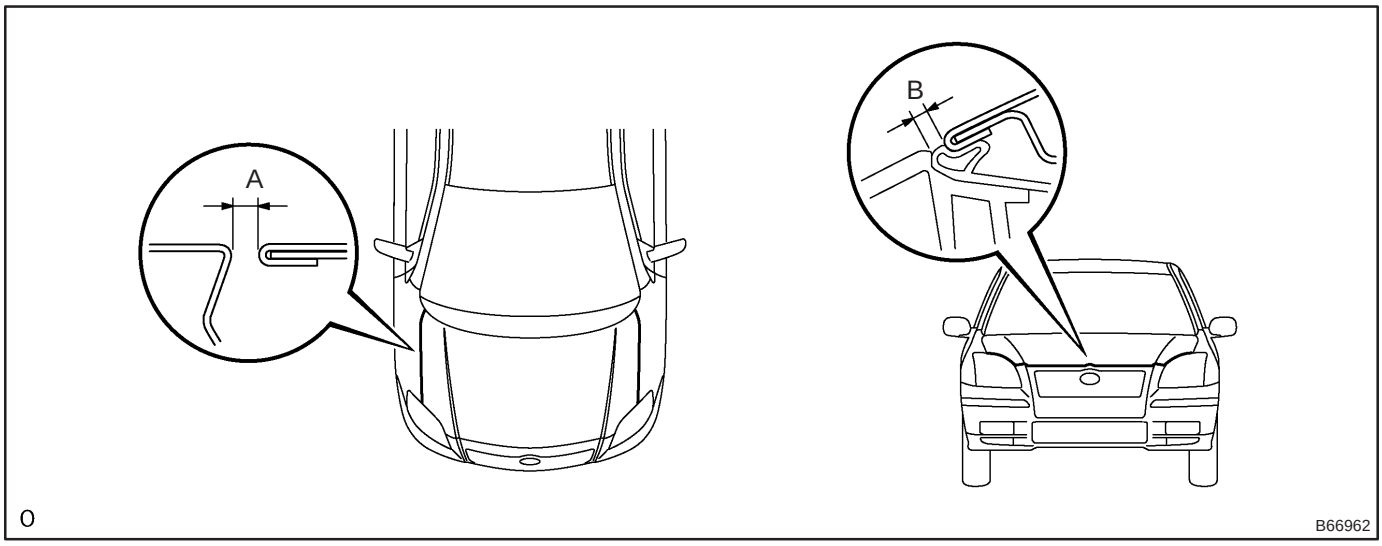

Standard range:

A	3.5 ± 1.5 mm (0.138 ± 0.059 in.)
B	3.5 – 1.5 or +2.5 mm (0.138 – 0.059 or + 0.098 in.)

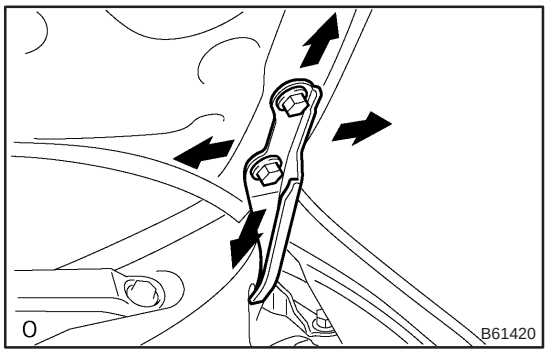

2. ADJUST HOOD SUB–ASSY

(a) Horizontally and vertically adjust the hood.
(1) Loosen the 4 hood hinge bolts on the hood side.

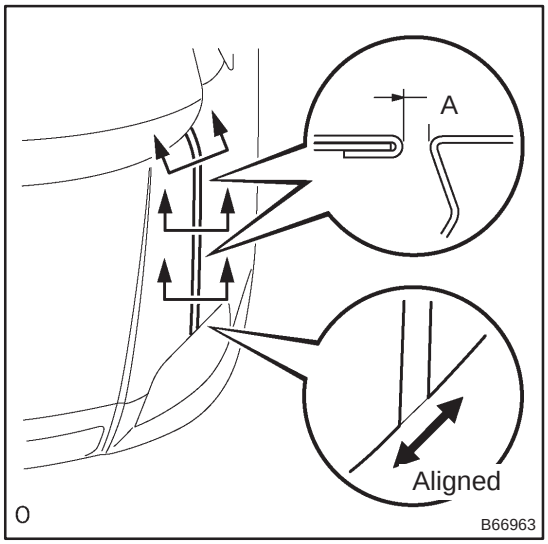

(2) Adjust the clearance by moving the hood, so that it will be in the standard range.

Standard range (A): 3.5 ± 1.5 mm (0.138 ± 0.059 in.)

(3) Tighten the hood side hinge bolts after the adjustment.

Torque: 13 N·m (133 kgf·cm, 10 ft·lbf)

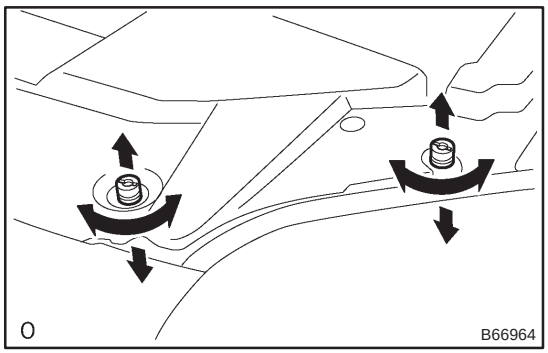

(b) Adjust the height of the hood front end using the cushion rubber.

(1) Adjust the cushion rubber so that the hood and the fender will be aligned.

HINT:

The cushion rubber goes up and down by turning it.

(c) Adjust the hood lock.

(1) Using a clip remover, remove the 6 clips and front end seal.

(2) Remove the retainer and battery service hole cover.

(3) Using a clip remover, remove the 3 clips and radiator cover.

(4) Using a clip remover, remove the 3 clips and engine room side cover RH.

(5) Remove the front bumper (See page 76–3).

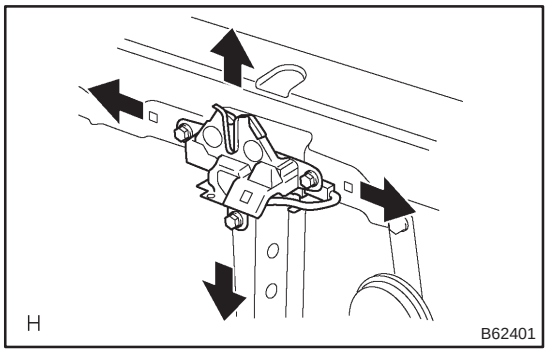

(6) Adjust the hood lock position by moving the striker, so that the striker can enter smoothly.

(7) Tighten the hood lock bolts after the adjustment.

Torque: 8.0 N·m (82 kgf·cm, 71 in.·lbf)

FRONT DOOR

COMPONENTS

750MV–01

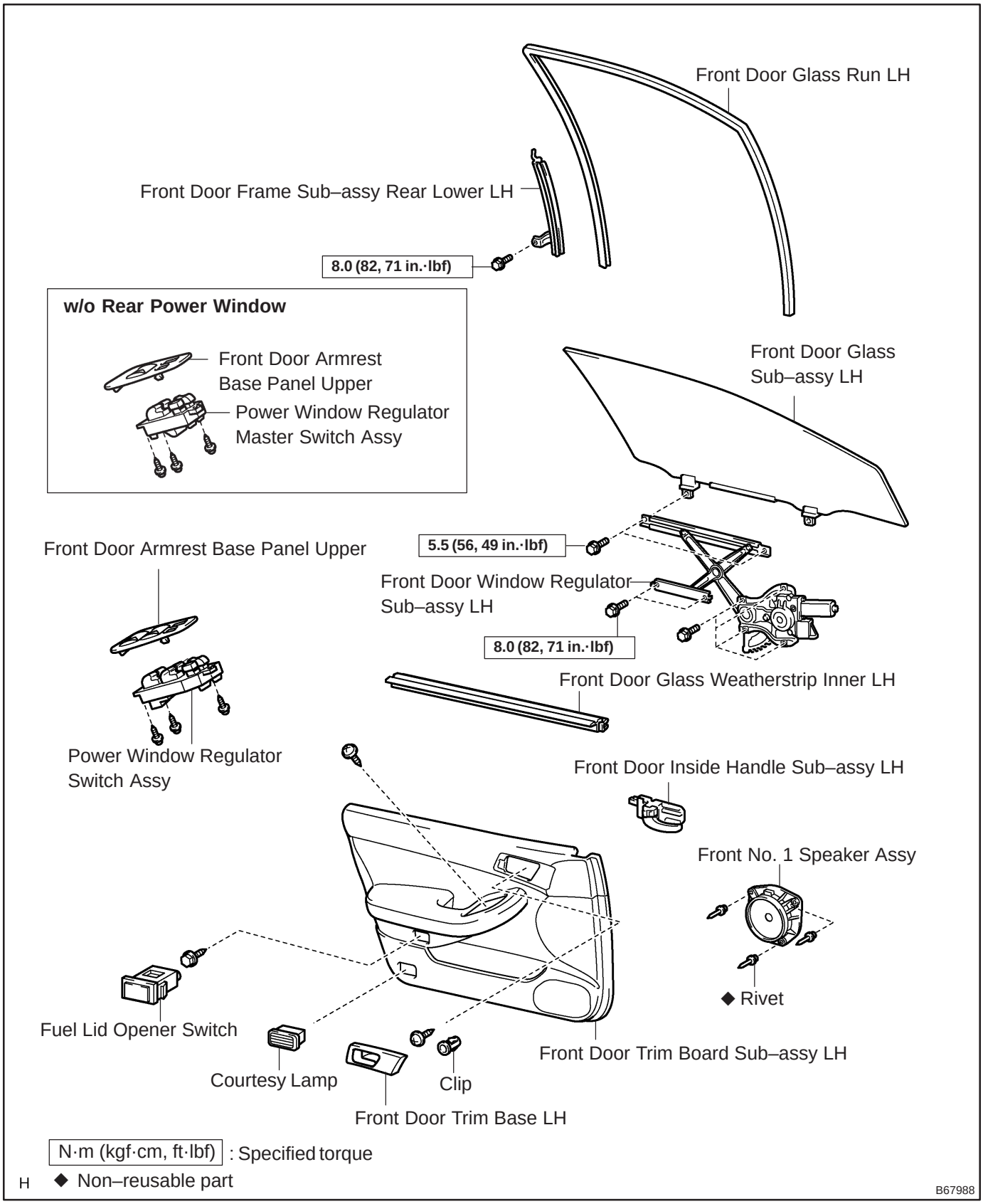

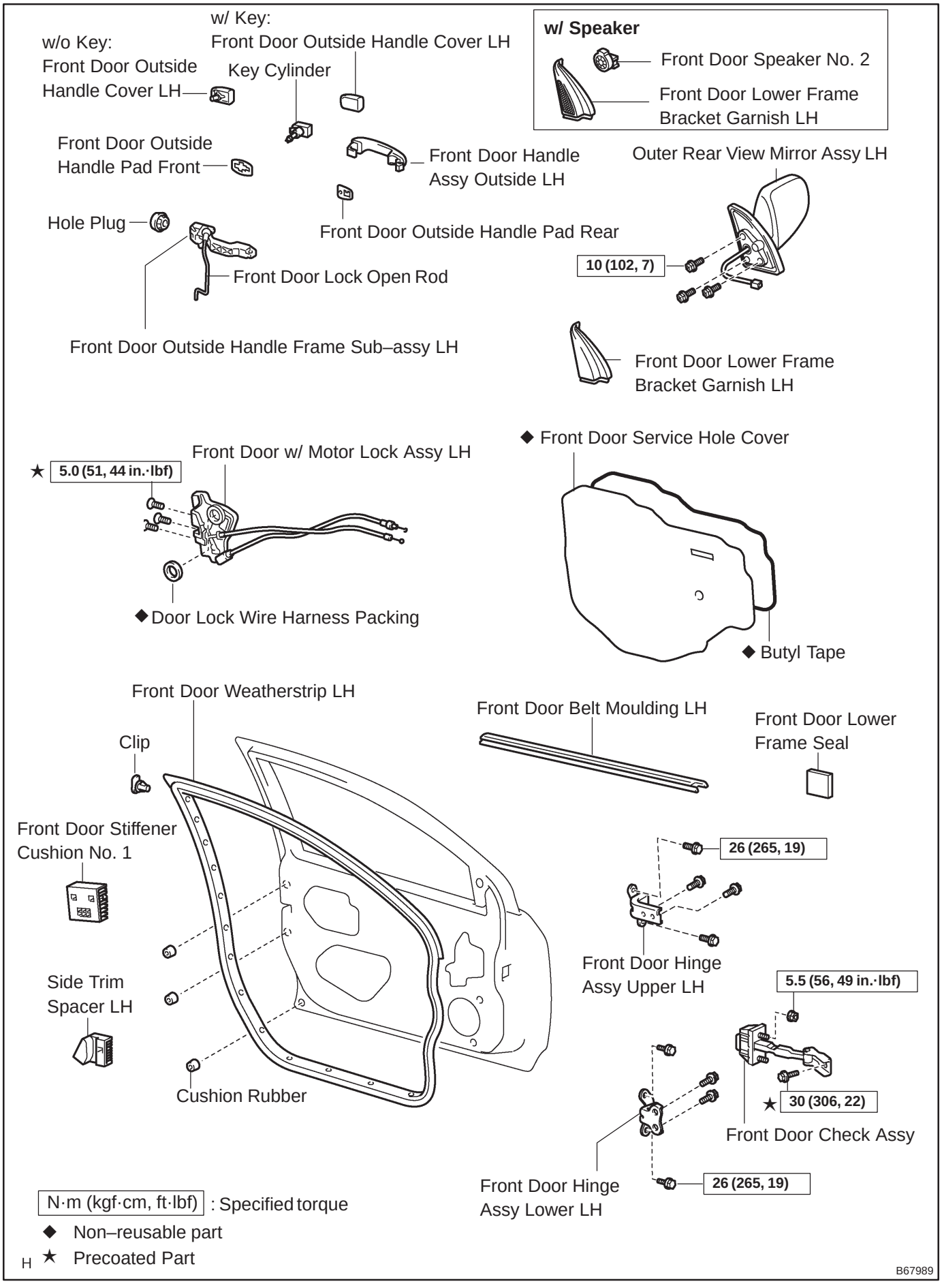
w/o Key:
Front Door Outside Handle Cover LH
w/ Key:
Front Door Outside Handle Cover LH
Key Cylinder
w/ Speaker
Front Door Speaker No. 2
Front Door Lower Frame Bracket Garnish LH
Front Door Outside Handle Pad Front
Front Door Handle Assy Outside LH
Outer Rear View Mirror Assy LH
Hole Plug
Front Door Outside Handle Pad Rear
10 (102, 7)
Front Door Lock Open Rod
Front Door Outside Handle Frame Sub–assy LH
Front Door Lower Frame Bracket Garnish LH
★ 5.0 (51, 44 in.·lbf)
Front Door w/ Motor Lock Assy LH
◆ Front Door Service Hole Cover
◆ Door Lock Wire Harness Packing
◆ Butyl Tape
Front Door Weatherstrip LH
Clip
Front Door Belt Moulding LH
Front Door Lower Frame Seal
Front Door Stiffener Cushion No. 1
26 (265, 19)
Front Door Hinge Assy Upper LH
Side Trim Spacer LH
5.5 (56, 49 in.·lbf)
★ 30 (306, 22)
Front Door Check Assy
Cushion Rubber
Front Door Hinge Assy Lower LH
26 (265, 19)
N·m (kgf·cm, ft·lbf) : Specified torque
◆ Non–reusable part
★ Precoated Part
B67989

750MW–01

ADJUSTMENT

HINT:

- Use the same procedures on the RH side as on the LH side.

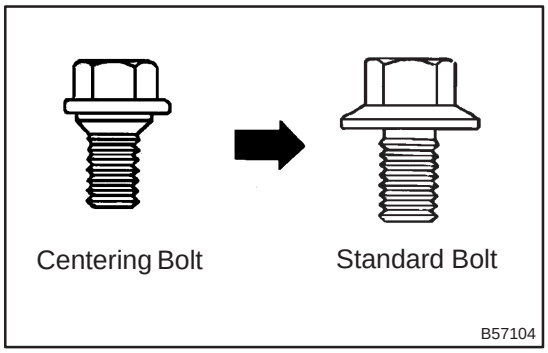

- Because a centering bolt is used as a door hinge mounting bolt on the body side and the door side, the door can not be adjusted with them on. Substitute a bolt with a washer for the centering bolt.

1. INSPECT FRONT DOOR PANEL SUB–ASSY LH

(a) Check that the clearance is within the standard range.

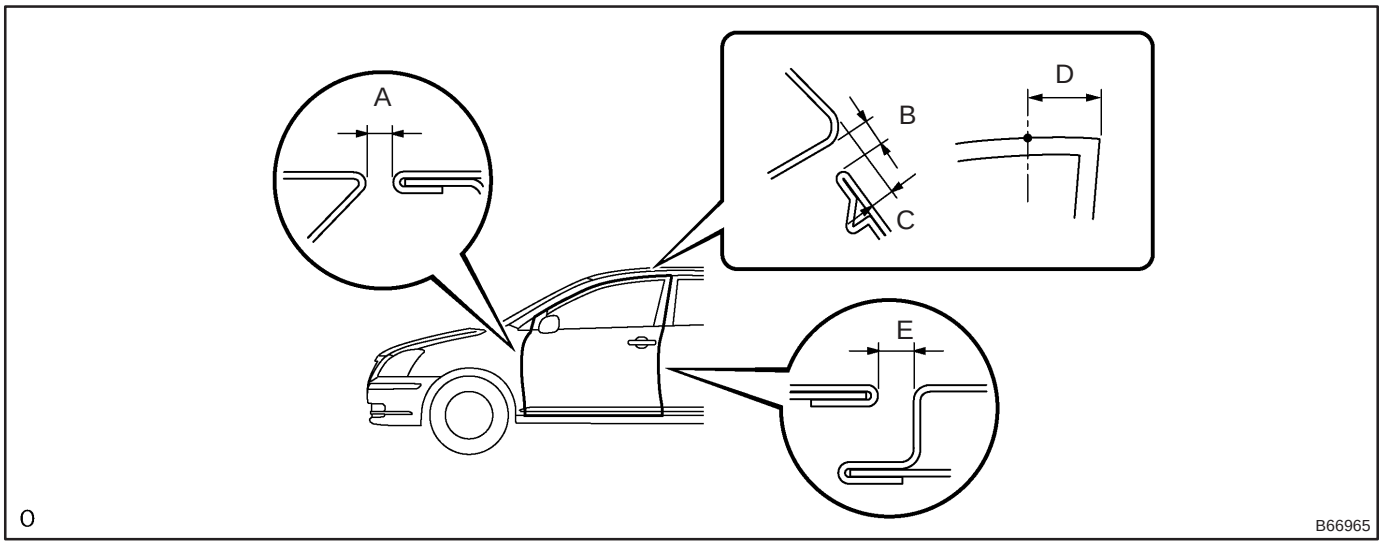

Standard range:

A	4.6 ± 1.5 mm (0.181 ± 0.059 in.)
B	5.5 ± 1.5 mm (0.220 ± 0.059 in.)
C	4.6 ± 1.5 mm (0.181 ± 0.059 in.)
D	160 mm (6.30 in.)
E	4.8 ± 1.5 mm (0.189 ± 0.059 in.)

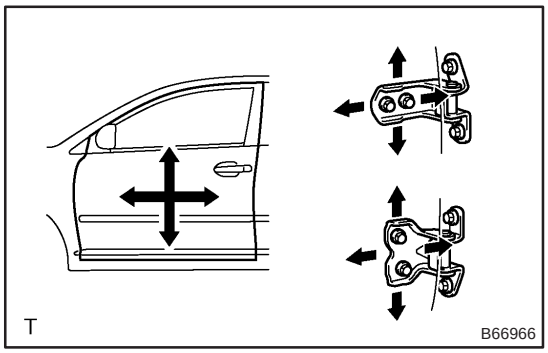

2. ADJUST FRONT DOOR PANEL SUB–ASSY LH

(a) Using SST, adjust the door horizontally and vertically by loosening the body side hinge bolts.
SST 09812–00010, 09812–00020

(b) Tighten the body side hinge bolts after the adjustment.
SST 09812–00010, 09812–00020
Torque: 26 N·m (265 kgf·cm, 19 ft·lbf)

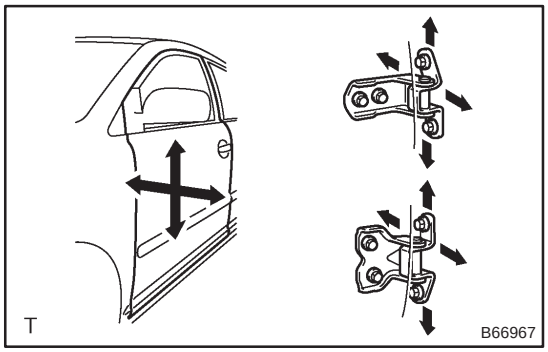

(c) Adjust the door forward/rearward and vertically by loosening the door side hinge bolts.

(d) Tighten the door side hinge bolts after the adjustment.
Torque: 26 N·m (265 kgf·cm, 19 ft·lbf)

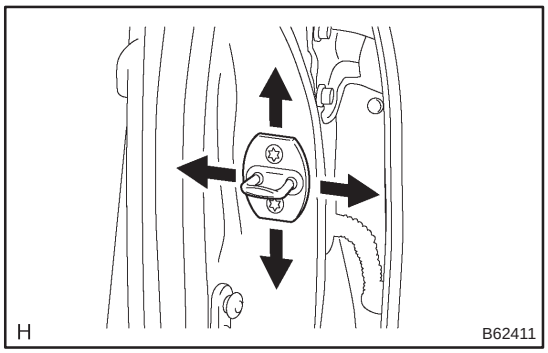

(e) Adjust the striker position by slightly loosening the striker mounting screws and hitting the striker with a plastic–faced hammer.

(f) Tighten the striker mounting screws after the adjustment.
Torque: 23 N·m (235 kgf·cm, 17 ft·lbf)

750MX–01

OVERHAUL

HINT:

- The installation is in the reverse order of the removal. However, when there is a special point concerning the installation, it is indicated.
- Use the same procedures on the RH side as on the LH side.

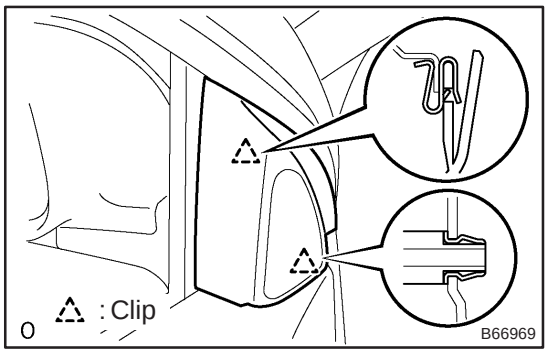

1. REMOVE FRONT DOOR LOWER FRAME BRACKET GARNISH LH

(a) Using a screwdriver, disengage the 2 clip and remove the garnish.

HINT:

Tape the screwdriver tip before use.

(b) w/ Speaker:

Remove the front door speaker No. 2 (See page 67–12).

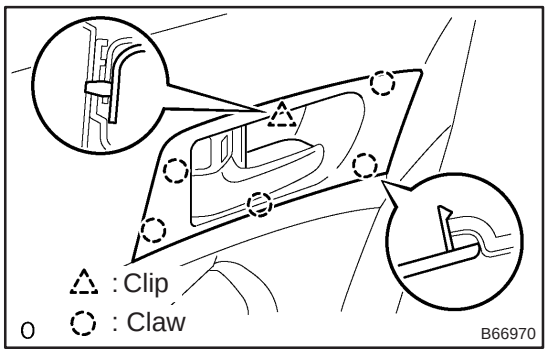

2. REMOVE FRONT DOOR TRIM BASE LH

(a) Using a screwdriver, disengage the 5 claws and clip, and remove the trim base.

HINT:

Tape the screwdriver tip before use.

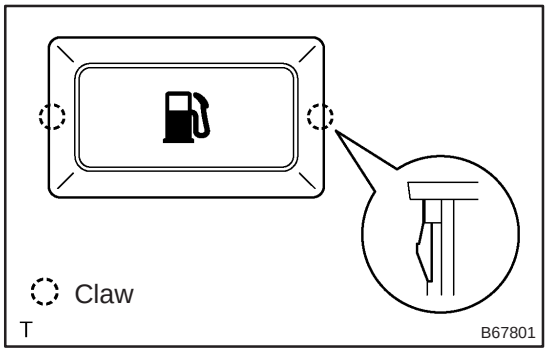

3. REMOVE FUEL LID OPENER SWITCH

(a) Using a screwdriver, disengage the 2 claws and remove the switch.

HINT:

Tape the screwdriver tip before use.

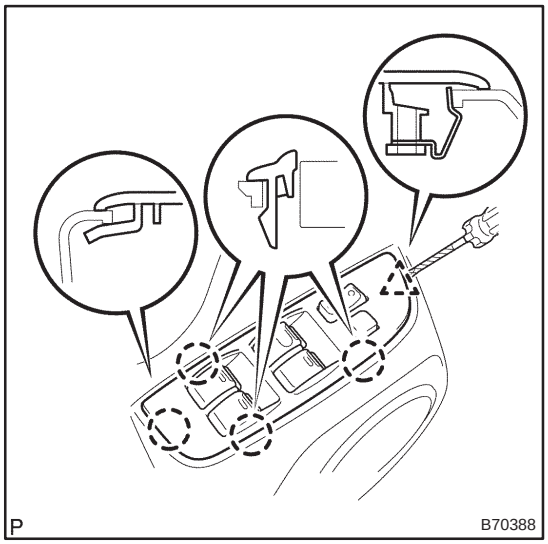

4. REMOVE POWER WINDOW REGULATOR MASTER SWITCH ASSY

(a) Using a screwdriver, disengage the 4 claws and clip, and remove the armrest base panel upper together with the switch.

HINT:

Tape the screwdriver tip before use.

(b) Disconnect the switch connector.

(c) Remove the 3 screws and switch from the armrest base panel upper.

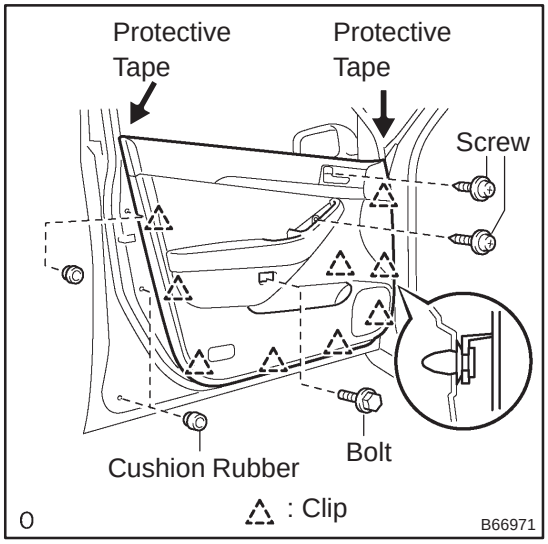

5. REMOVE FRONT DOOR TRIM BOARD SUB–ASSY LH

(a) Disconnect the courtesy lamp connector.

(b) Remove the 3 cushion rubbers.

(c) Remove the 2 screws and bolt as indicated.

(d) Using a clip remover, disengage 9 clips.

(e) Remove the trim board upward.

HINT:

In order to prevent the door panel from being damaged, cover the areas indicated by the arrow marks in the illustration with protective tape.

(f) Disengage the 2 claws and remove the courtesy lamp.

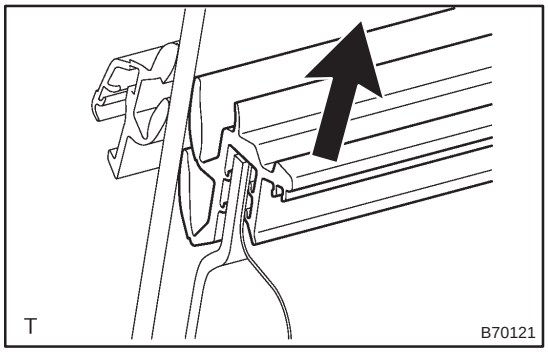

6. REMOVE FRONT DOOR GLASS WEATHERSTRIP INNER LH

(a) Remove the weatherstrip inner upward in the direction indicated by the arrow mark in the illustration.

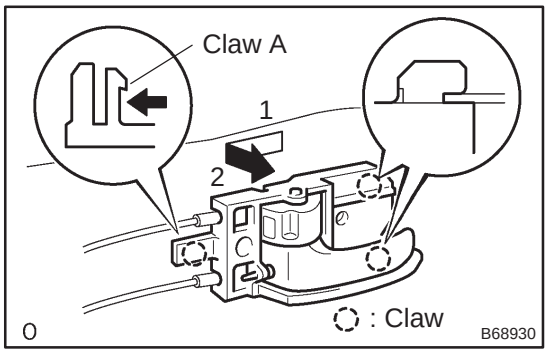

7. REMOVE FRONT DOOR INSIDE HANDLE SUB–ASSY LH

(a) Using a screwdriver, disengage the claw A indicated.

HINT:

Tape the screwdriver tip before use.

(b) Move the inside handle in the direction indicated the by arrow mark in the illustration.

(c) Disconnect the 2 cables from the inside handle.

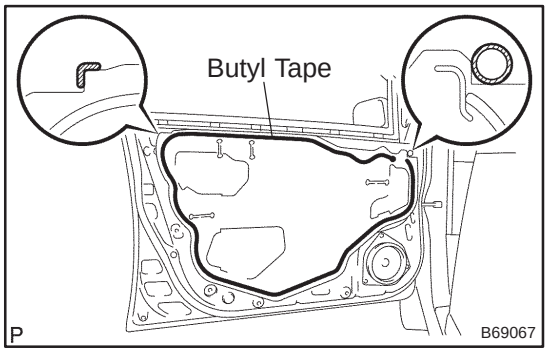

8. REMOVE FRONT DOOR SERVICE HOLE COVER

(a) Remove the service hole cover.

NOTICE:

Remove the tape remaining on the door side.

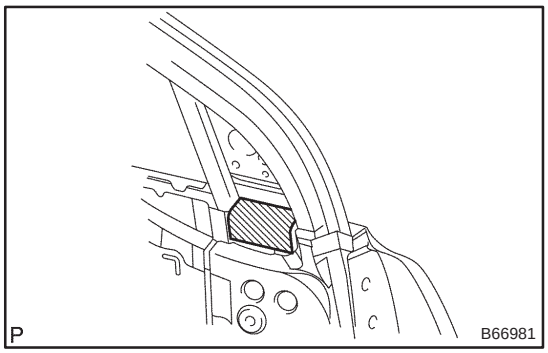

(b) Remove the lower frame seal.

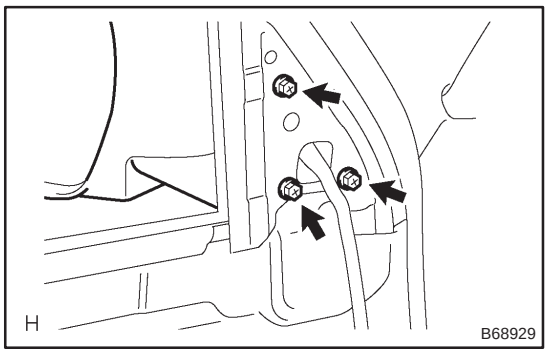

9. REMOVE OUTER REAR VIEW MIRROR ASSY LH

(a) Disconnect the mirror connector.

(b) Remove the 3 screws and mirror.

NOTICE:

When the screws are removed, the mirror may fall and become deformed.

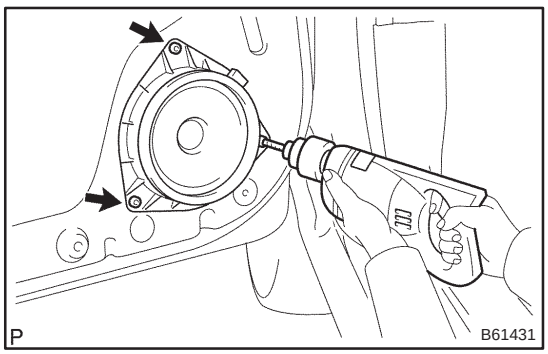

10. REMOVE FRONT NO.1 SPEAKER ASSY (W/ SPEAKER)

(a) Using a drill of less than ø 4 mm (0.16 in.), drill out the 3 rivets heads and remove the speaker.

NOTICE:

- **Prizing the hole with a drill can lead to damage to the rivet hole or breaking the drill.**
- **Be careful with the cut rivet, because it is hot.**

(b) Even if the flange is taken off, continue drilling and push out the remaining fragments using the drill.

(c) Using a vacuum cleaner, remove the drilled rivet and dust from the inside of the door.

11. REMOVE FRONT DOOR BELT MOULDING ASSY LH (See page 76–23)

12. REMOVE FRONT DOOR STIFFENER CUSHION NO.1

(a) Using a screwdriver, disengage the 2 claws and remove the cushion.

13. REMOVE FRONT DOOR SPACER LH

(a) Using a screwdriver, disengage the 2 claws and remove the spacer.

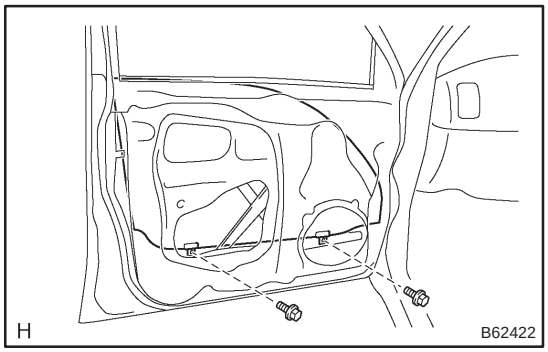

14. REMOVE FRONT DOOR GLASS SUB–ASSY LH

HINT:

Insert a shop rag inside the door panel to prevent the glass from being scratched.

(a) Move the door glass until the bolts appear in the service holes.

(b) Remove the 2 bolts holding the door glass to the window regulator.

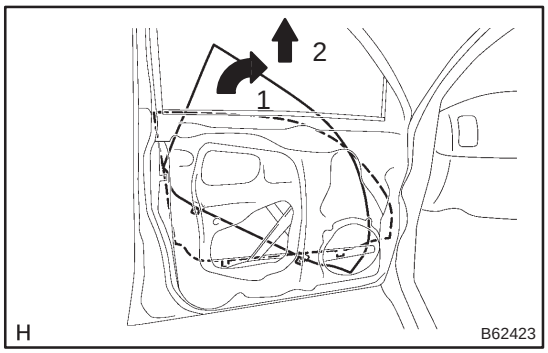

(c) Remove the door glass in the direction indicated by the arrows in the illustration.

NOTICE:

- **Do not damage the glass.**
- **When the bolts are removed, the glass may fall and become deformed.**

(d) Remove the glass run.

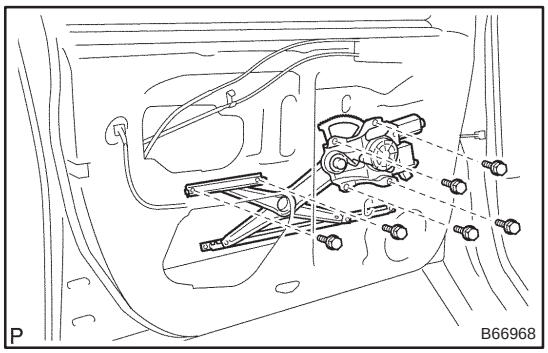

15. REMOVE FRONT DOOR WINDOW REGULATOR SUB–ASSY LH

(a) Disconnect the window regulator connector.

(b) Remove the 6 bolts and window regulator.

NOTICE:

When the bolts are removed, the window regulator may fall and become deformed.

HINT:

Remove the window regulator through the service hole.

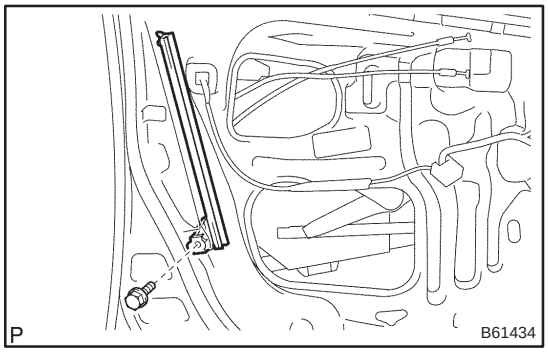

16. REMOVE FRONT DOOR FRAME SUB–ASSY REAR LOWER LH

(a) Remove the bolt and frame.

HINT:

Remove the frame through the service hole.

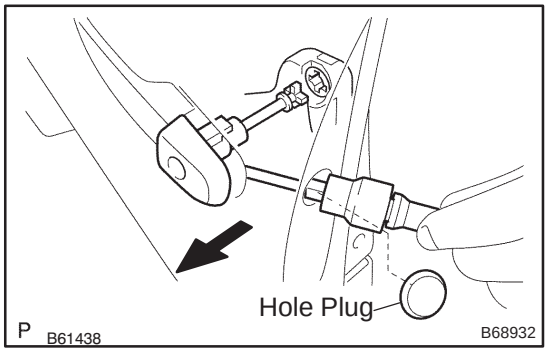

17. REMOVE FRONT DOOR OUTSIDE HANDLE COVER

(a) Remove the hole plug.

(b) Using a torx socket wrench (T30), loosen the screw and remove the cover with the door lock key cylinder installed.

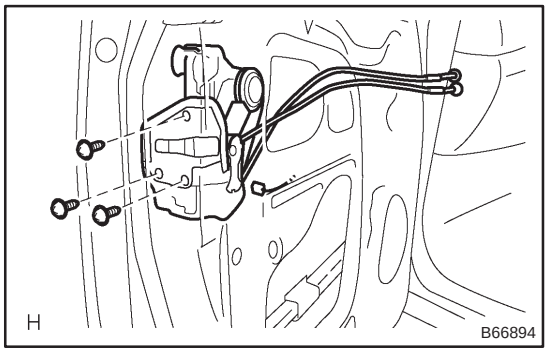

18. REMOVE FRONT DOOR W/MOTOR LOCK ASSY LH

(a) Disconnect the door lock connector.

(b) Using a torx socket wrench (T30), remove the 3 screws and door lock.

NOTICE:

When the bolts are removed, the window regulator may fall and become deformed.

HINT:

Remove the door lock through the service hole.

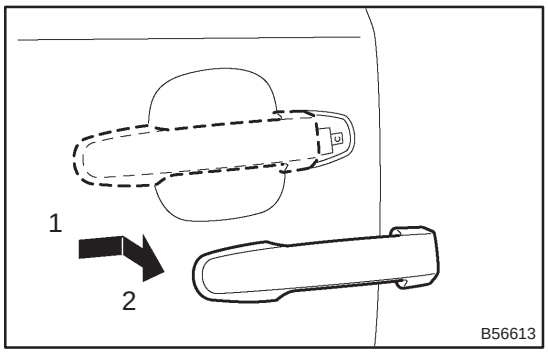

19. REMOVE FRONT DOOR HANDLE ASSY OUTSIDE LH

(a) Remove the handle pushing and pulling it in the direction indicated by the arrow mark in the illustration.

(b) Remove the outside handle pads front and rear.

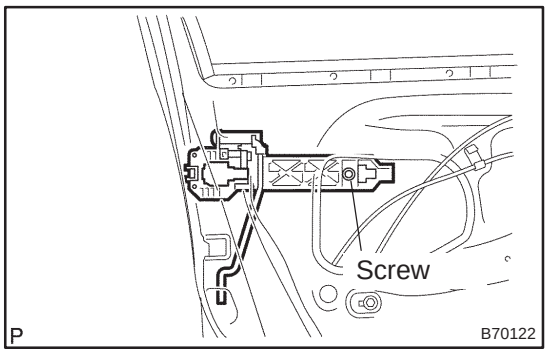

20. REMOVE FRONT DOOR OUTSIDE HANDLE FRAME SUB–ASSY LH

(a) Using a torx socket wrench (T30), loosen the screw of the frame.

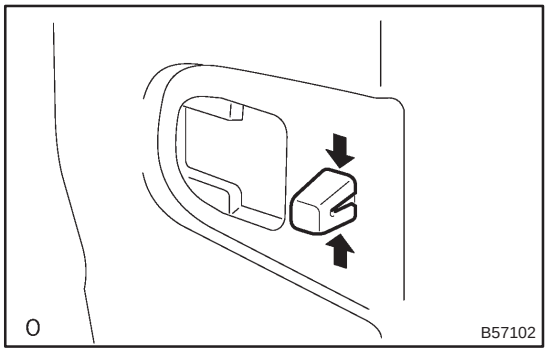

(b) Using pliers, disengage the clips and remove the frame, as shown in the illustration.

NOTICE:

Be sure to remove the outside handle together with the clips, as the clips will be damaged if they remain attached to the door panel.

HINT:

Remove the frame through the service hole.

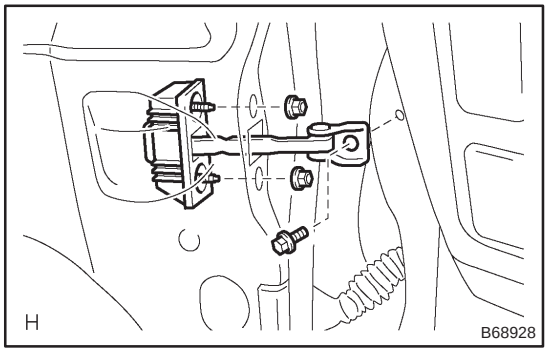

21. REMOVE FRONT DOOR CHECK ASSY LH

(a) Remove the 2 nuts, bolt and check.

HINT:

Remove the check through the service hole.

22. REMOVE FRONT DOOR WEATHERSTRIP LH

(a) Using a clip remover, disengage the clips and remove the weatherstrip.

HINT:

If the clips are damaged, replace them with new clips.

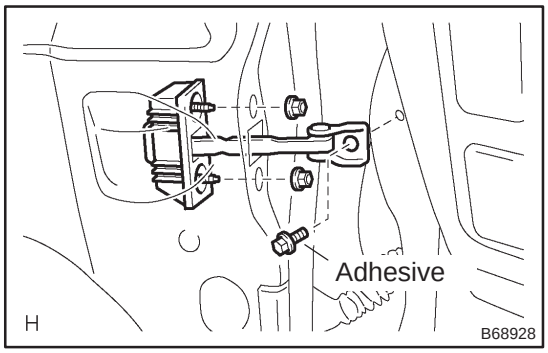

23. INSTALL FRONT DOOR CHECK ASSY LH

(a) Apply MP grease to the sliding areas of the check.

(b) Install the check to the door panel with the 2 nuts.
Torque: 5.5 N·m (56 kgf·cm, 49 in.·lbf)

(c) Apply adhesive to the threads of the bolt.
Adhesive:
Part No. 08833–00070, THREE BOND 1324 or equivalent

(d) Install the door check to the body panel with the bolt.
Torque: 30 N·m (306 kgf·cm, 22 in.·lbf)

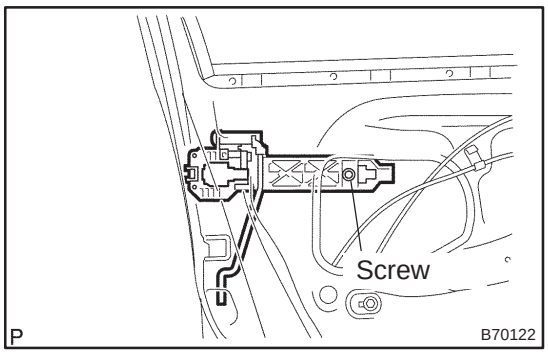

24. INSTALL FRONT DOOR OUTSIDE HANDLE FRAME SUB–ASSY LH

(a) Install the outside handle link.

(b) Apply MP grease to the sliding areas of the frame.

(c) Using a torx socket wrench (T30), install the frame with the screw.
Torque: 4.0 N·m (41 kgf·cm, 35 in.·lbf)

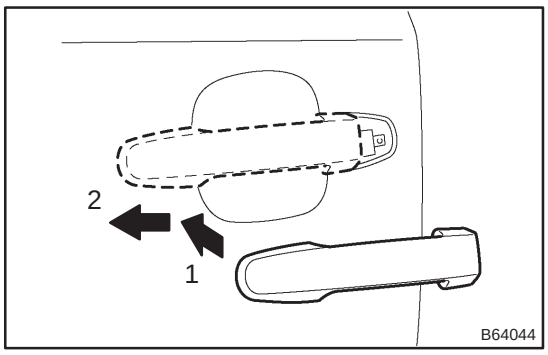

25. INSTALL FRONT DOOR HANDLE ASSY OUTSIDE LH

(a) Install the outside handle pads front and rear.

(b) Install the handle pushing it in the direction of the arrow mark in the illustration.

NOTICE:

If the release plate is not pulled and held when installing the handle, the release plate will interfere with the handle and become damaged.

26. INSTALL FRONT DOOR W/MOTOR LOCK ASSY LH

(a) Apply MP grease to the sliding and rotating areas of the door lock.

(b) Install a new door lock wire harness packing.

NOTICE:

- **When reusing a door lock that has been removed, replace the packing in the connecting part with a new one.**
- **Be careful that no grease or dirt does not sticks to the packing surface in the connecting part.**
- **Reusing removed packing or using damaged packing will allow water to penetrate through to the connecting part resulting in a door lock malfunction.**

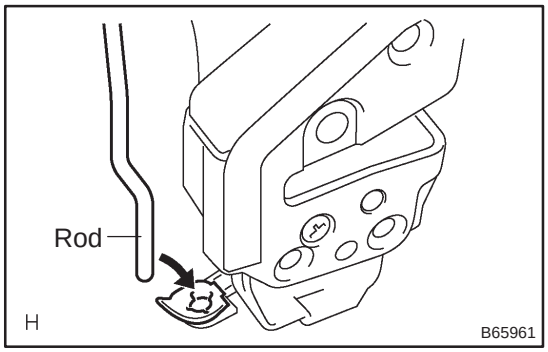

(c) Insert the control rod into the door lock, and then set it to the door panel.

NOTICE:

Make sure that the handle link is securely engaged with the lock.

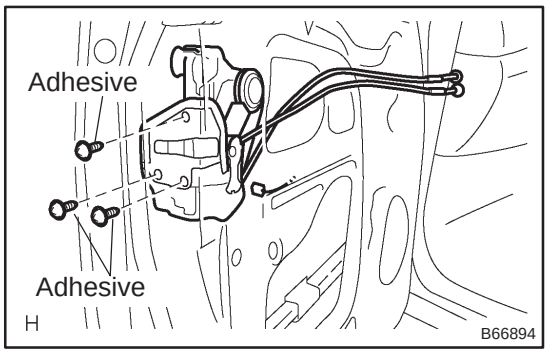

(d) Apply adhesive to the threads of the 3 screws.
Adhesive:
Part No. 08833–00070, THREE BOND 1324 or equivalent

(e) Using a torx socket wrench (T30), install the door lock with the 3 screws.
Torque: 5.0 N·m (51 kgf·cm, 44 in.·lbf)

(f) Connect the door lock connector.

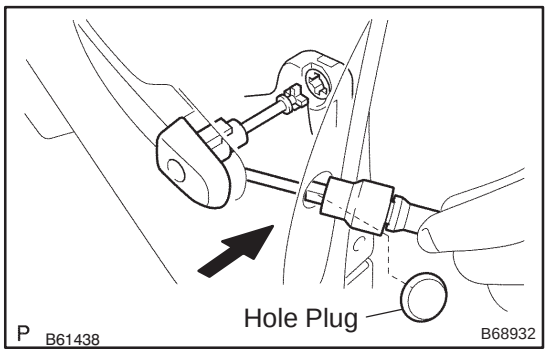

27. INSTALL FRONT DOOR OUTSIDE HANDLE COVER

(a) Using a torx socket wrench (T30), install the cover with the door lock key cylinder installed with the screw.
Torque: 7.0 N·m (71 kgf·cm, 62 in.·lbf)

(b) Install the hole plug.

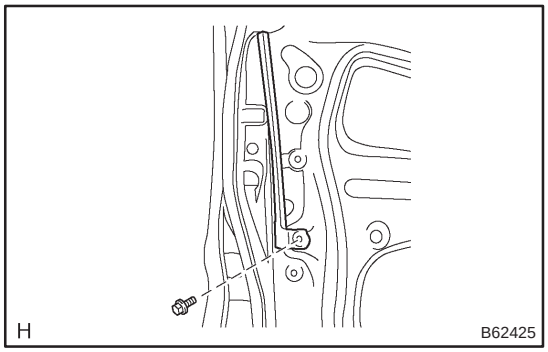

28. INSTALL FRONT DOOR FRAME SUB–ASSY REAR LOWER LH

(a) Install the frame with the bolt.
Torque: 5.5 N·m (56 kgf·cm, 49 in.·lbf)

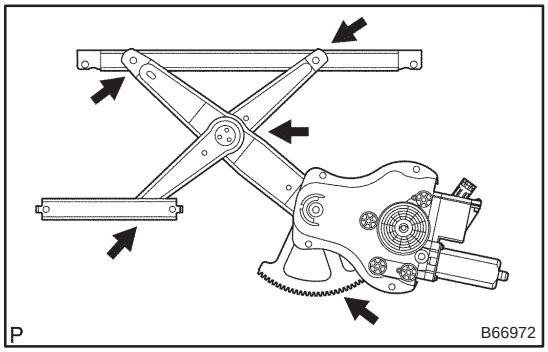

29. INSTALL FRONT DOOR WINDOW REGULATOR SUB–ASSY LH

(a) Apply MP grease to the sliding and rotating areas of the window regulator.

NOTICE:

Do not apply grease to the spring of the window regulator.

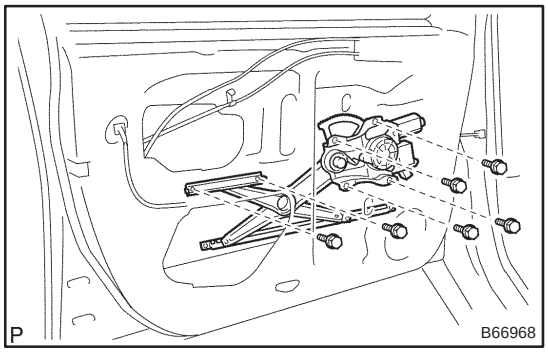

(b) Install the window regulator with the 6 bolts.
Torque: 8.0 N·m (82 kgf·cm, 71 in.·lbf)
(c) Connect the window regulator connector.

NOTICE:
Be careful not to drop and deform the door window regulator as this may cause deformation.

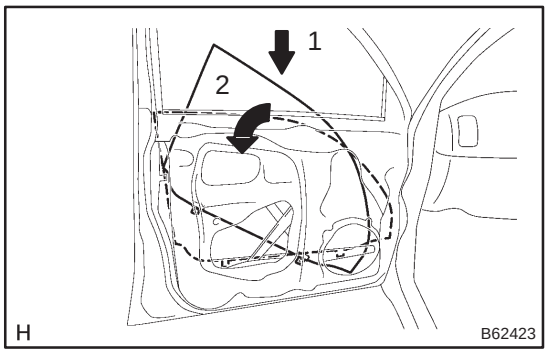

30. INSTALL FRONT DOOR GLASS SUB–ASSY LH

(a) Install the glass run.

NOTICE:
Do not damage the door glass.

(b) Insert the door glass into the door panel along the glass run in the direction indicated by arrows in the illustration.

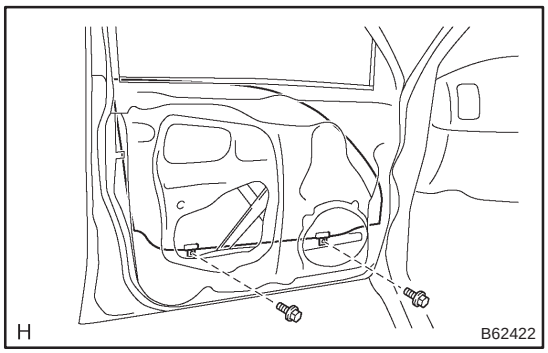

(c) Install the door glass to the window regulator with the 2 bolts.
Torque: 5.0 N·m (51 kgf·cm, 44 in.·lbf)
(d) Reset the power window motor (See page 70–13).
(e) Inspect operation of the power window.

HINT:
When the installation point of the door glass does not match, adjust the regulator position in manual operation.
(1) Connect the power window switch to the wire harness and turn the ignition switch ON.
(2) Repeat UP and DOWN operation several times in manual operation.

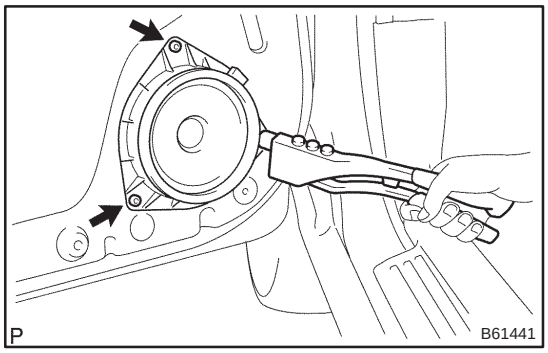

31. INSTALL FRONT NO.1 SPEAKER ASSY

(a) Using an air riveter or hand riveter, install the speaker to the door with the 3 rivets.

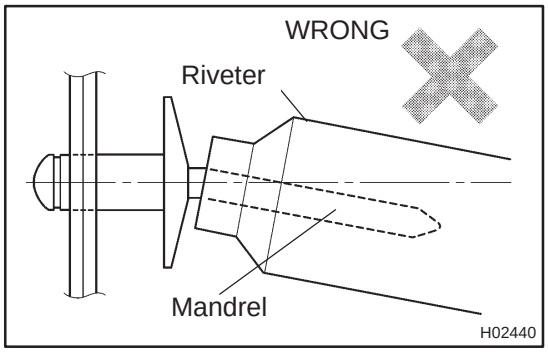

NOTICE:

- **Do not operate the riveter an angle as this will damage it bend the mandrel.**

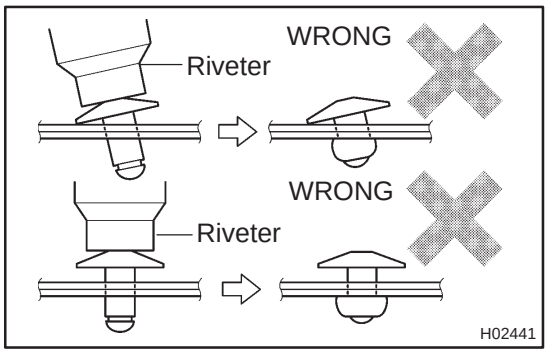

- **Do not tilt the riveter when removing the rivet as the speaker will not be tightened firmly.**

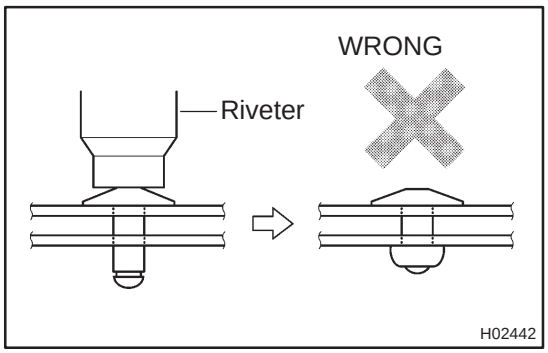

- **Install the rivet while attaching the speaker to ensure that it is tightened firmly.**

(b) Connect the speaker connector.

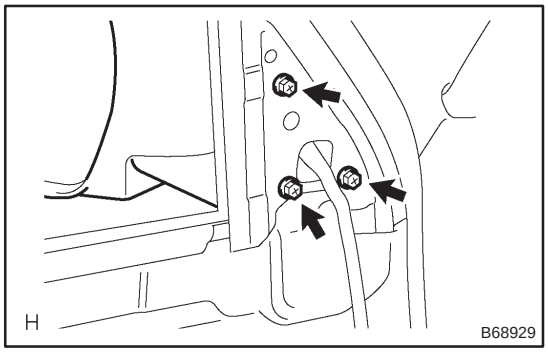

32. INSTALL OUTER REAR VIEW MIRROR ASSY LH

(a) Install the mirror with the 3 screws.
Torque: 10 N·m (102 kgf·cm, 7 ft·lbf)

(b) Connect the mirror connector.

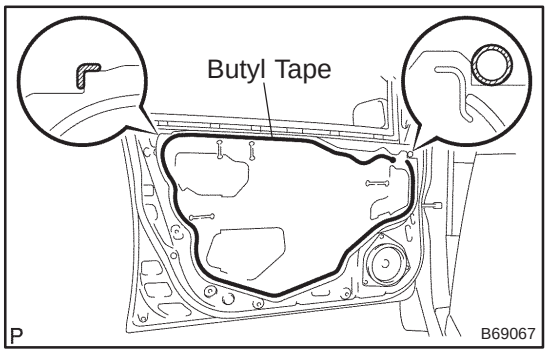

33. INSTALL FRONT DOOR SERVICE HOLE COVER

(a) Apply butyl tape to the door as shown in the illustration.

(b) Install the service hole cover.

HINT:

- When installing the service hole cover, pull out the links and connectors through the service hole cover.
- There should be no wrinkles or folds after attaching the service hole cover.
- After attaching the service hole cover, check the sealing quality.

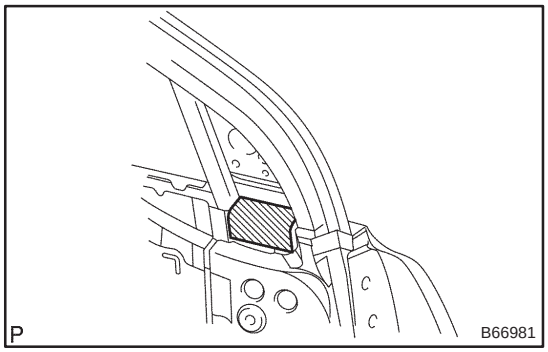

(c) Install the lower frame seal front.

REAR DOOR

COMPONENTS

750MY–01

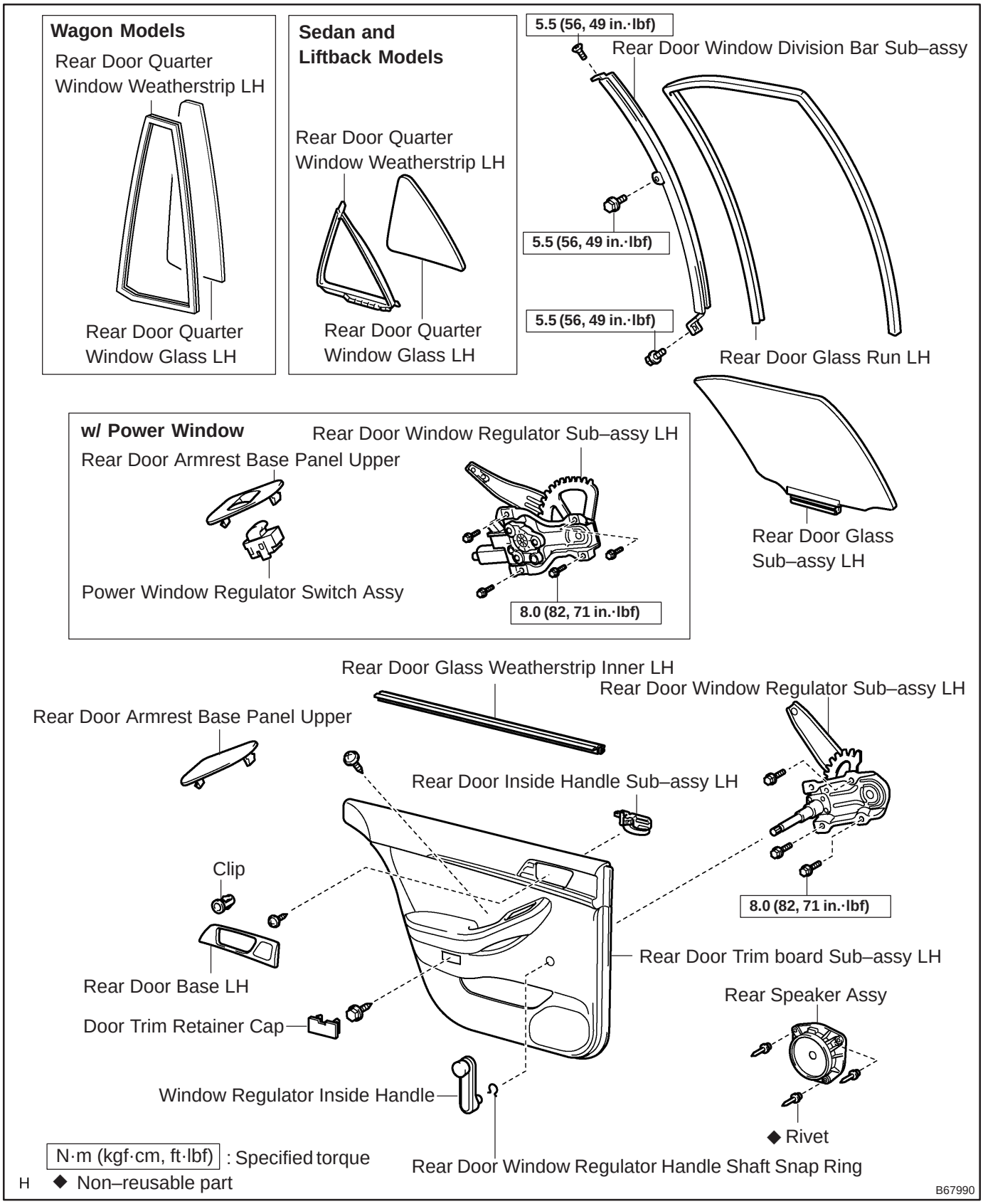

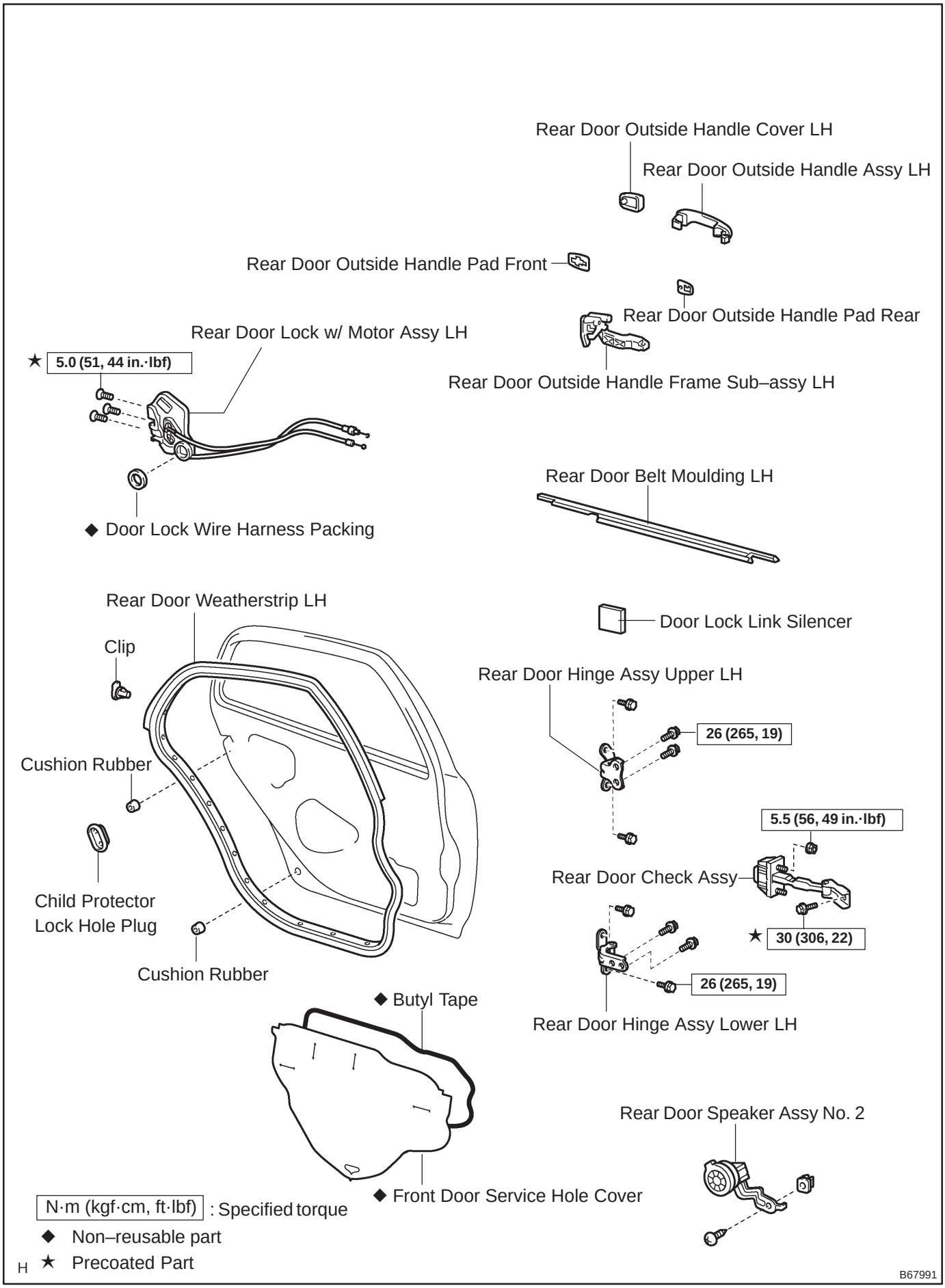
Rear Door Outside Handle Cover LH
Rear Door Outside Handle Assy LH
Rear Door Outside Handle Pad Front
Rear Door Outside Handle Pad Rear
Rear Door Outside Handle Frame Sub–assy LH
Rear Door Lock w/ Motor Assy LH
★ 5.0 (51, 44 in.·lbf)
◆ Door Lock Wire Harness Packing
Rear Door Belt Moulding LH
Rear Door Weatherstrip LH
Clip
Door Lock Link Silencer
Rear Door Hinge Assy Upper LH
26 (265, 19)
Cushion Rubber
5.5 (56, 49 in.·lbf)
Rear Door Check Assy
★ 30 (306, 22)
Child Protector
Lock Hole Plug
Cushion Rubber
26 (265, 19)
Rear Door Hinge Assy Lower LH
◆ Butyl Tape
Rear Door Speaker Assy No. 2
◆ Front Door Service Hole Cover
N·m (kgf·cm, ft·lbf) : Specified torque
◆ Non–reusable part
★ Precoated Part
B67991

750MZ–01

ADJUSTMENT

HINT:

- Use the same procedures on the RH side as on the LH side.

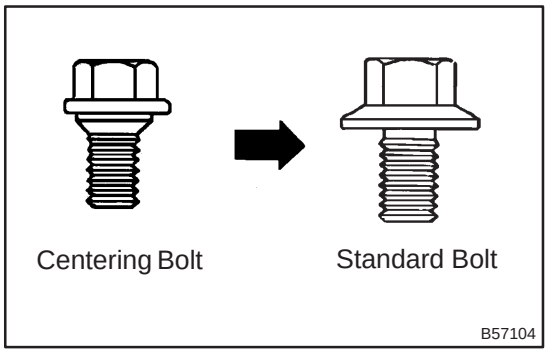

- Because centering bolt is used as a door hinge mounting bolt on the body side and the door side, the door can not be adjusted with them on. Substitute a bolt with a washer for the centering bolt.

1. INSPECT REAR DOOR PANEL SUB–ASSY LH

(a) Check that the clearance is within the standard range.

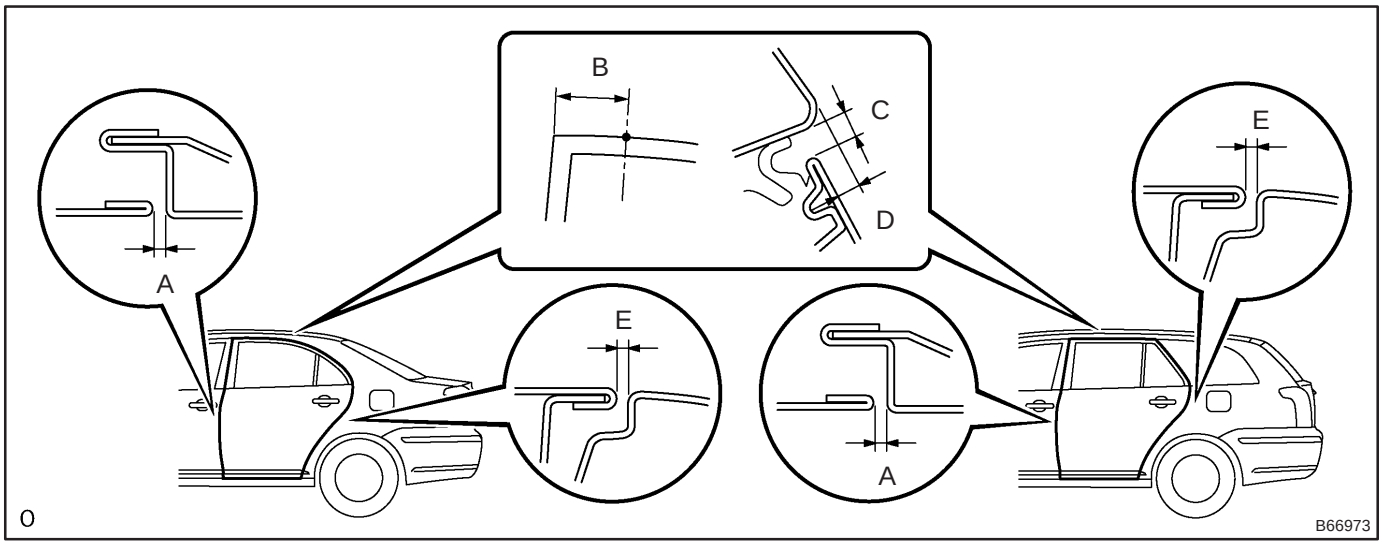

Standard range:

A	4.8 ± 1.5 mm (0.189 ± 0.059 in.)
D	160 mm (6.30 in.)
B	5.5 ± 1.5 mm (0.220 ± 0.059 in.)
E	4.3 ± 1.5 mm (0.169 ± 0.059 in.)
C	4.8 ± 1.5 mm (0189 ± 0.059 in.)

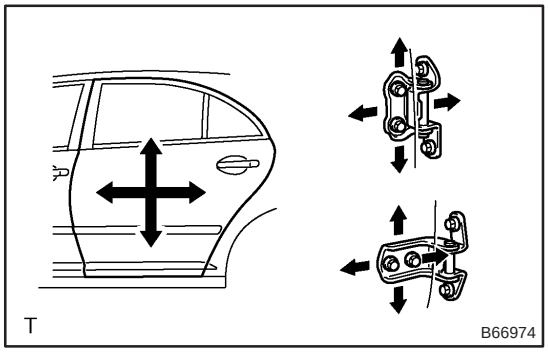

2. ADJUST REAR DOOR PANEL SUB–ASSY LH

(a) Adjust the door forward/rearward and vertically by loosening the body side hinge bolts.

(b) Tighten the body side hinge bolts after the adjustment.
Torque: 26 N·m (265 kgf·cm, 19 ft·lbf)

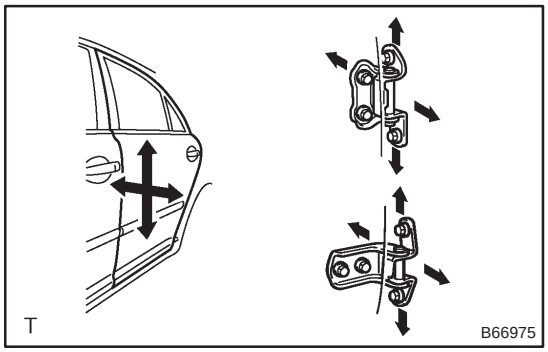

(c) Horizontally and vertically adjust the door by loosening the door side hinge bolts.

(d) Tighten the body side hinge bolts after the adjustment.
Torque: 26 N·m (265 kgf·cm, 19 ft·lbf)

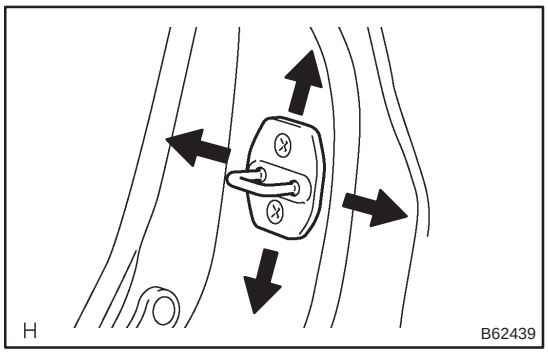

(e) Adjust the striker position by slightly loosening the striker mounting screws and hitting the striker with a plastic–faced hammer.

(f) Tighten the striker mounting screws after the adjustment.
Torque: 23 N·m (235 kgf·cm, 17 ft·lbf)

750N0–01

OVERHAUL

HINT:

- The installation is in the reverse order of the removal. However, when there is a special point concerning the installation, it is indicated.
- Use the same procedures on the RH side as on the LH side.

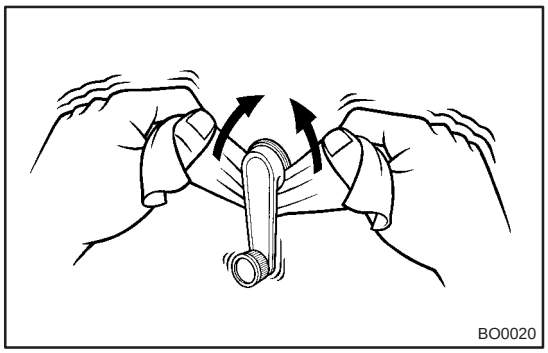

1. REMOVE REAR DOOR WINDOW REGULATOR HANDLE ASSY (W/O POWER WINDOW)

(a) Using a shop rag, remove the snap ring.

(b) Remove the window regulator handle.

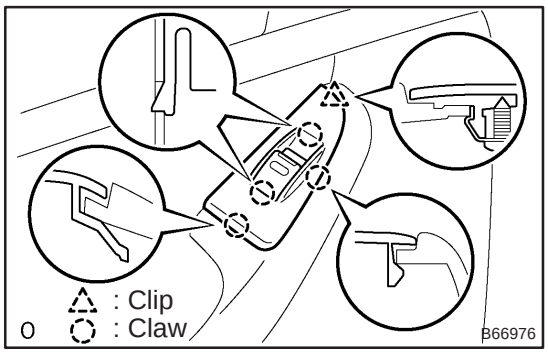

2. REMOVE POWER WINDOW REGULATOR SWITCH ASSY REAR (W/ POWER WINDOW)

(a) Using a screwdriver, disengage the claw and clip, and remove the armrest base panel upper together with the switch.

HINT:

Tape the screwdriver tip before use.

(b) Disconnect the switch connector.

(c) Disengage the 2 claws and remove the switch from the armrest base panel upper

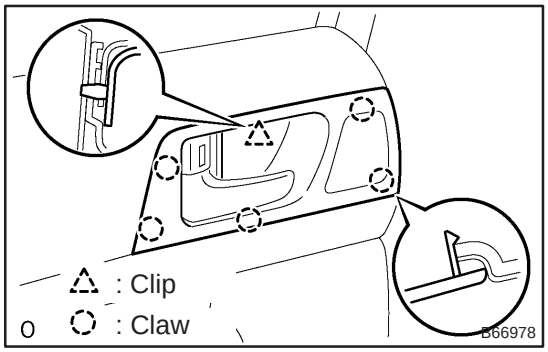

3. REMOVE REAR DOOR TRIM BASE LH

(a) Using a screwdriver, disengage the 5 claws and clip, and remove the trim base.

HINT:

Tape the screwdriver tip before use.

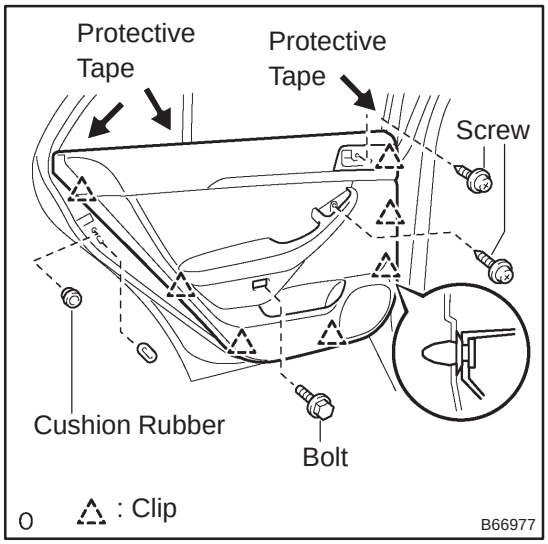

4. REMOVE REAR DOOR TRIM BOARD SUB–ASSY LH

(a) Remove the cushion rubber.

(b) Remove the bolt and 2 screws.

(c) Using a clip remover, remove the 10 clips and the trim board upward.

HINT:

In order to prevent the door panel from being damaged, cover the areas indicated by the arrow marks in the illustration with protective tape.

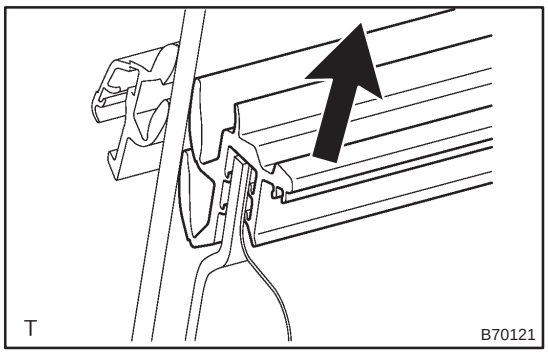

5. REMOVE REAR DOOR GLASS WEATHERSTRIP INNER LH

(a) Remove the weatherstrip inner, as shown in the illustration.

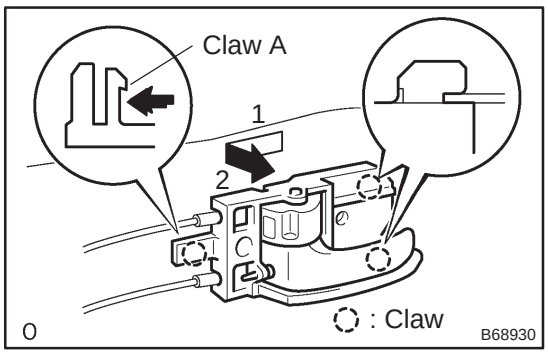

6. REMOVE REAR DOOR INSIDE HANDLE SUB–ASSY LH

(a) Using a screwdriver, disengage the claw A as indicated.

HINT:

Tape the screwdriver tip before use.

(b) Move the inside handle in the direction indicated by the arrow mark in the illustration.

(c) Disconnect the 2 cables from the inside handle.

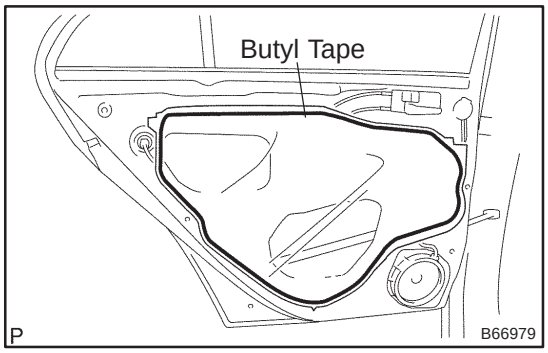

7. REMOVE REAR DOOR SERVICE HOLE COVER

(a) Remove the service hole cover.

NOTICE:

Remove the remaining tape on the door side.

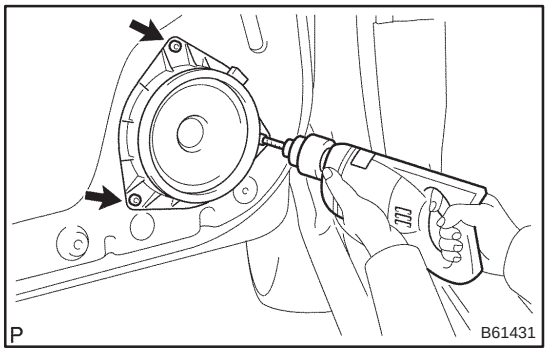

8. REMOVE REAR SPEAKER ASSY (W/ SPEAKER)

(a) Using a drill of less than ø 4 mm (0.16 in.), drill out the 3 rivet heads and remove the speaker.

NOTICE:

- **Be sure to gently place the drill perpendicularly to the rivet to prevent the rivet hole and the drill itself from being damaged.**
- **Be careful with the cut rivet because it is hot.**

(b) Even if the flange is taken off, continue drilling and push out the remaining fragments using the drill.

(c) Using a vacuum cleaner, remove the drilled rivet and dust from the inside of the door.

9. REMOVE REAR SPEAKER ASSY NO.2 (W/ SPEAKER) (See page 67–15)

10. REMOVE REAR DOOR BELT MOULDING ASSY LH (See page 76–24)

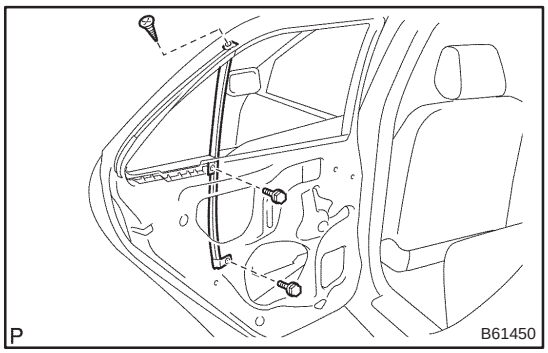

11. REMOVE REAR DOOR WINDOW DIVISION BAR SUB–ASSY LH

(a) Remove the glass run.

(b) Remove the screw and 2 bolts.

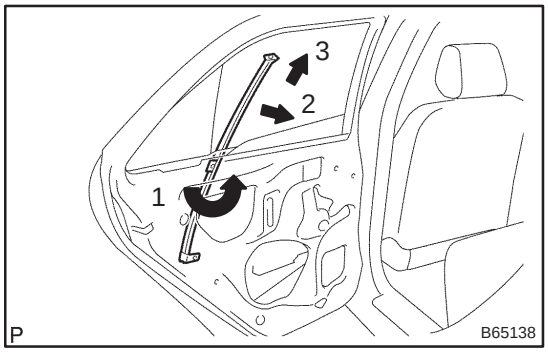

(c) Rotate the division bar by 45° and pull it upwards in the direction indicated by the arrow marks in the illustration. Then remove the division bar.

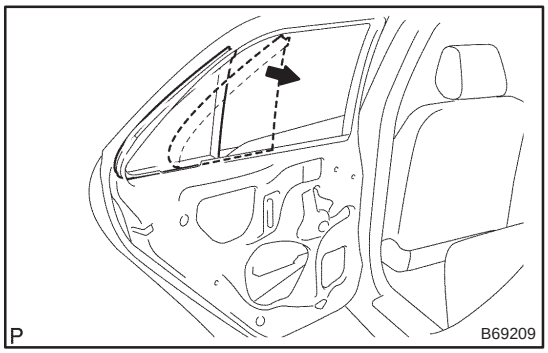

12. REMOVE REAR DOOR QUARTER WINDOW GLASS LH

(a) Remove the quarter glass together with the quarter window glass weatherstrip in the direction indicated by arrow marks in the illustration.

(b) Remove the quarter window glass weatherstrip.

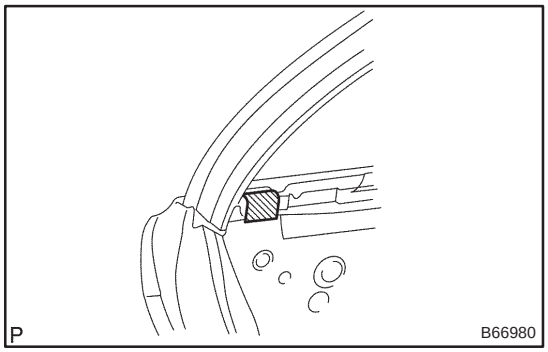

(c) Remove the door lock link silencer.

13. REMOVE REAR DOOR GLASS SUB–ASSY LH

(a) Carefully pull up the door glass out of the door panel.

HINT:

Insert a shop rag inside the door panel to prevent the glass from being scratched.

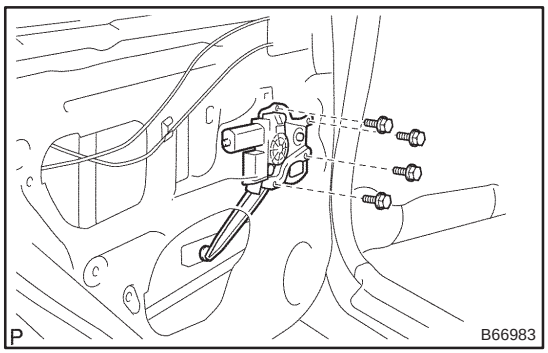

14. REMOVE REAR DOOR WINDOW REGULATOR SUB–ASSY LH

(a) w/ Power window:
Disconnect the window regulator connector.

(b) Remove the 4 bolts and window regulator.

NOTICE:

When the bolts are removed, the window regulator may fall and become deformed.

HINT:

Remove the door window regulator through the service hole.

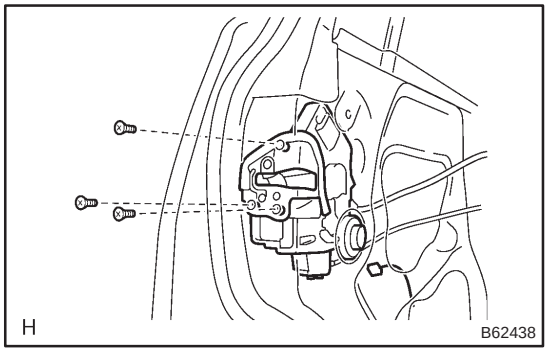

15. REMOVE REAR DOOR W/MOTOR LOCK ASSY LH

(a) Disconnect the door lock connector.

(b) Using a torx socket wrench (T30), remove the 3 screws and door lock.

HINT:

Remove the door lock through the service hole.

(c) Remove the door lock wire harness packing.

16. REMOVE REAR DOOR OUTSIDE HANDLE COVER LH

(a) Using a torx socket wrench (T30), loosen the screw.

(b) Remove the cover.

HINT:

Remove the cover through the service hole.

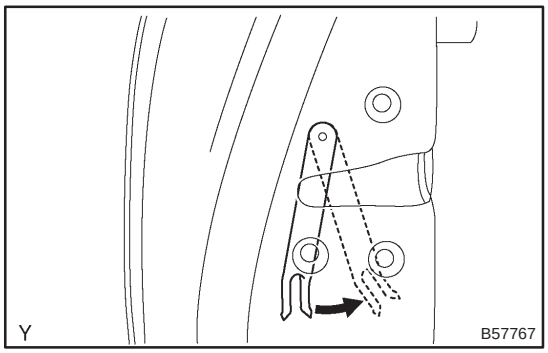

17. REMOVE REAR DOOR OUTSIDE HANDLE ASSY LH

(a) Pull and hold the release plate of the handle frame as shown in the illustration.

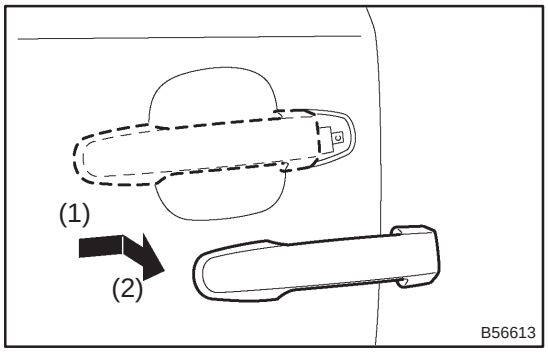

(b) Remove the handle pushing and pulling it in the direction indicated by the arrow mark in the illustration.

NOTICE:

If the release plate is not pulled and held when removing the handle, the release plate will interfere with the handle and become damaged .

(c) Remove the outside handle pads front and rear.

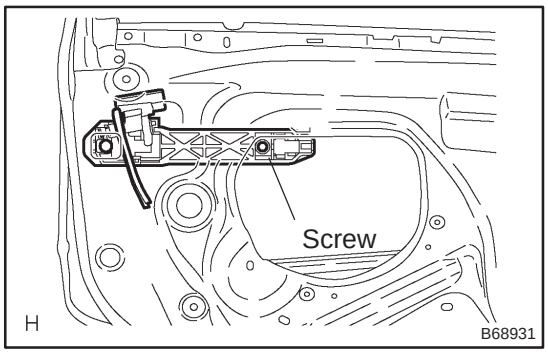

18. REMOVE REAR DOOR OUTSIDE HANDLE FRAME SUB–ASSY LH

(a) Using a torx socket wrench (T30), loosen the screw and remove the frame.

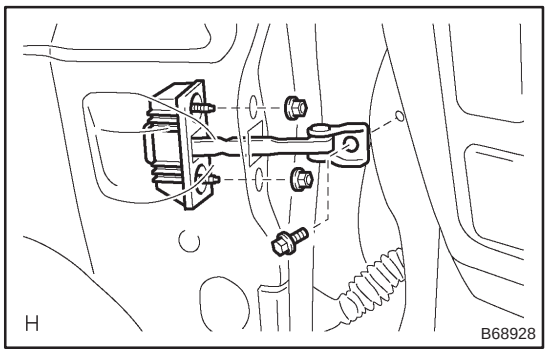

19. REMOVE REAR DOOR CHECK ASSY LH

(a) Remove the 2 nuts, bolt and check.

HINT:

Remove the check through the service hole.

20. REMOVE REAR DOOR WEATHERSTRIP LH

(a) Using a clip remover, disengage the clip and remove the weatherstrip.

HINT:

If the clip is damaged, replace it with a new clip.

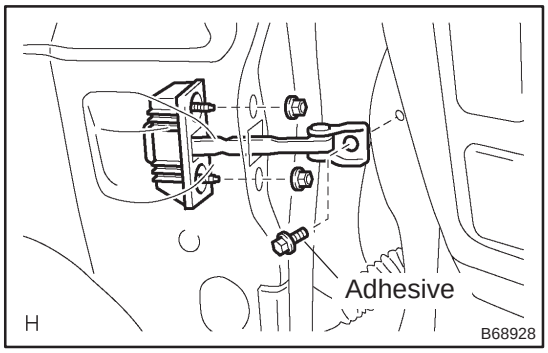

21. INSTALL REAR DOOR CHECK ASSY LH

(a) Apply MP grease to the sliding areas of the check.

(b) Install the check to the door panel with the 2 nuts.
Torque: 5.5 N·m (56 kgf·cm, 49 in.·lbf)

(c) Apply adhesive to the threads of the bolt.
Adhesive:
Part No. 08833–00070, THREE BOND 1324 or equivalent

(d) Install the check to the body panel with the bolt.
Torque: 30 N·m (306 kgf·cm, 22 ft·lbf)

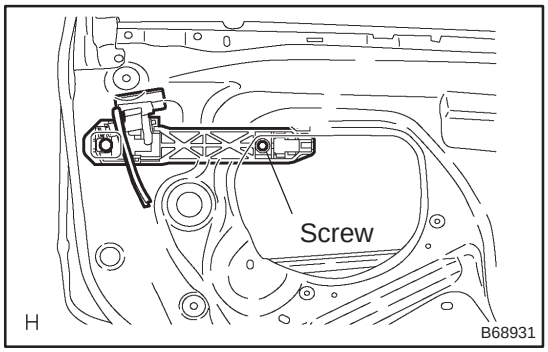

22. INSTALL REAR DOOR OUTSIDE HANDLE FRAME SUB–ASSY LH

(a) Apply MP grease to the sliding areas of the frame.

(b) Using a torx socket wrench (T30), install the handle frame with the screw.

Torque: 7.0 N·m (71 kgf·cm, 62 in.·lbf)

NOTICE:

A cover should be inserted between the nut and the door panel.

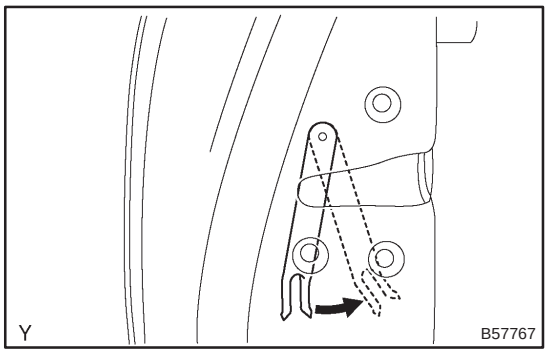

23. INSTALL REAR DOOR OUTSIDE HANDLE ASSY LH

(a) Install the outside handle pads front and rear.

(b) Pull and hold the release plate of the frame, as shown in the illustration.

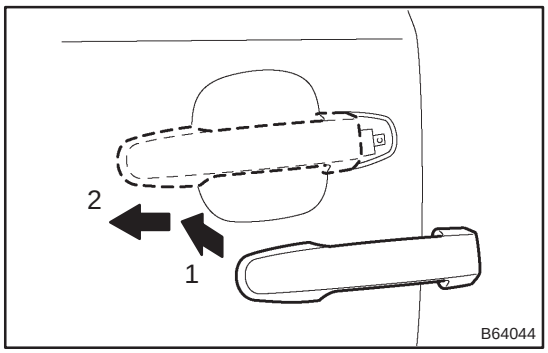

(c) Install the handle pushing it in the direction indicated by arrow marks in the illustration.

NOTICE:

If the release plate is not pulled and held when installing the handle, the release plate will interfere with the handle become damaged .

24. INSTALL REAR DOOR OUTSIDE HANDLE COVER LH

(a) Using a torx socket wrench (T30), install the outside handle cover with the screw.

Torque: 7.0 N·m (71 kgf·cm, 62 in.·lbf)

25. INSTALL REAR DOOR W/MOTOR LOCK ASSY LH

(a) Apply MP grease to the sliding and rotating areas of the door lock.

(b) Install a new door lock wire harness packing.

NOTICE:

- **When reusing a lock that has been removed, replace the packing in the connecting part with a new one.**
- **Be careful that grease or dirt does not stick to the packing surface in the connecting part.**
- **Reusing removed packing or using damaged packing will allow water to penetrate through to the connecting part resulting in a door lock malfunction.**

(c) Engage the door lock with the release plate of the handle, and then set it to the door panel.

NOTICE:

Make sure that the release plate of the frame is securely engaged with the door lock.

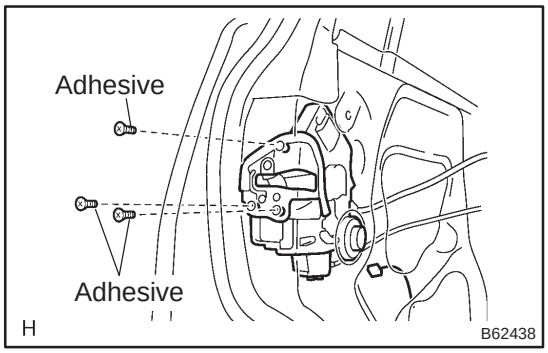

(d) Apply adhesive to the threads of the 3 screws.
Adhesive:
Part No. 08833–00070, THREE BOND 1324 or equivalent

(e) Using a torx socket wrench (T30), install the door lock with the 3 screws.
Torque: 5.0 N·m (51 kgf·cm, 44 in.·lbf)

(f) Connect the door lock connector.

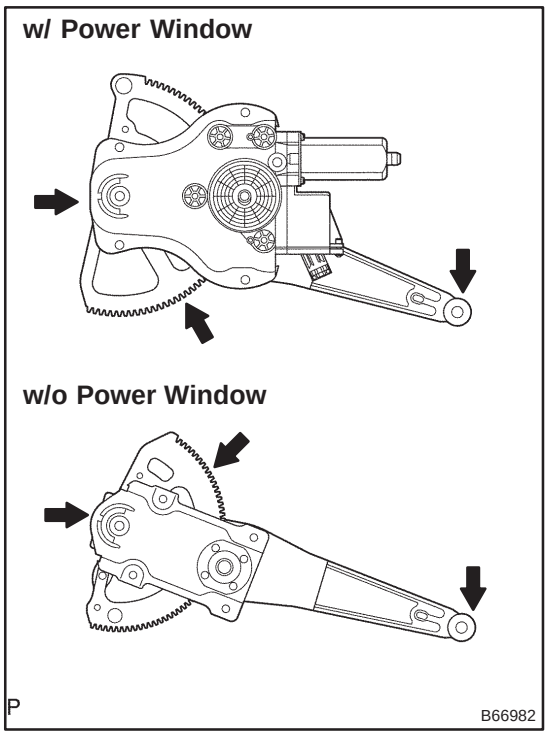

26. INSTALL REAR DOOR WINDOW REGULATOR SUB–ASSY LH

(a) Apply MP grease to the sliding and rotating areas of the window regulator.

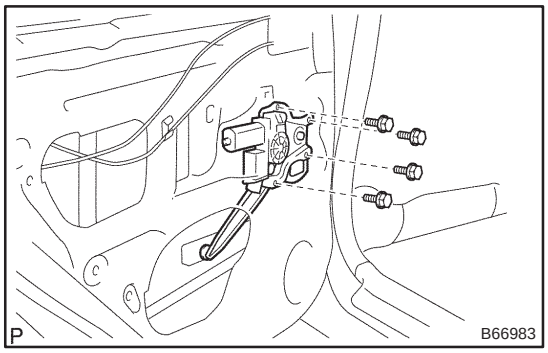

(b) Install the window regulator with the 4 bolts.
Torque: 8.0 N·m (82 kgf·cm, 71 in.·lbf)

NOTICE:

Be careful not to drop the window regulator as this may cause deformation.

(c) Connect the window regulator connector.

27. INSTALL REAR DOOR GLASS SUB–ASSY LH

NOTICE:

Be careful not to drop the glass as this may cause deformation.

(a) Install the door glass into the door panel.

HINT:

Insert a shop rag inside the door panel to prevent the door glass from being scratched.

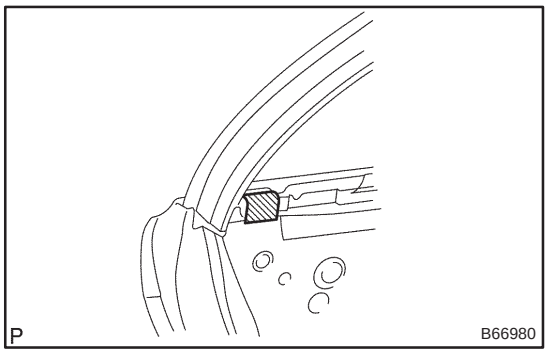

28. INSTALL REAR DOOR QUARTER WINDOW GLASS LH

(a) Install the quarter window weatherstrip on the glass.

NOTICE:

Do not damage the glass.

(b) Install the door lock link silencer.

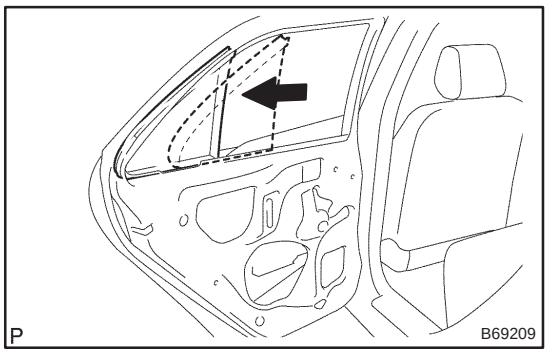

(c) Install the quarter window glass with the weatherstrip installed in the direction indicated by the arrow in the illustration.

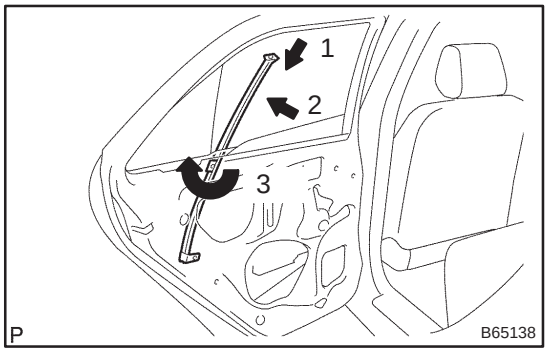

29. INSTALL REAR DOOR WINDOW DIVISION BAR SUB–ASSY LH

(a) Insert the division bar to the door panel and then rotate it by 90°, as shown in the illustration.

(b) Mount the door glass to the window regulator.

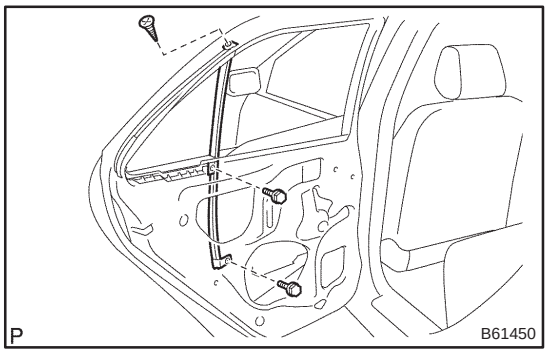

(c) Install the division bar with the 2 bolts and screw.

Torque: 5.5 N·m (56 kgf·cm, 49 in.·lbf)

(d) Install the glass run.

(e) Reset the power window motor (See page 70–13).

(f) Inspect operation of the power window.

HINT:

When the installation point of the door glass does not match, adjust the window regulator position in manual operation.

(1) Connect the power window switch to the wire harness and turn the ignition switch ON.

(2) Repeat UP and DOWN operation several times in manual operation.

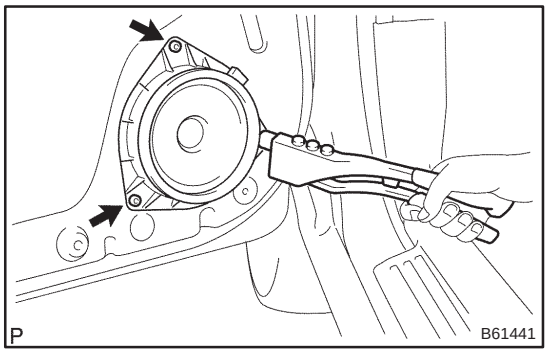

30. INSTALL REAR SPEAKER ASSY

(a) Using an air riveter or hand riveter, install the speaker to the door with the 3 rivets.

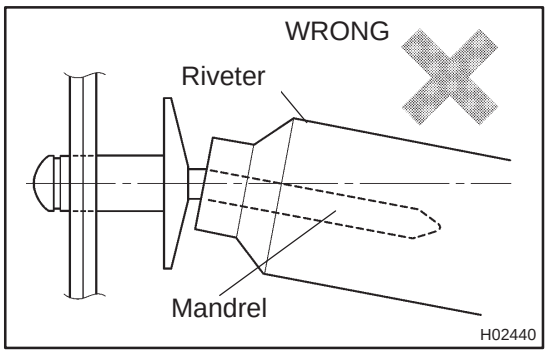

NOTICE:

- **Do not operate the riveter an angle as this will damage it bend the mandrel.**

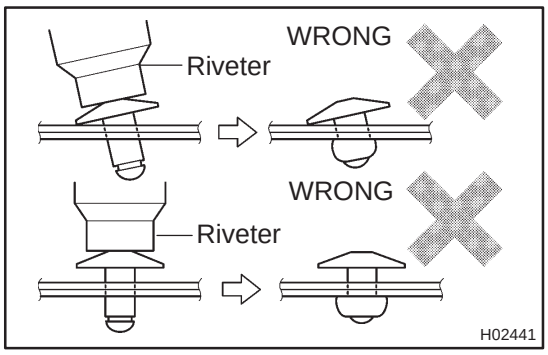

- **Do not tilt the riveter when removing the rivet as the speaker will not be tightened firmly.**

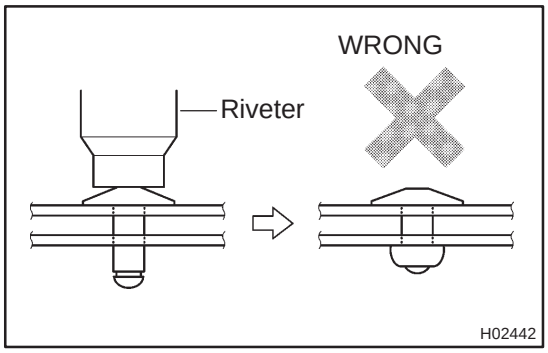

- **Install the rivet while attaching the speaker to ensure that it is tightened firmly.**

(b) Connect the speaker connector.

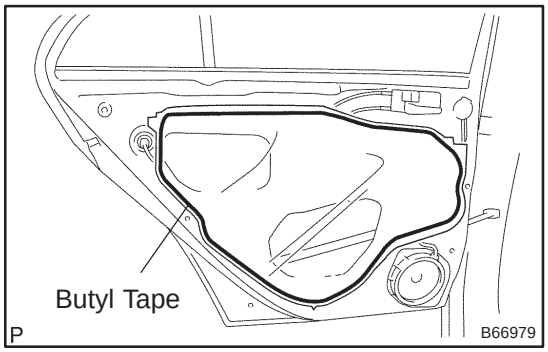

31. INSTALL REAR DOOR SERVICE HOLE COVER

(a) Apply butyl tape to the door panel, as shown in the illustration.

(b) Install the service hole cover.

HINT:

- When installing the service hole cover, pull out the links and connectors through the service hole cover.
- There should be no wrinkles or folds after attaching the service hole cover.
- After attaching the service hole cover, check the sealing quality.

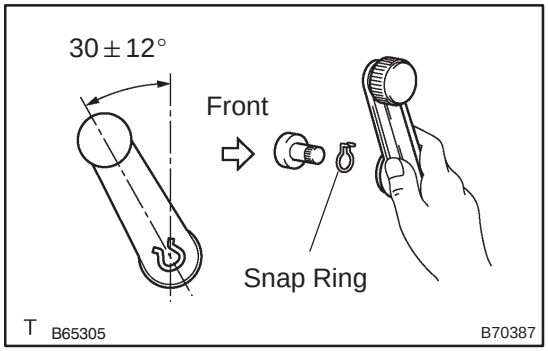

32. INSTALL REAR DOOR WINDOW REGULATOR HANDLE ASSY (W/O POWER WINDOW)

(a) Fully close the window.

(b) Install the snap ring to the regulator handle.

(c) Install the regulator handle.

HINT:

With the window fully closed, install the plate and regulator handle with the snap ring as shown in the illustration.

LUGGAGE COMPARTMENT DOOR

COMPONENTS

750N1–01

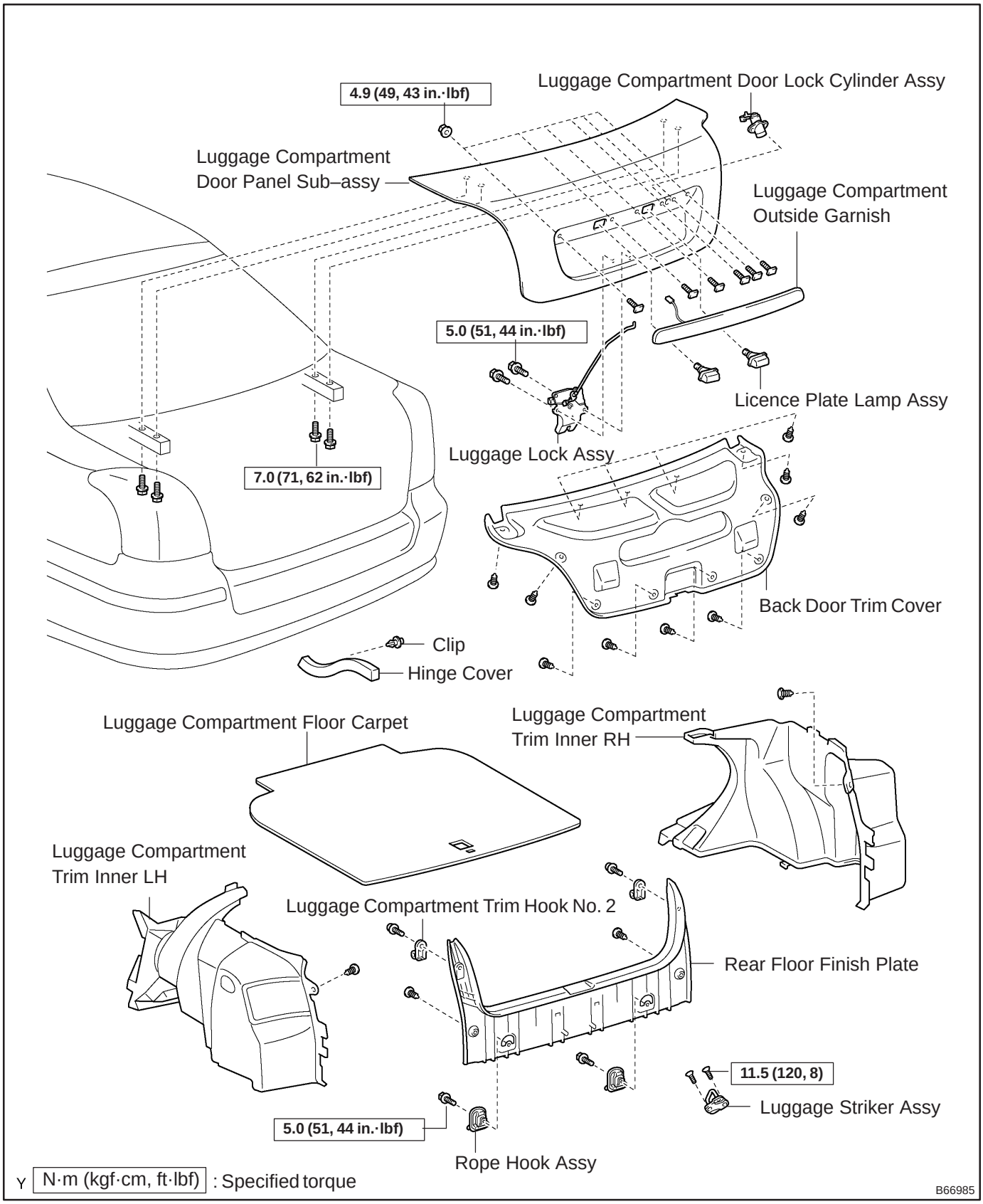

750N2–01

ADJUSTMENT

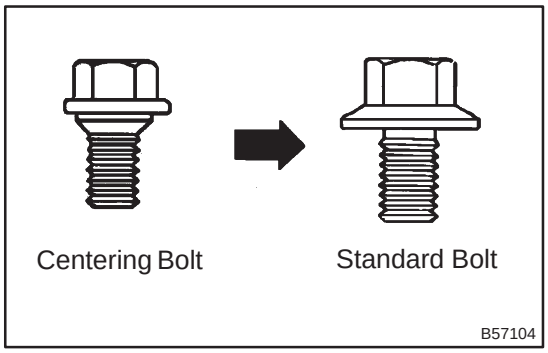

HINT:
Because a centering bolt is used as a luggage compartment door mounting bolt, the luggage compartment door can not be adjusted with it on. Substitute a bolt with a washer for the centering bolt.

1. INSPECT LUGGAGE COMPARTMENT DOOR PANEL SUB–ASSY

(a) Check that the clearance is within the standard range.

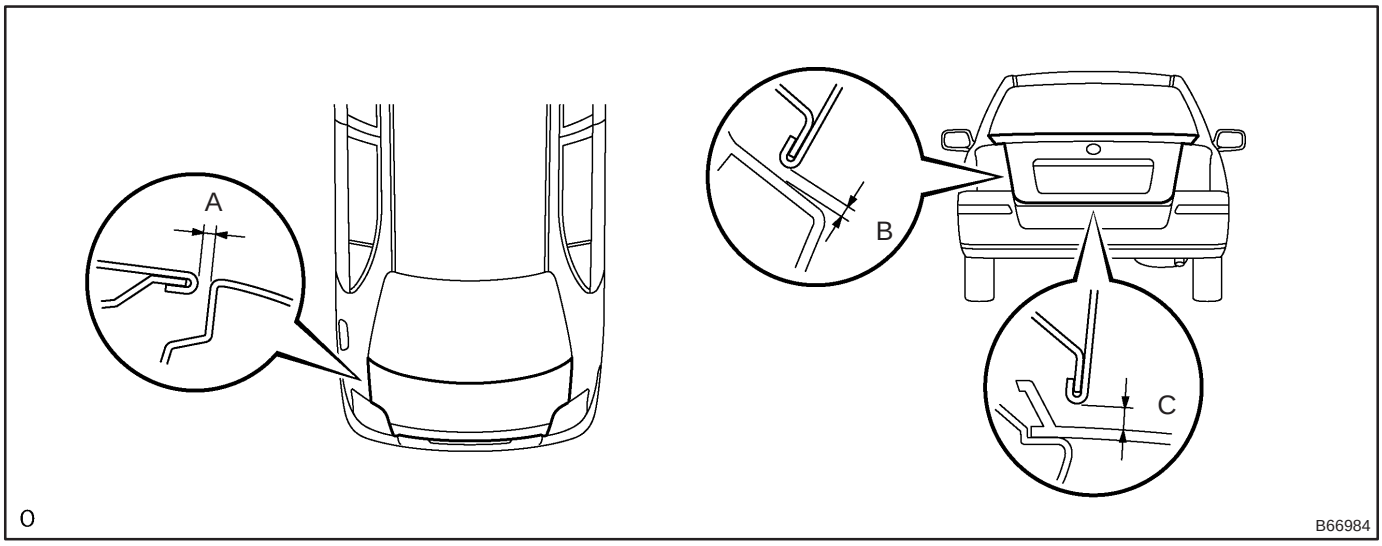

Standard range:

A	4.0 ± 1.5 mm (0.157 ± 0.059 in.)
B	5.3 ± 1.5 mm (0.209 ± 0.059 in.)
C	7.1 – 1.5 or + 2.5 mm (0.280 – 0.059 or + 0.098 in.)

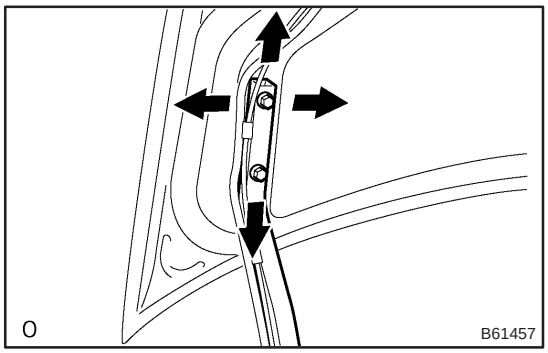

2. ADJUST LUGGAGE COMPARTMENT DOOR PANEL SUB–ASSY

(a) Using a clip remover, remove the clips and hinge cover.
(b) Using a clip remover, remove the 11 clips and trim cover.
(c) Adjust the door horizontally and vertically by Loosening the door bolts.
(d) Tighten the door mounting bolts after the adjustment.
Torque: 7.0 N·m (71 kgf·cm, 62 in.·lbf)

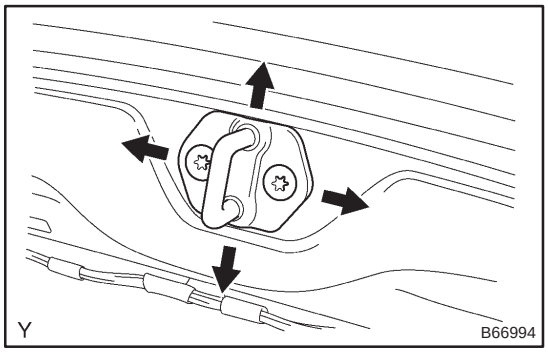

(e) Adjust the striker.

HINT:

Adjust the door lock position by moving the striker so that the door striker can enter smoothly.

(1) Using a hammer and a brass bar, tap the striker to adjust it.

(2) Tighten the 2 bolts after the adjustment.

Torque: 11.5 N·m (120 kgf·cm, 8 ft·lbf)

LUGGAGE DOOR HINGE TORSION BAR

750N3–01

REPLACEMENT

HINT:

- The installation is in the reverse order of the removal. However, when there is a special point concerning the installation, it is indicated.
- Use the same procedures on the RH side as on the LH side.
- After removing the torsion bar, opening and closing door operation should be carried out while holding the door with your hand in order to perform an accurate test by providing sliding resistance.
- The RH side torsion bar is on the upper side and the LH side torsion bar is on the lower side, thus the installation should be performed in the order of RH to LH and removal should be performed in the order of LH to RH.

1. REMOVE LUGGAGE DOOR HINGE TORSION BAR LH

(a) Remove the floor carpet.

(b) Remove the floor finish plate.

(1) Remove the 2 screws and 2 No. 2 trim hooks.

(2) Remove the 2 bolts and rope hook assy

(3) Using a clip remover, remove the 2 clips and floor finish plate.

(c) Remove the clips and trim cover inner LH and RH.

(d) Remove the torsion bar RH from the clip placed in the center of the upper back panel.

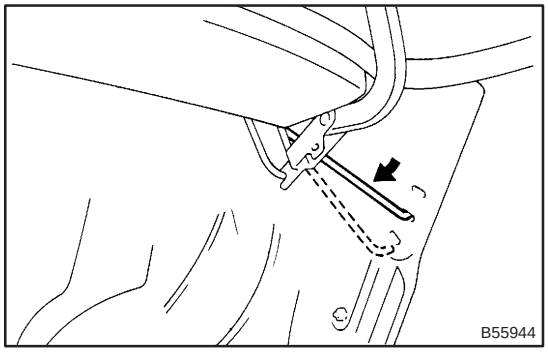

(e) Remove the tip of the torsion bar from the roof side inner panel by hand.

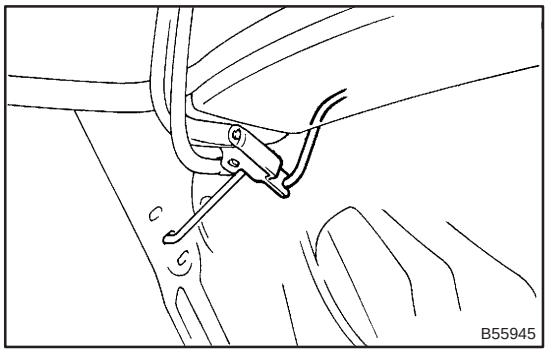

(f) Take out the hinge arm from the torsion bar in the rear direction.

(g) Pull the torsion bar to your side in order to remove the U–shaped part from the hinge support.

2. REMOVE LUGGAGE DOOR HINGE TORSION BAR RH

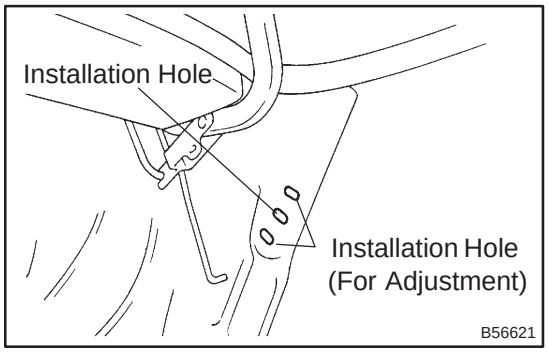

3. INSTALL LUGGAGE DOOR HINGE TORSION BAR LH

(a) Set the tip of the torsion bar in the installation hole placed in the center part. The holes placed in the upper and lower parts are used for adjustment.

4. INSTALL LUGGAGE DOOR HINGE TORSION BAR RH

BACK DOOR (LIFTBACK MODELS)

COMPONENTS

750N4–01

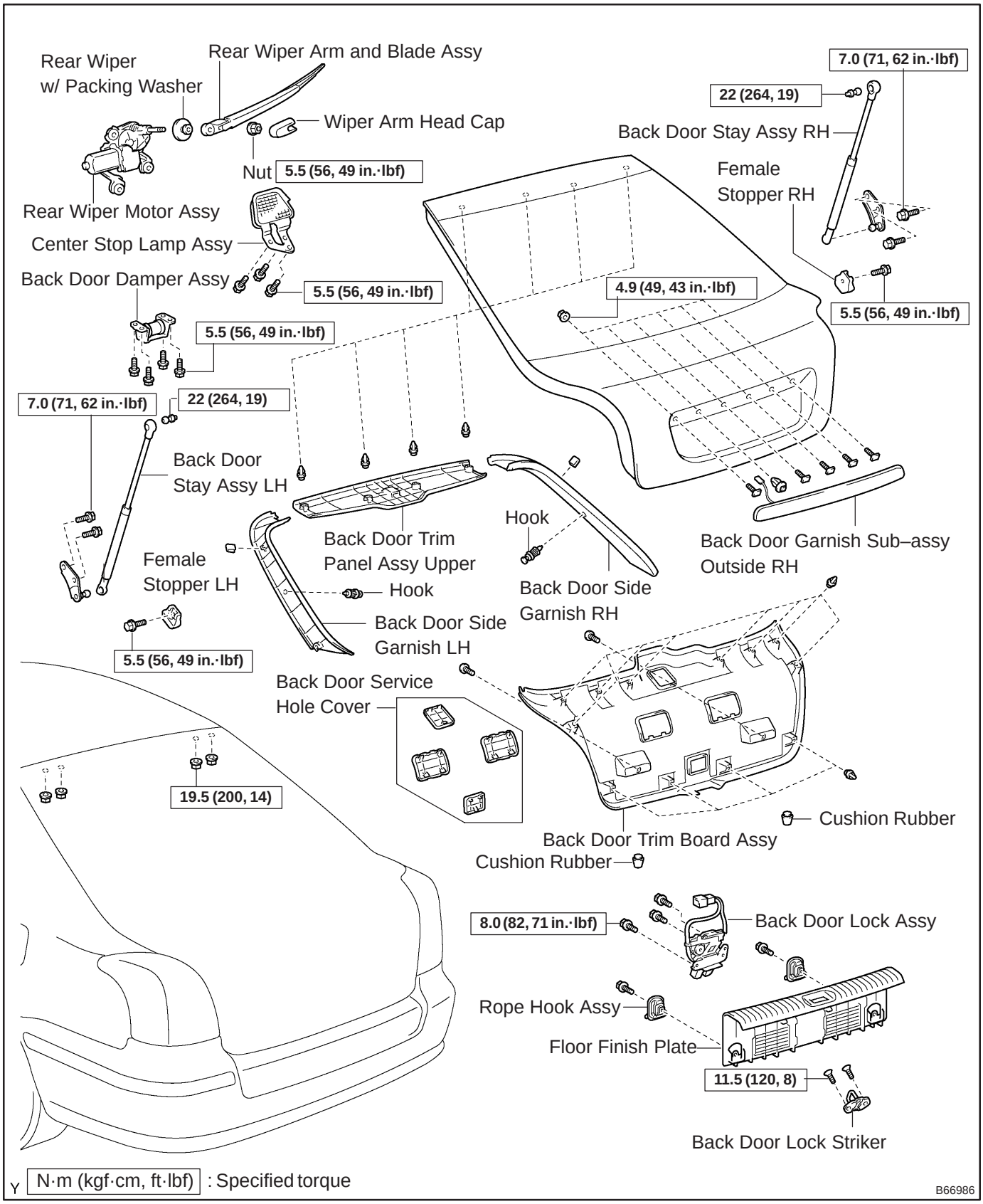

750N5–01

ADJUSTMENT

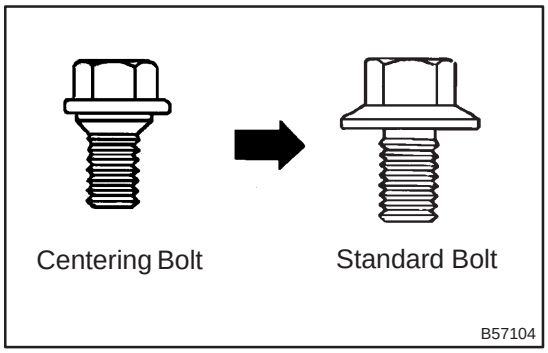

HINT:
Because a centering bolt is used as a door hinge mounting bolt on the body side and door side, the door can not be adjusted with them on. Substitute a bolt with a washer for the centering bolt.

1. INSPECT BACK DOOR PANEL SUB–ASSY

(a) Check that the clearance is within the standard range.

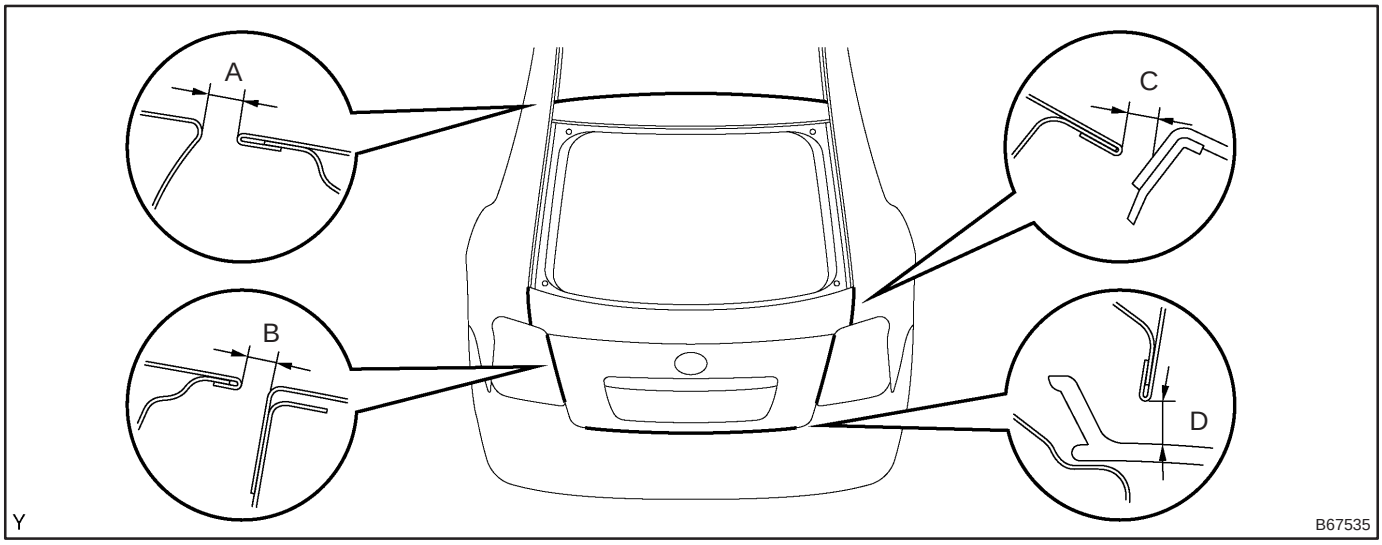

Standard range:

A	6.3 ± 1.5 mm (0.248 ± 0.059 in.)
B	4.9 ± 1.5 mm (0.193 ± 0.059 in.)
C	5.0 ± 1.5 mm (0.197 ± 0.059 in.)
D	8.0 ± 1.5 mm (0.315 ± 0.059 in.)

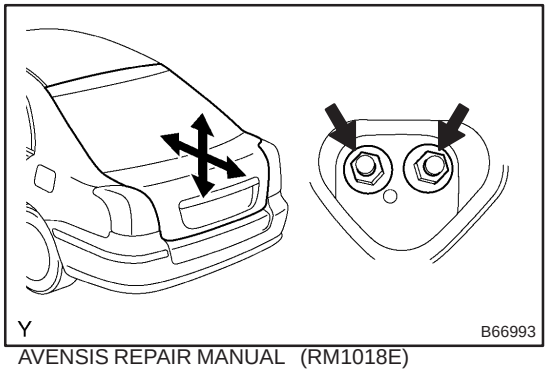

2. ADJUST BACK DOOR PANEL SUB–ASSY

(a) Adjust the door vertically and forward/rearward by loosening the body side hinge bolts.

(b) Tighten the body side hinge bolts after the adjustment.
Torque: 19.5 N·m (200 kgf·cm, 14 ft·lbf)

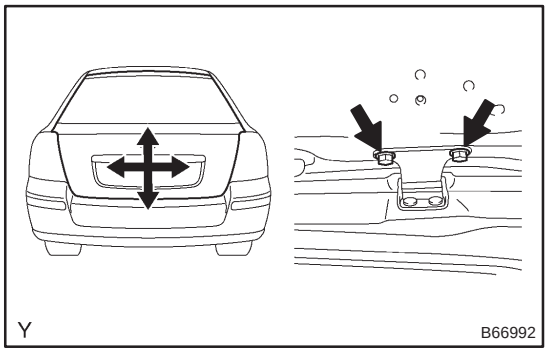

(c) Horizontally and vertically adjust the door by loosening the 8 door side hinge bolts.
(d) Tighten the door side hinge bolts after the adjustment.
Torque: 19.5 N·m (200 kgf·cm, 14 ft·lbf)

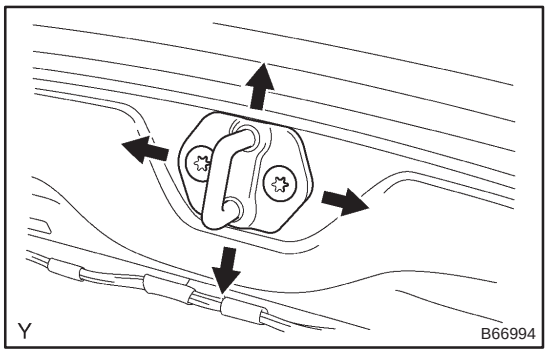

(e) Remove the floor finish plate (See page 76–45)
(f) Adjust the striker position by slightly loosening the striker mounting screws and hitting the striker with a plastic–faced hammer.
(g) Tighten the striker mounting screws after the adjustment.
Torque: 11.5 N·m (120 kgf·cm, 8 ft·lbf)

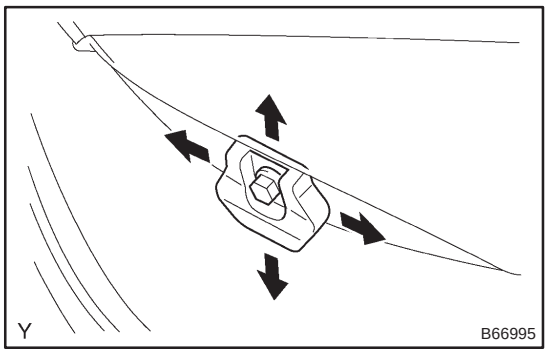

(h) Adjust the side female stopper so that the door can be opened/closed smoothly, as shown in the illustration.
(i) Tighten the side female stopper after the adjustment.
Torque: 5.5 N·m (56 kgf·cm, 49 in.·lbf)

750N6–01

OVERHAUL

HINT:

The installation is in the reverse order of the removal. However, when there is a special point concerning the installation, it is indicated.

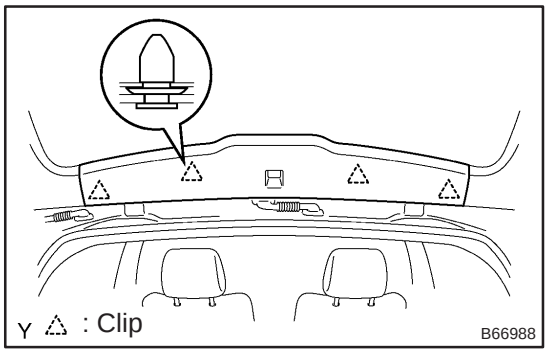

1. REMOVE BACK DOOR TRIM PANEL ASSY UPPER

(a) Using a screwdriver, disengage the 4 clips and remove the trim.

HINT:

Tape the screwdriver tip before use.

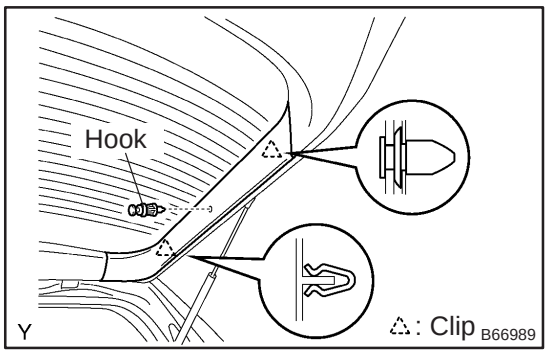

2. REMOVE BACK DOOR SIDE GARNISH LH

(a) Using a clip remover, remove the hook.

(b) Using a screwdriver, disengage the 2 clips and remove the side garnish.

HINT:

Tape the screwdriver tip before use.

3. REMOVE BACK DOOR SIDE GARNISH RH

HINT:

Use the same procedures described for the LH side.

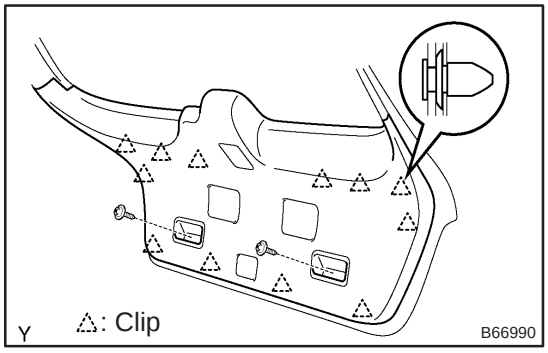

4. REMOVE BACK DOOR TRIM BOARD ASSY

(a) Remove the 2 screws.

(b) Using a screwdriver, disengage the 12 clips and remove the trim board.

HINT:

Tape the screwdriver tip before use.

(c) Remove the 4 service hole covers.

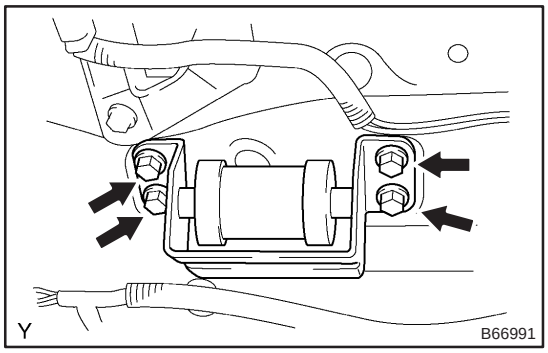

5. REMOVE BACK DOOR DAMPER ASSY

(a) Remove the 4 bolts and damper.

6. REMOVE BACK DOOR GARNISH SUB–ASSY OUTSIDE RH (See page 76–27)

7. REMOVE REAR WIPER MOTOR ASSY (See page 66–17)

8. REMOVE CENTER STOP LAMP ASSY (See page 65–26)

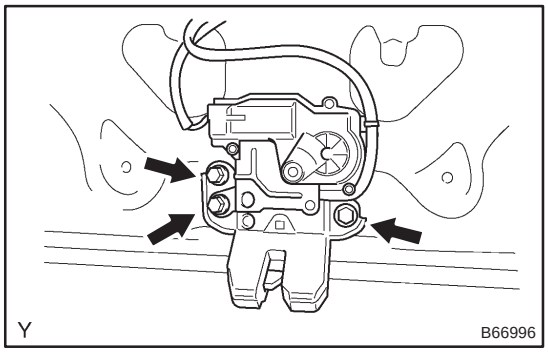

9. REMOVE BACK DOOR LOCK ASSY

(a) Disconnect the connector.

(b) Remove the 3 bolts and door lock.

10. REMOVE BACK DOOR STAY ASSY LH (See page 75–47)

11. REMOVE BACK DOOR STAY ASSY RH (See page 75–47)

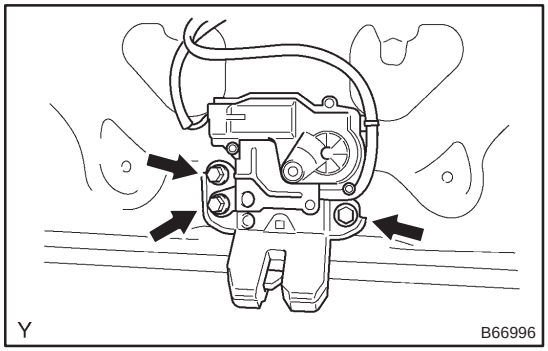

12. INSTALL BACK DOOR LOCK ASSY

(a) Install the door lock with the 3 bolts.
Torque: 8.0 N·m (82 kgf·cm, 71 in.·lbf)

(b) Connect the door lock connector

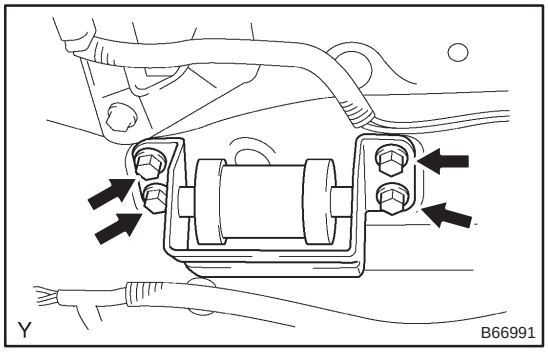

13. INSTALL BACK DOOR DAMPER ASSY

(a) Install the damper with the 4 bolts.
Torque: 5.5 N·m (56 kgf·cm, 49 in.·lbf)

BACK DOOR (WAGON MODELS)

COMPONENTS

750N7–01

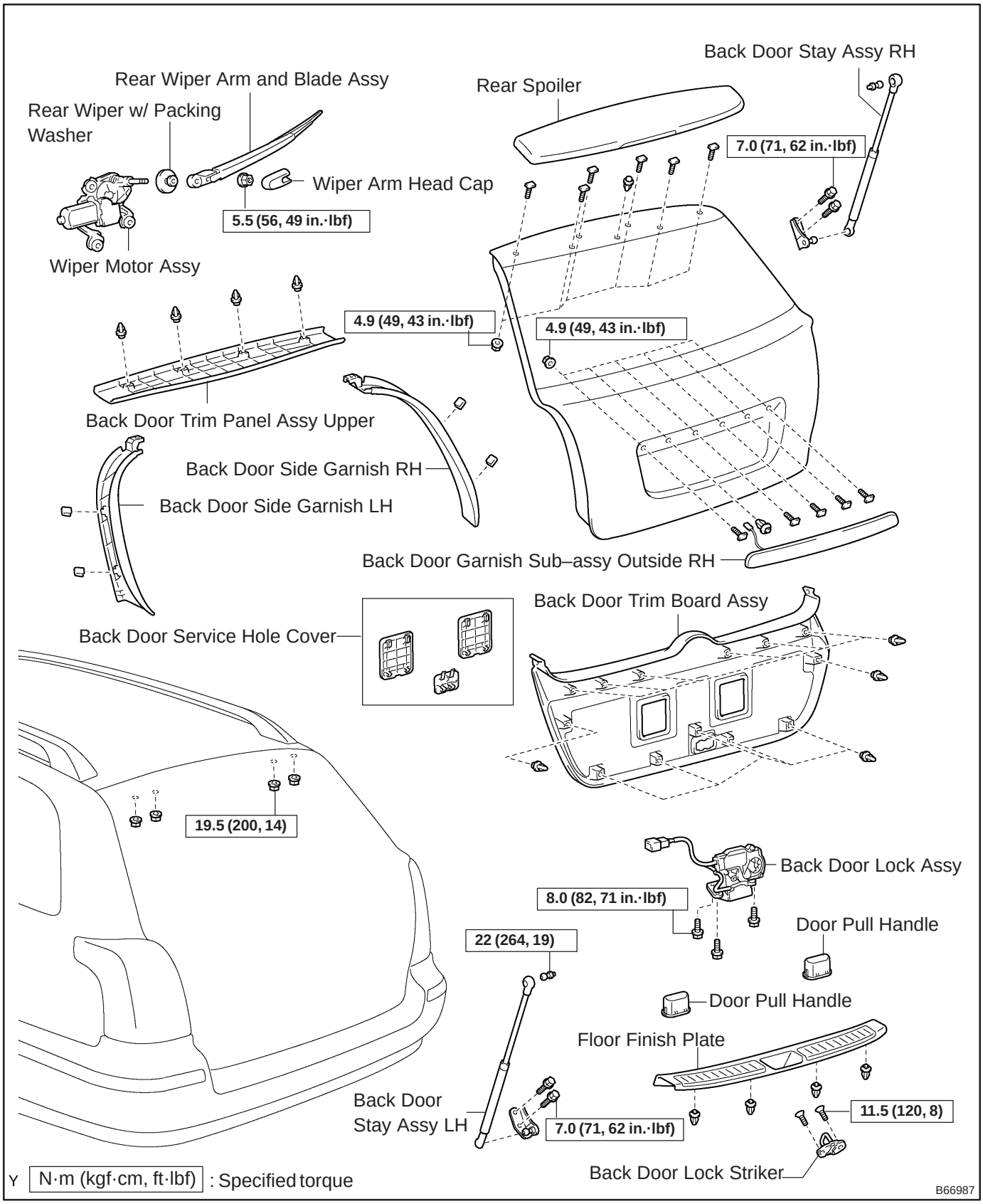

750N8–01

ADJUSTMENT

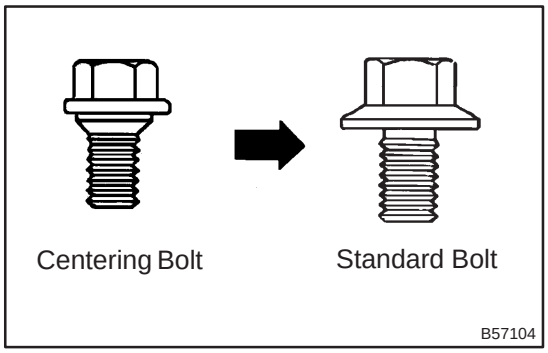

HINT:
Because a centering bolt is used as a door hinge mounting bolt on the body side and door side, the door can not be adjusted with them on. Substitute a bolt with a washer for the centering bolt.

1. INSPECT BACK DOOR PANEL SUB–ASSY

(a) Check that the clearance is within the standard range.

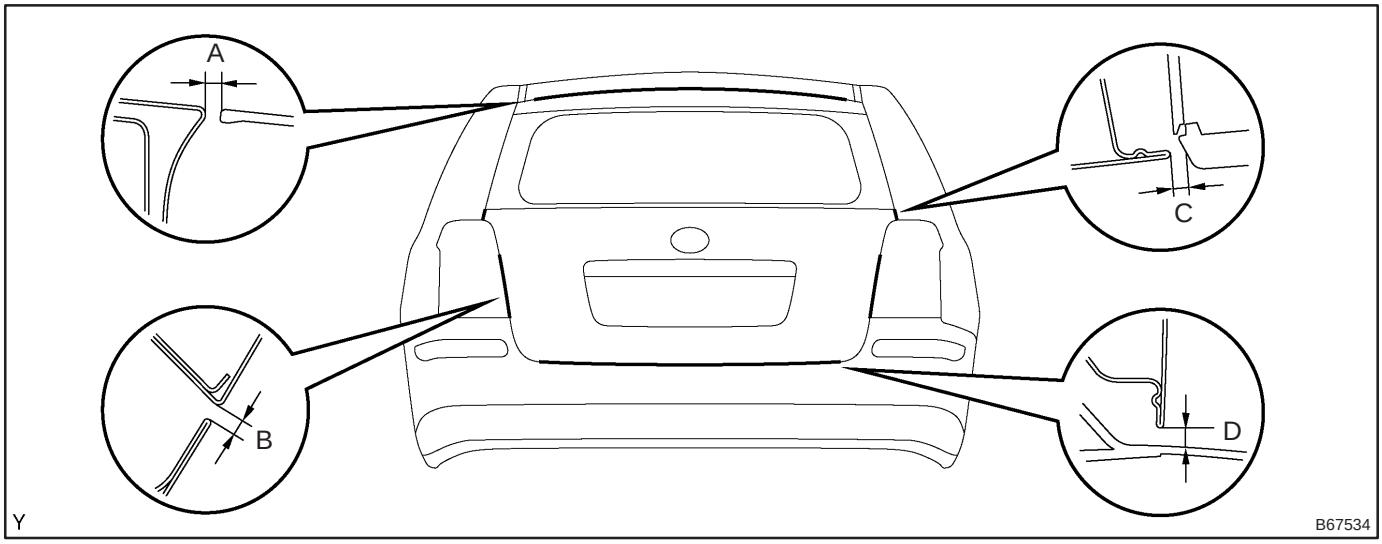

Standard range:

A	7.5 ± 1.5 mm (0.295 ± 0.059 in.)
B	4.9 ± 1.5 mm (0.193 ± 0.059 in.)
C	5.4 ± 1.5 mm (0.213 ± 0.059 in.)
D	6.0 ± 1.5 mm (0.236 ± 0.059 in.)

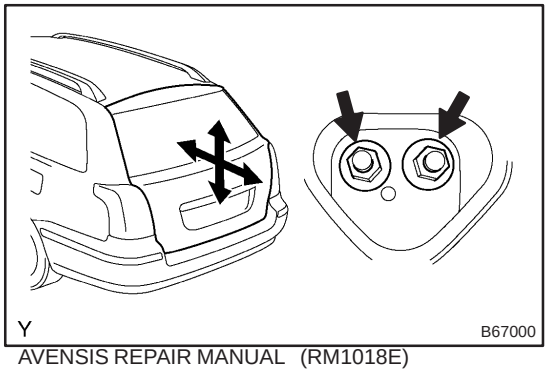

2. ADJUST BACK DOOR PANEL SUB–ASSY

(a) Adjust the door horizontally and forward/rearward by loosening the body side hinge bolts.

(b) Tighten the body side hinge bolts after the adjustment.
Torque: 26 N·m (265 kgf·cm, 19 ft·lbf)

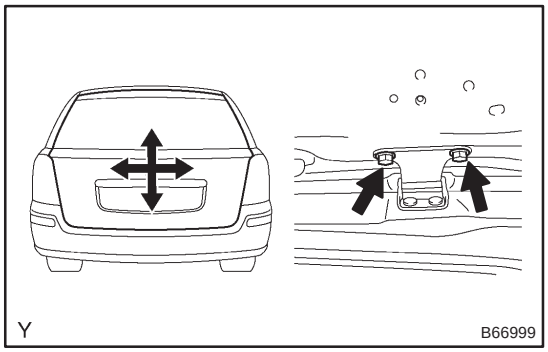

(c) Horizontally and vertically adjust the door by loosening the door side hinge bolts.

(d) Tighten the door side hinge bolts after the adjustment.
Torque: 26 N·m (265 kgf·cm, 19 ft·lbf)

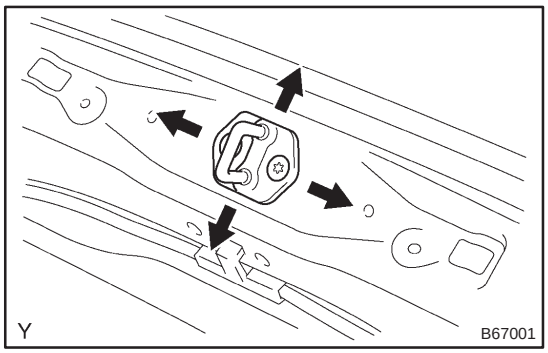

(e) Remove the floor finish plate (See page 76–54)

(f) Adjust the striker position by slightly loosening the striker mounting 2 screws and hitting the striker with a plastic–faced hammer.

(g) Tighten the striker mounting screws after the adjustment.
Torque: 23 N·m (235 kgf·cm, 17 ft·lbf)

750N9–01

OVERHAUL

HINT:

The installation is in the reverse order of the removal. However, when there is a special point concerning the installation, it is indicated.

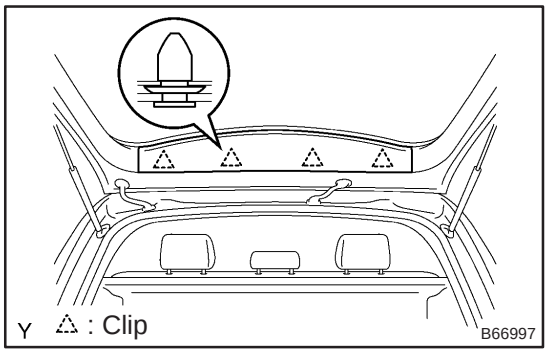

1. REMOVE BACK DOOR TRIM PANEL ASSY UPPER

(a) Using a screwdriver, disengage the 4 clips and remove the trim panel.

HINT:

Tape the screwdriver tip before use.

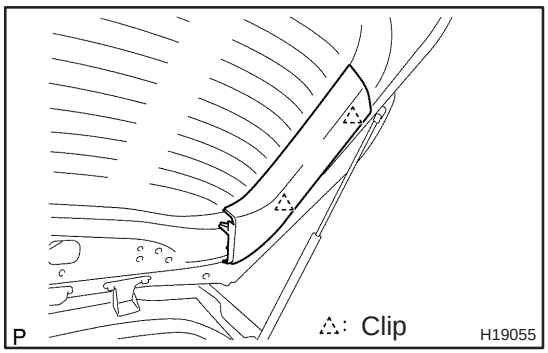

2. REMOVE BACK DOOR SIDE GARNISH LH

(a) Using a screwdriver, disengage the 2 clips and remove the side garnish.

HINT:

Tape the screwdriver tip before use.

3. REMOVE BACK DOOR SIDE GARNISH RH

HINT:

Use the same procedures described for the LH side.

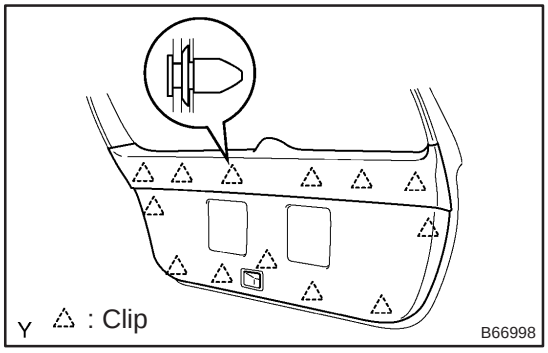

4. REMOVE BACK DOOR TRIM BOARD ASSY

(a) Using a screwdriver, disengage the 13 clips and remove the trim board.

HINT:

Tape the screwdriver tip before use.

(b) Remove the 3 service hole covers.

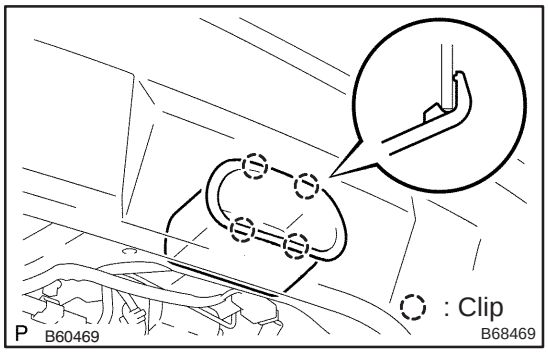

5. REMOVE DOOR PULL HANDLE

(a) Using a screwdriver, disengage the 4 claws and remove the pull handle.

6. REMOVE REAR SPOILER (See page 76–30)

7. REMOVE REAR WIPER MOTOR ASSY (See page 66–17)

8. REMOVE BACK DOOR GARNISH SUB–ASSY OUTSIDE RH (See page 76–29)

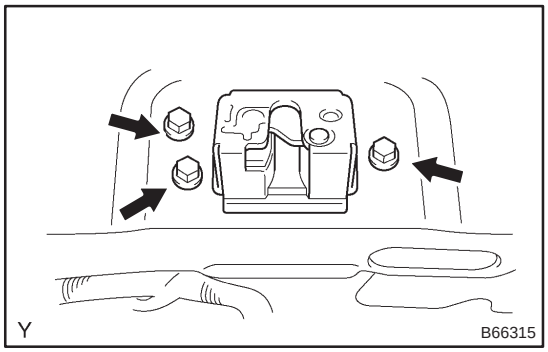

9. REMOVE BACK DOOR LOCK ASSY

(a) Disconnect the door lock connector.

(b) Remove the 3 bolts and door lock.

10. BACK DOOR STAY ASSY LH (See page 65–26)

11. BACK DOOR STAY ASSY RH (See page 65–26)

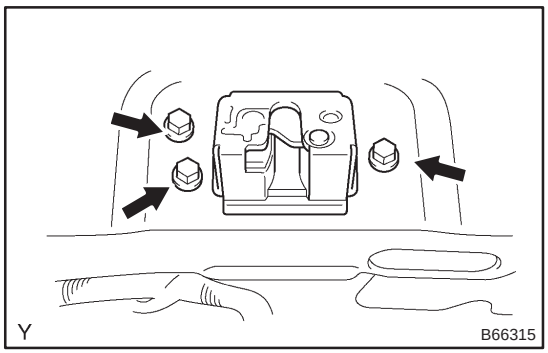

12. INSTALL BACK DOOR LOCK ASSY

(a) Install the door lock with the 3 bolts.

Torque: 8.0 N·m (82 kgf·cm, 71 in.·lbf)

(b) Connect the door lock connector.

BACK DOOR STAY

750NA–01

REPLACEMENT

HINT:
Use the same procedures on the RH side as on the LH side.

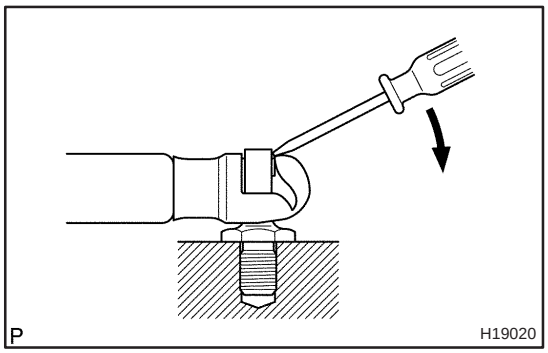

1. REMOVE BACK DOOR STAY ASSY LH

(a) Using a screwdriver, remove the stay from the door panel.

HINT:

- Remove the door stay while supporting the back door with your hands.
- Tape the screwdriver tip before use.

(b) Remove the 2 bolts and stay from the body.

2. INSTALL BACK DOOR STAY ASSY LH

(a) Install the stay with the bolts.

Torque:
22 N·m (264 kgf·cm, 19 ft·lbf) on door side
7.0 N·m (71 kgf·cm, 63 in.·lbf) on body side

750NB–01

DISPOSAL

HINT:

Use the same procedures on the RH side as on the LH side.

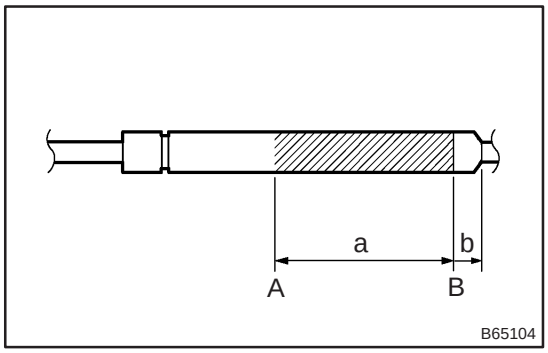

1. DISPOSE OF BACK DOOR STAY ASSY LH

(a) Horizontally fix the stay in a vise with the piston–rod pulled out.

(b) Wearing safety glasses, gradually cut a part between A and B as shown in the illustration using a metal saw to gradually release the gas.

Standard dimension:

a	80 mm (3.15 in.)
b	20 mm (0.80 in.)

NOTICE:

Although the gas inside the stay is colorless, odorless and harmless, there is a possibility that metal debris from cutting could be blown out. Therefore, cover it with clothes or thr like.

FRONT BUMPER

COMPONENTS

760WX–01

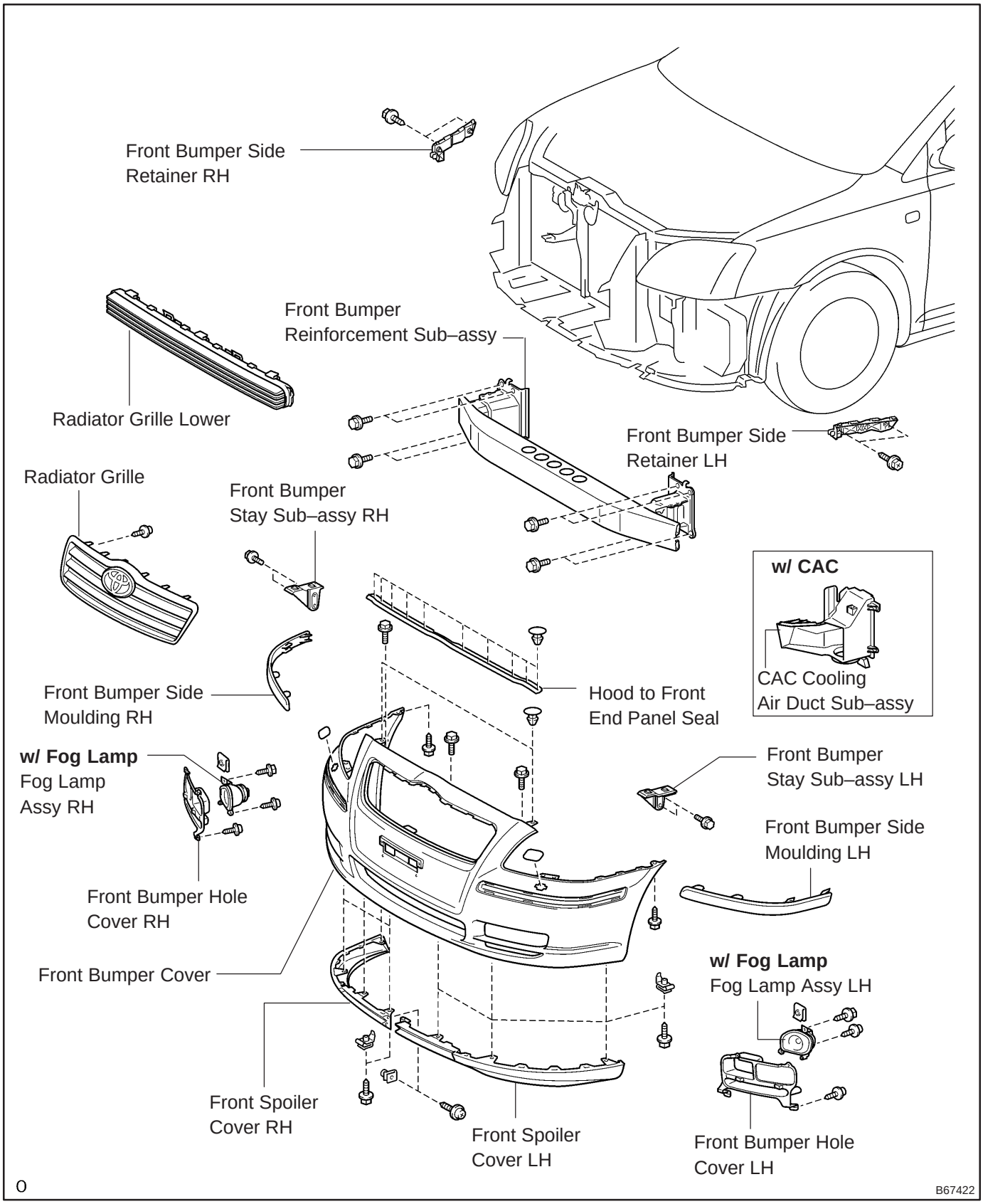

w/ Headlamp Cleaner

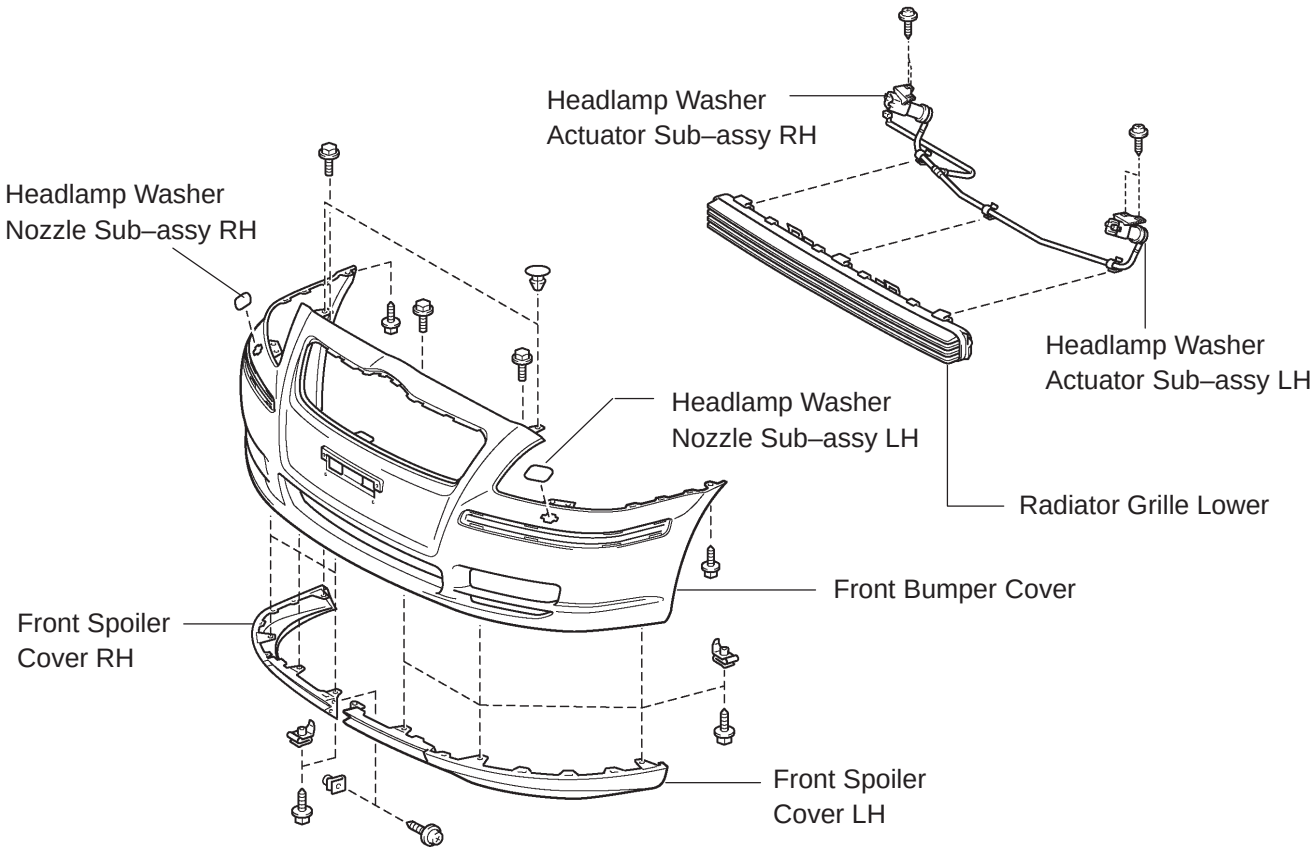

REPLACEMENT

HINT:

The installation is in the reverse order of the removal. However, when there is a special point concerning the installation, it is indicated.

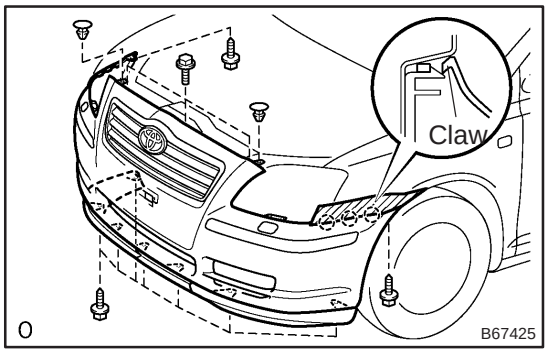

1. REMOVE FRONT BUMPER COVER

(a) Put protective tape under the front fender.

HINT:

Because the spoiler covers LH and RH are assembled, remove them together.

(b) Remove the spoiler.
  (1) Remove the 9 screws and 6 claws.
  (2) Remove the 6 retainers.
  (3) Remove the spoiler covers LH and RH together.
  (4) Remove the bolt and separate the spoiler cover RH from the LH.

(c) Remove the 3 bolts and 2 clips.

(d) Using a screwdriver, disengage the 6 claws and remove the bumper cover.

HINT:

Tape the screwdriver tip before use.

(e) w/ Fog lamp:
  Disconnect the fog lamp connectors.

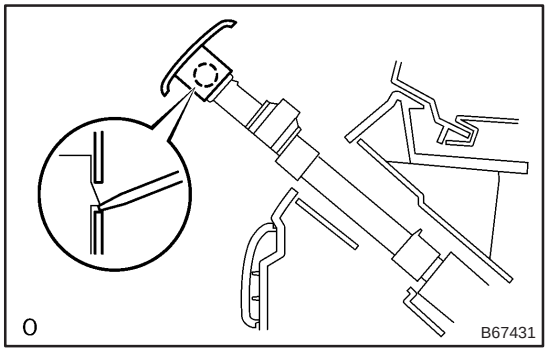

2. REMOVE HEADLAMP WASHER ACTUATOR SUB–ASSY LH (W/ HEADLAMP CLEANER)

(a) Remove the washer hose clip.

(b) Using a screwdriver, pry out the front washer nozzle.

HINT:

Tape the screwdriver tip before use.

(c) Remove the 2 screws and actuator.

3. REMOVE HEADLAMP WASHER ACTUATOR SUB–ASSY RH (W/ HEADLAMP CLEANER)

HINT:

Use the same procedures described for the LH side.

4. REMOVE INTERCOOLER COOLING AIR DUCT SUB–ASSY (W/ CAC 1CD–FTV ENGINE TYPE)

(a) Remove the 3 screws and air duct.

5. REMOVE FRONT BUMPER REINFORCEMENT SUB–ASSY

(a) Using a screwdriver, remove the wire harness.

(b) Remove the 8 bolts and reinforcement.

6. REMOVE FRONT BUMPER SIDE RETAINER LH

(a) Using a screwdriver, remove the 2 screws and retainer.

HINT:

Tape the screwdriver tip before use.

7. REMOVE FRONT BUMPER SIDE RETAINER RH

HINT:

Use the same procedures described for the LH side.

8. REMOVE FRONT BUMPER STAY SUB–ASSY LH

(a) Remove the 2 bolts and stay.

9. REMOVE FRONT BUMPER STAY SUB–ASSY RH

(a) Remove the 2 bolts and stay.

10. REMOVE FOG LAMP ASSY LH (W/ FOG LAMP)

(a) Remove the 2 screws and fog lamp.

11. REMOVE FOG LAMP ASSY RH (W/ FOG LAMP)

(a) Remove the 2 screws and fog lamp.

12. REMOVE FRONT BUMPER HOLE COVER LH

13. REMOVE FRONT BUMPER HOLE COVER RH

14. REMOVE FRONT BUMPER SIDE MOULDING LH

(a) Using a screwdriver, disengage the 9 claws and remove the retainer.

HINT:

Tape the screwdriver tip before use.

15. REMOVE FRONT BUMPER SIDE MOULDING RH

HINT:

Use the same procedures described for the LH side.

16. REMOVE HOOD TO FRONT END PANEL SEAL

(a) Using a screwdriver, remove the 10 clips and panel seal.

HINT:

Tape the screwdriver tip before use.

17. REMOVE RADIATOR GRILLE

(a) Using a screwdriver, disengage the 13 claws and remove the 2 screws and radiator grille.

HINT:

Tape the screwdriver tip before use.

18. REMOVE RADIATOR GRILLE LOWER

(a) Using a screwdriver, disengage the 10 claws and remove the grille lower.

HINT:

Tape the screwdriver tip before use.

19. INSTALL FRONT BUMPER REINFORCEMENT SUB–ASSY

(a) Install the reinforcement with the 8 bolts.

(b) Install the wire harness.

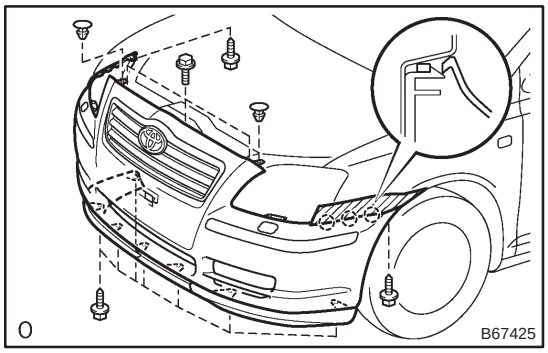

20. INSTALL FRONT BUMPER COVER

(a) w/ Fog lamp:
Connect the fog lamp connector.

(b) Engage the 6 claws and install the bumper cover.

(c) Install the 3 bolts and 2 clips.

(d) Install the spoiler.

(1) Install the spoiler covers LH and RH together.

(2) Install the 6 retainers.

(3) Install the 9 screws and 10 claws.

REAR BUMPER (SEDAN/LIFTBACK)

COMPONENTS

760X1–01

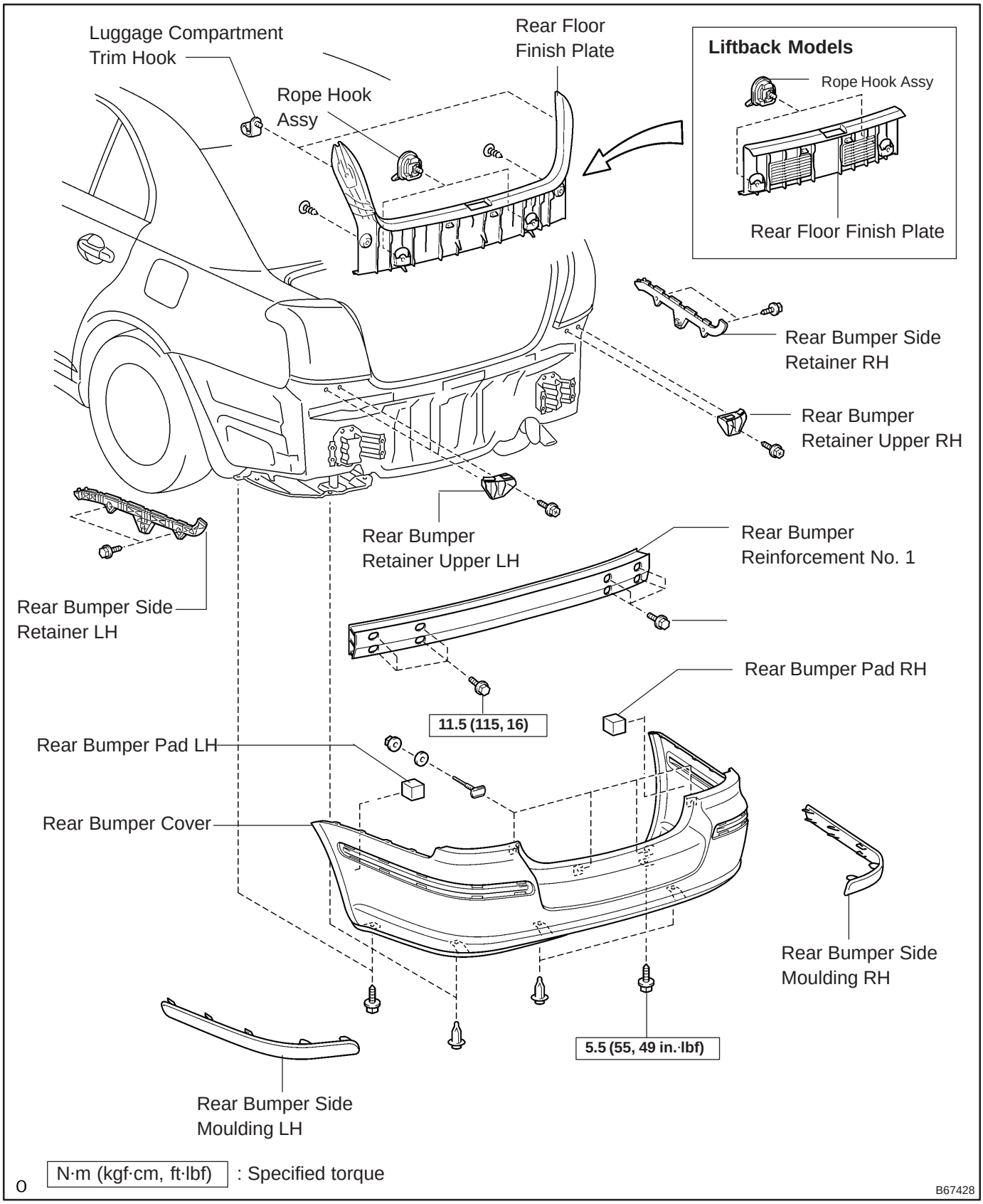

760X2–01

REPLACEMENT

HINT:

The installation is in the reverse order of the removal. However, when there is a special point concerning the installation, it is indicated.

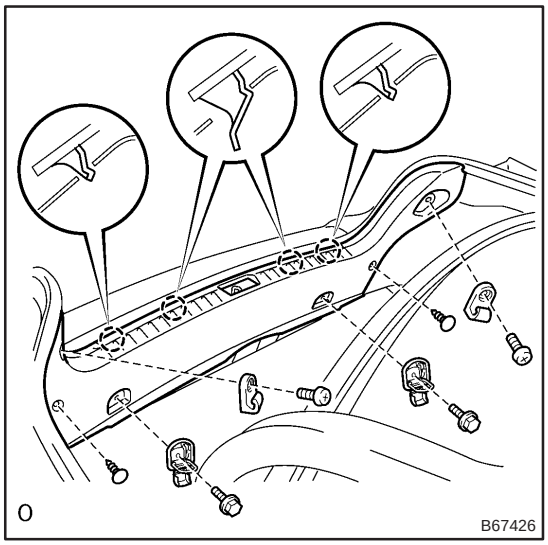

1. REMOVE REAR FLOOR FINISH PLATE (SEDAN MODELS)

(a) Remove the 2 hooks and 2 rope hooks.

(b) Using a moulding remover, remove the 2 clips and finish plate.

(c) Using a screwdriver, disengage the 4 claws and finish plate.

HINT:

Tape the screwdriver tip before use.

2. REMOVE REAR FLOOR FINISH PLATE (LIFTBACK MODELS)

(a) Remove the 2 bolts and 2 rope hooks.

(b) Using a screwdriver, disengage the 4 claws and finish plate.

HINT:

Tape the screwdriver tip before use.

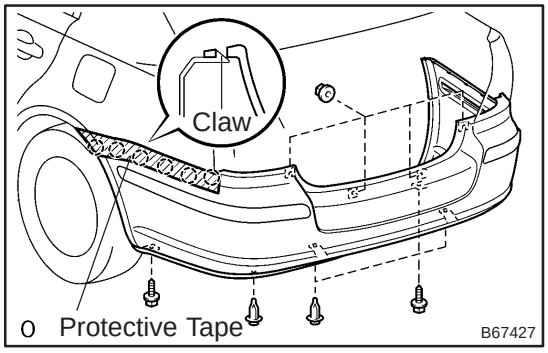

3. REMOVE REAR BUMPER COVER

(a) Put protective tape under the quarter panel.

(b) Remove the 2 screws, 4 nuts and 3 clips.

(c) Using a screwdriver, disengage the 14 claws and remove the bumper.

HINT:

Tape the screwdriver tip before use.

4. REMOVE REAR BUMPER REINFORCEMENT NO.1

(a) Remove the 8 bolts and reinforcement.

5. REMOVE REAR BUMPER SIDE RETAINER LH

(a) Remove the 2 screws.

(b) Using a screwdriver, remove the retainer.

HINT:

Tape the screwdriver tip before use.

6. REMOVE REAR BUMPER SIDE RETAINER RH

HINT:

Use the same procedures described for the LH side.

7. REMOVE REAR BUMPER RETAINER UPPER LH

(a) Remove the 2 screws.

(b) Using a screwdriver, remove the retainer.

HINT:

Tape the screwdriver tip before use.

8. REMOVE REAR BUMPER RETAINER UPPER RH

HINT:

Use the same procedures described for the LH side.

9. REMOVE REAR BUMPER SIDE MOULDING LH

(a) Using a screwdriver, disengage the 10 claws and remove the moulding.

HINT:

Tape the screwdriver tip before use.

10. REMOVE REAR BUMPER SIDE MOULDING RH

HINT:

Use the same procedures described for the LH side.

11. INSTALL REAR BUMPER REINFORCEMENT NO.1

(a) Install the reinforcement with the 8 bolts.

Torque: 11.5 N·m (115 kgf·cm, 16 ft·lbf)

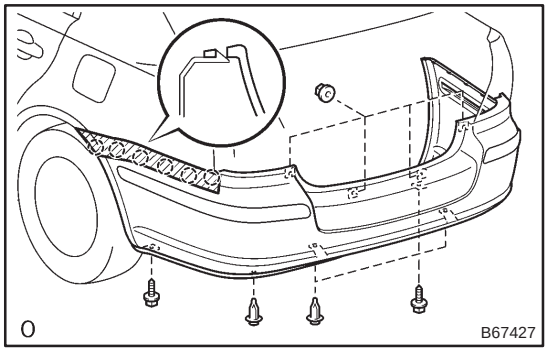

12. INSTALL REAR BUMPER COVER

(a) Install the bumper cover with the 4 nuts, 2 screws and 3 clips.

Torque: 5.5 N·m (55 kgf·cm, 49 in.·lbf) for screw

REAR BUMPER (WAGON MODELS)

760X3–01

COMPONENTS

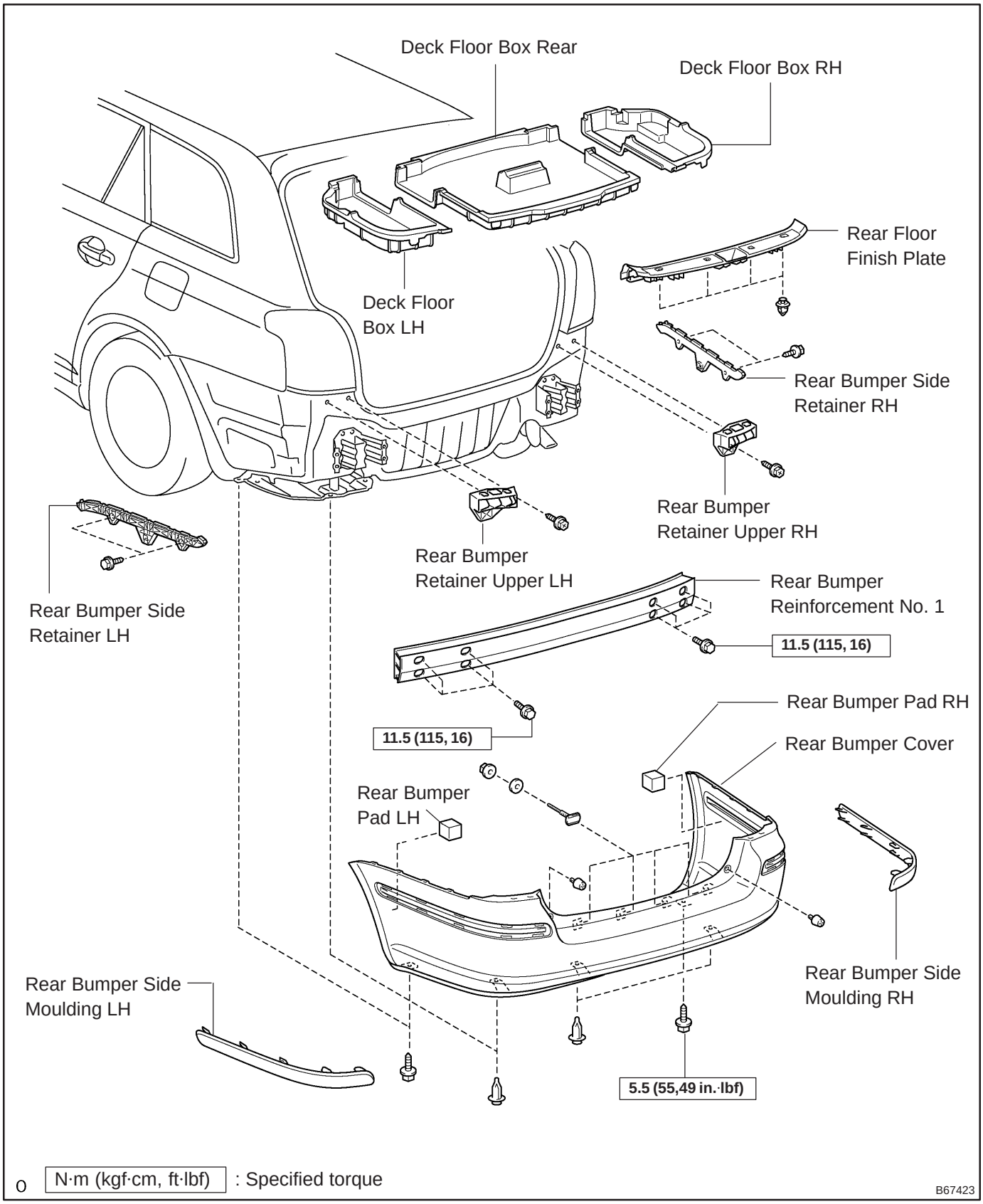

760X4–01

REPLACEMENT

HINT:

The installation is in the reverse order of the removal. However, when there is a special point concerning the installation, it is indicated.

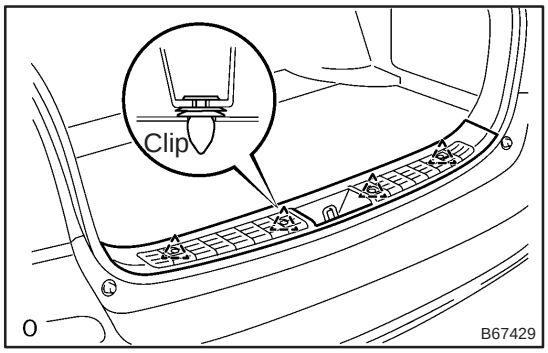

1. REMOVE REAR FLOOR FINISH PLATE

(a) Using a screwdriver, remove the 4 clips and finish plate.

HINT:

Tape the screwdriver tip before use.

2. REMOVE DECK FLOOR BOX REAR (See page 76–54)

3. REMOVE DECK FLOOR BOX LH (See page 76–54)

4. REMOVE DECK FLOOR BOX RH (See page 76–54)

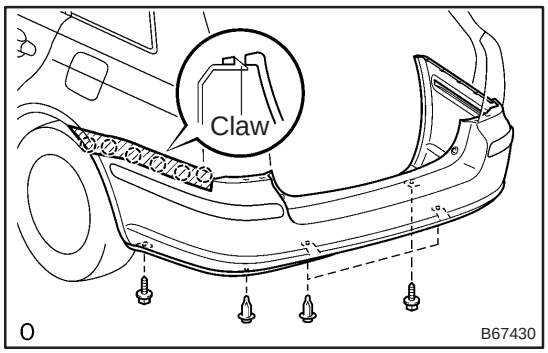

5. REMOVE REAR BUMPER COVER

(a) Put protective tape under the quarter panel.

(b) Remove the 2 screws, 3 clips and 4 nuts.

(c) Using a screwdriver, disengage the 16 claws and remove the bumper cover.

HINT:

Tape the screwdriver tip before use.

6. REMOVE REAR BUMPER REINFORCEMENT NO.1

(a) Remove the 8 bolts and reinforcement.

7. REMOVE REAR BUMPER SIDE RETAINER LH

(a) Remove the 2 screws.

(b) Using a screwdriver, disengage the 3 claws and remove the side retainer.

HINT:

Tape the screwdriver tip before use.

8. REMOVE REAR BUMPER SIDE RETAINER RH

HINT:

Use the same procedures described for the LH side.

9. REMOVE REAR BUMPER RETAINER UPPER LH

(a) Remove the 2 screws.

(b) Using a screwdriver, disengage the claw and remove the retainer upper.

HINT:

Tape the screwdriver tip before use.

10. REMOVE REAR BUMPER RETAINER UPPER RH

HINT:

Use the same procedures described for the LH side.

11. REMOVE REAR BUMPER SIDE MOULDING LH

(a) Using screwdriver, remove the moulding.

HINT:

Tape the screwdriver tip before use.

12. REMOVE REAR BUMPER SIDE MOULDING RH

HINT:

Use the same procedures described for the LH side.

13. INSTALL REAR BUMPER REINFORCEMENT NO.1

(a) Install the reinforcement with the 8 bolts.

Torque: 11.5 N·m (115 kgf·cm, 16 ft·lbf)

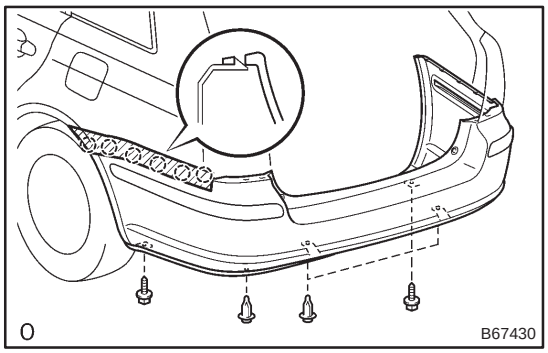

14. INSTALL REAR BUMPER COVER

(a) Install the bumper cover with the 2 screws, 3 clips and 4 nuts.

Torque: 5.5 N·m (55 kgf·cm, 49 in.·lbf) for screw

FUEL LID LOCK CONTROL ASSY

760X5–01

COMPONENTS

Sedan Models

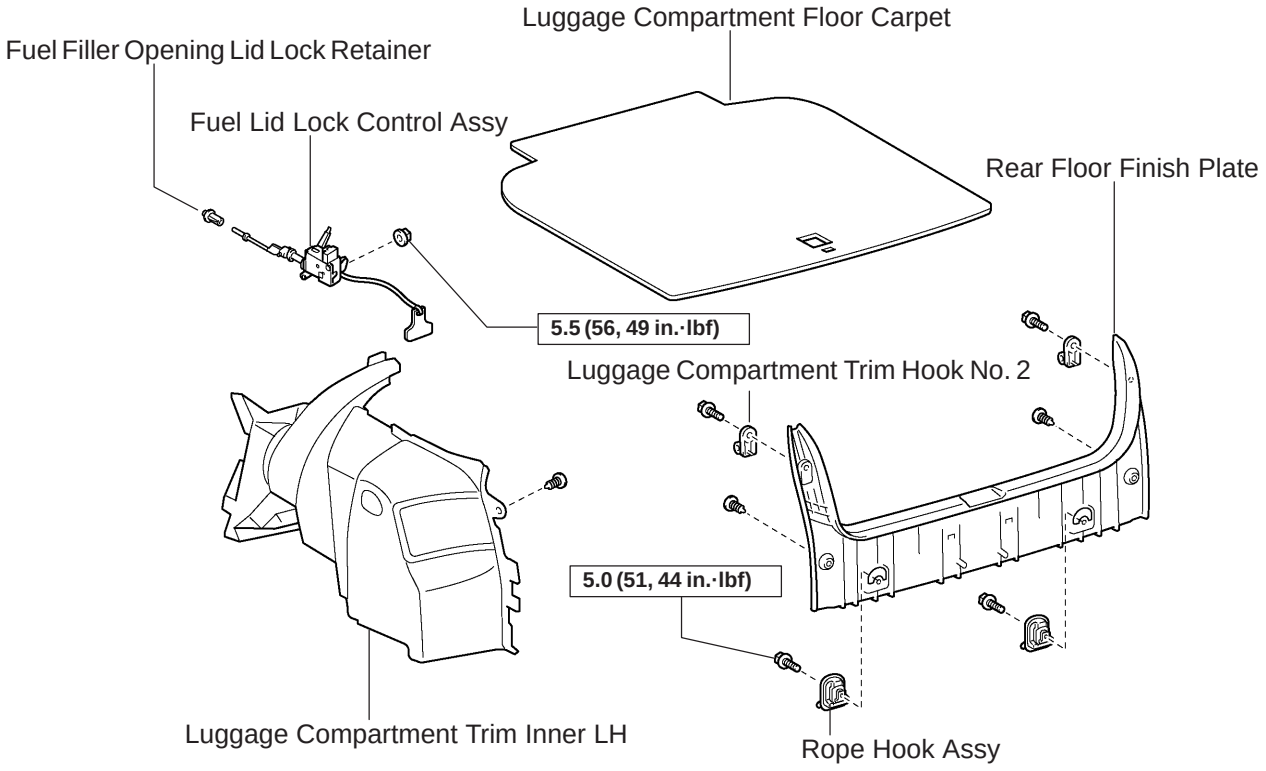

Y N·m (kgf·cm, ft·lbf) : Specified torque

B68948

Liftback Models

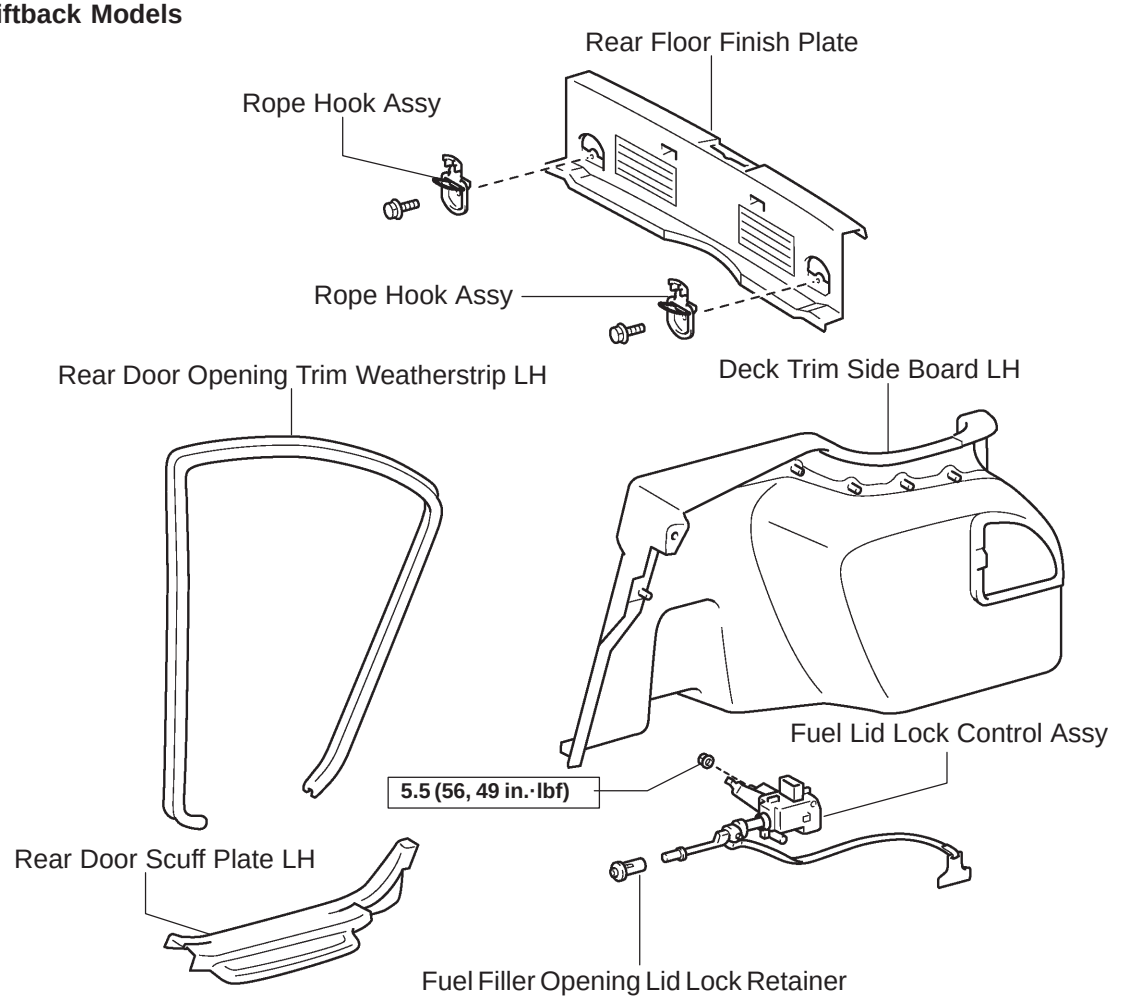

T N·m (kgf·cm, ft·lbf) : Specified torque

B68947

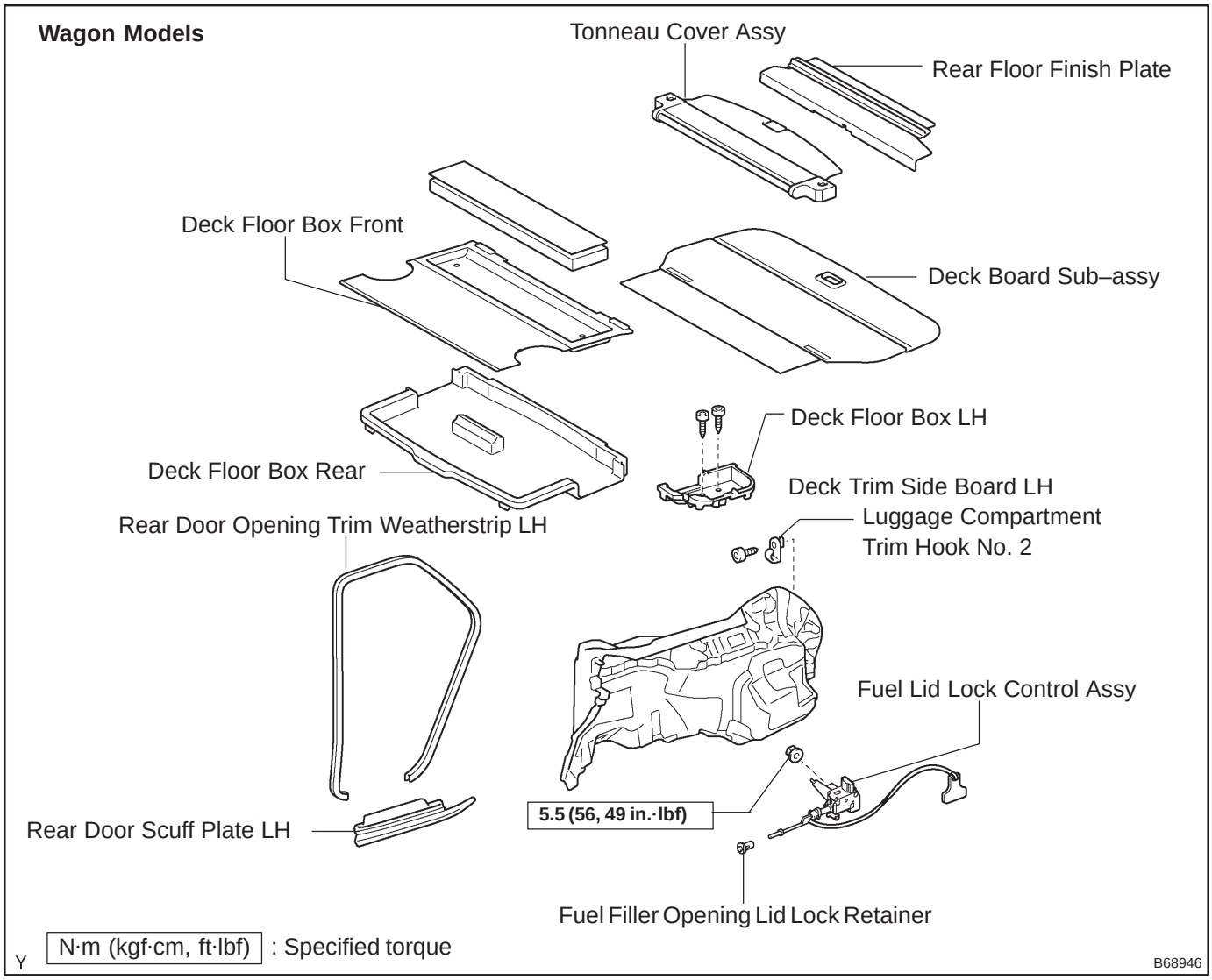
Wagon Models
Tonneau Cover Assy
Rear Floor Finish Plate
Deck Floor Box Front
Deck Board Sub–assy
Deck Floor Box LH
Deck Floor Box Rear
Deck Trim Side Board LH
Luggage Compartment
Trim Hook No. 2
Rear Door Opening Trim Weatherstrip LH
Fuel Lid Lock Control Assy
5.5 (56, 49 in.·lbf)
Rear Door Scuff Plate LH
Fuel Filler Opening Lid Lock Retainer
N·m (kgf·cm, ft·lbf) : Specified torque
Y
B68946

760X6–01

REPLACEMENT

HINT:

The installation is in the reverse order of the removal. However, when there is a special point concerning the installation, it is indicated.

1. REMOVE LUGGAGE COMPARTMENT TRIM COVER INNER LH (SEDAN MODELS) (See page 76–36)

(a) Remove the luggage compartment floor carpet.
(b) Remove the 2 rope hooks.
(c) Remove the rear floor finish plate.
(d) Remove the 2 luggage compartment trim hooks.
(e) Remove the luggage compartment trim inner.

2. REMOVE DECK TRIM SIDE BOARD LH (LIFTBACK MODELS) (See page 76–45)

(a) Remove the 2 rope hooks.
(b) Remove the rear floor finish plate.
(c) Remove the rear door opening trim weatherstrip LH.
(d) Remove the rear door scuff plate LH.
(e) Remove the deck trim side board.

3. REMOVE DECK TRIM SIDE PANEL ASSY LH (WAGON MODELS) (See page 76–54)

(a) Remove the rear door opening trim weatherstrip LH
(b) Remove the rear door scuff plate.
(c) Remove the tonneau cover.
(d) Remove the deck board.
(e) Remove the deck floor box rear.
(f) Remove the deck floor box LH.
(g) Remove the deck floor box front.
(h) Remove the rear floor finish plate.
(i) Remove the luggage compartment trim hook No. 2.
(j) Remove the deck trim side board.

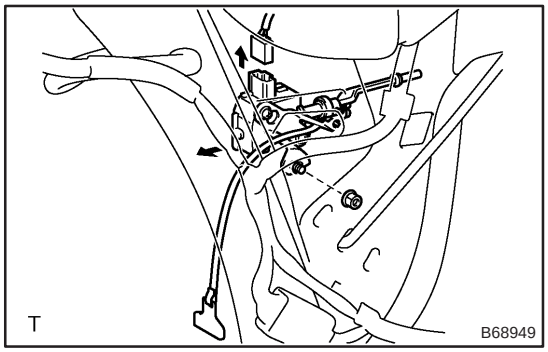

4. REMOVE FUEL LID LOCK CONTROL ASSY

(a) Disconnect the connector.
(b) Remove the nut and fuel lid lock control.

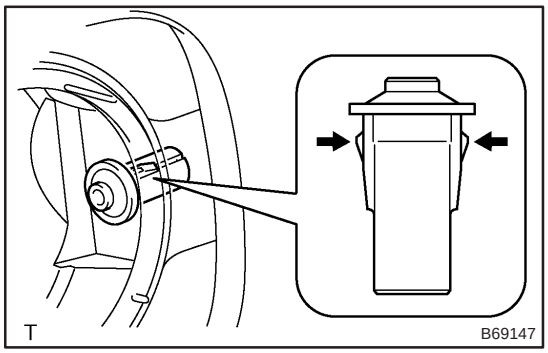

5. REMOVE FUEL FILLER OPENING LID LOCK RETAINER

(a) Remove the fuel filler opening lid lock retainer, as shown in the illustration.

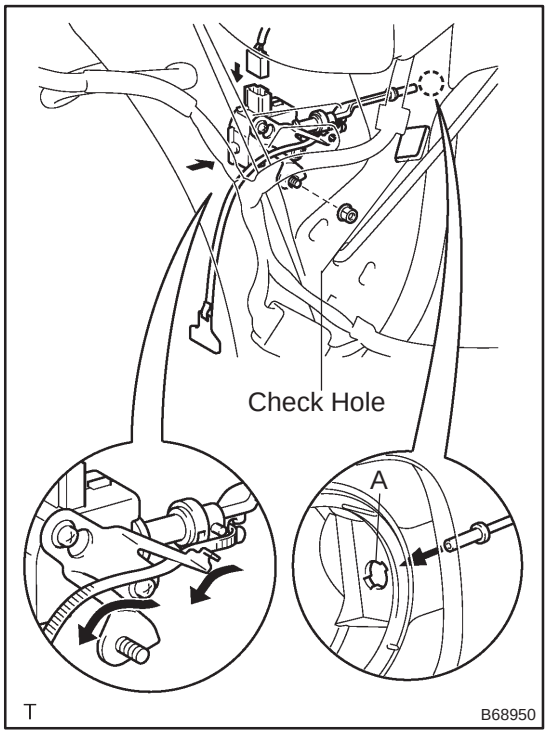

6. INSTALL FUEL LID LOCK CONTROL ASSY

(a) Install the fuel lid lock control with the the nut.
Torque: 8.0 N·m (82 kgf·cm, 71 in.·lbf)

HINT:

Check to see that the tip of the lock is securely insearted into hole A, looking inside through the check hole.

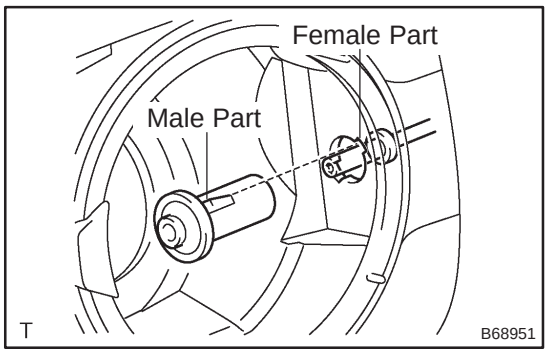

7. INSTALL FUEL FILLER OPENING LID LOCK RETAINER

(a) Install the fuel filler opening lid lock retainer as shown in the illustration.

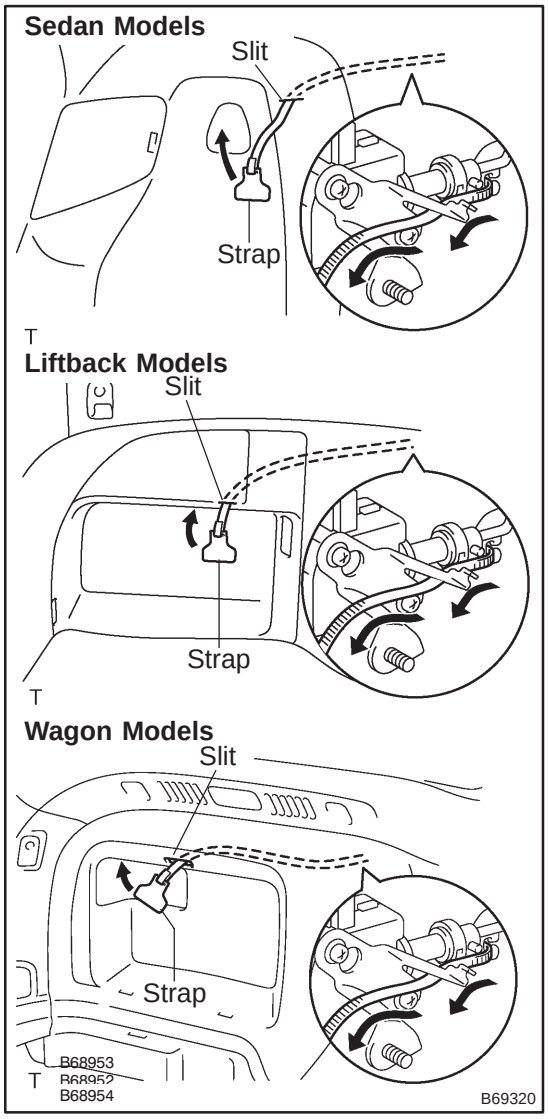

(b) Pass the strap through the slit on the trim as shown in the illustration.

(c) Attach a strap to the trim.

NAME PLATE

REPLACEMENT

760W4–01

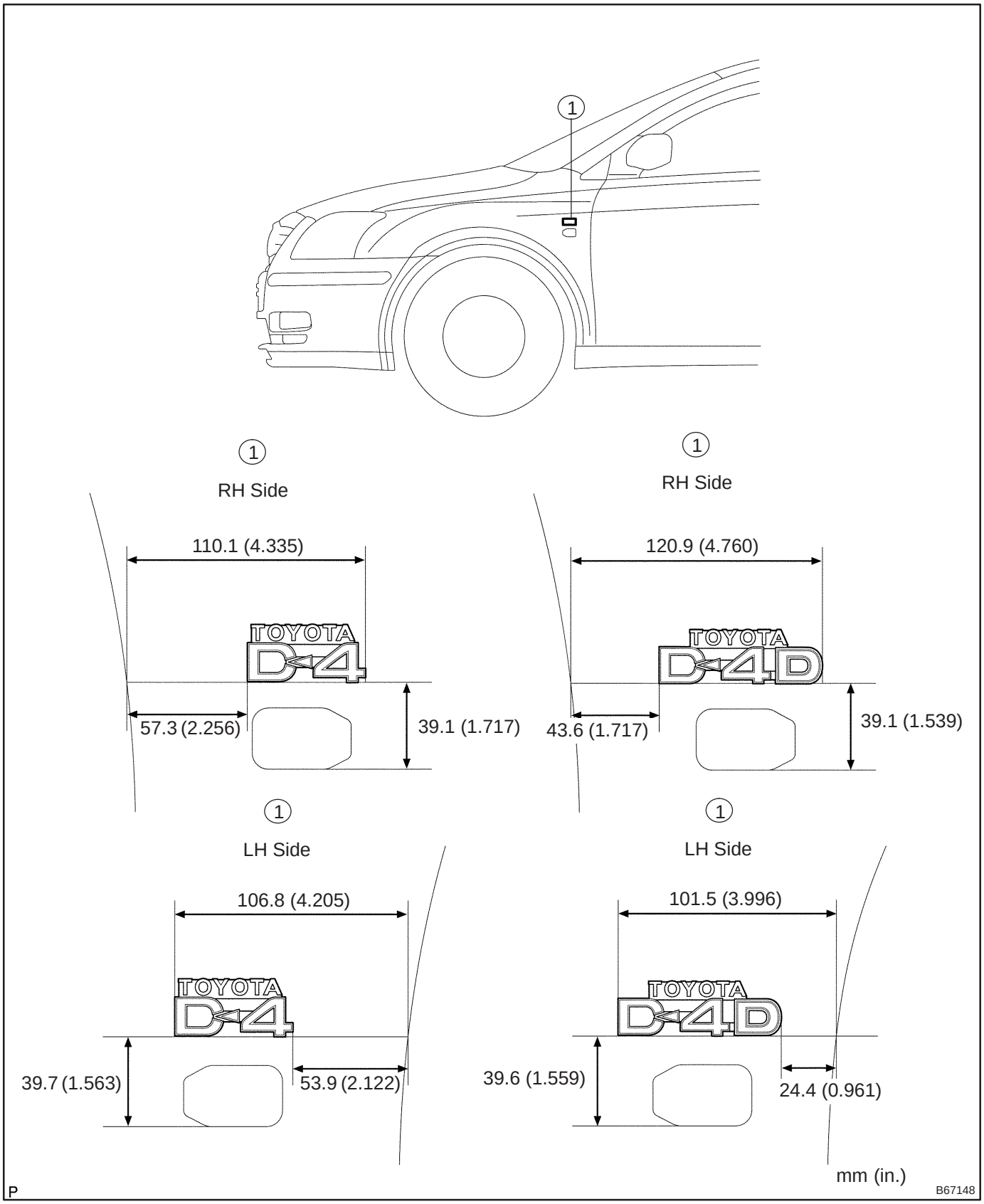

Sedan Models

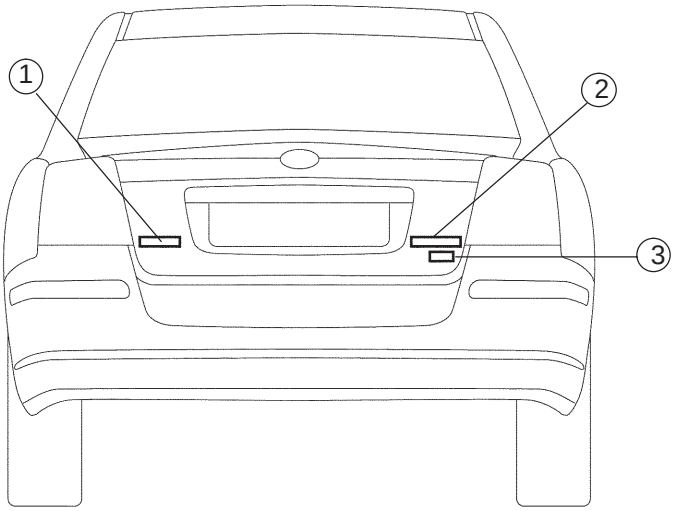

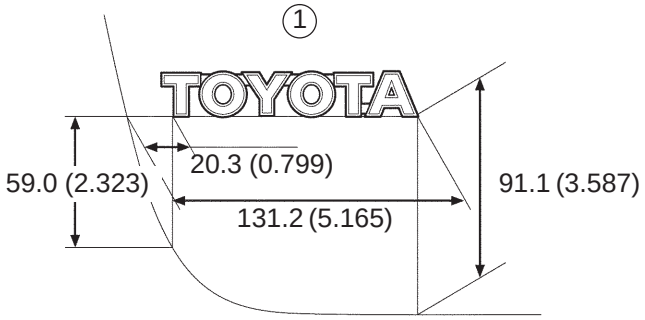

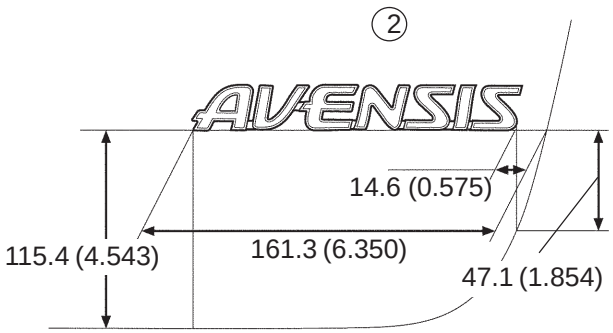

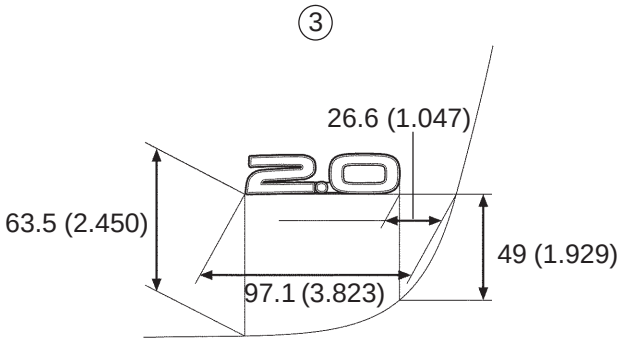

mm (in.)

P B67145

Liftback Models

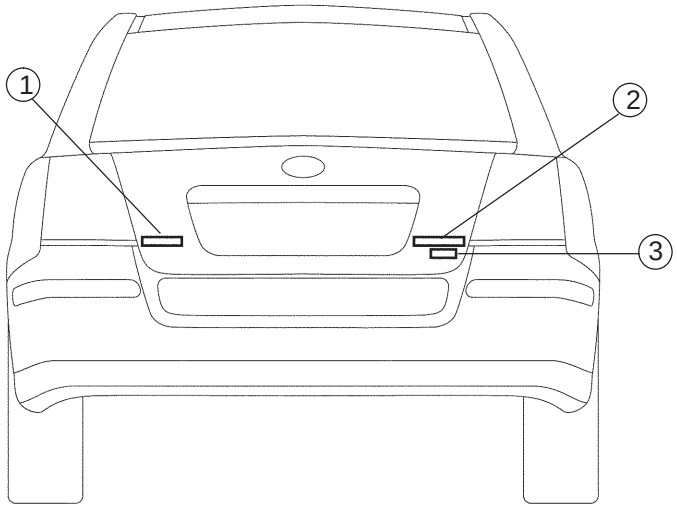

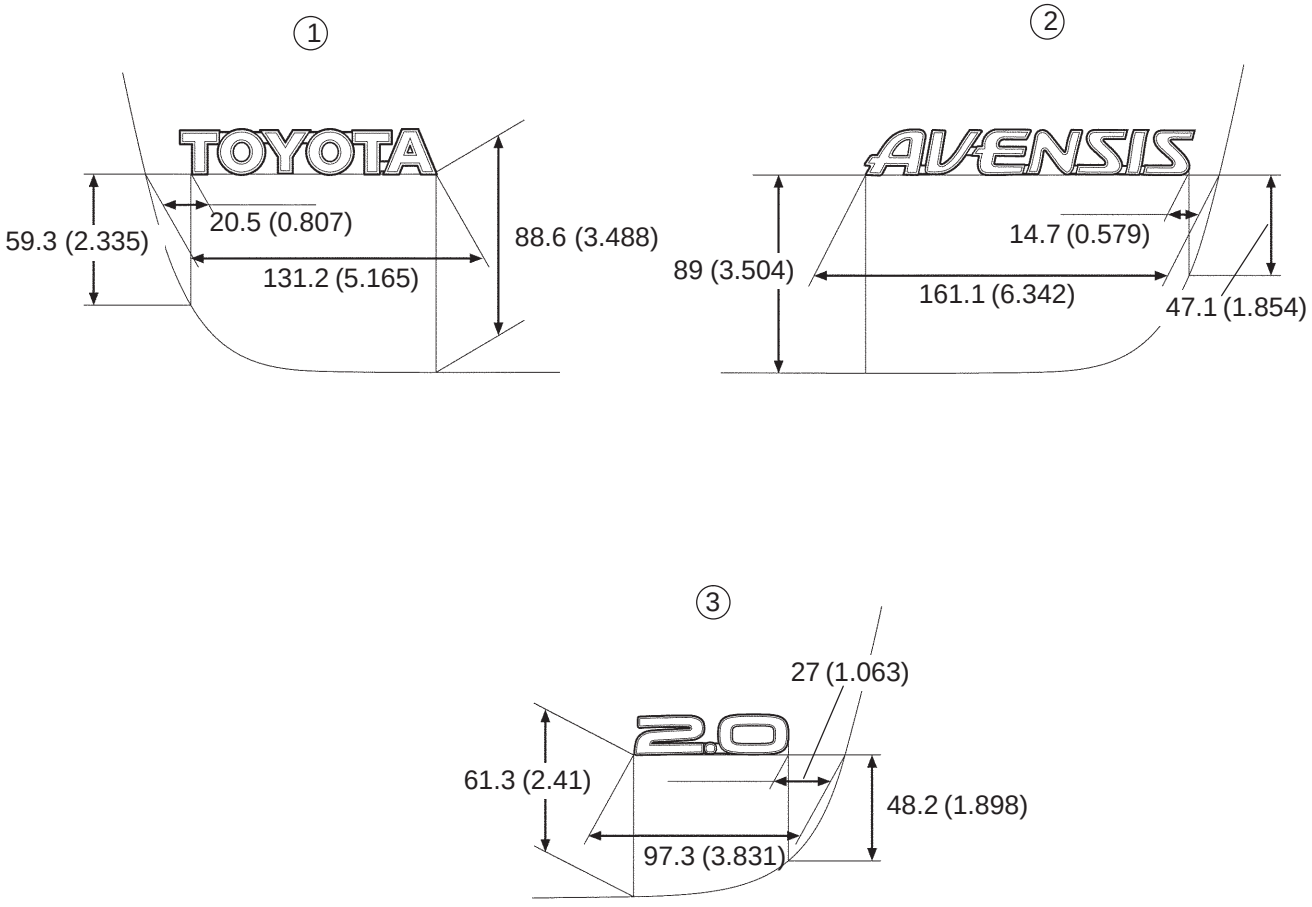

mm (in.)

P B67146

Wagon Models

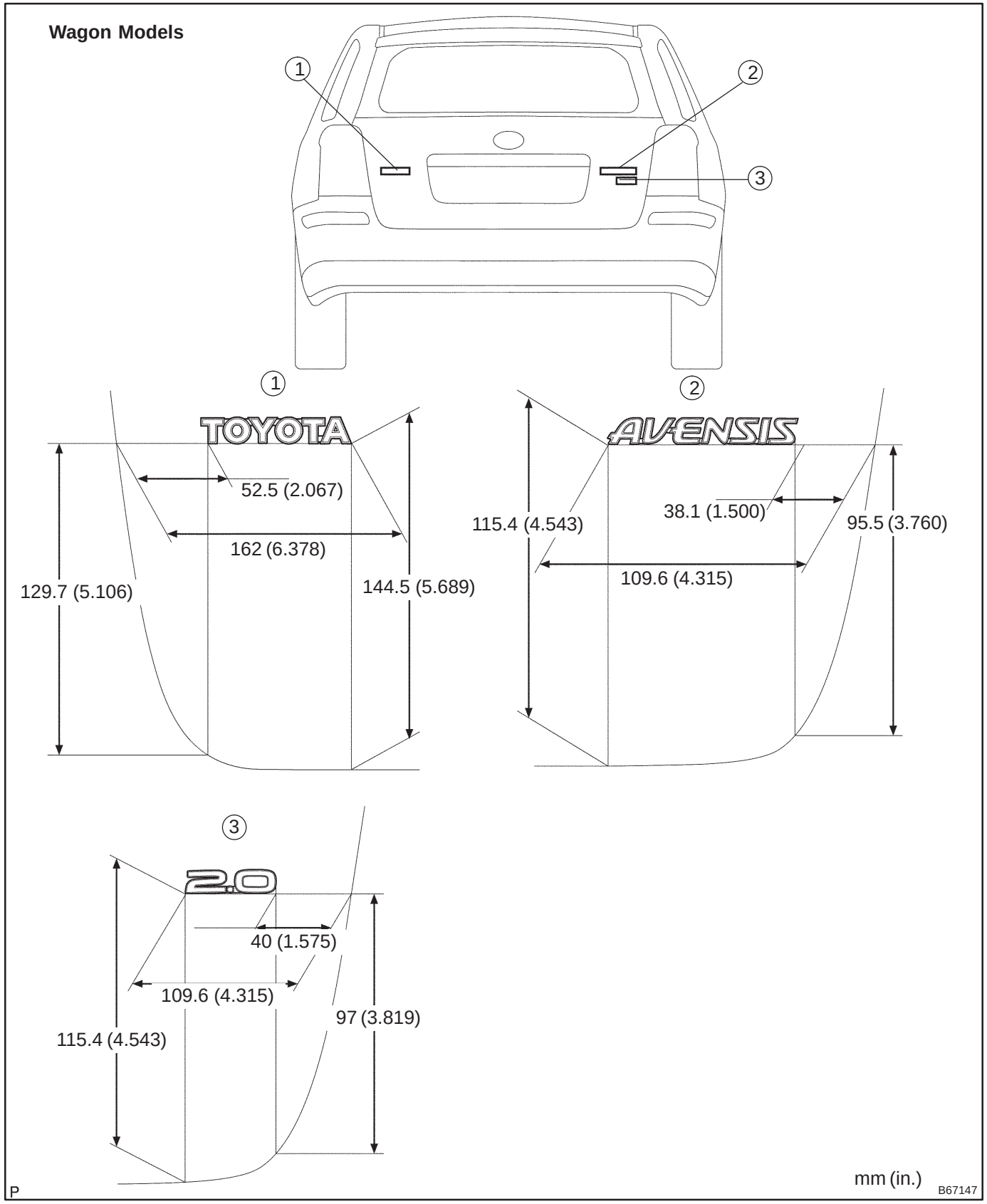

OUTSIDE MOULDING LH

760W5–01

REPLACEMENT

HINT:
On the RH side, use the same procedures as on the LH side.

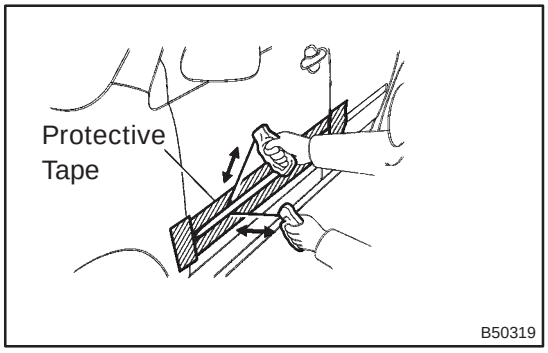

1. REMOVE OUTSIDE MOULDING LH

(a) Using a heat light, heat the moulding.
Heating temprature: 40 – 60°C (104 – 140°F)

NOTICE:

Do not heat the moulding excessively.

(b) Tie both the piano wire ends to a wooden block or a similar object.

(c) Scrape tape off by pulling the piano wire and remove the moulding with reference pins remaining on the moulding.

NOTICE:

- **If reusing the moulding, take care not to damage the moulding.**
- **Do not damage the body.**

(d) Remove the moulding.

2. INSTALL OUTSIDE MOULDING LH

(a) Using a heat light, heat the body surface.
Heating temprature: 40 – 60°C (104 – 140°F)

NOTICE:

Do not heat the body excessively.

(b) Remove the tape from the body.

(c) Wipe off the stains with cleaner.

(d) Clean the moulding (if reusing the moulding).

(1) Using a heat light, heat the moulding.
Heating temprature: 20 – 30°C (68 – 86°F)

NOTICE:

Do not heat the moulding excessively.

(2) Remove the tape from the moulding.

(3) Wipe off the stains with cleaner.

(4) Apply new double–sided tape to the moulding as shown in the illustration.

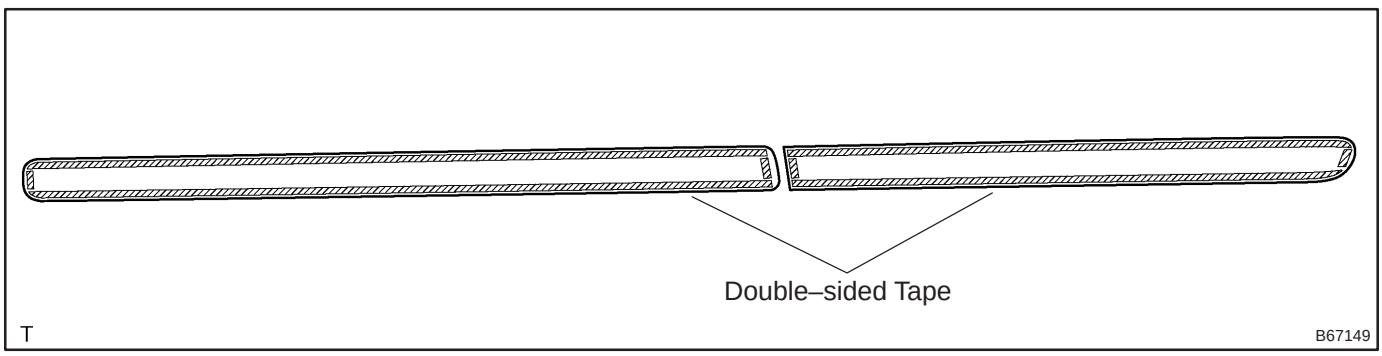

(e) Using a heat light, heat the body and moulding.
Heating temperature:

Body	40 – 60°C (104 – 140°F)
Moulding	20 – 30°C (68 – 86°F)

NOTICE:
Do not heat the body and moulding excessively.

(f) Remove the peeling paper from the face of the moulding and attach the moulding securely to the vehicle body.

NOTICE:
Be careful that dirt or foreign objects do not stick to adhesive part when removeing the peeling paper.

(g) Push the moulding to the body, as shown in the illustration.

NOTICE:
Do not apply excessive force onto the moulding. Instead, apply steady pressure with your thumbs.

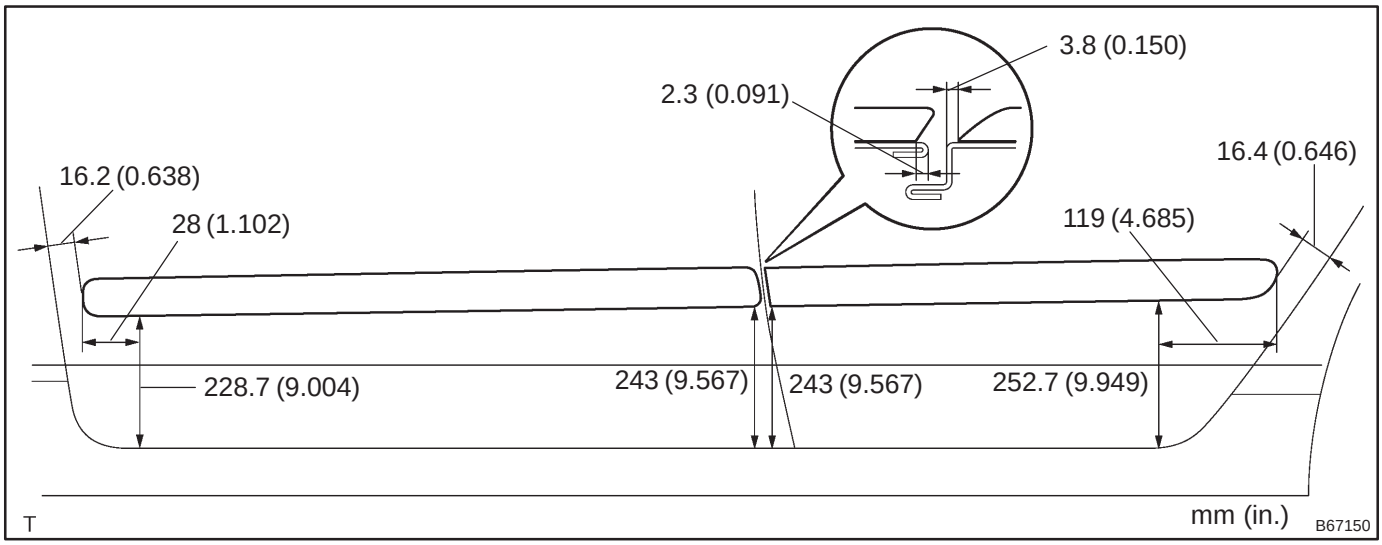

FRONT DOOR BELT MOULDING ASSY LH

760W6–01

REPLACEMENT

HINT:

- The installation is in the reverse order of the removal.
- On the RH side, use the same procedures as on the LH side.

1. **REMOVE REAR DOOR WINDOW REGULATOR HANDLE ASSY (W/O POWER WINDOW) (See page 75–8)**
2. **REMOVE FRONT DOOR LOWER FRAME BRACKET GARNISH LH (See page 75–8)**
3. **REMOVE FRONT DOOR TRIM BASE LH (See page 75–8)**
4. **REMOVE FUEL LID OPENER SWITCH (See page 75–8)**
5. **REMOVE POWER WINDOW REGULATOR SWITCH ASSY (W/ POWER WINDOW) (See page 75–8)**
6. **REMOVE FRONT DOOR TRIM BOARD SUB–ASSY LH (See page 75–8)**
7. **REMOVE FRONT DOOR INSIDE HANDLE SUB–ASSY LH (See page 75–8)**
8. **REMOVE FRONT DOOR GLASS WEATHERSTRIP INNER LH (See page 75–8)**

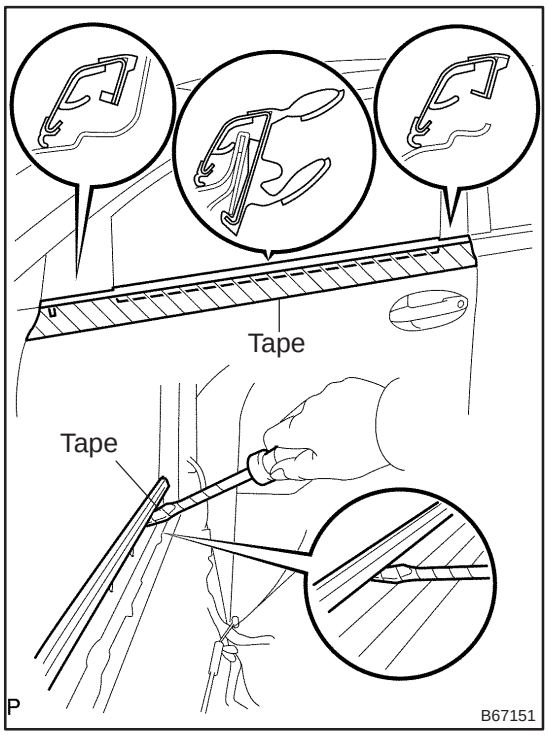

9. **REMOVE FRONT DOOR BELT MOULDING ASSY LH**

(a) Put protective tape under the moulding.

(b) Using a screwdriver or moulding remover, pry out the claws and remove the moulding.

HINT:

Tape the screwdriver tip before use.

REAR DOOR BELT MOULDING ASSY LH

760W7–01

REPLACEMENT

HINT:

- The installation is in the reverse order of the removal.
- On the RH side, use the same procedures as on the LH side.

1. **REMOVE REAR DOOR WINDOW REGULATOR HANDLE ASSY (See page 75–22)**
2. **REMOVE REAR DOOR TRIM BASE LH (See page 75–22)**
3. **REMOVE POWER WINDOW REGULATOR SWITCH ASSY REAR (W/ POWER WINDOW) (See page 75–22)**
4. **REMOVE REAR DOOR TRIM BOARD SUB–ASSY LH (See page 75–22)**
5. **REMOVE REAR DOOR GLASS WEATHERSTRIP INNER LH (See page 75–22)**
6. **REMOVE REAR DOOR SERVICE HOLE COVER LH (See page 75–22)**

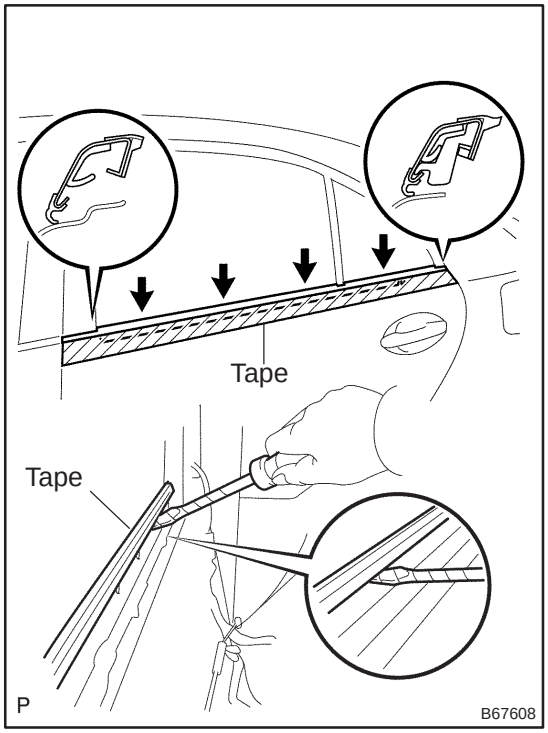

7. **REMOVE REAR DOOR BELT MOULDING ASSY LH**

(a) Put protective tape under the moulding.

(b) Using a screwdriver or moulding remover, pry out the claws and remove the moulding.

HINT:

Tape the screwdriver tip before use.

ROCKER PANEL MOULDING LH

760W8–01

REPLACEMENT

HINT:

- The installation is in the reverse order of the removal.
- Use the same procedures on the RH side as on the LH side.

1. REMOVE FRONT WHEEL

2. REMOVE REAR WHEEL

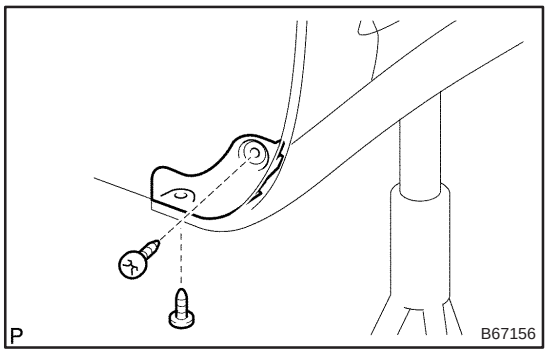

3. REMOVE SIDE MUDGUARD FRONT LH

(a) Remove the 2 screws and mudguard.

(b) Remove the 2 screws and wheel house plate.

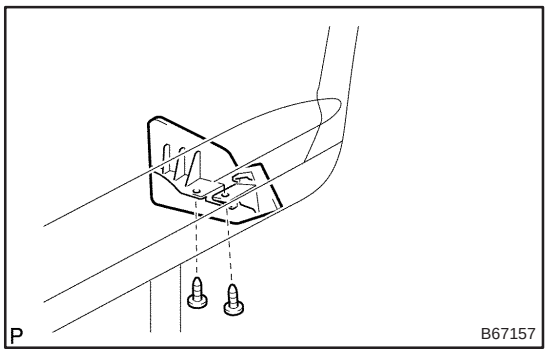

4. REMOVE REAR WHEEL HOUSE PLATE FRONT LH

(a) Remove the 2 screws and wheel house plate.

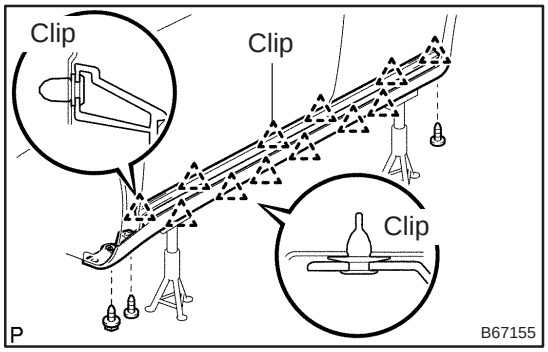

5. REMOVE ROCKER PANEL MOULDING LH

(a) Remove the 3 screws, 12 clips and moulding.

ROOF DRIP SIDE FINISH MOULDING CENTER LH

760WE–01

REPLACEMENT

HINT:
Use the same procedures on the RH side as on the LH side.

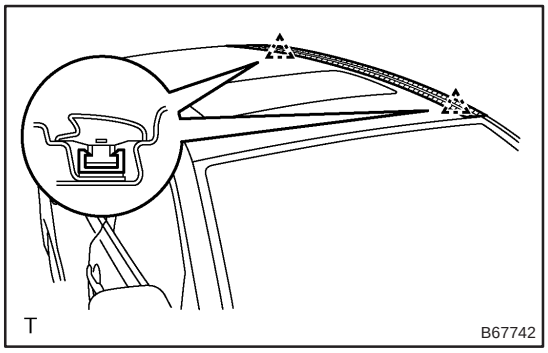

1. REMOVE ROOF DRIP SIDE FINISH MOULDING CENTER LH

(a) Put the protective tape around the circumference of the moulding.

(b) Using a remover for the roof moulding, release the disengage the clips both in the front and rear ends of the moulding, and then remove the moulding.

NOTICE:

- **Do not remove the clips.**
- **If that the clips are damaged or removed accidentally, exchange them for supplied ones.**

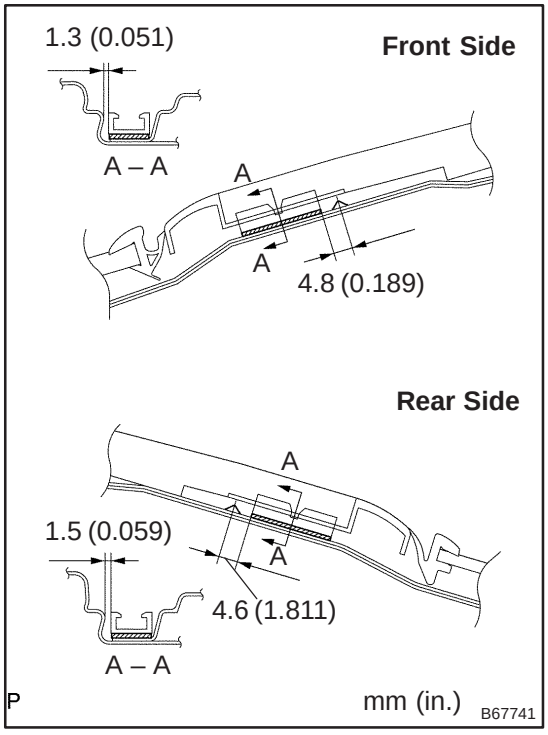

2. INSTALL ROOF DRIP SIDE FINISH MOULDING CENTER LH

NOTICE:

Only when exchanging the clips.

(a) Remove the tape that remains on the mounting surface of the body, and then clean the surface with white gasoline.

(b) Using a heat light, heat up the clip installation surfaces of the body and moulding.

Heating temperature:

Body	40 – 60°C (104 – 140°F)
Moulding	20 – 30°C (68 – 86°F)

NOTICE:

Do not heat the moulding and body excessively.

(c) Set the supplied clips in the positions as shown in the illustration and press–fit them by hand to install them.

NOTICE:

Install the moulding when 30 minutes or more have passed after press–fitting the clips.

HINT:

- Initial hardening time: 30 minutes
- Perfect hardening time: 24 hours

LUGGAGE COMPARTMENT DOOR GARNISH SUB–ASSY OUTSIDE (SEDAN MODELS)

760W9–01

REPLACEMENT

HINT:

The installation is in the reverse order of the removal. However, when there is a special point concerning the installation, it is indicated.

1. REMOVE BACK DOOR TRIM COVER (See page 75–32)

2. REMOVE LUGGAGE COMPARTMENT DOOR GARNISH SUB–ASSY OUTSIDE

(a) Remove the 6 nuts, clip and garnish.

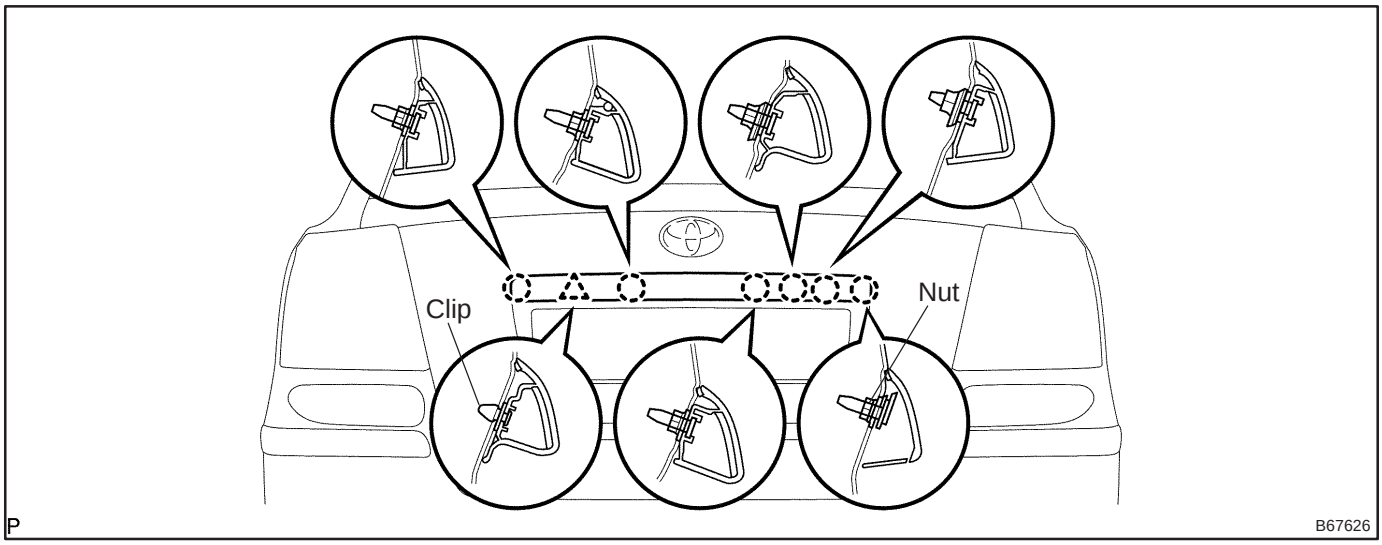

3. INSTALL BACK DOOR GARNISH SUB–ASSY OUTSIDE

(a) Install the garnish with the 6 nuts and clip.

Torque: 4.9 N·m (50 kgf·cm, 43 in.·lbf)

BACK DOOR GARNISH SUB–ASSY OUTSIDE (LIFTBACK MODELS)

760WA–01

REPLACEMENT

HINT:

The installation is in the reverse order of the removal. However, when there is a special point concerning the installation, it is indicated.

1. REMOVE BACK DOOR TRIM PANEL ASSY UPPER (See page 75–40)

2. REMOVE BACK DOOR SIDE GARNISH LH (See page 75–40)

3. REMOVE BACK DOOR SIDE GARNISH RH (See page 75–40)

4. REMOVE BACK DOOR SIDE GARNISH CLIP (See page 75–40)

5. REMOVE BACK DOOR TRIM BOARD ASSY (See page 75–40)

6. REMOVE BACK DOOR GARNISH SUB–ASSY OUTSIDE (See page 75–40)

(a) Remove the 5 nuts, clip and garnish.

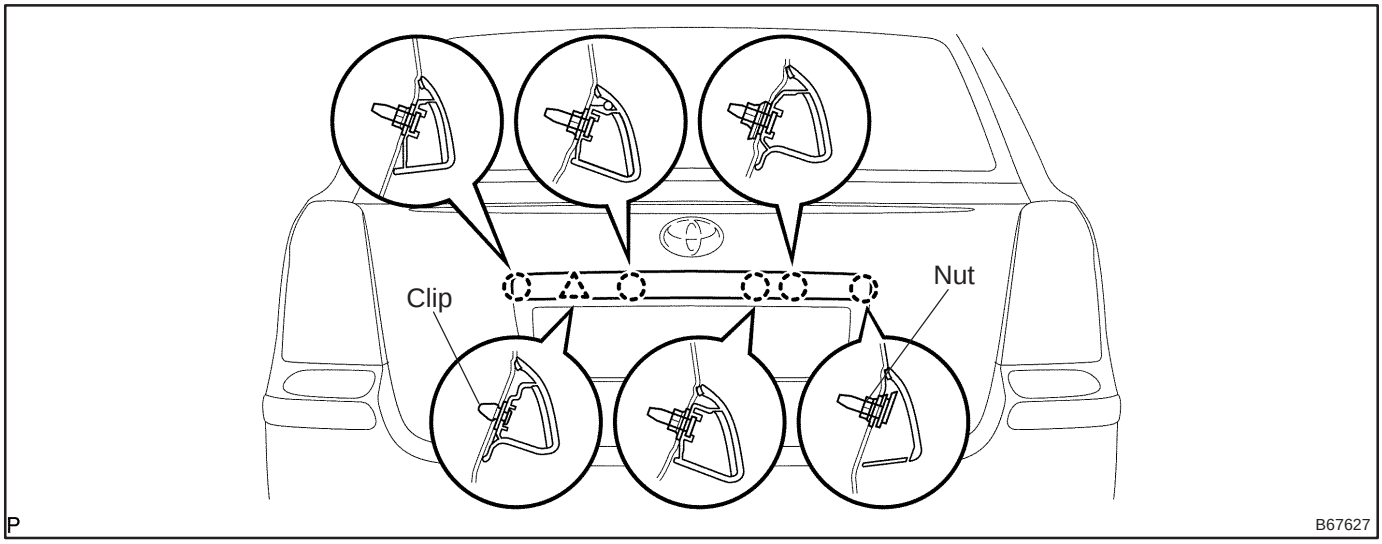

7. INSTALL BACK DOOR GARNISH SUB–ASSY OUTSIDE

(a) Install the garnish with the 5 nuts and clip.

Torque: 4.9 N·m (50 kgf·cm, 43 in.·lbf)

BACK DOOR GARNISH SUB–ASSY OUTSIDE (WAGON MODELS)

760WB–01

REPLACEMENT

HINT:

The installation is in the reverse order of the removal. However, when there is a special point concerning the installation, it is indicated.

1. REMOVE BACK DOOR TRIM PANEL ASSY UPPER (See page 75–45)

2. REMOVE BACK DOOR SIDE GARNISH LH (See page 75–45)

3. REMOVE BACK DOOR SIDE GARNISH RH (See page 75–45)

4. REMOVE BACK DOOR TRIM BOARD ASSY (See page 75–45)

5. REMOVE DOOR PULL HANDLE (See page 75–45)

6. REMOVE BACK DOOR GARNISH SUB–ASSY OUTSIDE

(a) Remove the 5 nuts, clip and back door garnish.

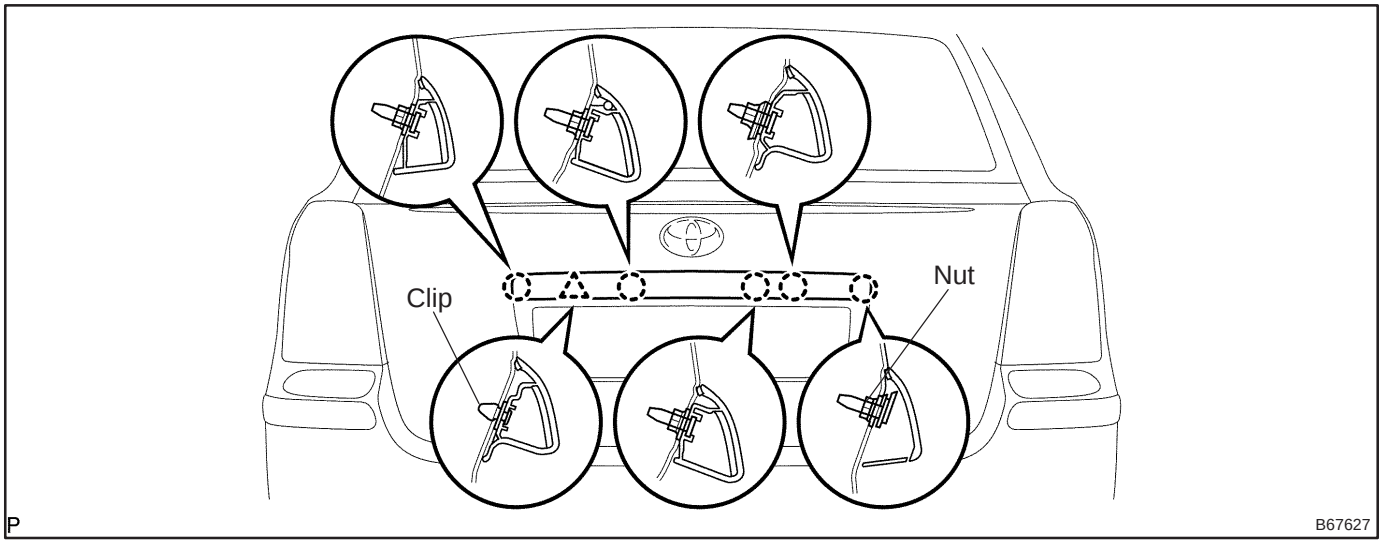

7. INSTALL BACK DOOR GARNISH SUB–ASSY OUTSIDE

(a) Install the garnish with the 5 nuts and clip.

Torque: 4.9 N·m (50 kgf·cm, 43 in.·lbf)

REAR SPOILER (WAGON MODELS)

760WD–01

REPLACEMENT

HINT:
The installation is in the reverse order of the removal.

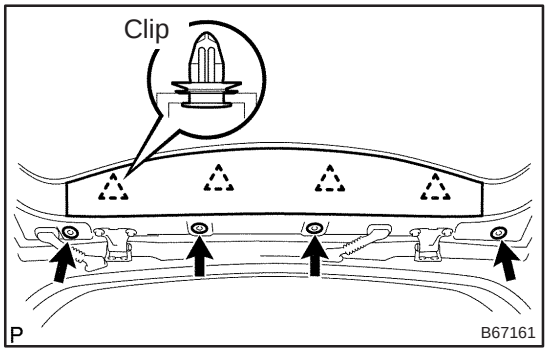

1. REMOVE BACK DOOR TRIM PANEL ASSY UPPER

(a) Remove the 4 clips and door trim panel.
(b) Remove the 4 hole plugs.

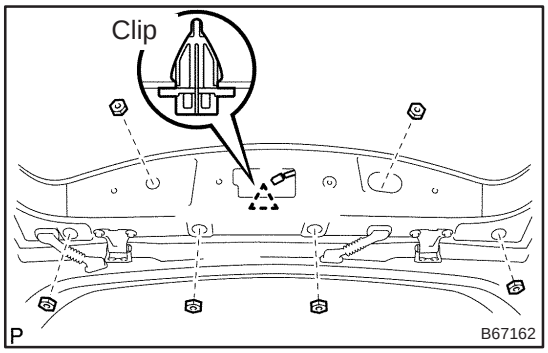

2. REMOVE REAR SPOILER

(a) Disconnect the stop lamp connector.
(b) Remove the 6 nuts and clip.

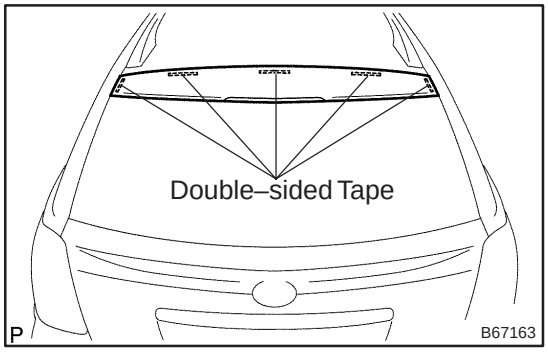

(c) Using a heat light, heat the spoiler.
Heating temprature: 40 – 60°C (104 – 140°F)

NOTICE:

Do not heat the spoiler excessively.

(d) Lightly lift the spoiler at the right end or the left end.
(e) Cut the tape.
(1) Tie both piano wire ends to a wooden block or similar object.
(2) Cut the tape by pulling the piano wire.

NOTICE:

- **If reusing the rear spoiler, take care not to damage it.**
- **Be careful not to damage the back door.**

(f) Remove the spoiler.

3. INSTALL REAR SPOILER

(a) Clean the surface on the back door where the spoiler is to be attached.
(1) Using a heat light, heat the back door contact surface.

Heating temprature: 40 – 60°C (104 – 140°F)

NOTICE:

Do not heat the back door excessively.

(2) Remove the tape from the back door.
(3) Wipe off the stains with cleaner.

(b) When reusing the spoiler:
Clean the spoiler.
(1) Using a heat light, heat the spoiler.
Heating temprature: 20 – 30°C (68 – 86°F)

NOTICE:
Do not heat the spoiler excessively.

(2) Remove the tape from the spoiler.
(3) Wipe off the stains with cleaner.

(c) Install the spoiler.
(1) Using a heat light, heat the door and spoiler.
Heating temperature:

Door	40 – 60°C (104 – 140°F)
Spoiler	20 – 30°C (68 – 86°F)

NOTICE:
Do not heat the door and spoiler excessively.

(2) Apply new double–sided tape to the spoiler, as shown in the illustration.

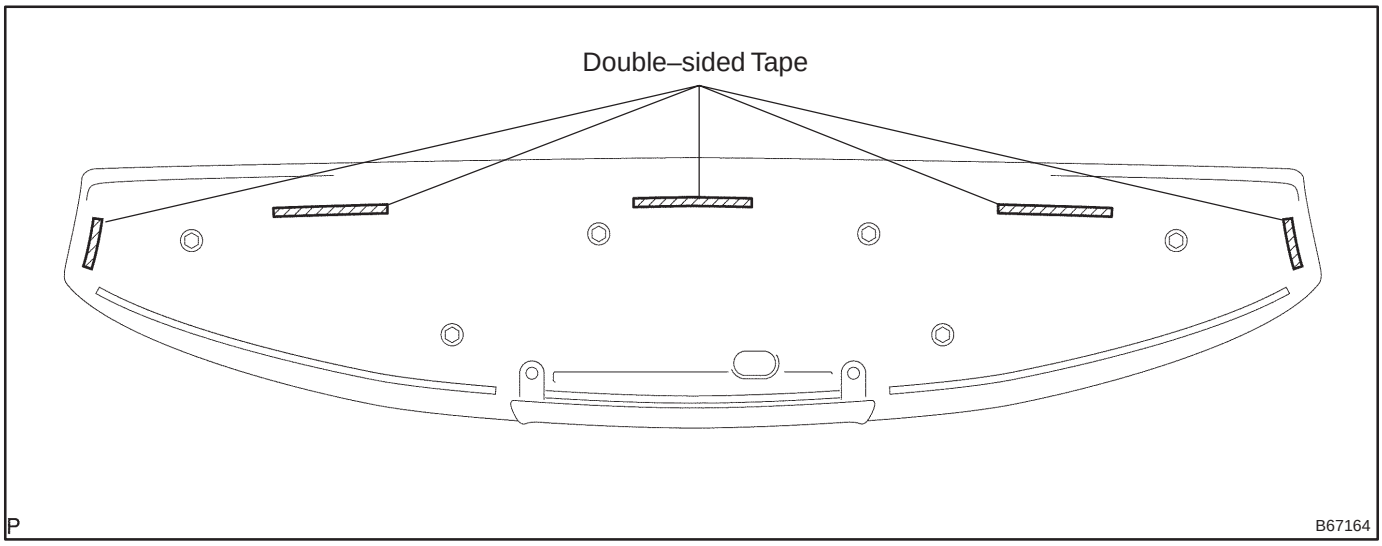

(3) Remove the peeling paper from the spoiler.

NOTICE:
Be careful that dirt or foreign objects do not stick to the adhesive part when removing the peeling paper.

(4) Install the spoiler with the 6 nuts.
Torque: 9.8 N·m (99 kgf·cm, 87 in.·lbf)

NOTICE:
Do not apply excessive force onto the spoiler. Instead, apply steady pressure with your thumbs.

(5) Connect the stop lamp connector.
(6) Install the 4 hole plugs.

FRONT FLOOR FOOTREST

760WC–01

REPLACEMENT

HINT:
The installation is in the reverse order of the removal.

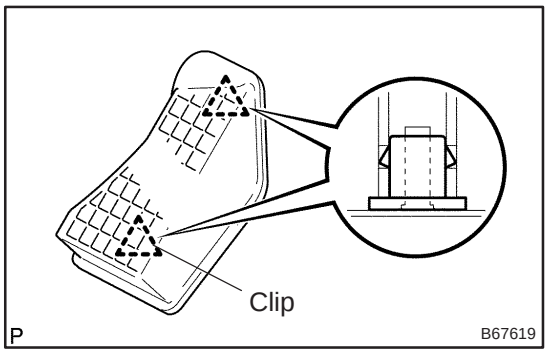

1. REMOVE FR FLOOR FOOTREST LH

(a) Using a screwdriver, disengage the 2 clips and remove the footrest.

HINT:
Tape the screwdriver tip before use.

(b) Disengage the clips and then remove the 2 clips from the footrest.

ROOF HEADLINING ASSY (SEDAN MODELS)

760WT–01

COMPONENTS

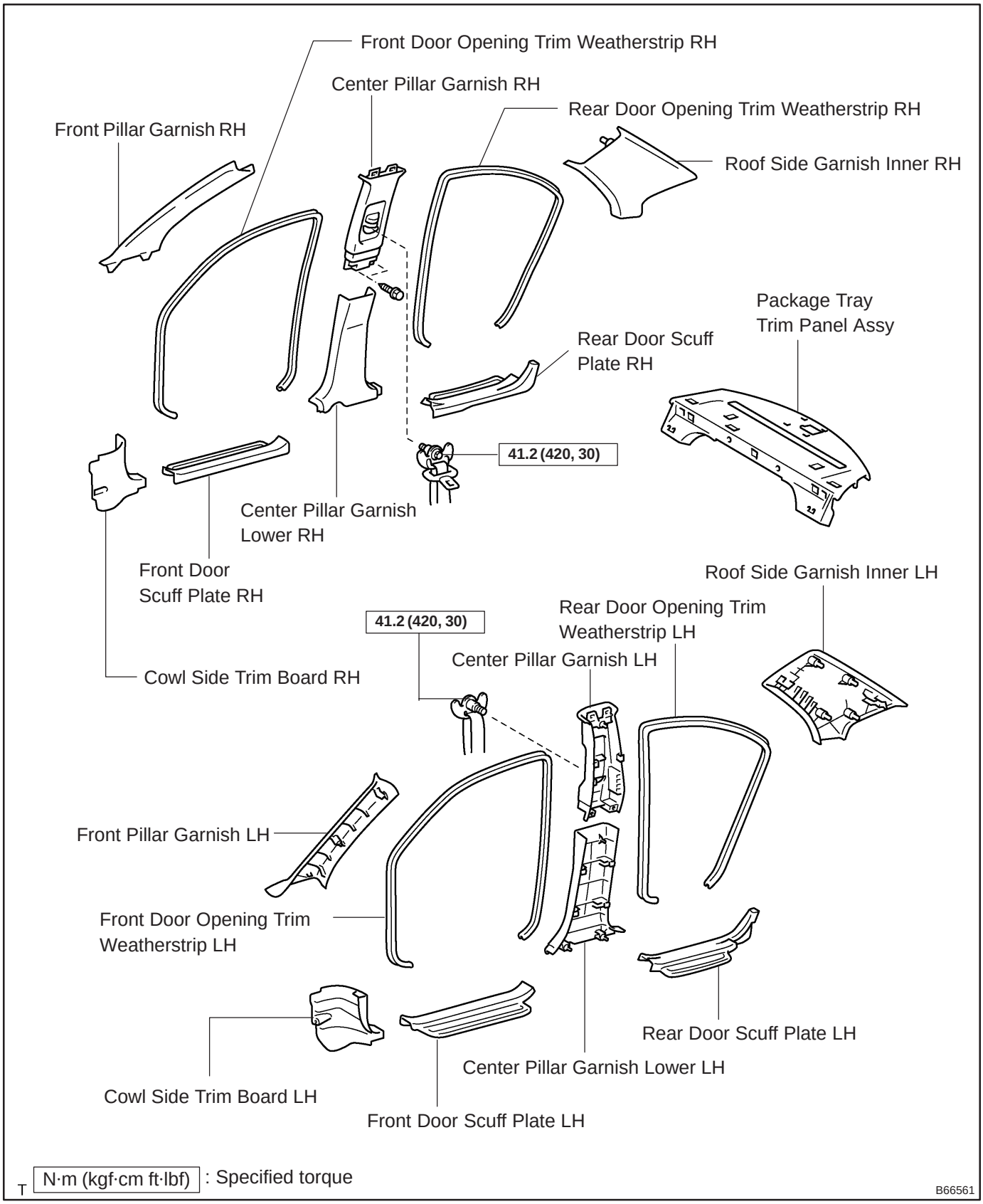

w/ Sliding Roof

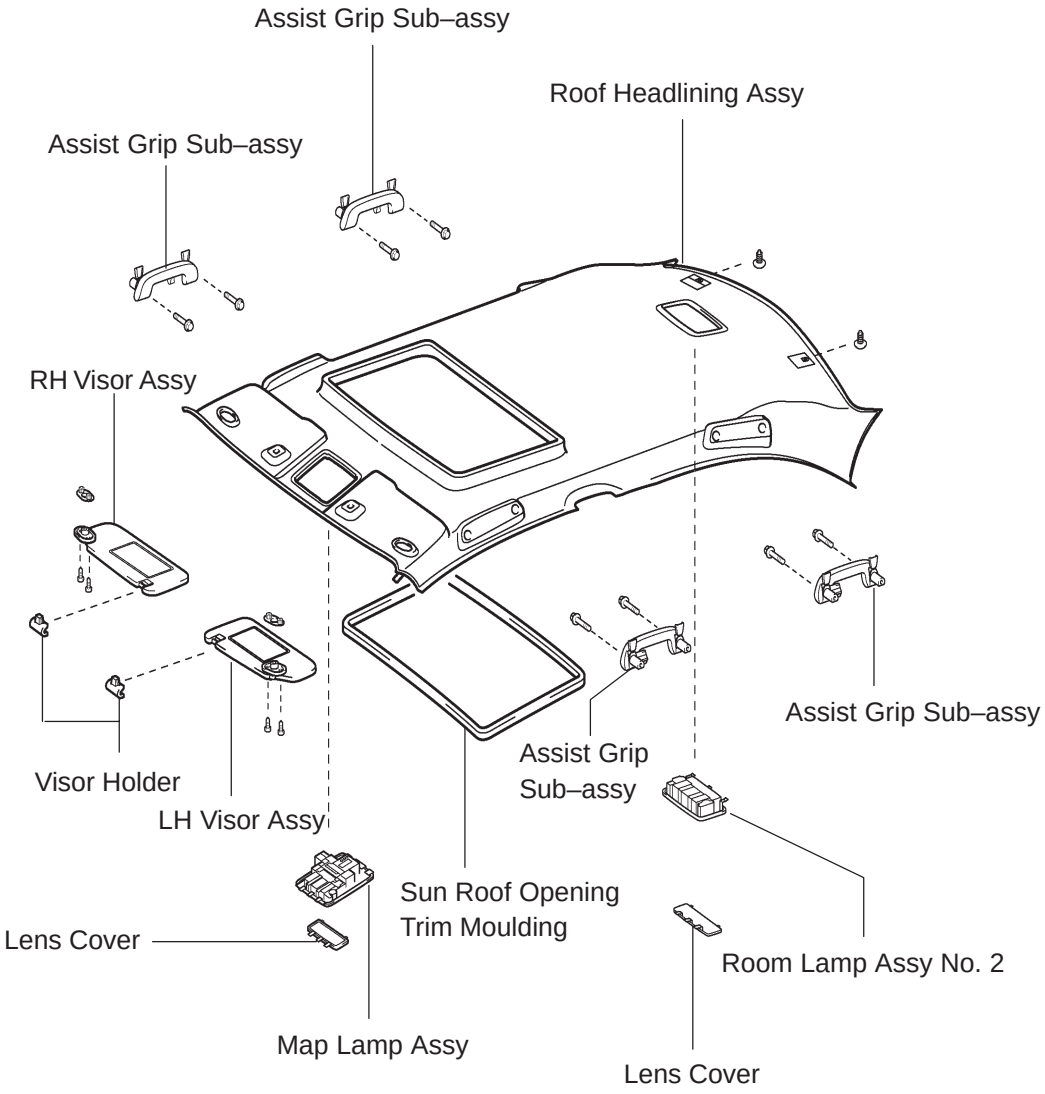

w/o Sliding Roof

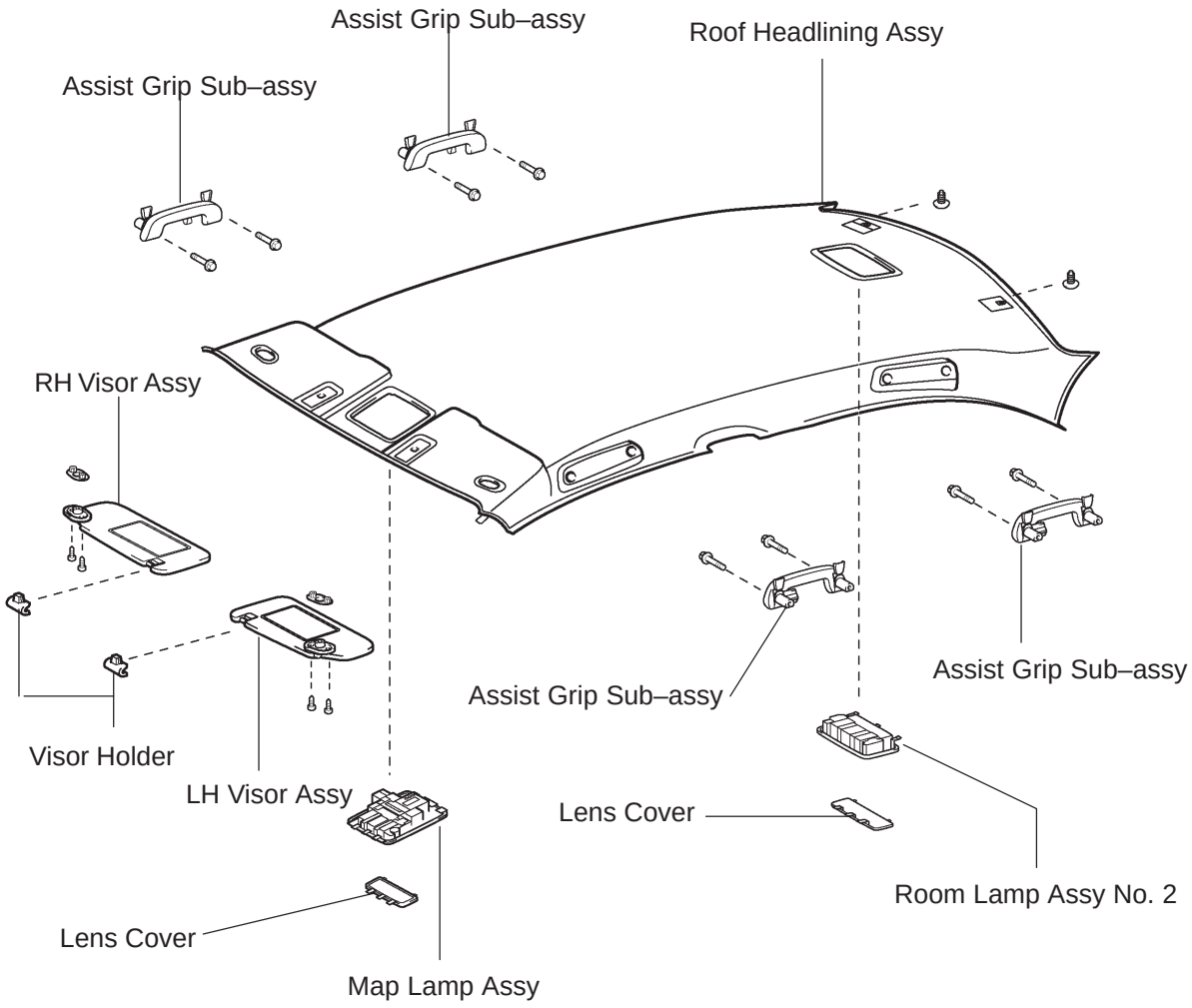

T

B66563

760WU–01

REPLACEMENT

HINT:

The installation is in the reverse order of the removal. However, when there is a special point concerning the installation, it is indicated.

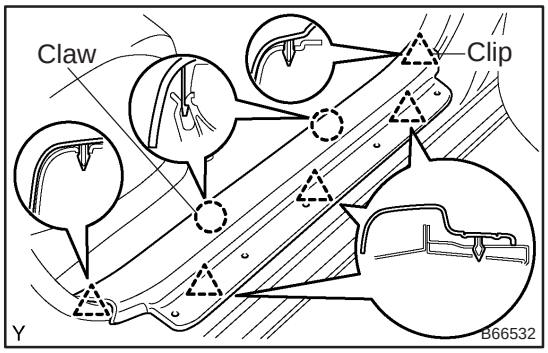

1. REMOVE FRONT DOOR SCUFF PLATE RH

(a) Using a screwdriver, disengage the 5 clips and 2 claws, and remove the scuff plate.

HINT:

Tape the screwdriver tip before use.

2. REMOVE FRONT DOOR SCUFF PLATE LH

HINT:

Use the same procedures described for the RH side.

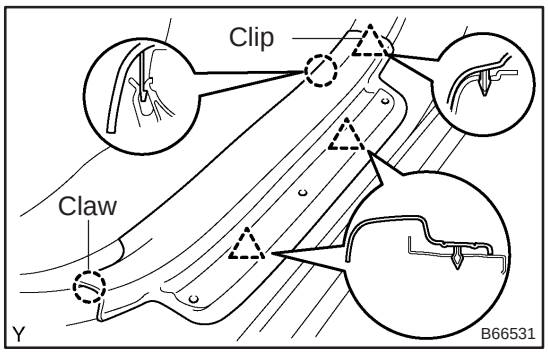

3. REMOVE REAR DOOR SCUFF PLATE RH

(a) Using a screwdriver, disengage the 3 clips and 2 claws, and remove the scuff plate.

HINT:

Tape the screwdriver tip before use.

4. REMOVE REAR DOOR SCUFF PLATE LH

HINT:

Use the same procedures described for the RH side.

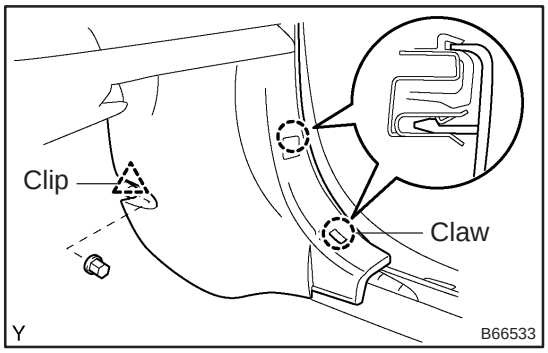

5. REMOVE COWL SIDE TRIM BOARD RH

(a) Using a screwdriver, disengage the clip and 2 claw and remove the trim board.

HINT:

Tape the screwdriver tip before use.

6. REMOVE COWL SIDE TRIM BOARD LH

HINT:

Use the same procedures described for the RH side.

7. REMOVE FRONT DOOR OPENING TRIM WEATHERSTRIP RH

8. REMOVE FRONT DOOR OPENING TRIM WEATHERSTRIP LH

9. REMOVE REAR DOOR OPENING TRIM WEATHERSTRIP RH

10. REMOVE REAR DOOR OPENING TRIM WEATHERSTRIP LH

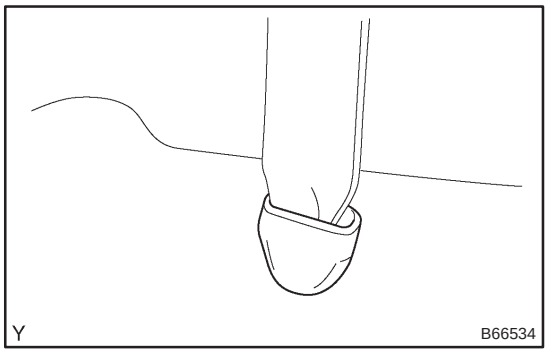

11. REMOVE CENTER PILLAR GARNISH LOWER RH

(a) Remove the floor anchor cover.

(b) Remove the bolt and outer belt on the floor anchor side.

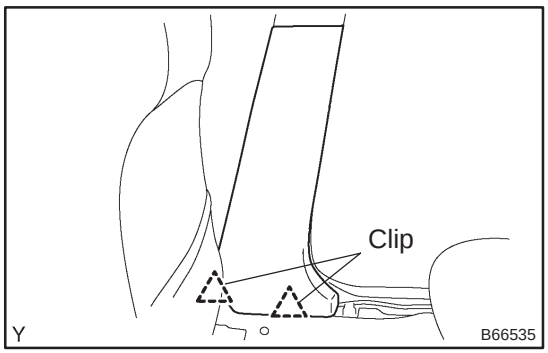

(c) Using a screwdriver, disengage the 2 clips and remove the pillar garnish lower.

HINT:

Tape the screwdriver tip before use.

12. REMOVE CENTER PILLAR GARNISH LOWER LH

HINT:

Use the same procedures described for the RH side.

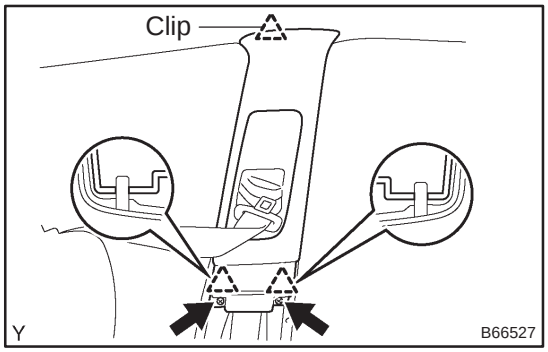

13. REMOVE CENTER PILLAR GARNISH UPPER RH

(a) Using a screwdriver, disengage the clip and 2 screws and remove the pillar garnish.

HINT:

Tape the screwdriver tip before use.

14. REMOVE CENTER PILLAR GARNISH UPPER LH

HINT:

Use the same procedures described for the RH side.

15. REMOVE REAR SEAT ASSY (See page 72–27, 72–32)

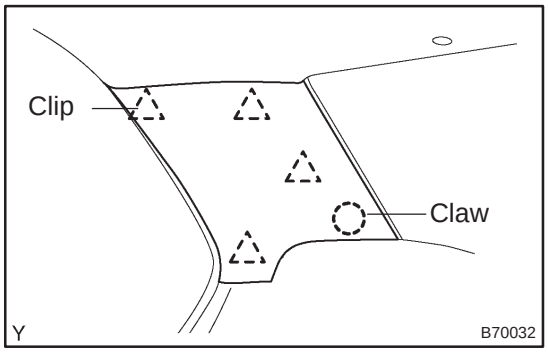

16. REMOVE ROOF SIDE GARNISH INNER RH

(a) Using a screwdriver, disengage the 4 clips and claw and remove the roof side garnish.

HINT:

Tape the screwdriver tip before use.

17. REMOVE ROOF SIDE GARNISH INNER LH

HINT:

Use the same procedures described for the RH side.

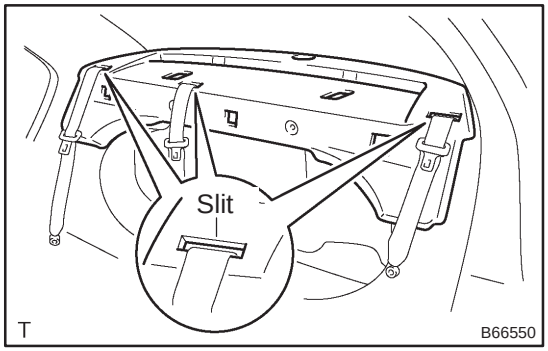

18. REMOVE PACKAGE TRAY TRIM PANEL ASSY

(a) Remove the 4 clips.

(b) Remove the roof package tray trim panel.

(c) Pull out the belt from the slit and remove the tray trim panel.

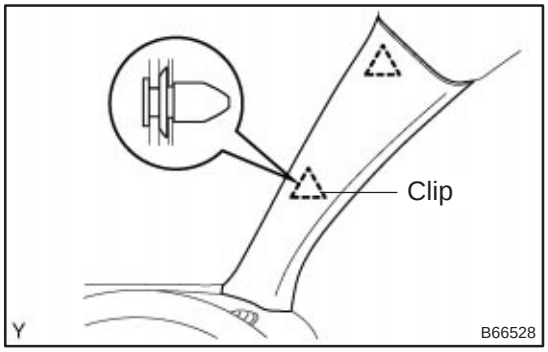

19. REMOVE FRONT PILLAR GARNISH RH

(a) Using a screwdriver, disengage the 2 clips and remove the pillar garnish.

HINT:

Tape the screwdriver tip before use.

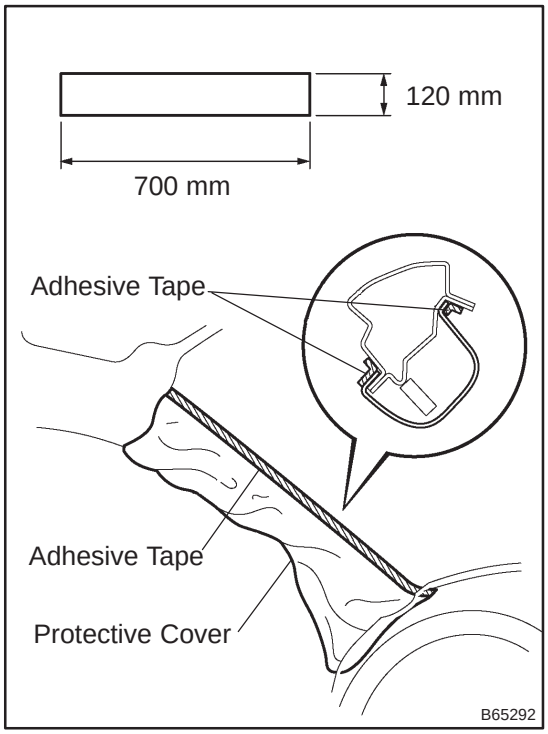

(b) Pull the garnish upward and remove from the instrument panel.

(c) w/ Curtain shield airbag:
Protect the curtain shield airbag LH.

(1) Thoroughly cover the airbag with cloth or nylon of 700 mm (27.56 in.) x 120 mm (4.72 in.) and fix the ends of the cover with adhesive tape as shown in the illustration.

NOTICE:
Cover the curtain shield airbag with the protection cover as soon as the front pillar garnish is removed.

20. REMOVE FRONT PILLAR GARNISH LH

HINT:
Use the same procedures described for the RH side.

21. REMOVE RH VISOR ASSY

(a) Remove the 2 screws and visor.

22. REMOVE LH VISOR ASSY

(a) Remove the 2 screws and visor.

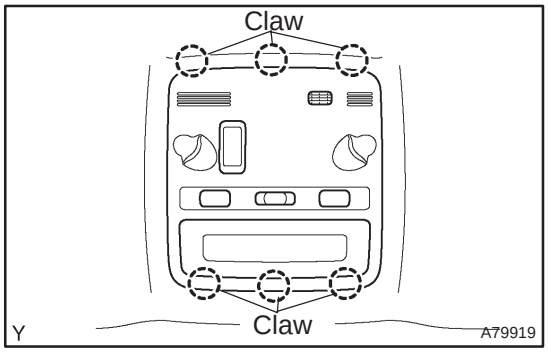

23. REMOVE MAP LAMP ASSY

(a) Using a screwdriver, disengage the 6 claws and remove the lens cover.

HINT:
Tape the screwdriver tip before use.

(b) Remove the 2 screws.

(c) Using a moulding remover, disengage the claws.

(d) Disconnect the map lamp switch connector and sliding roof switch connector, and remove the map lamp.

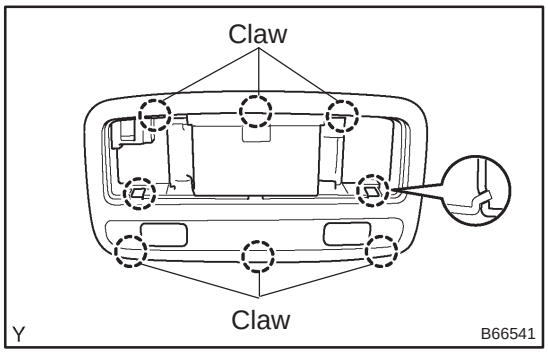

24. REMOVE ROOM LAMP ASSY NO.2

(a) Using a moulding remover, disengage the 8 claws and remove the lens cover.

HINT:
Tape the screwdriver tip before use.

(b) Using a moulding remover, disengage the claws.

(c) Disconnect the map lamp switch connector and remove the map lamp.

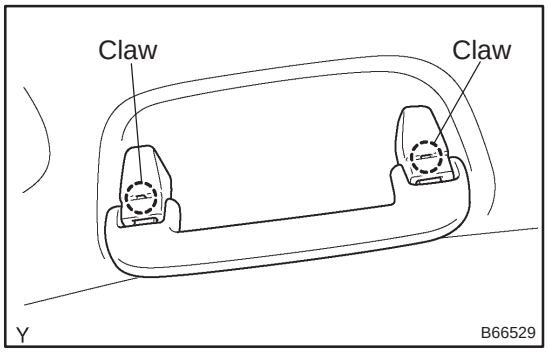

25. REMOVE ASSIST GRIP SUB–ASSY

(a) Using a screwdriver, disengage the 2 claws and remove the 2 assist grip covers.

HINT:

Tape the screwdriver tip before use.

(b) Remove the 2 bolts and assist grip.

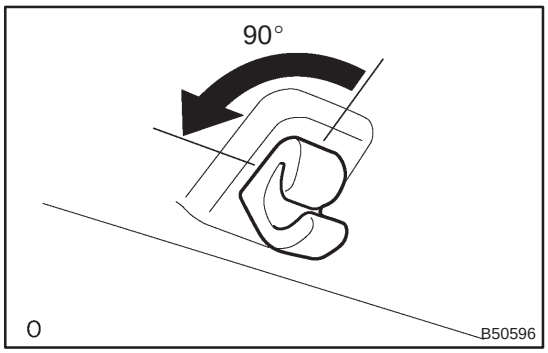

26. REMOVE VISOR HOLDER

(a) Remove the holder of the sun visor by turning it counter-clockwise.

27. REMOVE SUN ROOF OPENING TRIM MOULDING (W/ SLIDING ROOF)

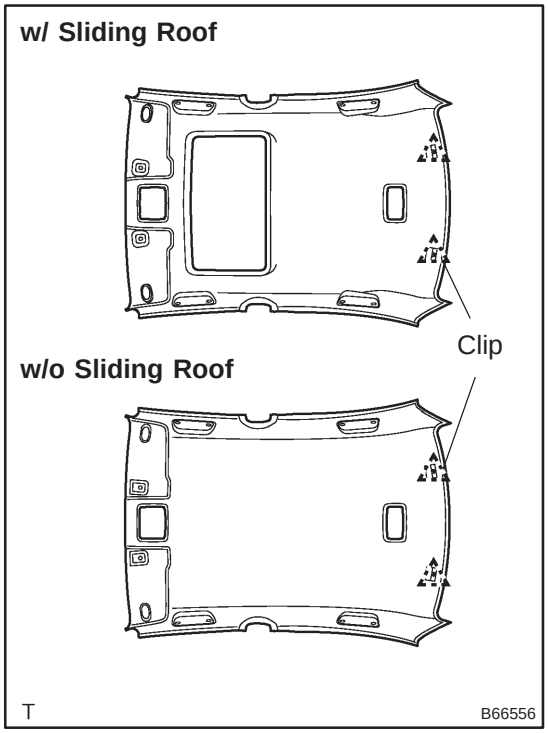

28. REMOVE ROOF HEADLINING ASSY

(a) Using a clip remover, disengage the 2 clips and remove the roof headling.

w/ Sliding Roof

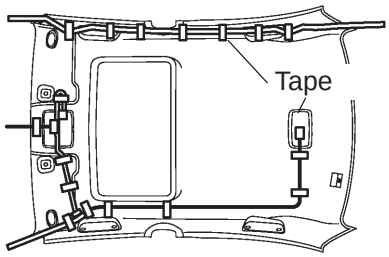

w/o Sliding Roof

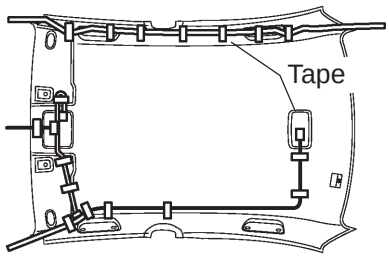

T

B66553

29. INSTALL ROOF HEADLINING ASSY

(a) Align the markings, and then install the wire harness with tape.

NOTICE:

Attach the roof wire harness securely.

(b) Install the 2 clips.

30. INSTALL REAR SEAT ASSY (See page 72–27, 72–32)

ROOF HEADLINING ASSY (LIFTBACK MODELS)

760WV–01

COMPONENTS

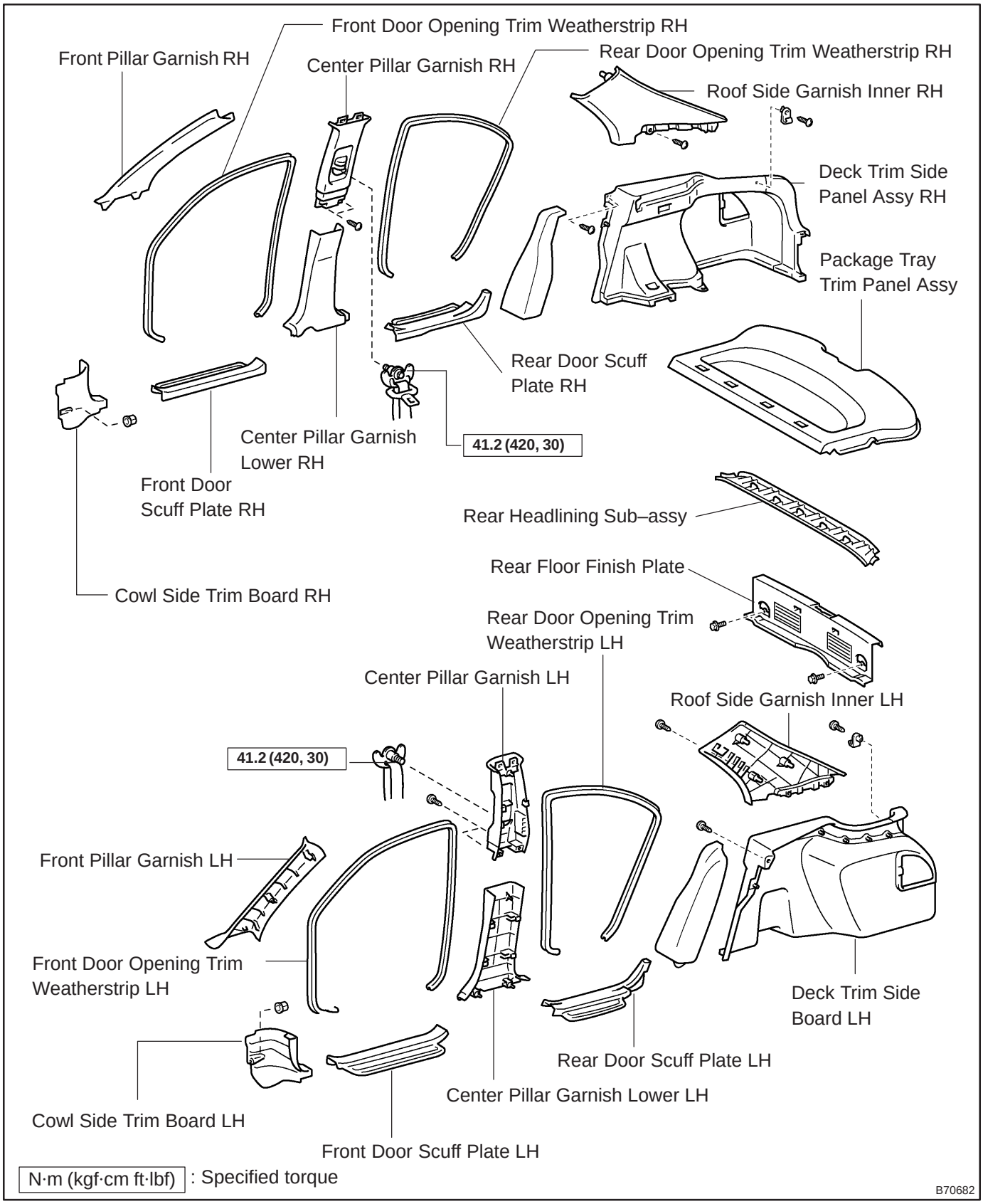

w/ Sliding Roof

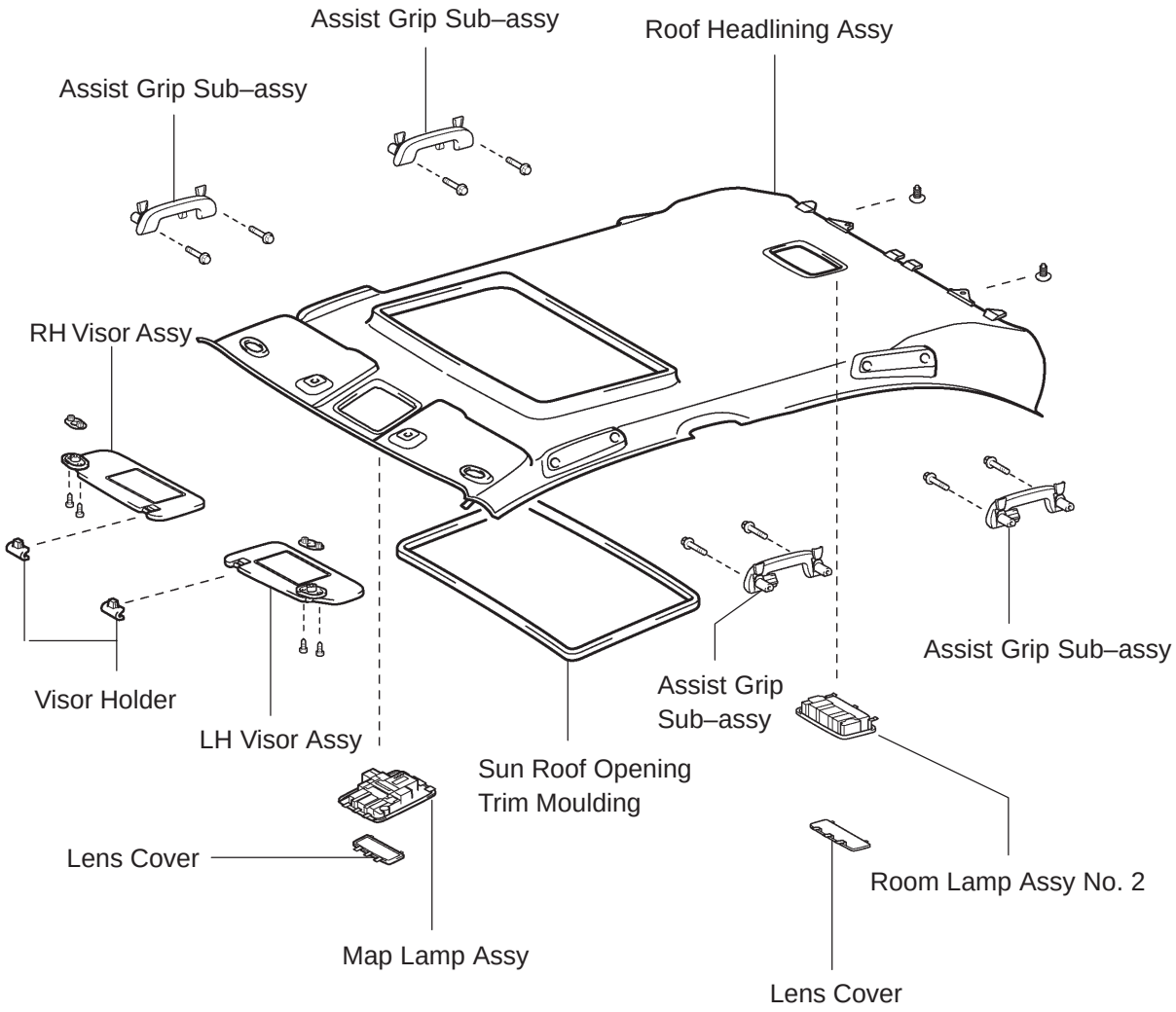

w/o Sliding Roof

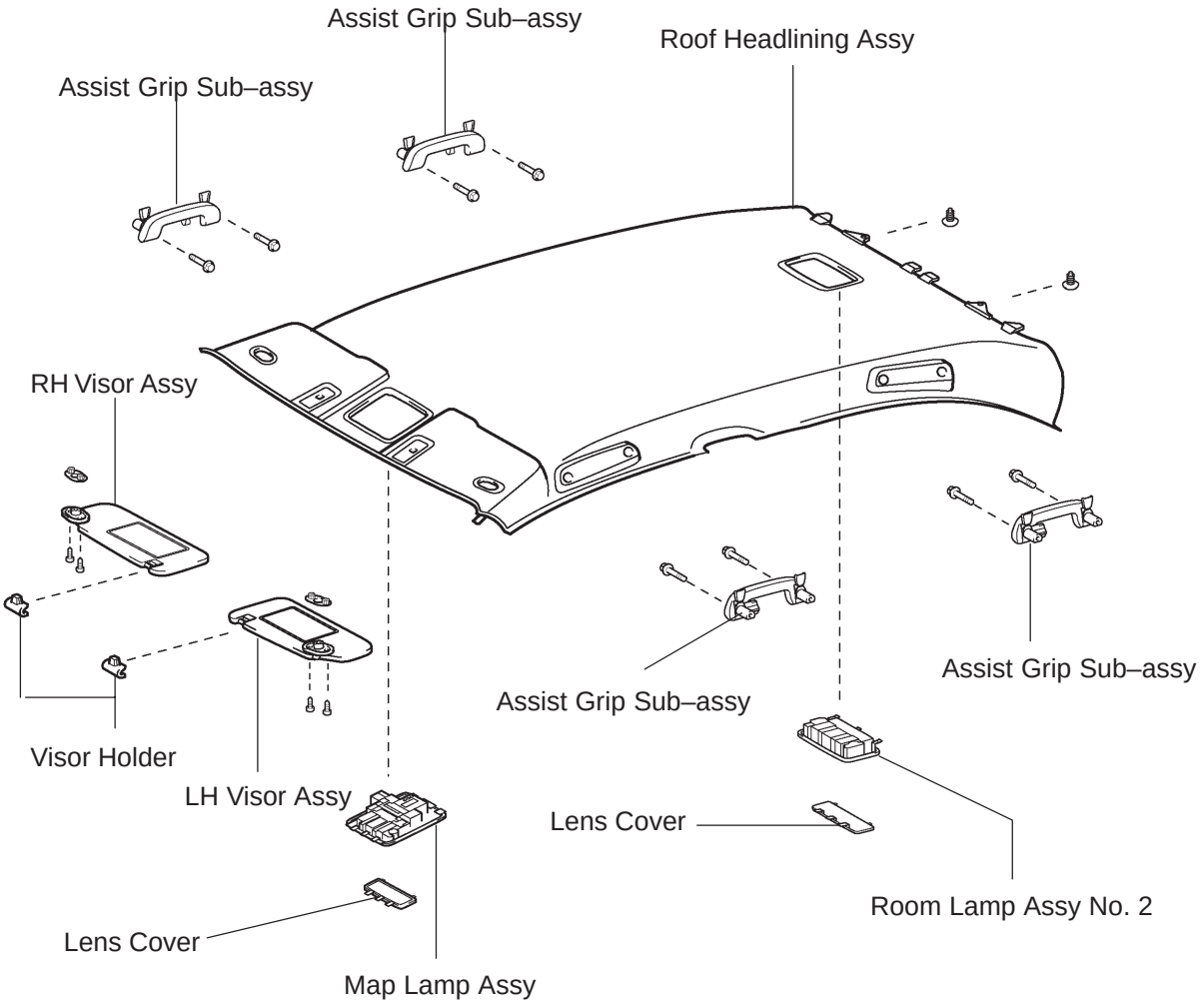

T

B66566

REPLACEMENT

HINT:

The installation is in the reverse order of the removal. However, when there is a special point concerning the installation, it is indicated.

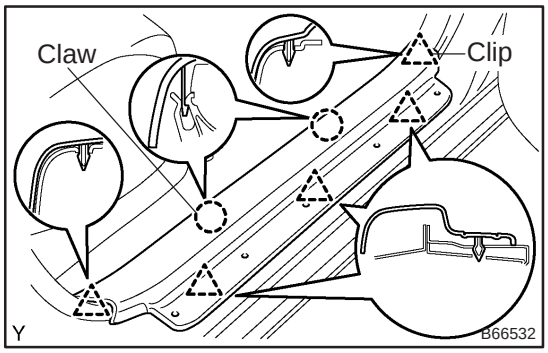

1. REMOVE FRONT DOOR SCUFF PLATE RH

(a) Using a screwdriver, disengage the 5 clips and 2 claws, and remove the scuff plate.

HINT:

Tape the screwdriver tip before use.

2. REMOVE FRONT DOOR SCUFF PLATE LH

HINT:

Use the same procedures described for the RH side.

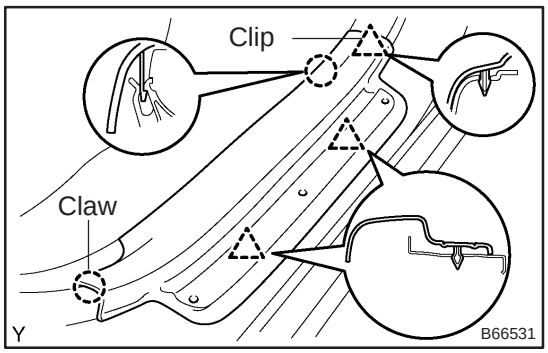

3. REMOVE REAR DOOR SCUFF PLATE RH

(a) Using a screwdriver, disengage the 3 clips and 2 claws, and remove the scuff plate.

HINT:

Tape the screwdriver tip before use.

4. REMOVE REAR DOOR SCUFF PLATE LH

HINT:

Use the same procedures described for the RH side.

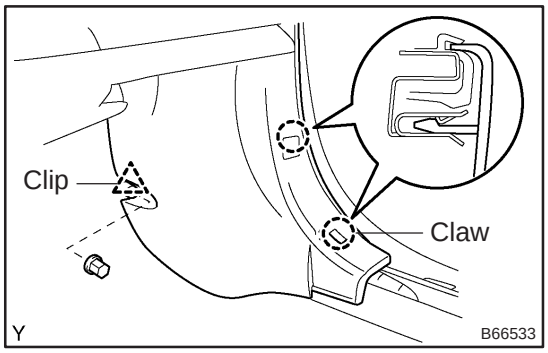

5. REMOVE COWL SIDE TRIM BOARD RH

(a) Using a screwdriver, disengage the clip and 2 claws, and remove the trim board.

HINT:

Tape the screwdriver tip before use.

6. REMOVE COWL SIDE TRIM BOARD LH

HINT:

Use the same procedures described for the RH side.

7. REMOVE FRONT DOOR OPENING TRIM WEATHERSTRIP RH
8. REMOVE FRONT DOOR OPENING TRIM WEATHERSTRIP LH
9. REMOVE REAR DOOR OPENING TRIM WEATHERSTRIP RH
10. REMOVE REAR DOOR OPENING TRIM WEATHERSTRIP LH

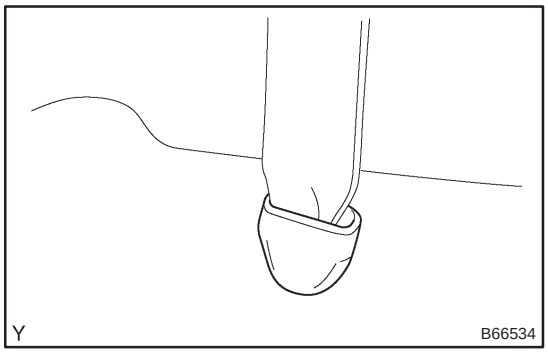

11. REMOVE CENTER PILLAR GARNISH LOWER RH
(a) Remove the floor anchor cover.
(b) Remove the bolt and the outer belt on the floor anchor side.

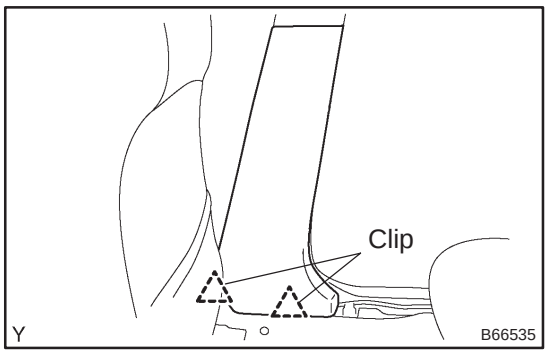

(c) Using a screwdriver, disengage the 2 clips and remove the pillar garnish.

HINT:
Tape the screwdriver tip before use.

12. REMOVE CENTER PILLAR GARNISH LOWER LH
HINT:
Use the same procedures described for the RH side.

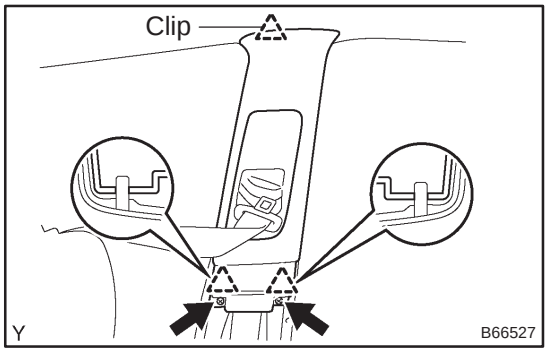

13. REMOVE CENTER PILLAR GARNISH UPPER RH
(a) Using a screwdriver, disengage the clip and 2 screws, and remove the pillar garnish.

HINT:
Tape the screwdriver tip before use.

14. REMOVE CENTER PILLAR GARNISH UPPER LH
HINT:
Use the same procedures described for the RH side.
15. REMOVE REAR SEAT ASSY (See page 72–21)
16. REMOVE REAR SIDE SEAT BACK ASSY RH
(a) Remove the bolt and seatback.
17. REMOVE REAR SIDE SEAT BACK ASSY LH
(a) Remove the bolt and seatback.
18. REMOVE PACKAGE TRAY TRIM PANEL ASSY

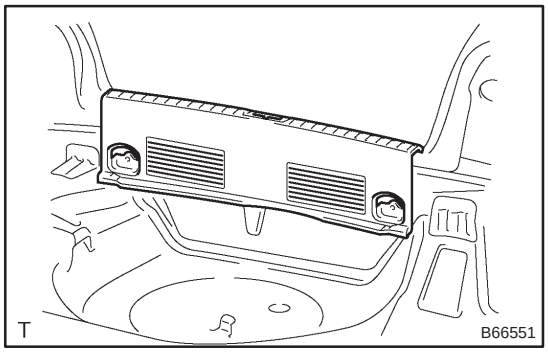

19. REMOVE REAR FLOOR FINISH PLATE

(a) Remove the 2 bolts.

(b) Using a screwdriver, disengage the 4 claws and remove the floor finish plate.

HINT:

Tape the screwdriver tip before use.

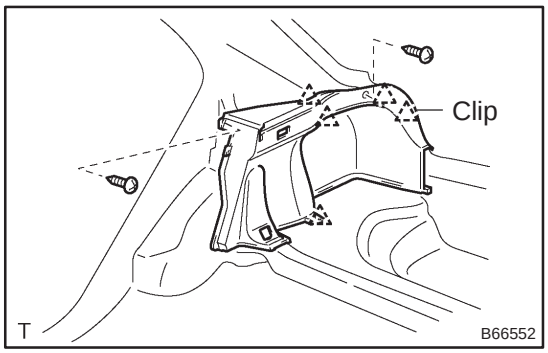

20. REMOVE DECK TRIM SIDE PANEL ASSY RH

(a) Remove the 2 screws.

(b) Using a screwdriver, disengage the 5 clips and remove the deck trim side panel.

HINT:

Tape the screwdriver tip before use.

21. REMOVE DECK TRIM SIDE BOARD LH

HINT:

Use the same procedures described for the RH side.

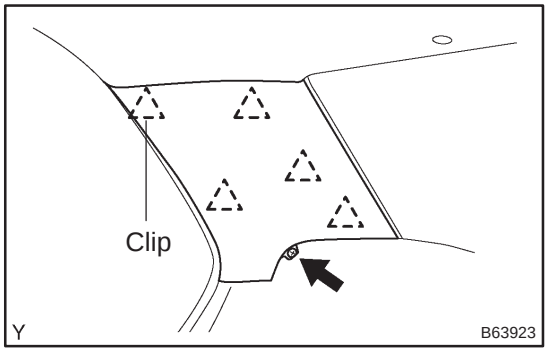

22. REMOVE ROOF SIDE GARNISH INNER RH

(a) Remove the screw.

(b) Using a screwdriver, disengage the 5 clips and remove the roof side garnish.

HINT:

Tape the screwdriver tip before use.

23. REMOVE ROOF SIDE GARNISH INNER LH

HINT:

Use the same procedures described for the RH side.

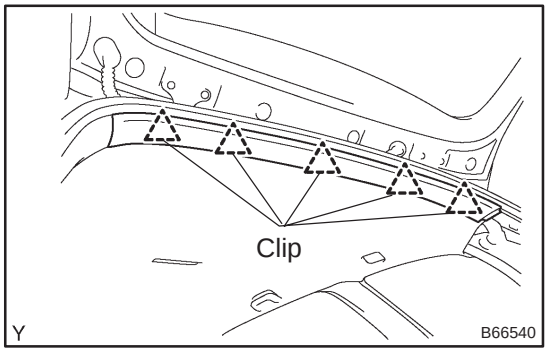

24. REMOVE ROOF HEADLINING TRIM SUB–ASSY REAR

(a) Using a screwdriver, disengage the 5 clips and remove the roof head lining trim.

HINT:

Tape the screwdriver tip before use.

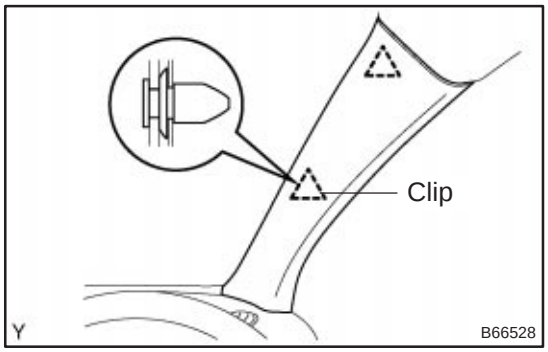

25. REMOVE FRONT PILLAR GARNISH RH

(a) Using a screwdriver, disengage the 2 clips and remove the pillar garnish.

HINT:

Tape the screwdriver tip before use.

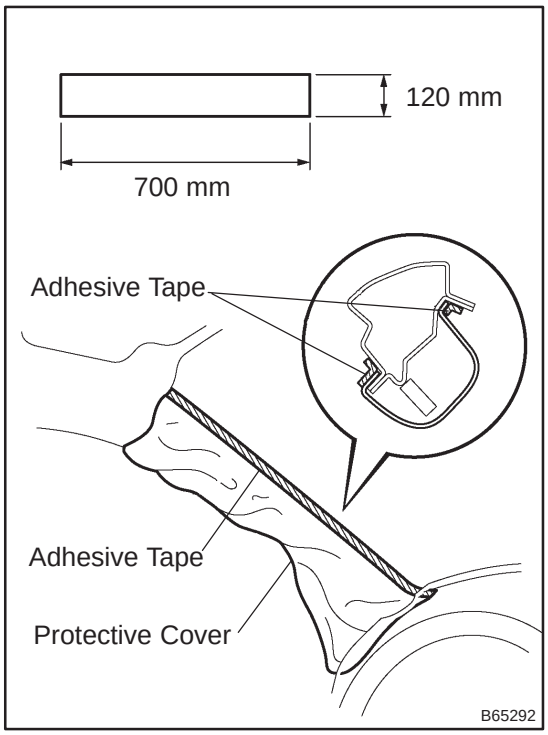

(b) Pull the garnish upward and remove if from the instrument panel.

(c) w/ Curtain shield airbag:

Protect the curtain shield airbag LH.

(1) Thoroughly cover the airbag with cloth or nylon of 700 mm (27.56 in.) x 120 mm (4.72 in.) and fix the ends of the cover in place with adhesive tape as shown in the illustration.

NOTICE:

Cover the curtain shield airbag with a protective cover as soon as the front pillar garnish is removed.

26. REMOVE FRONT PILLAR GARNISH LH

HINT:

Use the same procedures described for the RH side.

27. REMOVE RH VISOR ASSY

(a) Remove the 2 screws and visor.

28. REMOVE LH VISOR ASSY

(a) Remove the 2 screws and visor.

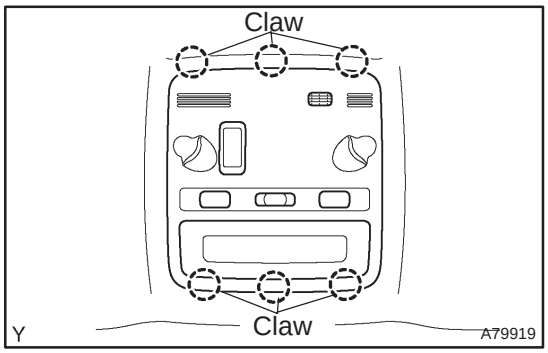

29. REMOVE MAP LAMP ASSY

(a) Using a screwdriver, disengage the 6 claws and remove the lens cover.

HINT:

Tape the screwdriver tip before use.

(b) Remove the 2 screws.

(c) Using a moulding remover, disengage the claws.

(d) Disconnect the map lamp switch connector and sliding roof switch connector, and remove the map lamp.

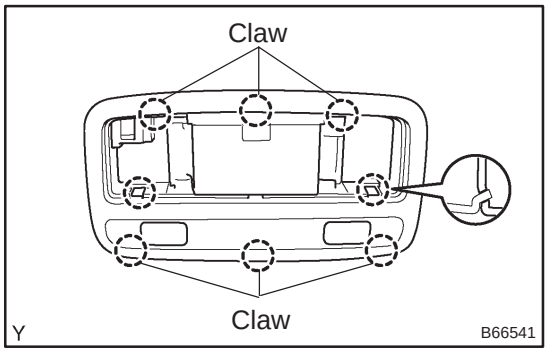

30. REMOVE ROOM LAMP ASSY NO.2

(a) Using a moulding remover, disengage the 8 claws and remove the lens cover.

HINT:

Tape the screwdriver tip before use.

(b) Using a moulding remover, disengage the claws.

(c) Disconnect the map lamp switch connector and remove the map lamp.

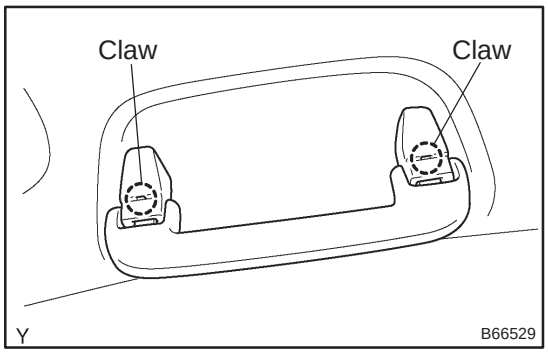

31. REMOVE ASSIST GRIP SUB–ASSY

(a) Using a screwdriver, disengage the 2 claws and remove the 2 assist grip covers.

HINT:

Tape the screwdriver tip before use.

(b) Remove the 2 bolts and assist grip.

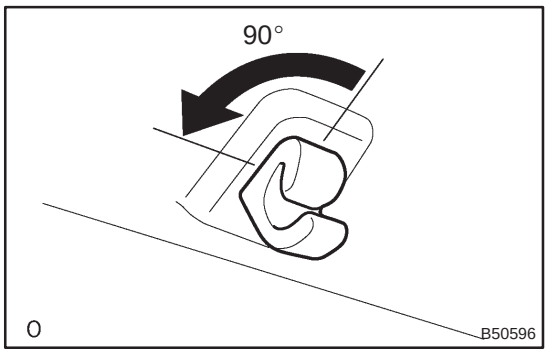

32. REMOVE VISOR HOLDER

(a) Remove the holder of the sun visor by turning it counterclockwise.

33. REMOVE SUN ROOF OPENING TRIM MOULDING (W/ SLIDING ROOF)

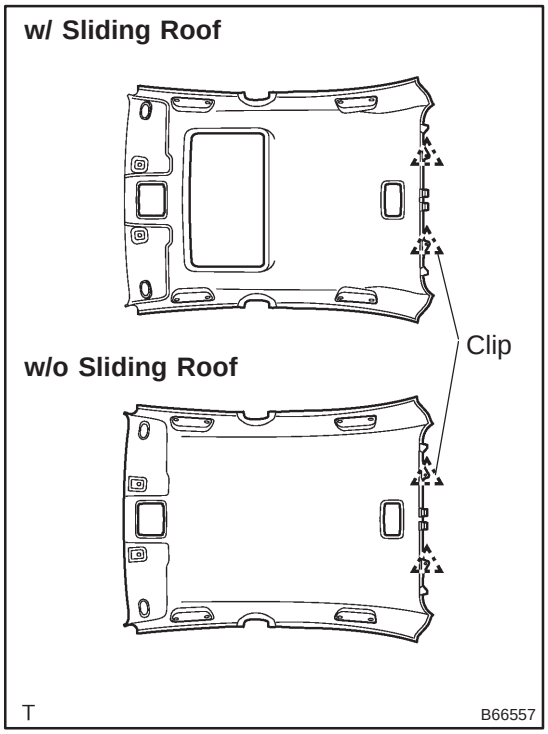

34. REMOVE ROOF HEADLINING ASSY

(a) Using a clip remover, disengage the 2 clips and remove the roof headling.

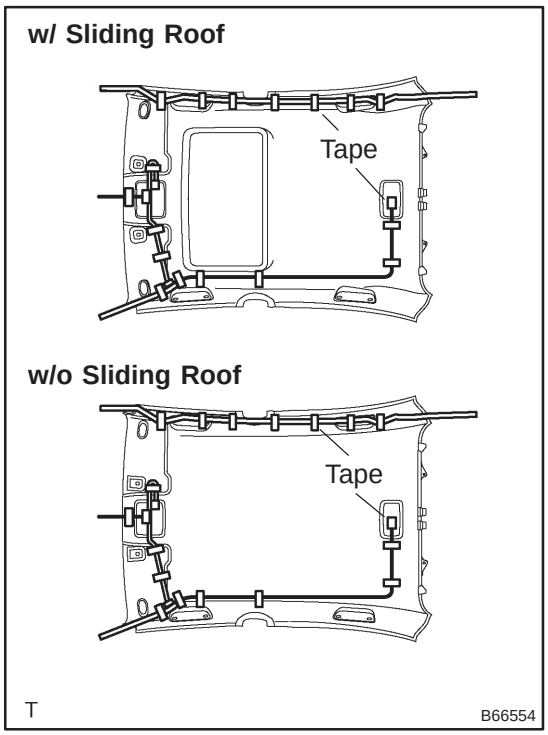

35. INSTALL ROOF HEADLINING ASSY

(a) Align the markings, and then install the wire harness with tape.

NOTICE:

Attach the roof wire harness securely.

(b) Install the 2 clips.

36. INSTALL REAR SEAT ASSY (See page 72–21)

ROOF HEADLINING ASSY (WAGON MODELS)

760WZ–01

COMPONENTS

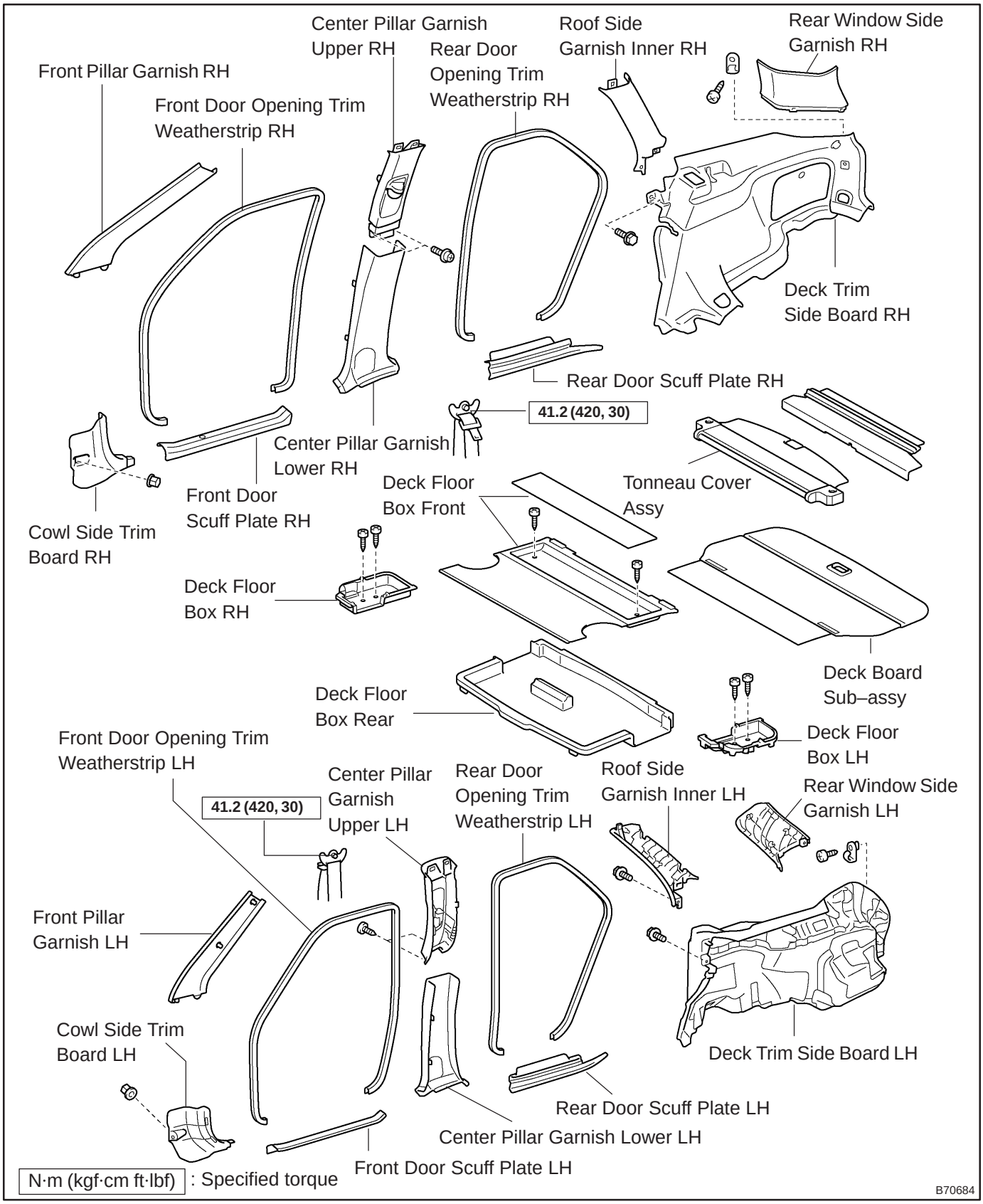

w/ Sliding Roof

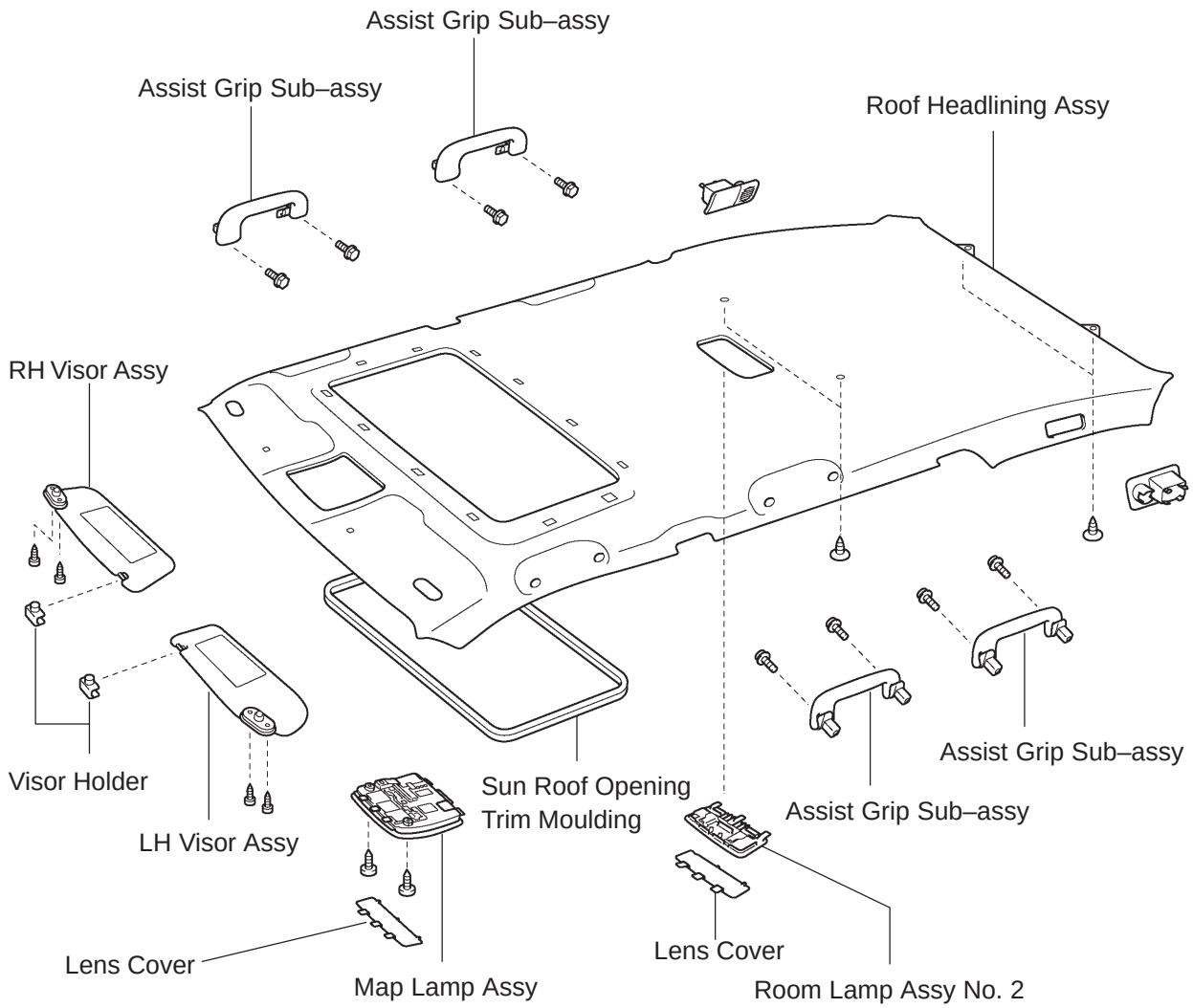

w/o Sliding Roof

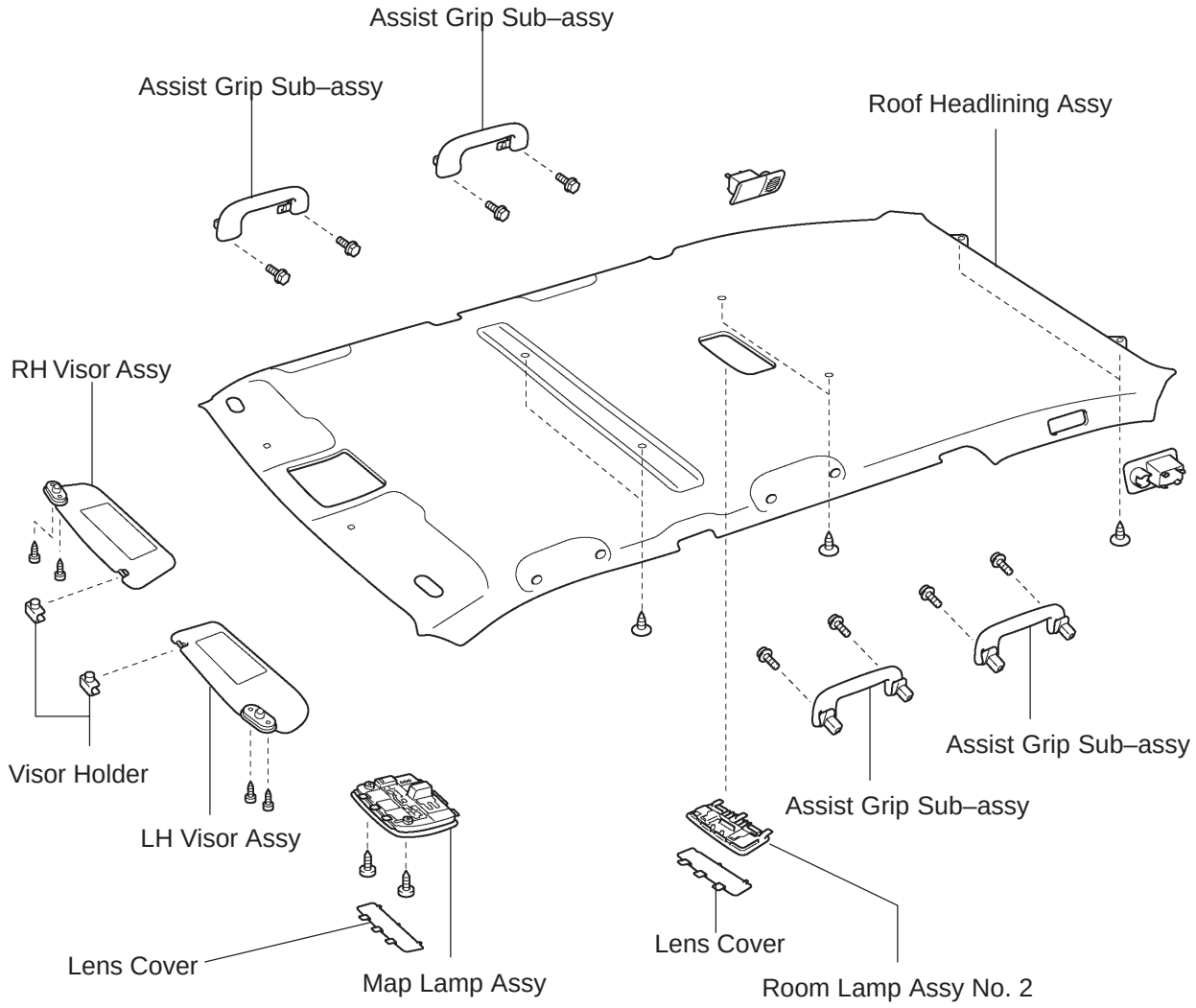

Y

B66548

REPLACEMENT

HINT:

The installation is in the reverse order of the removal. However, when there is a special point concerning the installation, it is indicated.

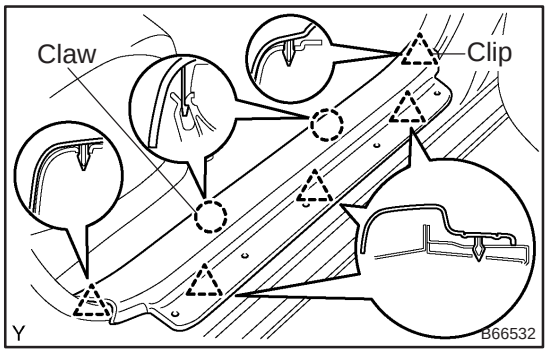

1. REMOVE FRONT DOOR SCUFF PLATE RH

(a) Using a screwdriver, disengage the 5 clips and 2 claws, and remove the scuff plate.

HINT:

Tape the screwdriver tip before use.

2. REMOVE FRONT DOOR SCUFF PLATE LH

HINT:

Use the same procedures described for the RH side.

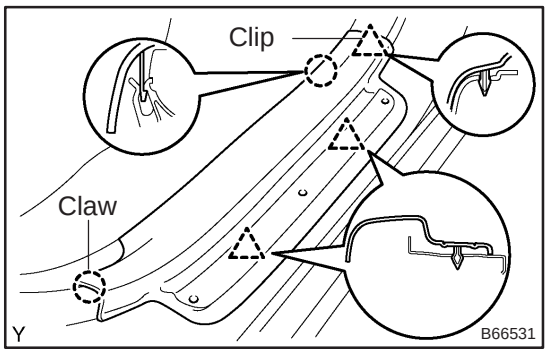

3. REMOVE REAR DOOR SCUFF PLATE RH

(a) Using a screwdriver, disengage the 3 clips and 2 claws, and remove the scuff plate.

HINT:

Tape the screwdriver tip before use.

4. REMOVE REAR DOOR SCUFF PLATE LH

HINT:

Use the same procedures described for the RH side.

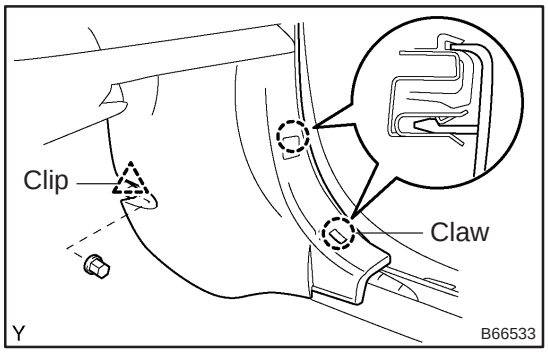

5. REMOVE COWL SIDE TRIM BOARD RH

(a) Using a screwdriver, disengage the clip and 2 claws, and remove the trim board.

HINT:

Tape the screwdriver tip before use.

6. REMOVE COWL SIDE TRIM BOARD LH

HINT:

Use the same procedures described for the RH side.

7. REMOVE FRONT DOOR OPENING TRIM WEATHERSTRIP RH
8. REMOVE FRONT DOOR OPENING TRIM WEATHERSTRIP LH
9. REMOVE REAR DOOR OPENING TRIM WEATHERSTRIP RH
10. REMOVE REAR DOOR OPENING TRIM WEATHERSTRIP LH

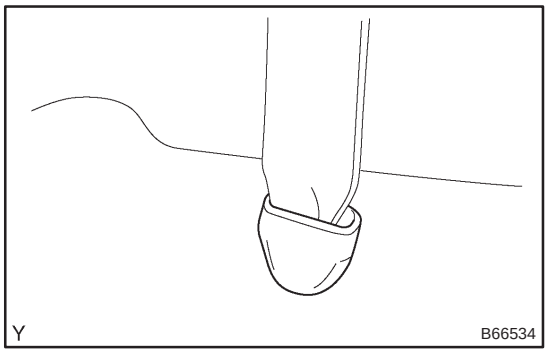

11. REMOVE CENTER PILLAR GARNISH LOWER RH
(a) Remove the floor anchor cover.
(b) Remove the bolt and outer belt on the floor anchor side.

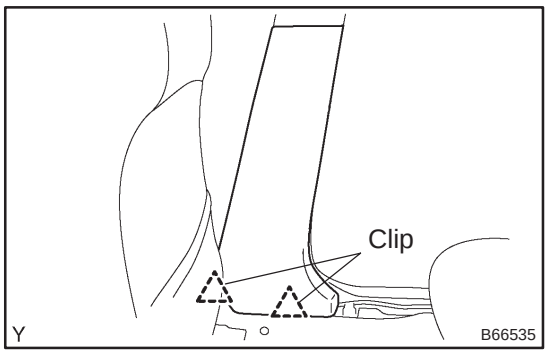

(c) Using a screwdriver, disengage the 2 clips and remove the pillar garnish.

HINT:
Tape the screwdriver tip before use.

12. REMOVE CENTER PILLAR GARNISH LOWER LH
HINT:
Use the same procedures described for the RH side.

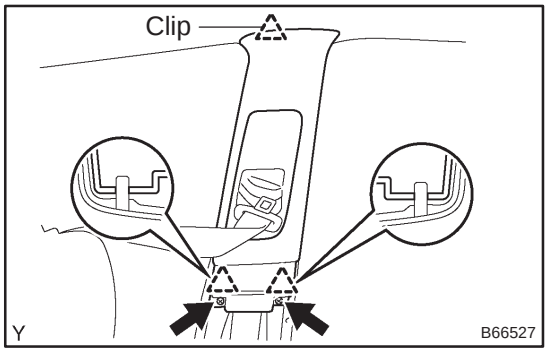

13. REMOVE CENTER PILLAR GARNISH UPPER RH
(a) Using a screwdriver, disengage the clip and 2 screws, and remove the pillar garnish.

HINT:
Tape the screwdriver tip before use.

14. REMOVE CENTER PILLAR GARNISH UPPER LH
HINT:
Use the same procedures described for the RH side.
15. REMOVE REAR SEAT ASSY (See page 72–21)
16. REMOVE REAR SIDE SEAT BACK ASSY RH
(a) Remove the bolt and seatback
17. REMOVE REAR SIDE SEAT BACK ASSY LH
(a) Remove the bolt and seatback
18. REMOVE TONNEAU COVER ASSY
19. REMOVE BACK DOOR WEATHERSTRIP

20. REMOVE DECK BOARD SUB–ASSY

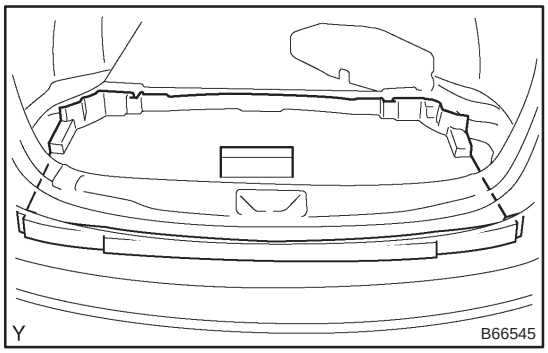

21. REMOVE DECK FLOOR BOX REAR

(a) Remove the deck floor box.

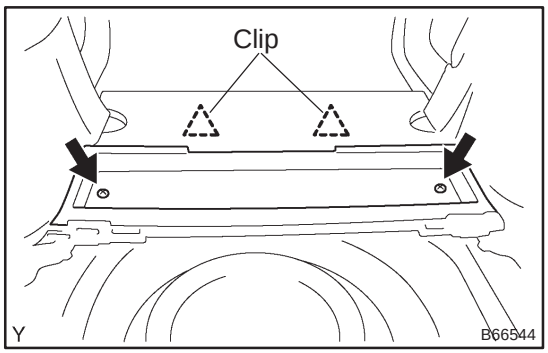

22. REMOVE DECK FLOOR BOX FRONT

(a) Using a screwdriver, disengage the 2 clips and 2 screws, and remove the deck floor box.

HINT:

Tape the screwdriver tip before use.

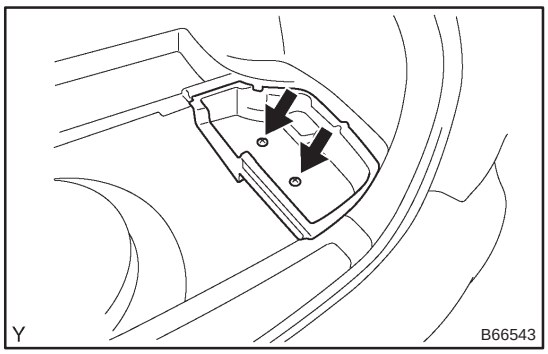

23. REMOVE DECK FLOOR BOX RH

(a) Remove the 2 screws and deck floor box.

24. REMOVE DECK FLOOR BOX LH

(a) Remove the 2 screws and deck floor box.

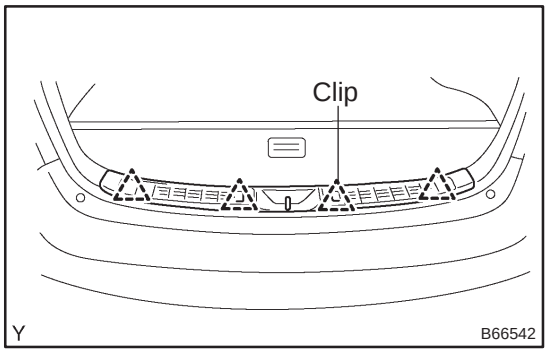

25. REMOVE REAR FLOOR FINISH PLATE

(a) Using a screwdriver, disengage the 4 clips and remove the floor finish plate.

HINT:

Tape the screwdriver tip before use.

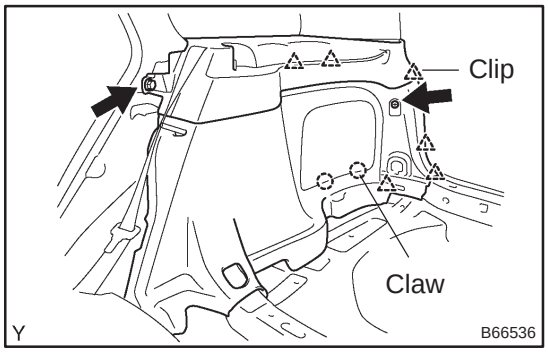

26. REMOVE DECK TRIM SIDE BOARD RH

(a) Remove the bolt and screw.

(b) Using a screwdriver, disengage the 5 clips and 2 claws, and remove the deck trim side board.

HINT:

Tape the screwdriver tip before use.

27. REMOVE DECK TRIM SIDE BOARD LH

HINT:

Use the same procedures described for the RH side.

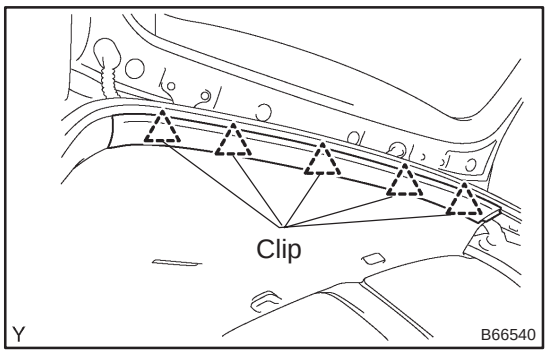

28. REMOVE ROOF HEADLINING TRIM SUB–ASSY REAR

(a) Using a screwdriver, disengage the 5 clips and remove the roof headlining trim.

HINT:

Tape the screwdriver tip before use.

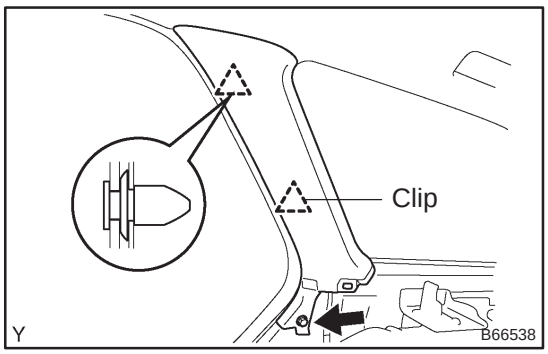

29. REMOVE ROOF SIDE GARNISH INNER RH

(a) Remove the bolt.

(b) Using a screwdriver, disengage the 2 clips and remove the window side garnish.

HINT:

Tape the screwdriver tip before use.

30. REMOVE ROOF SIDE GARNISH INNER LH

HINT:

Use the same procedures described for the RH side.

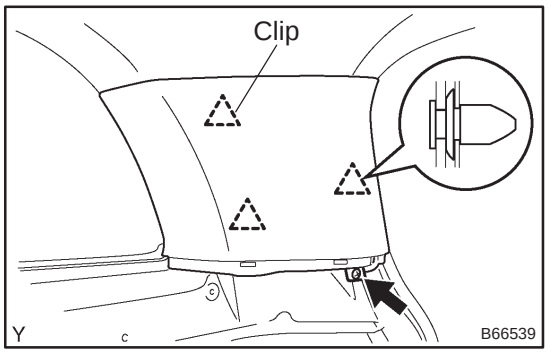

31. REMOVE REAR WINDOW SIDE GARNISH RH

(a) Using a screwdriver, disengage the 3 clips and screw, and remove the roof side garnish.

HINT:

Tape the screwdriver tip before use.

32. REMOVE REAR WINDOW SIDE GARNISH LH

HINT:

Use the same procedures described for the RH side.

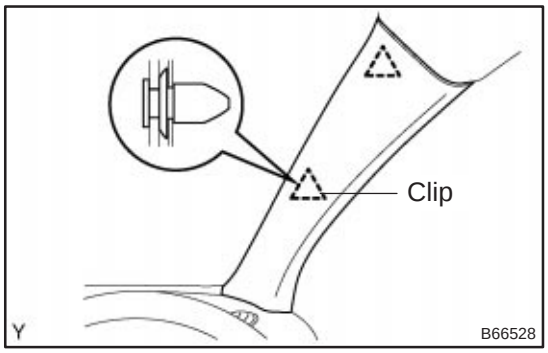

33. REMOVE FRONT PILLAR GARNISH RH

(a) Using a screwdriver, disengage the 2 clips and remove the pillar garnish.

HINT:

Tape the screwdriver tip before use.

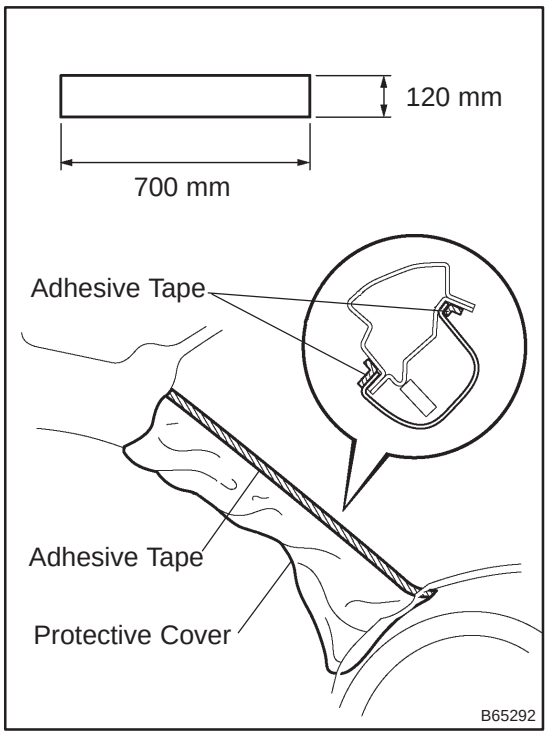

(b) Pull the garnish upward and remove if from the instrument panel.

(c) w/ Curtain shield airbag:

Protect the curtain shield airbag LH.

(1) Thoroughly cover the airbag with cloth or nylon of 700 mm (27.56 in.) x 120 mm (4.72 in.) and fix the ends of the cover in place with adhesive tape as shown in the illustration.

NOTICE:

Cover the curtain shield airbag with a protective cover as soon as the front pillar garnish is removed.

34. REMOVE FRONT PILLAR GARNISH LH

HINT:

Use the same procedures described for the RH side.

35. REMOVE RH VISOR ASSY

(a) Remove the 2 screws and visor.

36. REMOVE LH VISOR ASSY

(a) Remove the 2 screws and visor.

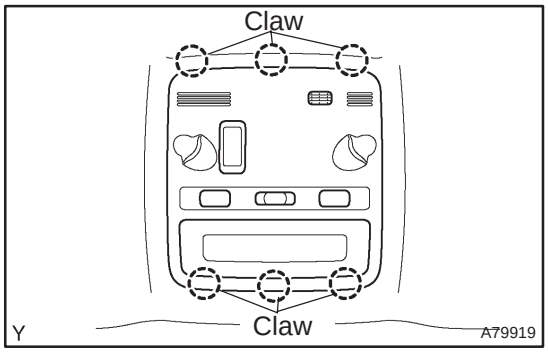

37. REMOVE MAP LAMP ASSY

(a) Using a screwdriver, disengage the 6 claws and remove the lens cover.

HINT:

Tape the screwdriver tip before use.

(b) Remove the 2 screws.

(c) Using a moulding remover, disengage the claws.

(d) Disconnect the map lamp switch connector and sliding roof switch connector, and remove the map lamp.

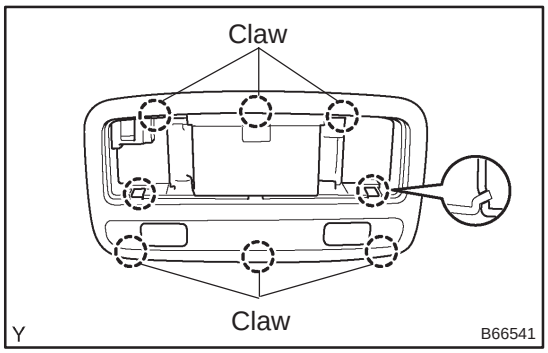

38. REMOVE ROOM LAMP ASSY NO.2

(a) Using a moulding remover, disengage the 8 claws and remove the lens cover.

HINT:

Tape the screwdriver tip before use.

(b) Using a moulding remover, disengage the claws.

(c) Disconnect the map lamp switch connector and remove the map lamp.

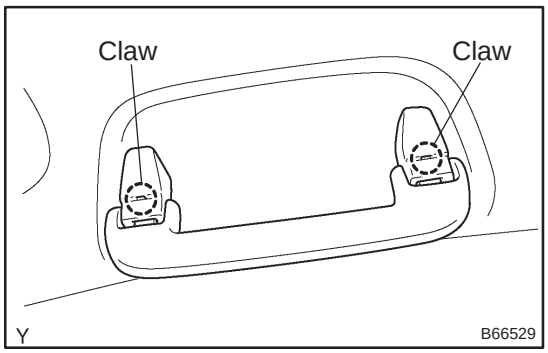

39. REMOVE ASSIST GRIP SUB–ASSY

(a) Using a screwdriver, disengage the 2 claws and remove the 2 assist grip covers.

HINT:

Tape the screwdriver tip before use.

(b) Remove the 2 bolts and assist grip.

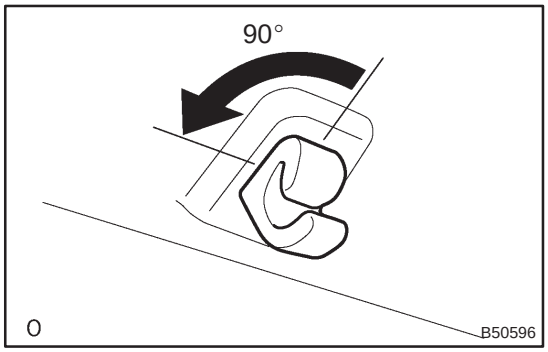

40. REMOVE VISOR HOLDER

(a) Remove the holder of the sun visor by turning it counterclockwise.

41. REMOVE SUN ROOF OPENING TRIM MOULDING (W/ SLIDING ROOF)

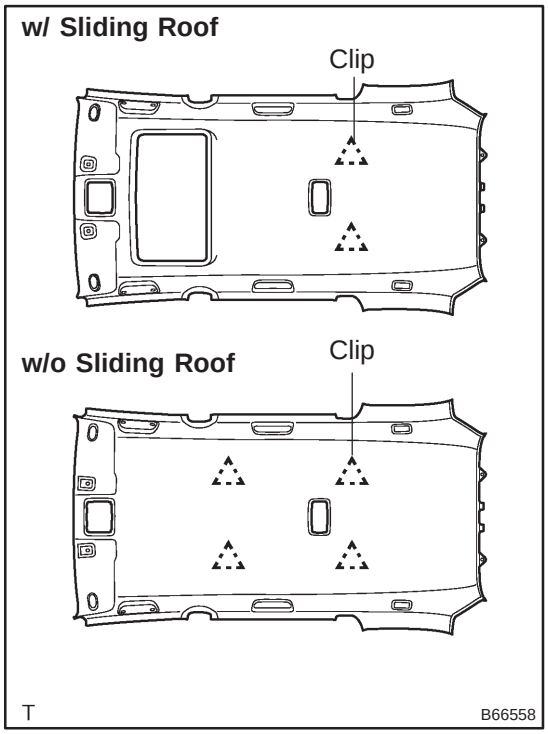

42. REMOVE ROOF HEADLINING ASSY

(a) w/ Sliding roof:
Using a clip remover, disengage the 2 clips and remove the roof headling.

(b) w/o Sliding roof:
Using a clip remover, disengage the 4 clips and remove the roof headling.

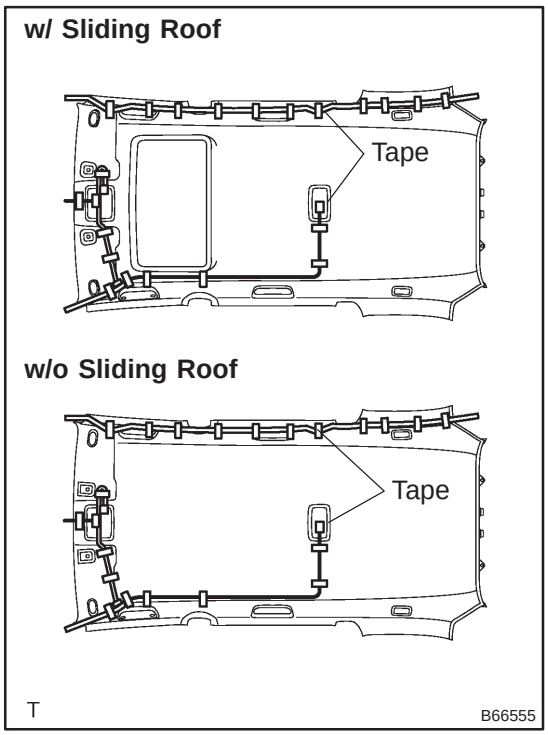

43. INSTALL ROOF HEADLINING ASSY

(a) Align the markings, and then install the wire harness with tape.

NOTICE:

Attach the roof wire harness securely.

(b) w/ Sliding roof:
Install the 4 clips.

(c) wo/ Sliding roof:
Install the 2 clips.

44. INSTALL REAR SEAT ASSY (See page 72–21)

IGNITION OR STARTER SWITCH ASSY

80027–04

REPLACEMENT

HINT:

The installation is in the reverse order of the removal.

1. REMOVE STEERING COLUMN COVER LWR (See page 50–9)

2. REMOVE STEERING COLUMN COVER UPR (See page 50–9)

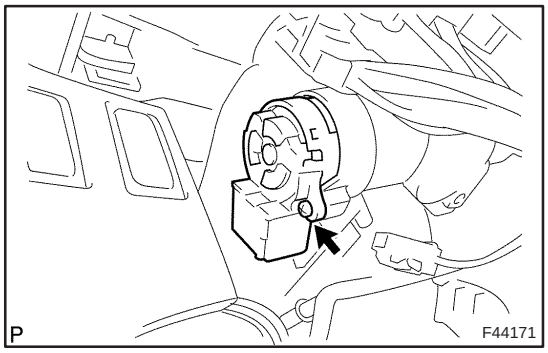

3. REMOVE IGNITION OR STARTER SWITCH ASSY

(a) Disconnect the ignition switch and unlock warning switch connectors.

(b) Remove the clamp.

(c) Remove the screw and ignition switch.

80028–04

INSPECTION

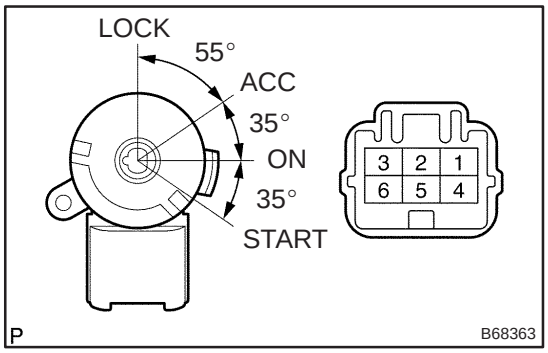

1. INSPECT IGNITION OR STARTER SWITCH ASSY

(a) Inspect the switch resistance.

Standard:

Terminal No.	Switch Condition	Specified Condition
2 – 3	ACC	Below 1Ω
1 – 3	ON	
2 – 3		
4 – 6		
1 – 3	START	
4 – 5		
4 – 6		

If the result is not as specified, replace the switch.

HOW TO USE THIS MANUAL

010B2–08

GENERAL INFORMATION

1. GENERAL DESCRIPTION

(a) This manual is made in accordance with SAE J2008.

(b) Generally, repair operations can be separated in the following 3 main processes:
1. Diagnosis
2. Removing and Installing, Replacing, Disassembling, Installing and Checking, Adjusting
3. Final Inspection

(c) This manual explains the 1st process of ”Diagnosis” (placed in the ”Diagnostics” section), the 2nd process of ”Removing and Installing, Replacing, Disassembling, Installing and Checking, Adjusting”, but the 3rd process of ”Final Inspection” is omitted.

(d) The following essential operations are not written in this manual. However, these operations must be done in the practical situation.
(1) Operation with a jack or lift
(2) Cleaning of a removed part when necessary
(3) Visual check

2. INDEX

(a) An alphabetical INDEX is provided as a section on the end of the book to guide you to the item to be repaired.

3. PREPARATION

(a) Use of special service tools (SST) and special service materials (SSM) may be required, depending on the repairing condition. Be sure to use SST and SSM when they are required and follow the working procedure properly. A list of SST and SSM is in the Preparation section of this manual.

4. REPAIR PROCEDURES

(a) Component drawing is placed under the title when necessary.

(b) Illustrations are placed as ”disassembled parts drawing” so that it enables you to understand the fitting condition of the components.

(c) Non–reusable parts, grease applied parts, precoated parts and tightening torque are specified in the components drawing.

Example:

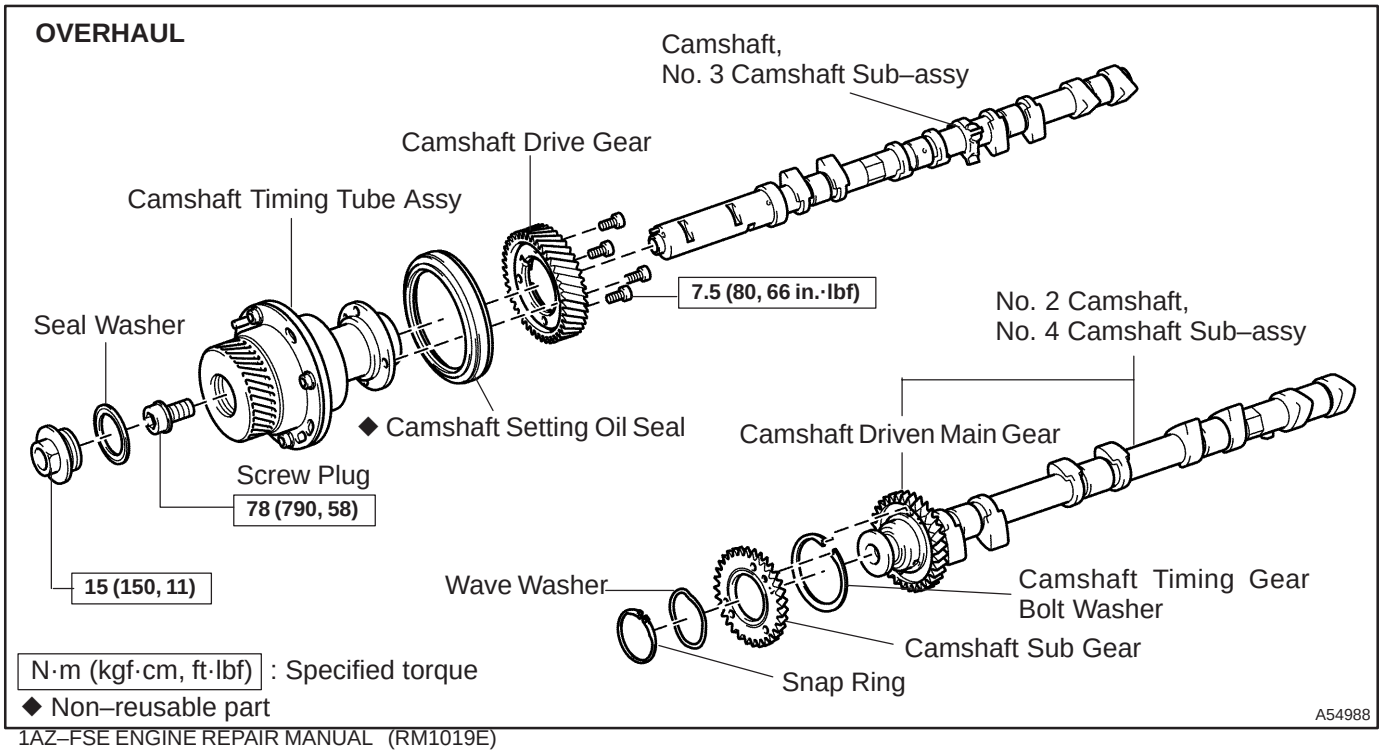

(d) Tightening torque, oil applying position, and non–reusable parts are described as important points in the procedure.

NOTICE:

There are cases where such information can only be indicated by an illustration. In that case, all the information such as torque, oil, etc. are described in the illustration.

(e) Installing procedure of operation items is performed in the reverse order of the removal, and only the important points are described.

(f) Only items with points are described in the procedure, and the operational portion and content are placed using an illustration. In the explanations, details of the operational method, standard value and notice are placed.

(g) There may be a case where the illustrations of the similar models are used. In that case the details may be different from the actual vehicle.

(h) The procedures are presented in a step–by–step format:

(1) The illustration shows what to do and where to do it.

(2) The task heading tells what to do.

(3) The detailed text tells how to perform the task and gives other information such as specifications and warnings.

Example:

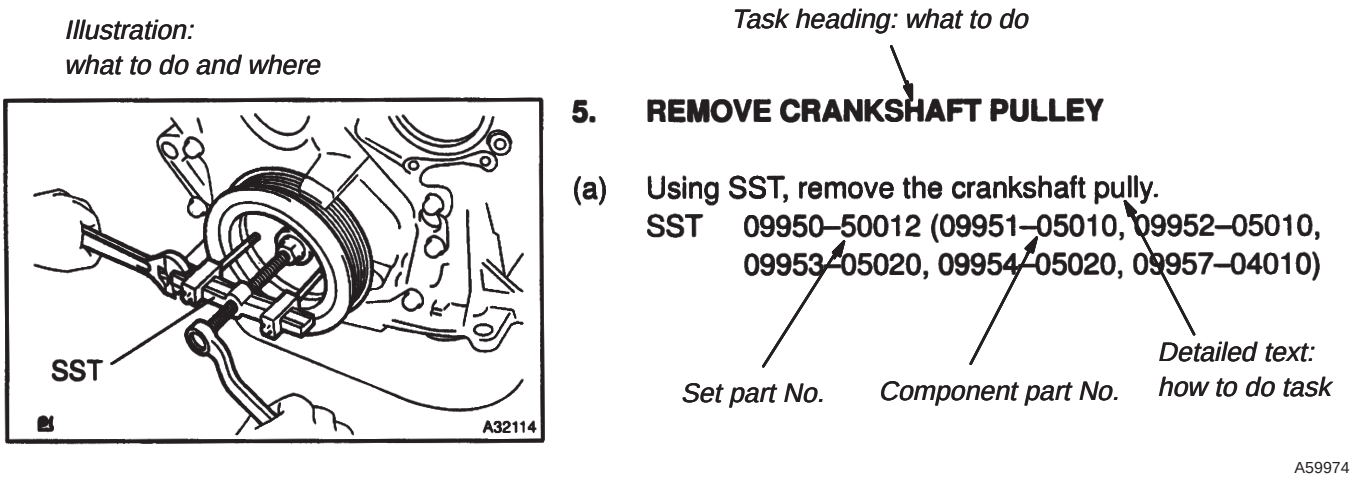

HINT:

This format provides an experienced technician with a FAST TRACK to the necessary information. The task heading can be read at a glance when necessary, and the text below provides detailed information. Important specifications and warnings always stand out in bold type.

5. SERVICE SPECIFICATIONS

(a) Specifications are presented in bold type throughout the manual. You never have to leave the procedure to look up your specifications. The specifications are also found in the Service Specifications section for a quick reference.

6. TERMS DEFINITION

CAUTION	Indicates the possibility of injury to you or other people.
NOTICE	Indicates the possibility of damage to the components being repaired.
HINT	Provides additional information to help you to perform the repair efficiently.

7. SI UNIT

(a) The UNITS given in this manual are primarily expressed according to the SI UNIT (International System of Unit), and alternately expressed in the metric system and in the English System.

Example:

Torque: 30 N·m (310 kgf·cm, 22 ft·lbf)

REPAIR INSTRUCTION

010L5–01

PRECAUTION

1. TO PREVENT FROM ENTERING FOREIGN SUBSTANCES.

(a) When foreign substances such as dust, grain of sand or metallic dust enter inside of engine, it often causes functional failure of the engine.
  (1) Precaution before disassembly.
    • Remove adequately all sand and mud adhere to the outside of engine .
  (2) Precaution at reassembly.
    • Protect disassembled parts from dust by using vinyl sheet to cover.

2. TO PREVENT SCRATCHES ON THE PARTS.

(a) The existence of scratches on the contact and revolving surfaces often causes oil leak and seisure.
  (1) Precautions at disassembly and reassembly.
    • When disassemble the contact surface of the parts, use plastic hummer striking lightly. (Do not pry out by screwdriver).
    • When fix the parts to the vise, do not directly catch it in the vise. Fix the parts through aluminum bar.

3. TO CLEAN AND WASH THE PARTS.

(a) Each parts needs to be well cleaned, washed, and dried by air, and apply specified oil before reassembly.
  (1) Cleaning and washing by alkaline solvent is prohibited:
    • Parts made of aluminum and rubber. (ex. cylinder head cover gasket etc.)
  (2) Cleaning and washing by flushing oil (ex. kerosene, white gasoline etc.) is prohibited:
    • Parts made of rubber. (ex. cylinder head cover gasket etc.)

4. POSITION AND DIRECTION OF EACH PARTS.

(a) Each parts needs to be reassembled as the same position and direction as it disassembled.
  (1) Precautions at disassembly and reassembly.
    • Follow the directions when the manual designates to mark the matchmark and/or direction mark.
    • Disassembled parts needs to be put in order as disassembled, not to change position and/or direction.
    • Follow the directions when the manual instructs the position and direction.

5. INSTALL ENGINE ASSEMBLY TO OVERHAUL STAND WHEN OVERHAUL THE ENGINE.

6. PUT THE DISASSEMBLED PARTS IN ORDER AS THEY DISASSEMBLED.

7. APPLY ENGINE OIL TO THE SLIDING AND ROTATING SURFACES.

8. NON–REUSABLE PARTS SUCH AS GASKET AND SEAL NEEDS TO BE CHANGED TO THE NEW PARTS.

9. BASIC REPAIR HINT

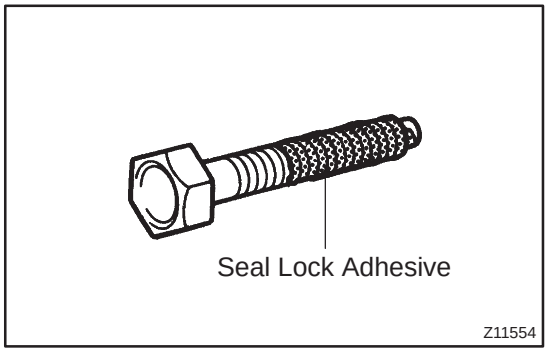

(a) Precoated Parts:
  (1) Precoated parts are bolts, nuts, etc. that are coated with a seal lock adhesive at the factory.
  (2) If a precoated part is retightened, loosened or caused to move in any way, it must be recoated with the specified adhesive.
  (3) When reusing precoated parts, clean off the old adhesive and dry with compressed air. Then apply the specified seal lock adhesive to the bolt, nut or threads.

NOTICE:

Do the torque checking with the lower limit value of the torque tolerance.

(4) Depending on the seal lock agent to apply, there may be a case where it is necessary to leave it for a specified time until it hardens.

(b) Gaskets:

When necessary, use a sealer on gaskets to prevent leaks.

(c) Bolts, Nuts and Screws:

Carefully observe all specifications for bolt tightening torques. Always use a torque wrench.

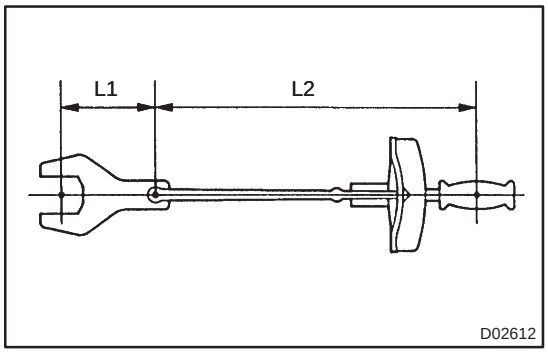

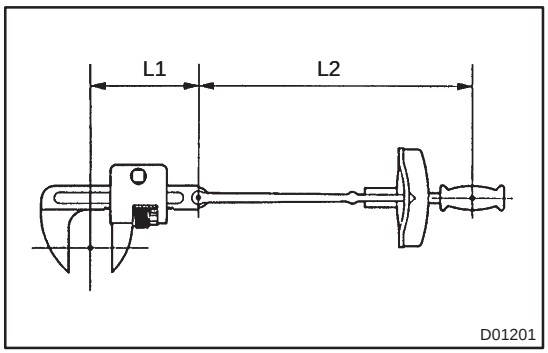

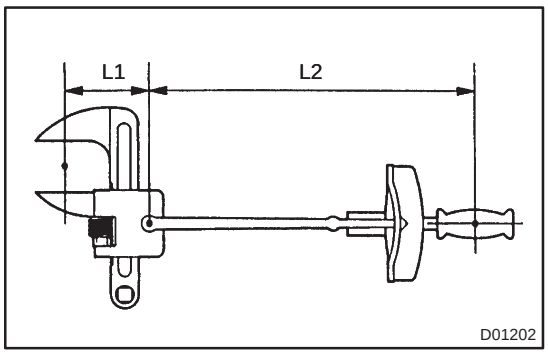

(d) Torque When Using Extension Tool with Torque Wrench:

(1) In case of tightening by extending the entire length of the torque wrench combined with SST or tool, if you tighten until the reading of the torque wrench reached the specified torque value, the actual torque becomes excessive.

(2) In this text, only the specified torque is described. In case of using SST or extension tool, find the reading of the torque wrench by the formula.

(3) Formula T'=T x L2/(L1 + L2)

T'	Reading of torque wrench {N·m (kgf·cm, ft·lbf)}
T	Torque {N·m (kgf·cm, ft·lbf)}
L1	Length of SST or tool (cm)
L2	Length of torque wrench (cm)

10. REMOVAL AND INSTALLATION OF FUEL CONTROL PARTS

(a) Place for Removing and Installing Fuel System Parts:

(1) Place with good air ventilation and without anything flammable such as welder, grinder, drill, electric motor or stove in the surroundings.

(2) Never work in a place like a pit or nearby pit as there is a possibility that vaporized fuel fills those places.

(b) Removing and Installing of Fuel System Parts:

(1) Prepare a fire extinguisher before starting the operation.

(2) For prevention of the static electricity, install a ground on the fuel changer, vehicle and fuel tank, and do not spray much water so as to prevent slipping.

(3) Never use any electric equipment like an electric motor or a working light as they may cause spark or high temperature.
(4) Never use an iron hammer as it may cause spark.
(5) Dispose the shop lag separately from any fuel deposit.

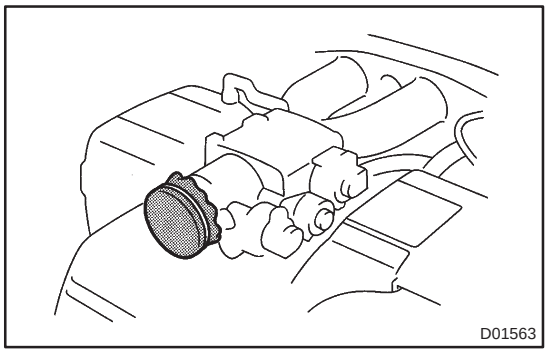

11. REMOVAL AND INSTALLATION OF ENGINE INTAKE PARTS

(a) If any metal tip is mixed in the inlet pass, that may give a bad effect to the engine and turbo charger.
(b) When removing and installing of the inlet system parts, close the opening of the removed inlet system parts and the engine with a clean shop lag or gum tape.
(c) When installing the inlet system parts, check that there is no mixing of a metal tip.

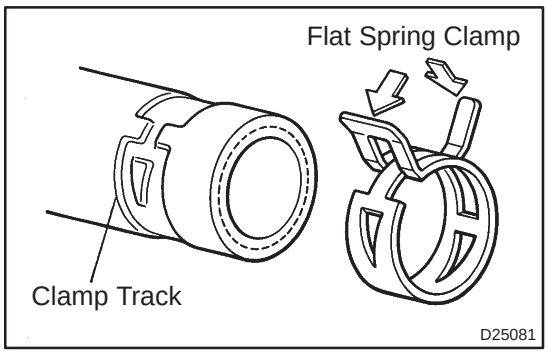

12. HANDLING OF HOSE CLAMPS

(a) Before removing the hose, check the depth of inserting portion and the clamp position to restore it surely.
(b) Change a deformed or dented into a new one.
(c) In case of reusing the hose, install the clamp on the hose where it has a clamp track.
(d) For a flat spring type clamp, make it adjust by adding force to the arrow mark direction after the installation.

TERMS

ABBREVIATIONS USED IN THIS MANUAL

010B9–09

Abbreviations	Meaning
ABS	Anti–Lock Brake System
A/C	Air Conditioner
AC	Alternating Current
ACC	Accessory
ACIS	Acoustic Control Induction System
ACSD	Automatic Cold Start Device
A.D.D.	Automatic Disconnecting Differential
A/F	Air–Fuel Ratio
AHC	Active Height Control Suspension
ALR	Automatic Locking Retractor
ALT	Alternator
AMP	Amplifier
ANT	Antenna
Approx.	Approximately
ASSY	Assembly
A/T, ATM	Automatic Transmission (Transaxle)
ATF	Automatic Transmission Fluid
AUTO	Automatic
AUX	Auxiliary
AVG	Average
AVS	Adaptive Variable Suspension
B+	Battery Voltage
BA	Brake Assist
BACS	Boost Altitude Compensation System
BAT	Battery
BDC	Bottom Dead Center
B/L	Bi–Level
B/S	Bore–Stroke Ratio
BTDC	Before Top Dead Center
BVSV	Bimetallic Vacuum Switching Valve
CB	Circuit Breaker
CCo	Catalytic Converter For Oxidation
CD	Compact Disc
CF	Cornering Force
CG	Center Of Gravity
CH	Channel
CKD	Complete Knock Down
COMB.	Combination
CPE	Coupe
CPS	Combustion Pressure Sensor
CPU	Central Processing Unit
CRS	Child Restraint System
CTR	Center
C/V	Check Valve
CV	Control Valve
CW	Curb Weight
DC	Direct Current
DEF	Defogger

Abbreviations	Meaning
DFL	Deflector
DIFF.	Differential
DIFF. LOCK	Differential Lock
D/INJ	Direct Injection
DLC	Data Link Connector
DLI	Distributorless Ignition
DOHC	Double Overhead Camshaft
DP	Dash Pot
DS	Dead Soak
DSP	Digital Signal Processor
DTC	Diagnostic Trouble Code
DVD	Digital Versatile Disc
EBD	Electric Brake Force Distribution
ECAM	Engine Control And Measurement System
ECD	Electronic Controlled Diesel
ECDY	Eddy Current Dynamometer
ECT	Electronic Control Transmission
ECU	Electronic Control Unit
ED	Electro–Deposited Coating
EDU	Electronic Driving Unit
EDIC	Electric Diesel Injection Control
EFI	Electronic Fuel Injection
E/G	Engine
EGR	Exhaust Gas Recirculation
EGR–VM	EGR–Vacuum Modulator
ELR	Emergency Locking Retractor
EMPS	Electric Motor Power Steering
ENG	Engine
ESA	Electronic Spark Advance
ETCS–i	Electronic Throttle Control System–intelligent
EVAP	Evaporative Emission Control
EVP	Evaporator
E–VRV	Electric Vacuum Regulating Valve
EX	Exhaust
FE	Fuel Economy
FF	Front–Engine Front–Wheel–Drive
F/G	Fuel Gauge
FIPG	Formed In Place Gasket
FL	Fusible Link
F/P	Fuel Pump
FPU	Fuel Pressure Up
Fr	Front
F/W	Flywheel
FW/D	Flywheel Damper
FWD	Front–Wheel–Drive
GAS	Gasoline
GND	Ground
GPS	Global Positioning System
HAC	High Altitude Compensator
H/B	Hatchback
H–FUSE	High Current Fuse

Abbreviations	Meaning
HI	High
HID	High Intensity Discharge (Head Lamp)
HSG	Housing
HT	Hard Top
HWS	Heated Windshield System
IC	Integrated Circuit
IDI	Indirect Diesel Injection
IFS	Independent Front Suspension
IG	Ignition
IIA	Integrated Ignition Assembly
IN	Intake (Manifold, Valve)
INT	Intermittent
I/P	Instrument Panel
IRS	Independent Rear Suspension
ISC	Idle Speed Control
J/B	Junction Block
J/C	Junction Connector
KD	Kick–Down
LAN	Local Area Network
LB	Liftback
LCD	Liquid Crystal Display
LED	Light Emitting Diode
LH	Left–Hand
LHD	Left–Hand Drive
L/H/W	Length, Height, Width
LLC	Long–Life Coolant
LNG	Liquified Natural Gas
LO	Low
LPG	Liquified Petroleum Gas
LSD	Limited Slip Differential
LSP & PV	Load Sensing Proportioning And Bypass Valve
LSPV	Load Sensing Proportioning Valve
MAP	Manifold Absolute Pressure
MAX.	Maximum
MIC	Microphone
MIL	Malfunction Indicator Lamp
MIN.	Minimum
MG1	Motor Generator No.1
MG2	Motor Generator No.2
MP	Multipurpose
MPI	Multipoint Electronic Injection
MPX	Multiplex Communication System
M/T, MTM	Manual Transmission (Transaxle)
MT	Mount
MTG	Mounting
N	Neutral
NA	Natural Aspiration
No.	Number
O2S	Oxygen Sensor
O/D	Overdrive
OEM	Original Equipment Manufacturing

Abbreviations	Meaning
OHC	Overhead Camshaft
OHV	Overhead Valve
OPT	Option
ORVR	On–board Refilling Vapor Recovery
O/S	Oversize
P & BV	Proportioning And Bypass Valve
PCS	Power Control System
PCV	Positive Crankcase Ventilation
PKB	Parking Brake
PPS	Progressive Power Steering
PTC	Positive Temperature Coefficient
PS	Power Steering
PTO	Power Take–Off
P/W	Power Window
R & P	Rack And Pinion
RAM	Random Access Memory
R/B	Relay Block
RBS	Recirculating Ball Type Steering
R/F	Reinforcement
RFS	Rigid Front Suspension
RH	Right–Hand
RHD	Right–Hand Drive
RLY	Relay
ROM	Read Only Memory
Rr	Rear
RRS	Rigid Rear Suspension
RWD	Rear–Wheel Drive
SDN	Sedan
SEN	Sensor
SICS	Starting Injection Control System
SOC	State Of Charge
SOHC	Single Overhead Camshaft
SPEC	Specification
SPI	Single Point Injection
SRS	Supplemental Restraint System
SSM	Special Service Materials
SST	Special Service Tools
STD	Standard
STJ	Cold–Start Fuel Injection
SW	Switch
SYS	System
T/A	Transaxle
TACH	Tachometer
TBI	Throttle Body Electronic Fuel Injection
TC	Turbocharger
TCCS	TOYOTA Computer–Controlled System
TCV	Timing Control Valve
TDC	Top Dead Center
TEMP.	Temperature
TEMS	TOYOTA Electronic Modulated Suspension
TFT	Toyota Free–Tronic

Abbreviations	Meaning
TIS	Total Information System For Vehicle Development
T/M	Transmission
TMC	TOYOTA Motor Corporation
TMMK	TOYOTA Motor Manufacturing Kentucky, Inc.
TRC	Traction Control System
TURBO	Turbocharge
TWC	Three–Way Catalyst
U/D	Underdrive
U/S	Undersize
VCV	Vacuum Control Valve
VENT	Ventilator
VIN	Vehicle Identification Number
VPS	Variable Power Steering
VSC	Vehicle Stability Control
VSV	Vacuum Switching Valve
VTV	Vacuum Transmitting Valve
VVT–i	Variable Valve Timing–intelligent
w/	With
WGN	Wagon
W/H	Wire Harness
w/o	Without
WU–TWC	Warm Up Three–way Catalytic Converter
WU–OC	Warm Up Oxidation Catalytic Converter
1st	First
2nd	Second
2WD	Two Wheel Drive Vehicle (4 x 2)
3rd	Third
4th	Fourth
4WD	Four Wheel Drive Vehicle (4 x 4)
4WS	Four Wheel Steering System
5th	Fifth

010BA–12

GLOSSARY OF SAE AND TOYOTA TERMS

This glossary lists all SAE–J1930 terms and abbreviations used in this manual in compliance with SAE recommendations, as well as their TOYOTA equivalents.

SAE ABBREVIATIONS	SAE TERMS	TOYOTA TERMS ( )—ABBREVIATIONS
A/C	Air Conditioning	Air Conditioner
ACL	Air Cleaner	Air Cleaner, A/CL
AIR	Secondary Air Injection	Air Injection (AI)
AP	Accelerator Pedal	–
B+	Battery Positive Voltage	+B, Battery Voltage
BARO	Barometric Pressure	HAC
CAC	Charge Air Cooler	Intercooler
CARB	Carburetor	Carburetor
CFI	Continuous Fuel Injection	–
CKP	Crankshaft Position	Crank Angle
CL	Closed Loop	Closed Loop
CMP	Camshaft Position	Cam Angle
CPP	Clutch Pedal Position	–
CTOX	Continuous Trap Oxidizer	–
CTP	Closed Throttle Position	LL ON, Idle ON
DFI	Direct Fuel Injection (Diesel)	Direct Injection (DI/INJ)
DI	Distributor Ignition	–
DLC1 DLC2 DLC3	Data Link Connector 1 Data Link Connector 2 Data Link Connector 3	1: Check Connector 2: Total Diagnosis Communication Link (TDCL) 3: OBD II Diagnostic Connector
DTC	Diagnostic Trouble Code	Diagnostic Trouble Code
DTM	Diagnostic Test Mode	–
ECL	Engine Control Level	–
ECM	Engine Control Module	Engine ECU (Electronic Control Unit)
ECT	Engine Coolant Temperature	Coolant Temperature, Water Temperature (THW)
EEPROM	Electrically Erasable Programmable Read Only Memory	Electrically Erasable Programmable Read Only Memory (EEPROM), Erasable Programmable Read Only Memory (EPROM)
EFE	Early Fuel Evaporation	Cold Mixture Heater (CMH), Heat Control Valve (HCV)
EGR	Exhaust Gas Recirculation	Exhaust Gas Recirculation (EGR)
EI	Electronic Ignition	Distributorless Ignition (DLI)
EM	Engine Modification	Engine Modification (EM)
EPROM	Erasable Programmable Read Only Memory	Programmable Read Only Memory (PROM)
EVAP	Evaporative Emission	Evaporative Emission Control (EVAP)
FC	Fan Control	–
FEEPROM	Flash Electrically Erasable Programmable Read Only Memory	–
FEPROM	Flash Erasable Programmable Read Only Memory	–
FF	Flexible Fuel	–
FP	Fuel Pump	Fuel Pump
GEN	Generator	Alternator
GND	Ground	Ground (GND)

HO2S	Heated Oxygen Sensor	Heated Oxygen Sensor (HO_2S)
IAC	Idle Air Control	Idle Speed Control (ISC)
IAT	Intake Air Temperature	Intake or Inlet Air Temperature
ICM	Ignition Control Module	–
IFI	Indirect Fuel Injection	Indirect Injection (IDL)
IFS	Inertia Fuel–Shutoff	–
ISC	Idle Speed Control	–
KS	Knock Sensor	Knock Sensor
MAF	Mass Air Flow	Air Flow Meter
MAP	Manifold Absolute Pressure	Manifold Pressure Intake Vacuum
MC	Mixture Control	Electric Bleed Air Control Valve (EBCV) Mixture Control Valve (MCV) Electric Air Control Valve (EACV)
MDP	Manifold Differential Pressure	–
MFI	Multiport Fuel Injection	Electronic Fuel Injection (EFI)
MIL	Malfunction Indicator Lamp	Check Engine Lamp
MST	Manifold Surface Temperature	–
MVZ	Manifold Vacuum Zone	–
NVRAM	Non–Volatile Random Access Memory	–
O2S	Oxygen Sensor	Oxygen Sensor, O_2 Sensor (O_2S)
OBD	On–Board Diagnostic	On–Board Diagnostic System (OBD)
OC	Oxidation Catalytic Converter	Oxidation Catalyst Convert (OC), CCo
OP	Open Loop	Open Loop
PAIR	Pulsed Secondary Air Injection	Air Suction (AS)
PCM	Powertrain Control Module	–
PNP	Park/Neutral Position	–
PROM	Programmable Read Only Memory	–
PSP	Power Steering Pressure	–
PTOX	Periodic Trap Oxidizer	Diesel Particulate Filter (DPF) Diesel Particulate Trap (DPT)
RAM	Random Access Memory	Random Access Memory (RAM)
RM	Relay Module	–
ROM	Read Only Memory	Read Only Memory (ROM)
RPM	Engine Speed	Engine Speed
SC	Supercharger	Supercharger
SCB	Supercharger Bypass	E–ABV
SFI	Sequential Multiport Fuel Injection	Electronic Fuel Injection (EFI), Sequential Injection
SPL	Smoke Puff Limiter	–
SRI	Service Reminder Indicator	–
SRT	System Readiness Test	–
ST	Scan Tool	–
TB	Throttle Body	Throttle Body
TBI	Throttle Body Fuel Injection	Single Point Injection Central Fuel Injection (Ci)
TC	Turbocharger	Turbocharger
TCC	Torque Converter Clutch	Torque Converter

TCM	Transmission Control Module	Transmission ECU, ECT ECU
TP	Throttle Position	Throttle Position
TR	Transmission Range	–
TVV	Thermal Vacuum Valve	Bimetallic Vacuum Switching Valve (BVSV) Thermostatic Vacuum Switching Valve (TVSV)
TWC	Three–Way Catalytic Converter	Three–Way Catalytic (TWC) Manifold Converter CC_{RO}
TWC+OC	Three–Way + Oxidation Catalytic Converter	CC_R + CCo
VAF	Volume Air Flow	Air Flow Meter
VR	Voltage Regulator	Voltage Regulator
VSS	Vehicle Speed Sensor	Vehicle Speed Sensor
WOT	Wide Open Throttle	Full Throttle
WU–OC	Warm Up Oxidation Catalytic Converter	–
WU–TWC	Warm Up Three–Way Catalytic Converter	–
3GR	Third Gear	–
4GR	Fourth Gear	–

ENGINE MECHANICAL

022IW–01

PREPARATION

SST

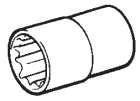	09011–38121	12 mm Socket Wrench for 12 Pointed Head	CYLINDER BLOCK ASSY
	09032–00100	Oil Pan Seal Cutter	PARTIAL ENGINE ASSY
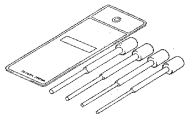	09201–10000	Valve Guide Bushing Remover & Replacer Set	CYLINDER HEAD ASSY
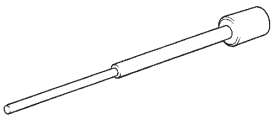	(09201–01050)	Valve Guide Bushing Remover & Replacer 5	CYLINDER HEAD ASSY
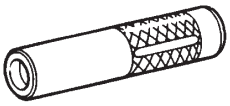	09201–41020	Valve Stem Oil Seal Replacer	CYLINDER HEAD ASSY
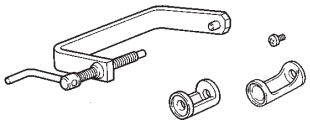	09202–70020	Valve Spring Compressor	CYLINDER HEAD ASSY
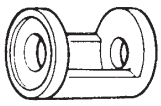	(09202–00010)	Attachment	CYLINDER HEAD ASSY
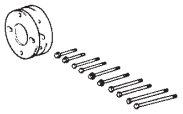	09213–54015	Crankshaft Pulley Holding Tool	PARTIAL ENGINE ASSY
	(91651–60855)	Bolt	PARTIAL ENGINE ASSY
	09223–15030	Oil Seal & Bearing Replacer	PARTIAL ENGINE ASSY
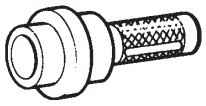	09223–22010	Crankshaft Front Oil Seal Replacer	PARTIAL ENGINE ASSY
	09228–06501	Oil Filter Wrench	PARTIAL ENGINE ASSY

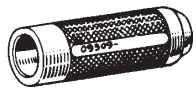	09309–37010	Transmission Bearing Replacer	PARTIAL ENGINE ASSY
	09330–00021	Companion Flange Holding Tool	PARTIAL ENGINE ASSY
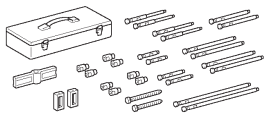	09950–50013	Puller C Set	PARTIAL ENGINE ASSY
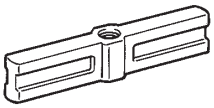	(09951–05010)	Hanger 150	PARTIAL ENGINE ASSY
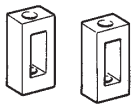	(09952–05010)	Slide Arm	PARTIAL ENGINE ASSY
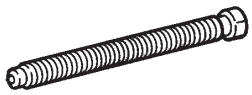	(09953–05020)	Center Bolt 150	PARTIAL ENGINE ASSY
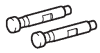	(09954–05021)	Claw No.2	PARTIAL ENGINE ASSY
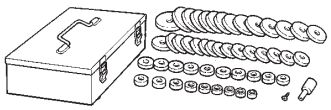	09950–60010	Replacer Set	CYLINDER HEAD ASSY CYLINDER BLOCK ASSY
	(09951–00180)	Replacer 18	CYLINDER HEAD ASSY
	(09951–00200)	Replacer 20	CYLINDER BLOCK ASSY
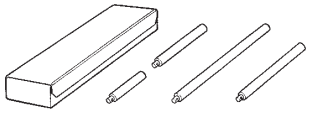	09950–70010	Handle Set	CYLINDER HEAD ASSY CYLINDER BLOCK ASSY PARTIAL ENGINE ASSY
	(09951–07100)	Handle 100	CYLINDER HEAD ASSY CYLINDER BLOCK ASSY PARTIAL ENGINE ASSY
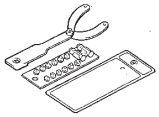	09960–10010	Variable Pin Wrench Set	PARTIAL ENGINE ASSY

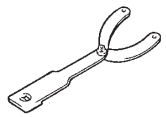	(09962–01000)	Variable Pin Wrench Arm Assy	PARTIAL ENGINE ASSY
	(09963–00700)	Pin 7	PARTIAL ENGINE ASSY
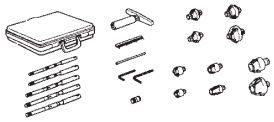	TB–524	Valve seal cutter set by BANZAI (J)	CYLINDER HEAD ASSY

Recomended Tools

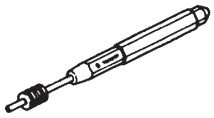	09031–00040	Pin Punch .	CYLINDER HEAD ASSY
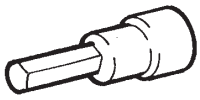	(09043–20060)	Socket Hexagon Wrench 6	PARTIAL ENGINE ASSY
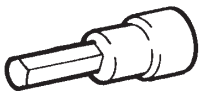	(09043–20120)	Socket Hexagon Wrench 12	PARTIAL ENGINE ASSY
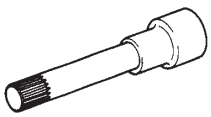	09043–50100	Bi–hexagon Wrench 10 mm	PARTIAL ENGINE ASSY

Equipment

Reamer	
piston ring compressor	
Micro meter	
Dial indicator	
Spring tension gauge	
Feeler gauge	
Cylinder gauge	
Straight edge	
Torque wrench	
Slide calipers	
V–block	
Sandpaper (#400)	
Piston heater	
Wooden block	
Plastigage	
Angle gauge	

LUBRICATION

022IX–01

PREPARATION

SST

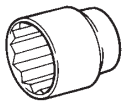	09011–12271	Socket Wrench for 27 mm	OIL PUMP ASSY

Equipment

Feeler gauge	
Straight edge	
Torque wrench	

STARTING & CHARGING

022KC–01

PREPARATION

SST

	09285–76010	Injection Pump Camshaft Bearing Cone Replacer	GENERATOR ASSY

Recomended Tools

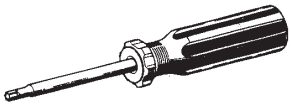	09041–00020	Torx Driver T25	STARTER ASSY
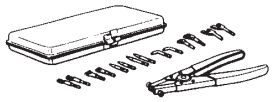	09904–00010	Expander Set	STARTER ASSY
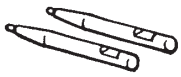	(09904–00050)	No. 4 Claw	STARTER ASSY

Equipment

Dial indicator	
Ohmmeter	
Torque wrench	
Slide calipers	
V–block	

STANDARD BOLT

HOW TO DETERMINE BOLT STRENGTH

030LK–05

Bolt Type				Class
Hexagon Head Bolt		Stud Bolt	Weld Bolt	
Normal Recess Bolt	Deep Recess Bolt			
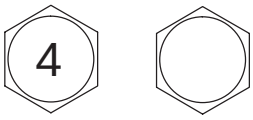 No Mark	 No Mark	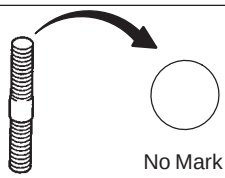 No Mark	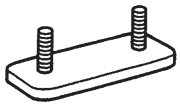	4T
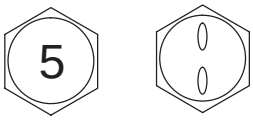				5T
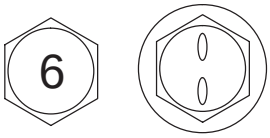 w/ Washer	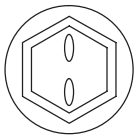 w/ Washer			6T
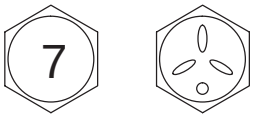	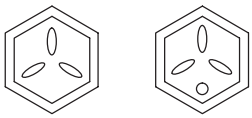			7T
				8T
				9T
	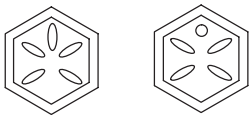			10T
	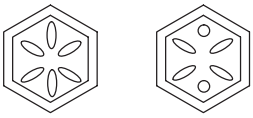			11T

B06431

030LL–05

SPECIFIED TORQUE FOR STANDARD BOLTS

Class	Diameter mm	Pitch mm	Specified torque					
			Hexagon head bolt			Hexagon flange bolt		
			N·m	kgf·cm	ft·lbf	N·m	kgf·cm	ft·lbf
4T	6	1	5	55	48 in.·lbf	6	60	52 in.·lbf
	8	1.25	12.5	130	9	14	145	10
	10	1.25	26	260	19	29	290	21
	12	1.25	47	480	35	53	540	39
	14	1.5	74	760	55	84	850	61
	16	1.5	115	1,150	83	–	–	–
5T	6	1	6.5	65	56 in.·lbf	7.5	75	65 in.·lbf
	8	1.25	15.5	160	12	17.5	175	13
	10	1.25	32	330	24	36	360	26
	12	1.25	59	600	43	65	670	48
	14	1.5	91	930	67	100	1,050	76
	16	1.5	140	1,400	101	–	–	–
6T	6	1	8	80	69 in.·lbf	9	90	78 in.·lbf
	8	1.25	19	195	14	21	210	15
	10	1.25	39	400	29	44	440	32
	12	1.25	71	730	53	80	810	59
	14	1.5	110	1,100	80	125	1,250	90
	16	1.5	170	1,750	127	–	–	–
7T	6	1	10.5	110	8	12	120	9
	8	1.25	25	260	19	28	290	21
	10	1.25	52	530	38	58	590	43
	12	1.25	95	970	70	105	1,050	76
	14	1.5	145	1,500	108	165	1,700	123
	16	1.5	230	2,300	166	–	–	–
8T	8	1.25	29	300	22	33	330	24
	10	1.25	61	620	45	68	690	50
	12	1.25	110	1,100	80	120	1,250	90
9T	8	1.25	34	340	25	37	380	27
	10	1.25	70	710	51	78	790	57
	12	1.25	125	1,300	94	140	1,450	105
10T	8	1.25	38	390	28	42	430	31
	10	1.25	78	800	58	88	890	64
	12	1.25	140	1,450	105	155	1,600	116
11T	8	1.25	42	430	31	47	480	35
	10	1.25	87	890	64	97	990	72
	12	1.25	155	1,600	116	175	1,800	130

030LM–05

HOW TO DETERMINE NUT STRENGTH

Nut Type			Class
Present Standard Hexagon Nut	Old Standard Hexagon Nut		
	Cold Forging Nut	Cutting Processed Nut	
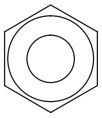 No Mark			4N
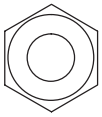 No Mark (w/ Washer)	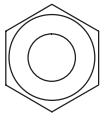 No Mark (w/ Washer)	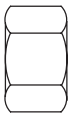 No Mark	5N (4T)
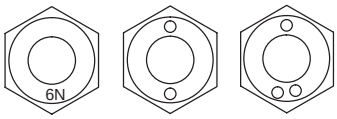 6N			6N
	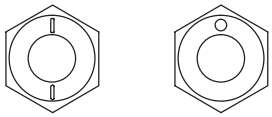	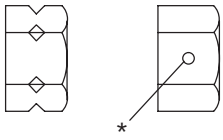 *	7N (5T)
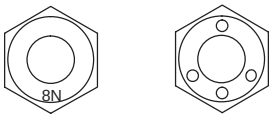 8N			8N
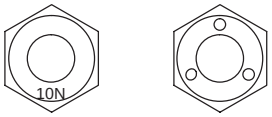 10N	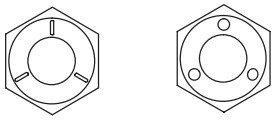	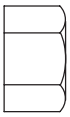 No Mark	10N (7T)
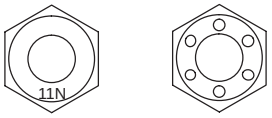 11N			11N
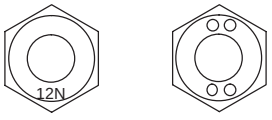 12N			12N

*: Nut with 1 or more marks on one side surface of the nut.

B06432

HINT:

Use the nut with the same number of the nut strength classification or the greater than the bolt strength classification number when tightening parts with a bolt and nut.

Example: Bolt = 4T

Nut = 4N or more

ENGINE MECHANICAL

SERVICE DATA

031FM–01

Oil pump drive gear		
Gear diameter (w/chain)	Minimum	48.2 mm (1.898 in.)
Oil pump drive shaft gear		
Gear diameter (w/chain)	Minimum	48.2 mm (1.898 in.)
Crankshaft timing gear or sprocket		
Gear diameter (w/chain)	Minimum	51.6 mm (2.031 in.)
Chain tensioner slipper		
Wear	Maximum	1.0 mm (0.039 in.)
Chain vibration damper No.1		
Wear	Maximum	1.0 mm (0.039 in.)
Cylinder head set bolt		
Bolt length	Standard	161.3 to 162.7 mm (6.350 to 6.406 in.)
	Maximum	164.2 mm (6.465 in.)
Chain sub–assy		
Elongation	Maximum	115.4 mm (4.543 in.)
Camshaft timing gear or sprocket		
Sprocket diameter (w/chain)	Minimum	97.3 mm (3.831 in.)
Camshaft		
Circle runout	Maximum	0.05 mm (0.0020 in.)
Cam lobe height	Standard	45.510 to 45.610 mm (1.7917 to 1.7957 in.)
	Minimum	45.400 mm (1.7874 in.)
Camshaft No.2		
Circle runout	Maximum	0.05 mm (0.0020 in.)
Cam lobe height	Standard	45.983 to 46.083 mm (1.8104 to 1.8143 in.)
	Minimum	45.873 mm (1.8060 in.)
No. 1 journal diameter		35.971 to 35.985 mm (1.4162 to 1.4167 in.)
Other journal diameter		22.959 to 22.975 mm (0.9040 to 0.9045 in.)
Thrust clearance		
Intake	Standard	0.040 to 0.095 mm (0.0016 to 0.0037 in.)
	Maximum	0.11 mm (0.0043 in.)
Exhaust	Standard	0.080 to 0.135 mm (0.0032 to 0.0053 in.)
	Maximum	0.15 mm (0.0059 in.)
Oil clearance		
Intake No. 1 journal bearing mark 1	Standard	0.007 to 0.038 mm (0.0028 to 0.00150 in.)
Intake No. 1 journal bearing mark 2	Standard	0.008 to 0.038 mm (0.0031 to 0.00150 in.)
Intake No. 1 journal bearing mark 3	Standard	0.008 to 0.038 mm (0.0031 to 0.00150 in.)
Exhaust No. 1 journal	Standard	0.015 to 0.054 mm (0.0006 to 0.0021 in.)
Other journals	Standard	0.025 to 0.062 mm (0.00098 to 0.00244 in.)
Intake No. 1 journal	Maximum	0.07 mm (0.0028 in.)
Other journals	Maximum	0.10 mm (0.0039 in.)
Valve clearance	(Cold)	
Intake		0.19 to 0.29 mm (0.007 to 0.0114 in.)
Exhaust		0.30 to 0.40 mm (0.012 to 0.0160 in.)
Cylinder head		
Warpage		
Cylinder block side	Maximum	0.05 mm (0.0020 in.)
Intake manifold side	Maximum	0.08 mm (0.0031 in.)
Exhaust manifold side	Maximum	0.08 mm (0.0031 in.)
Inner compression spring		
Free length		45.7 mm (1.799 in.)
Deviation	Maximum	1.6 mm (0.063 in.)
Angle (reference)	Maximum	2°

Intake valve		
Overall length	Standard	101.71 mm (4.0043in.)
	Minimum	101.21 mm (3.9846in.)
Valve stem diameter		5.470 to 5.485 mm (0.2154 to 0.2159 in.)
Margin thickness	Standard	1.05 to 1.45 mm (0.041 to 0.057 in.)
	Minimum	0.5 mm (0.020 in.)
Exhaust valve		
Overall length	Standard	101.15 mm (3.9823in.)
	Minimum	100.70 mm (3.9646 in.)
Valve stem diameter		5.465 to 5.480 mm (0.2152 to 0.2157 in.)
Margin thickness	Standard	1.2 to 1.6 mm (0.047 to 0.063 in.)
	Minimum	0.75 mm (0.030 in.)
Intake valve guide bush		
Bushing inside diameter		5.510 to 5.530 mm (0.2169 to 0.2177 in.)
Oil clearance	Standard	0.025 to 0.060 mm (0.00098 to 0.00236 in.)
	Maximum	0.08 mm (0.0031 in.)
Diameter		10.285 to 10.306 mm (0.4049 to 0.4057 in.)
Protrusion height		9.6 to 10.0 mm (0.3779 to 0.3937 in.)
Exhaust valve guide bush		
Bushing inside diameter		5.510 to 5.530 mm (0.2169 to 0.2177 in.)
Oil clearance	Standard	0.030 to 0.065 mm (0.0012 to 0.0026 in.)
	Maximum	0.10 mm (0.0039 in.)
Diameter		10.285 to 10.306 mm (0.4049 to 0.4057 in.)
Protrusion height		9.6 to 10.0 mm (0.3779 to 0.3937 in.)
Valve lifter		
Lifter diameter		30.966 to 30.976 mm (1.2191 to 1.2195 in.)
Lifter bore diameter		31.009 to 31.025 mm (1.2208 to 1.2215 in.)
Oil clearance	Standard	0.033 to 0.059 mm (0.0013 to 0.0023 in.)
	Maximum	0.08 mm (0.0032 in.)
Ring w/head pin		
Protrusion height		3.0 to 5.5 mm (0.118 to 0.217 in.)
Connecting rod		
Thrust clearance	Standard	0.160 to 0.362 mm (0.0063 to 0.0143 in.)
	Maximum	0.362 mm (0.0143 in.)
Oil clearance	Standard	0.024 to 0.048 mm (0.0009 to 0.0019 in.)
	Maximum	0.08 mm (0.0031 in.)
Bushing inside diameter		22.005 to 22.014 mm (0.8663 to 0.8667 in.)
Oil clearance	Standard	0.005 to 0.011 mm (0.0002 to 0.0004 in.)
	Maximum	0.05 mm (0.0020 in.)
Out–of–alignment	Maximum per 100 mm (3.94 in.)	0.05 mm (0.0020 in.)
Rod twist	Maximum per 100 mm (3.94 in.)	0.15 mm (0.0059 in.)
Cylinder block		
Warpage	Maximum	0.05 mm (0.0020 in.)
Bore diameter	Standard	86.000 to 86.013 mm (3.3858 to 3.3863 in.)
Piston		
Piston diameter		85.927 to 85.937 mm (3.3829 to 3.3833 in.)
Piston oil clearance	Standard	0.063 to 0.086 mm (0.0025 to 0.0034 in.)
	Maximum	0.1 mm (0.0039 in.)
Piston ring		
Ring groove clearance	No. 1	0.020 to 0.070 mm (0.0008 to 0.0028 in.)
	No. 2	0.020 to 0.060 mm (0.0008 to 0.0024 in.)
	Oil (side rail)	0.070 to 0.150 mm (0.0028 to 0.0059 in.)
End gap	Standard No. 1	0.30 to 0.40 mm (0.0118 to 0.0157 in.)
	No. 2	0.47 to 0.62 mm (0.0185 to 0.0244 in.)
	Oil (side rail)	0.10 to 0.35 mm (0.0039 to 0.0138 in.)
	Maximum No. 1	0.89 mm (0.0350 in.)
	No. 2	1.37 mm (0.0539 in.)
	Oil (side rail)	0.73 mm (0.0287 in.)

Piston pin		
Bushing inside diameter		22.005 to 22.014 mm (0.8663 to 0.8667 in.)
Piston pin diameter		21.997 to 22.006 mm (0.8660 to 0.8664 in.)
Oil clearance	Standard	0.005 to 0.011 mm (0.0002 to 0.0004 in.)
	Maximum	0.005 mm (0.0020 in.)
Connecting rod bolt		
Diameter	Standard	7.2 to 7.3 mm (0.283 to 0.287 in.)
	Minimum	7.0 mm (0.276 in.)
Crankshaft		
Thrust clearance	Standard	0.040 to 0.240 mm (0.0016 to 0.0094 in.)
	Maximum	0.30 mm (0.0118 in.)
Thrust washer thickness		1.930 to 1.980 mm (0.0760 to 0.0780 in.)
Circle runout	Maximum	0.03 mm (0.0012 in.)
Main journal diameter		54.988 to 55.000 (2.1648 to 2.06535 in.)
Oil clearance	Standard	0.017 to 0.040 mm (0.0007 to 0.0016 in.)
	Maximum	0.07 mm (0.0028 in.)
Crank pin taper and out– of –round	Maximum	0.003 mm (0.0001 in.)
Crank pin diameter		47.990 to 48.000 mm (1.8894 to 1.8898 in.)
Crankshaft bearing cap set bolt		
Diameter	Standard	7.5 to 7.6 mm (0.295 to 0.299 in.)
	Minimum	7.2 mm (0.283 in.)

031FN–01

TORQUE SPECIFICATION

Part Tightened		N·m	kgf·cm	ft·lbf
Stiffening crankcase assy x Cylinder block		33	332	24
Oil control valve filter x Cylinder block		30	306	22
Cylinder block water drain cock x Stiffening crankcase assy		25	255	18
Cylinder head x Cylinder block	1st 2nd	79 Turn 90°	806 Turn 90°	58 Turn 90°
Camshaft timing gear assy x Camshaft		54	551	40
Camshaft timing sprocket x Camshaft		54	551	40
Camshaft bearing cap No. 1 x Cylinder head		30	301	22
Camshaft bearing cap No. 2 x Cylinder head		30	301	22
Camshaft bearing cap No. 3 x Cylinder head		9.0	92	80 in.·lbf
Oil pump assy x Stiffening crankcase assy		19	194	14
Chain tensioner plate x Stiffening crankcase assy		12	122	9
Oil pump drive sprocket x Oil pump		30	301	22
Chain vibration damper No. 1 x Cylinder head		9.0	92	80 in.·lbf
Chain vibration damper No. 1 x Cylinder block		9.0	92	80 in.·lbf
Chain tensioner slipper x Cylinder block		19	194	14
Timing chain guide x Crankshaft bearing cap No. 1		9.0	92	80 in.·lbf
Timing chain cover (See page 14–5)	Bolt A Bolt B Bolt C Nut	9.0 21 43 9.0	92 214 438 92	80 in.·lbf 15 32 80 in.·lbf
Oil pan x Stiffening crankcase assy		9.0	92	80 in.·lbf
Oil pan drain plug x Oil pan		25	250	18
Water pump assy x Cylinder block		9.0	92	80 in.·lbf
Water pump pulley x Water pump assy		26	265	19
Crankshaft position sensor x Timing chain cover		9.0	92	80 in.·lbf
Crankshaft pulley x Crankshaft		170	1,733	125
Chain tensioner assy No. 1 x Timing chain cover		9.0	92	80 in.·lbf
Camshaft position sensor x Cylinder head		9.0	92	80 in.·lbf
Cylinder head cover x Cylinder head (See page 14–5)	Bolt A Bolt B Bolt C Nut	11 14 21 11	112 143 214 112	8 10 15 8
Oil filter union x Stiffening crankcase assy		30	306	22
Spark plug x Cylinder head		19	194	14
Ventilation valve x Cylinder head cover		19	194	14
Stud bolt x Cylinder head (See page 14–39)	Bolt A Bolt B Bolt C Bolt D	5 5 9.5 9.5	51 51 97 97	44 in.·lbf 44 in.·lbf 84 in.·lbf 84 in.·lbf
Connecting rod cap x Connecting rod	1st 2nd	25 Turn 90°	250 Turn 90°	18 Turn 90°
Crankshaft bearing cap x Cylinder block	1st 2nd	20 40	204 408	15 29
Stud bolt x Cyllinder block (See page 14–53)	Stud bolt A Stud bolt B Stud bolt C	5.0 10 5.0	51 97 51	44 in.·lbf 84 in.·lbf 44 in.·lbf

LUBRICATION

031FK–01

SERVICE DATA

Oil pump		
Side clearance	Standard	0.030 to 0.085 mm (0.0012 to 0.0033 in.)
	Maximum	0.16 mm (0.0063 in.)
Tip clearance	Standard	0.080 to 0.160 mm (0.0031 to 0.0063 in.)
	Maximum	0.35 mm (0.0138 in.)
Body clearance	Standard	0.100 to 0.170 mm (0.00394 to 0.00669 in.)
	Maximum	0.325 mm (0.01280 in.)

031FL–01

TORQUE SPECIFICATION

Part Tightened	N·m	kgf·cm	ft·lbf
Oil pump x Oil pump cover	8.8	90	80 in.·lbf
Oil pump x Oil pump relief valve plug	49	500	35

STARTING & CHARGING

SERVICE DATA

031E6–02

Starter armature assy		
Circle runout	Standard	0.02 mm (0.0008 in.)
	Maximum	0.05 mm (0.0020 in.)
Commutator length	Standard	29 mm (1.142 in.)
	Minimum	28 mm (1.102 in.)
Starter brush holder assy		
Brush length	Standard	15.5 mm (0.610 in.)
	Minimum	9.0 mm (0.354 in.)
Generator rotor assy		
Slip ring resistance	at 20°C (68°F)	2.27 to 2.53 Ω
Slip ring diameter	Standard	15.3 to 15.5 mm (0.602 to 0.610 in.)
	Minimum	14.3 mm (0.561 in.)
Generator brush holder assy		
Exposed brush length	Standard	11.0 to 13.6 mm (0.433 to 0.535 in.)
	Minimum	1.5 mm (0.059 in.)

031E7–02

TORQUE SPECIFICATION

Part Tightened	N·m	kgf·cm	ft·lbf
Starter commutator end frame assy x Starter drive housing assy	6.0	61	53 in.·lbf
Starter drive housing assy x Repair service starter kit	2.3	24	21 in.·lbf
Lead wire x Repair service starter kit	6.0	61	53 in.·lbf
Generator pulley x Generator rotor assy	65	663	48
Stator sub–assy generator w/ rectifire x Drive end frame	3.5	36	31 in.·lbf
Regulator rear end cover x Stator sub–assy generator w/ rectifire			
w/ washer	2.2	22	19 in.·lbf
w/o washer	1.2	12	11 in.·lbf
Generator rear end cover x Stator sub–assy generator w/ rectifire			
(See page 19–9) Nur A	19.5	199	14
Nut B	12	122	9.0
Screw	2.4	24	21 in.·lbf

PARTIAL ENGINE ASSY

COMPONENTS

141BX–01

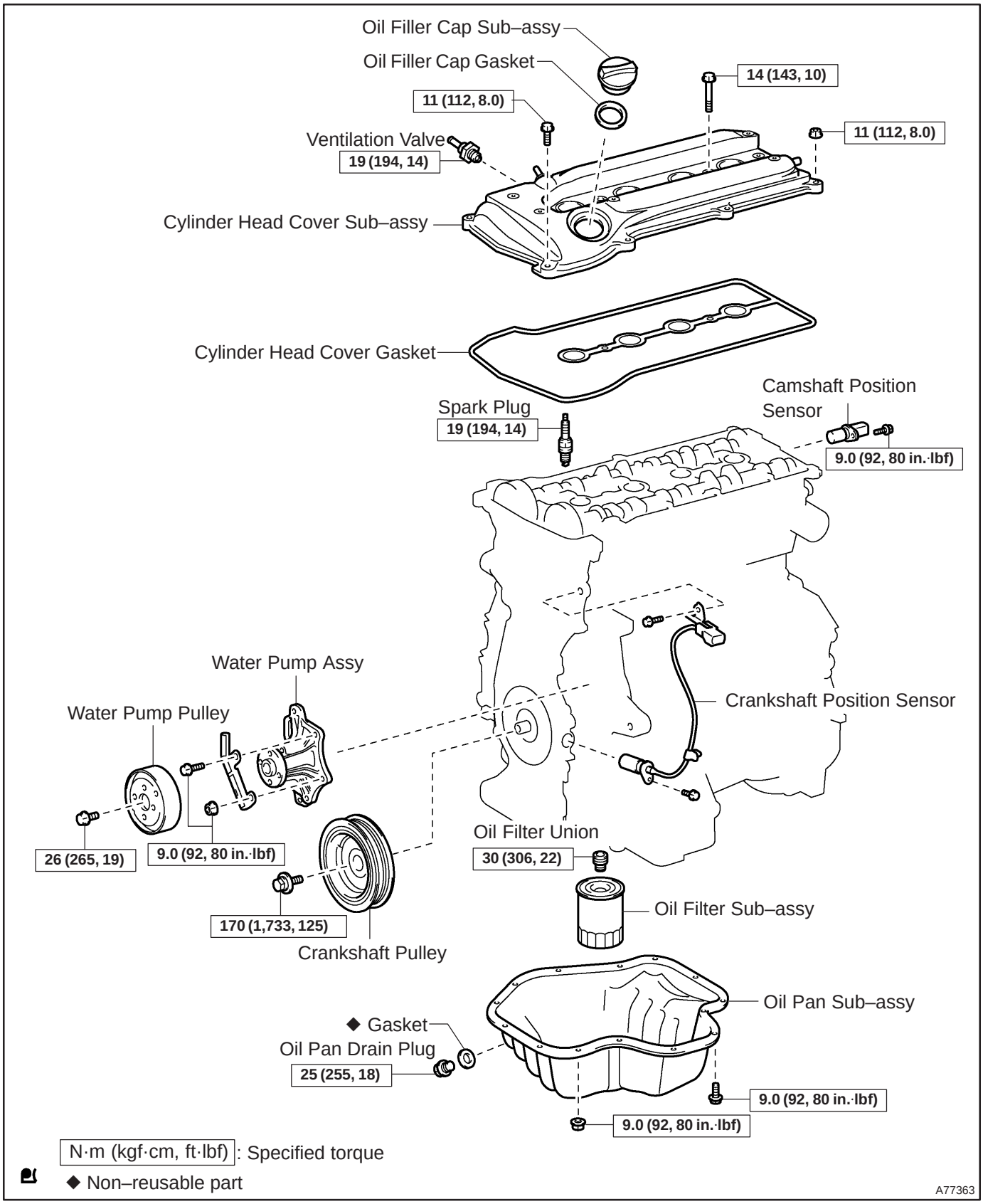

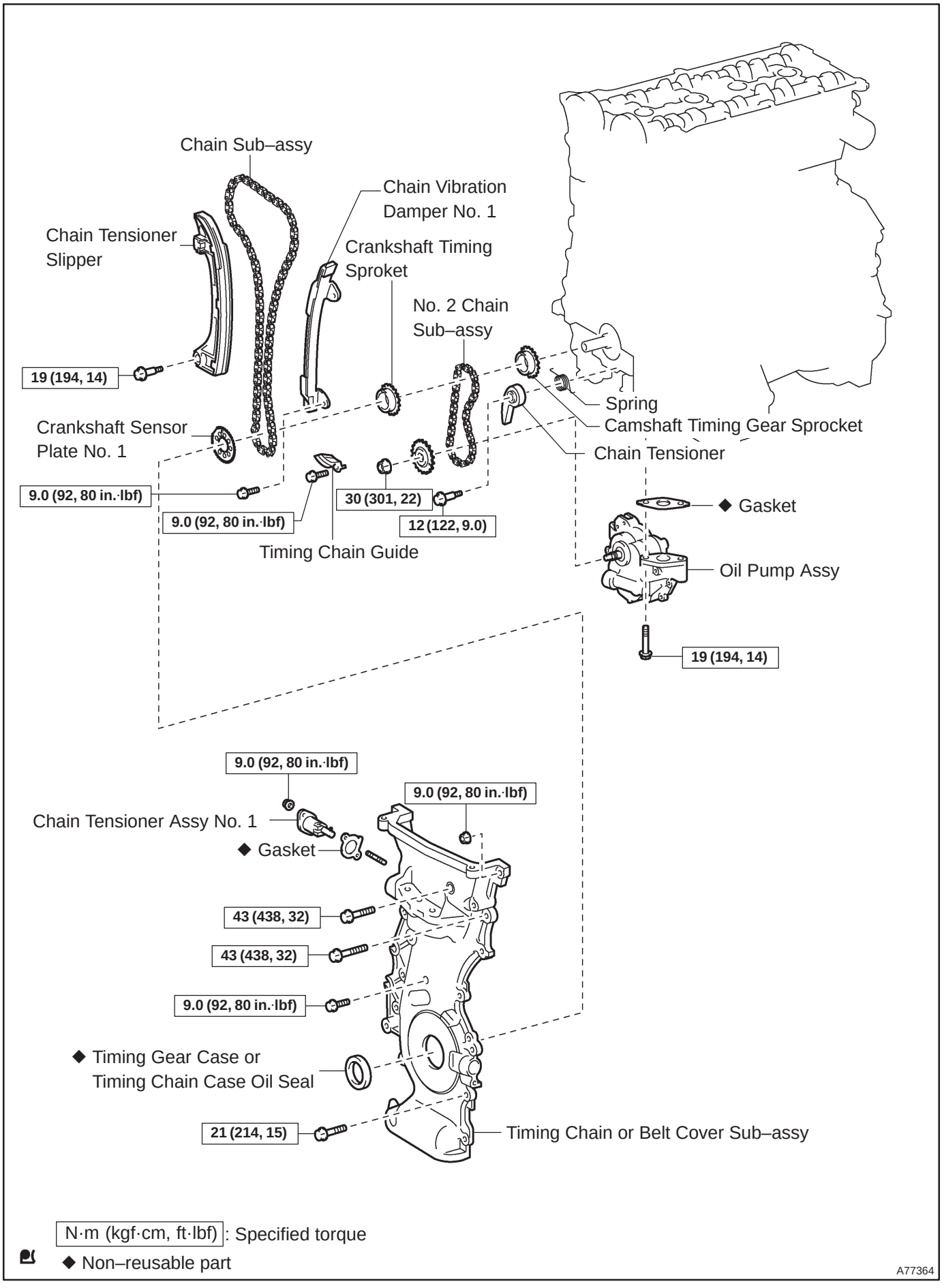
Chain Sub–assy
Chain Vibration Damper No. 1
Chain Tensioner Slipper
Crankshaft Timing Sproket
No. 2 Chain Sub–assy
19 (194, 14)
Spring
Camshaft Timing Gear Sprocket
Crankshaft Sensor Plate No. 1
Chain Tensioner
9.0 (92, 80 in.·lbf)
30 (301, 22)
9.0 (92, 80 in.·lbf)
12 (122, 9.0)
Timing Chain Guide
◆ Gasket
Oil Pump Assy
19 (194, 14)
9.0 (92, 80 in.·lbf)
9.0 (92, 80 in.·lbf)
Chain Tensioner Assy No. 1
◆ Gasket
43 (438, 32)
43 (438, 32)
9.0 (92, 80 in.·lbf)
◆ Timing Gear Case or Timing Chain Case Oil Seal
21 (214, 15)
Timing Chain or Belt Cover Sub–assy
N·m (kgf·cm, ft·lbf): Specified torque
◆ Non–reusable part
A77364

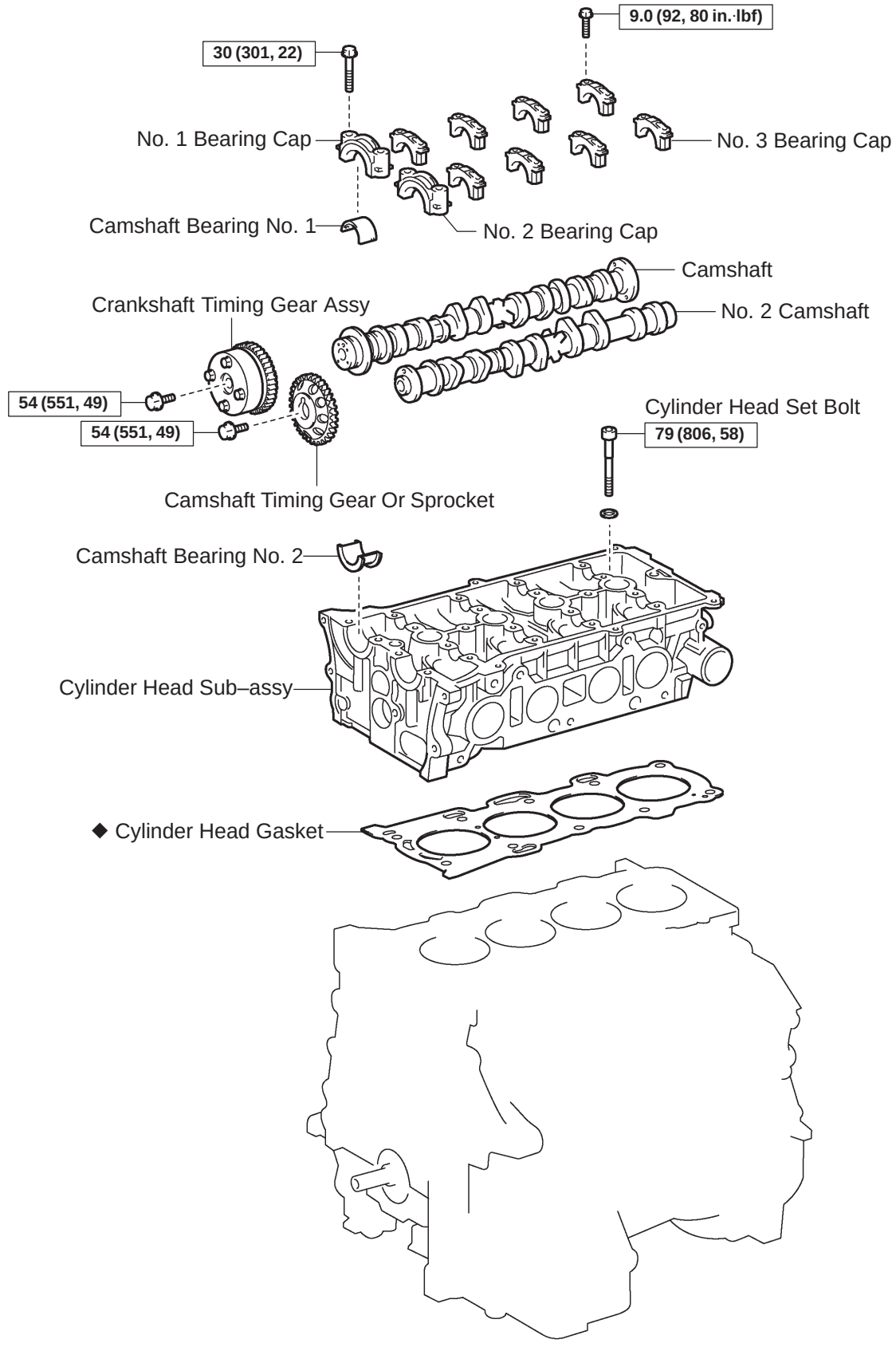

N·m (kgf·cm, ft·lbf): Specified torque

◆ Non–reusable part

A77365

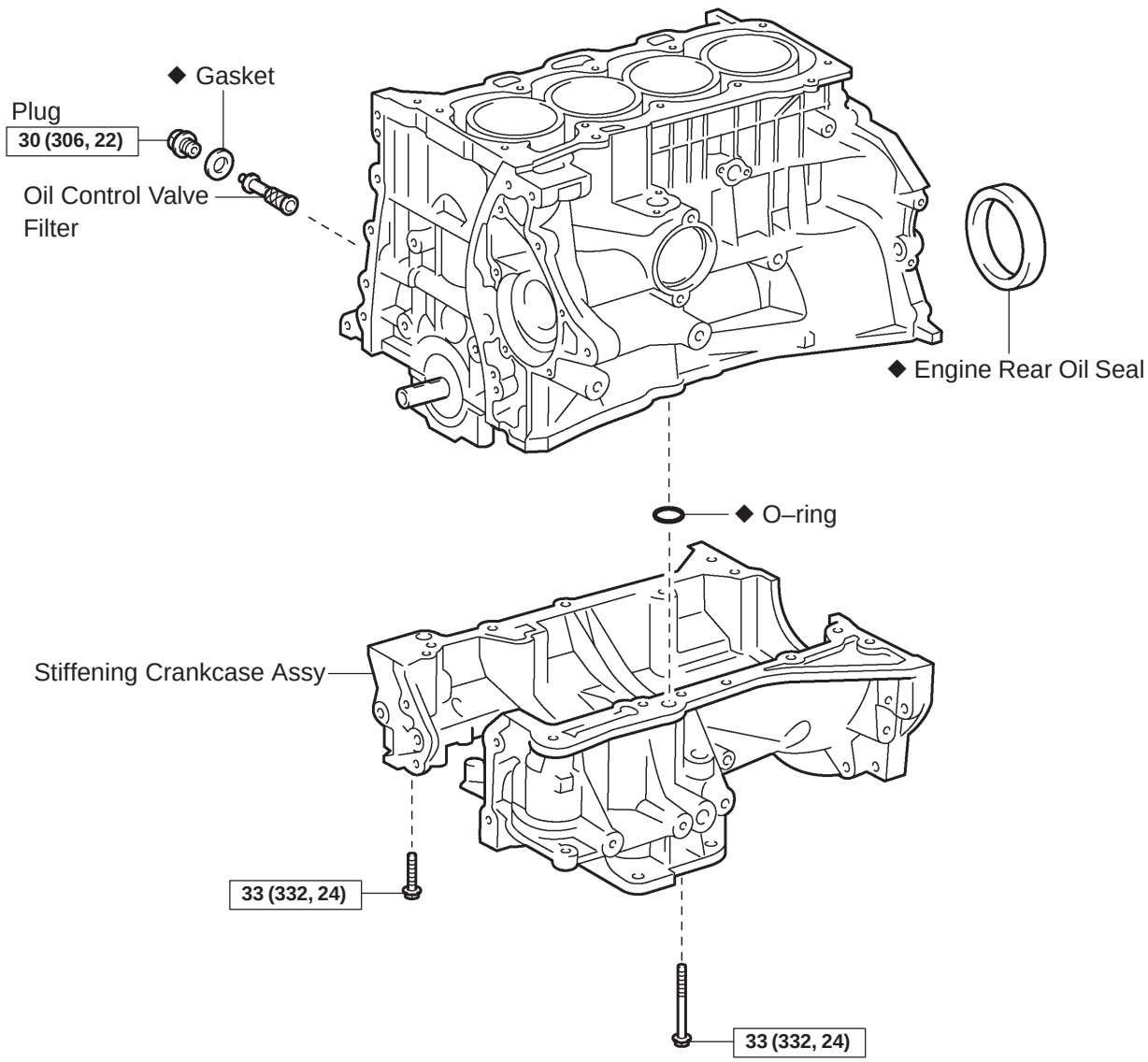

N·m (kgf·cm, ft·lbf): Specified torque

◆ Non–reusable part

A77362

141BY–01

OVERHAUL

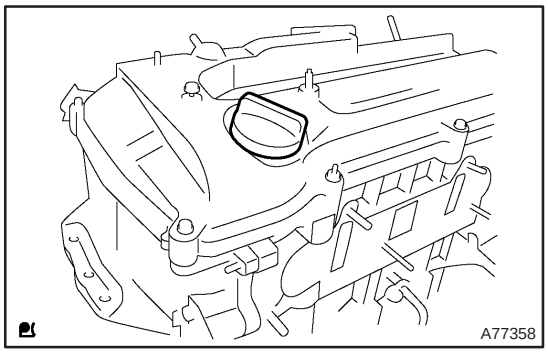

1. REMOVE OIL FILLER CAP SUB–ASSY

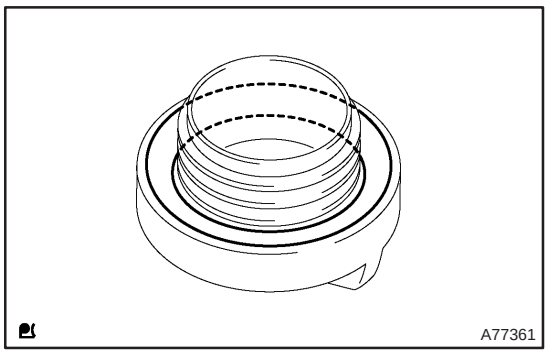

2. REMOVE OIL FILLER CAP GASKET

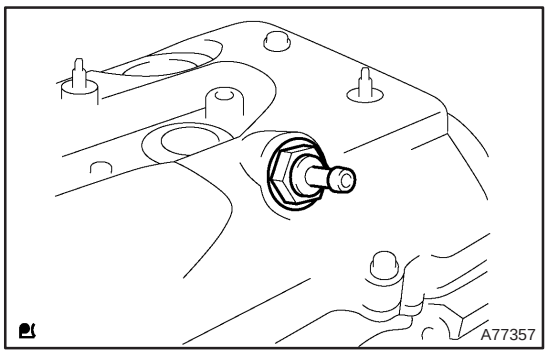

3. REMOVE VENTILATION VALVE SUB–ASSY

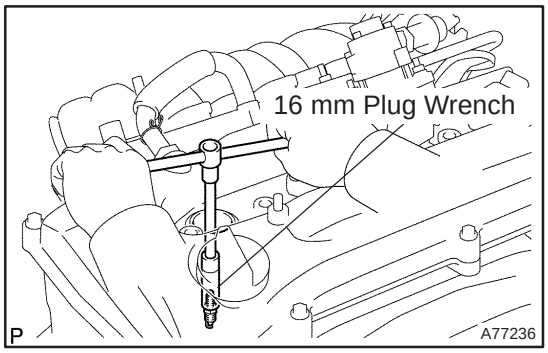

4. REMOVE SPARK PLUG

(a) Using a 16 mm plug wrench, remove the spark plugs.

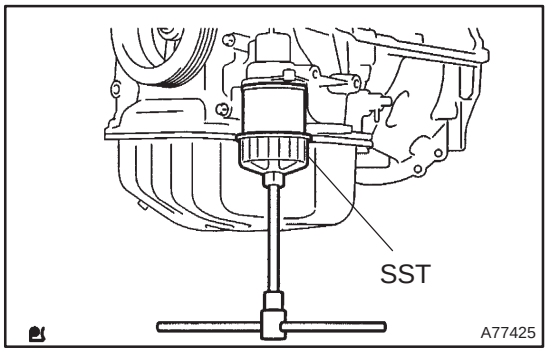

5. REMOVE OIL FILTER SUB–ASSY

(a) Using SST, remove the oil filter.
SST 09228–06501

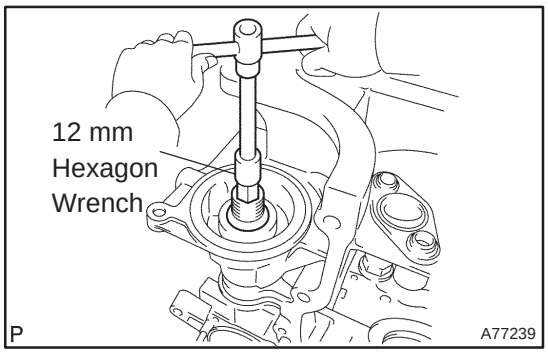

6. REMOVE OIL FILTER UNION

(a) Using a 12 mm socket hexagon wrench, remove the oil filter union.

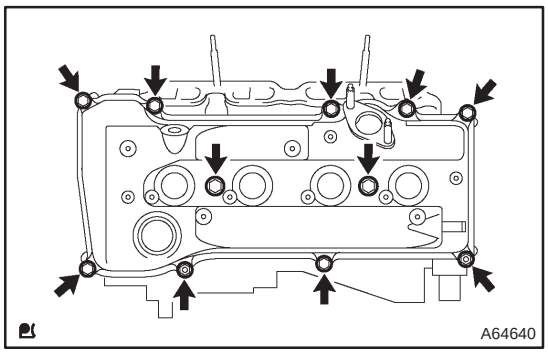

7. REMOVE CYLINDER HEAD COVER SUB–ASSY

(a) Remove 9 bolts and 2 nuts from the cylinder head cover.
(b) Remove the cylinder head cover.

8. REMOVE CYLINDER HEAD COVER GASKET

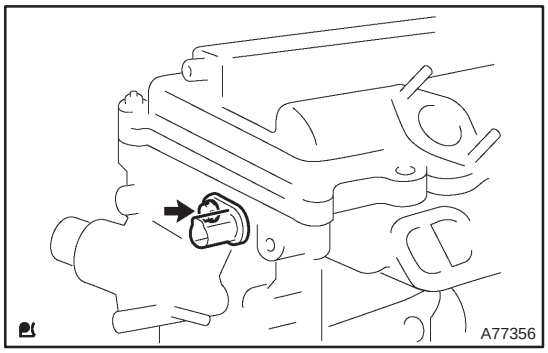

9. REMOVE CAMSHAFT POSITION SENSOR

(a) Remove the bolt and the camshaft position sensor.

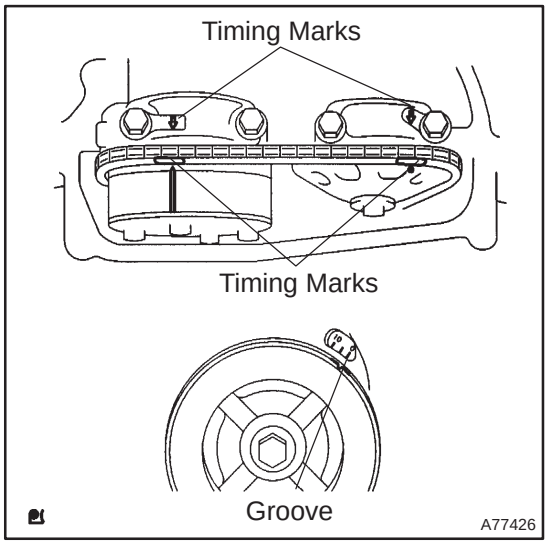

10. REMOVE CRANKSHAFT PULLEY

(a) Set No. 1 cylinder to TDC/ compression.

(1) Turn the crankshaft pulley, and align its groove with the timing mark ”0” of the timing chain cover.

(2) Check that the timing marks of the camshaft timing sprockets are aligned with the timing marks of the No. 1 bearing cap as shown in the illustration.

If not, turn the crankshaft 1 revolution (360°) and align the mark as above.

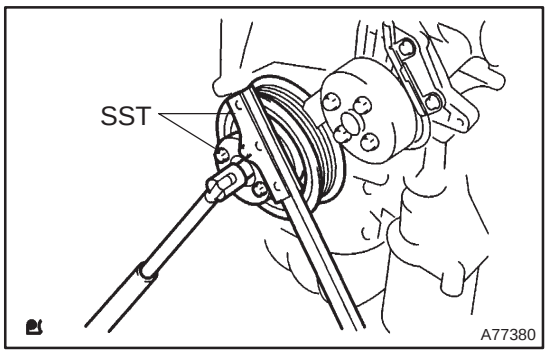

(b) Remove the crankshaft pulley.

(1) Using SST, fix the crankshaft pulley and loosen the pulley set bolt.

SST 09213–54015 (91651–60855), 09330–00021,

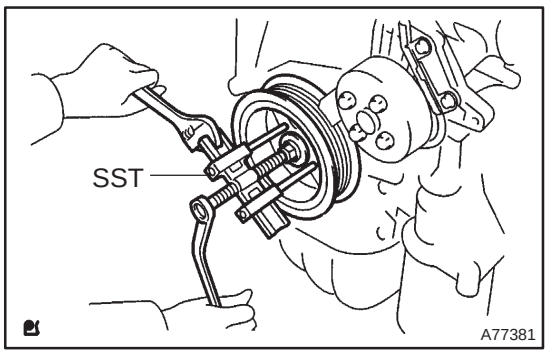

(2) Using the pulley set bolt and SST, remove the crankshaft pulley.

SST 09950–50013 (09951–05010, 09952–05010, 09953–05020, 09954–05021)

11. REMOVE CHAIN TENSIONER ASSY NO.1

NOTICE:

Do not turn the crankshaft.

(a) Separate a clamp.

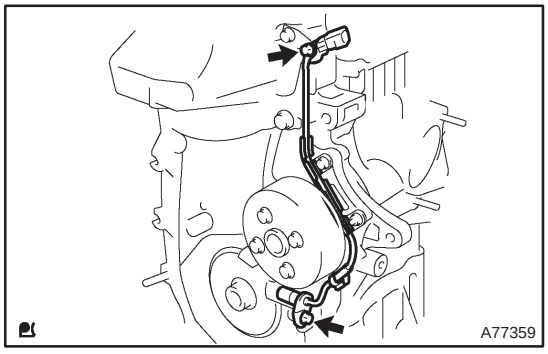

12. REMOVE CRANKSHAFT POSITION SENSOR

(a) Remove the 2 bolts and the crankshaft position sensor.

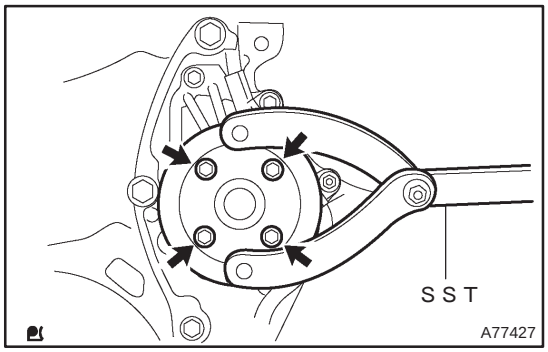

13. REMOVE WATER PUMP PULLEY

(a) Using SST, remove the 4 bolts and the water pump pulley.
SST 09960–10010 (09962–01000, 09963–00700)

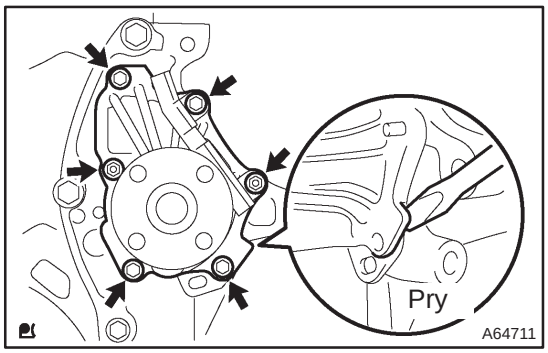

14. REMOVE WATER PUMP ASSY

(a) Remove the 4 bolts, 2 nuts and clamp.

(b) Using a screw driver, pry between the water pump and cylinder block, and then remove the water pump.

NOTICE:

Be careful not to damage the contact surface of the water pump and cylinder block.

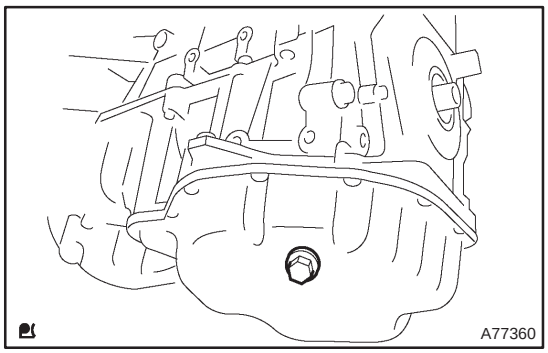

15. REMOVE OIL PAN DRAIN PLUG

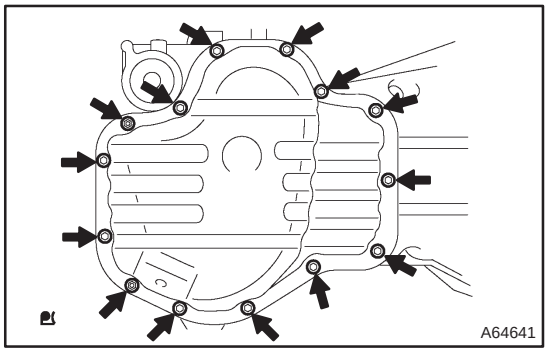

16. REMOVE OIL PAN SUB–ASSY

(a) Remove the 12 bolts and 2 nuts.

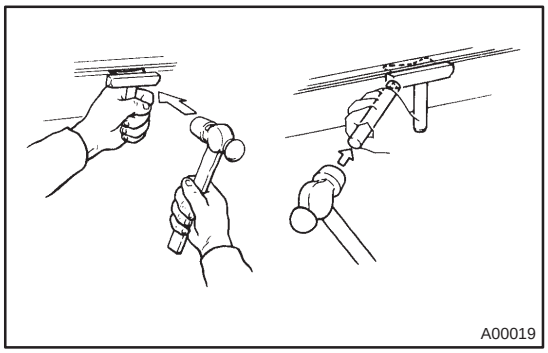

(b) Insert the blade of SST between the crank case, timing chain cover and oil pan, cut off applied sealer and remove the oil pan.
SST 09032–00100

NOTICE:

Be careful not to damage the contact surface of the timing chain cover, crank case and oil pan.

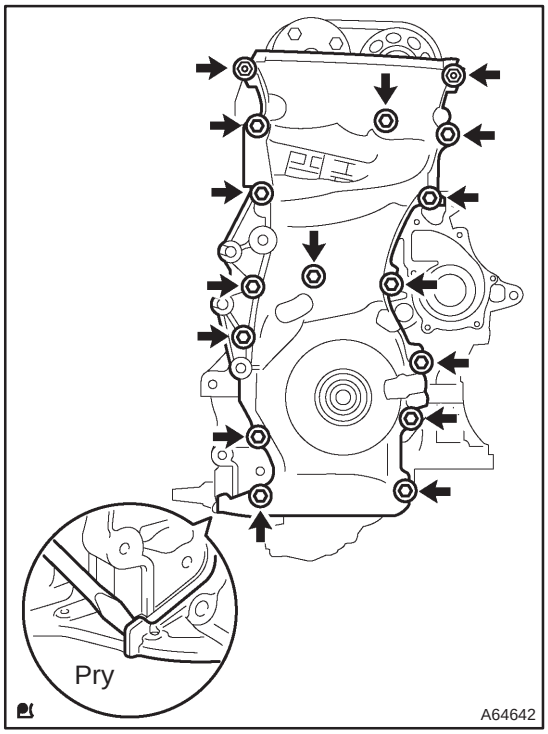

17. REMOVE TIMING CHAIN OR BELT COVER SUB–ASSY

(a) Remove the 14 bolts and 2 nuts.

(b) Using a screwdriver, pry between the timing chain cover and cylinder head or cylinder block.

(c) Remove the timing chain cover.

NOTICE:

Be careful not to damage the contact surface of the timing chain cover, cylinder head and cylinder block.

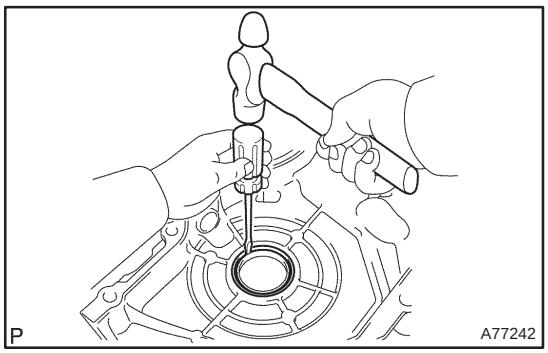

18. REMOVE TIMING GEAR CASE OR TIMING CHAIN CASE OIL SEAL

(a) Using a screwdriver and a hammer, tap out the oil seal.

19. REMOVE CRANKSHAFT POSITION SENSOR PLATE NO.1

20. REMOVE CHAIN TENSIONER SLIPPER

(a) Remove the bolt and chain tensioner slipper.

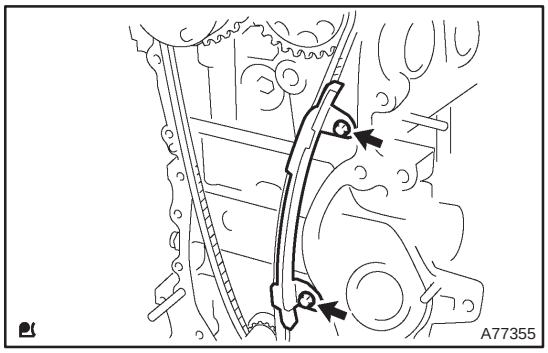

21. REMOVE CHAIN VIBRATION DAMPER NO.1

(a) Remove the 2 bolts and the chain vibration damper No. 1.

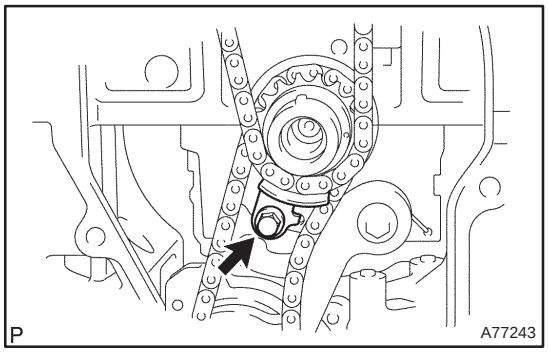

22. REMOVE TIMING CHAIN GUIDE

(a) Remove the bolt and the timing chain guide.

23. REMOVE CHAIN SUB–ASSY

24. REMOVE CRANKSHAFT TIMING GEAR OR SPROCKET

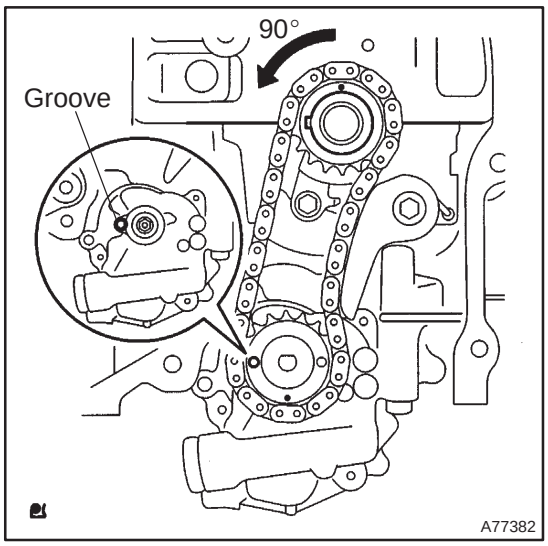

25. REMOVE NO.2 CHAIN SUB–ASSY

(a) Turn the crankshaft counterclockwise 90°, and align adjusting hole of the oil pump drive shaft gear with the groove of the oil pump.

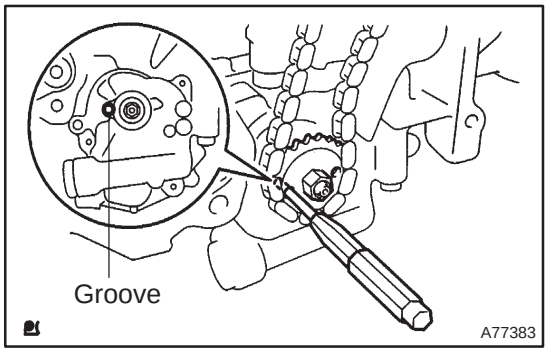

(b) Insert a 4 mm diameter bar in the adjusting hole drive shaft gear to lock in position, and remove the nut.

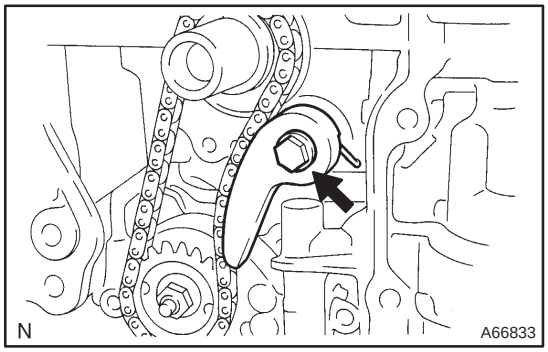

(c) Remove the bolt, chain tensioner and spring.

(d) Remove the oil pump drive shaft gear and chain No.2.

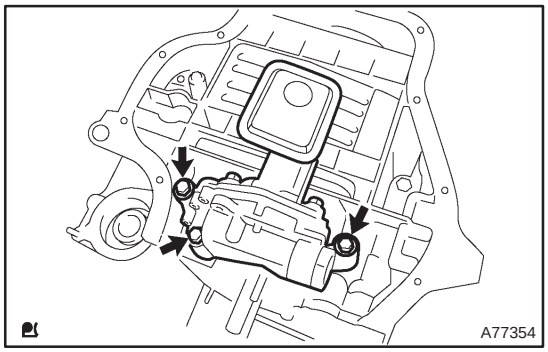

26. REMOVE OIL PUMP ASSY

(a) Remove the 3 bolts, the remove then oil pump and gasket.

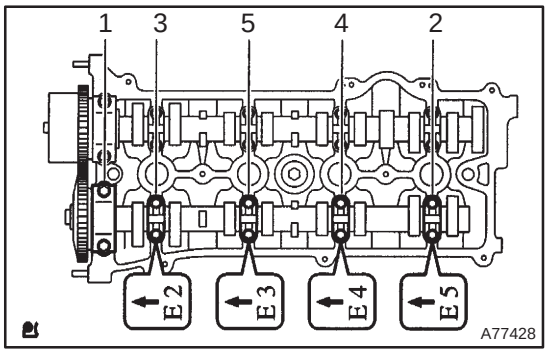

27. REMOVE NO.2 CAMSHAFT

(a) Remove the No. 2 and No. 3 camshaft bearing caps in the sequence shown in the illustration.

(b) Remove the No. 2 camshaft.

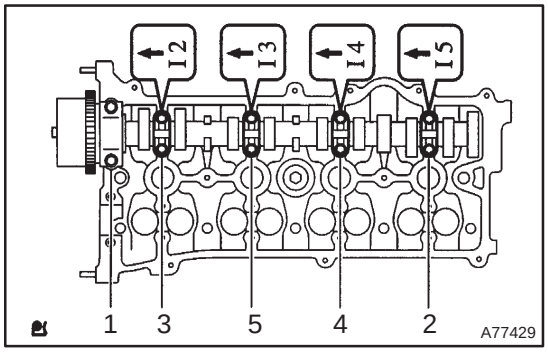

28. REMOVE CAMSHAFT

(a) Remove the No. 1 and No. 3 camshaft bearing caps in the sequence shown in the illustration.

(b) Remove the camshaft.

29. REMOVE CAMSHAFT BEARING NO.1

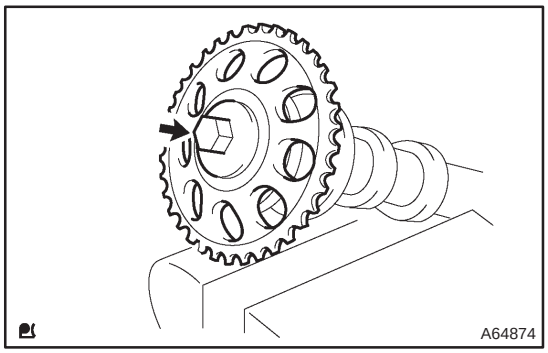

30. REMOVE CAMSHAFT TIMING GEAR OR SPROCKET

(a) Clamp the No. 2 camshaft in a vise, and remove the camshaft timing gear.

NOTICE:

Be careful not to damage the No. 2 camshaft.

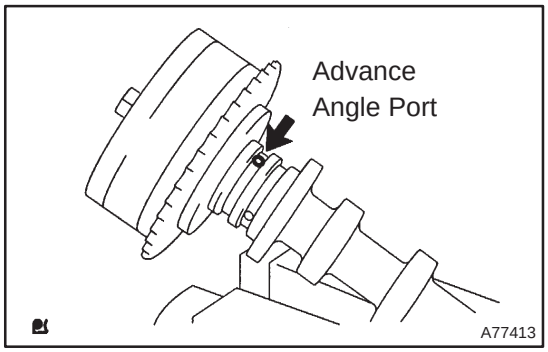

31. REMOVE CAMSHAFT TIMING GEAR ASSY

(a) Clamp the camshaft in a vise, and make sure the camshaft timing gear assembly does not move.

NOTICE:

Be careful not to damage the camshaft.

(b) Cover all the oil ports with vinyl tape expect the advance angle port as shown in the illustration.

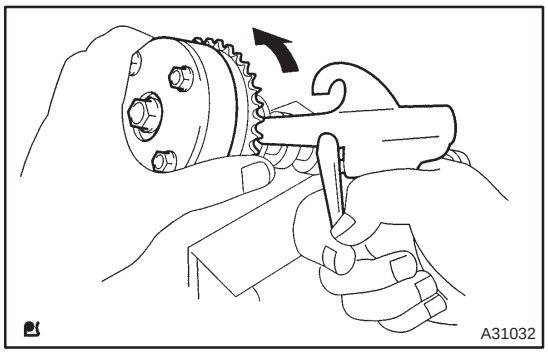

(c) Put air pressure into the oil port with 150 kPa (1.5 kgf/cm^2 21 psi), and turn the camshaft timing gear assembly to the advance direction (counterclockwise) by force.

NOTICE:

Some oil spraying will occur. Be prepared to catch the spray with a shop rag.

HINT:

Depending on the pressure, the VVT timing sprocket may turn to the advance angle side without applying force by hand. Also, if the pressure can be hardly applied because of the air leakage from the port, it might be difficult to get the lock–pin to release.

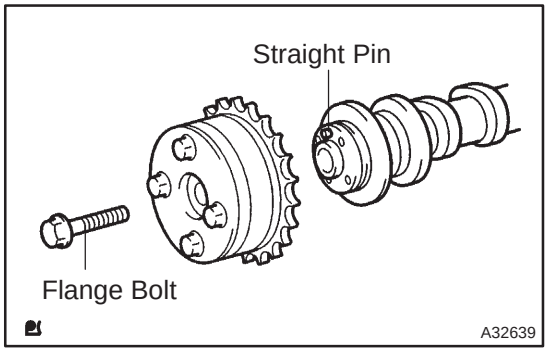

(d) Remove the flange bolt from the camshaft timing gear assembly.

NOTICE:

- **Be sure not to remove the other 4 bolts.**
- **In case of reusing the camshaft timing gear assembly, release the straight pin lock first, and then install the gear.**

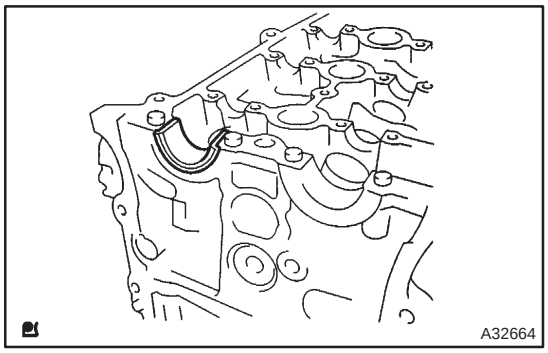

32. REMOVE CAMSHAFT BEARING NO.2

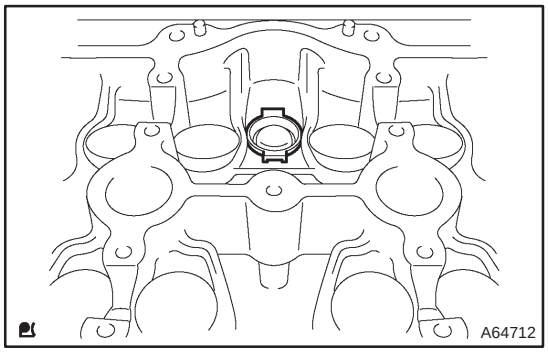

33. REMOVE CAMSHAFT HOUSING PLUG

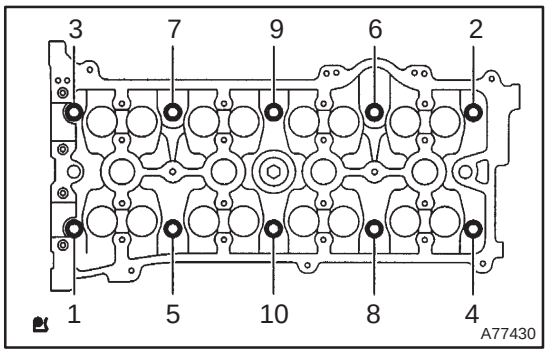

34. REMOVE CYLINDER HEAD SUB–ASSY

(a) Using several steps, loosen the 10 cylinder head bolts with a 10 mm bi–hexagon wrench uniformly in the sequence shown.

(b) Remove 10 cylinder head bolts and plate washers.

NOTICE:

- **Be careful not to drop washers into the cylinder head.**
- **Head warpage or cracking could result from removing bolts in an incorrect order.**

35. REMOVE CYLINDER HEAD GASKET

36. REMOVE CYLINDER BLOCK WATER DRAIN COCK SUB–ASSY

37. REMOVE OIL CONTROL VALVE FILTER

(a) Using a 12 mm hexagon wrench, remove the plug, gasket and oil control valve filter.

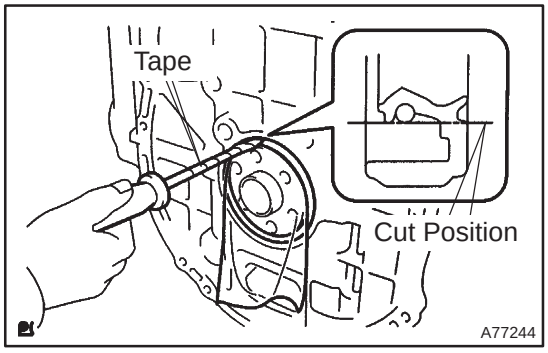

38. REMOVE ENGINE REAR OIL SEAL

(a) Using a knife, cut off the oil seal lip.

(b) Using a screwdriver with the tip wrapped in tape, pry out the oil seal.

NOTICE:

After the removal, check the crankshaft is not damaged. If it is damaged, smooth the surface with 400 grit sand paper.

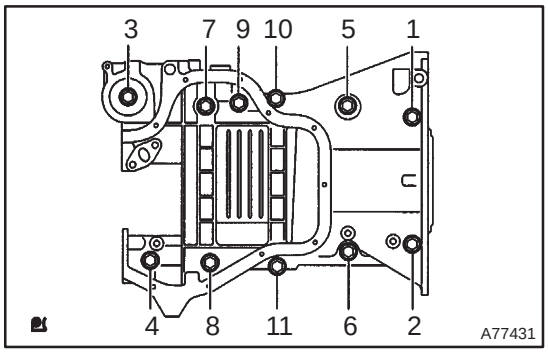

39. REMOVE STIFFENING CRANKCASE ASSY

(a) Loosen and remove the 11 bolts uniformly in several steps, in the sequence shown.

(b) Using a screw driver, remove the crankcase by prying the between the crankcase and cylinder block.

NOTICE:

Be careful not to damage the contact surfaces of the crankcase and cylinder block.

(c) Remove the O–ring from the cylinder block.

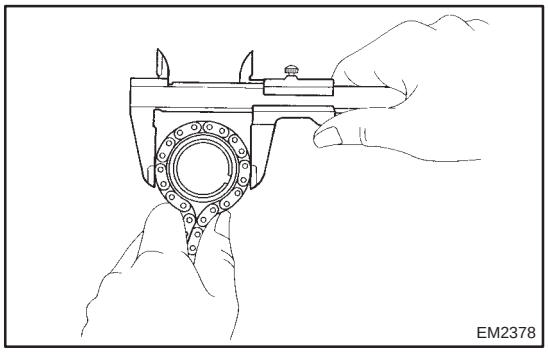

40. INSPECT OIL PUMP DRIVE GEAR

(a) Wrap the chain around the drive gear.

(b) Using vernier calipers, measure the drive gear diameter with the chain wrapped.

NOTICE:

Vernier calipers must contact the chain rollers for the measuring.

Minimum gear diameter (w/chain): 48.2 mm (1.898 in.)

If the diameter is less than minimum, replace the chain and drive gear.

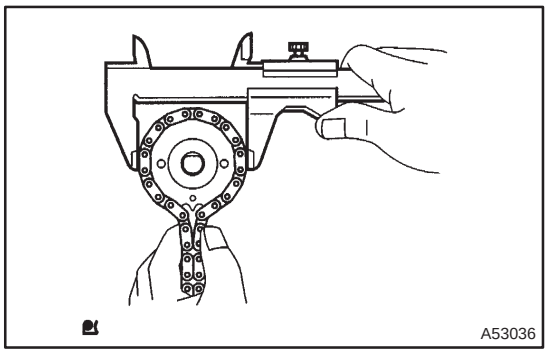

41. INSPECT OIL PUMP DRIVE SHAFT GEAR

(a) Wrap the chain around the drive shaft gear.

(b) Using vernier calipers, measure the drive shaft gear diameter with the chain wrapped.

NOTICE:

Vernier calipers must contact the chain rollers for the measuring.

Minimum gear diameter (w/chain): 48.2 mm (1.898 in.)

If the diameter is less than minimum, replace the chain and drive shaft gear.

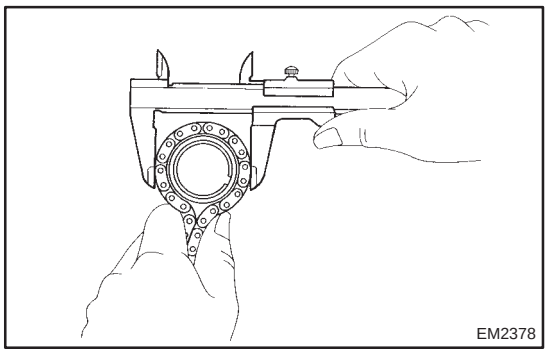

42. INSPECT CRANKSHAFT TIMING GEAR OR SPROCKET

(a) Wrap the chain around the timing gear.

(b) Using vernier calipers, measure the timing gear diameter with the chain wrapped.

NOTICE:

Vernier calipers must contact the chain rollers for the measuring.

Minimum gear diameter (w/chain): 51.6 mm (2.031 in.)

If the diameter is less than minimum, replace the chain and timing gear.

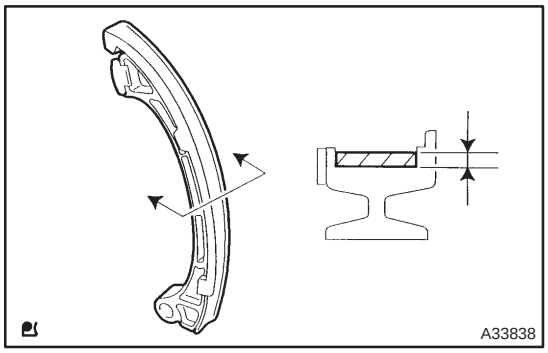

43. INSPECT CHAIN TENSIONER SLIPPER

(a) Measure the chain tensioner slipper wears.

Maximum wear: 1.0 mm (0.039 in.)

If the wear is greater than maximum, replace the chain tensioner slipper.

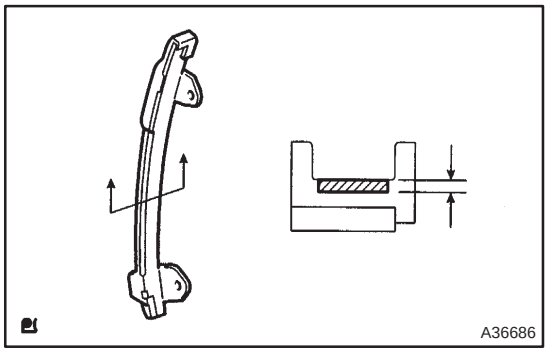

44. INSPECT CHAIN VIBRATION DAMPER NO.1

(a) Measure the chain vibration damper No. 1 wears.

Maximum wear: 1.0 mm (0.039 in.)

If the wear is greater than maximum, replace the chain vibration damper No. 1

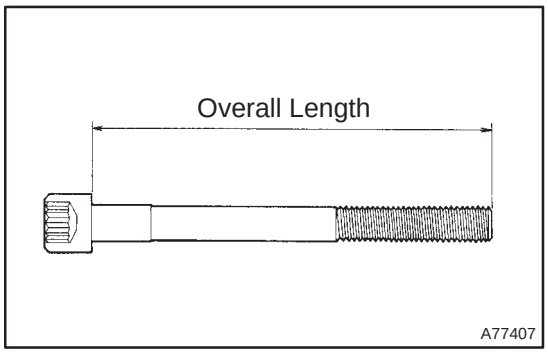

45. INSPECT CYLINDER HEAD SET BOLT

(a) Using vernier calipers, measure the length of head bolts from the seat to the end.

Standard bolt length:
161.3 to 162.7 mm (6.350 to 6.406 in.)
Maximum bolt length: 164.2 mm (6.465 in.)

If the length is greater than maximum, replace the bolt.

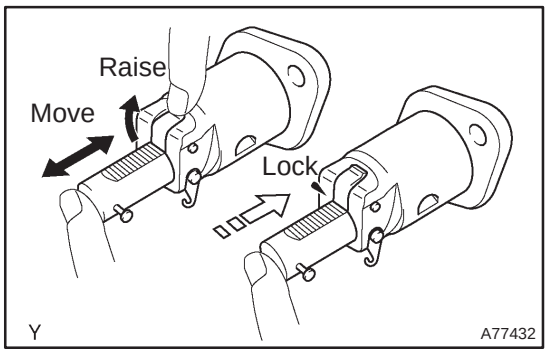

46. INSPECT CHAIN TENSIONER ASSY NO.1

(a) Check the plunger moves smoothly when the ratchet pawl is raised, and when the ratchet pawl is released, the plunger is locked in place.

(b) Replace the ratchet pawl and check that the plunger is locked in place by the ratchet pawl and does not move when pushing with your finger.

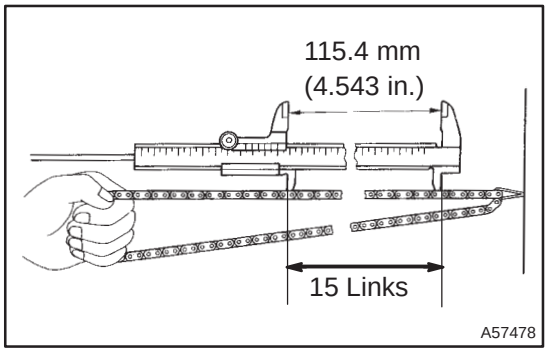

47. INSPECT CHAIN SUB–ASSY

(a) Using vernier calipers, measure length of the 15 links with the chain dully stretched.

Maximum chain elongation: 115.4 mm (4.543 in.)

If the elongation is greater than maximum, replace the chain.

NOTICE:

Make the same measurements pulling at 3 or more random places to obtain an average length.

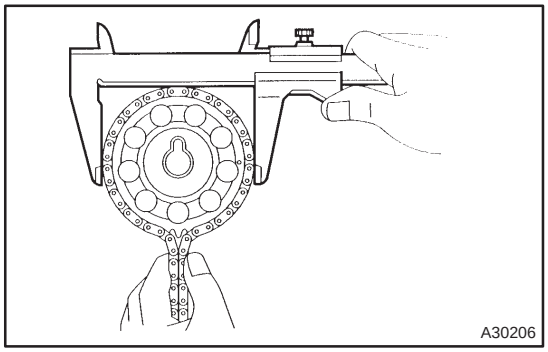

48. INSPECT CAMSHAFT TIMING GEAR OR SPROCKET

(a) Wrap the chain around the timing sprocket.

(b) Using vernier calipers, measure the timing sprocket diameter with the chain wrapped.

Minimum sprocket diameter (w/ chain):
97.3 mm (3.831 in.)

If the diameter is less than minimum, replace the chain and timing sprocket.

NOTICE:
Vernier calipers must contact the chain rollers for the measuring.

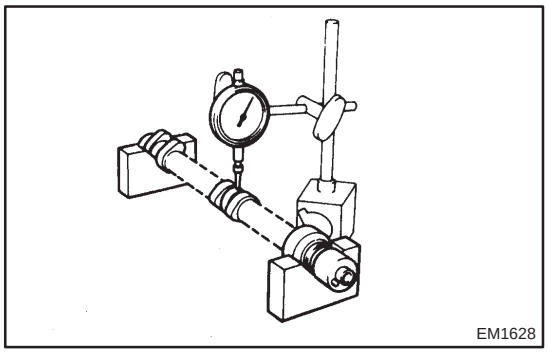

49. INSPECT CAMSHAFT

(a) Inspect the camshaft for runout.
(1) Place the camshaft on V–blocks.
(2) Using a dial indicator, measure the circle runout at the center journal.
Maximum circle runout: 0.05 mm (0.0020 in.)

If the circle runout is greater than maximum, replace the camshaft.

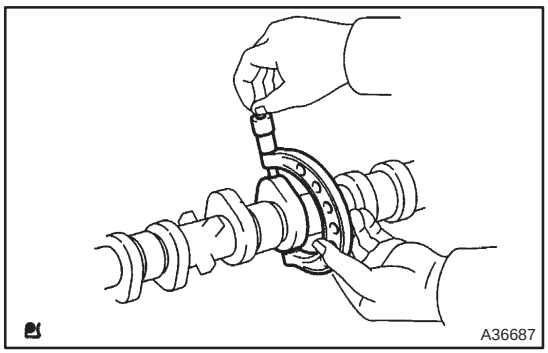

(b) Inspect cam lobe height.
(1) Using a micrometer, measure the cam lobe height.
Standard cam lobe height:
45.510 to 45.610 mm (1.7917 to 1.7957 in.)
Minimum cam lobe height: 45.400 mm (1.7874 in.)

If the cam lobe height is less than minimum, replace the camshaft.

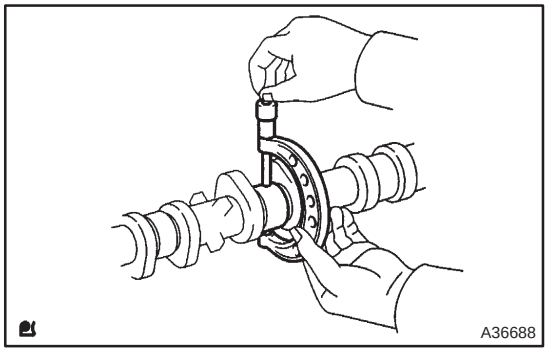

(c) Inspect camshaft journals.
(1) Using a micrometer, measure the journal diameter.
Journal diameter:
No. 1 35.971 to 35.985 mm (1.4162 to 1.4167 in.)
Others 22.959 to 22.975 mm (0.9040 to 0.9045 in.)

If the journal diameter is not as specified, check the oil clearance.

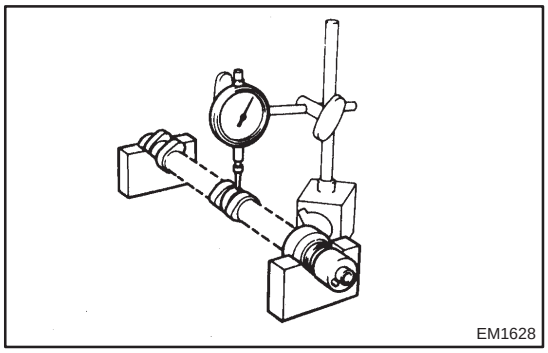

50. INSPECT NO.2 CAMSHAFT

(a) Inspect the No. 2 camshaft for runout.
(1) Place the No. 2 camshaft on V–blocks.
(2) Using a dial indicator, measure the circle runout at the center journal.
Maximum circle runout: 0.05 mm (0.0020 in.)

If the circle runout is greater than maximum, replace the No. 2 camshaft.

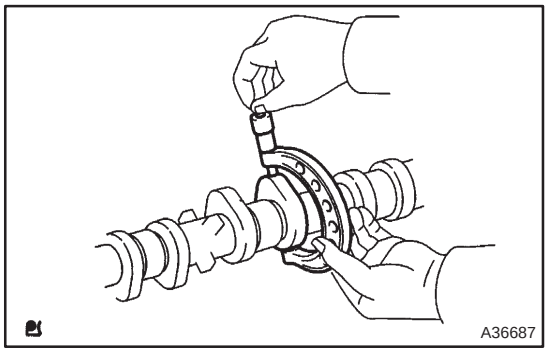

(b) Inspect cam lobe height.
(1) Using a micrometer, measure the cam lobe height.
Standard cam lobe height:
45.983 to 46.083 mm (1.8106 to 1.8143 in.)
Minimum cam lobe height: 45.873 mm (1.8060 in.)

If the cam lobe height is less than minimum, replace the No. 2 camshaft.

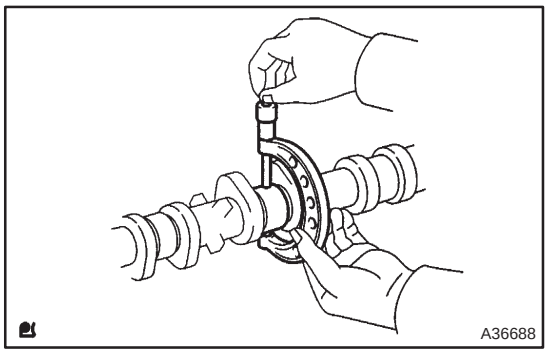

(c) Inspect camshaft journals.
(1) Using a micrometer, measure the journal diameter.
Journal diameter:
No. 1 35.971 to 35.985 mm (1.4162 to 1.4167 in.)
Others 22.959 to 22.975 mm (0.9040 to 0.9045 in.)

If the journal diameter is not as specified, check the oil clearance.

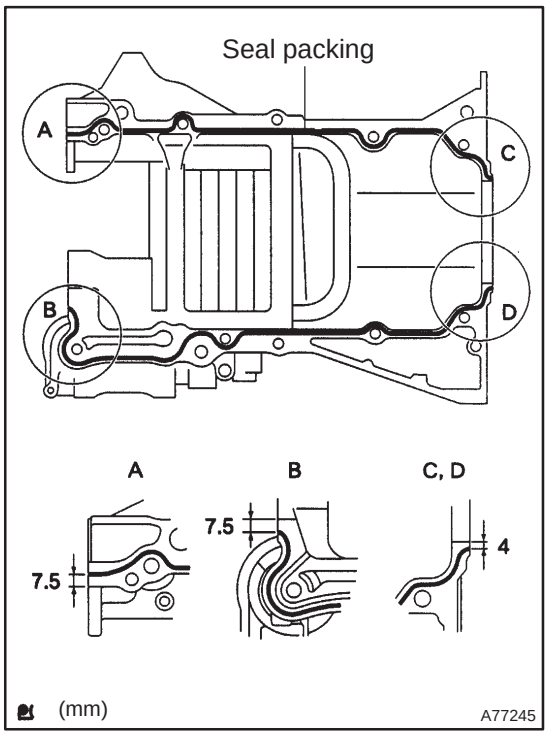

51. INSTALL STIFFENING CRANKCASE ASSY

(a) Apply a continuous bead (Diameter 2.5 to 3 mm (0.098 to 0.118 in.)) of seal packing on the places shown in the illustration.
Seal Packing: Part No. 08826 – 00080 or equivalent

NOTICE:
- **Remove any oil from the contact surface.**
- **Install the crankcase within 3 minutes after applying seal packing.**
- **Do not start the engine within 2 hours after installing.**

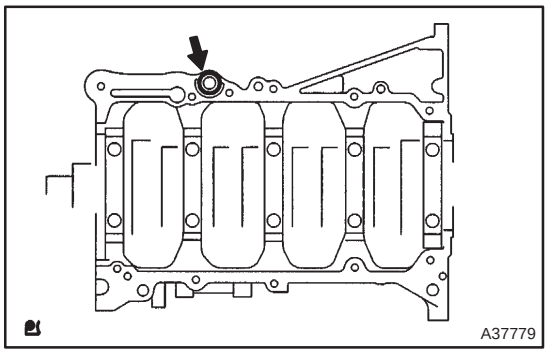

(b) Install a new O–ring to the place shown in the illustration.

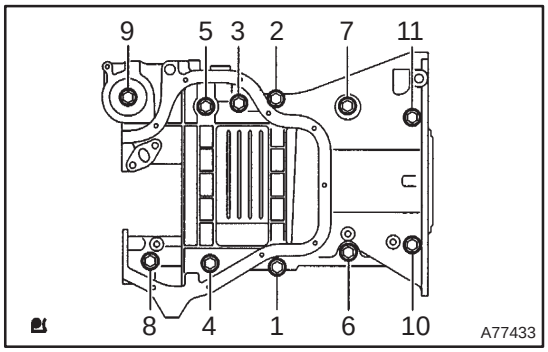

(c) Tighten the 11 bolts in several steps in the sequence shown in the illustration.
Torque: 33 N·m (332 kgf·cm, 24 ft·lbf)

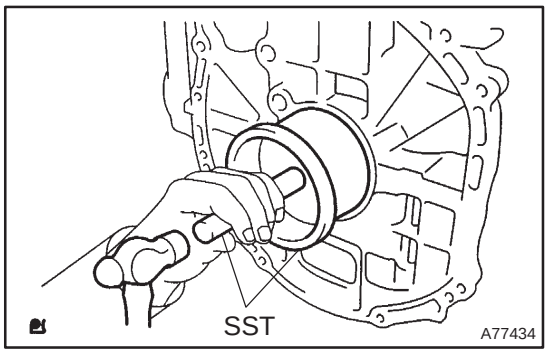

52. INSTALL ENGINE REAR OIL SEAL

(a) Apply MP grease to a new oil seal lip.

NOTICE:

Keep the lip free of foreign material.

(b) Using SST and a hammer, equally tap the oil seal until its surface is flush with the rear oil seal retainer edge.
SST 09223–15030, 09950–70010 (09951–07100)

NOTICE:

Wipe off extra grease on the crankshaft.

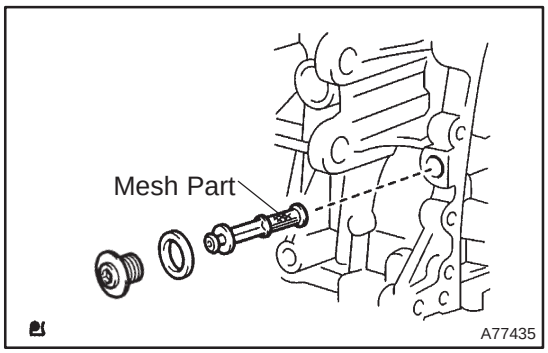

53. INSTALL OIL CONTROL VALVE FILTER

(a) Check that no foreign material on the mesh part of the filter.

(b) Using a 6 mm socket hexagon wrench, install the oil control valve filter with a new gasket.
Torque: 30 N·m (306 kgf·cm, 22 ft·lbf)

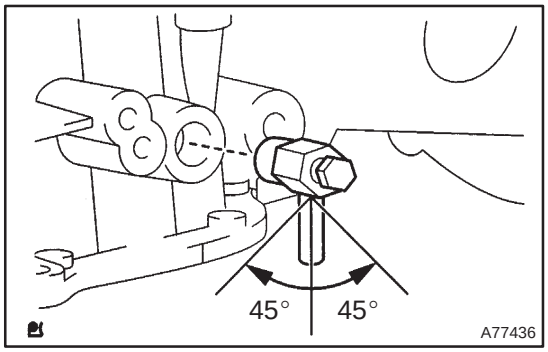

54. INSTALL CYLINDER BLOCK WATER DRAIN COCK SUB–ASSY

(a) Install the water drain cock sub assembly within the range shown in the illustration.
Torque: 25 N·m (255 kgf·cm, 18 ft·lbf)

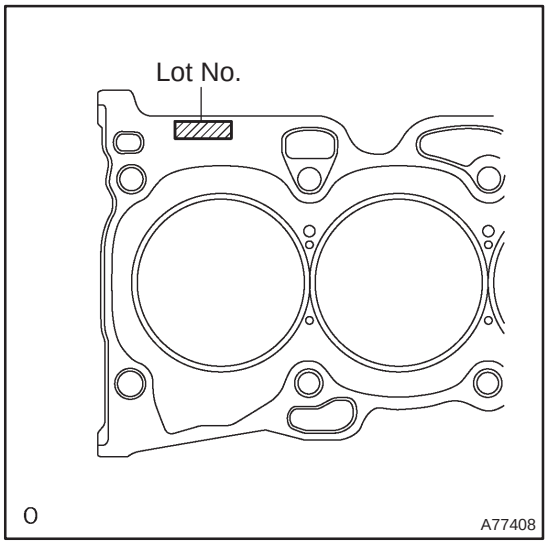

55. INSTALL CYLINDER HEAD GASKET

(a) Place a new cylinder head gasket on the cylinder block surface with the Lot No. stamp upward.

NOTICE:

- **Remove any oil from contact surface.**
- **Be careful of the installation direction.**
- **Place the cylinder head carefully in order not to damage the gasket with the bottom part of the head.**

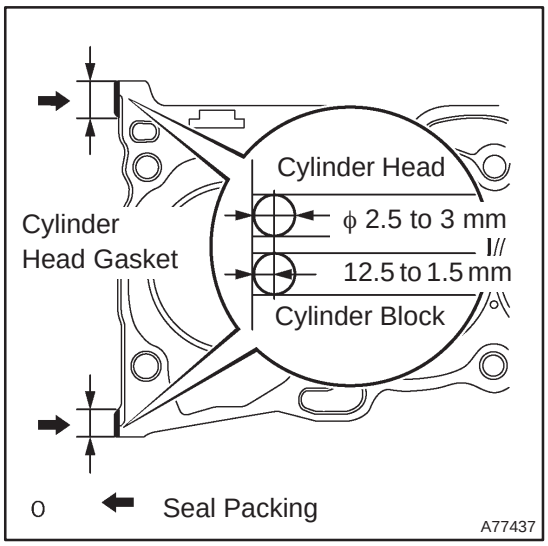

56. INSTALL CYLINDER HEAD SUB–ASSY

HINT:

The cylinder head bolts are tightened in 2 successive steps.

(a) Apply a continuous bead (Diameter 2.5 to 3.0 mm (0.098 to 0.118 in.)) of seal packing on the places as shown in the illustration.

Seal Packing: Part No. 08826 – 00080, or equivalent.

NOTICE:

- **Remove any oil from the contact surface.**
- **Install the cylinder head within 3 minutes after applying seal packing.**
- **Do not start the engine within 2 hours after installing.**

(b) Apply a light coat of engine oil on the threads of the cylinder head bolts.

(c) Install the bolts and plate washers to the cylinder head.

NOTICE:

Do not drop the washers into the cylinder head.

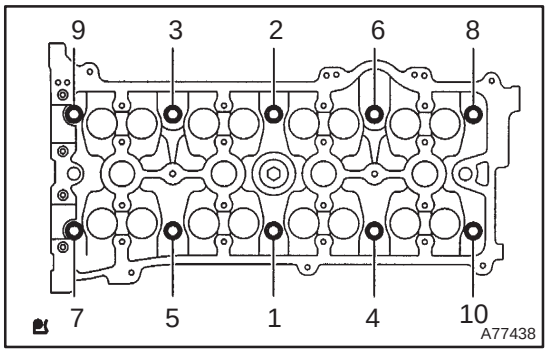

(d) Using several steps tighten each bolt with a 10 mm bi–hexagon wrench uniformly in the sequence shown in the illustration.

Torque: 79 N·m (806 kgf·cm, 58 ft·lbf)

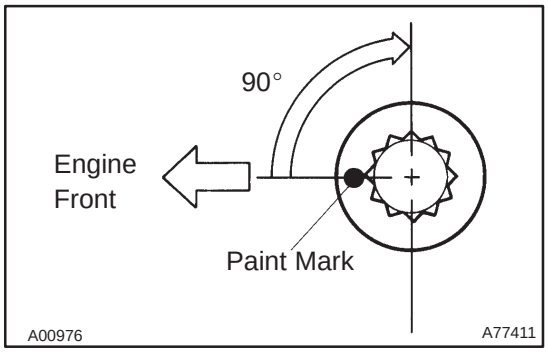

(e) Mark each cylinder head bolt head on the front side with paint.
(f) Retighten the cylinder head bolts by 90° in the same sequence shown as step (b).
(g) Check that each painted mark is now at a 90° angle to the front.

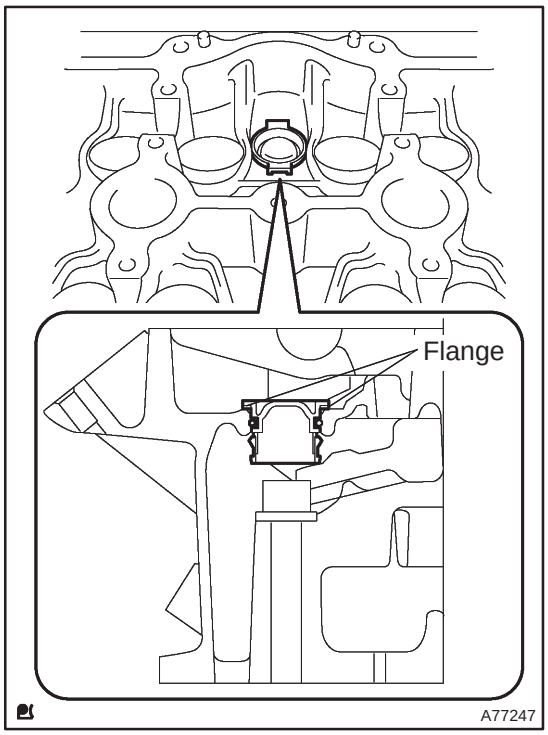

57. INSTALL CAMSHAFT HOUSING PLUG

(a) Apply engine oil to a new O–ring, and install the camshaft housing plug.

NOTICE:

- **Install the plug with its flange portions faced the manifold.**
- **Insert the plug into the cylinder head until its flange portions reach the installation surface of the cylinder head.**

58. INSTALL CAMSHAFT BEARING NO.2

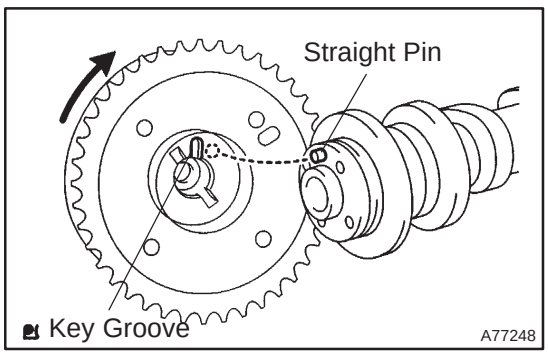

59. INSTALL CAMSHAFT TIMING GEAR ASSY

(a) Align the key groove of the camshaft timing gear with the straight pin located on the camshaft, then fit the timing gear into place.
(b) Turn the camshaft timing gear assembly to the left direction (as shown in the illustration) while pushing it lightly against the camshaft. Push further at the position where the pin gets into the groove.

CAUTION:

Be sure not to turn the camshaft timing gear to the retard angle side (to the right angle).

(c) Check that there is no clearance between the gear's fringe and the camshaft.
(d) Tighten the fringe bolt with the camshaft timing gear fixed.
Torque: 54 N·m (551 kgf·cm, 49 ft·lbf)

(e) Check that the camshaft timing gear assembly can move to the retard angle side (the right direction), and is locked at the most retarded position.

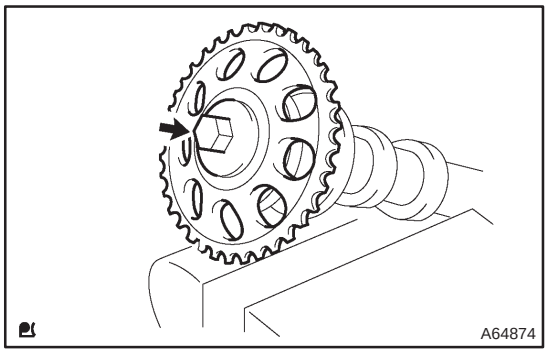

60. INSTALL CAMSHAFT TIMING GEAR OR SPROCKET

(a) Clamp the camshaft No. 2 in a vise, and install the camshaft No. 2 timing gear.

Torque: 54 N·m (551 kgf·cm, 40 ft·lbf)

NOTICE:

Be careful not to damage the No. 2 camshaft.

61. INSTALL CAMSHAFT BEARING NO.1

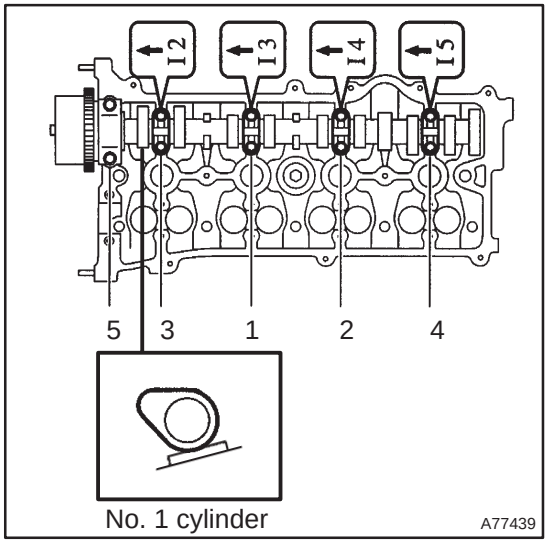

62. INSTALL CAMSHAFT

(a) Place the camshaft on the cylinder head as shown in the illustration.

(b) Tighten the camshaft bearing cap No. 1 and No. 3 in the sequence shown in the illustration.

Torque:

Bearing cap No. 1 30 N·m (301 kgf·cm, 22 ft·lbf)

Bearing cap No. 3 9 N·m (92 kgf·cm, 80 in.·lbf)

NOTICE:

- **Tighten the bolts after deciding the position for the thrust direction of the camshaft by bearing cap No. 1.**
- **Install the camshaft with its timing mark of camshaft timing gear upward.**

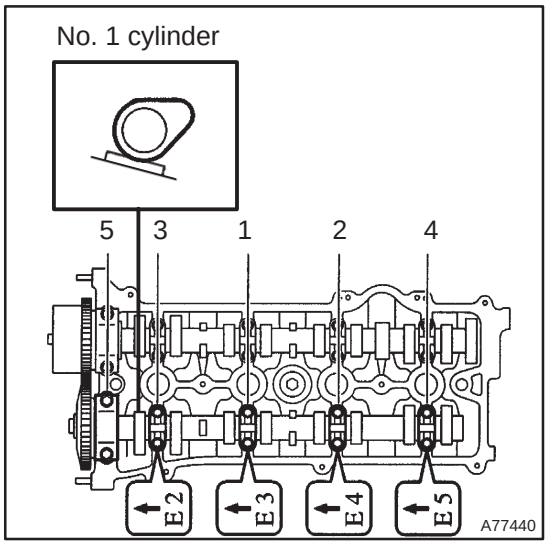

63. INSTALL NO.2 CAMSHAFT

(a) Place the No. 2 camshaft on the cylinder head as shown in the illustration.

(b) Tighten the camshaft bearing cap No. 2 and No. 3 in the sequence shown in the illustration.

Torque:

Bearing cap No. 2 30 N·m (301 kgf·cm, 22 ft·lbf)

Bearing cap No. 3 9 N·m (92 kgf·cm, 80 in.·lbf)

NOTICE:

- **Tighten the bolts after deciding the position for the thrust direction of the camshaft by bearing cap No. 2.**
- **Install the camshaft with its timing mark of camshaft timing gear upward.**

64. INSTALL OIL PUMP ASSY

(a) Install the oil pump assembly with the 3 bolts and a new gasket.
Torque: 19 N·m (194 kgf·cm, 14 ft·lbf)

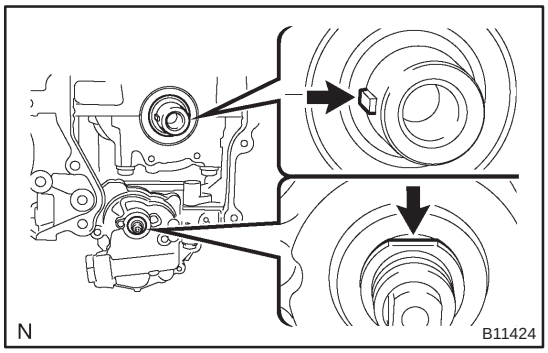

65. INSTALL NO.2 CHAIN SUB–ASSY

(a) Set the crankshaft key in the left side position.
(b) Turn the flat portion of the drive shaft upward.

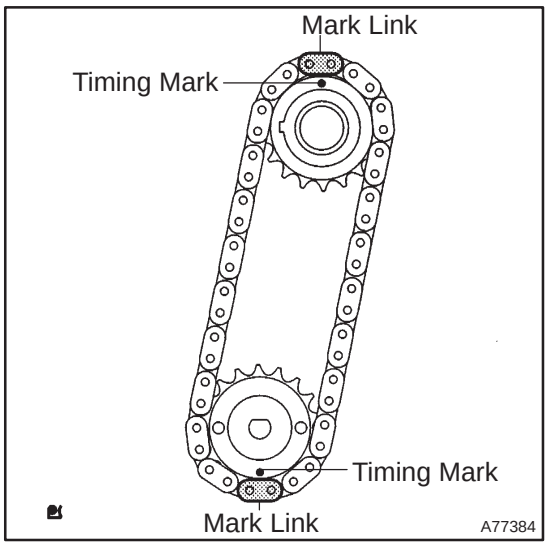

(c) Align the mark links (yellow colored links) with the timing marks of the gears as shown in the illustration.
(d) With the chain wrapped, insert the gears to the crankshaft and oil pump shaft.
(e) Temporarily secure the oil pump drive shaft gear with a nut.

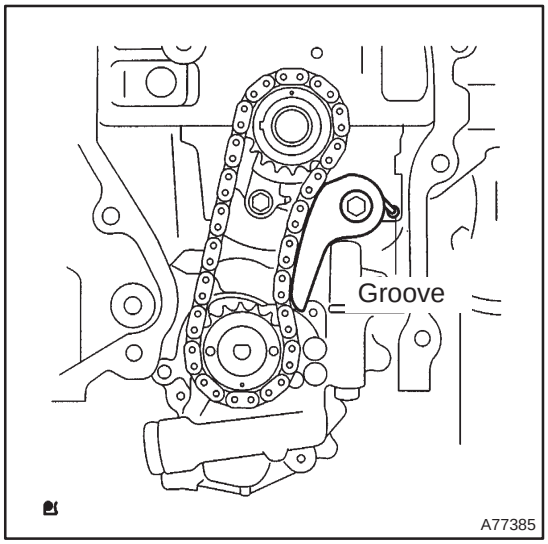

(f) Insert the damper spring into the adjusting hole of the cylinder block, and install the chain tensioner plate with the bolt.
Torque: 12 N·m (122 kgf·cm, 9 ft·lbf)

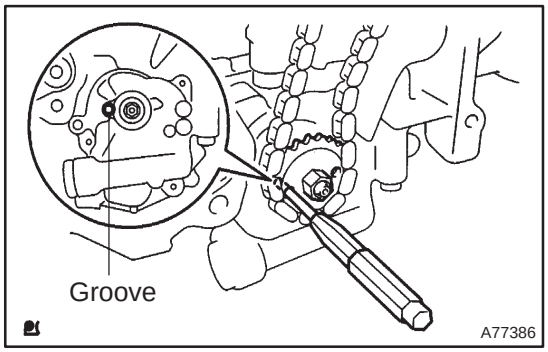

(g) Align the adjusting hole of the sprocket with the groove of the oil pump.

(h) Put a 4 mm diameter bar into the adjusting hole to lock in position, and assemble the nut.
Torque: 30 N·m (301 kgf·cm, 22 ft·lbf)

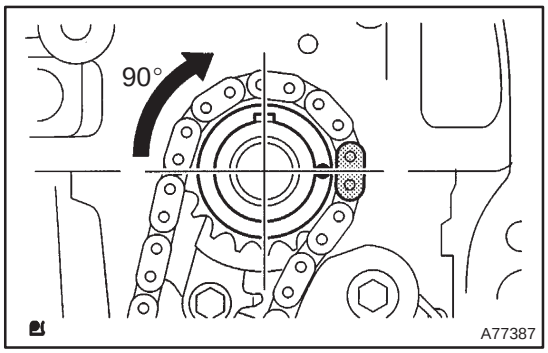

(i) Rotate the crankshaft 90° clockwise, and position the key of the crankshaft upward.

66. INSTALL CRANKSHAFT TIMING GEAR OR SPROCKET

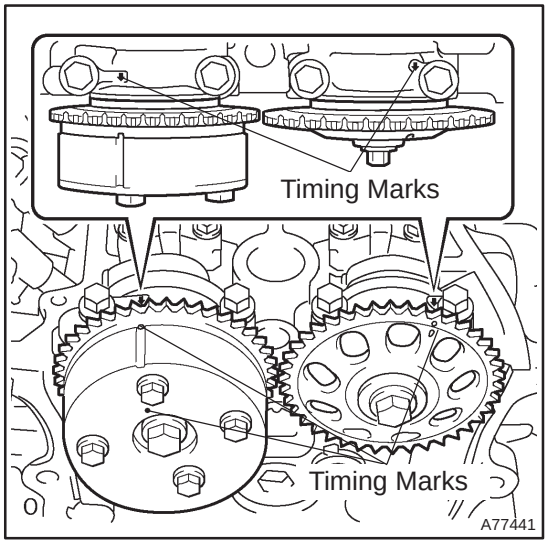

67. INSTALL CHAIN SUB–ASSY

(a) Set No. 1 cylinder to TDC/ compression.

(1) Align the timing marks of the camshaft timing sprockets with the timing marks located on the No. 1 bearing caps.

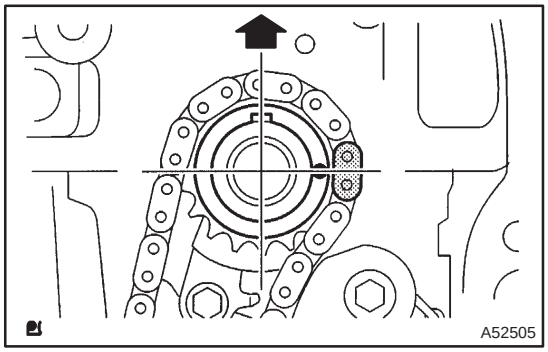

(2) Using the crankshaft pulley bolt, turn the crankshaft and set the key on the crankshaft upward.

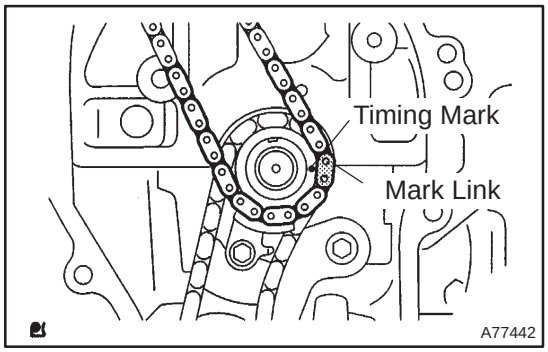

(b) Align the mark link (blue or orange colored link) with the timing mark located on the crankshaft timing gear.

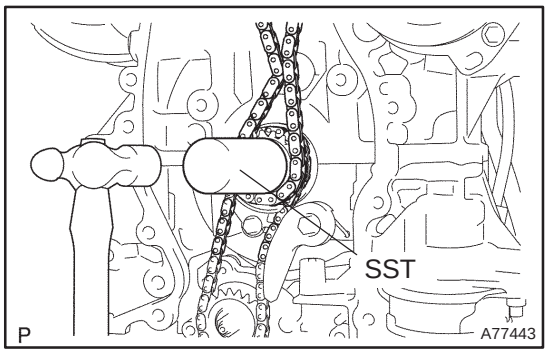

(c) Using SST, install the sprocket.
SST 09309–37010

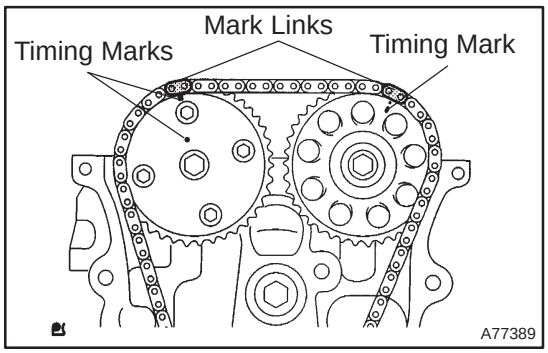

(d) Align the mark links (gold or yellow colored links) with each timing mark located on the camshaft timing gear, and on the timing sprocket to install the chain.

68. INSTALL TIMING CHAIN GUIDE
Torque: 9.0 N·m (92 kgf·cm, 80 in.·lbf)

69. INSTALL CHAIN VIBRATION DAMPER NO.1
Torque: 9.0 N·m (92 kgf·cm, 80 in.·lbf)

70. INSTALL CHAIN TENSIONER SLIPPER
Torque: 19 N·m (194 kgf·cm, 14 ft·lbf)

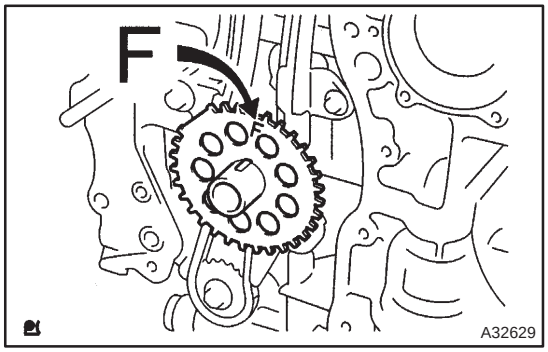

71. INSTALL CRANKSHAFT POSITION SENSOR PLATE NO.1

(a) Install the crankshaft position sensor plate with the ”F” mark facing forward.

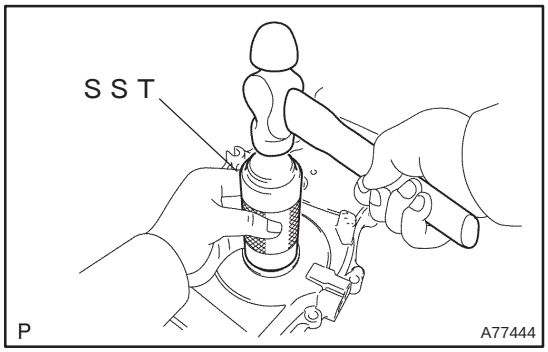

72. INSTALL TIMING GEAR CASE OR TIMING CHAIN CASE OIL SEAL

(a) Using SST, tap in a new oil seal until its surface is flush with the timing chain cover edge.
SST 09223–22010

(b) Apply a light coat of MP grease to the lip of a new oil seal.

NOTICE:
Keep the lip free of foreign material.

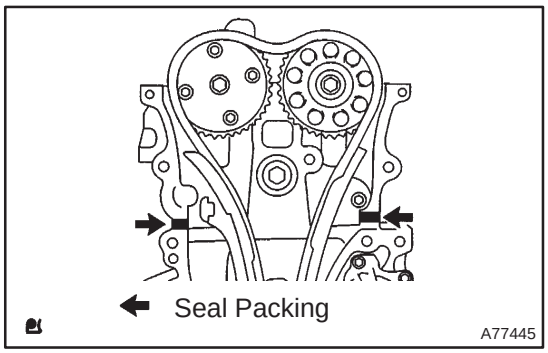

73. INSTALL TIMING CHAIN OR BELT COVER SUB–ASSY

NOTICE:
- **Remove any oil from the contact surface.**
- **Install the chain cover within 3 minutes after applying seal packing.**
- **Do not start the engine within 2 hours after installing.**

(a) Remove any old packing (FIPG) material and be careful not to drop any oil on the contact surfaces of the timing chain cover, cylinder head and cylinder block.

(b) Apply a continuous bead (Diameter 2 mm (0.09 in.)) of seal packing as shown in the illustration.
Seal packing: Part No. 08826 – 00080 or equivalent

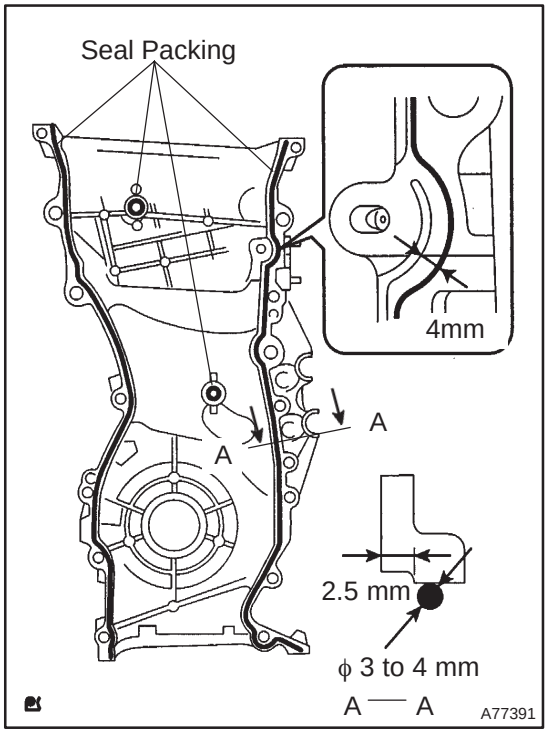

(c) Apply a continuous bead (Diameter 3 to 4 mm (0.118 to 0.157 in.)) of seal packing as shown in the illustration.
Seal packing: Part No. 08826 – 00080 or equivalent

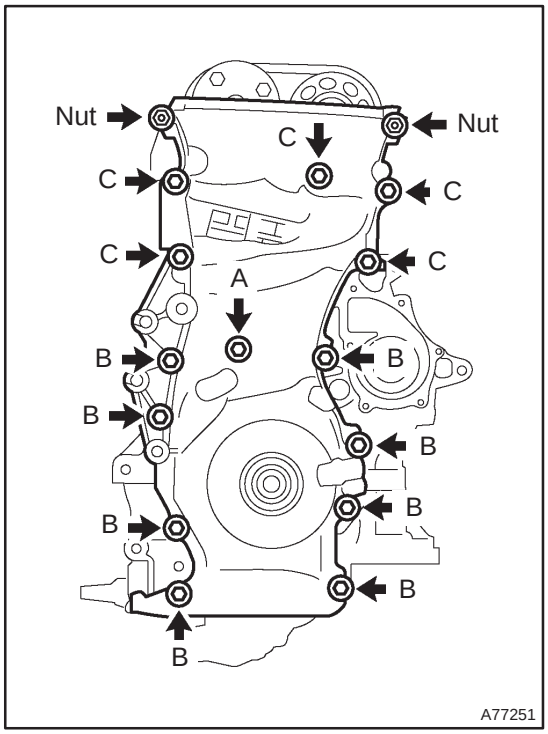

(d) Install the timing chain cover with the 14 bolts and 2 nuts.
Torque:
Bolt A 9.0 N·m (92 kgf·cm, 80 in.·lbf)
Bolt B 21 N·m (214 kgf·cm, 15 ft·lbf)
Bolt C 43 N·m (438 kgf·cm, 32 ft·lbf)
Nut 9.0 N·m (92 kgf·cm, 80 in.·lbf)

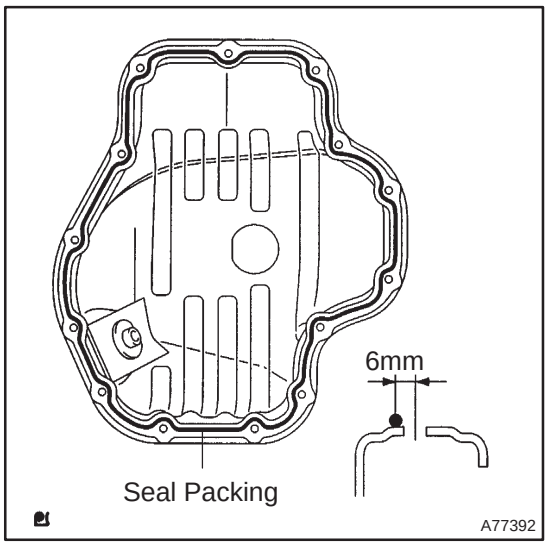

74. INSTALL OIL PAN SUB–ASSY

NOTICE:

- **Remove any oil from the contact surface.**
- **Install the oil pan within 3 minutes after applying seal packing.**
- **Do not start the engine within 2 hours after installing.**

(a) Remove any old packing (FIPG) material and be careful not to drop any oil on the contact surface of the cylinder block and oil pan.

(b) Apply a continuous bead (Diameter 3 mm to 4 mm (0.079 to 0.118 in.)) of seal packing as shown in the illustration, and install the oil pan.
Seal packing: Part No. 08826 – 00080 or equivalent

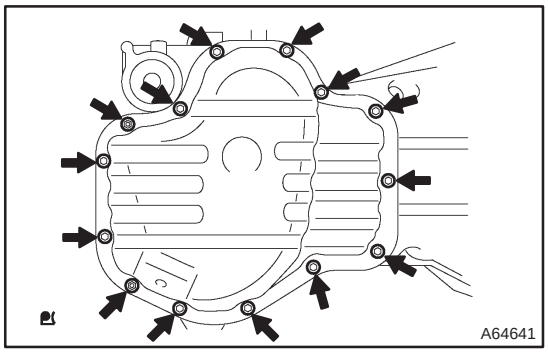

(c) Install the oil pan with the 12 bolts and 2 nuts.
Torque: 9.0 N·m (92 kgf·cm, 80 in.·lbf)

75. INSTALL OIL PAN DRAIN PLUG

(a) Install the oil pan drain plug and a new gasket.
Torque: 25 N·m (255 kgf·cm, 18 ft·lbf)

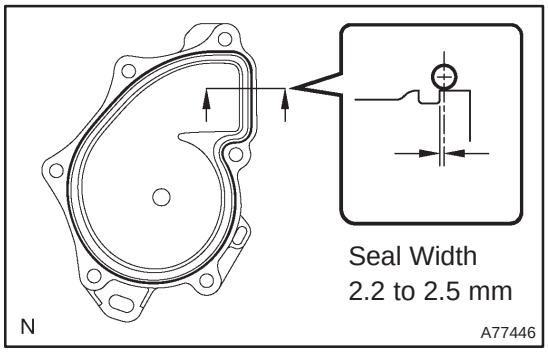

76. INSTALL WATER PUMP ASSY

(a) Clean the contact surface of the cylinder block.

(b) Apply a continuous bead (Diameter 2.2 to 2.5 mm(0.087 to 0.098in.)) of seal packing to the outside edge of the water pump.

Seal packing: Part No. 08826 – 00100 or equivalent

NOTICE:

- **Remove any oil from the contact surface.**
- **Install the water pump within 5 minutes after applying seal packing.**
- **Do not start the engine within 2 hours after installing.**

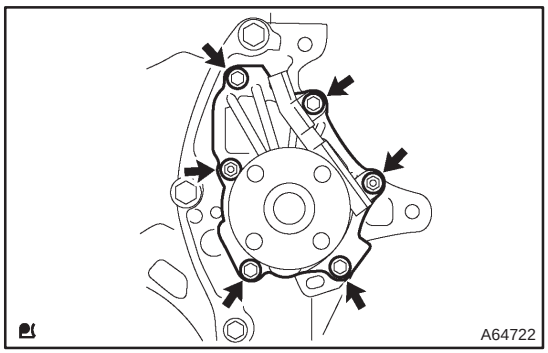

(c) Install the clamp and the water pump assembly with the 4 bolts and 2 nuts.

Torque: 9.0 N·m (92 kgf·cm, 80 in.·lbf)

NOTICE:

Tighten the outside bolts and nuts.

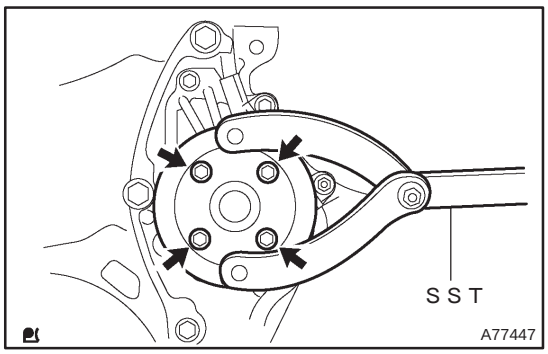

77. INSTALL WATER PUMP PULLEY

(a) Using SST, install the water pump pulley with the 4 bolts.

SST 09960–10010 (09962–01000, 09963–00700)

Torque: 26 N·m (265 kgf·cm, 19 ft·lbf)

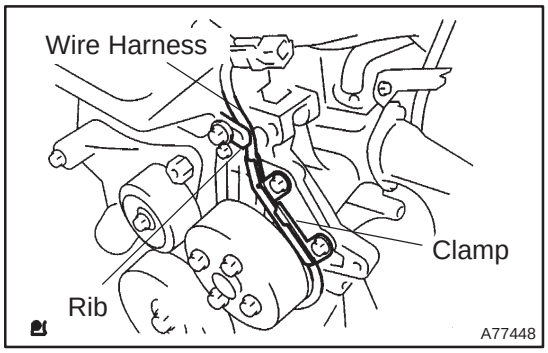

78. INSTALL CRANKSHAFT POSITION SENSOR

(a) Apply a light coat of engine oil to the O–ring.

(b) Install the crankshaft position sensor with the bolt.

Torque: 9.0 N·m (92 kgf·cm, 80 in.·lbf)

(c) Confirm the wire harness of the crankshaft position sensor is placed as shown in the illustration.

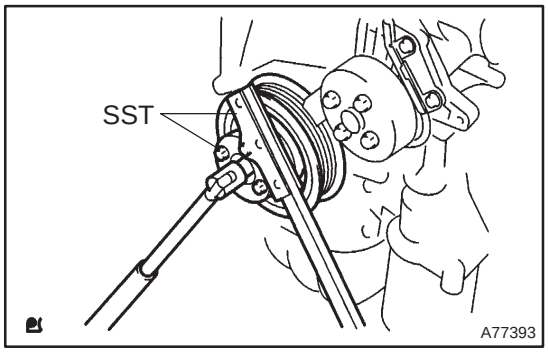

79. INSTALL CRANKSHAFT PULLEY

(a) Using SST, tighten the set bolt.
SST 09213–54015 (91651–60855), 09330–00021
Torque: 170 N·m (1,733 kgf·cm, 125 ft·lbf)

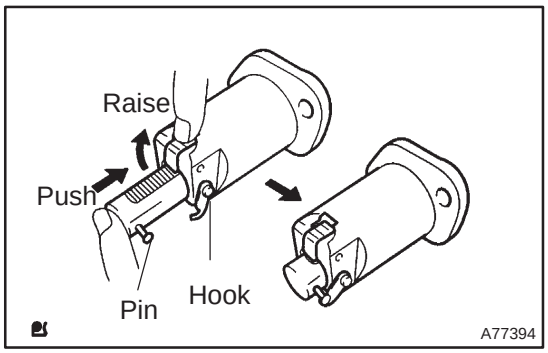

80. INSTALL CHAIN TENSIONER ASSY NO.1

(a) Release the ratchet pawl, fully push in the plunger and apply the hook to the pin so that the plunger is locked in the position.

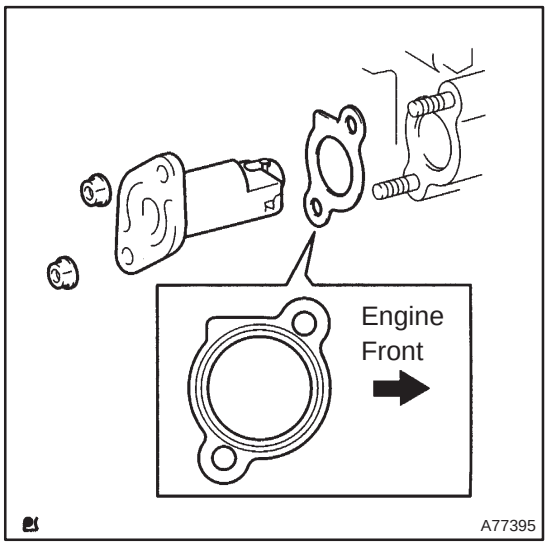

(b) Install a new gasket and the chain tensioner with the 2 nuts.
Torque: 9.0 N·m (92 kgf·cm, 80 in.·lbf)

NOTICE:
If the hook is disengaged while installing, re–apply the hook and then insert the chain tensioner.

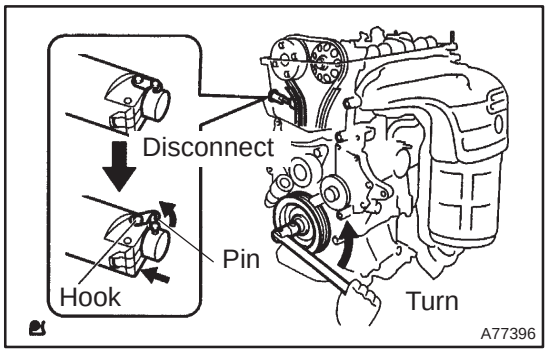

(c) Turn the crankshaft pulley counterclockwise, and check that the plunger knock pin is free from the hook.

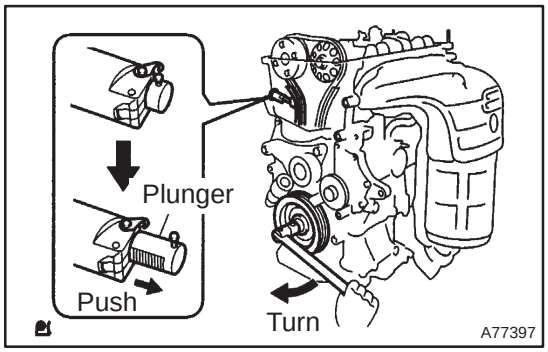

(d) Turn the crankshaft clockwise, and check that the plunger is extended.

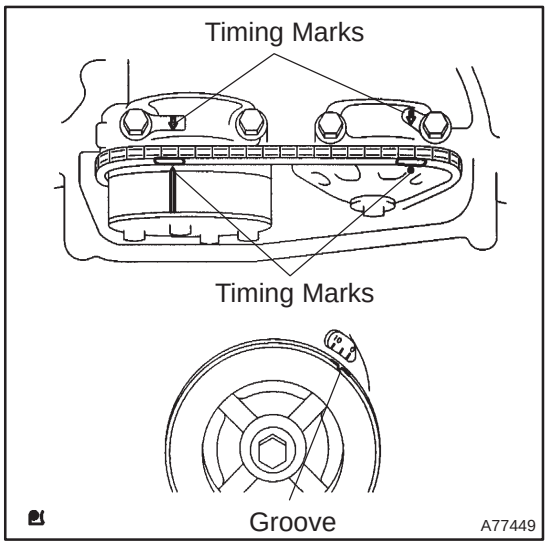

81. INSPECT VALVE CLEARANCE

(a) Turn the crankshaft pulley, and align its groove with the timing mark "0" of the timing chain cover.

(b) Check that the timing marks of the camshaft timing sprockets are aligned with the timing marks located on the No. 1 bearing cap as shown in the illustration.

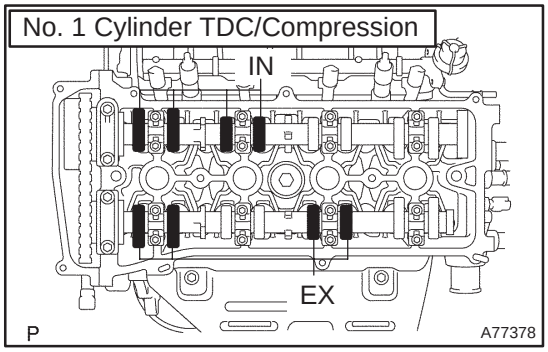

(c) Check only the valve indicated as shown in the illustration.

(1) Using a feeler gauge, measure the clearance between the valve lifter and the camshaft.

(2) Record the our–of–specification valve clearance measurements. They will be used later to determine the required replacement valve lifter.

Valve clearance (cold):
Intake 0.19 to 0.29 mm (0.007 to 0.011 in.)
Exhaust 0.30 to 0.40 mm (0.012 to 0.016 in.)

(d) Turn the crankshaft 1 revolution (360°) clockwise, and set the No. 4 cylinder to TDC/compression.

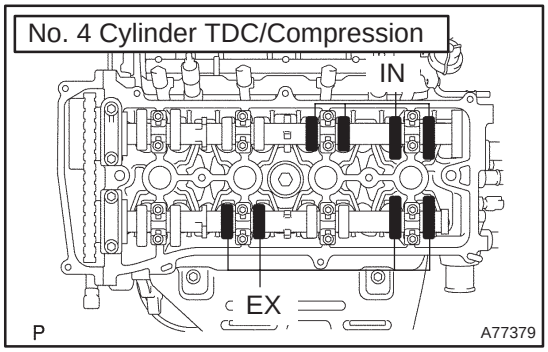

(e) Check only the valve indicated as shown in the illustration.

(1) Using a feeler gauge, measure the clearance between the valve lifter and the camshaft.

(2) Record the out–of–specification valve clearance measurements. They will be used later to determine the required replacement valve lifter.

Valve clearance (cold):
Intake 0.19 to 0.29 mm (0.007 to 0.011 in.)
Exhaust 0.30 to 0.40 mm (0.012 to 0.016 in.)

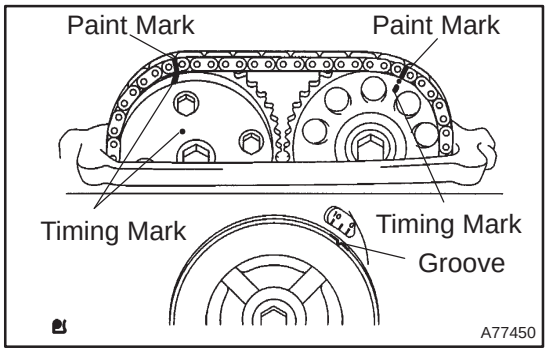

82. ADJUST VALVE CLEARANCE

NOTICE:

Do not turn the crankshaft without the chain tensioner.

(a) Turn the crankshaft 1 revolution (360°) clockwise, and set the No. 1 cylinder to TDC/compression.

(b) Place matchmarks on the timing chain and camshaft timing gear.

(c) Remove the 2 bolts and the chain tensioner.

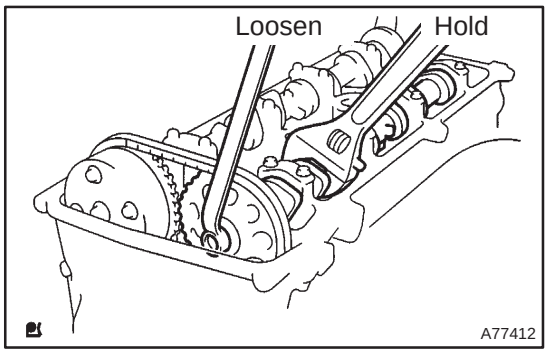

(d) Fix the camshaft with a wrench, then loosen the camshaft timing gear set bolt.

NOTICE:

Be careful not to damage the valve lifter.

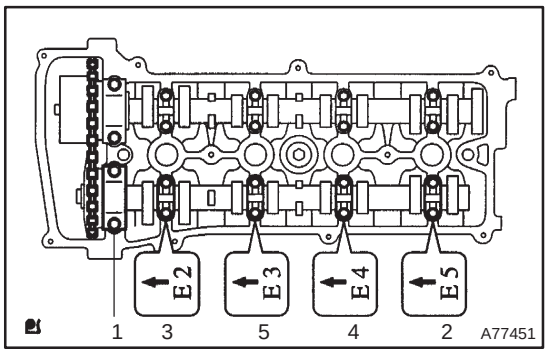

(e) Using several steps, loosen the camshaft bearing cap bolts on the No. 2 camshaft in the sequence shown in the illustration, and then remove the bearing caps.

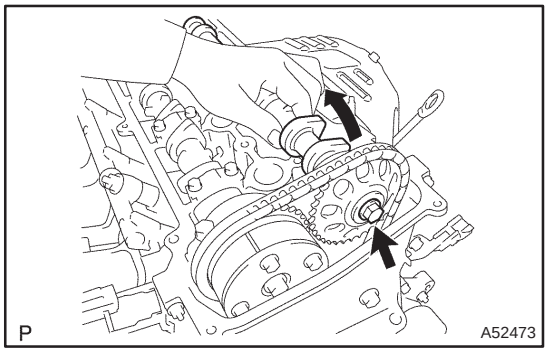

(f) Raising the No. 2 camshaft, remove the set bolt.

(g) Remove the timing chain sprocket from the No. 2 camshaft with the timing chain assembled.

(h) Remove the timing chain sprocket from the timing chain.

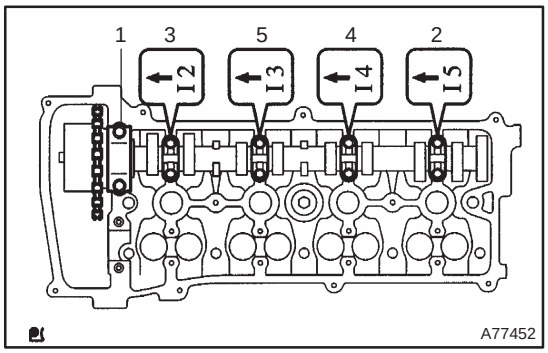

(i) Using several steps, loosen the camshaft bearing cap bolts on the camshaft in the sequence shown in the illustration, then remove the bearing caps.

(j) Remove the intake camshaft.

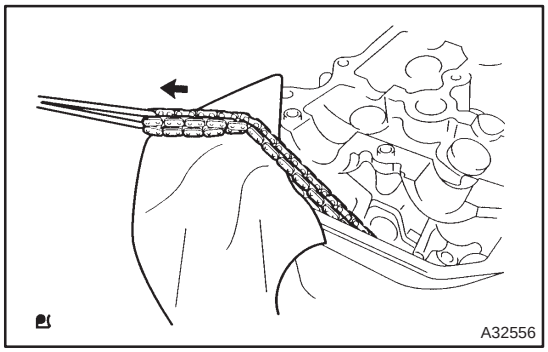

(k) Tie the timing chain with a string.

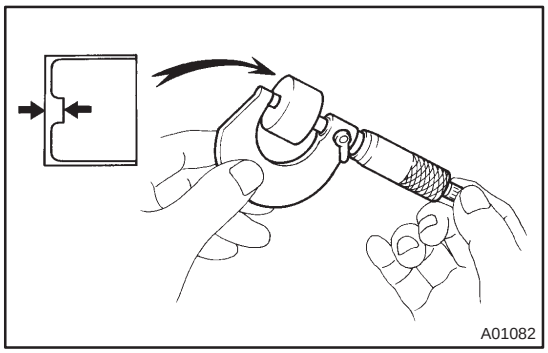

(l) Using a micrometer, measure the thickness of the removed lifter.

(m) Calculate the thickness of a new lifter so that the valve clearance comes within the specified valve.

A	Thickness of the new lifter
B	Thickness of the used lifter
C	Measured valve clearance

Valve clearance:
Intake A = B + (C – 0.24 mm (0.0094 in.))
Exhaust A = B + (C – 0.35 mm (0.0138 in.))

EXAMPLE: (Intake)
Measure valve clearance = 0.44 mm (0.0173 in.)
0.44 mm (0.0173 in.) – 0.24 mm (0.0094 in.) = 0.20 mm (0.0079 in.)
(Measured – Specification = Excess clearance)
Used shim measurement = 5.30 mm (0.2087 in.)
0.20 mm (0.0079 in.) + 5.30 mm (0.2087 in.) = 5.50 mm (0.2165 in.)
(Excess clearance + Used shim = Ideal new shim)
Closest new shim = 5.50 mm (0.2165 in.) = Shim No. ”50”

HINT:

- Select a new lifter with a thickness as close as possible to the calculated values.
- Lifter are available in 35 sizes in increments of 0.020 mm (0.0008 in.), from 5.060 mm (0.1992 in.) to 5.740 mm (0.2260 in.)
- Refer to new Lifter Thickness table on the following 2 pages.

Valve Lifter Selection Chart (Intake)

Measure clearance mm (in.) \ Installed lifter thickness mm (in.)	5.060 (0.1992)	5.080 (0.2000)	5.100 (0.2008)	5.120 (0.2016)	5.140 (0.2024)	5.160 (0.2031)	5.180 (0.2039)	5.200 (0.2047)	5.210 (0.2051)	5.220 (0.2055)	5.230 (0.2059)	5.240 (0.2063)	5.250 (0.2067)	5.260 (0.2071)	5.270 (0.2075)	5.280 (0.2079)	5.290 (0.2083)	5.300 (0.2087)	5.310 (0.2091)	5.320 (0.2094)	5.330 (0.2098)	5.340 (0.2102)	5.350 (0.2106)	5.360 (0.2110)	5.370 (0.2114)	5.380 (0.2118)	5.390 (0.2122)	5.400 (0.2126)	5.410 (0.2130)	5.420 (0.2134)	5.430 (0.2138)	5.440 (0.2142)	5.450 (0.2146)	5.460 (0.2150)	5.470 (0.2154)	5.480 (0.2157)	5.490 (0.2161)	5.500 (0.2165)	5.510 (0.2169)	5.520 (0.2173)	5.530 (0.2177)	5.540 (0.2181)	5.550 (0.2185)	5.560 (0.2189)	5.570 (0.2193)	5.580 (0.2197)	5.590 (0.2201)	5.600 (0.2205)	5.620 (0.2213)	5.640 (0.2220)	5.660 (0.2228)	5.680 (0.2236)	5.700 (0.2244)	5.720 (0.2252)	5.740 (0.2260)
0.000–0.030 (0.0000–0.0012)													06	06	08	08	10	10	12	12	14	14	16	16	18	18	20	20	22	22	24	24	26	26	28	28	30	30	32	32	34	34	36	36	38	38	40	40	42	42	44	46	48	50	52	54
0.031–0.050 (0.0012–0.0020)									06	06	06	08	08	10	10	12	12	14	14	16	16	18	18	20	20	22	22	24	24	26	26	28	28	30	30	32	32	34	34	36	36	38	38	40	40	42	42	44	46	48	50	52	54	56	58
0.051–0.070 (0.0020–0.0028)								06	08	08	08	10	10	12	12	14	14	16	16	18	18	20	20	22	22	24	24	26	26	28	28	30	30	32	32	34	34	36	36	38	38	40	40	42	42	44	44	46	48	50	52	54	56	58	60
0.071–0.090 (0.0028–0.0035)							06	08	10	10	10	12	12	14	14	16	16	18	18	20	20	22	22	24	24	26	26	28	28	30	30	32	32	34	34	36	36	38	38	40	40	42	42	44	44	46	46	48	50	52	54	56	58	60	62
0.091–0.110 (0.0036–0.0043)						06	08	10	12	12	12	14	14	16	16	18	18	20	20	22	22	24	24	26	26	28	28	30	30	32	32	34	34	36	36	38	38	40	40	42	42	44	44	46	46	48	48	50	52	54	56	58	60	62	64
0.111–0.130 (0.0044–0.0051)					06	08	10	12	14	14	14	16	16	18	18	20	20	22	22	24	24	26	26	28	28	30	30	32	32	34	34	36	36	38	38	40	40	42	42	44	44	46	46	48	48	50	50	52	54	56	58	60	62	64	66
0.131–0.150 (0.0052–0.0059)				06	08	10	12	14	16	16	16	18	18	20	20	22	22	24	24	26	26	28	28	30	30	32	32	34	34	36	36	38	38	40	40	42	42	44	44	46	46	48	48	50	50	52	52	54	56	58	60	62	64	66	68
0.151–0.170 (0.0059–0.0067)			06	08	10	12	14	16	18	18	18	20	20	22	22	24	24	26	26	28	28	30	30	32	32	34	34	36	36	38	38	40	40	42	42	44	44	46	46	48	48	50	50	52	52	54	54	56	58	60	62	64	66	68	70
0.171–0.189 (0.0067–0.0074)		06	08	10	12	14	16	18	20	20	20	22	22	24	24	26	26	28	28	30	30	32	32	34	34	36	36	38	38	40	40	42	42	44	44	46	46	48	48	50	50	52	52	54	54	56	56	58	60	62	64	66	68	70	72
0.190–0.290 (0.0075–0.0114)																																																										
0.291–0.310 (0.0115–0.0122)	12	14	16	18	20	22	24	26	28	28	30	30	32	32	34	34	36	36	38	38	40	40	42	42	44	44	46	46	48	48	50	50	52	52	54	54	56	56	58	58	60	60	62	62	64	64	66	66	68	70	72	74	74	74
0.311–0.330 (0.0122–0.0130)	14	16	18	20	22	24	26	28	30	30	32	32	34	34	36	36	38	38	40	40	42	42	44	44	46	46	48	48	50	50	52	52	54	54	56	56	58	58	60	60	62	62	64	64	66	66	68	68	70	72	74	74	74	
0.331–0.350 (0.0130–0.0138)	16	18	20	22	24	26	28	30	32	32	34	34	36	36	38	38	40	40	42	42	44	44	46	46	48	48	50	50	52	52	54	54	56	56	58	58	60	60	62	62	64	64	66	66	68	68	70	70	72	74	74	74		
0.351–0.370 (0.0138–0.0146)	18	20	22	24	26	28	30	32	34	34	36	36	38	38	40	40	42	42	44	44	46	46	48	48	50	50	52	52	54	54	56	56	58	58	60	60	62	62	64	64	66	66	68	68	70	70	72	72	74	74	74			
0.371–0.390 (0.0146–0.0154)	20	22	24	26	28	30	32	34	36	36	38	38	40	40	42	42	44	44	46	46	48	48	50	50	52	52	54	54	56	56	58	58	60	60	62	62	64	64	66	66	68	68	70	70	72	72	74	74	74	74				
0.391–0.410 (0.0154–0.0161)	22	24	26	28	30	32	34	36	38	38	40	40	42	42	44	44	46	46	48	48	50	50	52	52	54	54	56	56	58	58	60	60	62	62	64	64	66	66	68	68	70	70	72	72	74	74	74	74	74					
0.411–0.430 (0.0162–0.0169)	24	26	28	30	32	34	36	38	40	40	42	42	44	44	46	46	48	48	50	50	52	52	54	54	56	56	58	58	60	60	62	62	64	64	66	66	68	68	70	70	72	72	74	74	74	74								
0.431–0.450 (0.0170–0.0177)	26	28	30	32	34	36	38	40	42	42	44	44	46	46	48	48	50	50	52	52	54	54	56	56	58	58	60	60	62	62	64	64	66	66	68	68	70	70	72	72	74	74	74	74										
0.451–0.470 (0.0178–0.0185)	28	30	32	34	36	38	40	42	44	44	46	46	48	48	50	50	52	52	54	54	56	56	58	58	60	60	62	62	64	64	66	66	68	68	70	70	72	72	74	74	74	74												
0.471–0.490 (0.0185–0.0193)	30	32	34	36	38	40	42	44	46	46	48	48	50	50	52	52	54	54	56	56	58	58	60	60	62	62	64	64	66	66	68	68	70	70	72	72	74	74	74	74														
0.491–0.510 (0.0193–0.0201)	32	34	36	38	40	42	44	46	48	48	50	50	52	52	54	54	56	56	58	58	60	60	62	62	64	64	66	66	68	68	70	70	72	72	74	74	74	74																
0.511–0.530 (0.0201–0.0209)	34	36	38	40	42	44	46	48	50	50	52	52	54	54	56	56	58	58	60	60	62	62	64	64	66	66	68	68	70	70	72	72	74	74	74	74																		
0.531–0.550 (0.0209–0.0217)	36	38	40	42	44	46	48	50	52	52	54	54	56	56	58	58	60	60	62	62	64	64	66	66	68	68	70	70	72	72	74	74	74	74																				
0.551–0.570 (0.0217–0.0224)	38	40	42	44	46	48	50	52	54	54	56	56	58	58	60	60	62	62	64	64	66	66	68	68	70	70	72	72	74	74	74	74																						
0.571–0.590 (0.0225–0.0232)	40	42	44	46	48	50	52	54	56	56	58	58	60	60	62	62	64	64	66	66	68	68	70	70	72	72	74	74	74	74																								
0.591–0.610 (0.0233–0.0240)	42	44	46	48	50	52	54	56	58	58	60	60	62	62	64	64	66	66	68	68	70	70	72	72	74	74	74	74																										
0.611–0.630 (0.0241–0.0248)	44	46	48	50	52	54	56	58	60	60	62	62	64	64	66	66	68	68	70	70	72	72	74	74	74	74																										
0.631–0.650 (0.0248–0.0256)	46	48	50	52	54	56	58	60	62	62	64	64	66	66	68	68	70	70	72	72	74	74	74	74																										
0.651–0.670 (0.0256–0.0264)	48	50	52	54	56	58	60	62	64	64	66	66	68	68	70	70	72	72	74	74	74	74																										
0.671–0.690 (0.0264–0.0272)	50	52	54	56	58	60	62	64	66	66	68	68	70	70	72	72	74	74	74	74																										
0.691–0.710 (0.0272–0.0280)	52	54	56	58	60	62	64	66	68	68	70	70	72	72	74	74	74	74																										
0.711–0.730 (0.0280–0.0287)	54	56	58	60	62	64	66	68	70	70	72	72	74	74	74	74																										
0.731–0.750 (0.0288–0.0295)	56	58	60	62	64	66	68	70	72	72	74	74	74	74																										
0.751–0.770 (0.0296–0.0303)	58	60	62	64	66	68	70	72	74	74	74	74																										
0.771–0.790 (0.0304–0.0311)	60	62	64	66	68	70	72	74	74	74																										
0.791–0.810 (0.0311–0.0319)	62	64	66	68	70	72	74																													
0.811–0.830 (0.0319–0.0327)	64	66	68	70	72	74																														
0.831–0.850 (0.0327–0.0335)	66	68	70	72	74																															
0.851–0.870 (0.0335–0.0343)	68	70	72	74																																
0.871–0.890 (0.0343–0.0350)	70	72	74																																	
0.891–0.910 (0.0351–0.0358)	72	74																																		
0.911–0.930 (0.0359–0.0366)	74																																			

Intake valve clearance (Cold):
0.19 to 0.29 mm (0.008 to 0.011 in.)

EXAMPLE:

The 5.250 mm (0.2067 in.) lifter is installed, and the measured clearance is 0.400 mm (0.0157 in.).

Replace the 5.250 mm (0.2067 in.) lifter with a new No. 42 lifter.

New Lifter Thickness mm (in.)

Lifter No.	Thickness	Lifter No.	Thickness	Lifter No.	Thickness
06	5.060 (0.1992)	30	5.300 (0.2087)	54	5.540 (0.2181)
08	5.080 (0.2000)	32	5.320 (0.2094)	56	5.560 (0.2189)
10	5.100 (0.2008)	34	5.340 (0.2102)	58	5.580 (0.2197)
12	5.120 (0.2016)	36	5.360 (0.2110)	60	5.600 (0.2205)
14	5.140 (0.2024)	38	5.380 (0.2118)	62	5.620 (0.2213)
16	5.160 (0.2031)	40	5.400 (0.2126)	64	5.640 (0.2220)
18	5.180 (0.2039)	42	5.420 (0.2134)	66	5.660 (0.2228)
20	5.200 (0.2047)	44	5.440 (0.2142)	68	5.680 (0.2236)
22	5.220 (0.2055)	46	5.460 (0.2150)	70	5.700 (0.2244)
24	5.240 (0.2063)	48	5.480 (0.2157)	72	5.720 (0.2252)
26	5.260 (0.2071)	50	5.500 (0.2165)	74	5.740 (0.2260)
28	5.280 (0.2079)	52	5.520 (0.2173)		

A77296

P

Valve Lifter Selection Chart (Exhaust)

Measure clearance mm (in.) \ Installed lifter thickness mm (in.)	5.060 (0.1992)	5.080 (0.2000)	5.100 (0.2008)	5.120 (0.2016)	5.140 (0.2024)	5.160 (0.2031)	5.180 (0.2039)	5.200 (0.2047)	5.210 (0.2051)	5.220 (0.2055)	5.230 (0.2059)	5.240 (0.2063)	5.250 (0.2067)	5.260 (0.2071)	5.270 (0.2075)	5.280 (0.2079)	5.290 (0.2083)	5.300 (0.2087)	5.310 (0.2091)	5.320 (0.2094)	5.330 (0.2098)	5.340 (0.2102)	5.350 (0.2106)	5.360 (0.2110)	5.370 (0.2114)	5.380 (0.2118)	5.390 (0.2122)	5.400 (0.2126)	5.410 (0.2130)	5.420 (0.2134)	5.430 (0.2138)	5.440 (0.2142)	5.450 (0.2146)	5.460 (0.2150)	5.470 (0.2154)	5.480 (0.2157)	5.490 (0.2161)	5.500 (0.2165)	5.510 (0.2169)	5.520 (0.2173)	5.530 (0.2177)	5.540 (0.2181)	5.550 (0.2185)	5.560 (0.2189)	5.570 (0.2193)	5.580 (0.2197)	5.590 (0.2201)	5.600 (0.2205)	5.620 (0.2213)	5.640 (0.2220)	5.660 (0.2228)	5.680 (0.2236)	5.700 (0.2244)	5.720 (0.2252)	5.740 (0.2260)
0.000–0.030 (0.0000–0.0012)																							06	06	08	08	10	10	12	12	14	14	16	16	18	18	20	20	22	22	24	24	26	26	28	28	30	30	32	34	36	38	40	42	44
0.031–0.050 (0.0012–0.0020)																					06	06	08	08	10	10	12	12	14	14	16	16	18	18	20	20	22	22	24	24	26	26	28	28	30	30	32	32	34	36	38	40	42	44	46
0.051–0.070 (0.0020–0.0028)																			06	06	08	08	10	10	12	12	14	14	16	16	18	18	20	20	22	22	24	24	26	26	28	28	30	30	32	32	34	34	36	38	40	42	44	46	48
0.071–0.090 (0.0028–0.0035)																	06	06	08	08	10	10	12	12	14	14	16	16	18	18	20	20	22	22	24	24	26	26	28	28	30	30	32	32	34	34	36	36	38	40	42	44	46	48	50
0.091–0.110 (0.0036–0.0043)															06	06	08	08	10	10	12	12	14	14	16	16	18	18	20	20	22	22	24	24	26	26	28	28	30	30	32	32	34	34	36	36	38	38	40	42	44	46	48	50	52
0.111–0.130 (0.0044–0.0051)												06	06	08	08	10	10	12	12	14	14	16	16	18	18	20	20	22	22	24	24	26	26	28	28	30	30	32	32	34	34	36	36	38	38	40	40	42	44	46	48	50	52	54
0.131–0.150 (0.0052–0.0059)										06	06	08	08	10	10	12	12	14	14	16	16	18	18	20	20	22	22	24	24	26	26	28	28	30	30	32	32	34	34	36	36	38	38	40	40	42	42	44	46	48	50	52	54	56
0.151–0.170 (0.0059–0.0067)									06	06	08	08	10	10	12	12	14	14	16	16	18	18	20	20	22	22	24	24	26	26	28	28	30	30	32	32	34	34	36	36	38	38	40	40	42	42	44	44	46	48	50	52	54	56	58
0.171–0.190 (0.0067–0.0075)								06	08	08	10	10	12	12	14	14	16	16	18	18	20	20	22	22	24	24	26	26	28	28	30	30	32	32	34	34	36	36	38	38	40	40	42	42	44	44	46	46	48	50	52	54	56	58	60
0.191–0.210 (0.0075–0.0083)							06	08	10	10	12	12	14	14	16	16	18	18	20	20	22	22	24	24	26	26	28	28	30	30	32	32	34	34	36	36	38	38	40	40	42	42	44	44	46	46	48	48	50	52	54	56	58	60	62
0.211–0.230 (0.0083–0.0091)						06	08	10	12	12	14	14	16	16	18	18	20	20	22	22	24	24	26	26	28	28	30	30	32	32	34	34	36	36	38	38	40	40	42	42	44	44	46	46	48	48	50	50	52	54	56	58	60	62	64
0.231–0.250 (0.0091–0.0098)					06	08	10	12	14	14	16	16	18	18	20	20	22	22	24	24	26	26	28	28	30	30	32	32	34	34	36	36	38	38	40	40	42	42	44	44	46	46	48	48	50	50	52	52	54	56	58	60	62	64	66
0.251–0.270 (0.0099–0.0106)				06	08	10	12	14	16	16	18	18	20	20	22	22	24	24	26	26	28	28	30	30	32	32	34	34	36	36	38	38	40	40	42	42	44	44	46	46	48	48	50	50	52	52	54	54	56	58	60	62	64	66	68
0.271–0.290 (0.0107–0.0114)			06	08	10	12	14	16	18	18	20	20	22	22	24	24	26	26	28	28	30	30	32	32	34	34	36	36	38	38	40	40	42	42	44	44	46	46	48	48	50	50	52	52	54	54	56	56	58	60	62	64	66	68	70
0.291–0.299 (0.0115–0.0118)		06	08	10	12	14	16	18	20	20	22	22	24	24	26	26	28	28	30	30	32	32	34	34	36	36	38	38	40	40	42	42	44	44	46	46	48	48	50	50	52	52	54	54	56	56	58	58	60	62	64	66	68	70	72
0.300–0.400 (0.0118–0.0157)																																																								
0.401–0.420 (0.0158–0.0165)	12	14	16	18	20	22	24	26	26	28	28	30	30	32	32	34	34	36	36	38	38	40	40	42	42	44	44	46	46	48	48	50	50	52	52	54	54	56	56	58	58	60	60	62	62	64	64	66	68	70	72	74	74	74
0.421–0.440 (0.0166–0.0173)	14	16	18	20	22	24	26	28	28	30	30	32	32	34	34	36	36	38	38	40	40	42	42	44	44	46	46	48	48	50	50	52	52	54	54	56	56	58	58	60	60	62	62	64	64	66	66	68	70	72	74	74	74
0.441–0.460 (0.0174–0.0181)	16	18	20	22	24	26	28	30	30	32	32	34	34	36	36	38	38	40	40	42	42	44	44	46	46	48	48	50	50	52	52	54	54	56	56	58	58	60	60	62	62	64	64	66	66	68	68	70	72	74	74	74		
0.461–0.480 (0.0181–0.0189)	18	20	22	24	26	28	30	32	32	34	34	36	36	38	38	40	40	42	42	44	44	46	46	48	48	50	50	52	52	54	54	56	56	58	58	60	60	62	62	64	64	66	66	68	68	70	70	72	74	74	74			
0.481–0.500 (0.0189–0.0197)	20	22	24	26	28	30	32	34	34	36	36	38	38	40	40	42	42	44	44	46	46	48	48	50	50	52	52	54	54	56	56	58	58	60	60	62	62	64	64	66	66	68	68	70	70	72	72	74	74	74				
0.501–0.520 (0.0197–0.0205)	22	24	26	28	30	32	34	36	36	38	38	40	40	42	42	44	44	46	46	48	48	50	50	52	52	54	54	56	56	58	58	60	60	62	62	64	64	66	66	68	68	70	70	72	72	74	74	74	74					
0.521–0.540 (0.0205–0.0213)	24	26	28	30	32	34	36	38	38	40	40	42	42	44	44	46	46	48	48	50	50	52	52	54	54	56	56	58	58	60	60	62	62	64	64	66	66	68	68	70	70	72	72	74	74	76	76	74						
0.541–0.560 (0.0213–0.0220)	26	28	30	32	34	36	38	40	40	42	42	44	44	46	46	48	48	50	50	52	52	54	54	56	56	58	58	60	60	62	62	64	64	66	66	68	68	70	70	72	72	74	74	74	74	74	74							
0.561–0.580 (0.0221–0.0228)	28	30	32	34	36	38	40	42	42	44	44	46	46	48	48	50	50	52	52	54	54	56	56	58	58	60	60	62	62	64	64	66	66	68	68	70	70	72	72	74	74	74	74	74	74	74								
0.581–0.600 (0.0229–0.0236)	30	32	34	36	38	40	42	44	44	46	46	48	48	50	50	52	52	54	54	56	56	58	58	60	60	62	62	64	64	66	66	68	68	70	70	72	72	74	74	74	74	74	74	74										
0.601–0.620 (0.0237–0.0244)	32	34	36	38	40	42	44	46	46	48	48	50	50	52	52	54	54	56	56	58	58	60	60	62	62	64	64	66	66	68	68	70	70	72	72	74	74	74	74	74	74													
0.621–0.640 (0.0244–0.0252)	34	36	38	40	42	44	46	48	48	50	50	52	52	54	54	56	56	58	58	60	60	62	62	64	64	66	66	68	68	70	70	72	72	74	74	74	74	74	74															
0.641–0.660 (0.0252–0.0260)	36	38	40	42	44	46	48	50	50	52	52	54	54	56	56	58	58	60	60	62	62	64	64	66	66	68	68	70	70	72	72	74	74	74	74	74	74																	
0.661–0.680 (0.0260–0.0268)	38	40	42	44	46	48	50	52	52	54	54	56	56	58	58	60	60	62	62	64	64	66	66	68	68	70	70	72	72	74	74	74	74	74	74																			
0.681–0.700 (0.0268–0.0276)	40	42	44	46	48	50	52	54	54	56	56	58	58	60	60	62	62	64	64	66	66	68	68	70	70	72	72	74	74	74	74	74	74																				
0.701–0.720 (0.0276–0.0283)	42	44	46	48	50	52	54	56	56	58	58	60	60	62	62	64	64	66	66	68	68	70	70	72	72	74	74	74	74	74	74																							
0.721–0.740 (0.0284–0.0291)	44	46	48	50	52	54	56	58	58	60	60	62	62	64	64	66	66	68	68	70	70	72	72	74	74	74	74	74	74																								
0.741–0.760 (0.0292–0.0299)	46	48	50	52	54	56	58	60	60	62	62	64	64	66	66	68	68	70	70	72	72	74	74	74	74	74	74																									
0.761–0.780 (0.0300–0.0307)	48	50	52	54	56	58	60	62	62	64	64	66	66	68	68	70	70	72	72	74	74	74	74	74	74																									
0.781–0.800 (0.0307–0.0315)	50	52	54	56	58	60	62	64	64	66	66	68	68	70	70	72	72	74	74	74	74	74	74																									
0.801–0.820 (0.0315–0.0323)	52	54	56	58	60	62	64	66	66	68	68	70	70	72	72	74	74	74	74	74	74																									
0.821–0.840 (0.0323–0.0331)	54	56	58	60	62	64	66	68	68	70	70	72	72	74	74	74	74	74	74																									
0.841–0.860 (0.0331–0.0339)	56	58	60	62	64	66	68	70	70	72	72	74	74	74	74	74	74																									
0.861–0.880 (0.0339–0.0346)	58	60	62	64	66	68	70	72	72	74	74	74	74	74	74																									
0.881–0.900 (0.0347–0.0354)	60	62	64	66	68	70	72	74	74	74	74	74	74																									
0.901–0.920 (0.0355–0.0362)	62	64	66	68	70	72	74	74	74	74																												
0.921–0.940 (0.0363–0.0370)	64	66	68	70	72	74	74	74	74																													
0.941–0.960 (0.0370–0.0378)	66	68	70	72	74	74	74																															
0.961–0.980 (0.0378–0.0386)	68	70	72	74	74	74																																
0.981–1.000 (0.0386–0.0394)	70	72	74	74	74																																	
1.001–1.020 (0.0394–0.0402)	72	74	74	74																																		
1.021–1.040 (0.0402–0.0409)	74	74	74																																			
1.041–1.060 (0.0410–0.0417)	74	74																																				
1.061–1.080 (0.0418–0.0425)	74																																					

Exhaust valve clearance (Cold):
0.30 to 0.40 mm (0.0118 to 0.0157 in.)

EXAMPLE:

The 5.340 mm (0.2102 in.) lifter is installed, and the measured clearance is 0.440 mm (0.0173 in.).

Replace the 5.340 mm (0.2102 in.) lifter with a new No. 44 lifter.

New lifter thickness mm (in.)

Lifter No.	Thickness	Lifter No.	Thickness	Lifter No.	Thickness
06	5.060 (0.1992)	30	5.300 (0.2087)	54	5.540 (0.2181)
08	5.080 (0.2000)	32	5.320 (0.2094)	56	5.560 (0.2189)
10	5.100 (0.2008)	34	5.340 (0.2102)	58	5.580 (0.2197)
12	5.120 (0.2016)	36	5.360 (0.2110)	60	5.600 (0.2205)
14	5.140 (0.2024)	38	5.380 (0.2118)	62	5.620 (0.2213)
16	5.160 (0.2031)	40	5.400 (0.2126)	64	5.640 (0.2220)
18	5.180 (0.2039)	42	5.420 (0.2134)	66	5.660 (0.2228)
20	5.200 (0.2047)	44	5.440 (0.2142)	68	5.680 (0.2236)
22	5.220 (0.2055)	46	5.460 (0.2150)	70	5.700 (0.2244)
24	5.240 (0.2063)	48	5.480 (0.2157)	72	5.720 (0.2252)
26	5.260 (0.2071)	50	5.500 (0.2165)	74	5.740 (0.2260)
28	5.280 (0.2079)	52	5.520 (0.2173)		

A77297

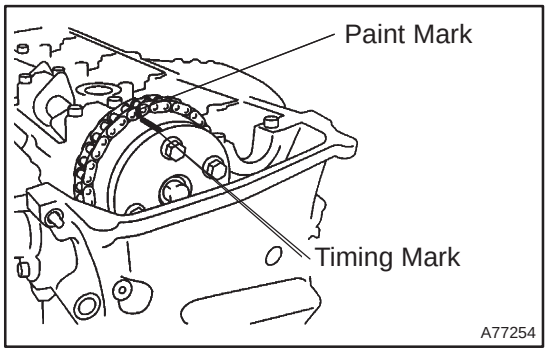

(n) Install the timing chain on the camshaft timing gear, with the painted links aligned with the timing marks on the camshaft timing sprockets.

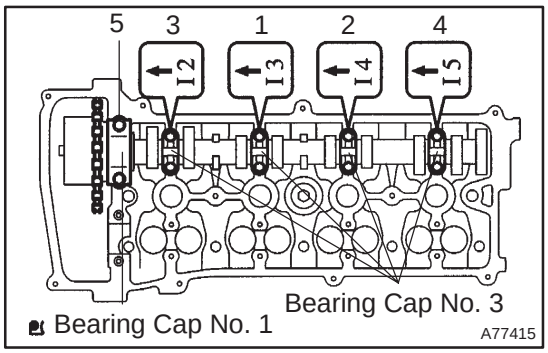

(o) Examine the front marks and numbers and tighten the bolts in the sequence shown in the illustration.
Torque:
Bearing cap No. 1 30 N·m (301 kgf·cm, 22 ft·lbf)
Bearing cap No. 3 9.0 N·m (92 kgf·cm, 80 in.·lbf)

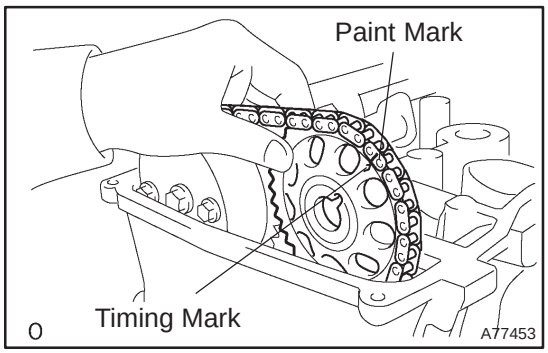

(p) Put the camshaft No. 2 on the cylinder head with the painted links of chain aligned with the timing mark on the camshaft timing sprockets.

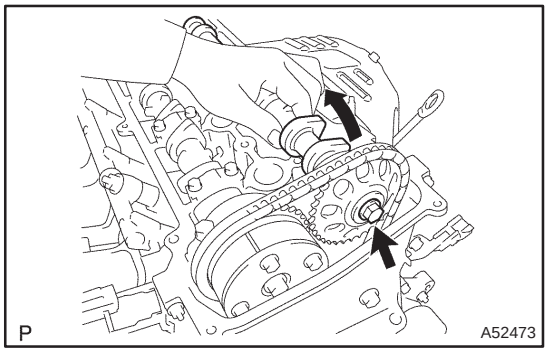

(q) Raising the No. 2 camshaft, tighten the set bolt temporarily.

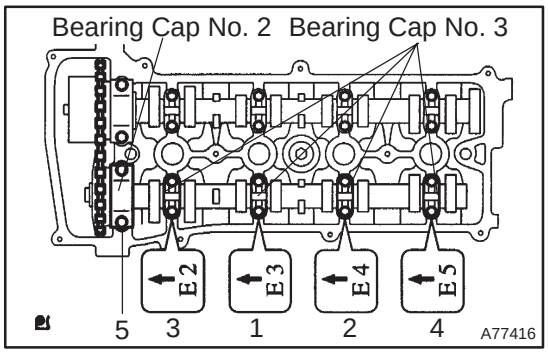

(r) Examine the front marks and numbers and tighten the bolts in the sequence shown in the illustration.
Torque:
Bearing cap No. 2 30 N·m (301 kgf·cm, 22 ft·lbf)
Bearing cap No. 3 9.0 N·m (92 kgf·cm, 80 in.·lbf)

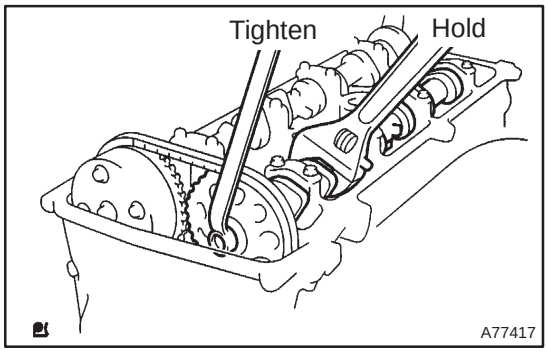

(s) Fix the camshaft with a wrench, then tighten the camshaft timing gear set bolt.

Torque: 54 N·m (551 kgf·cm, 40 ft·lbf)

NOTICE:

Be careful not to damage the valve lifter.

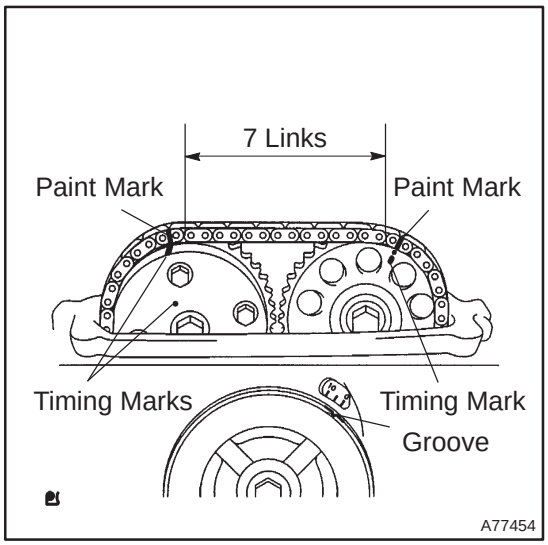

(t) Check that each pair of the matchmarks are aligning as shown in the illustration.

HINT:

There are 7 links between the two paint marks.

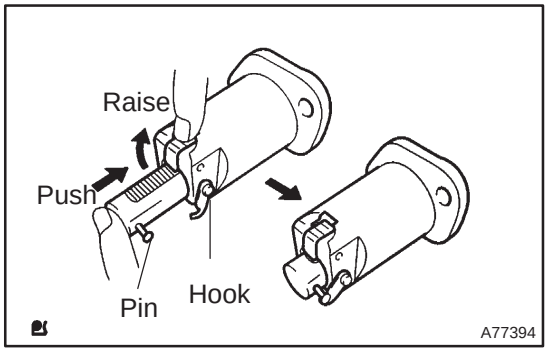

(u) Install the chain tensioner.

(1) Release the ratchet pawl, fully push in the plunger and apply the hook to the pin so that the plunger is locked in the position.

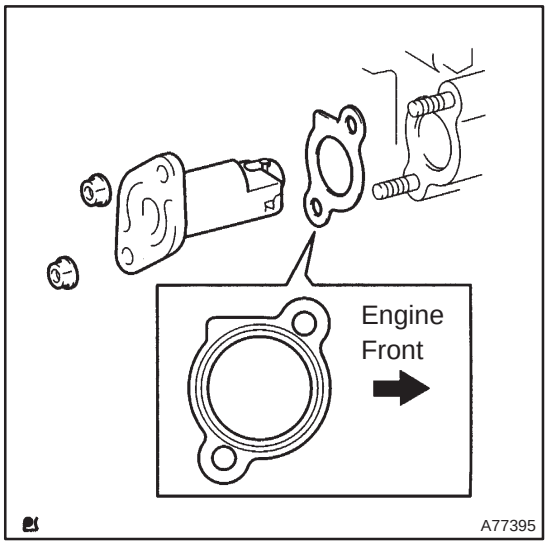

(2) Install a new gasket and the chain tensioner with the 2 nuts.

Torque: 9.0 N·m (92 kgf·cm, 80 in.·lbf)

NOTICE:

If the hook is disengaged from the pin, re–apply the hook then resume installation.

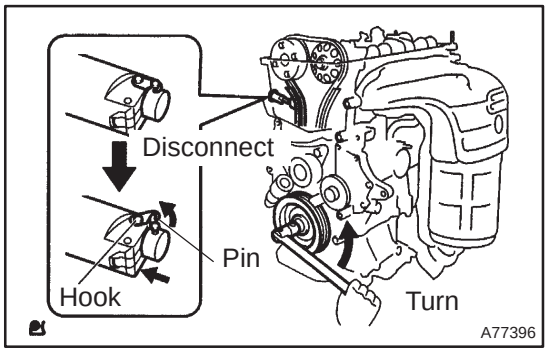

(3) Turn the crankshaft counterclockwise, and disengage the hook from the pin to free the plunger.

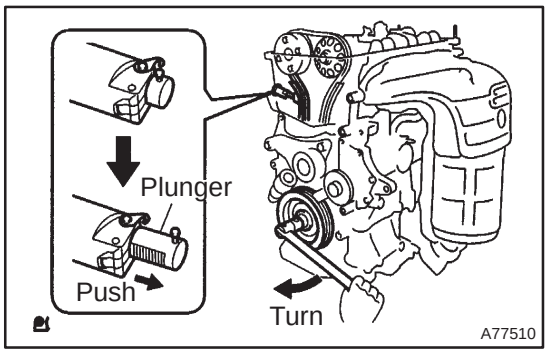

(4) Turn the crankshaft clockwise, and check that the plunger is pushed by the slipper.

83. INSTALL CAMSHAFT POSITION SENSOR
Torque: 9.0 N·m (92 kgf·cm, 80 in.·lbf)

84. INSTALL CYLINDER HEAD COVER GASKET

85. INSTALL CYLINDER HEAD COVER SUB–ASSY

(a) Remove any old packing (FIPG) material.

(b) Apply seal packing to the 2 locations shown in the illustration.

Seal packing: Part No. 08826–00080 or equivalent

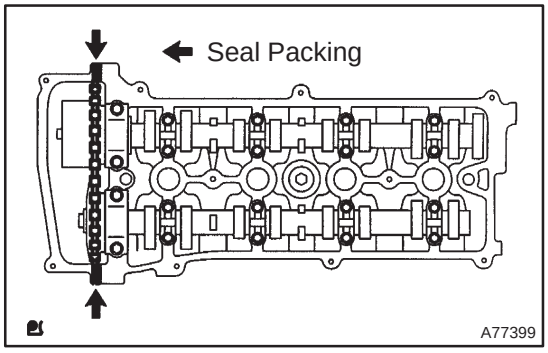

NOTICE:

- **Remove any oil from the contact surface.**
- **Install the cylinder head cover within 5 minutes after applying seal packing.**
- **Do not expose seal packing to engine oil 2 hours after installing.**

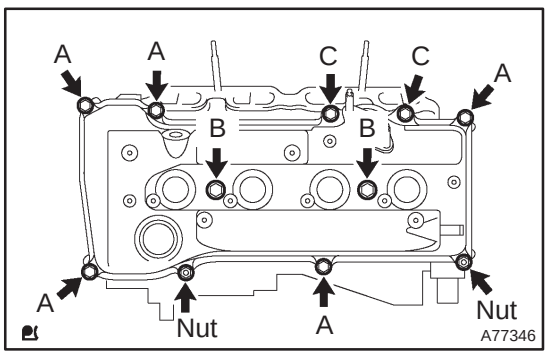

(c) Install the cylinder head cover with the 8 bolts and 2 nuts.

Torque:
Bolt A 11 N·m (112 kgf·cm, 8 ft·lbf)
Bolt B 14 N·m (143 kgf·cm, 10 ft·lbf)
Bolt C 21 N·m (214 kgf·cm, 15 ft·lbf)
Nut 11 N·m (112 kgf·cm, 8 ft·lbf)

86. INSTALL OIL FILTER UNION

(a) Using a 12 mm hexagon wrench, install the oil filter union.
Torque: 30 N·m (306 kgf·cm, 22 ft·lbf)

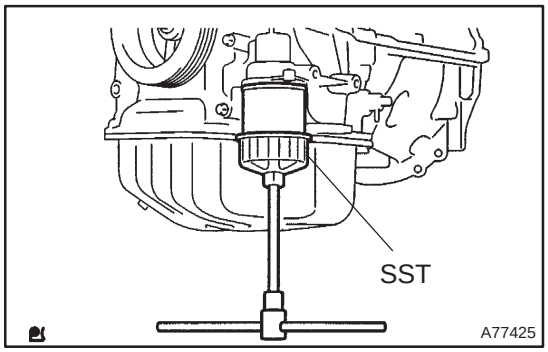

87. INSTALL OIL FILTER SUB–ASSY

(a) Check and clean the oil filter installation surface.

(b) Apply clean engine oil to the gasket of a new oil filter.

(c) Lightly screw the oil filter into place, and tighten it until the gasket contacts the seat.

(d) Using SST, tighten it an additional 3/4 turn.
SST 09228–06501

88. INSTALL SPARK PLUG
Torque: 19 N·m (194 kgf·cm, 14 ft·lbf)

89. INSTALL VENTILATION VALVE SUB–ASSY

(a) Apply adhesive on the threads of the ventilation valve.
Torque: 15 N·m (153 kgf·cm, 11 ft·lbf)
Adhesive: Part No. 08833–00070 THREE BOND 1324 or equivalent

90. INSTALL OIL FILLER CAP GASKET

91. INSTALL OIL FILLER CAP SUB–ASSY

CYLINDER HEAD ASSY

COMPONENTS

141BV–01

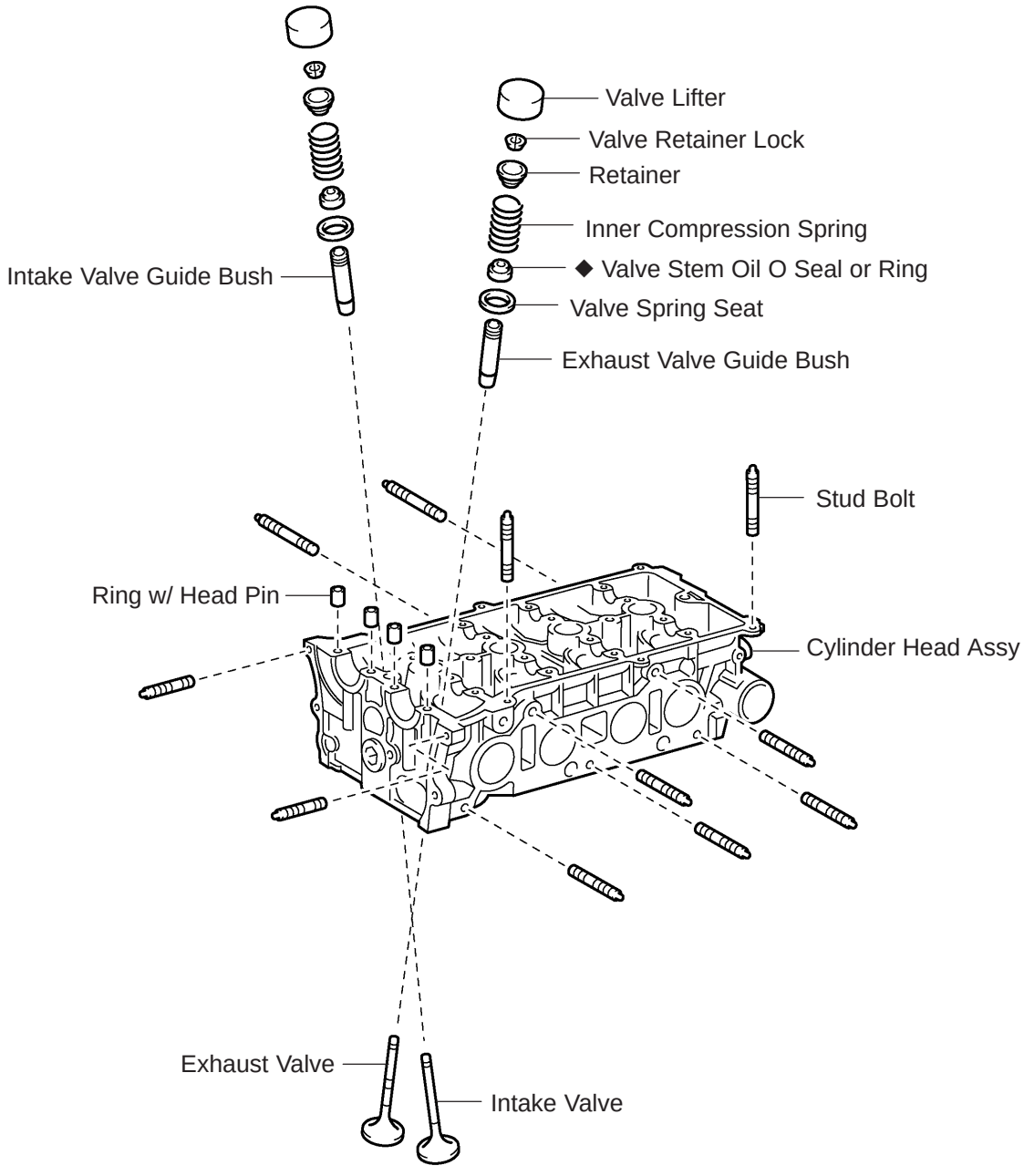

◆ Non–reusable part

A77366

141BW–01

OVERHAUL

1. REMOVE VALVE LIFTER

HINT:

Store the valve liters in correct order, so that they can be returned to the original locations when re–assembling.

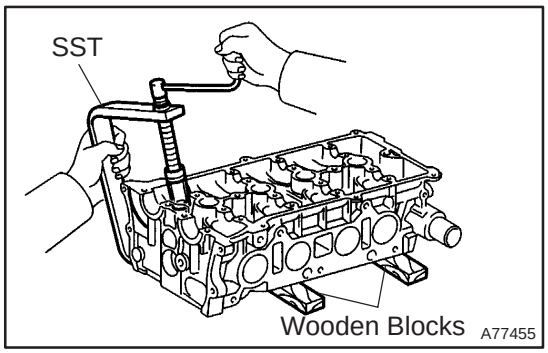

2. REMOVE INTAKE VALVE

(a) Using SST and wooden blocks, compress and remove the 8 valve spring retainer locks.
SST 09202–70020 (09202–00010)

(b) Remove the parts below from the cylinder head.

1	Retainer
2	Valve spring
3	Intake valve

HINT:

Store the removed parts in correct order, so that they can be returned to the original locations when re–assembling.

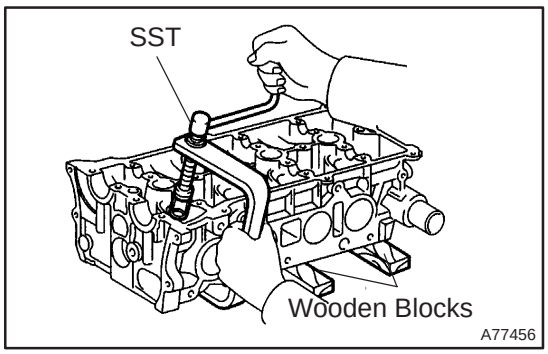

3. REMOVE EXHAUST VALVE

(a) Using SST and wooden blocks, compress and remove the 8 valve spring retainer locks.
SST 09202–70020 (09202–00010)

(b) Remove the parts below from the cylinder head.

1	Retainer
2	Valve spring
3	Intake valve

HINT:

Store the removed parts in correct order, so that they can be returned to the original locations when re–assembling.

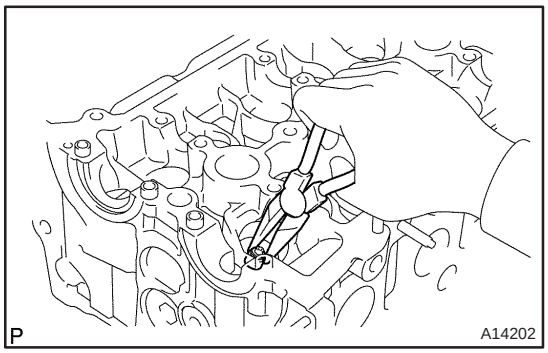

4. REMOVE VALVE STEM OIL O SEAL OR RING

(a) Using needle–nose pliers, remove the oil seals.

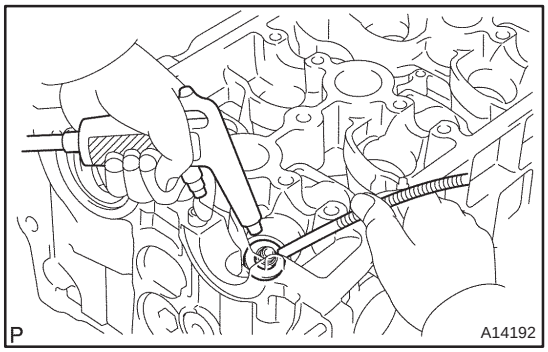

5. REMOVE VALVE SPRING SEAT

(a) Using compressed air and a magnetic finger, remove the spring seat by blowing air.

HINT:

Store the removed parts in correct order, so that they can be returned to the original locations when re–assembling.

6. REMOVE STUD BOLT

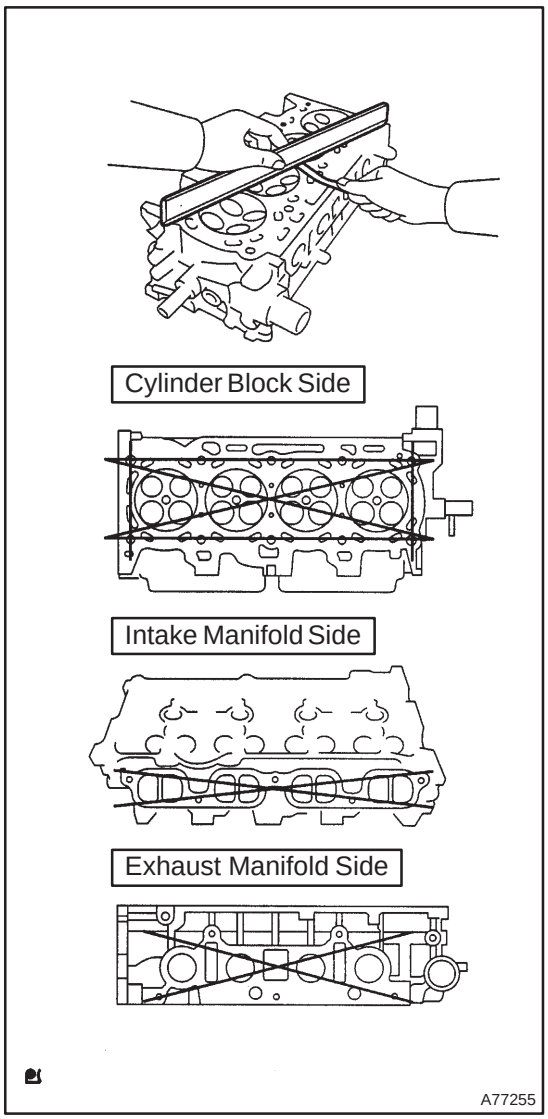

7. INSPECT CYLINDER HEAD FOR FLATNESS

(a) Using a precision straight edge and a feeler gauge, measure the surface contacting the cylinder block and the manifolds for warpage.

Maximum warpage:
Cylinder block side 0.05 mm (0.0020 in.)
Intake manifold side 0.08 mm (0.0031 in.)
Exhaust manifold side 0.08 mm (0.0031 in.)

If warpage is greater than maximum, replace the cylinder head.

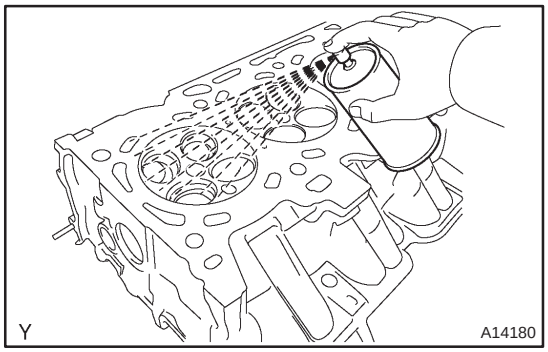

8. INSPECT CYLINDER HEAD FOR CRACKS

(a) Using a dye penetrate, check the intake ports, exhaust ports and cylinder surface for cracks.

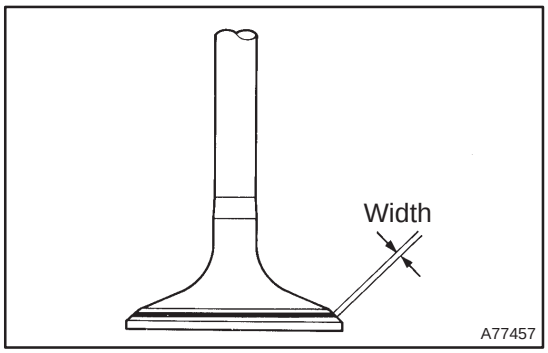

9. INSPECT VALVE SEATS

(a) Apply a light coat of prussian blue (or white lead) to the valve face.

(b) Lightly press the valve against the seat.

(c) Check the valve face and seat according to the following procedure.

(1) If blue appears 360° around the face, the valve is concentric. If not, replace the valve.

(2) If blue appears 360° around the valve seat, the guide and face are concentric. If not, resurface the seat.

(3) Check that the seat contact is in the middle of the valve face with the width between 1.0 to 1.4 mm (0.039 to 0.055 in.).

10. REPAIR VALVE SEATS

NOTICE:

Releasing the seat–cutter pressure gradually helps to make smoother valve seat faces.

(a) Using a 45° cutter, cut valve face of the cylinder head a little wider than the specified valve seating width.

(b) Confirm that the valve fits the valve seat center portion. If not, re–cut the valve face with the 45° cutter.

(c) Adjust valve face with a 30° or 60° cutter to accurately fit the valve seat center portion.

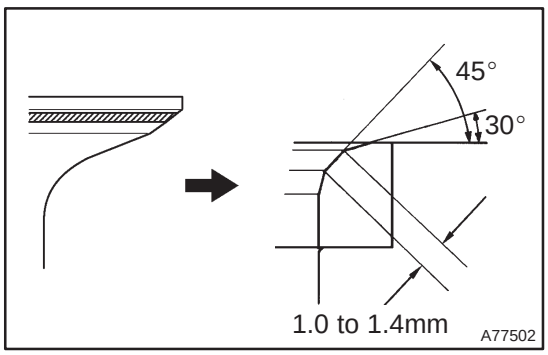

(1) If the seating is too high on the valve face, use 30° and 45° cutters to correct the seat.

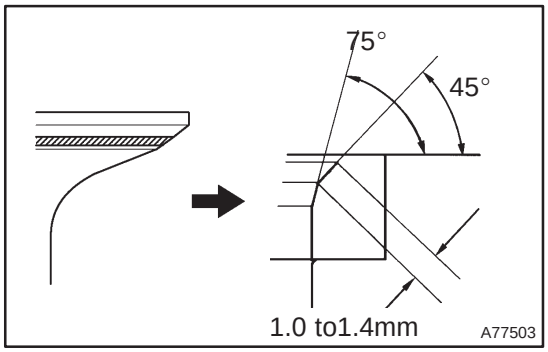

(2) If the seating is too low on the valve face, use 75° and 45° cutters to correct the seat.

(d) Hand–lap the valve and valve seat with an abrasive compound.

(e) Recheck the valve seating position.

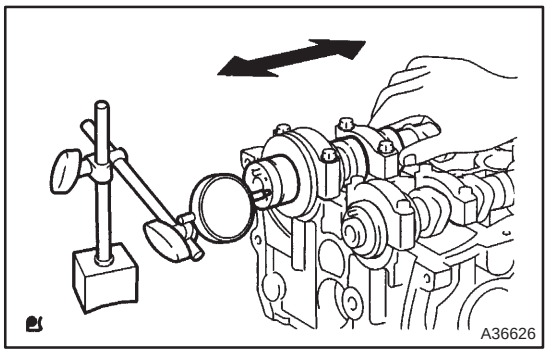

11. INSPECT CAMSHAFT THRUST CLEARANCE

(a) Install the camshafts.

(b) Using a dial indicator, measure the thrust clearance while moving the camshaft back and forth.

Standard thrust clearance:
Intake 0.040 to 0.095 mm (0.0016 to 0.0037 in.)
Exhaust 0.080 to 0.135 m (0.0032 to 0.0053 in.)
Maximum thrust clearance:
Intake 0.11 mm (0.0043 in.)
Exhaust 0.15 mm (0.0059 in.)

(c) If the thrust clearance is greater than maximum, replace the cylinder head. If the thrust surface is damaged, replace the camshaft.

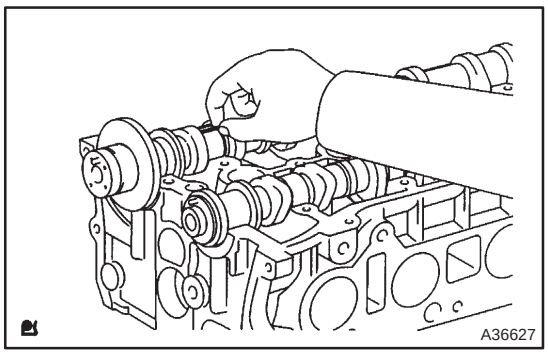

12. INSPECT CAMSHAFT OIL CLEARANCE

(a) Clean the bearing caps and camshaft journals.

(b) Place the camshafts on the cylinder head.

(c) Lay a strip of Plastigage across each of the camshaft journal.

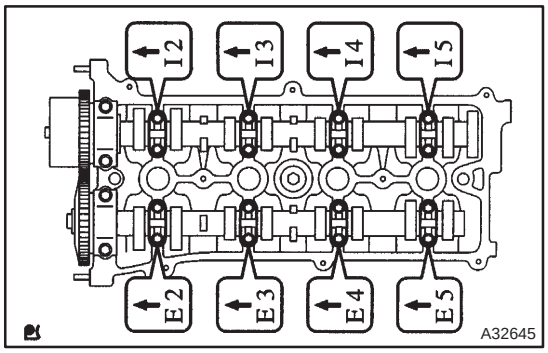

(d) Install the bearing caps.

Torque:
No. 1 30 N·m (301 kgf·cm, 22 ft·lbf)
No. 2 30 N·m (301 kgf·cm, 22 ft·lbf)
No. 3 9 N·m (92 kgf·cm, 80 in.·lbf)

NOTICE:
Do not turn the camshaft.

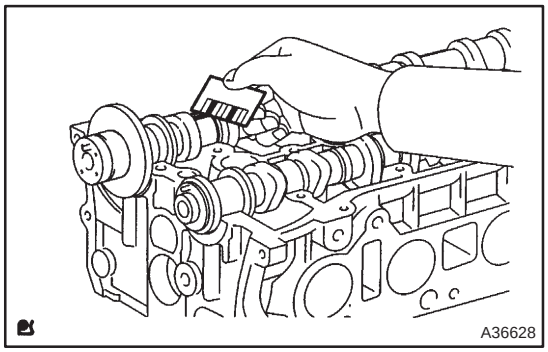

(e) Remove the bearing cap, and measure the Plastigage at its widest point.

Standard oil clearance:
Intake No. 1 journal bearing mark 1
0.007 to 0.038 mm (0.0028 to 0.00150 in.)
Intake No. 1 journal bearing mark 2
0.008 to 0.038 mm (0.0031 to 0.00150 in.)
Intake No. 1 journal bearing mark 3
0.008 to 0.038 mm (0.0031 to 0.00150 in.)
Other journals
0.025 to 0.062 mm (0.00098 to 0.00244 in.)
Exhaust No. 1 journal
0.015 to 0.054 mm (0.0006 to 0.0021 in.)
Other journals
0.025 to 0.062 mm (0.00098 to 0.00244 in.)
Maximum oil clearance:
Intake No. 1 journal 0.07 mm (0.0028 in.)
Other journals 0.10 mm (0.0039 in.)

NOTICE:

Completely remove the Plastigage after the inspection.

(f) If the oil clearance is greater than maximum, replace the camshaft. If necessary, replace the cylinder head.

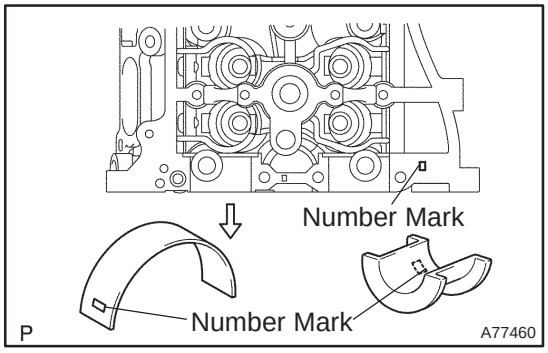

(g) If the oil clearance on No. 1 journal is greater than maximum, replace the bearing.

HINT:

Cylinder head journal bore diameter:

Mark "1"	40.000 to 40.008 mm (1.57480 to 1.57511 in.)
Mark "2"	40.009 to 40.017 mm (1.57515 to 1.57547 in.)
Mark "3"	40.018 to 40.025 mm (0.57551 to 1.57578 in.)

Standard bearing center wall thickness:

Mark "1"	2.000 to 2.004 mm (0.07874 to 0.07890 in.)
Mark "2"	2.005 to 2.008 mm (0.07894 to 0.07905 in.)
Mark "3"	2.009 to 2.012 mm (0.07909 to 0.07921 in.)

Camshaft journal diameter:
35.971 to 35.985 mm (1.41648 to 1.41673 in.)

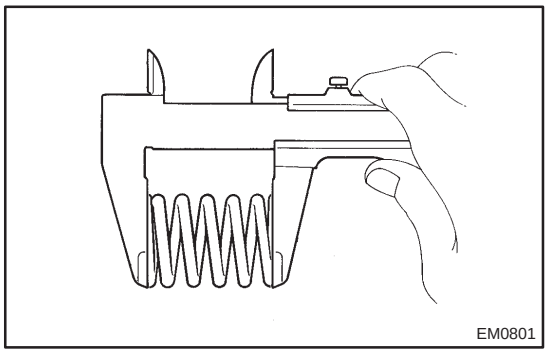

13. INSPECT INNER COMPRESSION SPRING

(a) Check the free length.
(1) Using vernier calipers, measure the free length of the valve spring.
Free length: 45.7 mm (1.799 in.)

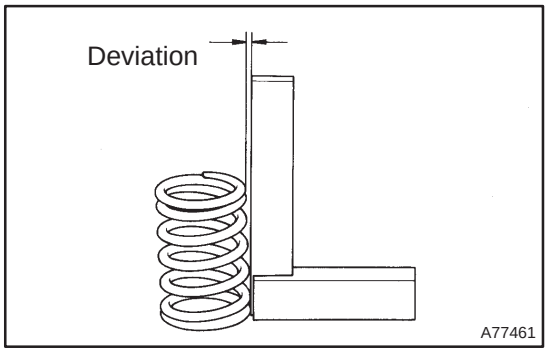

(b) Check the deviation.
(1) Using a steel square, measure the deviation of the valve spring.
Maximum deviation: 1.6 mm (0.063 in.)
Maximum angle (reference): 2°

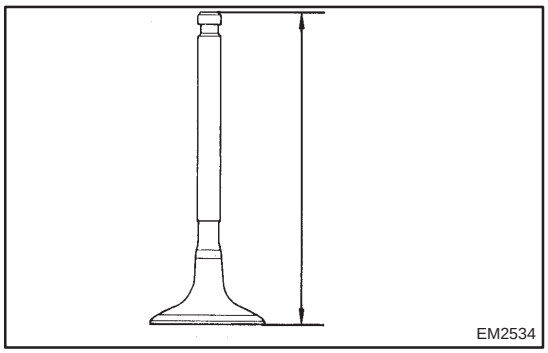

14. INSPECT INTAKE VALVE
(a) Check the valve overall length.
(1) Using vernier calipers, measure the valve overall length.
Standard overall length: 101.71 mm (4.0043 in.)
Minimum overall length: 101.21 mm (3.9846 in.)

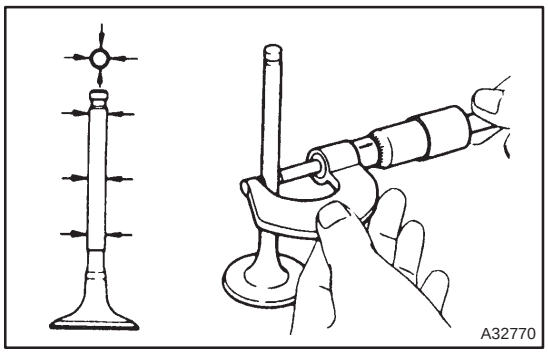

(b) Check the diameter of the valve stem.
(1) Using a micrometer, measure the diameter of the valve stem.
Valve stem diameter:
5.470 to 5.485 mm (0.2154 to 0.2159 in.)

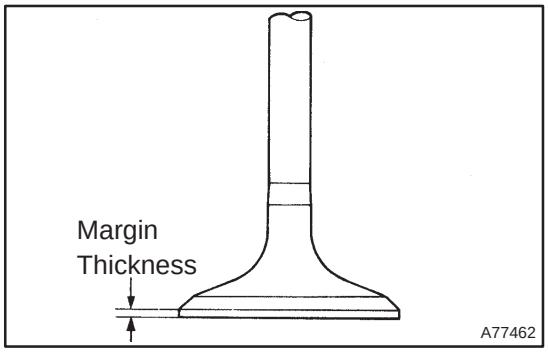

(c) Check the valve head margin thickness.
(1) Using vernier calipers, measure the valve head margin thickness.
Standard margin thickness:
1.05 to 1.45 mm (0.041 to 0.057 in.)
Minimum margin thickness: 0.75 mm (0.030 in.)

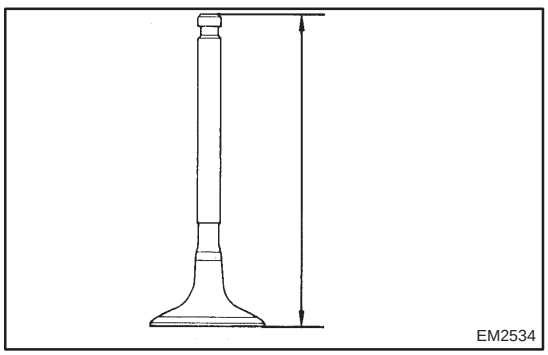

15. INSPECT EXHAUST VALVE
(a) Check the valve overall length.
(1) Using vernier calipers, measure the valve overall length.
Standard overall length: 101.15 mm (3.9823 in.)
Minimum overall length: 100.70 mm (3.9646 in.)

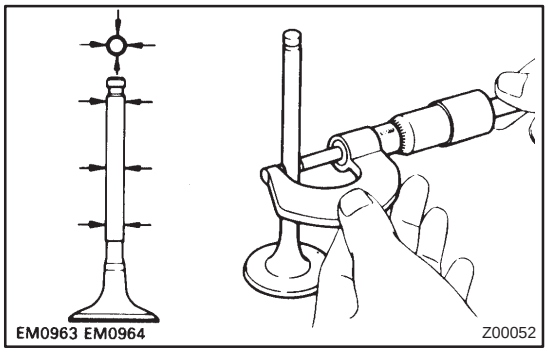

(b) Check the diameter of the valve stem.
(1) Using a micrometer, measure the diameter of the valve stem.
Valve stem diameter:
5.465 to 5.480 mm (0.2152 to 0.2157 in.)

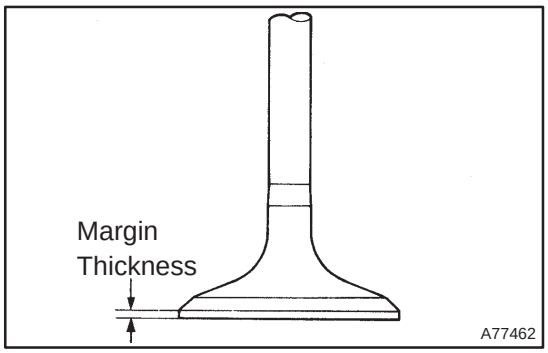

(c) Check the valve head margin thickness.
(1) Using vernier calipers, measure the valve head margin thickness.
Standard margin thickness:
1.2 to 1.6 mm (0.047 to 0.063 in.)
Minimum margin thickness: 0.9 mm (0.035 in.)

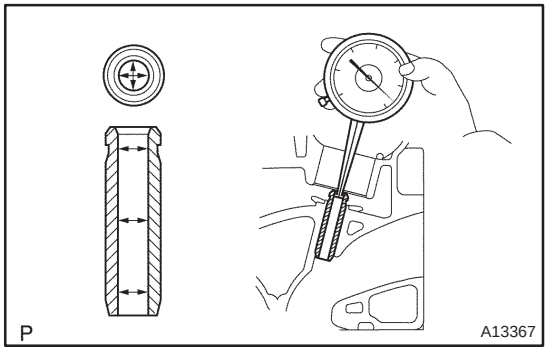

16. INSPECT INTAKE VALVE GUIDE BUSH
(a) Using a caliper gauge, measure the inside diameter of the guide bushing diameter.
Bushing inside diameter:
5.510 to 5.530 mm (0.2169 to 0.2177 in.)
(b) Subtract the valve stem diameter measurement from the guide bushing.
Standard oil clearance:
0.025 to 0.060 mm (0.00098 to 0.00236 in.)
Maximum oil clearance: 0.08 mm (0.0031 in.)

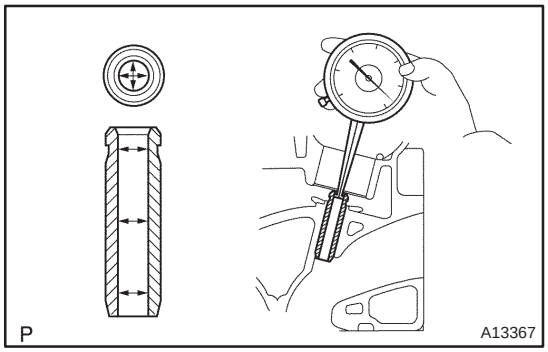

17. INSPECT EXHAUST VALVE GUIDE BUSH
(a) Using a caliper gauge, measure the inside diameter of the guide bushing diameter.
Bushing inside diameter:
5.510 to 5.530 mm (0.2169 to 0.2177 in.)
(b) Subtract the valve stem diameter measurement from the guide bushing inside diameter measurement.
Standard oil clearance:
0.030 to 0.065 mm (0.0012 to 0.0026 in.)
Maximum oil clearance: 0.10 mm (0.0039 in.)

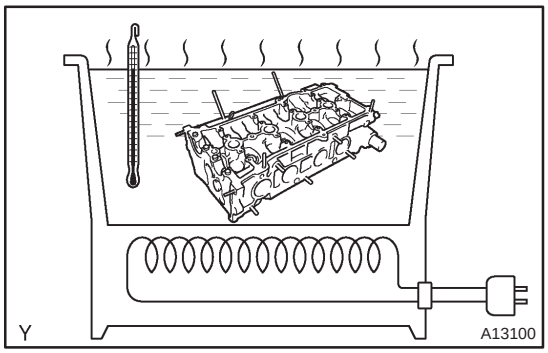

18. REMOVE INTAKE VALVE GUIDE BUSH
(a) Gradually heat the cylinder head to 80 to 100°C (176 to 212°F).

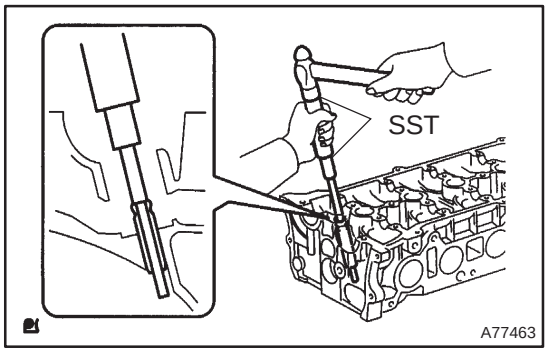

(b) Using SST and a hammer, tap out the guide bushing.
SST 09201–10000 (09201–01050), 09950–70010 (09951–07100)

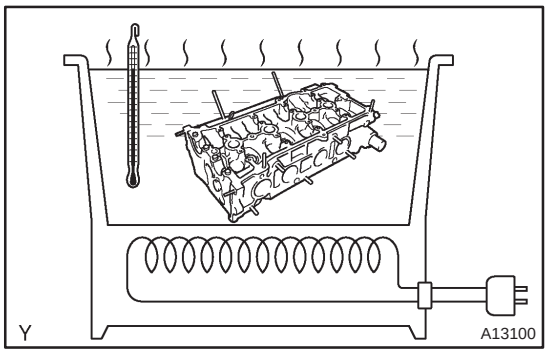

19. REMOVE EXHAUST VALVE GUIDE BUSH

(a) Gradually heat the cylinder head to 80 to 100°C (176 to 212°F).

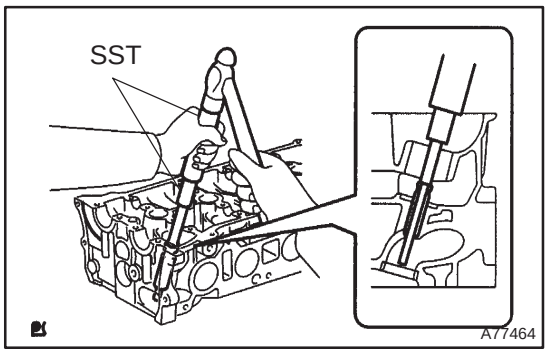

(b) Using SST and a hammer, tap out the guide bushing.
SST 09201–10000 (09201–01050), 09950–70010 (09951–07100)

20. INSTALL INTAKE VALVE GUIDE BUSH

(a) Using a caliper gauge, measure the bushing bore diameter of the cylinder head.
Diameter: 10.285 to 10.306 mm (0.4049 to 0.4057 in.)

(b) Install the STD bushing if the diameter is within specified diameter.

HINT:

STD	10.333 to 10.344 mm (0.4068 to 0.4072 in.)

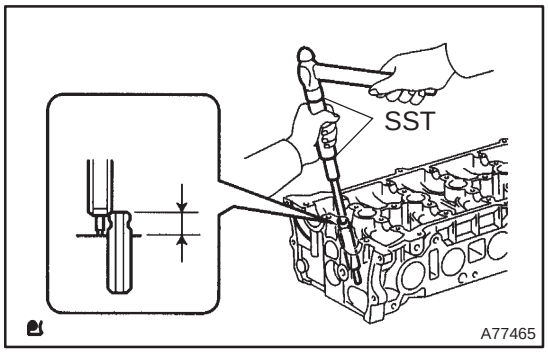

(c) Using SST and a hammer, tap in a new guide bushing to the specified protrusion height.
Protrusion height: 9.6 to 10.0 mm (0.3779 to 0.3937 in.)
SST 09201–10000 (09201–01050), 09950–70010 (09951–07100), 23801

(d) Using a sharp 5.5 mm reamer, ream the guide bushing to obtain the standard specified clearance between the guide bushing and valve stem.
Standard oil clearance:
0.025 to 0.060 mm (0.00098 to 0.00236 in.)

21. INSTALL EXHAUST VALVE GUIDE BUSH

(a) Using a caliper gauge, measure the bushing bore diameter of the cylinder head.
Diameter: 10.285 to 10.306 mm (0.4049 to 0.4057 in.)

(b) Install the STD bushing if the diameter is within specified diameter.

HINT:

STD	10.333 to 10.344 mm (0.4068 to 0.4072 in.)

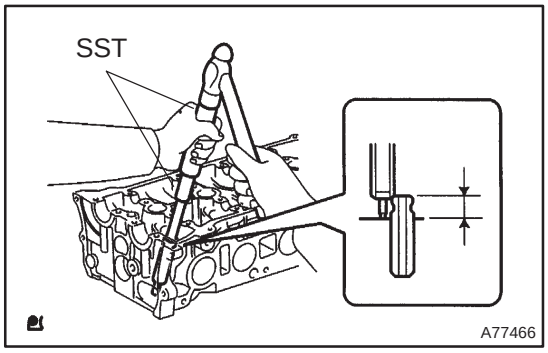

(c) Using SST and a hammer, tap in a new guide bushing to the specified protrusion height.

Protrusion height: 9.6 to 10.0 mm (0.3779 to 0.3937 in.)

(d) Using a sharp 5.5 mm reamer, ream the guide bushing to obtain the standard specified clearance between the guide bushing and valve stem.

SST 09201–10000 (09201–01050), 09950–70010 (09951–07100), 23801

Standard oil clearance:
0.030 to 0.065 mm (0.00118 to 0.00256 in.)

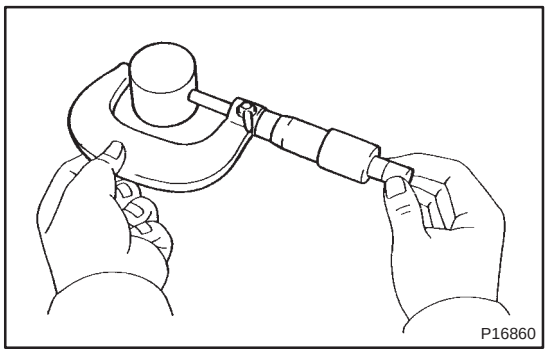

22. INSPECT VALVE LIFTER

(a) Check the lifter diameter.

(1) Using a micrometer, measure the lifter diameter.

Lifter diameter:
30.966 to 30.976 mm (1.2191 to 1.2195 in.)

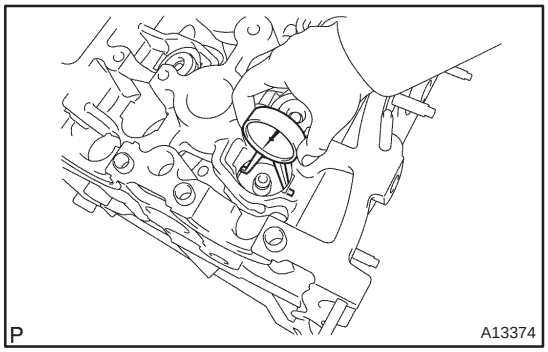

(b) Check the valve lifter oil clearance.

(1) Using a caliper gauge, measure the lifter bore diameter of the cylinder head.

Lifter bore diameter:
31.009 to 31.025 mm (1.2208 to 1.2215 in.)

(c) Subtract the lifter diameter measurement from the lifter bore diameter measurement.

Standard oil clearance:
0.033 to 0.059 mm (0.0013 to 0.0023 in.)
Maximum oil clearance: 0.08 mm (0.0032 in.)

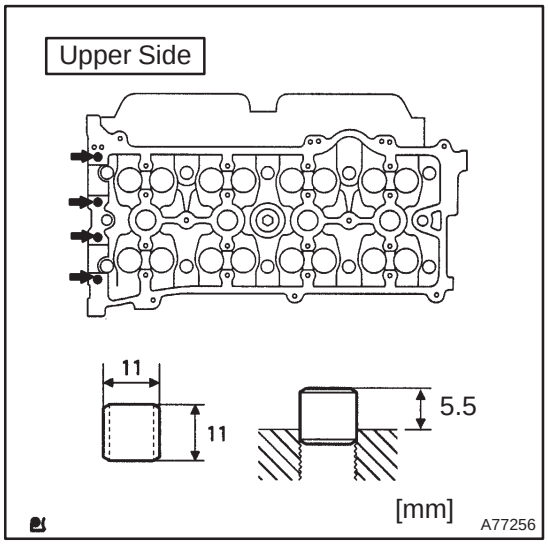

23. INSTALL RING W/HEAD PIN

(a) Using a plastic–faced hammer, tap in a new ring pin to the specified protrusion height.
Protrusion height: 5.5 mm (0.217 in.)

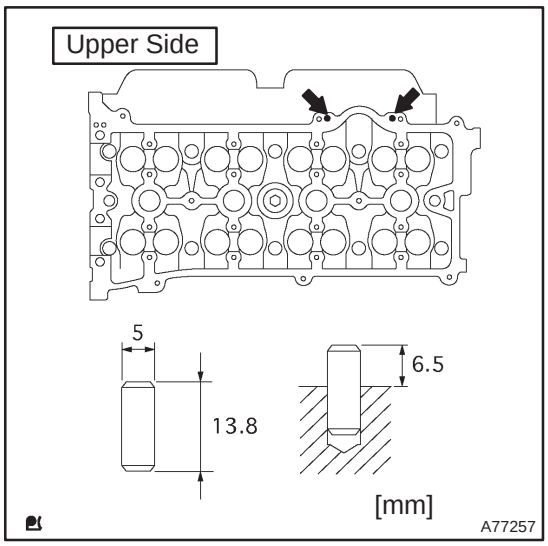

24. INSTALL RING PIN

(a) Using a plastic–faced hammer, tap in a new ring pin to the specified protrusion height.
Protrusion height: 6.5 mm (0.256 in.)

25. INSTALL TIGHT PLUG

(a) Apply seal packing to the cylinder head as shown in the illustration.

(b) Using SST, tap in plug to the specified protrusion height.
SST 09950–60010 (09951–00180), 09950–70010 (09951–07100)
Protrusion height: 1.5 to 2.5 mm (0.059 to 0.098 in.)

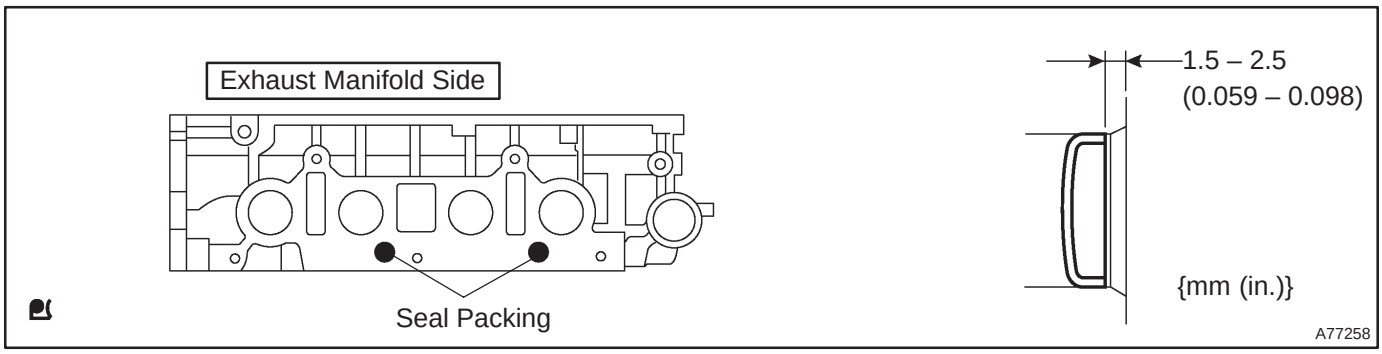

26. INSTALL STUD BOLT

Torque:
Bolt A 5.0 N·m (51 kgf·cm, 44 in.·lbf)
Bolt B 5.0 N·m (51 kgf·cm, 44 in.·lbf)
Bolt C 9.5 N·m (97 kgf·cm, 84 in.·lbf)
Bolt D 9.5 N·m (97 kgf·cm, 84 in.·lbf)

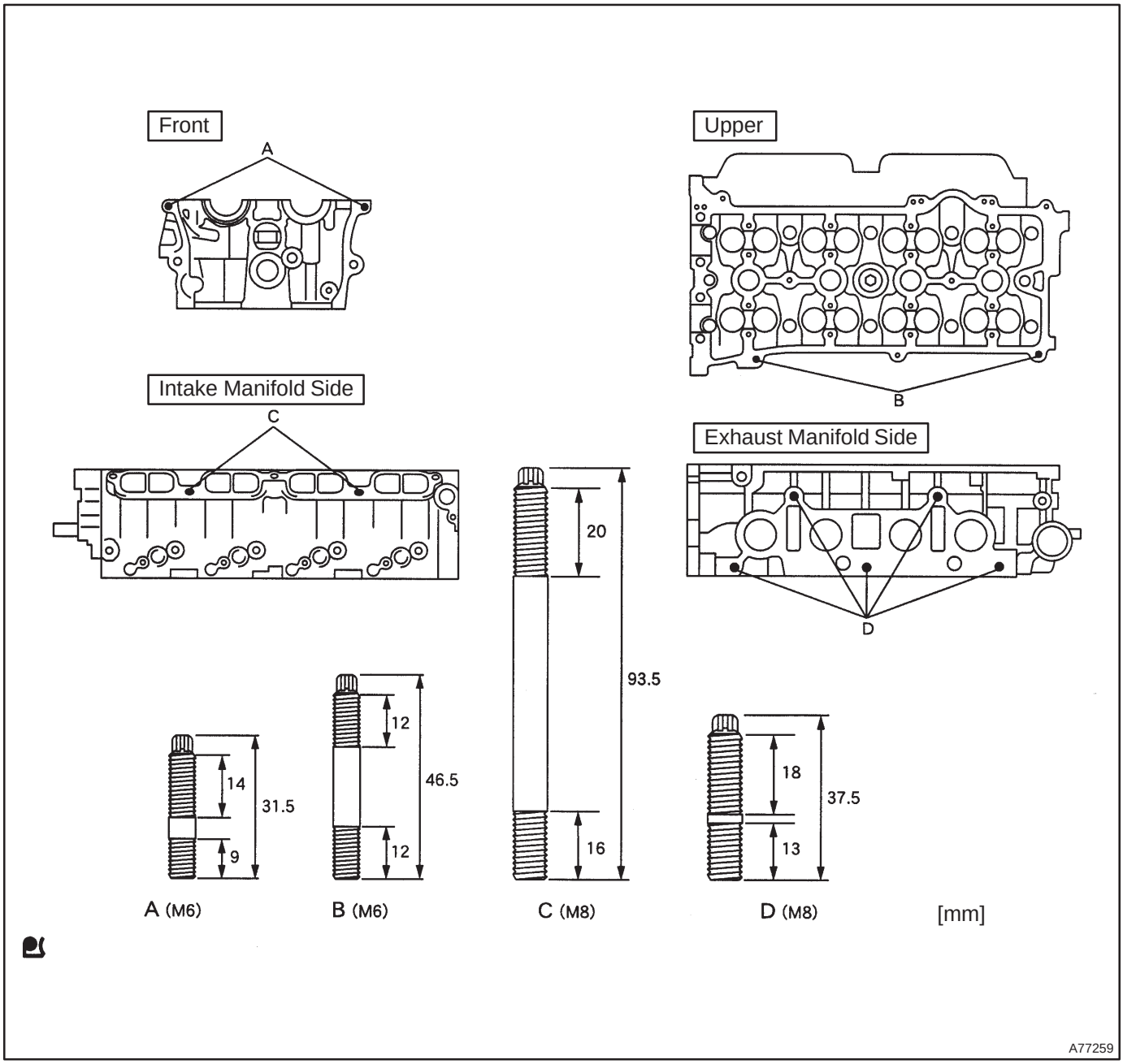

27. INSTALL VALVE SPRING SEAT

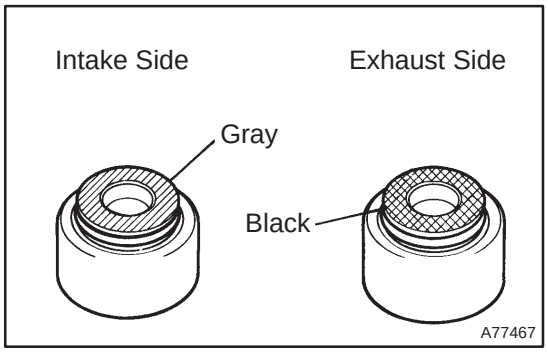

28. INSTALL VALVE STEM OIL O SEAL OR RING

(a) Apply a light coat of engine oil on new valve stem seals.

NOTICE:

Pay much attention assembling the oil seal for intake and exhaust. Installing the wrong one may cause improper installation.

HINT:

The intake valve oil seal is gray and the exhaust valve oil seal is black.

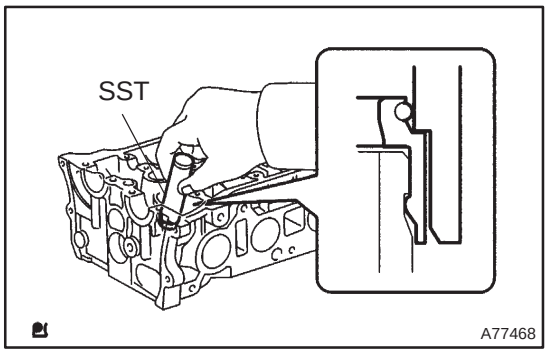

(b) Using SST, push in the oil seal.
SST 09201–41020

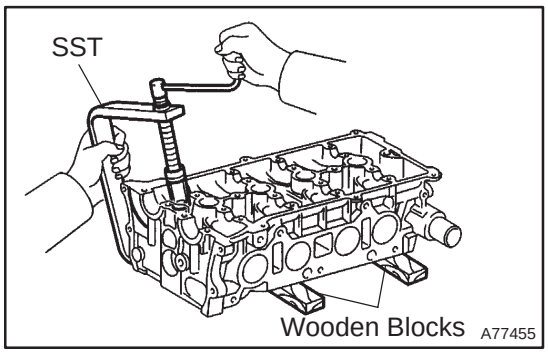

29. INSTALL INTAKE VALVE

(a) Install the parts below to the cylinder head.

1	Intake valve
2	Spring
3	Retainer

(b) Using SST and wooden blocks, compress and install 2 valve spring retainer locks.
SST 09202–70020 (09202–00010)

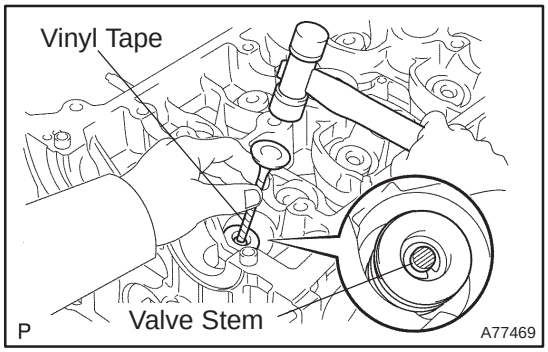

(c) Wrap the tip of a discarded valve with vinyl tape, place the discarded valve tip on the installed valve. Using a plastic–faced hammer, lightly tap the discarded valve head to ensure proper fitting of the installed valve.

NOTICE:

Be careful not to damage the valve stem tip.

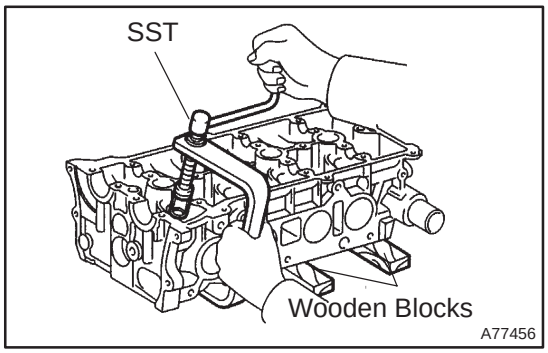

30. INSTALL EXHAUST VALVE

(a) Install the parts below to the cylinder head.

1	Exhaust valve
2	Spring
3	Retainer

(b) Using SST and wooden blocks, compress and install 2 valve spring retainer locks.
SST 09202–70020 (09202–00010)

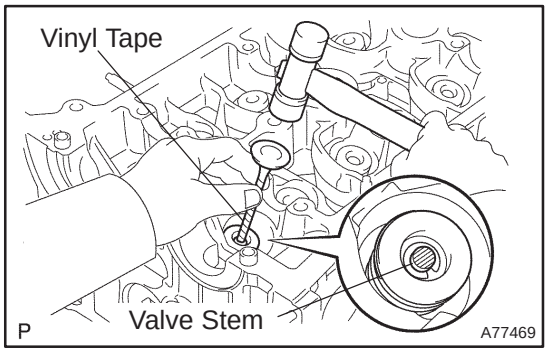

(c) Wrap the tip of a discarded valve with vinyl tape, place the discarded valve tip on the installed valve. Using a plastic–faced hammer, lightly tap the discarded valve head to ensure proper fitting of the installed valve.

NOTICE:

Be careful not to damage the valve stem tip.

31. INSTALL VALVE LIFTER

(a) Apply a light coat of engine oil on the valve lifter.

NOTICE:

Install the valve lifters to the original locations.

CYLINDER BLOCK ASSY

COMPONENTS

141BT–01

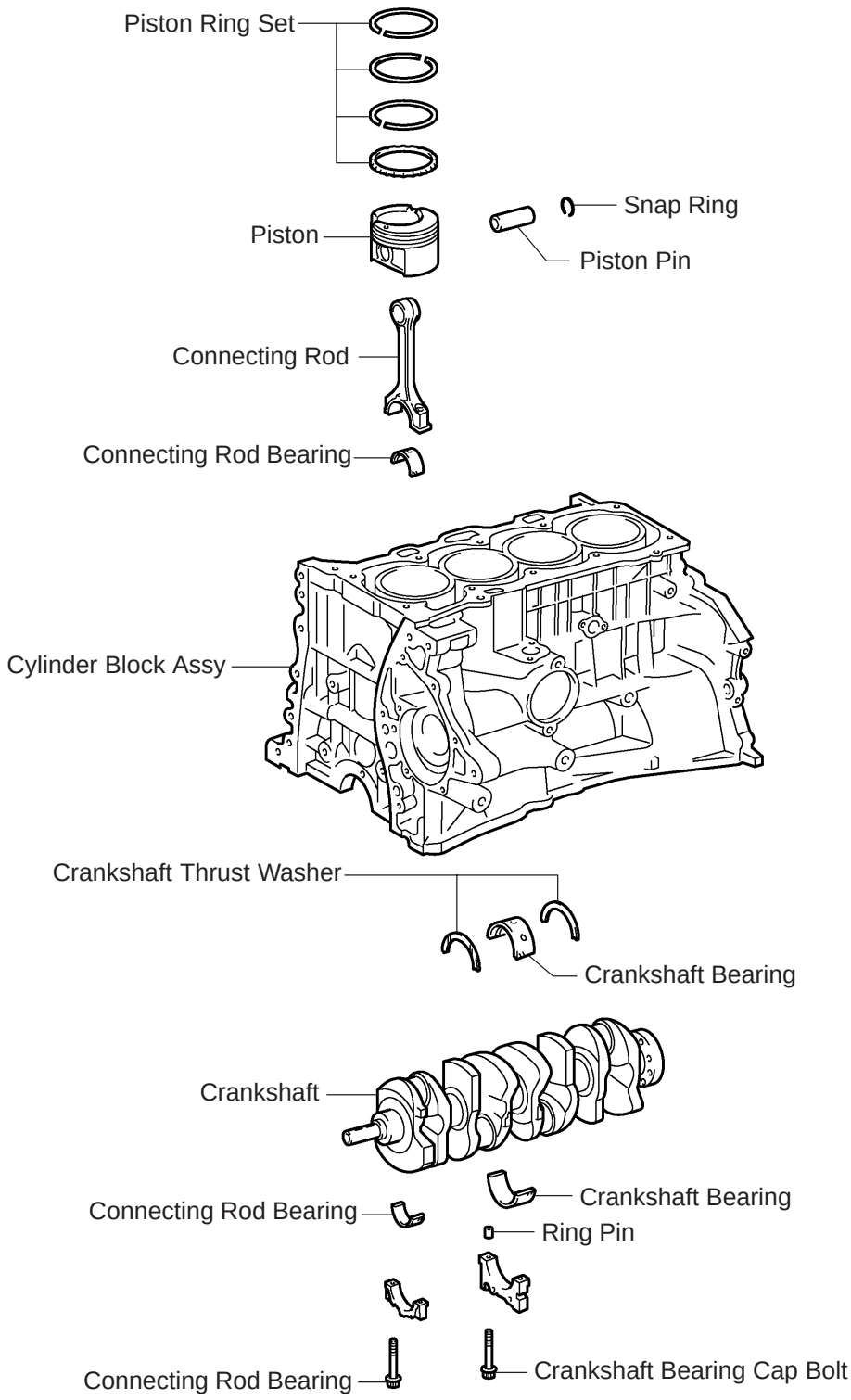

A77367

OVERHAUL

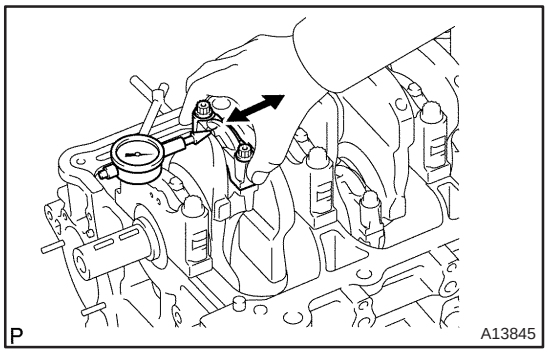

1. INSPECT CONNECTING ROD THRUST CLEARANCE

(a) Using a dial indicator, measure the thrust clearance while moving the connecting rod back and forth.
Standard thrust clearance:
0.160 to 0.362 mm (0.0063 to 0.0143 in.)
Maximum thrust clearance: 0.362 mm (0.0143 in.)

(b) If the thrust clearance is greater than maximum, replace the connecting rod assembly(s). If necessary, replace the crankshaft.

2. INSPECT CONNECTING ROD OIL CLEARANCE

HINT:
The connecting rod cap bolts are tightened in 2 successive steps.

(a) Check that the matchmarks on the connecting rod and cap are aligned to ensure correct reassembly.

(b) Using a 12 mm socket wrench, remove the 2 connecting rod cap bolts.
SST 09011–38121

(c) Clean the crank pin and bearing.

(d) Check the crank pin and bearing for pitting and scratches.

(e) Lay a strip of Plastigage on the crank pin.

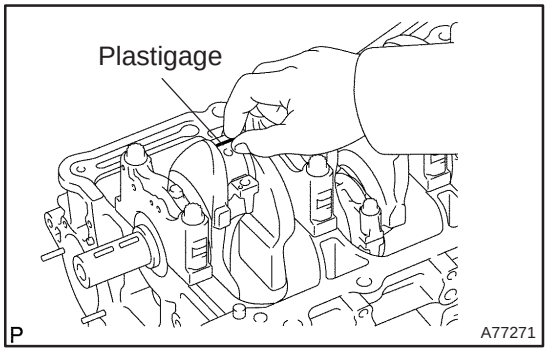

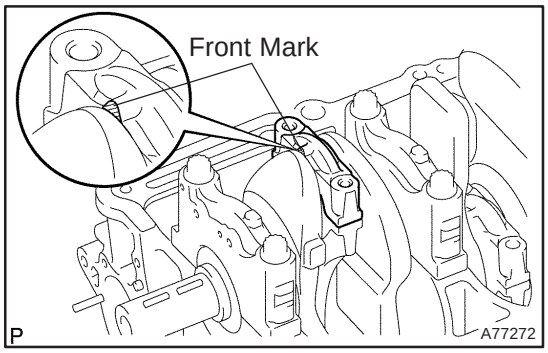

(f) Check that the front mark of the connecting rod cap is facing the correct direction.

(g) Apply a light coat of engine oil on the threads of the connecting rod cap bolts.

(h) Using a 12 mm socket wrench, tighten the bolts in several steps with the specified torque.
SST 09011–38121
Torque: 25 N·m (250 kgf·cm, 18 ft·lbf)

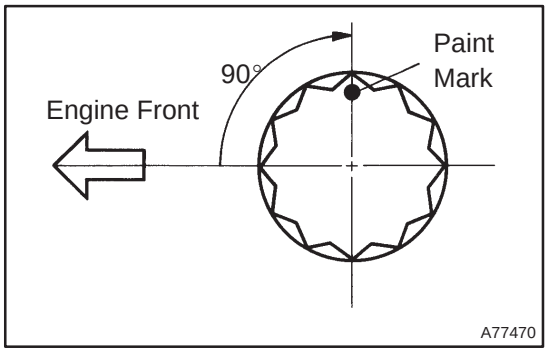

(i) Place the front mark on each connecting rod cap bolt head with paint.

(j) Retighten the cap bolts by 90° as shown in the illustration.

NOTICE:

Do not turn the crankshaft.

(k) Remove the 2 bolts, connecting rod cap and lower bearing.

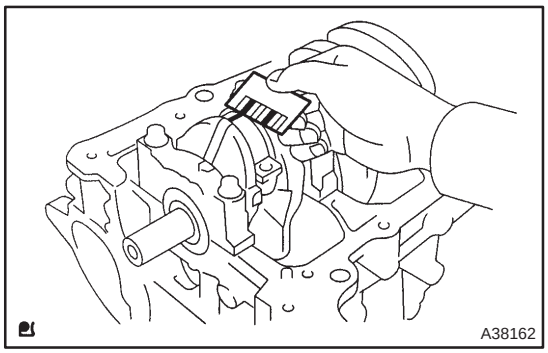

(l) Measure the Plastigage at its widest point.

Standard oil clearance:

0.024 to 0.048 mm (0.0009 to 0.0019 in.)

Maximum oil clearance: 0.08 mm (0.0031 in.)

NOTICE:

Completely remove the Plastigage.

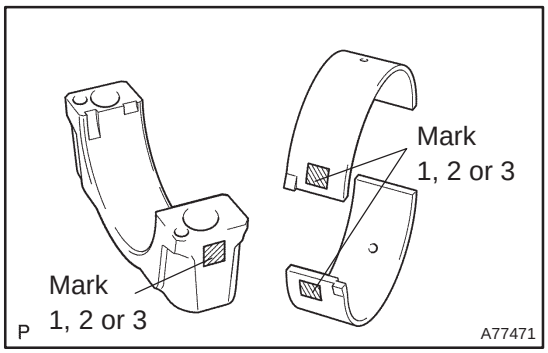

(m) If replacing the bearing, replace it with one having the same number as marked on the connecting rod. There are 3 sizes of standard bearings, marked ”1”, ”2” and ”3” accordingly.

HINT:

Standard bearing center wall thickness.

Mark 1	1.485 to 1.488 mm (0.0585 to 0.0586 in.)
Mark 2	1.488 to 1.491 mm (0.0586 to 0.0587 in.)
Mark 3	1.491 to 1.494 mm (0.0587 to 0.0588 in.)

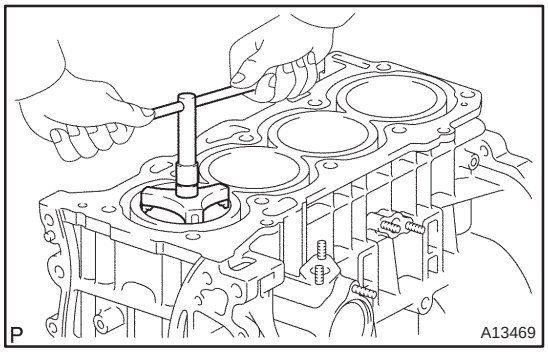

3. REMOVE PISTON SUB–ASSY W/CONNECTING ROD

(a) Using a ridge reamer, remove all the carbon from the top of the cylinder.

(b) Push the piston, connecting rod assembly and upper bearing through the top of the cylinder block.

HINT:

- Keep the bearing, connecting rod and cap together.
- Store the piston and connecting rod assemblies in correct order so they can be returned to the original locations when re–installing.

4. REMOVE CONNECTING ROD BEARING

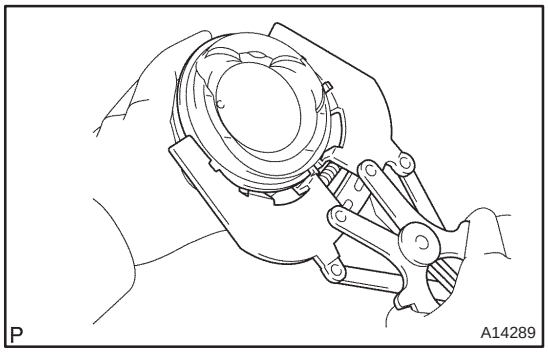

5. REMOVE PISTON RING SET

(a) Using a piston ring expander, remove the 2 compression rings.

(b) Remove the 2 side rails and oil ring by hand.

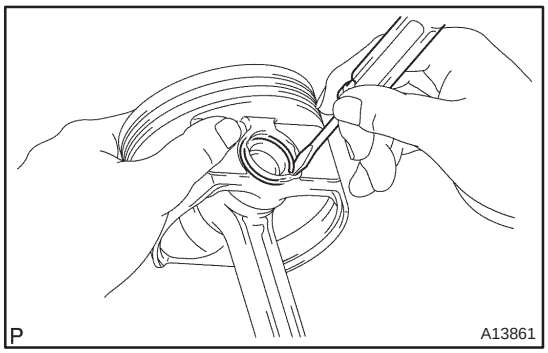

6. REMOVE PISTON

(a) Using a small screwdriver, pry out the 2 snap rings.

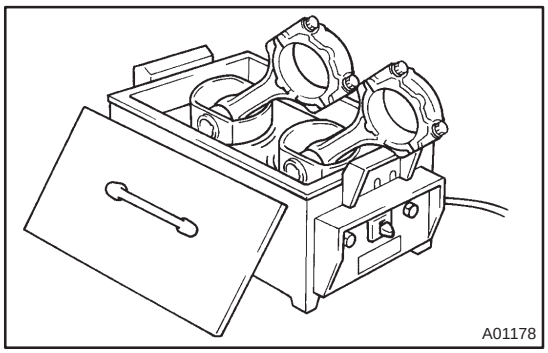

(b) Gradually heat the piston to 80 to 90 °C (176 to 194 °F).

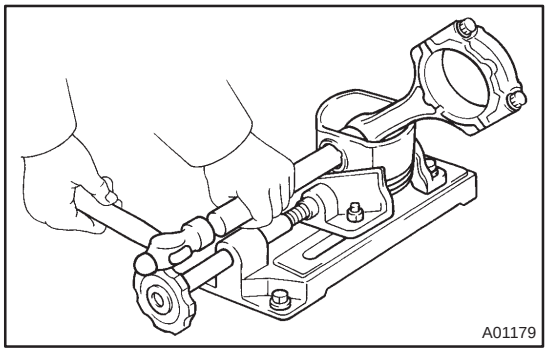

(c) Using a plastic–faced hammer and brass bar, lightly tap out the piston pin and remove the connecting rod.

HINT:

- The piston and pin are a matched set.
- Store the pistons, pins, rings, connecting rods and bearings in correct order so that they can be returned to the original locations when re–assembling.

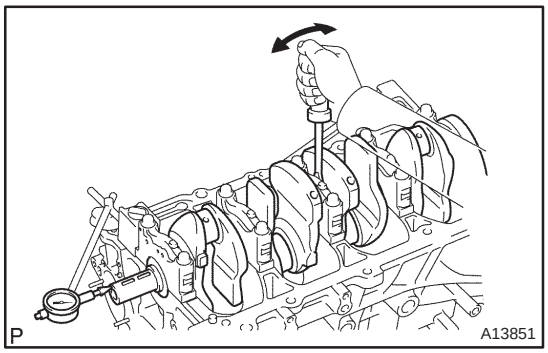

7. INSPECT CRANKSHAFT THRUST CLEARANCE

(a) Using a dial indicator, measure the thrust clearance while prying the crankshaft back and forth with a screwdriver.
Standard thrust clearance:
0.040 to 0.240 mm (0.0016 to 0.0094 in.)
Maximum thrust clearance: 0.30 mm (0.0118 in.)

(b) If the thrust clearance is greater than maximum, replace the thrust washers as a set.
Thrust washer thickness:
1.930 to 1.980 mm (0.0760 to 0.0780 in.)

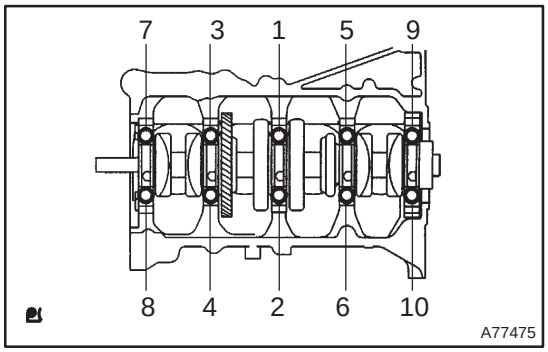

8. REMOVE CRANKSHAFT

(a) Using several steps, loosen and remove the 10 bearing cap sub–assembly bolts uniformly in the sequence shown.

(b) Remove the bearing cap and the crankshaft.

9. REMOVE CRANKSHAFT THRUST WASHER UPPER

10. REMOVE CRANKSHAFT BEARING

NOTICE:

Store the bearings in correct order so they can be returned to the original locations when re–assembling.

11. REMOVE CRANKSHAFT BEARING NO.2

NOTICE:

Store the bearings in correct order so they can be returned to the original locations when re–assembling.

12. REMOVE STUD BOLT

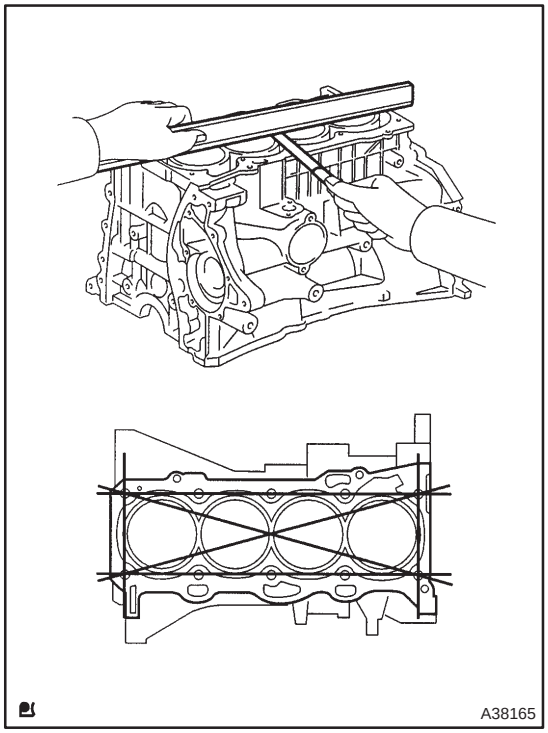

13. INSPECT CYLINDER BLOCK FOR FLATNESS

(a) Using a precision straight edge and feeler gauge, measure the surface contacting the cylinder head gasket for warpage.

Maximum warpage: 0.05 mm (0.0020 in.)

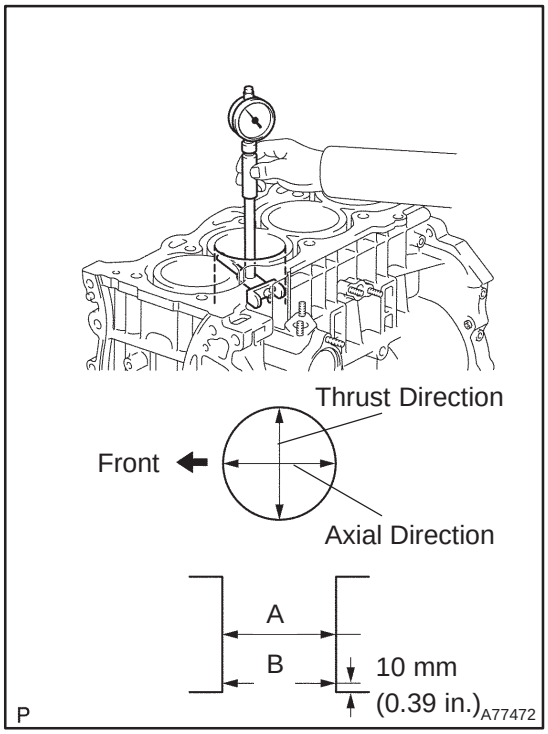

14. INSPECT CYLINDER BORE

(a) Using a cylinder gauge, measure the cylinder bore diameter at positions A, B and C in the thrust and axial directions.

Standard diameter:
86.000 to 86.013 mm (3.3858 to 3.3863 in.)
Maximum diameter: 86.013 mm (3.3863 in.)

If the diameter is greater than maximum, replace the cylinder block.

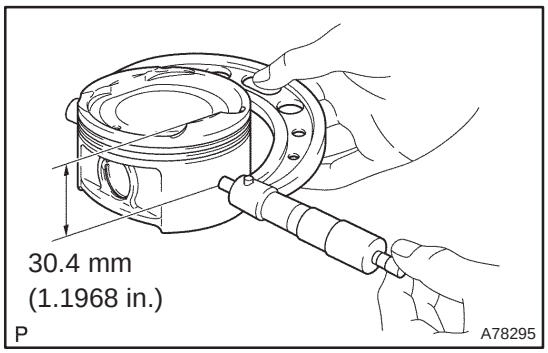

15. INSPECT PISTON DIAMETER

(a) Using a micrometer, measure the piston diameter at right angles to the piston pin center line, 30.4 mm (1.1968 in.) from the piston head.

Piston diameter:
85.927 to 85.937 mm (3.3829 to 3.3833 in.)

16. INSPECT PISTON CLEARANCE

(a) Subtract the piston diameter measurement from the cylinder bore diameter measurement.
Standard oil clearance: 0.063 to 0.086 mm (0.0025 to 0.0034 in.)
Maximum oil clearance: 0.1 mm (0.0039 in.)

(b) If the clearance is greater than maximum, replace all the 4 pistons. If necessary, replace the cylinder block.

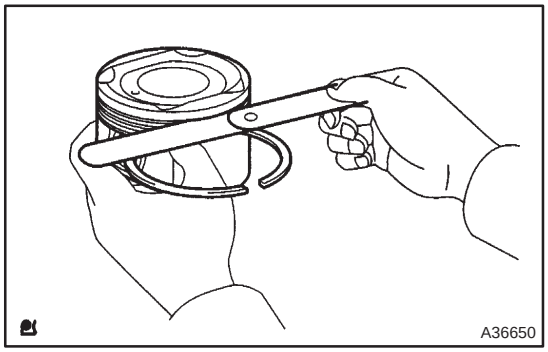

17. INSPECT RING GROOVE CLEARANCE

(a) Using a feeler gauge, measure the clearance between the piston ring and the wall of the ring groove.

Ring groove clearance:

Piston Ring	mm (in.)
No. 1	0.020 to 0.007 (0.0008 to 0.0028)
No. 2	0.020 to 0.006 (0.0008 to 0.0024)
Oil ring (Side rail)	0.070 to 0.150 (0.0028 to 0.0059)

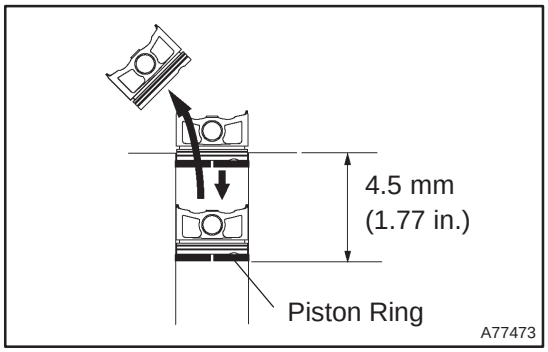

18. INSPECT PISTON RING END GAP

(a) Using a piston, push the piston ring a little beyond the bottom of the ring travel, 4.5 mm (1.77 in.) from the top of the cylinder block.

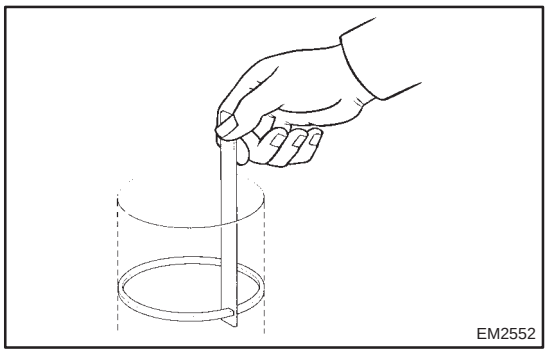

(b) Using a feeler gauge, measure the end gap.
Standard end gap:
No. 1 0.30 to 0.40 mm (0.0118 to 0.0157 in.)
No. 2 0.47 to 0.62 mm (0.0185 to 0.0244 in.)
Oil (side rail) 0.10 to 0.35 mm (0.0039 to 0.0138 in.)
Maximum end gap:
No. 1 0.89 mm (0.0350 in.)
No. 2 1.37 mm (0.0539 in.)
Oil (side rail) 0.73 mm (0.0287 in.)

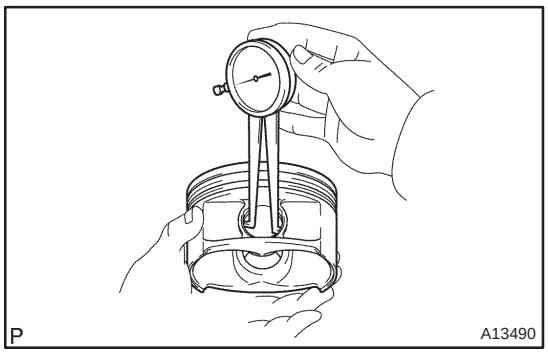

19. INSPECT PISTON PIN OIL CLEARANCE

(a) Using a caliper gauge, measure the inside diameter of the piston bushing.
Bushing inside diameter:
22.005 to 22.014 mm (0.8663 to 0.8667 in.)

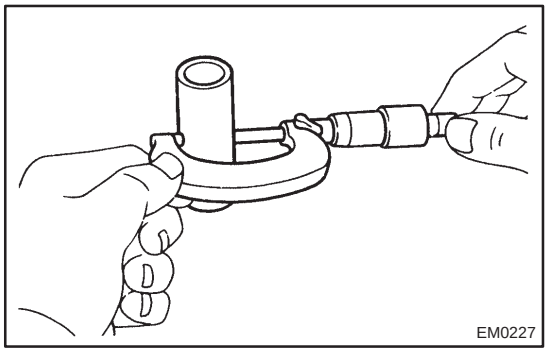

(b) Using a micrometer, measure the piston pin diameter.
Piston pin diameter:
21.997 to 22.009 mm (0.8660 to 0.8665 in.)

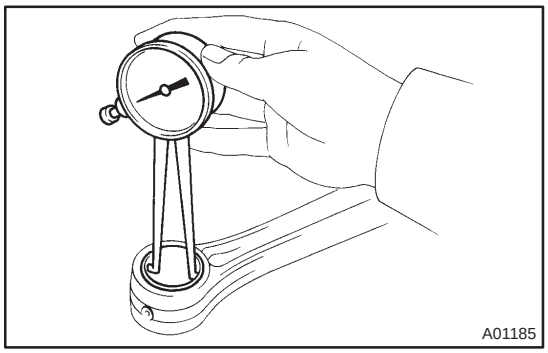

(c) Using a caliper gauge, measure the inside diameter of the connecting rod bushing.
Bushing inside diameter:
22.005 to 22.014 mm (0.8663 to 0.8667 in.)

(d) Subtract the piston pin diameter measurement from the piton pin hole diameter measurement.
Standard oil clearance:
0.005 to 0.011 mm (0.0002 to 0.0004 in.)
Maximum oil clearance: 0.05 mm (0.0020 in.)

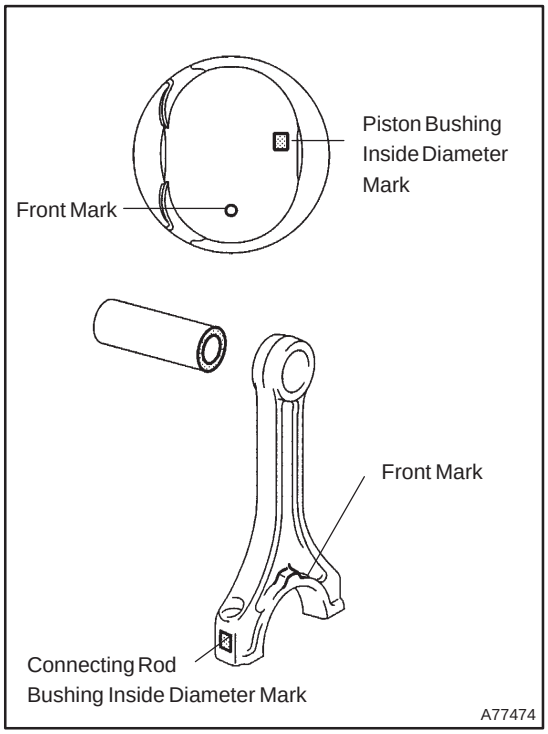

(e) If the oil clearance is greater than maximum, replace the connecting rod. If necessary, replace the piston and piston pin as a set.

(f) Subtract the piston pin diameter measurement from the bushing inside diameter measurement.
Standard oil clearance:
0.005 to 0.011 mm (0.0002 to 0.0004 in.)
Maximum oil clearance: 0.05 mm (0.0020 in.)

(g) If the oil clearance is greater than maximum, replace the connecting rod. If necessary, replace the connecting rod and piston pin as a set.

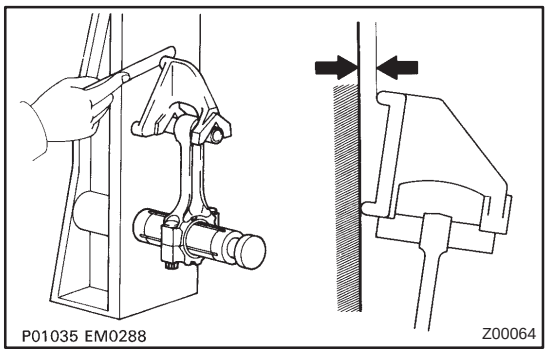

20. INSPECT CONNECTING ROD SUB–ASSY

(a) Using a rod aligner and feeler gauge, check the connecting rod alignment.
(1) Check for misalignment.
Maximum misalignment:
0.05 mm (0.0020 in.) per 100 mm (3.94 in.)

(b) If out–of alignment is greater than maximum, replace the connecting rod assembly.

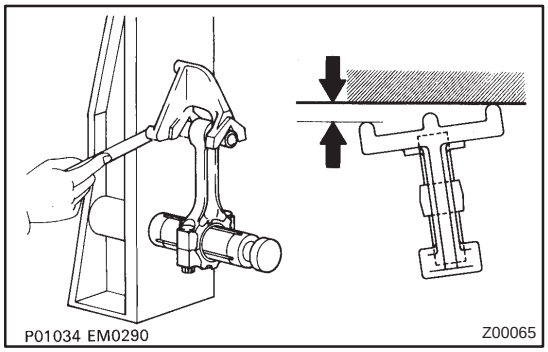

(1) Check for twist.
Maximum twist:
0.15 mm (0.0059 in.) per 100 mm (3.94 in.)

(c) If twist is greater than maximum, replace the connecting rod assembly.

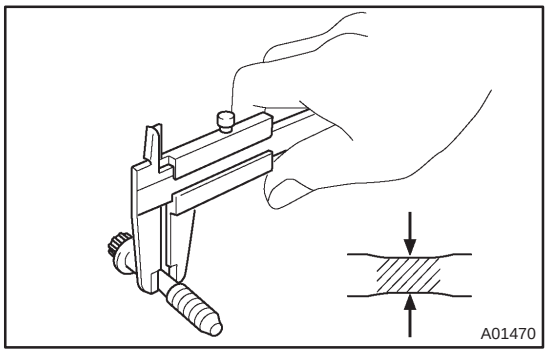

21. INSPECT CONNECTING ROD BOLT

(a) Using a vernier calipers, measure the tension portion diameter of the bolt.
Standard diameter: 7.2 to 7.3 mm (0.283 to 0.287 in.)
Minimum diameter: 7.0 mm (0.276 in.)

(b) If the diameter is less than minimum, replace the bolt.

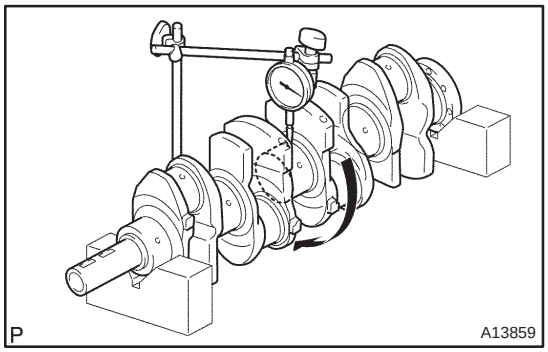

22. INSPECT CRANKSHAFT

(a) Using a dial indicator and V–blocks, measure the circle runout as shown in the illustration.
Maximum circle runout: 0.03 mm (0.0012 in.)

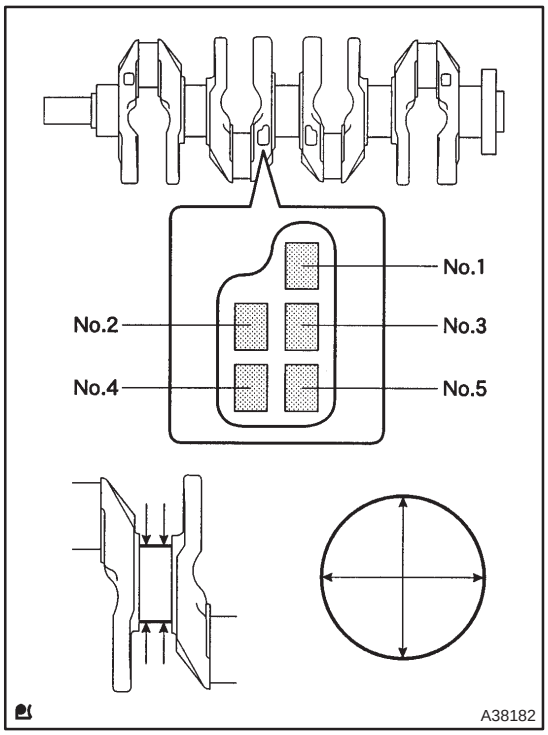

(b) Using a micrometer, measure the diameter of each main journal.
Diameter: 54.988 to 55.000 (2.1648 to 2.06535 in.)

(c) Check each main journal for taper and out–of–round as shown.
Maximum taper and out –of– round:
0.003 mm (0.0001 in.)

HINT:

Mark	mm (in.)
0	54.998 to 55.000 (2.16528 to 2.16535)
1	54.996 to 54.998 (2.16520 to 2.16528)
2	54.994 to 54.996 (2.16512 to 2.16520)
3	54.992 to 54.994 (2.16504 to 2.16512)
4	54.990 to 54.992 (2.16496 to 2.16504)
5	54.988 to 54.990 (2.16490 to 2.16496)

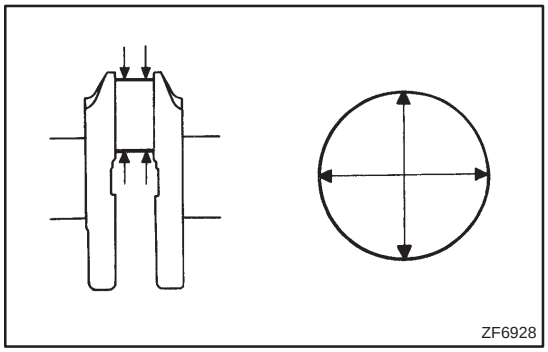

(d) Using a micrometer, measure the diameter of each crank pin.
Diameter: 47.990 to 48.000 mm (1.8894 to 1.8898 in.)

(e) Check each crank pin for taper and out–of–round as shown.
Maximum taper and out–of–round:
0.003 mm (0.0001 in.)

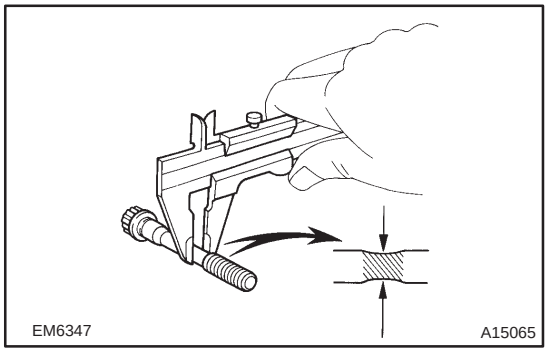

23. INSPECT CRANKSHAFT BEARING CAP SET BOLT

(a) Using vernier calipers, measure the tension portion diameter of the bolt.
Standard diameter: 7.5 to 7.6 mm (0.295 to 0.299 in.)
Minimum diameter: 7.2 mm (0.283 in.)

If the diameter is less than minimum, replace the bolt.

24. INSTALL RING PIN

(a) Using a plastic–faced hammer, tap into the ring pin.
Standard protrusion:
Ring pin A 6 mm (0.236 in.)
Ring pin B 5 mm (0.197 in.)

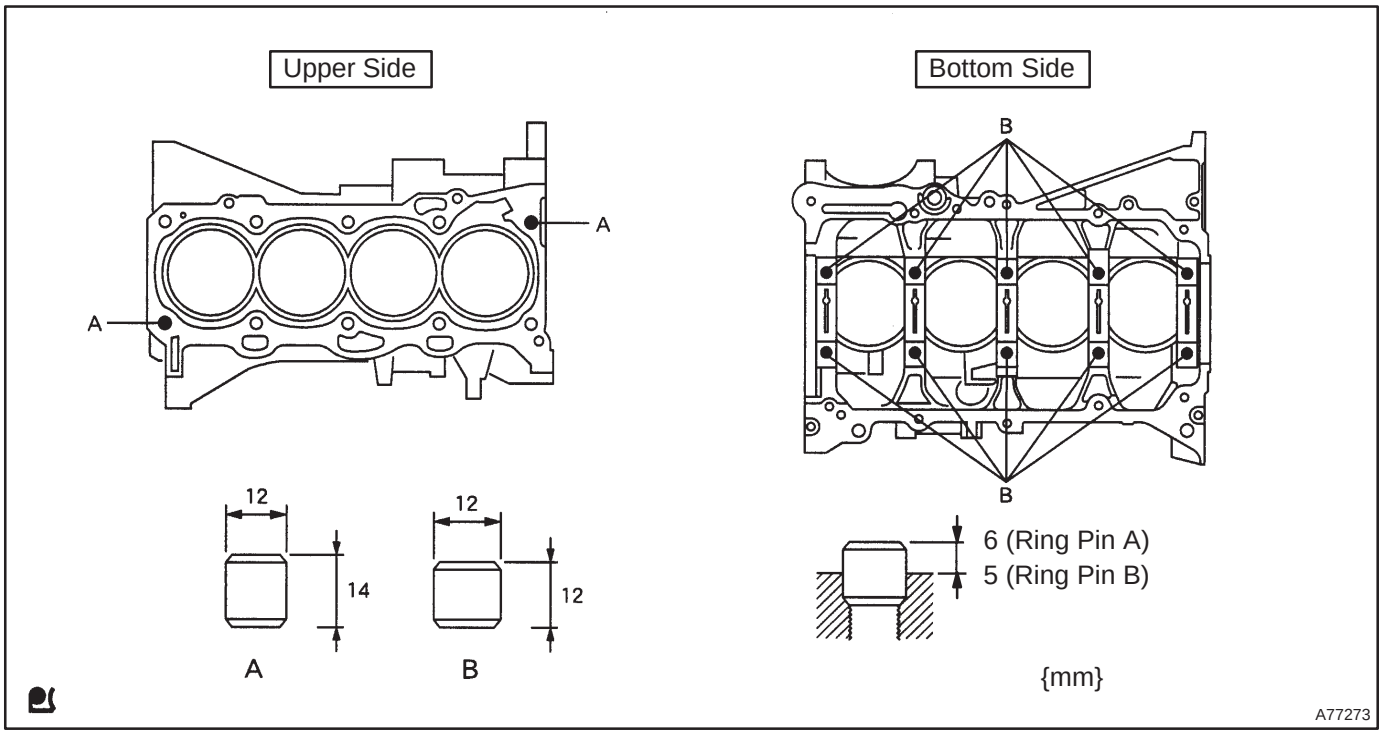

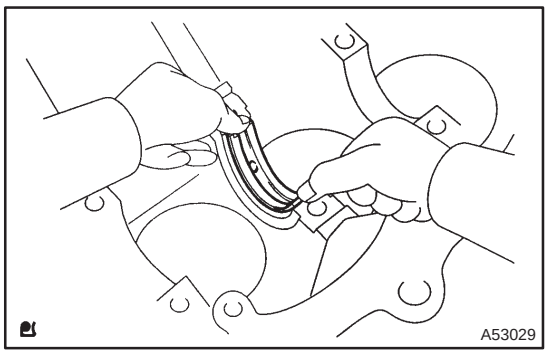

25. INSPECT CRANKSHAFT OIL CLEARANCE

NOTICE:

- **Clean the backside of the bearing and the bearing surface of the bearing cap and keep them free of oils.**
- **The bearing cap bolts are tightened in 2 progressive steps.**

(a) Clean each main journal and bearing.

(b) Install the upper bearing with an oil groove on cylinder block.

(c) Install the lower bearing on the bearing cap sub assembly.

(d) Place the crankshaft on the cylinder block.

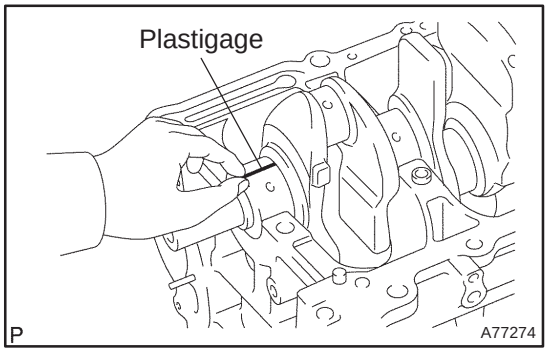

(e) Lay a strip of Plastigage across each journal.
SST 09011–38121

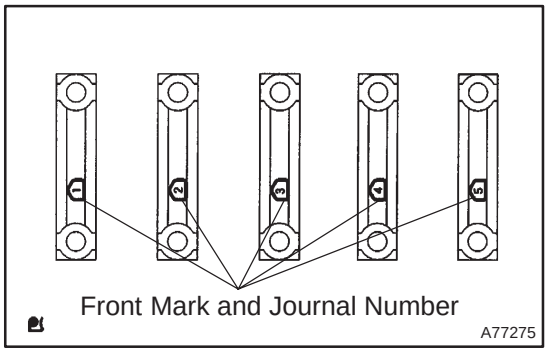

(f) Examine the front marks and install the bearing caps on the cylinder block.

(g) Apply a light coat of engine oil on the threads and under the bearing cap bolts.

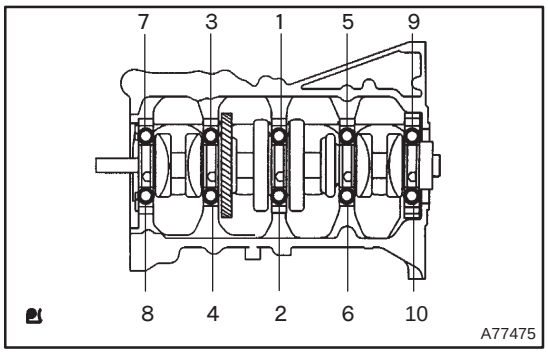

(h) Using several steps, tighten the bolts with the specified torque in the sequence shown in the illustration.
Torque: 20 N·m (204 kgf·cm, 15 ft·lbf)

(i) Retighten the bolts in the same way as above with the specified torque.
Torque: 40 N·m (408 kgf·cm, 29 ft·lbf)

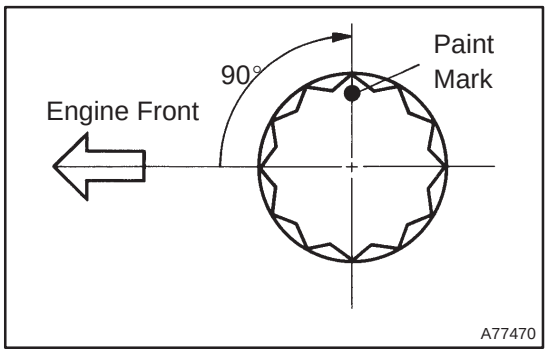

(j) Place the front mark on each bearing cap bolt head with paint.

(k) Retighten the bearing cap bolts by 90° in the same sequence as step (h).

(l) Check that each painted mark is now at a 90° angle to the front.

NOTICE:
Do not turn the crankshaft.

(m) Remove the bearing caps.

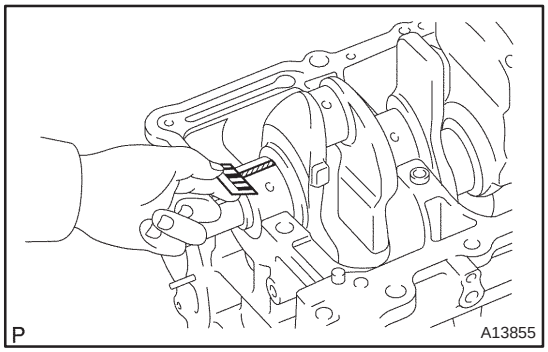

(n) Measure the Plastigage at its widest point.
Standard oil clearance:
0.017 to 0.040 mm (0.0007 to 0.0016 in.)
Maximum oil clearance: 0.07 mm (0.0028 in.)

NOTICE:
Completely remove the Plastigage.

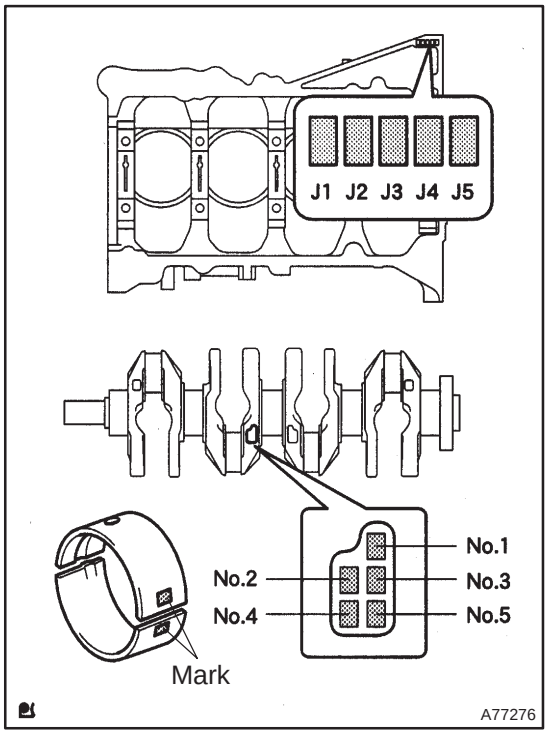

(o) If using a standard bearing, replace it with one having the same number as old one. If the number of the bearing cannot be determined, select a proper bearing by putting together the numbers imprinted on the cylinder block and the crankshaft. The total number of this will determine an applicable bearing among the 4 standard bearings, marked ”1”, ”2”, ”3” and ”4”. For the details about selection, refer to the table and hint below.

Cylinder block + Crankshaft	0 to 2	3 to 5	6 to 8	9 to 11
Replacement bearing number	”1”	”2”	”3”	”4”

HINT:
EXAMPLE
Cylinder block with imprinted number ”4”
Crankshaft with imprinted number ”3”
”4” + ”3” = ”7”
Select the bearing with marked ”3”

Reference:

Item	Mark	mm (in.)
Cylinder block main journal bore diameter (A)	0	59.000 to 59.002 (2.08683 to 2.32291)
	1	59.003 to 59.004 (2.08694 to 2.32299)
	2	59.005 to 59.006 (2.08701 to 2.32307)
	3	59.007 to 59.009 (2.08708 to 2.32318)
	4	59.010 to 59.011 (2.08718 to 2.32326)
	5	59.012 to 59.013 (2.08725 to 2.32334)
	6	59.014 to 59.016 (2.08733 to 2.32346)
Crankshaft main journal diameter (B)	0	54.998 to 55.000 (1.94528 to 2.16535)
	1	54.996 to 54.998 (1.94521 to 2.16527)
	2	54.994 to 54.996 (1.94514 to 2.16519)
	3	54.992 to 54.994 (1.94507 to 2.16511)
	4	54.990 to 54.992 (1.94500 to 2.16504)
	5	54.988 to 54.990 (1.94493 to 2.16496)
Standard bearing center wall thickness	1	1.993 to 1.996 (0.07846 to 0.07858)
	2	1.996 to 1.999 (0.07858 to 0.07870)
	3	1.999 to 2.002 (0.07870 to 0.07882)
	4	2.002 to 2.005 (0.07882 to 0.07894)

26. INSTALL TIGHT PLUG

(a) Apply adhesive around tight plugs.
Adhesive: Part No. 08833–00070, THREE BOND 1324 or equivalent.

(b) Using SST, push in the tight plugs as shown in the illustration.
SST 09950–60010 (09951–00200), 09950–70010 (09951–07100)
Standard depth:
Engine front 1.7 to 2.7 mm (0.067 to 0.106 in.)
Engine rear 2.2 to 3.2 mm (0.087 to 0.126 in.)

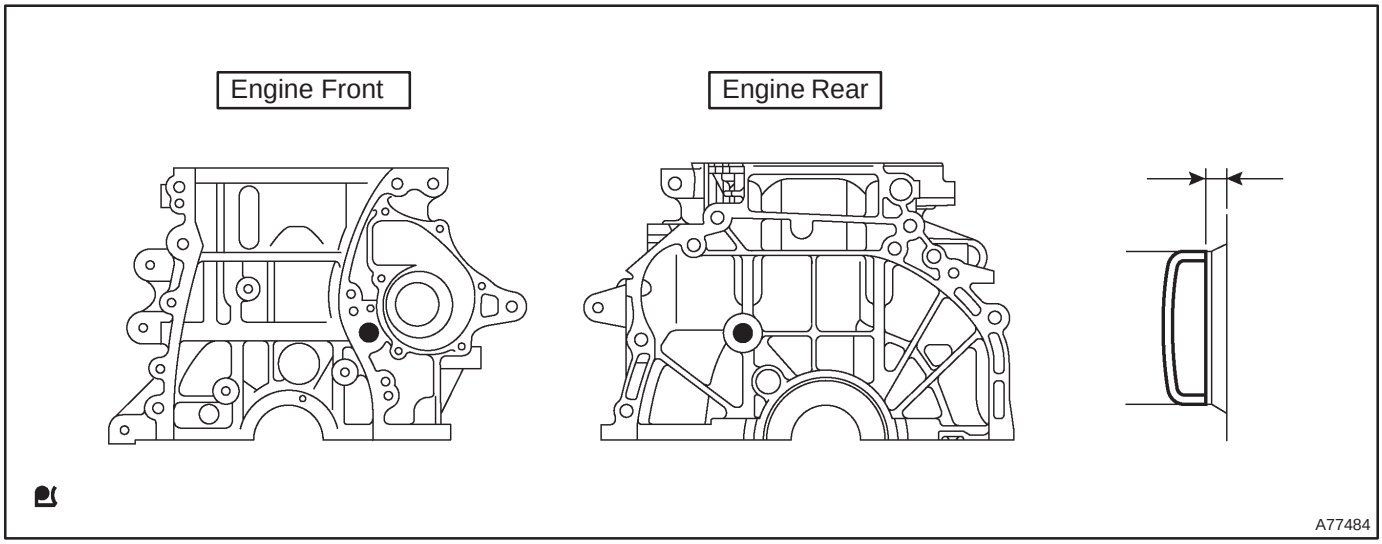

27. INSTALL STUD BOLT

(a) Install the stud bolts as shown in the illustration.
Torque:
Stud bolt A 5.0 N·m (51 kgf·cm, 44 in.·lbf)
Stud bolt B 10N·m (97 kgf·cm, 84 in.·lbf)
Stud bolt C 5.0N·m (51 kgf·cm, 44 in.·lbf)

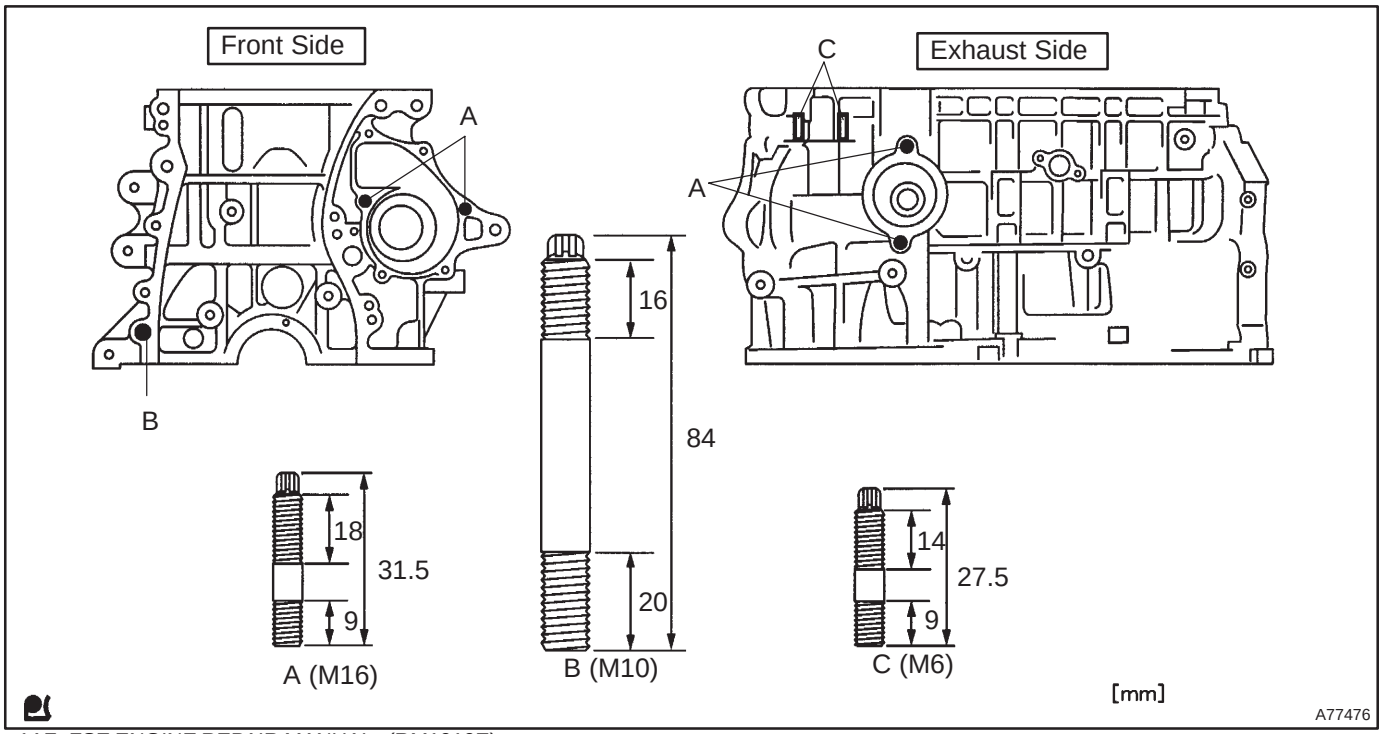

28. INSTALL STRAIGHT PIN

(a) Using a plastic–faced hammer, tap into the straight pin.

Standard protrusion

Pin A 7.5 mm (0.295 in.)

Pin B 12 mm (0.472 in.)

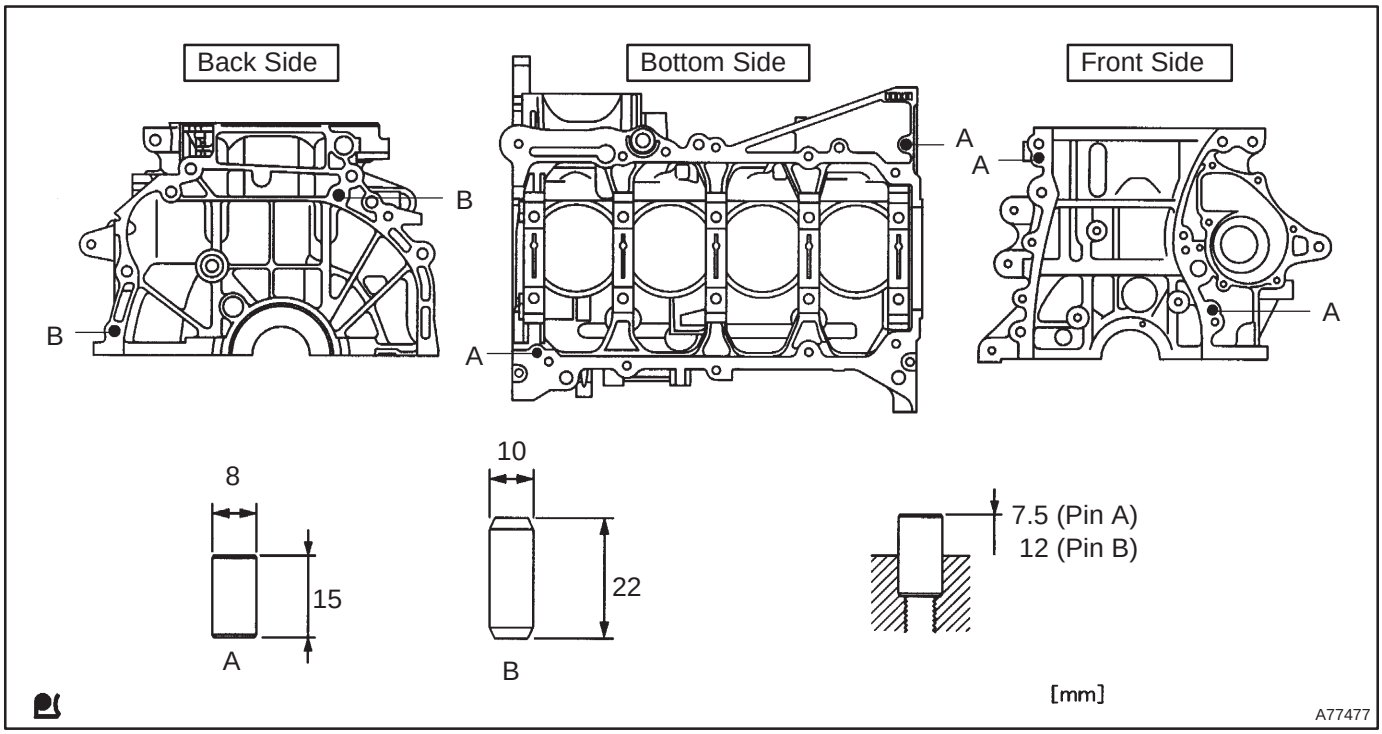

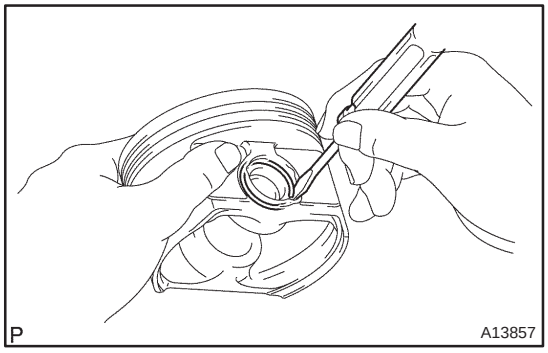

29. INSTALL PISTON

(a) Using a small screwdriver, install a new snap ring at one end of the piston pin hole.

(b) Gradually heat the piston to 80 to 90°C (176 to 194°F).

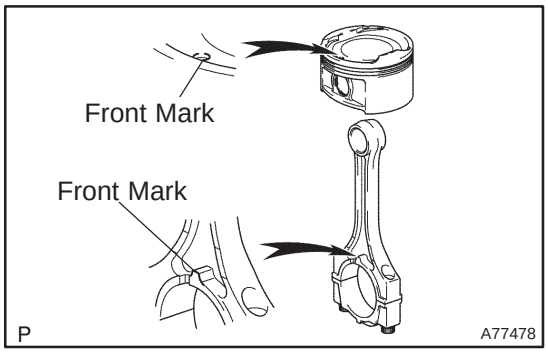

(c) Align the front mark of the piston with the front mark located on the connecting rod, and push in the piston with your thumb.

(d) Using a small screwdriver, install a new snap ring on the other end of the piston pin hole.

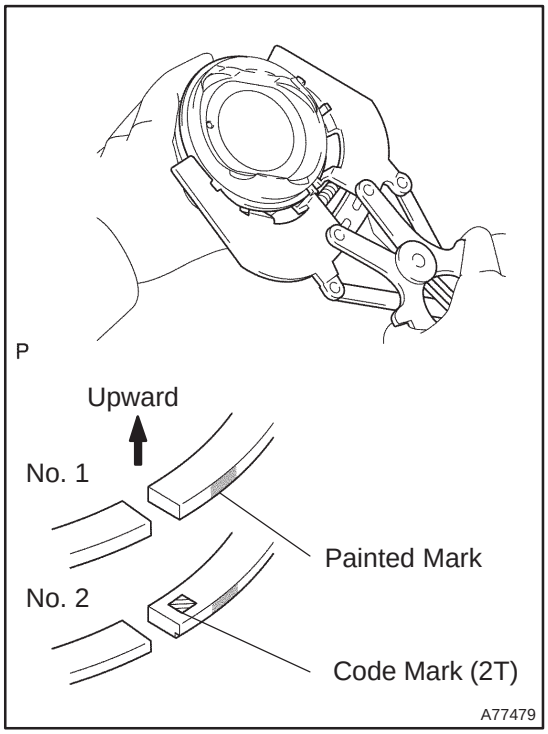

30. INSTALL PISTON RING SET

(a) Install the oil ring expander and 2 side rails by hand.

(b) Using a piston ring expander, install the 2 compression rings with the painted mark facing right side.

NOTICE:

Install the compression ring No. 2 with the code mark (2T) upward.

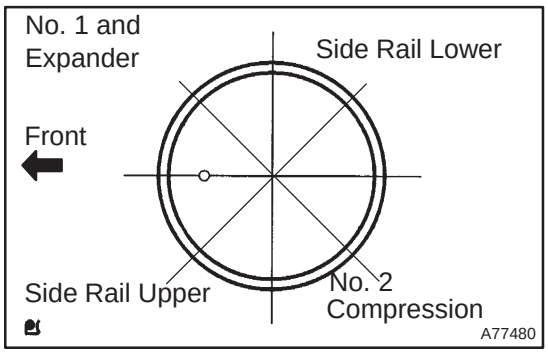

(c) Position the piston rings so that the ring ends are as shown.

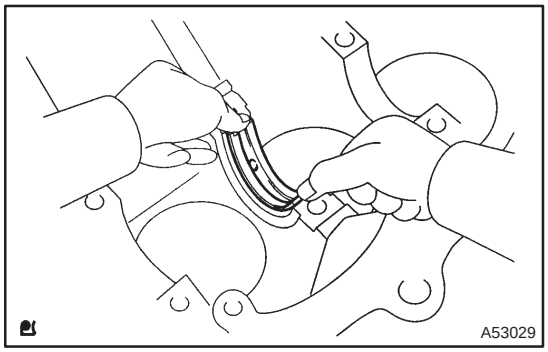

31. INSTALL CRANKSHAFT BEARING

(a) Install the upper bearing with an oil groove on cylinder block.

NOTICE:

Clean the back side of the bearing and the bearing surface of the cylinder block and keep them free of oils.

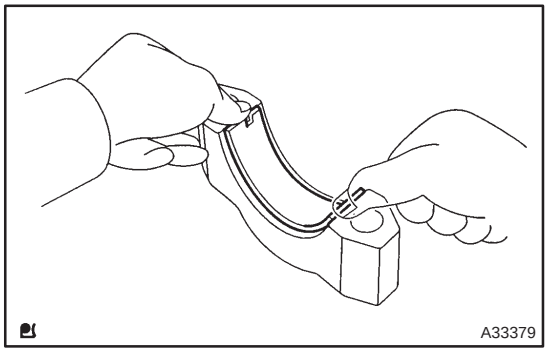

32. INSTALL CRANKSHAFT BEARING NO.2

(a) Install the lower bearing on bearing cap.

NOTICE:

Clean the back side of the bearing and the bearing surface of the cylinder block and keep them free of oils.

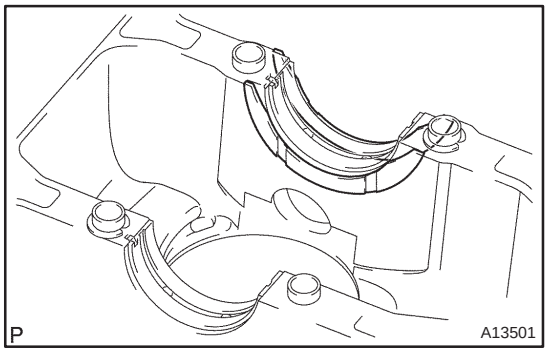

33. INSTALL CRANKSHAFT THRUST WASHER UPPER

(a) Install the 2 thrust washers under the No. 3 journal position of the cylinder block with the oil grooves facing outward.

34. INSTALL CRANKSHAFT

(a) Apply engine oil on the upper bearing and install the crankshaft on the cylinder block.

(b) Apply engine oil on the lower bearing.

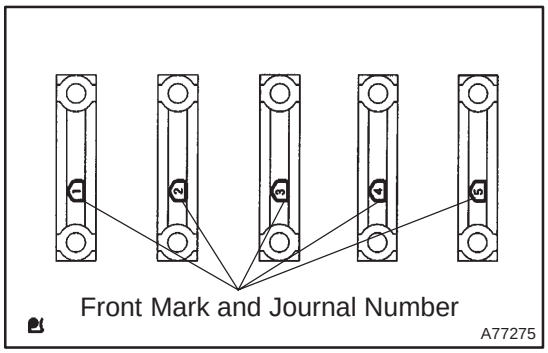

(c) Examine the front marks and install the bearing caps to the cylinder block.

(d) Apply a light coat of engine oil on the threads of the bearing cap bolts.

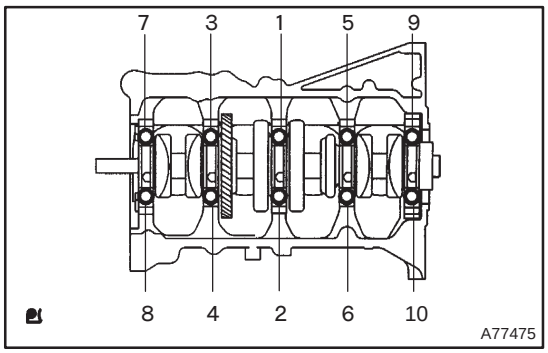

(e) Using several steps, tighten the bolts with the specified torque in the sequence shown in the illustration.
Torque: 20 N·m (204 kgf·cm, 15 ft·lbf)

(f) Retighten the bolts in the same way as above with the specified torque.
Torque: 40 N·m (408 kgf·cm, 29 ft·lbf)

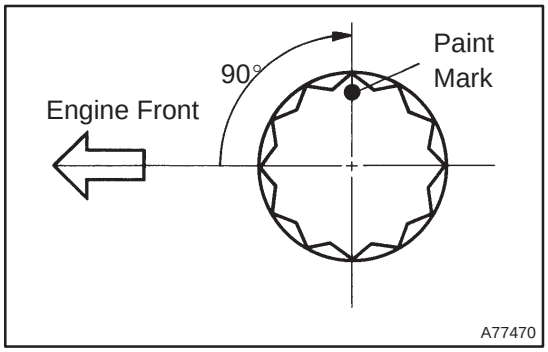

(g) Place the front mark on each bearing cap bolt head with paint.

(h) Retighten the bearing cap bolts by 90° in the same sequence as step (e).

(i) Check that each painted mark is now at a 90° angle to the front.

(j) Check that the crankshaft turns smoothly.

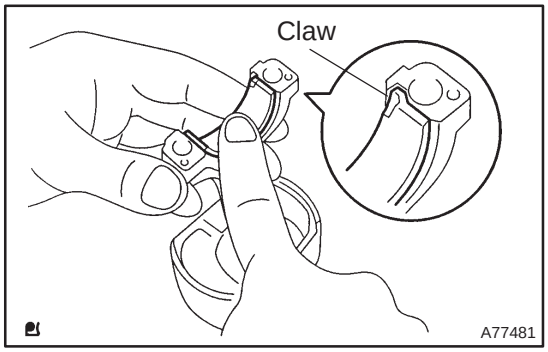

35. INSTALL CONNECTING ROD BEARING

(a) Align the bearing claw with the groove of the connecting rod or connecting cap.

NOTICE:

Clean the back side of the bearing and the bearing surface of the bearing cap and keep them free of oils.

36. INSTALL PISTON SUB–ASSY W/CONNECTING ROD

NOTICE:

The connecting rod cap bolts are tightened in 2 progressive steps.

(a) Apply engine oil on the cylinder walls, the pistons, and the surfaces of connecting rod bearings.
(b) Check the position of the piston ring ends.

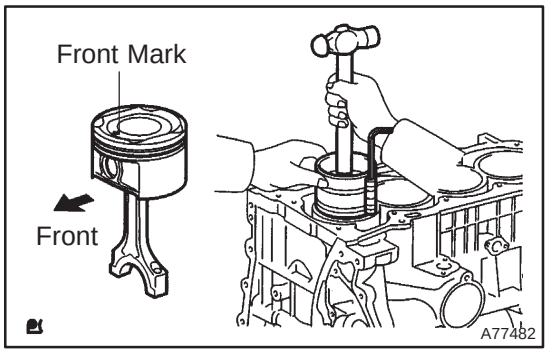

(c) Using a piston ring compressor, push the correctly numbered piston and connecting rod assemblies into each cylinder with the front mark of the piston facing forward.

NOTICE:
Match the numbered connecting rod cap with the connecting rod.

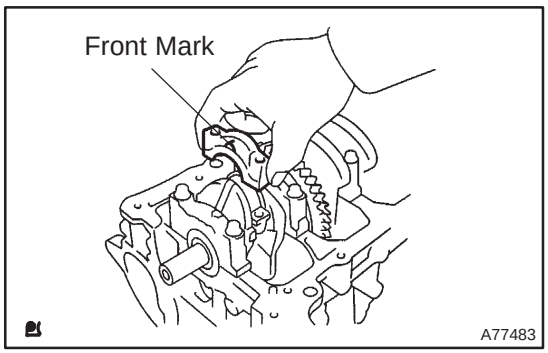

(d) Check that the protrusion of the connecting rod cap is facing the correct direction.
(e) Apply a light coat of engine oil on the threads of the connecting rod cap bolts.
(f) Using a 12 mm socket wrench, tighten the bolts in several steps with the specified torque.
Torque: 25 N·m (250 kgf·cm, 18 ft·lbf)
SST 09011–38121
(g) Place the front mark on each connecting cap bolt head with paint.
(h) Retighten the cap bolts by 90° as shown in the illustration.

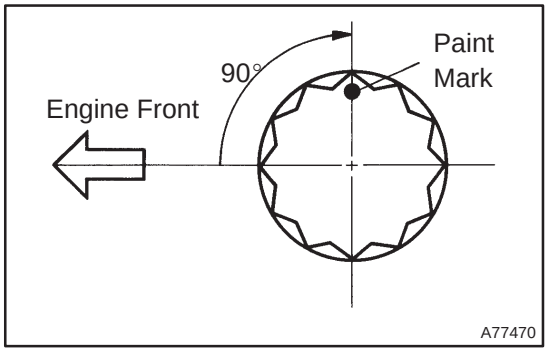

(i) Check that each painted mark is at a 90° angle to the front.
(j) Check that the crankshaft turns smoothly.

WATER PUMP ASSY

160MB–01

INSPECTION

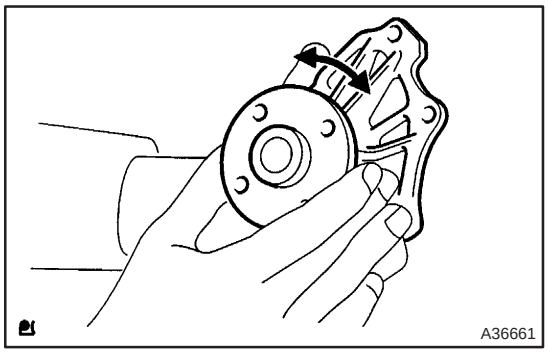

1. INSPECT WATER PUMP ASSY

(a) Visually check the drain hole coolant leakage.

(b) Turn the pulley, and check that the water pump bearing moves smoothly and quietly.

If necessary, replace the water pump.

OIL PUMP ASSY

COMPONENTS

170FL–01

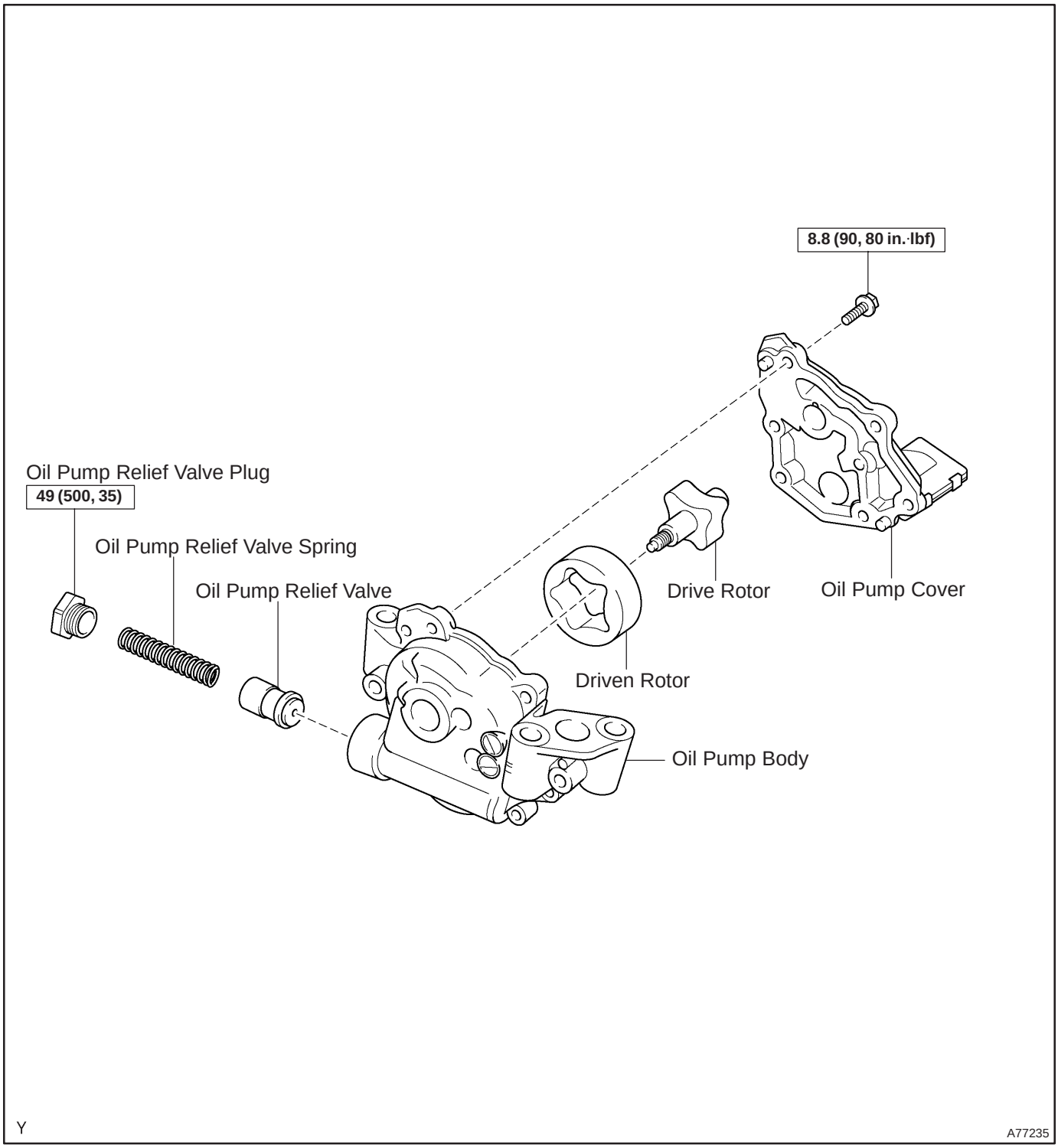

170FM–01

OVERHAUL

1. REMOVE OIL PUMP RELIEF VALVE PLUG

(a) Using a 27 mm socket wrench, remove the oil pump relief plug.
SST 09011–12271

2. REMOVE OIL PUMP RELIEF VALVE SPRING

3. REMOVE OIL PUMP RELIEF VALVE

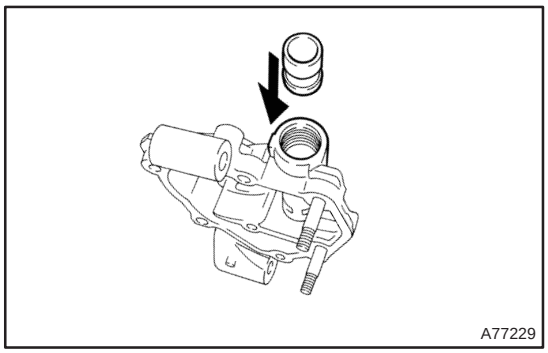

4. INSPECT OIL PUMP RELIEF VALVE

(a) Coat the oil pump relief valve with engine oil.

(b) Check that it falls smoothly into the oil pump relief valve hole by its own weight.

If it does not, replace the oil pump relief valve.

If necessary, replace the oil pump assembly.

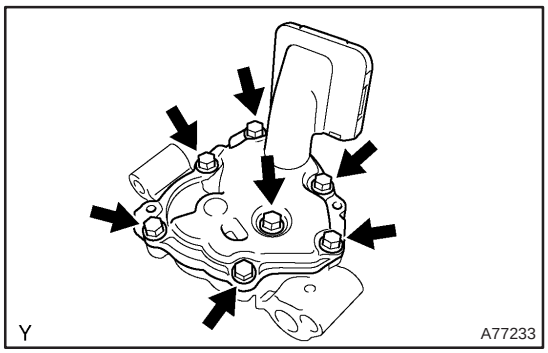

5. REMOVE OIL PUMP COVER

(a) Remove 7 bolts and the oil pump cover.

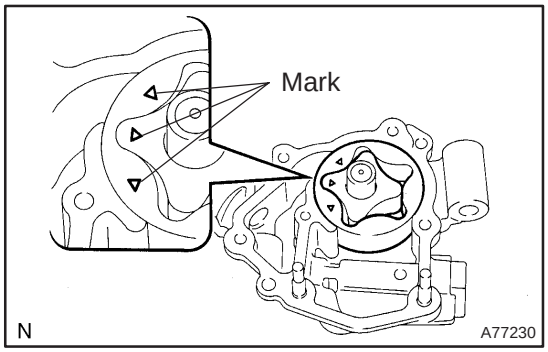

6. INSPECT OIL PUMP ROTOR SET

(a) Place the drive and driven rotors into the oil pump body with the marks facing the oil pump cover.

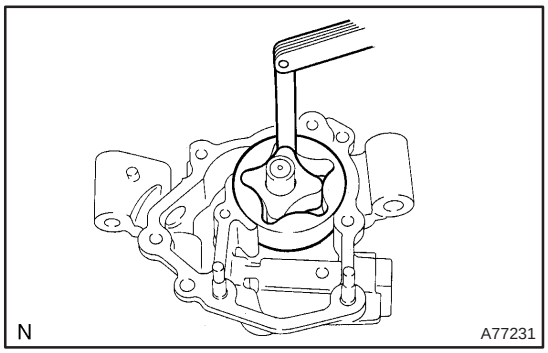

7. INSPECT ROTOR TIP CLEARANCE

(a) Using a feeler gauge, measure the clearance between the drive and driven rotor tip.

Standard tip clearance:
0.080 to 0.160 mm (0.0031 to 0.0063 in.)
Maximum tip clearance: 0.35 mm (0.0138 in.)

If the tip clearance is greater than maximum, replace the rotors as a set.

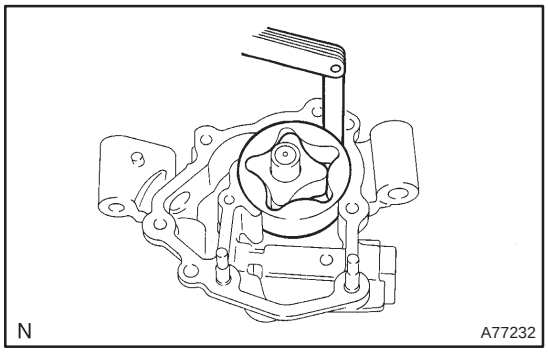

8. INSPECT ROTOR BODY CLEARANCE

(a) Using a feeler gauge, measure the clearance between the driven rotor and body.

Standard body clearance:
0.100 to 0.170 mm (0.0039 to 0.067 in.)
Maximum body clearance: 0.325 mm (0.0128 in.)

If the body clearance is greater than maximum, replace the rotors as a set. If necessary, replace the oil pump assembly.

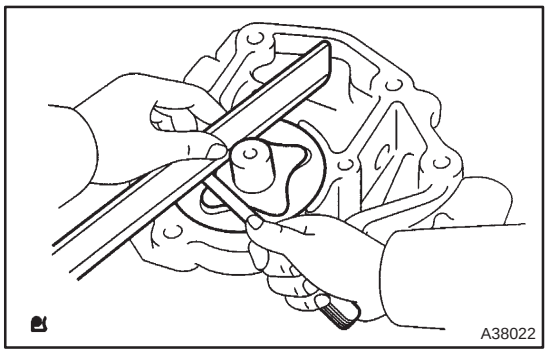

9. INSPECT ROTOR SIDE CLEARANCE

(a) Using a feeler gauge and precision straight edge, measure the clearance between the rotors and precision straight edge.

Standard side clearance:
0.030 to 0.085 mm (0.0012 to 0.0033 in.)
Maximum side clearance: 0.16 mm (0.0063 in.)

If the side clearance is greater than maximum, replace the rotors as a set. If necessary, replace the oil pump assembly.

10. REMOVE OIL PUMP ROTOR SET

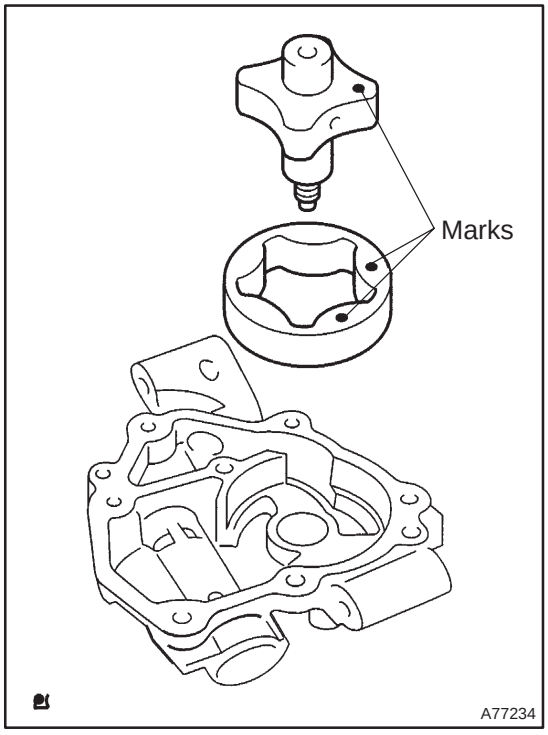

11. INSTALL OIL PUMP ROTOR SET

(a) Coat the drive rotor and driven rotor with engine oil.

(b) Place the drive rotor and driven rotor into the pump body with marks facing the pump body cover.

12. INSTALL OIL PUMP COVER
Torque: 8.8 N·m (90 kgf·cm, 80 in.·lbf)

13. INSTALL OIL PUMP RELIEF VALVE

(a) Coat the oil pump relief valve with engine oil, and insert the oil pump relief valve into oil pump body hole.

14. INSTALL OIL PUMP RELIEF VALVE SPRING

15. INSTALL OIL PUMP RELIEF VALVE PLUG

(a) Using a 27 mm socket wrench, install the oil pump relief valve plug.
Torque: 49 N·m (500 kgf·cm, 35 ft·lbf)
SST 09011–12271

STARTER ASSY

COMPONENTS

190OH–01

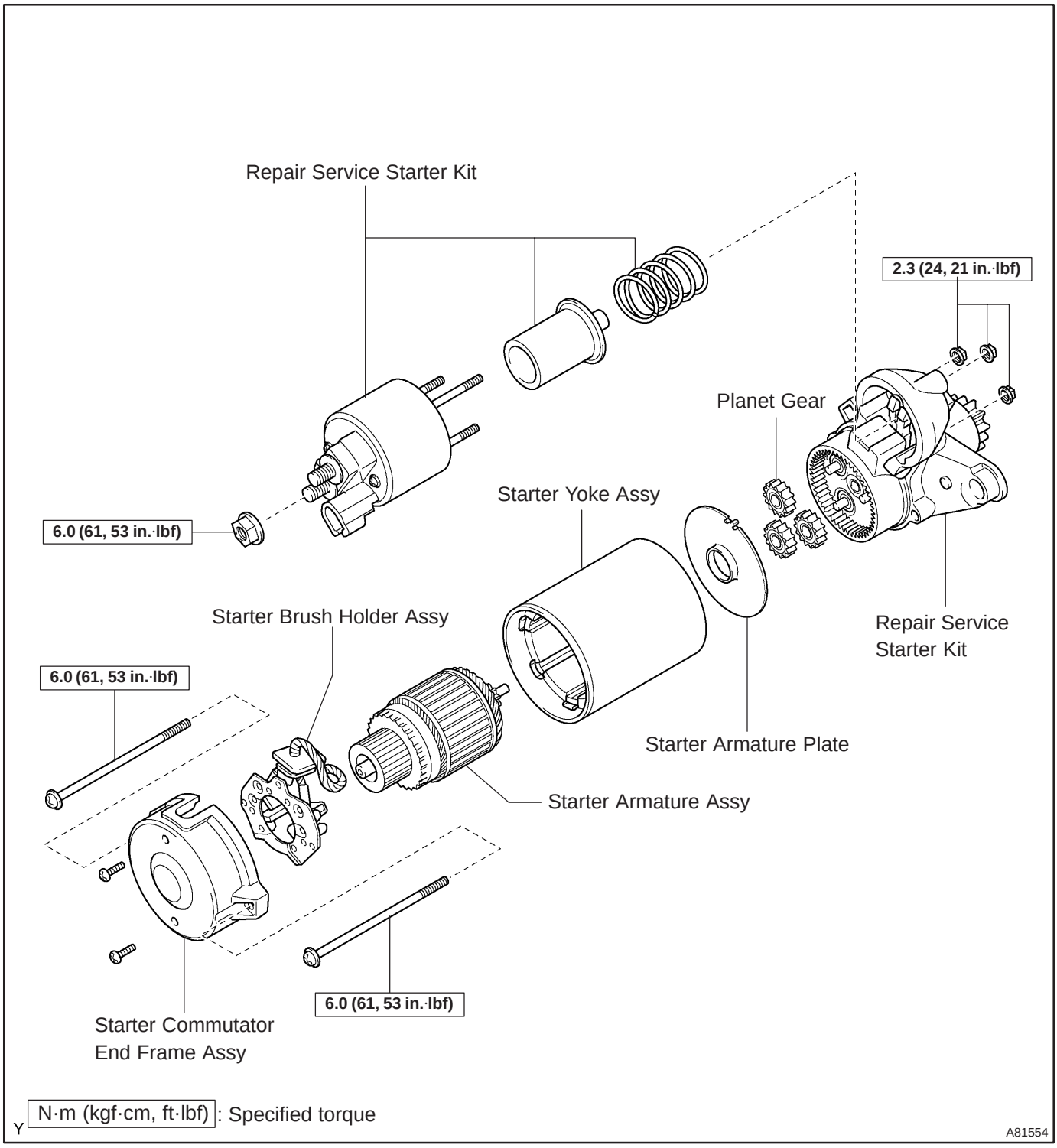

190OI–01

OVERHAUL

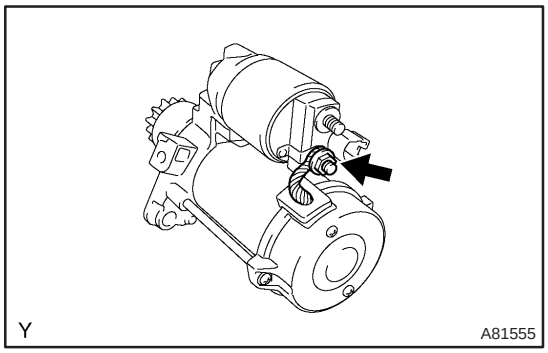

1. REMOVE REPAIR SERVICE STARTER KIT

(a) Remove the nut, and disconnect the lead wire from the repair service starter kit.

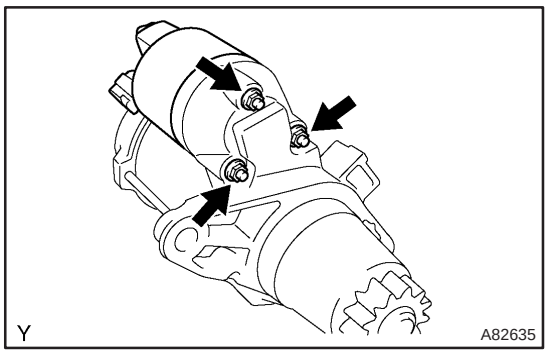

(b) Remove the 3 nuts holding the repair service starter kit to the starter housing.

(c) Remove the repair service starter kit.

(d) Remove the return spring and plunger.

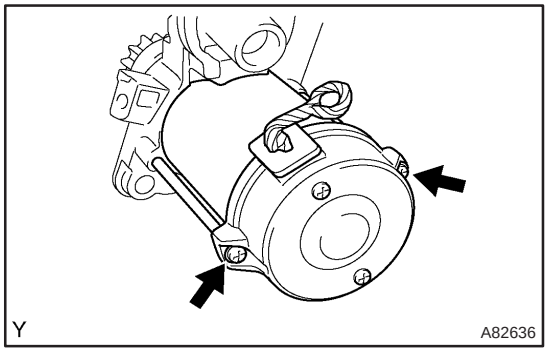

2. REMOVE STARTER YOKE ASSY

(a) Using a torx driver T25, remove the 2 through bolts and pull out the starter yoke together with the starter commutator end frame.

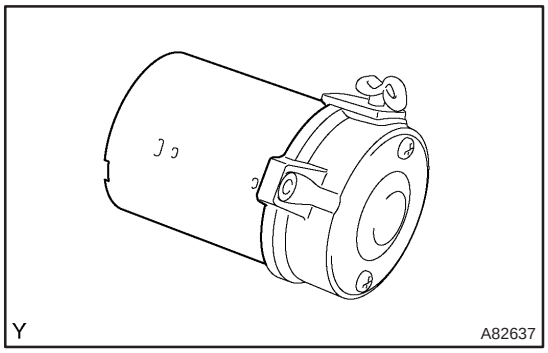

(b) Remove the starter yoke from the starter commutator end frame.

3. REMOVE STARTER ARMATURE ASSY

(a) Remove the starter armature assy from the starter yoke assy.

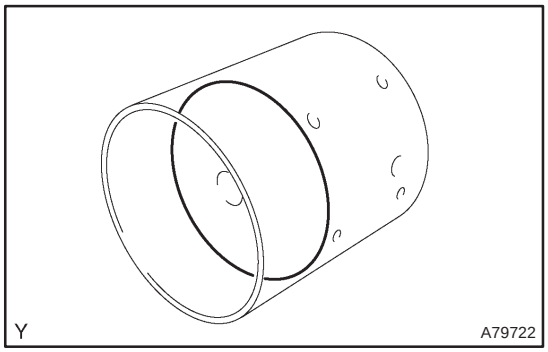

4. REMOVE STARTER ARMATURE PLATE

(a) Remove the armature plate from the starter yoke.

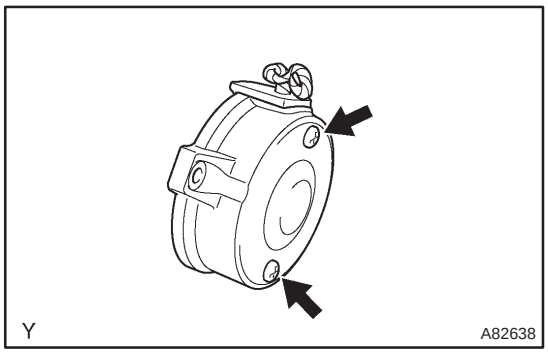

5. REMOVE STARTER BRUSH HOLDER ASSY

(a) Remove the 2 screws and brush holder assy from the commutator end frame.

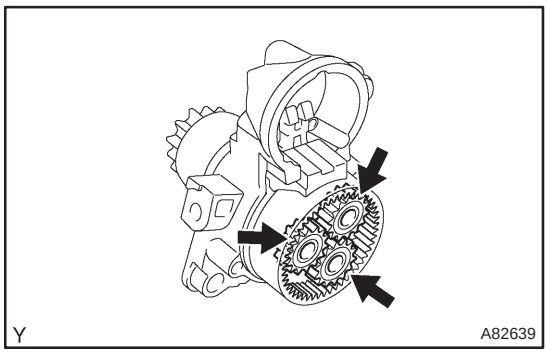

6. REMOVE PLANET GEAR

(a) Remove the 3 planet gears from the repair service starter kit.

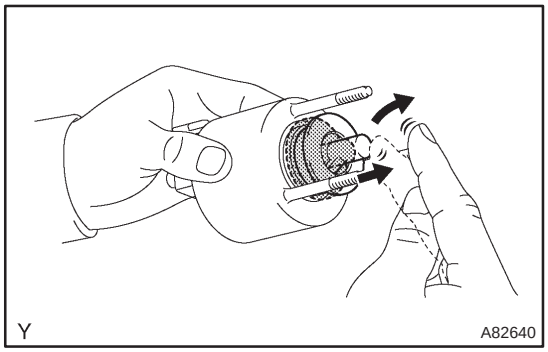

7. INSPECT REPAIR SERVICE STARTER KIT

(a) Check the plunger.

(1) Push in the plunger and check that it returns quickly to its original position.

If necessary, replace the repair service starter kit.

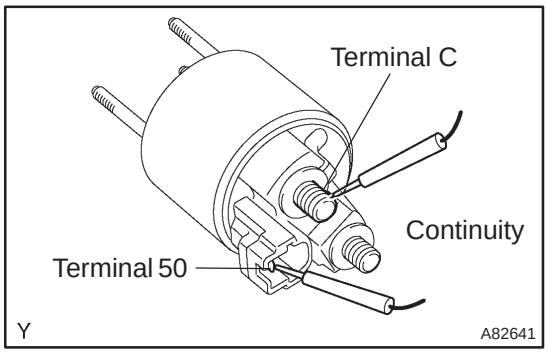

(b) Check the pull–in coil for open circuit.

(1) Using an ohmmeter, check that there is continuity between terminals 50 and C.

If there is no continuity, replace the repair service starter kit.

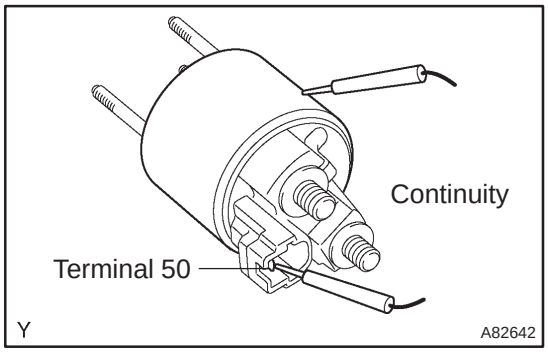

(c) Check if the hold–in coil has an open circuit.
(1) Using an ohmmeter, check that there is continuity between terminal 50 and the switch body.

If there is no continuity, replace the repair service kit.

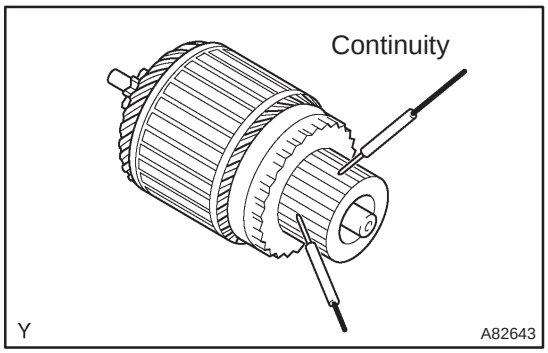

8. INSPECT STARTER ARMATURE ASSY

(a) Check the commutator for open circuit.
(1) Using an ohmmeter, check that there is continuity between the segments of the commutator.

If there is no continuity between any segments, replace the armature.

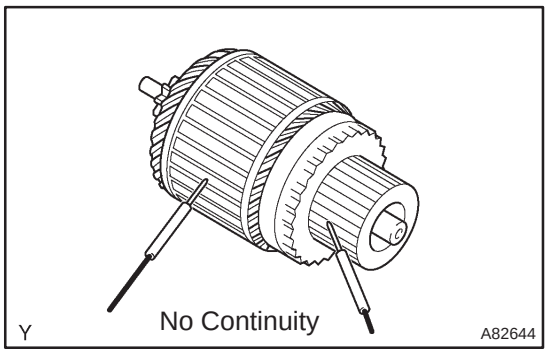

(b) Check the commutator for ground.
(1) Using an ohmmeter, check that there is no continuity between the commutator and the armature coil core.

If there is continuity, replace the armature.

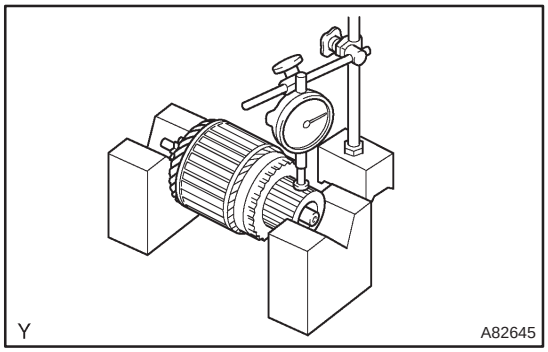

(c) Check the commutator for dirty or burned surface.

If the surface is dirty or burnt, smooth the surface with 400–grit sandpaper.

(d) Check for the commutator circuit runout.
(1) Place the commutator on V–blocks.
(2) Using a dial indicator, measure the circle runout.
Standard runout: 0.02 mm (0.0008 in.)
Maximum runout: 0.05 mm (0.0020 in.)

If the runout is greater than maximum, replace the armature.

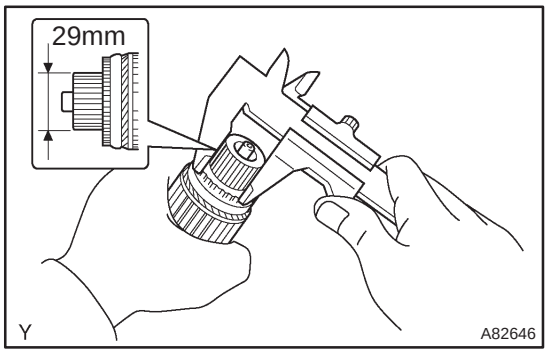

(e) Using vernier calipers, measure the commutator diameter.
Standard length: 29 mm (1.142 in.)
Minimum length: 28 mm (1.102 in.)

If the diameter is less than minimum, replace the armature.

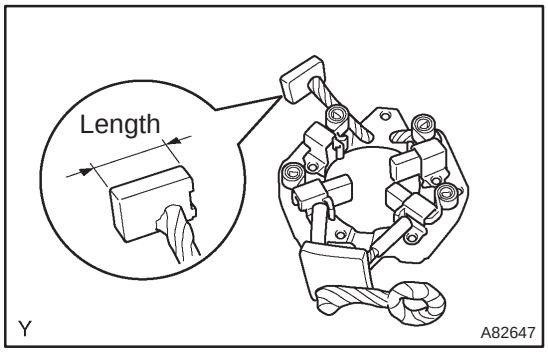

9. INSPECT STARTER BRUSH HOLDER ASSY

(a) Using vernier calipers, measure the brush length.

Standard length: 15.5 mm (0.610 in.)

Minimum length: 9.0 mm (0.354 in.)

If the length is less than minimum, replace the starter brush holder assy.

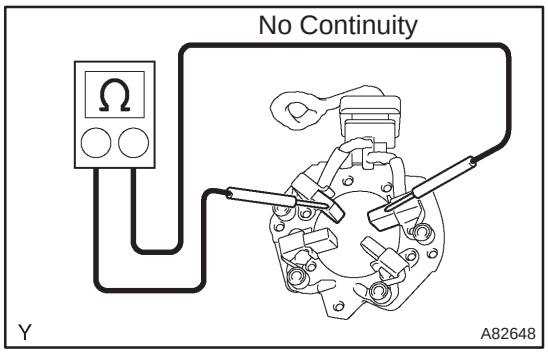

(b) Check the brush holder.

(1) Using an ohmmeter, check that there is no continuity between the positive (+) and negative (–) brush holders.

If there is continuity, repair or replace the starter commutator end frame assy.

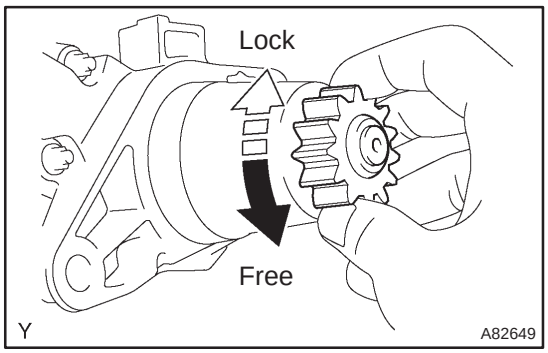

10. INSPECT REPAIR SERVICE STARTER KIT

(a) Check the starter clutch.

(1) Rotate the clutch pinion gear counterclockwise and check that it turns freely. Try to rotate the clutch pinion gear clockwise and check that it locks.

If necessary, replace the repair service starter kit.

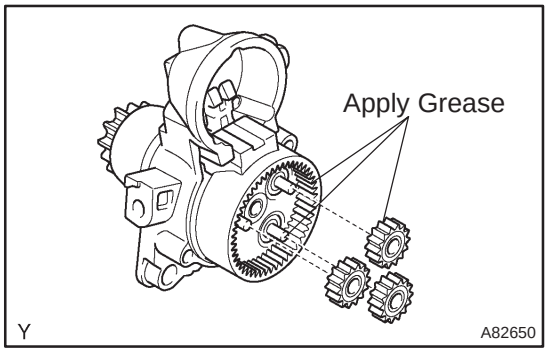

11. INSTALL PLANET GEAR

(a) Apply grease to the planet gears and pin parts of the planetary shaft.

(b) Install the 3 planet gears.

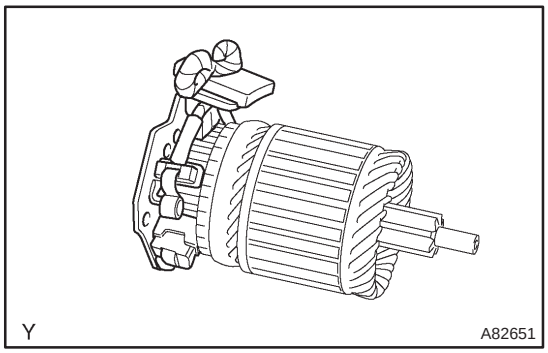

12. INSTALL STARTER BRUSH HOLDER ASSY

(a) Install the brush holder to the starter armature assy.

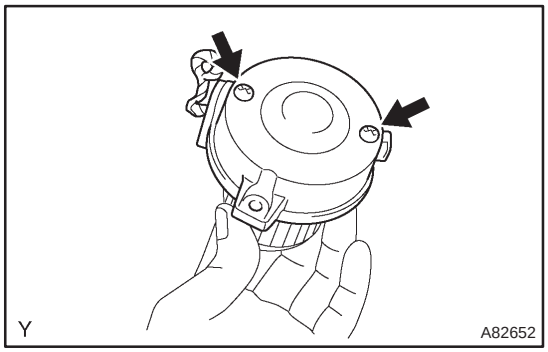

13. INSTALL STARTER COMMUTATOR END FRAME ASSY

(a) Install the commutator end frame with the 2 screws.

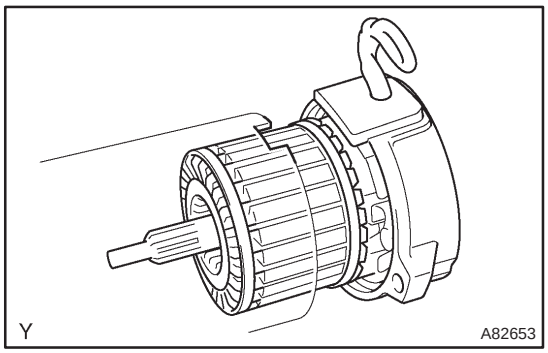

14. INSTALL STARTER ARMATURE ASSY

(a) Align the rubber with the convex cutout of starter yoke.

(b) Install starter armature with the brush holder to the starter yoke.

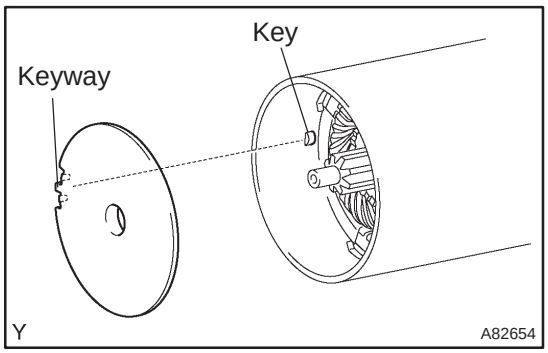

15. INSTALL STARTER ARMATURE PLATE

(a) Insert the starter armature plate to the starter yoke.

(b) Align the keyway of the starter plate with the key inside the starter yoke, and install the starter plate.

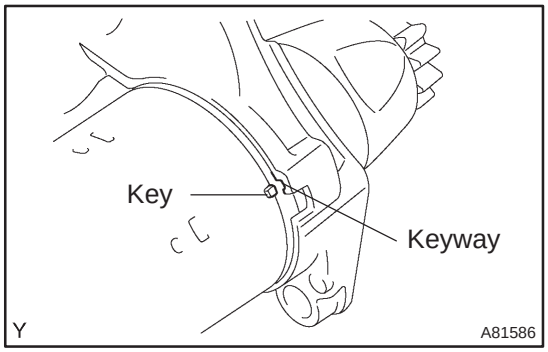

16. INSTALL STARTER YOKE ASSY

(a) Align the key of the starter yoke with the keyway located on the starter drive housing.

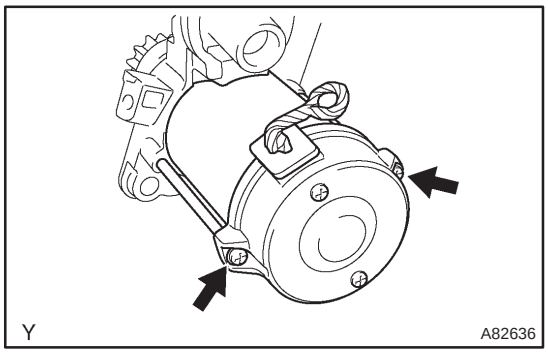

(b) Using a torx driver T25, install the starter yoke with the 2 through bolts.

Torque: 6.0 N·m (61 kgf·cm, 53 in.·lbf)

17. INSTALL REPAIR SERVICE STARTER KIT

(a) Apply grease to the plunger and hook.

(b) Set the plunger and hook of the repair service starter kit to the drive lever.

(c) Install the plunger and return spring.

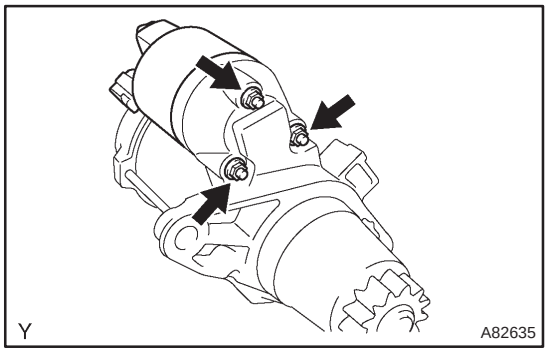

(d) Install the repair service starter kit with the 3 nuts.
Torque: 2.3 N·m (24 kgf·cm, 21 in.·lbf)

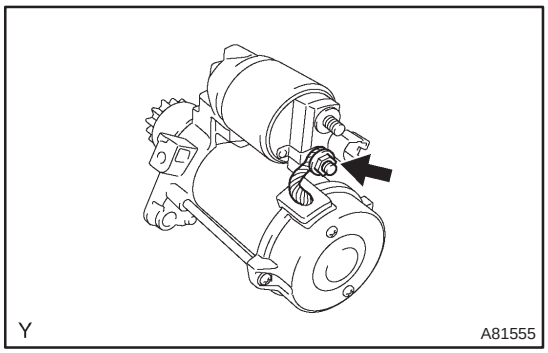

(e) Connect the lead wire to the repair service starter kit and then fasten it with the nut.
Torque: 6.0 N·m (61 kgf·cm, 53 in.·lbf)

GENERATOR ASSY

COMPONENTS

190OJ–01

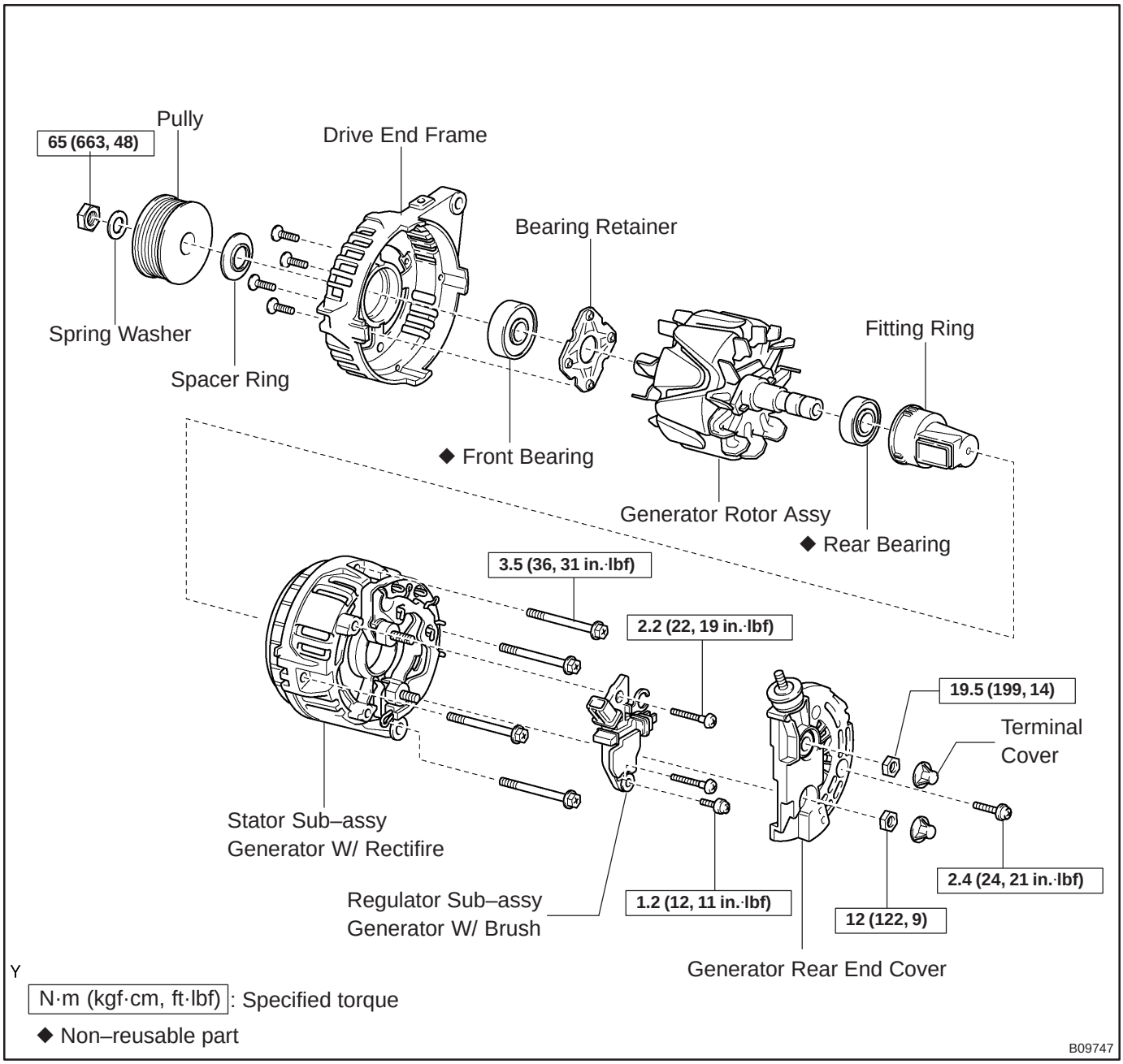

OVERHAUL

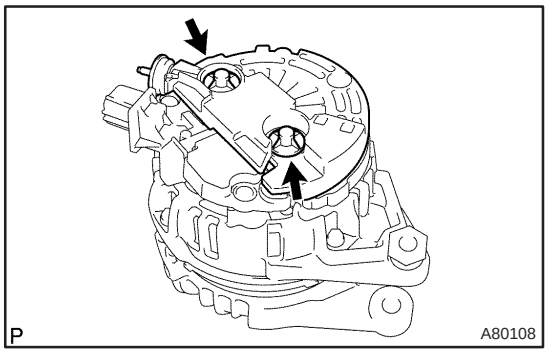

190OK–01

1. REMOVE GENERATOR REAR END COVER

(a) Remove the 2 terminal covers by turning them counterclockwise.

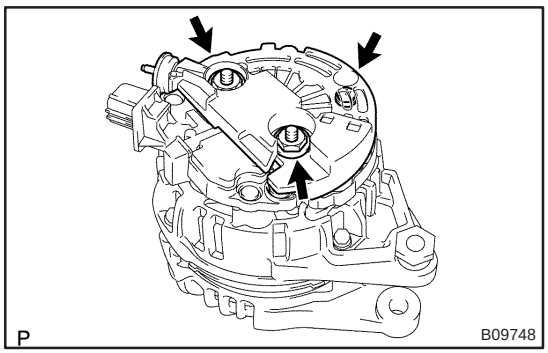

(b) Remove the screw and 2 nuts, and then detach the generator rear end cover.

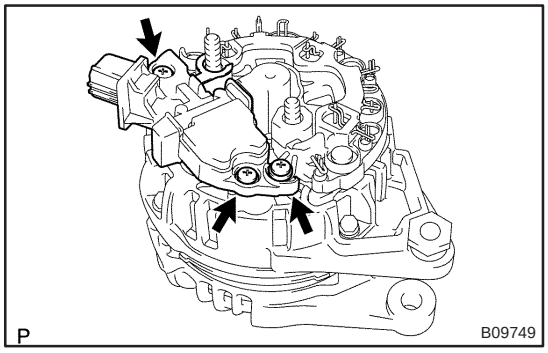

2. REMOVE REGULATOR SUB–ASSY GENERATOR W/BRUSH

(a) Remove the 3 screws and the regulator sub–assy generator w/ brush.

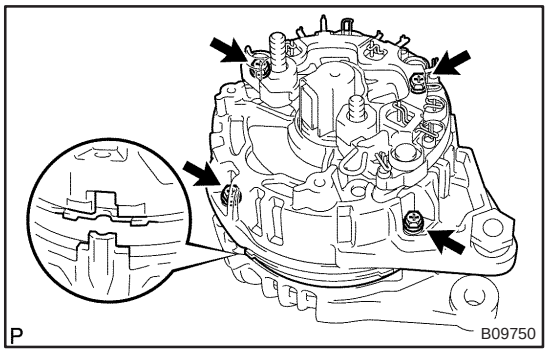

3. REMOVE STATOR SUB–ASSY GENERATOR W/RECTIFIRE

(a) Remove the 4 bolts.

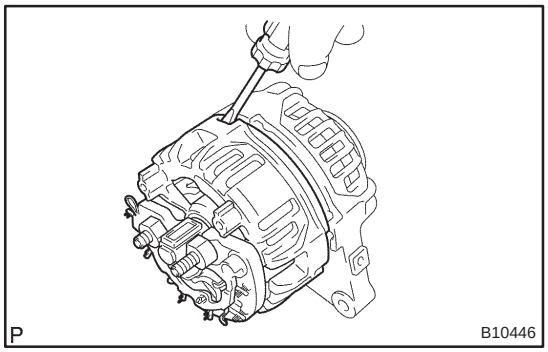

(b) Using a screwdriver, pry out the stator sub–assy generator w/rectifire.

4. REMOVE BEARING SET GENERATOR

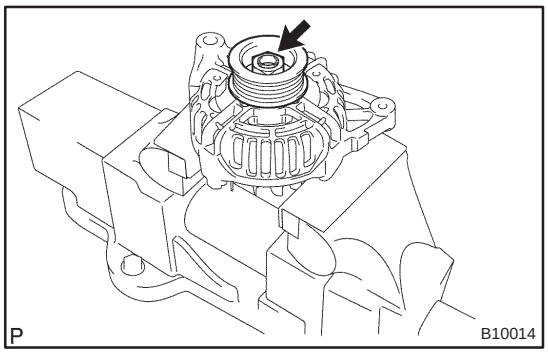

5. REMOVE PULLEY SET GENERATOR

(a) Clamp the swivel arm in a vise.

NOTICE:

Be careful not to damage the fan.

(b) Using an impact wrench or internal serration on rotor shaft end together with a torque wrench,remove the nut and spring washer, then detach the pulley.

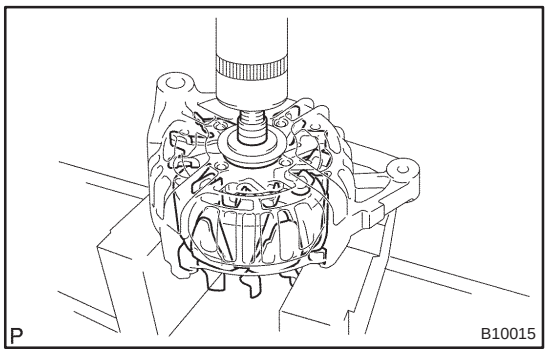

6. REMOVE GENERATOR ROTOR ASSY

(a) Using a press, press out the generator rotor assy and spacer ring.

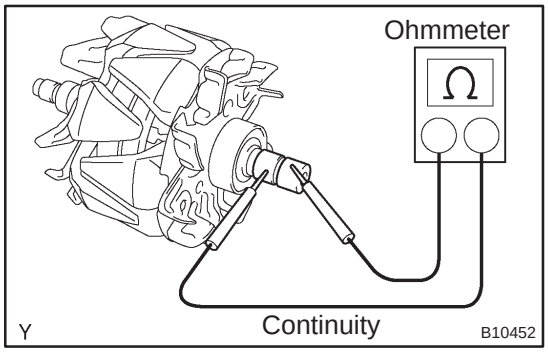

7. INSPECT GENERATOR ROTOR ASSY

(a) Inspect the generator rotor assy for open circuit.

(1) Using an ohmmeter, check that there is continuity between the slip rings.

Standard resistance: 2.27 to 2.53 Ω at 20°C (68°F)

If there is no continuity, replace the generator rotor assy.

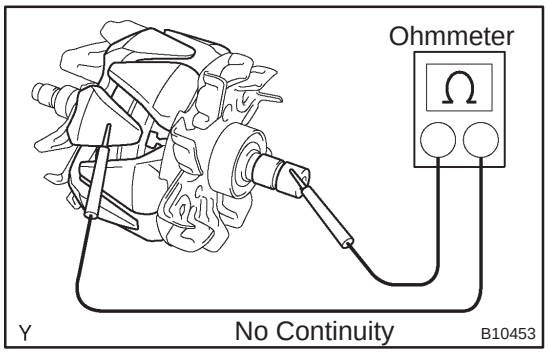

(b) Inspect the generator rotor assy for ground.

(1) Using an ohmmeter, check that there is no continuity between the slip ring and the generator rotor assy.

If there is continuity, replace the generator rotor assy.

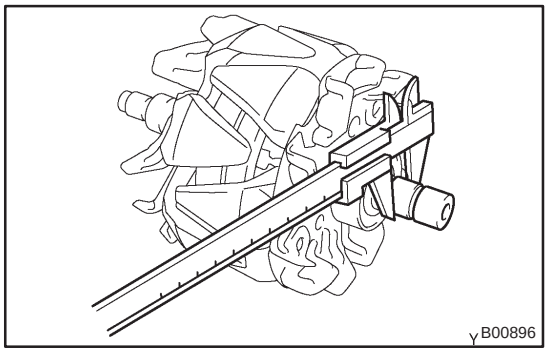

(c) Inspect the slip rings.

(1) Check that the slip rings are not rough or scored.

If rough or scored, replace the generator rotor assy.

(2) Using vernier calipers, measure the slip ring diameter.

Standard diameter: 15.3 to 15.5 mm (0.602 to 0.610 in.)
Minimum diameter: 14.3 mm (0.561 in.)

If the diameter is less than minimum, replace the generator rotor assy.

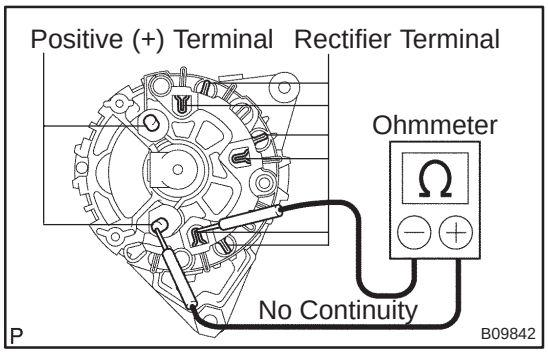

8. INSPECT STATOR SUB–ASSY GENERATOR W/RECTIFIRE

(a) Inspect the positive (+) rectifier.

(1) Using an ohmmeter, connect one tester probe to the positive (+) terminal and the other to each rectifier terminal.

(2) Reverse the polarity of the tester probes and repeat step (1).

(3) Check that one shows continuity and the other shows no continuity.

If result is not as specified, replace the stator sub–assy generator w/ rectifire.

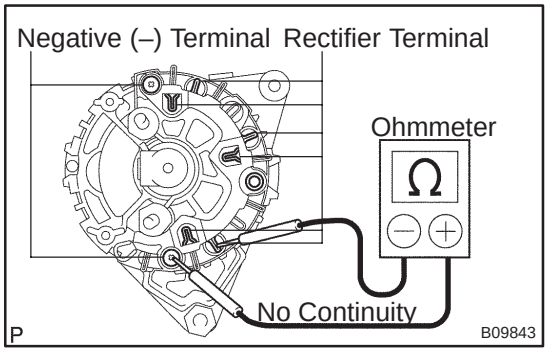

(b) Inspect the negative (–) rectifier.

(1) Using an ohmmeter, connect one tester probe to each negative (–) terminal and the other to each rectifier terminal.

(2) Reverse the polarity of the tester probes and repeat step (1).

(3) Check that one shows continuity and the other shows no continuity.

If result is not as specified replace the stator sub–assy generator w/ rectifire.

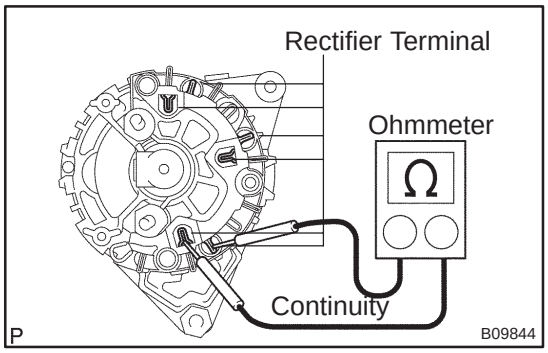

(c) Inspect the stator for open circuit.

Using an ohmmeter, check that there is continuity between the rectifier terminals.

If there is no continuity, replace the stator sub–assy generator w/ rectifire.

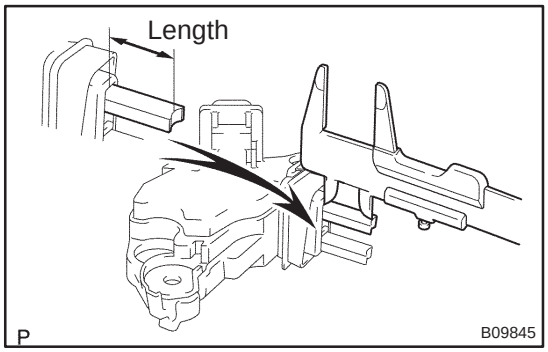

9. INSPECT BRUSH

(a) Using vernier calipers, measure the brush length.
Standard exposed length:
11.0 to 13.6 mm (0.433 to 0.535 in.)
Minimum exposed length: 1.5 mm (0.059 in.)

If the expose length is less than minimum, replace the voltage regulator and the brush assembly.

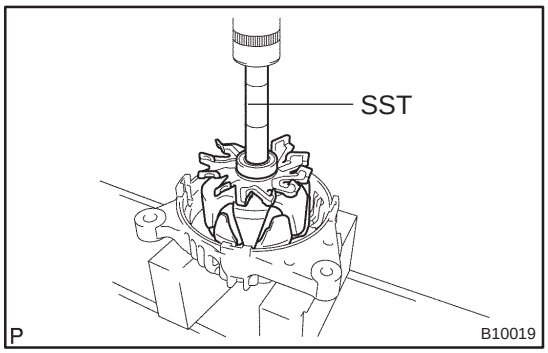

10. INSTALL GENERATOR ROTOR ASSY

(a) Using SST and a press, press in the generator rotor assy.
SST 09285–76010

NOTICE:
Avoid misalignment during pressing

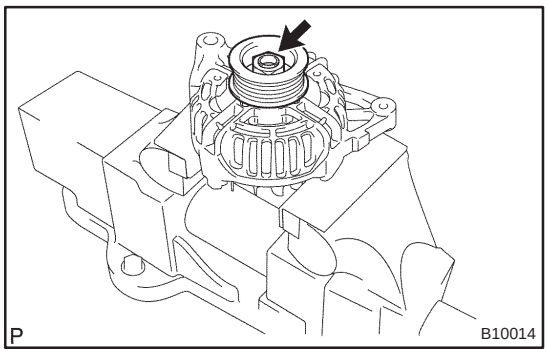

11. INSTALL PULLEY SET GENERATOR

(a) Clamp the rotor in a soft jaw vise.
(b) Install the pulley with the spring washer and nut.
Torque: 65 N·m (663 kgf·cm, 48 ft·lbf)

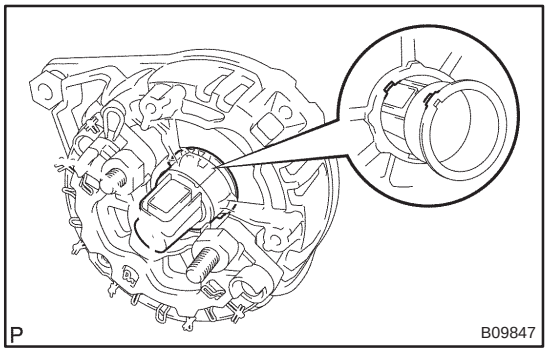

12. INSTALL BEARING SET GENERATOR

(a) Insert the fitting ring into in the position shown in the illustration.
(b) Align the key of the fitting ring with the keyway of the stator sub–assy generator w/ rectifire.
(c) Install the bearing.

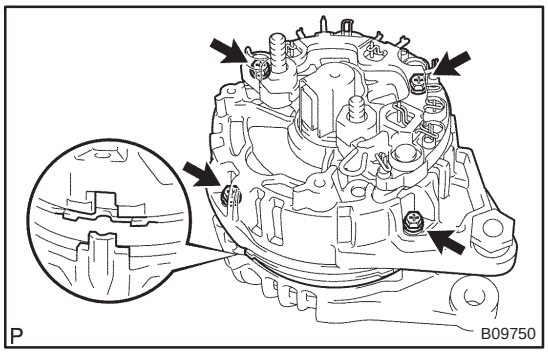

13. INSTALL STATOR SUB–ASSY GENERATOR W/RECTIFIRE

(a) Align the key of the drive end frame with the keyway of the stator sub–assy generator w/ rectifire.
(b) Install the stator sub–assy generator w/ rectifire with the 4 bolts.
Torque: 3.5 N·m (36 kgf·cm, 31 in.·lbf)

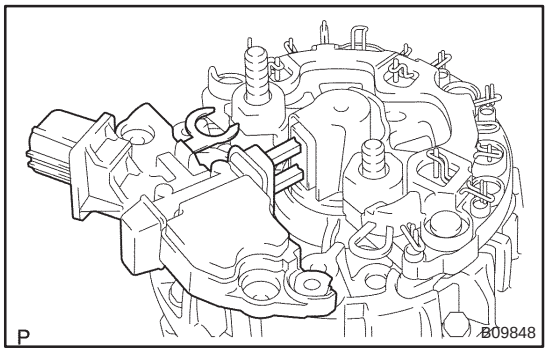

14. INSTALL REGULATOR SUB–ASSY GENERATOR W/BRUSH

(a) Attach the brushes and the terminals to the rectifier end frame of the regulator sub–assy generator w/ brush.

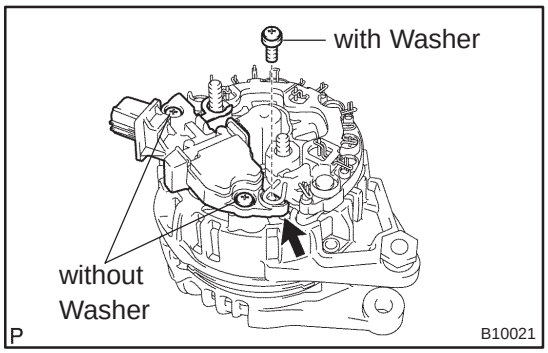

(b) Install the regulator sub–assy generator w/ brush with the 3 screws.

HINT:

Install the screw with the plate washer to the position shown in the illustration.

Torque:
2.2 N·m (22 kgf·cm, 19 in.·lbf) for without washer
1.2 N·m (12 kgf·cm, 11 in.·lbf) for with washer

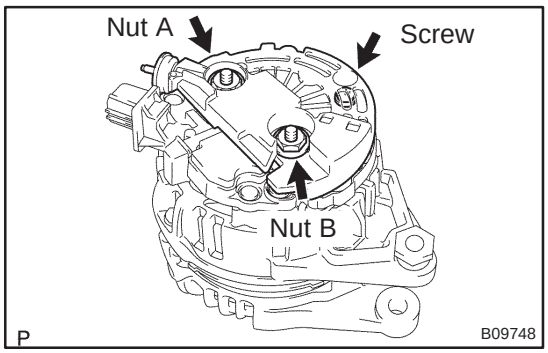

15. INSTALL GENERATOR REAR END COVER

(a) Install the generator rear end cover with the 2 nuts and the screw.

Torque:
19.5 N·m (199 kgf·cm, 14 ft·lbf) for nut A
12 N·m (122 kgf·cm, 9 ft·lbf) for nut B
2.4 N·m (24 kgf·cm, 21 in.·lbf) for screw

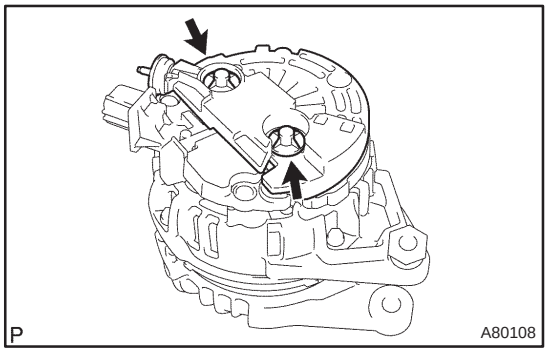

(b) Install the 2 terminal covers by turning them clockwise.

HOW TO USE THIS MANUAL TRANSAXLE REPAIR MANUAL

010BW–02

GENERAL INFORMATION

1. GENERAL DESCRIPTION

(a) This manual is made in accordance with SAE J2008.

(b) Generally repair operations can be separated in the following 3 main processes:
1. Diagnosis
2. Removing and Installing, Replacing, Disassembling, Installing and Checking, Adjusting
3. Final Inspection

(c) This manual explains ”Removing and Installing, Replacing, Disassembling, Installing and Checking, Adjusting”, but ”Final Inspection” is omitted.

(d) The following essential operations are not written in this manual, however these operations must be done in the practical situation.
(1) Operation with a jack or lift
(2) Cleaning of a removed part when necessary
(3) Visual check

2. INDEX

(a) An alphabetical INDEX is provided as a section on the end of the book to guide you to the item to be repaired.

3. PREPARATION

(a) Use of special service tools (SST) and special service materials (SSM) may be required, depending on the repairing condition. Be sure to use SST and SSM when they are required and follow the working procedure properly. A list of SST and SSM is in the Preparation section of this manual.

4. REPAIR PROCEDURES

(a) Component drawing is placed as the section or title when necessary.

(b) Illustrations of the parts catalog are placed as the ”disassembled parts drawing” so that it enables you to understand the fitting condition of the components.

(c) Non–reusable parts, grease applied parts, precoated parts and tightening torque are specified in the components drawing.

Example:

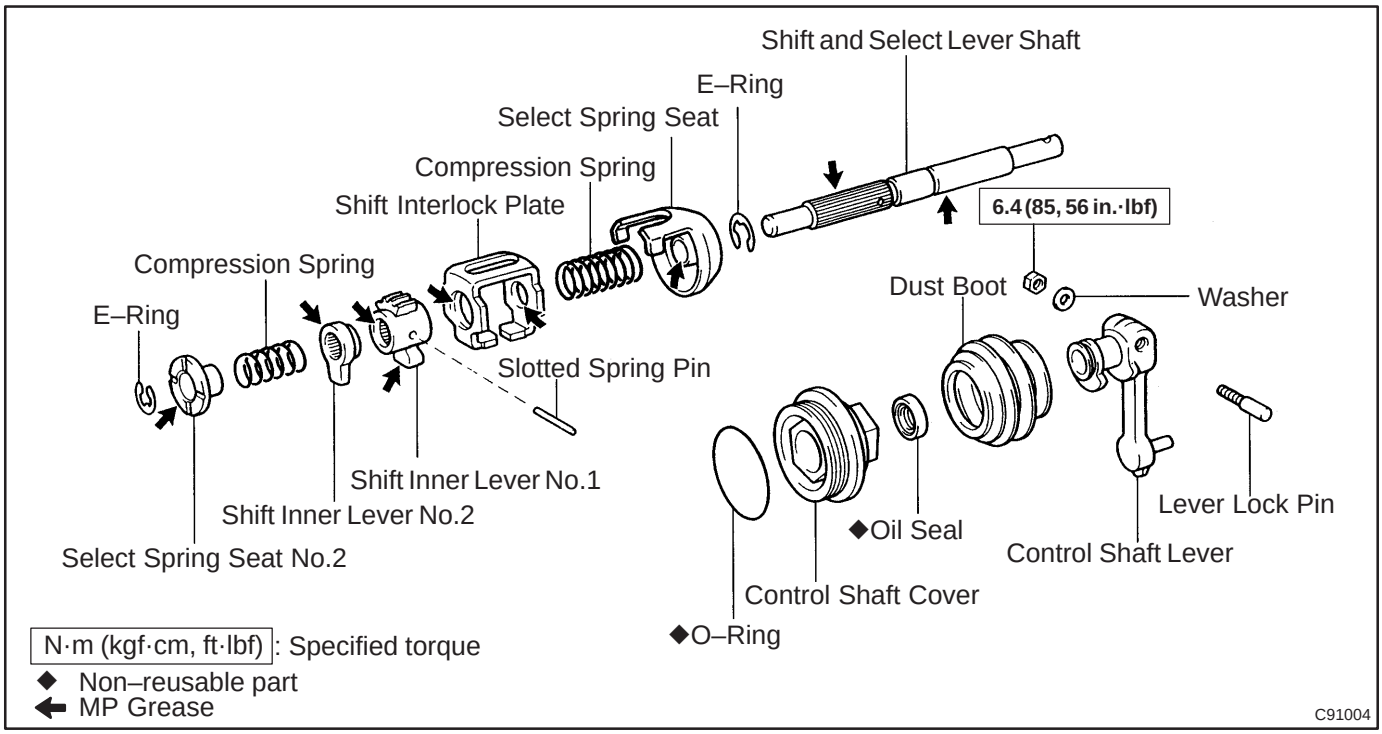

(d) Tightening torque, oil applying position, and non–reusable parts are described as important points in the procedure.

NOTICE:

There are cases where such information can only be indicated by an illustration. In that case, all the information such as torque, oil, etc. are described in the illustration.

(e) Installing procedure of operation items is performed in the reverse order of the removing, and only the important points are described.

(f) Only items with points are described in the procedure, and the operational portion and content are placed using an illustration. In the explanations, details of the operational method, standard value and notice are placed.

(g) There may be a case where the illustrations of similar models are used. In that case the details may be different from the actual vehicle.

(h) The procedures are presented in a step–by–step format:

(1) The illustration shows what to do and where to do it.

(2) The task heading tells what to do.

(3) The detailed text tells how to perform the task and gives other information such as specifications and warnings.

Example:

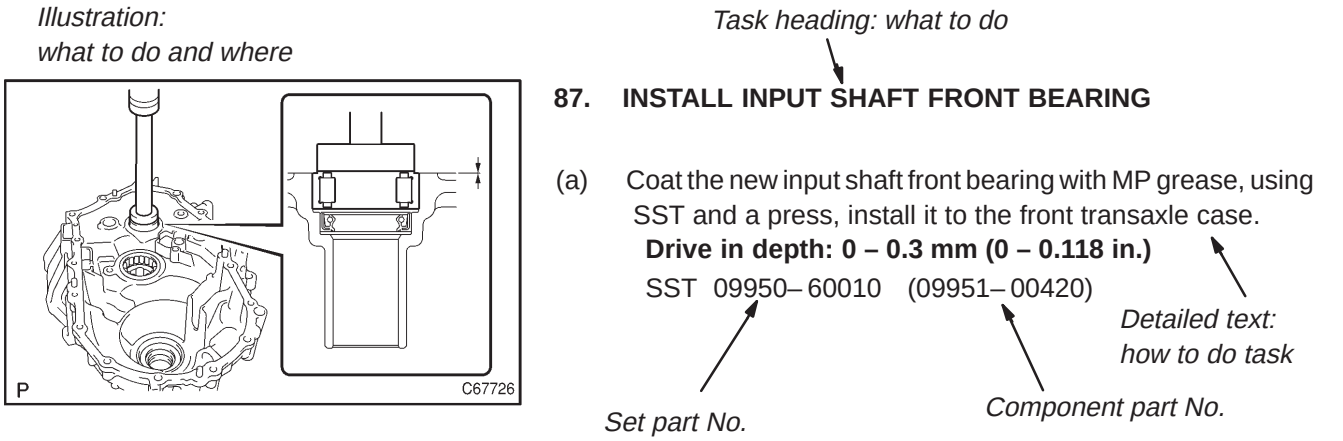

HINT:

This format provides an experienced technician with a FAST TRACK to the necessary information. The task heading can be read at a glance when necessary, and the text below provides detailed information. Important specifications and warnings always stand out in bold type.

5. SERVICE SPECIFICATIONS

(a) Specifications are presented in bold type throughout the manual. You never have to leave the procedure to look up your specifications. The specifications are also found in the Service Specifications section for a quick reference.

6. TERMS DEFINITION

CAUTION	Indicate the possibility of injury to you or other people.
NOTICE	Indicate the possibility of damage to the components being repaired.
HINT	Provide additional information to help you perform the repair efficiently.

7. SI UNIT

(a) The UNITS given in this manual are primarily expressed according to the SI UNIT (International System of Unit), and alternately expressed in the metric system and in the English System.

Example:

Torque: 30 N·m (310 kgf·cm, 22 ft·lbf)

REPAIR INSTRUCTION FOR MANUAL TRANSAXLE REPAIR MANUAL

010BX–02

PRECAUTION

1. BASIC REPAIR HINT

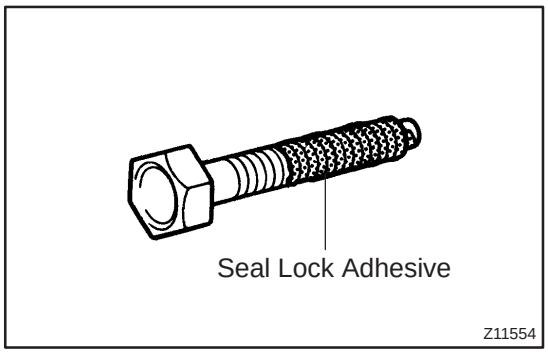

(a) PRECOATED PARTS

(1) Precoated parts are bolts, nuts, etc. that are coated with a seal lock adhesive at the factory.

(2) If a precoated part is retightened, loosened or caused to move in any way, it must be recoated with the specified adhesive.

(3) When reusing precoated parts, clean off the old adhesive and dry with compressed air. Then apply the specified seal lock adhesive to the bolt, nut or threads.

NOTICE:

Do the torque checking with the lower limit value of the torque tolerance.

(4) Depending on the seal lock agent to apply, there may be a case where it is necessary to leave it for a specified time until it hardens.

(b) GASKETS

When necessary, use a sealer on gaskets to prevent leaks.

(c) BOLTS, NUTS AND SCREWS

Carefully observe all specifications for bolt tightening torques. Always use a torque wrench.

TERMS FOR MANUAL TRANSAXLE REPAIR MANUAL

010BY–02

ABBREVIATIONS USED IN THIS MANUAL

Abbreviations	Meaning
E/G	Engine
FIPG	Formed In Plce Gasket
MAX	Maximum
MIN	Minimum
MP	Multipurpose
M/T	Manual Transmission
N	Neutral
No.	Number
RH	Right–Hand
SPEC	Specification
SSM	Special Service Materials
SST	Special service Tools
STD	Standard
T/A	Transaxle
T/M	Transmission
TMC	TOYOTA Motor Coporation
w/	With
w/o	Without
1st	First
2nd	Second

010BZ–02

GLOSSARY OF SAE AND TOYOTA TERMS

This glossary lists all SAE–J1930 terms and abbreviations used in this manual in compliance with SAE recommendations, as well as their Toyota equivalents.

SAE ABBREVIATIONS	SAE TERMS	TOYOTA TERMS ( )—ABBREVIATIONS
A/C	Air Conditioning	Air Conditioner
ACL	Air Cleaner	Air Cleaner
AIR	Secondary Air Injection	Air Injection (AI)
AP	Accelerator Pedal	–
B+	Battery Positive Voltage	+B, Battery Voltage
BARO	Barometric Pressure	–
CAC	Charge Air Cooler	Inter cooler
CARB	Carburetor	Carburetor
CFI	Continuous Fuel Injection	–
CKP	Crankshaft Position	Crank Angle
CL	Closed Loop	Closed Loop
CMP	Camshaft position	Cam Angle
CPP	Clutch Pedal Position	–
CTOX	Continuous Trap Oxidizer	–
CTP	Closed Throttle Potion	–
DFI	Direct Fuel Injection (Diesel)	Direct Injection (DI)
DI	Distributor Ignition	–
DLC1 DLC2 DLC3	Data Link Connector 1 Data Link Connector 2 Data Link Connector 3	1: Check Connector 2: Total Diagnosis Communication Link (TDCL) 3: OBD II Diagnostic Connector
DTC	Diagnostic Trouble Code	Diagnostic Code
DTM	Diagnostic Test Mode	–
ECL	Engine Control Level	–
ECM	Engine Control Module	Engine ECU (Electronic Control Unit)
ECT	Engine Control Temperature	Coolant Temperature, Water Temperature (THW)
EEPROM	Electrically Erasable Programmable Read Only memory	Electrically Erasable Programmable Read Only memory (EEPROM), Erasable Programmable Read Only memory (EPROM)
EFE	Early Fuel Evaporation	Cold Mixture Heater (CMH), Heat Control Valve (HCV)
EGR	Exhaust Gas Recirculation	Exhaust Gas Recirculation (EGR)
EI	Electronic Ignition	Distributorless Ignition (DI)
EM	Engine Modification	Engine Modification (EM)
EPROM	Erasable Programmable Read Only Memory	Programmable Read Only Memory (PROM)
EVAP	Evaporative Emission	Evaporative Emission Control (EVAP)
FC	Fan Control	–
FEEPROM	Flash Electrically Erasable Programmable Read Only Memory	–
FEPROM	Flash Erasable Programmable Read Only Memory	–
FF	Flexible Fuel	–
FP	Fuel Pump	Fuel Pump
GEN	Generator	Alternator
GND	Ground	Ground (GND)
HO2S	Heated Oxygen Sensor	Heated Oxygen Sensor (HO2S)
IAC	Idol Air Control	Idol Speed Control (ISC)
IAT	Intake Air Temperature	Intake or Inlet Air Temperature
ICM	Ignition Control Module	–
IFI	Indirect Fuel Injection	Indirect Injection
IFS	Inertia Fuel–Shutoff	–

ISC	Idle Speed Control	–
KS	Knock Sensor	Knock Sensor
MAF	Mass Air Flow	Air Flow Meter
MAP	Manifold Absolute Pressure	Manifold Pressure Intake Vacuum
MC	Mixture Control	Electric Bleed Air Control Valve (EBCV) Mixture Control Valve (MCV) Electric Air Control Valve (EACV)
MDP	Manifold Differential Pressure	–
MFI	Multiport Fuel Injection	Electronic Fuel Injection (EFI)
MIL	Malfunction Indicator Lamp	Check Engine Light
MST	Manifold Surface temperature	–
MVZ	Manifold Vacuum Zone	–
NVRAM	Non–Volatile Random Access Memory	–
O2S	Oxygen Sensor	Oxygen Sensor, O_2 Sensor (O_{2S})
OBD	On–Board Diagnostic	On–Board Diagnostic (OBD)
OC	Oxidation Catalytic Converter	Oxidation Catalyst Converter (OC), CC_0
OP	Open Loop	Open Loop
PAIR	Pulsed Secondary Air Injection	Air Suction (AS)
PCM	Powertrain Control Module	–
PNP	Park/Neutral Position	–
PROM	Programmable Read Only Memory	–
PSP	Power Steering Pressure	–
PTOX	Periodic Trap Oxidizer	Diesel Particulate Filter (DPF) Diesel Particulate Trap (DPT)
RAM	Random Access Memory	Random Access Memory (RAM)
RM	Relay Module	–
ROM	Read Only Memory	Read Only Memory (ROM)
RPM	Engine Speed	Engine Speed
SC	Supercharger	Supercharger
SCB	Supercharger Bypass	–
SFI	Sequential Multiport Fuel Injection	Electronic Fuel Injection (EFI), Sequential Injection
SPL	Smoke Puff Limiter	–
SRI	Service Reminder Indicator	–
SRT	System Readiness Test	–
ST	Scan Tool	–
TB	Throttle Body	Throttle Body
TBI	Throttle Body Fuel Injection	Single Point Injection Central Fuel Injection (Ci)
TC	Turbocharger	Turbocharger
TCC	Torque Converter Clutch	Torque Converter
TCM	Transmission Control Module	Transmission ECU (Electronic Control Unit)
TP	Throttle Position	Throttle Position
TR	Transmission Range	–
TVV	Thermal Vacuum Valve	Bimetallic Vacuum Switching Valve (BVSV) Thermostatic Vacuum Switching Valve (TVSV)
TWC	Three–Way Catalytic Converter	Three–Way Catalytic (TWC) CC_{RO}
TWC+OC	Three–Way + Oxidation Catalytic Converter	CC_R + CC_O
VAF	Volume Air Flow	Air Flow Meter
VR	Voltage Regulator	Voltage Regulator
VSS	Vehicle Speed Sensor	Vehicle Speed Sensor (Read Switch Type)
WOT	Wide Open Throttle	Full Throttle

WU–OC	Warm Up Oxidation Catalytic Converter	–
WU–TWC	Warm Up Three–Way Catalytic Converter	Manifold Converter
3GR	Third Gear	–
4GR	Fourth Gear	–

MANUAL TRANSMISSION/TRANSAXLE

022GG–01

PREPARATION

SST

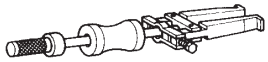	09308–00010	Oil Seal Puller	MANUAL TRANSAXLE ASSY(C250)
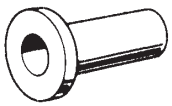	09309–36010	Transmission Rear Bearing Replacer	MANUAL TRANSAXLE ASSY(C250)
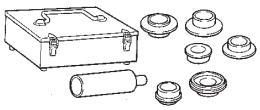	09316–60011	Transmission & Transfer Bearing Replacer	MANUAL TRANSAXLE ASSY(C250) INPUT SHAFT ASSY(C250) OUTPUT SHAFT ASSY(C250)
	(09316–00011)	Replacer Pipe	MANUAL TRANSAXLE ASSY(C250)
	(09316–00021)	Replacer ”A”	INPUT SHAFT ASSY(C250)
	(09316–00031)	Replacer ”B”	OUTPUT SHAFT ASSY(C250)
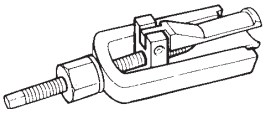	09319–60020	Output Shaft Needle Roller Bearing Remover	MANUAL TRANSAXLE ASSY(C250)
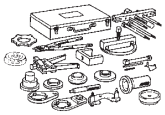	09350–32014	TOYOTA Automatic Transmission Tool Set	MANUAL TRANSAXLE ASSY(C250)
	(09351–32120)	Overdrive Bearing Replacer	MANUAL TRANSAXLE ASSY(C250)
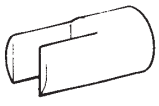	09564–32011	Differential Preload Adaptor	MANUAL TRANSAXLE ASSY(C250)
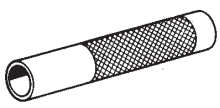	09612–22011	Tilt Handle Bearing Replacer	OUTPUT SHAFT ASSY(C250)
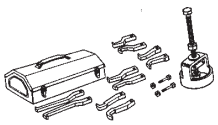	09612–65014	Steering Worm Bearing Puller	MANUAL TRANSAXLE ASSY(C250)

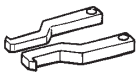	(09612–01040)	Claw ”D”	MANUAL TRANSAXLE ASSY(C250)
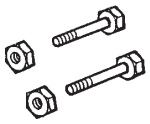	(09612–01050)	Hanger Pin with Nut	MANUAL TRANSAXLE ASSY(C250)
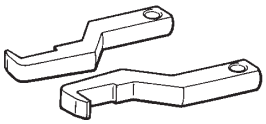	(09612–01060)	Claw ”E”	MANUAL TRANSAXLE ASSY(C250)
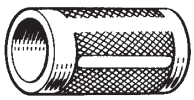	09636–20010	Upper Ball Joint Dust Cover Replacer	MANUAL TRANSAXLE ASSY(C250)
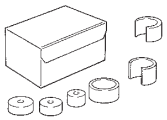	09710–20011	Front Suspension Bushing Tool Set	MANUAL TRANSAXLE ASSY(C250)
	(09710–06071)	Replacer	MANUAL TRANSAXLE ASSY(C250)
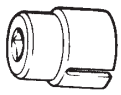	09817–16011	Back–up Light Switch Tool	MANUAL TRANSAXLE ASSY(C250)
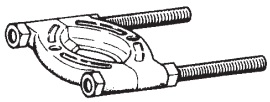	09950–00020	Bearing Remover	MANUAL TRANSAXLE ASSY(C250) INPUT SHAFT ASSY(C250) OUTPUT SHAFT ASSY(C250)
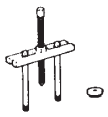	09950–00030	Bearing Remover Attachment	MANUAL TRANSAXLE ASSY(C250)
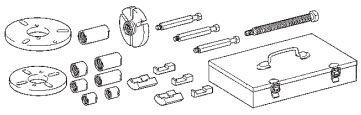	09950–30012	Puller A Set	MANUAL TRANSAXLE ASSY(C250)
	(09951–03010)	Upper Plate	MANUAL TRANSAXLE ASSY(C250)
	(09953–03010)	Center Bolt	MANUAL TRANSAXLE ASSY(C250)
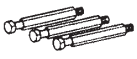	(09954–03010)	Arm	MANUAL TRANSAXLE ASSY(C250)

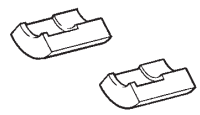	(09955–03011)	Claw No.1	MANUAL TRANSAXLE ASSY(C250)
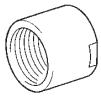	(09956–03020)	Adapter 18	MANUAL TRANSAXLE ASSY(C250)
	(09957–04010)	Attachment	MANUAL TRANSAXLE ASSY(C250)
	09950–40011	Puller B Set	MANUAL TRANSAXLE ASSY(C250)
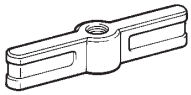	(09951–04010)	Hanger 150	MANUAL TRANSAXLE ASSY(C250)
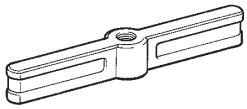	(09951–04020)	Hanger 200	MANUAL TRANSAXLE ASSY(C250)
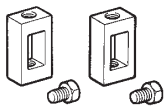	(09952–04010)	Slide Arm	MANUAL TRANSAXLE ASSY(C250)
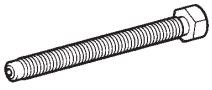	(09953–04020)	Center Bolt 150	MANUAL TRANSAXLE ASSY(C250)
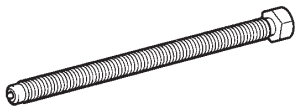	(09953–04030)	Center Bolt 200	MANUAL TRANSAXLE ASSY(C250)
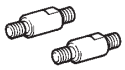	(09954–04010)	Arm 25	MANUAL TRANSAXLE ASSY(C250)
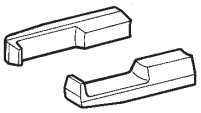	(09955–04061)	Claw No.6	MANUAL TRANSAXLE ASSY(C250)
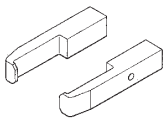	(09955–04071)	Claw No.7	MANUAL TRANSAXLE ASSY(C250)
	(09957–04010)	Attachment	MANUAL TRANSAXLE ASSY(C250)

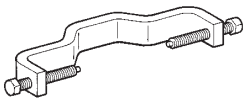	(09958–04011)	Holder	MANUAL TRANSAXLE ASSY(C250)
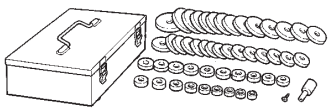	09950–60010	Replacer Set	MANUAL TRANSAXLE ASSY(C250) SHIFT & SELECT LEVER SHAFT ASSY(C250)
	(09951–00190)	Replacer 19	MANUAL TRANSAXLE ASSY(C250)
	(09951–00200)	Replacer 20	MANUAL TRANSAXLE ASSY(C250)
	(09951–00220)	Replacer 22	MANUAL TRANSAXLE ASSY(C250) SHIFT & SELECT LEVER SHAFT ASSY(C250)
	(09951–00360)	Replacer 36	MANUAL TRANSAXLE ASSY(C250)
	(09951–00370)	Replacer 37	MANUAL TRANSAXLE ASSY(C250)
	(09951–00420)	Replacer 42	MANUAL TRANSAXLE ASSY(C250)
	(09951–00530)	Replacer 53	MANUAL TRANSAXLE ASSY(C250)
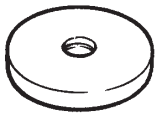	(09951–00550)	Replacer 55	MANUAL TRANSAXLE ASSY(C250)
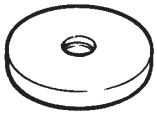	(09951–00600)	Replacer 60	MANUAL TRANSAXLE ASSY(C250)
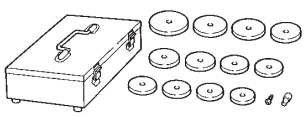	09950–60020	Replacer Set No.2	MANUAL TRANSAXLE ASSY(C250)
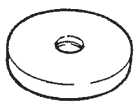	(09951–00680)	Replacer 68	MANUAL TRANSAXLE ASSY(C250)

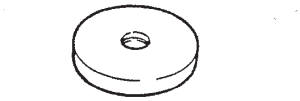	(09951–00710)	Replacer 71	MANUAL TRANSAXLE ASSY(C250)
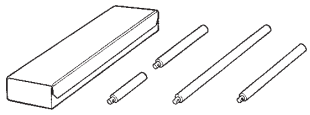	09950–70010	Handle Set	MANUAL TRANSAXLE ASSY(C250) SHIFT & SELECT LEVER SHAFT ASSY(C250)
	(09951–07100)	Handle 100	MANUAL TRANSAXLE ASSY(C250) SHIFT & SELECT LEVER SHAFT ASSY(C250)
	(09951–07150)	Handle 150	MANUAL TRANSAXLE ASSY(C250)

Recomended Tools

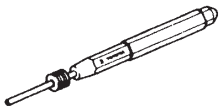	09031–00030	Pin Punch	DIFFERENTIAL CASE ASSY(C250)
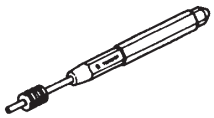	09031–00040	Pin Punch .	MANUAL TRANSAXLE ASSY(C250) SHIFT & SELECT LEVER SHAFT ASSY(C250)
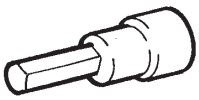	(09043–20060)	Socket Hexagon Wrench 6	MANUAL TRANSAXLE ASSY(C250)
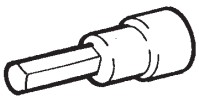	(09043–20060)	Socket Hexagon Wrench 6	MANUAL TRANSAXLE ASSY(C250)
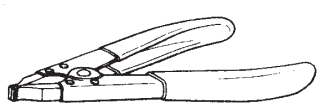	09905–00012	Snap Ring No.1 Expander	MANUAL TRANSAXLE ASSY(C250)

Equipment

V–block	
Cylinder gauge	
Dial indicator or dial indicator with magnetic base	
Feeler gauge	
Micrometer	
Torque wrench	
Vernier calipers	
Chisel	
Plastic hammer	
Slide calipers	
Press	
Heater	

SSM (Special Service Materials)

08826–00090	"Seal Packing 1281," THREE BOND 1281 or equivalent (FIPG)	
08833–00080	Adhesive 1344 THREE BOND 1344 LOCTITE 242 or equivalent	

STANDARD BOLT

HOW TO DETERMINE BOLT STRENGTH

030LK–04

Bolt Type				Class
Hexagon Head Bolt		Stud Bolt	Weld Bolt	
Normal Recess Bolt	Deep Recess Bolt			
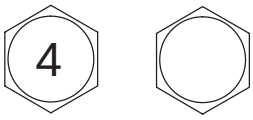 No Mark	 No Mark	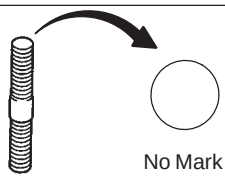 No Mark	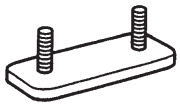	4T
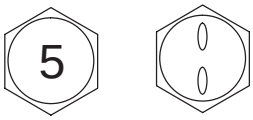				5T
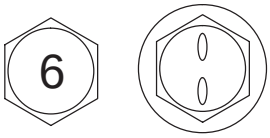 w/ Washer	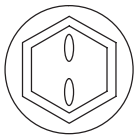 w/ Washer			6T
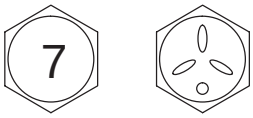	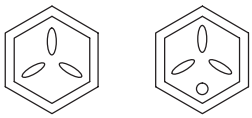			7T
				8T
				9T
	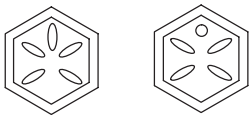			10T
	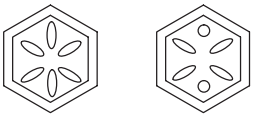			11T

B06431

030LL–04

SPECIFIED TORQUE FOR STANDARD BOLTS

Class	Diameter mm	Pitch mm	Specified torque					
			Hexagon head bolt			Hexagon flange bolt		
			N·m	kgf·cm	ft·lbf	N·m	kgf·cm	ft·lbf
4T	6	1	5	55	48 in.·lbf	6	60	52 in.·lbf
	8	1.25	12.5	130	9	14	145	10
	10	1.25	26	260	19	29	290	21
	12	1.25	47	480	35	53	540	39
	14	1.5	74	760	55	84	850	61
	16	1.5	115	1,150	83	–	–	–
5T	6	1	6.5	65	56 in.·lbf	7.5	75	65 in.·lbf
	8	1.25	15.5	160	12	17.5	175	13
	10	1.25	32	330	24	36	360	26
	12	1.25	59	600	43	65	670	48
	14	1.5	91	930	67	100	1,050	76
	16	1.5	140	1,400	101	–	–	–
6T	6	1	8	80	69 in.·lbf	9	90	78 in.·lbf
	8	1.25	19	195	14	21	210	15
	10	1.25	39	400	29	44	440	32
	12	1.25	71	730	53	80	810	59
	14	1.5	110	1,100	80	125	1,250	90
	16	1.5	170	1,750	127	–	–	–
7T	6	1	10.5	110	8	12	120	9
	8	1.25	25	260	19	28	290	21
	10	1.25	52	530	38	58	590	43
	12	1.25	95	970	70	105	1,050	76
	14	1.5	145	1,500	108	165	1,700	123
	16	1.5	230	2,300	166	–	–	–
8T	8	1.25	29	300	22	33	330	24
	10	1.25	61	620	45	68	690	50
	12	1.25	110	1,100	80	120	1,250	90
9T	8	1.25	34	340	25	37	380	27
	10	1.25	70	710	51	78	790	57
	12	1.25	125	1,300	94	140	1,450	105
10T	8	1.25	38	390	28	42	430	31
	10	1.25	78	800	58	88	890	64
	12	1.25	140	1,450	105	155	1,600	116
11T	8	1.25	42	430	31	47	480	35
	10	1.25	87	890	64	97	990	72
	12	1.25	155	1,600	116	175	1,800	130

030LM–04

HOW TO DETERMINE NUT STRENGTH

Nut Type			Class
Present Standard Hexagon Nut	Old Standard Hexagon Nut		
	Cold Forging Nut	Cutting Processed Nut	
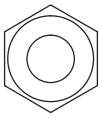 No Mark			4N
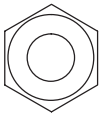 No Mark (w/ Washer)	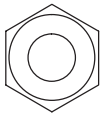 No Mark (w/ Washer)	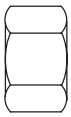 No Mark	5N (4T)
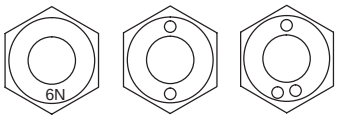 6N			6N
	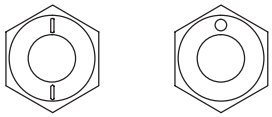	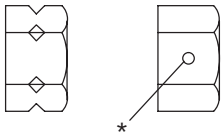 *	7N (5T)
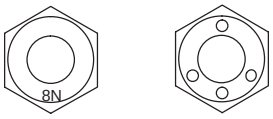 8N			8N
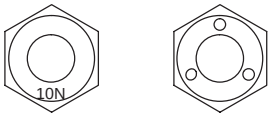 10N	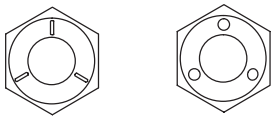	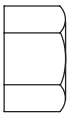 No Mark	10N (7T)
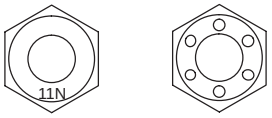 11N			11N
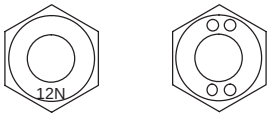 12N			12N

*: Nut with 1 or more marks on one side surface of the nut.

B06432

HINT:

Use the nut with the same number of the nut strength classification or the greater than the bolt strength classification number when tightening parts with a bolt and nut.

Example: Bolt = 4T

Nut = 4N or more

MANUAL TRANSMISSION / TRANSAXLE

031EO–01

SERVICE DATA

Manual transaxle assy		
5th gear thrust clearance	STD Max.	0.10 – 0.57 mm (0.0039 – 0.02244 in.) 0.57 mm (0.02244 in.)
5th gear radial clearance	STD Max	0.015 – 0.058 mm (0.0006 – 0.0023 in.) 0.058 mm (0.0023 in.)
Synchro nizer ring No.3 clearance	STD Min	0.75 – 1.65 mm (0.0295 – 0.0649 in.) 0.75 mm (0.0295 in.)
Transmission hub sleeve No.3 clearance		0.3 – 0.5 mm (0.0012 – 0.0020 in.)
5th gear clearance		29.915 – 29.931 mm (1.1778 – 1.1783 in.)
Reverse idler gear sub–assy	STD MAX	18.040 – 18.058 mm (0.7102 – 0.7109 in.) 18.058 mm (0.7109 in.)
Reverse idler gear shaft outer diameter	STD Min	17.966 – 17.984 mm (0.7073 – 0.7080 in.) 17.966 mm (0.7073 in.)
Front transaxle cace oil seal drive in depth		15.6 – 16.0 mm (0.6141 – 0.6299 in.)
Input shaft front bearing drive in depth		0 – 0.3 mm (0 – 0.0118 in.)
Shift & select lever shaft needle roller bearing drive in depth		0 – 0.5 mm (0 – 0.020 in.)
Differential side bearing preload		0.78 – 1.57 N·m (7.95 – 16.0 kgf·cm, 6.9 – 13.89 in.·lbf)
Front differential case rear plate washer thickness	AA BB CC DD EE FF GG HH JJ KK LL MM NN PP QQ RR SS TT UU	2.10 mm (0.0827 in.) 2.15 mm (0.0846 in.) 2.20 mm (0.0866 in.) 2.25 mm (0.0886 in.) 2.30 mm (0.0906 in.) 2.35 mm (0.0925 in.) 2.40 mm (0.0945 in.) 2.45 mm (0.0965 in.) 2.50 mm (0.0984 in.) 2.55 mm (0.1004 in.) 2.60 mm (0.1024 in.) 2.65 mm (0.1043 in.) 2.70 mm (0.1063 in.) 2.75 mm (0.1083 in.) 2.80 mm (0.1102 in.) 2.85 mm (0.1122 in.) 2.90 mm (0.1161 in.) 2.95 mm (0.1161 in.) 3.00 mm (0.1181 in.)
Transmission case oil seal drive in depth		9.6 – 10.2 mm (0.3779 – 0.4015 in.)
Transaxle case oil seai drive in depth		1.6 – 2.2 mm (0.0629 – 0.0866 in.)
Reverse restrict pin assy drive in depth		15.5 – 16.5 mm (0.6102 – 0.6496 in.)
Transmission clutch hub No.3 shaft snap ring clearance		0.1 mm or less
Transmission clutch hub No.3 shaft snap ring thickness	A B C D E F G	2.25 mm (0.0886 in.) 2.31 mm (0.0909 in.) 2.37 mm (0.0933 in.) 2.43 mm (0.0957 in.) 2.49 mm (0.0980 in.) 2.55 mm (0.1004 in.) 2.61 mm (0.1028 in.)

Input shaft assy		
4th gear thrust clearance	STD Max	0.1 – 0.55 mm (0.0039 – 0.0217 in.) 0.55 mm (0.0217 in.)
3rd gear thrust clearance	STD Max	0.1 – 0.35 mm (0.0039 – 0.0138 in.) 0.35 mm (0.0138 in.)
4th gear radial clearance	STD Max	0.015 – 0.058 mm (0.0006 – 0.0023 in.) 0.058 mm (0.0023 in.)

3rd gear radial clearance	STD	0.015 – 0.058 mm (0.0006 – 0.0023 in.)
	Max	0.058 mm (0.0023 in.)
Input shaft runout	Min	0.015 mm(0.00059 in.)
Input shaft outer diameter	STD: Part A	24.885 – 24.900 mm (0.9797 – 0.9803 in.)
	Part B	28.991 – 29.006 mm (1.1413 – 1.1419 in.)
	Part C	30.985 – 31.000 mm (1.2198 – 1.2204 in.)
	Part D	24.985 – 25.000 mm (0.9836 – 0.9842 in.)
	Min: Part A	24.885 mm (0.9797 in.)
	Part B	28.991 mm (1.1413 in.)
	Part C	30.985 mm (1.2198 in.)
	Part D	24.985 mm (0.9836 in.)
4th gear clearance	STD	34.015 – 34.031 mm (1.3391 – 1.3398 in.)
	Max	34.031 mm (1.3398 in.)
3rd gear clearance	STD	36.015 – 36.031 mm (1.4179 – 1.4185 in.)
	Max	36.031 mm (1.4185 in.)
Synchronizer ring No.2 (For 4th gear) clearance		0.75 – 1.65 mm (0.0295 – 0.0649 in.)
Synchronizer ring No.2 (For 3rd gear) clearance		0.75 – 1.65 mm (0.0295 – 0.0649 in.)
Transmission hub sleeve No.2 clearance		0.15 – 0.35 mm (0.0059 – 0.0137 in.)
Clutch hub No.2 setting shaft snap ring clearance		0.1 mm (0.0039 in.) or less.
Clutch hub No.2 setting shaft snap ring thickness	0	2.30 mm (0.0906 in.)
	1	2.36 mm (0.0929 in.)
	2	2.42 mm (0.0953 in.)
	3	2.48 mm (0.0976 in.)
	4	2.54 mm (0.1000 in.)
	5	2.60 mm (0.1024 in.)
Input shaft rear bearing shaft snap ring clearance		0.1 mm (0.0039 in.) or less
Input shaft rear bearing shaft snap ring thickness	A	2.29 mm (0.0902 in.)
	B	2.35 mm (0.0925 in.)
	C	2.41 mm (0.0949 in.)
	D	2.47 mm (0.0972 in.)
	E	2.53 mm (0.0996 in.)
	F	2.59 mm (0.1020 in.)

Output shaft assy		
1st gear thrust clearance	STD	0.10 – 0.40 mm (0.0039 – 0.0157 in.)
	Max	0.40 mm (0.0157 in.)
2nd gear thrust clearance	STD	0.1 – 0.45 mm (0.0039 – 0.0177 in.)
	Max	0.45 mm (0.0177 in.)
1st gear radial clearance	STD	0.015 – 0.058 mm (0.0006 – 0.0023 in.)
	Max	0.058 mm (0.0023 in.)
2nd gear radial clearance	STD	0.015 – 0.058 mm (0.0006 – 0.0023 in.)
	Max	0.058 mm (0.0023 in.)
Input shaft runout	Min	0.015 mm (0.0006 in.)
Input shaft outer diameter	Part A	31.985 –32.000 mm (1.2592 – 1.2598 in.)
	Part B	37.985 –38.000 mm (1.4955 – 1.2598 in.)
	Part C	32.985 –33.000 mm (1.2986 – 1.2992 in.)
2nd gear clearance	STD	38.015 –38.013 mm (1.4966 – 1.4972 in.)
	Max	38.031 mm (1.4972 in.)
1st gear clearance	STD	44.015 – 44.031 mm (1.7328 – 1.7335 in.)
	Max	44.031 mm (1.7335 in.)
1st gear thrust washer thickness	STD	5.975 – 6.025 mm (0.2352 – 0.2372 in.)
	Min	5.975 mm (0.2352 in.)
Synchronizer ring No.1 (for 2nd gear)clearance	STD	0.70 – 1.30 mm (0.0276 – 0.0512 in.)
	Min	0.70 mm (0.0276in.)
Synchronizer ring No.1 (for 1st gear)clearance	STD	0.75 – 1.65 mm (0.0295 – 6.8898 in.)
	Min	0.75 mm (0.0295 in.)
reverse gear and shift fork clearance	Max	0.35 mm (0.014 in.)

Clutch hub No.1 shaft snap ring clearance		0.1 mm (0.039 in.) or less
Clutch hub No.1 shaft snap ring thickness	A	2.50 mm (0.0984 in.)
	B	2.56 mm (0.1008 in.)
	C	2.62 mm (0.1031 in.)
	D	2.68 mm (0.1055 in.)
	E	2.74 mm (0.1079 in.)
	F	2.80 mm (0.1102 in.)

Sift & Select lever shaft assy		
Contorol shaft cover oil seal drive in depth		0.2 – 1.2 mm (0.079 – 0.0472 in.)
Sift lever slotted pin (for select inner lever) drivein depth		3.0 – 4.0 mm (0.1181 – 0.1575 in)
Sift lever slotted pin (for sift lever inner No.1) drivein depth		–0.5 – 0.5 mm (–0.0197 – 0.0197 in)
Sift lever slotted pin (for sift lever inner No.2) drivein depth		–0.5 – 0.5 mm (–0.0197 – 0.0197 in)

Differential case assy		
Front differential side gear backlash		0.05 – 0.20 mm (0.0020 – 0.0079 in.)
Front differential pinion thrust washer	Min	0.94 mm (0.03701 in.)
Front differential pinion shaft No.1 outer diameter	Min	16.982 mm (0.6685 in.)

031EP–01

TORQUE SPECIFICATION

Part Tightened		N·m	kgf·cm	ft·lbf
Bearing lock plate × Front transaxle case		11	115	8.3
Oil receiver pipe No.1 × Manual transmission case		17	175	13
Oil receiver pipe No.2 × Manual transmission case		17	175	13
Reverse restrict pin plug × Manual transmission case		13	130	9.3
manual transaxle case receiver × Manual transmission case		11	8.3	8.3
Gear shift fork No.1 × Gear shift fork shaft No.1		16	160	12
Gear shift fork No.2 × Gear shift fork shaft No.2		16	160	12
Gear shift head No.1 × Gear shift fork shaft No.2		16	160	12
Reverse shift arm bracket assy × Front transaxle case		17	175	13
Manual transmission case × Front transaxle case	bolt	29	300	22
	nut	29	300	22
Reverse idler gear shaft bolt × Manual transmission case		29	300	22
Lock ball assy No.2 × Manual transmission case		39	400	29
Shift detent ball × Manual transmission case		25	250	18
Shift detent ball × Front transaxle case		25	250	18
Bearing retainer rear × Manual transmission case		27	280	20
Gear shift fork No.3 × Gear shift fork shaft		16	160	12
Manual transmission output shaft rear set nut × output shaft		118	1200	87
Manual transmission case cover × Manual transmission case		18	185	14
Control shaft cover × Manual transmission case		20	200	14
Control shift lever lock nut		12	122	8.9
Lock ball assy No.1 × Manual transmission case		29	300	22
Selecting bell crank assy × Manual transmission case		25	250	18
Floor shift control lever housing support bracket × Front transaxle case		18	184	13
Back–up lamp switch assy × Manual transmission case		40	410	30
Speedometer driven hole cover sub–assy × Manual transaxle		11	115	8.3
Release fork support × Front transaxle case		37	375	25
Manual transmission filler plug × Manual transaxle		39	400	29
Drain plug sub–assy × Manual transmission case		39	400	29
Selecting bell crank No.2 plate washer × Selecting bell crank		12	120	9
Front defferential ring gear × Front differential case		77	790	57

MANUAL TRANSAXLE ASSY (C250)

410DC–01

COMPONENTS

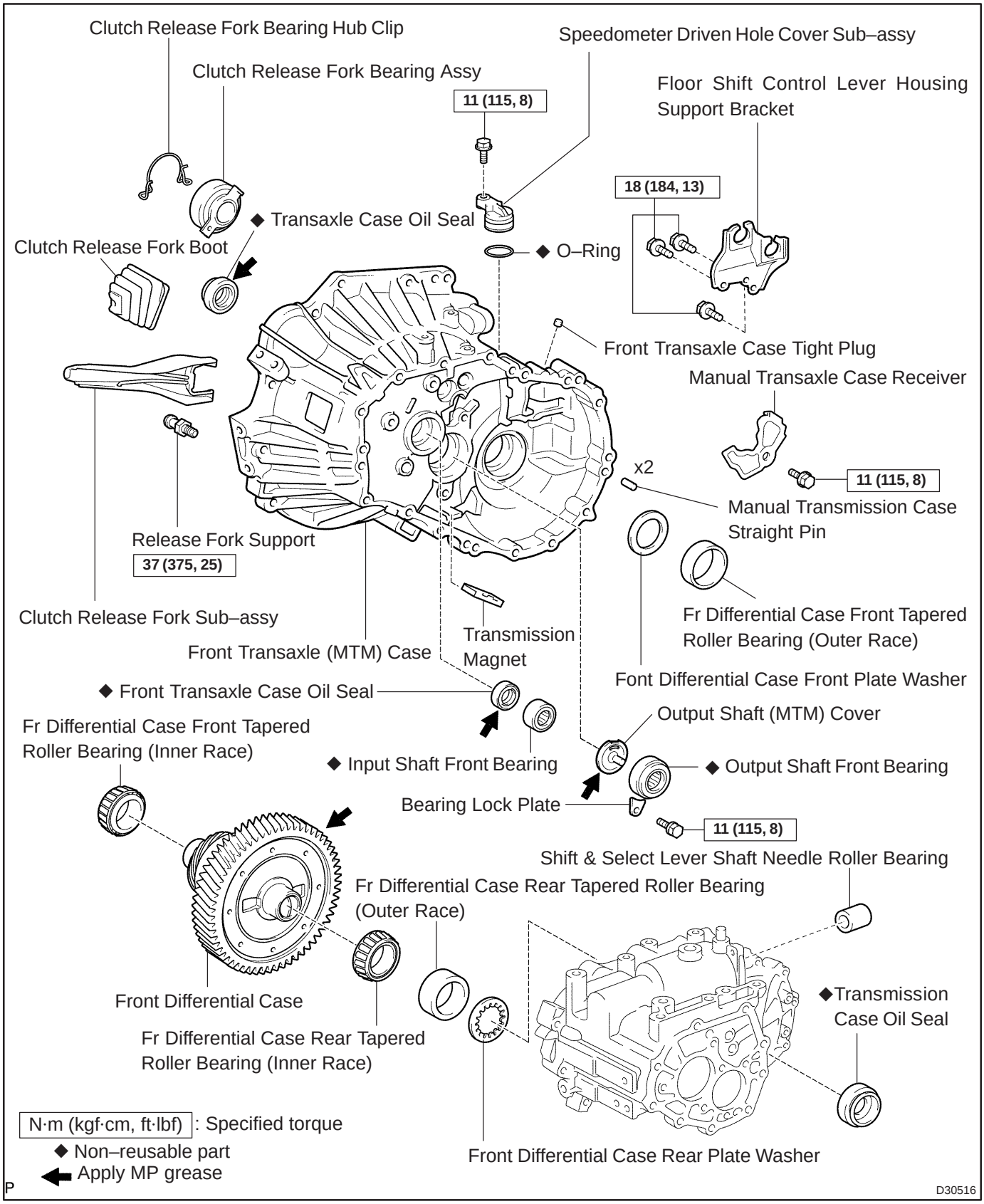

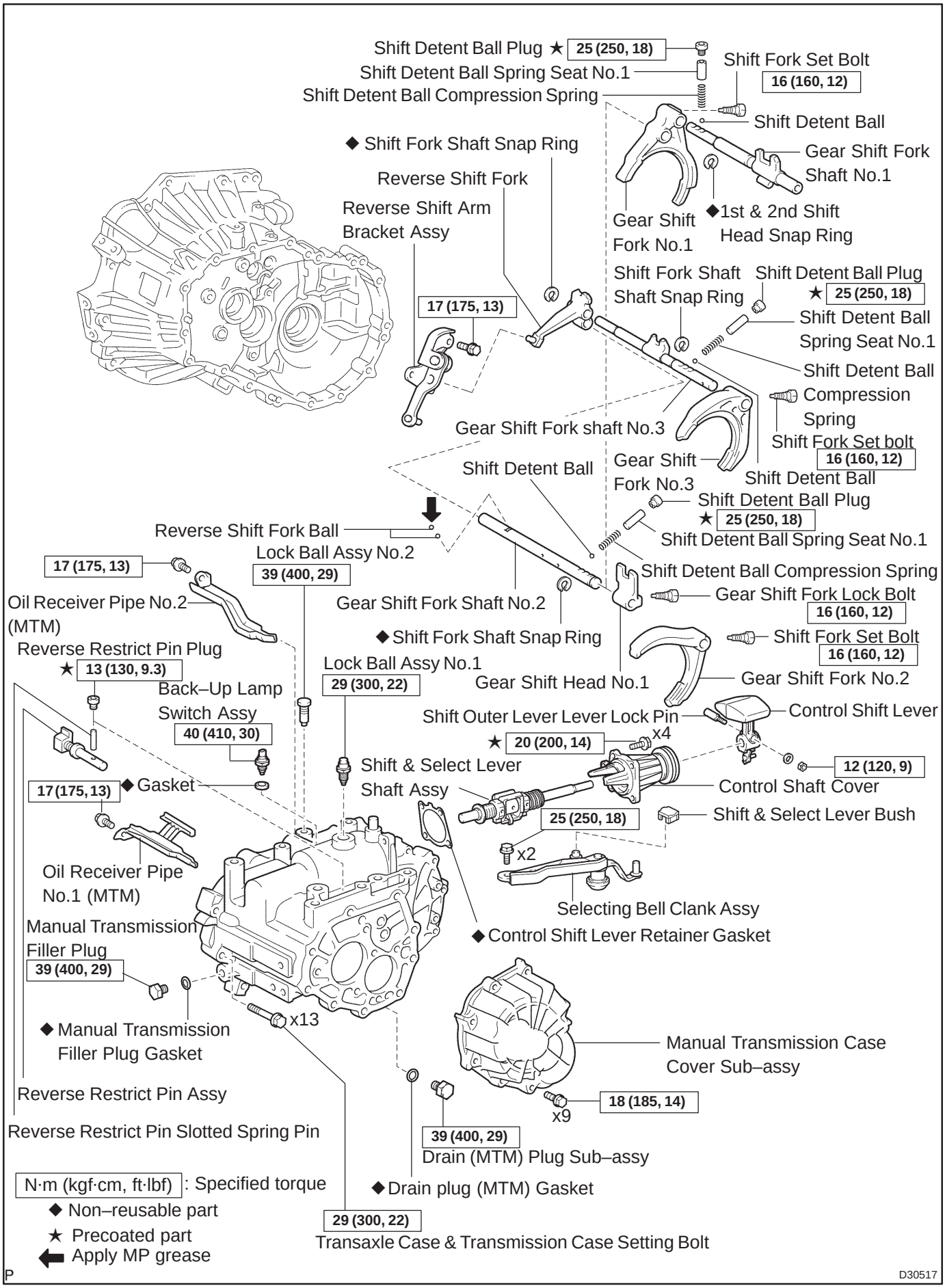
Shift Detent Ball Plug ★ 25 (250, 18)
Shift Detent Ball Spring Seat No.1
Shift Detent Ball Compression Spring
Shift Fork Set Bolt
16 (160, 12)
Shift Detent Ball
◆ Shift Fork Shaft Snap Ring
Reverse Shift Fork
Reverse Shift Arm Bracket Assy
Gear Shift Fork Shaft No.1
Gear Shift Fork No.1
◆1st & 2nd Shift Head Snap Ring
17 (175, 13)
Shift Fork Shaft Shaft Snap Ring
Shift Detent Ball Plug ★ 25 (250, 18)
Shift Detent Ball Spring Seat No.1
Shift Detent Ball Compression Spring
Gear Shift Fork shaft No.3
Shift Fork Set bolt 16 (160, 12)
Gear Shift Fork No.3
Shift Detent Ball
Shift Detent Ball Plug ★ 25 (250, 18)
Shift Detent Ball Spring Seat No.1
Shift Detent Ball Compression Spring
Reverse Shift Fork Ball
Lock Ball Assy No.2
17 (175, 13)
39 (400, 29)
Oil Receiver Pipe No.2 (MTM)
Gear Shift Fork Shaft No.2
Gear Shift Fork Lock Bolt 16 (160, 12)
◆ Shift Fork Shaft Snap Ring
Shift Fork Set Bolt 16 (160, 12)
Reverse Restrict Pin Plug ★ 13 (130, 9.3)
Lock Ball Assy No.1
29 (300, 22)
Gear Shift Head No.1
Gear Shift Fork No.2
Back–Up Lamp Switch Assy
40 (410, 30)
Shift Outer Lever Lever Lock Pin ★ 20 (200, 14) x4
Control Shift Lever
12 (120, 9)
17 (175, 13)
◆ Gasket
Shift & Select Lever Shaft Assy
Control Shaft Cover
25 (250, 18)
Shift & Select Lever Bush
x2
Oil Receiver Pipe No.1 (MTM)
Selecting Bell Clank Assy
Manual Transmission Filler Plug
39 (400, 29)
◆ Control Shift Lever Retainer Gasket
x13
◆ Manual Transmission Filler Plug Gasket
Manual Transmission Case Cover Sub–assy
Reverse Restrict Pin Assy
18 (185, 14)
x9
Reverse Restrict Pin Slotted Spring Pin
39 (400, 29)
Drain (MTM) Plug Sub–assy
N·m (kgf·cm, ft·lbf) : Specified torque
◆ Drain plug (MTM) Gasket
◆ Non–reusable part
★ Precoated part
29 (300, 22)
Transaxle Case & Transmission Case Setting Bolt
Apply MP grease
P
D30517

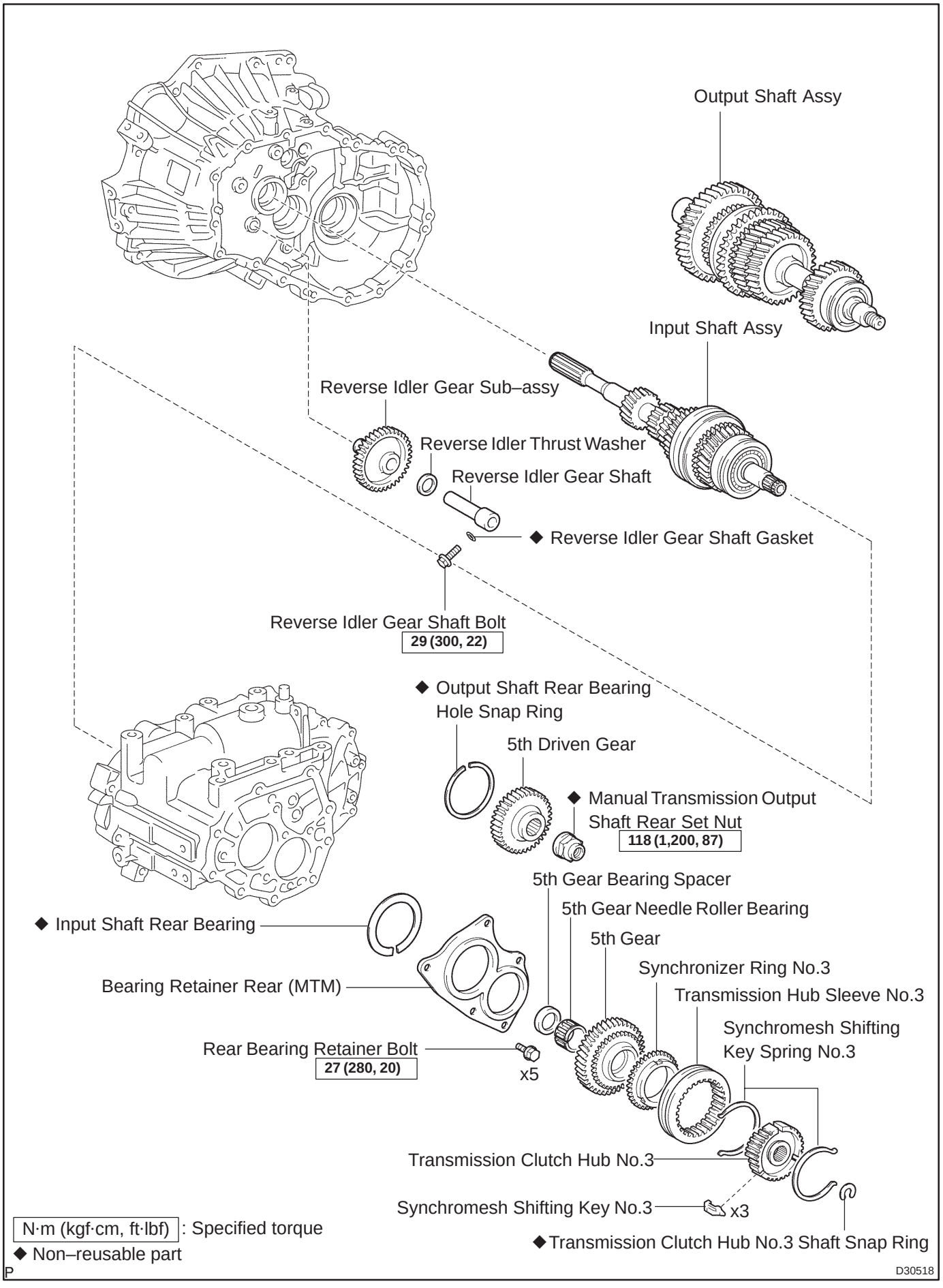
Output Shaft Assy
Input Shaft Assy
Reverse Idler Gear Sub–assy
Reverse Idler Thrust Washer
Reverse Idler Gear Shaft
◆ Reverse Idler Gear Shaft Gasket
Reverse Idler Gear Shaft Bolt
29 (300, 22)
◆ Output Shaft Rear Bearing Hole Snap Ring
5th Driven Gear
◆ Manual Transmission Output Shaft Rear Set Nut
118 (1,200, 87)
5th Gear Bearing Spacer
5th Gear Needle Roller Bearing
5th Gear
Synchronizer Ring No.3
Transmission Hub Sleeve No.3
Synchromesh Shifting Key Spring No.3
◆ Input Shaft Rear Bearing
Bearing Retainer Rear (MTM)
Rear Bearing Retainer Bolt
27 (280, 20)
x5
Transmission Clutch Hub No.3
Synchromesh Shifting Key No.3
x3
◆ Transmission Clutch Hub No.3 Shaft Snap Ring
N·m (kgf·cm, ft·lbf) : Specified torque
◆ Non–reusable part
P
D30518

OVERHAUL

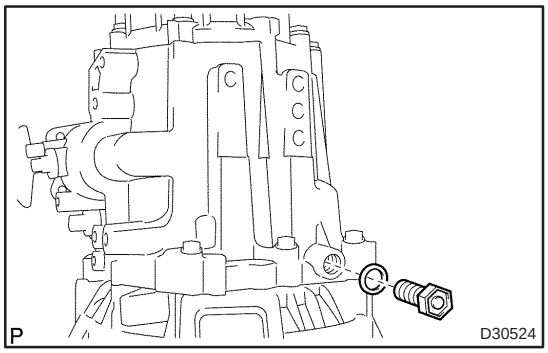

1. REMOVE MANUAL TRANSMISSION FILLER PLUG

(a) Remove the manual transmission filler plug and gasket from the manual transmission case.

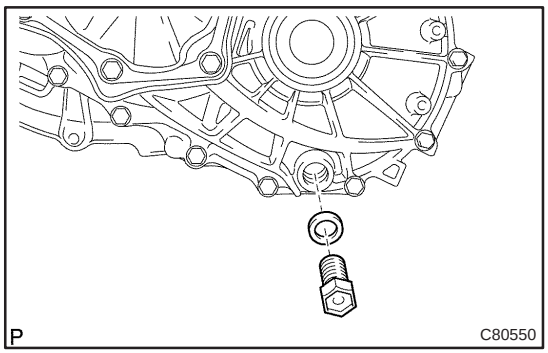

2. REMOVE DRAIN (MTM) PLUG SUB–ASSY

(a) Remove the drain plug and gasket from the manual transmission case.

3. REMOVE SPEEDOMETER DRIVEN HOLE COVER SUB–ASSY

(a) Remove the bolt and speedometer driven hole cover sub–assy.

(b) Remove the O–ring from the speedometer driven hole cover sub–assy.

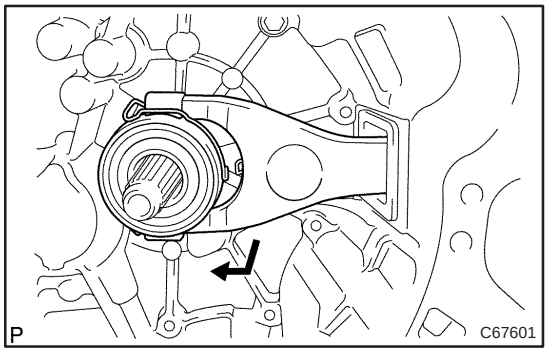

4. REMOVE CLUTCH RELEASE FORK SUB–ASSY

(a) Remove the clutch release fork sub–assy with clutch release bearing assy from the front transaxle case.

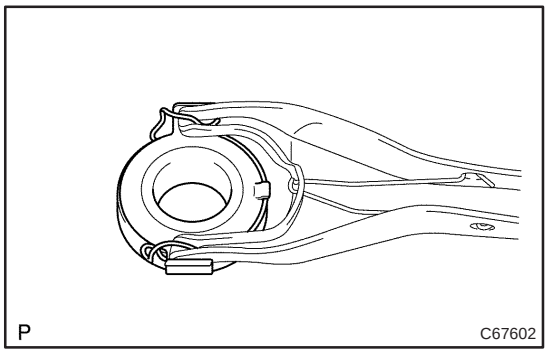

5. REMOVE CLUTCH RELEASE BEARING ASSY

(a) Remove the clutch release bearing clip and clutch release bearing assy from the clutch release fork sub–assy.

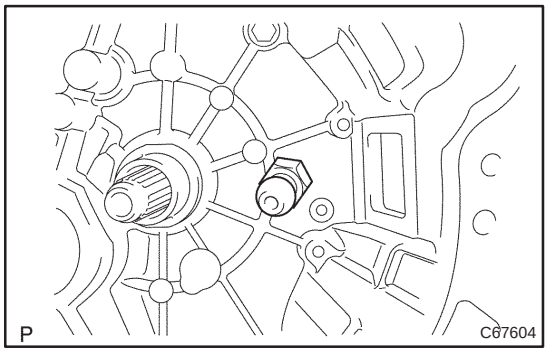

6. REMOVE RELEASE FORK SUPPORT

(a) Remove the clutch release fork support from the front transaxle case.

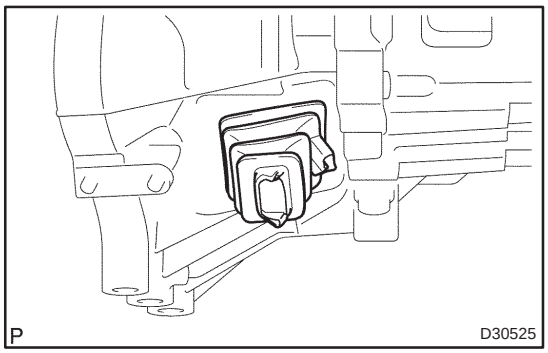

7. REMOVE CLUTCH RELEASE FORK BOOT

(a) Remove the clutch release fork boot from the front transaxle case.

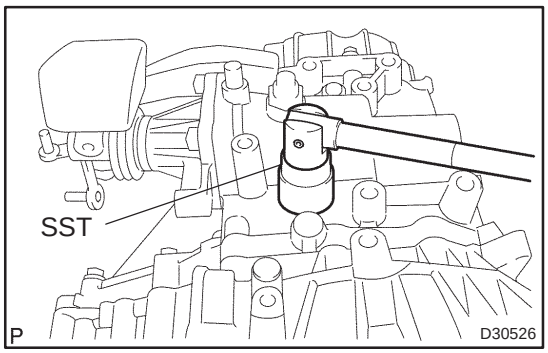

8. REMOVE BACK UP LAMP SWITCH ASSY

(a) Using SST, remove the back–up lamp switch assy and gasket from the manual transmission case.
SST 09817–16011

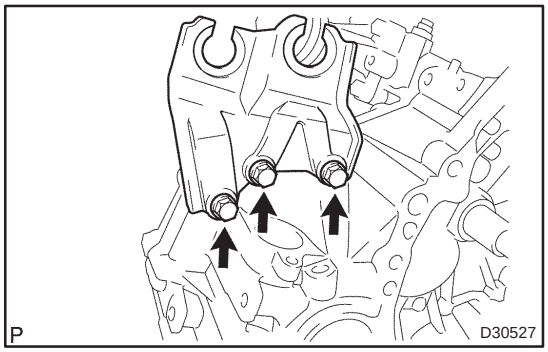

9. REMOVE FLOOR SHIFT CONTROL LEVER HOUSING SUPPORT BRACKET

(a) Remove the 3 bolts and control cable bracket from the front transaxle case.

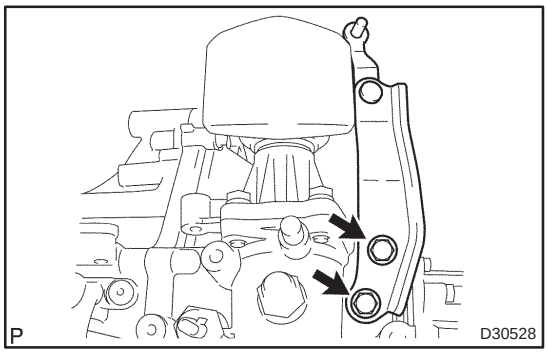

10. REMOVE SELECTING BELL CRANK ASSY

(a) Remove the 2 bolts and selecting bell crank assy from the manual transmission case.

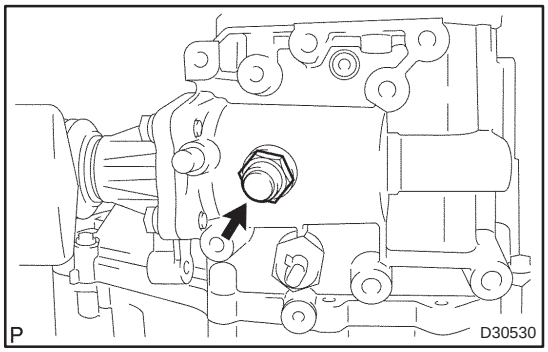

11. REMOVE LOCK BALL ASSY NO.1

(a) Remove the lock ball assy No.1 from the manual transmission case.

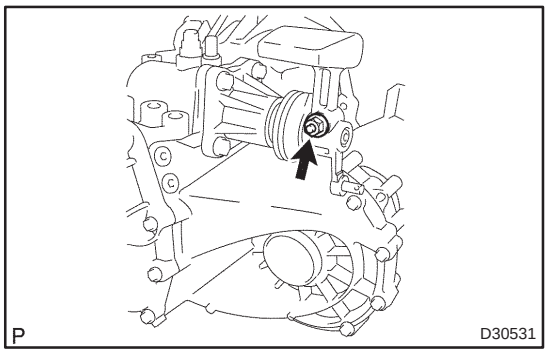

12. REMOVE CONTROL SHIFT LEVER

(a) Remove the nut and spring washer.

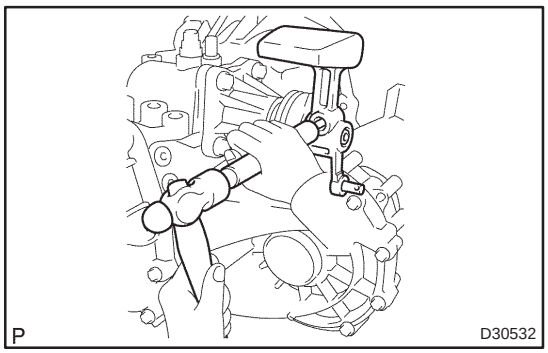

(b) Using a brass bar and a hammer, remove the shift outer lever lever lock pin.

(c) Remove the control shift lever.

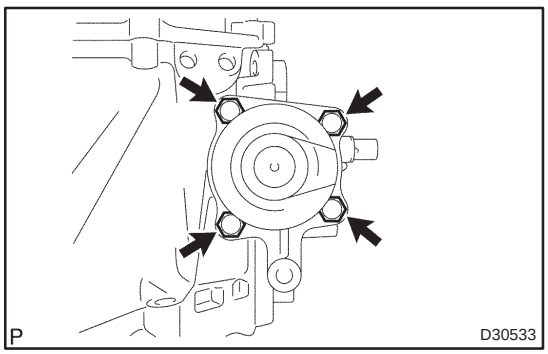

13. REMOVE CONTROL SHAFT COVER

(a) Remove the 4 bolts, control shaft cover and gasket from the manual transmission case.

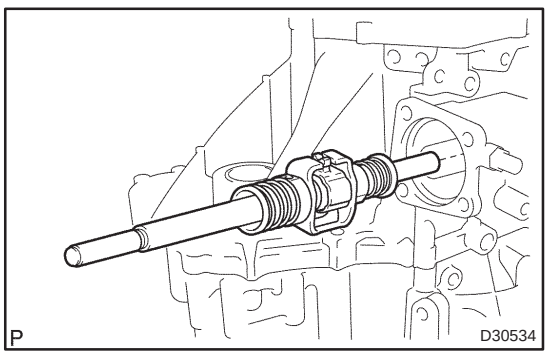

14. REMOVE SHIFT & SELECT LEVER SHAFT ASSY

(a) Remove the shift & select lever shaft assy from the manual transmission case.

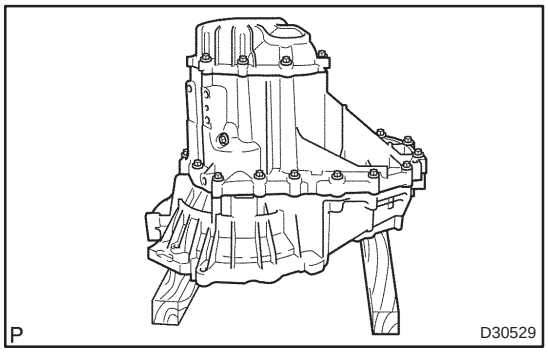

15. FIX MANUAL TRANSAXLE ASSY

(a) Using 2 wooden blocks, fixing the manual transaxle assy.

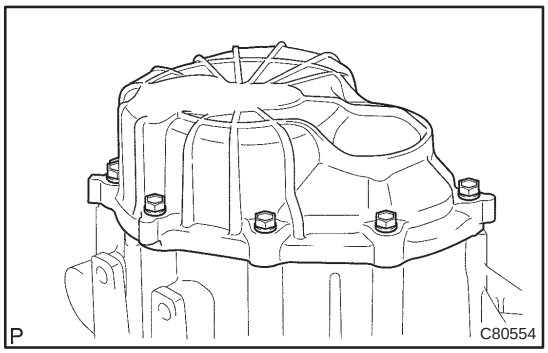

16. REMOVE MANUAL TRANSMISSION CASE COVER SUB–ASSY

(a) Remove the 9 bolts.

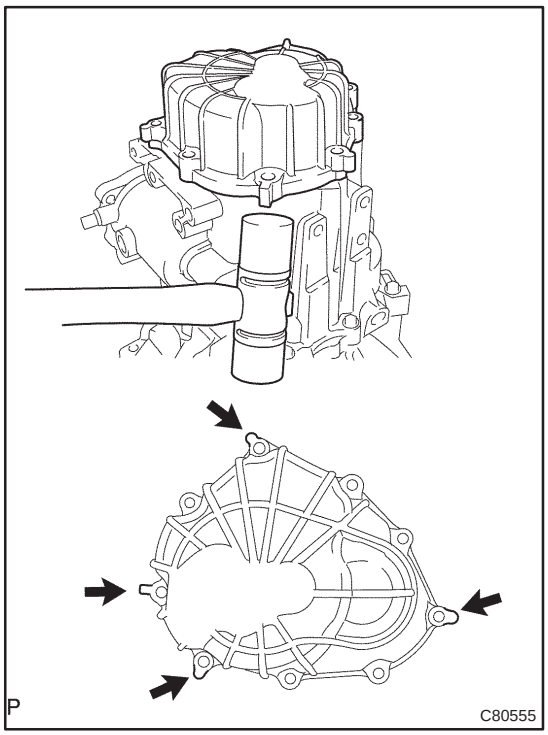

(b) Carefully tap the projection of the manual transmission case cover sub–assy with a hammer and remove it.

NOTICE:

Do not damage the manual transmission case sub–assy.

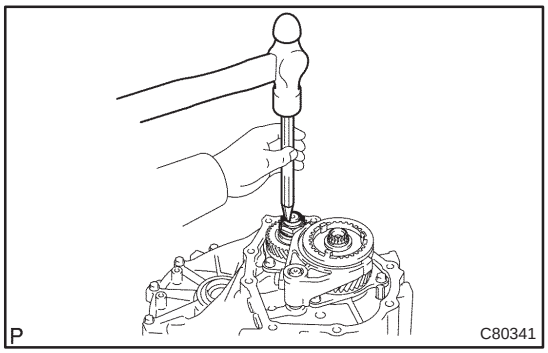

17. REMOVE MANUAL TRANSMISSION OUTPUT SHAFT REAR SET NUT

(a) Using a chisel and a hammer, loosen the staked part of the manual transmission output shaft rear set nut.

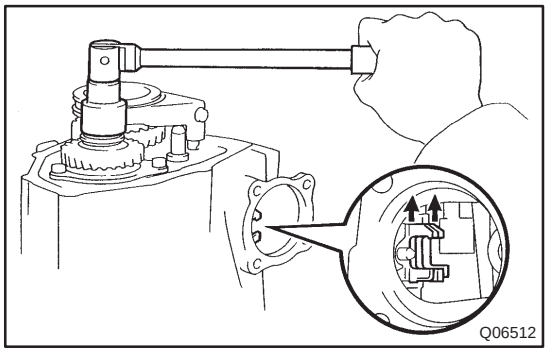

(b) Engage the gear to the double meshing.
(c) Remove the manual transmission output shaft rear set nut.
(d) Disengage the double meshing of the gear.

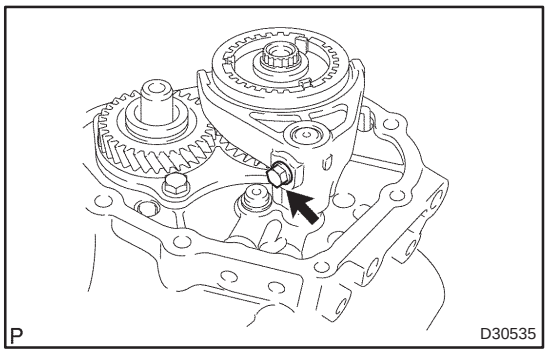

18. REMOVE GEAR SHIFT FORK NO.3

(a) Remove the shift fork set bolt from the gear shift fork No.3.

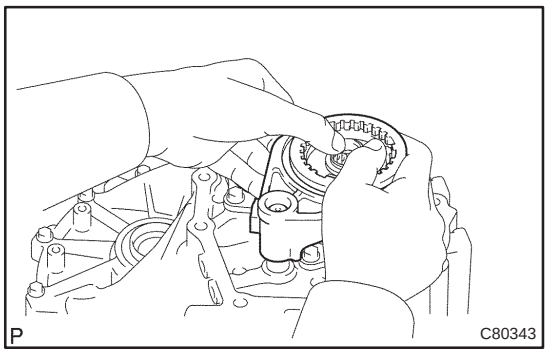

(b) Remove the No.3 hub sleeve and gear shift fork No.3 from the transmission clutch hub No.3.

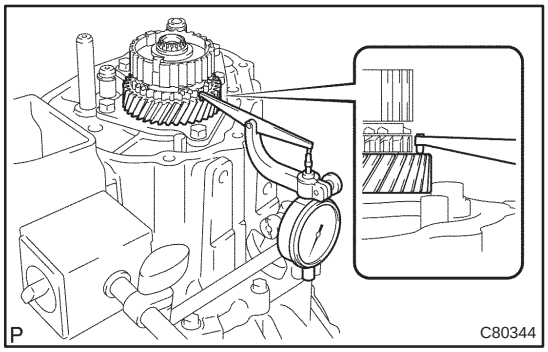

19. INSPECT 5TH GEAR THRUST CLEARANCE

(a) Using a dial indicator, measure the thrust clearance.
Standard clearance:
0.10 – 0.57 mm (0.0039 – 0.0224 in.)
Maximum clearance:
0.57 mm (0.0224 in.)

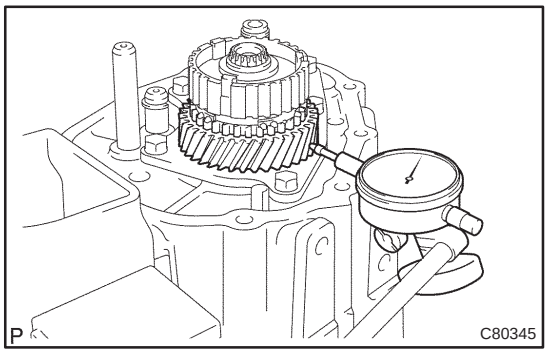

20. INSPECT 5TH GEAR RADIAL CLEARANCE

(a) Using a dial indicator, measure the radial clearance.
Standard clearance:
0.015 – 0.058 mm (0.0006 – 0.0023 in.)
Maximum clearance:
0.058 mm (0.0023 in.)

If the clearance exceeds the maximum, replace the gear needle roller bearing or shaft.

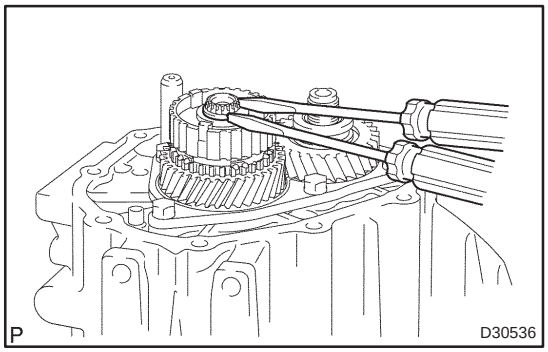

21. REMOVE TRANSMISSION CLUTCH HUB NO.3

(a) Using 2 screwdrivers and a hammer, tap out the snap ring.

HINT:

Using a shop rug to prevent the snap ring from being scattered.

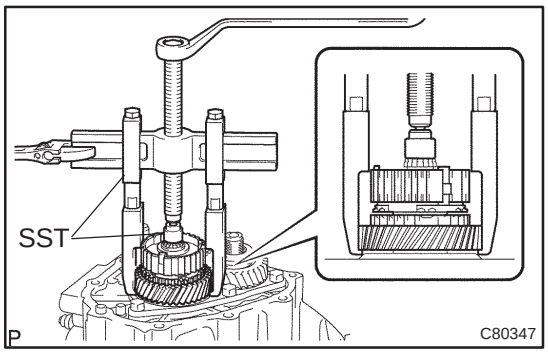

(b) Using SST, remove the transmission clutch hub No.3, 5th gear and synchronizer ring from the input shaft.

SST 09950–40011 (09951–04020, 09952–04010, 09953–04030, 09954–04010, 09955–04071, 09957–04010), 09950–60010 (09951–00200)

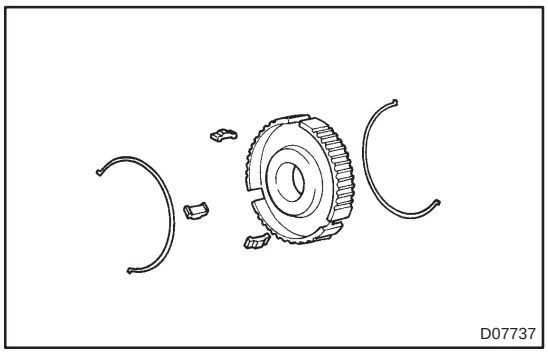

(c) Remove the 3 synchromesh shifting keys and 2 synchromesh shifting key springs from the transmission clutch hub No.3.

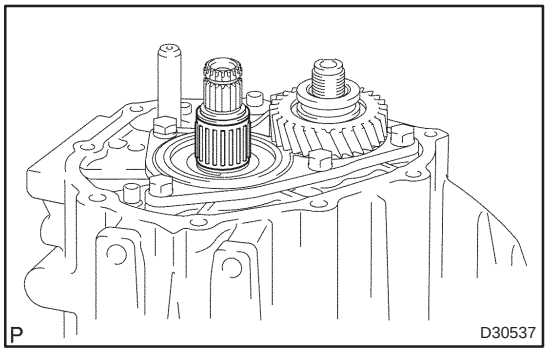

22. REMOVE 5TH GEAR NEEDLE ROLLER BEARING

(a) Remove the 5th gear needle roller bearing and 5th gear bearing spacer from the input shaft.

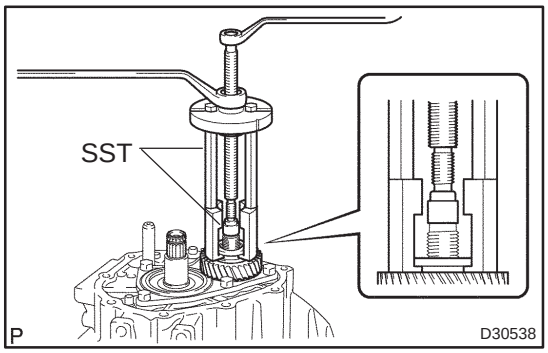

23. REMOVE 5TH DRIVEN GEAR

(a) Using SST, remove the 5th driven gear from the output shaft.

SST 09950–30012 (09951–03010, 09953–03010, 09954–03010, 09955–03011, 09957–04010), 09950–60010 (09951–00190)

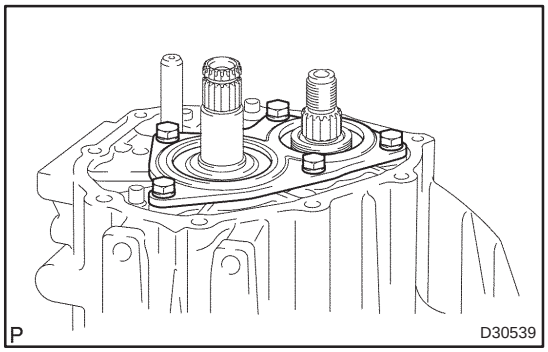

24. REMOVE BEARING RETAINER REAR (MTM)

(a) Remove the 5 bolts and bearing retainer rear from the manual transmission case.

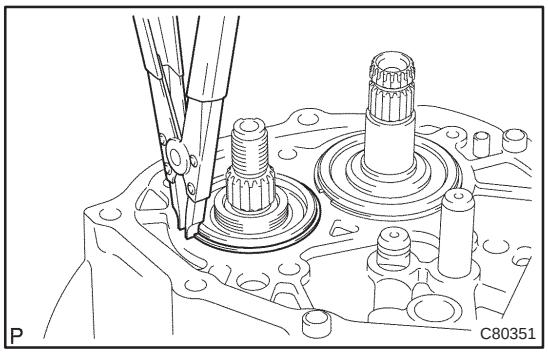

25. REMOVE OUTPUT SHAFT REAR BEARING HOLE SNAP RING

(a) Using a snap ring expander, remove the output shaft rear bearing hole snap ring from the output shaft.

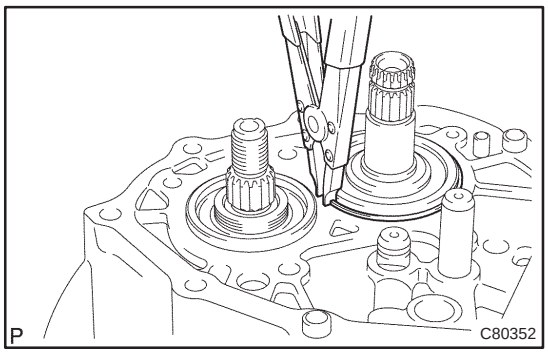

26. REMOVE INPUT SHAFT REAR BEARING HOLE SNAP RING

(a) Using a snap ring expander, remove the input shaft rear bearing hole snap ring from the input shaft.

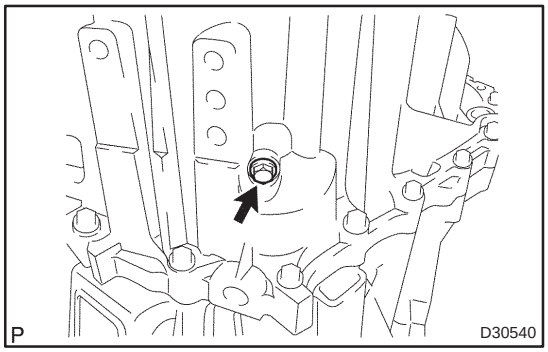

27. REMOVE REVERSE IDLER GEAR SHAFT BOLT

(a) Remove the reverse idler gear shaft bolt and reverse idler gear shaft gasket from the manual transmission case.

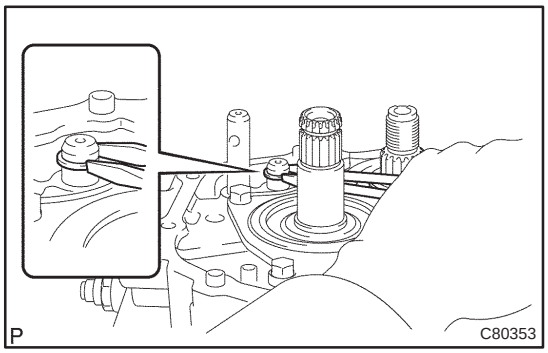

28. REMOVE SHIFT FORK SHAFT SHAFT SNAP RING

(a) Using 2 screwdrivers and a hammer, tap out the snap ring.

HINT:

Using a shop rug to the shifting key spring from being scattered.

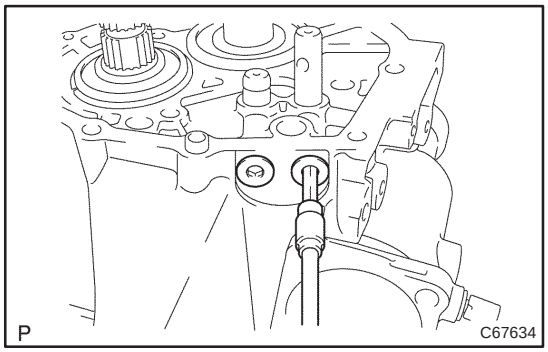

29. REMOVE SHIFT DETENT BALL

(a) Using a hexagon wrench, remove the 2 shift detent ball plugs from the manual transmission case.

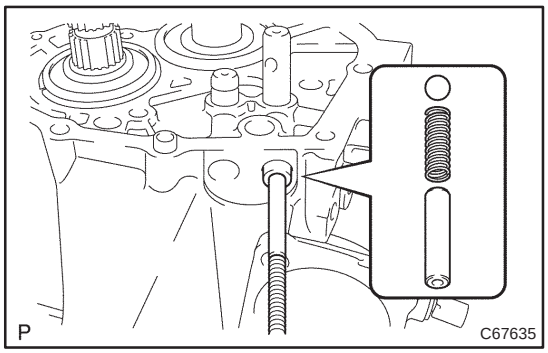

(b) Using a magnetic finger, remove the 2 seats, springs and balls from the manual transmission case.

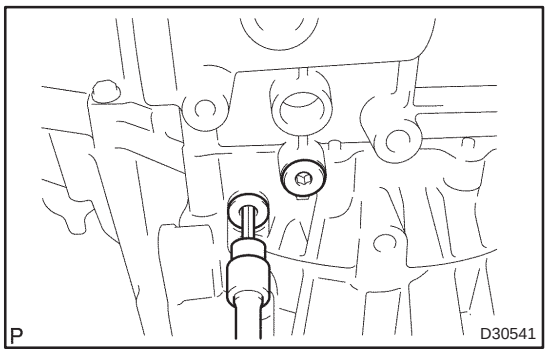

(c) Using a hexagon wrench, remove the shift detent ball plug from the front transaxle case.

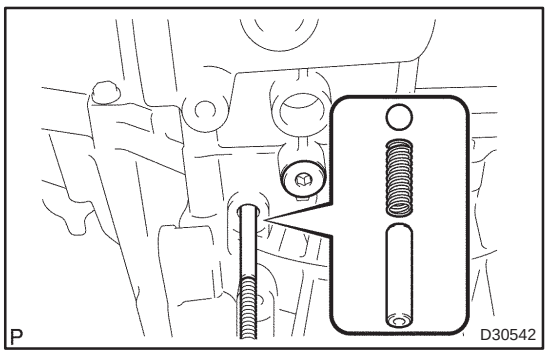

(d) Using a magnetic finger, remove the seat, spring and ball from the front transaxle case.

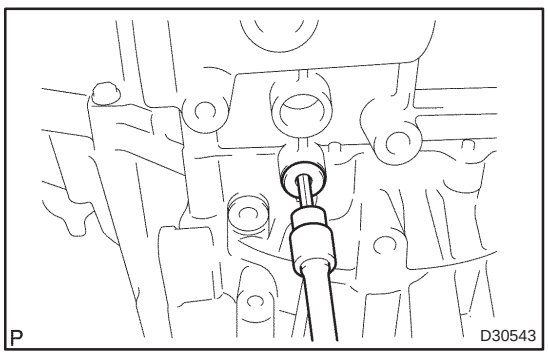

30. REMOVE LOCK BALL ASSY NO.2

(a) Using a hexagon wrench, remove the lock ball assy No.2 from the manual transmission case.

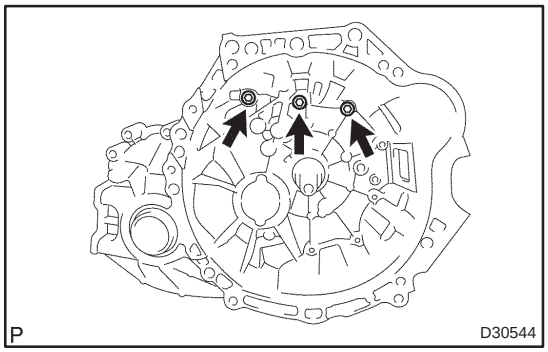

31. REMOVE MANUAL TRANSMISSION CASE

(a) Remove the 3 bolts from the front transaxle case.

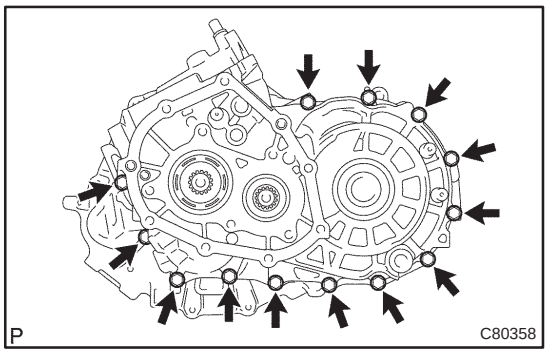

(b) Remove the 13 bolts from the manual transmission case.

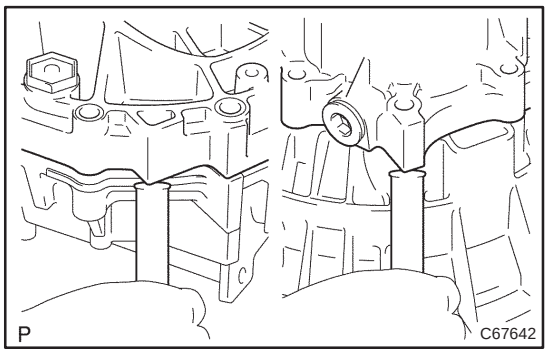

(c) Carefully tap the transmission case with a brass bar and hammer and remove it from the transaxle case.

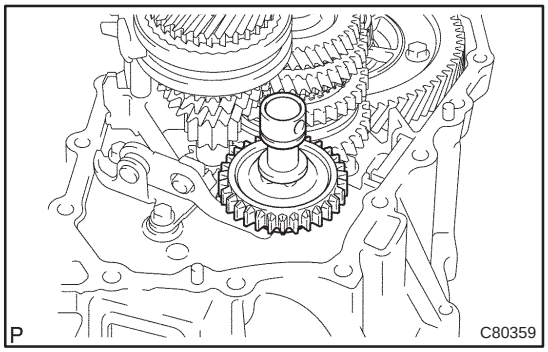

32. REMOVE REVERSE IDLER GEAR SUB–ASSY

(a) Remove the revers idler gear, thrust washer and reverse idler gear shaft from the front transaxle case.

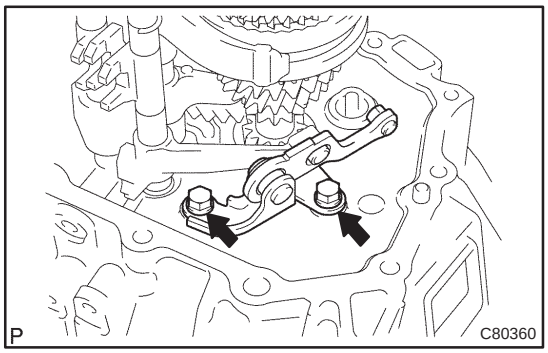

33. REMOVE REVERSE SHIFT ARM BRACKET ASSY

(a) Remove the 2 bolts and reverse shift arm bracket assy from the front transaxle case.

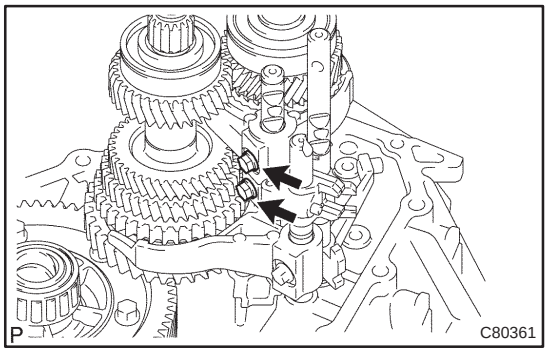

34. REMOVE GEAR SHIFT FORK SHAFT NO.2

(a) Remove the 2 bolts from the gear shift fork No.2 and gear shift head No.1.

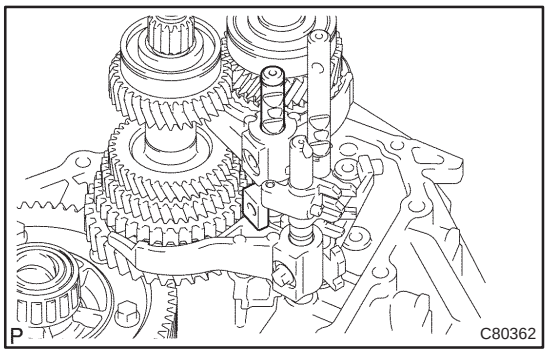

(b) Remove the gear shift fork shaft No.2 and gear shift head No.1 from the front transaxle case.

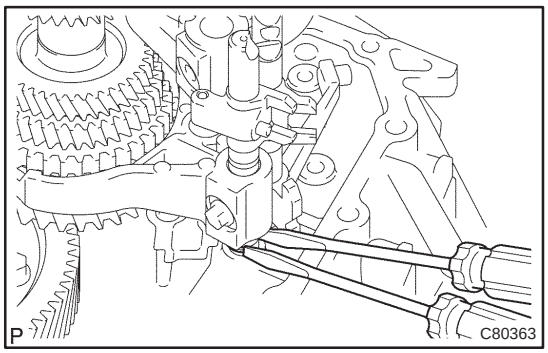

35. REMOVE GEAR SHIFT FORK SHAFT NO.1

(a) Using 2 screwdrivers and a hammer, tap out the snap rings.

HINT:

Using a shop rug to prevent the snap ring from being scattered.

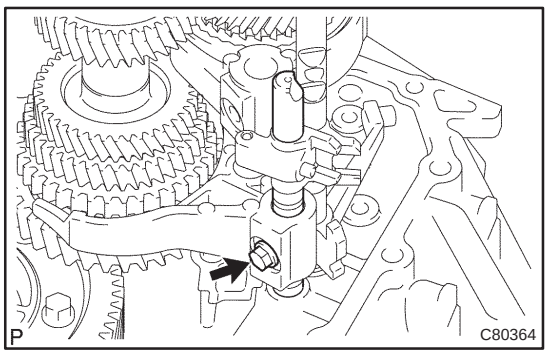

(b) Remove the shift fork set bolt and gear shift fork shaft No.1 from the gear shift fork No.1.

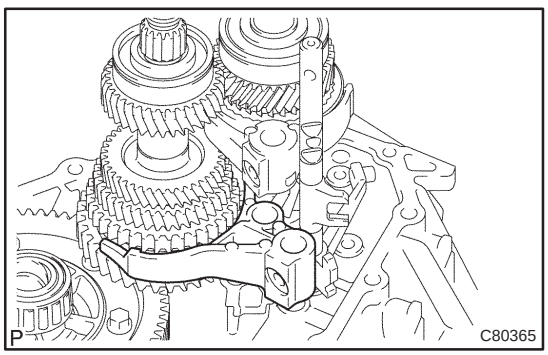

(c) Remove the shift fork No.1.

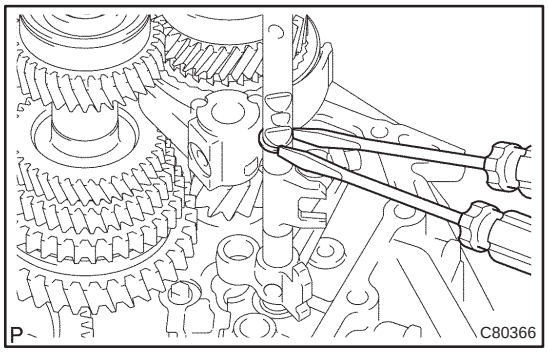

36. REMOVE GEAR SHIFT FORK SHAFT NO.3

(a) Using 2 screwdrivers and a hammer, tap out the snap ring from the gear shift fork shaft No.3.

HINT:

Using a shop rug to prevent the snap ring from being scattered.

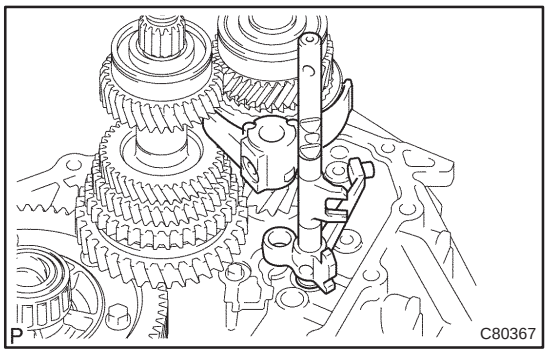

(b) Remove the shift fork shaft No.3, reverse shift fork and gear shift fork No.2 from the manual transaxle case.

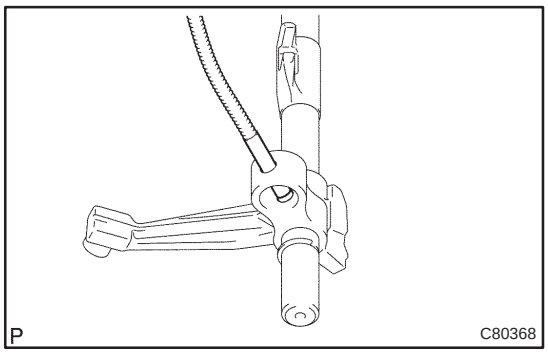

(c) Using a magnetic finger, remove the 2 reverse shift fork balls from the reverse shift fork.

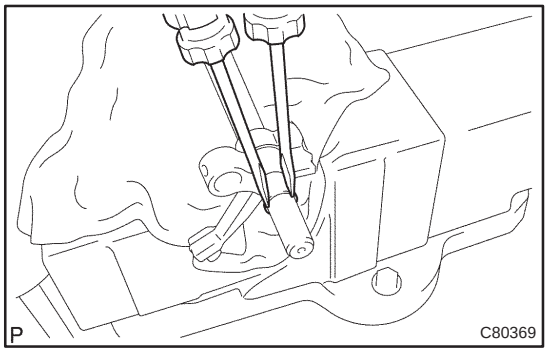

(d) Using 2 screwdrivers and a hammer, tap out the snap ring from the shift fork shaft No.3.

HINT:

Using a shop rug to prevent the snap ring from being scattered.

(e) Remove the reverse shift fork from the gear shift fork shaft No.3.

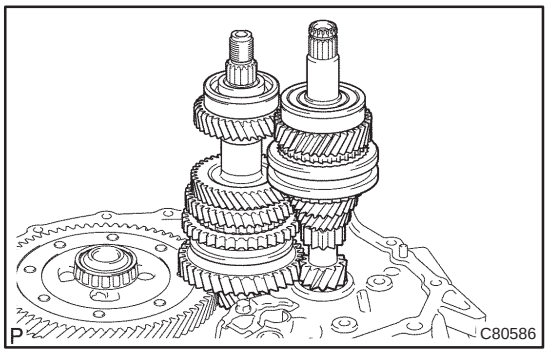

37. REMOVE INPUT SHAFT ASSY

(a) Remove the input shaft assy and output shaft assy from the front transaxle case.

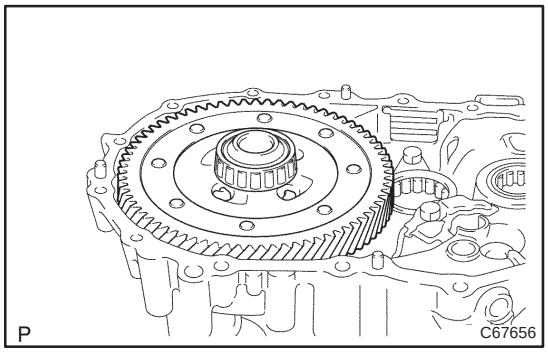

38. REMOVE DIFFERENTIAL CASE ASSY

(a) Remove the differential case assy from the front transaxle case.

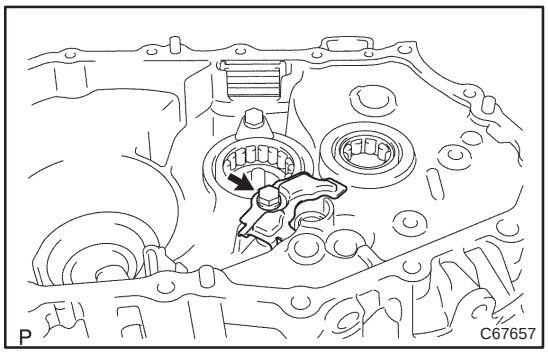

39. REMOVE MANUAL TRANSAXLE CASE RECEIVER

(a) Remove the bolt and manual transaxle case receiver from the front transaxle case.

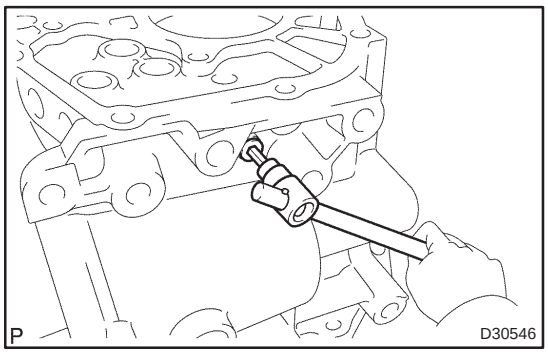

40. REMOVE REVERSE RESTRICT PIN ASSY

(a) Using a hexagon wrench, remove the reverse restrict pin plug from the manual transmission case.

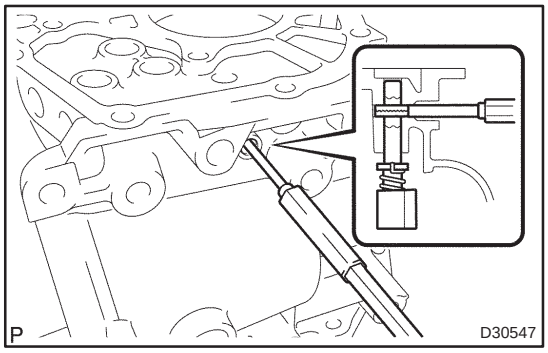

(b) Using a pin punch (ϕ 5 mm) and hammer, drive out the slotted spring pin and reverse restrict pin assy from the manual transmission case.

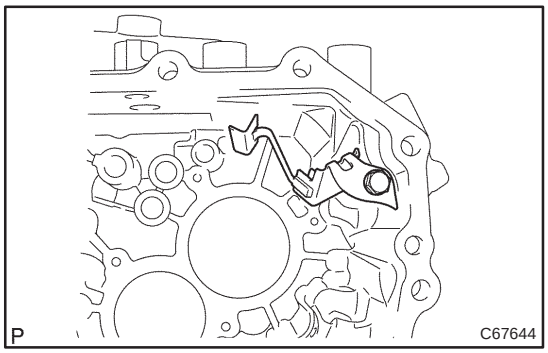

41. REMOVE OIL RECEIVER PIPE NO.1 (MTM)

(a) Remove the bolt and oil receiver pipe No.1 from the manual transmission case.

NOTICE:

Be careful not to damage the oil receiver pipe No.1.

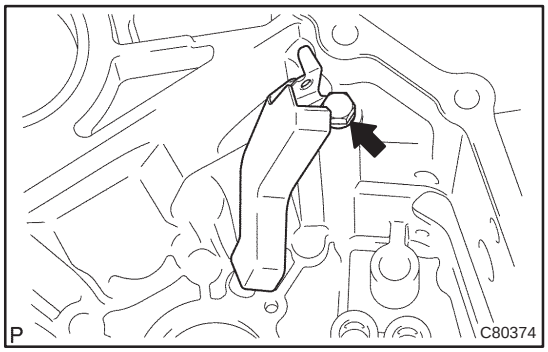

42. REMOVE OIL RECEIVER PIPE NO.2 (MTM)

(a) Remove the bolt and oil receiver pipe No.2 from the manual transmission case.

NOTICE:

Be careful not to damage the oil receiver pipe No.2.

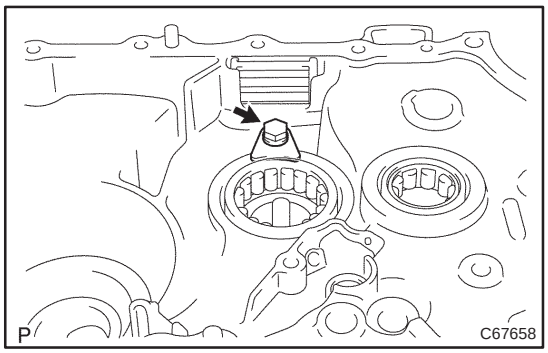

43. REMOVE BEARING LOCK PLATE

(a) Remove the bolt and bearing lock plate from the front transaxle case.

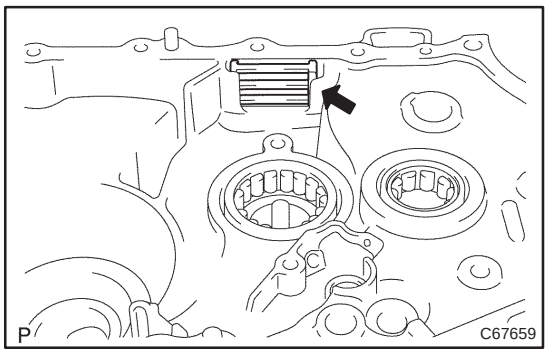

44. REMOVE TRANSMISSION MAGNET

(a) Remove the transmission magnet from the front transaxle case.

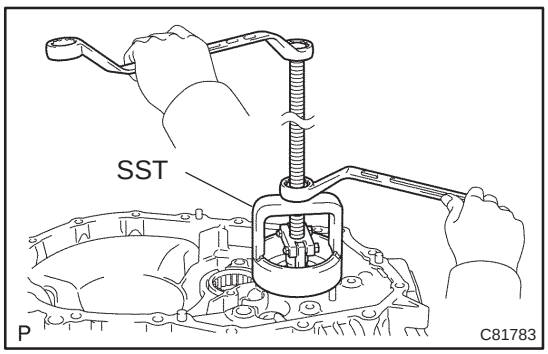

45. REMOVE INPUT SHAFT FRONT BEARING

(a) Using SST, remove the input shaft front bearing from the front transaxle case.

SST 09612–65014 (09612–01050, 09612–01060)

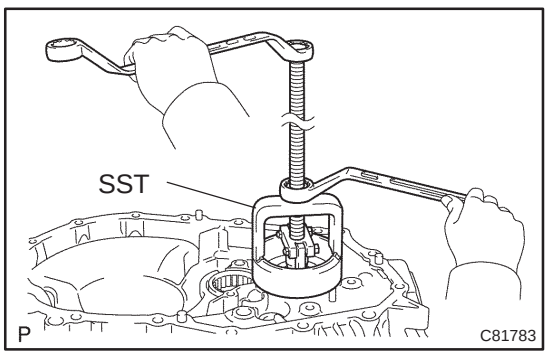

46. REMOVE FRONT TRANSAXLE CASE OIL SEAL

(a) Using SST, remove the front transaxle case oil seal from the front transaxle case.

SST 09612–65014 (09612–01040, 09612–01050)

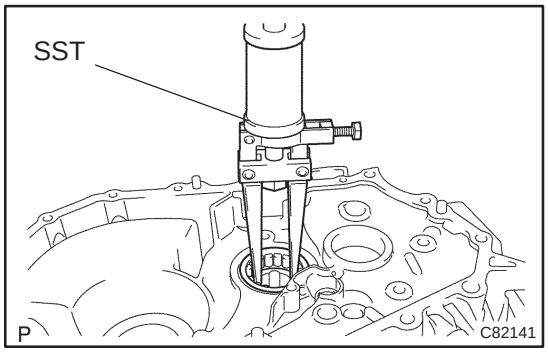

47. REMOVE OUTPUT SHAFT FRONT BEARING

(a) Using SST, remove the output shaft front bearing from the front transaxle case.
SST 09308–00010

NOTICE:
Do not apply unreasonable force to the front transaxle case when installing it.

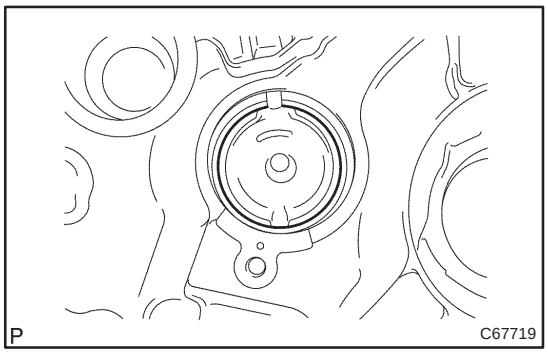

48. REMOVE OUTPUT SHAFT (MTM) COVER

(a) Remove the output shaft cover from the front transaxle case.

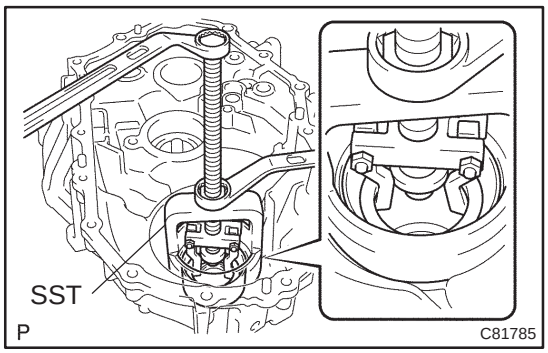

49. REMOVE FR DIFFERENTIAL CASE FRONT TAPERED ROLLER BEARING

(a) Using SST, remove the front differential case front tapered roller bearing (outer race) and shim from the front transaxle case.
SST 09612–65014 (09612–01040, 09612–01050),

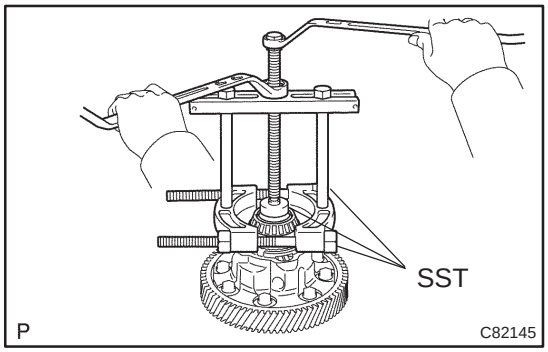

(b) Using SST, remove the front differential case front tapered roller bearing (inner race) from the front differential case.
SST 09950–00020, 09950–00030, 09950–40011 (09957–04010), 09950–60010 (09951–00360)

NOTICE:
Be careful not to damage bearing.

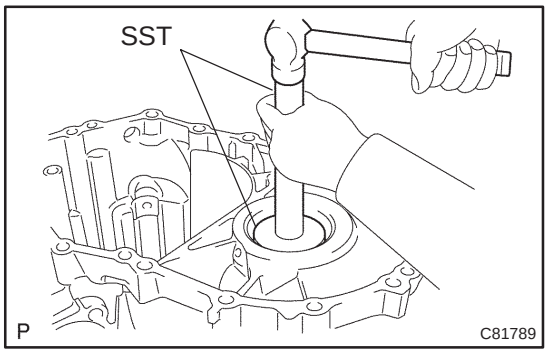

50. REMOVE TRANSAXLE CASE OIL SEAL

(a) Using SST and hammer, remove the transaxle case oil seal from the front transaxle case.
SST 09950–60010 (09951–00530), 09950–70010 (09951–07150)

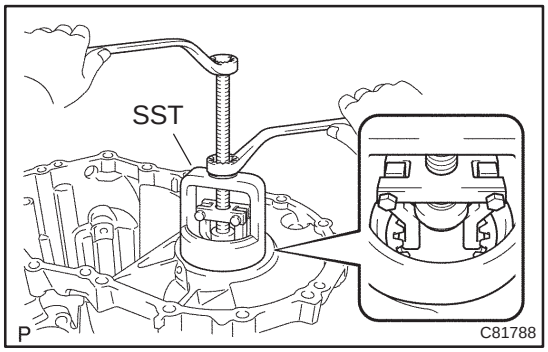

51. REMOVE FR DIFFERENTIAL CASE REAR TAPERED ROLLER BEARING

(a) Using SST, remove the front differential case rear tapered roller bearing (outer race) and shim from the transmission case.
SST 09612–65014 (09612–01040, 09612–01050)

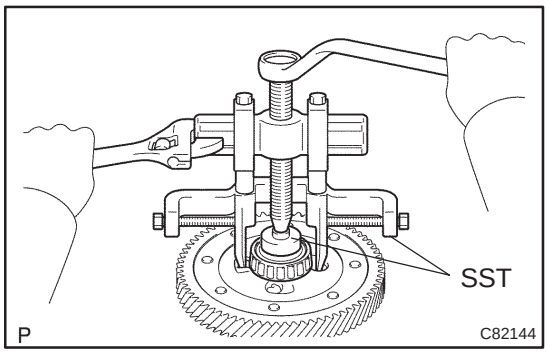

(b) Using SST and hammer, remove the front differential case rear tapered roller bearing (inner race) from the front differential case.
SST 09950–40011 (09951–04010, 09952–04010, 09953–04020, 09954–04010, 09955–04061, 09957–04010, 09958–04011), 09950–60010 (09951–00360)

NOTICE:
Be careful not to damage bearing.

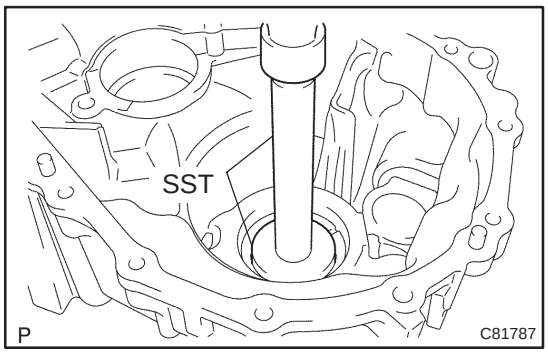

52. REMOVE TRANSMISSION CASE OIL SEAL

(a) Using SST and hammer, drive out the transmission case oil seal from the manual transmission case.
SST 09950–60010 (09951–00600), 09950–70010 (09951–07100)

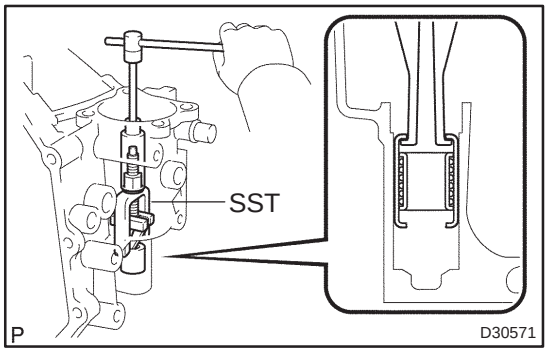

53. REMOVE SHIFT & SELECT LEVER SHAFT NEEDLE ROLLER BEARING

(a) Using SST, remove the shift & select lever shaft needle roller bearing.
SST 09319–60020

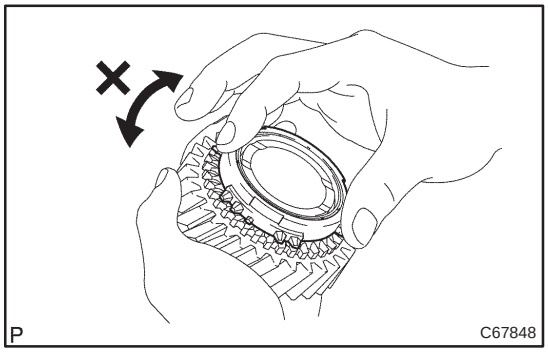

54. INSPECT SYNCHRONIZER RING NO.3

(a) Check for wear or damage.
(b) Check the braking effect of the synchronizer ring. Turn the synchronizer ring in one direction while pushing it to the gear cone, check that the ring locks.

If the braking effect is insufficient, apply a small amount of the fine lapping compound between the synchronizer ring and gear cone. Lightly rub the synchronizer ring and gear cone together.

NOTICE:
Ensure the fine lapping compound is completely washed off after rubbing.

(c) Check again the breaking effect of the synchronizer ring.

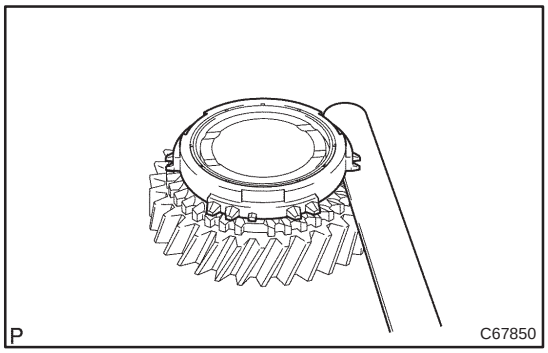

(d) Using a feeler gauge, measure the clearance between the synchronizer ring back and gear spline end.
Standard clearance:
0.75 – 1.65 mm (0.0295 – 0.0649 in.)
Minimum clearance: 0.75 mm (0.0295 in.)

If the clearance is less than minimum, replace the synchronizer ring and gear cone by applying a small amount of the fine lapping compound.

NOTICE:
Ensure the fine lapping compound is completely washed off after rubbing.

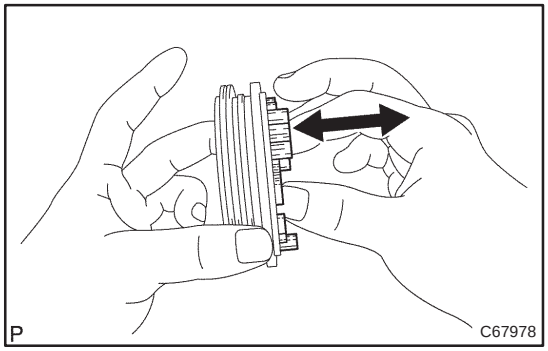

55. INSPECT TRANSMISSION HUB SLEEVE NO.3

(a) Check the sliding condition between the transmission hub sleeve No.3 and transmission clutch hub No.3.

(b) Check that spline gear's of the transmission hub sleeve No.3 is not worn down.

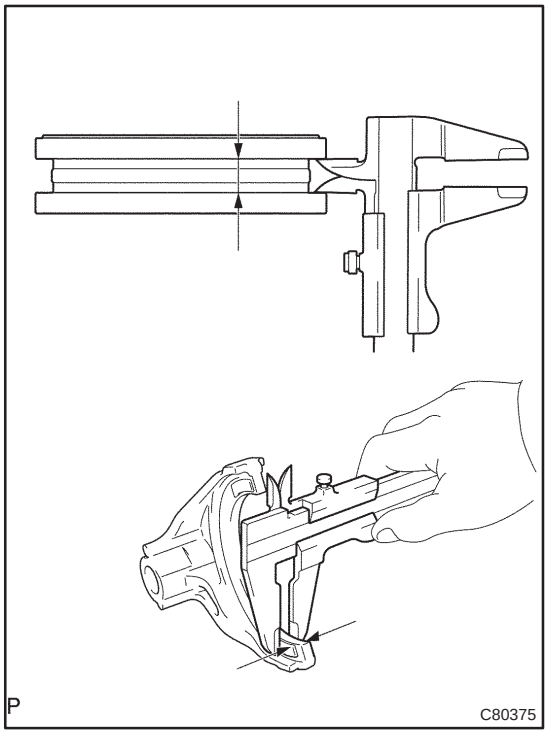

(c) Using a vernier calipers, inspect the transmission hub sleeve No.3 and gear shift fork No.3 as shown in the illustration.
Standard clearance:
0.3 – 0.5 mm (0.0012 – 0.0020 in.)

If the clearance exceeds the standard clearance, replace the transmission hub sleeve No.3 and gear shift fork No.3.

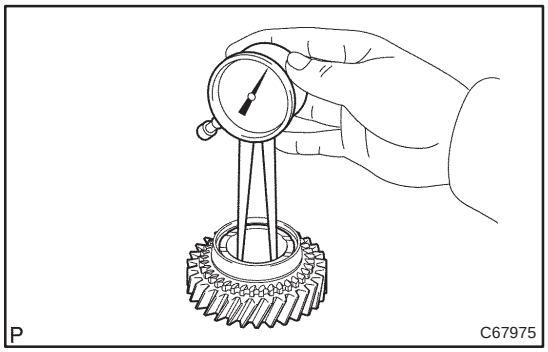

56. INSPECT 5TH GEAR

(a) Using a caliper gauge, inspect 5th gear as shown in the illustration.

Standard clearance:
29.915 – 29.931 mm (1.1778 – 1.1783 in.)

If the clearance exceeds the maximum, replace the 5th gear.

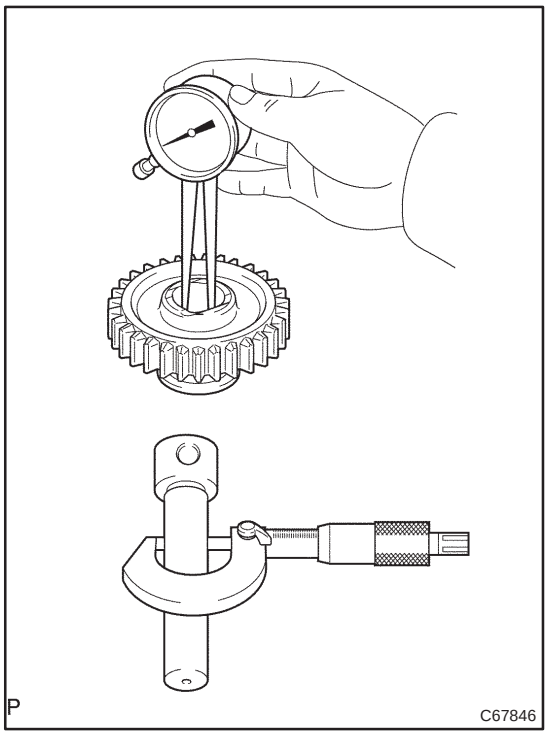

57. INSPECT REVERSE IDLER GEAR SUB–ASSY

(a) Using a caliper gauge, inspect the reverse idler gear sub–assy as shown in the illustration.

Standard clearance:
18.040 – 18.058 mm (0.7102 – 0.7109 in.)
Maximum clearance:
18.058 mm (0.7109 in.)

If the clearance exceeds the maximum, replace idler gear.

(b) Using a micrometer, inspect the reverse idler gear shaft as shown in the illustration.

Standard outer diameter:
17.966 – 17.984 mm (0.7073 – 0.7080 in.)
Minimum outer diameter:
17.966 mm (0.7073 in.)

If the outer diameter exceeds the minimum, replace the reverse idler gear shaft.

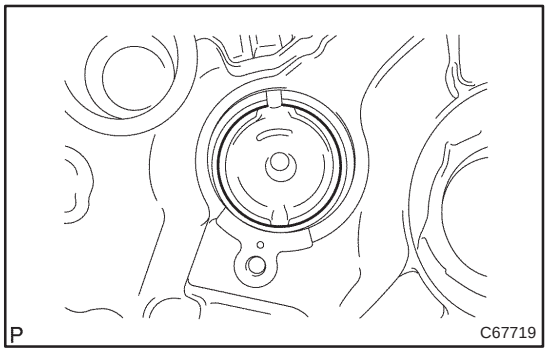

58. INSTALL OUTPUT SHAFT (MTM) COVER

(a) Coat the output shaft cover with MP grease and install it to the front transaxle case.

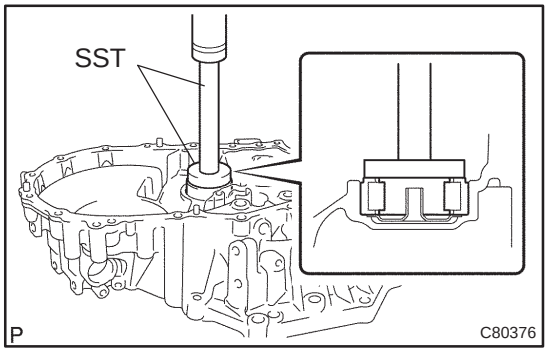

59. INSTALL OUTPUT SHAFT FRONT BEARING

(a) Coat the new output shaft front bearing with gear oil, using SST and a press, install it.

SST 09950–60010 (09951–00550), 09950–70010 (09951–07150)

NOTICE:
Be careful not to damage the output shaft front bearing.

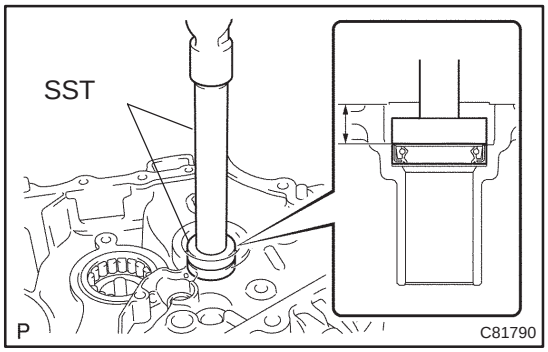

60. INSTALL FRONT TRANSAXLE CASE OIL SEAL

(a) Using SST and a hammer, install a new front transaxle case oil seal to the front transaxle case.
SST 09950–60010 (09951–00370), 09950–70010 (09951–07150)
Drive in depth: 15.6 – 16.0 mm (0.6141 – 0.6299 in.)

(b) Coat the lip of the front transaxle case oil seal with MP grease.

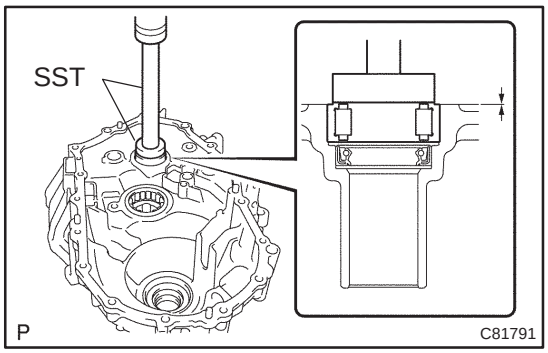

61. INSTALL INPUT SHAFT FRONT BEARING

(a) Coat the new input shaft front bearing with MP grease, using SST and a press, install it to the front transaxle case.
SST 09950–60010 (09951–00420), 09950–70010 (09951–07150)
Drive in depth: 0 – 0.3 mm (0 – 0.0118 in.)

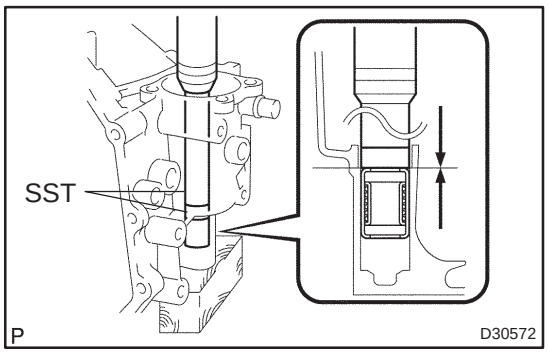

62. INSTALL SHIFT & SELECT LEVER SHAFT NEEDLE ROLLER BEARING

(a) Using SST, install the shift & select lever shaft needle roller bearing.
SST 09950–60010 (09951–00220), 09950–70010 (09951–07100)
Drive in depth: 0 – 0.5 mm (0 – 00020 in.)

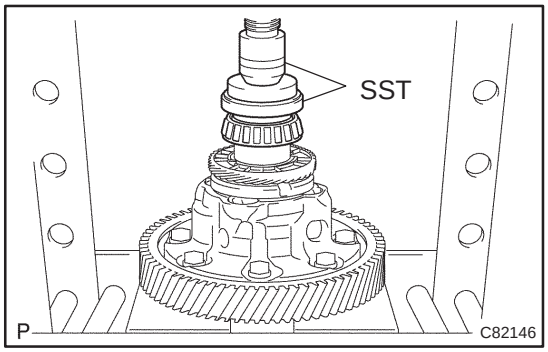

63. INSTALL FR DIFFERENTIAL CASE FRONT TAPERED ROLLER BEARING

(a) Using SST and a press, install the front differential case front tapered roller bearing (inner race) to the front differential case.
SST 09350–32014 (09351–32120), 09950–60010 (09951–00530)

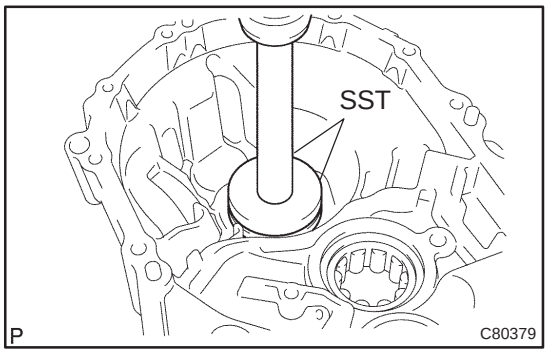

(b) Using SST and a press, install the front differential case front tapered roller bearing (outer race) with shim to the front transaxle case.
SST 09950–60020 (09951–00680), 09950–70010 (09951–07150)

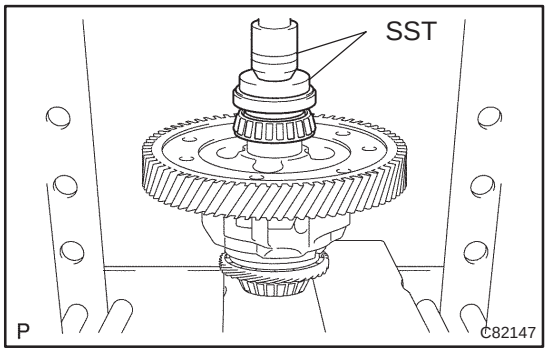

64. INSTALL FR DIFFERENTIAL CASE REAR TAPERED ROLLER BEARING

(a) Using SST and a press, install front differential case rear tapered roller bearing (inner race) to the front differential case.
SST 09350–32014 (09351–32120), 09950–60010 (09951–00530)

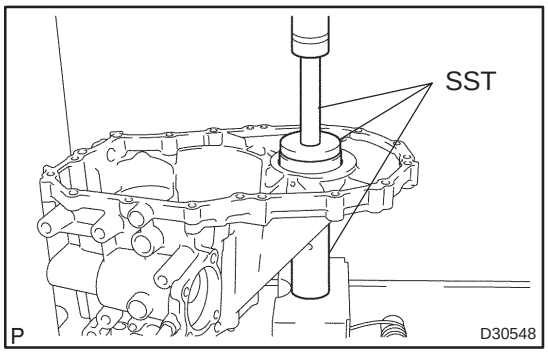

(b) Using SST and a press, front differential case rear tapered roller bearing (outer race) with shim to the transmission case.
SST 09309–36010, 09950–60020 (09951–00710), 09950–70010 (09951–07150)

HINT:
Use a front differential case washer rear of the same thickness as the removed one.

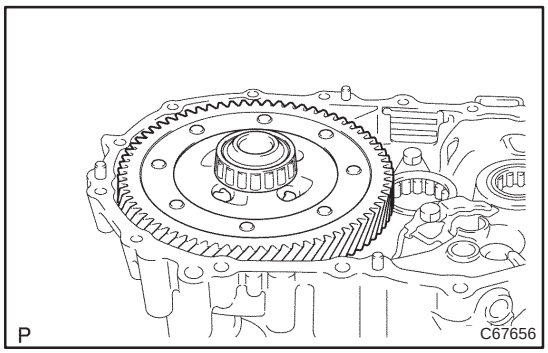

65. ADJUST DIFFERENTIAL SIDE BEARING PRELOAD

(a) Coat the differential case assy with gear oil, install it to the front transaxle case.

(b) Install the manual transmission case with 16 bolts.
Torque: 29 N·m (300 kgf·cm, 22 ft·lbf)

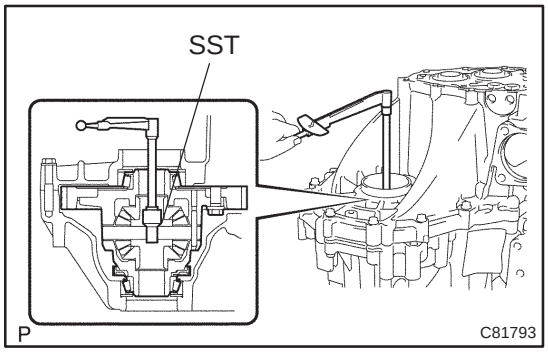

(c) Using SST and a torque wrench, turn the differential case assy right and left 2 or 3 times to allow the bearings to settle.
SST 09564–32011

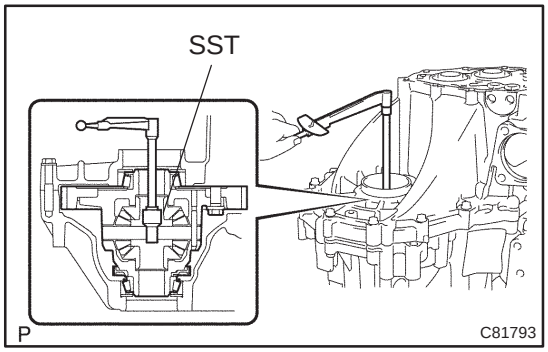

(d) Using SST and a torque wrench, measure the preload.
SST 09564–32011
Preload (at starting):
New bearing:
0.78 – 1.57 N·m (7.95 – 16.0 kgf·cm, 6.9 – 13.89 in.·lbf)

(e) Select another shim.

Mark	Thickness mm (in.)	Mark	Thickness mm (in.)
AA	2.10 (0.0827)	LL	2.60 (0.1024)
BB	2.15 (0.0846)	MM	2.65 (0.1043)
CC	2.20 (0.0866)	NN	2.70 (0.1063)

Mark	Thickness mm (in.)	Mark	Thickness mm (in.)
DD	2.25 (0.0886)	PP	2.75 (0.1083)
EE	2.30 (0.0906)	QQ	2.80 (0.1102)
FF	2.35 (0.0925)	RR	2.85 (0.1122)
GG	2.40 (0.0945)	SS	2.90 (0.1142)
HH	2.45 (0.0965)	TT	2.95 (0.1161)
JJ	2.50 (0.0984)	UU	3.00 (0.1181)
KK	2.55 (0.1004)	–	–

(f) Remove the 16 bolts and manual transmission case.

(g) Remove the differential case assy.

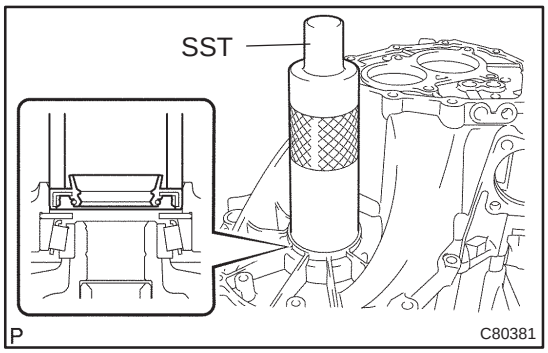

66. INSTALL TRANSMISSION CASE OIL SEAL

(a) Using SST and a hammer, install the transmission case oil seal to the manual transmission case.
SST 09316–60011 (09316–00011)
Drive in depth:
9.6 – 10.2 mm (0.3779 – 0.4015 in.)

(b) Coat the lip of the front transmission case oil seal with MP grease.

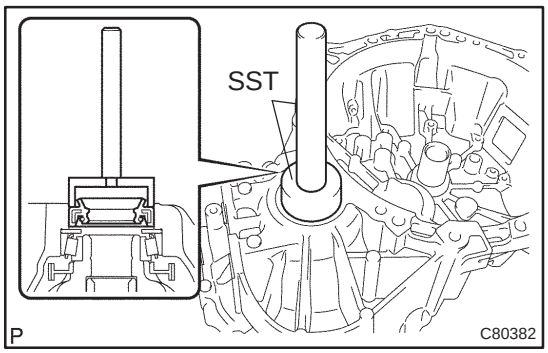

67. INSTALL TRANSAXLE CASE OIL SEAL

(a) Using SST and a hammer, install the transaxle case oil seal to the front transaxle case.
Drive in depth: 1.6 – 2.2 mm (0.0629 – 0.0866 in.)
SST 09710–20011 (09710–06071), 09950–70010 (09951–07150)

(b) Coat the lip of the front transaxle case oil seal with MP grease.

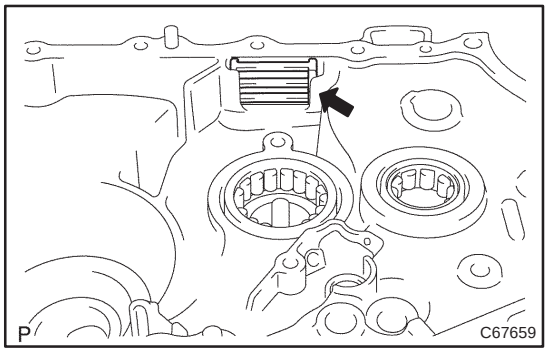

68. INSTALL TRANSMISSION MAGNET

(a) Clean the transmission magnet to the front transaxle case.

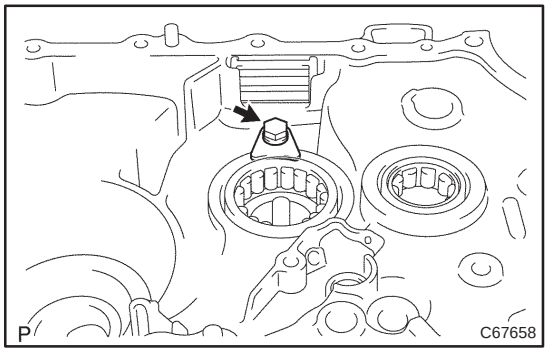

69. INSTALL BEARING LOCK PLATE

(a) Install the bearing lock plate with bolt.
Torque: 11 N·m (115 kgf·cm, 8.3 ft·lbf)

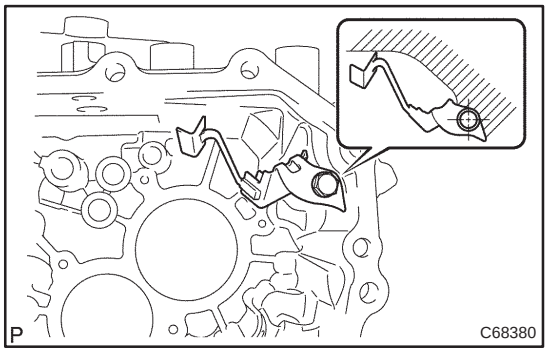

70. INSTALL OIL RECEIVER PIPE NO.1 (MTM)

(a) Install the oil receiver pipe No.1 with bolt to the manual transmission case.
Torque: 17 N·m (175 kgf·cm, 13 ft·lbf)

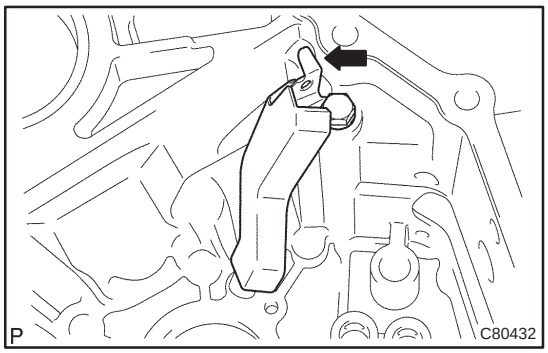

71. INSTALL OIL RECEIVER PIPE NO.2 (MTM)

(a) Install the oil receiver pipe No.2 with bolt to the manual transmission case.
Torque: 17 N·m (175 kgf·cm, 13 ft·lbf)

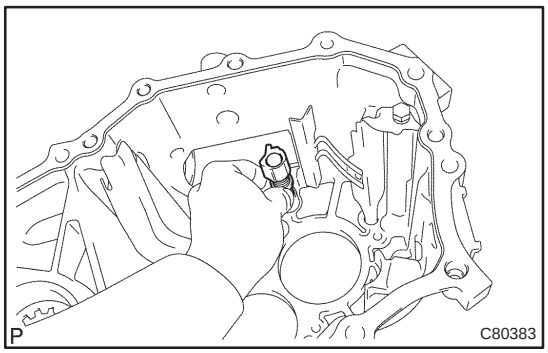

72. INSTALL REVERSE RESTRICT PIN ASSY

(a) Install the reverse restrict pin assy to the manual transmission case.

HINT:
Do not set the reverse restrict pin assy in incorrect orientation.

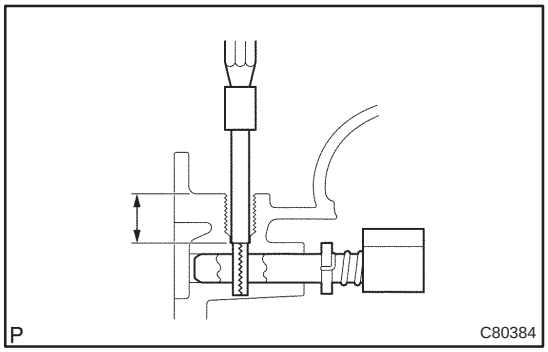

(b) Using a pin punch (ϕ 5 mm) and hammer, install the slotted pin to the restrict pin assy.
Drive in depth: 15.5 – 16.5 mm (0.6102 – 0.6496 in.)

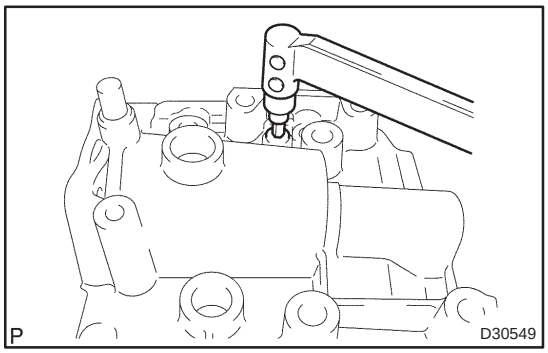

(c) Apply sealant to the reverse restrict pin plug.
Sealant:
Part No. 08833–00080, THREE BOND 1344, LOCTITE 242 or equivalent

(d) Using a hexagon wrench and torque wrench install the reverse restrict pin plug to the manual transmission case.
Torque: 13 N·m (130 kgf·cm, 9.3 ft·lbf)

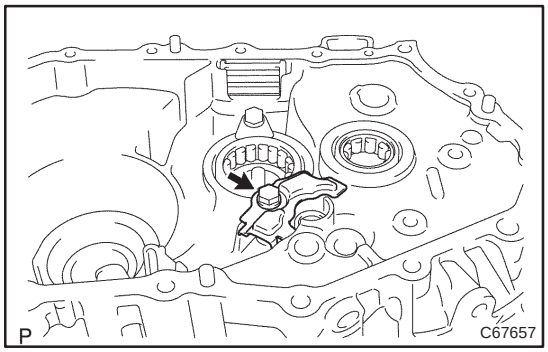

73. INSTALL MANUAL TRANSAXLE CASE RECEIVER

(a) Install the manual transaxle case receiver with bolt to the front transaxle case.
Torque: 11 N·m (115 kgf·cm, 8.3 ft·lbf)

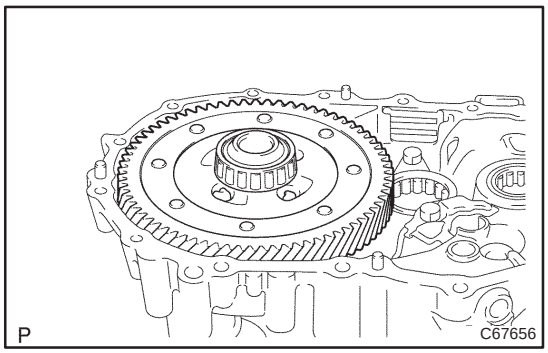

74. INSTALL DIFFERENTIAL CASE ASSY

(a) Coat the differential case tapered roller bearing with gear oil, install them to the front transaxle case.

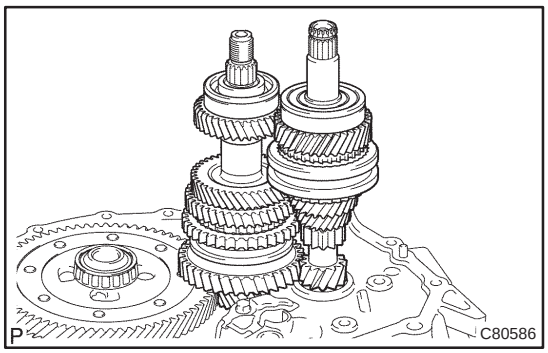

75. INSTALL INPUT SHAFT ASSY

(a) Coat sliding and rotating surface of the input and output shafts with gear oil, install them to the transaxle case.

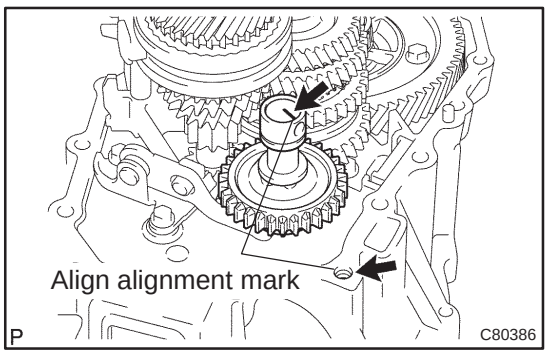

76. INSTALL REVERSE IDLER GEAR SUB–ASSY

(a) Coat the reverse idler gear, shim and reverse idler gear shaft with gear oil, install them.

HINT:
Align the mark on the reverse idler gear shaft with the bolt hole shown in the illustration.

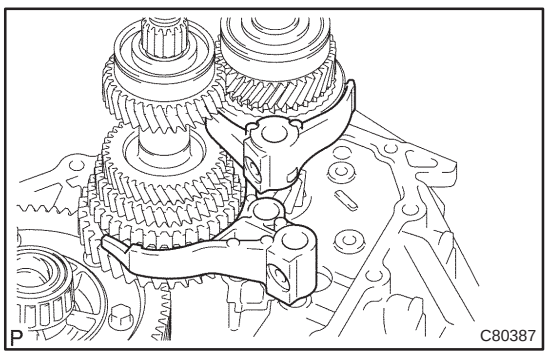

77. INSTALL GEAR SHIFT FORK SHAFT NO.1

(a) Coat the gear shift fork No.1 and gear shift fork No.2 with gear oil, install them.

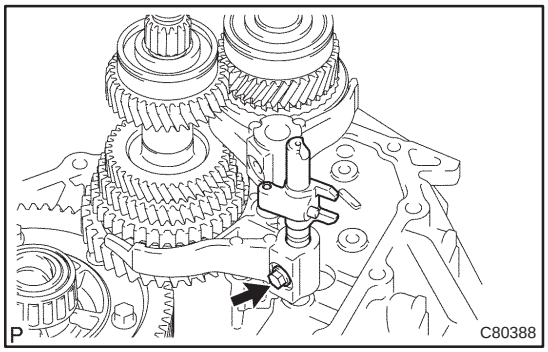

(b) Coat the gear shift fork shaft No.1 with gear oil, install it.
(c) Apply sealant to the shift fork lock bolt.
Sealant:
Part No. 08833–00080, THREE BOND 1344, LOCTITE 242 or equivalent
(d) Install the gear shift fork lock bolt.
Torque: 16 N·m (160 kgf·cm, 12 ft·lbf)

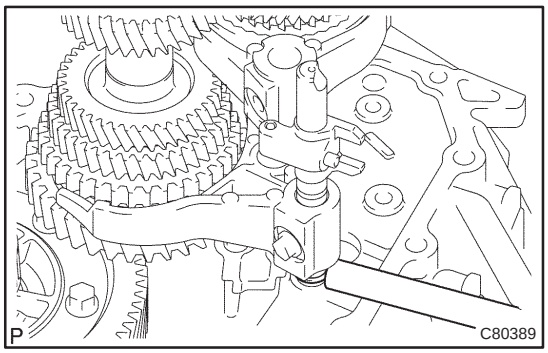

(e) Using a brass bar and hammer, install the shaft snap ring to the gear shift fork shaft No.1.

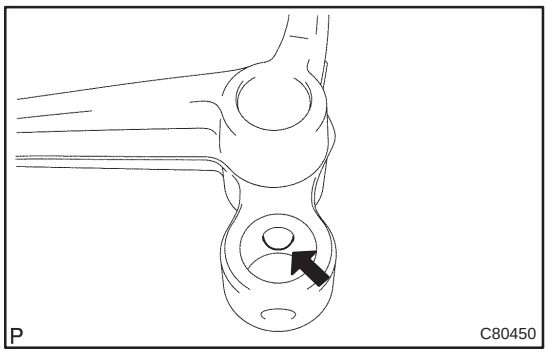

78. INSTALL GEAR SHIFT FORK SHAFT NO.3
(a) Coat the 2 shift fork balls with MP grease, install them to the reverse shift fork.
(b) Install reverse shift fork to the shift fork shaft No.3.

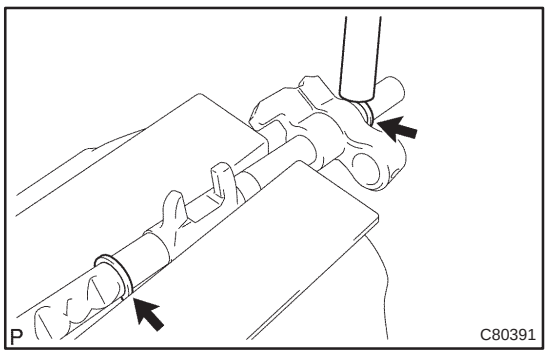

(c) Using a brass bar and hammer, install 2 shift fork shaft snap rings to the shift fork shaft No.3.

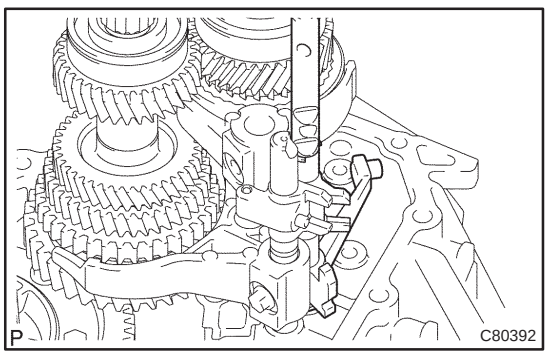

(d) Coat the shift fork shaft No.3 with gear oil, install it.

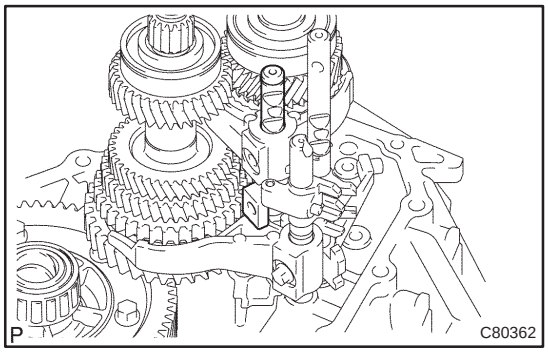

79. INSTALL GEAR SHIFT FORK SHAFT NO.2

(a) Coat the gear shift head No.1 and gear shift fork shaft No.2 with gear oil, install them.

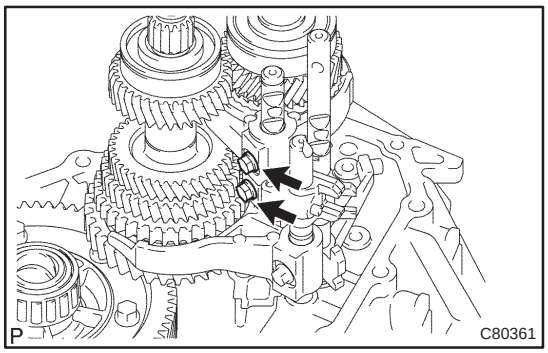

(b) Coat the 2 shift lock bolts with sealant, install them to the gear shift fork No.2 and shift head No.1.
Sealant:
Part No. 08833–00080, THREE BOND 1344, LOCTITE 242 or equivalent
Torque: 16 N·m (160 kgf·cm, 12 ft·lbf)

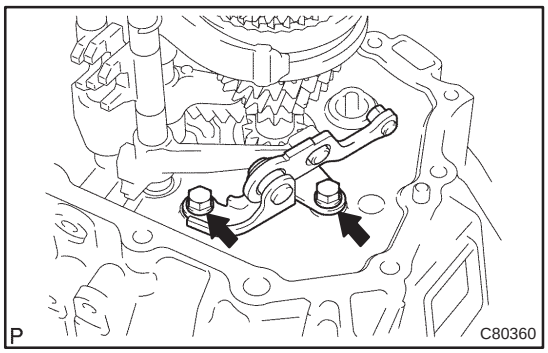

80. INSTALL REVERSE SHIFT ARM BRACKET ASSY

(a) Install the reverse shift arm bracket assy with 2 bolts to the front transaxle case.
Torque: 17 N·m (175 kgf·cm, 13 ft·lbf)

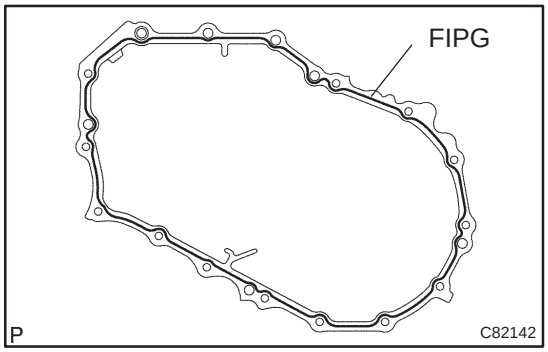

81. INSTALL MANUAL TRANSMISSION CASE

(a) Apply FIPG to the manual transmission case, as shown to the illustration.
FIPG:
Part No. 08826–00090, THREE BOND 1281 or equivalent

NOTICE:
Parts must be assembled within 10 minutes of application. Otherwise, the packing (FIPG) material must be remove and reapplied.

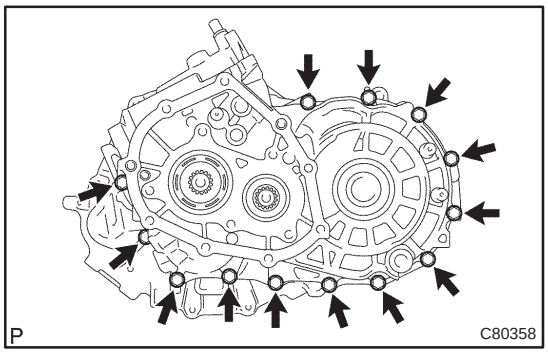

(b) Coat the 13 bolts with sealant, install to the manual transmission case.
Sealant:
Part No. 08833–00080, THREE BOND 1344, LOCTITE 242 or equivalent
Torque: 29 N·m (300 kgf·cm, 22 ft·lbf)

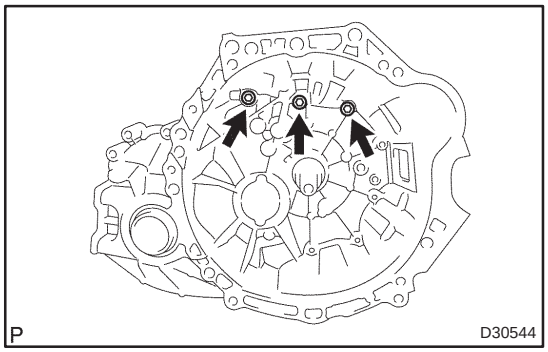

(c) Coat the 3 bolts with sealant, install to the front transaxle case.
Sealant:
Part No. 08833–00080, THREE BOND 1344, LOCTITE 242 or equivalent
Torque: 29 N·m (300 kgf·cm, 22 ft·lbf)

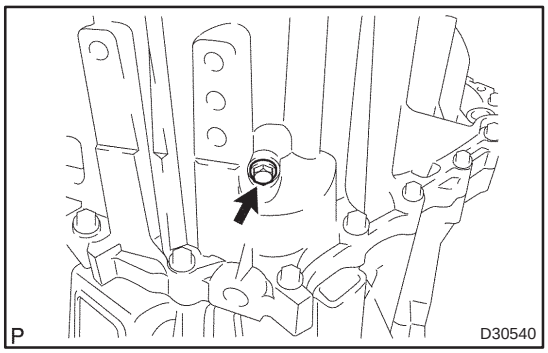

82. INSTALL REVERSE IDLER GEAR SHAFT BOLT

(a) Coat the reverse idler gear shaft bolt with sealant, install it with new gasket.
Sealant:
Part No. 08833–00080, THREE BOND 1344, LOCTITE 242 or equivalent
Torque: 29 N·m (300 kgf·cm, 22 ft·lbf)

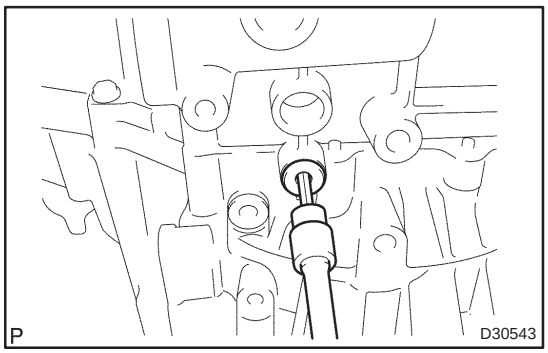

83. INSTALL LOCK BALL ASSY NO.2

(a) Coat the lock ball assy No.2 with sealant, install it with a hexagon wrench.
Sealant:
Part No. 08833–00080, THREE BOND 1344, LOCTITE 242 or equivalent
Torque: 39 N·m (400 kgf·cm, 29 ft·lbf)

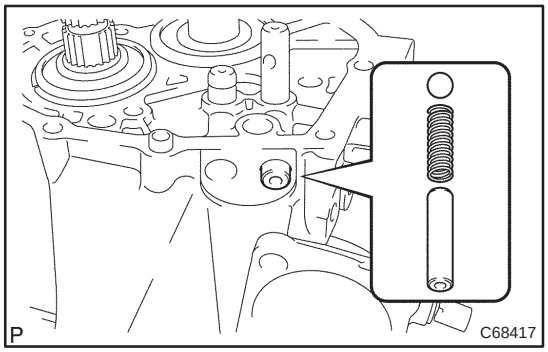

84. INSTALL SHIFT DETENT BALL

(a) Install the 2 shift detent balls, 2 shift detent ball springs with 2 shift detent ball spring seat No.1 to the manual transmission case.

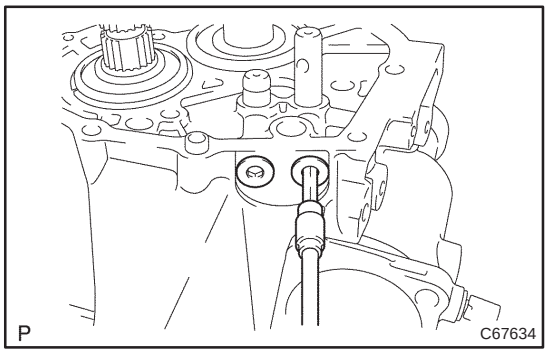

(b) Coat the 2 shift detent ball plugs with sealant, install them with a hexagon wrench.
Sealant:
Part No. 08833–00080, THREE BOND 1344, LOCTITE 242 or equivalent
Torque: 25 N·m (250 kgf·cm, 18 ft·lbf)

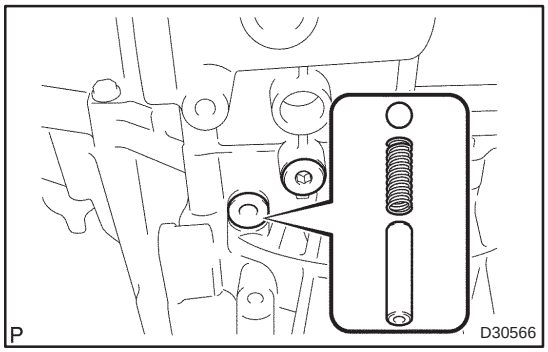

(c) Install the shift detent ball, shift detent ball compression spring and shift detent ball spring seat No.1 to the front transaxle case.

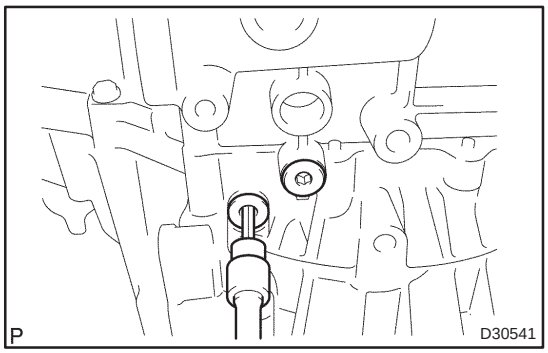

(d) Coat the shift detent ball plug with sealant, install it with using a hexagon wrench.
Sealant:
Part No. 08833–00080, THREE BOND 1344, LOCTITE 242 or equivalent
Torque: 25 N·m (250 kgf·cm, 18 ft·lbf)

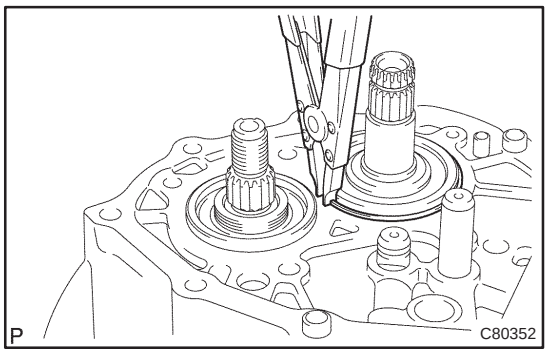

85. INSTALL INPUT SHAFT REAR BEARING HOLE SNAP RING

(a) Using a snap ring expander, install the input shaft rear bearing hole snap ring to the input shaft.

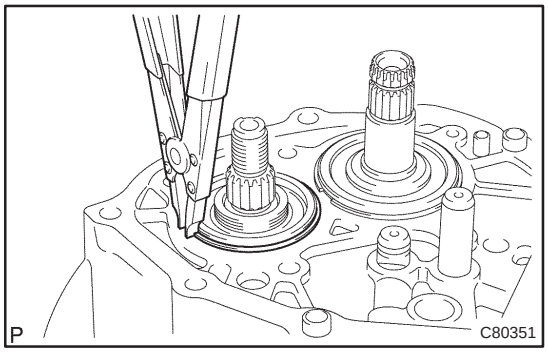

86. INSTALL OUTPUT SHAFT REAR BEARING HOLE SNAP RING

(a) Using a snap ring expander, install the output shaft rear bearing hole snap ring to the output shaft.

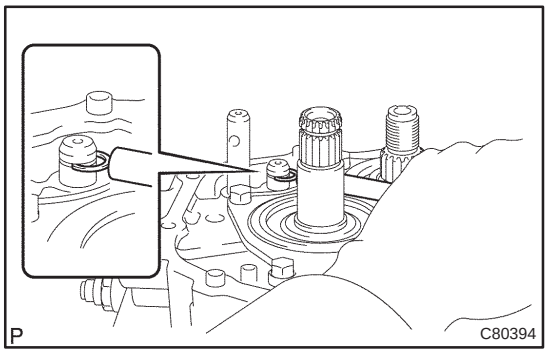

87. INSTALL SHIFT FORK SHAFT SHAFT SNAP RING

(a) Using a brass bar and hammer, install the shift fork shaft snap ring to the shift fork shaft No.2.

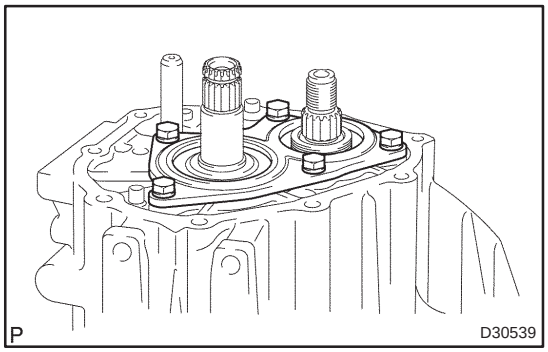

88. INSTALL BEARING RETAINER REAR (MTM)

(a) Coat the 5 bolts with sealant, install them and bearing retainer rear to the manual transmission case.
Torque: 27 N·m (280 kgf·cm, 20 ft·lbf)

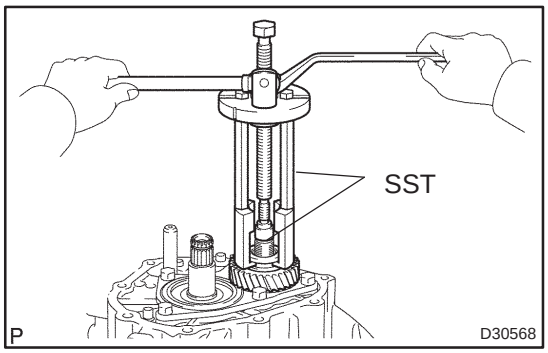

89. INSTALL 5TH DRIVEN GEAR

(a) Using SST, install the 5th driven gear to the output shaft.
SST 09950–30012 (09951–03010, 09953–03010, 09954–03010, 09955–03011, 09956–03020)

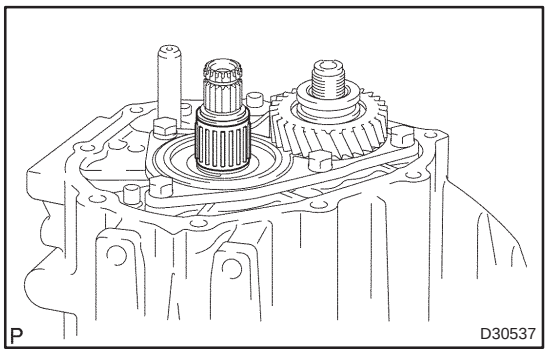

90. INSTALL 5TH GEAR NEEDLE ROLLER BEARING

(a) Coat the 5th gear needle roller bearing and spacer with gear oil, install them to the input shaft.

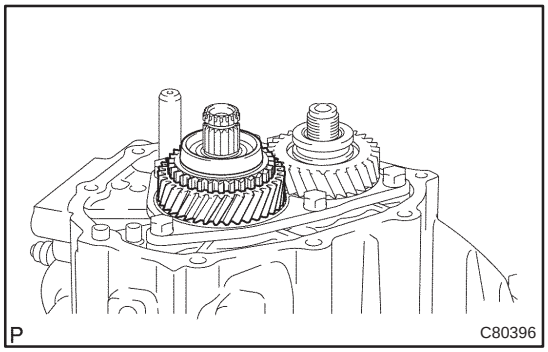

91. INSTALL 5TH GEAR

(a) Coat the 5th gear with gear oil, install it to the input shaft.

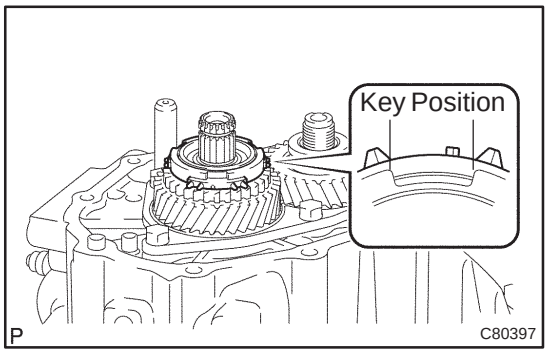

92. INSTALL SYNCHRONIZER RING NO.3

(a) Coat the synchronizer ring No.3 with gear oil, install it to the 5th gear.

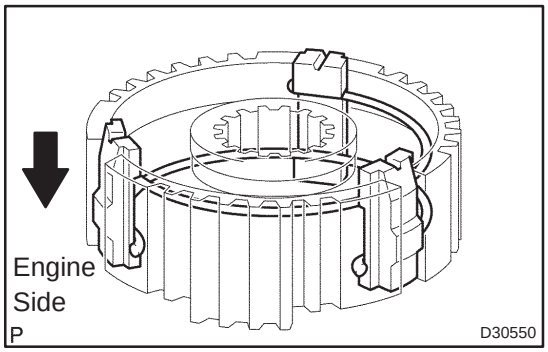

93. INSTALL TRANSMISSION CLUTCH HUB NO.3

(a) Install the 3 synchromesh shifting keys and 2 synchromesh shifting key springs to the transmission clutch hub No.3.

HINT:

Do not set both openings of the shifting key springs in the same position.

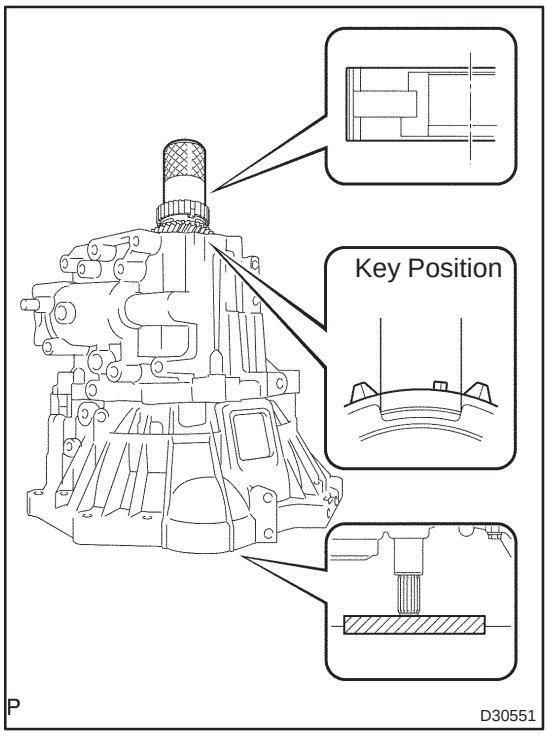

(b) Using SST and a hammer, install the transmission clutch hub No.3 to the input shaft.

SST 09636–20010

NOTICE:

- **Make sure the direction of the transmission clutch hub No.3.**
- **Attach the transmission clutch hub No.3 with checking position of the spline on synchronizer ring and synchromesh fitting key No.3.**
- **Check that the 5th gear is rotating.**

HINT:

Place the suitable sized wooden block to supports the transaxle assy.

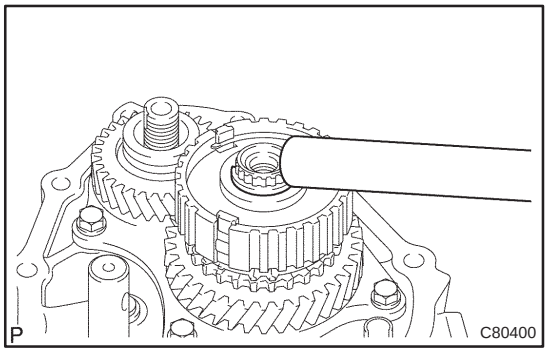

(c) Select a snap ring that will allow minimum axial play.

Clearance: 0.1 mm or less

Mark	Thickness mm (in.)	Mark	Thickness mm (in.)
A	2.25 (0.0886)	E	2.49 (0.0980)
B	2.31 (0.0909)	F	2.55 (0.1004)
C	2.37 (0.0933)	G	2.61 (0.1028)
D	2.43 (0.0957)		

(d) Using a brass bar and hammer, install the snap ring to the input shaft.

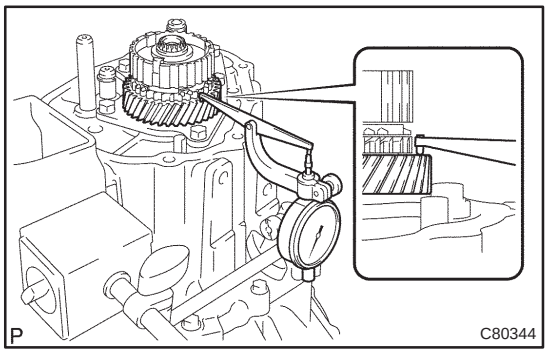

94. INSPECT 5TH GEAR THRUST CLEARANCE

(a) Using a dial indicator, inspect the 5th gear thrust clearance.

Standard clearance:
0.1 – 0.57 mm (0.0039 – 0.02244 in.)
Maximum clearance:
0.57 mm (0.02244 in.)

If the clearance exceeds the maximum, replace the gear, needle roller bearing or shaft.

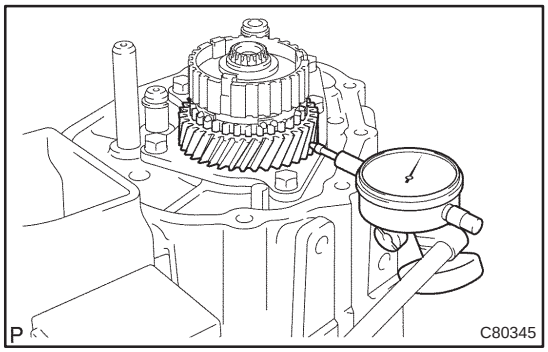

95. INSPECT 5TH GEAR RADIAL CLEARANCE

(a) Using a dial indicator, inspect the 5th gear radial clearance.

Standard clearance:
0.015 – 0.058 mm (0.0006 – 0.0023 in.)
Maximum clearance:
0.058 mm (0.0023 in.)

If the clearance exceeds the maximum, replace the gear, needle roller bearing or shaft.

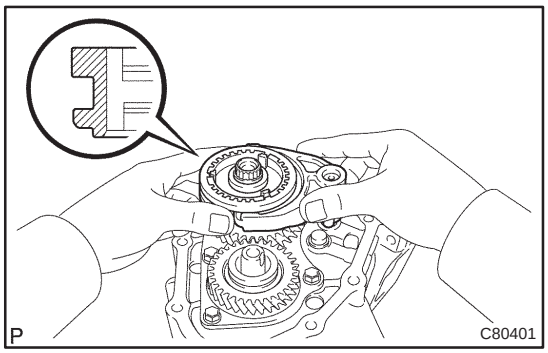

96. INSTALL GEAR SHIFT FORK NO.3

(a) Coat the transmission clutch hub sleeve No.3 with gear oil, install it and gear shift fork No.3 to the transmission clutch hub No.3.

HINT:
Do not set the transmission clutch hub No.3 in incorrect orientation.

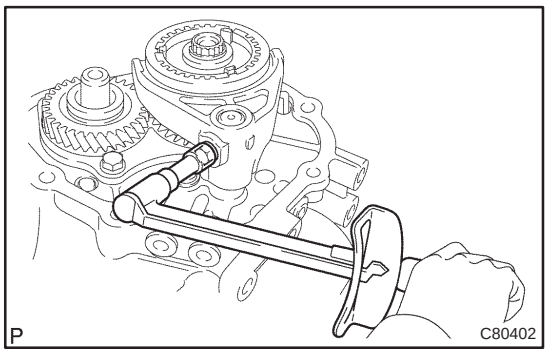

(b) Coat the gear shift fork lock bolt with sealant, install it to the gear shift fork No.3.

Sealant:
Part No. 08833–00080, THREE BOND 1344, LOCTITE 242 or equivalent
Torque: 16 N·m (160 kgf·cm, 12 ft·lbf)

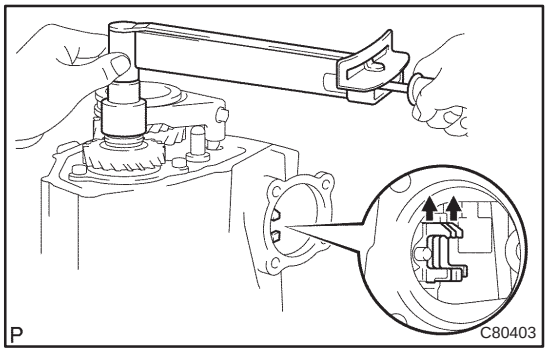

97. INSTALL MANUAL TRANSMISSION OUTPUT SHAFT REAR SET NUT

(a) Engage the gear double meshing.

(b) Install the new manual transmission output shaft rear set nut.

Torque: 118 N·m (1200 kgf·cm, 87 ft·lbf)

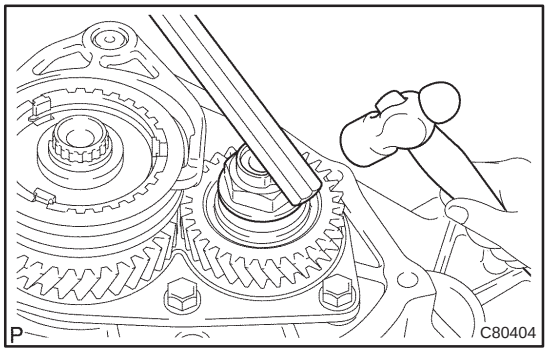

(c) Using a chisel and hammer, stake the manual transmission output shaft rear set nut.

(d) Disengage the gear double meshing.

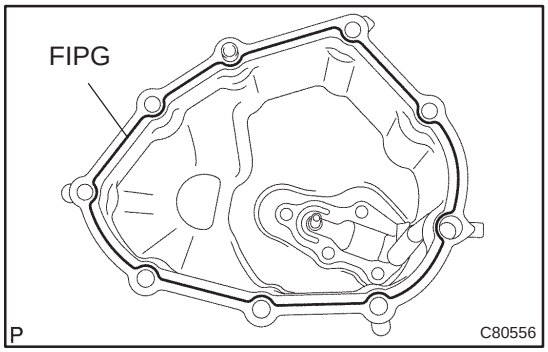

98. INSTALL MANUAL TRANSMISSION CASE COVER SUB–ASSY

(a) Apply FIPG to the transaxle case, cover as shown to the illustration.

FIPG:

Part No. 08826–00090, THREE BOND 1281

NOTICE:

Parts must be assembled within 10 minutes of application. Otherwise, the packing (FIPG) material must be removed and reapplied.

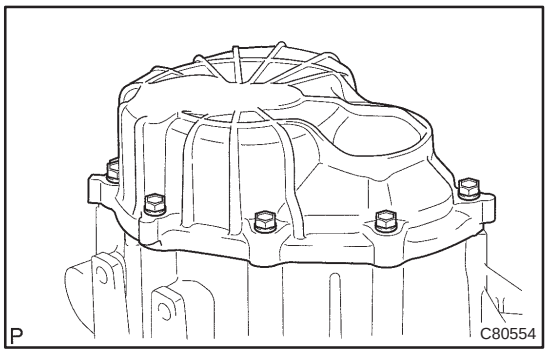

(b) Install the 9 bolts with manual transmission case cover to the manual transmission case.

Torque: 18 N·m (185 kgf·cm, 14 ft·lbf)

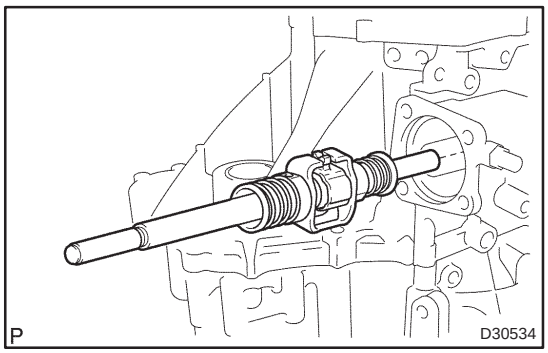

99. INSTALL SHIFT & SELECT LEVER SHAFT ASSY

(a) Coat the sift & select lever shaft assy with gear oil, install it to the manual transmission case.

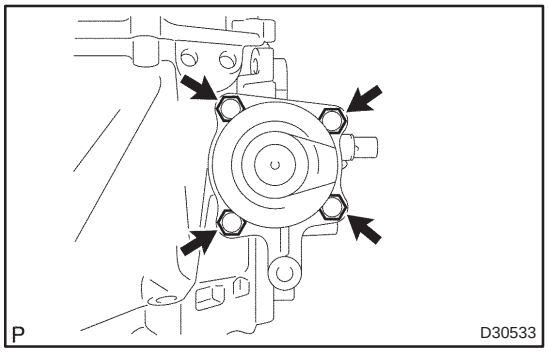

100. INSTALL CONTROL SHAFT COVER

(a) Coat the 4 bolts with sealant, install the new gasket, control shaft cover with the bolt.

Sealant:

Part No. 08833–00080, THREE BOND 1344, LOCTITE 242 or equivalent

Torque: 20 N·m (200 kgf·cm, 14 ft·lbf)

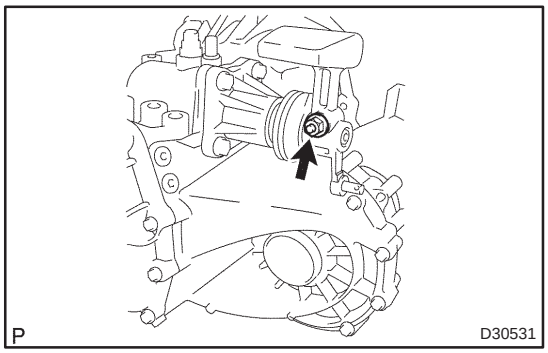

101. INSTALL CONTROL SHIFT LEVER

(a) Install the control shift lever with shift outer lever lever lock pin to the shift & select lever shaft assy.

(b) Install the spring washer with nut.

Torque: 12 N·m (122 kgf·cm, 8.9 ft·lbf)

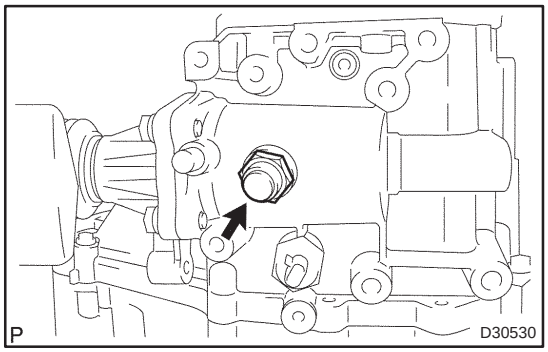

102. INSTALL LOCK BALL ASSY NO.1

(a) Coat the lock ball assy No.1 with sealant, install it to the manual transmission case.
Torque: 29 N·m (300 kgf·cm, 22 ft·lbf)
Sealant:
Part No. 08833–00080, THREE BOND 1344, LOCTITE 242 or equivalent

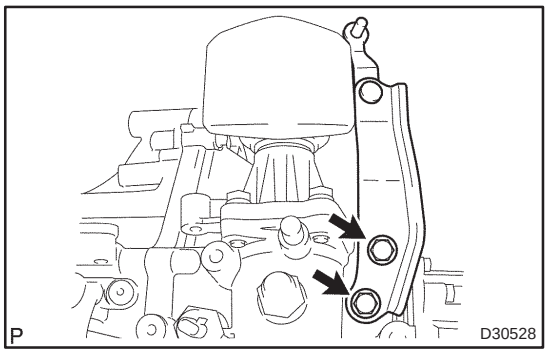

103. INSTALL SELECTING BELL CRANK ASSY

(a) Install the 2 bolts with selecting bell crank assy to the manual transmission case.
Torque: 25 N·m (250 kgf·cm, 18 ft·lbf)

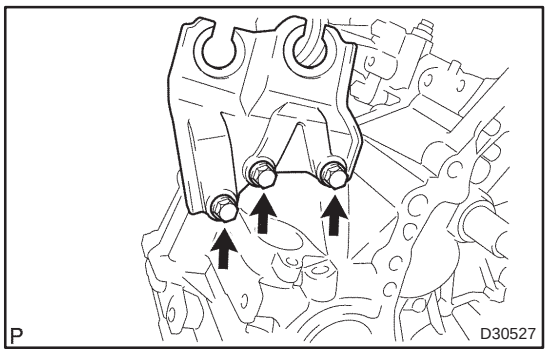

104. INSTALL FLOOR SHIFT CONTROL LEVER HOUSING SUPPORT BRACKET

(a) Install the 3 bolts with floor shift control lever housing support bracket to the front transaxle case.
Torque: 18 N·m (184 kgf·cm, 13 ft·lbf)

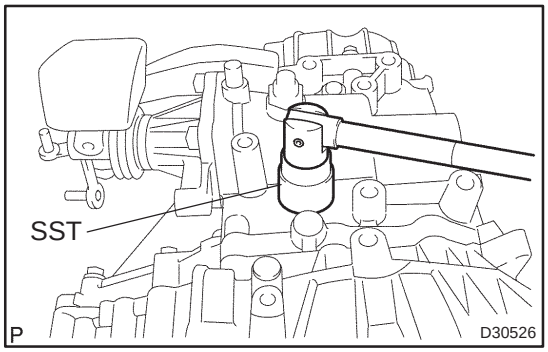

105. INSTALL BACK UP LAMP SWITCH ASSY

(a) Using SST, install the back up lamp switch assy with new gasket to the manual transmission case.
SST 09817–16011
Torque: 40 N·m (410 kgf·cm, 30 ft·lbf)

106. INSTALL SPEEDOMETER DRIVEN HOLE COVER SUB–ASSY

(a) Install a new O–ring to the speedometer driven hole cover sub–assy.
(b) Install the bolt with speedometer driven hole cover sub–assy to the manual transaxle case.
Torque: 11 N·m (115 kgf·cm, 8.3 ft·lbf)

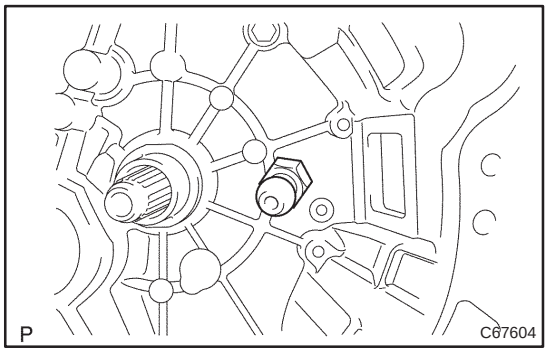

107. INSTALL RELEASE FORK SUPPORT

(a) Install the release fork support to the front transaxle case.
Torque: 37 N·m (375 kgf·cm, 25 ft·lbf)

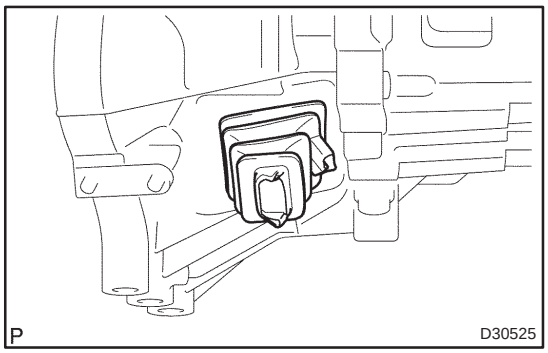

108. INSTALL CLUTCH RELEASE FORK BOOT

(a) Install the clutch release fork boot to the front transaxle case.

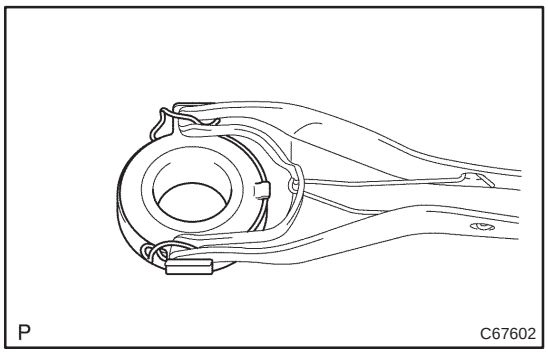

109. INSTALL CLUTCH RELEASE BEARING ASSY

(a) Coat the clutch release bearing assy with release hub grease, install it to the clutch release fork sub–assy.
Sealant:
Part No. 08887–01806, RELEASE HUB GREASE or equivalent

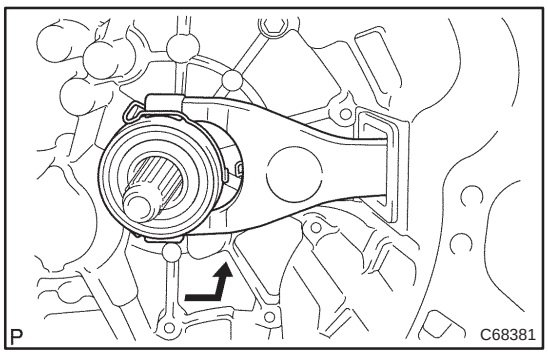

110. INSTALL CLUTCH RELEASE FORK SUB–ASSY

(a) Install the clutch release fork sub–assy to the input shaft.
Sealant:
Part No. 08887–01806, CLUTCH SPLINE GREASE or equivalent

(b) Apply clutch spline grease to the input shaft spline.

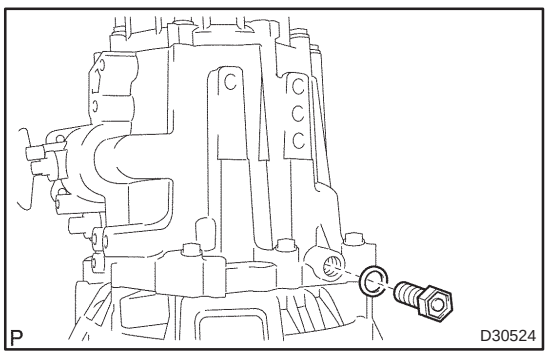

111. INSTALL MANUAL TRANSMISSION FILLER PLUG

(a) Install the manual transmission filler plug with new gasket to the manual transmission case.
Torque: 39 N·m (400 kgf·cm, 29 ft·lbf)

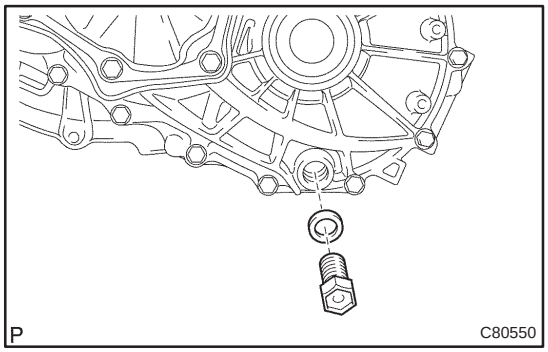

112. INSTALL DRAIN (MTM) PLUG SUB–ASSY

(a) Install the drain plug with new gasket to the manual transmission case.
Torque: 39 N·m (400 kgf·cm, 29 ft·lbf)

INPUT SHAFT ASSY (C250)

COMPONENTS

410DE–01

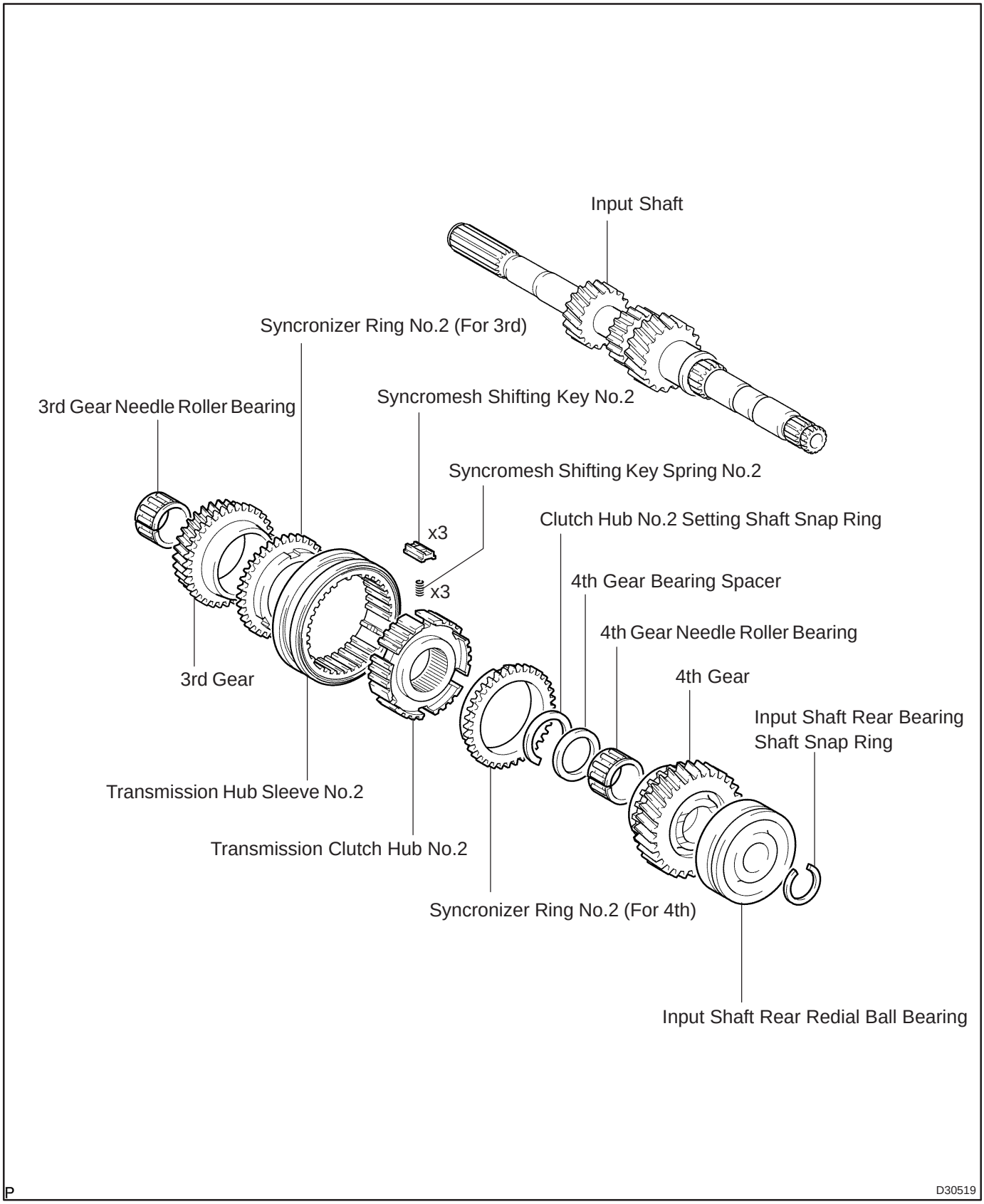

OVERHAUL

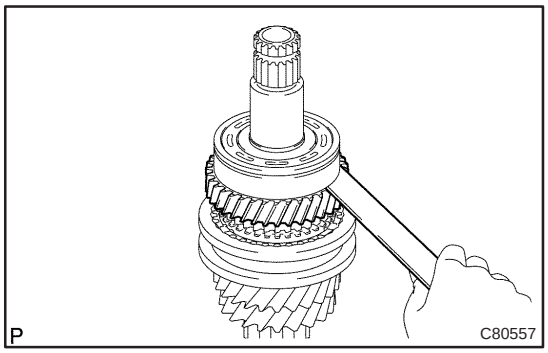

1. INSPECT 4TH GEAR THRUST CLEARANCE

(a) Using a feeler gauge, measure the 4th gear thrust clearance.

Standard clearance:
0.1 – 0.55 mm (0.0039 – 0.0217 in.)
Maximum clearance:
0.55 mm (0.0217 in.)

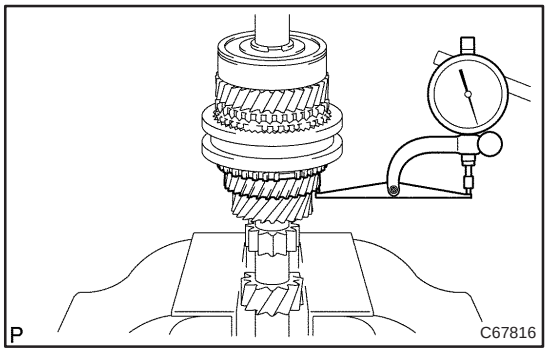

2. INSPECT 3RD GEAR THRUST CLEARANCE

(a) Using a dial indicator, measure the 3rd gear thrust clearance.

Standard clearance:
0.1 – 0.35 mm (0.0039 – 0.0138 in.)
Maximum clearance:
0.35 mm (0.0138 in.)

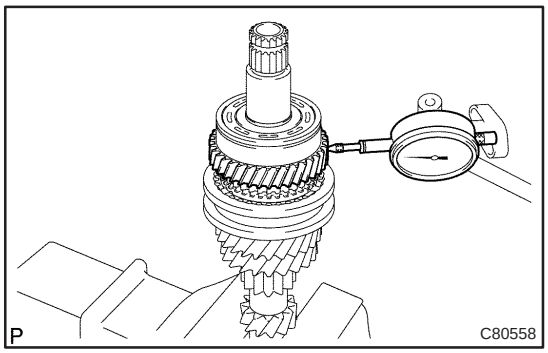

3. INSPECT 4TH GEAR RADIAL CLEARANCE

(a) Using a dial indicator, measure the 4th gear radial clearance between the gear and shaft.

Standard clearance:
0.015 – 0.058 mm (0.0006 – 0.0023 in.)
Maximum clearance:
0.058 mm (0.0023 in.)

If the clearance exceeds the maximum, replace the gear, needle roller bearing or shaft.

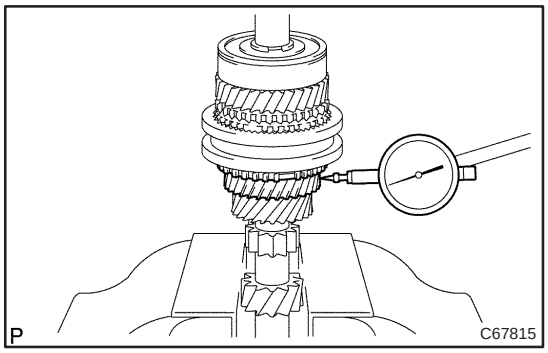

4. INSPECT 3RD GEAR RADIAL CLEARANCE

(a) Using a dial indicator, measure the 3rd gear radial clearance between the gear and shaft.

Standard clearance:
0.015 – 0.058 mm (0.0006 – 0.0023 in.)
Maximum clearance:
0.058 mm (0.0023 in.)

If the clearance exceeds the maximum, replace the gear, needle roller bearing or shaft.

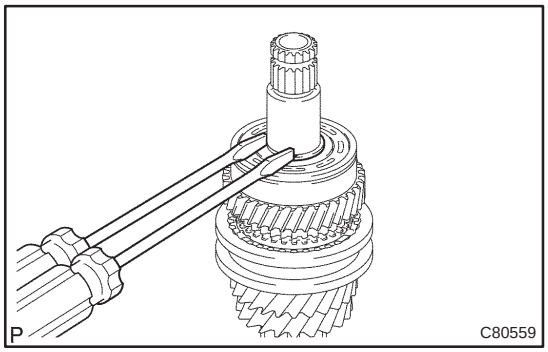

5. REMOVE 4TH GEAR

(a) Using 2 screwdrivers and a hammer, remove the input shaft rear bearing shaft snap ring from input shaft.

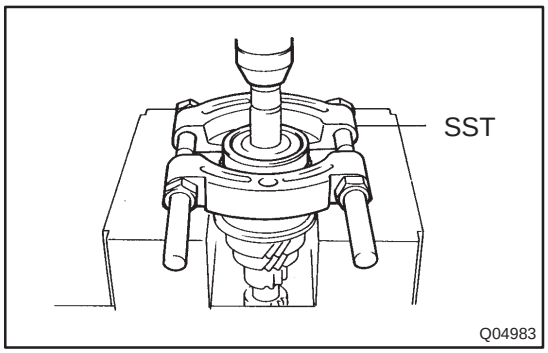

(b) Using SST and a press, remove the input shaft radial ball bearing rear and 4th gear from input shaft.

NOTICE:

Do not tighten SST excessively.

SST 09950–00020

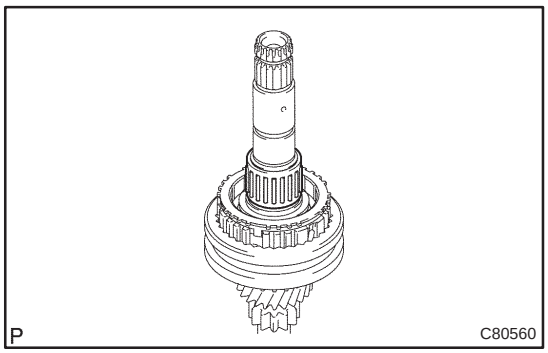

6. REMOVE 4TH GEAR NEEDLE ROLLER BEARING

(a) Remove the 4th gear needle roller bearing and 4th gear bearing spacer from input shaft.

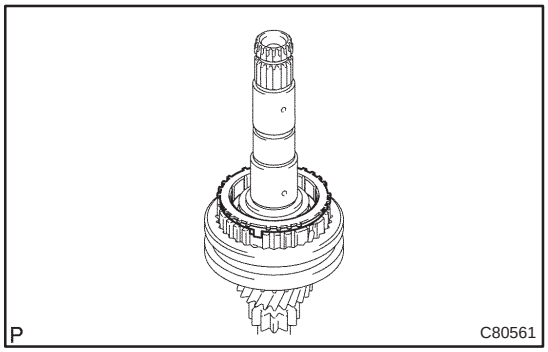

7. REMOVE SYNCHRONIZER RING NO.2 (FOR FOURTH SYNCHRONIZER RING)

(a) Remove synchronizer ring No.2 from transmission clutch hub No.2.

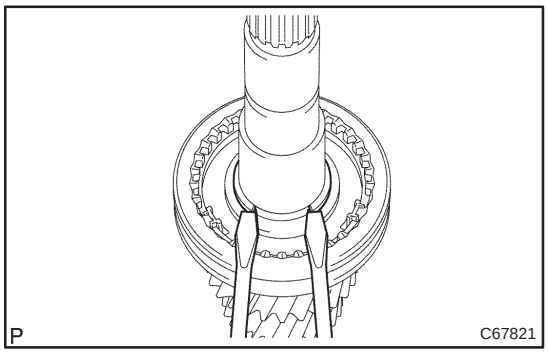

8. REMOVE 3RD GEAR

(a) Using 2 screwdrivers and a hammer, remove the clutch hub No.2 setting shaft snap ring from the input shaft.

NOTICE:

Using a shop rug to prevent the snap ring from being scattered.

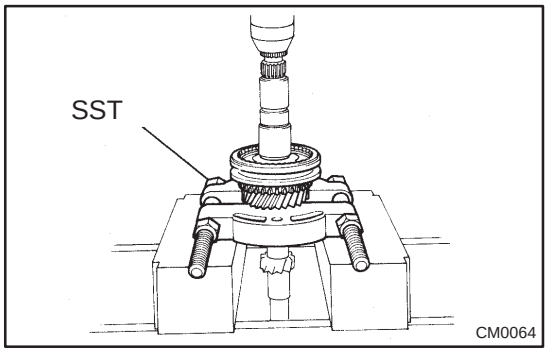

(b) Using SST and a press, remove the transmission clutch hub No.2 and 3rd gear from the input shaft.

NOTICE:

Do not tighten SST excessively.

SST 09950–00020

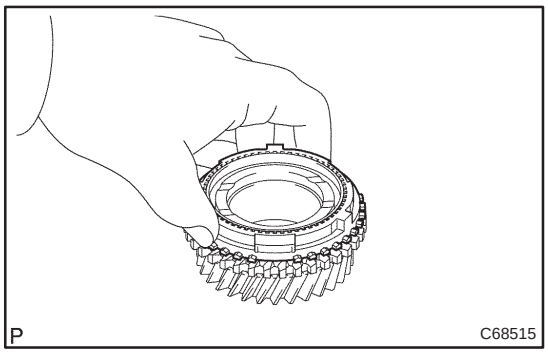

9. REMOVE SYNCHRONIZER RING NO.2 (FOR THIRD SYNCHRONIZER RING)

(a) Remove the synchronizer ring No.2 from the 3rd gear.

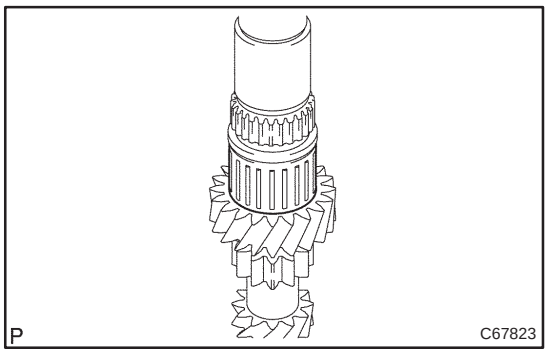

10. REMOVE 3RD GEAR NEEDLE ROLLER BEARING

(a) Remove the 3rd gear needle roller bearing from the input shaft.

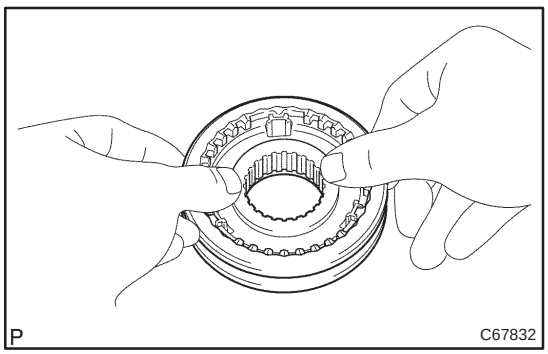

11. REMOVE TRANSMISSION HUB SLEEVE NO.2

(a) Remove the transmission hub sleeve No.2, 3 synchromesh shifting keys No.2 and 3 synchromesh shifting key springs No.2 from the transmission clutch hub No.2.

NOTICE:

Using a waste to prevent the shifting key and shifting key spring from being scattered.

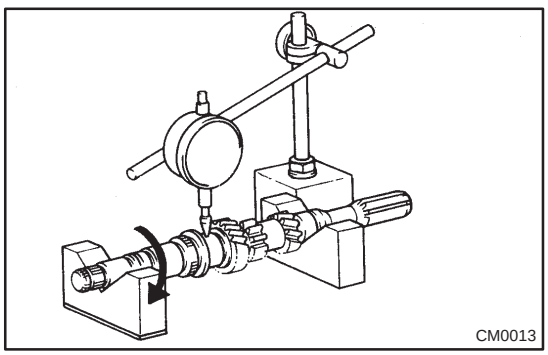

12. INSPECT INPUT SHAFT

(a) Using a dial indicator, check the shaft runout.

Maximum runout: 0.015 mm (0.00059 in.)

If the runout exceeds the maximum, replace the input shaft.

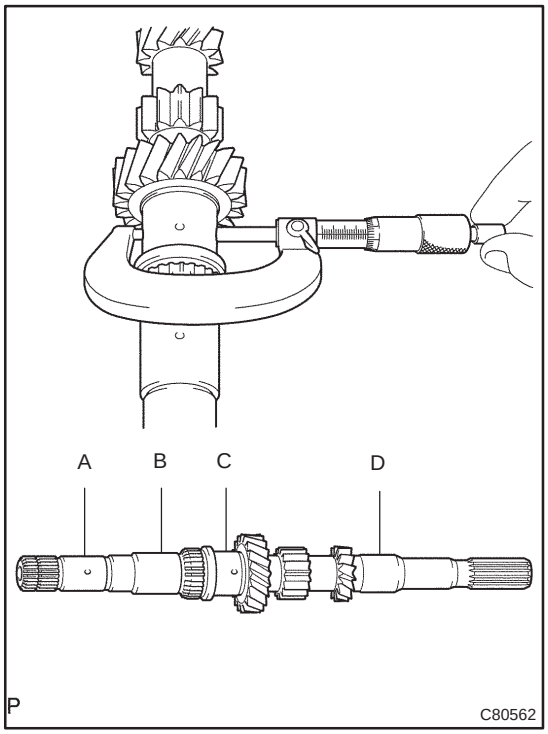

(b) Using a micrometer, measure the outer diameter of the input shaft journal surface.

Standard outer diameter:
Part A: 24.885 – 24.900 mm (0.9797 – 0.9803 in.)
Part B: 28.991 – 29.006 mm (1.1413 – 1.1419 in.)
Part C: 30.985 – 31.000 mm (1.2198 – 1.2204 in.)
Part D: 24.985 – 25.000 mm (0.9836 – 0.9842 in.)
Minimum outer diameter:
Part A: 24.885 mm (0.9797 in.)
Part B: 28.991 mm (1.1413 in.)
Part C: 30.985 mm (1.2198 in.)
Part D: 24.985 mm (0.9836 in.)

If the outer diameter is less than the minimum, replace the input shaft.

SST 99999–60009

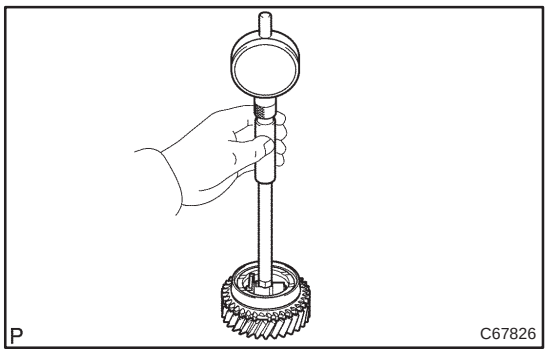

13. INSPECT 4TH GEAR

(a) Using a cylinder gauge, measure the inside diameter of the 4th gear.

Standard clearance:
34.015 – 34.031 mm (1.3391 – 1.3398 in.)
Maximum clearance:
34.031 mm (1.3398 in.)

If the clearance exceeds the maximum, replace the 4th gear.

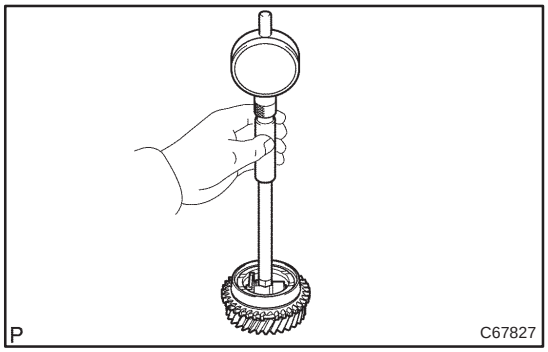

14. INSPECT 3RD GEAR

(a) Using a cylinder gauge, measure the inside diameter of the 3rd gear.

Standard clearance:
36.015 – 36.031 mm (1.4179 – 1.4185 in.)
Maximum clearance:
36.031 mm (1.4185 in.)

If the clearance exceeds the maximum, replace the 3rd gear.

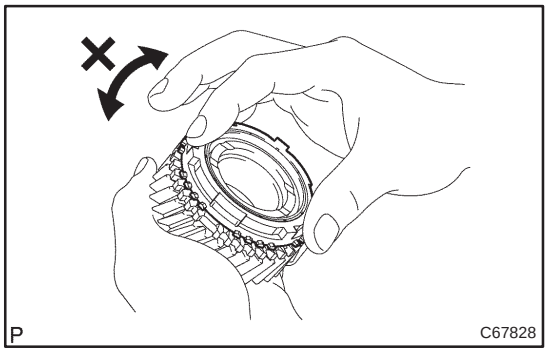

15. INSPECT SYNCHRONIZER RING NO.2 (FOR FOURTH SYNCHRONIZER RING)

(a) Coat the 4th gear cone with gear oil. Check the braking effect of the synchronizer ring No.2. Turn the synchronizer ring No.2 in one direction while pushing it to the 4th gear cone. Check that the ring locks.

If the braking effect is insufficient, apply a small amount of the fine lapping compound between the synchronizer ring No.2 and 4th gear cone. Lightly rub the synchronizer ring No.2 and 4th gear cone together.

NOTICE:

Ensure the fine lapping compound is completely washed off after rubbing.

(b) Check again the braking effect of the synchronizer ring No.2.

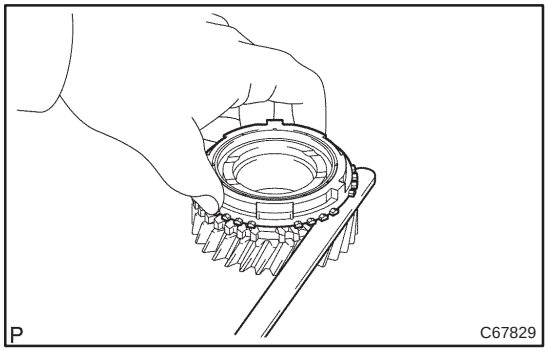

(c) Using a feeler gauge, measure the clearance between the synchronizer ring No.2 back and 4th gear spline end.

Standard clearance:

0.75 – 1.65 mm (0.0295 – 0.0649 in.)

If the clearance is less than the minimum, replace the synchronizer ring and apply a small amount of the fine lapping compound on 4th gear cone.

NOTICE:

Ensure the fine lapping compound is completely washed off after rubbing.

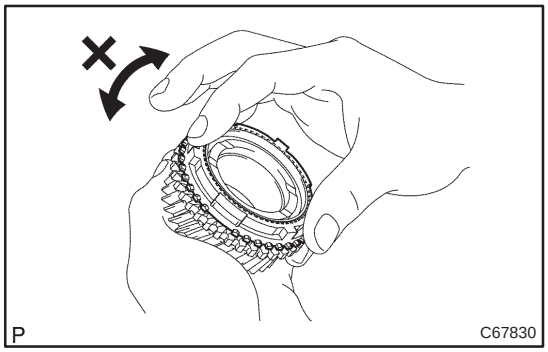

16. INSPECT SYNCHRONIZER RING NO.2 (FOR THIRD SYNCHRONIZER RING)

(a) Coat the 3rd gear cone with gear oil. Check the braking effect of the synchronizer ring No.2. Turn the synchronizer ring No.2 in one direction while pushing it to the 3rd gear cone. Check that the ring locks.

If the braking effect is insufficient, apply a small amount of the fine lapping compound between the synchronizer ring No.2 and 3rd gear cone. Lightly rub the synchronizer ring No.2 and 3rd gear cone together.

NOTICE:

Ensure the fine lapping compound is completely washed off after rubbing.

(b) Check again the braking effect of the synchronizer ring No.2.

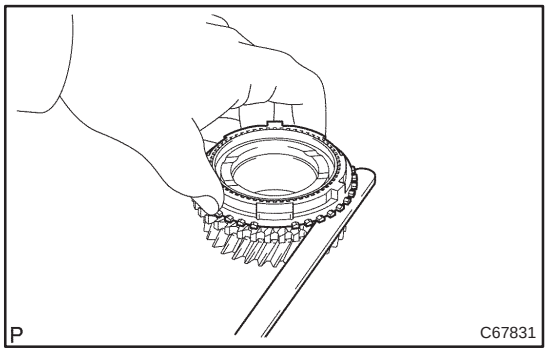

(c) Using a feeler gauge, measure the clearance between the synchronizer ring No.2 back and 3rd gear spline end.

Standard clearance:

0.75 – 1.65 mm (0.0295 – 0.0649 in.)

If the clearance is less than the minimum, replace the synchronizer ring No.2 and apply a small amount of the fine lapping compound on the 3rd gear cone.

NOTICE:

Ensure the fine lapping compound is completely washed off after rubbing.

17. INSPECT TRANSMISSION HUB SLEEVE NO.2

(a) Check the sliding condition between the transmission hub sleeve No.2 and transmission clutch hub No.2.

(b) Check that the spline gear's edges of the transmission hub sleeve No.2 is not worn down.

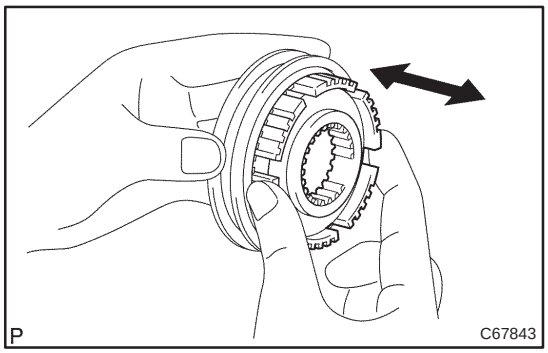

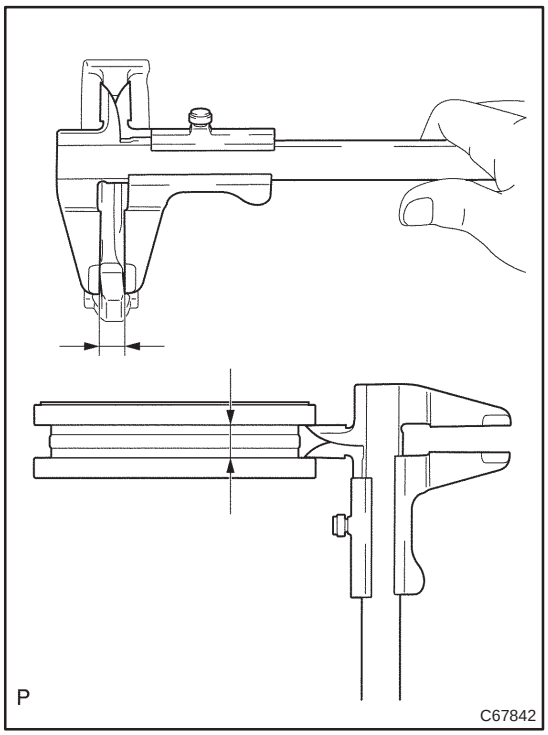

(c) Using a vernier calipers, inspect the transmission hub sleeve No.2 and gear shift fork No.2 as shown in the illustration.

Standard clearance:

0.15 – 0.35 mm (0.0059 – 0.0137 in.)

If the clearance exceeds the standard clearance, replace the transmission hub sleeve No.2 and gear shift fork No.2.

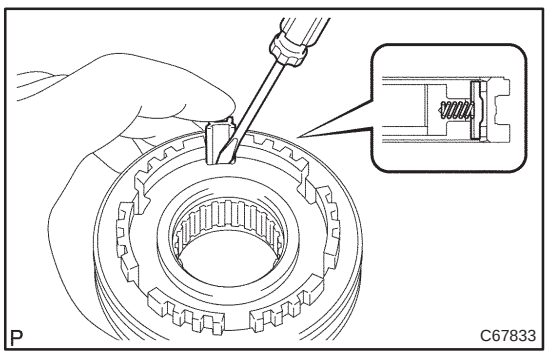

18. INSTALL TRANSMISSION HUB SLEEVE NO.2

(a) Coat the transmission hub sleeve No.2 with gear oil, install it to the transmission clutch hub No.2.

NOTICE:

Do not set the transmission hub sleeve No.2 and the transmission clutch hub in incorrect orientation.

(b) Install the 2 synchromesh key springs with 3 synchromesh shifting keys No.2 to the transmission clutch hub No.2.

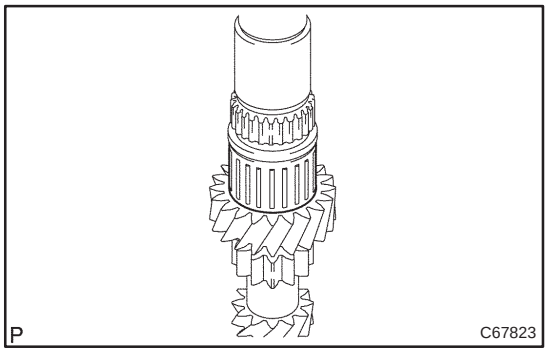

19. INSTALL 3RD GEAR NEEDLE ROLLER BEARING

(a) Coat the 3rd gear needle roller bearing with gear oil, install it to the input shaft.

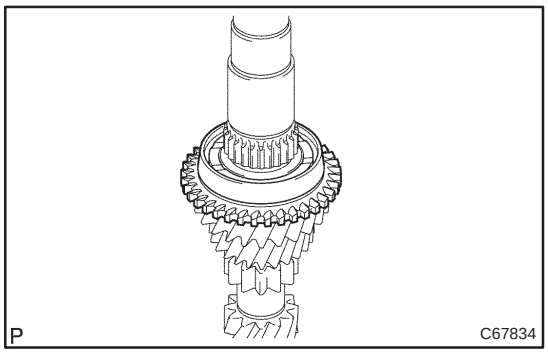

20. INSTALL 3RD GEAR

(a) Coat the 3rd gear with gear oil, install it to the input shaft.

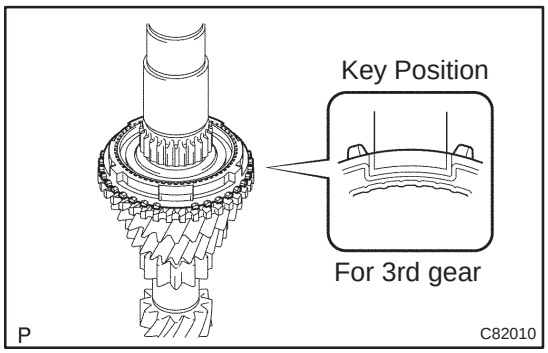

21. INSTALL SYNCHRONIZER RING NO.2 (FOR THIRD SYNCHRONIZER RING)

(a) Coat the synchronizer ring No.2 with gear oil, install it to the 3rd gear.

HINT:

The synchronizer ring No.2 (for 3rd) is a gray color.

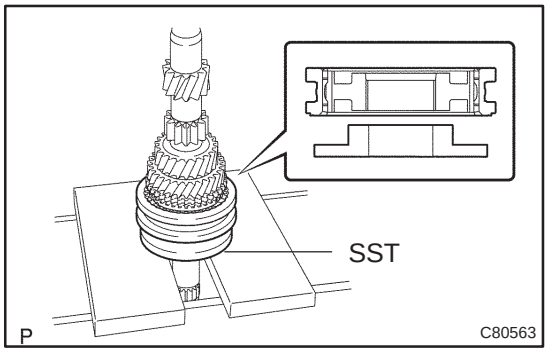

22. INSTALL TRANSMISSION CLUTCH HUB NO.2

(a) Using SST and a press, install the transmission clutch hub No.2 to the input shaft.

SST 09316–60011 (09316–00021)

NOTICE:

Paying attention to the proper position, fit the synchro-mesh shifting key into the groove of the synchronizer ring.

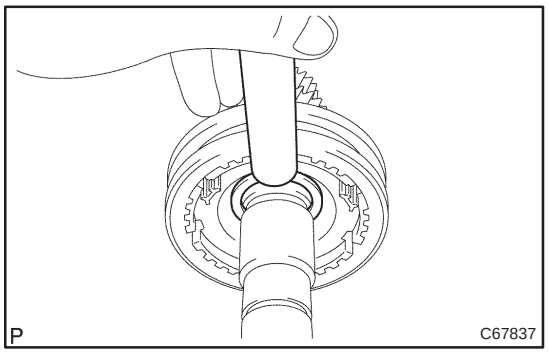

(b) Select a snap ring that will allow the minimum axial play.

Standard clearance:
0.1 mm (0.0039 in.) or less.

Mark	Thickness mm (in)	Mark	Thickness mm (in)
0	2.30 (0.0906)	3	2.48 (0.0976)
1	2.36 (0.0929)	4	2.54 (0.1000)
2	2.42 (0.0953)	5	2.60 (0.1024)

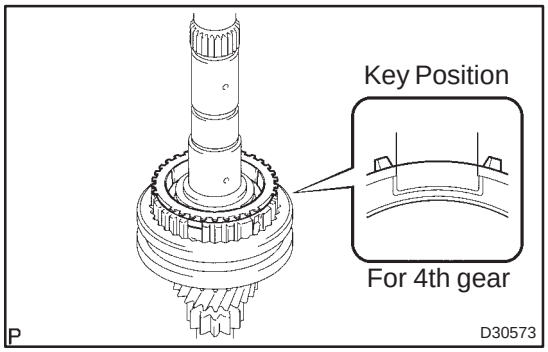

23. INSTALL SYNCHRONIZER RING NO.2 (FOR FOURTH SYNCHRONIZER RING)

(a) Coat the synchronizer ring No.2 with gear oil, install it to the transmission clutch hub No.2.

HINT:

The synchronizer ring No.2 (for 4th) is a yellow copper color.

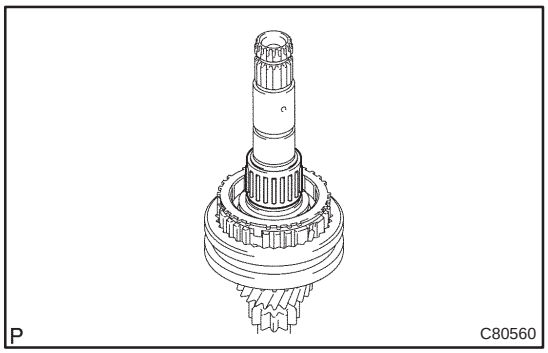

24. INSTALL 4TH GEAR NEEDLE ROLLER BEARING

(a) Coat the 4th gear needle roller bearing and 4th gear bearing spacer with gear oil, install it to the transmission clutch hub No.2.

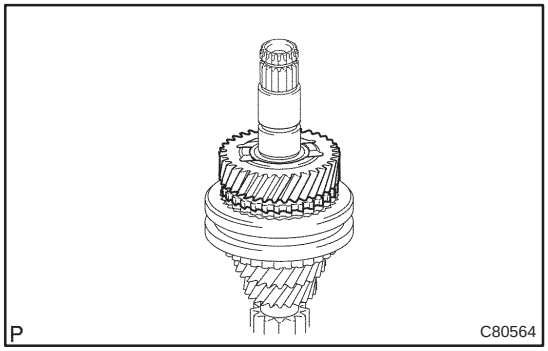

25. INSTALL 4TH GEAR

(a) Coat the 4th gear with gear oil, install it to the input shaft.

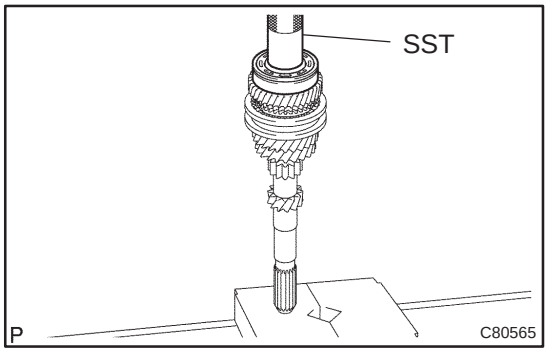

26. INSTALL INPUT SHAFT REAR RADIAL BALL BEARING

(a) Using SST and a press, install the input shaft rear radial ball bearing to the input shaft.

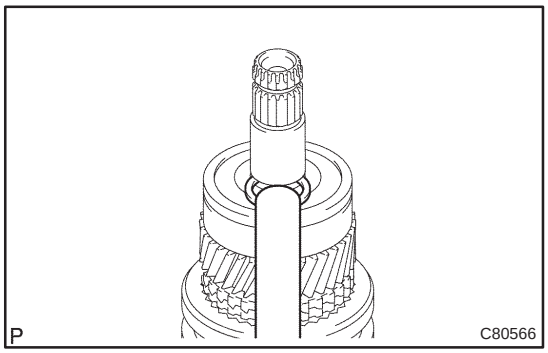

(b) Select a snap ring that will allow minimum axial play.

Standard clearance:
0.1 mm (0.0039 in.) or less

Mark	Thickness mm (in)	Mark	Thickness mm (in)
A	2.29 (0.0901)	D	2.47 (0.0972)
B	2.35 (0.0925)	E	2.53 (0.0996)
C	2.41 (0.0948)	F	2.59 (0.1019)

If the clearance is less than the limit, replace the input shaft rear radial ball bearing.

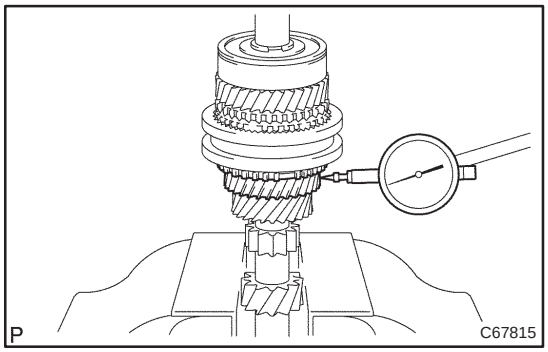

27. INSPECT 3RD GEAR RADIAL CLEARANCE

(a) Using a dial indicator, measure the radial clearance between the 3rd gear.

Standard clearance:
0.015 – 0.058 mm (0.0006 – 0.0023 in.)

If the clearance is less than the limit, replace the 3rd gear.

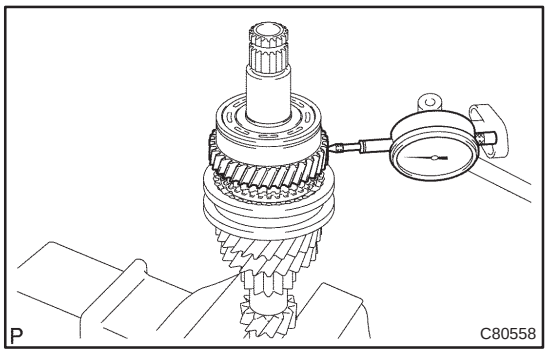

28. INSPECT 4TH GEAR RADIAL CLEARANCE

(a) Using a dial indicator, measure the radial clearance between the 4th gear.

Standard clearance:
0.015 – 0.058 mm (0.0006 – 0.0023 in.)

If the clearance is less than the limit, replace the 4th gear.

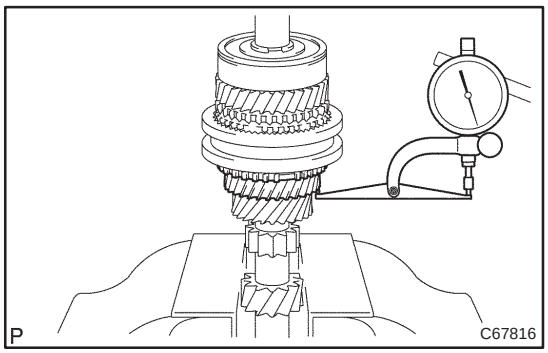

29. INSPECT 3RD GEAR THRUST CLEARANCE

(a) Using a dial indicator, measure the 3rd thrust clearance.

Standard clearance:
0.1 – 0.35 mm (0.0039 – 0.0138 in.)

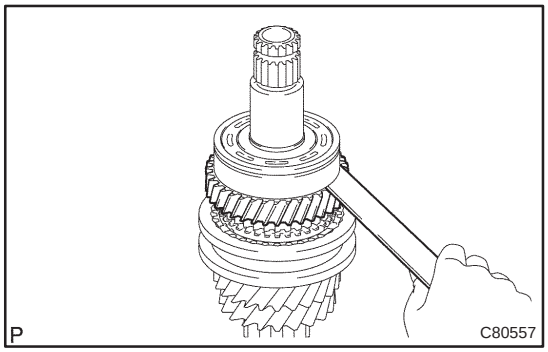

30. INSPECT 4TH GEAR THRUST CLEARANCE

(a) Using a feeler gauge, measure the 4th thrust clearance.

Standard clearance:
0.1 – 0.55 mm (0.0039 – 0.0217 in.)

If the clearance is less than the limit, replace the 4th gear.

OUTPUT SHAFT ASSY (C250)

COMPONENTS

410DG–01

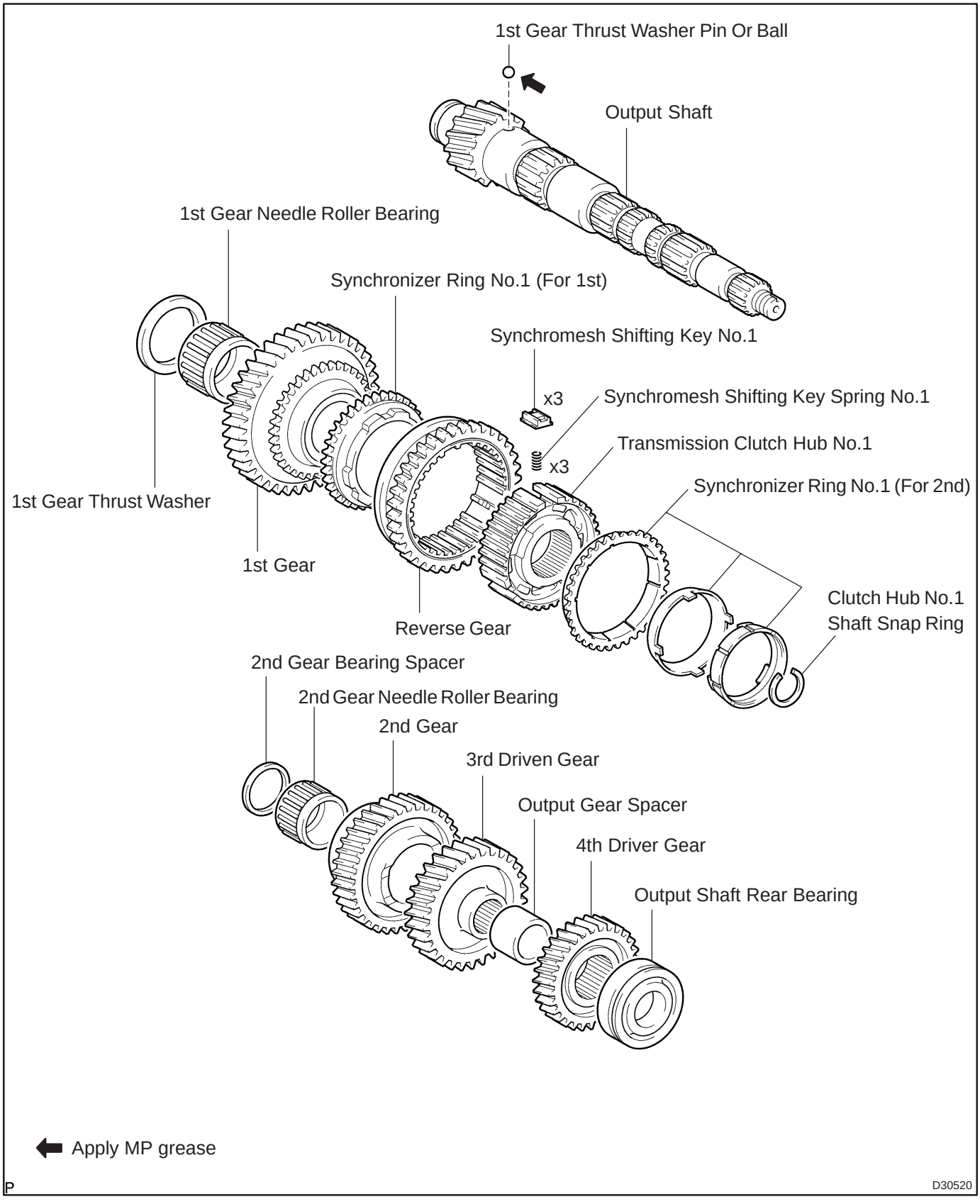

OVERHAUL

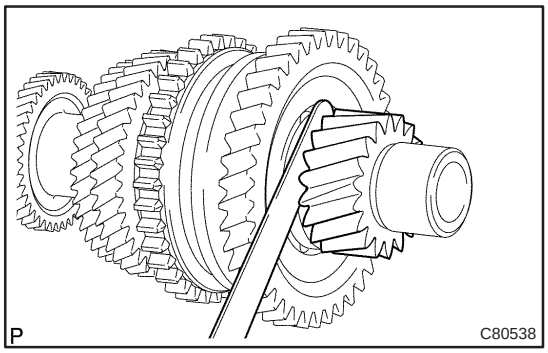

1. INSPECT 1ST GEAR THRUST CLEARANCE

(a) Using a feeler gauge, measure the 1st gear thrust clearance.

Standard clearance:
0.10 – 0.40 mm (0.0039 – 0.0157 in.)
Maximum clearance:
0.40 mm (0.0157 in.)

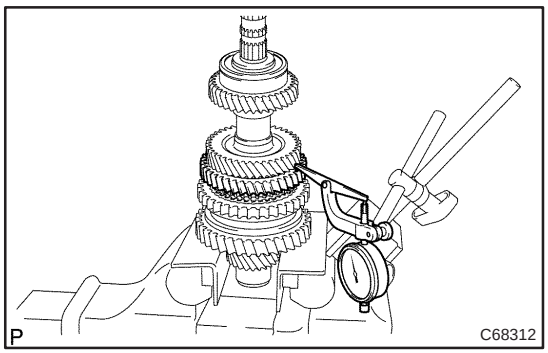

2. INSPECT 2ND GEAR THRUST CLEARANCE

(a) Using a dial indicator, measure the 2nd gear thrust clearance.

Standard clearance:
0.1 – 0.45 mm (0.0039 – 0.0177 in.)
Maximum clearance:
0.45 mm (0.0177 in.)

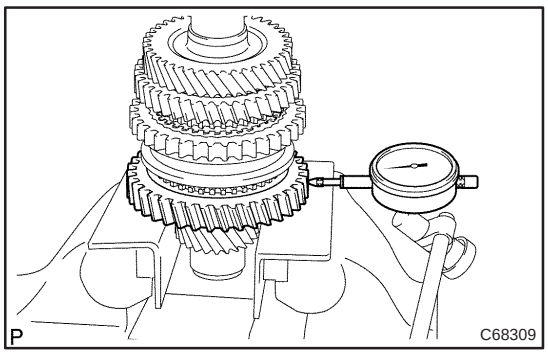

3. INSPECT 1ST GEAR RADIAL CLEARANCE

(a) Using a dial indicator, measure the 1st gear radial clearance between the gear and shaft.

Standard clearance:
0.015 – 0.058 mm (0.0006 – 0.0023 in.)
Maximum clearance:
0.058 mm (0.0023 in.)

If the clearance exceeds the maximum, replace the 1st gear needle roller bearing.

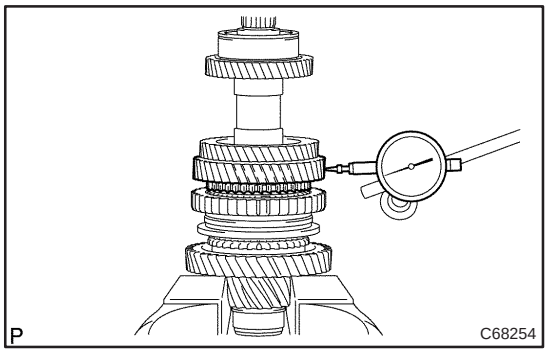

4. INSPECT 2ND GEAR RADIAL CLEARANCE

(a) Using a dial indicator, measure the 2nd gear radial clearance between the gear and shaft.

Standard clearance:
0.015 – 0.058 mm (0.0006 – 0.0023 in.)
Maximum clearance:
0.058 mm (0.0023 in.)

If the clearance exceeds the maximum, replace the 2nd gear needle roller bearing.

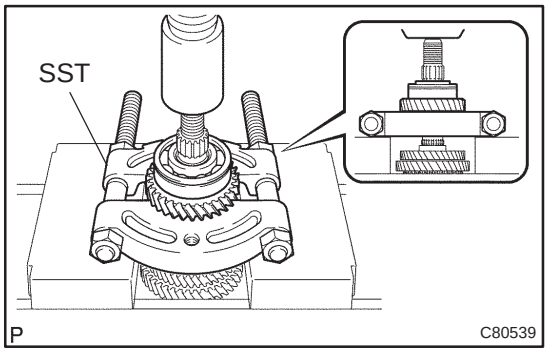

5. REMOVE 4TH DRIVEN GEAR

(a) Using SST and a press, remove the output shaft bearing rear and 4th driven gear from the output shaft.
SST 09950–00020

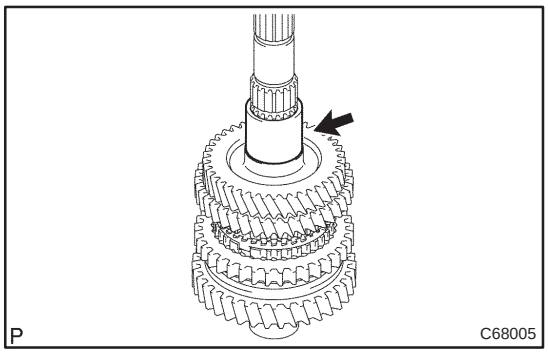

6. REMOVE OUTPUT GEAR SPACER

(a) Remove the output gear spacer from the output shaft.

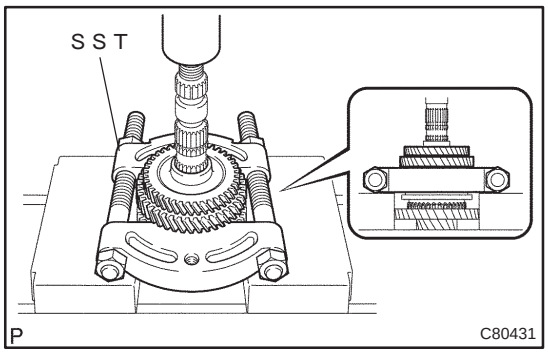

7. REMOVE 2ND GEAR

(a) Using SST, remove the 3rd driven gear and 2nd gear from the out put shaft.
SST 09950–00020

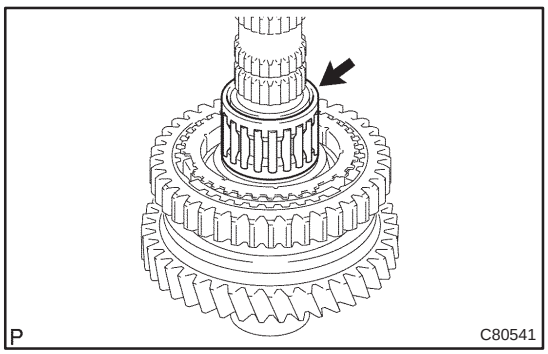

8. REMOVE 2ND GEAR NEEDLE ROLLER BEARING

(a) Remove the 2nd gear needle roller bearing and 2nd gear bearing spacer from the output shaft.

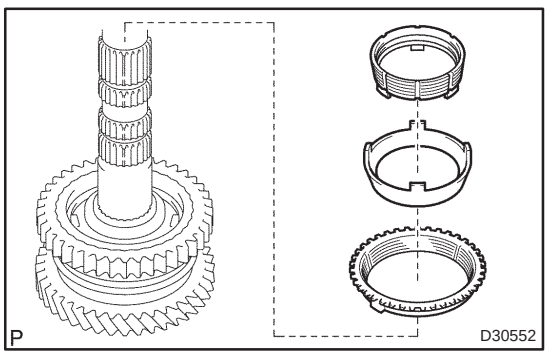

9. REMOVE SYNCHRONIZER RING NO.1 (FOR SECOND SYNCHRONIZER RING)

(a) Remove the synchronizer ring No.1 from the output shaft.

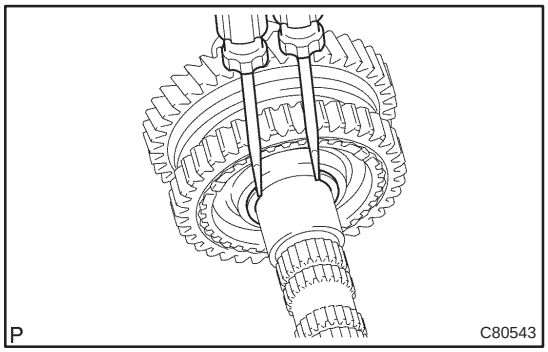

10. REMOVE 1ST GEAR

(a) Using 2 screwdrivers and a hammer, remove the clutch hub No.1 shaft snap ring from the output shaft.

HINT:

Using a shop rug to prevent the shaft snap ring from being scatted.

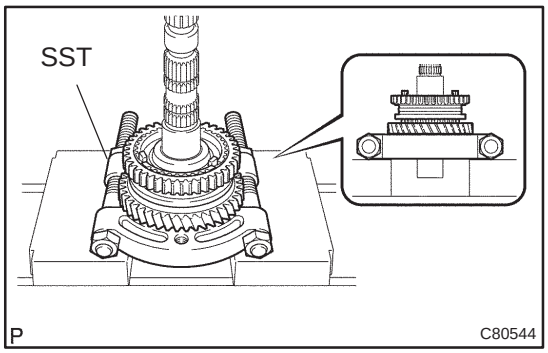

(b) Using SST and a press, remove the clutch hub No.1 assy and 1st gear from the output shaft.

SST 09950–00020

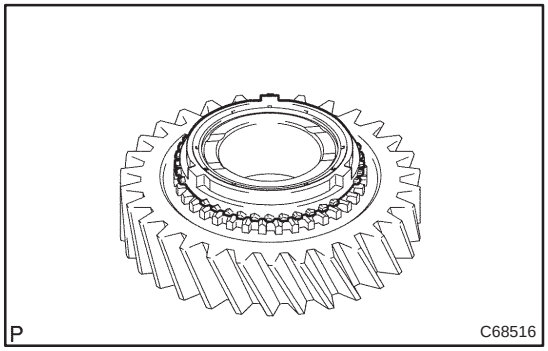

11. REMOVE SYNCHRONIZER RING NO.1 (FOR FIRST SYNCHRONIZER RING)

(a) Remove the synchronizer ring No.1 from the 1st gear.

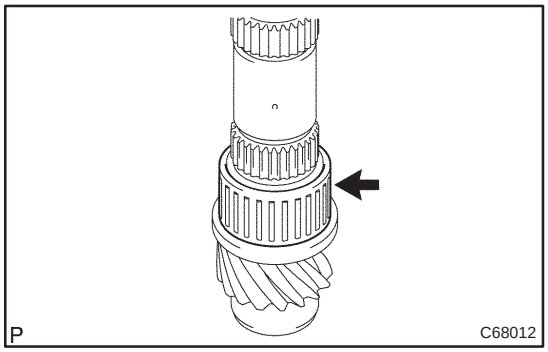

12. REMOVE 1ST GEAR NEEDLE ROLLER BEARING

(a) Remove the 1st gear needle roller bearing from the output shaft.

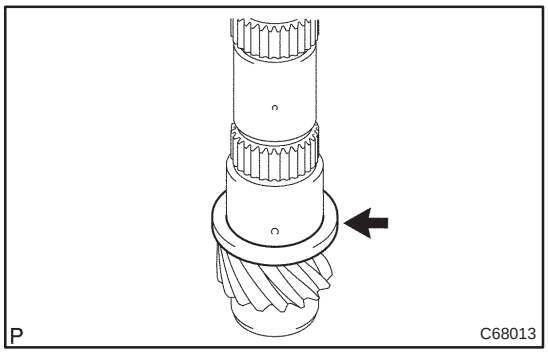

13. REMOVE 1ST GEAR THRUST WASHER

(a) Remove the 1st gear thrust washer from the output shaft.

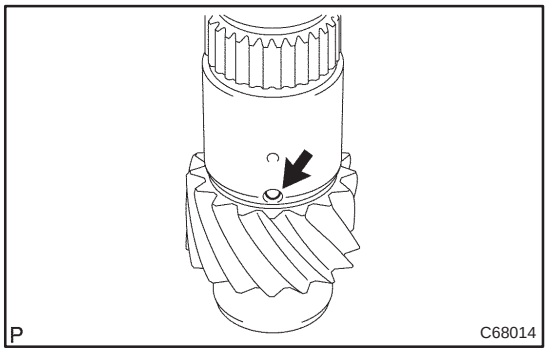

14. REMOVE 1ST GEAR THRUST WASHER PIN OR BALL

(a) Remove the 1st gear thrust washer pin or ball from the output shaft.

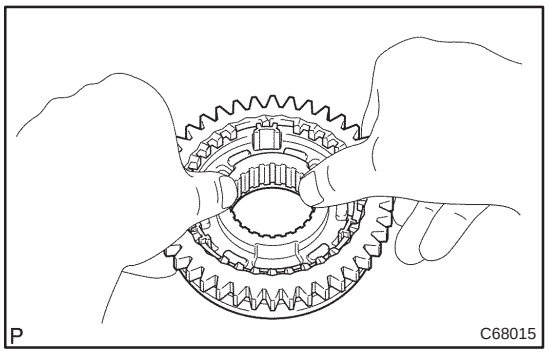

15. REMOVE REVERSE GEAR

(a) Remove the reverse gear, 3 synchromesh shifting keys and 3 synchromesh keys springs.

HINT:

Using a waste to prevent the shifting key and shifting key spring from being scatted.

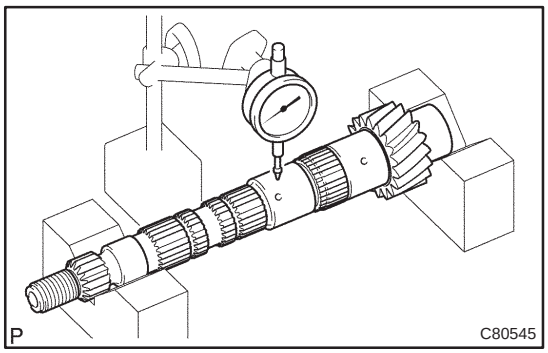

16. INSPECT OUTPUT SHAFT

(a) Using a dial indicator, check the shaft runout.

Minimum runout: 0.015 mm (0.0006 in.)

If the runout exceeds the maximum, replace the output shaft.

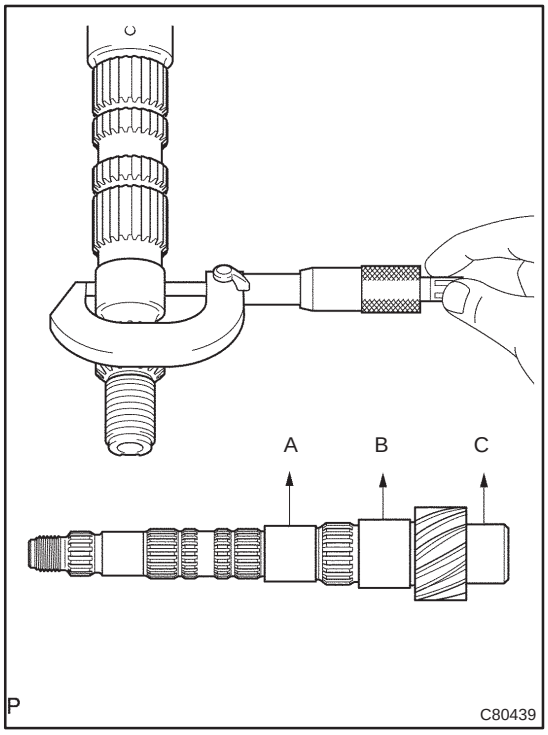

(b) Using a micrometer, measure the outer diameter of the output shaft journal surface.

Standard outer diameter:

Part A: 31.985 –32.000 mm (1.2592 – 1.2598 in.)

Part B: 37.985 –38.000 mm (1.4955 – 1.2598 in.)

Part C: 32.985 –33.000 mm (1.2986 – 1.2992 in.)

If the outer diameter is less than the minimum, replace the output shaft.

SST 99999–60009

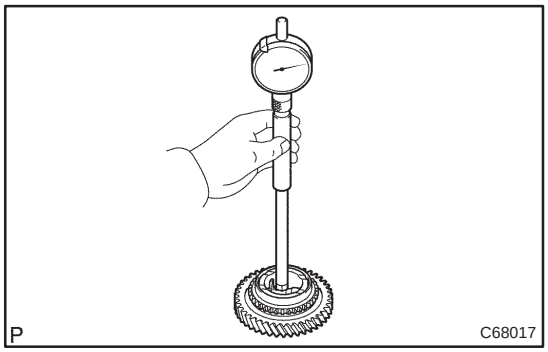

17. INSPECT 2ND GEAR

(a) Using a cylinder gauge, measure the clearance of the 2nd gear.

Standard clearance:
38.015 – 38.031 mm (1.4966 – 1.4972 in.)
Maximum clearance:
38.031 mm (1.4972 in.)

If the clearance exceeds the maximum, replace the 1st gear.

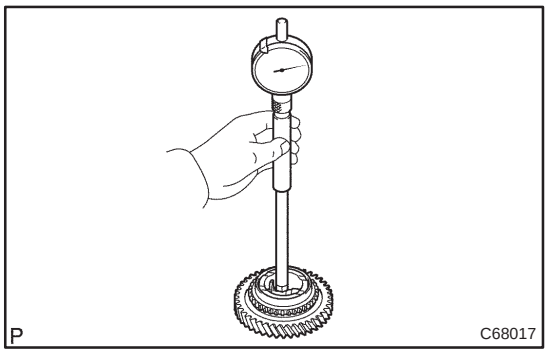

18. INSPECT 1ST GEAR

(a) Using a cylinder gauge, measure the clearance of the 1st gear.

Standard clearance:
44.015 – 44.031 mm (1.7328 – 1.7335 in.)
Maximum clearance:
44.031 mm (1.7335 in.)

If the clearance exceeds the maximum, replace the 1st gear.

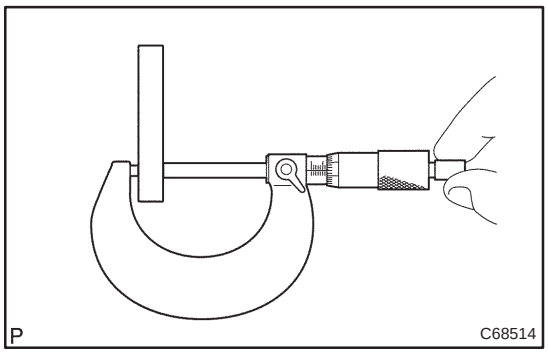

19. INSPECT 1ST GEAR THRUST WASHER

(a) Using a micrometer, measure the 1st gear thrust washer.

Standard thickness:
5.975 – 6.025 mm (0.2352 – 0.2372 in.)
Minimum thickness:
5.975 mm (0.2352 in.)

If the clearance exceeds the minimum, replace the 1st gear.

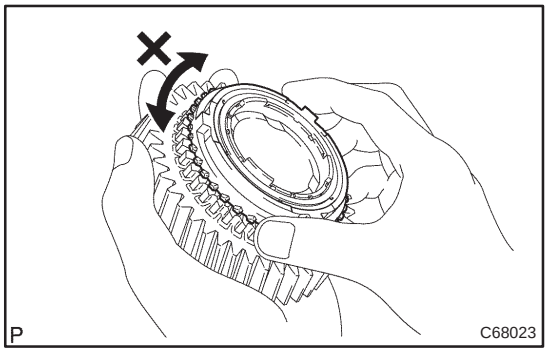

20. INSPECT SYNCHRONIZER RING NO.1 (FOR SECOND SYNCHRONIZER RING)

(a) Coat the 2nd gear cone with gear oil. Check the braking effect of the synchronizer ring. Turn the synchronizer ring in one direction while pushing it to the gear cone. Check that the ring locks.

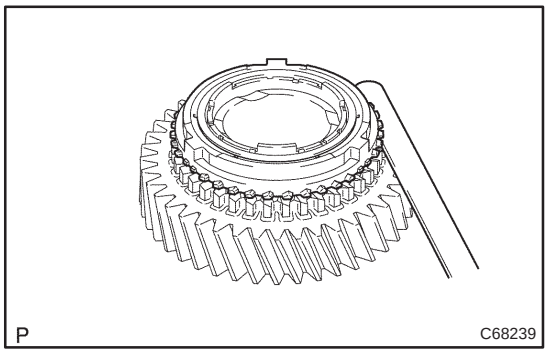

(b) Using a feeler gauge, measure the clearance between the synchronizer ring back and gear spline end.

Standard clearance:
0.70 – 1.30 mm (0.0276 – 0.0512 in.)
Minimum clearance:
0.70 mm (0.0276in.)

If the clearance is less than the minimum, replace the synchronizer ring.

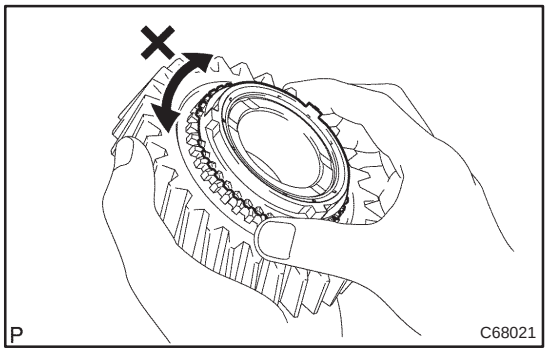

21. INSPECT SYNCHRONIZER RING NO.1 (FOR FIRST SYNCHRONIZER RING)

(a) Coat the 1st gear cone with gear oil. Check the braking effect of the synchronizer ring. Turn the synchronizer ring in one direction while pushing it to the gear cone. Check that the ring locks.

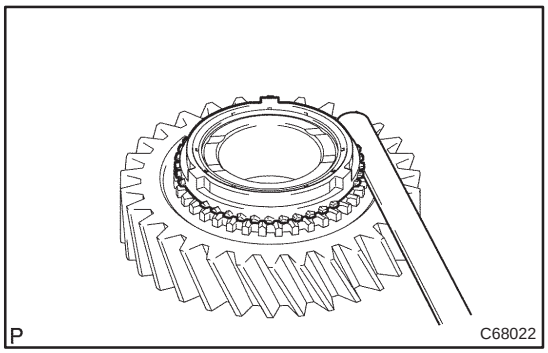

(b) Using a feeler gauge, measure the clearance between the synchronizer ring back and gear spline end.

Standard clearance:
0.75 – 1.65 mm (0.0295 – 0.0650 in.)
Minimum clearance:
0.75 mm (0.0295 in.)

If the clearance is less than the minimum, replace the synchronizer ring.

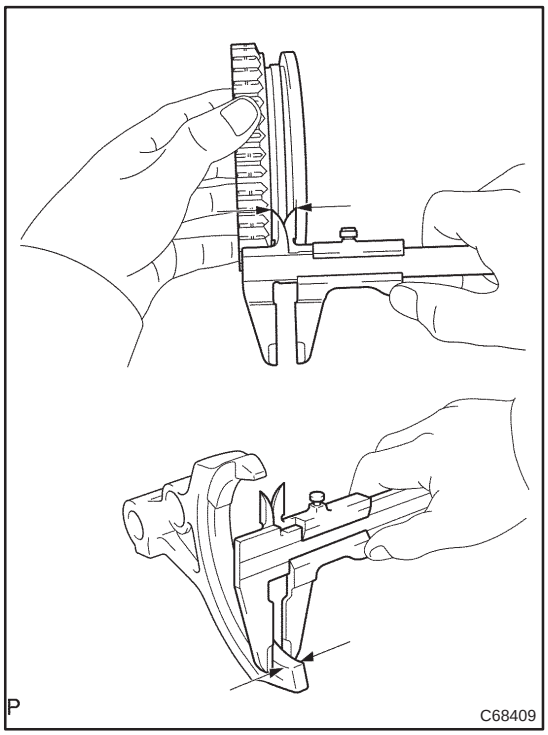

22. INSPECT REVERSE GEAR

(a) Using a vernier caliper, measure the clearance between the reverse gear and shift fork.

Maximum clearance: 0.35 mm (0.014 in.)

If the clearance exceeds the maximum, replace the shift form or reverse gear.

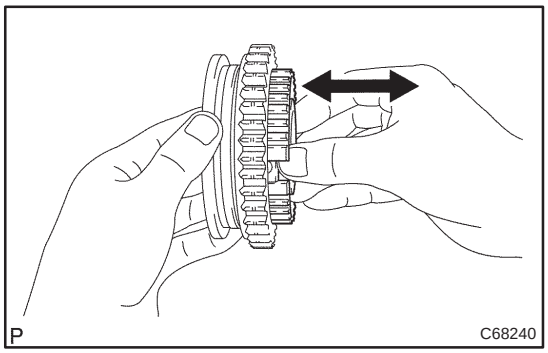

23. INSPECT TRANSMISSION CLUTCH HUB NO.1

(a) Check that the transmission clutch hub No.1 and reverse gear slides smoothly.

(b) Check that the spline gear's edges of the reverse gear is not worn down.

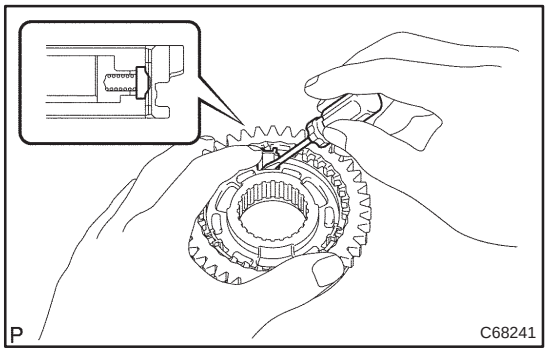

24. INSTALL REVERSE GEAR

(a) Coat the reverse gear with gear oil, install it to the transmission clutch hub No.1.

HINT:

Do not set the reverse gear and transmission clutch hub No.1 in incorrect orientation.

(b) Install the 3 synchromesh shifting key springs and 3 synchromesh shifting keys.

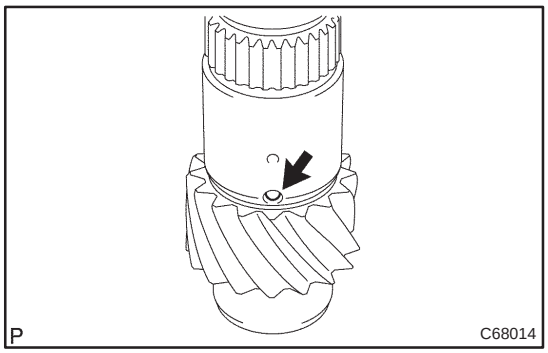

25. INSTALL 1ST GEAR THRUST WASHER PIN OR BALL

(a) Coat the 1st gear thrust washer pin or ball with gear oil, install it to the output shaft.

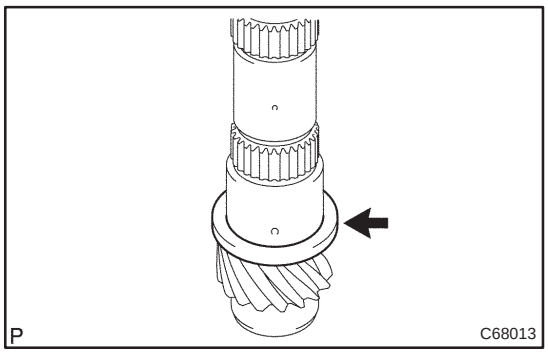

26. INSTALL 1ST GEAR THRUST WASHER

(a) Coat the 1st gear thrust washer with gear oil, install it to the output shaft.

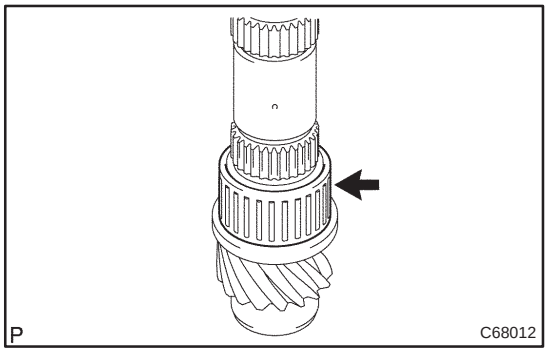

27. INSTALL 1ST GEAR NEEDLE ROLLER BEARING

(a) Coat the 1st gear needle roller bearing with gear oil, install it to the output shaft.

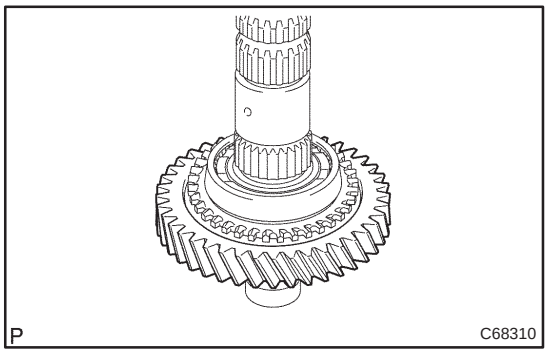

28. INSTALL 1ST GEAR

(a) Coat the 1st gear with gear oil, install it to the output shaft.

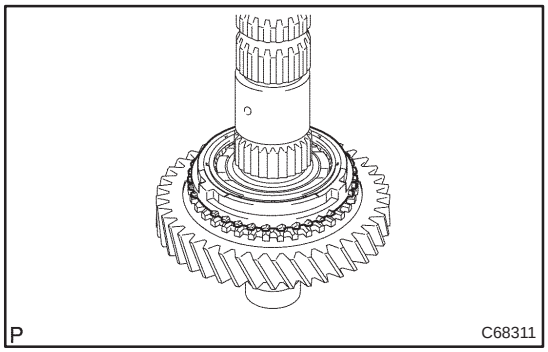

29. INSTALL SYNCHRONIZER RING NO.1 (FOR FIRST SYNCHRONIZER RING)

(a) Coat the synchronizer ring No.1 with gear oil, install it to the 1st gear.

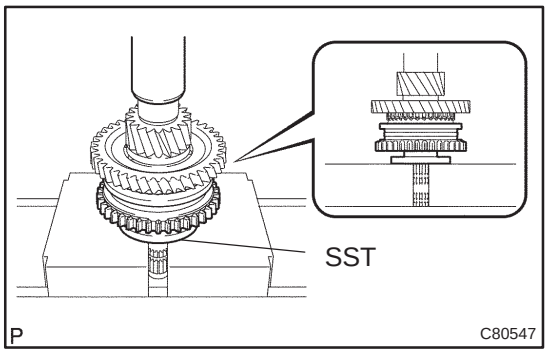

30. INSTALL TRANSMISSION CLUTCH HUB NO.1

(a) Using SST and a press, install the transmission clutch hub No.1 to the output shaft

SST 09316–60011 (09316–00031)

HINT:

- The 1st gear can be turned.
- While checking the 1st gear thrust washer pin or ball is inserted into the groove of the 1st gear thrust washer, press and fit the clutch hub No.1.

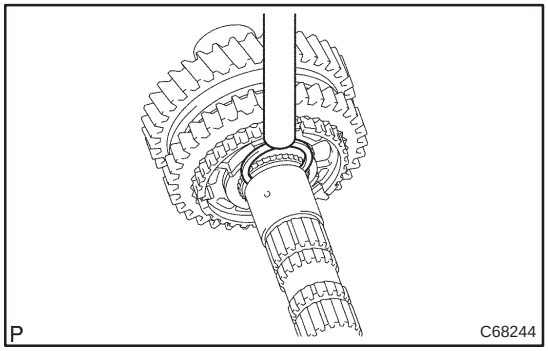

(b) Select a snap ring that will allow the minimum axial play.

Standard clearance:
0.1 mm (0.039 in.) or less

Mark	Thickness mm (in.)	Mark	Thickness mm (in.)
A	2.50 (0.0984)	D	2.68 (0.1055)
B	2.56 (0.1008)	E	2.74 (0.1079)
C	2.62 (0.1031)	F	2.80 (0.1102)

(c) Using brass bar and hammer, install the snap ring to the output shaft.

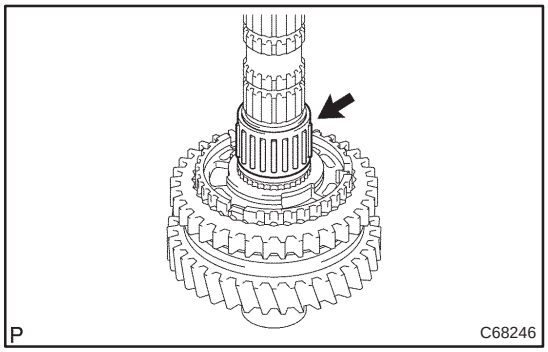

31. INSTALL 2ND GEAR NEEDLE ROLLER BEARING

(a) Coat the 2nd gear needle roller bearing and 2nd gear bearing spacer with gear oil, install them to the output shaft.

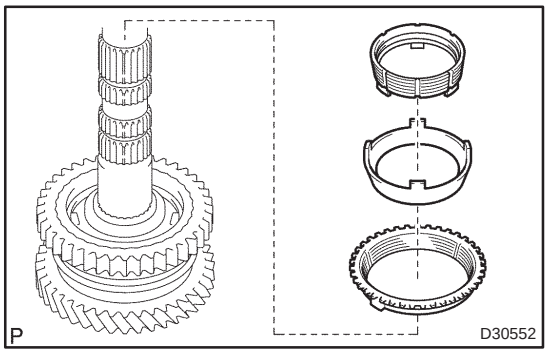

32. INSTALL SYNCHRONIZER RING NO.1 (FOR SECOND SYNCHRONIZER RING)

(a) Coat the synchronizer ring No.1 with gear oil, install it to the 2nd gear.

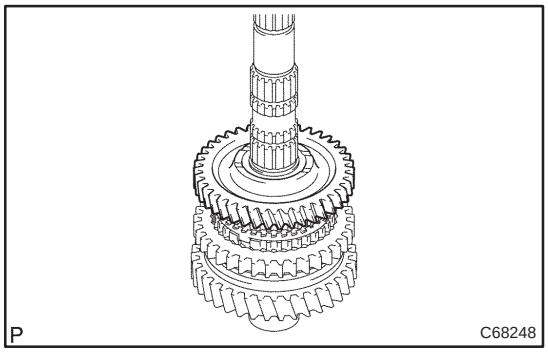

33. INSTALL 2ND GEAR

(a) Coat the 2nd gear with gear oil, install it to the output shaft.

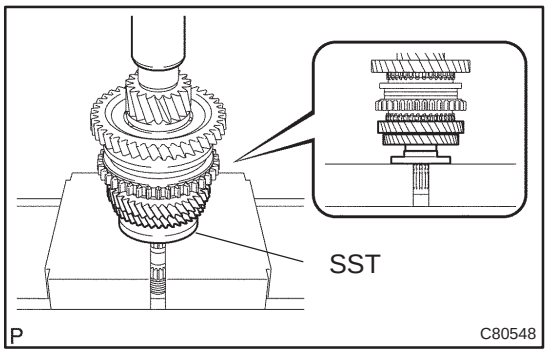

34. INSTALL 3RD DRIVEN GEAR

(a) Using SST and a press, install the 3rd driven gear to the output shaft.
SST 09950–00020

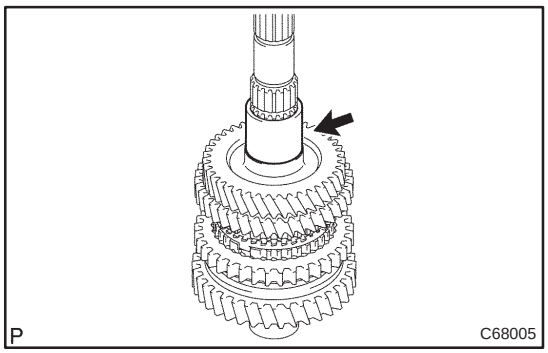

35. INSTALL OUTPUT GEAR SPACER

(a) Install the output gear spacer to the output shaft.

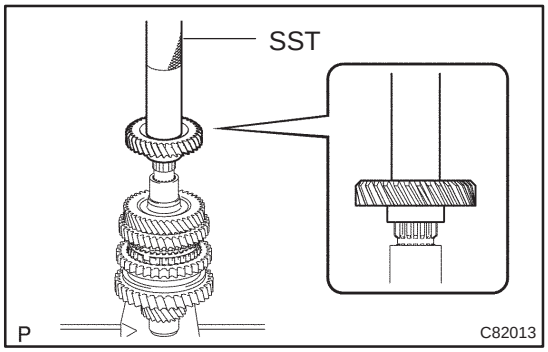

36. INSTALL 4TH DRIVEN GEAR

(a) Using SST and a press, 4th driven gear to the output shaft.
SST 09612–22011

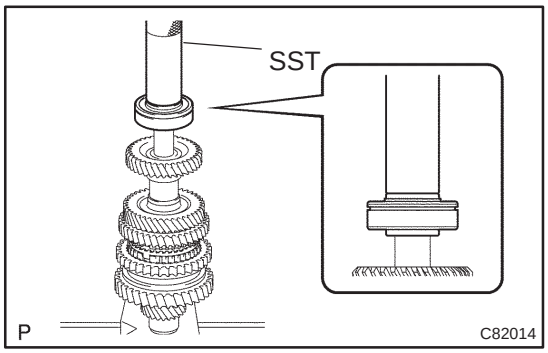

37. INSTALL OUTPUT SHAFT REAR BEARING

(a) Using SST and a press, install the output shaft rear bearing to the output shaft.
SST 09612–22011

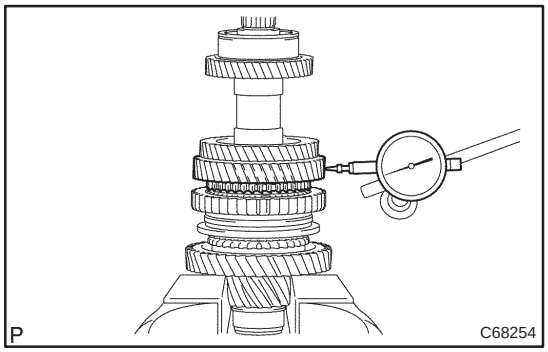

38. INSPECT 2ND GEAR RADIAL CLEARANCE

(a) Using a dial indicator, measure the 2nd gear radial clearance between the gear and shaft.

Standard clearance:
0.015 – 0.058 mm (0.0006 – 0.0023 in.)
Maximum clearance:
0.058 mm (0.0023 in.)

If the clearance exceeds the maximum, replace the 2nd gear or needle roller bearing.

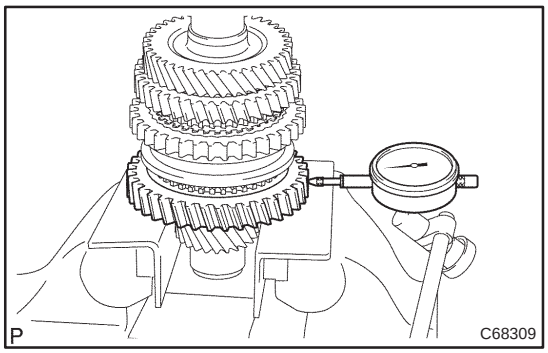

39. INSPECT 1ST GEAR RADIAL CLEARANCE

(a) Using a dial indicator, measure the 1st gear radial clearance between the gear and shaft.

Standard clearance:
0.015 – 0.058 mm (0.0006 – 0.0023 in.)
Maximum clearance:
0.058 mm (0.0023 in.)

If the clearance exceeds the maximum, replace the 1st gear, needle roller bearing.

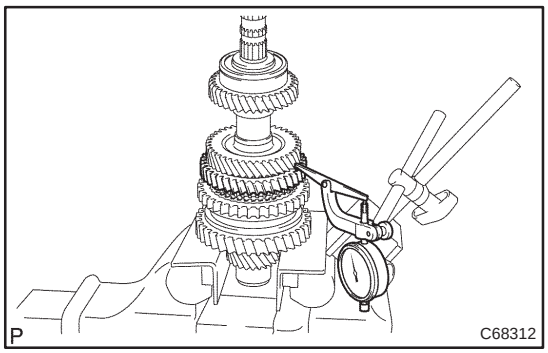

40. INSPECT 2ND GEAR THRUST CLEARANCE

(a) Using a dial indicator, measure the 2nd gear thrust clearance.

Standard clearance:
0.1 – 0.45 mm (0.0039 – 0.0177 in.)
Maximum clearance:
0.45 mm (0.0177 in.)

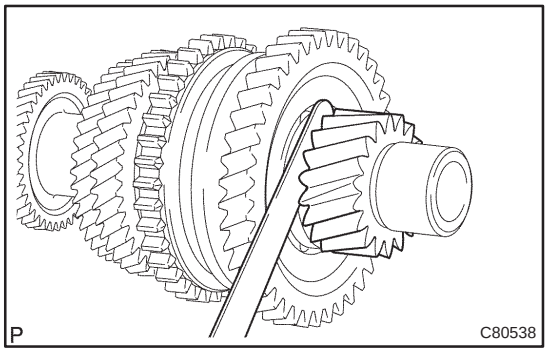

41. INSPECT 1ST GEAR THRUST CLEARANCE

(a) Using a feeler gauge, measure the 1st gear thrust clearance.

Standard clearance:
0.10 – 0.40 mm (0.0039 – 0.0157 in.)
Maximum clearance:
0.40 mm (0.0157 in.)

SHIFT & SELECT LEVER SHAFT ASSY (C250)

410DI–01

COMPONENTS

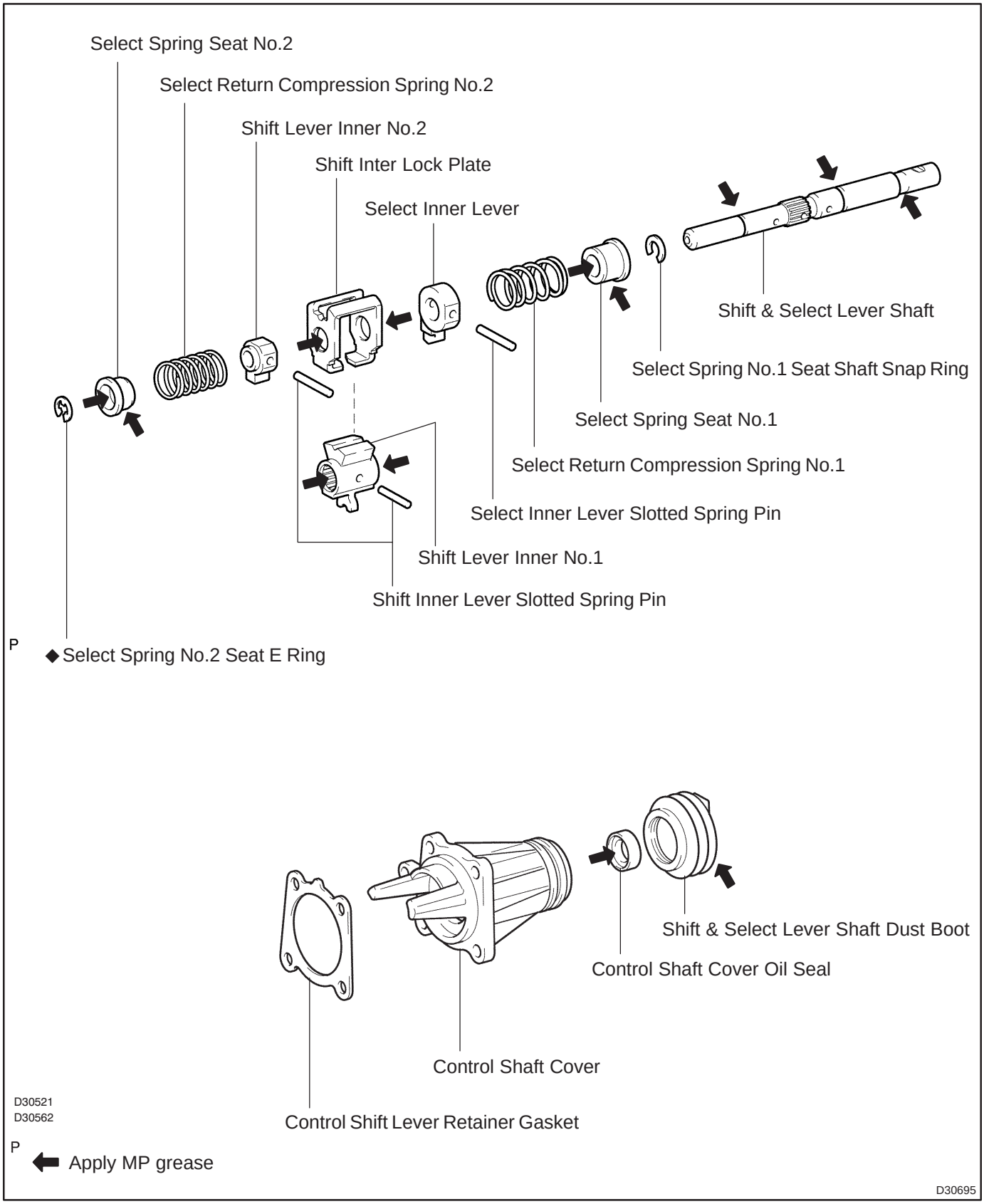

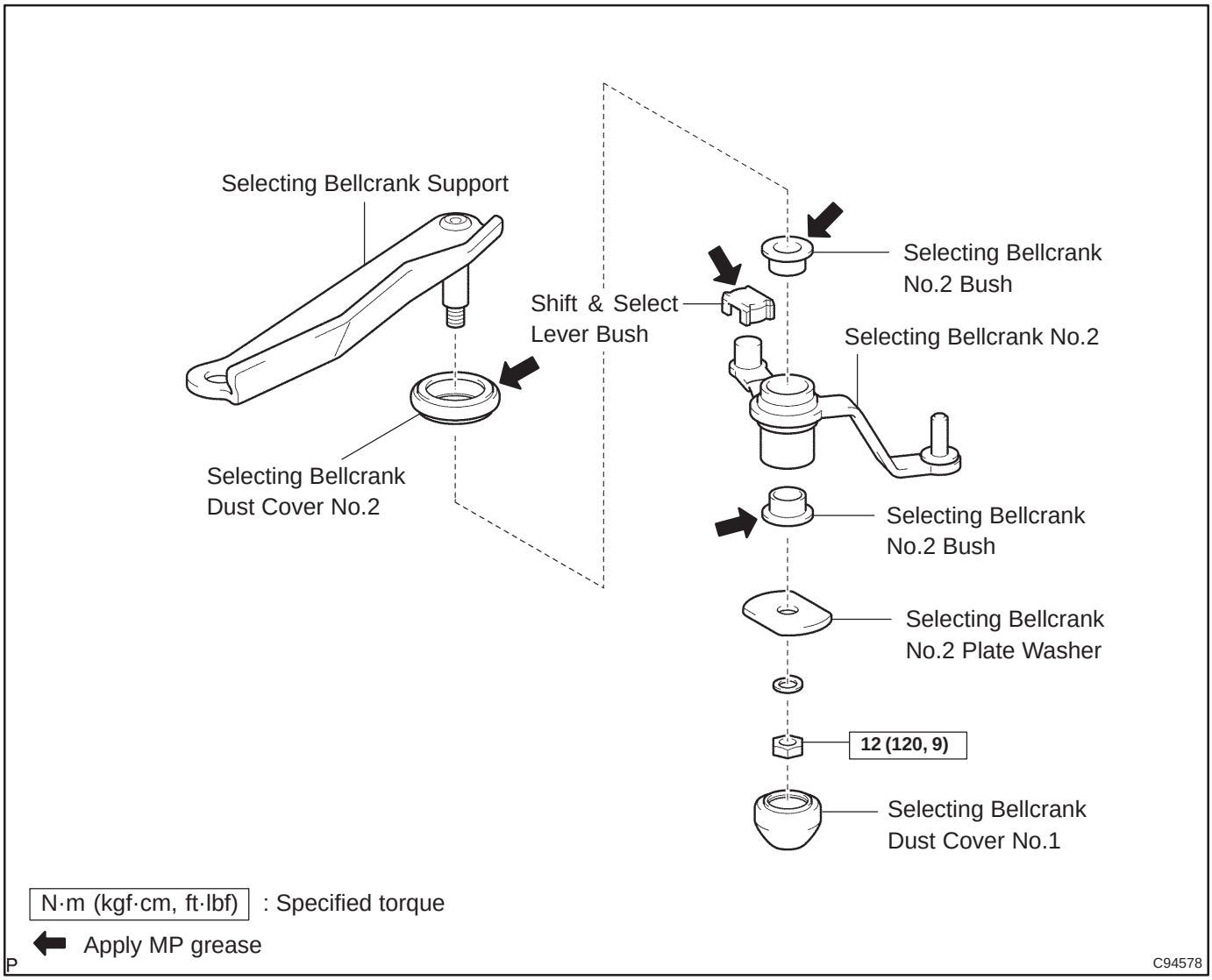
Selecting Bellcrank Support
Selecting Bellcrank Dust Cover No.2
Shift & Select Lever Bush
Selecting Bellcrank No.2 Bush
Selecting Bellcrank No.2
Selecting Bellcrank No.2 Bush
Selecting Bellcrank No.2 Plate Washer
12 (120, 9)
Selecting Bellcrank Dust Cover No.1
N·m (kgf·cm, ft·lbf) : Specified torque
Apply MP grease
P
C94578

OVERHAUL

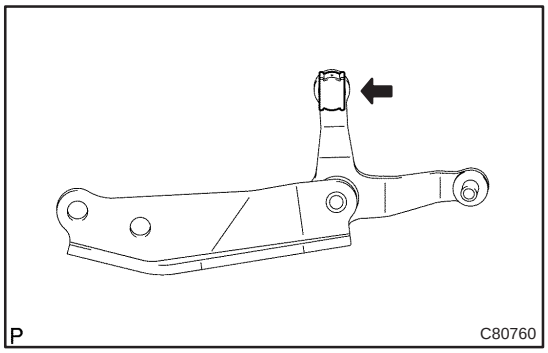

1. REMOVE SHIFT & SELECT LEVER BUSH

(a) Remove the shift & select lever bush from the selecting bell crank assy.

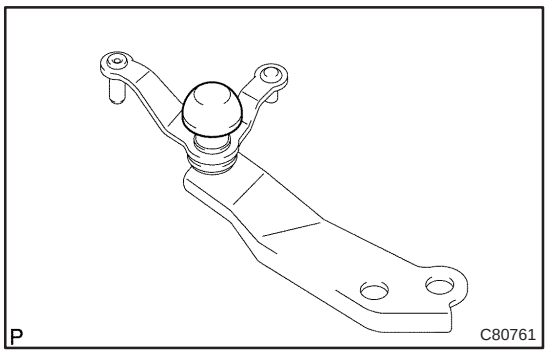

2. REMOVE SELECTING BELLCRANK DUST COVER NO.1

(a) Remove the selecting bellcrank dust cover No.1 from the selecting bellcrank assy.

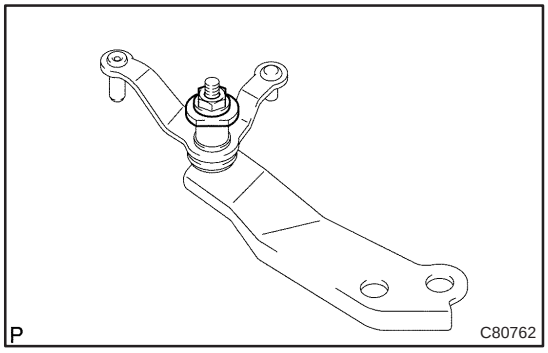

3. REMOVE SELECTING BELL CRANK NO.2

(a) Remove the nut, spring washer and selecting bellcrank No.2 plate washer.

(b) Remove selecting bellcrank No.2 from the selecting bellcrank support.

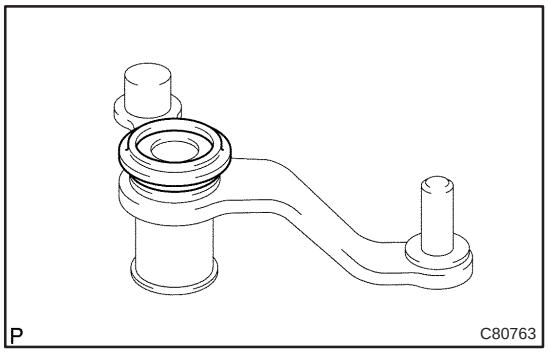

4. REMOVE SELECTING BELLCRANK DUST COVER NO.2

(a) Remove the selecting bellcrank dust cover No.2 from the selecting bellcrank No.2.

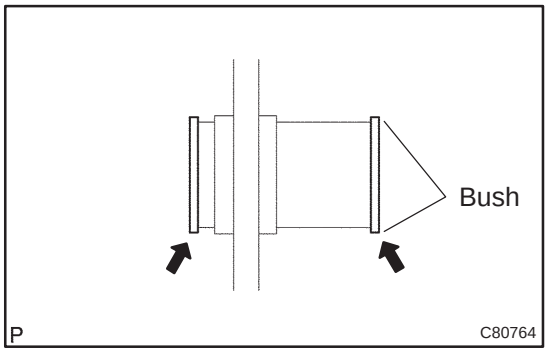

5. REMOVE SELECTING BELLCRANK NO.2 BUSH

(a) Remove the 2 selecting bellcrank No.2 bushes from the selecting bellcrank.

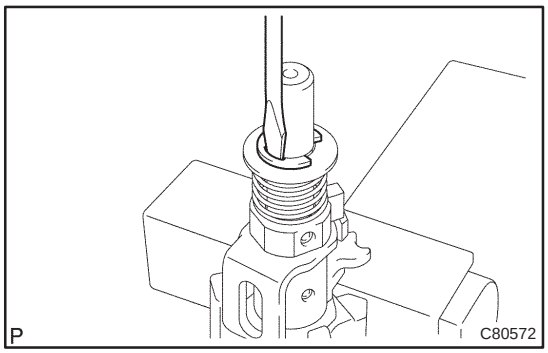

6. REMOVE SELECT SPRING SEAT NO.2

(a) Using a screwdriver, remove the select spring seat No.2 E–ring, select spring seat No.2 and select return spring No.2 from the shift & select lever shaft.

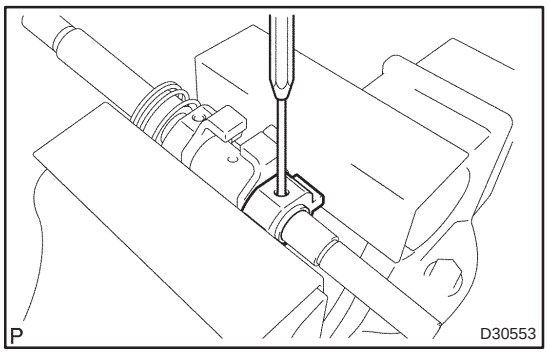

7. REMOVE SHIFT LEVER INNER NO.2

(a) Using a pin punch (ϕ 5mm) and hammer, remove the shift inner lever slotted pin and shift lever inner No.2 from the shift & select lever shaft.

HINT:

Make sure of the orientation of the shift lever inner No.2.

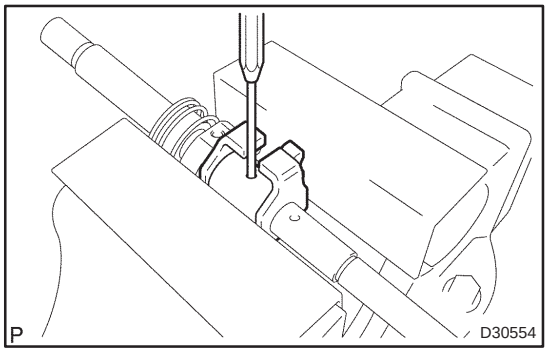

8. REMOVE SHIFT LEVER INNER NO.1

(a) Using a pin punch (ϕ 5mm) and hammer, remove the shift inner lever slotted pin, shift lever inner No.1 and shift inter lock plate from the shift & select lever shaft.

HINT:

Make sure of the orientation of the shift lever inner No.1.

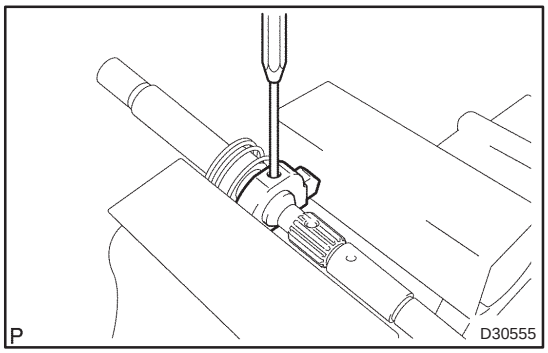

9. REMOVE SELECT INNER LEVER

(a) Using a pin punch (ϕ 5mm) and hammer, remove the select inner lever slotted pin, select inner lever select return spring No.1 and select return spring No.1 seat from shift & select lever shaft.

HINT:

Make sure of the orientation of the select inner lever.

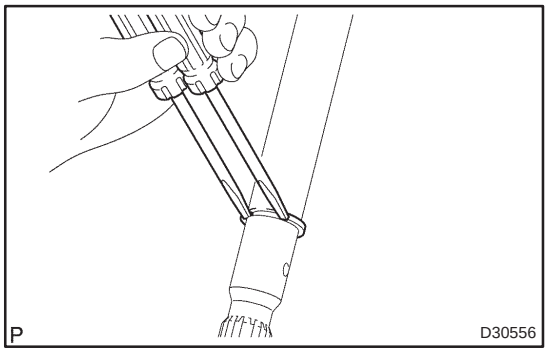

10. REMOVE SELECT SPRING NO.1 SEAT SHAFT SNAP RING

(a) Using 2 screwdrivers and a hammer, remove the select spring No.1 seat shaft snap ring.

NOTICE:

Do not damage the shaft.

11. REMOVE SHIFT & SELECT LEVER SHAFT DUST BOOT

(a) Remove the shift & select lever shaft dust boot from the shift & select lever shaft.

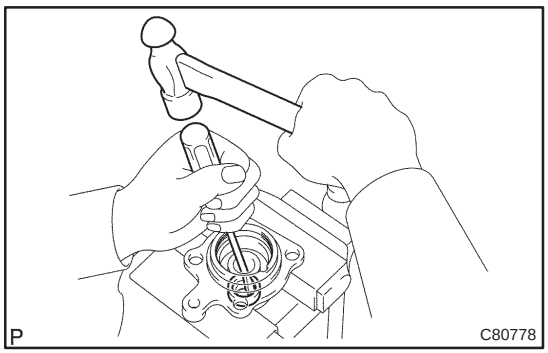

12. REMOVE CONTROL SHAFT COVER OIL SEAL

(a) Using a screwdriver remove the control shaft cover oil seal from the control shaft cover.

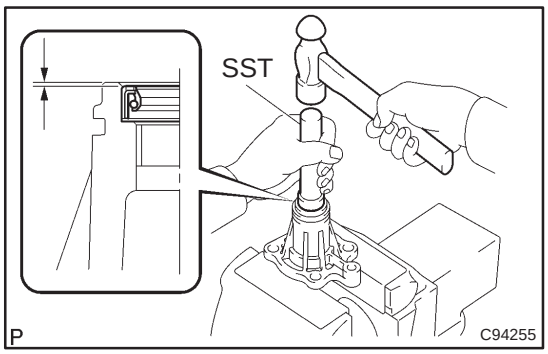

13. INSTALL CONTROL SHAFT COVER OIL SEAL

(a) Using SST and a hammer, install the new control shaft cover oil seal to the control shaft cover.

SST 09950–60010 (09951–00220), 09950–70010 (09951–07100)

Drive in depth:

0.2 – 1.2 mm (0.079 – 0.0472 in.)

(b) Coat the control shaft cover oil seal with MP grease.

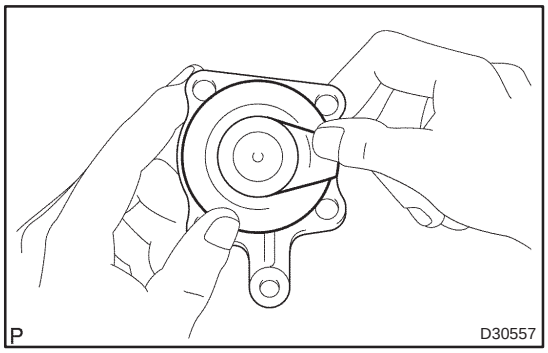

14. INSTALL SHIFT & SELECT LEVER SHAFT DUST BOOT

(a) Coat the shift & select lever shaft dust boot with MP grease.

(b) Install the shift & select lever shaft dust boot to the shift & select lever shaft.

HINT:

Install the boot with the projection up and the hole side down.

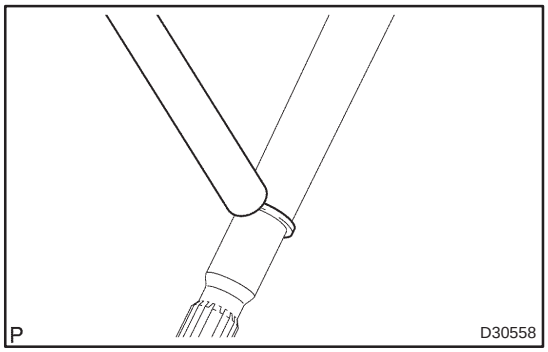

15. INSTALL SELECT SPRING NO.1 SEAT SHAFT SNAP RING

(a) Coat the shift & select lever shaft with MP grease, install it and snap ring with a brass bar and hammer.

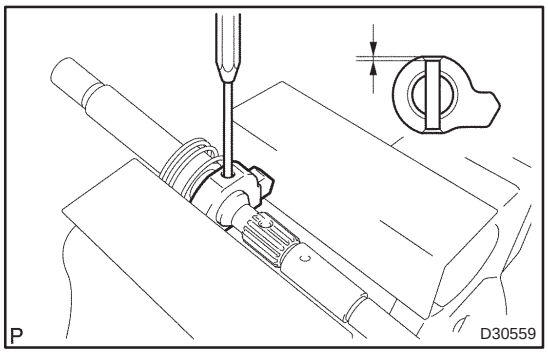

16. INSTALL SELECT INNER LEVER

(a) Coat the select spring No.1 seat with MP grease.

(b) Using a pin punch (ϕ 5mm) and hammer, install the select spring No.1 seat, select return spring No.1, select inner lever and shift & select lever slotted pin to the shift & select lever.

Drive in depth: 3.0 – 4.0 mm (0.1181 – 0.1575 in)

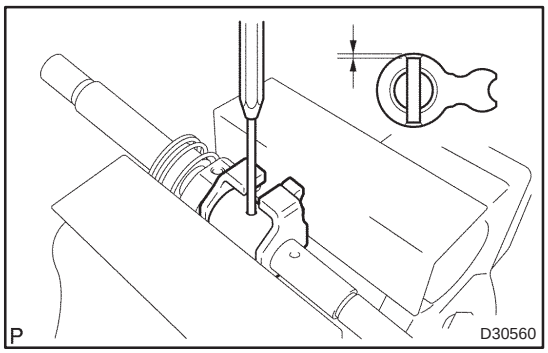

17. INSTALL SHIFT LEVER INNER NO.1

(a) Coat the shift inter lock plate and shift lever inner No.1 with MP grease.

(b) Using a pin punch (ϕ 5mm) and hammer, install the shift inter lock plate, shift lever inner No.1 and shift lever slotted pin to the shift & select lever shaft.

Drive in depth: –0.5 – 0.5 mm (–0.0197 – 0.0197 in)

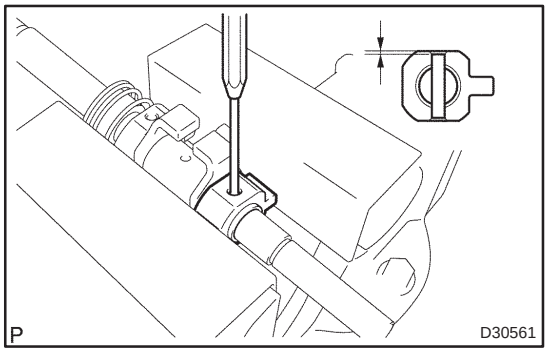

18. INSTALL SHIFT LEVER INNER NO.2

(a) Coat the shift lever inner No.2 with Mp grease.

(b) Using a pin punch (ϕ 5mm) and hammer, install the shift lever inner No.2 E–ring and shift inner lever slotted pin to the shift & select lever shaft.

Drive in depth: –0.5 – 0.5 mm (–0.0197 – 0.0197 in)

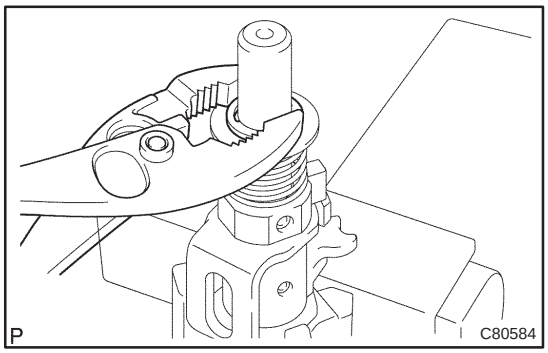

19. INSTALL SELECT SPRING SEAT NO.2

(a) Coat the select spring seat No.2 with MP grease.

(b) Install the select spring seat No.2, select return spring No.2. Using a plier, install a new select spring seat No.2 E–ring to the shift & select lever shaft.

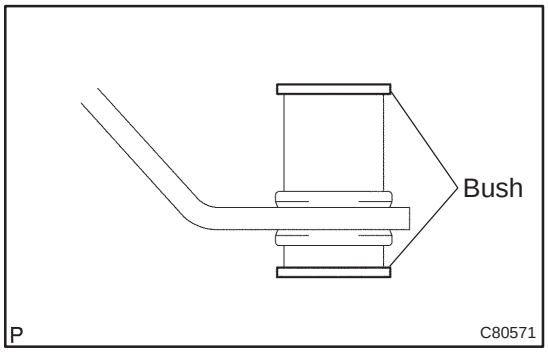

20. INSTALL SELECTING BELLCRANK NO.2 BUSH

(a) Coat the 2 selecting bellcrank No.2 bushes with MP grease, install it to the selecting bellcrank.

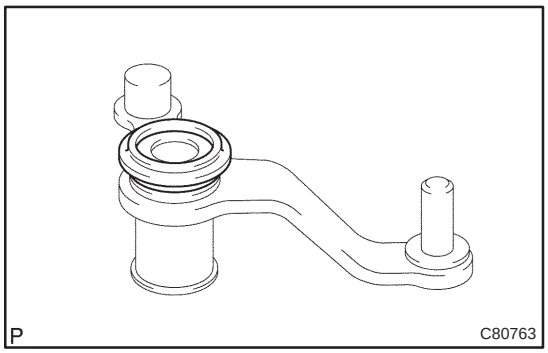

21. INSTALL SELECTING BELLCRANK DUST COVER NO.2

(a) Coat the selecting bellcrank dust cover No.2 with MP grease, install it to the selecting bell crank.

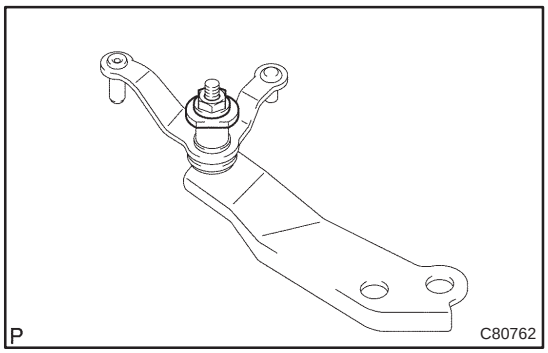

22. INSTALL SELECTING BELL CRANK NO.2

(a) Install the selecting bellcrank, selecting bell crank No.1 plate washer, spring washer and nut.
Torque: 12 N·m (120 kgf·cm, 9 ft·lbf)

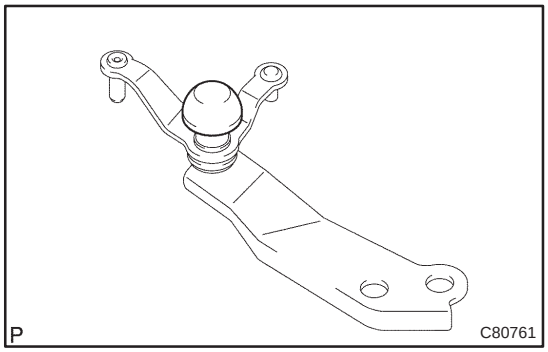

23. INSTALL SELECTING BELLCRANK DUST COVER NO.1

(a) Install the selecting bellcrank dust cover No.1 to the selecting bell crank assy.

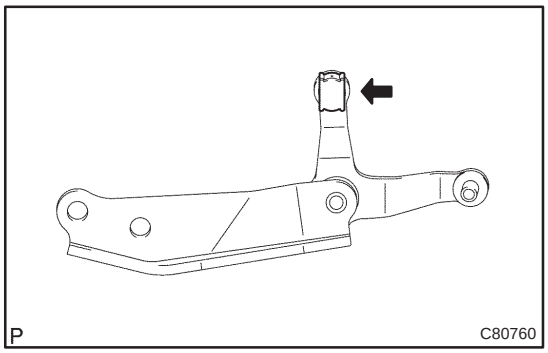

24. INSTALL SHIFT & SELECT LEVER BUSH

(a) Install shift & select lever bush to the selecting bell crank assy.

DIFFERENTIAL CASE ASSY (C250)

COMPONENTS

410DK–01

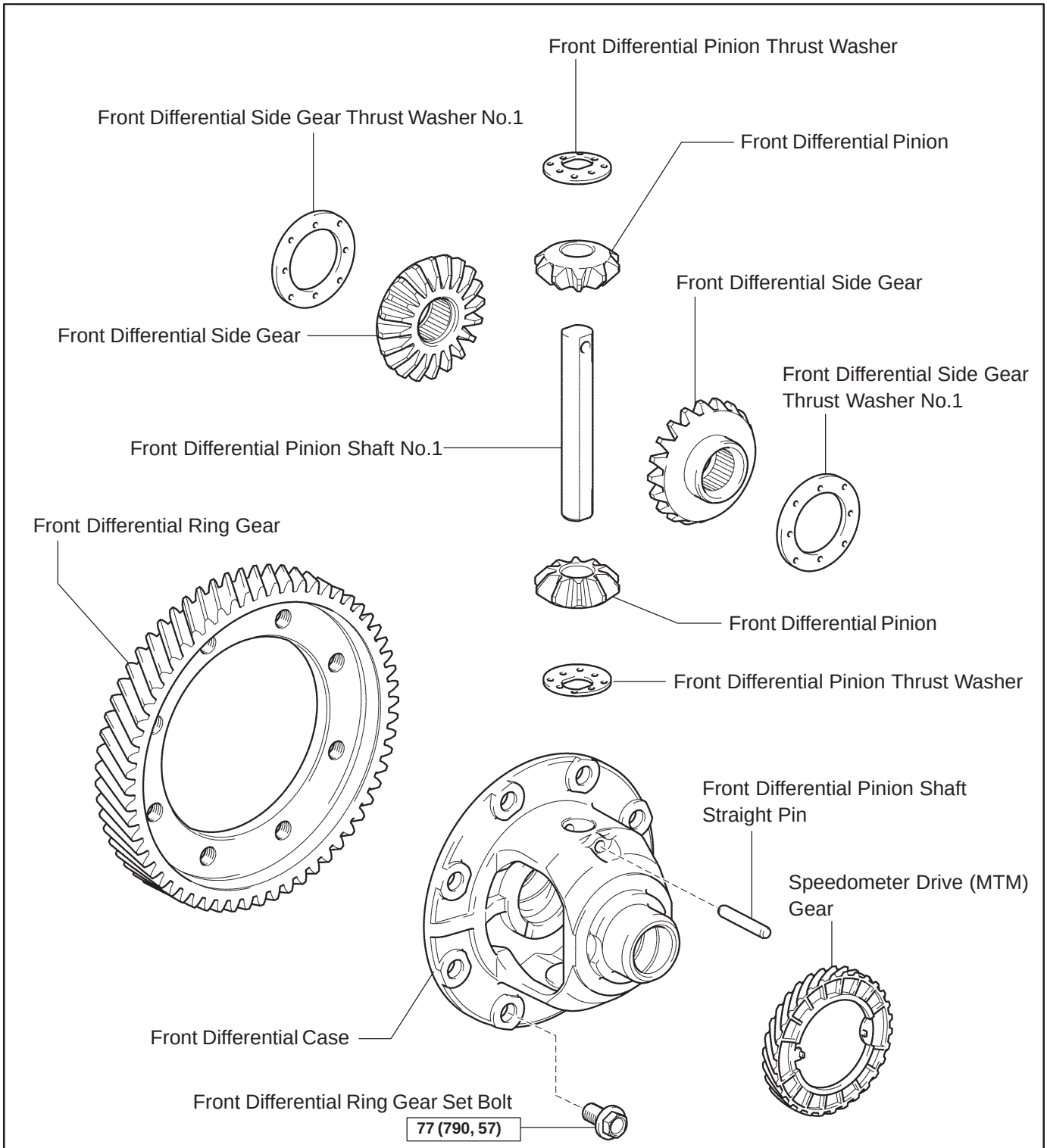

C88990
P

N·m (kgf·cm, ft·lbf): Specified torque

D30564

OVERHAUL

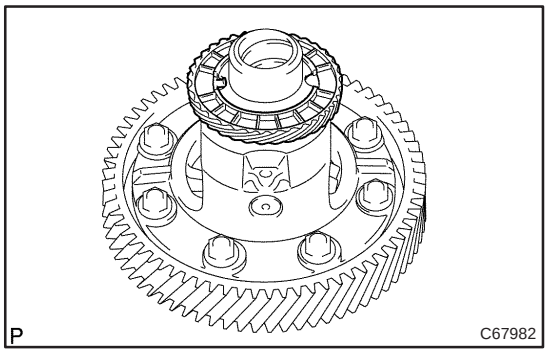

1. REMOVE SPEEDOMETER DRIVE (MTM) GEAR

(a) Remove the speedometer drive gear from the front differential case.

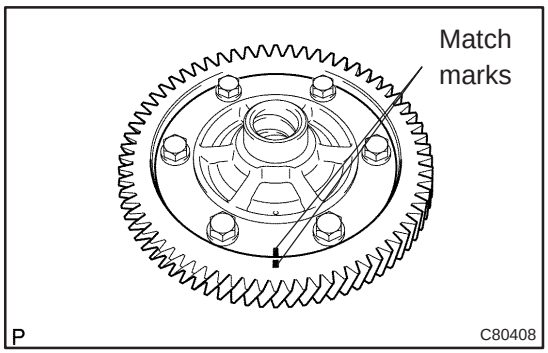

2. REMOVE FRONT DIFFERENTIAL RING GEAR

(a) Place match marks on the from the front differential ring gear and from the front differential case.

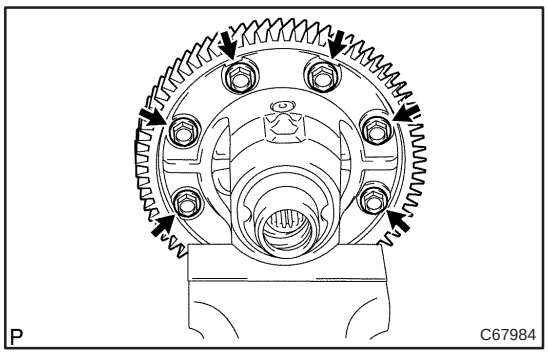

(b) Remove the 8 bolts. Using a hammer, remove the front differential ring gear from the front differential case.

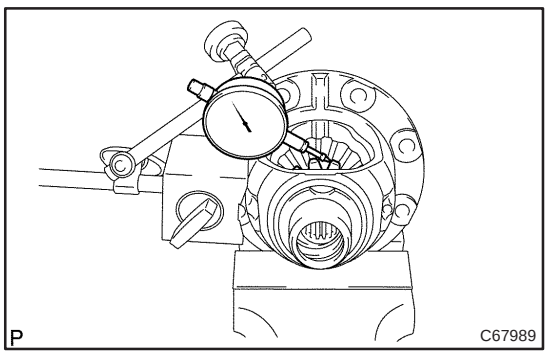

3. INSPECT FRONT DIFFERENTIAL SIDE GEAR BACKLASH

(a) Fixing the front differential pinion to the from the front differential case side. Using a dial indicator, measure the front differential side gear back lash.

Standard backlash:

0.05 – 0.20 mm (0.0020 – 0.0079 in.)

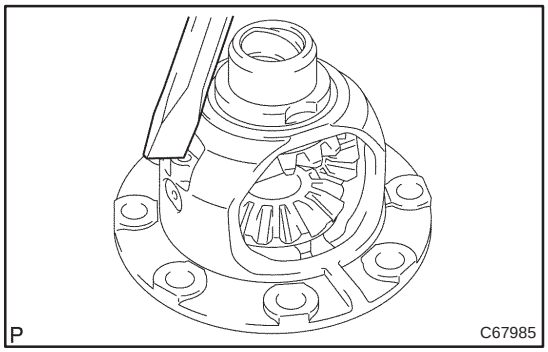

4. REMOVE FRONT DIFFERENTIAL PINION SHAFT STRAIGHT PIN

(a) Using a chisel and hammer, loosen the staked part of the front differential case.

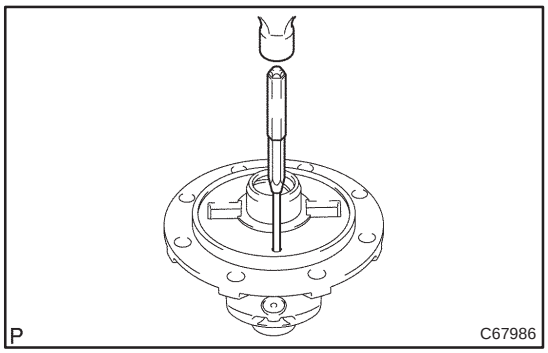

(b) Using a pin punch (ϕ 3 mm) and a hammer, remove the front differential pinion shaft straight pin from the front differential case.

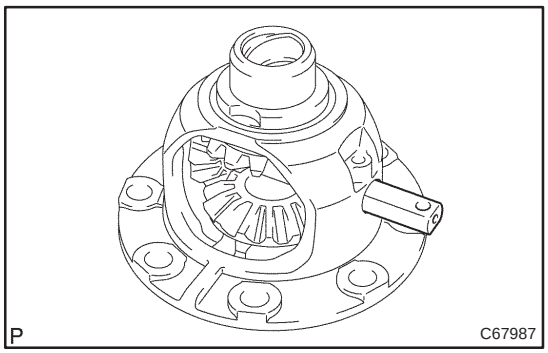

5. REMOVE FRONT DIFFERENTIAL PINION SHAFT NO.1

(a) Remove the front differential pinion shaft No.1 from the front differential case.

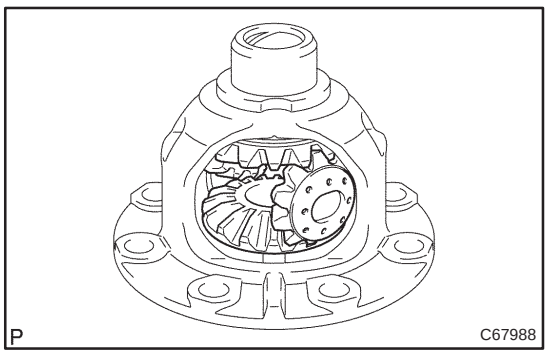

6. REMOVE FRONT DIFFERENTIAL SIDE GEAR

(a) Remove the 2 front differential pinions , front differential pinion thrust washers and front differential side gear thrust washers No.1 from the front differential case.

HINT:

Revolving the front differential pinion, remove the 2 pinions, pinion thrust washers and side gear thrust washers.

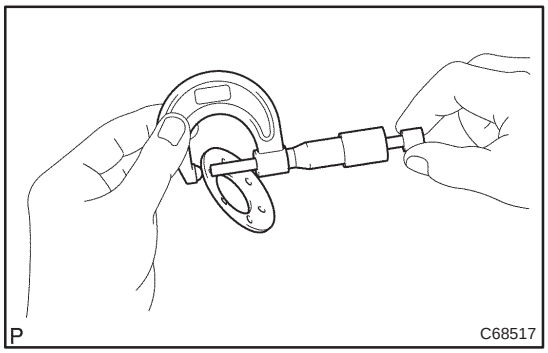

7. INSPECT FRONT DIFFERENTIAL PINION THRUST WASHER

(a) Using a micrometer, measure the thickness of the front differential pinion thrust washer.

Minimum thickness: 0.94 mm (0.03701 in.)

If the thickness exceed the minimum, replace the front differential pinion thrust washer.

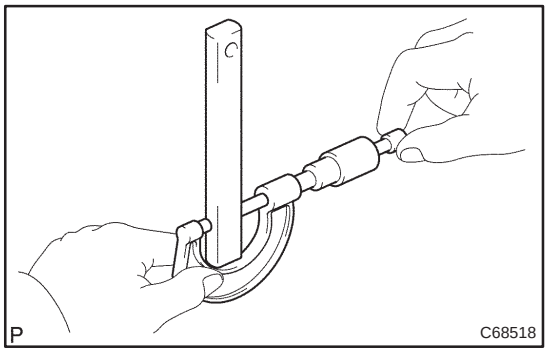

8. INSPECT FRONT DIFFERENTIAL PINION SHAFT NO.1

(a) Using a micrometer, measure the outer diameter of the front differential pinion shaft No.1.

Minimum outer diameter: 16.982 mm (0.6685 in.)

If the outer diameter exceed the minimum, replace the front differential pinion shaft No.1.

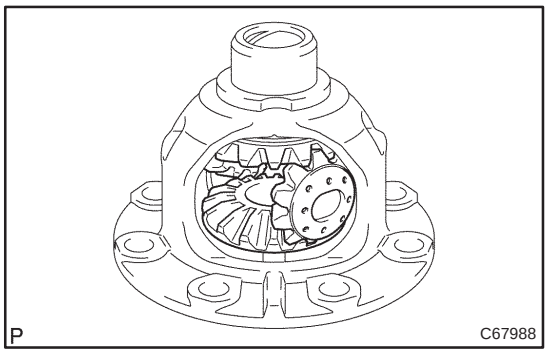

9. INSTALL FRONT DIFFERENTIAL SIDE GEAR

(a) Coat the sliding and rotating surface of the front differential side gear with MP grease.

(b) Install the 2 front differential side gear thrust washers to the 2 front differential side gear.

(c) Install the 2 front differential pinions with front differential washers to the front differential case.

HINT:

Revolving the front differential pinion, install the 2 front differential pinions with front differential washers.

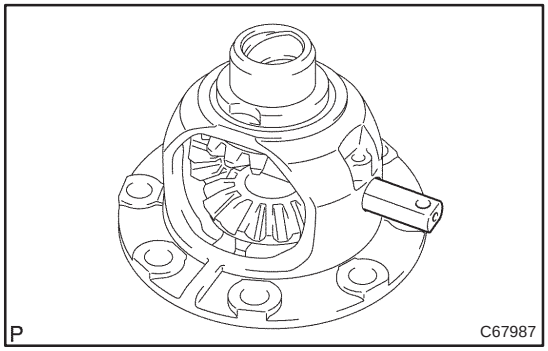

10. INSTALL FRONT DIFFERENTIAL PINION SHAFT NO.1

(a) Coat the front differential pinion shaft No.1 with MP grease.

(b) Install the front differential pinion shaft No.1 to the front differential case so that the hole for the front differential pinion shaft straight pin is aligned with the hole in the front differential case.

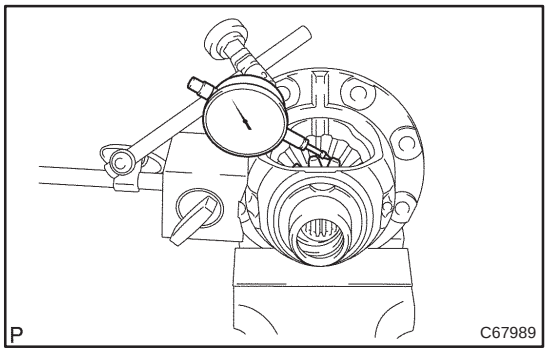

11. ADJUST FRONT DIFFERENTIAL SIDE GEAR BACKLASH

(a) Fixing the front differential pinion to the front differential case side. Using a dial indicator, measure the front differential side gear backlash.

Standard backlash:

0.05 – 0.20 mm (0.0020 – 0.0079 in.)

HINT:

- Because the thrust washer does not have any mark for distinction, measure the thickness with a micrometer to select a proper thrust washer.
- Select washers of the same thickness for both the right and left.

Thrust washer thickness

Parts No.	Thickness mm (in.)
41361 – 22140	0.95 (0.0374 in.)
41361 – 22020	1.00 (0.0394 in.)
41361 – 22150	1.05 (0.0413 in.)
41361 – 22030	1.10 (0.0433 in.)
41361 – 22160	1.15 (0.0452 in.)
41361 – 22040	1.20 (0.0472 in.)

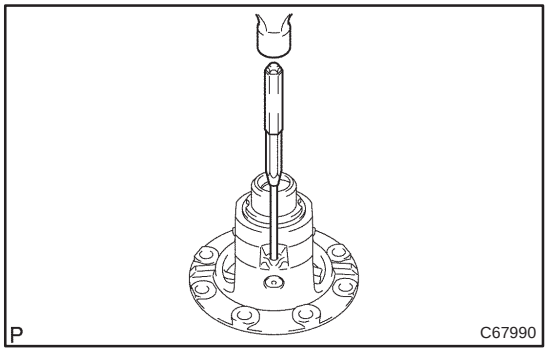

12. INSTALL FRONT DIFFERENTIAL PINION SHAFT STRAIGHT PIN

(a) Using a pin punch (ϕ 3mm) and hammer, install the front differential pinion shaft straight pin to the front differential case.

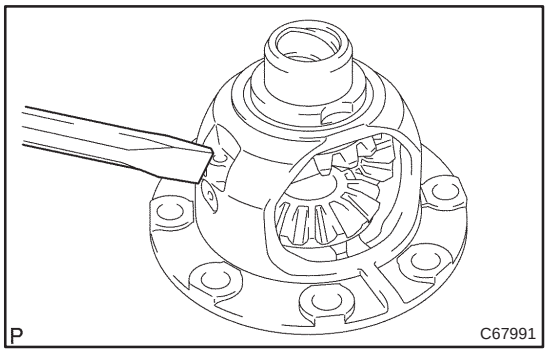

(b) Using a chisel and hammer, stake the front differential case hole.

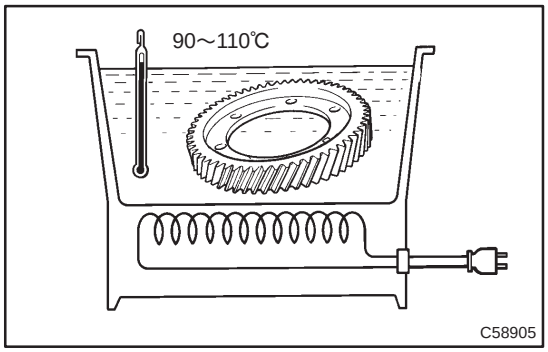

13. INSTALL FRONT DIFFERENTIAL RING GEAR

(a) Using a heater, heat the front differential ring gear to 90 – 110 °C (194.0 – 230.0 °F.)

(b) Clean the contact surface of the front differential case.

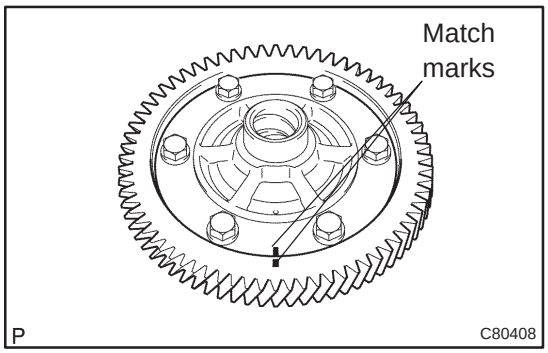

(c) Aligning the both match marks, quickly install the front differential ring gear to the front differential case.

(d) Install the 8 bolts.
Torque: 77 N·m (790 kgf·cm, 57 ft·lbf)

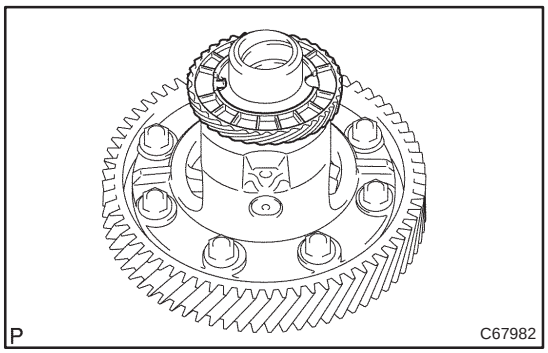

14. INSTALL SPEEDOMETER DRIVE (MTM) GEAR

(a) install the speedometer drive gear to the front differential case.

HOW TO USE THIS AUTOMATIC TRANSAXLE REPAIR MANUAL

0103A–07

GENERAL INFORMATION

1. GENERAL DESCRIPTION

(a) This manual is made in accordance with SAE J2008.

(b) Generally repair operations can be separated in the following 3 main processes:
1. Diagnosis
2. Removing and Installing, Replacing, Disassembling, Installing and Checking, Adjusting
3. Final Inspection

(c) This manual explains" Removing and Installing, Replacing, Disassembling ,Instaling and Checking, Adjusting" , but" Final inspection" is omitted.

(d) The following essential operations are not written in this manual, however these operations must be done in the practical situation.
(1) Operation with a jack or lift
(2) Cleaning of a removed part when necessary
(3) Visual check

2. INDEX

(a) An alphabetical INDEX is provided as a section on the end of the book to guide you to the item to be repaired.

3. PREPARATION

(a) Use of special service tools (SST) and special service materials (SSM) may be required, depending on the repairing condition. Be sure to use SST and SSM when they are required and follow the working procedure properly. A list of SST and SSM is in the Preparation section of this manual.

4. REPAIR PROCEDURES

(a) Component drawing is placed as the section or title when necessary.

(b) Illustrations of the parts catalog are placed as the" disassembled parts drawing" so that it enables you to understand the fitting condition of the components.

(c) Non–reusable parts, grease applied parts, precoated parts and tightening torque are specified in the components drawing.

Example:

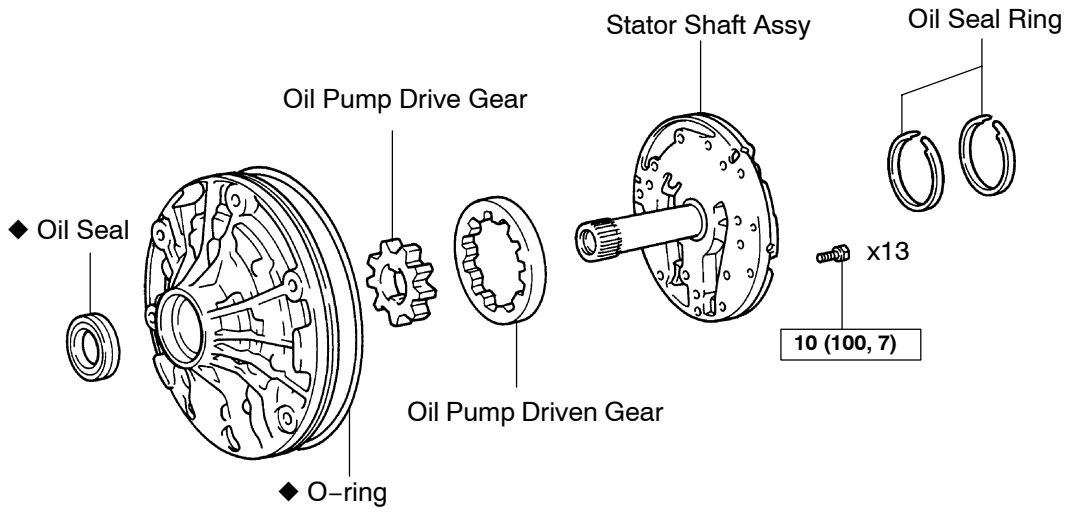

N·m (kgf·cm, ft·lbf) : Specified torque

◆ Non–reusable part

D25697

(d) Tightening torque, oil applying position, and non–reusable parts are described as important points in the procedure.

NOTICE:

There are cases where such information can only be indicated by an illustration. In that case, all the information such as torque, oil, etc are described in the illustration.

(e) Installing procedure of operation item is performed in the reverse order of the removing, and only the important points are described.

(f) Only items with points are described in the procedure, and the operational portion and content are placed using an illustration. In the explanations, details of the operational method, standard value and notice are placed.

(g) There may be a case where the illustrations of similar models are used. In that case the details may be different from the actual vehicle.

(h) The procedures are presented in a step–by–step format:

(1) The illustration shows what to do and where to do it.

(2) The task heading tells what to do.

(3) The detailed text tells how to perform the task and gives other information such as specifications and warnings.

Example:

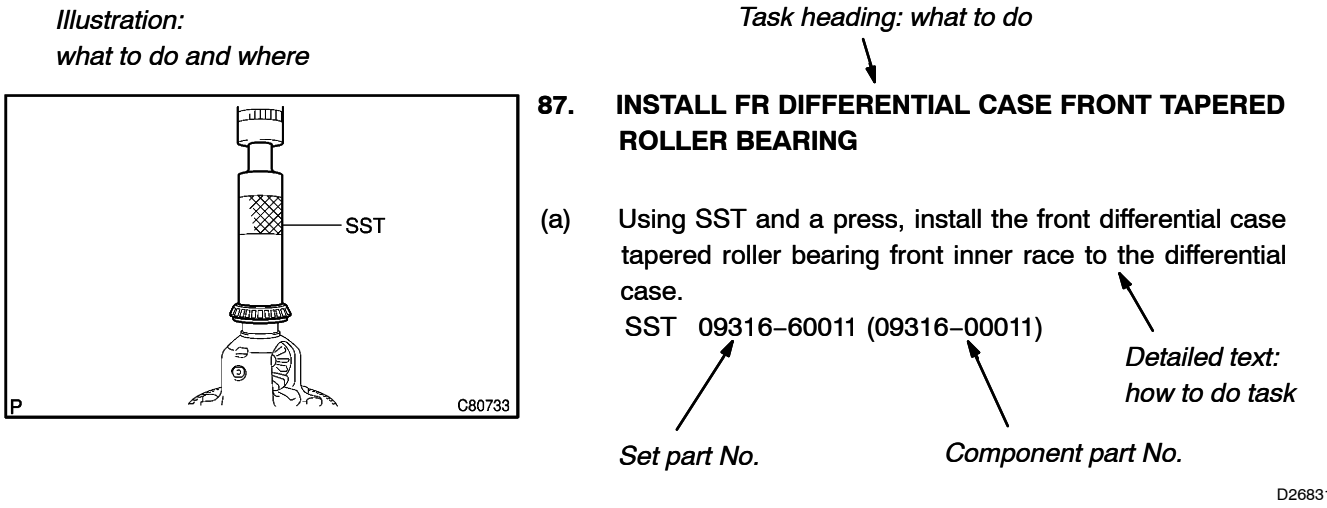

HINT:

This format provides an experienced technician with a FAST TRACK to the necessary information. The task heading can be read at a glance when necessary, and the text below provides detailed information. Important specifications and warnings always stand out in bold type.

5. SERVICE SPECIFICATIONS

(a) Specifications are presented in bold type throughout the manual. You never have to leave the procedure to look up your specifications. The specifications are also found in the Service Specifications section for a quick reference.

6. TERMS DEFINITION

CAUTION	Indicate the possibility of injury to you or other people.
NOTICE	Indicate the possibility of damage to the components being repaired.
HINT	Provide additional information to help you perform the repair efficiently.

7. SI UNIT

(a) The UNITS given in this manual are primarily expressed according to the SI UNIT (International System of Unit), and alternately expressed in the metric system and in the English System.

Example:

Torque: 30 N·m (310 kgf·cm, 22 ft·lbf)

REPAIR INSTRUCTION FOR AUTOMATIC TRANSAXLE REPAIR MANUAL

PRECAUTION

0103B–07

1. BASIC REPAIR HINT

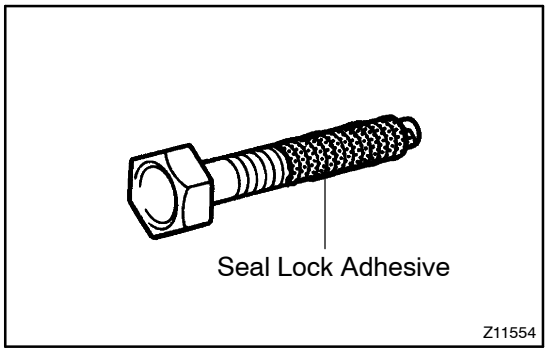

(a) PRECOATED PARTS

(1) Precoated parts are bolts, nuts, etc. that are coated with a seal lock adhesive at the factory.

(2) If a precoated part is retightened, loosened or caused to move in any way, it must be recoated with the specified adhesive.

(3) When reusing precoated parts, clean off the old adhesive and dry with compressed air. Then apply the specified seal lock adhesive to the bolt, nut or threads.

NOTICE:

Do the torque checking with the lower limit value of the torque tolerance.

(4) Depending on the seal lock agent to apply, there may be a case where it is necessary to leave it for a specified time until it hardens.

(b) GASKETS

When necessary, use a sealer on gaskets to prevent leaks.

(c) BOLTS, NUTS AND SCREWS

Carefully observe all specifications for bolt tightening torques. Always use a torque wrench.

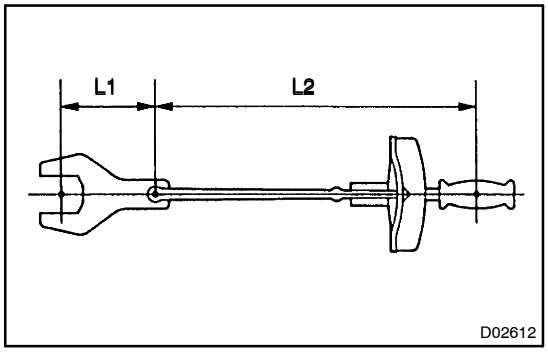

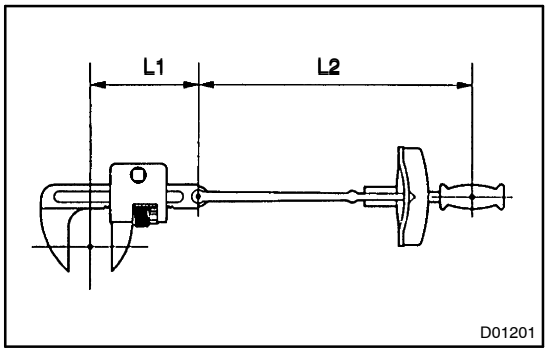

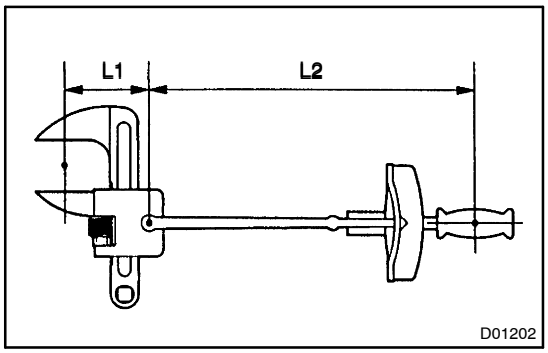

(d) TORQUE WHEN USING EXTENSION TOOL WITH TORQUE WRENCH

(1) In case of tightening by extending the entire length of the torque wrench combined with SST or tool, if you tighten until the reading of the torque wrench reached the specified torque value, the actual torque becomes excessive.

(2) In this text, only the specified torque is described. In case of using SST or extension tool, find the reading of the torque wrench by the formula.

(3) Formula T'=T x L2/(L1 + L2)

T'	Reading of torque wrench {N·m (kgf·cm, ft·lbf)}
T	Torque {N·m (kgf·cm, ft·lbf)}
L1	Length of SST or tool (cm)
L2	Length of torque wrench (cm)

TERMS FOR AUTOMATIC TRANSAXLE REPAIR MANUAL

0103C–05

ABBREVIATIONS USED IN THIS MANUAL

Abbreviations	Meaning
ASSY	Assembly
ATF	Automatic Transaxle Fluid
B_3	U/D Brake
C_2	Reverse Clutch
C_3	U/D Clutch
FIPG	Formed In Place Gasket
O/D	Overdrive
SSM	Special Service Materials
SST	Special Service Tools
U/D	Underdrive
w/	With
w/o	Without
1st	First
2nd	Second

0103D–09

GLOSSARY OF SAE AND TOYOTA TERMS

This glossary lists all SAE–J1930 terms and abbreviations used in this manual in compliance with SAE recommendations, as well as their Toyota equivalents.

SAE ABBREVIATIONS	SAE TERMS	TOYOTA TERMS ( )––ABBREVIATIONS
A/C	Air Conditioning	Air Conditioner
ACL	Air Cleaner	Air Cleaner
AIR	Secondary Air Injection	Air Injection (AI)
AP	Accelerator Pedal	–
B+	Battery Positive Voltage	+B, Battery Voltage
BARO	Barometric Pressure	–
CAC	Charge Air Cooler	Inter cooler
CARB	Carburetor	Carburetor
CFI	Continuous Fuel Injection	–
CKP	Crankshaft Position	Crank Angle
CL	Closed Loop	Closed Loop
CMP	Camshaft position	Cam Angle
CPP	Clutch Pedal Position	–
CTOX	Continuous Trap Oxidizer	–
CTP	Closed Throttle Potion	–
DFI	Direct Fuel Injection (Diesel)	Direct Injection (DI)
DI	Distributor Ignition	–
DLC1 DLC2 DLC3	Data Link Connector 1 Data Link Connector 2 Data Link Connector 3	1: Check Connector 2: Total Diagnosis Communication Link (TDCL) 3: OBD II Diagnostic Connector
DTC	Diagnostic Trouble Code	Diagnostic Code
DTM	Diagnostic Test Mode	–
ECL	Engine Control Level	–
ECM	Engine Control Module	Engine ECU (Electronic Control Unit)
ECT	Engine Control Temperature	Coolant Temperature, Water Temperature (THW)
EEPROM	Electrically Erasable Programmable Read Only memory	Electrically Erasable Programmable Read Only memory (EEPROM), Erasable Programmable Read Only memory (EPROM)
EFE	Early Fuel Evaporation	Cold Mixture Heater (CMH), Heat Control Valve (HCV)
EGR	Exhaust Gas Recirculation	Exhaust Gas Recirculation (EGR)
EI	Electronic Ignition	Distributorless Ignition (DI)
EM	Engine Modification	Engine Modification (EM)
EPROM	Erasable Programmable Read Only Memory	Programmable Read Only Memory (PROM)
EVAP	Evaporative Emission	Evaporative Emission Control (EVAP)
FC	Fan Control	–
FEEPROM	Flash Electrically Erasable Programmable Read Only Memory	–
FEPROM	Flash Erasable Programmable Read Only Memory	–
FF	Flexible Fuel	–
FP	Fuel Pump	Fuel Pump
GEN	Generator	Alternator
GND	Ground	Ground (GND)
HO2S	Heated Oxygen Sensor	Heated Oxygen Sensor (HO2S)
IAC	Idol Air Control	Idol Speed Control (ISC)
IAT	Intake Air Temperature	Intake or Inlet Air Temperature
ICM	Ignition Control Module	–
IFI	Indirect Fuel Injection	Indirect Injection
IFS	Inertia Fuel–Shutoff	–

ISC	Idle Speed Control	–
KS	Knock Sensor	Knock Sensor
MAF	Mass Air Flow	Air Flow Meter
MAP	Manifold Absolute Pressure	Manifold Pressure Intake Vacuum
MC	Mixture Control	Electric Bleed Air Control Valve (EBCV) Mixture Control Valve (MCV) Electric Air Control Valve (EACV)
MDP	Manifold Differential Pressure	–
MFI	Multiport Fuel Injection	Electronic Fuel Injection (EFI)
MIL	Malfunction Indicator Lamp	Check Engine Light
MST	Manifold Surface temperature	–
MVZ	Manifold Vacuum Zone	–
NVRAM	Non–Volatile Random Access Memory	–
O2S	Oxygen Sensor	Oxygen Sensor, O_2 Sensor (O_{2S})
OBD	On–Board Diagnostic	On–Board Diagnostic (OBD)
OC	Oxidation Catalytic Converter	Oxidation Catalyst Converter (OC), CC_0
OP	Open Loop	Open Loop
PAIR	Pulsed Secondary Air Injection	Air Suction (AS)
PCM	Powertrain Control Module	–
PNP	Park/Neutral Position	–
PROM	Programmable Read Only Memory	–
PSP	Power Steering Pressure	–
PTOX	Periodic Trap Oxidizer	Diesel Particulate Filter (DPF) Diesel Particulate Trap (DPT)
RAM	Random Access Memory	Random Access Memory (RAM)
RM	Relay Module	–
ROM	Read Only Memory	Read Only Memory (ROM)
RPM	Engine Speed	Engine Speed
SC	Supercharger	Supercharger
SCB	Supercharger Bypass	–
SFI	Sequential Multiport Fuel Injection	Electronic Fuel Injection (EFI), Sequential Injection
SPL	Smoke Puff Limiter	–
SRI	Service Reminder Indicator	–
SRT	System Readiness Test	–
ST	Scan Tool	–
TB	Throttle Body	Throttle Body
TBI	Throttle Body Fuel Injection	Single Point Injection Central Fuel Injection (Ci)
TC	Turbocharger	Turbocharger
TCC	Torque Converter Clutch	Torque Converter
TCM	Transmission Control Module	Transmission ECU (Electronic Control Unit)
TP	Throttle Position	Throttle Position
TR	Transmission Range	–
TVV	Thermal Vacuum Valve	Bimetallic Vacuum Switching Valve (BVSV) Thermostatic Vacuum Switching Valve (TVSV)
TWC	Three–Way Catalytic Converter	Three–Way Catalytic (TWC) CC_{RO}
TWC+OC	Three–Way + Oxidation Catalytic Converter	$CC_R + CC_O$
VAF	Volume Air Flow	Air Flow Meter
VR	Voltage Regulator	Voltage Regulator
VSS	Vehicle Speed Sensor	Vehicle Speed Sensor (Read Switch Type)
WOT	Wide Open Throttle	Full Throttle

WU–OC	Warm Up Oxidation Catalytic Converter	–
WU–TWC	Warm Up Three–Way Catalytic Converter	Manifold Converter
3GR	Third Gear	–
4GR	Fourth Gear	–

AUTOMATIC TRANSMISSION / TRANS

022FX–01

PREPARATION

SST

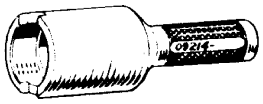	09214–76011	Crankshaft Pulley Replacer	FRONT DIFFERENTIAL ASSY(U151F)
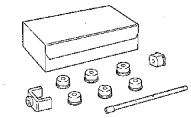	09215–00013	Crankshaft Bearing Remover & Replacer Set B	FRONT DIFFERENTIAL ASSY(U151E)
	(09215–00471)	Camshaft Bearing Remover & Replacer	FRONT DIFFERENTIAL ASSY(U151E)
	09223–15020	Oil Seal & Bearing Replacer	FRONT DIFFERENTIAL ASSY(U151E) FRONT DIFFERENTIAL ASSY(U151F)
	09223–15030	Oil Seal & Bearing Replacer	AUTOMATIC TRANSAXLE ASSY(U151E/U151F)
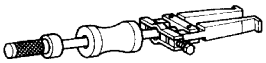	09308–00010	Oil Seal Puller	FRONT DIFFERENTIAL ASSY(U151E) OIL PUMP ASSY(U151E/U151F) FRONT DIFFERENTIAL ASSY(U151F)
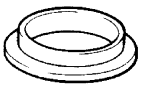	09316–12010	Transfer Bearing Replacer	FRONT DIFFERENTIAL ASSY(U151E)
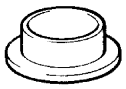	09316–20011	Transfer Bearing Replacer	UNDERDRIVE PLANETARY GEAR ASSY(U151E/U151F) FRONT DIFFERENTIAL ASSY(U151F)
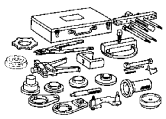	09350–32014	TOYOTA Automatic Transmission Tool Set	OIL PUMP ASSY(U151E/U151F) UNDERDRIVE CLUTCH ASSY(U151E/U151F)
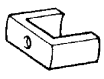	(09351–32070)	No.2 Piston Spring Compressor	UNDERDRIVE CLUTCH ASSY(U151E/U151F)
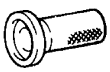	(09351–32140)	Oil Seal Replacer	OIL PUMP ASSY(U151E/U151F)
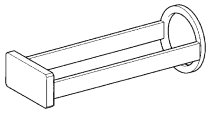	09387–00020	Direct Clutch Wrench	AUTOMATIC TRANSAXLE ASSY(U151E/U151F) FORWARD CLUTCH ASSY(U151E/U151F) DIRECT CLUTCH ASSY(U151E/U151F)

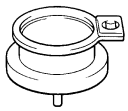	09387–00030	Counter Drive Gear Holding Tool	AUTOMATIC TRANSAXLE ASSY(U151E/U151F)
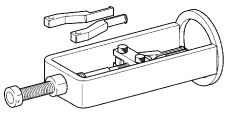	09387–00041	Bearing Puller Assembly	AUTOMATIC TRANSAXLE ASSY(U151E/U151F)
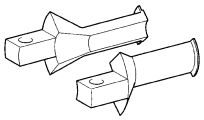	(09387–01010)	Claw No.1	AUTOMATIC TRANSAXLE ASSY(U151E/U151F)
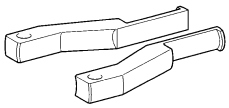	(09387–01021)	Claw No.2	AUTOMATIC TRANSAXLE ASSY(U151E/U151F)
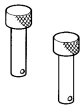	(09387–01030)	Pin	AUTOMATIC TRANSAXLE ASSY(U151E/U151F)
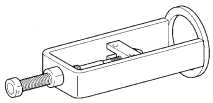	(09387–01040)	Bearing Puller Body	AUTOMATIC TRANSAXLE ASSY(U151E/U151F)
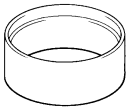	09387–00050	Under Drive Gear Puller	UNDERDRIVE PLANETARY GEAR ASSY(U151E/U151F)
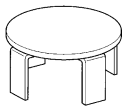	09387–00060	Second Brake Wrench	SECOND BRAKE PISTON ASSY(U151E/U151F)
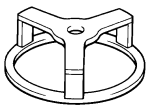	09387–00070	First & Reverse Brake Wrench	AUTOMATIC TRANSAXLE ASSY(U151E/U151F)
	09387–00080	Counter Drive Gear Nut Wrench	AUTOMATIC TRANSAXLE ASSY(U151E/U151F)
	09502–12010	Differential Bearing Replacer	UNDERDRIVE PLANETARY GEAR ASSY(U151E/U151F)
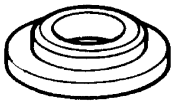	09506–35010	Differential Drive Pinion Rear Bearing Replacer	UNDERDRIVE PLANETARY GEAR ASSY(U151E/U151F)
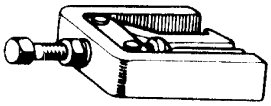	09514–35011	Rear Wheel Bearing Puller	AUTOMATIC TRANSAXLE ASSY(U151E/U151F)

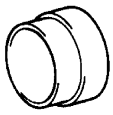	09527–17011	Rear Axle Shaft Bearing Remover	AUTOMATIC TRANSAXLE ASSY(U151E/U151F) FRONT DIFFERENTIAL ASSY(U151F)
	09550–60010	Differential Side Bearing Replacer	FRONT DIFFERENTIAL ASSY(U151E)
	(09951–00490)	Replacer 49	FRONT DIFFERENTIAL ASSY(U151E)
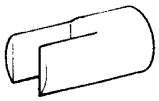	09564–32011	Differential Preload Adaptor	FRONT DIFFERENTIAL ASSY(U151E) FRONT DIFFERENTIAL ASSY(U151F)
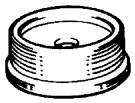	09608–10010	Steering Knuckle Oil Seal Replacer	FRONT DIFFERENTIAL ASSY(U151E) FRONT DIFFERENTIAL ASSY(U151F)
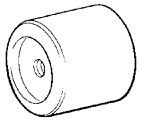	09649–17010	Steering Knuckle Tool	AUTOMATIC TRANSAXLE ASSY(U151E/U151F) FRONT DIFFERENTIAL ASSY(U151F)
	09710–30050	Suspension Arm Bushing Replacer	FRONT DIFFERENTIAL ASSY(U151E)
	09726–40010	Lower Control Shaft Bearing Replacer	UNDERDRIVE PLANETARY GEAR ASSY(U151E/U151F)
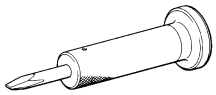	09930–00010	Drive Shaft Nut Chisel	UNDERDRIVE PLANETARY GEAR ASSY(U151E/U151F)
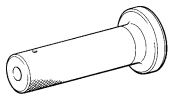	(09931–00010)	Handle	UNDERDRIVE PLANETARY GEAR ASSY(U151E/U151F)
	(09931–00020)	Nut Chisel	UNDERDRIVE PLANETARY GEAR ASSY(U151E/U151F)
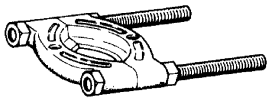	09950–00020	Bearing Remover	FRONT DIFFERENTIAL ASSY(U151E) AUTOMATIC TRANSAXLE ASSY(U151E/U151F) UNDERDRIVE PLANETARY GEAR ASSY(U151E/U151F) FRONT DIFFERENTIAL ASSY(U151F)

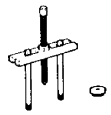	09950–00030	Bearing Remover Attachment	FRONT DIFFERENTIAL ASSY(U151E) AUTOMATIC TRANSAXLE ASSY(U151E/U151F) UNDERDRIVE PLANETARY GEAR ASSY(U151E/U151F) FRONT DIFFERENTIAL ASSY(U151F)
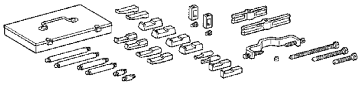	09950–40011	Puller B Set	FRONT DIFFERENTIAL ASSY(U151E) AUTOMATIC TRANSAXLE ASSY(U151E/U151F) UNDERDRIVE PLANETARY GEAR ASSY(U151E/U151F)
	(09957–04010)	Attachment	FRONT DIFFERENTIAL ASSY(U151E) AUTOMATIC TRANSAXLE ASSY(U151E/U151F) UNDERDRIVE PLANETARY GEAR ASSY(U151E/U151F)
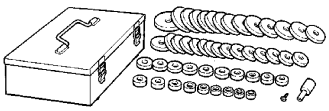	09950–60010	Replacer Set	FRONT DIFFERENTIAL ASSY(U151E) AUTOMATIC TRANSAXLE ASSY(U151E/U151F) UNDERDRIVE PLANETARY GEAR ASSY(U151E/U151F) FRONT DIFFERENTIAL ASSY(U151F)
	(09951–00230)	Replacer 23	AUTOMATIC TRANSAXLE ASSY(U151E/U151F)
	(09951–00260)	Replacer 26	UNDERDRIVE PLANETARY GEAR ASSY(U151E/U151F)
	(09951–00320)	Replacer 32	AUTOMATIC TRANSAXLE ASSY(U151E/U151F) UNDERDRIVE PLANETARY GEAR ASSY(U151E/U151F)
	(09951–00450)	Replacer 45	AUTOMATIC TRANSAXLE ASSY(U151E/U151F)
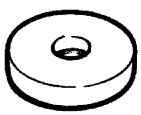	(09951–00480)	Replacer 48	FRONT DIFFERENTIAL ASSY(U151F)
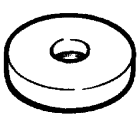	(09951–00490)	Replacer 49	FRONT DIFFERENTIAL ASSY(U151E)
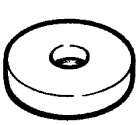	(09951–00500)	Replacer 50	AUTOMATIC TRANSAXLE ASSY(U151E/U151F)

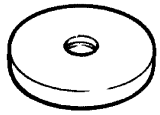	(09951–00590) Replacer 59	AUTOMATIC TRANSAXLE ASSY(U151E/U151F)
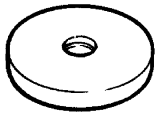	(09951–00600) Replacer 60	FRONT DIFFERENTIAL ASSY(U151F)
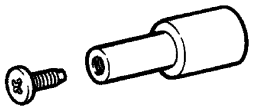	(09952–06010) Adapter	AUTOMATIC TRANSAXLE ASSY(U151E/U151F)
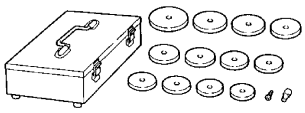	09950–60020 Replacer Set No.2	FRONT DIFFERENTIAL ASSY(U151E) AUTOMATIC TRANSAXLE ASSY(U151E/U151F) UNDERDRIVE PLANETARY GEAR ASSY(U151E/U151F) FRONT DIFFERENTIAL ASSY(U151F)
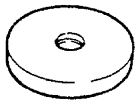	(09951–00730) Replacer 73	FRONT DIFFERENTIAL ASSY(U151F)
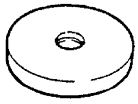	(09951–00750) Replacer 75	AUTOMATIC TRANSAXLE ASSY(U151E/U151F)
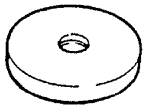	(09951–00810) Replacer 81	AUTOMATIC TRANSAXLE ASSY(U151E/U151F)
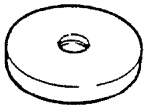	(09951–00890) Replacer 89	FRONT DIFFERENTIAL ASSY(U151E) UNDERDRIVE PLANETARY GEAR ASSY(U151E/U151F) FRONT DIFFERENTIAL ASSY(U151F)
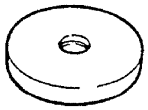	(09951–00910) Replacer 91	FRONT DIFFERENTIAL ASSY(U151E) AUTOMATIC TRANSAXLE ASSY(U151E/U151F)
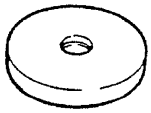	(09951–01030) Replacer 103	AUTOMATIC TRANSAXLE ASSY(U151E/U151F) FRONT DIFFERENTIAL ASSY(U151F)
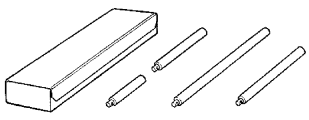	09950–70010 Handle Set	FRONT DIFFERENTIAL ASSY(U151E) AUTOMATIC TRANSAXLE ASSY(U151E/U151F) UNDERDRIVE PLANETARY GEAR ASSY(U151E/U151F) FRONT DIFFERENTIAL ASSY(U151F)

	(09951–07100)	Handle 100	FRONT DIFFERENTIAL ASSY(U151E) AUTOMATIC TRANSAXLE ASSY(U151E/U151F) UNDERDRIVE PLANETARY GEAR ASSY(U151E/U151F) FRONT DIFFERENTIAL ASSY(U151F)
	(09951–07150)	Handle 150	FRONT DIFFERENTIAL ASSY(U151E) AUTOMATIC TRANSAXLE ASSY(U151E/U151F) FRONT DIFFERENTIAL ASSY(U151F)

Recomended Tools

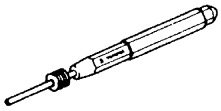	09031–00030	Pin Punch	AUTOMATIC TRANSAXLE ASSY(U151E/U151F)
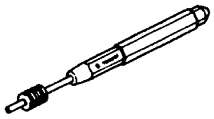	09031–00040	Pin Punch .	FRONT DIFFERENTIAL ASSY(U151E) FRONT DIFFERENTIAL ASSY(U151F)
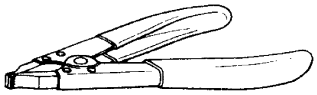	09905–00012	Snap Ring No.1 Expander	AUTOMATIC TRANSAXLE ASSY(U151E/U151F) FORWARD CLUTCH ASSY(U151E/U151F) DIRECT CLUTCH ASSY(U151E/U151F) FRONT DIFFERENTIAL ASSY(U151F)
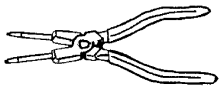	09905–00013	Snap Ring Pliers	UNDERDRIVE PLANETARY GEAR ASSY(U151E/U151F)

Equipment

Dial indicator with magnetic base	
Feeler gauge	
Vernier calipers	
Torque wrench	
Plastic hammer	
Straight edge	
Press	
Seal packing 2403, THREE BOND 2403 or equivalent	
Seal packing 2430, THREE BOND 2430 or equivalent	

Lubricant

item		
U151E / U151F Automatic transaxle fluid Dry fill Drain and refill	 6.8 liter (7.2 USqts, 6.0 Imp.qts) 2.9 liter (3.1 USqts, 2.6 Imp.qts)	ATF type T–IV

SSM (Special Service Materials)

08826–00090	Seal Packing 1281, THREE BOND 1281 or equivalent (FIPG)	
08833–00080	Adhesive 1344 THREE BOND 1344 LOCTITE 242 or equivalent	

STANDARD BOLT FOR AUTOMATIC TRANSAXLE REPAIR MANUAL

HOW TO DETERMINE BOLT STRENGTH

030JK–02

	Mark	Class
Hexagon head bolt	 Bolt head No. 4– 5– 6– 7– 8– 9– 10– 11–	4T 5T 6T 7T 8T 9T 10T 11T
	 No mark	4T
Hexagon flange bolt w/ washer hexagon bolt	 No mark	4T
Hexagon head bolt	 2 Protruding lines	5T
Hexagon flange bolt w/ washer hexagon bolt	 2 Protruding lines	6T
Hexagon head bolt	 3 Protruding lines	7T
Hexagon head bolt	 4 Protruding lines	8T

	Mark	Class
Hexagon flange bolt w/ washer hexagon bolt	 4 Protruding lines	9T
Hexagon flange bolt w/ washer hexagon bolt	 5 Protruding lines	10T
Hexagon flange bolt w/ washer hexagon bolt	 6 Protruding lines	11T
Stud bolt	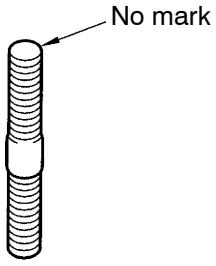 No mark	4T
	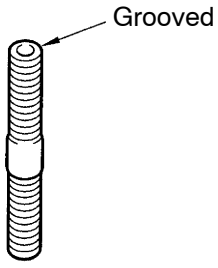 Grooved	6T
Welded bolt	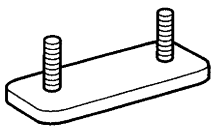	4T

V06821

030JL–02

SPECIFIED TORQUE FOR STANDARD BOLTS

Class	Diameter mm	Pitch mm	Specified torque							
			Hexagon head bolt				Hexagon flange bolt			
			N·m	kgf·cm	ft·lbf		N·m	kgf·cm	ft·lbf	
4T	6	1	5	55	48	in.·lbf	6	60	52	in.·lbf
	8	1.25	12.5	130	9		14	145	10	
	10	1.25	26	260	19		29	290	21	
	12	1.25	47	480	35		53	540	39	
	14	1.5	74	760	55		84	850	61	
	16	1.5	115	1,150	83		–	–	–	
5T	6	1	6.5	65	56	in.·lbf	7.5	75	65	in.·lbf
	8	1.25	15.5	160	12		17.5	175	13	
	10	1.25	32	330	24		36	360	26	
	12	1.25	59	600	43		65	670	48	
	14	1.5	91	930	67		100	1,050	76	
	16	1.5	140	1,400	101		–	–	–	
6T	6	1	8	80	69	in.·lbf	9	90	78	in.·lbf
	8	1.25	19	195	14		21	210	15	
	10	1.25	39	400	29		44	440	32	
	12	1.25	71	730	53		80	810	59	
	14	1.5	110	1,100	80		125	1,250	90	
	16	1.5	170	1,750	127		–	–	–	
7T	6	1	10.5	110	8		12	120	9	
	8	1.25	25	260	19		28	290	21	
	10	1.25	52	530	38		58	590	43	
	12	1.25	95	970	70		105	1,050	76	
	14	1.5	145	1,500	108		165	1,700	123	
	16	1.5	230	2,300	166		–	–	–	
8T	8	1.25	29	300	22		33	330	24	
	10	1.25	61	620	45		68	690	50	
	12	1.25	110	1,100	80		120	1,250	90	
9T	8	1.25	34	340	25		37	380	27	
	10	1.25	70	710	51		78	790	57	
	12	1.25	125	1,300	94		140	1,450	105	
10T	8	1.25	38	390	28		42	430	31	
	10	1.25	78	800	58		88	890	64	
	12	1.25	140	1,450	105		155	1,600	116	
11T	8	1.25	42	430	31		47	480	35	
	10	1.25	87	890	64		97	990	72	
	12	1.25	155	1,600	116		175	1,800	130	

V00079

030JM–02

HOW TO DETERMINE NUT STRENGTH

Nut Type			Class
Present Standard Hexagon Nut	Old Standard Hexagon Nut		
	Cold Forging Nut	Cutting Processed Nut	
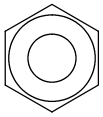 No Mark			4N
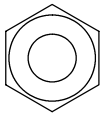 No Mark (w/ Washer)	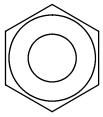 No Mark (w/ Washer)	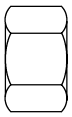 No Mark	5N (4T)
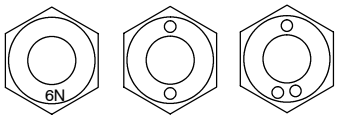 6N			6N
	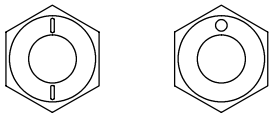	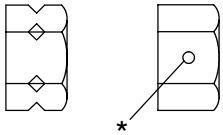 *	7N (5T)
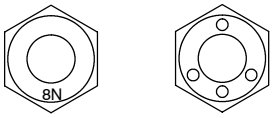 8N			8N
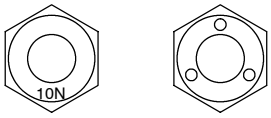 10N	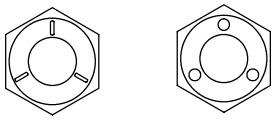	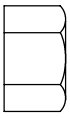 No Mark	10N (7T)
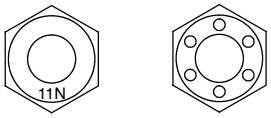 11N			11N
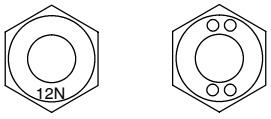 12N			12N

*: Nut with 1 or more marks on one side surface of the nut.

B06432

HINT:

Use the nut with the same number of the nut strength classification or the greater than the bolt strength classification number when tightening parts with a bolt and nut.

Example: Bolt = 4T

Nut = 4N or more

AUTOMATIC TRANSMISSION / TRANSAXLE

0305K–11

SERVICE DATA

Oil pump		
Body clearance	STD	0.10 – 0.17 mm (0.0039 – 0.0067 in.)
	Max.	0.17 mm (0.0067 in.)
Tip clearance	STD	0.07 – 0.15 mm (0.0028 – 0.0059 in.)
	Max.	0.15 mm (0.0059 in.)
Side clearance	STD	0.02 – 0.05 mm (0.0008 – 0.0020 in.)
	Max.	0.05 mm (0.0020 in.)
Drive gear thickness	Mark	
	A	11.690 – 11.699 mm (0.4602 – 0.4606 in.)
	B	11.700 – 11.709 mm (0.4606 – 0.4610 in.)
	C	11.710 – 11.720 mm (0.4610 – 0.4614 in.)
	D	11.721 – 11.730 mm (0.4615 – 0.4618 in.)
	E	11.731 – 11.740 mm (0.4619 – 0.4622 in.)
Driven gear thickness	Mark	
	A	11.690 – 11.699 mm (0.4602 – 0.4606 in.)
	B	11.700 – 11.709 mm (0.4606 – 0.4610 in.)
	C	11.710 – 11.720 mm (0.4610 – 0.4614 in.)
	D	11.721 – 11.730 mm (0.4615 – 0.4618 in.)
	E	11.731 – 11.740 mm (0.4619 – 0.4622 in.)
Pump body bushing inside diameter	STD	38.113 – 38.138 mm (1.50050 – 1.50149 in.)
	Max.	38.188 mm (1.50346 in.)
Stator shaft bushing inside diameter	STD	21.500 – 21.526 mm (0.84646 – 0.84748 in.)
	Max.	21.57 mm (0.8492 in.)

Multiple disc clutch		
Inside diameter	STD	23.025 – 23.045 mm (0.9065 – 0.9073 in.)
	Max.	23.09 mm (0.9091 in.)

Forward clutch		
Pack clearance		1.00 – 1.25 mm (0.0394 – 0.4921 in.)
Return spring free length		26.74 mm (1.0528 in.)
Flange thickness	Mark	
	1	3.00 mm (0.1181 in.)
	2	3.15 mm (0.1240 in.)
	3	3.30 mm (0.1299 in.)
	4	3.45 mm (0.1358 in.)
	5	3.60 mm (0.1417 in.)

Reverse clutch		
Pack clearance:		0.60 – 0.82 mm (0.02362 – 0.03228 in.)
Flange thickness	Mark	
	1	3.0 mm (0.118 in.)
	2	3.1 mm (0.122 in.)
	3	3.2 mm (0.126 in.)
	4	3.3 mm (0.130 in.)
	5	3.4 mm (0.134 in.)
	6	3.5 mm (0.138 in.)
	7	3.6 mm (0.142 in.)

Direct clutch & O/D clutch		
Pack clearance		0.61 – 0.83 mm (0.02401 – 0.03268 in.)
Return spring free length		25.91 mm (1.0201 in.)
Flange thickness	Mark	
	0	2.5 mm (0.098 in.)
	1	2.6 mm (0.102 in.)
	2	2.7 mm (0.106 in.)
	3	2.8 mm (0.110 in.)
	4	2.9 mm (0.114 in.)
	5	3.0 mm (0.118 in.)
	6	3.1 mm (0.122 in.)

2nd brake		
Pack clearance		0.62 – 0.91 mm (0.0244 – 0.0358 in.)
Return spring free length		16.61 mm (0.6539 in.)
Flange thickness	Mark	
	1	3.0 mm (0.118 in.)
	2	3.1 mm (0.122 in.)
	3	3.2 mm (0.126 in.)
	4	3.3 mm (0.130 in.)
	5	3.4 mm (0.134 in.)
	6	3.5 mm (0.138 in.)
	7	3.6 mm (0.142 in.)

U/D clutch		
Pack clearance		1.51 – 1.71 mm (0.0594 – 0.0673 in.)
U/D clutch drum bushing inside diameter	STD	37.06 – 37.08 mm (1.4591 – 1.4598 in.)
	Max.	37.13 mm (1.4618 in.)
Return spring free length		17.14 mm (0.6752 in.)
Flange thickness	Mark	
	1	3.0 mm (0.118 in.)
	2	3.1 mm (0.122 in.)
	3	3.2 mm (0.126 in.)
	4	3.3 mm (0.130 in.)
	5	3.4 mm (0.134 in.)

U/D brake		
Pack clearance		1.81 – 2.20 mm (0.0713 – 0.0866 in.)
Return spring free length		14.04 mm (0.5528 in.)
Flange thickness	Mark	
	1	3.0 mm (0.118 in.)
	2	3.2 mm (0.126 in.)
	3	3.4 mm (0.134 in.)

1st & reverse brake		
Pack clearance		1.16 – 1.35 mm (0.0457 – 0.0531in.)
Return spring free length		15.53 mm (0.6114 in.)
Flange thickness	Mark	
	1	1.8 mm (0.071 in.)
	2	1.9 mm (0.075 in.)
	3	2.0 mm (0.079 in.)
	4	2.1 mm (0.083 in.)
	5	2.2 mm (0.087 in.)
	6	2.3 mm (0.091 in.)
	7	2.4 mm (0.094 in.)
	8	2.5 mm (0.098 in.)

U/D planetary gear	
Preload (at 60 rpm)	0.50 – 1.42 N·m (5.1 – 14.5 kgf·cm, 0.06 – 0.17 in.·lbf)

Front planetary gear		
Turning torque (at 60 rpm)	New Bearing	0.51 – 1.02 N·m (5.1 – 10.0 kgf·cm, 4.4 – 8.7 in.·lbf)
	Used Bearing	0.26 – 0.51 N·m (2.7 – 5.2 kgf·cm, 2.3 – 4.5 in.·lbf)

Input shaft	
End play	0.262 – 1.249 mm (0.0103 – 0.0492 in.)

Transaxle rear cover	
Bearing press fit depth	20.55 – 21.25 mm (0.8091 – 0.8366 in.)

Transmission valve body		
Valve body installation bolt length	A	41 mm (1.614 in.)
	B	57 mm (2.244 in.)
	C	25 mm (0.984 in.)

Accumulator			
Spring		Free length/Outer diameter	Color
B_3	Inner	62.00 (2.4409) / 15.50 (0.610)	Purple
	Outer	74.23 (2.9224) / 16.50 (0.649)	Purple
C_2		60.96 (2.3999) / 14.10 (0.555)	Yellow
C_3		72.20 (2.8425) / 19.0 (0.748)	Colorless

Front differential(U151E)		
Backlash		0.05 – 0.20 mm (0.0020 – 0.0079 in.)
Thrust washer thickness	Mark	
	–	1.625 mm (0.0640 in.)
	–	1.725 mm (0.0679 in.)
	–	1.825 mm (0.0719 in.)
Praload (at 60 rpm)	New bearing	0.20 – 0.69 N·m (2.0 – 7.0 kgf·cm, 1.8 – 6.1 in.·lbf)
	Used bearing	0.10 – 0.35 N·m (1.0 – 3.6 kgf·cm, 0.9 – 3.1 in.·lbf)
Flange thickness	Mark	
	0	2.00 mm (0.0787 in.)
	1	2.05 mm (0.0807 in.)
	2	2.10 mm (0.0827 in.)
	3	2.15 mm (0.0846 in.)
	4	2.20 mm (0.0866 in.)
	5	2.25 mm (0.0886 in.)
	6	2.30 mm (0.0906 in.)
	7	2.35 mm (0.0925 in.)
	8	2.40 mm (0.0945 in.)
	9	2.45 mm (0.0965 in.)
	A	2.50 mm (0.0984 in.)
	B	2.55 mm (0.1004 in.)
	C	2.60 mm (0.1024 in.)
	D	2.65 mm (0.1043 in.)
	E	2.70 mm (0.1063 in.)
	F	2.75 mm (0.1083 in.)
	G	2.80 mm (0.1102 in.)
	H	2.85 mm (0.1122 in.)

Front differential (U151F)	
Side gear backlash	0.05 – 0.20 mm (0.0020 – 0.0079 in.)

Thrust washer thickness = Clearance – 0.162 – 0.265 mm (0.0064 – 0.0104 in.)	Mark	
	A	0.95 mm (0.0373 in.)
	B	1.00 mm (0.0393 in.)
	C	1.05 mm (0.0413 in.)
	D	1.10 mm (0.0433 in.)
	E	1.15 mm (0.0453 in.)
	F	1.20 mm (0.0472 in.)
	G	1.25 mm (0.0492 in.)
	H	1.30 mm (0.0512 in.)
	J	1.35 mm (0.0532 in.)
	K	1.40 mm (0.0552 in.)
Pinion's backlash		0.05 – 0.20 mm (0.0020 – 0.0079 in.)
Thrust washer thickness	Mark	
	MA	0.80 mm (0.0313 in.)
	MB	0.85 mm (0.0333 in.)
	MC	0.90 mm (0.0353 in.)
	MD	0.95 mm (0.0373 in.)
	ME	1.00 mm (0.0393 in.)
	MF	1.05 mm (0.0413 in.)
	MG	1.10 mm (0.0433 in.)
	MH	1.15 mm (0.0453 in.)
	MJ	1.20 mm (0.0472 in.)
	MK	1.25 mm (0.0492 in.)
	ML	1.30 mm (0.0512 in.)
	MM	1.35 mm (0.0532 in.)
	MN	1.40 mm (0.0552 in.)
Praload (at 60 rpm)	New bearing	0.20 – 0.69 N·m (2.0 – 7.0 kgf·cm, 1.8 – 6.1 in.·lbf)
	Used bearing	0.10 – 0.35 N·m (1.0 – 3.6 kgf·cm, 0.9 – 3.1 in.·lbf)
Flange thickness	Mark	
	0	2.00 mm (0.0787 in.)
	1	2.05 mm (0.0807 in.)
	2	2.10 mm (0.0827 in.)
	3	2.15 mm (0.0846 in.)
	4	2.20 mm (0.0866 in.)
	5	2.25 mm (0.0886 in.)
	6	2.30 mm (0.0906 in.)
	7	2.35 mm (0.0925 in.)
	8	2.40 mm (0.0945 in.)
	9	2.45 mm (0.0965 in.)
	A	2.50 mm (0.0984 in.)
	B	2.55 mm (0.1004 in.)
	C	2.60 mm (0.1024 in.)
	D	2.65 mm (0.1043 in.)
	E	2.70 mm (0.1063 in.)
	F	2.75 mm (0.1083 in.)
	G	2.80 mm (0.1102 in.)
	H	2.85 mm (0.1122 in.)
Oil seal press in depth		5.5 – 6.5 mm (0.217 – 0.256 in.)

0305L–11

TORQUE SPECIFICATION

Part Tightened		N·m	kgf·cm	ft·lbf
Differential gear lube apply tube x Transaxle housing		9.8	100	87 in.·lbf
Front planetary gear lock nut		210–350	2141–3569	155–258
Brake apply tube clamp x Transaxle case		5.4	55	48 in.·lbf
Transaxle case No. 1 plug x Transaxle rear cover		7.4	75	65 in.·lbf
Transaxle rear cover x Transaxle case	Bolt A	19	190	14
	Other bolt	25	250	18
Pawl shaft clamp x Transaxle case		9.8	100	87 in.·lbf
Oil pump assy x Transaxle case		22	226	16
Transaxle housing x Transaxle case	Bolt A	25	255	18
	Bolt B	33	337	24
	Bolt C	29	295	21
	Bolt D	22	226	16
Automatic transmission case plug x Transaxle housing		7.4	75	65 in.·lbf
Automatic transmission case plug x Transaxle case		7.4	75	65 in.·lbf
Parking lock pawl bracket x Transaxle case		20	205	15
Manual detent spring x Transaxle case	Bolt A	20	205	15
	Bolt B	12	120	9
Transmission wire x Transaxle housing		5.4	55	48 in.·lbf
Transmission valve body x Transaxle case		11	110	8
ATF temperature sensor clamp x Transmission valve body		6.6	67	58 in·lbf
Valve body oil strainer assy x Transmission valve body		11	110	8
Automatic transaxle oil pan sub–assy x Transaxle case		7.8	80	69 in.·lbf
Drain plug x Automatic transaxle oil pan sub–assy		49	500	36
Speed sensor x Transaxle case		11	115	8
Oil cooler tube union x Transaxle case	Union	27	276	20
	Elbow	27	276	20
Park/neutral start switch x nut		6.9	70	61 in.·lbf
Park/neutral start switch x Bolt		5.4	55	48 in.·lbf
Park/neutral start switch x Control shaft lever		13	130	9
Speedometer driven hole cover sub–assy x Transaxle case		6.9	70	61
Oil pump body x Stator shaft assy		9.8	100	87 in.·lbf
Line pressure control solenoid assy x Transmission valve body assy		6.6	67	58 in.·lbf
Shift solenoid valve SL1x Transmission valve body assy		6.6	67	58 in.·lbf
Shift solenoid valve SL2x Transmission valve body assy		10.8	110	8
Shift solenoid valve SL3x Transmission valve body assy		6.6	67	58 in.·lbf
Shift solenoid valve S4x Transmission valve body assy		10.8	110	8
Shift solenoid valve DSL x Transmission valve body assy		10.8	110	8
Front differential case x Front differential ring gear		95.1	970	70

AUTOMATIC TRANSMISSION / TRANSAXLE (U151E/U151F)

4010I–01

COMPONENTS

U151E:

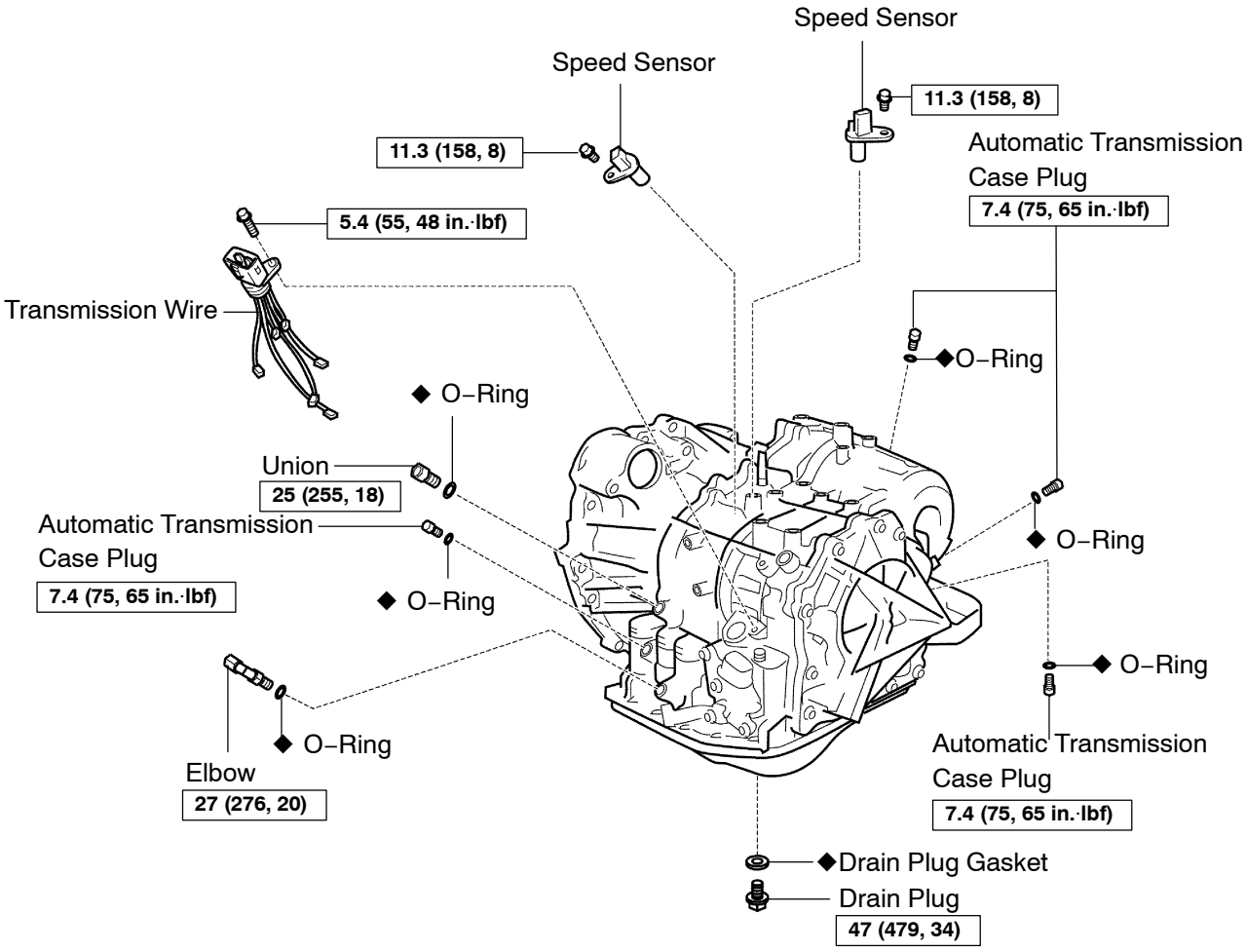

N·m (kgf·cm, ft·lbf) : Specified torque

◆ Non–reusable part

C86320

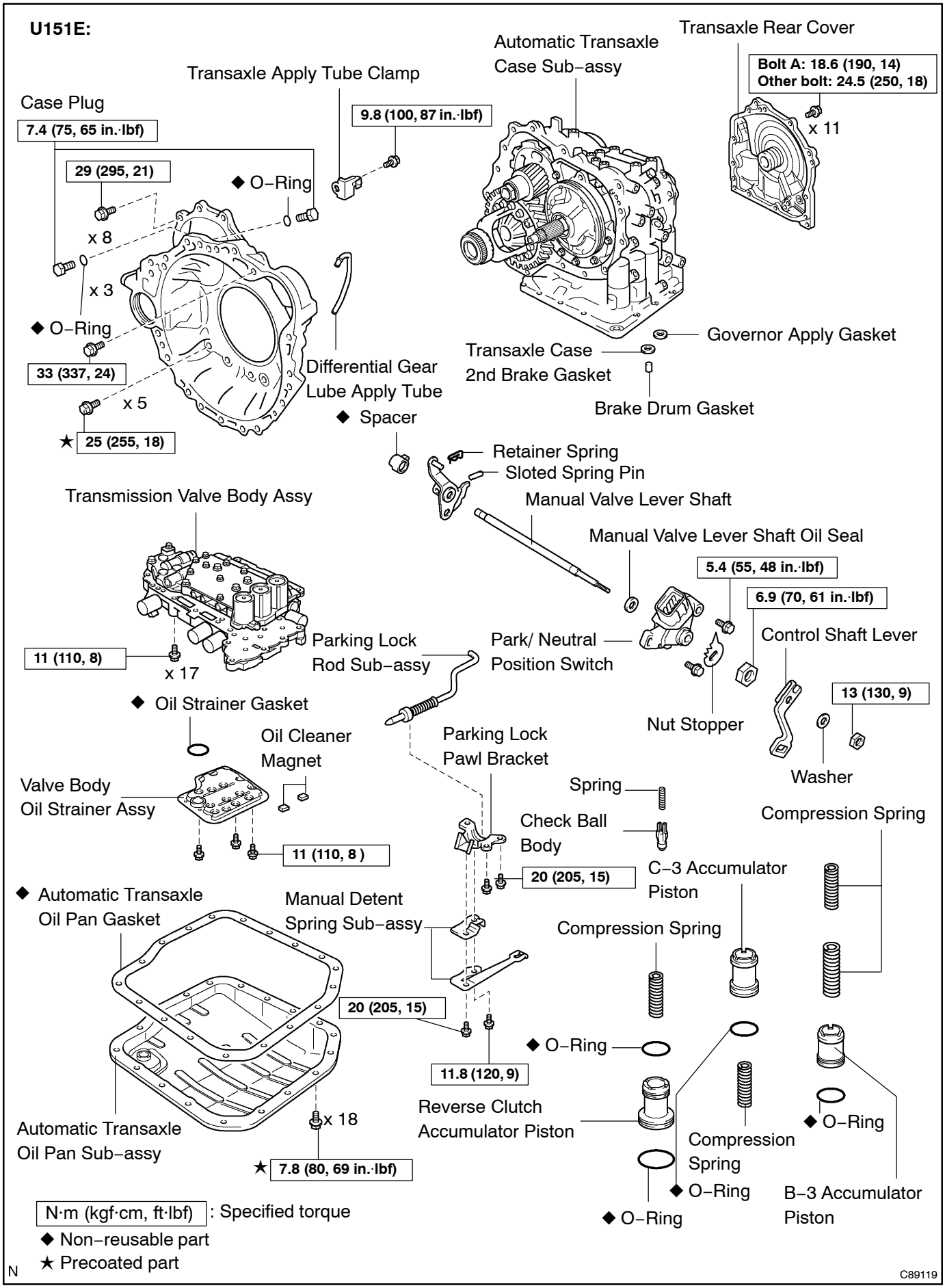
U151E:
Transaxle Rear Cover
Automatic Transaxle Case Sub–assy
Transaxle Apply Tube Clamp
Bolt A: 18.6 (190, 14)
Other bolt: 24.5 (250, 18)
Case Plug
7.4 (75, 65 in.·lbf)
9.8 (100, 87 in.·lbf)
x 11
29 (295, 21)
◆ O–Ring
x 8
x 3
◆ O–Ring
33 (337, 24)
x 5
★ 25 (255, 18)
Differential Gear Lube Apply Tube
Governor Apply Gasket
Transaxle Case 2nd Brake Gasket
Brake Drum Gasket
◆ Spacer
Retainer Spring
Sloted Spring Pin
Manual Valve Lever Shaft
Transmission Valve Body Assy
Manual Valve Lever Shaft Oil Seal
5.4 (55, 48 in.·lbf)
6.9 (70, 61 in.·lbf)
11 (110, 8)
x 17
Parking Lock Rod Sub–assy
Park/ Neutral Position Switch
Control Shaft Lever
13 (130, 9)
◆ Oil Strainer Gasket
Nut Stopper
Washer
Oil Cleaner Magnet
Parking Lock Pawl Bracket
Valve Body Oil Strainer Assy
Spring
Check Ball
Body
Compression Spring
11 (110, 8)
20 (205, 15)
C–3 Accumulator Piston
◆ Automatic Transaxle Oil Pan Gasket
Manual Detent Spring Sub–assy
Compression Spring
20 (205, 15)
◆ O–Ring
11.8 (120, 9)
Reverse Clutch Accumulator Piston
◆ O–Ring
Automatic Transaxle Oil Pan Sub–assy
x 18
Compression Spring
★ 7.8 (80, 69 in.·lbf)
◆ O–Ring
◆ O–Ring
B–3 Accumulator Piston
◆ O–Ring
N·m (kgf·cm, ft·lbf) : Specified torque
◆ Non–reusable part
★ Precoated part
N
C89119

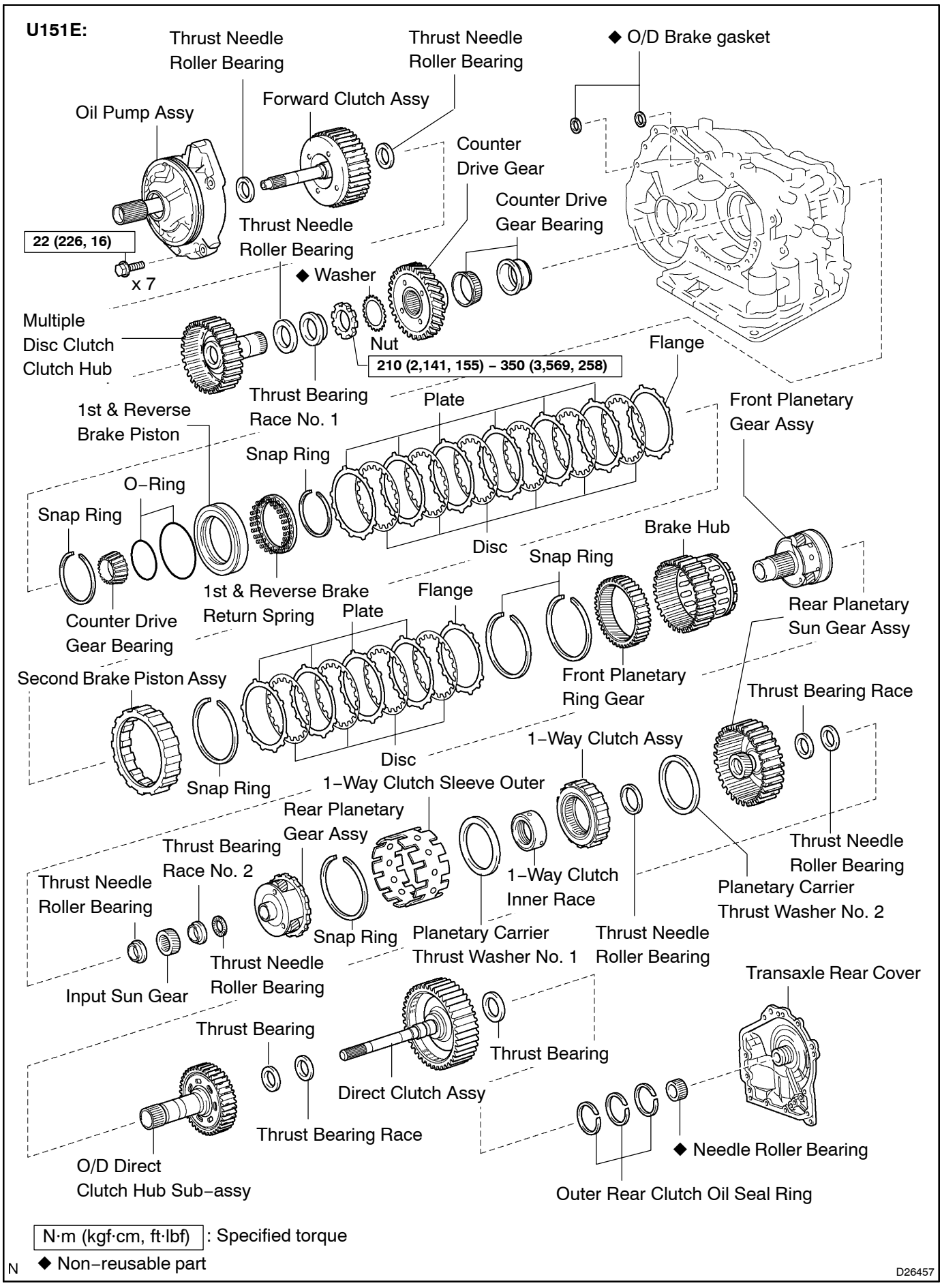
U151E:
Thrust Needle Roller Bearing
Thrust Needle Roller Bearing
◆ O/D Brake gasket
Oil Pump Assy
Forward Clutch Assy
Counter Drive Gear
Counter Drive Gear Bearing
22 (226, 16)
x 7
Thrust Needle Roller Bearing
◆ Washer
Multiple Disc Clutch Clutch Hub
Nut
210 (2,141, 155) – 350 (3,569, 258)
Flange
Thrust Bearing Race No. 1
Plate
1st & Reverse Brake Piston
Snap Ring
Front Planetary Gear Assy
O–Ring
Snap Ring
Brake Hub
Disc
Snap Ring
1st & Reverse Brake Return Spring
Flange
Plate
Rear Planetary Sun Gear Assy
Counter Drive Gear Bearing
Second Brake Piston Assy
Front Planetary Ring Gear
Thrust Bearing Race
1–Way Clutch Assy
Disc
Snap Ring
1–Way Clutch Sleeve Outer
Rear Planetary Gear Assy
Thrust Needle Roller Bearing
Thrust Bearing Race No. 2
1–Way Clutch Inner Race
Planetary Carrier Thrust Washer No. 2
Thrust Needle Roller Bearing
Snap Ring
Planetary Carrier Thrust Washer No. 1
Thrust Needle Roller Bearing
Thrust Needle Roller Bearing
Input Sun Gear
Transaxle Rear Cover
Thrust Bearing
Thrust Bearing
Direct Clutch Assy
Thrust Bearing Race
◆ Needle Roller Bearing
O/D Direct Clutch Hub Sub–assy
Outer Rear Clutch Oil Seal Ring
N·m (kgf·cm, ft·lbf) : Specified torque
◆ Non–reusable part
N
D26457

U151E:

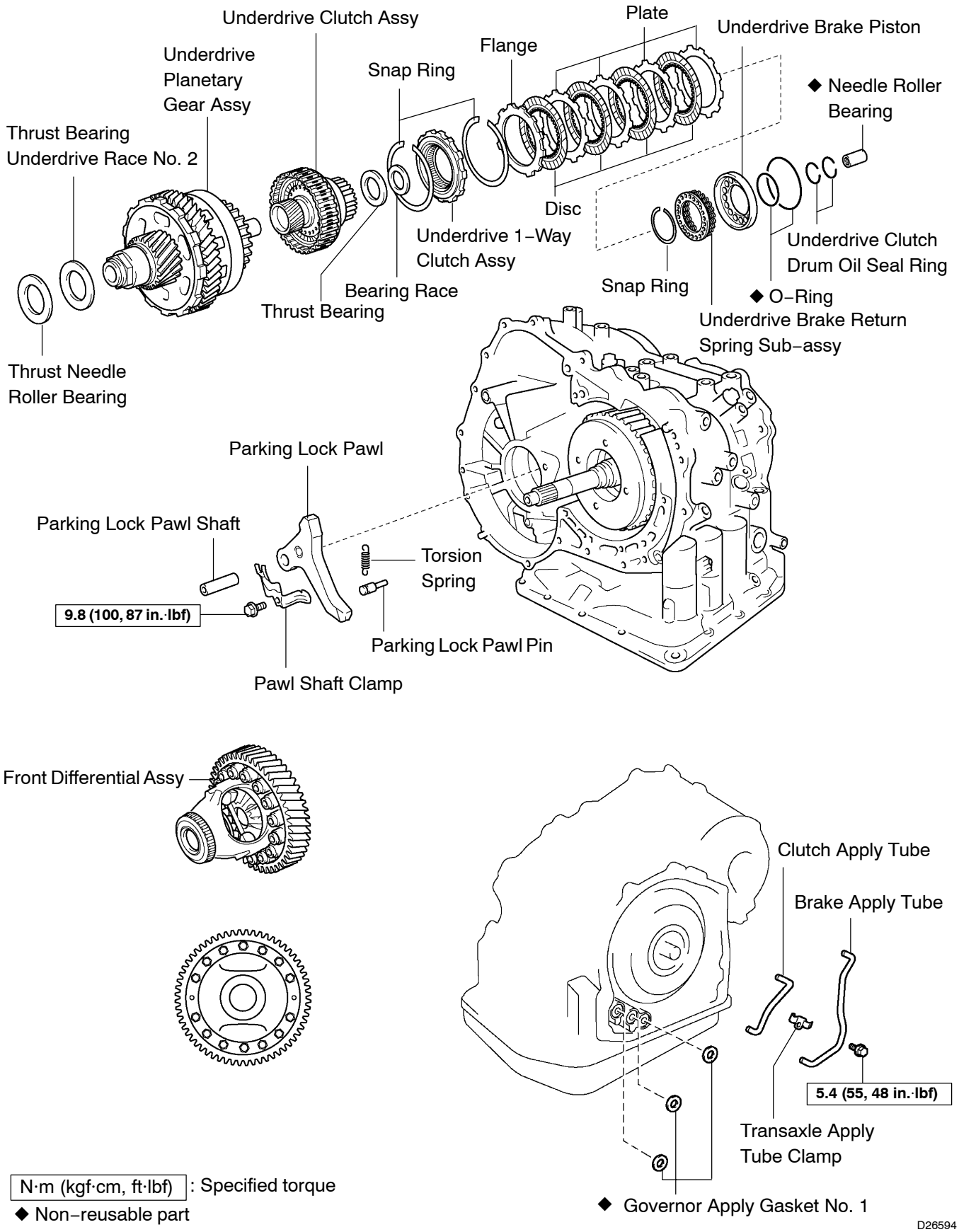
Underdrive Clutch Assy
Plate
Underdrive Brake Piston
Flange
Underdrive Planetary Gear Assy
Snap Ring
◆ Needle Roller Bearing
Thrust Bearing Underdrive Race No. 2
Disc
Underdrive 1–Way Clutch Assy
Underdrive Clutch Drum Oil Seal Ring
Snap Ring
◆ O–Ring
Bearing Race
Thrust Bearing
Underdrive Brake Return Spring Sub–assy
Thrust Needle Roller Bearing
Parking Lock Pawl
Parking Lock Pawl Shaft
Torsion Spring
9.8 (100, 87 in.·lbf)
Parking Lock Pawl Pin
Pawl Shaft Clamp
Front Differential Assy
Clutch Apply Tube
Brake Apply Tube
5.4 (55, 48 in.·lbf)
Transaxle Apply Tube Clamp
◆ Governor Apply Gasket No. 1
N·m (kgf·cm, ft·lbf) : Specified torque
◆ Non–reusable part
D26594

U151F:

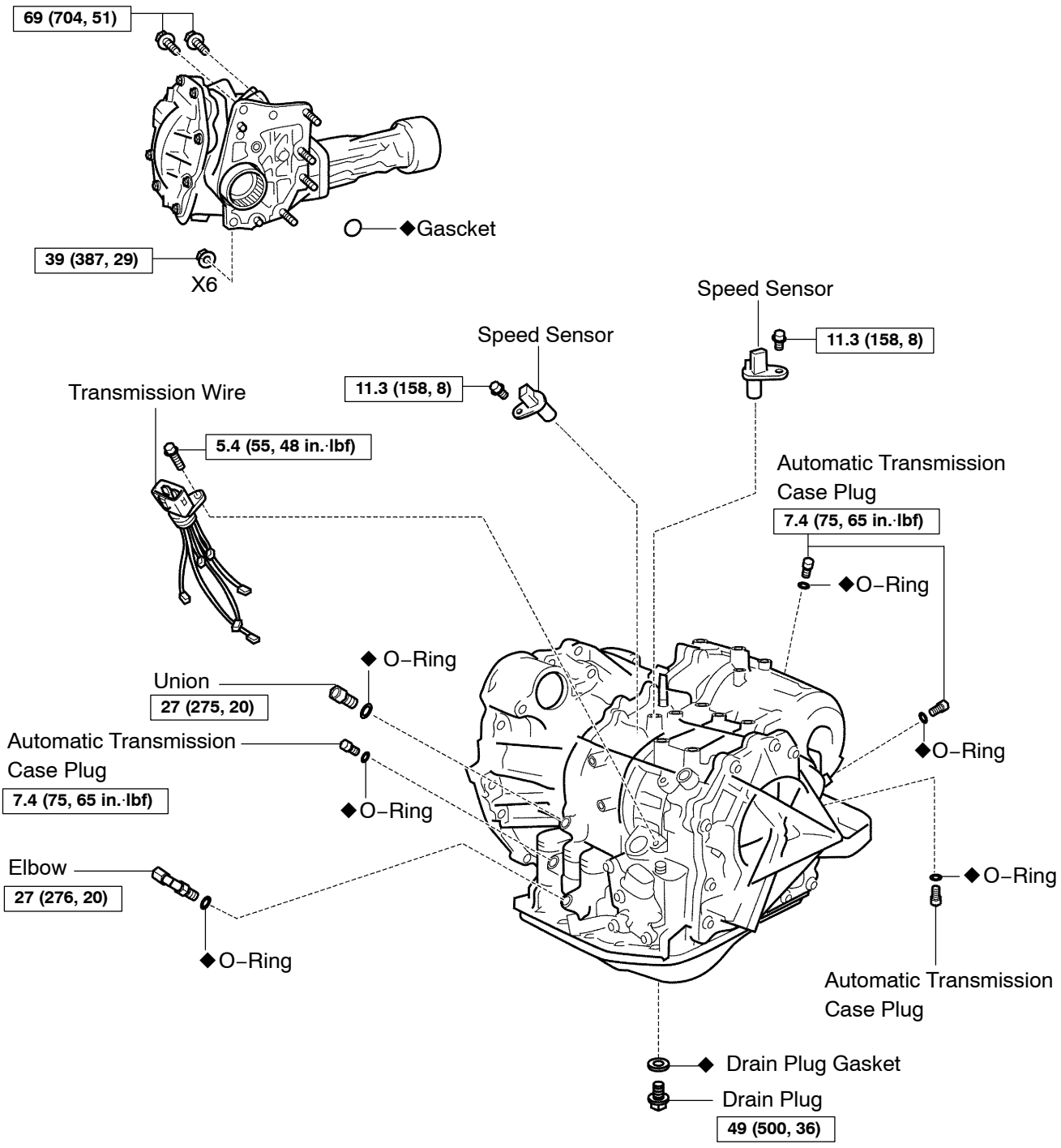

N·m (kgf·cm, ft·lbf) : Specified torque

◆ Non–reusable part

C86315

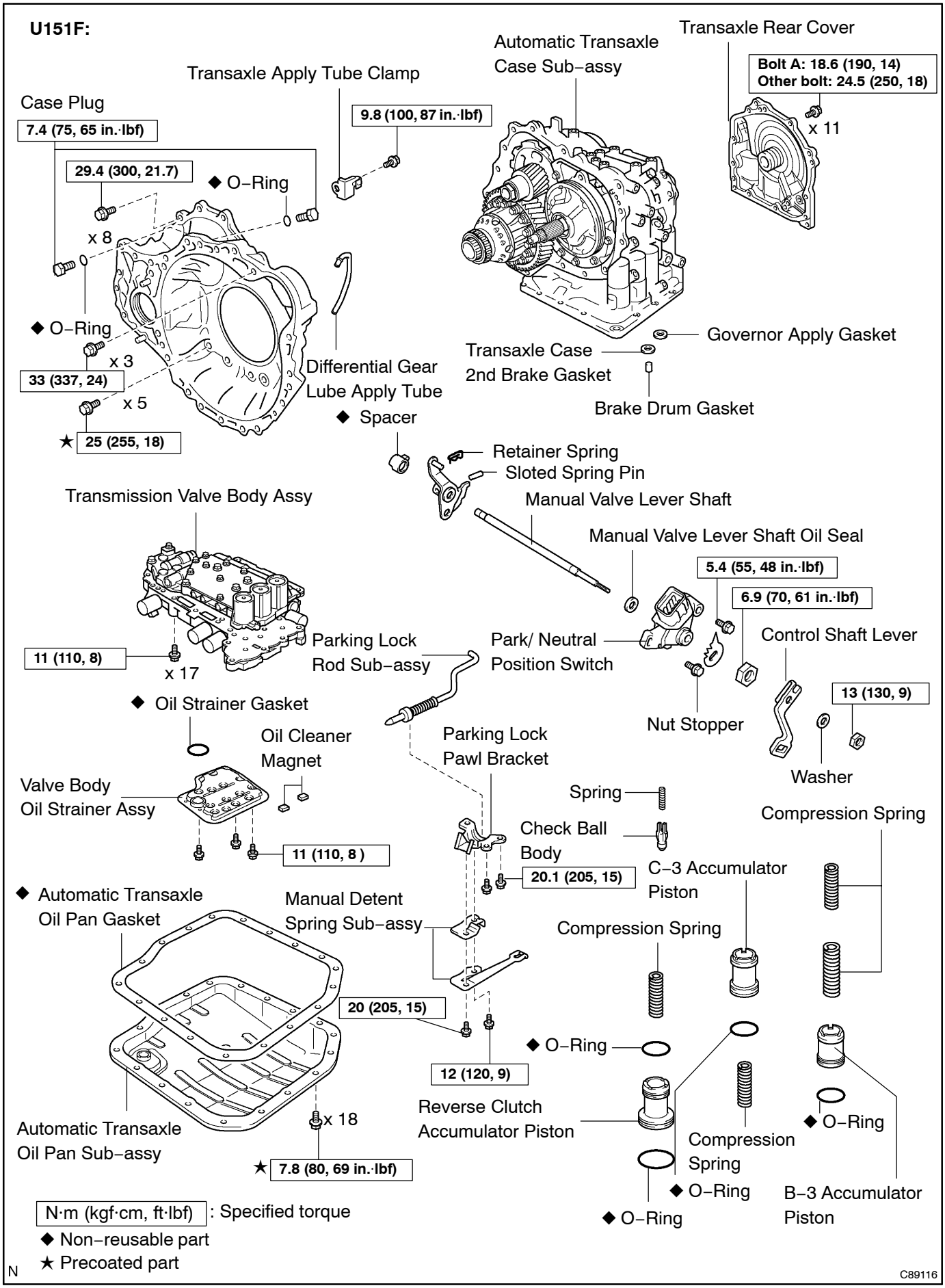
U151F:
Transaxle Rear Cover
Automatic Transaxle Case Sub–assy
Transaxle Apply Tube Clamp
Bolt A: 18.6 (190, 14)
Other bolt: 24.5 (250, 18)
Case Plug
7.4 (75, 65 in.·lbf)
9.8 (100, 87 in.·lbf)
x 11
29.4 (300, 21.7)
◆ O–Ring
x 8
◆ O–Ring
x 3
33 (337, 24)
x 5
★ 25 (255, 18)
Differential Gear Lube Apply Tube
◆ Spacer
Governor Apply Gasket
Transaxle Case 2nd Brake Gasket
Brake Drum Gasket
Retainer Spring
Sloted Spring Pin
Manual Valve Lever Shaft
Transmission Valve Body Assy
Manual Valve Lever Shaft Oil Seal
5.4 (55, 48 in.·lbf)
6.9 (70, 61 in.·lbf)
11 (110, 8)
x 17
Parking Lock Rod Sub–assy
Park/ Neutral Position Switch
Control Shaft Lever
13 (130, 9)
◆ Oil Strainer Gasket
Nut Stopper
Washer
Oil Cleaner Magnet
Parking Lock Pawl Bracket
Valve Body Oil Strainer Assy
Spring
Compression Spring
Check Ball Body
11 (110, 8)
20.1 (205, 15)
C–3 Accumulator Piston
◆ Automatic Transaxle Oil Pan Gasket
Manual Detent Spring Sub–assy
Compression Spring
20 (205, 15)
◆ O–Ring
12 (120, 9)
Reverse Clutch Accumulator Piston
◆ O–Ring
Automatic Transaxle Oil Pan Sub–assy
x 18
★ 7.8 (80, 69 in.·lbf)
Compression Spring
◆ O–Ring
◆ O–Ring
B–3 Accumulator Piston
N·m (kgf·cm, ft·lbf) : Specified torque
◆ Non–reusable part
★ Precoated part
N
C89116

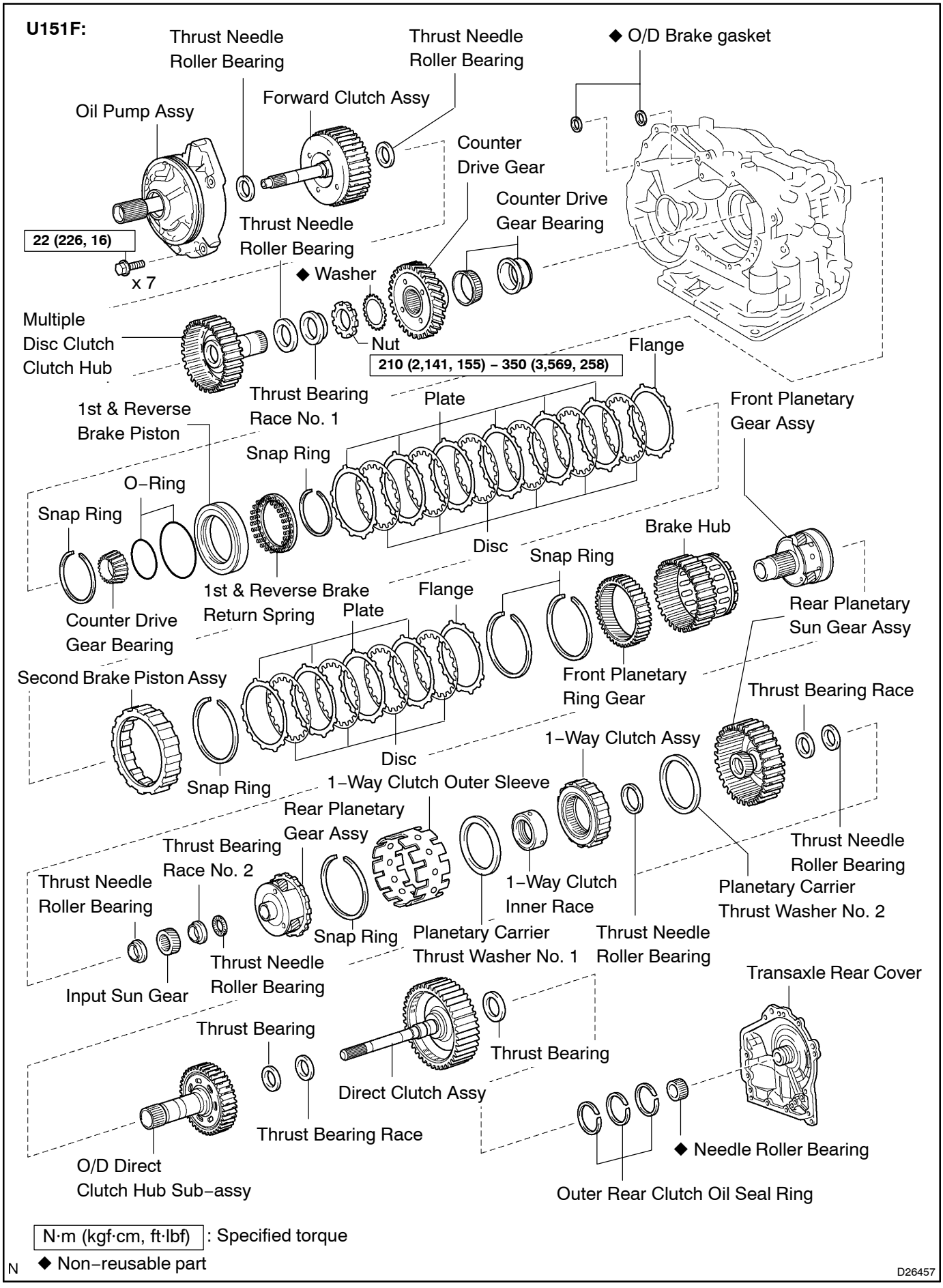
U151F:
Thrust Needle Roller Bearing
Thrust Needle Roller Bearing
◆ O/D Brake gasket
Oil Pump Assy
Forward Clutch Assy
Counter Drive Gear
Counter Drive Gear Bearing
22 (226, 16)
x 7
Thrust Needle Roller Bearing
◆ Washer
Multiple Disc Clutch Clutch Hub
Nut
210 (2,141, 155) – 350 (3,569, 258)
Flange
Thrust Bearing Race No. 1
Plate
1st & Reverse Brake Piston
Front Planetary Gear Assy
Snap Ring
O–Ring
Snap Ring
Disc
Brake Hub
Snap Ring
1st & Reverse Brake Return Spring
Flange
Plate
Rear Planetary Sun Gear Assy
Counter Drive Gear Bearing
Second Brake Piston Assy
Front Planetary Ring Gear
Thrust Bearing Race
1–Way Clutch Assy
Disc
Snap Ring
1–Way Clutch Outer Sleeve
Rear Planetary Gear Assy
Thrust Bearing Race No. 2
Thrust Needle Roller Bearing
Thrust Needle Roller Bearing
1–Way Clutch Inner Race
Planetary Carrier Thrust Washer No. 2
Snap Ring
Planetary Carrier Thrust Washer No. 1
Thrust Needle Roller Bearing
Input Sun Gear
Thrust Needle Roller Bearing
Transaxle Rear Cover
Thrust Bearing
Thrust Bearing
Direct Clutch Assy
Thrust Bearing Race
◆ Needle Roller Bearing
O/D Direct Clutch Hub Sub–assy
Outer Rear Clutch Oil Seal Ring
N·m (kgf·cm, ft·lbf) : Specified torque
◆ Non–reusable part
N
D26457

U151F:

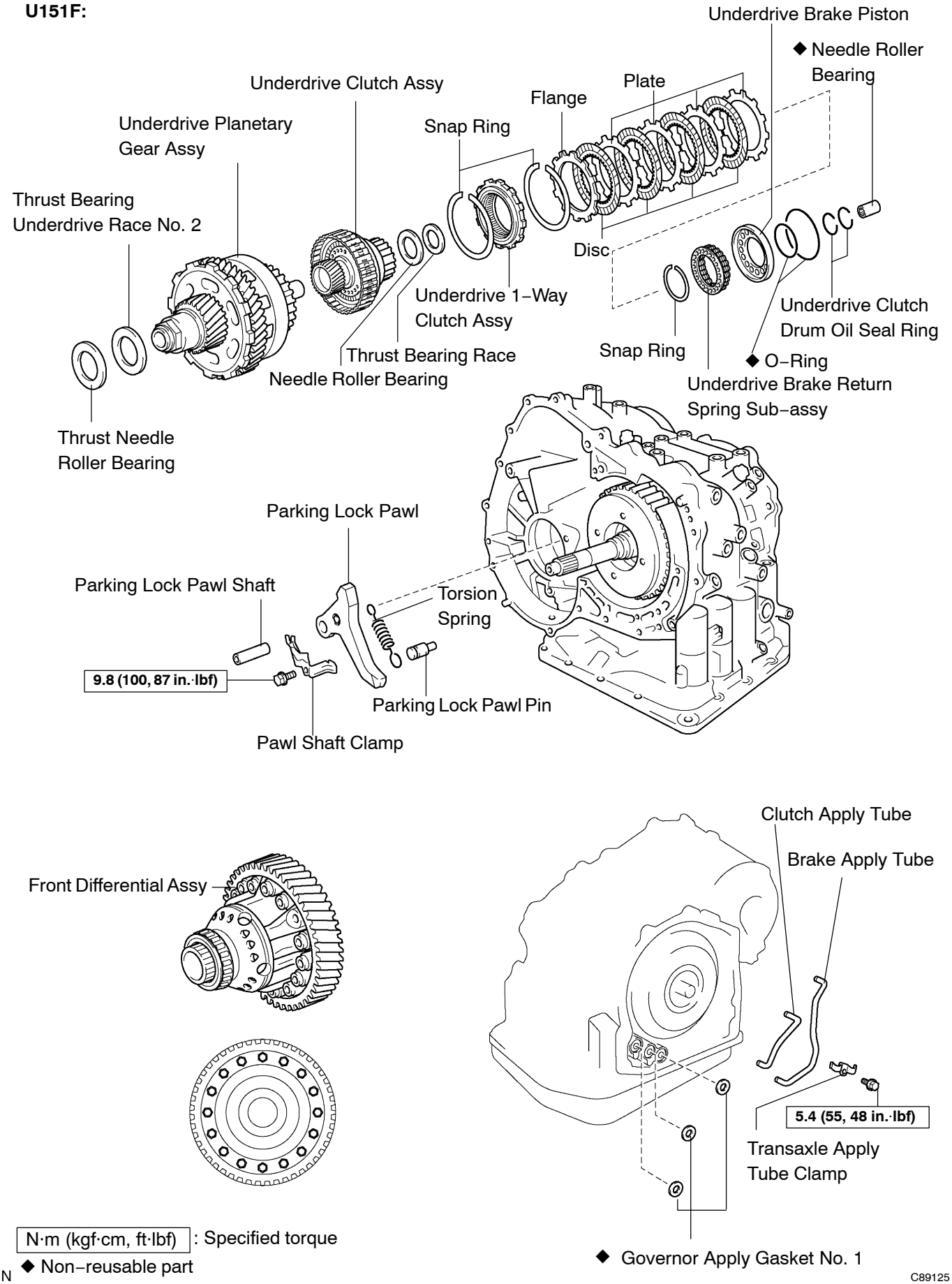

N·m (kgf·cm, ft·lbf) : Specified torque

◆ Non–reusable part

N

C89125

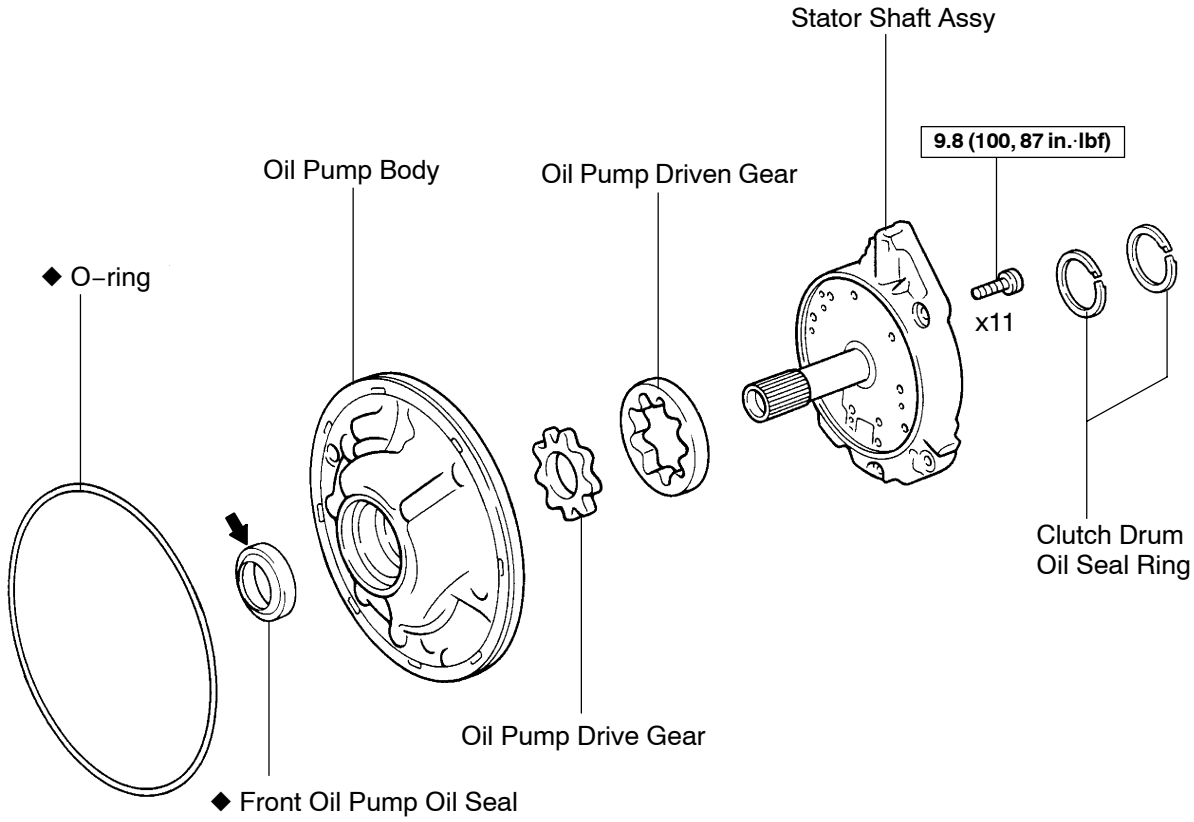

N·m (kgf·cm, ft·lbf) : Specified torque
◆ Non–reusable part
⬅ Apply petroleum jelly

D03643

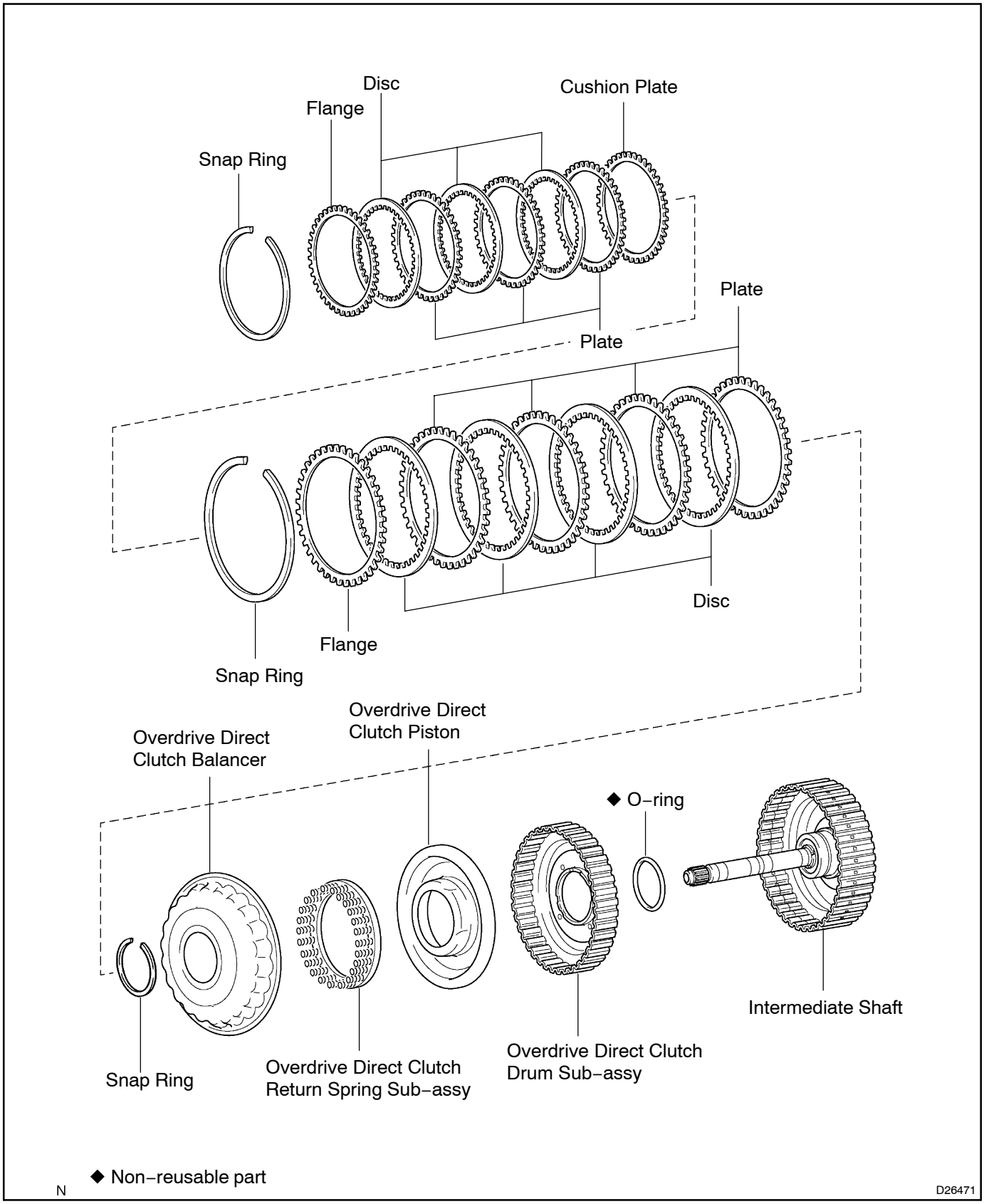
Disc
Flange
Cushion Plate
Snap Ring
Plate
Plate
Disc
Flange
Snap Ring
Overdrive Direct Clutch Piston
Overdrive Direct Clutch Balancer
◆ O–ring
Intermediate Shaft
Snap Ring
Overdrive Direct Clutch Return Spring Sub–assy
Overdrive Direct Clutch Drum Sub–assy
◆ Non–reusable part
N
D26471

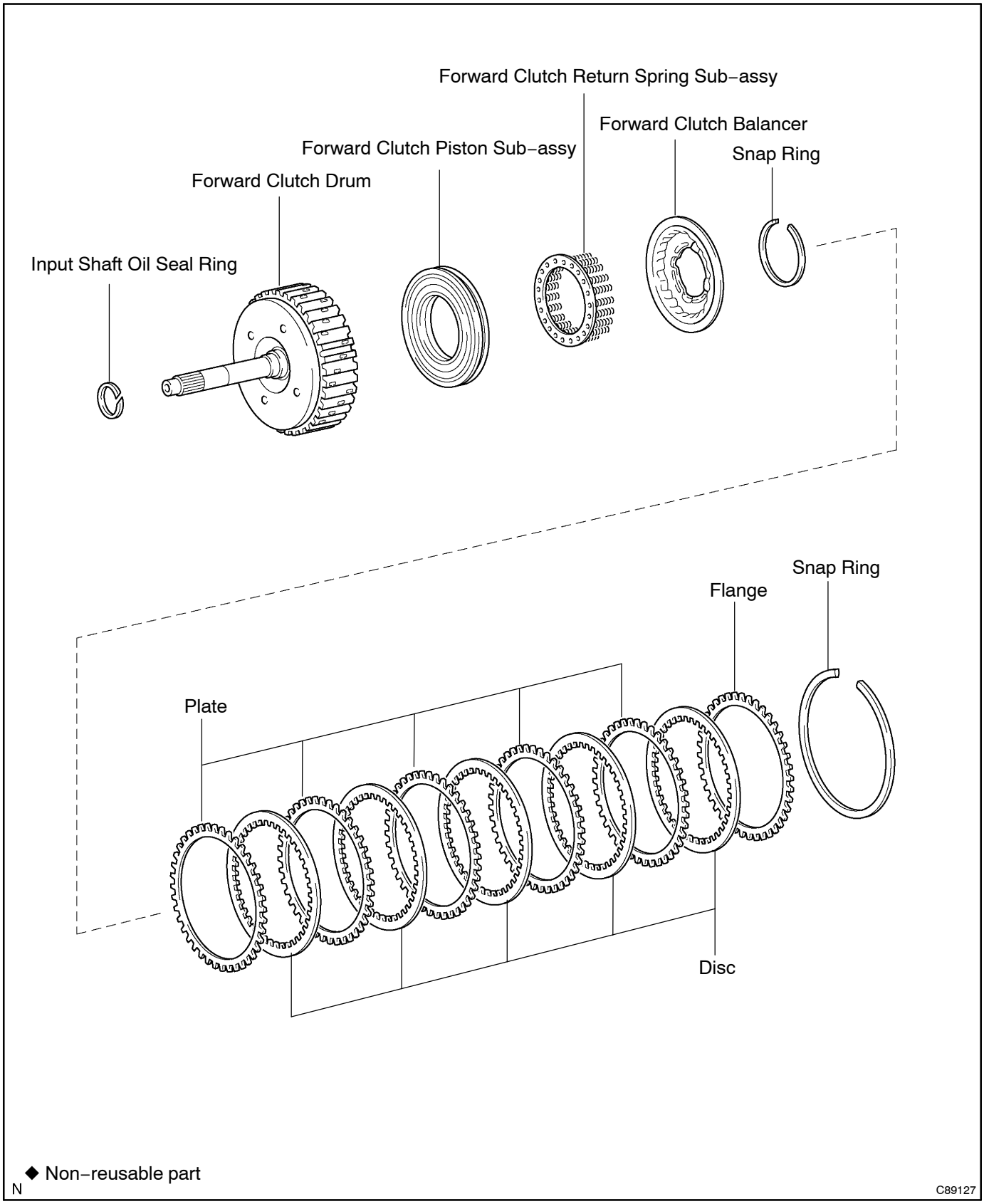
Forward Clutch Return Spring Sub–assy
Forward Clutch Balancer
Forward Clutch Piston Sub–assy
Snap Ring
Forward Clutch Drum
Input Shaft Oil Seal Ring
Snap Ring
Flange
Plate
Disc
◆ Non–reusable part
N
C89127

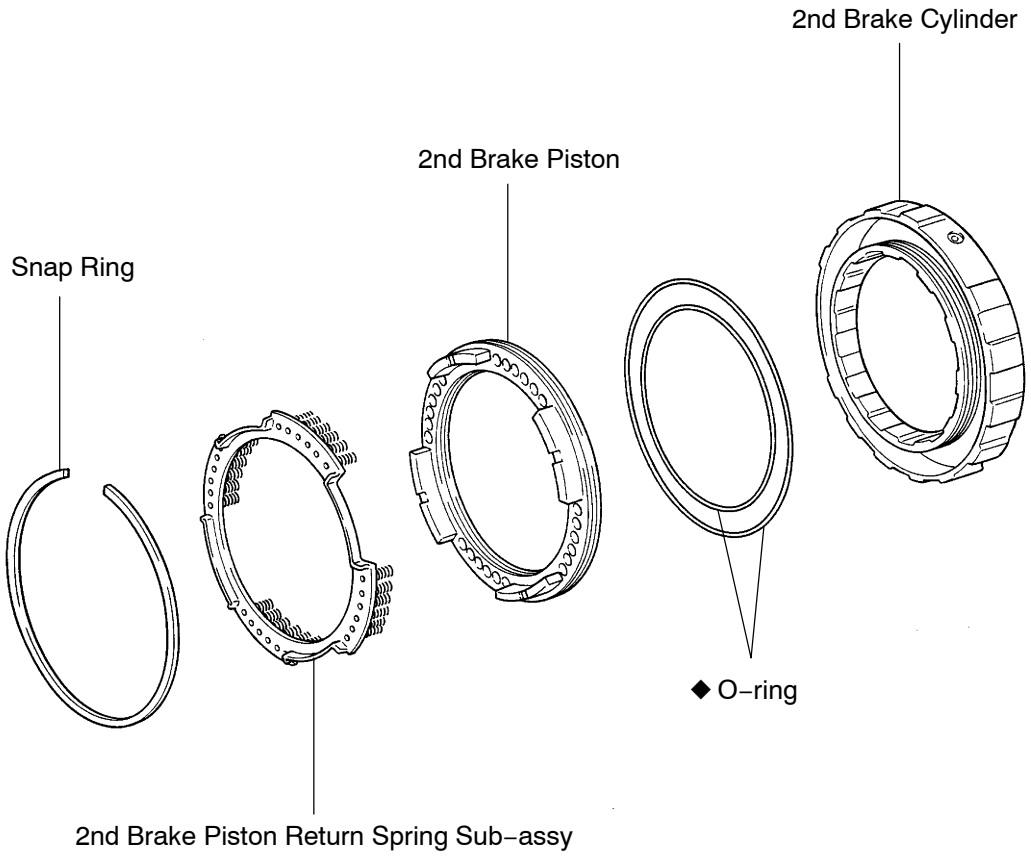

◆ Non–reusable part

N D26702

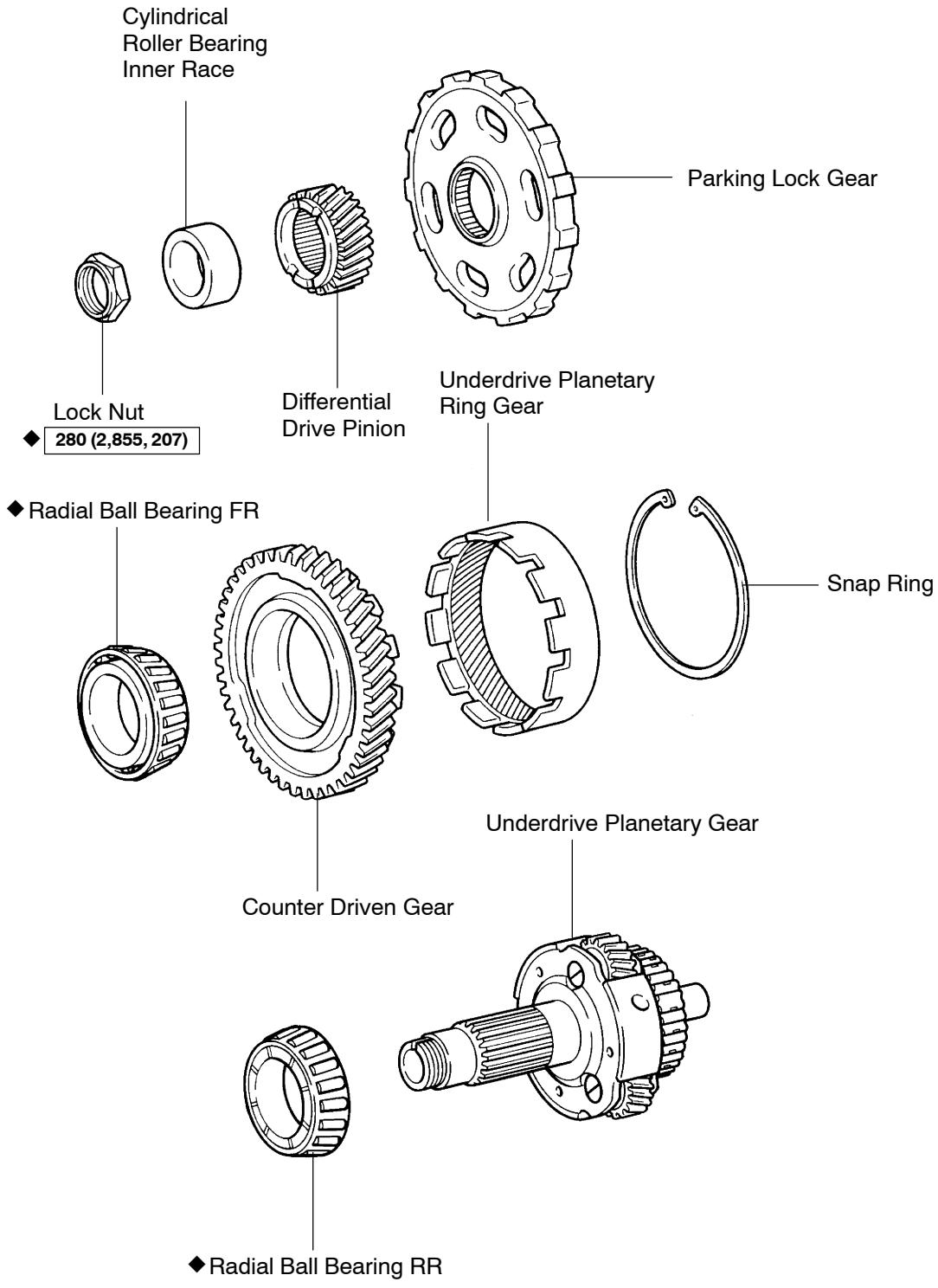

N·m (kgf·cm, ft·lbf) : Specified torque
◆ Non–reusable part

D03683

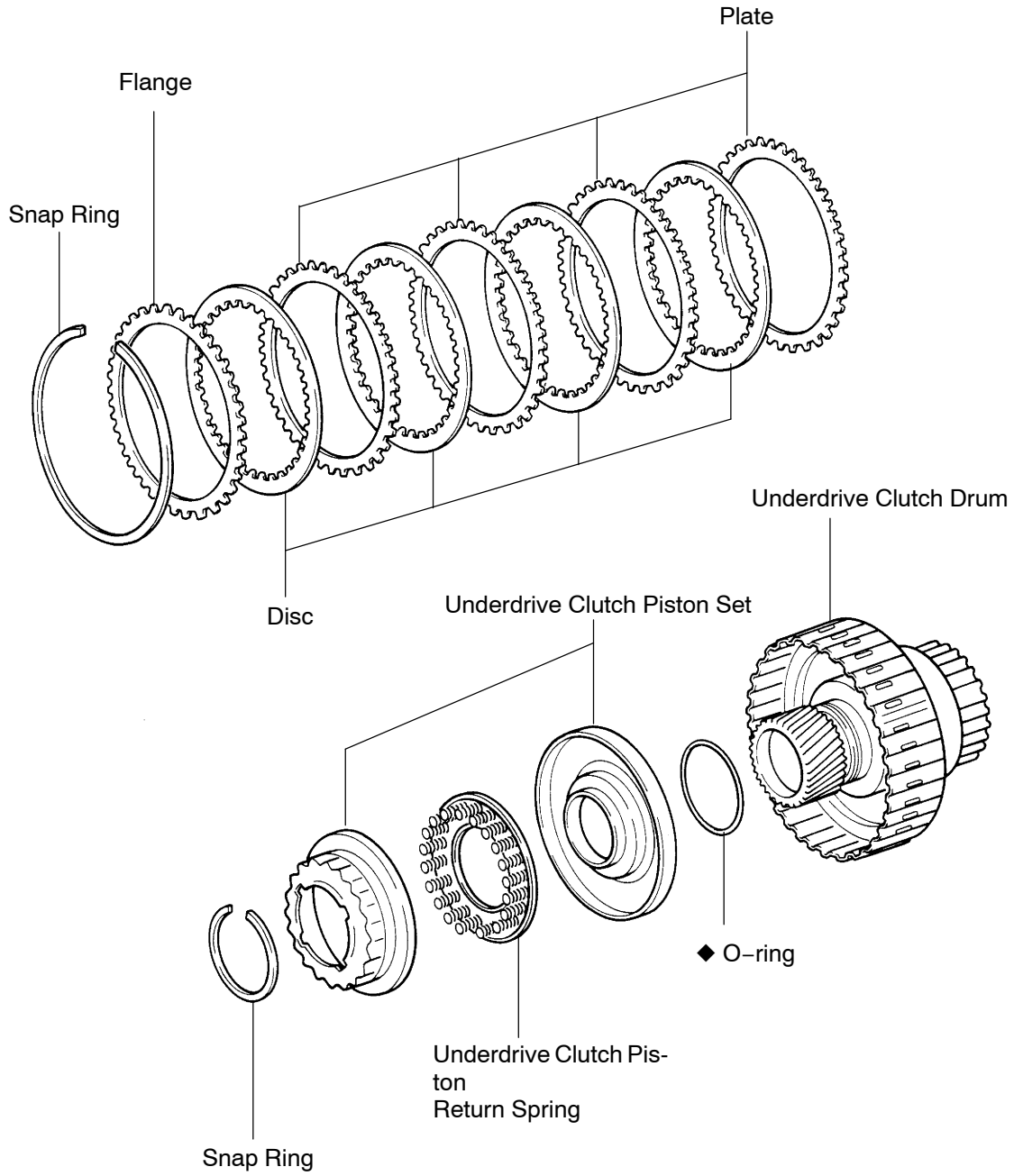

◆ Non–reusable part

D03697

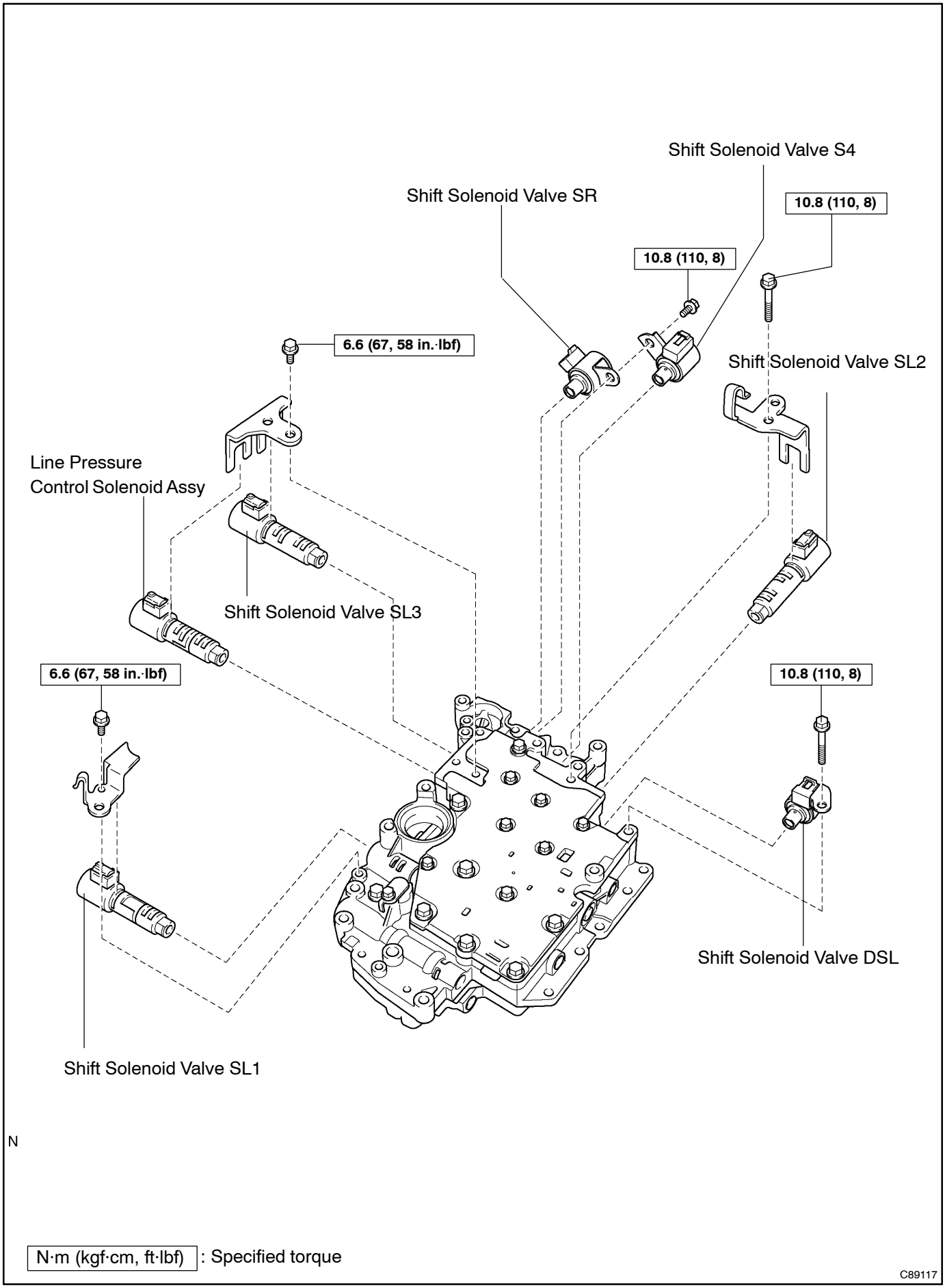
Shift Solenoid Valve S4
Shift Solenoid Valve SR
10.8 (110, 8)
10.8 (110, 8)
6.6 (67, 58 in.·lbf)
Shift Solenoid Valve SL2
Line Pressure
Control Solenoid Assy
Shift Solenoid Valve SL3
6.6 (67, 58 in.·lbf)
10.8 (110, 8)
Shift Solenoid Valve DSL
Shift Solenoid Valve SL1
N
N·m (kgf·cm, ft·lbf) : Specified torque
C89117

U151E:

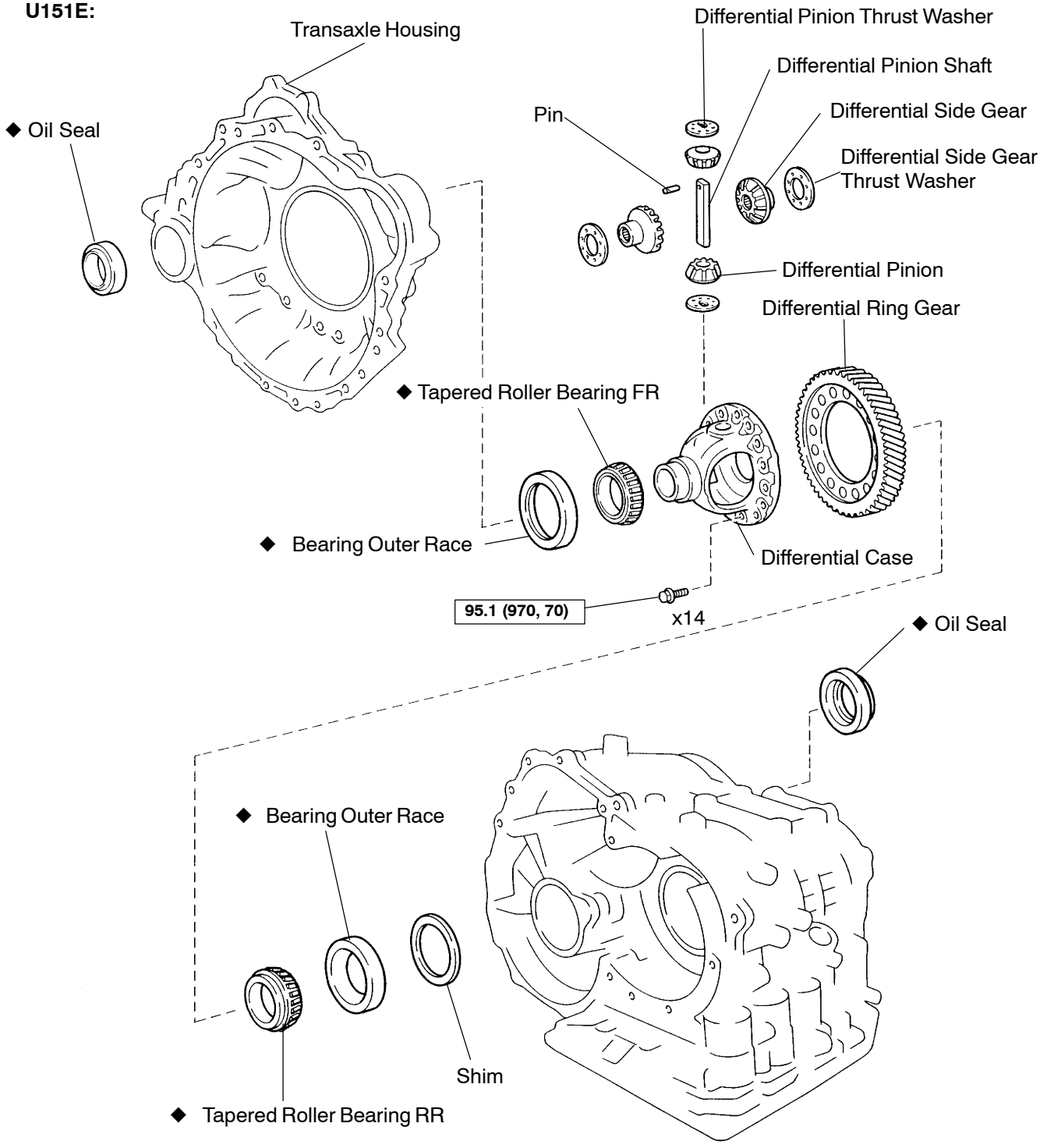

N·m (kgf·cm, ft·lbf) : Specified torque

◆ Non–reusable part

D03761

U151F:

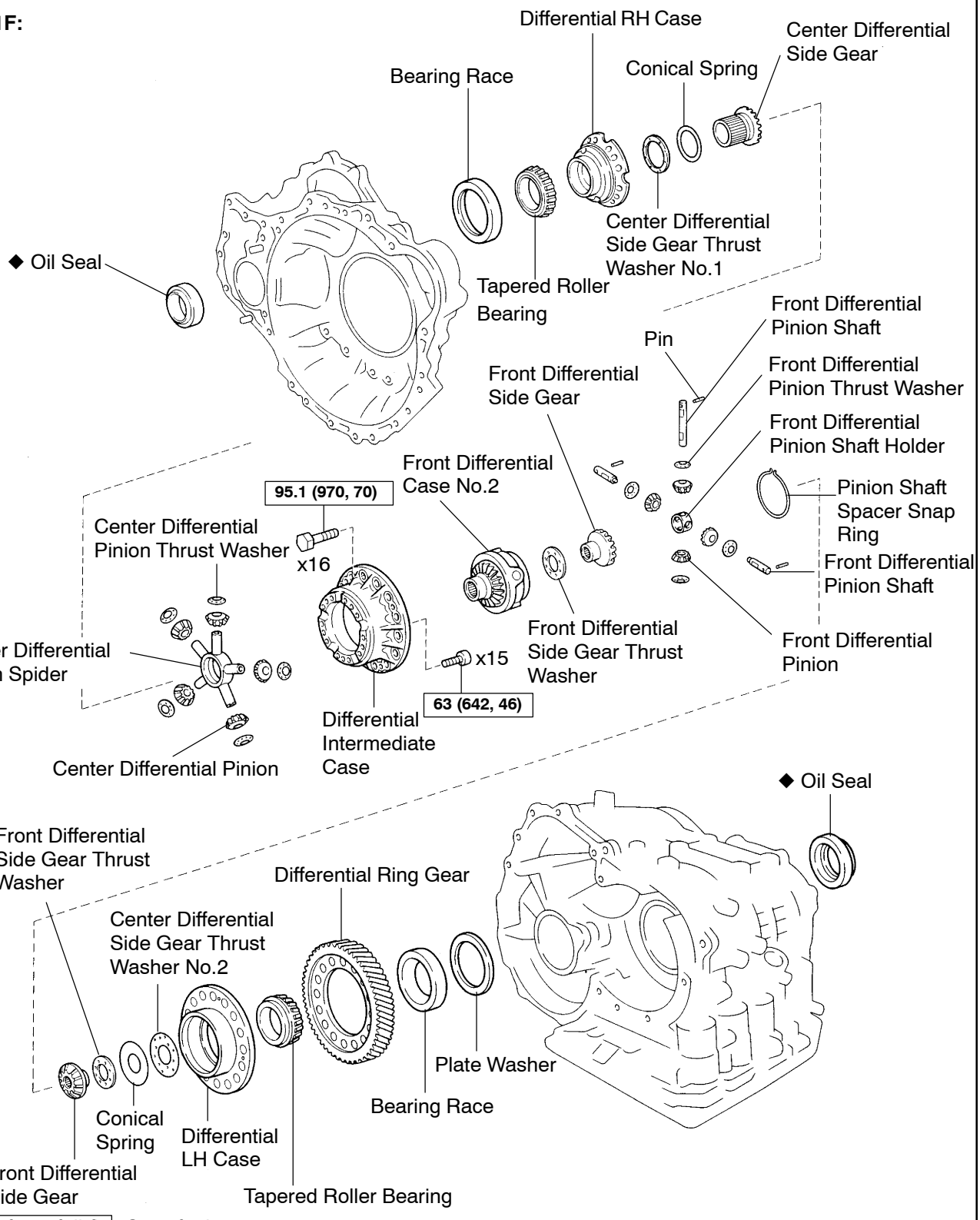

N·m (kgf·cm, ft·lbf) : Specified torque

◆ Non–reusable part

D03707

AUTOMATIC TRANSAXLE ASSY (U151E/U151F)

4010K–01

OVERHAUL

1. REMOVE SPEEDOMETER DRIVEN HOLE (ATM) COVER SUB–ASSY

(a) Remove the bolt and speedometer driven hole cover sub–assy from the transaxle assy.

(b) Remove the O–ring from the speedometer driven hole cover.

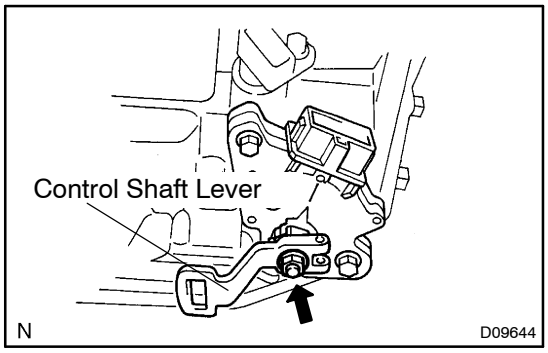

2. REMOVE PARK/NEUTRAL POSITION SWITCH ASSY

(a) Remove the nut, washer and control shaft lever.

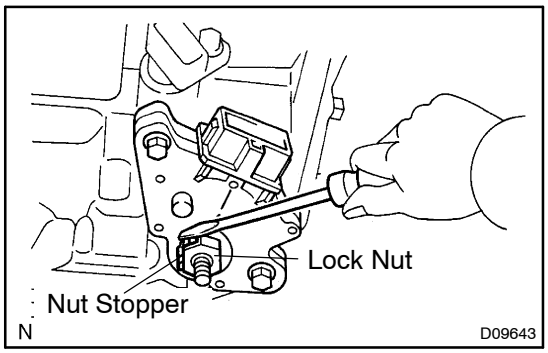

(b) Using a screwdriver, unstake the nut stopper, and remove the lock nut and nut stopper.

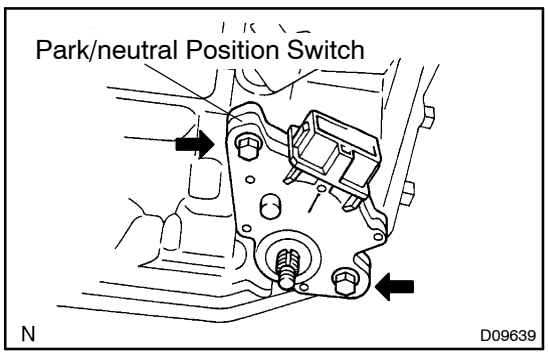

(c) Remove the 2 bolts and pull out the park/neutral position switch.

3. REMOVE BREATHER PLUG HOSE

(a) Remove the breather plug hose from the transaxle case.

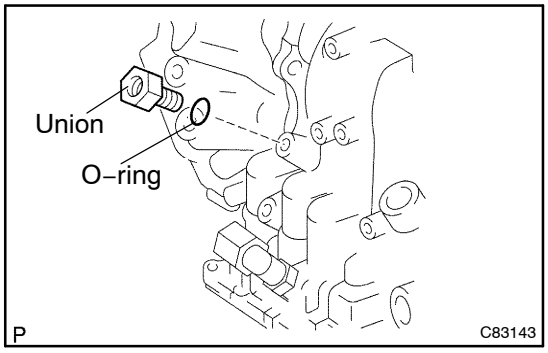

4. REMOVE OIL COOLER TUBE UNION (INLET OIL COOLER UNION)

(a) Remove the union.

(b) Remove the O–ring from the union.

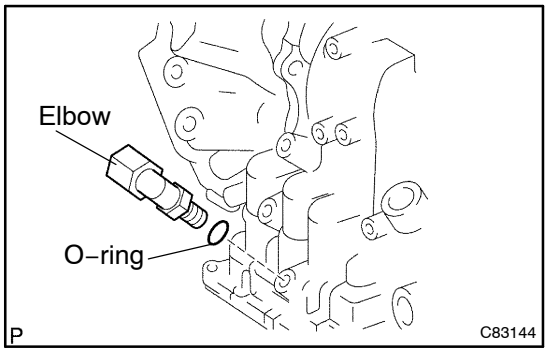

5. REMOVE OIL COOLER TUBE UNION (OUTLET OIL COOLER UNION)

(a) Remove the elbow.

(b) Remove the O–ring from the elbow.

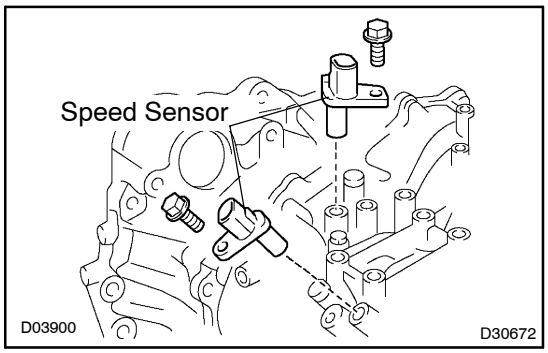

6. REMOVE SPEED SENSOR

(a) Remove the 2 bolts and the 2 speed sensors from the transaxle assy.

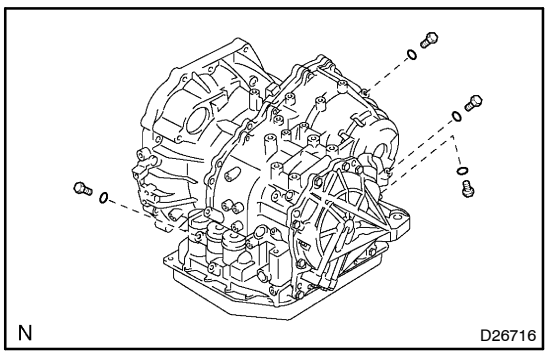

7. REMOVE TRANSAXLE CASE NO.1 PLUG

(a) Remove the 4 transaxle case No. 1 plugs from the transaxle case.

(b) Remove the 4 O–rings from the 4 transaxle case No.1 plugs.

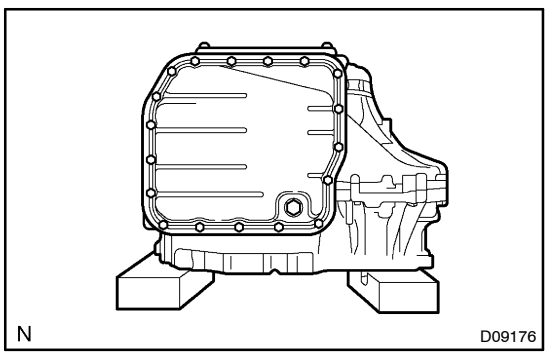

8. FIX AUTOMATIC TRANSAXLE ASSY

(a) Fix the transaxle assy.

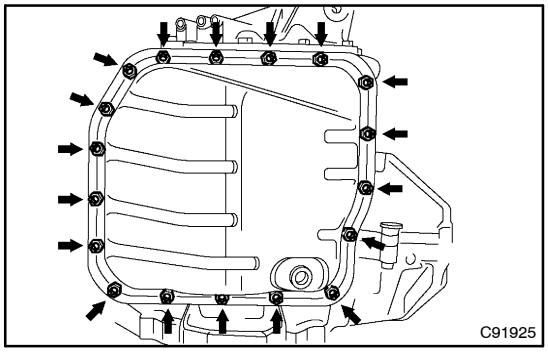

9. REMOVE AUTOMATIC TRANSAXLE OIL PAN SUB–ASSY

(a) Remove the 18 bolts, oil pan and gasket.

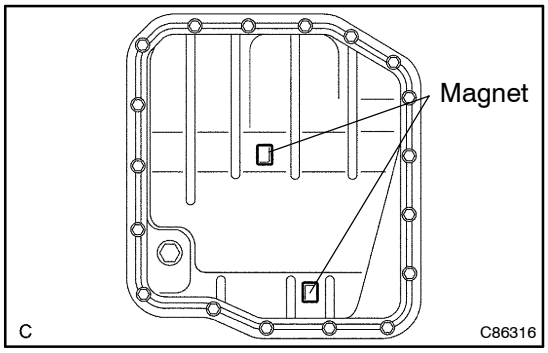

(b) Remove the 2 magnets from the oil pan.

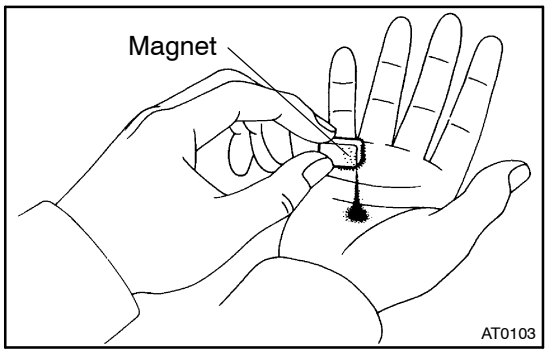

10. INSPECT TRANSMISSION OIL CLEANER MAGNET

(a) Remove the magnets and use them to collect any steel chips. Examine the chips and particles in the pan and on the magnet to determine what type of wear has occurred in the transaxle:
Steel (magnetic).... bearing, gear and plate wear
Brass (non–magnetic).... bushing wear

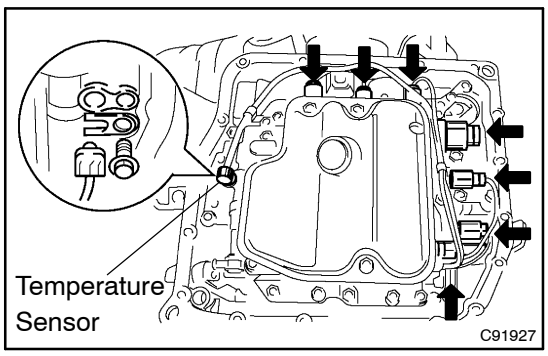

11. DISCONNECT TRANSMISSION WIRE

(a) Remove the 7 connectors from the shift solenoid valves.
(b) Remove the bolt, lock plate and ATF temperature sensor.

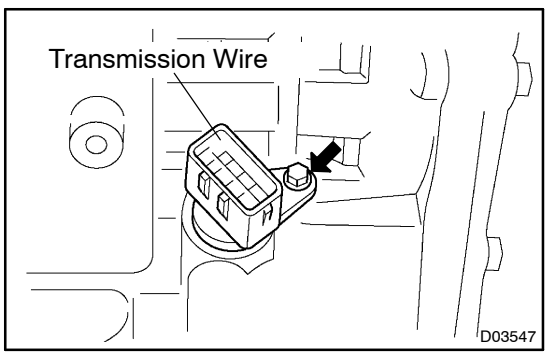

12. REMOVE TRANSMISSION WIRE

(a) Remove the bolt and transmission wire from the transaxle case.

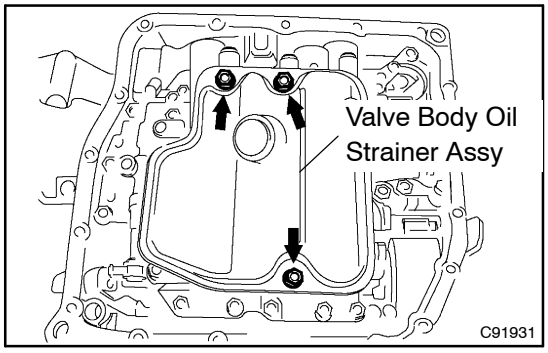

13. REMOVE VALVE BODY OIL STRAINER ASSY

(a) Remove the 3 bolts and oil strainer.

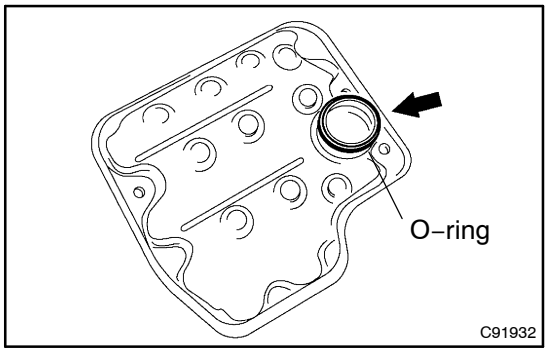

(b) Remove the O–ring from the oil strainer.

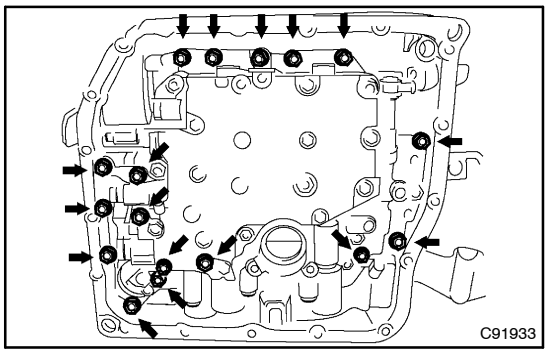

14. REMOVE TRANSMISSION VALVE BODY ASSY

(a) Support the valve body assy and remove the 17 bolts and valve body assy.

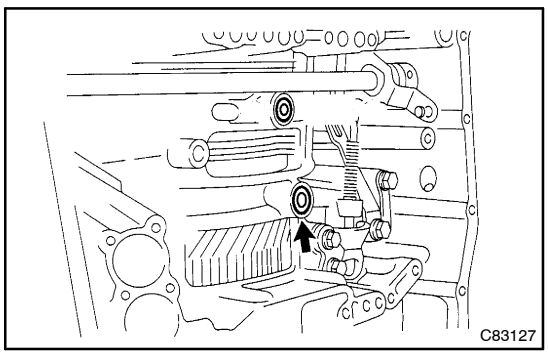

15. REMOVE GOVERNOR APPLY GASKET NO.1

(a) Remove the governor apply gasket No.1 from the transaxle case.

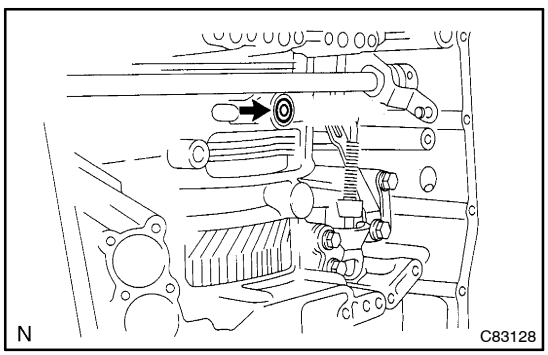

16. REMOVE TRANSAXLE CASE 2ND BRAKE GASKET

(a) Remove the transaxle case 2nd brake gasket from the transaxle case.

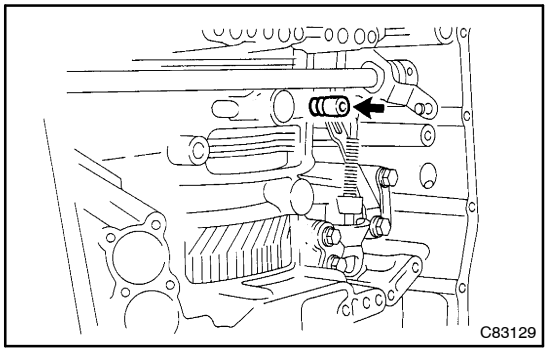

17. REMOVE BRAKE DRUM GASKET

(a) Remove the brake drum gasket from the transaxle case.

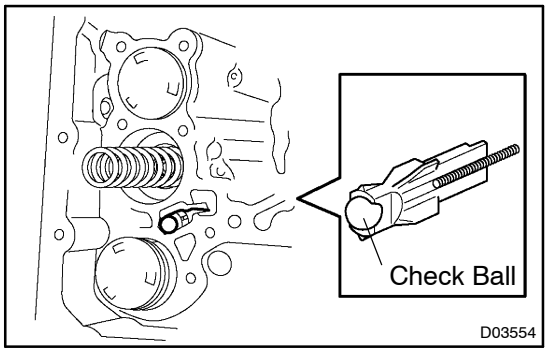

18. REMOVE CHECK BALL BODY

(a) Remove the check ball body and spring from the transaxle case.

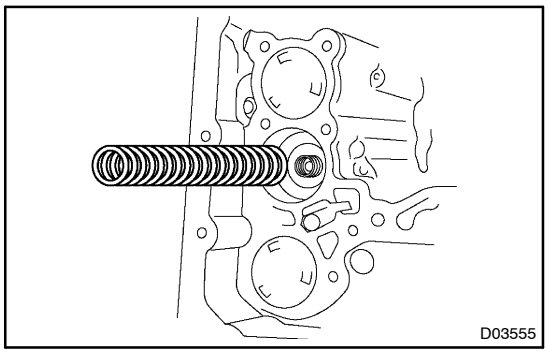

19. REMOVE C–3 ACCUMULATOR PISTON

(a) Remove the spring from the C–3 accumulator piston.

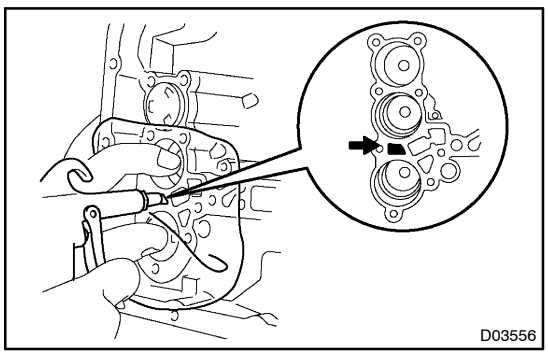

(b) Apply compressed air (392 kPa, 4.0 kgf/cm^2, 57 psi) to the oil hole and remove the C–3 accumulator piston.

NOTICE:

- **Blowing off the air may cause the piston to jump–out. When removing the piston, hold it by your hand using a waste cloth.**
- **Take care not to splash ATF when air–blowing.**

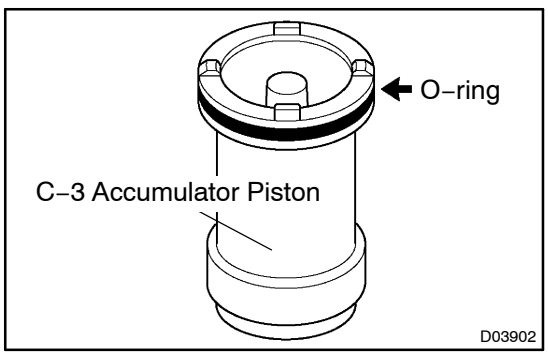

(c) Remove the O–ring from the C–3 accumulator piston.

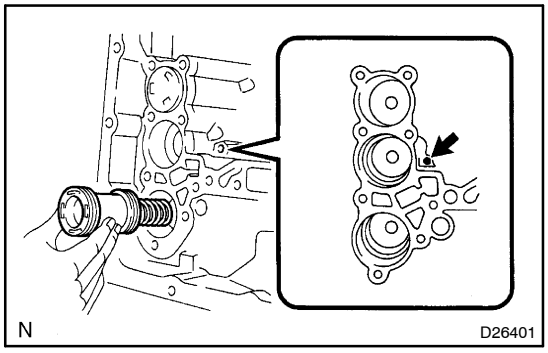

20. REMOVE REVERSE CLUTCH ACCUMULATOR PISTON

(a) Apply compressed air (392 kPa, 4.0 kgf/cm^2, 57 psi) to the oil hole and remove the reverse accumulator piston and spring.

NOTICE:

- **Blowing off the air may cause the piston to jump–out. When removing the piston, hold it by your hand using a waste cloth.**
- **Take care not to splash ATF when air–blowing.**

(b) Remove the 2 O–rings from the reverse clutch accumulator piston.

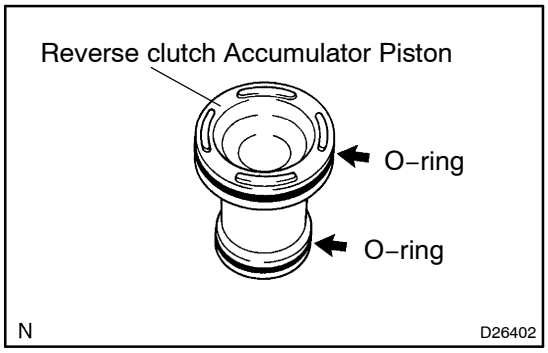

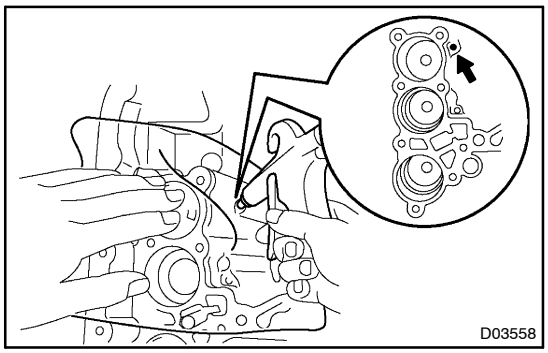

21. REMOVE B–3 ACCUMULATOR PISTON

(a) Apply compressed air (392 kPa, 4.0 kgf/cm^2, 57 psi) to the oil hole and remove the B–3 accumulator piston and 2 springs.

NOTICE:

- **Blowing off the air may cause the piston to jump–out. When removing the piston, hold it by your hand using a waste cloth.**
- **Take care not to splash ATF when air–blowing.**

(b) Remove the O–ring from the B–3 accumulator piston.

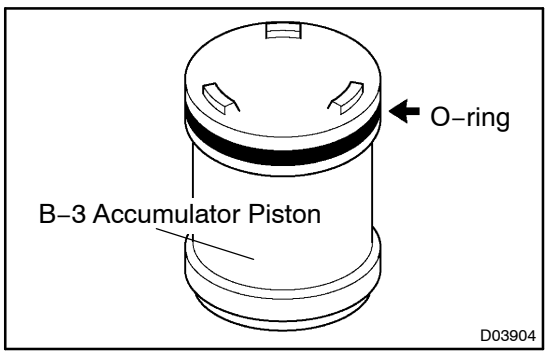

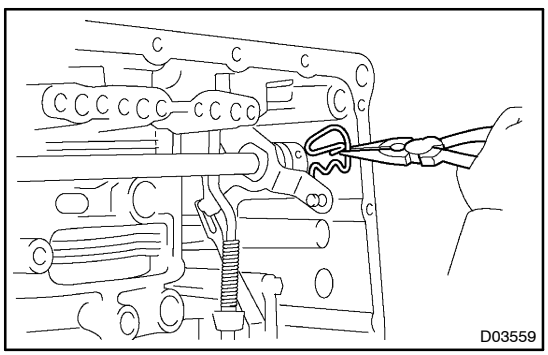

22. REMOVE MANUAL VALVE LEVER SHAFT RETAINER SPRING

(a) Using a needle–nose pliers, remove the manual valve lever shaft retainer spring.

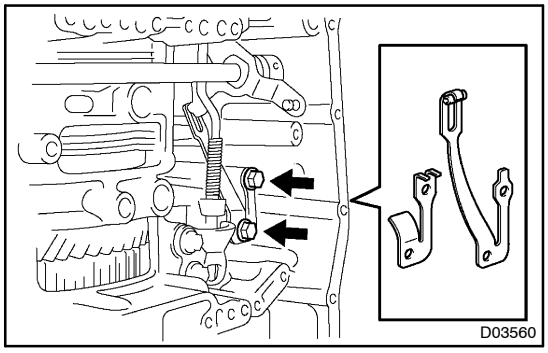

23. REMOVE MANUAL DETENT SPRING SUB–ASSY

(a) Remove the 2 bolts, the manual detent spring sub–assy and cover.

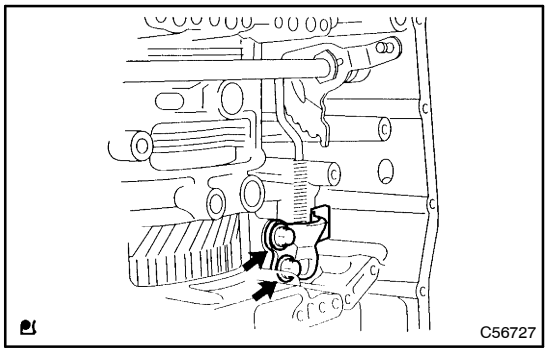

24. REMOVE PARKING LOCK PAWL BRACKET

(a) Remove the 2 bolts and parking lock pawl bracket.

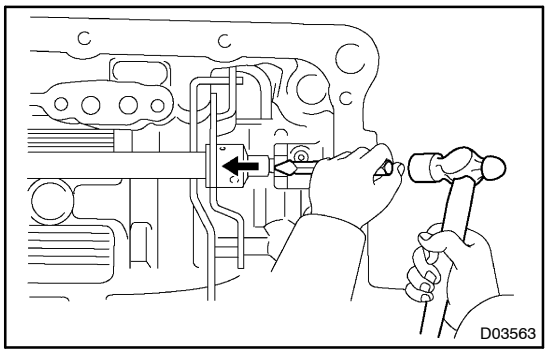

25. REMOVE MANUAL VALVE LEVER SUB–ASSY

(a) Using a chisel and hammer, cut off and remove the spacer.

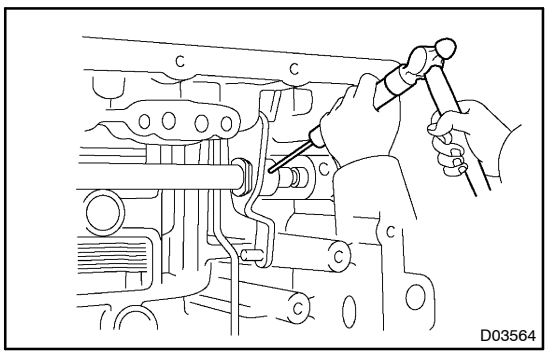

(b) Using a pin punch (ϕ35 mm) and hammer, drive out the pin.

HINT:

Slowly drive out the pin so that it will not fall into the transaxle case.

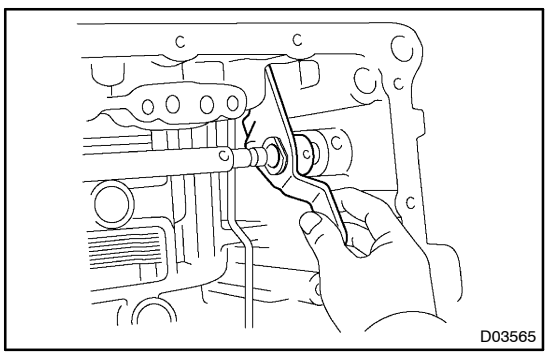

(c) Remove the manual valve lever shaft and manual valve lever.

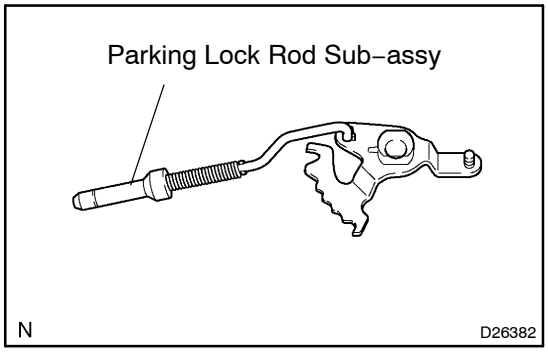

26. REMOVE PARKING LOCK ROD SUB–ASSY

(a) Remove the parking lock rod from the manual valve lever.

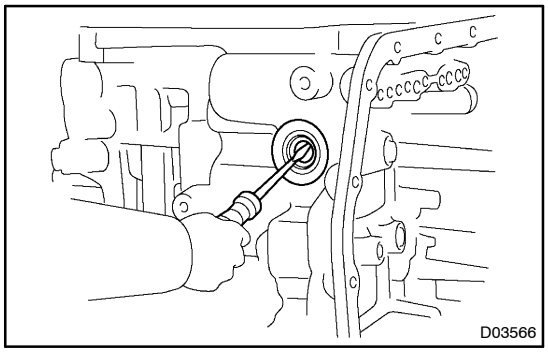

27. REMOVE MANUAL VALVE LEVER SHAFT OIL SEAL

(a) Using a screwdriver, remove the oil seal from the transaxle case.

28. FIX AUTOMATIC TRANSAXLE ASSY

(a) Fix the transaxle case with the oil pump side facing up.

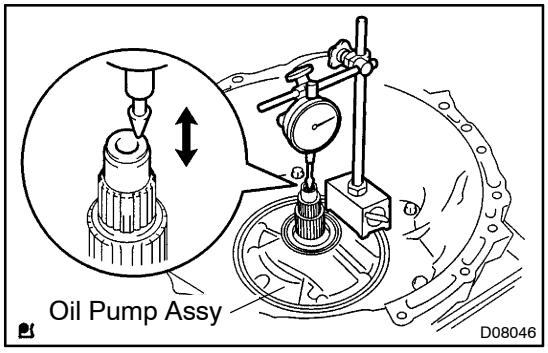

29. INSPECT INPUT SHAFT ENDPLAY

(a) Using a dial indicator, measure the input shaft endplay.
Endplay: 0.262 – 1.244 mm (0.01 – 0.049 in.)

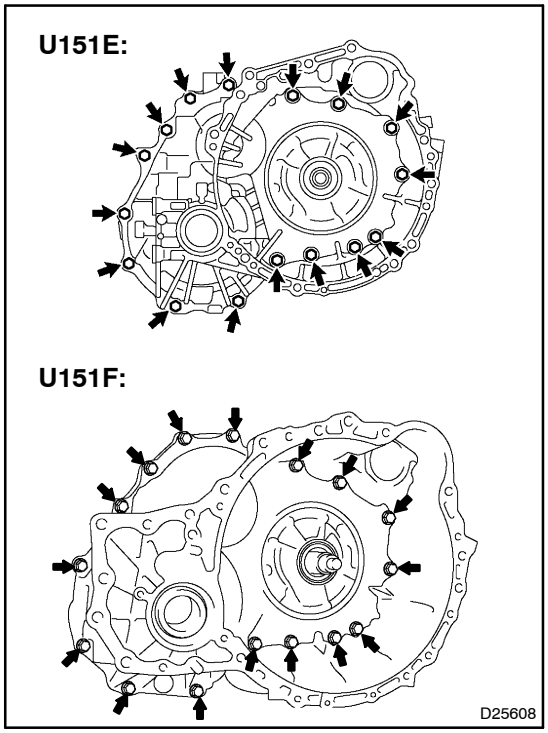

30. REMOVE TRANSAXLE HOUSING

(a) Remove the 16 bolts.

(b) Tap on the circumference of the transaxle housing with a plastic hammer to remove the transaxle housing from the transaxle case.

NOTICE:

Differential may be accidentally removed when the transaxle housing is removed.

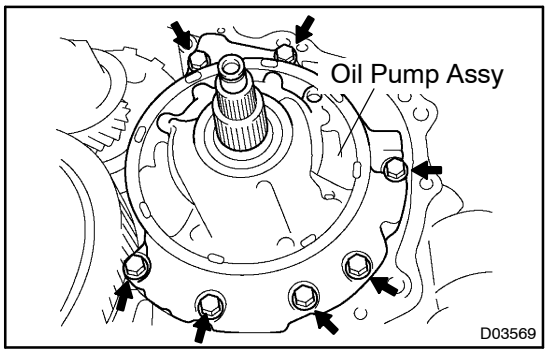

31. REMOVE OIL PUMP ASSY

(a) Remove the 7 bolts and oil pump from the transaxle case.

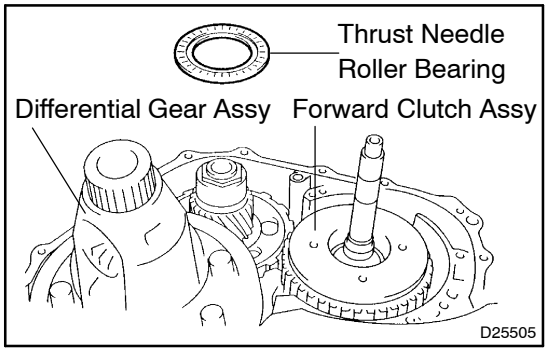

32. REMOVE THRUST NEEDLE ROLLER BEARING

(a) Remove the thrust needle roller bearing from the underdrive planetary gear assy.

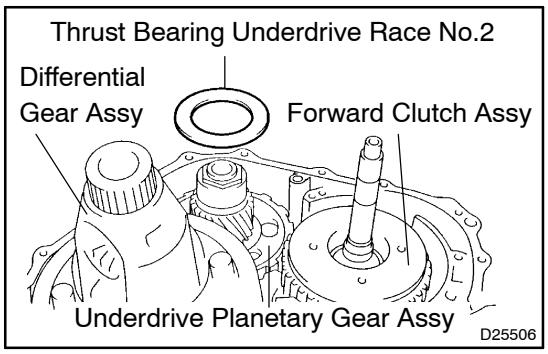

33. REMOVE THRUST BEARING UNDERDRIVE RACE NO.2

(a) Remove the thrust bearing underdrive race No. 2 from the underdrive planetary gear assy.

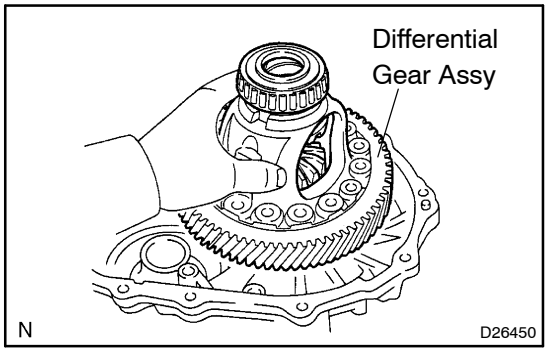

34. REMOVE DIFFERENTIAL GEAR ASSEMBLY

(a) Remove the differential gear assy from the transaxle case.

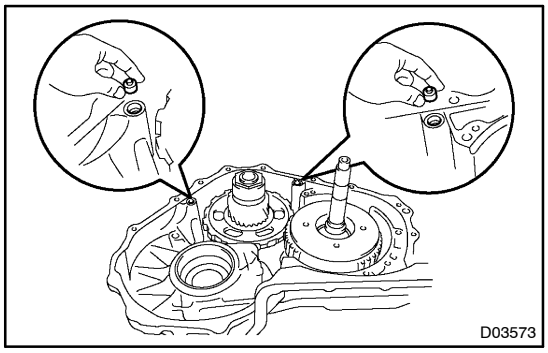

35. REMOVE OVERDRIVE BRAKE GASKET

(a) Remove the 2 overdrive brake gaskets from the transaxle case.

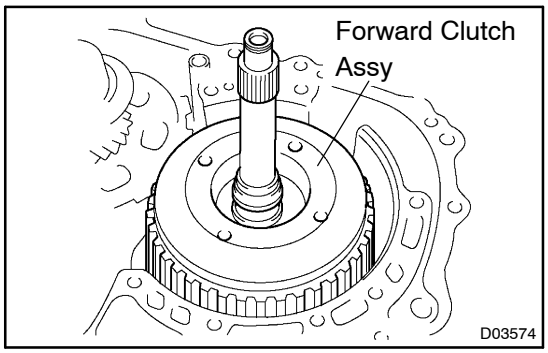

36. REMOVE FORWARD CLUTCH ASSY

(a) Remove the forward clutch assy from the transaxle case.

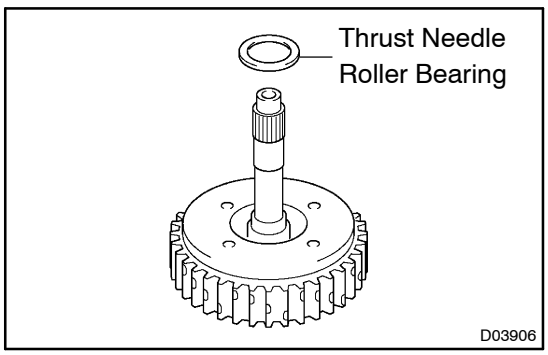

(b) Remove the thrust needle roller bearing from the forward clutch.

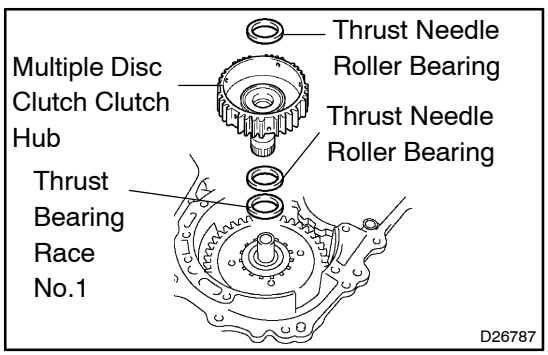

37. REMOVE MULTIPLE DISC CLUTCH CLUTCH HUB

(a) Remove the thrust needle roller bearing, multiple disc clutch clutch hub, thrust needle roller bearing and thrust bearing race No.1 from the transaxle case.

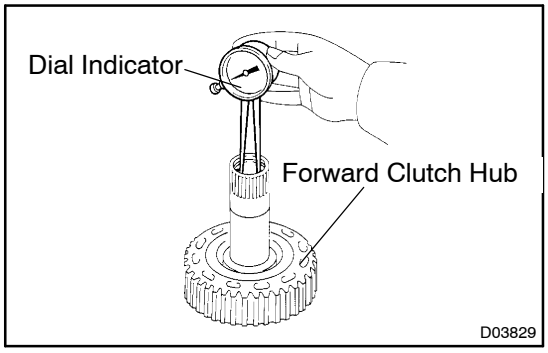

38. INSPECT MULTIPLE DISC CLUTCH CLUTCH HUB

(a) Using a dial indicator, measure the inside diameter of the forward clutch hub bushing

Standard inside diameter:
23.025 – 23.046 mm (0.9065 – 0.9073 in.)
Maximum inside diameter: 23.09 mm (0.9091 in.)

NOTICE:

- **When the diameter is over the maximum, replace the multiple disc clutch hub with new one.**
- **Check the contact surface of the bush in the direct clutch shaft. If any scratch or discolor is identified, replace the direct clutch sub–assy with new one.**

If the inside diameter is greater than the maximum, replace the forward clutch hub.

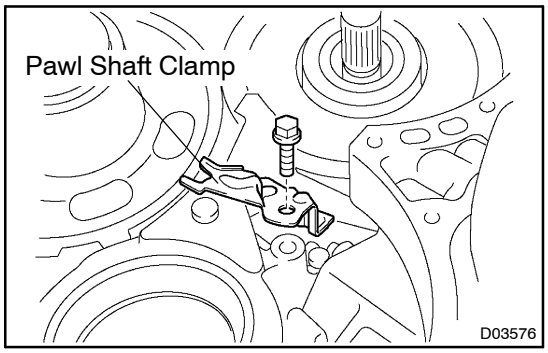

39. REMOVE UNDERDRIVE PLANETARY GEAR ASSY

(a) Remove the bolt and pawl shaft clamp.

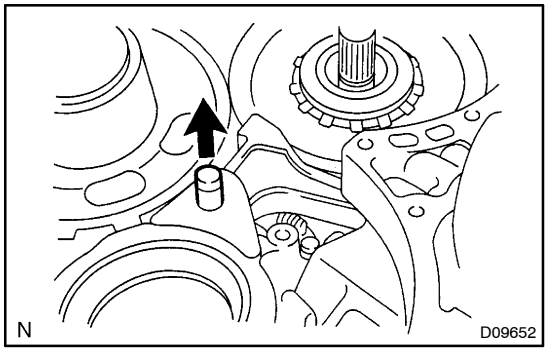

(b) Remove the parking lock pawl shaft.

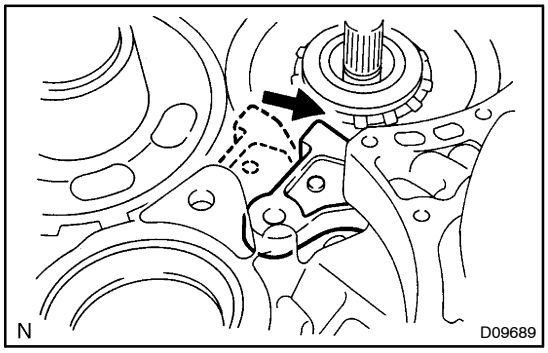

(c) Push the parking lock pawl.

HINT:

Failure to do so will cause interference when the underdrive planetary gear is removed.

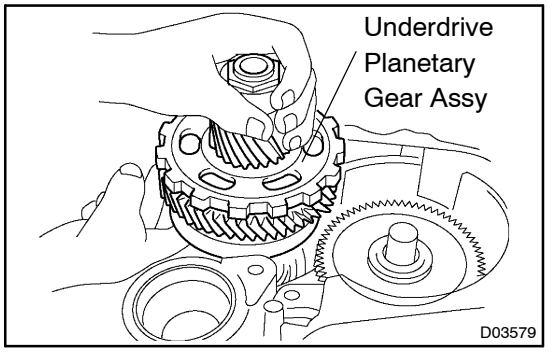

(d) Remove the underdrive planetary gear assy from the transaxle case.

NOTICE:

Be careful so that the underdrive planetary gear assy will not fall out.

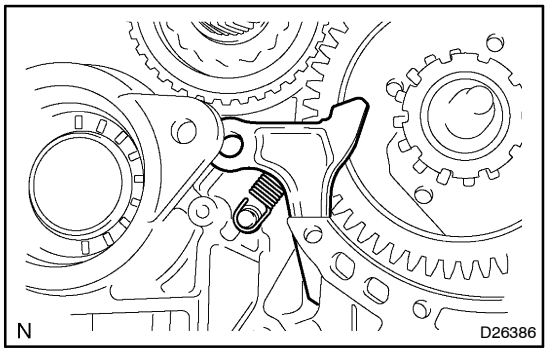

40. REMOVE PARKING LOCK PAWL

(a) Remove the spring, pawl pin and parking lock pawl.

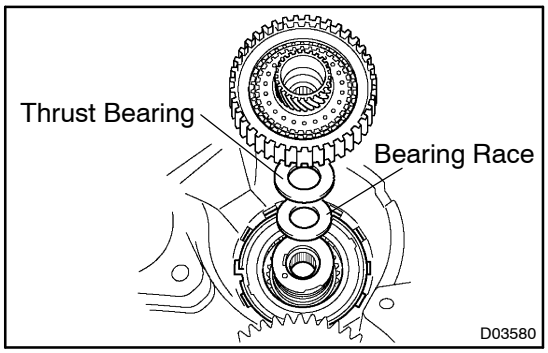

41. REMOVE UNDERDRIVE CLUTCH ASSY

(a) Remove the underdrive clutch assy, thrust bearing and bearing race from the transaxle case.

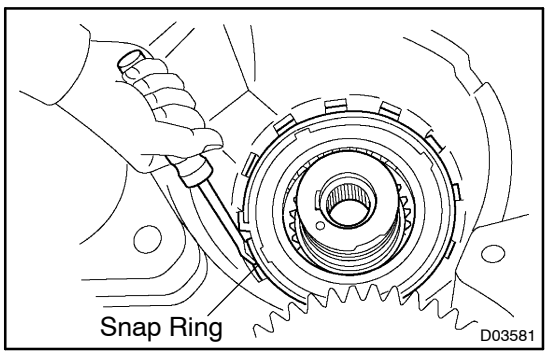

42. REMOVE UNDERDRIVE 1 WAY CLUTCH ASSY

(a) Using a screwdriver, remove the snap ring from the transaxle case.

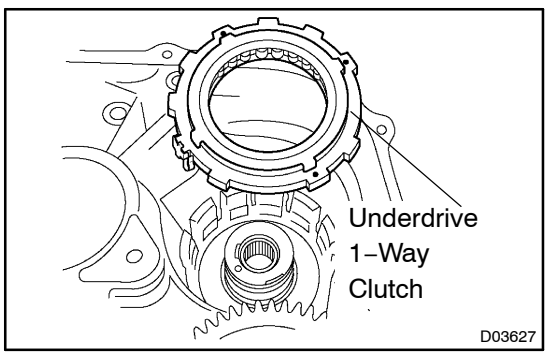

(b) Remove the underdrive 1–way clutch from the transaxle case.

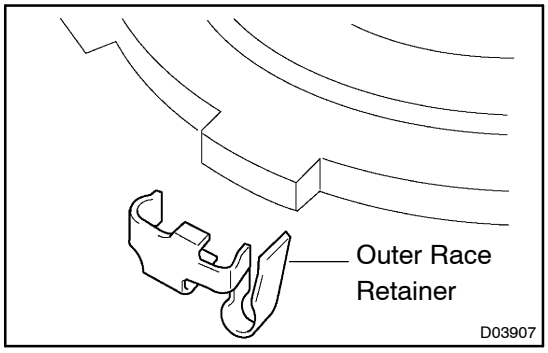

(c) Remove the outer race retainer from the 1–way clutch.

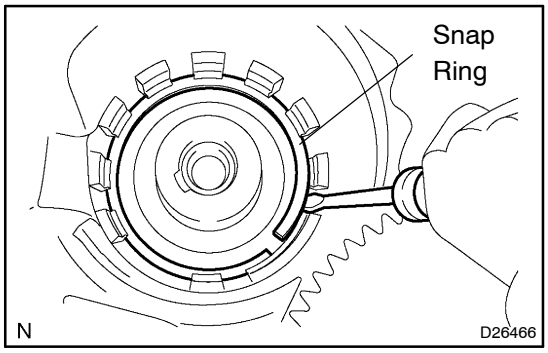

43. REMOVE UNDERDRIVE CLUTCH DISC NO.2

(a) Using a screwdriver, remove the snap ring.

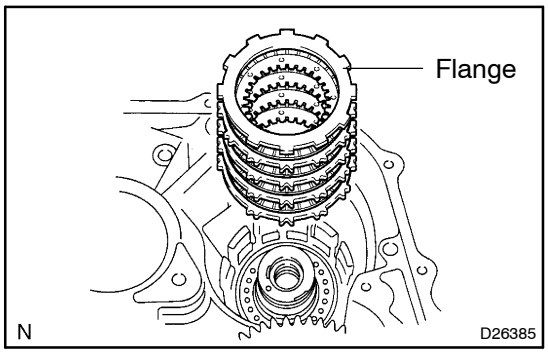

(b) Remove the flange, 4 discs and 4 plates from the transaxle case.

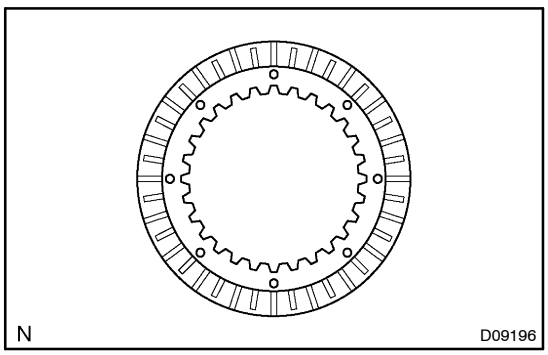

44. INSPECT UNDERDRIVE CLUTCH DISC NO.2

(a) Check to see if the sliding surface of the disc, plate and flange are worn or burnt.

If necessary, replace them.

NOTICE:

- **If the lining of the disc comes off or discolors, or even if a part of the groove is defaced, replace all discs.**
- **Before assembling new discs, soak them in ATF for at least 15 minutes.**

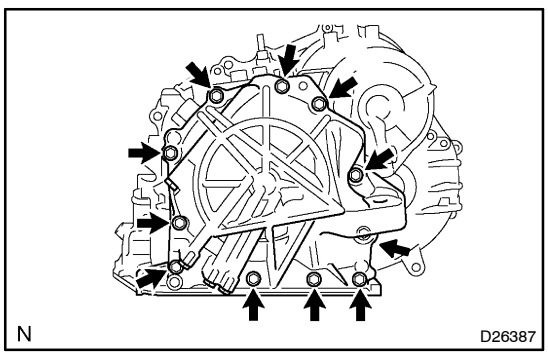

45. REMOVE TRANSAXLE REAR COVER SUB–ASSY

(a) Remove the 11 bolts.

(b) Tap in the circumference of the rear cover with a plastic hammer to remove the transaxle rear cover from the transaxle case.

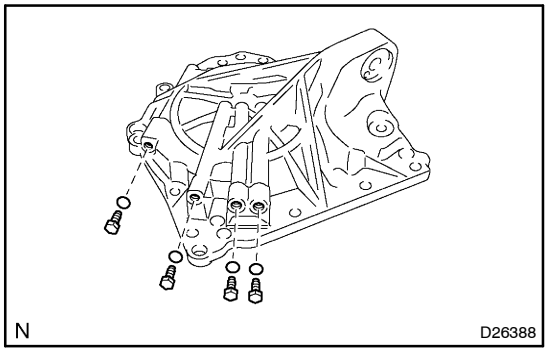

46. REMOVE TRANSAXLE CASE NO.1 PLUG

(a) Remove the 4 transaxle case No.1 plugs from the transaxle rear cover.

(b) Remove the 4 O–rings from the 4 transaxle case No.1 plugs.

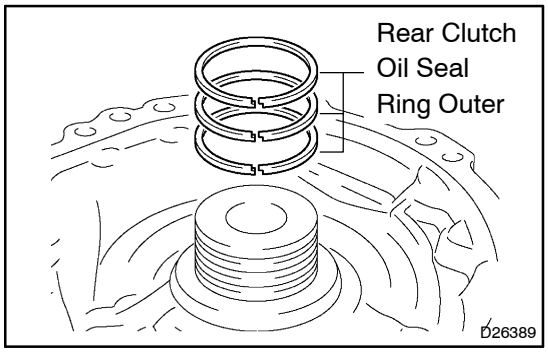

47. REMOVE REAR CLUTCH OIL SEAL RING OUTER

(a) Remove the 3 rear clutch oil seal rings from the transaxle rear cover.

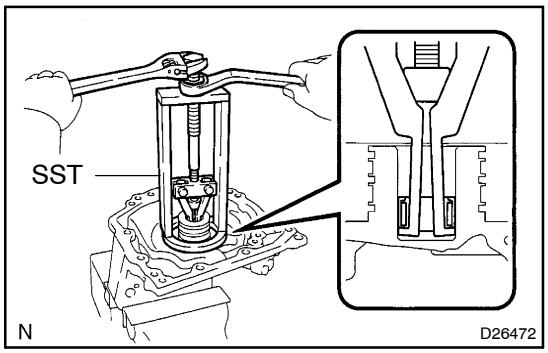

48. REMOVE NEEDLE ROLLER BEARING

(a) Using SST, remove the needle–roller bearing from the transaxle rear cover.

SST 09387–00041 (09387–01021, 09387–01030, 09387–01040)

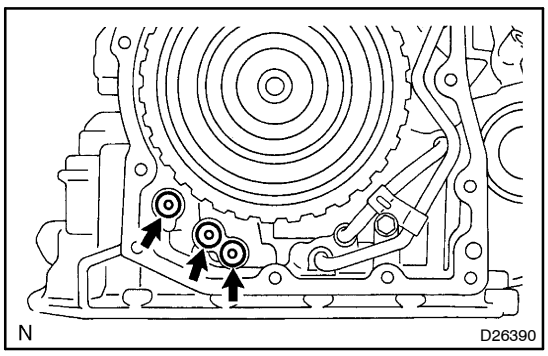

49. REMOVE GOVERNOR APPLY GASKET NO.1

(a) Using a screwdriver, remove the 3 apply gaskets.

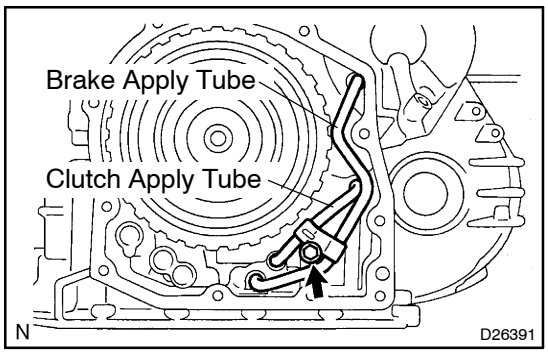

50. REMOVE BRAKE APPLY TUBE

(a) Remove the bolt, clamp and brake apply tube.

(b) Remove the clutch apply tube.

(c) Remove the brake apply tube from the clamp.

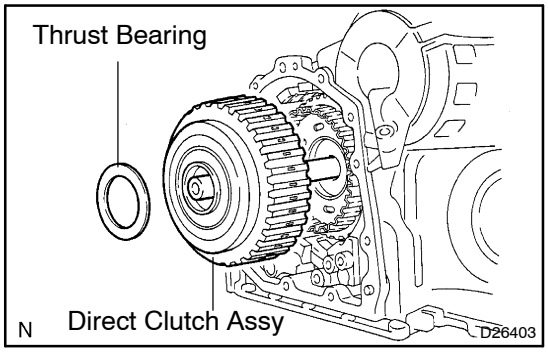

51. REMOVE DIRECT CLUTCH ASSY

(a) Remove the thrust bearing and the direct clutch assy from the transaxle case.

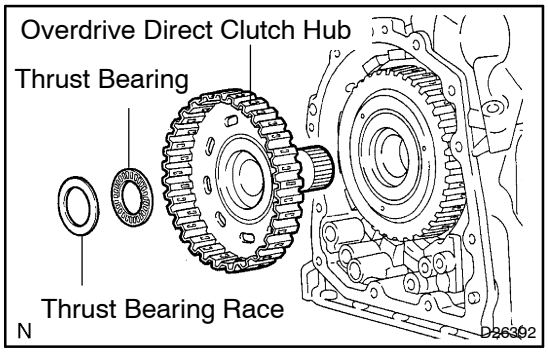

52. REMOVE OVERDREVE DIRECT CLUTCH HUB SUB–ASSY

(a) Remove the thrust bearing race, thrust bearing and overdrive direct clutch hub from the planetary gear assy.

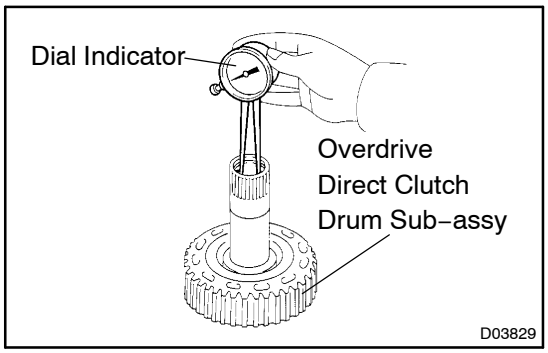

53. INSPECT OVERDRIVE DIRECT CLUTCH DRUM SUB–ASSY

(a) Using a dial indicator, measure the inside diameter of the forward clutch hub bushing.

Standard inside diameter:
23.025 – 23.046 mm (0.9065 – 0.9073 in.)
Maximum inside diameter: 23.09 mm (0.9091 in.)

NOTICE:

- **When the diameter is over the maximum, replace the multiple disc clutch hub with new one.**
- **Check the contact surface of the bush in the direct clutch shaft. If any scratch or discolor is identified, replace the direct clutch sub–assy with new one.**

If the inside diameter is greater than the maximum, replace the forward clutch hub.

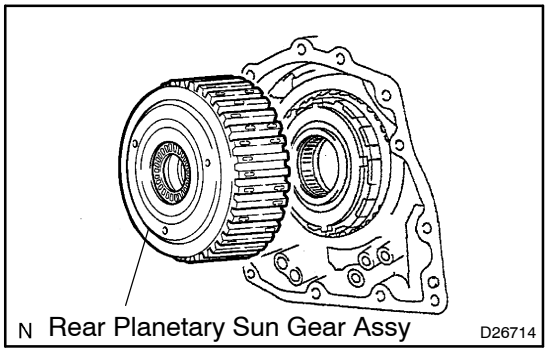

54. REMOVE REAR PLANETARY SUN GEAR ASSY

(a) Remove the rear planetary sun gear assy from the transaxle case.

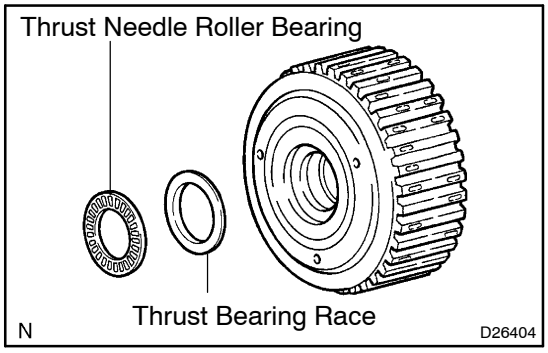

(b) Remove the thrust needle roller bearing and thrust bearing race from the rear planetary sun gear assy.

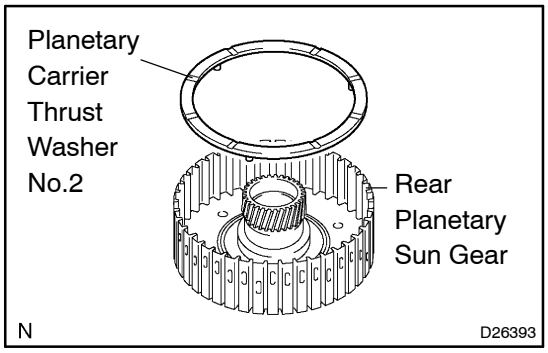

(c) Remove the planetary carrier thrust washer No.2 from the rear planetary sun gear assy.

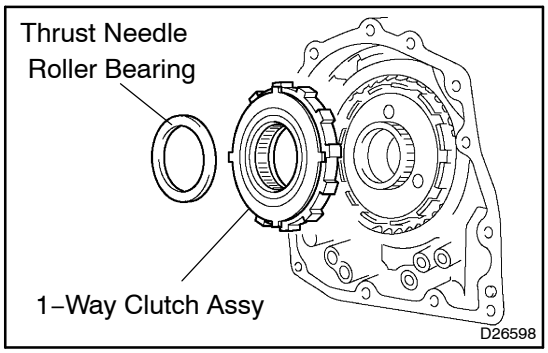

55. REMOVE 1 WAY CLUTCH ASSY

(a) Remove the 1–way clutch assy and the thrust needle roller bearing from the transaxle case.

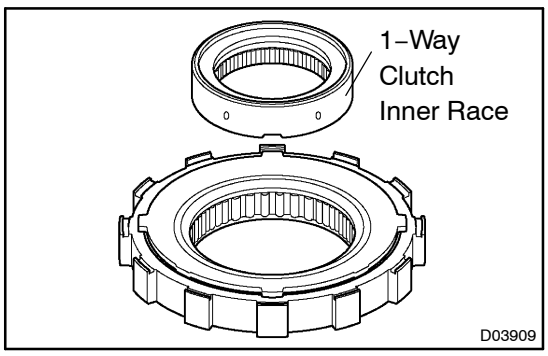

(b) Remove the 1–way clutch inner race from the 1–way clutch assy.

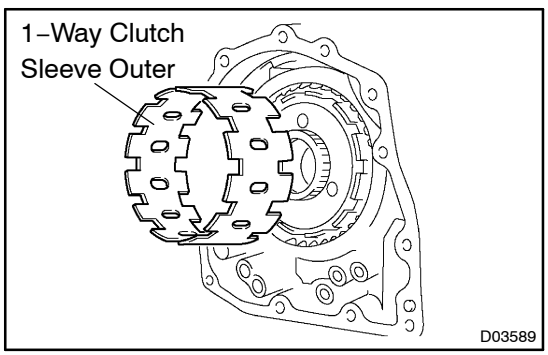

56. REMOVE 1WAY CLUTCH SLEEVE OUTER

(a) Remove the 1–way clutch sleeve outer from the transaxle case.

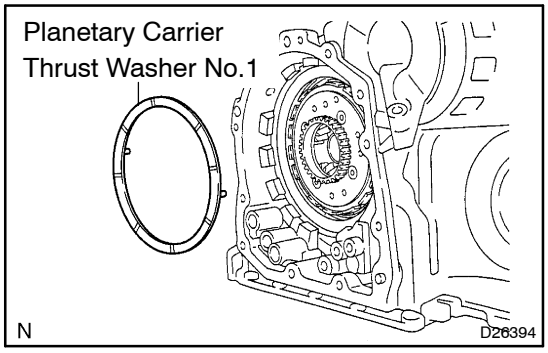

57. REMOVE PLANETARY CARRIER THRUST WASHER NO.1

(a) Remove the planetary carrier thrust washer No.1 from the planetary gear assy.

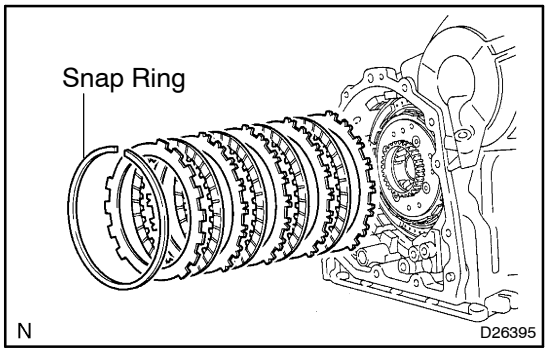

58. REMOVE 2ND BRAKE CLUTCH DISC

(a) Using a screwdriver, remove the snap ring.

(b) Remove the flange, 4 discs and 4 plates from the transaxle case.

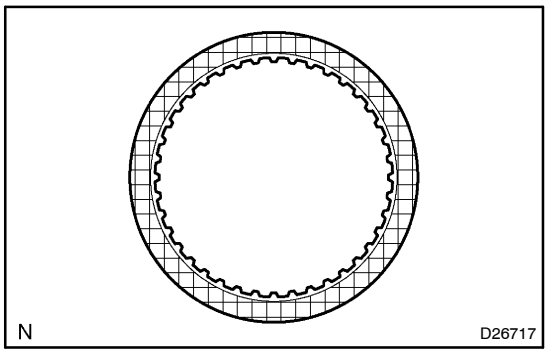

59. INSPECT 2ND BRAKE CLUTCH DISC

(a) Check to see if the sliding surface of the disc, plate and flange are worn or burnt.

If necessary, replace them.

NOTICE:

- **If the lining of the disc comes off or discolors, or even if a part of the groove is defaced, replace all discs.**
- **Before assembling new discs, soak them in ATF for at least 15 minutes.**

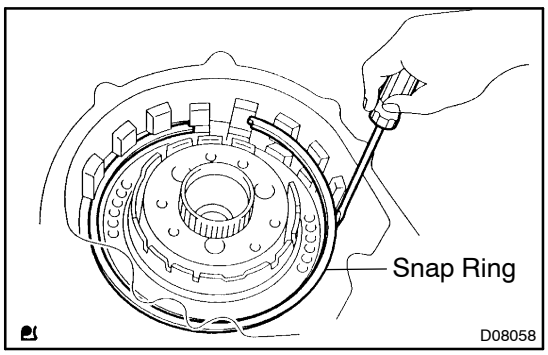

60. REMOVE SECOND BRAKE PISTON ASSY

(a) Using a screwdriver, remove the snap ring.

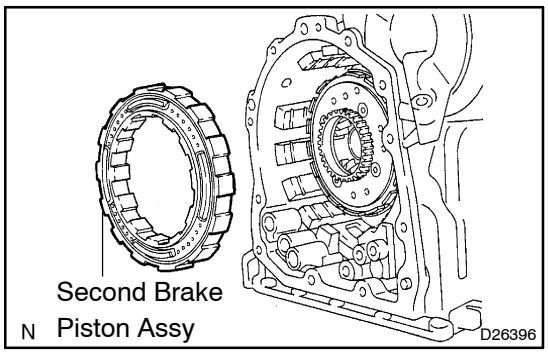

(b) Remove the second brake piston assy from the transaxle case.

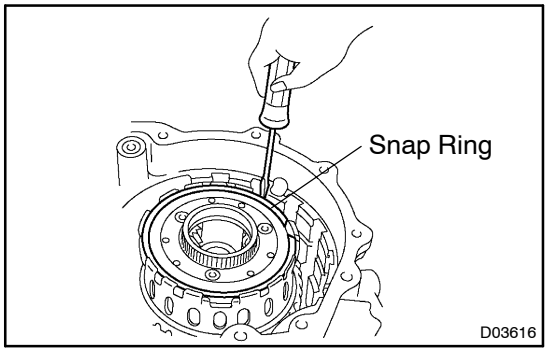

61. REMOVE REAR PLANETARY GEAR ASSY

(a) Using a screwdriver, remove the snap ring.

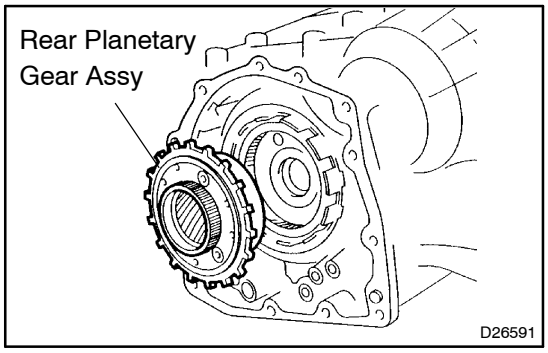

(b) Remove the rear planetary gear assy from the transaxle case.

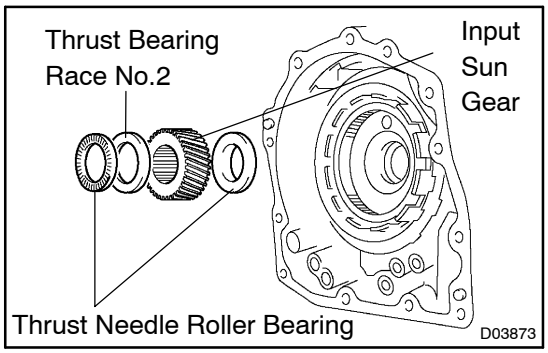

62. REMOVE INPUT SUN GEAR

(a) Remove the 2 thrust needle roller bearings, thrust bearing race No.2 and input sun gear from the transaxle case.

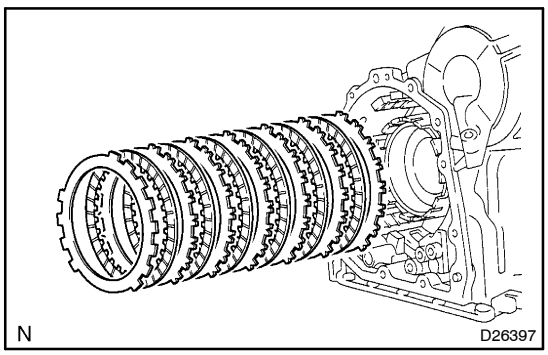

63. REMOVE 1ST & REVERSE BRAKE CLUTCH DISC

(a) Remove the flange, 6 discs and 6 plates from the transaxle case.

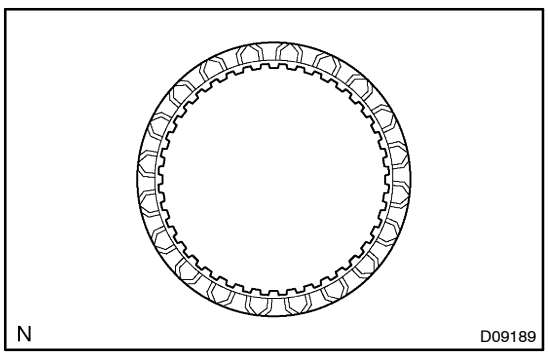

64. INSPECT 1ST & REVERSE BRAKE CLUTCH DISC

(a) Check to see if the sliding surface of the disc, plate and flange are worn or burnt.

If necessary, replace them.

NOTICE:

- **If the lining of the disc comes off or discolors, or even if a part of the groove is defaced, replace all discs.**
- **Before assembling new discs, soak them in ATF for at least 15 minutes.**

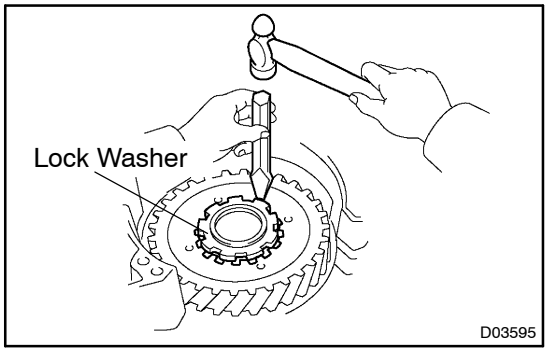

65. REMOVE FRONT PLANETARY GEAR ASSY

(a) Using a chisel and hammer, unstake the lock washer.

NOTICE:

Push down all claws of the washer. Otherwise SST cannot be fully pressed against the nut, and cannot loosen the nut.

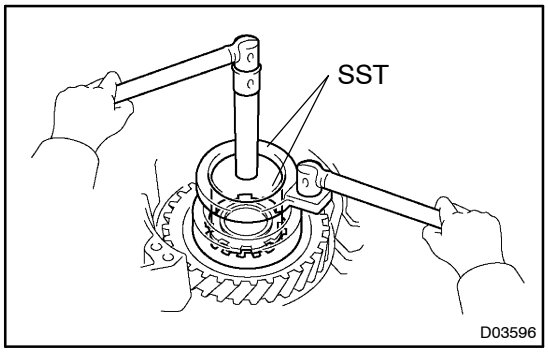

(b) Using SST, remove the nut.
SST 09387–00030, 09387–00080

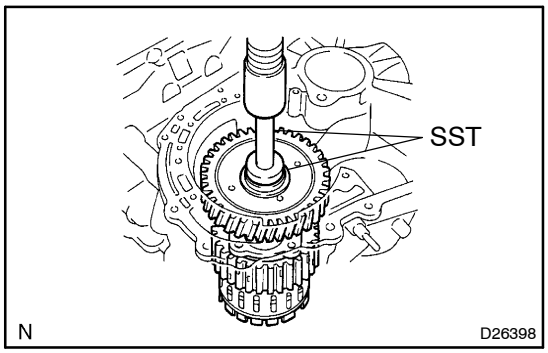

(c) Using SST and a press, remove the front planetary gear assy from the counter drive gear.
SST 09950–60010 (09951–00450), 09950–70010 (09951–07100)

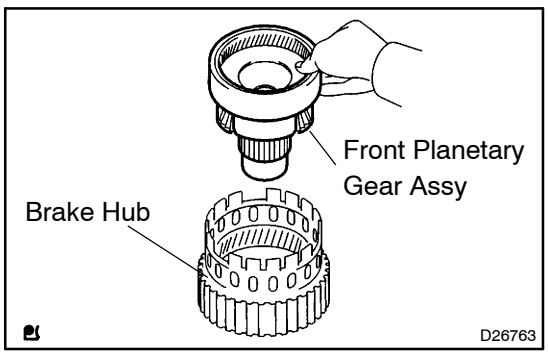

(d) Remove the front planetary gear assy from the brake hub.

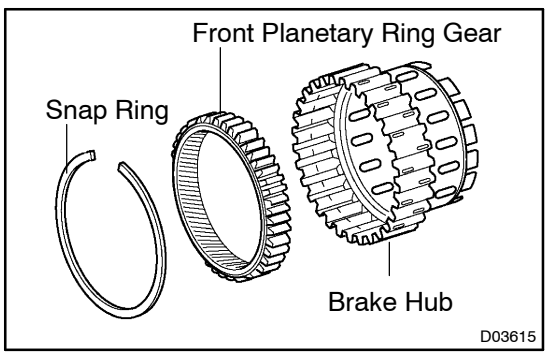

66. REMOVE FRONT PLANETARY RING GEAR

(a) Using a screwdriver, remove the snap ring and front planetary ring gear from the brake hub.

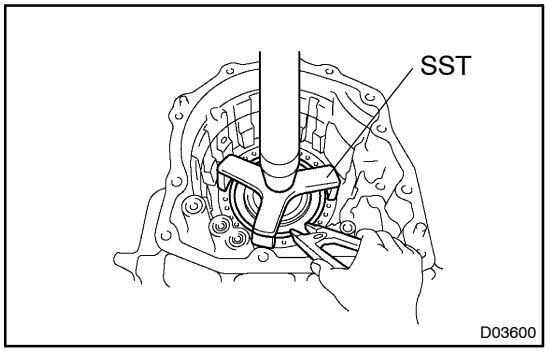

67. REMOVE 1ST & REVERSE BRAKE RETURN SPRING SUB–ASSY

(a) Place SST on the return spring, and compress the return spring with a press.
SST 09387–00070

(b) Using a snap ring expander, remove the snap ring.

NOTICE:

- **Stop the press when the spring sheet is lowered 1 – 2 mm (0.039 – 0.078 in.) from the snap ring groove, to prevent the spring sheet from deforming.**
- **Do not expand the snap ring excessively.**

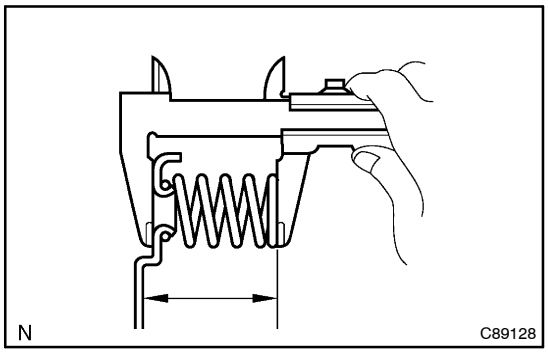

68. INSPECT 1ST & REVERSE BRAKE RETURN SPRING SUB–ASSY

(a) Using a vernier calipers, measure the free length of the spring together with the spring seat.
Standard free length: 17.61 mm (0.6933 in.)

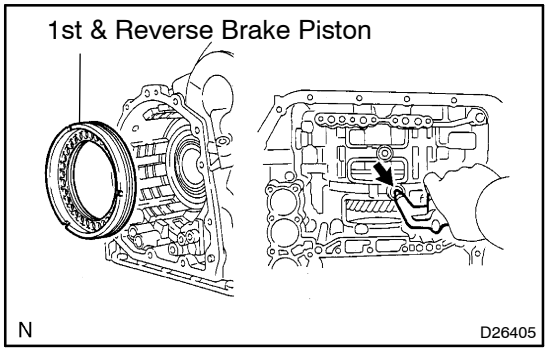

69. REMOVE 1ST & REVERSE BRAKE PISTON

(a) Apply compressed air (392 kPa, 4.0 kgf/cm^2, 57 psi) to the transaxle case to remove 1st & reverse brake piston.

NOTICE:

- **Blowing off the air may cause the piston to jump–out. When removing the piston, hold it by your hand using a waste cloth.**
- **Take care not to splash ATF when air–blowing.**

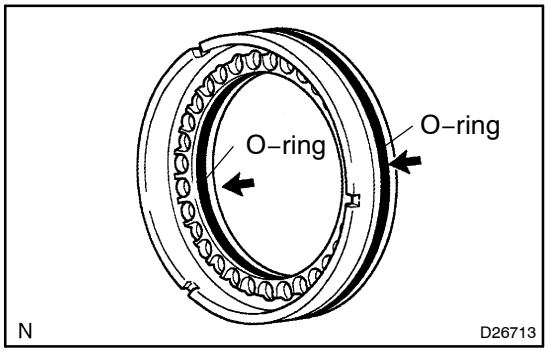

(b) Remove the 2 O–rings from the 1st & reverse brake piston.

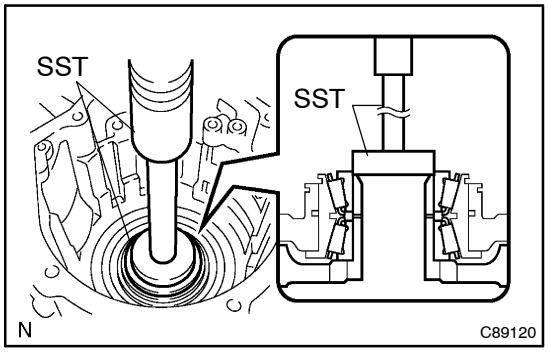

70. REMOVE COUNTER DRIVE GEAR

(a) Using SST and a press, remove the counter drive gear from the transaxle case.

SST 09950–60010 (09951–00590), 09950–70010 (09951–07100)

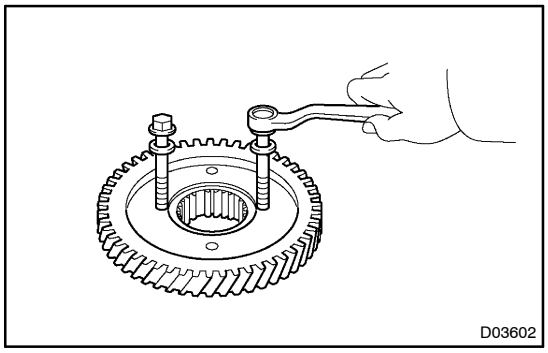

(b) As shown in the illustration, tighten 2 bolts evenly and make clearance of approx. 20.0 mm (0.797 in.) between the counter drive gear and the inner race.

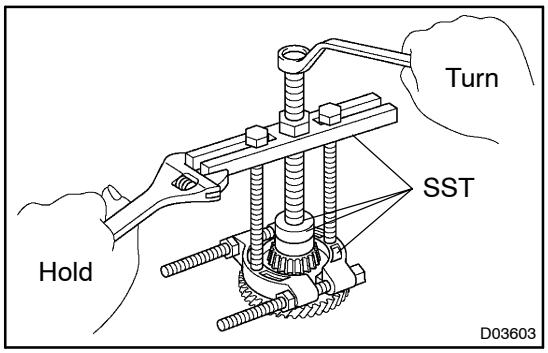

(c) Using SST, remove the tapered roller bearing.

SST 09950–60010 (09951–00590), 09950–70010 (09951–07100), 09950–00020, 09950–00030, 09950–40011 (09957–04010)

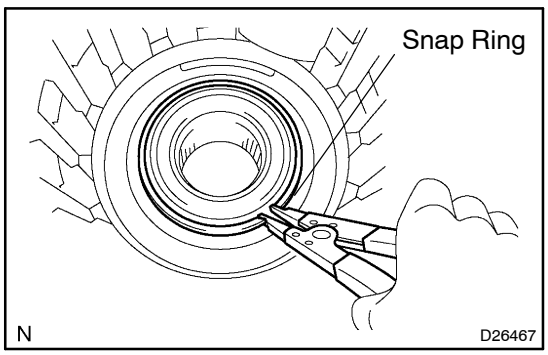

71. REMOVE COUNTER DRIVE GEAR BEARING

(a) Using a snap ring expander, remove the snap ring.

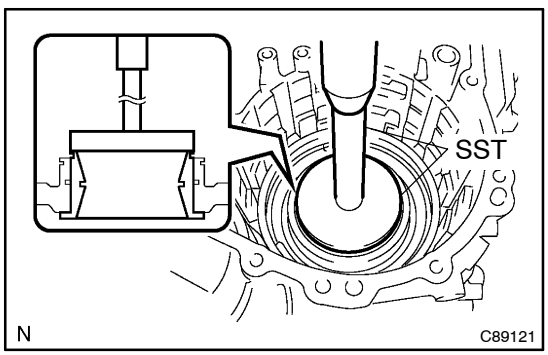

(b) Using SST and a press, remove the bearing outer race.

SST 09950–60020 (09951–00910), 09950–70010 (09951–07100)

72. REMOVE BREATHER PLUG NO.2 (ATM)

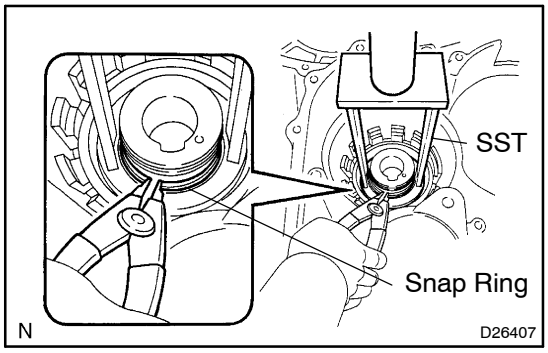

73. REMOVE UNDERDRIVE BRAKE RETURN SPRING SUB–ASSY

(a) Place SST on the return spring, and compress the return spring with a press.
SST 09387–00020

(b) Using a snap ring expander, remove the snap ring.

NOTICE:

- **Stop the press when the spring sheet is lowered 1 – 2 mm (0.039 – 0.078 in.) from the snap ring groove, to prevent the spring sheet from deforming.**
- **Do not expand the snap ring excessively.**

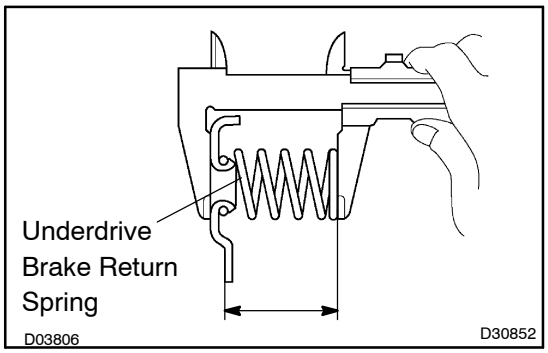

74. INSPECT UNDERDRIVE BRAKE RETURN SPRING SUB–ASSY

(a) Using a vernier calipers, measure the free length of the spring together with the spring seat.
Standard free length: 13.24 mm (0.5213 in.)

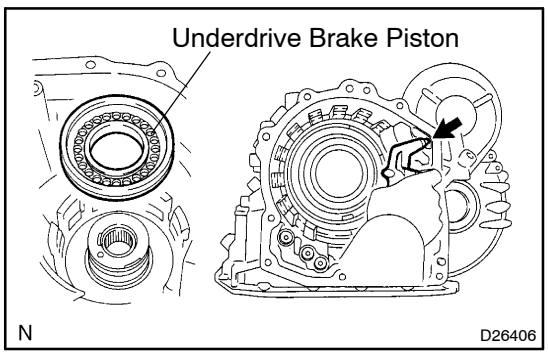

75. REMOVE UNDERDRIVE BRAKE PISTON

(a) Apply compressed air (392 kPa, 4.0 kgf/cm^2, 57 psi) to the transaxle case to remove the underdrive brake piston.

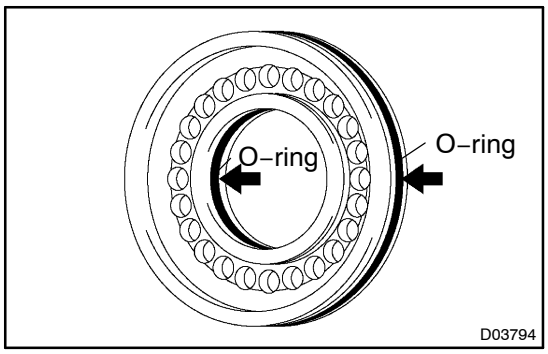

(b) Remove the 2 O–rings from the underdrive brake piston.

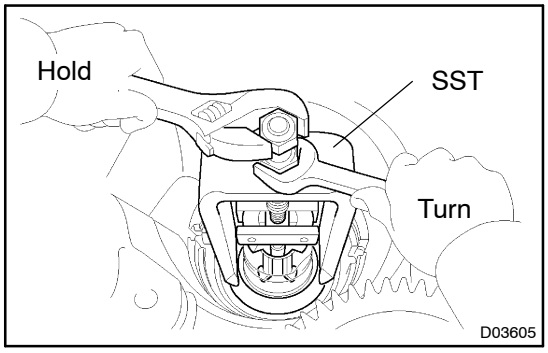

76. REMOVE NEEDLE ROLLER BEARING

(a) Using SST, remove the needle–roller bearing from the transaxle case.

SST 09387–00041 (09387–01010, 09387–01030, 09387–01040)

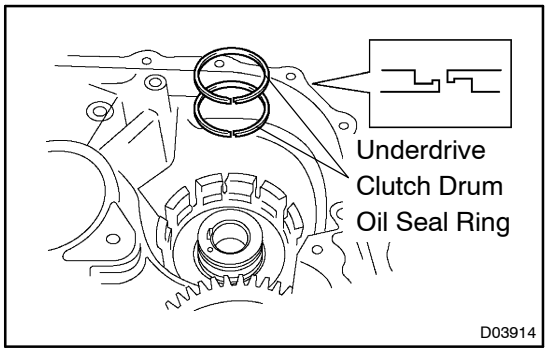

77. REMOVE UNDERDRIVE CLUTCH DRUM OIL SEAL RING

(a) Remove the 2 oil seal rings from the transaxle case.

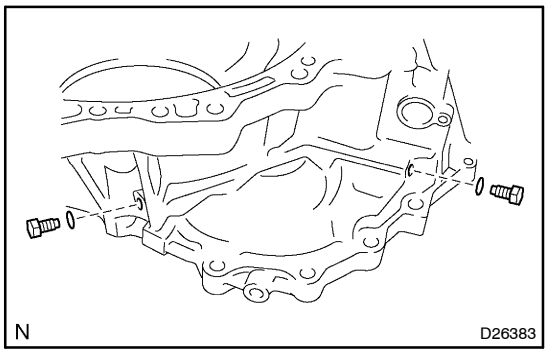

78. REMOVE TRANSAXLE CASE NO.1 PLUG

(a) Remove the 2 transaxle case No. 1 plugs.

(b) Remove the 2 O–rings from the 2 transaxle case No. 1 plugs.

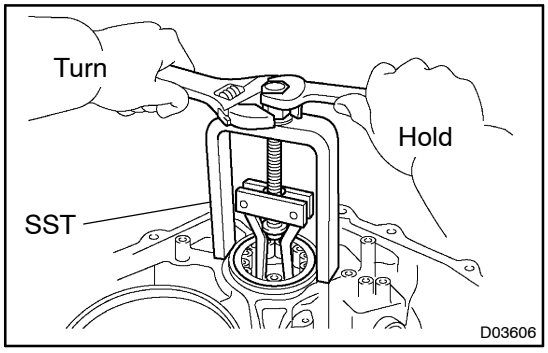

79. REMOVE UNDERDRIVE CYLINDRICAL ROLLER BEARING

(a) Using SST, remove the underdrive cylindrical roller bearing from the transaxle case.

SST 09514–35011

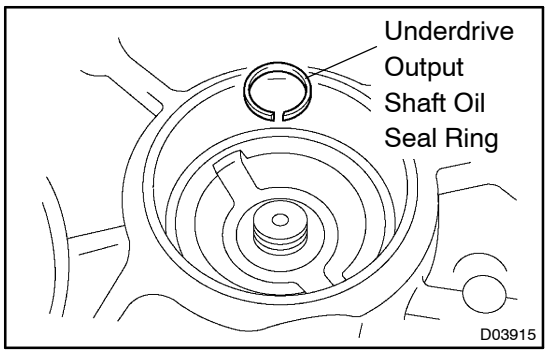

80. REMOVE UNDERDRIVE OUTPUT SHAFT OIL SEAL RING

(a) Remove the oil seal ring from the transaxle housing.

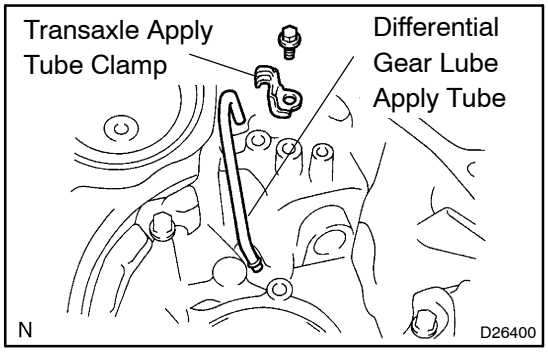

81. REMOVE DIFFERENTIAL GEAR LUBE APPLY TUBE

(a) Remove the bolt, transaxle apply tube clamp and differential gear lube apply tube from the transaxle housing.

82. BEARING POSITION

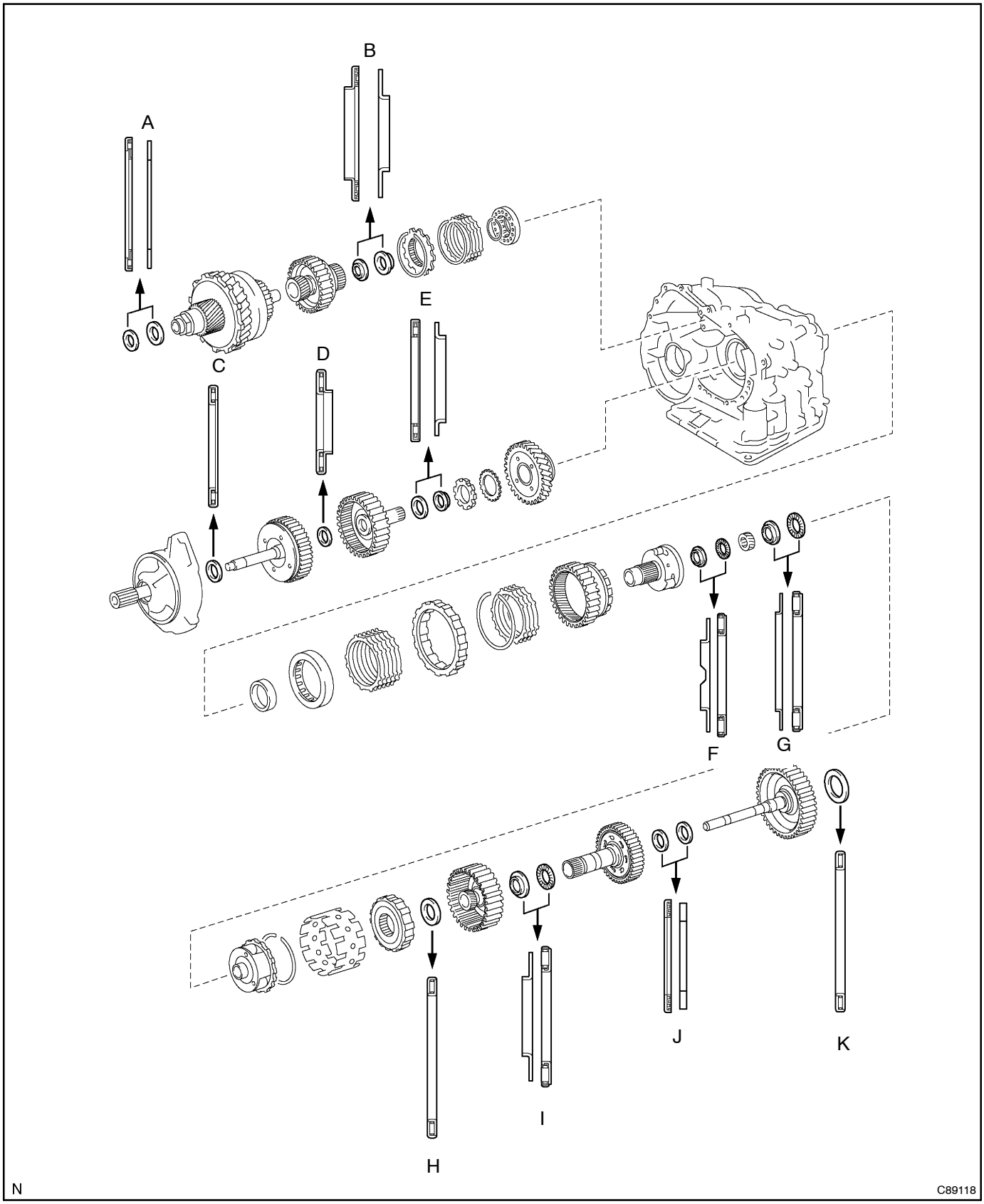

Mark	Front Race Diameter Inside / Outside mm (in.)	Thrust Bearing Diameter Inside / Outside mm (in.)	Rear Race Diameter Inside / Outside mm (in.)
A	–	57.2 (2.252) / 84.96 (3.3449)	56.4 (2.220) / 83.0 (3.268)
B	–	37.73 (1.4854) / 58.0 (2.283)	–
C	–	33.85 (1.3327) / 52.2 (2.055)	–
D	24.94 (0.982)	23.5 (0.925) / 44.0(1.732)	–
E	–	36.3 (1.429) / 51.93 (2.044)	34.5 (1.358) / 48.35 (1.904)
F	34.35 (1.352) / 56.57 (2.227)	32.45 (1.278) / 56.48 (2.223)	–
G	40.15 (1.581) / 59.25 (2.333)	38.65 (1.522) / 59.79 (2.354)	38.65 (1.522) / 59.25 (2.332)
H	–	53.6 (2.110) / 69.6 (2.740)	–
I	33.02 (1.3) / 45.8 (1.803)	31.85 (1.254) / 57.3 (2.256)	–
J	–	24.79 (0.976) / 39.5 (1.555)	23.6 (0.929) / 37.95 (1.494)
K	–	56.3 (2.216) / 75.96 (2.991)	–

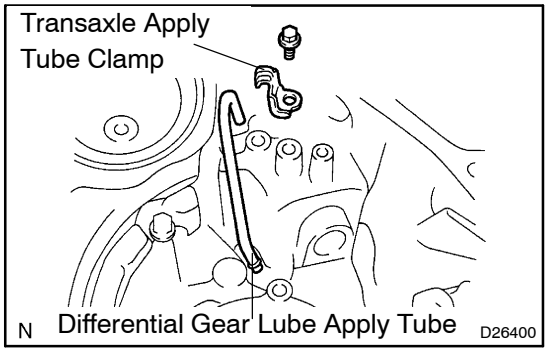

83. INSTALL DIFFERENTIAL GEAR LUBE APPLY TUBE

(a) Install the differential gear lube apply tube and transaxle apply tube clamp with the bolt to the transaxle housing.
Torque: 9.8 N·m (100 kgf·cm, 87 in.·lbf)

NOTICE:
Make sure to insert the pipe to the stopper.

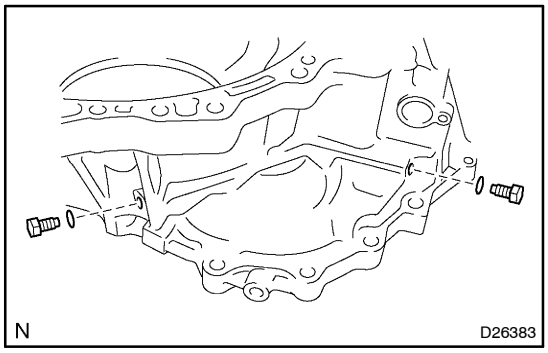

84. INSTALL TRANSAXLE CASE NO.1 PLUG

(a) Install the 2 new O–rings to the 2 transaxle case No.1 plugs.

(b) Install the 2 transaxle case No.1 plugs to the transaxle rear cover.
Torque: 7.4 N·m (75 kgf·cm, 65 in.·lbf)

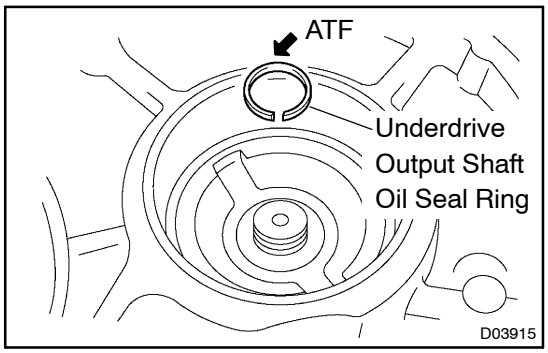

85. INSTALL UNDERDRIVE OUTPUT SHAFT OIL SEAL RING

(a) Coat the new oil seal ring with ATF and install it to the transaxle housing.

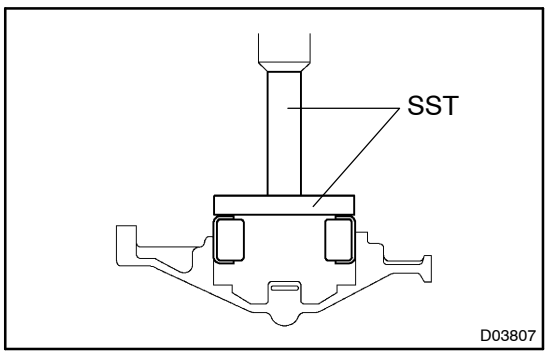

86. INSTALL UNDERDRIVE CYLINDRICAL ROLLER BEARING

(a) Coat the underdrive cylindrical roller bearing with ATF.

(b) Using SST and a press, install the underdrive cylindrical roller bearing.
SST 09950–60020 (09951–00810), 09950–70010 (09951–07100)

NOTICE:
Do not apply excessive pressure to it.

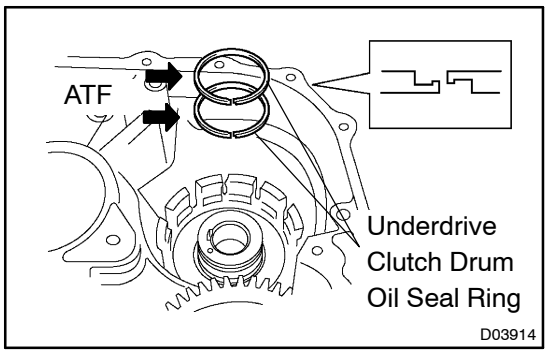

87. INSTALL UNDERDRIVE CLUTCH DRUM OIL SEAL RING

(a) Coat the 2 new oil seal rings with ATF, install them to the transaxle rear cover.

NOTICE:
- **Do not expand the gap of the oil seal ring too much.**
- **Fix the hooks certainly. Confirm the smooth rotation.**

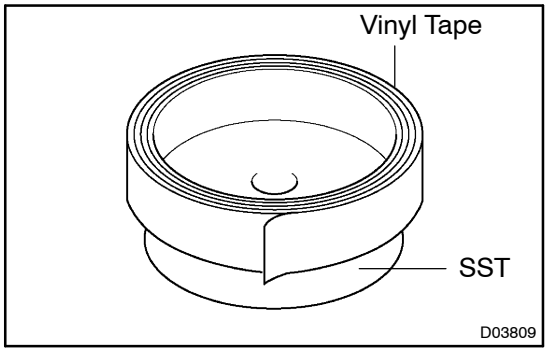

88. INSTALL NEEDLE ROLLER BEARING

(a) Wind a vinyl tape around SST at the place 4.0 mm (0.157 in.) above from the bottom end until the thickness of the wound tape is about 5.0 mm (0.197 in.).

NOTICE:

Clean SST to remove deposited oil, before winding a vinyl tape.

(b) Coat the needle roller bearing with ATF.

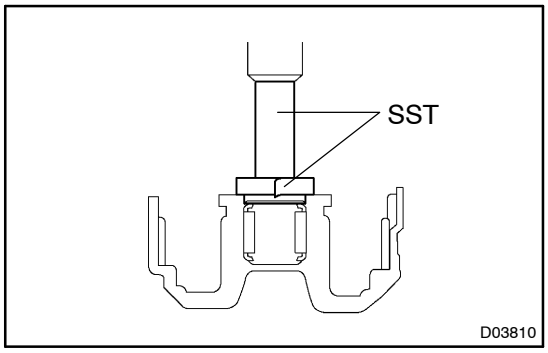

(c) Using SST and a press, install the needle–roller bearing to the transaxle case.

SST 09950–60010 (09951–00320), 09950–70010 (09951–07100)

NOTICE:

When the wound vinyl tape contacts the transaxle case, stop press–fitting.

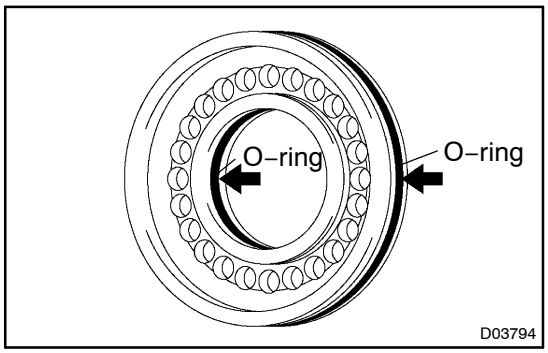

89. INSTALL UNDERDRIVE BRAKE PISTON

(a) Coat the 2 new O–rings with ATF, install them to the underdrive brake piston.

NOTICE:

- **Assemble the O–ring carefully not to have a twist and a pinching.**
- **Apply enough ATF to the O–ring prior to assembling.**

(b) Coat the underdrive brake piston with ATF.

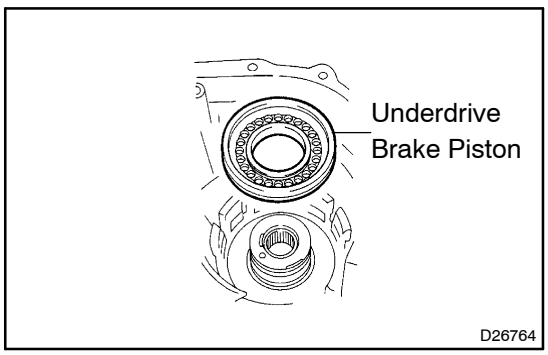

(c) Install the underdrive brake piston to the transaxle case.

NOTICE:

Be careful not to damage the O–ring.

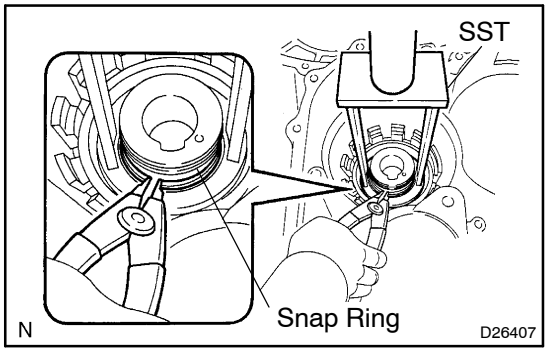

90. INSTALL UNDERDRIVE CLUTCH RETURN SPRING SUB–ASSY

(a) Place SST on the return spring and compress the return spring with a press.
SST 09387–00020

(b) Using a snap ring expander, install the snap ring to the transaxle case.

NOTICE:

- **Stop the press when the spring sheet is lowered 1 – 2 mm (0.039 – 0.078 in.) from the snap ring groove, to prevent the spring sheet from deforming.**
- **Do not expand the snap ring excessively.**
- **Installing the spring sub–assembly, check all of the springs are fit in the piston correctly.**
- **The snap ring should be fixed surely in the groove of the transaxle case.**

91. INSTALL BREATHER PLUG NO.2 (ATM)

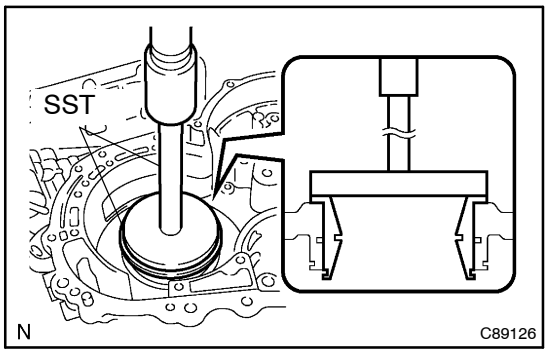

92. INSTALL COUNTER DRIVE GEAR BEARING

(a) Coat the counterdrive gear bearing with ATF.

(b) Using SST and a press, install the bearing outer race.
SST 09950–60020 (09951–01030), 09950–70010 (09951–07150), 09649–17010

NOTICE:

- **Do not apply excessive pressure to it.**
- **Press–fit the bearing outer race until it contacts the transaxle case.**

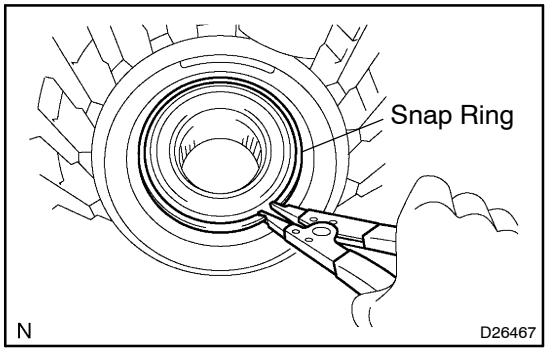

(c) Using a snap ring expander, install the snap ring.

NOTICE:

Face the white mark side of the snap ring up.

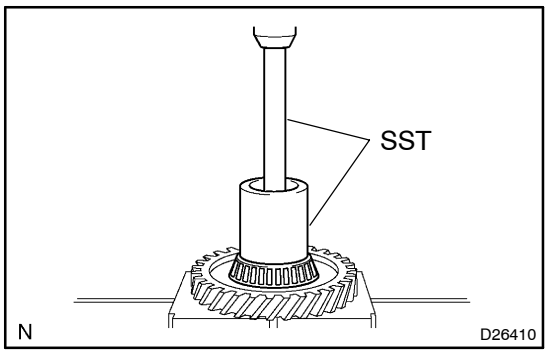

93. INSTALL COUNTER DRIVE GEAR

(a) Coat the couterdrive gear with ATF.

(b) Using SST and a press, install the tapered roller bearing to the counter drive gear.
SST 09950–70010 (09951–07150), 09649–17010

NOTICE:

Do not apply excessive pressure to it.

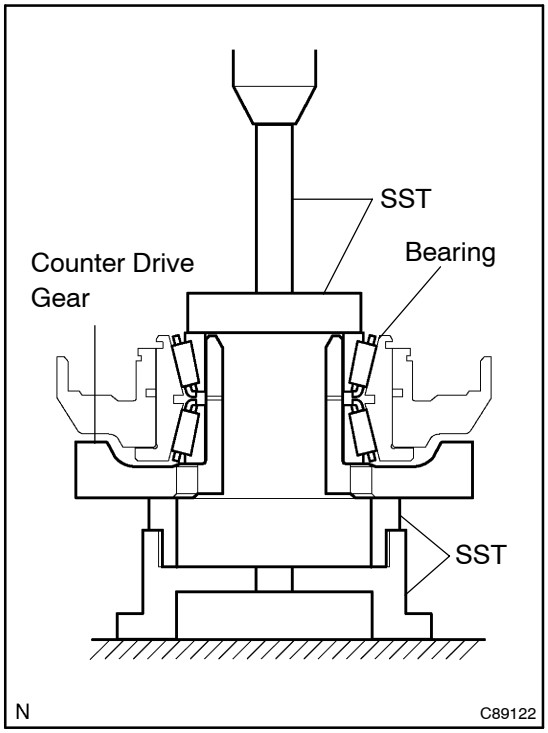

(c) Using SST and a press, install the counter drive gear and bearing to the transaxle case.
SST 09223–15030, 09527–17011, 09950–60020 (09951–00750), 09950–70010 (09951–07150)

NOTICE:
Do not apply excessive pressure to it.

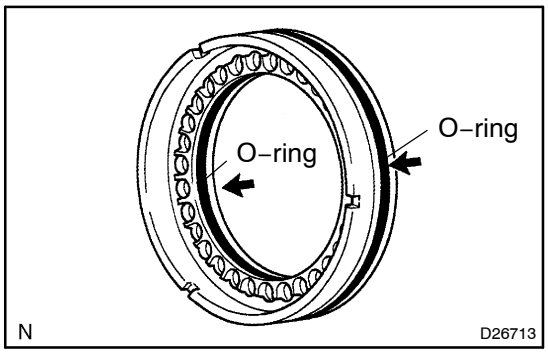

94. INSTALL 1ST & REVERSE BRAKE PISTON

(a) Coat the 2 new O–rings with ATF.

(b) Install the 2 O–rings to the 1st & reverse brake piston.

NOTICE:
- **Assemble the O–ring carefully not to have a twist and a pinching.**
- **Apply enough ATF to the O–ring prior to assembling.**

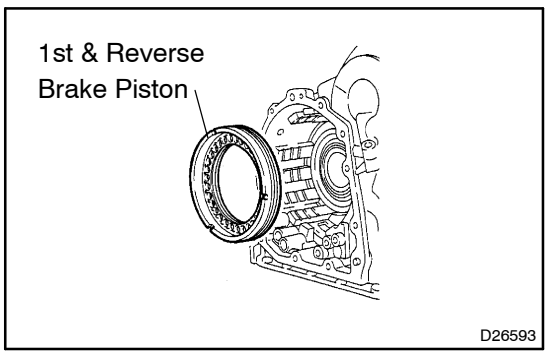

(c) Coat a 1st & reverse brake piston with ATF, install it to the transaxle case.

NOTICE:
Be careful not to damage the O–ring.

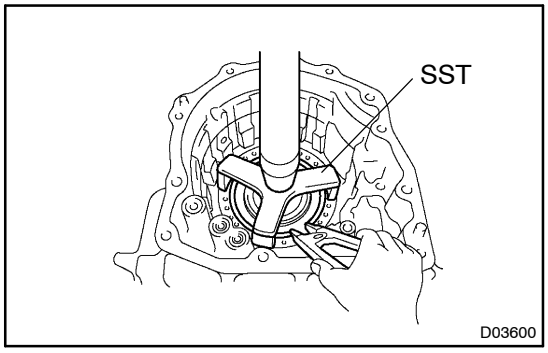

95. INSTALL 1ST & REVERSE BRAKE RETURN SPRING SUB–ASSY

(a) Place SST on the return spring and compress the return spring with a press.
SST 09387–00070

(b) Using a snap ring expander, install the snap ring to the transaxle case.

NOTICE:

- **Stop the press when the spring sheet is lowered to the place 1 – 2 mm (0.039 – 0.078 in.) from the snap ring groove, preventing the spring sheet from being deformed.**
- **Do not expand the snap ring excessively.**
- **Installing the spring sub–assembly, check all of the springs are fit in the piston correctly.**
- **The snap ring should be fixed surely in the groove of the cylinder.**
- **Fix the snap ring to the inside of the claw of the spring seat surely.**

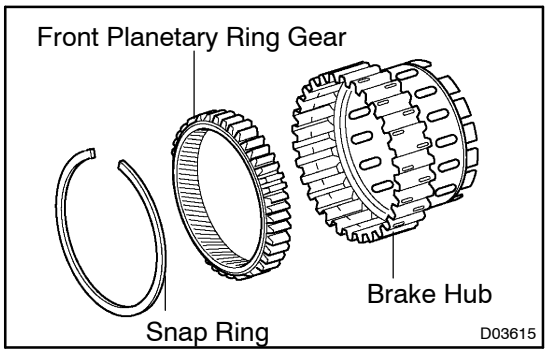

96. INSTALL FRONT PLANETARY RING GEAR

(a) Using a screwdriver, install the front planetary ring gear and snap ring to the brake hub.

NOTICE:

Confirm the snap ring is fixed in the groove of the brake hub correctly.

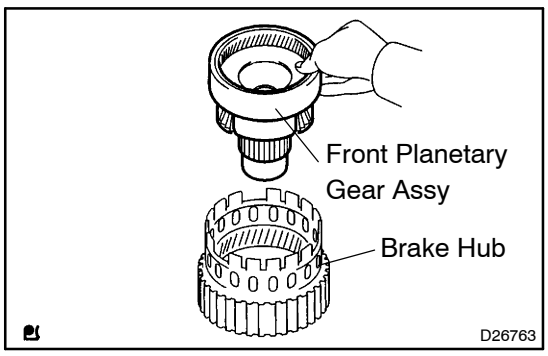

97. INSTALL FRONT PLANETARY GEAR ASSY

(a) Install the front planetary gear assy to the brake hub.

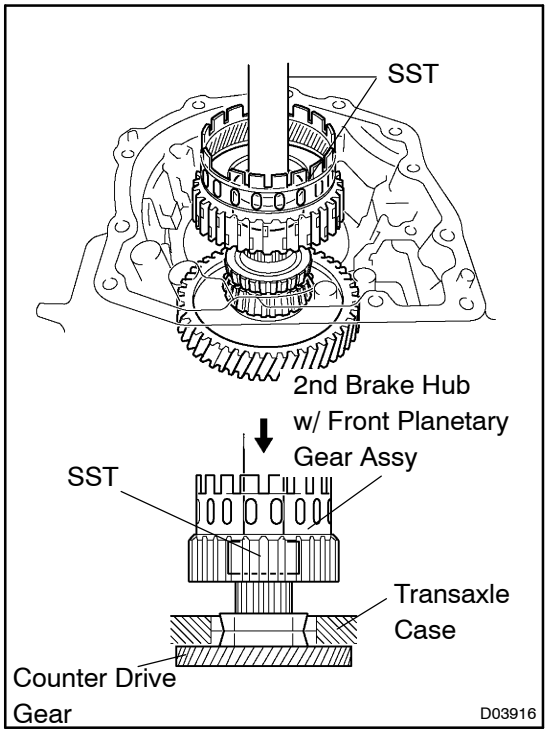

(b) Using SST and a press, press–fit the front planetary gear assy.
SST 09950–60010 (09951–00500), 09950–70010 (09951–07100)

NOTICE:
- **Do not apply excessive pressure to it.**
- **Press the inner race of LH tapered roller bearing, counter gear and front planetary gear assembly to the position where no pre–load should be applied to one pair of tapered roller bearings (left and right).**

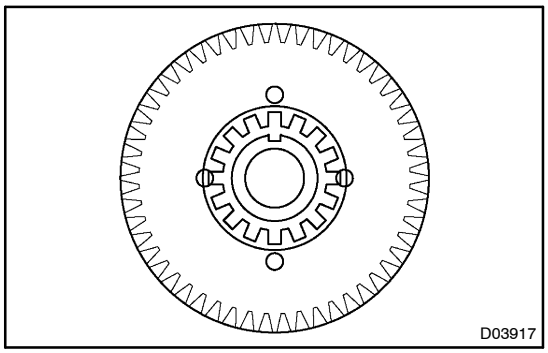

(c) Install the new washer, as shown in the illustration.

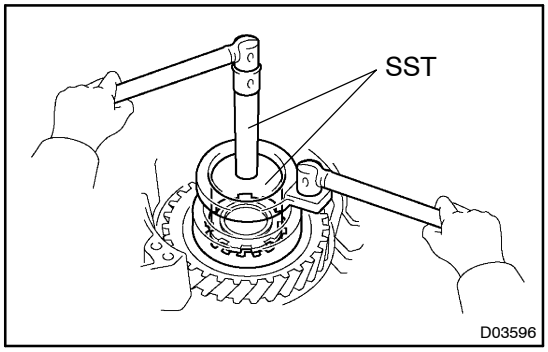

(d) Using SST, install the nut.
SST 09387–00030, 09387–00080
Torque: 210 – 350 N·m
(2,141 kgf·cm, 155 ft·lbf – 3,569 kgf·cm, 258 ft·lbf)

NOTICE:
Assemble the washer after pressing each part, then tighten the nut to minimum tightening torque.

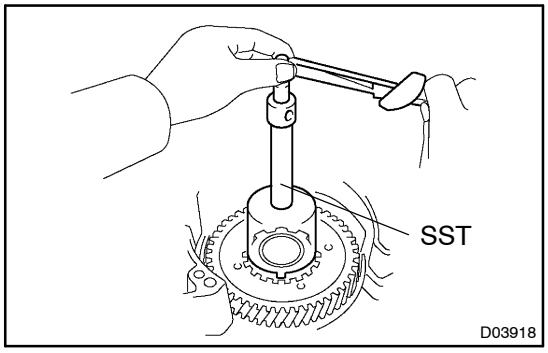

(e) Using SST and a torque wrench, measure the turning torque of the bearing while rotating SST at 60 rpm. When the measured value is not within the specified value, gradually tighten the nut until it reaches the specified value.

SST 09387–00080

Turning torque at 60 rpm:

New Bearing

0.51 – 1.02 N·m (5.1 – 10.0 kgf·cm, 4.4 – 8.7 in.·lbf)

Used Bearing

0.26 – 0.51 N·m (2.7 – 5.2 kgf·cm, 2.3 – 4.5 in.·lbf)

HINT:

Use a torque wrench with a fulcrum length of 160 mm (6.3 in.).

(f) Tighten the nut gradually until the specified rotation torque of tapered roller bearing is measured.

Torque: 350 N·m (3,569 kgf·cm, 258 ft·lbf) (a limit)

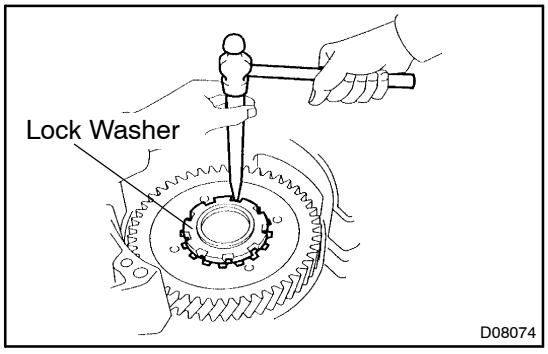

(g) Using a chisel and hammer, stake the front lock washer.

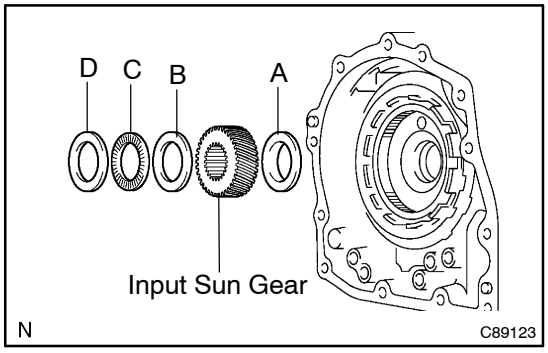

98. INSTALL INPUT SUN GEAR

(a) Coat the 2 thrust bearings with ATF.

(b) Install the 2 thrust bearings, the bearing race and the front planetary sun gear to the front planetary gear assy.

NOTICE:

- **Install the bearing race on the side of the front planetary carrier. Be careful about the orientation of the race.**
- **Installing thrust bearing and front sun gears, be careful about the orientation of the parts.**
- **Install the bearing race on the side of the front sun gear. Be careful about the orientation of the race.**
- **Install the thrust bearing and the race after holding the parts on the rear planetary carrier by applying grease. Be sure the assembling order.**

Thrust bearing and bearing race diameter: mm (in.)

	inside	outside
Thrust Bearing, A	32.5 (1.28)	56.5 (2.224)
Bearing Race, B	40.2 (1.583)	59.3 (2.335)
Thrust Bearing, C	38.6 (1.520)	59.7 (2.35)
Bearing Race, D	38.6 (1.520)	59.3 (2.335)

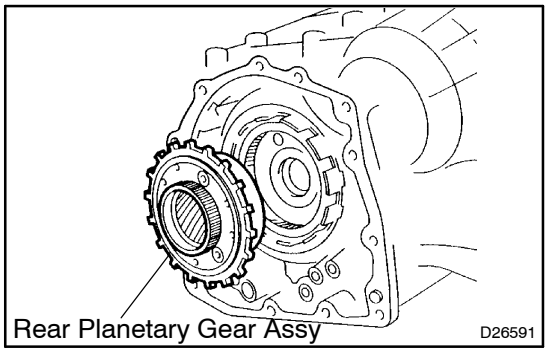

99. INSTALL REAR PLANETARY GEAR ASSY

(a) Install the rear planetary gear assy to the rear planetary ring gear.

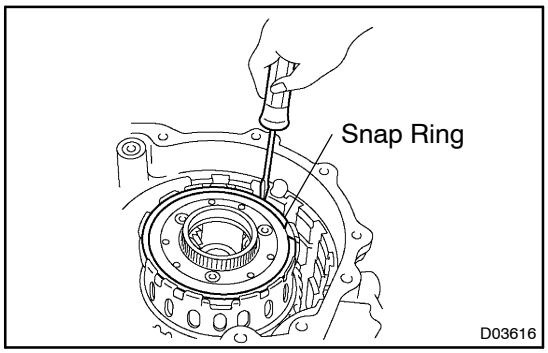

(b) Using a screwdriver, install the snap ring.

NOTICE:

Confirm the snap ring is fixed in the groove of the 1st & reverse brake hub correctly.

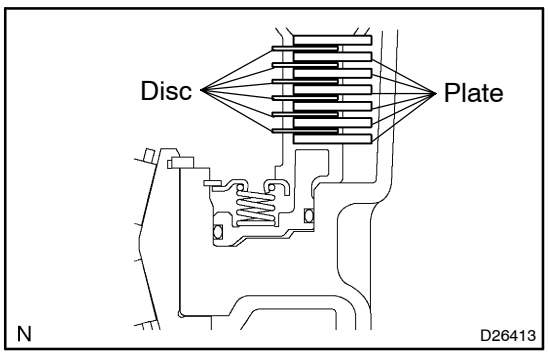

100. INSTALL 1ST & REVERSE BRAKE CLUTCH DISC

(a) Coat the 6 discs with ATF.

(b) Install the 6 plates and 6 discs.

NOTICE:

Be careful about the order of discs, plates and flange assembly.

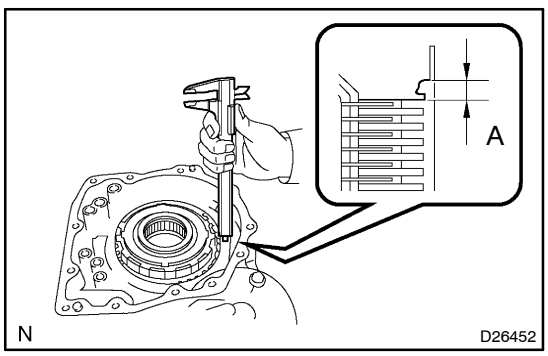

101. INSPECT PACK CLEARANCE OF FIRST & REVERSE BRAKE

(a) Using vernier calipers, measure the distance between the disc surface and the contact surface of the 2nd brake cylinder and transaxle case(Dimension A).

(b) Select an appropriate flange so that the pack clearance will meet the specified value.

Pack clearance: 1.16 – 1.35 mm (0.0457 – 0.0531 in.)

HINT:

Piston stroke = Dimension A –Flange thickness

Flange thickness: mm (in.)

Mark	Thickness	Mark	Thickness
1	1.8 (0.071)	5	2.2 (0.087)
2	1.9 (0.075)	6	2.3 (0.091)
3	2.0 (0.079)	7	2.4 (0.094)
4	2.1 (0.083)	8	2.5 (0.098)

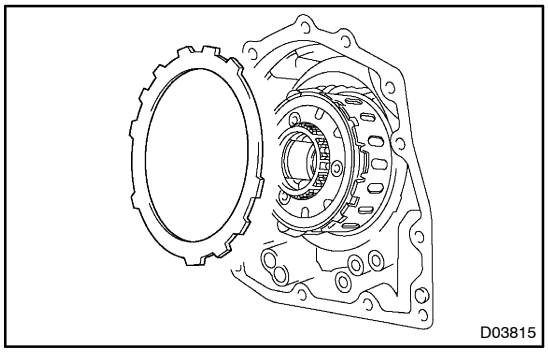

(c) Install the flange.

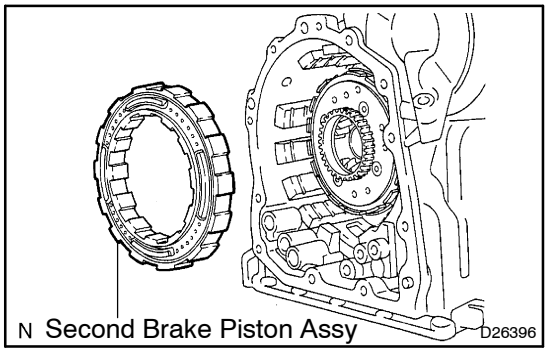

102. INSTALL SECOND BRAKE PISTON ASSY

(a) Install the second brake piston assy to the transaxle case.

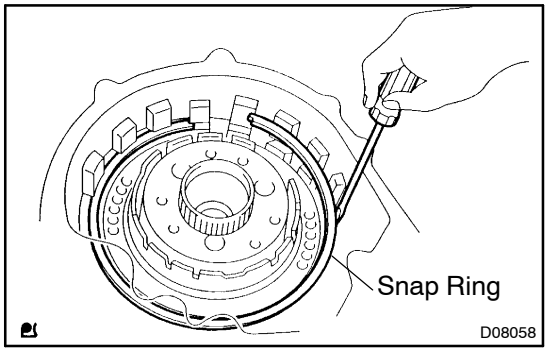

(b) Install the snap ring and measure the inside diameter.
Inside diameter: More than 167 mm (6.57 in.)

NOTICE:

- **Because the taper snap ring has the positioning direction, check it when installing.**
- **When the diameter does not meet the specified value, replace the snap ring with new one.**
- **After assembling, confirm that there is no clearance between the second brake cylinder and the fitting surface of the cylinder in the transaxle case.**

103. INSTALL 1WAY CLUTCH SLEEVE OUTER

(a) Install the 1–way clutch sleeve outer to the 2nd brake cylinder assy.

NOTICE:

Check the positioning direction of the outer sleeve.

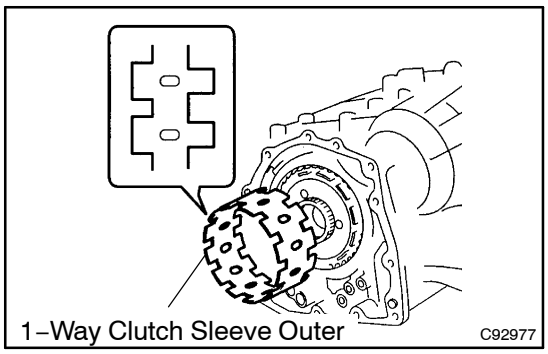

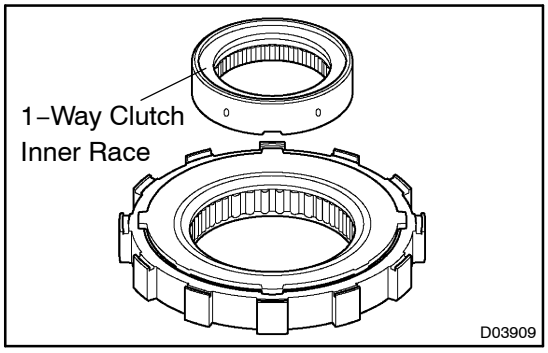

104. INSTALL 1 WAY CLUTCH ASSY

(a) Install the 1–way clutch inner race to the 1–way clutch.

NOTICE:

- **Check the direction of the inner race.**
- **Confirm that the discrimination mark can be seen by the worker.**

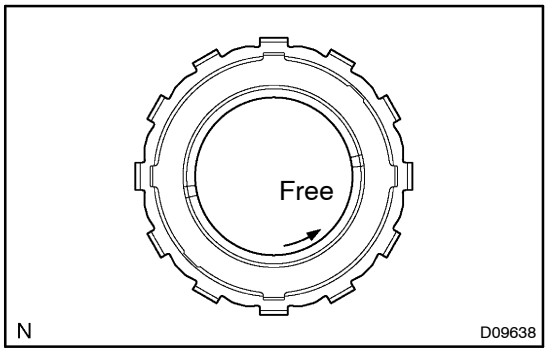

(b) Check the rotating direction of 1–way clutch for the lock or free operation, as shown in the illustration.

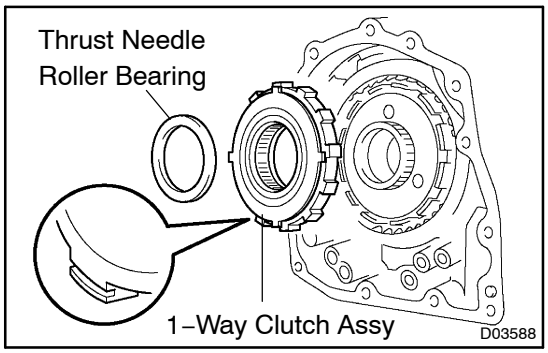

(c) Install the 1–way clutch and thrust needle roller bearing to the 1–way clutch sleeve outer.

Bearing diameter: mm (in.)

	Inside	Outside
Bearing	53.6 (2.110)	69.4 (2.732)

NOTICE:

Install the thrust bearing properly so that no–colored race will be visible.

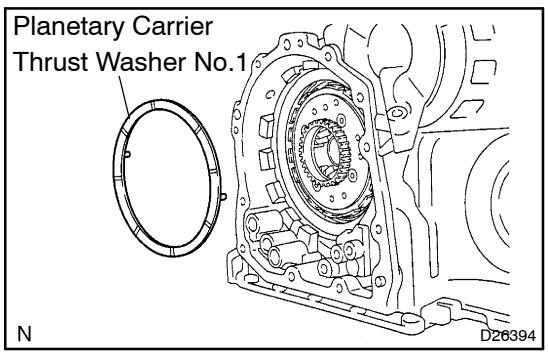

105. INSTALL PLANETARY CARRIER THRUST WASHER NO.1

(a) Coat the planetary carrier thrust washer No. 1 with yellow petrolatum, install it onto the planetary sun gear assy.

NOTICE:

After assembling, confirm that the projection should be fixed surely in the hole of the planetary sun gear assembly.

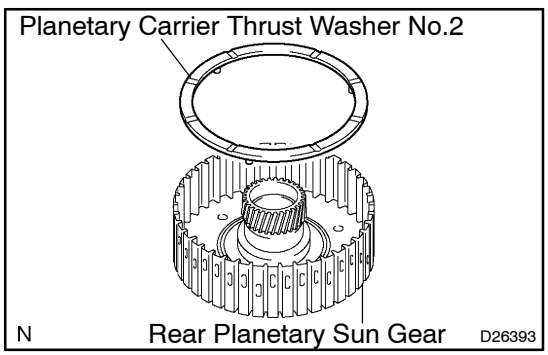

106. INSTALL REAR PLANETARY SUN GEAR ASSY

(a) Coat the planetary carrier thrust washer No. 2 with yellow petrolatum, install it onto the rear planetary sun gear.

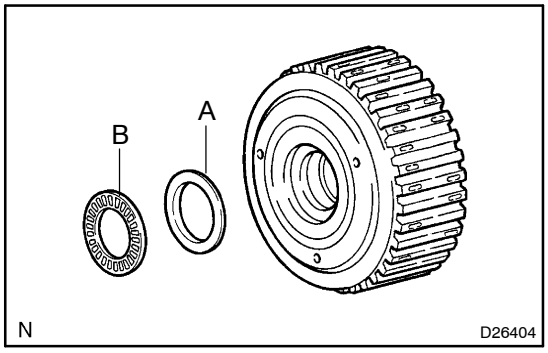

(b) Coat the bearing with yellow petrolatum, install it onto the rear planetary sun gear.

Bearing diameter: mm (in.)

	Inside	Outside
Race, A	33.0 (1.299)	45.4 (1.787)
Bearing, B	31.85 (1.254)	45.2 (1.78)

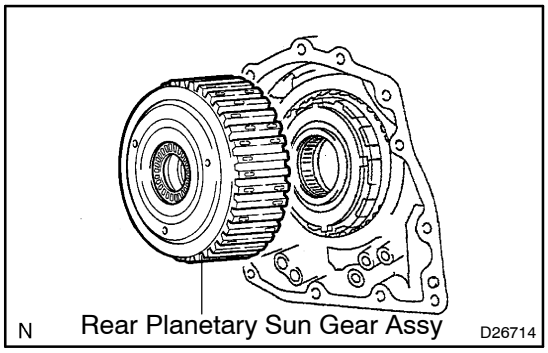

(c) Install the rear planetary sun gear assy to the rear planetary gear.

NOTICE:

Installing the rear planetary sun gear assembly, confirm that the B1 discs engage.

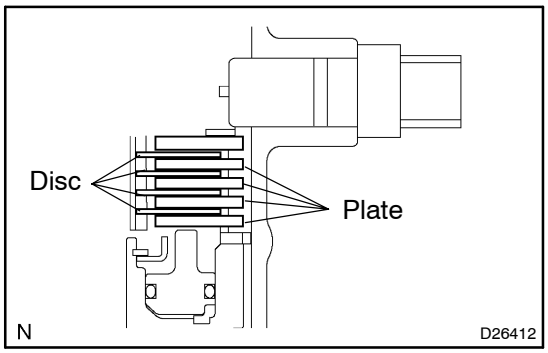

107. INSTALL 2ND BRAKE CLUTCH DISC

(a) Coat the 4 discs with ATF.

(b) Install the 4 discs and 4 plates to the transaxle case.

(c) Temporarily install the snap ring.

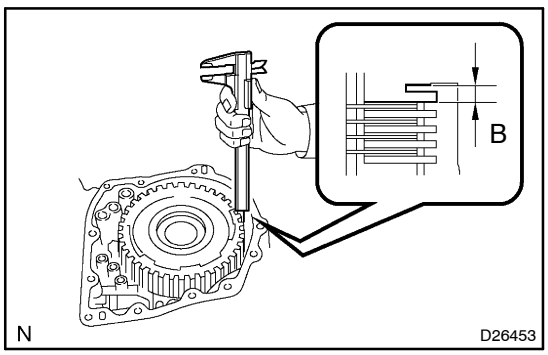

108. INSPECT PACK CLEARANCE OF SECOND BRAKE

(a) Using a vernier calipers, measure the distance between the disc surface and snap ring surface (Dimension B).

(b) Select an appropriate flange so that the pack clearance will meet the specified value.

Pack clearance: 0.62 – 0.91 mm (0.0244 – 0.0358 in.)

HINT:

Piston stroke = Dimension B – Flange thickness – Snap ring thickness 1.6 mm (0.063 in.)

Flange thickness: mm (in.)

Mark	Thickness	Mark	Thickness
1	3.0 (0.118)	5	3.4 (0.134)
2	3.1 (0.122)	6	3.5 (0.138)
3	3.2 (0.126)	7	3.6 (0.142)
4	3.3 (0.130)	8	–

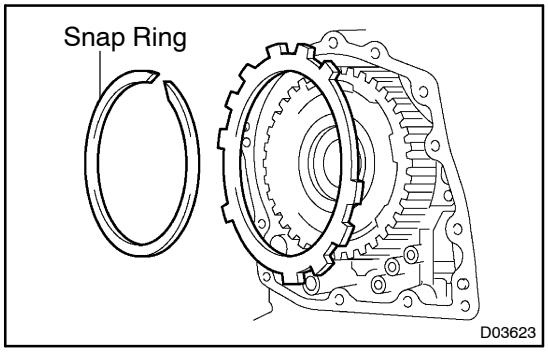

(c) Temporarily remove the snap ring, attach the selected flange and restore the snap ring.

NOTICE:

Secure the snap ring so that its gap is visible through the groove of the transaxle case.

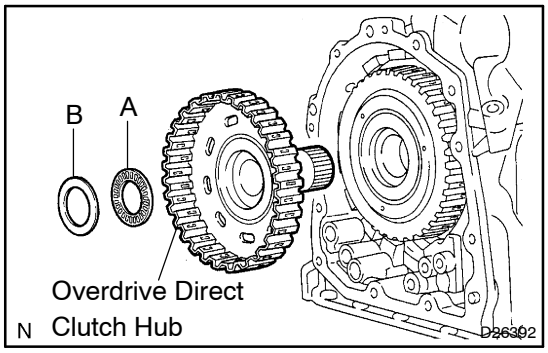

109. INSTALL OVERDREVE DIRECT CLUTCH HUB SUB–ASSY

(a) Install the direct clutch hub to the planetary gear assy.

NOTICE:

Be careful not to damage the bush inside of the overdrive clutch hub during instaling.

(b) Coat the thrust bearing with ATF.

(c) Install the bearing race and the thrust bearing to the direct clutch hub.

NOTICE:

Installing the bearing, hold the part on the side of the overdrive clutch hub.

Bearing and race diameter: mm (in.)

	Inside	Outside
Bearing, A	24.7 (0.972)	39.5 (1.555)
Race, B	23.6 (0.929)	38.0 (1.496)

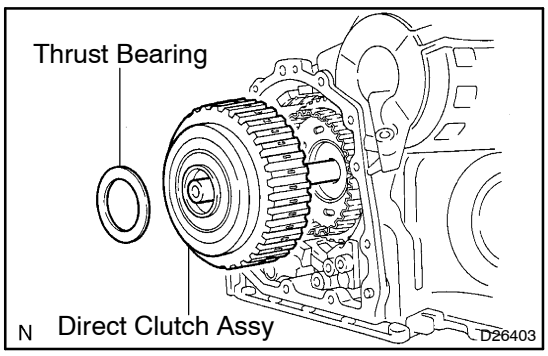

110. INSTALL DIRECT CLUTCH ASSY

(a) Coat the thrust bearing with ATF.

(b) Install the direct clutch assy and thrust bearing to the rear planetary sun gear assy.

NOTICE:

The disc in the direct clutch should completely match with the hub attached outside the rear planetary sun gear. Otherwise, the rear cover can not be installed.

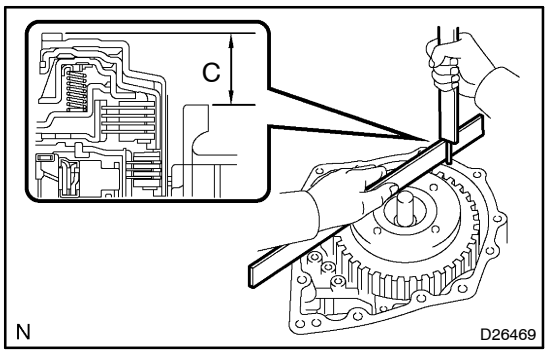

(c) Clean the connecter part of the transaxle case and the rear cover.

(d) As shown in the illustration, place a straight edge on the direct clutch drum and measure the distance between transaxle case and the straight edge using vernier calipers (Dimension C).

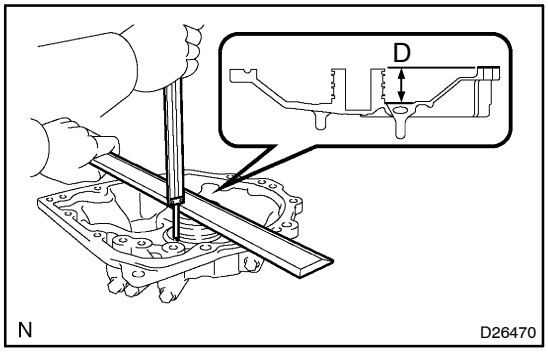

(e) Using vernier calipers and a simple straightedge, measure the position shown in the illustration.

(f) Calculate the end play value using the following formula. Select a thrust bearing which satisfies the end play value and install it.

End play: 0.244 – 0.901 mm (0.0096 – 0.0355 in.)

NOTICE:

Make sure that the no colored race side is facing the direct clutch assy.

HINT:

End play = Dimension D – Dimension C

Bearing thickness and diameter : mm (in.)

Thickness	Inside	Outside
3.6 (0.1417)	56.3 (2.217)	75.7 (2.980)
3.8 (0.1496)	56.3 (2.217)	75.7 (2.980)

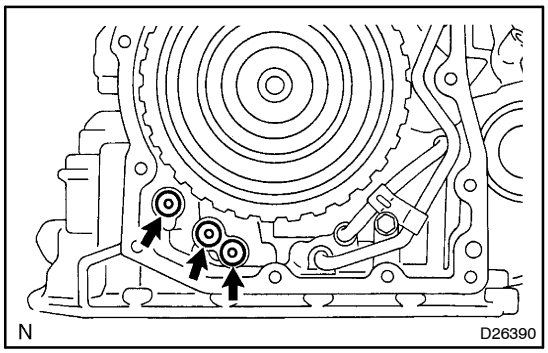

111. INSTALL GOVERNOR APPLY GASKET NO.1

(a) Install the 3 new governor apply gaskets No. 1 to the transaxle case.

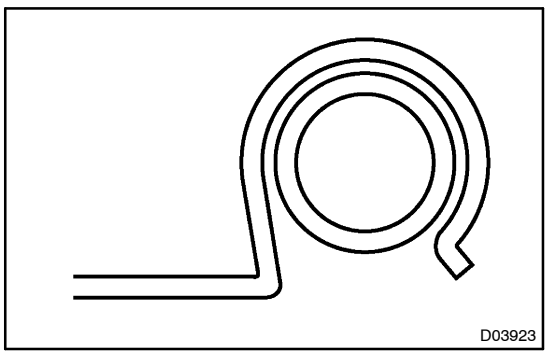

112. INSTALL BRAKE APPLY TUBE

(a) Install the clamp to the brake apply tube.

NOTICE:

Make sure to install the clamp to the apply tube before installing the apply tube to the transaxle case. This prevents the apply tube from being deformed or damaged.

(b) Install the clutch apply tube.

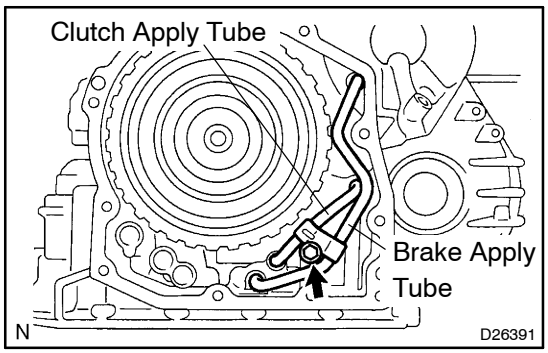

(c) Install the brake apply tube and a bolt to the transaxle case.

Torque: 5.4 N·m (55 kgf·cm, 48 in.·lbf)

NOTICE:

Each pipe should be securely inserted until it reaches the stopper.

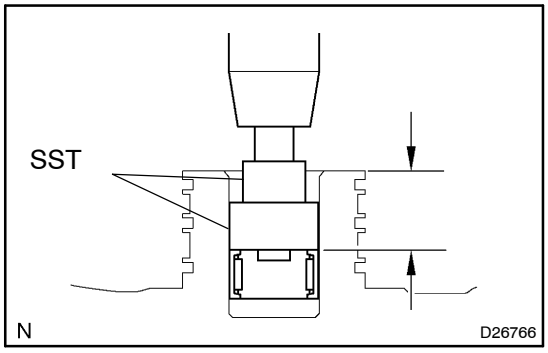

113. INSTALL NEEDLE ROLLER BEARING

(a) Using SST and a press, install the needle roller bearing to the transaxle rear cover.
SST 09950–60010 (09951–00230, 09952–06010)
Press fit depth: 20.55 – 21.25 mm (0.8091 – 0.8366 in.)

NOTICE:

- **Face the inscribed mark side of the bearing race up.**
- **Repeat the press fit until the specified value is obtained.**

(b) Coat a needle roller bearing with ATF.

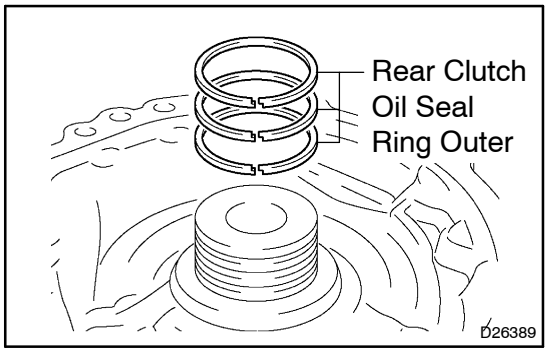

114. INSTALL REAR CLUTCH OIL SEAL RING OUTER

(a) Coat the 3 new rear clutch oil seal rings with ATF, install them to the transaxle rear cover.

NOTICE:

The snap ring should be fixed certainly in the groove of the drum.

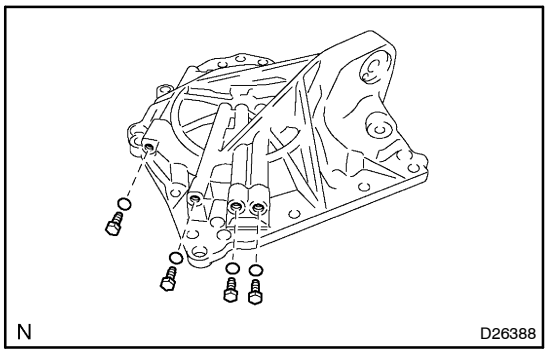

115. INSTALL TRANSAXLE CASE NO.1 PLUG

(a) Install the 4 new O–ring to the 4 transaxle case No. 1 plugs.

(b) Install the 4 transaxle case No. 1 plugs to the transaxle rear cover.
Torque: 7.4 N·m (75 kgf·cm, 65 in.·lbf)

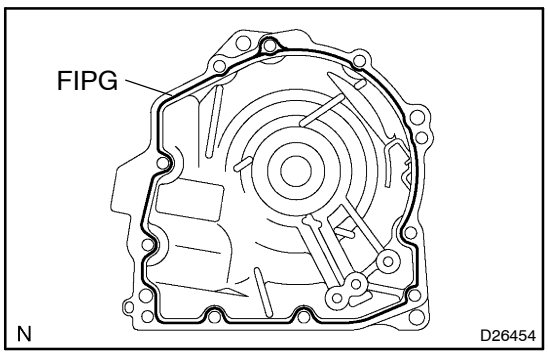

116. INSTALL TRANSAXLE REAR COVER SUB–ASSY

(a) Remove any packing material and be careful not to get oil on the contacting surfaces of the transaxle rear cover or the transaxle case.

(b) Apply FIPG to the cover.
FIPG:
Part No. 08826–00090, THREE BOND 1281 or equivalent.

NOTICE:

Concerning about the amount of the FIPG application, the amount should be controlled to from even sealing film on entire flange surface and have slight protrusion of the FIPG all around of the connecting area. The FIPG shall be applied continuously on the flange. (Reference value of the section diameter: ϕ1.2)

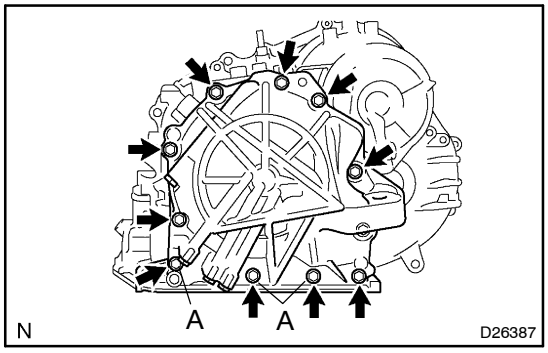

(c) Apply liquid sealer to the "A" bolt threads.
Sealant:
Part No. 08833–00080, THREE BOND 1344, LOCTITE 242 or equivalent.

(d) Install the 11 bolts.
Torque:
Bolt A: 19.0 N·m (190 kgf·cm, 14 ft·lbf)
Other bolt: 25.0 N·m (250 kgf·cm, 18 ft·lbf)

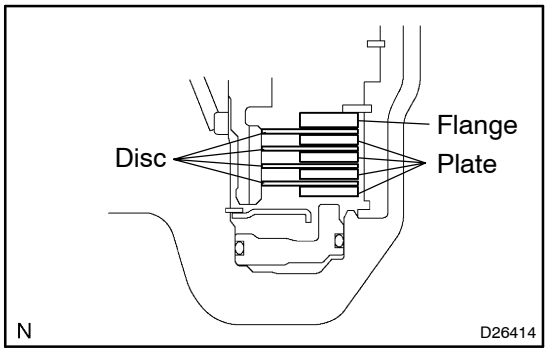

117. INSTALL UNDERDRIVE CLUTCH DISC NO.2

(a) Coat the 4 discs with ATF.

(b) Install the 4 discs, 4 plates and flange to the transaxle case.

NOTICE:
Be careful about the order of discs, plate and flange assembly.

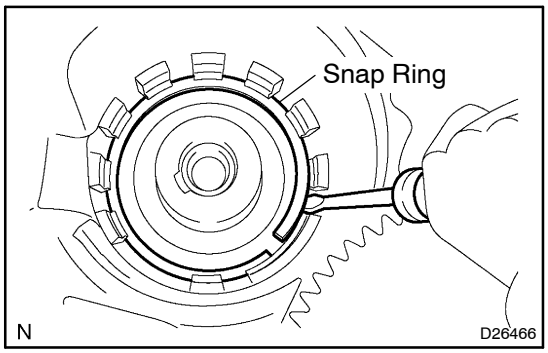

(c) Using a screwdriver, install the snap ring.

NOTICE:
The snap ring should be fixed certainly in the groove of the drum.

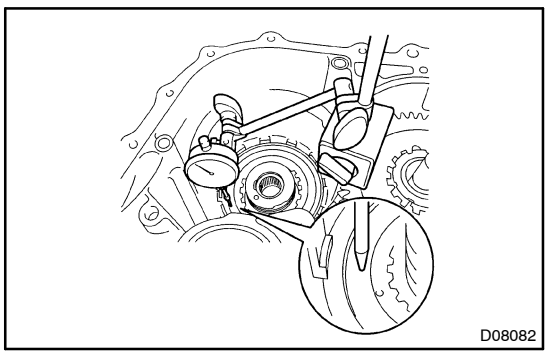

118. INSPECT PACK CLEARANCE OF UNDERDRIVE BRAKE

(a) Using a dial indicator, measure the underdrive brake pack clearance while applying and releasing compressed air (392 kPa, 4.0 kgf/cm^2, 57 psi).
Pack clearance: 1.81 – 2.20 mm (0.0713 – 0.0866 in.)

HINT:
Select an appropriate flange from the table below so that it will meet the specified value.

Flange thickness: mm (in.)

Mark	Thickness	Mark	Thickness
1	3.0 (0.118)	4	3.1 (0.122)
2	3.2 (0.126)	5	3.3 (0.130)
3	3.4 (0.134)	–	–

(b) Temporally remove the snap ring and attach to the flange.

(c) Restore the snap ring.

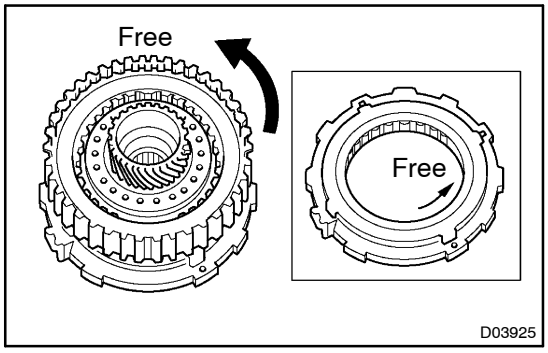

119. INSPECT UNDERDRIVE 1 WAY CLUTCH ASSY

(a) Install the underdrive clutch assy to the 1–way clutch.

(b) Rotate the underdrive clutch assy to check the rotating direction for the lock or free operation.

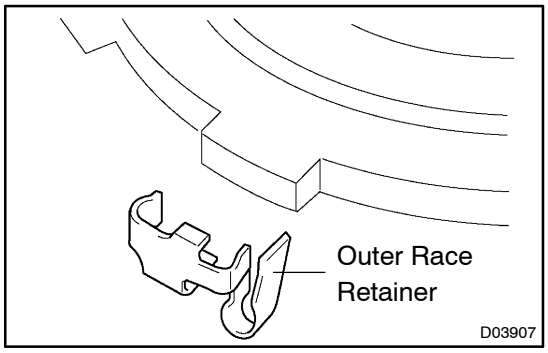

120. INSTALL UNDERDRIVE 1 WAY CLUTCH ASSY

(a) Install the outer race retainer to the 1–way clutch.

NOTICE:

Fix the outer race retainer to the external tooth of the one way clutch surely.

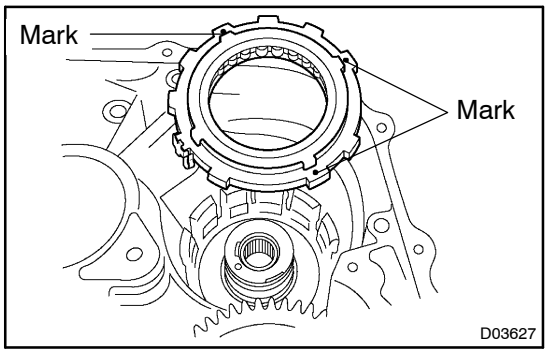

(b) Install the 1–way clutch to the transaxle case.

NOTICE:

Make sure that the mark on the 1–way clutch outer race is visible.

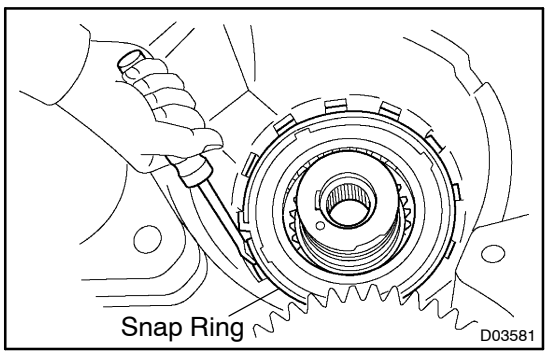

(c) Using a screwdriver, install the snap ring to the transaxle case.

NOTICE:

The snap ring should be fixed certainly in the groove of the transaxle case as the gap exists except in the lock of teeth.

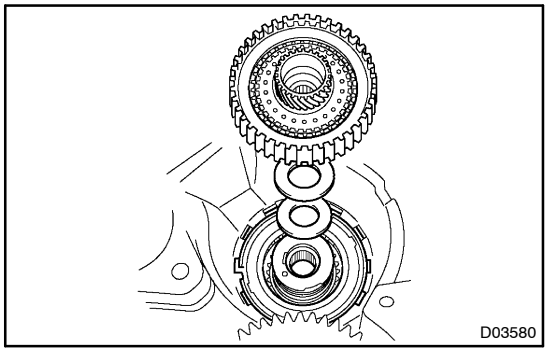

121. INSTALL UNDERDRIVE CLUTCH ASSY

(a) Coat the bearing and bearing race with petroleum jelly, install them onto the underdrive clutch.

Bearing and bearing race diameter: mm (in.)

	Inside	Outside
Bearing	37.73 (1.4854)	58.0 (2.2835)
Race	29.9 (1.1772)	55.5 (2.185)

(b) Install the underdrive clutch assy to the transaxle case.

NOTICE:

Installing the underdrive clutch drum sub–assy, be sure not to damage the oil seal ring.

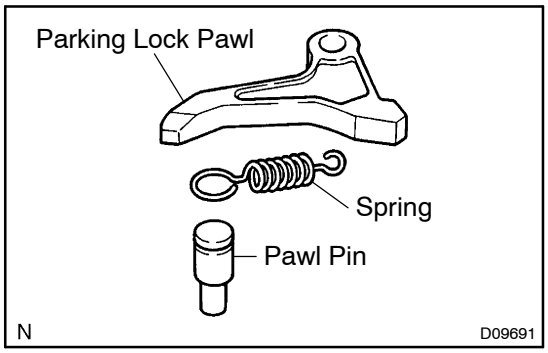

122. INSTALL PARKING LOCK PAWL

(a) Install the pawl pin and spring to the parking lock pawl.

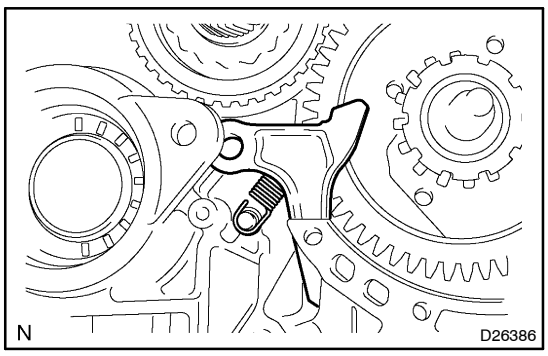

(b) Temporarily install the parking lock pawl, shaft and spring to the transaxle case, as shown in the illustration.

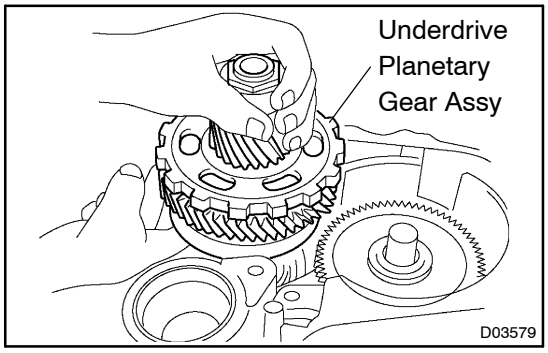

123. INSTALL UNDERDRIVE PLANETARY GEAR ASSY

(a) Install the underdrive planetary gear assy to the transaxle case.

NOTICE:

Engage all the discs of underdrive clutch and hub splines of the underdrive planetary gear assy firmly and assemble them securely.

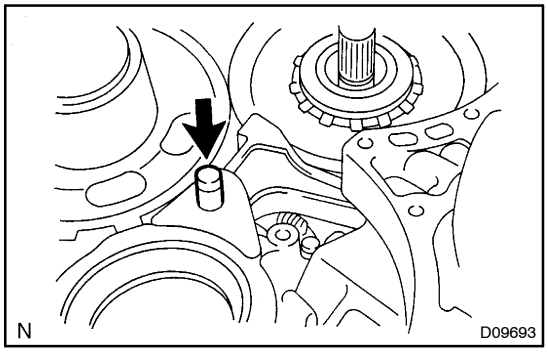

(b) Install the parking lock pawl shaft.

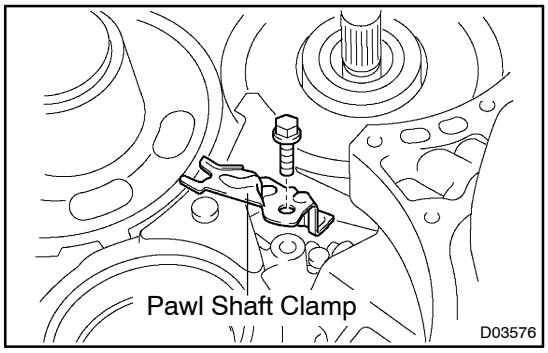

(c) Install the pawl shaft clamp with the bolt.
Torque: 9.8 N·m (100 kgf·cm, 87 in.·lbf)

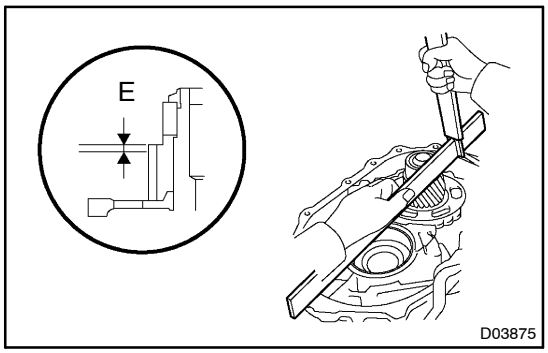

(d) Using a straight edge and vernier calipers as shown in the illustration, measure the gap between the top of the differential drive pinion in the underdrive planetary gear and contact surface of the transaxle case and housing (Dimension E).

NOTICE:
Note down the dimension E as it is necessary for the following process.

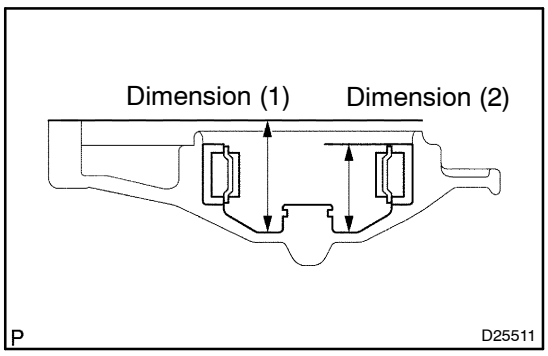

(e) As shown in the illustration, measure the 2 places of the transaxle housing, calculate the dimension F using the formula.

NOTICE:
Note down the dimension F as it is necessary for the following process.
HINT:
Dimension F = Dimension (1) – Dimension (2)

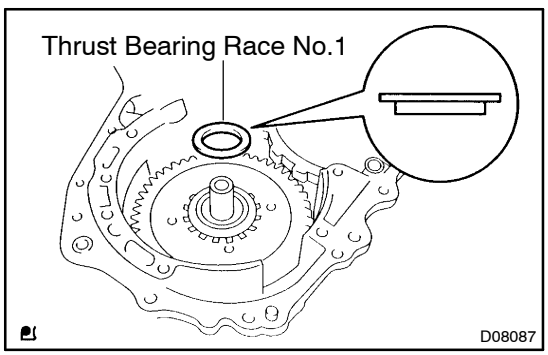

124. INSTALL MULTIPLE DISC CLUTCH CLUTCH HUB

(a) Install the thrust bearing race No.1 to the transaxle case while checking its direction.

Bearing race diameter: mm (in.)

	Inside	Outside
Bearing race	39.5 (1.555)	45.8 (1.803)

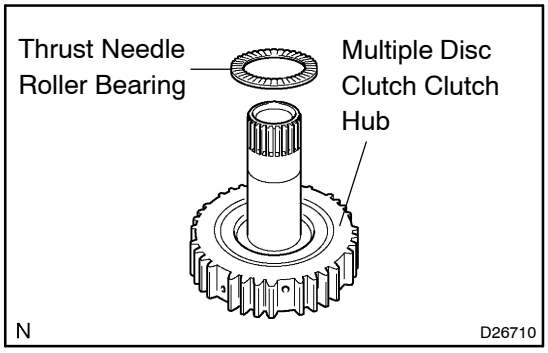

(b) Coat the thrust needle roller bearing and race with yellow petrolatum, install them onto the multiple disc clutch hub.

Thrust bearing and race diameter: mm (in.)

	Inside	Outside
Thrust Bearing	36.4 (1.433)	52.2 (2.055)

(c) Coat the needle roller bearing with ATF.

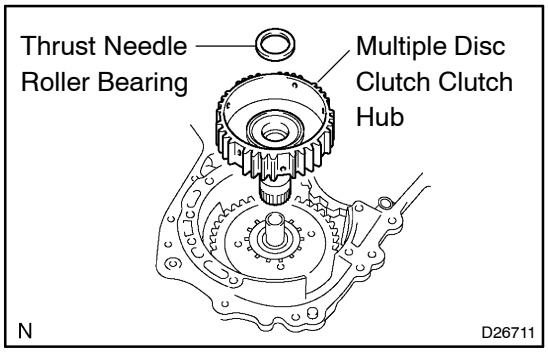

(d) Install the needle roller bearing to the multiple clutch hub.

Bearing diameter: mm (in.)

	Inside	Outside
Bearing	23.6 (0.929)	44 (1.732)

(e) Install the multiple clutch hub to the transaxle case.

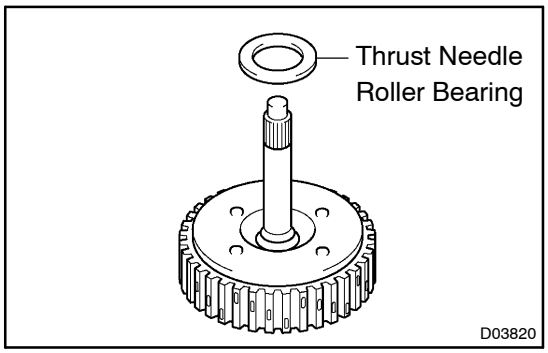

125. INSTALL FORWARD CLUTCH ASSY

(a) Coat the thrust needle roller bearing with ATF.

(b) Install the thrust needle roller bearing to the forward clutch.

Thrust bearing diameter: mm (in.)

	Inside	Outside
Thrust Bearing	33.58 (1.3220)	51.9 (2.043)

NOTICE:

Install the thrust bearing properly so that the no colored race or blue ink jet race will be visible.

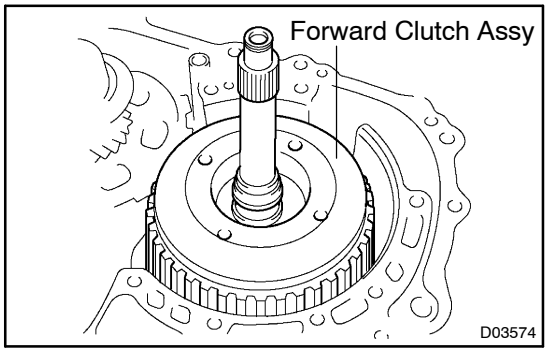

(c) Install the forward clutch to the forward clutch assy.

NOTICE:

- **Align the splines of all discs in the forward clutch with those of multiple clutch hub to assemble them securely.**
- **Be careful not to damage the bush inside of the forward clutch hub during installing.**

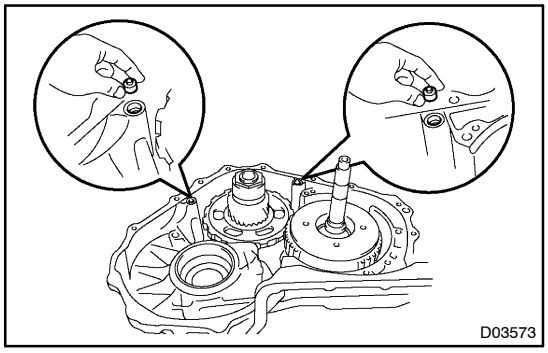

126. INSTALL OVERDRIVE BRAKE GASKET

(a) Install the 2 new overdrive brake gaskets.

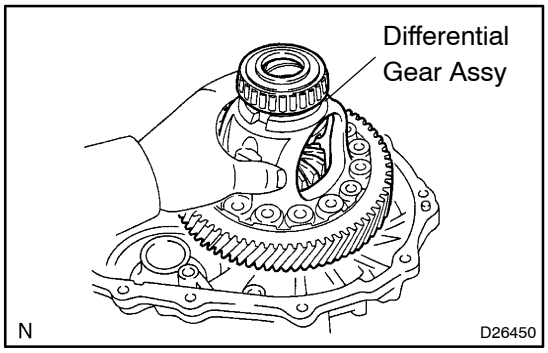

127. INSTALL DIFFERENTIAL GEAR ASSEMBLY

(a) Install the differential gear assy to the transaxle case.

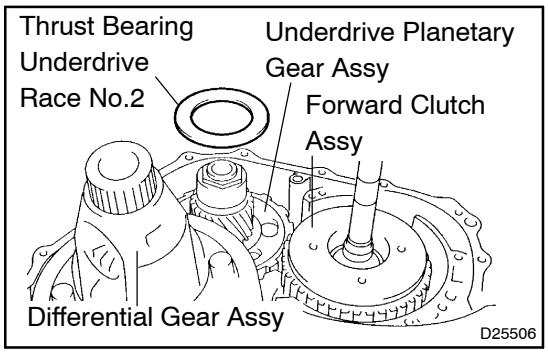

128. INSTALL THRUST BEARING UNDERDRIVE RACE NO.2

(a) Install the thrust bearing underdrive race No.2 to the underdrive planetary gear assy.

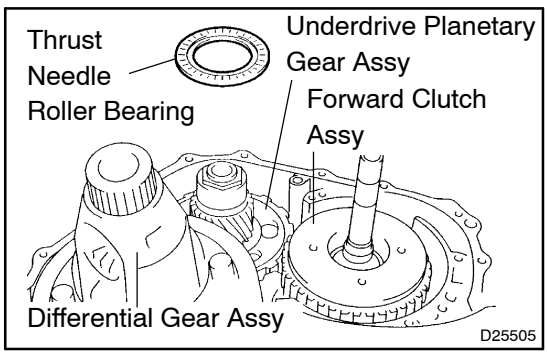

129. INSTALL THRUST NEEDLE ROLLER BEARING

(a) Coat the thrust needle roller bearing with ATF.

(b) Calculate the end play value using the following formula and values of Dimension E and F that ware measured when installing cylindrical roller bearing and underdrive planetary gear. Select an appropriate underdrive planetary gear thrust bearing race No. 2 which satisfies the specified end play value, and install it.

End play: 0.498 – 0.993 mm (0.01961 – 0.03909 in.)

HINT:

End play = Dimension F – Dimension E – thrust bearing thickness 2.5 mm (0.0984 in.) – underdrive thrust bearing race No. 2 thickness.

Race thickness: mm (in.)

F – E	Thickness
Less than 7.72 (0.3039)	3.5 (0.138)
7.72 (0.3039)	3.8 (0.150)

Bearing and bearing race diameter: mm (in.)

	Inside	Outside
Bearing	57.2 (2.252)	84.96 (3.345)
Bearing race	56.4 (2.22)	83 (3.268)

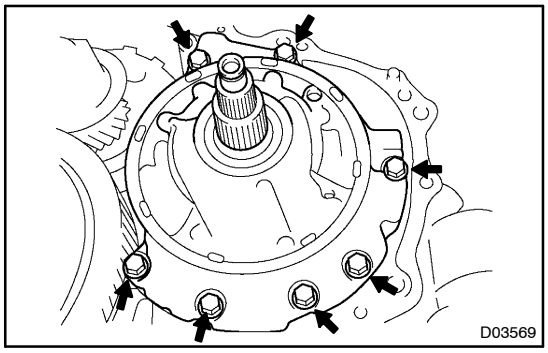

130. INSTALL OIL PUMP ASSY

(a) Install the oil pump to the transaxle case with the 7 bolts.
Torque: 22.0 N·m (226 kgf·cm, 16 ft·lbf)

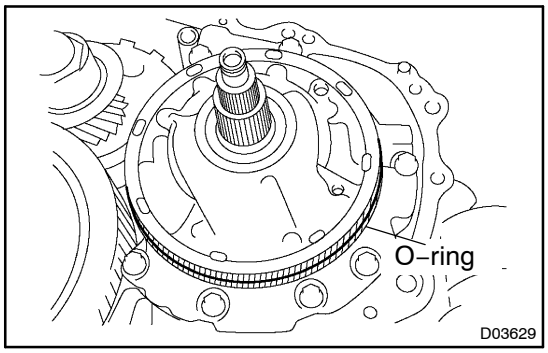

(b) Coat the O–ring of oil pump with ATF.

NOTICE:
Confirm the input shaft rotates smoothly with the manual operation after assembling the oil pump.

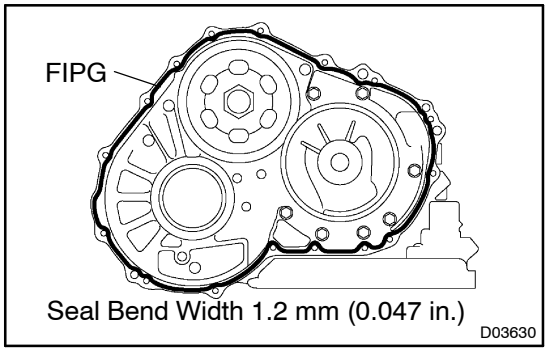

131. INSTALL TRANSAXLE HOUSING

(a) Remove any parking material and be careful not to get oil on the contacting surface of the transaxle case or transaxle housing.

(b) Apply FIPG to the transaxle case.
FIPG:
Part No. 08826–00090, THREE BOND 1281 or equivalent

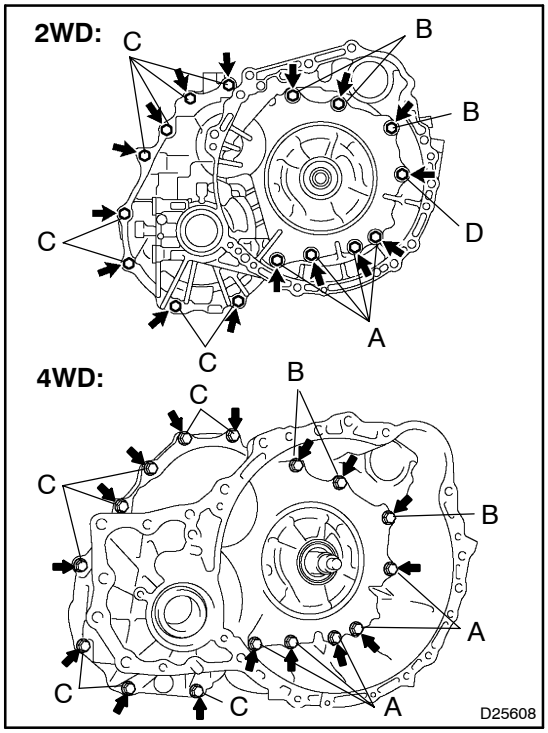

(c) Install the transaxle housing and 16 bolts to the transaxle case.

Torque:
Bolt A: 25 N·m (255 kgf·cm, 18 ft·lbf)
Bolt B: 33 N·m (337 kgf·cm, 24 ft·lbf)
Bolt C: 29 N·m (295 kgf·cm, 21 ft·lbf)
Bolt D: 22 N·m (226 kgf·cm, 16.0 ft·lbf)

HINT:
Apply seal packing or equivalent to the bolt A and D.

Seal packing:
THREE BOND 2403 or equivalent
Bolt length:
Bolt A: 50 mm (1.969 in.)
Bolt B: 50 mm (1.969 in.)
Bolt C: 42 mm (1.654 in.)
Bolt D: 72 mm (2.835 in.)

NOTICE:
Because the bolt A is a seal bolt, apply the seal packing to new bolts and tighten them within 10 minutes after application.

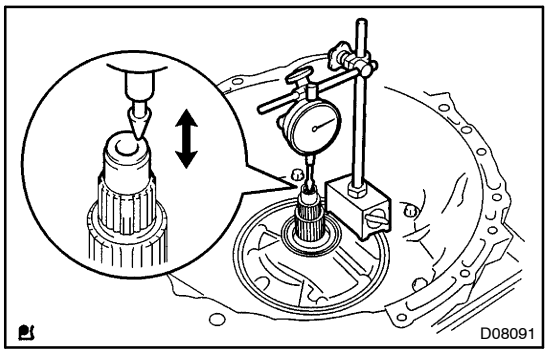

132. INSPECT INPUT SHAFT ENDPLAY

(a) Using a dial indicator, measure the input shaft end play.
End play: 0.262 – 1.249 mm (0.0100 – 0.0494 in.)

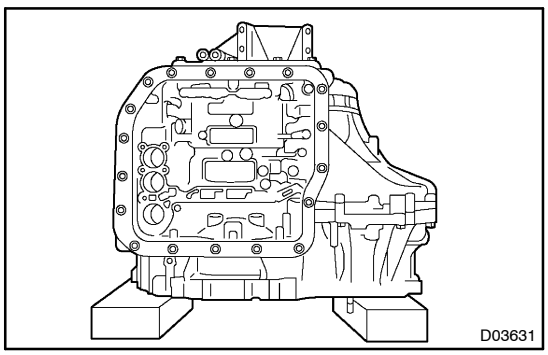

133. FIX AUTOMATIC TRANSAXLE ASSY

(a) Fix the transaxle assy.

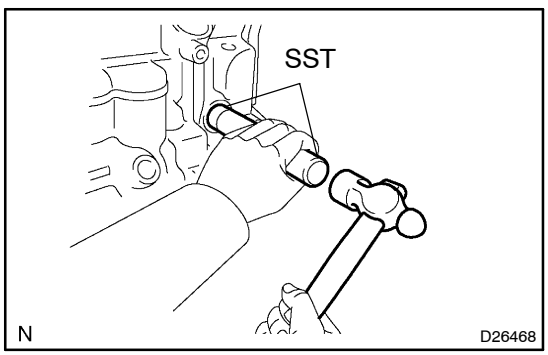

134. INSTALL MANUAL VALVE LEVER SHAFT OIL SEAL

(a) Coat a new oil seal with MP grease.
(b) Install the oil seal to the transaxle case.
SST 09950–60010 (09951–00230), 09950–70010 (09951–07100)
Oil seal drive in depth: 0 ± 0.5 mm (0 ± 0.0197 in.)

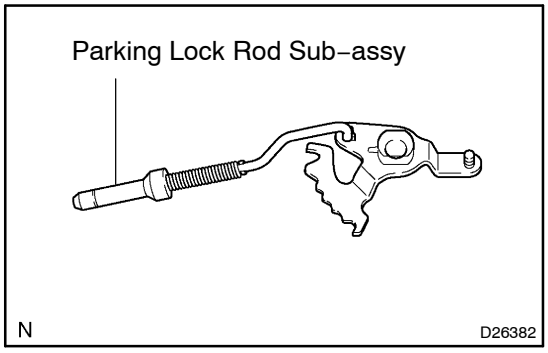

135. INSTALL PARKING LOCK ROD SUB–ASSY

(a) Install the parking lock rod to the manual valve lever.

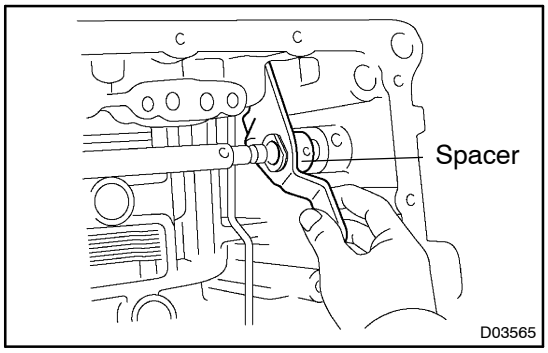

136. INSTALL MANUAL VALVE LEVER SUB–ASSY

(a) Install a new spacer and manual valve lever shaft to the transaxle case.

NOTICE:

Do not damage on the oil seal during assembling the shaft to the transaxle case.

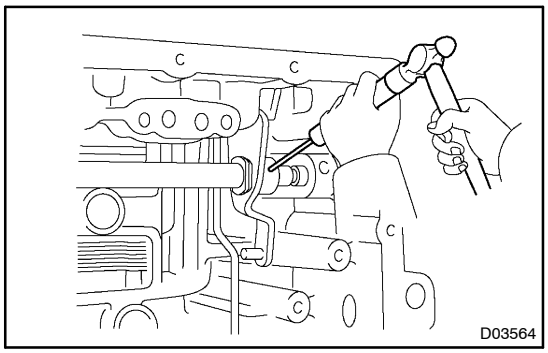

(b) Using a pin punch and hammer, drive in a new pin.

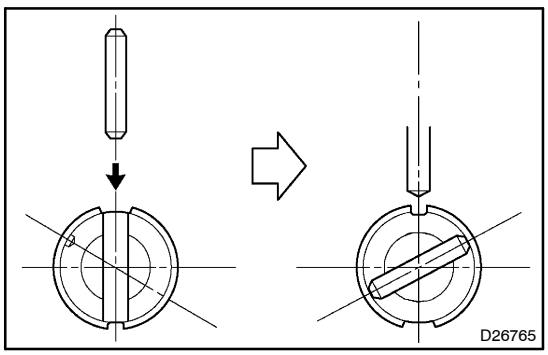

(c) Turn the spacer and the lever shaft to align the small hole for locating the staking position in the spacer with the staking position mark on the lever shaft.

(d) Using a pin punch, stake the spacer through the small hole.

(e) Check that the spacer does not turn.

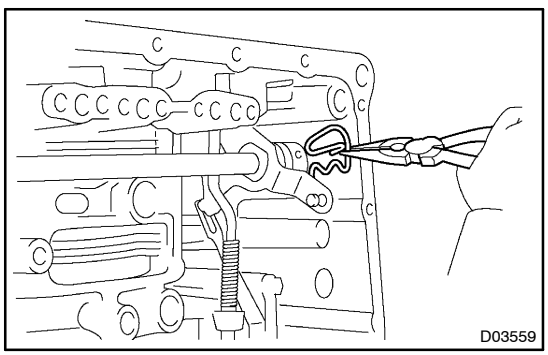

137. INSTALL MANUAL VALVE LEVER SHAFT RETAINER SPRING

(a) Using needle–nose pliers, install the retainer spring.

NOTICE:

Hang the spring on the shaft certainly.

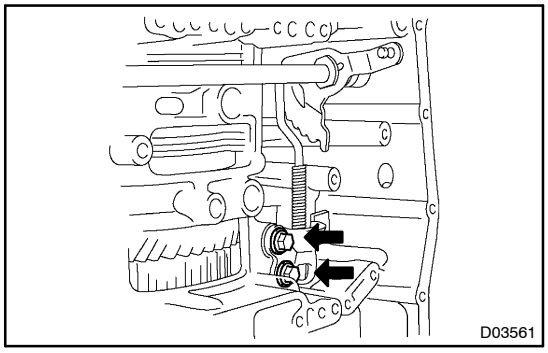

138. INSTALL PARKING LOCK PAWL BRACKET

(a) Install the parking lock pawl bracket with the 2 bolts.

Torque: 20 N·m (205 kgf·cm, 15 ft·lbf)

Bolt length: 25 mm (0.984 in.)

NOTICE:

Be sure the parking rod is placed between the parking pawl and the guide of the parking bracket when the parking bracket is assembled.

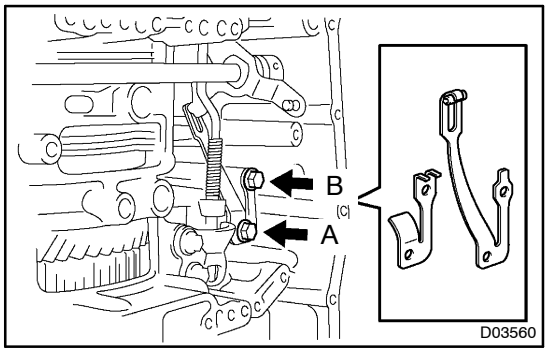

139. INSTALL MANUAL DETENT SPRING SUB–ASSY

(a) Install the manual detent spring with the 2 bolts.

NOTICE:

Make sure to install the manual detent spring and cover in this order.

HINT:

Tighten them in the order, A and B.

Torque:

Bolt A: 20 N·m (205 kgf·cm, 15 ft·lbf)

Bolt B: 12 N·m (120 kgf·cm, 9 ft·lbf)

Bolt length:

Bolt A: 27 mm (1.063 in.)

Bolt B: 16 mm (0.630 in.)

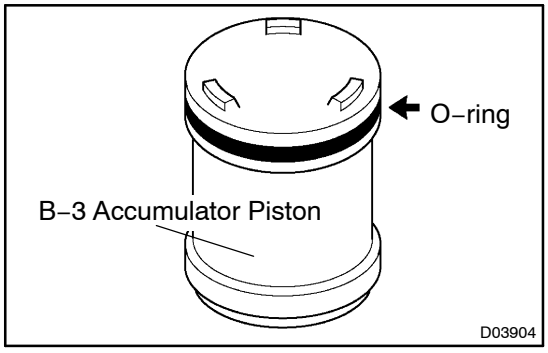

140. INSTALL B–3 ACCUMULATOR PISTON

(a) Coat a new O–ring with ATF, install it to the B–3 accumulator piston.

NOTICE:

Install the O–ring to the accumulator piston and the accumulator sleeve not to have a twist and a protrusion. Moreover, apply enough ATF prior to assembling. Be sure to the installed position.

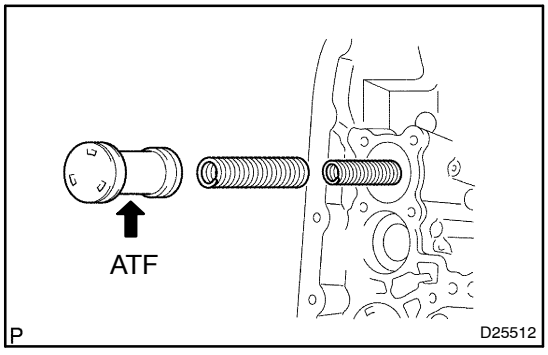

(b) Coat the piston with ATF, install it to the transaxle case.

NOTICE:

Install the springs to each accumulator piston with checking of the identification color or each spring.

Accumulator spring:

Free length Outer diameter mm (in.)	Color
Inner 62.00 (2.4409) / 15.50 (0.610)	Purple
Outer 74.23 (2.9224) / 21.70 (0.854)	Purple

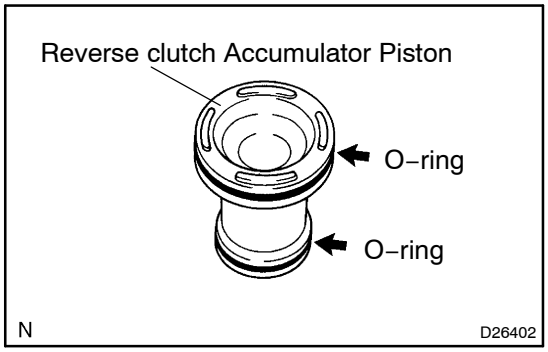

141. INSTALL REVERSE CLUTCH ACCUMULATOR PISTON

(a) Coat the 2 new O–rings with ATF, install them to the reverse accumulator piston.

NOTICE:

Install the O–ring to the accumulator piston and the accumulator sleeve not to have a twist and a protrusion. Moreover, apply enough ATF prior to assembling. Be sure to the installed position.

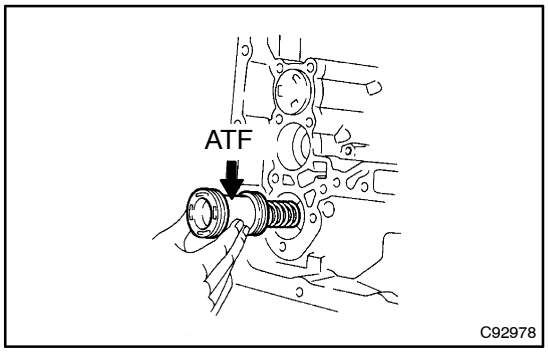

(b) Coat the piston with ATF, install it to the transaxle case.

NOTICE:

Install the springs to each accumulator piston with checking of the identification color or each spring.

Accumulator spring:

Free length Outer diameter mm (in.)	Color
60.96 (2.3999) / 14.10 (0.555)	Yellow

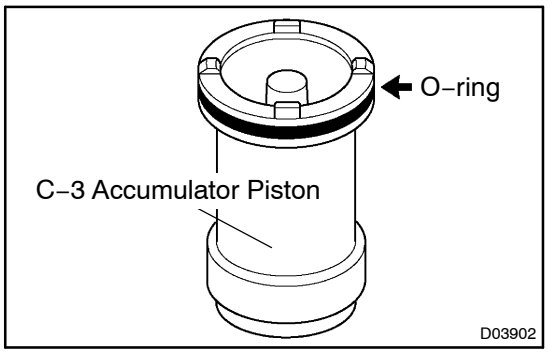

142. INSTALL C–3 ACCUMULATOR PISTON

(a) Coat a new O–ring with ATF, install it to the C–3 accumulator piston.

NOTICE:

Install the O–ring to the accumulator piston and the accumulator sleeve not to have a twist and a protrusion. Moreover, apply enough ATF prior to assembling. Be sure to the installed position.

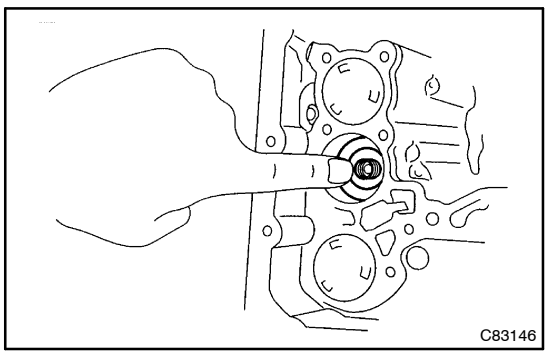

(b) Coat the piston with ATF, install it to the transaxle case.

NOTICE:

Install the springs to each accumulator piston with checking of the identification color or each spring.

Accumulator spring:

Free length Outer diameter mm (in.)	Color
72.20 (2.8425) / 19.0 (0.748)	Colorless

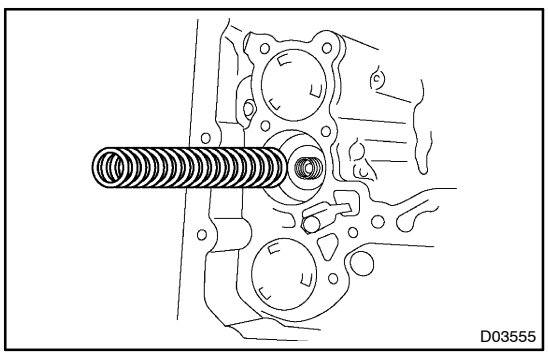

(c) Install the spring from the C–3 accumulator piston.

NOTICE:

Install the springs to each accumulator piston with checking of the identification color or each spring.

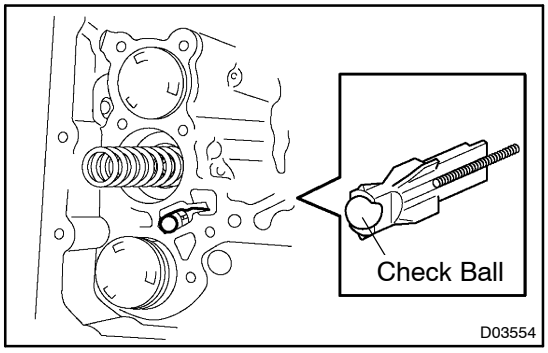

143. INSTALL CHECK BALL BODY

(a) Coat the check ball body with ATF.

(b) Install the check ball body and spring.

NOTICE:

Regarding the installation of the spring for the check ball body, be sure to place the spring in the hole in the ball body. Be careful about the parts orientation.

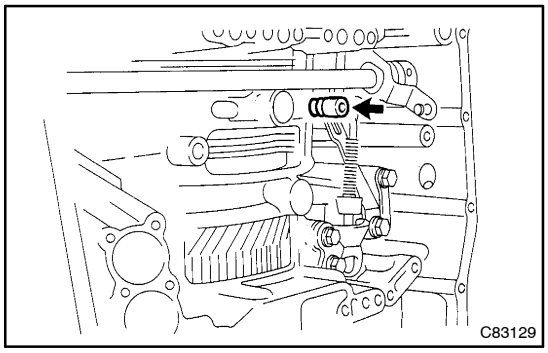

144. INSTALL BRAKE DRUM GASKET

(a) Coat a new brake drum gasket with ATF, install it to the transaxle case.

NOTICE:

Be sure not to damage the lip portion of the transaxle case brake gasket when inserting the gasket to the case. Moreover, apply enough ATF to the gasket prior to assembling. Also, be careful about the parts orientation.

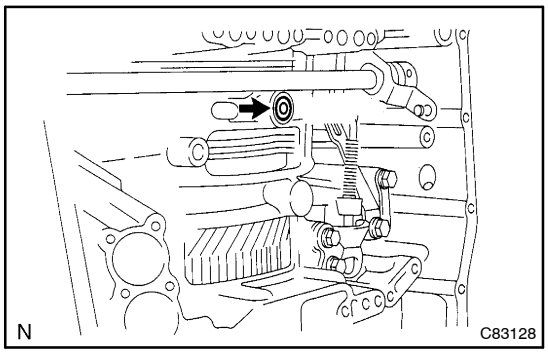

145. INSTALL TRANSAXLE CASE 2ND BRAKE GASKET

(a) Coat a new transaxle case 2nd brake gasket with ATF, install it to the transaxle case.

NOTICE:

Be sure not to damage the lip portion of the transaxle case brake gasket when inserting the gasket to the case. Moreover, apply enough ATF to the gasket prior to assembling. Also, be careful about the parts orientation.

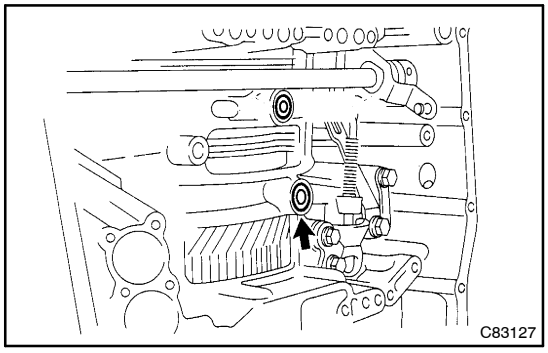

146. INSTALL GOVERNOR APPLY GASKET NO.1

(a) Coat a new governor apply gasket No. 1 with ATF, install it to the transaxle case.

NOTICE:

Be sure not to damage the lip portion of the transaxle case brake gasket when inserting the gasket to the case. Moreover, apply enough ATF to the gasket prior to assembling. Also, be careful about the parts orientation.

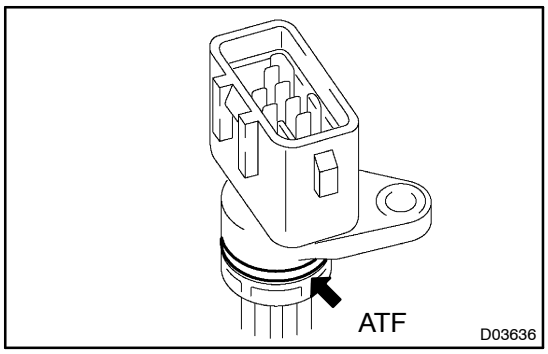

147. INSTALL TRANSMISSION WIRE

(a) Coat a new O–ring with ATF, install it to the transmission wire.

NOTICE:

Be careful about the O–ring not to have a twist, a protrusion and a pinching during installing the wire transmission to the transaxle case. Moreover, apply enough ATF to the O–ring prior to assembling.

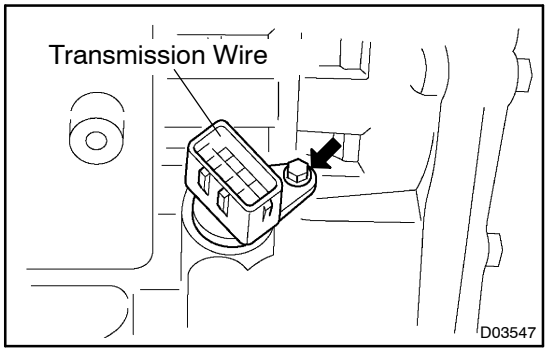

(b) Install the transmission wire retaining bolt.
Torque: 5.4 N·m (55 kgf·cm, 48 in.·lbf)

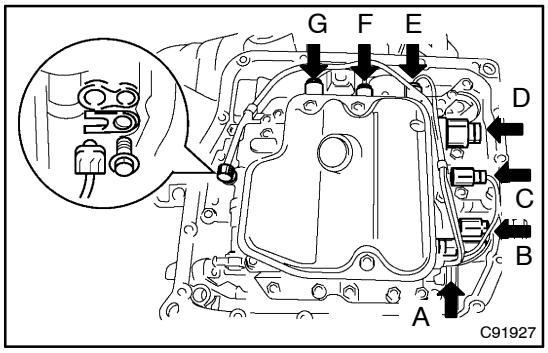

148. CONNECT TRANSMISSION WIRE

(a) Coat a O–ring of the ATF temperature sensor with ATF.

(b) Install the ATF temperature sensor, with the lock plate and bolt.
Torque: 6.6 N·m (67 kgf·cm, 58 in.·lbf)

(c) Connect the 7 solenoid connectors.

NOTICE:

- **Connect the connector to A, B, C, D, E, F, G, from shorter one.**
- **Apply ATF to the bolt.**

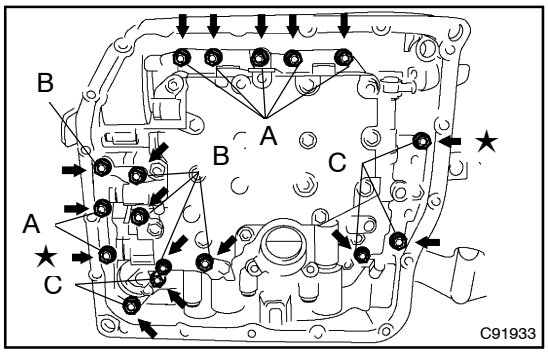

149. INSTALL TRANSMISSION VALVE BODY ASSY

(a) Make sure that the manual valve lever position, install the valve body with 17 bolts to the transaxle case.
Torque: 11 N·m (110 kgf·cm, 8 ft·lbf)
Bolt length:
Bolt A: 41 mm (1.614 in.)
Bolt B: 57 mm (2.244 in.)
Bolt C: 25 mm (0.984 in.)

NOTICE:

- **Push the valve body against the accumulator piston spring and the check ball body to install it.**
- **When installing the valve body to the transaxle case, do not hold the solenoids.**
- **Tighten temporarily those bolts marked by ★ in the illustration first because they are positioning bolts.**

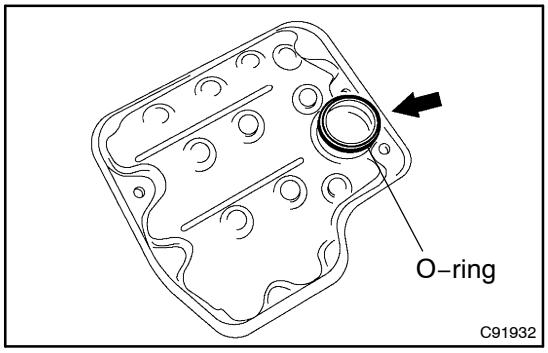

150. INSTALL VALVE BODY OIL STRAINER ASSY

(a) Coat a new O–ring with ATF, install it to the oil strainer.

NOTICE:

Assemble the O–ring carefully not to have a twist and a pinching. Moreover, apply enough ATF to the O–ring prior to assembling.

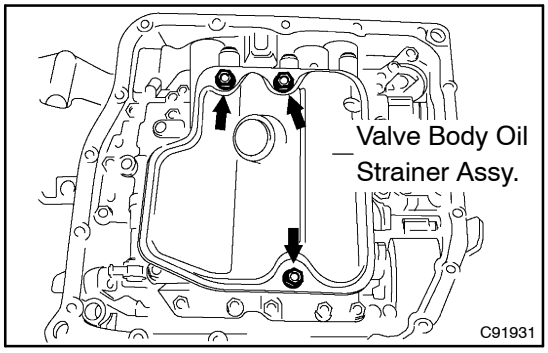

(b) Install the oil strainer and 3 bolts to the valve body.
Torque: 11 N·m (110 kgf·cm, 8 ft·lbf)

NOTICE:
Apply ATF to the bolts.

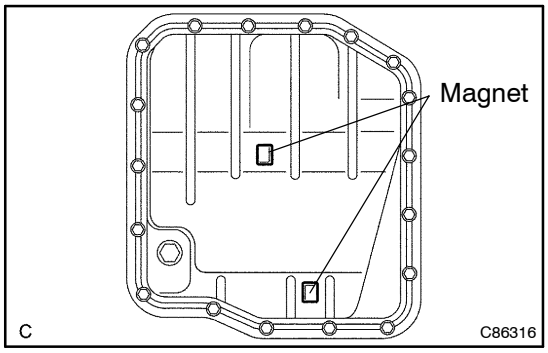

151. INSTALL AUTOMATIC TRANSAXLE OIL PAN SUB–ASSY

(a) Install the 2 magnets in the oil pan.
(b) Apply seal packing or equivalent to new 18 bolts.
Seal packing:
THREE BOND 2430 or equivalent

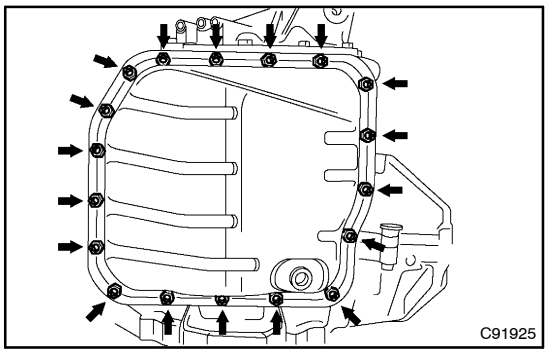

(c) Install the new oil pan gasket with the 18 bolts to the transaxle case.
Torque: 7.8 N·m (80 kgf·cm, 69 in.·lbf)

NOTICE:
- **Because the bolts should be seal bolts, apply seal packing to new bolts and tighten them within 10 minutes after application.**
- **Remove any oil or grease from the contacting surface of the transaxle case and the oil pan with the gasket completely before the oil pan to the case.**

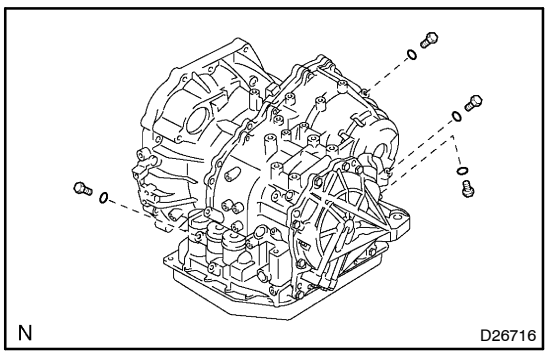

152. INSTALL TRANSAXLE CASE NO.1 PLUG

(a) Coat the 4 new O–rings with ATF, install them to the 4 transaxle case No. 1 plugs.
(b) Install the 4 transaxle case No. 1 plugs to the transaxle case.
Torque: 7.4 N·m (75 kgf·cm, 65 in.·lbf)

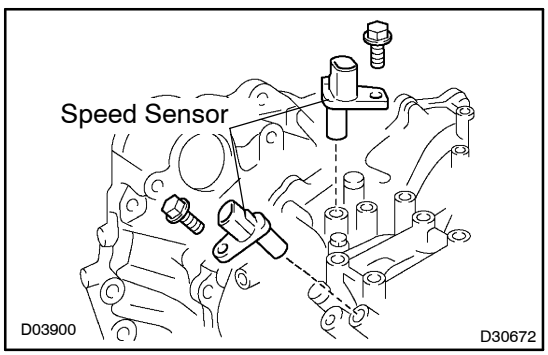

153. INSTALL SPEED SENSOR

(a) Install them to the 2 sensors.
(b) Install the 2 sensors to the transaxle case with the 2 bolts.
Torque: 11.0 N·m (115 kgf·cm, 8 ft·lbf)

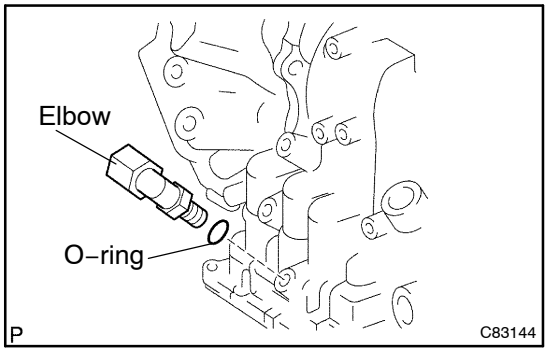

154. INSTALL OIL COOLER TUBE UNION (OUTLET OIL COOLER UNION)

(a) Coat a new O–ring with ATF, install it to the elbow.

(b) Install the elbow to the transaxle case.
Torque: 27 N·m (276 kgf·cm, 20 ft·lbf)

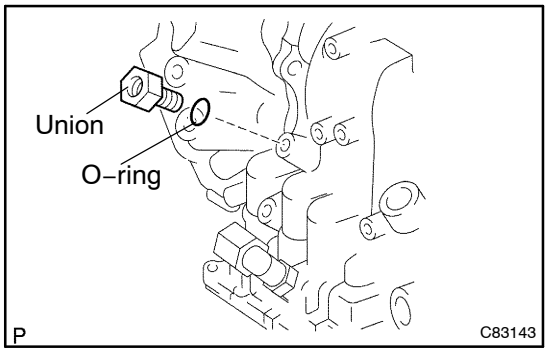

155. INSTALL OIL COOLER TUBE UNION (INLET OIL COOLER UNION)

(a) Coat a new O–ring with ATF, install it to the union.

(b) Install the union to the transaxle case.
Torque: 25 N·m (255 kgf·cm, 18 ft·lbf)

156. INSTALL BREATHER PLUG HOSE

(a) Install the breather plug hose into the transaxle case certainly.

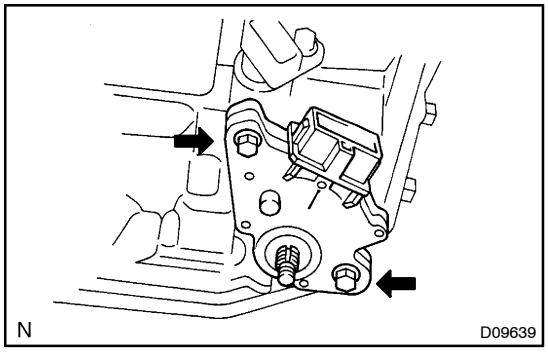

157. INSTALL PARK/NEUTRAL POSITION SWITCH ASSY

(a) Install the park/neutral position switch onto the manual valve lever shaft and temporarily install the 2 adjusting bolts.

(b) Install a new nut stopper and nut.
Torque: 6.9 N·m (70 kgf·cm, 61 in.·lbf)

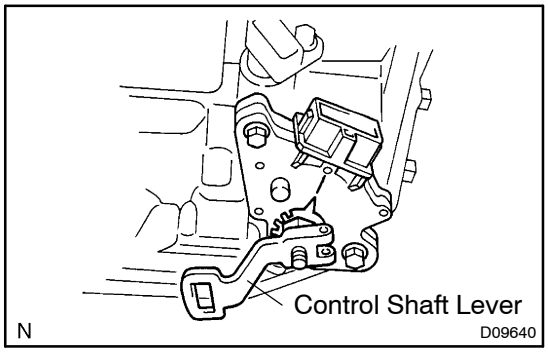

(c) Temporarily install control shaft lever.

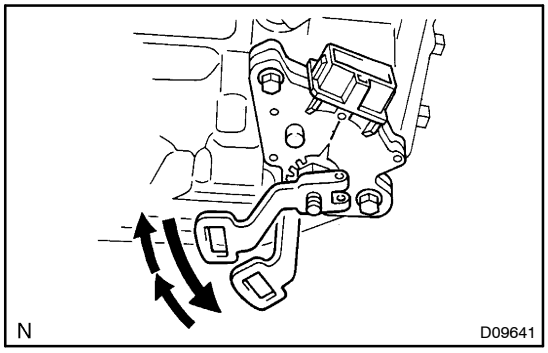

(d) Turn the lever counterclockwise until it stops, and then turn it clockwise 2 notches.
(e) Remove the control shaft lever.

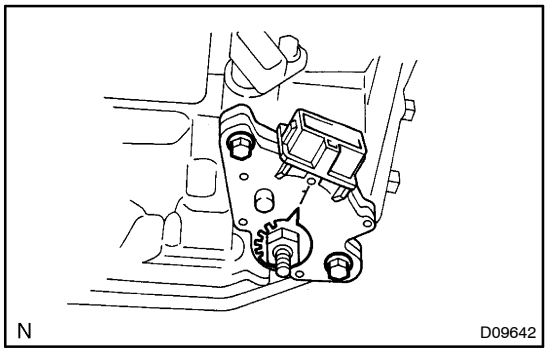

(f) Align the groove with neutral basic line.
(g) Tighten the 2 bolts.
Torque: 5.4 N·m (55 kgf·cm, 48 in.·lbf)

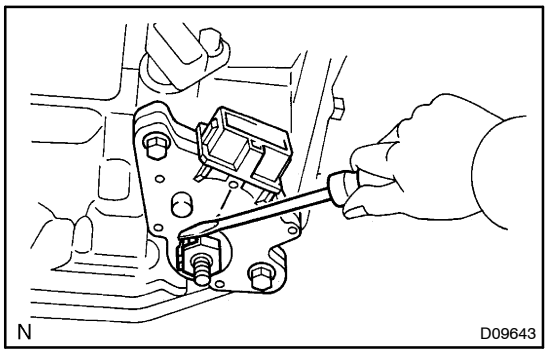

(h) Using a screwdriver, stake the nut with the nut stopper.

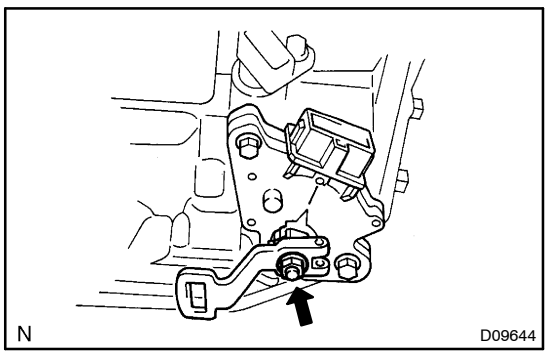

(i) Install the control shaft lever, washer and nut.
Torque: 13 N·m (130 kgf·cm, 9 ft·lbf)

158. INSTALL SPEEDOMETER DRIVEN HOLE (ATM) COVER SUB–ASSY

(a) Coat a new O–ring with ATF and install it to the speedometer driven hole cover.
(b) Install the bolt and speedometer driven hole cover sub–assy to the transaxle assy.
Torque: 6.9 N·m (70 kgf·cm, 61 ft·lbf)

OIL PUMP ASSY (U151E/U151F)

OVERHAUL

4006F–03

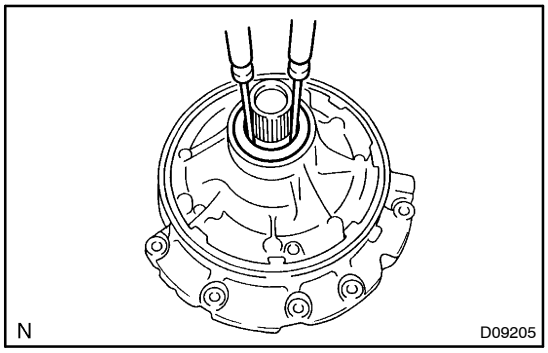

1. INSPECT OIL PUMP ASSY

(a) Turn the drive gear with 2 screwdrivers and make sure it rotates smoothly.

NOTICE:

Be careful not to damage the oil seal lip.

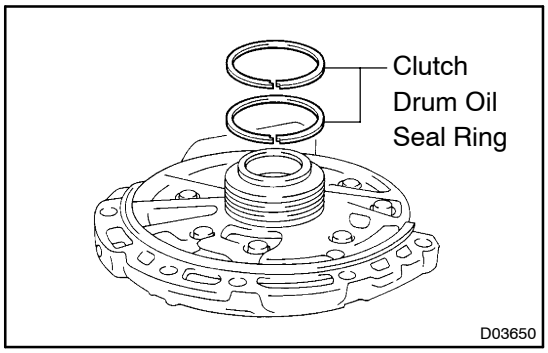

2. REMOVE CLUTCH DRUM OIL SEAL RING

(a) Remove the 2 clutch drum oil seal rings.

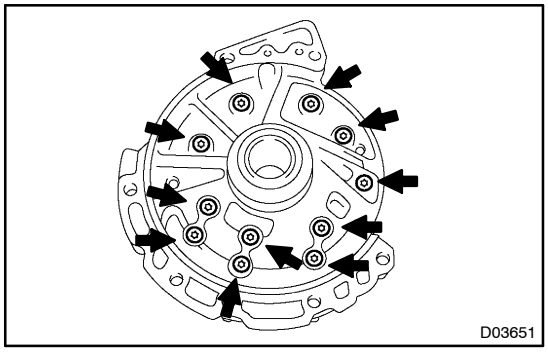

3. REMOVE STATOR SHAFT ASSY

(a) Using a torx socket (T30), remove the 11 bolts and stator shaft.

(b) Keep the gears in assembling order.

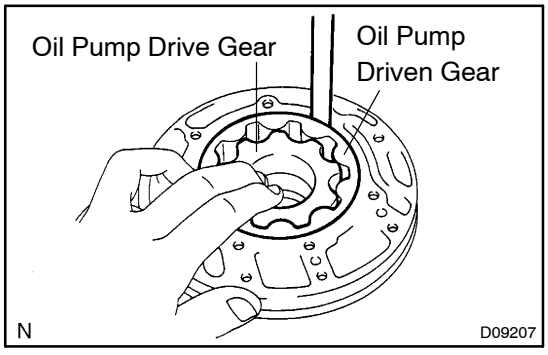

4. INSPECT CLEARANCE OF OIL PUMP ASSEMBLY

(a) Push the driven gear to one side of the body.

(b) Using a feeler gauge, measure the clearance.

Standard body clearance:

0.10 – 0.17 mm (0.0039 – 0.0067 in.)

Side clearance: 0.02 – 0.05 mm (0.001 – 0.02 in.)

Maximum body clearance: 0.17 mm (0.0067 in.)

If the body clearance is greater than the maximum, replace the oil pump body sub–assy.

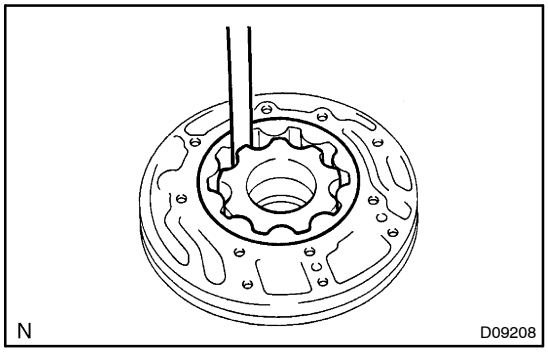

(c) Using a feeler gauge measure the tip clearance between the driven gear teeth and drive gear teeth.

Standard tip clearance:
0.07 – 0.15 mm (0.0028 – 0.0059 in.)
Maximum tip clearance: 0.15 mm (0.0059 in.)

If the tip clearance is greater than the maximum, replace the oil pump body sub–assy.

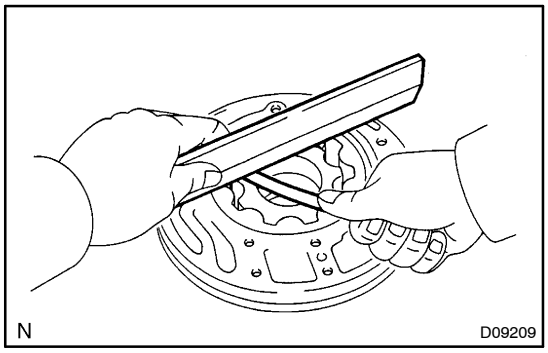

(d) Using a straight edge and feeler gauge, measure the side clearance of both gears.

Standard side clearance:
0.02 – 0.05 mm (0.0008 – 0.0020 in.)
Maximum side clearance: 0.05 mm (0.0020 in.)

Drive gear thickness: mm (in.)

Mark	Thickness
A	11.690 – 11.699 (0.4602 – 0.4606)
B	11.700 – 11.709 (0.4606 – 0.4610)
C	11.710 – 11.720 (0.4610 – 0.4614)
D	11.721 – 11.730 (0.4615 – 0.4618)
E	11.731 – 11.740 (0.4619 – 0.4622)

Driven gear thickness: mm (in.)

Mark	Thickness
A	11.690 – 11.699 (0.4602 – 0.4606)
B	11.700 – 11.709 (0.4606 – 0.4610)
C	11.710 – 11.720 (0.4610 – 0.4614)
D	11.721 – 11.730 (0.4615 – 0.4618)
E	11.731 – 11.740 (0.4619 – 0.4622)

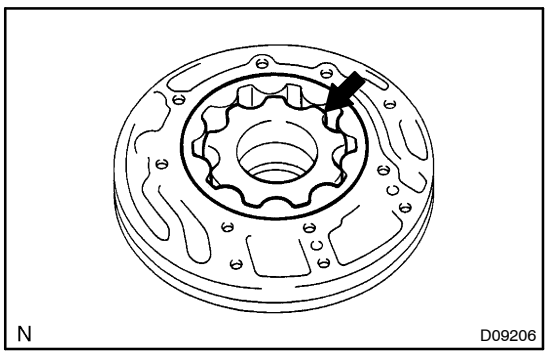

5. REMOVE FRONT OIL PUMP DRIVE GEAR

(a) Remove the front oil pump drive gear.

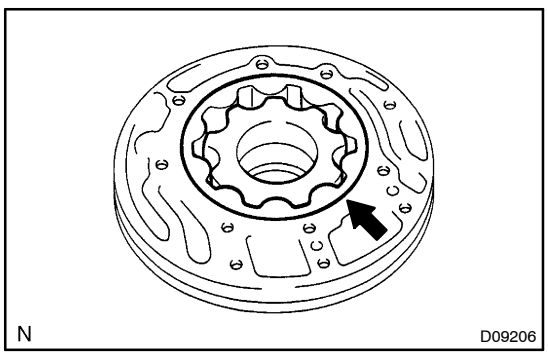

6. REMOVE FRONT OIL PUMP DRIVEN GEAR

(a) Remove the front oil pump driven gear.

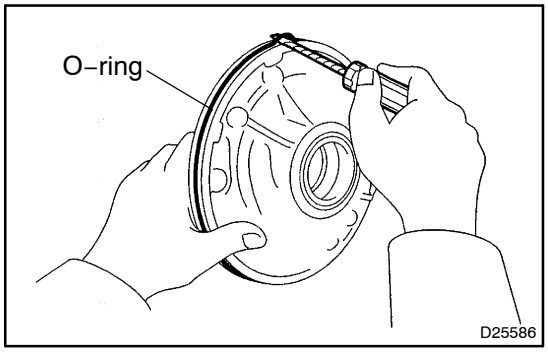

7. REMOVE FRONT OIL PUMP BODY O–RING

(a) Using a screwdriver, remove the O–ring.

HINT:

Tape the screwdriver before use.

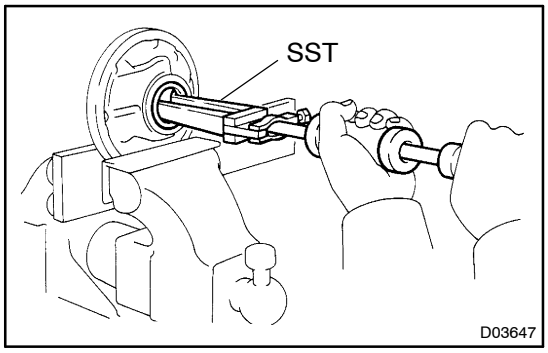

8. REMOVE FRONT OIL PUMP OIL SEAL

(a) Mount oil pump in a soft jaw vise.

(b) Using SST, remove the oil seal from the oil pump body.

SST 09308–00010

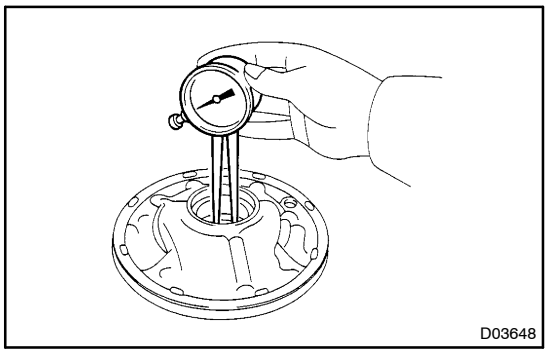

9. INSPECT FR OIL PUMP & GEAR BODY SUB–ASSY

(a) Using a dial indicator, measure the inside diameter of the oil pump body bushing.

Standard inside diameter:

38.113 – 38.138 mm (1.50051 – 1.50149 in.)

Maximum inside diameter: 38.188 mm (1.50346 in.)

If the inside diameter is greater than the maximum, replace the oil pump body sub–assy.

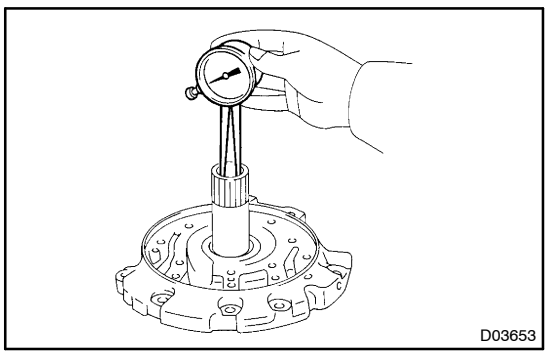

10. INSPECT STATOR SHAFT ASSY

(a) Using a dial indicator, measure the inside diameter of the stator shaft.

Standard inside diameter:

21.500 – 21.526 mm (0.84646 – 0.84748 in.)

Maximum inside diameter: 21.57 mm (0.8492 in.)

If the indicator diameter is greater than maximum, replace the stator shaft.

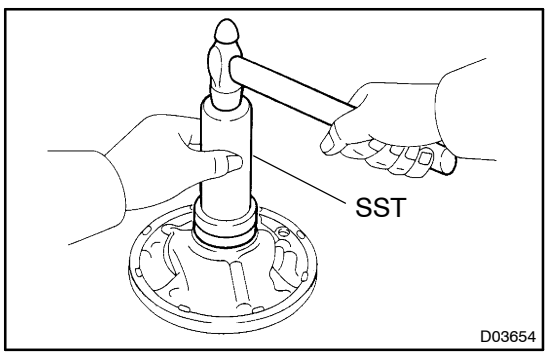

11. INSTALL FRONT OIL PUMP OIL SEAL

(a) Using SST and a hammer, install a new oil seal to the oil pump body.

SST 09350–32014 (09351–32140)

HINT:

The seal end should be flat with the outer edge of the oil pump.

(b) Coat the lip of the oil seal with MP grease.

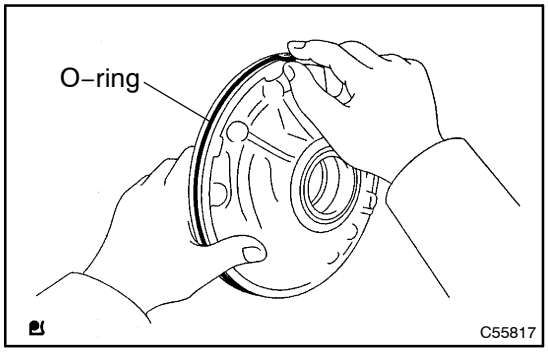

12. INSTALL FRONT OIL PUMP BODY O–RING

(a) Coat the new O–ring with ATF, install it to the oil pump body.

NOTICE:

Assemble the O–ring carefully not to have a twist and a pinching. Moreover, apply enough ATF to the O–ring prior to assembling.

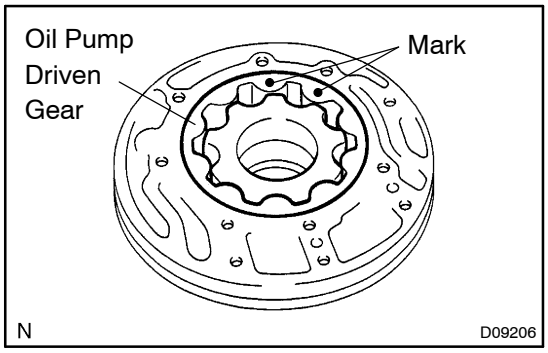

13. INSTALL FRONT OIL PUMP DRIVEN GEAR

(a) Coat the front oil pump driven gear with ATF, install it to the oil pump body with the marked side up.

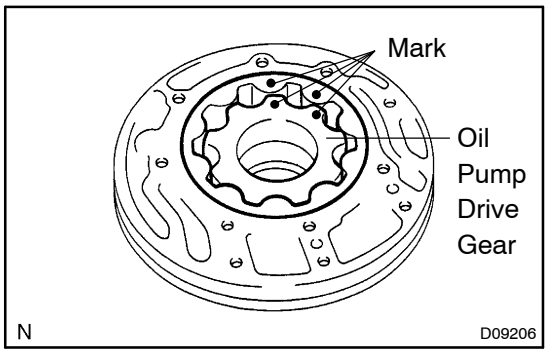

14. INSTALL FRONT OIL PUMP DRIVE GEAR

(a) Coat the front oil pump drive gear with ATF, install it to the oil pump body with the marked side up.

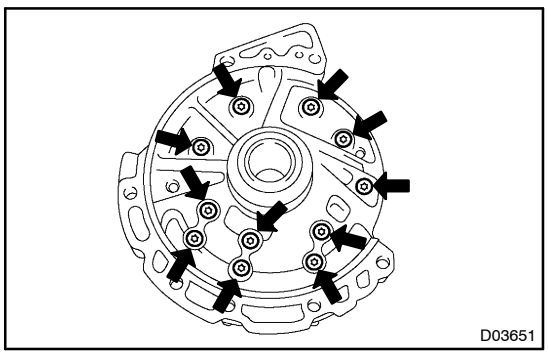

15. INSTALL STATOR SHAFT ASSY

(a) Set the stator shaft aligned with each bolt hole.

(b) Using a torx socket (T30), install the 11 bolts.

Torque: 9.8 N·m (100 kgf·cm, 87 in.·lbf)

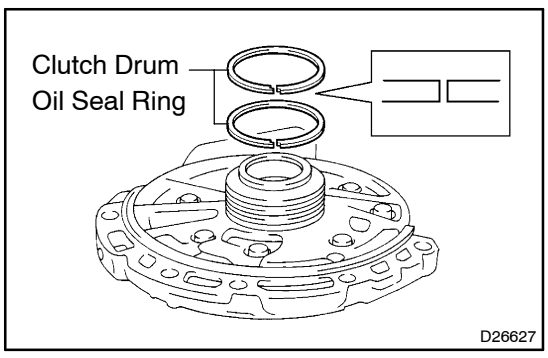

16. INSTALL CLUTCH DRUM OIL SEAL RING

(a) Coat the 2 new clutch drum oil seal rings with ATF.

(b) Install the 2 new clutch drum oil seal rings.

NOTICE:

Do not expand the ring ends excessively.

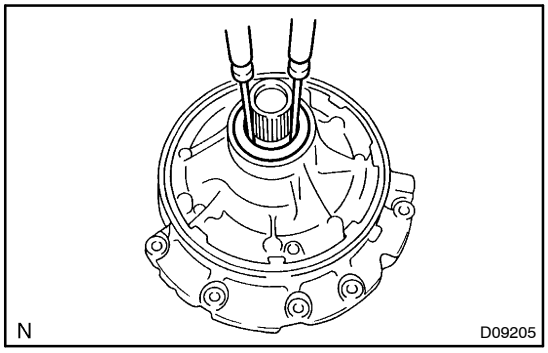

17. INSPECT OIL PUMP ASSY

(a) Turn the drive gear with 2 screwdrivers and make sure it rotates smoothly.

NOTICE:

Be careful not to damage the oil seal lip.

FORWARD CLUTCH ASSY (U151E/U151F)

400H1-02

OVERHAUL

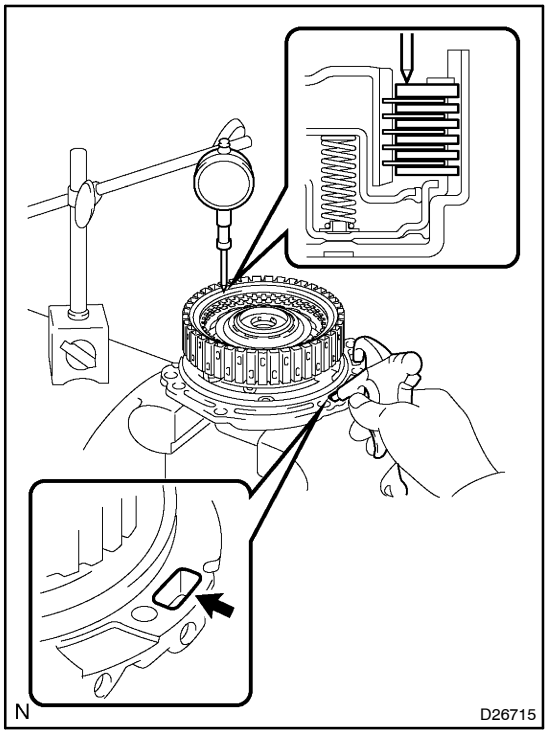

1. INSPECT PACK CLEARANCE OF FORWARD CLUTCH

(a) Install the forward clutch on the oil pump.

NOTICE:

Be careful not to damage the oil seal ring of oil pump.

(b) Using a dial indicator, measure the forward clutch pack clearance while applying and releasing compressed air (392 kPa, 4.0 kgf/cm^2, 57 psi).

Pack clearance: 1.00 – 1.25 mm (0.0394 – 0.4921 in.)

If the clearance is not within standard, inspect the discs, plates and flange.

HINT:

As the opening is large, cover it with a shop rug to prevent the compressed air from being released.

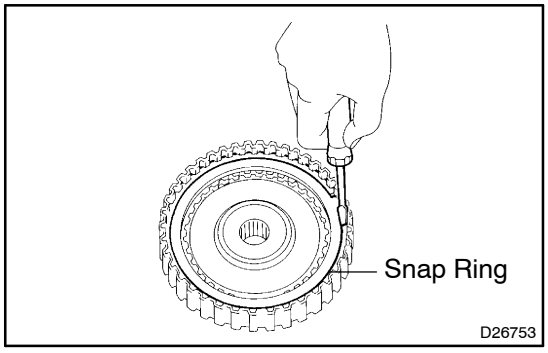

2. REMOVE FORWARD MULTIPLE DISC CLUTCH CLUTCH DISC

(a) Using a screwdriver, remove the snap ring.

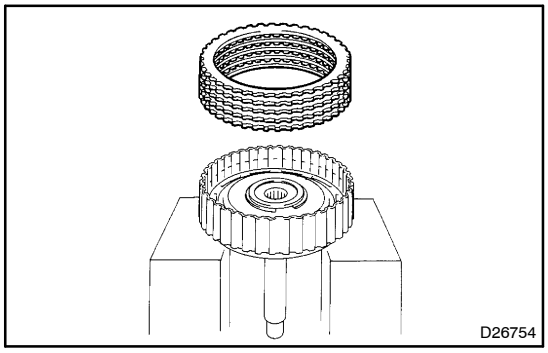

(b) Remove the flange, 5 discs and 5 plates from the input shaft assy.

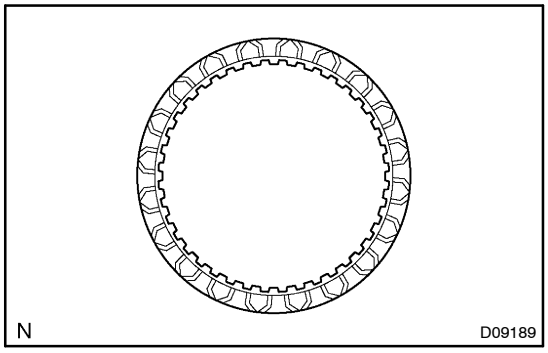

3. INSPECT FORWARD MULTIPLE DISC CLUTCH CLUTCH DISC

(a) Check to see if the sliding surface of the disc, plate and flange are worn or burnt.

If necessary, replace them.

HINT:

- If the lining of the disc comes off or discolors, or even if replace all discs.
- Before assembling new discs, soak them in ATF for at least 15 minutes.

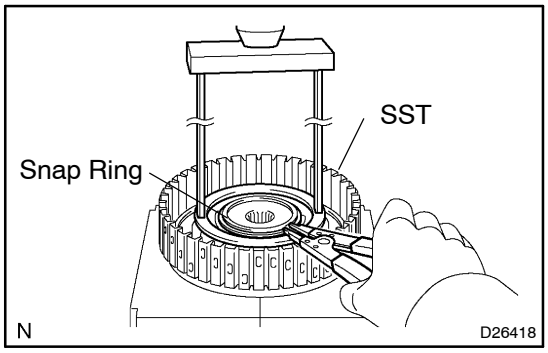

4. REMOVE FORWARD CLUTCH RETURN SPRING SUB–ASSY

(a) Place SST on the spring retainer and compress the return spring with a press.

SST 09387–00020

(b) Using a snap ring expander, remove the snap ring.

NOTICE:

- **Stop the press when the spring sheet is lowered 1 – 2 mm (0.039 – 0.078 in.) from the snap ring groove, preventing the spring sheet from deforming.**
- **Do not expand the snap ring excessively.**

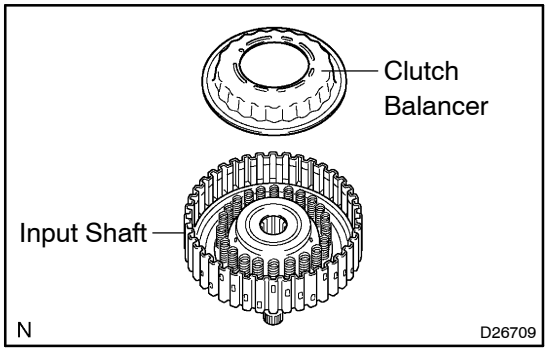

(c) Remove the clutch balancer from the input shaft.

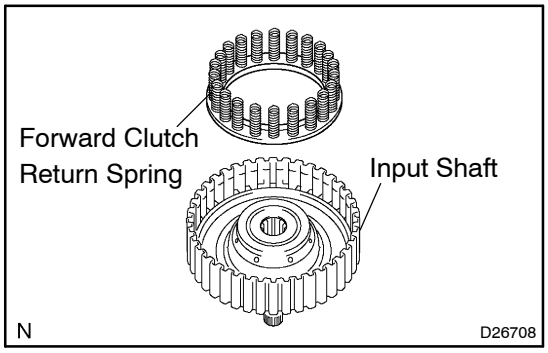

(d) Remove the forward clutch return spring from the input shaft.

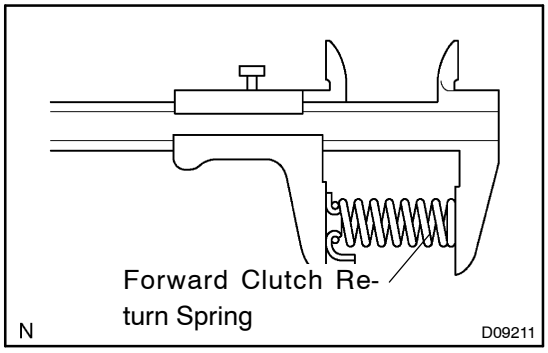

5. INSPECT FORWARD CLUTCH RETURN SPRING SUB–ASSY

(a) Using vernier calipers, measure the free length of the spring together with the spring seat.
Standard free length: 26.74 mm (1.0528 in.)

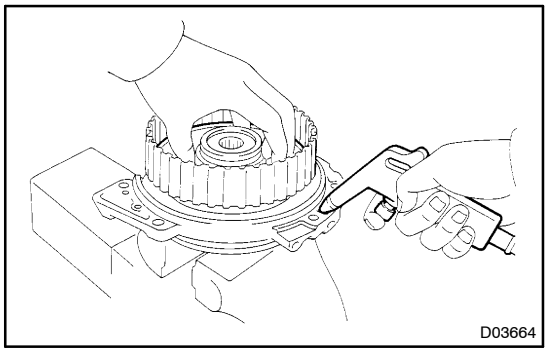

6. REMOVE FORWARD CLUTCH PISTON SUB–ASSY

(a) Place the forward clutch drum onto the oil pump.
(b) Holding the forward clutch piston by hand, apply compressed air (392 kPa, 4.0 kgf/cm^2, 57 psi) to the oil pump to remove the forward clutch piston.

HINT:
When the piston cannot be removed as it is slanted, either blow the air again with the protruding side pushed, or remove the piston using the needle nose plier with vinyl tape on the tip.

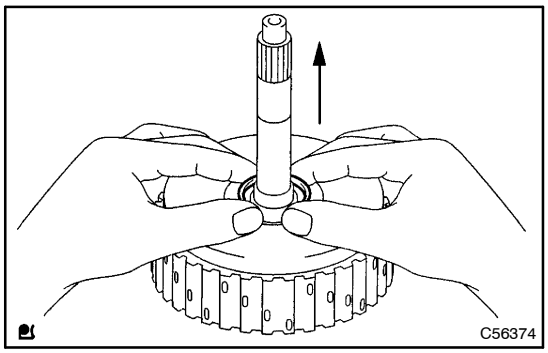

7. REMOVE INPUT SHAFT OIL SEAL RING

(a) Remove the input shaft oil seal ring to the input shaft.

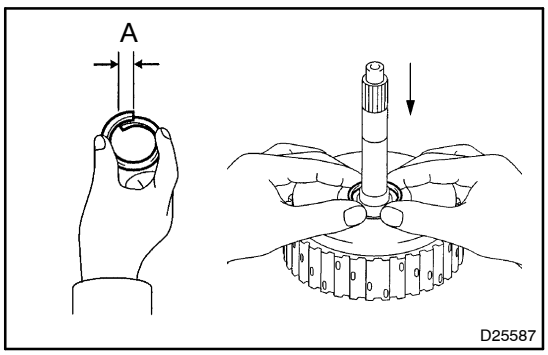

8. INSTALL INPUT SHAFT OIL SEAL RING

(a) Compress the new input shaft oil seal ring from both sides to reduce dimension A.
Dimension A: 5 mm (0.197 in.)
(b) Coat the oil seal ring with ATF and install it to the input shaft.

NOTICE:
Do not expand the gap of the oil seal ring too much. Fix the hooks certainly.

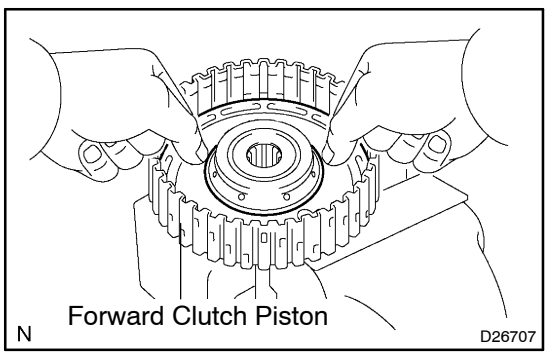

9. INSTALL FORWARD CLUTCH PISTON SUB–ASSY

(a) Coat the forward clutch piston with ATF, and install it to the input shaft.

NOTICE:
Be careful not to damage the lip seal of the forward clutch piston.

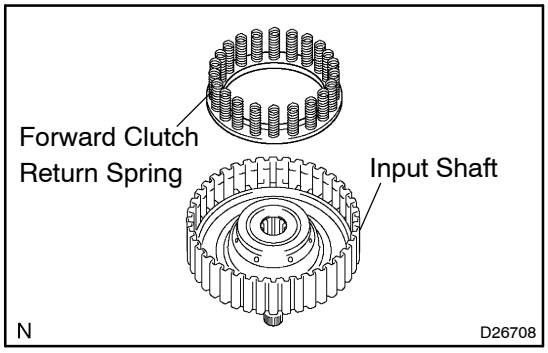

10. INSTALL FORWARD CLUTCH RETURN SPRING SUB–ASSY

(a) Install the return spring to the input shaft.

NOTICE:

Installing the spring sub–assembly, check all of the springs are fit in the piston correctly.

(b) Coat the clutch balancer with ATF.

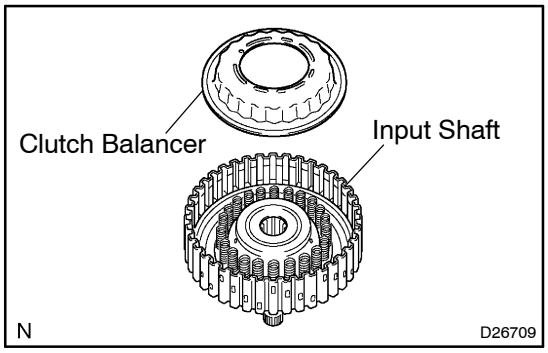

(c) Install the clutch balancer to the input shaft.

NOTICE:

- **Be careful not to damage the lip seal of the forward clutch balancer.**
- **Install the clutch balancer carefully not to have a pinching and any other defects at the sealing lip.**
- **Apply enough ATF to the sealing lip prior to assembling.**

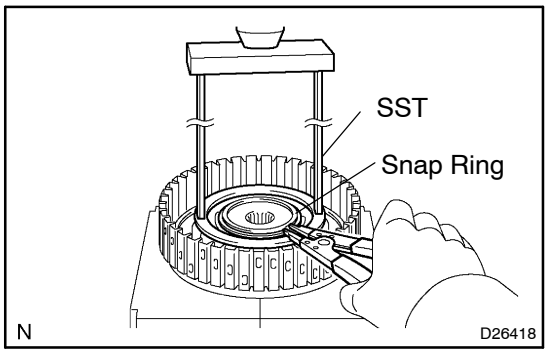

(d) Place SST on the clutch balancer, and compress the clutch balancer with a press.
SST 09387–00020

(e) Install the snap ring with a snap ring expander.

(f) Be sure the end gap of the snap ring is not aligned with the spring retainer claw.

NOTICE:

- **Stop the press when the spring sheet is lowered to the place 1 – 2 mm (0.039 – 0.078 in.) from the snap ring groove.**
- **This prevents the spring sheet from being deformed.**
- **Do not expand the snap ring excessively.**

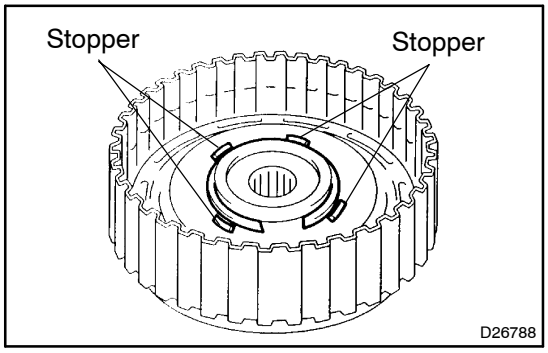

(g) Set the end gap of the snap ring in the piston shown in the illustration.

NOTICE:

The end gap of the snap ring should not coincide with any of the stoppers.

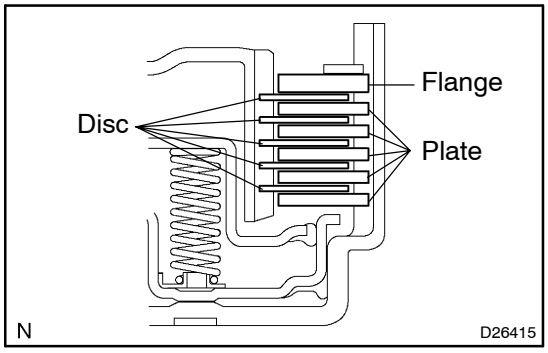

11. INSTALL FORWARD MULTIPLE DISC CLUTCH CLUTCH DISC

(a) Coat the 5 discs with ATF.

(b) Install the 5 plates, 5 discs and flange input shaft.

NOTICE:

Be careful about the order of discs, plates and flange assembly.

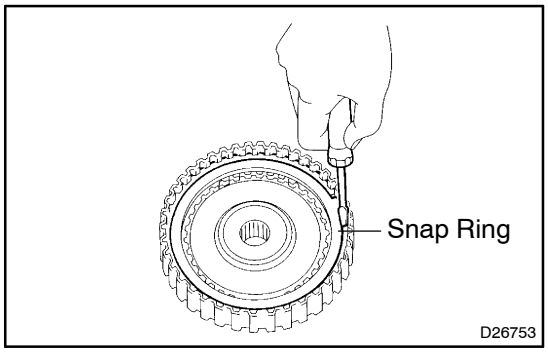

(c) Using a screwdriver, install the snap ring.

(d) Check that the end gap of the snap ring is not aligned with one of the cutouts.

NOTICE:

The snap ring should be fixed certainly in the groove of the drum.

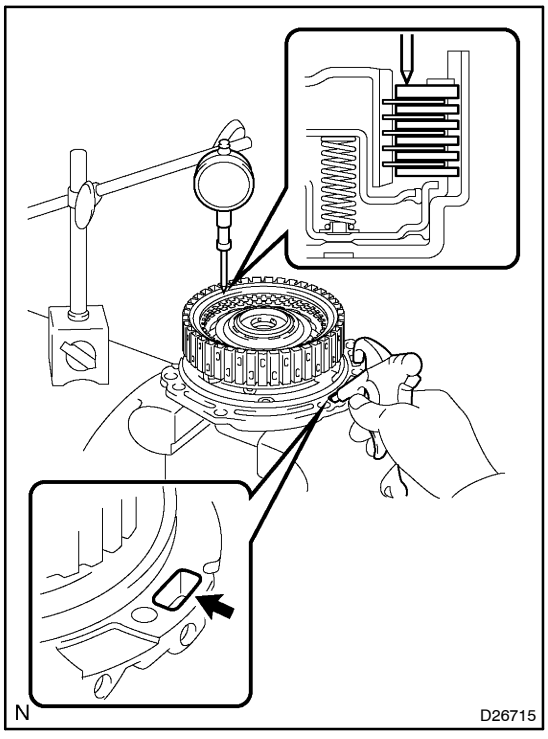

12. INSPECT PACK CLEARANCE OF FORWARD CLUTCH

(a) Using a dial indicator, measure the forward clutch pack clearance while applying and releasing compressed air (392 kgf·cm^2, 4.0 kPa, 57 psi).

Pack clearance: 1.00 – 1.25 mm (0.0394 – 0.4921 in.)

If the piston stroke is less than the minimum, parts may have been assembled incorrectly. Check and reassemble again.

If the clearance is not standard, select another flange.

HINT:

There are 5 different flanges in thickness.

Flange thickness: mm (in.)

No.	Thickness	No.	Thickness
1	3.00 (0.1181)	4	3.45 (0.1358)
2	3.15 (0.1240)	5	3.60 (0.1417)
3	3.30 (0.1299)	–	–

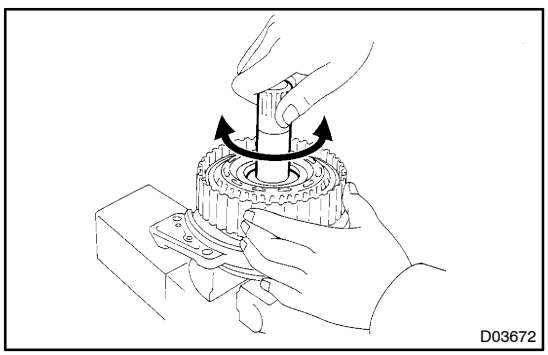

13. INSPECT FORWARD MULTIPLE DISC CLUTCH CLUTCH DISC

(a) Check if the disc lightly rotates when rotating the forward clutch assy after inserting the multiple disc clutch into it.

NOTICE:

Do not place the forward clutch assy in a vise.

DIRECT CLUTCH ASSY (U151E/U151F)

400H2–02

OVERHAUL

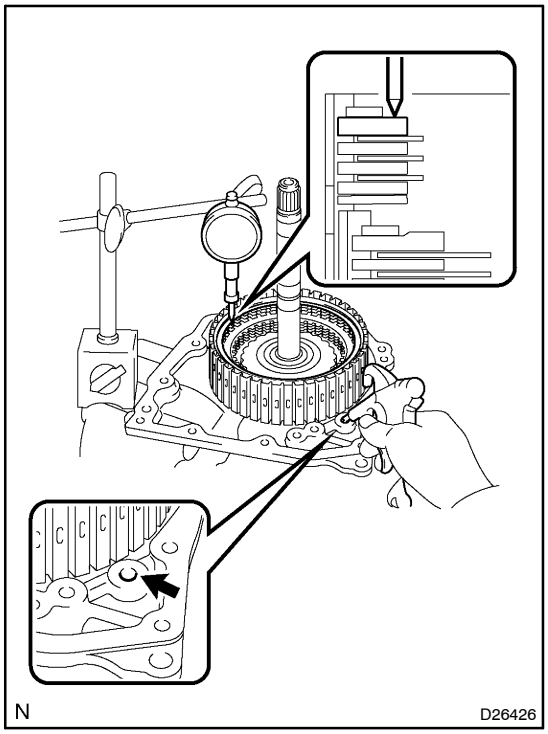

1. INSPECT PACK CLEARANCE OF REVERSE CLUTCH

(a) Install the intermediate shaft and needle roller bearing on the transaxle rear cover .

(b) Using a dial indicator, measure the reverse clutch pack clearance while applying and releasing compressed air (392 kPa, 4.0 kgf/cm^2, 57 psi).

Pack clearance:0.60 – 0.82 mm (0.02362 – 0.03228 in.)

If the pack clearance is not within standard, inspect the discs, plates and flange.

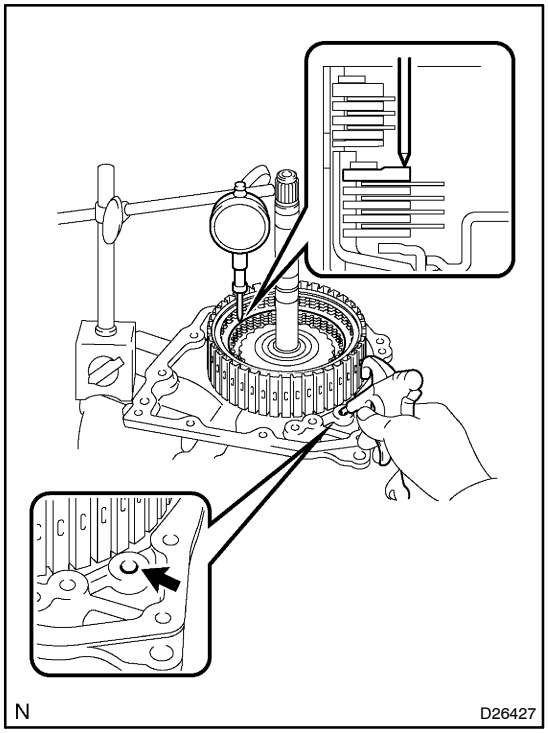

2. INSPECT PACK CLEARANCE OF DIRECT CLUTCH & OVERDRIVE CLUTCH

(a) Using a dial indicator, measure the direct clutch & overdrive clutch pack clearance while applying and releasing compressed air (392 kPa, 4.0 kgf/cm^2, 57 psi).

Pack clearance:0.61 – 0.83 mm (0.02401 – 0.03268 in.)

If the pack clearance is not within standard, inspect the discs, plates and flange.

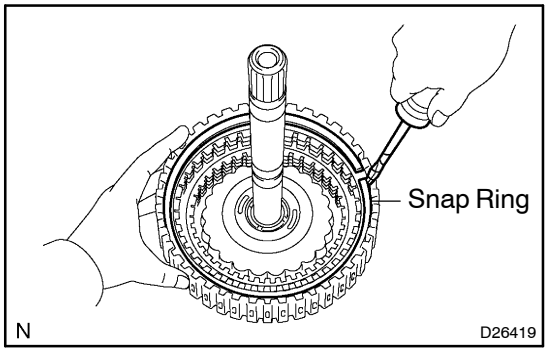

3. REMOVE DIRECT MULTIPLE DISC CLUTCH CLUTCH DISC

(a) Using a screwdriver, remove the snap ring from the intermediate shaft.

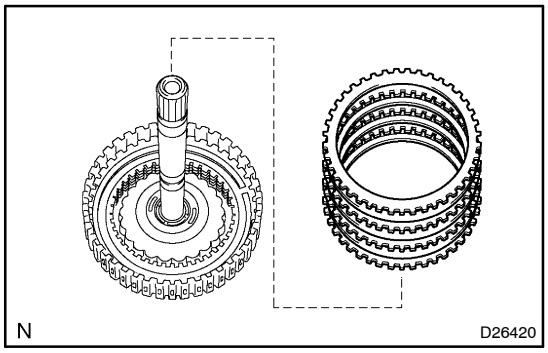

(b) Remove the flange, 3 discs,, 3 plates and cushion plate from the intermediate shaft.

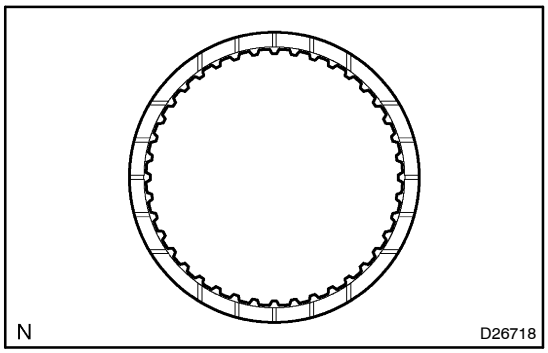

4. INSPECT DIRECT MULTIPLE DISC CLUTCH CLUTCH DISC

(a) Check to see if the sliding surface of the disc, plate and flange are worn or burnt.

If necessary, replace them.

HINT:

- If the lining of the disc comes off or discolors, or even if a part of the groove is defaced, replace all discs.
- Before assembling new discs, soak them in ATF for at least 15 minutes.

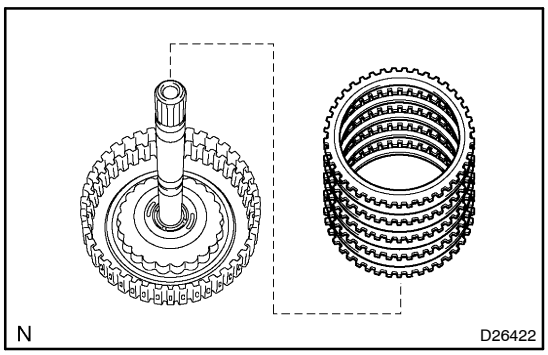

5. REMOVE OVERDRIVE DIRECT CLUTCH DISC

(a) Using a screwdriver, remove the snap ring from the intermediate shaft.

(b) Remove the flange, 4 discs and 4 plates from the intermediate shaft.

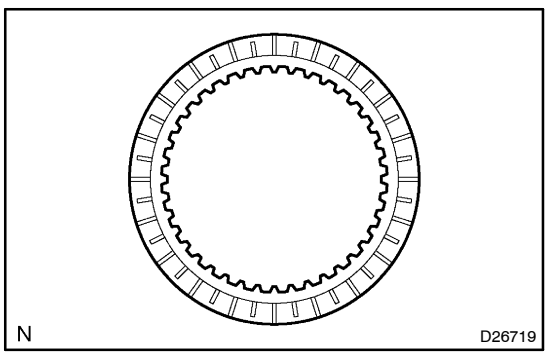

6. INSPECT OVERDRIVE DIRECT CLUTCH DISC

(a) Check to see if the sliding surface of the disc, plate and flange are worn or burnt.

If necessary, replace them.

HINT:

- If the lining of the disc comes off or discolors, or even if a part of the groove is defaced, replace all discs.
- Before assembling new discs, soak them in ATF for at least 15 minutes.

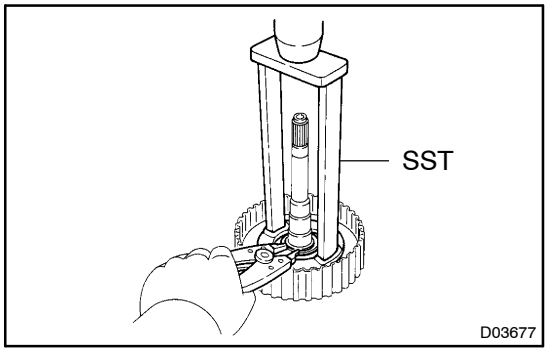

7. REMOVE OVERDRIVE CLUTCH RETURN SPRING SUB–ASSY

(a) Place SST on the clutch balancer and compress the spring with a press.
SST 09387–00020

(b) Using a snap ring expander, remove the snap ring from the direct clutch drum.

NOTICE:

- **Stop the press when the spring sheet is lowered to the place 1 – 2 mm (0.039 – 0.078 in.) from the snap ring groove.**
- **This prevents the spring sheet from being deformed.**
- **Do not expand the snap ring excessively.**

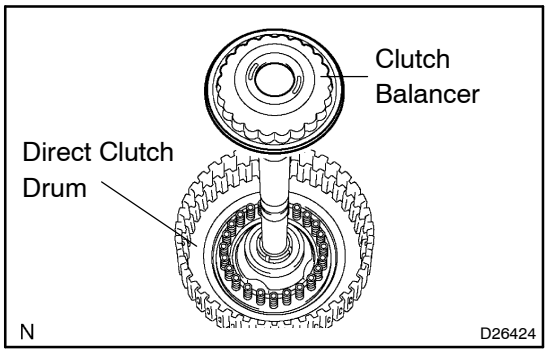

(c) Remove the clutch balancer from the direct clutch drum.

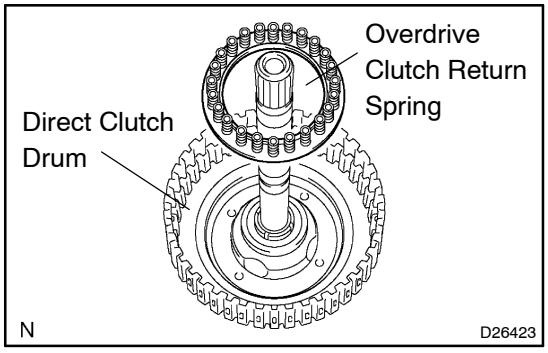

(d) Remove the overdrive clutch return spring from the direct clutch drum.

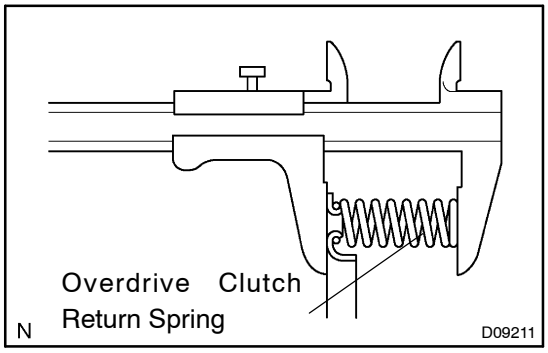

8. INSPECT OVERDRIVE CLUTCH RETURN SPRING SUB–ASSY

(a) Using vernier calipers, measure the free length of the spring together with the spring seat.
Standard free length: 25.91 mm (1.0201 in.)

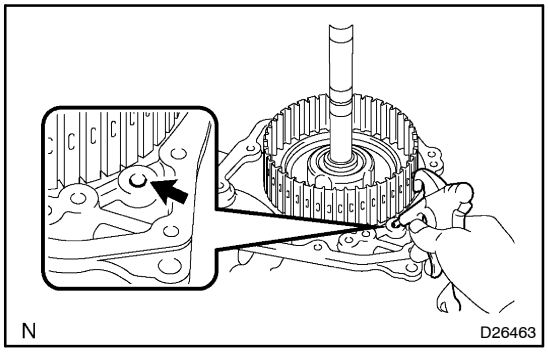

9. REMOVE OVERDRIVE DIRECT CLUTCH PISTON

(a) Install intermediate shaft on the transaxle rear cover.

(b) Holding the direct clutch piston with your hand, apply compressed air (392 kPa, 4.0 kgf/cm^2, 57 psi) to the transaxle rear cover to remove the direct clutch piston.

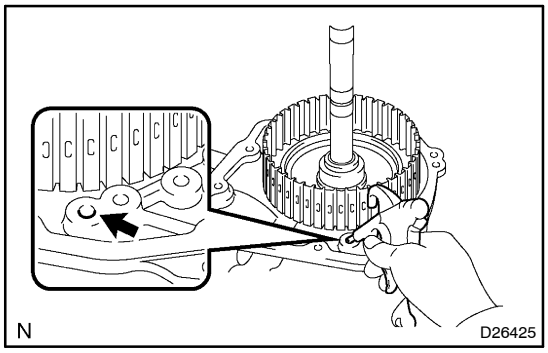

10. REMOVE OVERDRIVE DIRECT CLUTCH DRUM SUB–ASSY

(a) Holding the direct clutch drum by hand, apply compressed air (392 kPa, 4.0 kgf/cm^2, 57 psi) to the transaxle rear cover to remove the direct clutch drum.

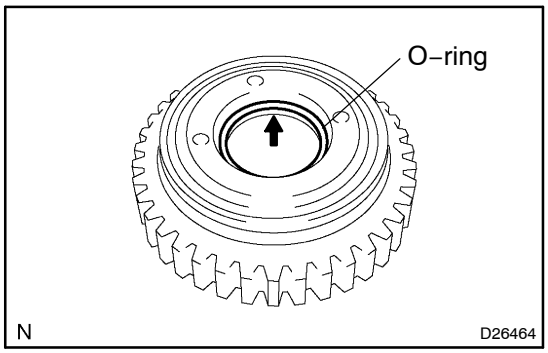

11. REMOVE OVERDRIVE DIRECT CLUCH O–RING

(a) Using a screwdriver, remove the O–ring from the direct clutch drum.

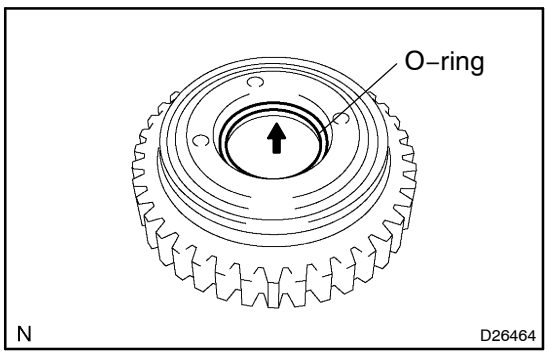

12. INSTALL OVERDRIVE DIRECT CLUCH O–RING

(a) Coat a O–ring with ATF, and install it to the direct clutch drum.

NOTICE:

Assemble the O–ring carefully not to have a twist and a pinching.

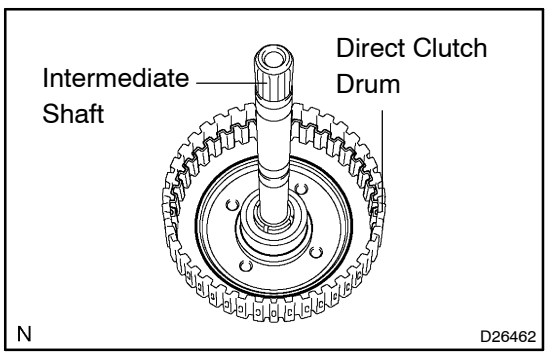

13. INSTALL OVERDRIVE DIRECT CLUTCH DRUM SUB–ASSY

(a) Coat the direct clutch drum with ATF, and install it to the intermediate shaft.

NOTICE:

- **Be careful not to damage the O–ring.**
- **Be careful not to damage the lip seal of the direct clutch drum.**

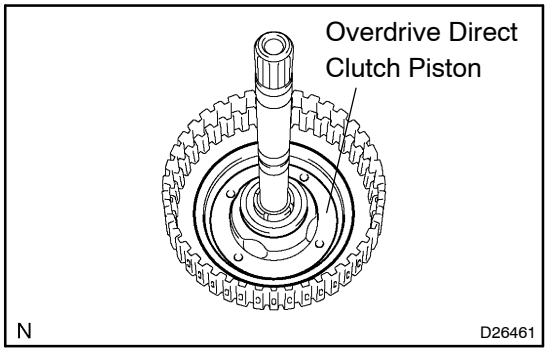

14. INSTALL OVERDRIVE DIRECT CLUTCH PISTON

(a) Apply the overdrive direct clutch piston with ATF, and install it to the direct clutch drum.

NOTICE:

Be careful not to damage the lip seal of the direct clutch piston.

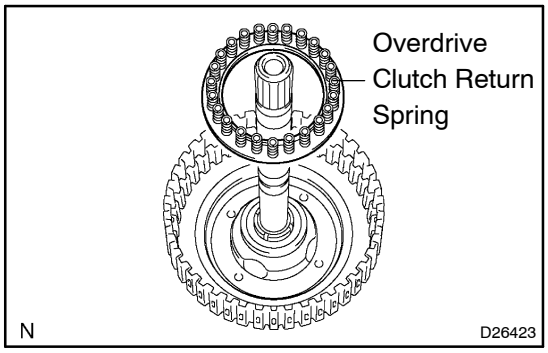

15. INSTALL OVERDRIVE CLUTCH RETURN SPRING SUB–ASSY

(a) Install the piston return spring to the direct clutch drum.

NOTICE:

Installing the spring sub–assembly, check all of the springs are fit in the piston correctly.

(b) Coat the clutch balancer with ATF.

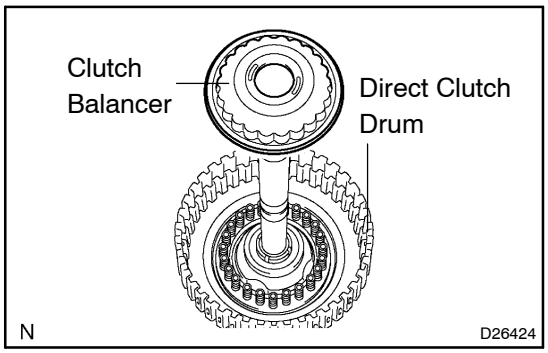

(c) Install the clutch balancer to the direct clutch drum.

NOTICE:

- **Be careful not to damage the lip seal of the direct clutch balancer.**
- **Install the clutch balancer carefully not to have a pinching and any other defects at the sealing lip.**
- **Apply enough ATF to the sealing lip prior to assembling.**

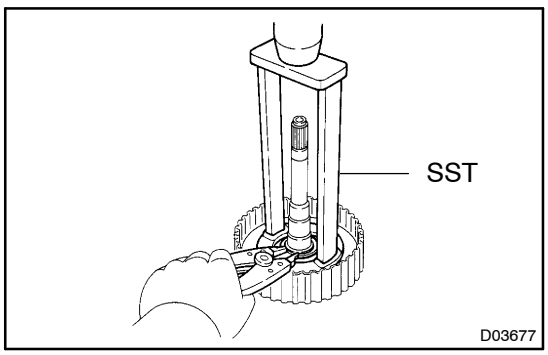

(d) Place SST on the clutch balancer and compress the piston return spring with a press.
SST 09387–00020

(e) Using a snap ring expander, install the snap ring to the direct clutch drum.

(f) Be sure the end gap of the snap ring is not aligned with the spring retainer claw.

NOTICE:

- **Stop the press when the spring sheet is lowered to the place 1 – 2 mm (0.039 – 0.078 in.) from the snap ring grove.**
- **This prevents the spring sheet from being deformed.**
- **Do not expand the snap ring excessively.**

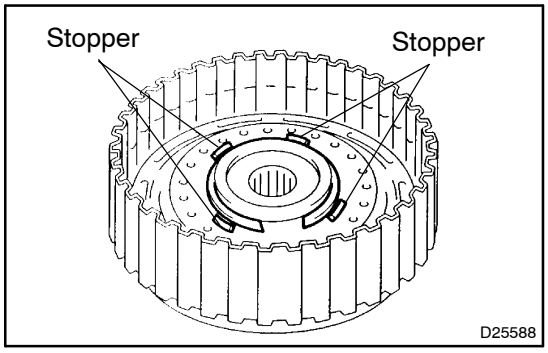

(g) Set the end gap of the snap ring in the piston shown in the illustration.

NOTICE:

The end gap of the snap ring should not coincide with any of the stoppers.

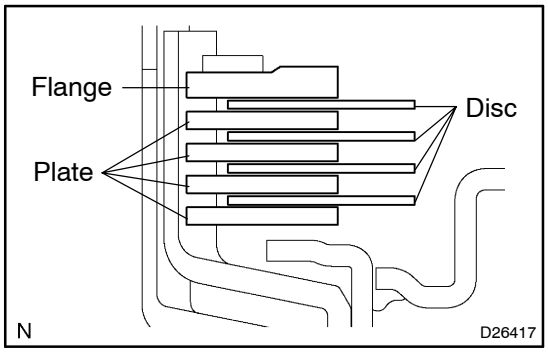

16. INSTALL OVERDRIVE DIRECT CLUTCH DISC

(a) Coat the 4 discs with ATF.

(b) Install the 4 plates, 4 discs and flange to the intermediate shaft.

NOTICE:

Be careful about the order of discs, plates and flange assembly.

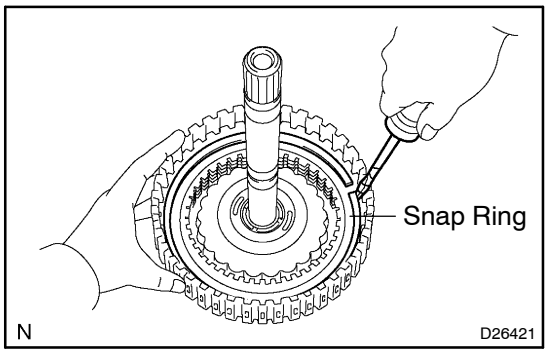

(c) Using a screwdriver, install the snap ring.

(d) Check that the end gap of the snap ring is not aligned with one of the cutouts.

NOTICE:

The snap ring should be fixed certainly in the groove of the drum.

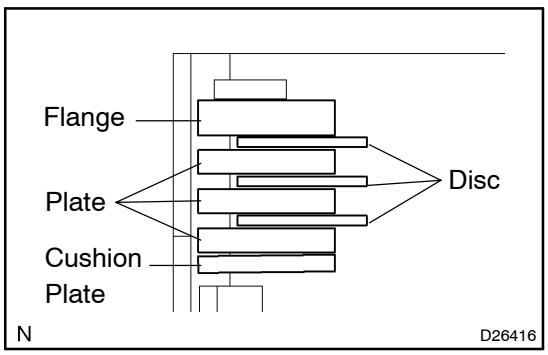

17. INSTALL DIRECT MULTIPLE DISC CLUTCH CLUTCH DISC

(a) Apply the 3 discs with ATF.

(b) Install the cushion plate, 3 plates, 3 discs and flange to the intermediate shaft.

NOTICE:

- **Install the cushion plate with the mark on the white surface facing to plate.**
- **Be careful about the order of discs, plates and flange assembly.**

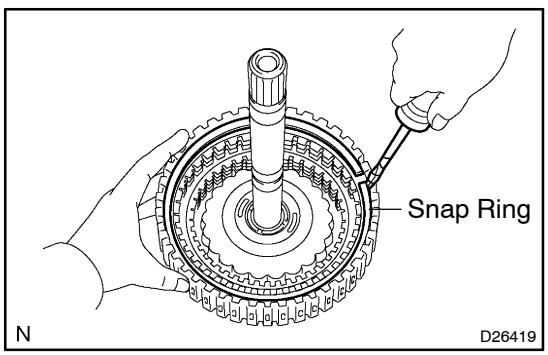

(c) Using a screwdriver, install the snap ring.

(d) Check that the end gap of the snap ring is not aligned with one of the cutouts.

NOTICE:

The snap ring should be fixed certainly in the groove of the drum.

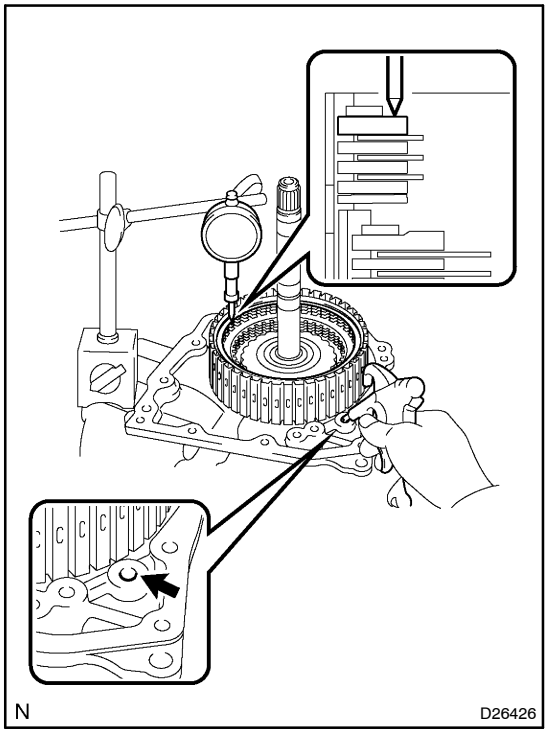

18. INSPECT PACK CLEARANCE OF REVERSE CLUTCH

(a) Install the intermediate shaft on the transaxle rear cover.

(b) Using a dial indicator, measure the direct clutch pack clearance while applying and releasing compressed air (392 kPa, 4.0 kgf/cm^2, 57 psi).

Pack clearance:0.60 – 0.82 mm (0.02362 – 0.03228 in.)

If the pack clearance is less than the minimum, parts may have been assembled incorrectly, so check and reassemble again.

If the stroke is not within standard, select another flange.

HINT:

There are 6 flanges of different thickness.

Flange thickness: mm (in.)

No.	Thickness	No.	Thickness
1	3.0 (0.118)	5	3.4 (0.134)
2	3.1 (0.122)	6	3.5 (0.138)
3	3.2 (0.126)	7	3.6 (0.142)
4	3.3 (0.130)	–	–

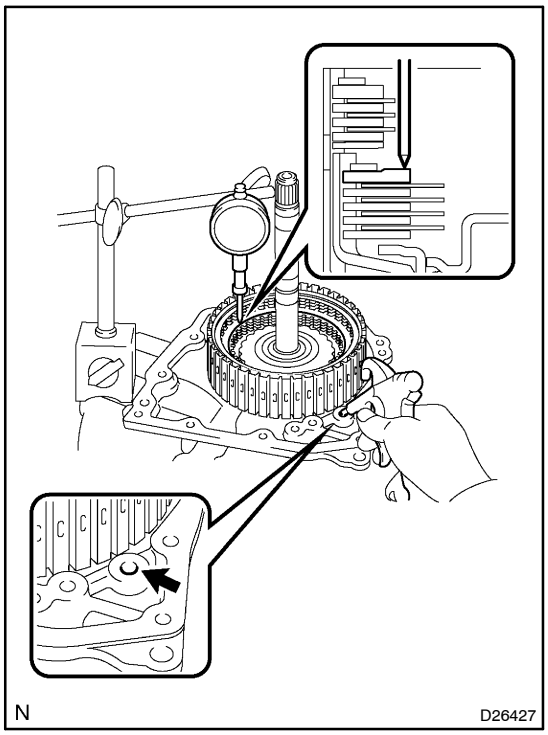

19. INSPECT PACK CLEARANCE OF DIRECT CLUTCH & OVERDRIVE CLUTCH

(a) Using a dial indicator, measure the direct clutch & overdrive clutch pack clearance while applying and releasing compressed air (392 kPa, 4.0 kgf/cm^2, 57 psi).

Pack clearance:0.61 – 0.83 mm (0.02401 – 0.03268 in.)

If the pack clearance is less than the minimum, parts may have been assembled incorrectly, so check and reassemble again.

If the stroke is not within standard, select another flange.

HINT:

There are 7 flanges in different thickness.

Flange thickness: mm (in.)

No.	Thickness	No.	Thickness
0	2.5 (0.098)	4	2.9 (0.114)
1	2.6 (0.102)	5	3.0 (0.118)
2	2.7 (0.106)	6	3.1 (0.122)
3	2.8 (0.110)	–	–

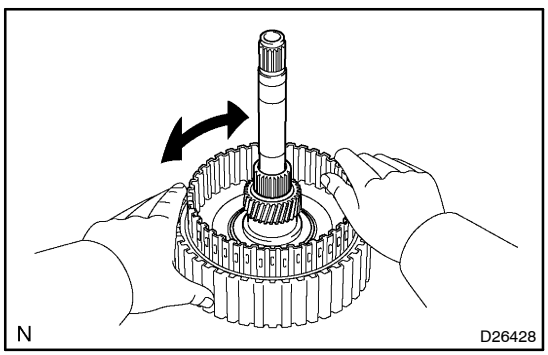

(b) Check that the disc rotates when rotating the disc after inserting the rear planetary sun gear.

NOTICE:

Do not place the rear planetary sun gear in a vise.

SECOND BRAKE PISTON ASSY (U151E/U151F)

4006I–03

OVERHAUL

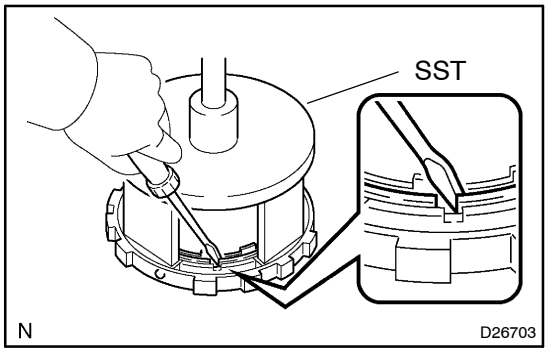

1. REMOVE 2ND BRAKE PISTON RETURN SPRING SUB–ASSY

(a) Place SST on the return spring and compress.
SST 09387–00060

(b) Using a screwdriver, remove the snap ring.

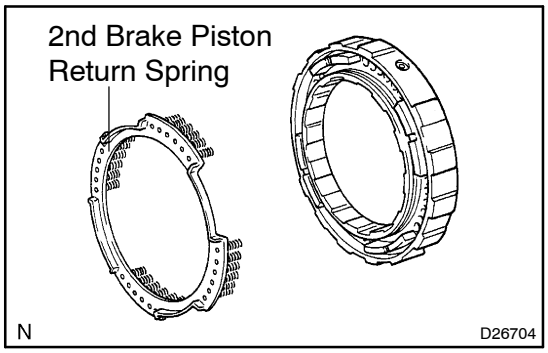

(c) Remove the 2nd brake piston return spring.

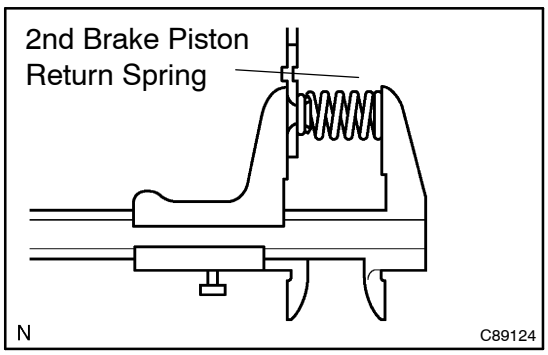

2. INSPECT 2ND BRAKE PISTON RETURN SPRING SUB–ASSY

(a) Using vernier calipers, measure the free length of the spring together with the spring seat.
Standard free length: 16.61 mm (0.6539 in.)

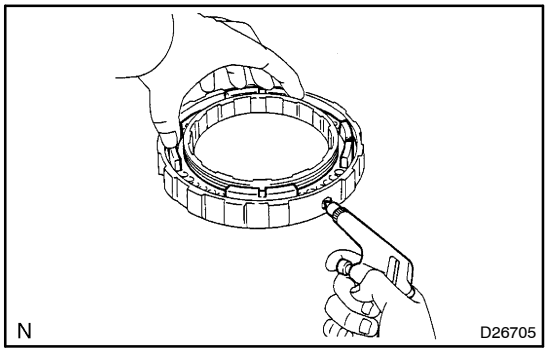

3. REMOVE 2ND BRAKE PISTON

(a) Hold the 2nd brake piston and apply compressed air (392 kPa, 4.0 kgf/cm^2, 57 psi) to the 2nd brake cylinder to remove the 2nd brake piston.

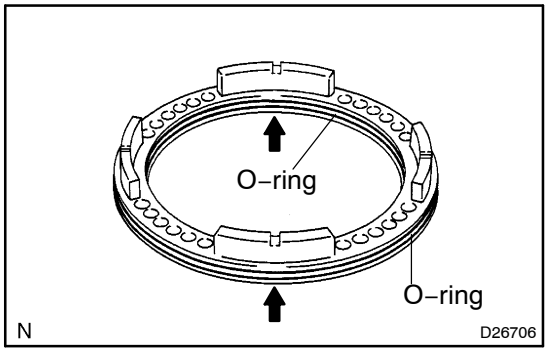

4. REMOVE 2ND BRAKE PISTON O–RING

(a) Remove the 2 O–rings from the 2nd brake piston.

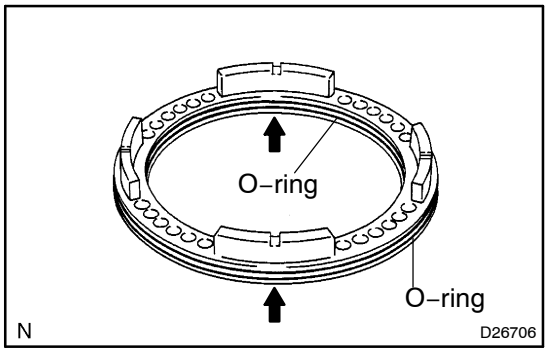

5. INSTALL 2ND BRAKE PISTON O–RING

(a) Apply the 2 new O–rings with ATF, install them in the 2nd brake piston.

NOTICE:

Assemble the O–ring carefully not to have a twist and a pinching.

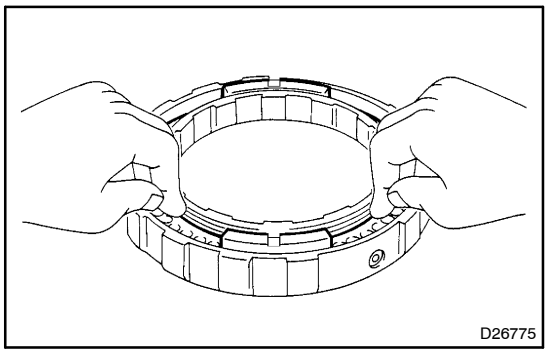

6. INSTALL 2ND BRAKE PISTON

(a) Apply the 2nd brake piston with ATF, and install it to the 2nd brake cylinder.

NOTICE:

Be careful not to damage the O–ring.

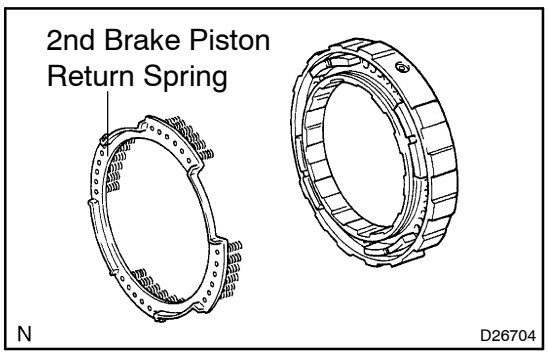

7. INSTALL 2ND BRAKE PISTON RETURN SPRING SUB–ASSY

(a) Install the 2nd brake piston return spring.

NOTICE:

Installing the spring sub–assembly, check all of the springs are fit in the piston correctly.

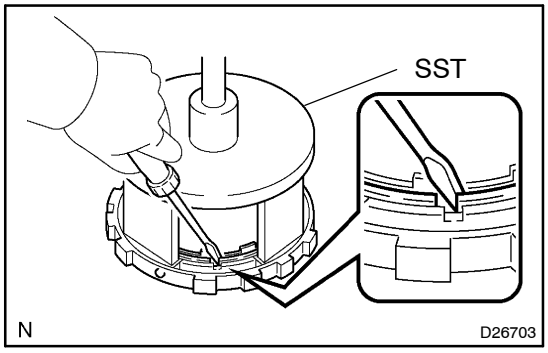

(b) Place SST on the piston return spring, and compress the piston return spring with a press.
SST 09387–00060

(c) Using a screwdriver, install the snap ring.

(d) Be sure the end gap of the snap ring is not aligned with the spring retainer claw.

NOTICE:

- **Stop the press when the spring sheet is lowered to the place 1 – 2 mm (0.039 – 0.078 in.) from the snap ring groove.**
- **This prevents the spring sheet from being deformed.**

UNDERDRIVE CLUTCH ASSY (U151E/U151F)

400H3–02

OVERHAUL

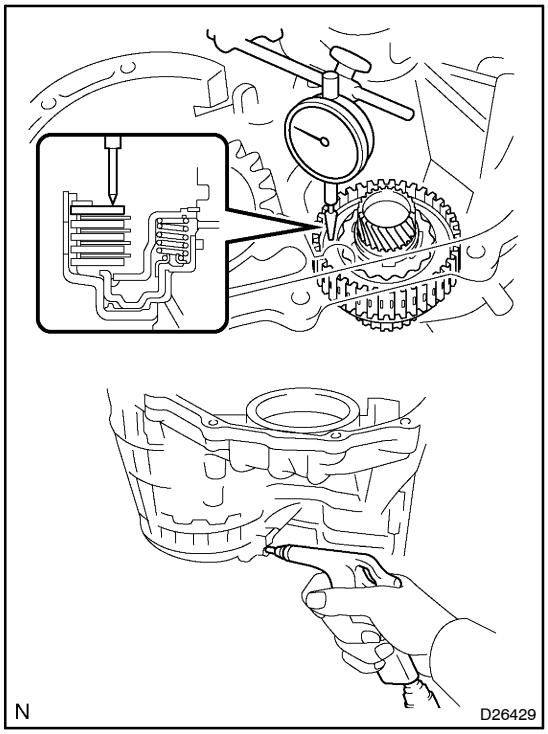

1. INSPECT UNDERDRIVE PACK CLEARANCE

(a) Install the underdrive clutch to the transaxle case.

NOTICE:

Be careful not to damage the oil seal rings.

(b) Install a dial indicator as shown in the illustration.

(c) Measure the underdrive clutch pack clearance while applying and releasing compressed air (392 kPa, 4.0 kgf/cm^2, 57 psi).

Pack clearance: 1.51 – 1.71 mm (0.0594 – 0.0673 in.)

If the pack clearance is not within standard, inspect the discs, plates and flange.

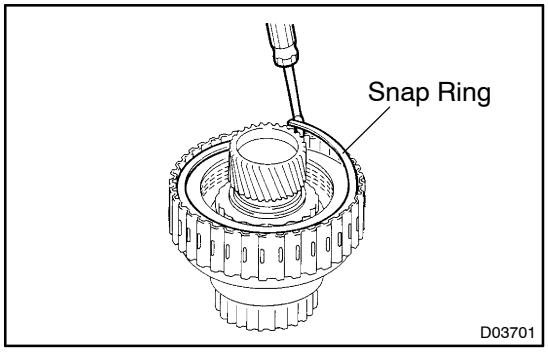

2. REMOVE UNDERDRIVE CLUTCH FLANGE NO.2 HOLE SNAP RING

(a) Using a screwdriver, remove the underdrive clutch flange No.2 snap ring.

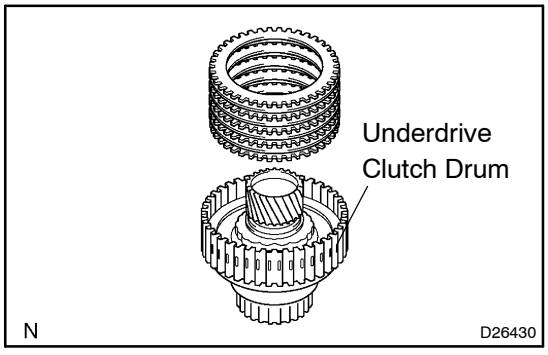

3. REMOVE UNDERDRIVE CLUTCH DISC NO.1

(a) Remove the flange, 4 discs and 4 plates from the underdrive clutch drum.

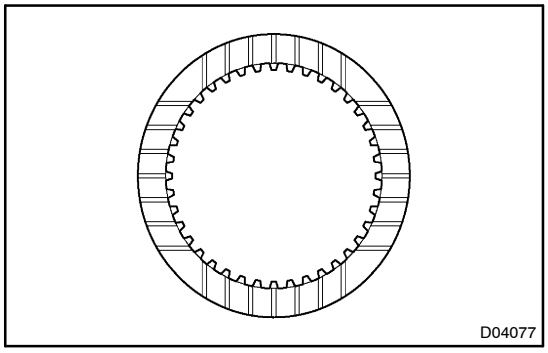

4. INSPECT UNDERDRIVE CLUTCH DISC NO.1

(a) Check to see if the sliding surface of the disc, plate and flange are worn or burnt. If necessary, replace them.

HINT:

- If the lining of the disc comes off or discolors, or even if a part of the groove is defaced, replace all discs.
- Before assembling new discs, soak them in ATF for at least 15 minutes.

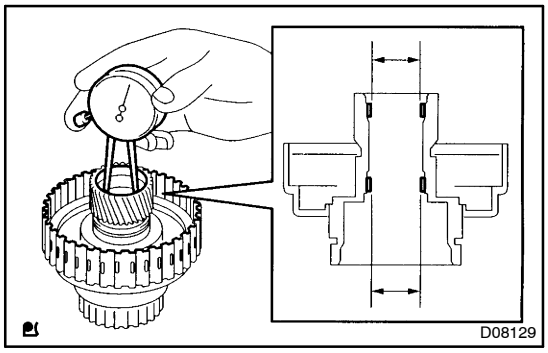

5. INSPECT UNDERDRIVE CLUTCH DRUM SUB–ASSY

(a) Using a dial indicator, measure the inside diameter of the underdrive clutch drum bushing.

Standard drum bushing:
37.06 – 37.08 mm (1.4591 – 1.4598 in.)
Maximum drum bushing: 37.13 mm (1.4618 in.)

If the inside diameter is greater than the maximum, replace the underdrive clutch drum.

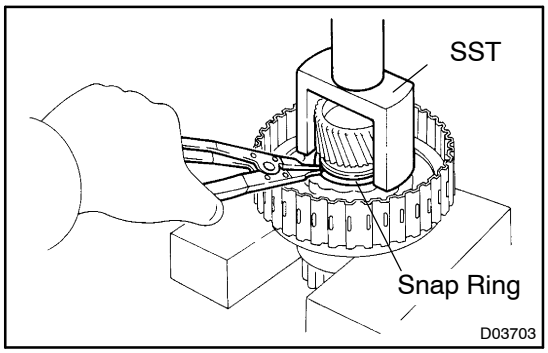

6. REMOVE UNDERDRIVE CLUTCH RETURN SPRING SUB–ASSY

(a) Place SST on the clutch balancer and compress the spring with a press.

SST 09350–32014 (09351–32070)

(b) Using a snap ring expander, remove the snap ring.

NOTICE:

- **Stop the press when the spring sheet is lowered to the place 1 – 2 mm (0.039 – 0.078 in.) from the snap ring groove.**
- **This prevents the spring sheet from being deformed.**
- **Do not expand the snap ring excessively.**

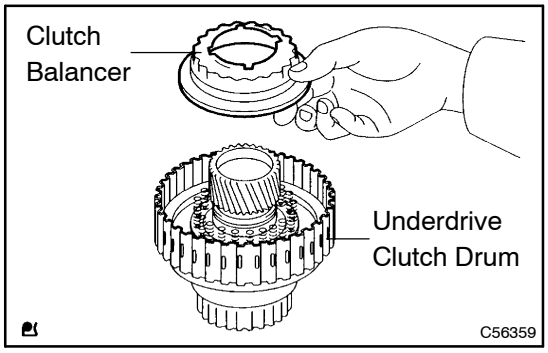

(c) Remove the clutch balancer from the underdrive clutch drum.

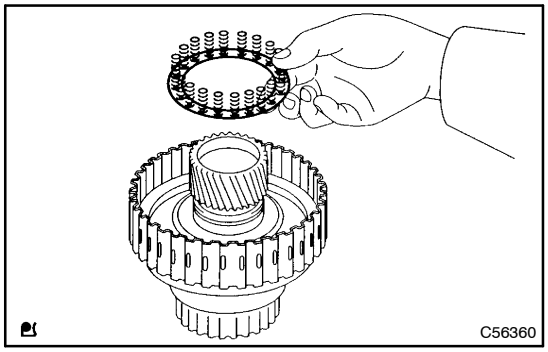

(d) Remove the return spring from the underdrive clutch drum.

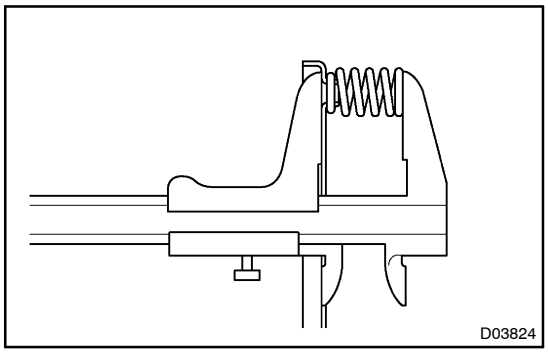

7. INSPECT UNDERDRIVE CLUTCH RETURN SPRING SUB–ASSY

(a) Using a vernier calipers, measure the free length of the spring together with the spring seat.
Standard free length: 17.14 mm (0.6752 in.)

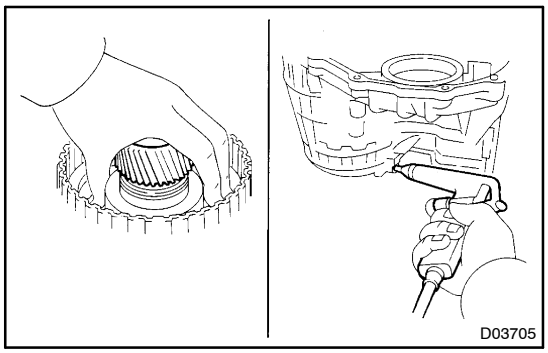

8. REMOVE UNDERDRIVE CLUTCH PISTON SET

(a) Install the underdrive clutch to the transaxle case.

NOTICE:

Be careful not to damage the oil seal ring.

(b) Holding the underdrive clutch piston by hand, apply compressed air (392 kPa, 4.0 kgf/cm^2, 57 psi) to the transaxle case to remove the underdrive clutch piston.

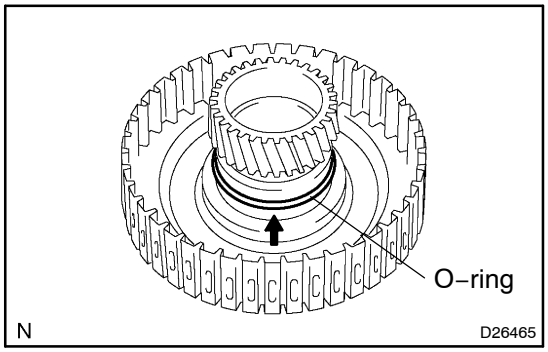

9. REMOVE UNDERDRIVE CLUTCH DRUM O–RING

(a) Using a screwdriver, remove the O–ring from the underdrive clutch drum.

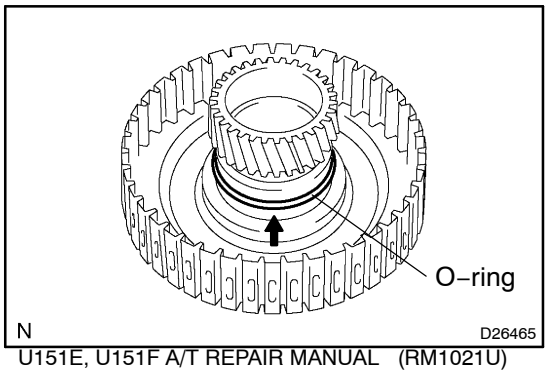

10. INSTALL UNDERDRIVE CLUTCH DRUM O–RING

(a) Apply the new O–ring with ATF, install it to the underdrive clutch drum.

NOTICE:

Assemble the O–ring carefully not to have a twist and a pinching.

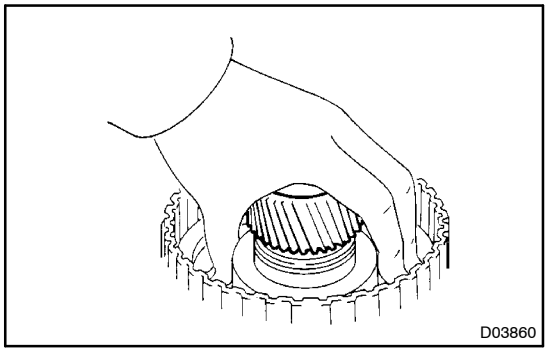

11. INSTALL UNDERDRIVE CLUTCH PISTON SET

(a) Coat the underdrive clutch piston with ATF, install it to the underdrive clutch piston drum.

NOTICE:

- **Be careful not to damage the O–ring.**
- **Be careful not to damage the lip seal of the piston.**

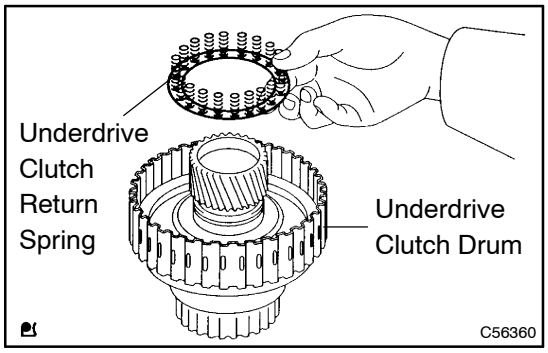

12. INSTALL UNDERDRIVE CLUTCH RETURN SPRING SUB–ASSY

(a) Install the return spring to the underdrive clutch drum.

NOTICE:

Installing the spring sub–assembly, check all of the springs are fit in the piston correctly.

(b) Coat the clutch balancer with ATF.

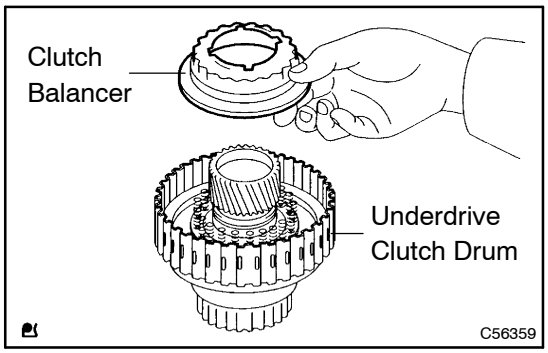

(c) Install the clutch balancer to the underdrive clutch drum.

NOTICE:

Be careful not to damage the lip seal of the clutch balancer.

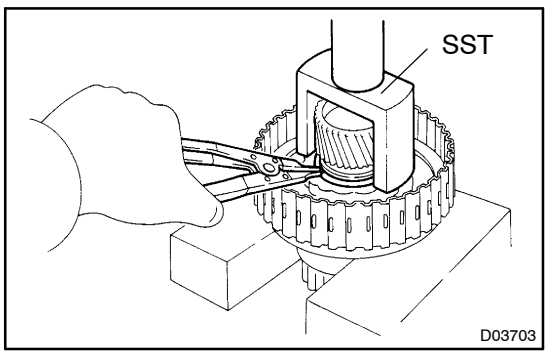

(d) Place SST on the clutch balancer and compress the piston return spring with a press.
SST 09350–32014 (09351–32070)

(e) Using a snap ring expander, install the snap ring to the underdrive clutch drum.

(f) Be sure the end gap of the snap ring is not aligned with the spring retainer claw.

NOTICE:

- **Stop the press when the spring sheet is lowered to the place 1 – 2 mm (0.039 – 0.078 in.) from the snap ring grove.**
- **This prevents the spring sheet from being deformed.**
- **Do not expand the snap ring excessively.**

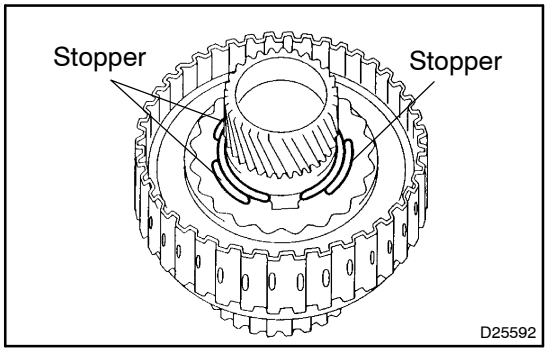

(g) Set the end gap of the snap ring in the underdrive clutch drum shown in the illustration.

NOTICE:

The end gap of the snap ring should not coincide with any of the stopper.

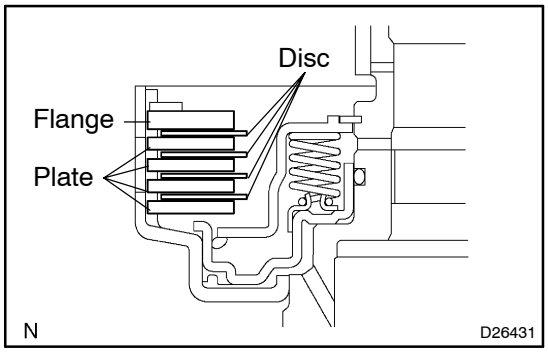

13. INSTALL UNDERDRIVE CLUTCH DISC NO.1

(a) Apply the 4 discs with ATF.

(b) Install the 4 plates, 4 discs and flange to the underdrive clutch drum.

NOTICE:

Be careful about the order of discs, plates and flange assembly.

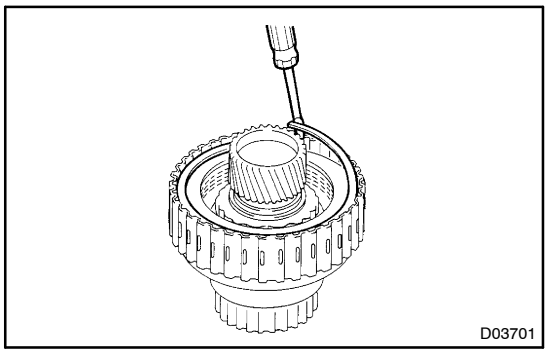

14. INSTALL UNDERDRIVE CLUTCH FLANGE NO.2 HOLE SNAP RING

(a) Using a screwdriver, install the underdrive clutch flange No.2 hole snap ring.

(b) Check that the end gap of snap ring is not aligned with one of the cutouts.

NOTICE:

The snap ring should be fixed certainly in the groove of the drum.

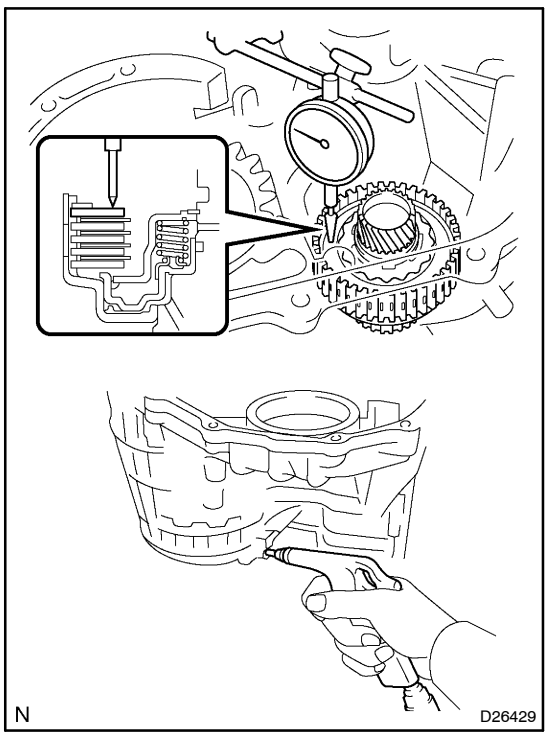

15. INSPECT UNDERDRIVE PACK CLEARANCE

(a) Install the underdrive clutch to the transaxle case.

NOTICE:

Be careful not to damage the oil seal ring.

(b) Set a dial indicator as shown in the illustration.

(c) Measure the underdrive clutch piston stroke while applying and releasing compressed air (392 kPa, 4.0 kgf/cm^2, 57 psi).

Park clearance: 1.51 – 1.71 mm (0.0594 – 0.0673 in.)

If the pack clearance is less than the minimum, parts may have been assembled incorrectly, so check and reassemble again.

If the pack clearance is not within standard, select another flange.

HINT:

There are 5 flanges in different thickness.

Flange thickness: mm (in.)

Mark	Thickness	Mark	Thickness
1	3.0 (0.118)	4	3.1 (0.122)
2	3.2 (0.126)	5	3.3 (0.130)
3	3.4 (0.134)	–	–

UNDERDRIVE PLANETARY GEAR ASSY (U151E/U151F)

4006K–03

OVERHAUL

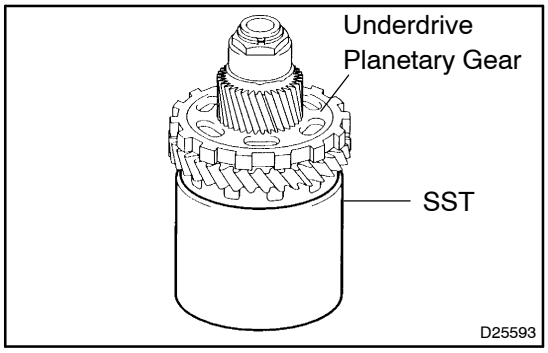

1. INSPECT UNDERDRIVE PLANETARY GEAR PRELOAD

(a) Using SST, fix the underdrive planetary gear assy.
SST 09387–00050

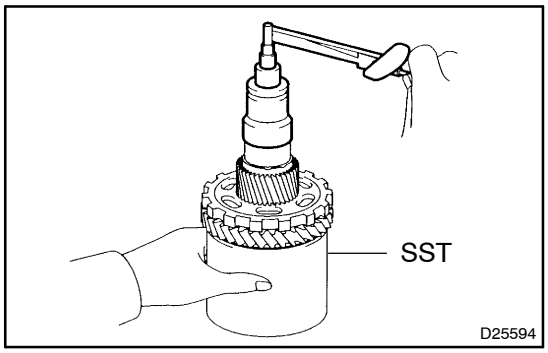

(b) Using SST and a torque wrench, measure the turning torque of underdrive planetary gear assy while rotating the torque wrench at 60 rpm.
SST 09387–00050
Turning torque at 60 rpm.:
0.50 – 1.42 N·m (5.1 – 14.5 kgf·cm, 0.06 – 0.17 in.·lbf)

HINT:
Use a torque wrench with a fulcrum length of 160 mm (6.3 in.).

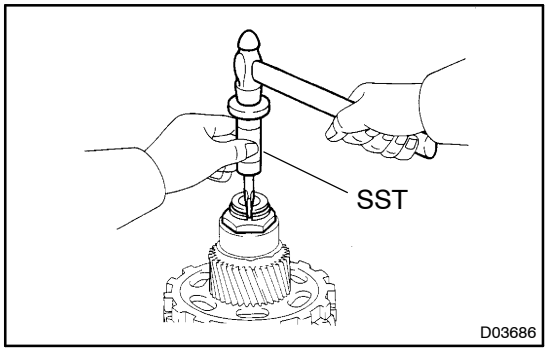

2. REMOVE FRONT PLANETARY GEAR NUT

(a) Using SST, loosen the staked part of the lock nut.
SST 09930–00010 (09931–00010, 09931–00020), 09387–00050

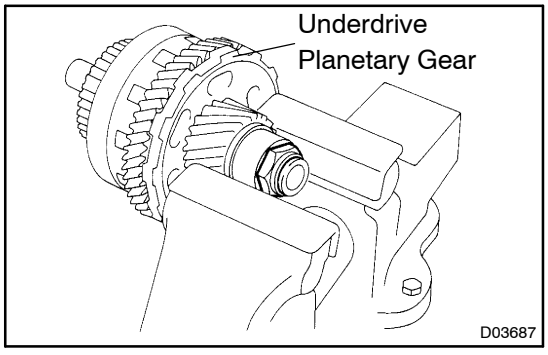

(b) Clamp the underdrive planetary gear in soft jaw vise.

NOTICE:
Be careful not to damage the differential drive pinion.

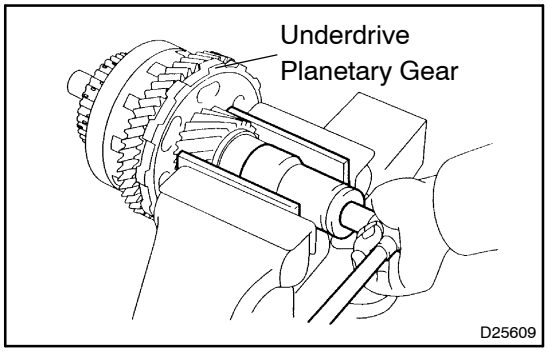

(c) Using a socket wrench, remove the lock nut.

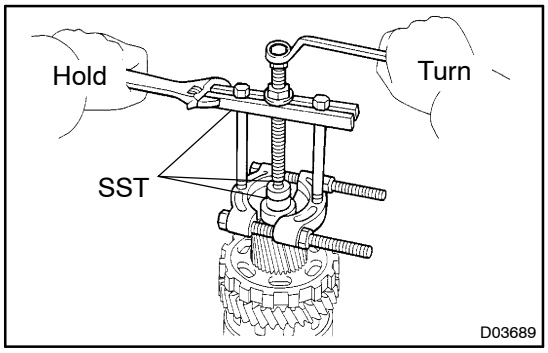

3. REMOVE CYLINDRICAL ROLLER BEARING RACE INNER

(a) Using SST, remove the cylindrical roller bearing race inner.

SST 09950–00020, 09950–00030, 09950–60010 (09951–00320), 09950–40011 (09957–04010)

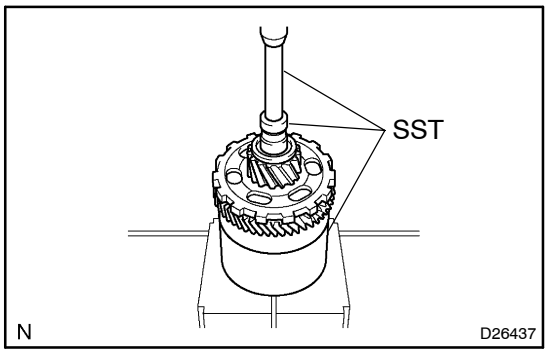

4. REMOVE UNDERDRIVE PLANETARY GEAR ASSY

(a) Using SST and a press, remove the differential drive pinion, parking lock gear, counter driven gear with underdrive planetary ring gear and front tapered roller bearing.

SST 09950–60010 (09951–00320), 09387–00050

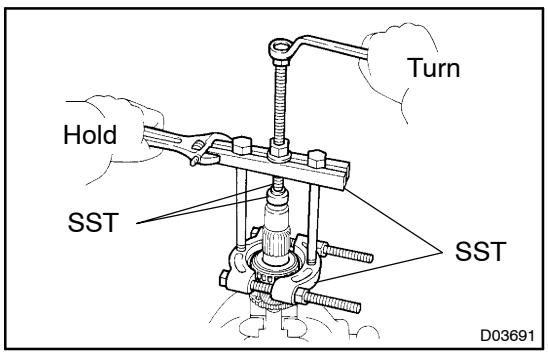

(b) Clamp the underdrive planetary gear in soft jaw vise.

(c) Using SST, remove the rear tapered roller bearing form the underdrive planetary gear.

SST 09950–00020, 09950–00030, 09950–60010 (09951–00320), 09950–40011 (09957–04010)

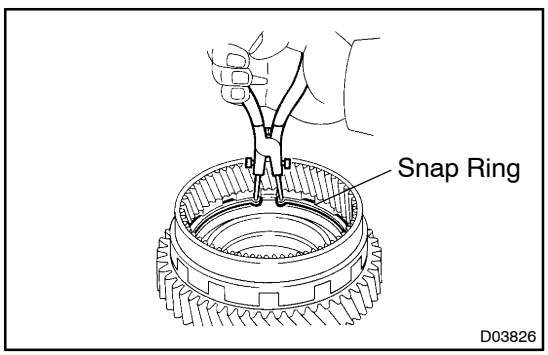

5. REMOVE UNDERDRIVE PLANETARY RING GEAR

(a) Using a snap ring pliers, remove the snap ring.

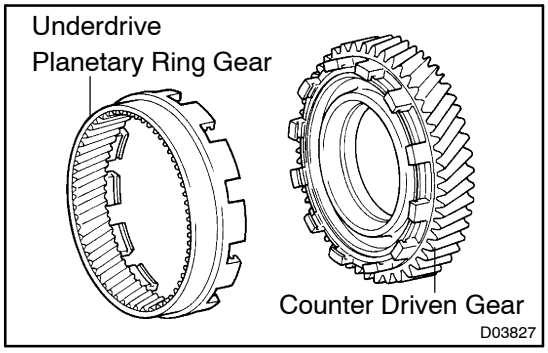

(b) Remove the underdrive planetary ring gear from the counter driven gear.

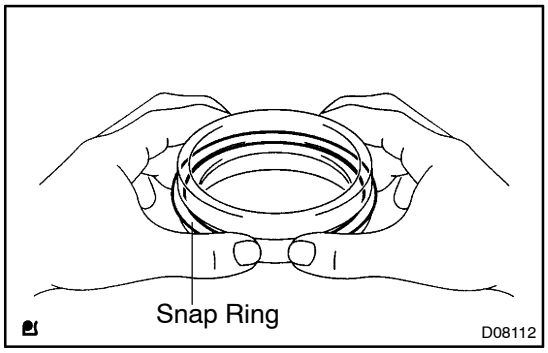

6. INSTALL UNDERDRIVE PLANETARY RING GEAR

(a) Install a new snap ring to the outer race of the tapered roller bearing.

HINT:
When replacing the bearing, also replace the counter driven gear with a new one.

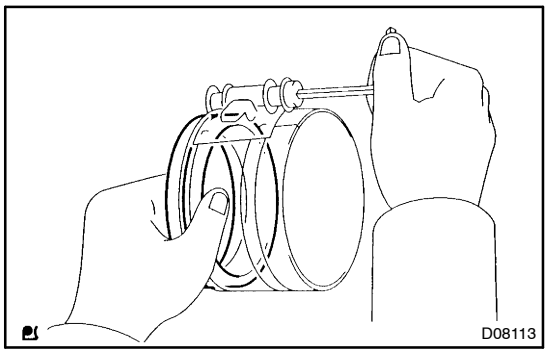

(b) Using a piston ring compressor, squeeze the snap ring.

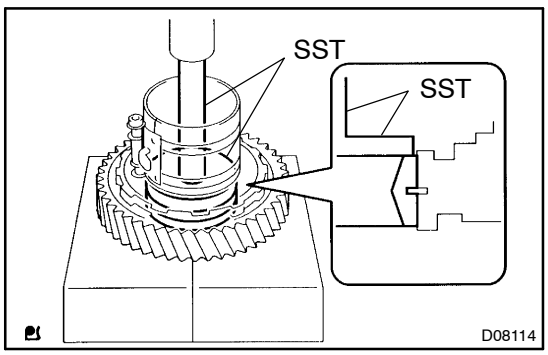

(c) Using SST and a press, press in the outer race of the tapered roller bearing.
SST 09950–60020 (09951–00890), 09950–70010 (09951–07100)

NOTICE:
Be sure not to damage on the snap ring during the outer race installation.

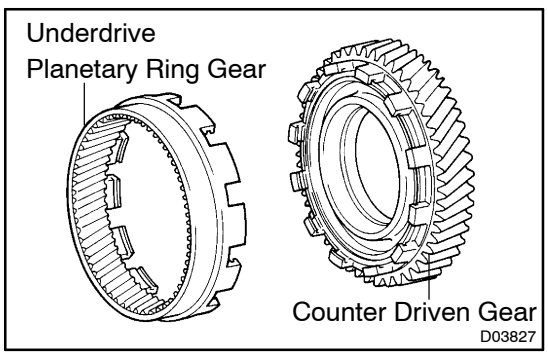

(d) Install the underdrive planetary ring gear to the counter driven gear.

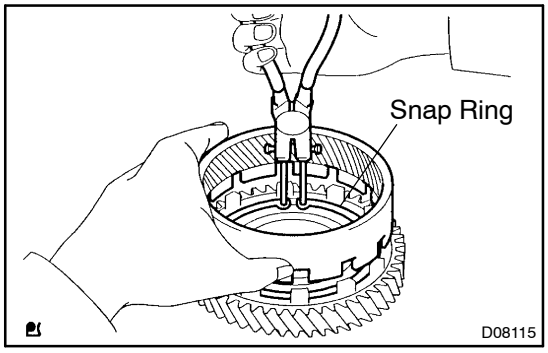

(e) Using a snap ring pliers, install the snap ring.

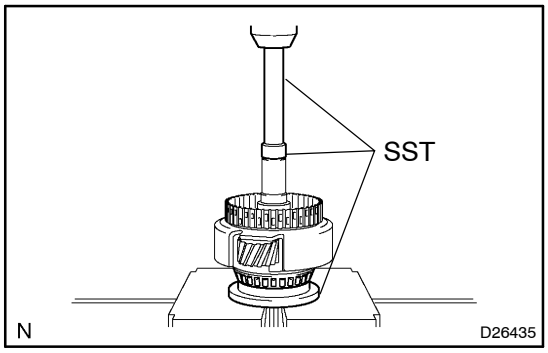

7. INSTALL UNDERDRIVE PLANETARY GEAR ASSY

(a) Using a press, press the rear tapered roller bearing to the underdrive planetary gear.

SST 09502–12010, 09950–60010 (09951–00260), 09950–70010 (09951–07100), 09316–20011

NOTICE:

Press the bearing until it becomes flat at the bottom.

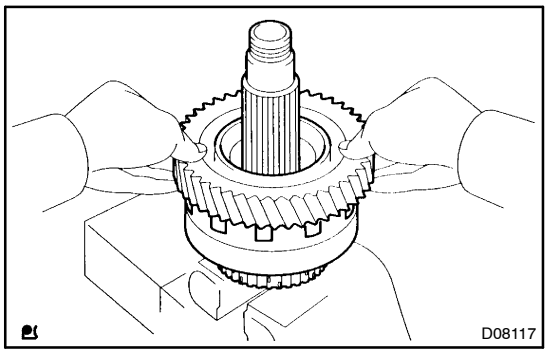

(b) Install the counter driven gear with planetary ring gear to the underdrive planetary gear.

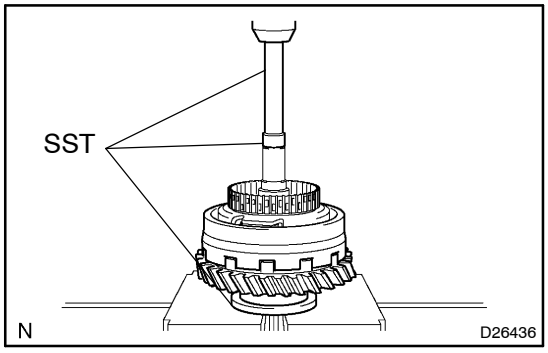

(c) Using SST and a press, press in the front tapered roller bearing.

SST 09502–12010, 09950–60010 (09951–00260), 09950–70010 (09951–07100), 09316–20011

NOTICE:

Press the counter driven gear while rotating it.

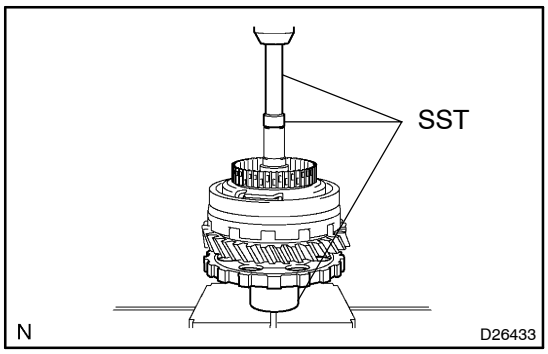

(d) Using a press, press in the parking lock gear.

SST 09502–12010, 09950–60010 (09951–00260), 09950–70010 (09951–07100), 09316–20011

NOTICE:

Press the counter driven gear while rotating it.

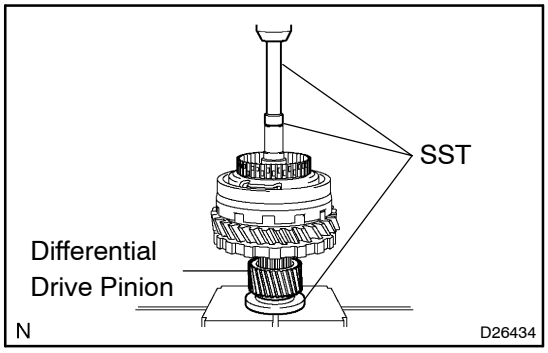

8. INSTALL DIFFERENTIAL DRIVE PINION

(a) Using a press, press the differential drive pinion.

SST 09726–40010, 09950–60010 (09951–00260), 09950–70010 (09951–07100)

NOTICE:

Press the counter driven gear while rotating it.

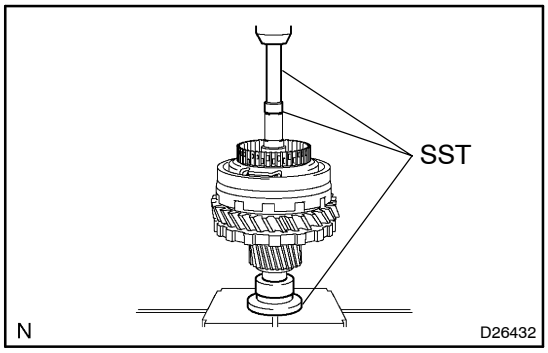

9. INSTALL CYLINDRICAL ROLLER BEARING RACE INNER

(a) Using a press, press the cylindrical roller bearing race inner.

SST 09506–35010, 09950–60010 (09951–00260), 09950–70010 (09951–07100)

NOTICE:

Press the counter driven gear while rotating it.

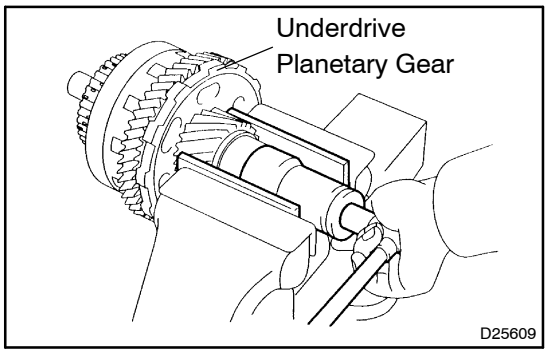

10. INSTALL FRONT PLANETARY GEAR NUT

(a) Clamp the underdrive planetary gear in soft jaw vise.

NOTICE:

Be careful not to damage the differential drive pinion.

(b) Using a socket wrench, install a new lock nut.

Torque: 280 N·m (2,855 kgf·cm, 207 in.·lbf)

HINT:

Use a torque wrench with a fulcrum length of 750 mm (29.53 in.).

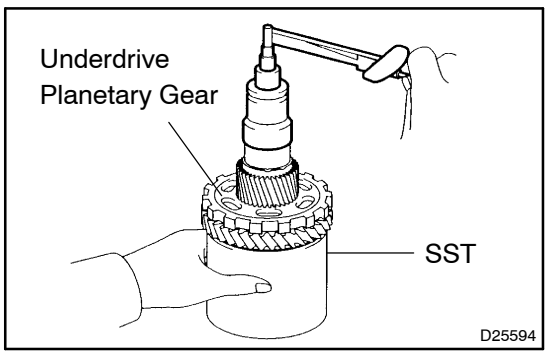

11. INSPECT UNDERDRIVE PLANETARY GEAR PRELOAD

(a) Using SST and a torque wrench, measure the turning torque of underdrive planetary gear assy while rotating the torque wrench at 60 rpm.

SST 09387–00050

Turning torque at 60 rpm.:

0.5 – 1.42 N·m (5.1 – 14.5 kgf·cm, 0.06 – 0.17 in.·lbf)

HINT:

Use a torque wrench with a fulcrum length of 160 mm (6.30 in.).

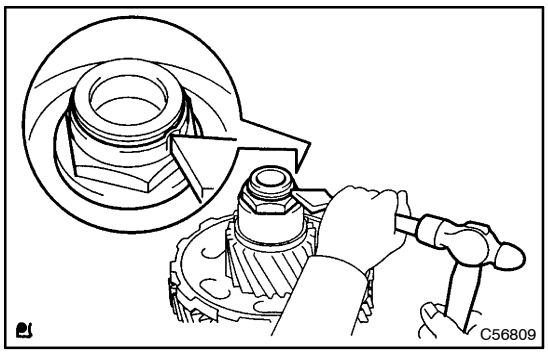

(b) Using a pin punch and hammer, stake the lock nut.

NOTICE:

Make sure that there are no cracks on the nut.

TRANSMISSION VALVE BODY ASSY (U151E/U151F)

4010J–01

OVERHAUL

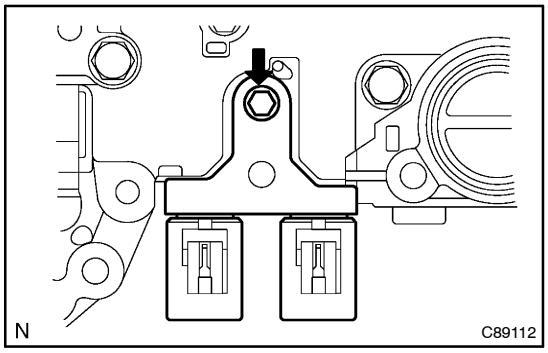

1. REMOVE SHIFT SOLENOID VALVE SL3

(a) Remove the bolt and shift solenoid valve SL3 from the valve body assy.

2. REMOVE LINE PRESSURE CONTROL SOLENOID ASSY

(a) Remove the shift solenoid valve SLT from the valve body assy.

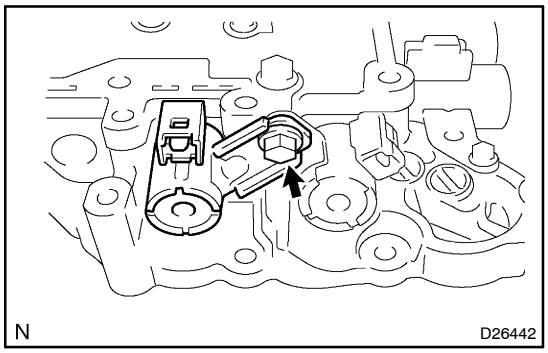

3. REMOVE SHIFT SOLENOID VALVE S4

(a) Remove the bolt and shift solenoid valve S4 from the valve body assy.

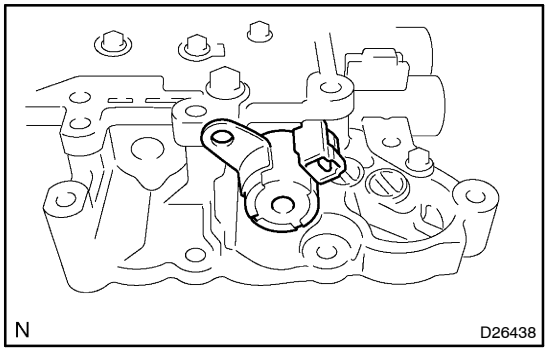

4. REMOVE SHIFT SOLENOID VALVE SR

(a) Remove the shift solenoid valve SR from the valve body assy.

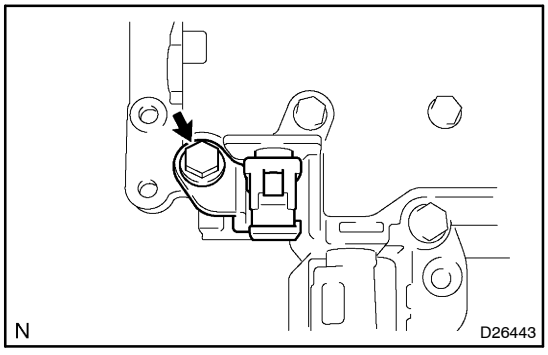

5. REMOVE SHIFT SOLENOID VALVE DSL

(a) Remove the bolt and shift solenoid valve DSL from the valve body assy.

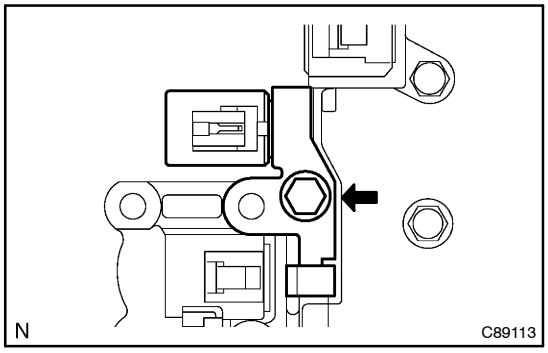

6. REMOVE SHIFT SOLENOID VALVE SL2

(a) Remove the bolt and shift solenoid valve SL2 from the valve body assy.

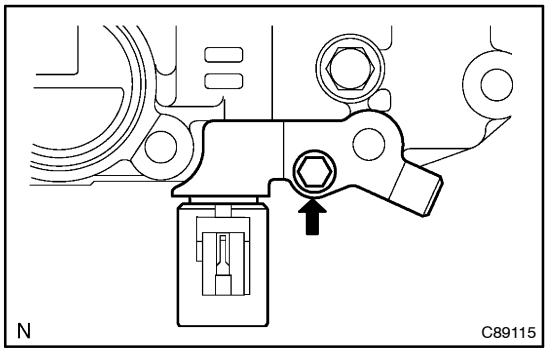

7. REMOVE SHIFT SOLENOID VALVE SL1

(a) Remove the bolt and shift solenoid valve SL1 from the valve body assy.

8. REMOVE MANUAL VALVE

(a) Remove the manual valve from the valve body assy.

9. INSTALL MANUAL VALVE

(a) Install the manual valve to the valve body assy.

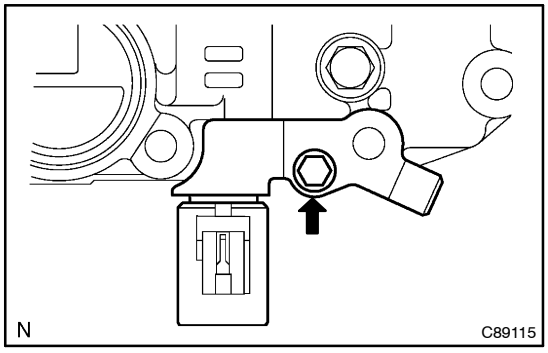

10. INSTALL SHIFT SOLENOID VALVE SL1

(a) Install the shift solenoid valve SL1 to the valve body assy with the bolt.

Torque: 6.6 N·m (67 kgf·cm, 58 in.·lbf)

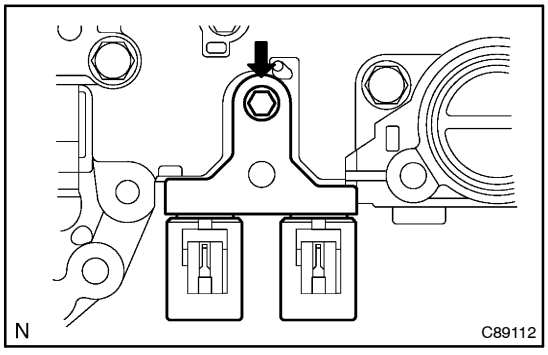

11. INSTALL LINE PRESSURE CONTROL SOLENOID ASSY

(a) Install the shift solenoid valve SLT to the valve body assy with the bolt.

Torque: 6.6 N·m (67 kgf·cm, 58 in.·lbf)

12. INSTALL SHIFT SOLENOID VALVE SL3

(a) Install the shift solenoid valve SL3 to the valve body assy with the bolt.

Torque: 6.6 N·m (67 kgf·cm, 58 in.·lbf)

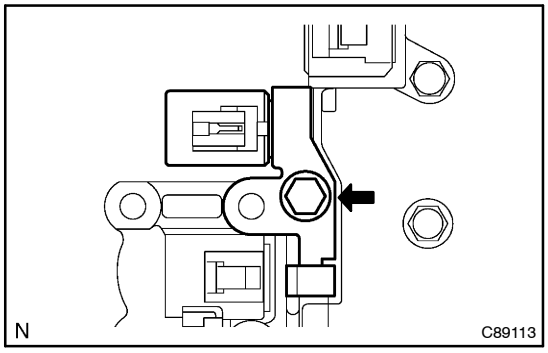

13. INSTALL SHIFT SOLENOID VALVE SL2

(a) Install the shift solenoid valve SL2 to the valve body assy with the bolt.
Torque: 10.8 N·m (110 kgf·cm, 8 ft·lbf)

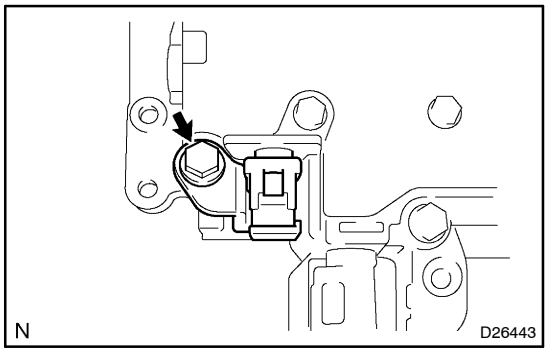

14. INSTALL SHIFT SOLENOID VALVE DSL

(a) Install the shift solenoid valve DSL to the valve body assy with the bolt.
Torque: 10.8 N·m (110 kgf·cm, 8 ft·lbf)

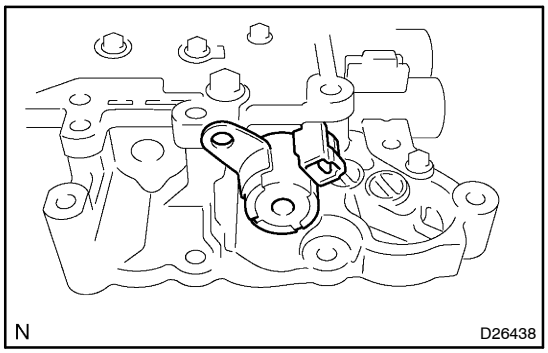

15. INSTALL SHIFT SOLENOID VALVE SR

(a) Install the shift solenoid valve SR to the valve body assy.

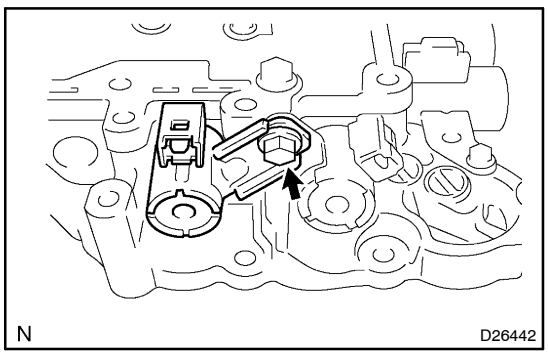

16. INSTALL SHIFT SOLENOID VALVE S4

(a) Install the shift solenoid valve S4 to the valve body assy with the bolt.
Torque: 10.8 N·m (110 kgf·cm, 8 ft·lbf)

FRONT DIFFERENTIAL ASSY (U151E)

OVERHAUL

4006M–03

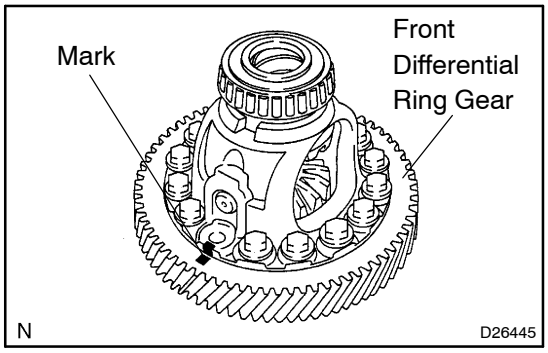

1. REMOVE FRONT DIFFERENTIAL RING GEAR

(a) Place the match–marks on the front differential ring gear and differential case.

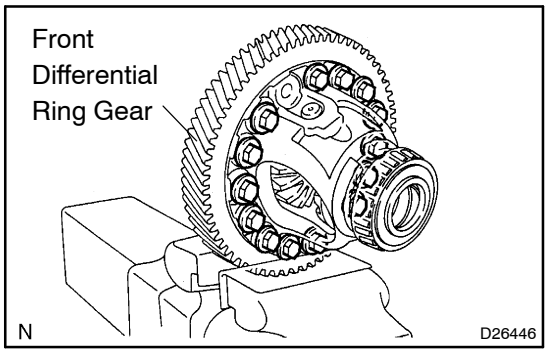

(b) Remove the 14 bolts.

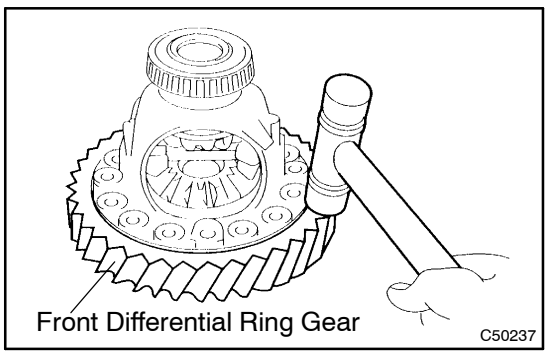

(c) Using a plastic hammer, tap on the front differential ring gear to remove it from the case.

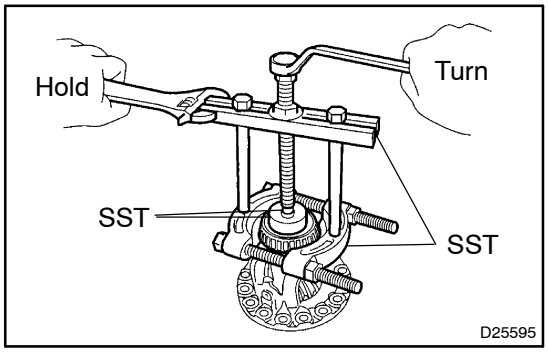

2. REMOVE FR DIFFERENTIAL CASE FRONT TAPERED ROLLER BEARING

(a) Using SST, remove the front differential case front differential tapered roller bearing from the differential case.

SST 09950–00020, 09950–00030, 09950–60010 (09951–00490), 09950–40011 (09957–04010)

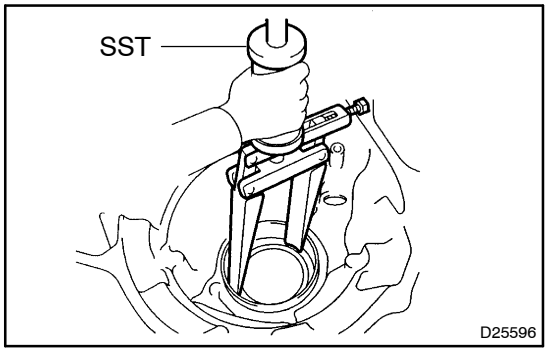

(b) Using SST, remove the front differential case front tapered roller bearing outer race.
SST 09308–00010

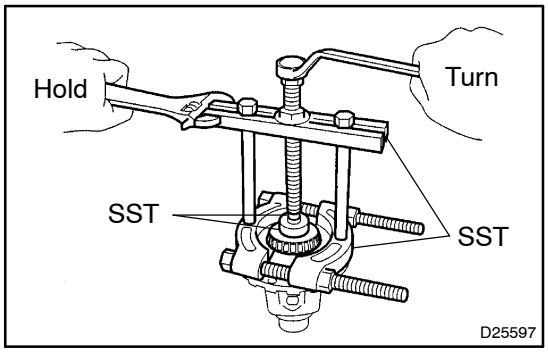

3. REMOVE FR DIFFERENTIAL CASE REAR TAPERED ROLLER BEARING

(a) Using SST, remove the front differential case rear tapered roller bearing from the differential case.
SST 09950–00020, 09950–00030, 09950–60010 (09951–00490), 09950–40011 (09957–04010)

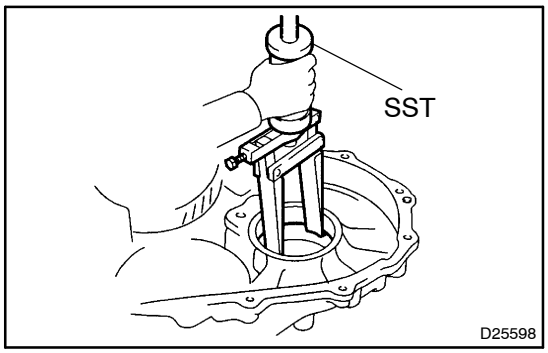

(b) Using SST, remove the front differential case rear tapered roller bearing outer race.
SST 09308–00010

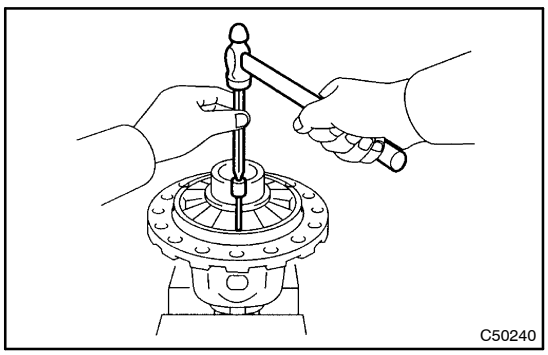

4. REMOVE FRONT DIFFERENTIAL PINION SHAFT STRAIGHT PIN

(a) Using a pin punch and hammer, install the straight pin.

NOTICE:

Before removing the straight pin, unstake it with a pin punch.

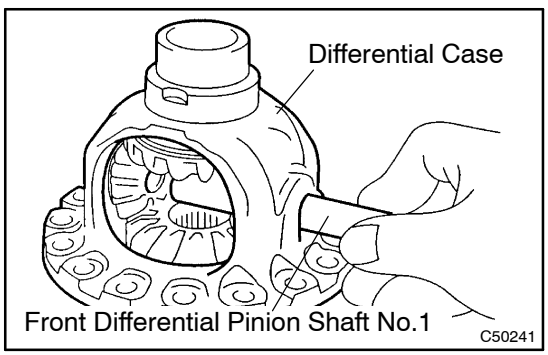

5. REMOVE FRONT DIFFERENTIAL PINION SHAFT NO.1

(a) Remove the front differential pinion shaft No.1 from the differential case.

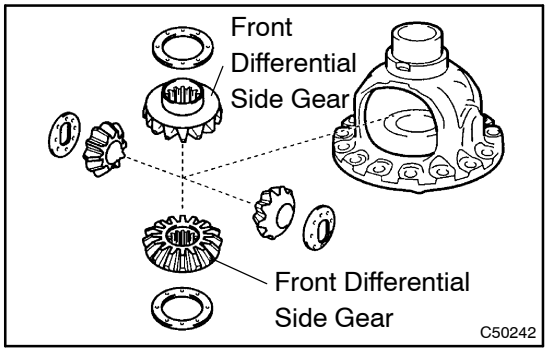

6. REMOVE FRONT DIFFERENTIAL SIDE GEAR

(a) Remove the 2 front differential pinions, 2 pinion thrust washers, 2 front differential side gears and 2 side gear thrust washers from the differential case.

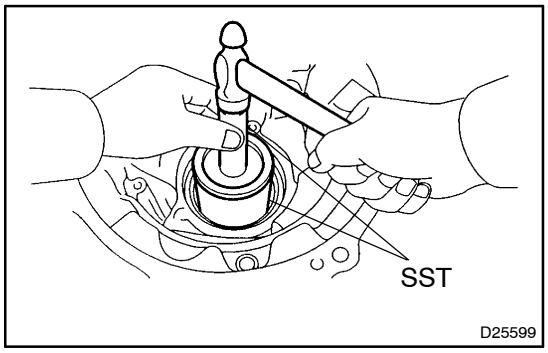

7. REMOVE TRANSAXLE HOUSING OIL SEAL

(a) Using SST, remove the oil seal.
SST 09950–70010 (09951–07100), 09215–00013 (09215–00471)

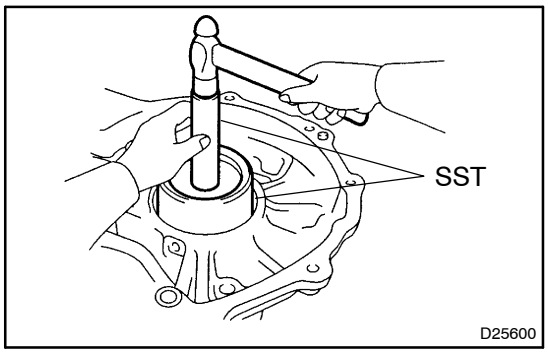

8. REMOVE DIFFERENTIAL SIDE BEARING RETAINER OIL SEAL

(a) Using SST, remove the oil seal.
SST 09950–70010 (09951–07100), 09608–10010

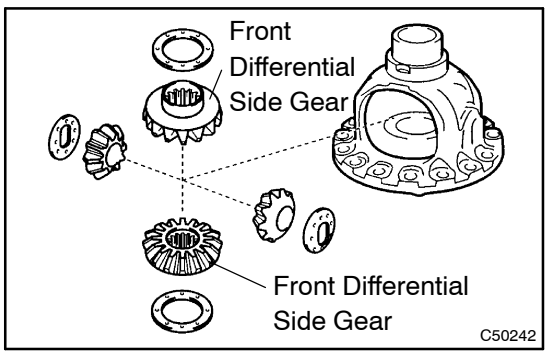

9. INSTALL FRONT DIFFERENTIAL SIDE GEAR

(a) Apply the 2 front differential side gears, 2 side gear thrust washers, 2 front differential pinions and 2 pinion thrust washers with ATF and install them to the differential case.

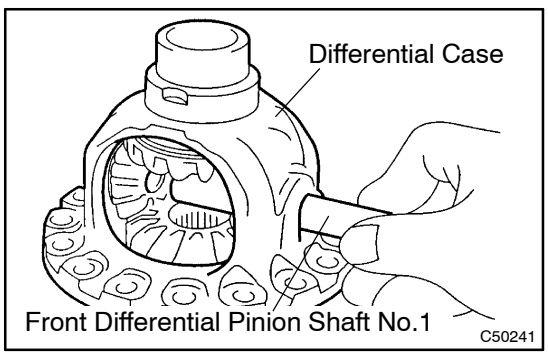

10. INSTALL FRONT DIFFERENTIAL PINION SHAFT NO.1

(a) Apply the front differential pinion shaft No.1 with ATF, install it to the differential case.

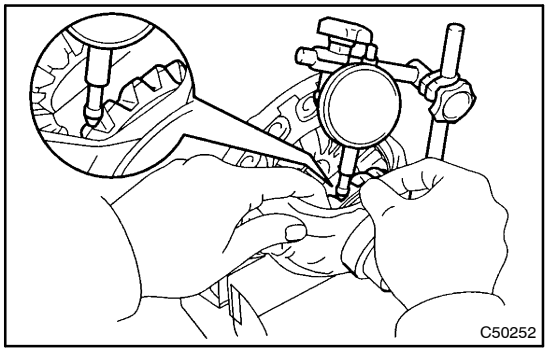

11. INSPECT BACKLASH

(a) Using a dial indicator, inspect the backlash of the side gear.

Standard backlash:
0.05 – 0.20 mm (0.0020 – 0.0079 in.)
Thrust washer thickness

Mark	Thickness
–	1.625 mm (0.0640 in.)
–	1.725 mm (0.0679 in.)
–	1.825 mm (0.0719 in.)

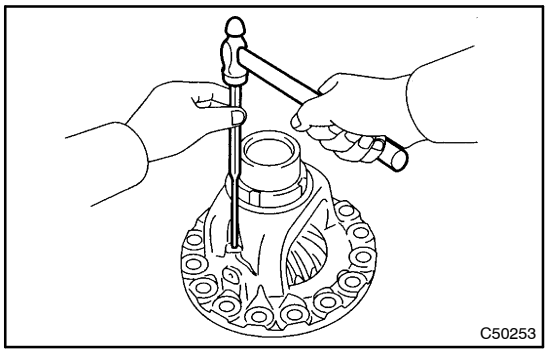

12. INSTALL FRONT DIFFERENTIAL PINION SHAFT STRAIGHT PIN

(a) Using a pin punch and hammer, install the pinion shaft straight pin.

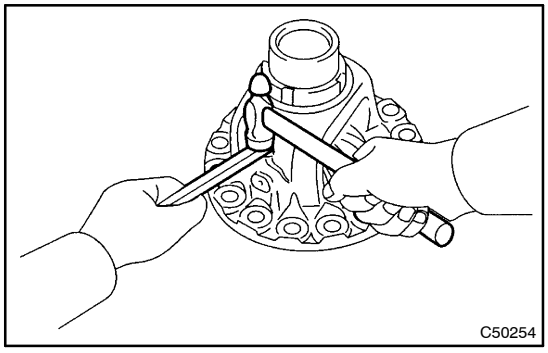

(b) Using a chisel and hammer, stake the differential case.

NOTICE:
Stake it after adjusting the backlash.

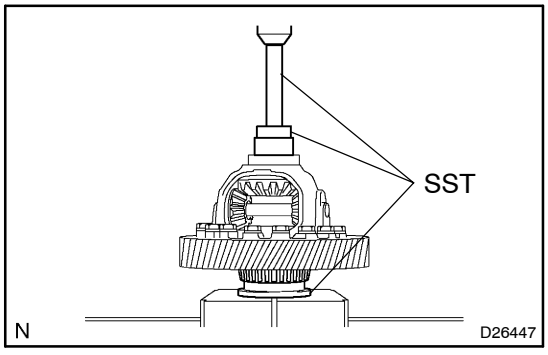

13. INSTALL FR DIFFERENTIAL CASE FRONT TAPERED ROLLER BEARING

(a) Using SST and a press, install the front differential case rear tapered roller bearing to the differential case.

SST 09316–12010, 09550–60010 (09951–00490), 09950–70010 (09951–07100)

NOTICE:
Do not make a damage on the bearing cage during the bearing inner race installation.

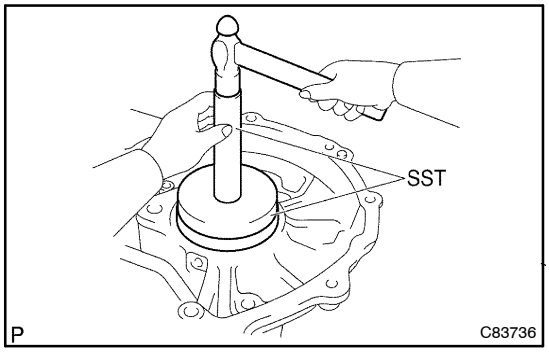

(b) Using SST and a hammer, install the front differential case tapered roller bearing front outer race to the transaxle housing.
SST 09550–60010 (09951–00490), 09950–60020 (09951–00910)

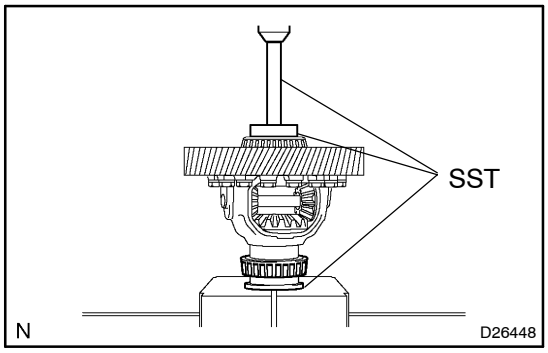

14. INSTALL FR DIFFERENTIAL CASE REAR TAPERED ROLLER BEARING

(a) Using SST and a press, install the front differential case front tapered roller bearing to the differential case.
SST 09316–12010, 09550–60010 (09951–00490), 09950–70010 (09951–07100)

NOTICE:
Do not make a damage on the bearing cage during the bearing inner race installation.

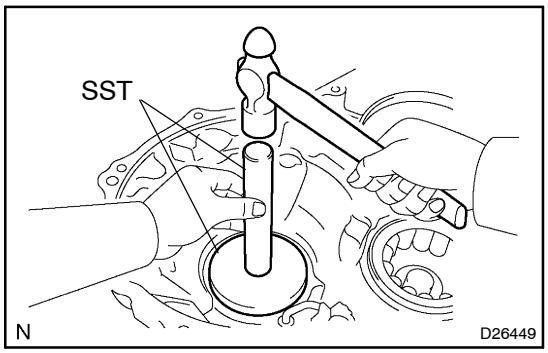

(b) Using SST and a hammer, install the front differential case tapered roller bearing front outer race to the transaxle housing.
SST 09950–70010 (09951–07150), 09950–60020 (09951–00890)

NOTICE:
Clearance is not allowed between the bearing and transaxle housing.

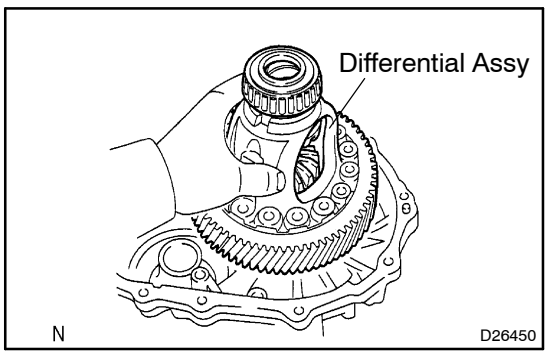

15. ADJUST DIFFERENTIAL SIDE BEARING RRELOAD

(a) Install the differential assy to the transaxle case.

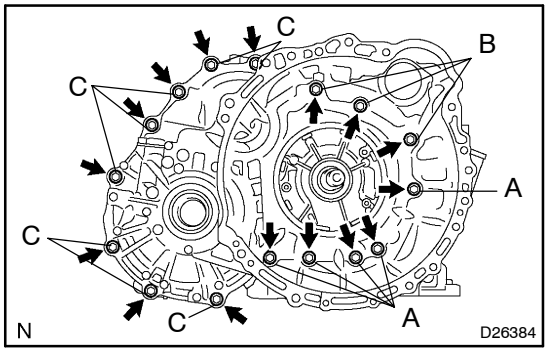

(b) Clean the matching surfaces of the transaxle case and transaxle housing.

(c) Install the transaxle housing to the transaxle case and tighten them with the 16 bolts.

Torque:
Bolt A: 25 N·m (255 kgf·cm, 18 ft·lbf)
Bolt B: 33 N·m (337 kgf·cm, 24 ft·lbf)
Bolt C: 29 N·m (295 kgf·cm, 21 ft·lbf)
Bolt D: 22 N·m (226 kgf·cm, 16.0 ft·lbf)

HINT:

Apply seal packing or equivalent to the A and D.

Seal packing:
THREE BOND 2403 or equivalent
Bolt length:
Bolt A: 50 mm (1.969 in.)
Bolt B: 50 mm (1.969 in.)
Bolt C: 42 mm (1.654 in.)
Bolt D: 72 mm (2.835 in.)

HINT:

Usually, bolt A is a non–reusable bolt. In this case, however, it can be used after cleaning it.

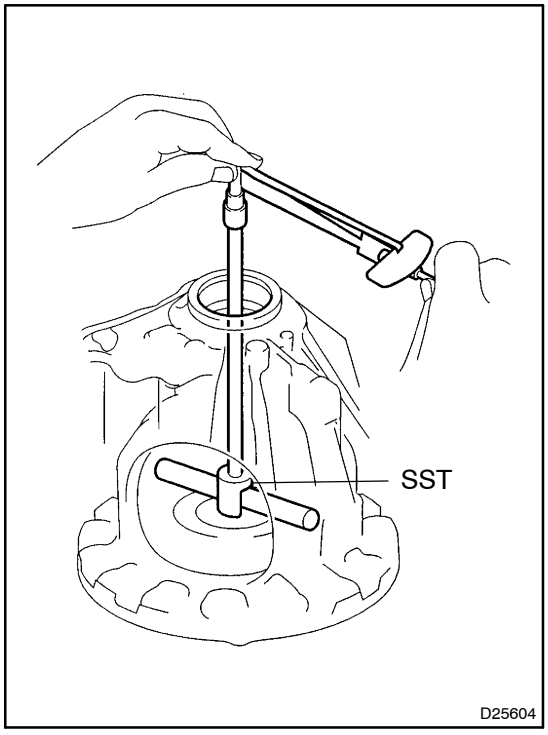

(d) Using SST, turn the differential assy right and left 2 or 3 times to settle the bearing.
SST 09564–32011

(e) Using SST and a torque wrench, measure the turning torque of the differential.
SST 09564–32011

Turning torque at 60 rpm:
New bearing
0.20 – 0.69 N·m (2.0 – 7.0 kgf·cm, 1.8 – 6.1 in.·lbf)
Used bearing
0.10 – 0.35 N·m (1.0 – 3.6 kgf·cm, 0.9 – 3.1 in.·lbf)

HINT:

If the turning torque is not within the specified value, refer to the table below to select a thrust washer which turning torque is within the specified value.

Flange thickness: mm (in.)

Mark	Thickness	Mark	Thickness
0	2.00 (0.0787)	9	2.45 (0.0965)
1	2.05 (0.0807)	A	2.50 (0.0984)
2	2.10 (0.0827)	B	2.55 (0.1004)
3	2.15 (0.0846)	C	2.60 (0.1024)
4	2.20 (0.0866)	D	2.65 (0.1043)
5	2.25 (0.0886)	E	2.70 (0.1063)
6	2.30 (0.0906)	F	2.75 (0.1083)

Mark	Thickness	Mark	Thickness
7	2.35 (0.0925)	G	2.80 (0.1102)
8	2.40 (0.0945)	H	2.85 (0.1122)

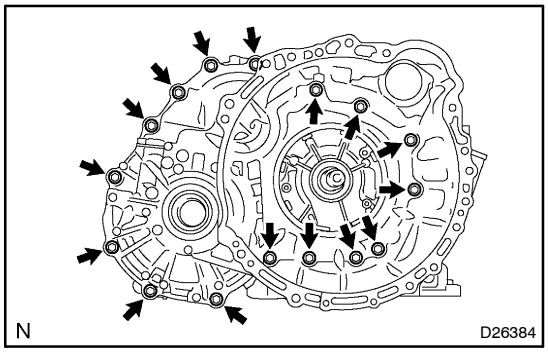

(f) Remove the 16 bolts and the transaxle housing.

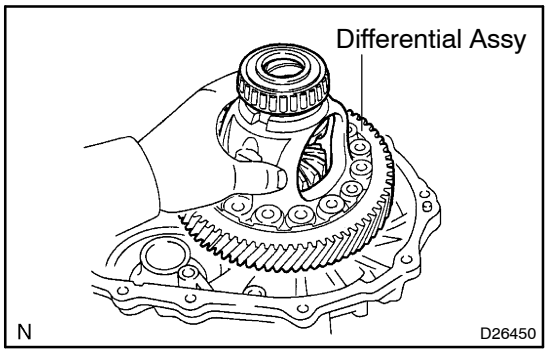

(g) Remove the differential assy.

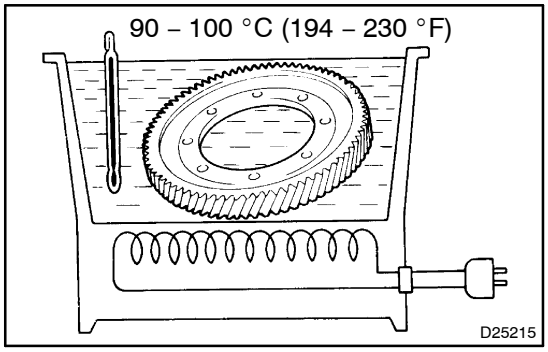

16. INSTALL FRONT DIFFERENTIAL RING GEAR

(a) Using ATF and heater, heat the front differential ring gear to 90 – 110 °C (194.0 – 230.0 °F).

NOTICE:

Do not overheat the ring gear to 110 °C (230.0 °F) or more.

(b) Clean the contact surface of the front differential case.

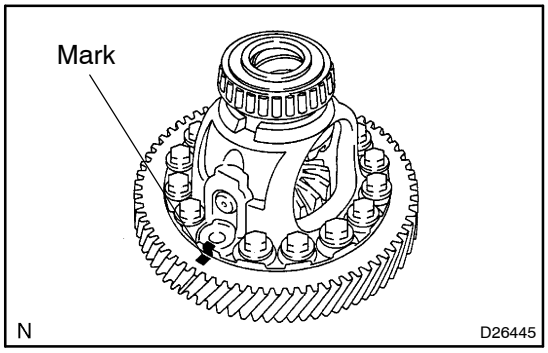

(c) Align the match–marks, install the front differential ring gear case quickly.

NOTICE:

Do not install the bolts while the ring gear is hot.

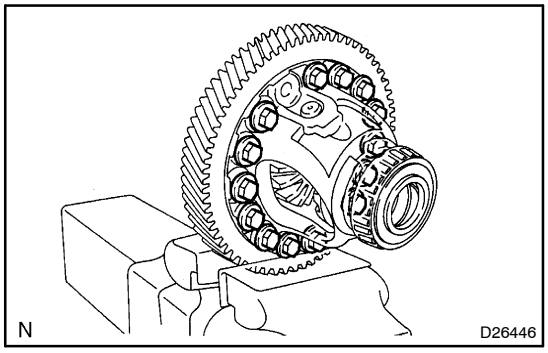

(d) Tighten the 14 bolts.
Torque: 95.0 N·m (970 kgf·cm, 70 ft·lbf)

NOTICE:
Tighten the bolts a little at a time in diagonal order.

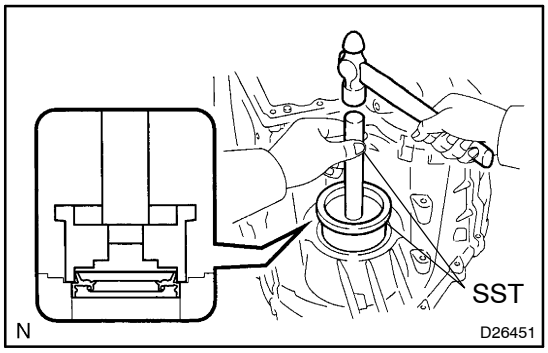

17. INSTALL TRANSAXLE HOUSING OIL SEAL

(a) Using SST and a hammer, install a new oil seal.
(b) Apply the rip of oil seal with a little MP grease.
SST 09223–15020, 09950–70010 (09951–07150)
Oil seal drive in depth: 0 ± 0.5 mm (0 ± 0.0197 in.)

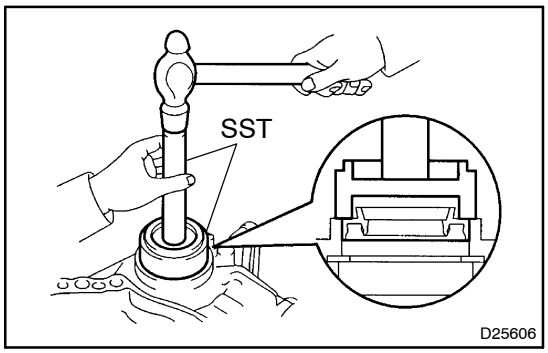

18. INSTALL DIFFERENTIAL SIDE BEARING RETAINER OIL SEAL

(a) Using SST and a hammer, drive into a new oil seal.
(b) Apply the lip of the oil seal with a little MP grease.
SST 09710–30050, 09950–70010 (09951–07150)
Oil seal drive in depth: 0 ± 0.5 mm (0 ± 0.0197 in.)

FRONT DIFFERENTIAL ASSY (U151F)

4006N–02

OVERHAUL

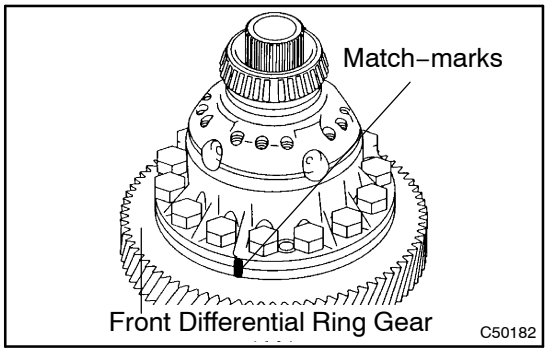

1. REMOVE FRONT DIFFERENTIAL RING GEAR

(a) Place the match–marks on the ring gear and differential case.

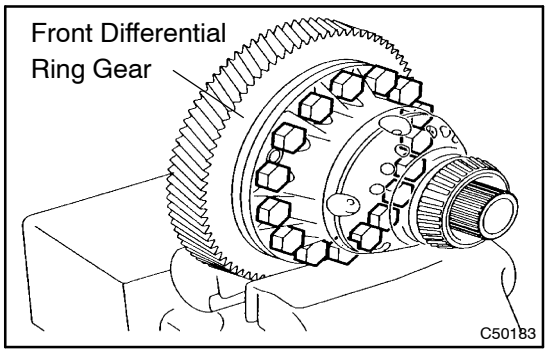

(b) Remove the 16 bolts.

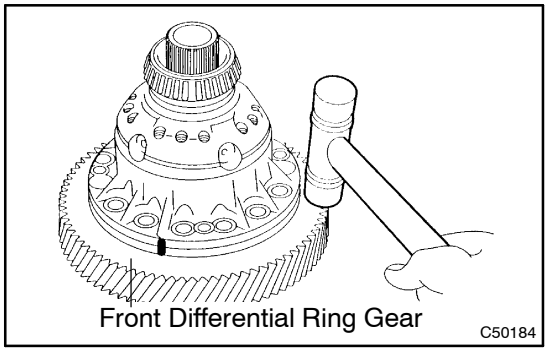

(c) Using a plastic hammer, tap on the ring gear to remove it from the case.

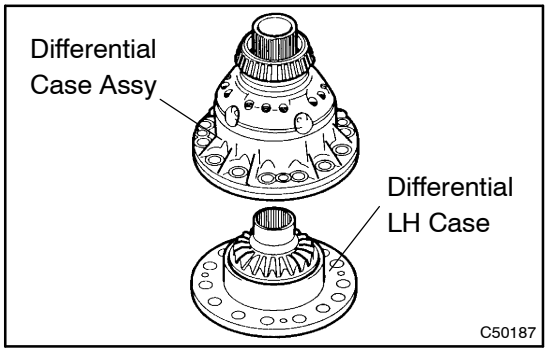

2. REMOVE FRONT DIFFERENTIAL SIDE GEAR

(a) Remove the differential LH case from the differential case assy.

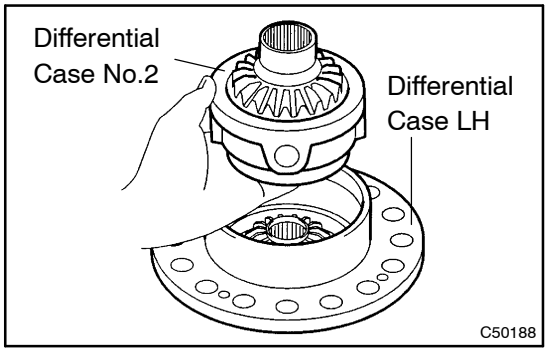

(b) Remove the differential case No.2 from the differential case LH.

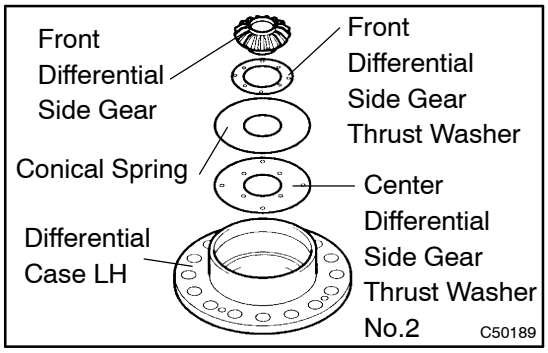

(c) Remove the front differential side gear, front differential side gear thrust washer, conical spring and center differential side gear thrust washer No.2 from the differential case LH.

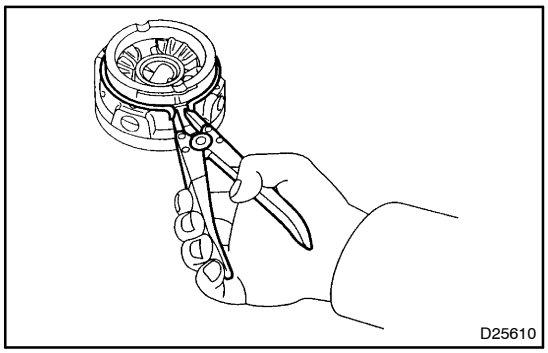

(d) Using a snap ring expander, remove the pinion shaft spacer snap ring.

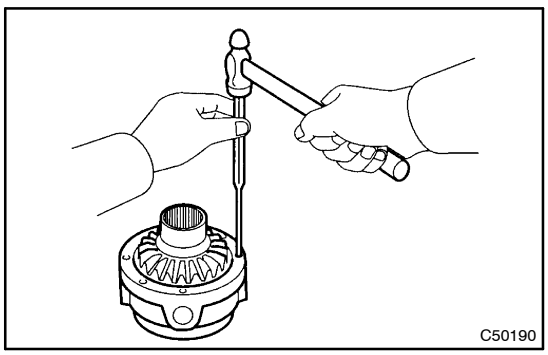

(e) Using a pin punch and a hammer, remove 3 straight pins.

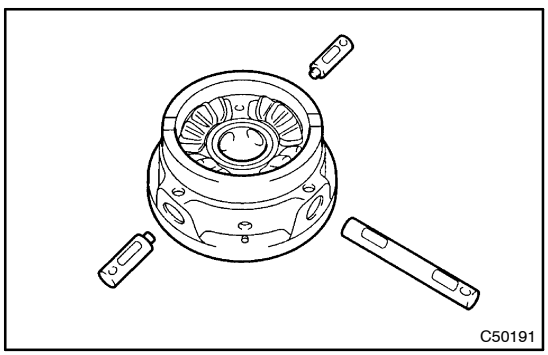

(f) Remove the center differential pinion shaft and 2 differential pinion shafts.

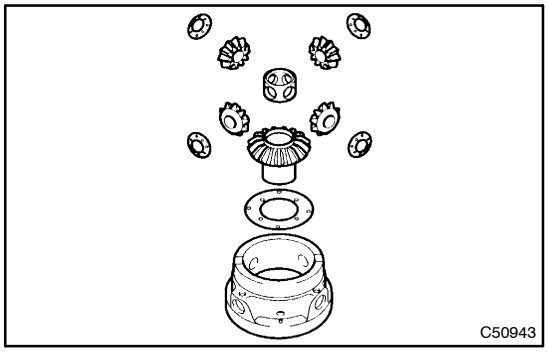

(g) Remove 4 front differential pinions, 4 front differential pinion thrust washers, front differential pinion shaft holder, front differential planetary ring gear and differential side gear thrust washer No. 1.

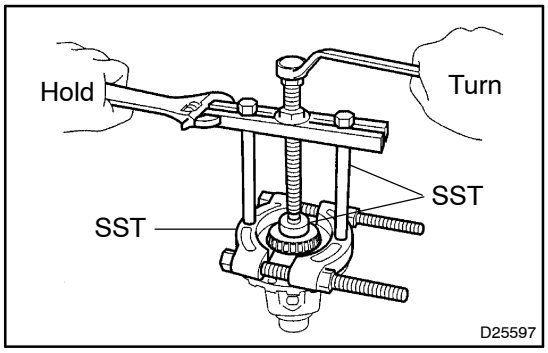

3. REMOVE FR DIFFERENTIAL CASE REAR TAPERED ROLLER BEARING

(a) Using SST, remove the front differential case rear tapered roller bearing from the differential case.
SST 09950–00020, 09950–00030, 09950–60010 (09951–00480)

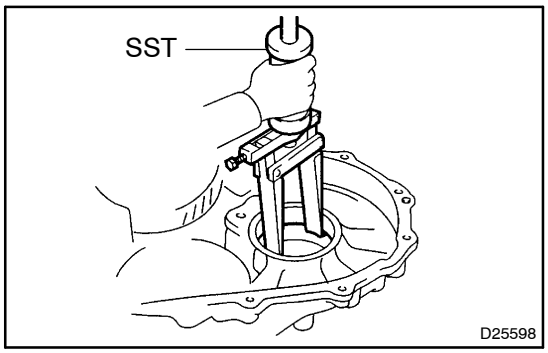

(b) Using SST, remove the front differential case rear tapered roller bearing outer race and differential case washer.
SST 09308–00010

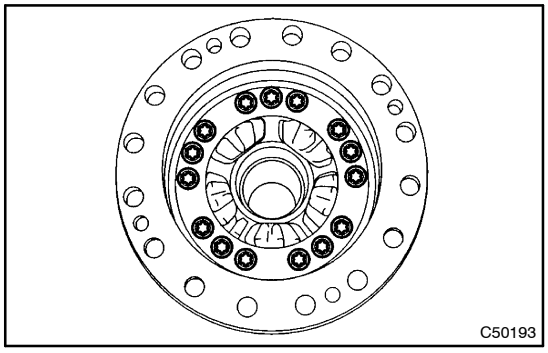

4. REMOVE CENTER DIFFERENTIAL PINION

(a) Using torx socket (T50), remove the 15 bolts.

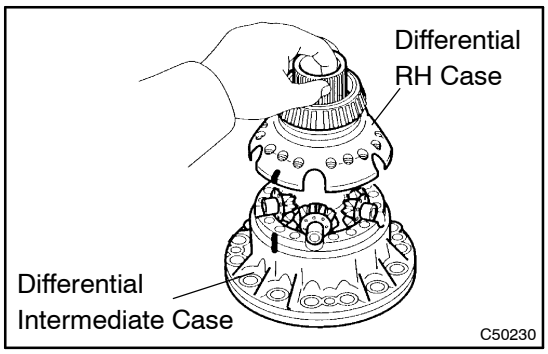

(b) Place the matchmarks on the differential intermediate case and differential case.

(c) Remove the differential intermediate case from the differential case RH.

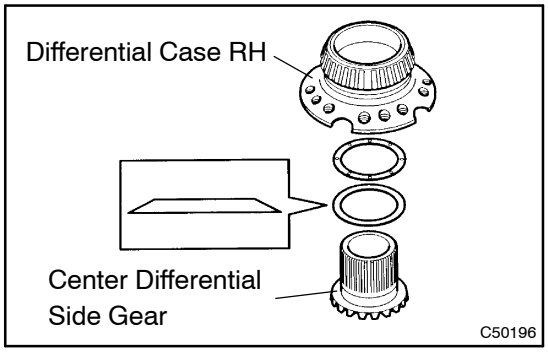

(d) Remove the center differential side gear, conical spring washer and center differential side gear thrust washer No. 1 RH from the differential case RH.

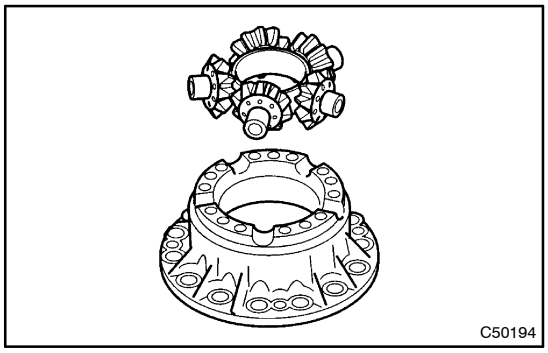

(e) Remove the differential spider, 5 center differential pinions and 5 center differential pinion thrust washers from the differential intermediate case.

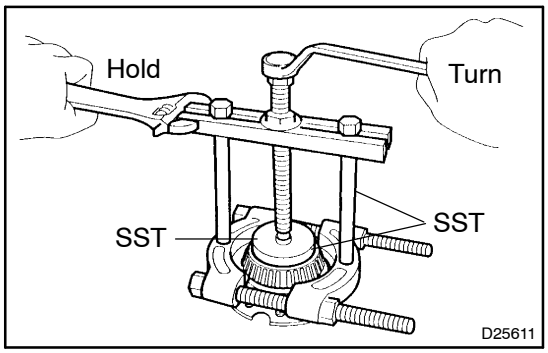

5. REMOVE FR DIFFERENTIAL CASE FRONT TAPERED ROLLER BEARING

(a) Using SST, remove the front differential case front tapered roller bearing from the differential case.

SST 09950–00020, 09950–00030, 09950–60010 (09951–00600)

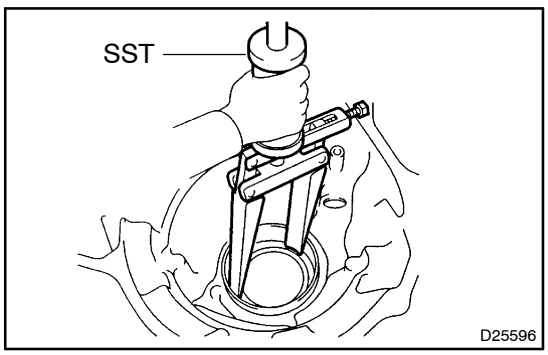

(b) Using SST, remove the front differential case front tapered roller bearing outer race and differential case washer.

SST 09308–00010

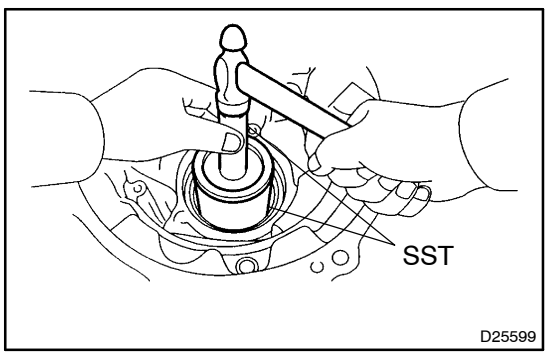

6. REMOVE TRANSAXLE HOUSING OIL SEAL

(a) Using SST, remove the oil seal.

SST 09950–70010 (09951–07100), 09649–17010

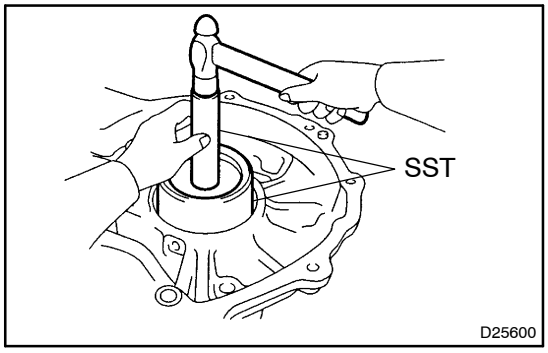

7. REMOVE DIFFERENTIAL SIDE BEARING RETAINER OIL SEAL

(a) Using SST, remove the oil seal.
SST 09950–70010 (09951–07100), 09608–10010

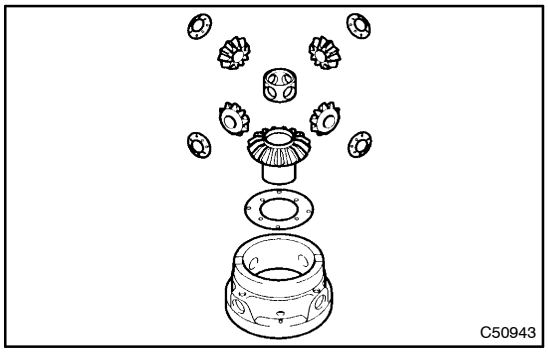

8. INSTALL DIFFERENTIAL CASE SUB–ASSY NO.2

(a) Coat the front differential side gear thrust washer No.1, front differential planetary ring gear, front differential pinion No.2, front differential pinion thrust washer No.2, front differential pinion shaft holder, front differential pinion shaft and 2 differential pinion shafts with ATF, install them to the differential case No.2.

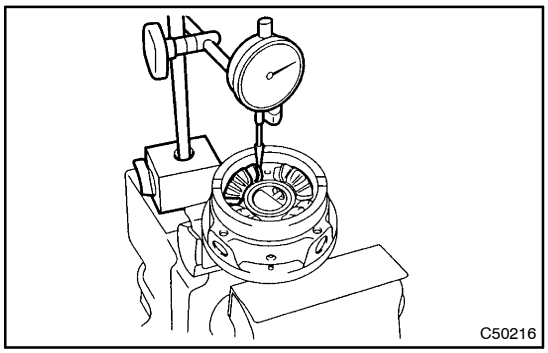

(b) Using a dial indicator, measure the backlash of one pinion gear while holding the front differential side gear toward the case.
Standard backlash:
0.05 – 0.20 mm (0.0020 – 0.0079 in.)

NOTICE:
Do not mount the surface of front differential case which contacts with bushing in a vise.

If the backlash is not within the specified value, refer to the table below and select a thrust washer which will ensure that the backlash is within the specified value.

Thrust washer thickness: mm (in.)

Mark	Thickness	Mark	Thickness
A	0.95 (0.0373)	F	1.20 (0.0472)
B	1.00 (0.0393)	G	1.25 (0.0492)
C	1.05 (0.0413)	H	1.30 (0.0512)
D	1.10 (0.0433)	J	1.35 (0.0532)
E	1.15 (0.0453)	K	1.40 (0.0552)

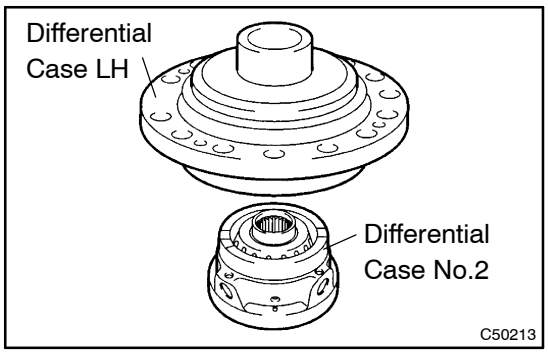

(c) Engage the front differential side gear to the above mentioned front differential case.
(d) Install the differential case LH to the front differential case and measure its center.
(e) After that, remove the differential case LH.

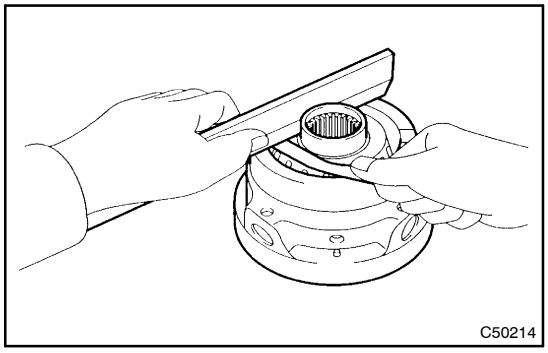
C50214

(f) Using a straight edge and feeler gauge, measure the clearance between the front differential case and the front differential side gear.

t= Thrust washer thickness

L= Clearance

t= L–0.162 – 0.265 mm (0.0064 – 0.0104 in.)

If the clearance is not within the specified value, refer to the table below and select a thrust washer which will ensure that the clearance is within the specified value.

Thrust washer thickness: mm (in.)

Mark	Thickness	Mark	Thickness
A	0.95 (0.0373)	F	1.20 (0.0472)
B	1.00 (0.0393)	G	1.25 (0.0492)
C	1.05 (0.0413)	H	1.30 (0.0512)
D	1.10 (0.0433)	J	1.35 (0.0532)
E	1.15 (0.0453)	K	1.40 (0.0552)

If the clearance is not within the specified value, parts may have been assembled incorrectly, so check and reassemble it.

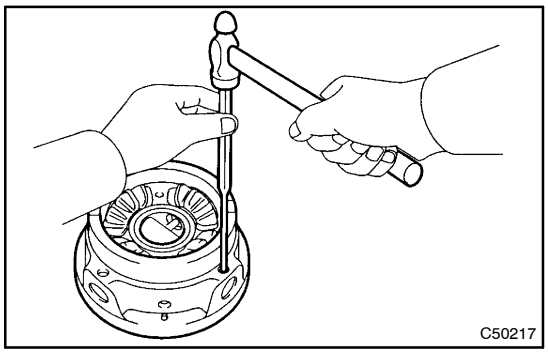
C50217

(g) Using a pin punch and a hammer, install 3 straight pins.

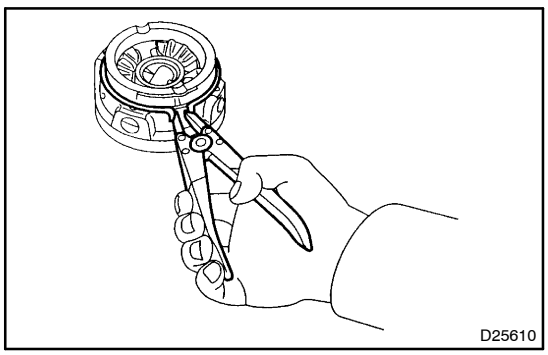
D25610

(h) Using a snap ring expander, install the pinion shaft spacer snap ring.

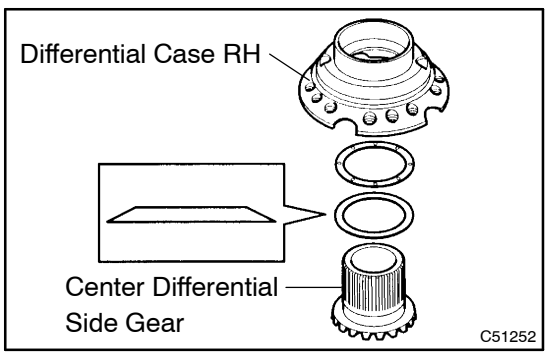

C51252

9. INSTALL CTR DIFFERENTIAL PLANETARY GEAR ASSY

(a) Install the center differential side gear, conical spring washer and center differential side gear thrust washer No.2 RH from the differential case RH.

HINT:

Ensure that the conical washers is installed correctly.

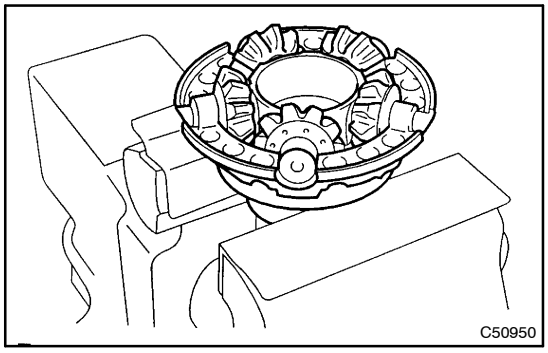
C50950

(b) Hold the differential case RH by vice. Install the center differential pinion and pinion thrust washer to the differential spider and install them to the differential case RH.

NOTICE:

When holding the differential case RH by vise, be sure to place an aluminum sheet between them and use a minimum force.

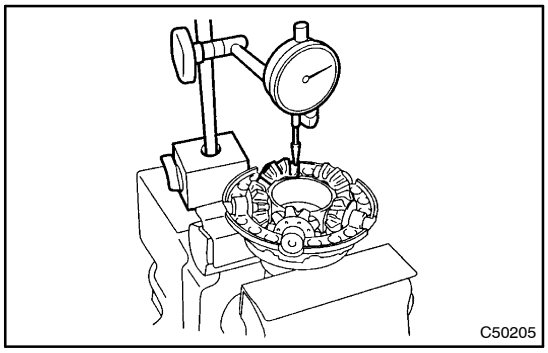
C50205

(c) Pressing and holding the differential spider toward the differential case RH, measure the pinion's backlash with a dial indicator as illustrated.

Standard backlash:

0.05 – 0.20 mm (0.0020 – 0.0079 in.)

If the backlash is not within the specified value, refer to the table below and select a thrust washer which will ensure that the backlash is within the specified value.

Thrust washer thickness: mm (in.)

Mark	Thickness	Mark	Thickness
MA	0.80 (0.0313)	MH	1.15 (0.0453)
MB	0.85 (0.0333)	MJ	1.20 (0.0472)
MC	0.90 (0.0353)	MK	1.25 (0.0492)
MD	0.95 (0.0373)	ML	1.30 (0.0512)
ME	1.00 (0.0393)	MM	1.35 (0.0532)
MF	1.05 (0.0413)	MN	1.40 (0.0552)
MG	1.10 (0.0433)	–	–

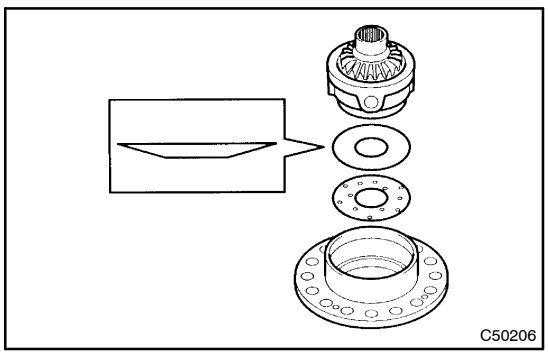
C50206

(d) Temporarily install the differential side gear thrust washer No.2 LH, center differential side gear conical spring washer and differential case No.2 to the differential case LH.

HINT:

Ensure that the conical washers is installed correctly.

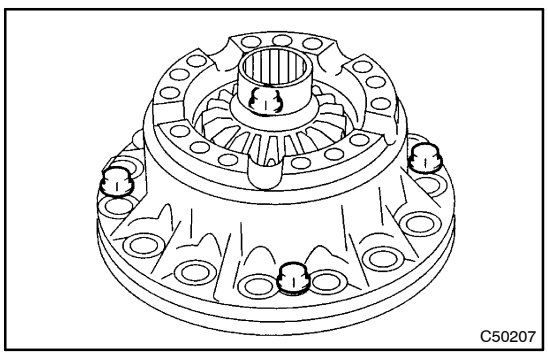
C50207

(e) Install the differential intermediate case to the above and fix them with 4 bolts.

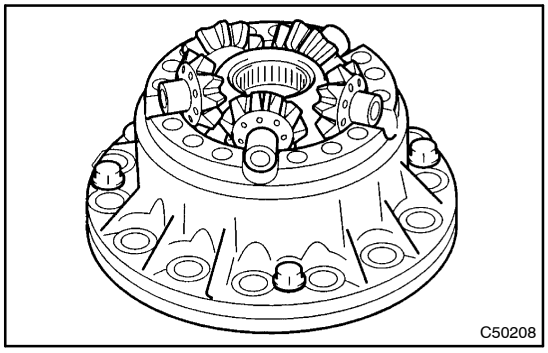

(f) Remove the differential spider, 5 center differential pinions and 5 center differential pinion thrust washers from the differential case RH. Put them in the differential intermediate case and fix the case.

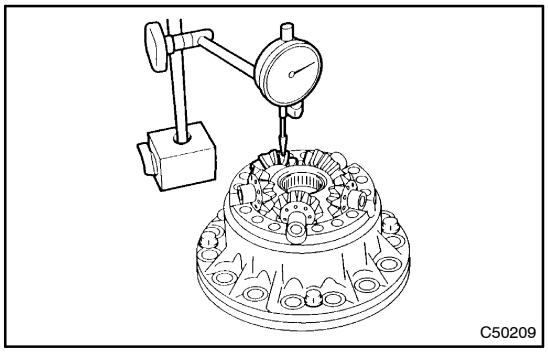

(g) Pressing and holding the differential spider toward the differential intermediate case, measure the pinion's backlash with a dial indicator.

Standard backlash:

0.05 – 0.20 mm (0.0020 – 0.0079 in.)

If the backlash is not within the specified value, refer to the table below and select a thrust washer which will ensure that the backlash is within the specified value.

Thrust washer thickness: mm (in.)

Mark	Thickness	Mark	Thickness
MA	0.80 (0.0313)	MH	1.15 (0.0453)
MB	0.85 (0.0333)	MJ	1.20 (0.0472)
MC	0.90 (0.0353)	MK	1.25 (0.0492)
MD	0.95 (0.0373)	ML	1.30 (0.0512)
ME	1.00 (0.0393)	MM	1.35 (0.0532)
MF	1.05 (0.0413)	MN	1.40 (0.0552)
MG	1.10 (0.0433)	–	–

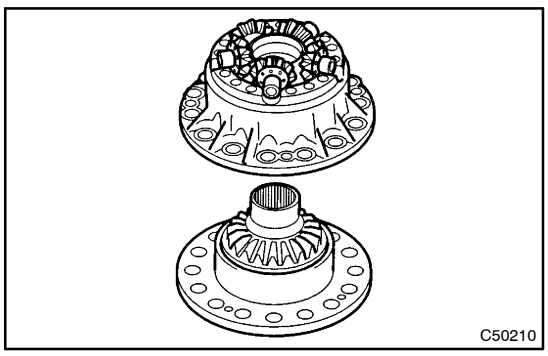

(h) Remove the 4 bolts and disconnect the differential case LH from the differential intermediate case.

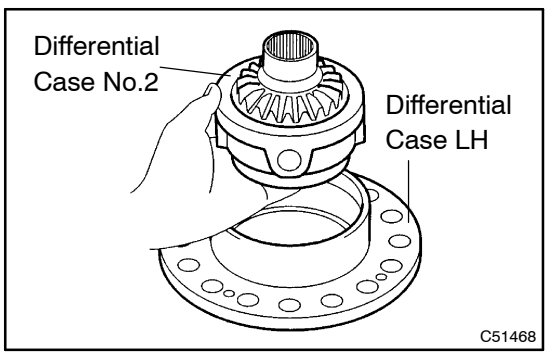

(i) Remove the differential case No.2 from the differential case LH.

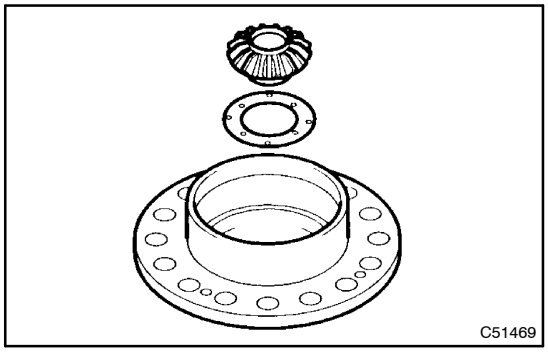
C51469

(j) Install the selected differential side gear thrust washer No. 2 LH and center differential planetary gear to the differential case LH.

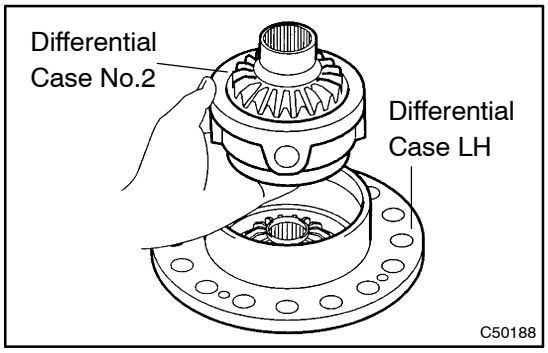

C50188

(k) Install the differential case No. 2 to the differential case LH again.

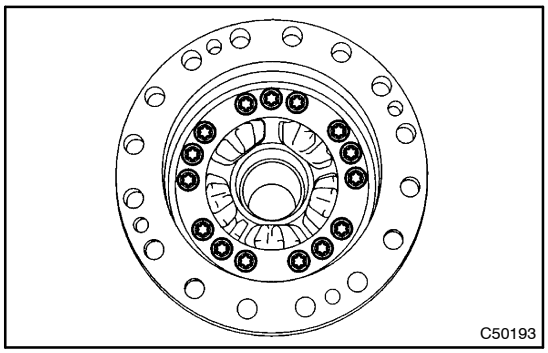
C50193

(l) Install the adjusted differential case RH to the intermediate case and tighten the 15 bolts using a torx socket wrench (T50).

Torque: 63 N·m (642 kgf·cm, 46 ft·lbf)

NOTICE:

Align the matchmarks.

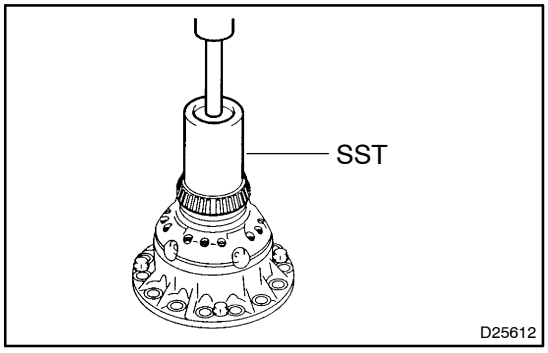

D25612

10. INSTALL FR DIFFERENTIAL CASE FRONT TAPERED ROLLER BEARING

(a) Using SST and a press, install the front differential case tapered roller bearing FR to the differential case.

SST 09950–70010 (09951–07100), 09649–17010

NOTICE:

Do not make a damage on the bearing cage during the bearing inner race installation.

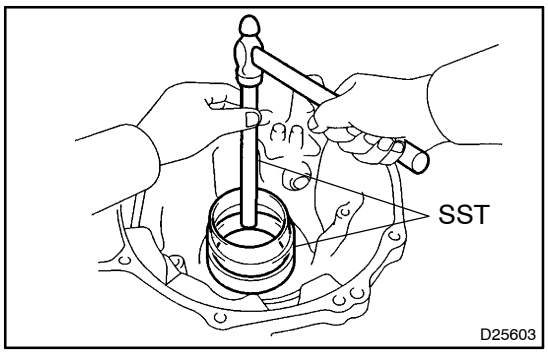

D25603

(b) Using SST, install the outer race of the tapered roller bearing FR.

SST 09527–17011, 09950–60020 (09951–01030)

NOTICE:

Clearance is not allowed between the plate washer and transaxle housing.

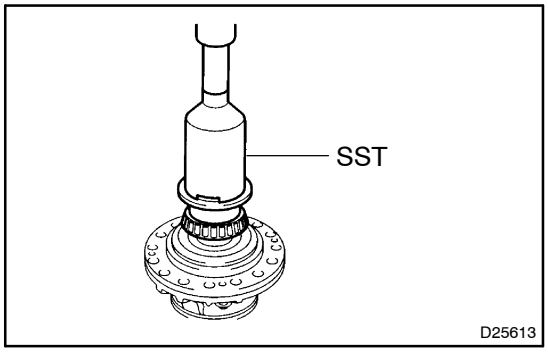

11. INSTALL FR DIFFERENTIAL CASE REAR TAPERED ROLLER BEARING

(a) Using SST and a press, install the front differential case tapered roller bearing RR to the differential case.
SST 09316–20011, 09214–76011

NOTICE:
Do not make a damage on the bearing cage during the bearing inner race installation.

(b) Install the front differential case shim RR to the transaxle case.

If the bearing is new, check to select a front differential case shim RR of proper thickness starting from the thinner ones.
If the bearing is reused, check to select a front differential case shim RR starting from the same thickness as one installed before disassembly.

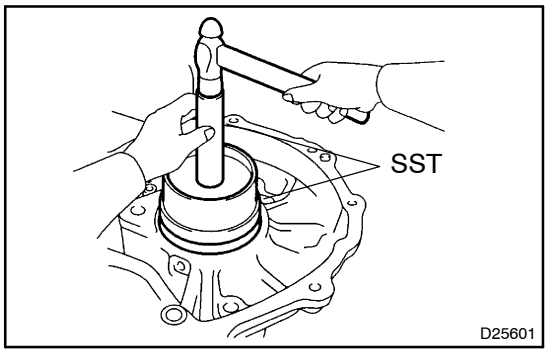

(c) Using SST, install the outer race of the front differential case tapered roller bearing RR.
SST 09950–60020 (09951–00890), 09950–70010 (09951–07100)

NOTICE:
Clearance is not allowed between the differential case shim and transaxle case.

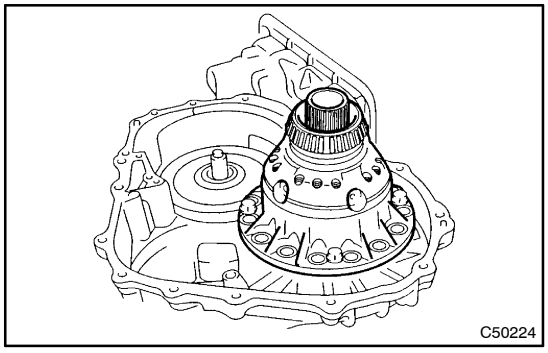

12. ADJUST TAPERED POLLER BEARING PRELOAD

(a) Install the intermediate case to the differential case LH and fix them with 4 bolts.

(b) Install the differential assy to the transaxle case.

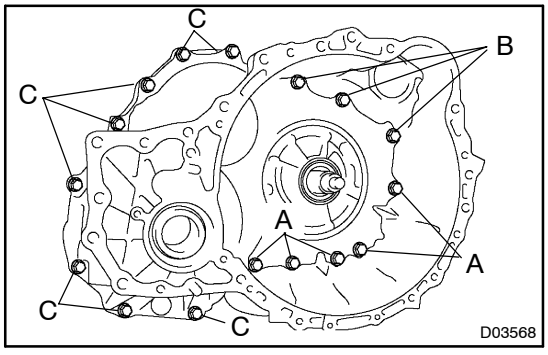

(c) Clean the matching surfaces of the transaxle case and transaxle housing.

(d) Install the transaxle housing to the transaxle case and tighten them with the 16 bolts.
Torque:
Bolt A: 25 N·m (255 kgf·cm, 18 ft·lbf)
Bolt B 33 N·m (337 kgf·cm, 24 ft·lbf)
Bolt C 29 N·m (295 kgf·cm, 21 ft·lbf)
Bolt length:
Bolt A: 50 mm (1.969 in.)
Bolt B: 50 mm (1.969 in.)
Bolt C: 42 mm (1.654 in.)

HINT:
Usually, bolt A is a non–reusable bolt. In this case, however, it can be used after cleaning it.

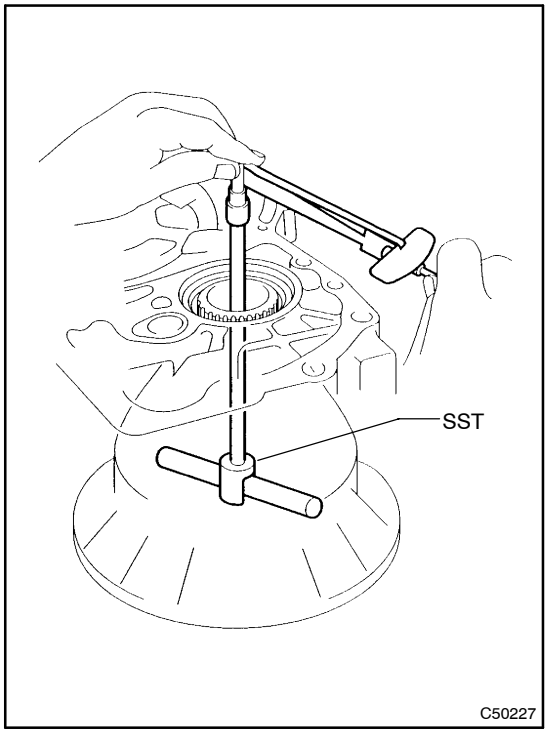

(e) Using SST, turn the differential assy right and left 2or 3 times to allow the bearing settle.
SST 09564–32011

(f) Using SST and a torque wrench, measure the turning torque of the differential case assy.
SST 09564–32011
Turning torque at 60 rpm:
New bearing
0.20 – 0.69 N·m (2.0 – 7.0 kgf·cm, 1.8 – 6.1 in.·lbf)
Used bearing
0.10 – 0.35 N·m (1.0 – 3.6 kgf·cm, 0.9 – 3.1 in.·lbf)

HINT:
If the turning torque is not within the specified value, refer to the table below and select a thrust washer which turning torque is within the specified value.

Flange thickness: mm (in.)

Mark	Thickness	Mark	Thickness
0	2.00 (0.0787)	9	2.45 (0.0965)
1	2.05 (0.0807)	A	2.50 (0.0984)
2	2.10 (0.0827)	B	2.55 (0.1004)
3	2.15 (0.0846)	C	2.60 (0.1024)
4	2.20 (0.0866)	D	2.65 (0.1043)
5	2.25 (0.0886)	E	2.70 (0.1063)
6	2.30 (0.0906)	F	2.75 (0.1083)
7	2.35 (0.0925)	G	2.80 (0.1102)
8	2.40 (0.0945)	H	2.85 (0.1122)

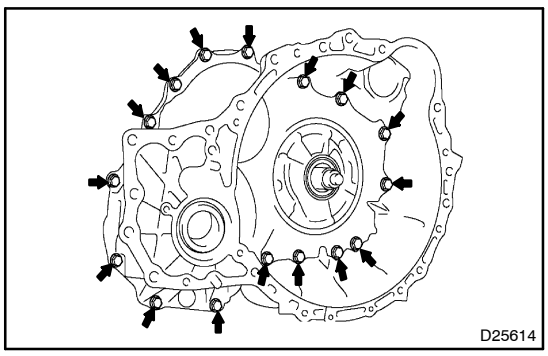

(g) Remove the 16 bolts and the transaxle housing.

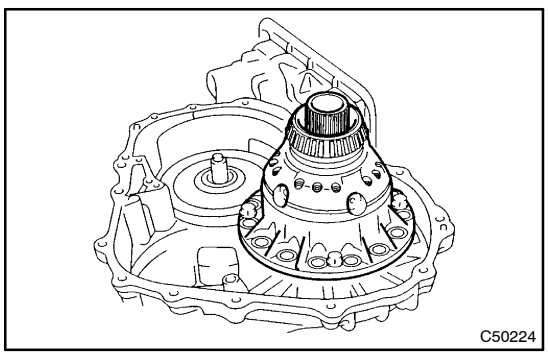

(h) Remove the differential assy.

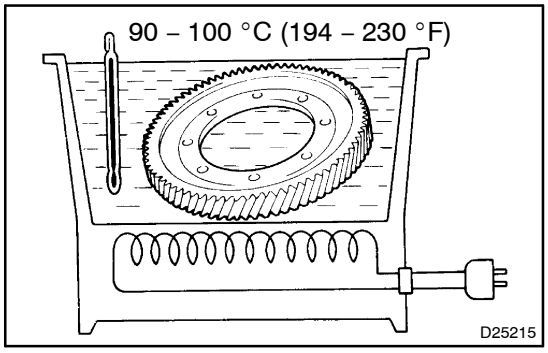

13. INSTALL FRONT DIFFERENTIAL RING GEAR

(a) Using ATF and heater, heat the front differential ring gear to 90 – 110 °C. (194.0 – 230.0 °F)

NOTICE:

Do not overheat the ring gear to 110 °C (230.0 °F) or more.

(b) Clean the contact surface of the front differential case.

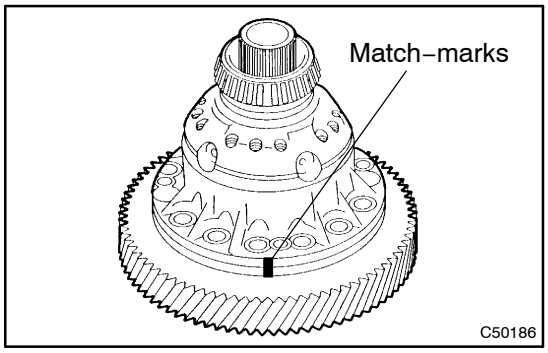

(c) Set the match–marks, install the front differential ring gear case quickly.

NOTICE:

Do not install the bolts while the ring gear is hot.

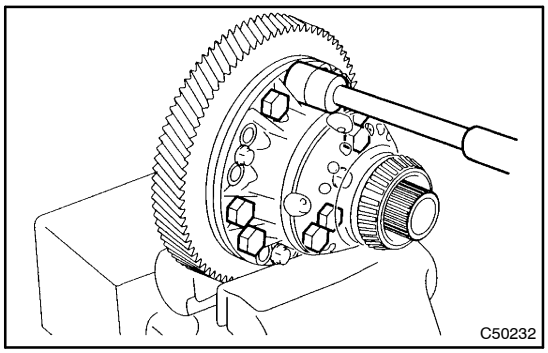

(d) Temporarily install the 8 bolts as shown in the illustration.

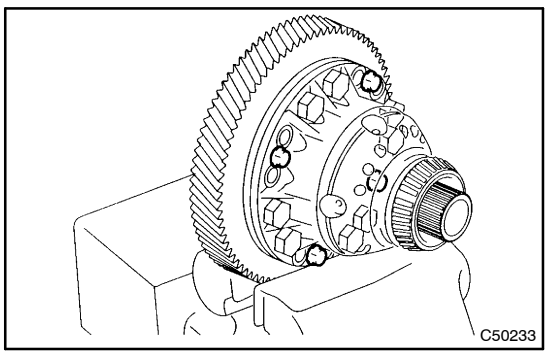

(e) Remove the 4 bolts shown in the illustration.

(f) Temporarily install the remaining 8 set bolts.

(g) Fully tighten the set bolts.

Torque: 95.1 N·m (970 kgf·cm, 70 ft·lbf)

NOTICE:

Tighten the bolts a little at a time in diagonal order.

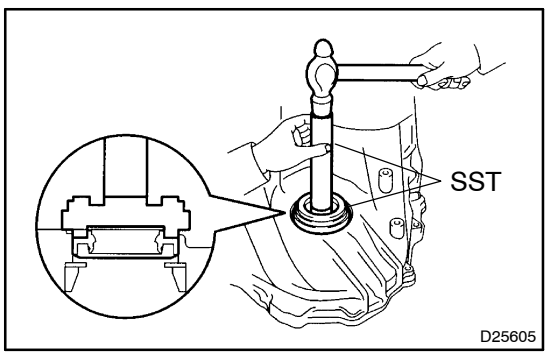

14. INSTALL DIFFERENTIAL SIDE BEARING RETAINER OIL SEAL

(a) Using SST and a hammer, install a new oil seal.

SST 09223–15020, 09950–70010 (09951–07100)

(b) Coat the rip of oil seal with a little MP grease.

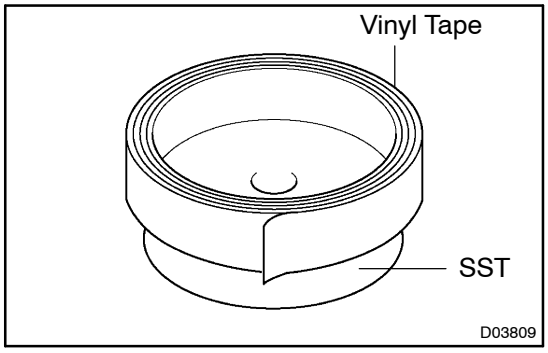

15. INSTALL TRANSAXLE HOUSING OIL SEAL

(a) Wind a vinyl tape around SST at the place 6.0 mm (0.236 in.) above from the bottom end until the thickness of the wound tape is about 5.0 mm (0.197 in.).
SST 09950–60020 (09951–00730)

NOTICE:

Remove foreign matter such as grease on the SST before winding the tape.

(b) Coat the rip of oil seal with a little MP grease.

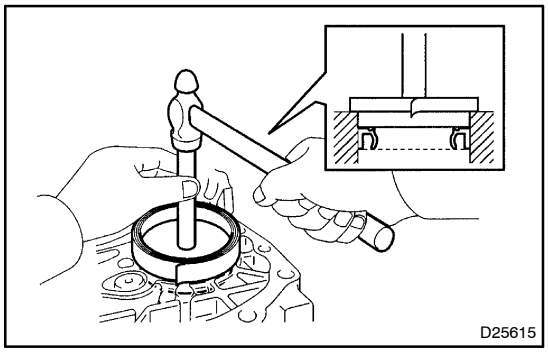

(c) Using SST, install a new oil seal.
SST 09950–60020 (09951–00730), 09950–70010 (09951–07150)
Standard press in depth:
5.5 – 6.5 mm (0.217 – 0.256 in.)

NOTICE:

Stop pressing when the would vinyl tape is contact with the transaxle housing.

HOW TO USE THIS MANUAL

010B2–20

GENERAL INFORMATION

1. GENERAL DESCRIPTION

(a) This manual is made in accordance with SAE J2008.

(b) Generally, repair operations can be separated in the following 3 main processes:
1. Diagnosis
2. Removing/Installing, Replacing, Disassembling/Reassembling, Checking and Adjusting
3. Final Inspection

(c) This manual explains the 1st process of ”Diagnosis” (found in the ”Diagnostics” section), the 2nd process of ”Removing and Installing, Replacing, Disassembling, Installing and Checking, and Adjusting”, but the 3rd process of ”Final Inspection” is omitted.

(d) The following essential operations are not written in this manual. However, these operations must be performed in actual situations.
(1) Operations with a jack or lift
(2) Cleaning of a removed part when necessary
(3) Visual check

2. INDEX

(a) An alphabetical INDEX section is provided at the end of the book as a reference to help you find the item to be repaired.

3. PREPARATION

(a) Use of special service tools (SST) and special service materials (SSM) may be required, depending on the repair situation. Be sure to use SST and SSM when they are required and follow the working procedure properly. A list of SST and SSM is in the Preparation section of this manual.

4. REPAIR PROCEDURES

(a) Component drawing is placed under the title where necessary.

(b) Non–reusable parts, grease application area, precoated parts and tightening torque are specified in the component drawings.

Example:

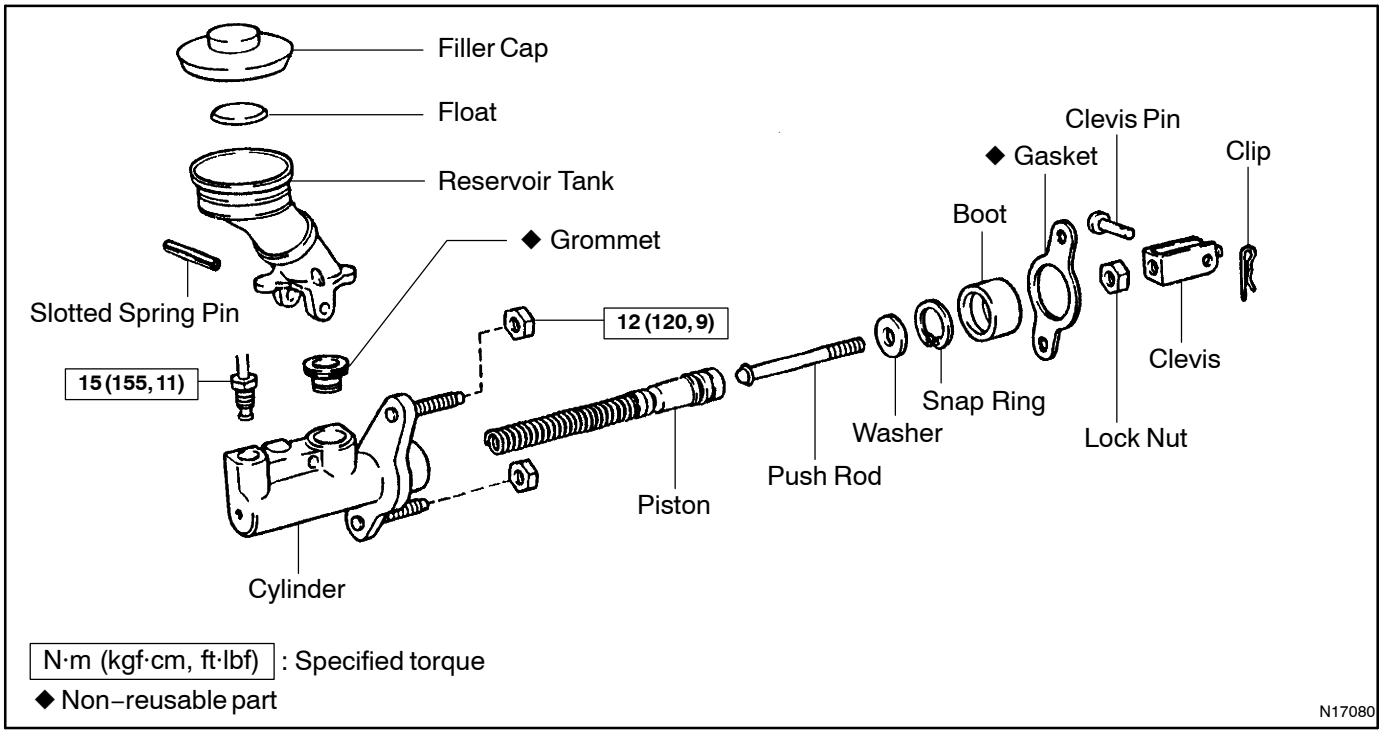

(c) Tightening torque, grease application area, and non–reusable parts are described as important points in the procedures.

NOTICE:

There are cases where such information can only be explained by using an illustration. In these cases, all the information such as torque, oil, etc. are described in the illustration.

(d) Installing procedures are performed in the reverse order of the removal and only the important points are described.

(e) Only items with points are described in the procedure, and the operational portion and content are placed using an illustration. In the explanations, details of the operational method, standard value and notices are placed.

(f) There may be a case where the illustrations of similar models are used. In that case, specific details may be different from the actual vehicle.

(g) The procedures are presented in a step–by–step format:

(1) The illustration shows what to do and where to do it.

(2) The task heading tells what to do.

(3) The explanation text tells how to perform the task and gives other information such as specifications and warnings.

Example:

Illustration:

what to do and where

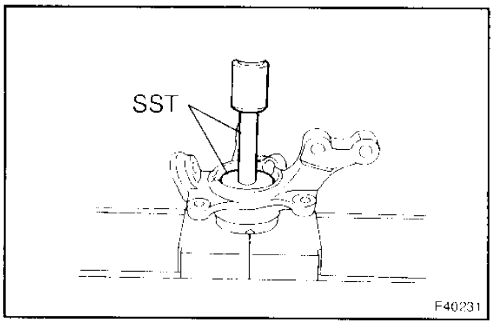

Task heading: what to do

14. INSTALL FRONT AXLE HUB LH BEARING

(a) Using SST and a press, install a new bearing to the steering knuckle. ← *Detailed text: how to perform task*

SST 09950–60020 (09951–00720), 09950–70010 (09951–07100)

Set part No

Component part No.

D31009

HINT:

This format provides an experienced technician with a FAST TRACK to the necessary information. The task heading can be read at a glance when necessary, and the text below provides detailed information. Important specifications and warnings always are written in bold type to stand out from the rest of the test.

5. SERVICE SPECIFICATIONS

(a) Specifications are presented in bold type throughout the manual. You never have to leave the procedure to look up your specifications. The specifications are also found in the Service Specifications section for quick reference.

6. TERMS DEFINITION

CAUTION	Indicates the possibility of injury to you or other people.
NOTICE	Indicates the possibility of damage to the components being repaired.
HINT	Provides additional information to help you to perform the repair efficiently.

7. SI UNIT

(a) The units given in this manual are primarily expressed according to the SI UNIT (International System of Units), and alternately expressed in the metric system and in the English System.

Example:

Torque: 30 N·m (310 kgf·cm, 22 ft·lbf)

IDENTIFICATION INFORMATION

VEHICLE IDENTIFICATION AND SERIAL NUMBERS

010SB–01

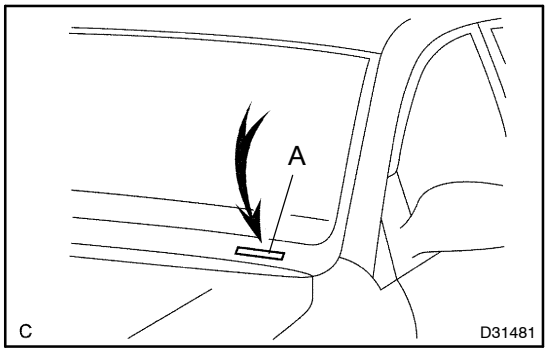

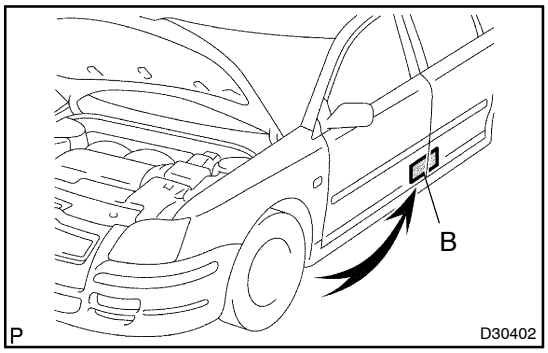

1. VEHICLE IDENTIFICATION NUMBER

(a) The vehicle identification number is stamped on the vehicle identification number plate and the certification label, as shown in the illustration.

A: Vehicle Identification Number Plate

B: Certification Label

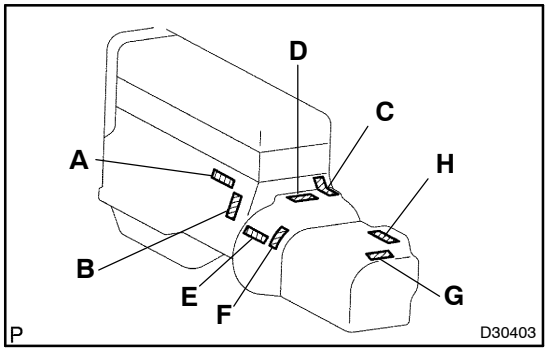

2. ENGINE SERIAL NUMBER AND TRANSAXLE SERIAL NUMBER

(a) The engine serial number is stamped on the cylinder block of the engine and the transmission serial number is stamped on the housing as shown in the illustration.

A: 1CD–FTV

B: 1AZ–FE, 1AZ–FSE, 2AZ–FSE

C: 1ZZ–FE, 3ZZ–FE

D: C50, C250

E: U241E, U151E

F: E354, E357

G: U241E, U151E

H: U341E

REPAIR INSTRUCTION

010LF–03

PRECAUTION

1. BASIC REPAIR HINT

(a) HINTS ON OPERATIONS

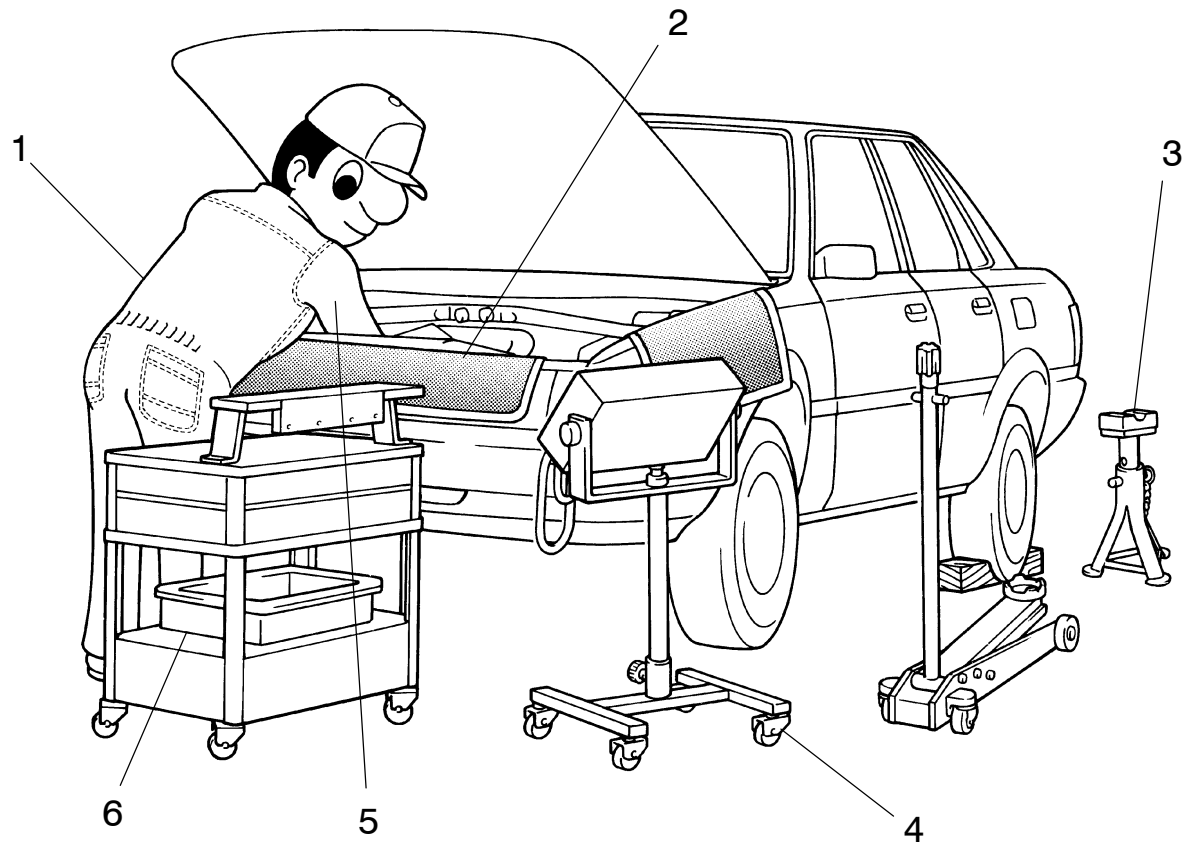

1	Looks	• Always wear a clean uniform. • Hat and safety shoes must be worn.
2	Vehicle protection	• Set a grill cover, fender cover, seat cover and floor mat before starting operation.
3	Safe operation	• When working with 2 or more persons, be sure to check the safety of one another. • When working with the engine running, pay attention to providing ventilation for exhaust fumes in the workshop. • When working with high–temperatures, rotating, moving or vibrating parts, be careful not to burn or injure yourself. • When jacking up the vehicle, be sure to support the specified location with a safety stand. • When lifting up the vehicle, use safety equipment.
4	Preparation of tools and measuring gauge	• Before starting repairs, prepare the tool stand, SST, gauge, oil, shop rag and parts for replacement.
5	Removal and installation, disassembly and assembly operations	• Diagnose with a thorough understanding of the trouble condition and perform effective operation. • Before removing the parts, check the general condition of the assembly, and for deformation and damage. • When the structure is complicated, take a notes or make matchmarks as not to make mistakes that affect the function of the parts. • Clean and wash the removed parts if necessary and assemble them after a thorough check.
6	Removed parts	• Place the removed parts in the correct order to avoid mixing them up or making them dirty. • As for non–reusable parts such as gaskets, O–rings, and self–locking nuts, replace them with new ones following the instructions in this manual. • Organize the parts that were replaced in a box and show them to the customer.

(b) JACKING UP AND SUPPORTING VEHICLE

(1) Care must be taken when jacking up and supporting the vehicle. Be sure to lift and support the vehicle at the proper locations (See page 01–19).

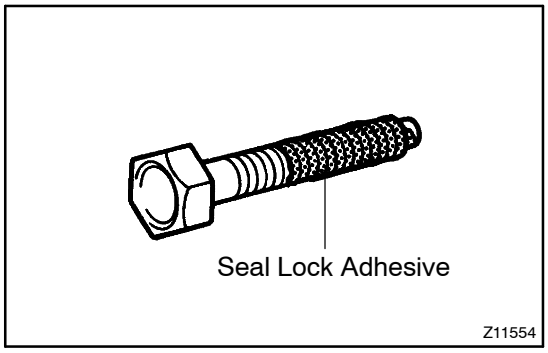

(c) PRECOATED PARTS

(1) Precoated parts such as bolts, nuts, etc., are coated with a seal lock adhesive at the factory.

(2) If a precoated part is retightened, loosened or caused to move in any way, it must be recoated with the specified adhesive.

(3) When reusing precoated parts, clean off the old adhesive and dry the part with compressed air. Then apply the specified seal lock adhesive to the bolt, nut or threads.

NOTICE:

Check the torque with the lower limit value of the torque tolerance.

(4) Depending on the seal lock agent to be applied, there may be cases where it is necessary to leave it for a specified time until it hardens.

(d) GASKETS

(1) When necessary, use a sealer on gaskets to prevent leaks.

(e) BOLTS, NUTS AND SCREWS

(1) Carefully follow all the specifications for tightening torques. Always use a torque wrench.

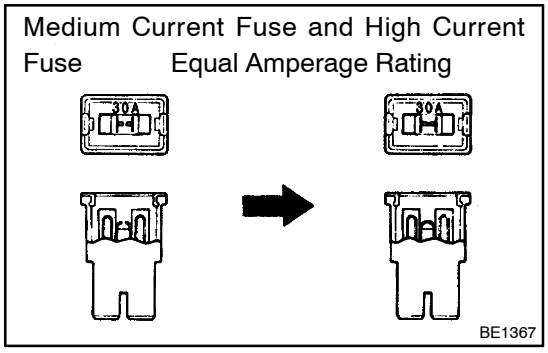

(f) FUSES

(1) When replacing fuses, be sure that a new fuse has the correct amperage rating. DO NOT exceed the rating, or use one with a lower rating.

Illustration	Symbol	Part Name	Abbreviation
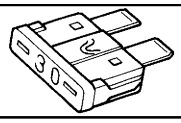 BE5594	 IN0365	FUSE	FUSE
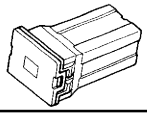 BE5595	 IN0366	MEDIUM CURRENT FUSE	M–FUSE
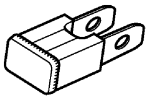 D27353	 IN0367	HIGH CURRENT FUSE	H–FUSE

V35002

(g) CLIPS

(1) The removal and installation methods of typical clips used in body parts are shown in the table below.

HINT:

If the clip is damaged during the procedure, always replace it with a new clip.

Shape (Example)	Removal/Installation
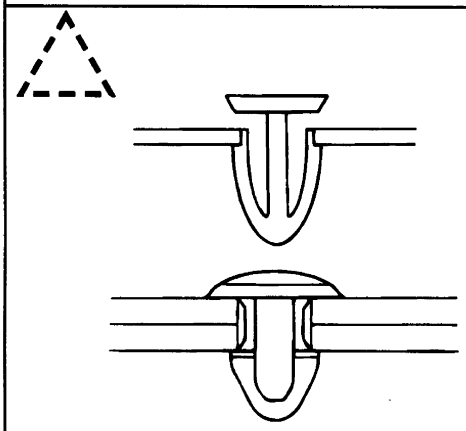	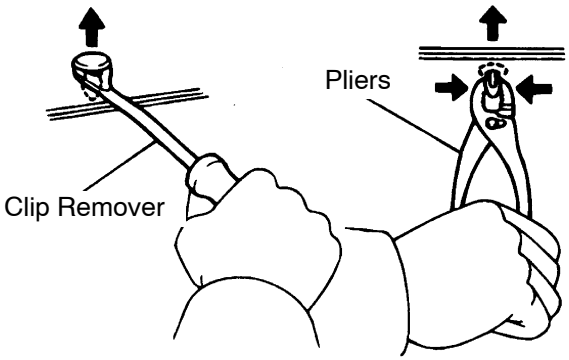
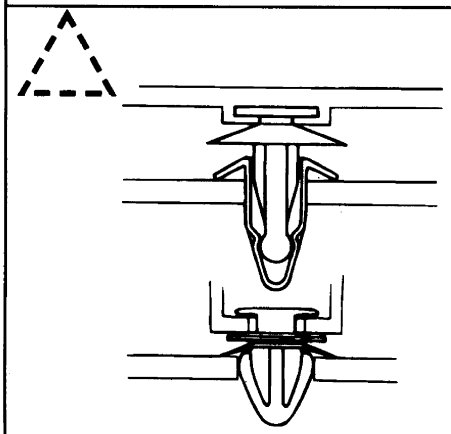	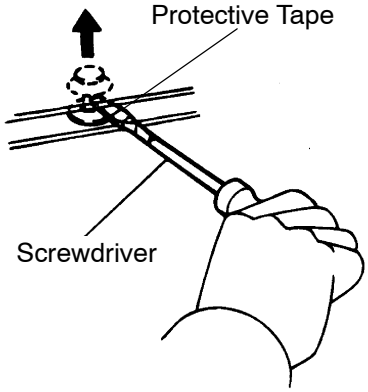
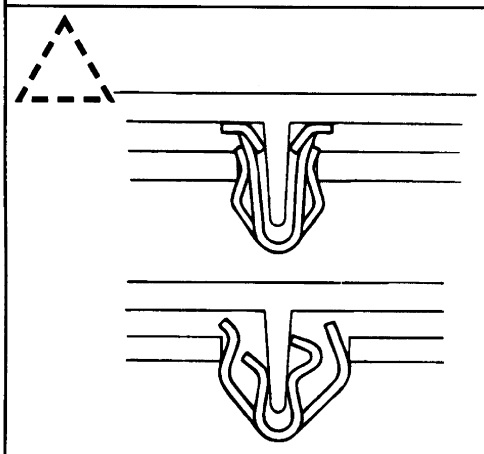	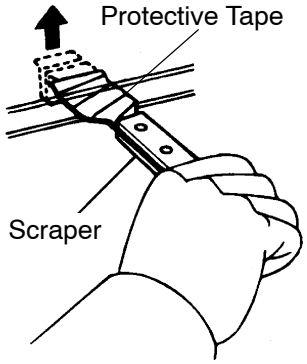

D25786

Shape (Example)	Removal/Installation
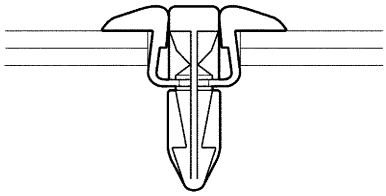	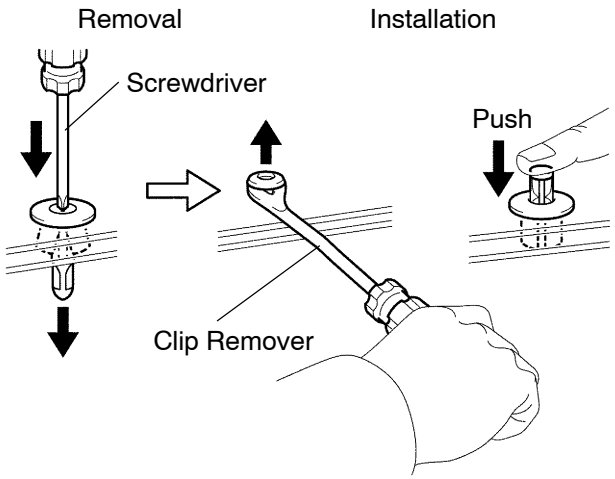
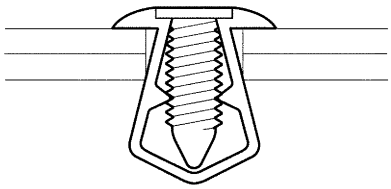	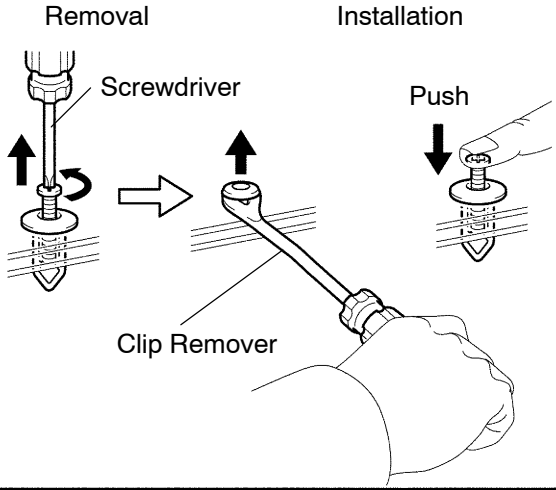
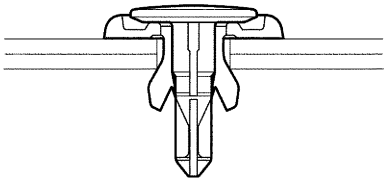	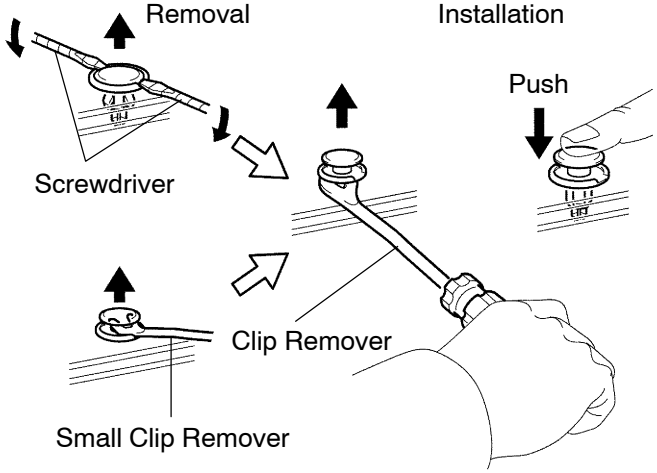

P

V35006

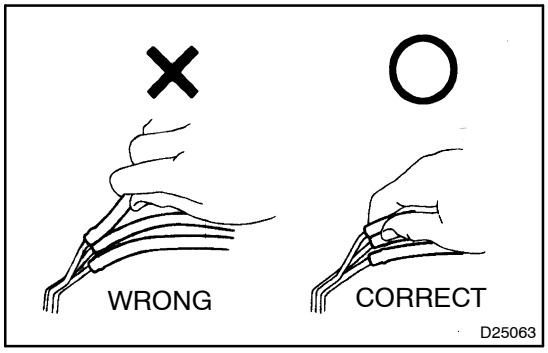

(h) REMOVAL AND INSTALLATION OF VACUUM HOSES

(1) To disconnect vacuum hoses, pull them by holding the end, not the middle of the hose.

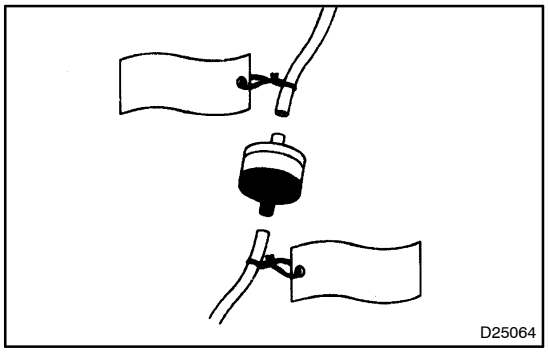

(2) When disconnecting vacuum hoses, use tags to identify where they should be reconnected.

(3) After completing the job, make a double check whether the vacuum hoses are properly connected. A label under the hood shows the proper layout.

(4) When using a vacuum gauge, never force the hose onto a connector that is too large. Use a step–down adapter for adjustment. Once the hose has been stretched, it may leak air.

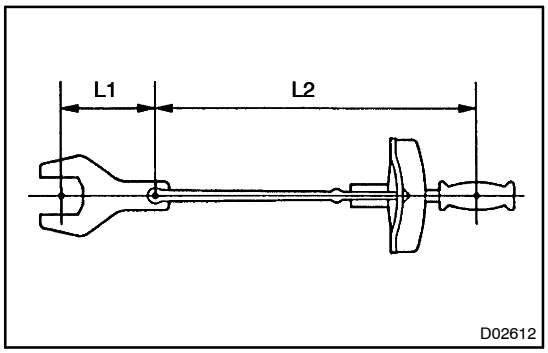

(i) TORQUE WHEN USING TORQUE WRENCH WITH EXTENSION TOOL

(1) When the torque wrench is combined with SST or an extension tool to extend the length, and you tighten until the torque wrench reads the specified torque value, the actual torque becomes excessive.

(2) In this manual, only the specified torque is described. In case of using SST or extension tool, calculate the reading of the torque wrench by the following formula.

(3) Formula T'=T x L2/(L1 + L2)

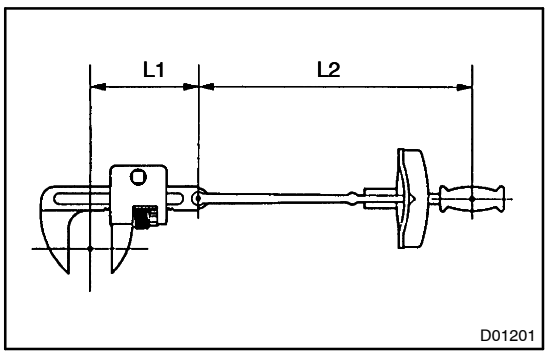

T'	Reading of torque wrench {N·m (kgf·cm, ft·lbf)}
T	Torque {N·m (kgf·cm, ft·lbf)}
L1	Length of SST or extension tool (cm)
L2	Length of torque wrench (cm)

2. FOR VEHICLES EQUIPPED WITH SRS AIRBAG AND SEAT BELT PRETENSIONER

HINT:

The AVENSIS is equipped with an SRS (Supplemental Restraint System), which includes the driver airbag, front passenger airbag, instrument panel passenger airbag, instrument panel lower airbag, side airbag, curtain shield and seat belt pretensioner.

Failure to carry out the service operations in the correct sequence could cause the supplemental restraint system to unexpectedly deploy while servicing. This could cause a serious accident.

Furthermore, if a mistake is made when servicing the supplemental restraint system, it is possible that the SRS will fail to operate when required. Before servicing (including removal or installation of parts, inspection or replacement), be sure to read the following items carefully. Then follow the correct procedures described in this manual.

(a) GENERAL NOTICE

(1) Malfunction symptoms of the supplemental restraint system are difficult to confirm so the diagnostic trouble codes become the most important source of information when troubleshooting. When troubleshooting the supplemental restraint system, always check the diagnostic trouble codes before disconnecting the battery (See Pub. No. RM1018E on 05–1184).

(2) Work must be started after 90 seconds from the time that the ignition switch is turned to the LOCK position and the negative (–) terminal cable is disconnected from the battery.
(The supplemental restraint system is equipped with a back–up power source. So, if work is started within 90 seconds after disconnecting the negative (–) terminal cable from the battery, the SRS may deploy).
When the negative (–) terminal cable is disconnected from the battery, memory of the clock and audio systems is cancelled. So, before starting work, make a record of the contents recorded in each memory system. Then, when work is finished, reset the clock and audio systems as before.

(3) Even in the case of a minor collision where the SRS does not deploy, the horn button assembly, instrument panel passenger airbag assembly and seat belt pretensioner should be inspected (See Pub. No. RM1018E on 60–19 and 60–9).

(4) Never use the SRS related parts from another vehicle. When replacing the parts, replace them with new parts.

(5) Before repairs, remove the airbag sensor if impacts are likely to be applied to the sensor during repairs.

(6) Never disassemble and repair the center airbag sensor assembly, side airbag sensor assembly, horn button assembly, instrument panel passenger airbag assembly, front seat airbag assembly, instrument panel lower airbag assembly, curtain shield airbag assembly or seat belt pretensioner.

(7) If the center airbag sensor assembly, the side airbag sensor assembly, the horn button assembly, the instrument panel passenger airbag assembly, the instrument panel lower airbag assembly have been dropped, or if there are cracks, dents or other defects in the case, bracket or connector, replace them with new ones.

(8) Do not directly expose the airbag sensor assembly, the side airbag sensor assembly, the horn button assembly, the instrument panel passenger airbag assembly, the instrument panel lower airbag assembly or the seat belt pretensioner to hot air or flames.

(9) Use a volt/ohmmeter with high impedance (10 kΩ/V minimum) for troubleshooting an electrical circuits.

(10) Information labels are attached to the SRS components. Follow the instructions on the notices.

(11) After work on the supplemental restraint system is completed, check the SRS warning light (See Pub. No. RM1018E on 05–1184)

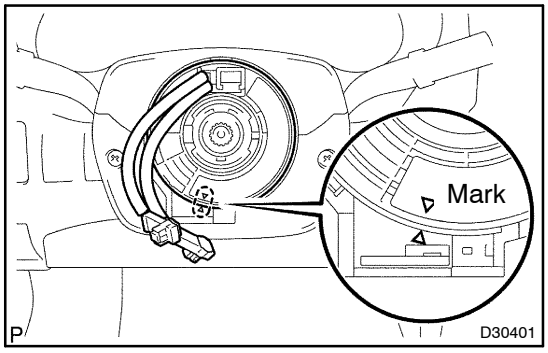

(b) SPIRAL CABLE (in Combination Switch)

(1) The steering wheel must be fitted correctly to the steering column with the spiral cable at the neutral position, otherwise cable disconnection and other troubles may occur. Refer to Pub. No. RM1018E on 60–26 of this manual concerning the correct installation of the steering wheel.

(c) HORN BUTTON ASSEMBLY (with Airbag)

(1) When removing the horn button assembly or handling a new horn button, it should be placed with the top of the pad surface facing upward. Placing it with the pad surface facing downward may lead to a serious accident if the airbag deploys for some reasons. Also, do not place anything on top of the horn button.

(2) Never measure the resistance of the airbag squib (This may cause the airbag to inflate, which is very dangerous).

(3) Grease should not be applied to the horn button assembly, and the pad should not be cleaned with any type of detergent.

(4) Store the horn button assembly where the ambient temperature remains below 93˚C (200˚F), without high humidity and away from electrical noise.

(5) When using electric welding, disconnect the airbag connector (4 yellow pins) under the steering column near the combination switch connector before starting work.

(6) When disposing the vehicle or the horn button assembly unit, the airbag should be deployed using SST before disposal (See Pub. No. RM1018E on 60–19).
Activate in a safe place away from electrical noise.

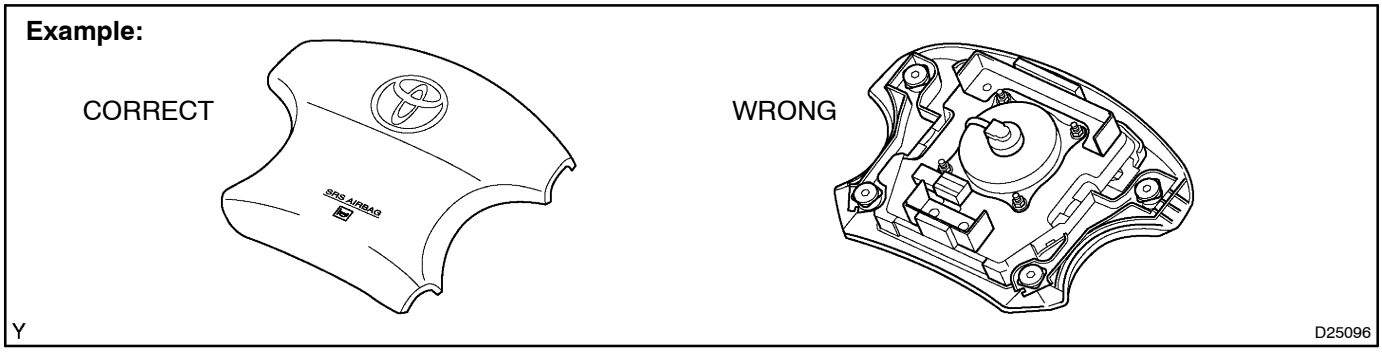

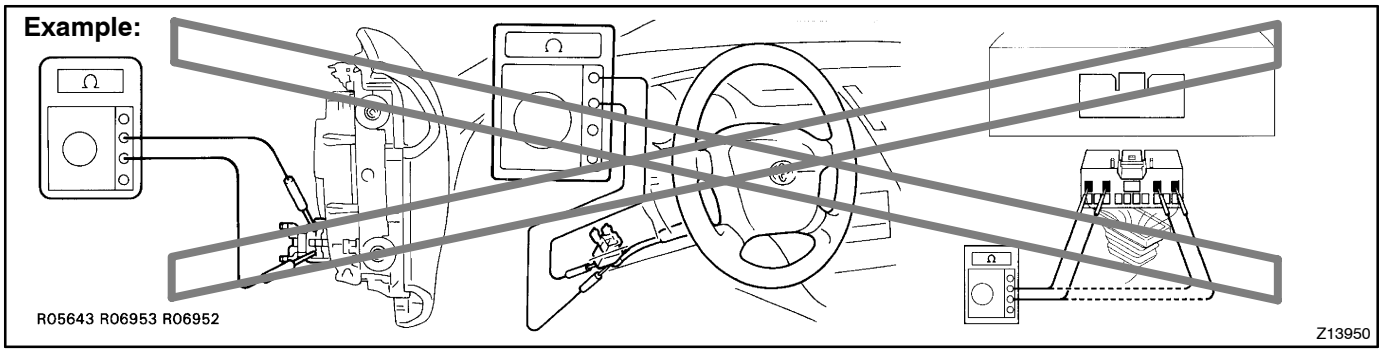

(d) INSTRUMENT PANEL PASSENGER AIRBAG ASSEMBLY

(1) Always place a removed or new instrument panel passenger airbag assembly with the airbag inflation direction facing upward. Placing the airbag assembly with the airbag inflation direction facing downward could cause a serious accident if the airbag deploys.

(2) Never measure the resistance of the airbag squib (This may cause the airbag to inflate, which is very dangerous).

(3) Grease should not be applied to the instrument panel passenger airbag assembly and the airbag door should not be cleaned with detergents of any kind.

(4) Store the airbag assembly where the ambient temperature remains below 93°C (200°F), without high humidity and away from electrical noise.

(5) When using electric welding, disconnect the airbag connector (4 yellow pins) installed on the assembly before starting work.

(6) When disposing of a vehicle or the airbag assembly unit, the airbag should be deployed using SST before disposal (See Pub. No. RM1018E on 60–30).
Activate in a safe place away from electrical noise.

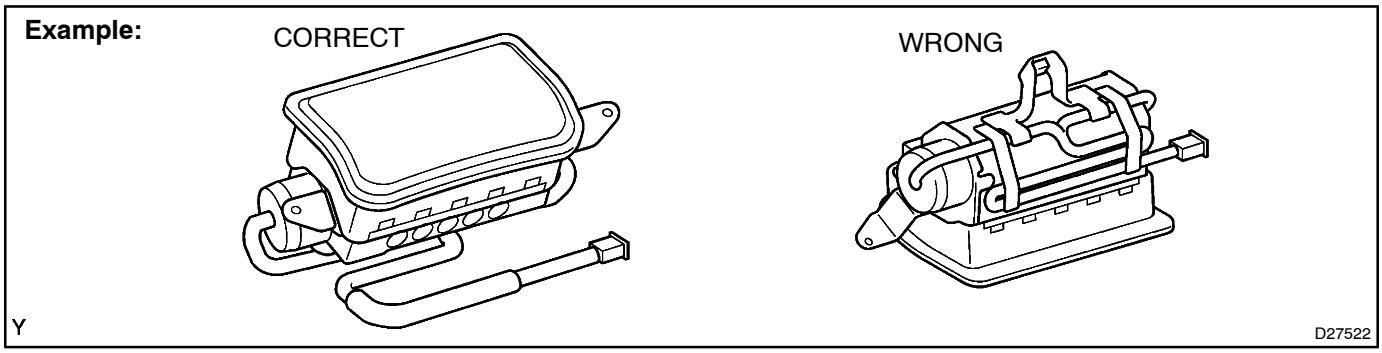

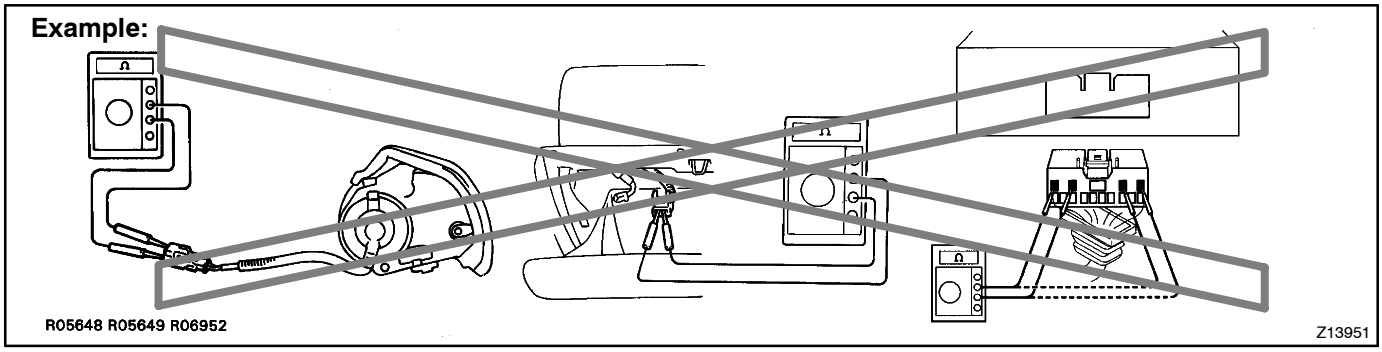

(e) FRONT SEAT AIRBAG ASSEMBLY

(1) Always place a removed or new front seat airbag assembly with the airbag inflating direction facing upward.
Placing the airbag assembly with the airbag inflation direction facing downward could cause a serious accident if the airbag deploys.

(2) Never measure the resistance of the airbag squib (This may cause the airbag to inflate, which is very dangerous.).

(3) Grease should not be applied to the front seat airbag assembly and the airbag door should not be cleaned with detergents of any kind.

(4) Store the airbag assembly where the ambient temperature remains below 93°C (200°F), without high humidity and away from electrical noise.

(5) When using electric welding, first disconnect the airbag connector (2 yellow pins) installed on the assembly before starting work.

(6) When disposing of a vehicle or the airbag assembly unit, the airbag should be inflated using SST before disposal (See Pub. No. RM1018E on 60–47).
Activate in a safe place away from electrical noise.

Example:

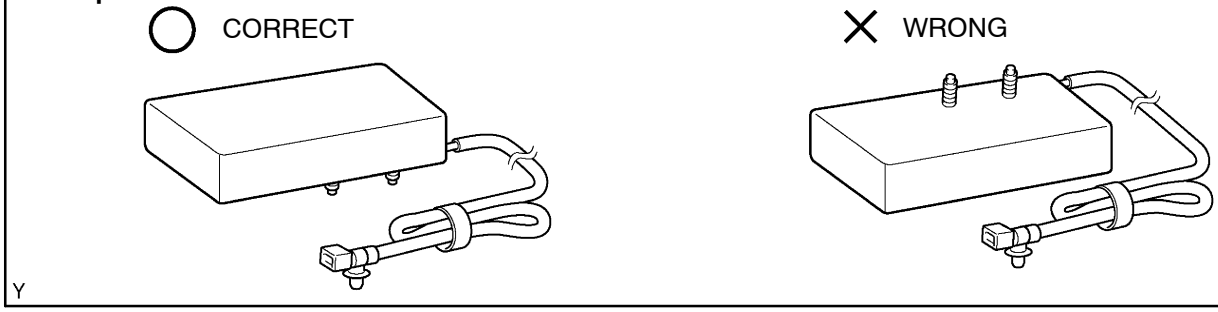

Y D26612

Example:

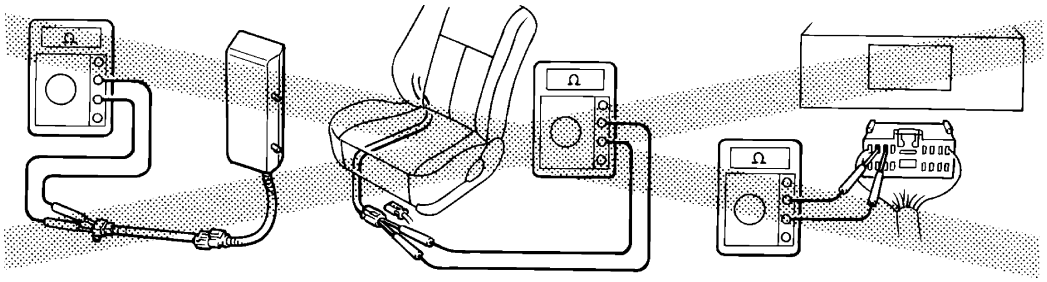

B01546

(f) INSTRUMENT PANEL LOWER AIRBAG ASSEMBLY

(1) Always place a removed or new instrument panel lower airbag assembly with the airbag inflating direction facing upward.
Placing the airbag assembly with the airbag inflation direction facing downward could cause a serious accident if the airbag deploys.

(2) Never measure the resistance of the airbag squib (This may cause the airbag to inflate, which is very dangerous.).

(3) Grease should not be applied to the instrument panel lower airbag assembly and the airbag door should not be cleaned with detergents of any kind.

(4) Store the instrument panel lower airbag assembly where the ambient temperature remains below 93°C (200°F), without high humidity and away from electrical noise.

(5) When using electric welding, first disconnect the airbag connector (2 yellow pins) installed on the instrument panel lower airbag assembly before starting work.

(6) When disposing of a vehicle or the instrument panel lower airbag assembly alone, the airbag should be inflated using an SST before disposal (See Pub. No. RM1018E on 60–55).
Activate in a safe place away from electrical noise.

Example:

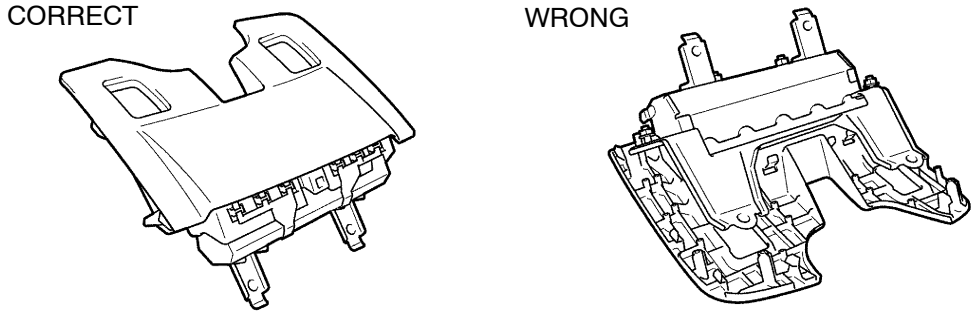

P D30399

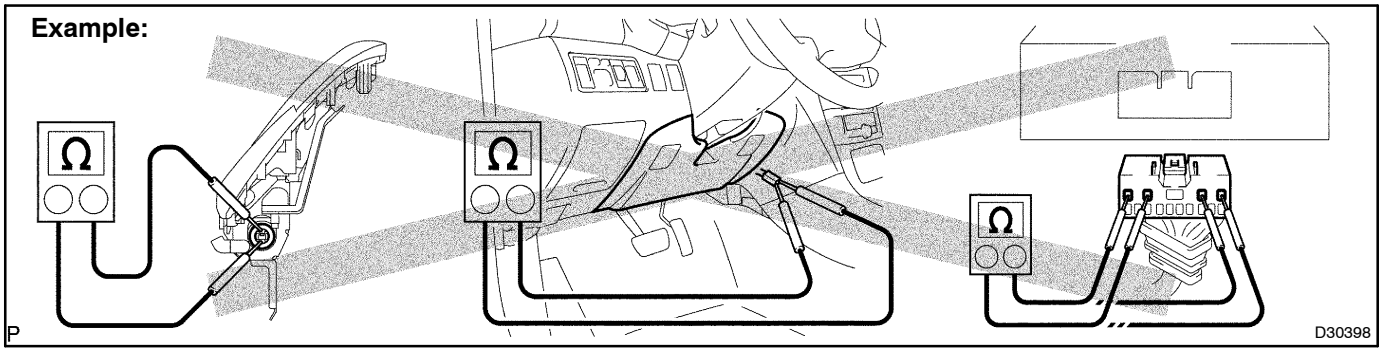

(g) CURTAIN SHIELD AIRBAG ASSEMBLY

(1) Always place the removed or new curtain shield airbag assembly in a clear plastic bag, and keep it in a safe place.

NOTICE:

Protection bag is not re–useable.

CAUTION:

Never disassemble the curtain shield airbag assembly.

(2) Never measure the resistance of the airbag squib (This may cause the airbag to inflate, which is very dangerous).

(3) Grease should not be attached to the curtain shield airbag assembly, and the surface should not be cleared with detergents of any kind.

(4) Store the airbag assembly where the ambient temperature remains below 93°C (200°F), without high humidity and away from electrical noise.

(5) When using electric welding, first disconnect the airbag connector (4 yellow pins) from the instrument panel before starting work.

(6) When disposing of a vehicle or the curtain shield airbag assembly alone, the airbag should be deployed using SST before the disposal (See Pub. No. RM1018E on 60–41). Active in a safe place away from electrical noise.

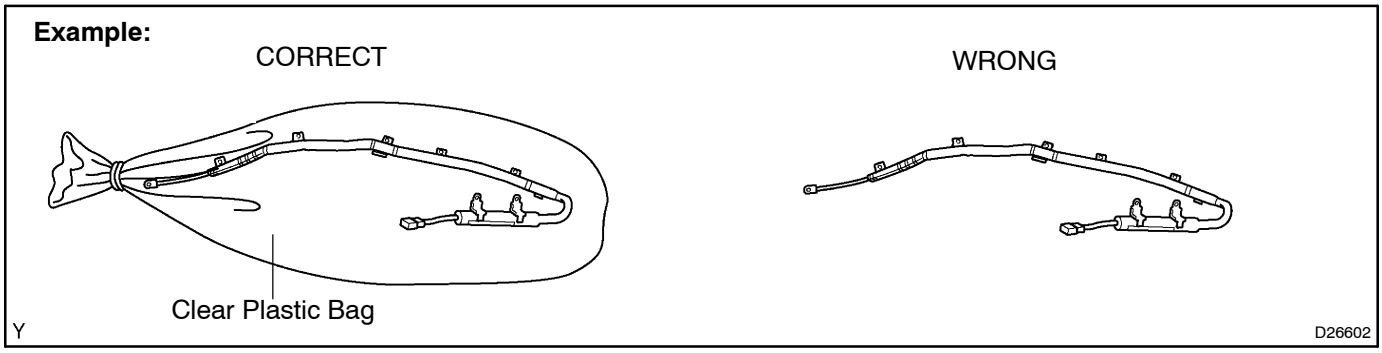

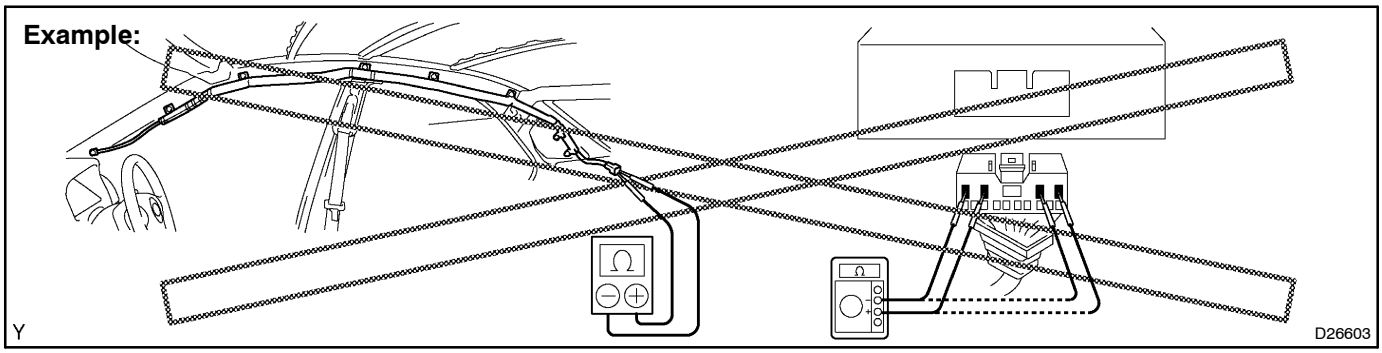

(h) SEAT BELT PRETENSIONER

(1) Never measure the resistance of the seat belt pretensioner (This may cause the seat belt pretensioner to activate, which is very dangerous.).

(2) Never disassemble the seat belt pretensioner.

(3) Never install the seat belt pretensioner in another vehicle.

(4) Store the seat belt pretensioner where the ambient temperature remains below 80°C (176°F) without high humidity and away from electrical noise.

(5) When using electric welding, first disconnect the connector (2 yellow pins) before starting work.

(6) When disposing of a vehicle or the seat belt pretensioner alone, the seat belt pretensioner should be activated before disposal (See Pub. No. RM1018E on 61–9). Perform the operation in a safe place away from electrical noise.

(7) The seat belt pretensioner is hot after being activation so allow some time for it to cool down sufficiently before disposal. Never apply water to cool down the seat belt pretensioner.

(8) Oil or water should not be put on the front seat outer belt, and the front seat outer belt should be cleaned with the appropriate detergents.

Example:

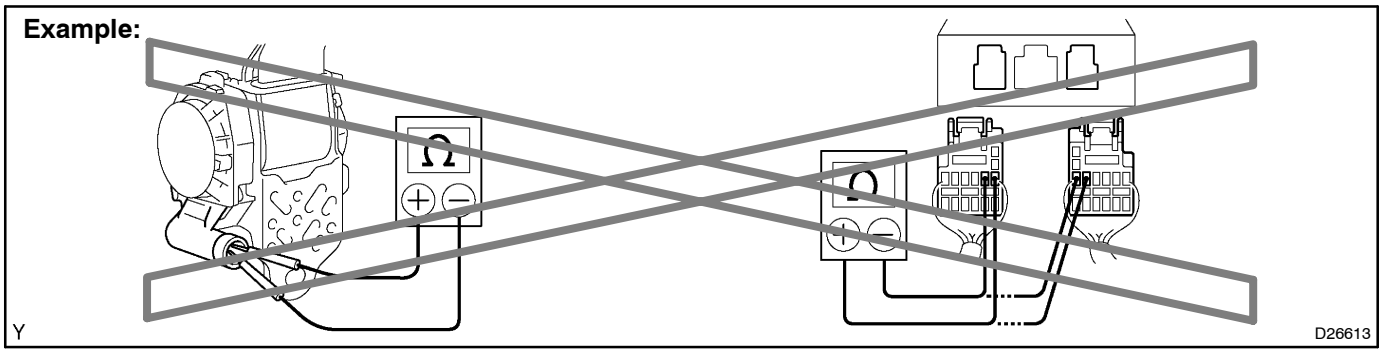

(i) AIRBAG SENSOR ASSEMBLY

(1) Never reuse the airbag sensor assembly involved in a collision where the SRS has deployed.

(2) The connectors to the airbag sensor assembly should be connected or disconnected with the sensor mounted on the floor. If the connectors are connected or disconnected while the airbag sensor assembly is not mounted to the floor, it could cause the supplemental restraint system to deploy potentially resulting in injury.

(3) Work must be started after 90 seconds from the time the ignition switch is turned to the "LOCK" position and the negative (–) terminal cable is disconnected from the battery, even if only loosening the set bolts of the airbag sensor assembly.

(j) WIRE HARNESS AND CONNECTOR

(1) The SRS wire harness is integrated with the instrument panel wire harness assembly. All the connectors in the system are a standard yellow color. If the SRS wire harness becomes disconnected or the connector becomes broken due to an accident, etc., repair or replace it.

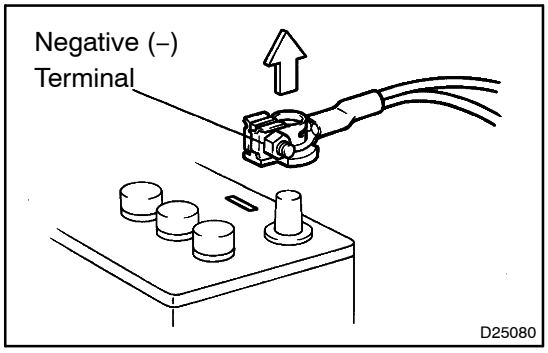

3. ELECTRONIC CONTROL

(a) REMOVAL AND INSTALLATION OF BATTERY TERMINAL

(1) Before performing electronic work, disconnect the battery negative (–) terminal cable beforehand in order to prevent it from shorting and burning out.

(2) When disconnecting and installing the terminal cable, turn the ignition switch and lighting switch OFF, and loosen the terminal nut completely. Perform these operations without twisting or prying the terminal.

(3) When the battery terminal cable is removed, the memories of the clock, radio, DTCs, etc. are erased. So before removing it, check them and make a note of their settings.

(4) When the battery negative (–) terminal cable is disconnected, memories of various systems are erased. Therefore, refer to the PRE–CHECK for each system to make sure whether or not the system needs to be initialized after the battery negative (–) terminal cable is disconnected. If necessary, be sure to initialize the system.

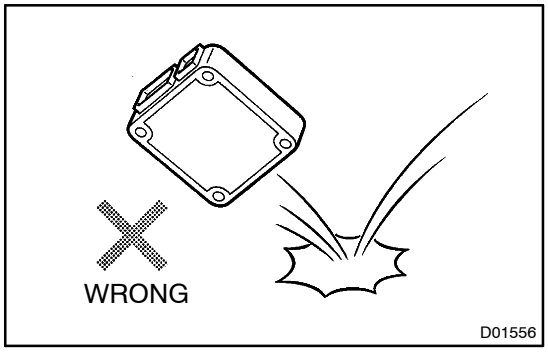

(b) HANDLING OF ELECTRONIC PARTS

(1) Do not open the cover or case of the ECU unless absolutely necessary (If the IC terminals are touched, the IC may be rendered inoperative by static electricity).

(2) To disconnect electronic connectors, pull the connector itself, not the wires.

(3) Be careful not to drop electronic components, such as sensors or relays. If they are dropped on a hard floor, they should be replaced and not be reused.

(4) When cleaning the engine with steam, protect the electronic components, air filter and emission–related components from water.

(5) Never use an impact wrench to remove or install temperature switches or temperature sensors.

(6) When checking the continuity at the wire connector, insert the tester probe carefully to prevent terminals from bending.

4. REMOVAL AND INSTALLATION OF FUEL CONTROL PARTS

(a) PLACE FOR REMOVING AND INSTALLING OF FUEL SYSTEM PARTS

(1) Work in a place with good air ventilation and without anything that could cause combustion around you such as a welder, grinder, drill, electric motor or stove.

(2) Never work in a place such as a pit or nearby a pit, as there is a possibility that vaporized fuel will collect in those places.

(b) REMOVING AND INSTALLING OF FUEL SYSTEM PARTS

(1) Prepare a fire extinguisher before starting operations.

(2) To prevent static electricity, install a ground on the fuel changer, vehicle and fuel tank, and do not spray much water so as to prevent slipping.

(3) Never use any electric equipment like an electric motor or a working light, as they may create sparks or a high temperature.

(4) Never use an iron hammer, as it may create sparks.

(5) Dispose of shop rags containing fuel deposits separately.

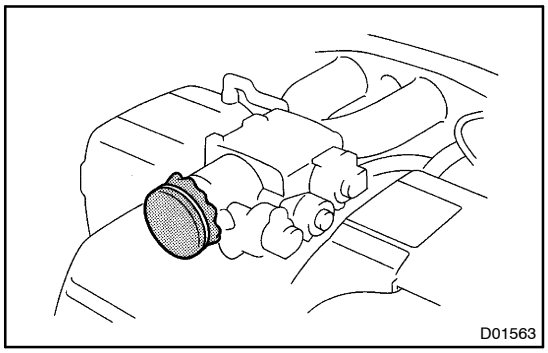
D01563

5. REMOVAL AND INSTALLATION OF ENGINE INTAKE PARTS

(a) If any metal tip is mixed in the inlet pass, this may give a bad effect to the engine and turbocharger.

(b) When removing and installing the inlet system parts, close the opening of the removed inlet system parts and the engine with a clean waste cloth or gum tape.

(c) When installing the inlet system parts, check that no metal particles have entered.

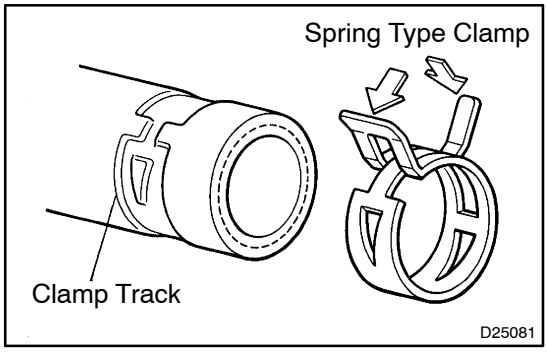

D25081

6. HANDLING OF HOSE CLAMPS

(a) Before removing the hose, check the depth of the inserting portion and the clamp position to restore it surely.

(b) Replace a deformed or dented clamp for a new one.

(c) When reusing a hose, attach the clamp on the clamp track portion of the hose.

(d) For a spring type clamp, adjust it by adding force to the arrow mark direction after the installation.

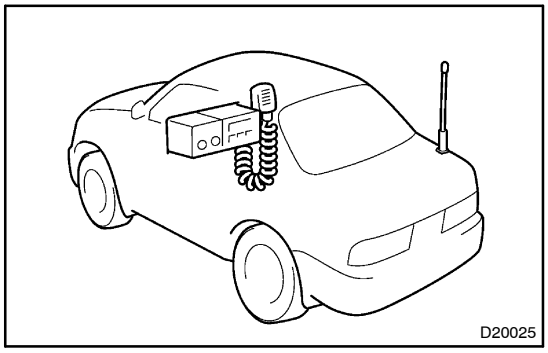
D20025

7. FOR VEHICLES EQUIPPED WITH MOBILE COMMUNICATION SYSTEMS

(a) Install the antenna as far away from the ECU and sensors of the vehicle electronic systems as possible.

(b) Install an antenna feeder at least 20 cm (7.87 in.) away from the ECU and sensors of the vehicle electronic systems. For details of the ECU and sensors locations, refer to the section on applicable components.

(c) Prevent the antenna feeder from getting entangled with the other wiring, and keep the antenna feeder separate from other wiring as much as possible.

(d) Check that the antenna and feeder are correctly adjusted.

(e) Do not install any high–powered mobile communication system.

8. FOR VEHICLES EQUIPPED WITH TRACTION CONTROL (TRC) SYSTEM

(a) NOTICES WHEN USING 2–WHEEL DRUM TESTER

(1) When using a 2–wheel drum tester such as a speedometer tester, a combination tester of speedometer and brake, chassis dynamometer or else, always turn the TRC system off via the TRC OFF switch before measurement.

NOTICE:

TRC system OFF condition can be confirmed by the indication, "TRC OFF", of the indicator light in the combination meter.

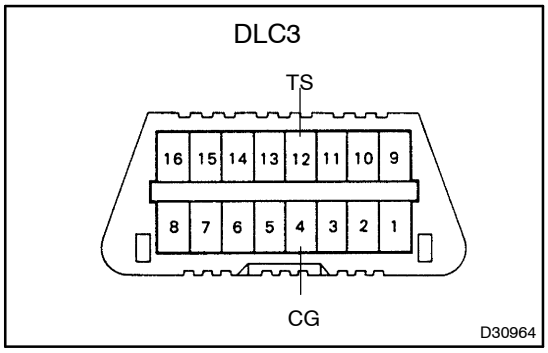

9. FOR VEHICLES EQUIPPED WITH VEHICLE SKID CONTROL (VSC) SYSTEM

(a) NOTICES WHEN USING DRUM TESTER

(1) When using a drum tester, be sure to start the engine with the ignition OFF, and connect SST to the terminals TS and CG of the DLC3 before measurement in order to prohibit the VSC operation.

SST 09843–18040

NOTICE:

- **Confirm that the VSC warning light blinks.**
- **VSC system will be reset when the engine is restarted.**
- **Fasten the vehicle with lock chains.**

(b) NOTICES OF RELATED OPERATIONS TO VSC

(1) Do not carry out unnecessary installation and removal as it might disorder the adjustment of related parts to VSC.

(2) Be sure to carry out the preparation for operation and the confirmation of operation completion in accordance with the instruction of the text and when the related operations to VSC are performed.

10. FOR VEHICLES EQUIPPED WITH CATALYTIC CONVERTER

CAUTION:

If a large amount of unburned gasoline flows into the converter, it may cause overheating and is a fire hazard. To prevent this, observe the following precautions.

(a) Use only unleaded gasoline.

(b) Avoid prolonged idling.
Avoid idling the engine for more than 20 minutes.

(c) Avoid a spark jump test.

(1) Perform a spark jump test only when absolutely necessary. Perform this test as rapidly as possible.

(2) While testing, never race the engine.

(d) Avoid a prolonged engine compression measurement.
Engine compression measurements must be performed as rapidly as possible.

(e) Do not run the engine when the fuel tank is nearly empty. This may cause the engine to misfire and create an extra load on the converter.

010B5–17

VEHICLE LIFT AND SUPPORT LOCATIONS

1. NOTICE ABOUT VEHICLE CONDITION WHEN JACKING UP

(a) As a rule, the vehicle must be unloaded when jacking up. Never jack up or lift up the vehicle loaded with things of heavy weight.

(b) When removing any parts of heavy weight like the engine and transmission, the center of gravity of the vehicle moves. Place a balance weight so as to keep it from rolling, or hold the jacking support location using the mission jack.

2. NOTICE FOR USING 4 POST LIFT

(a) Follow the instruction manual for a safety operation.

(b) Do not damage tires or wheels with a free wheel beam.

(c) Using a wheel stopper, fix the vehicle.

3. NOTICE FOR USING JACK AND SAFETY STAND

(a) Work in the flat place using a wheel stopper at all times.

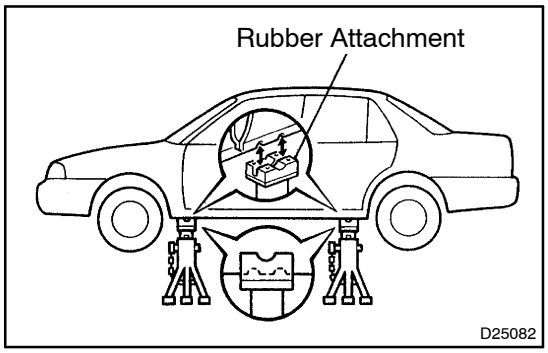

(b) Use a safety stand with a rubber attachment, as shown in the illustration.

(c) Support the specified location with a jack and safety stand accurately.

(d) When jacking up the front wheels, release the parking brake and place wheel stoppers only behind the rear wheels. When jacking up the rear wheels, place wheel stoppers only in front of the front wheels.

(e) Do not work or leave the vehicle supported only by a jack. Be sure to support the vehicle with a safety stand.

(f) When jacking up only the front wheels or only the rear wheels, place wheel stoppers to both sides of the wheels that contact ground.

(g) When jacking down the vehicle with its front wheels jacked up, release the parking brake and place wheel stoppers only in front of the rear wheels. When jacking down the vehicle with its rear wheels jacked up, place wheel stoppers only behind the front wheels.

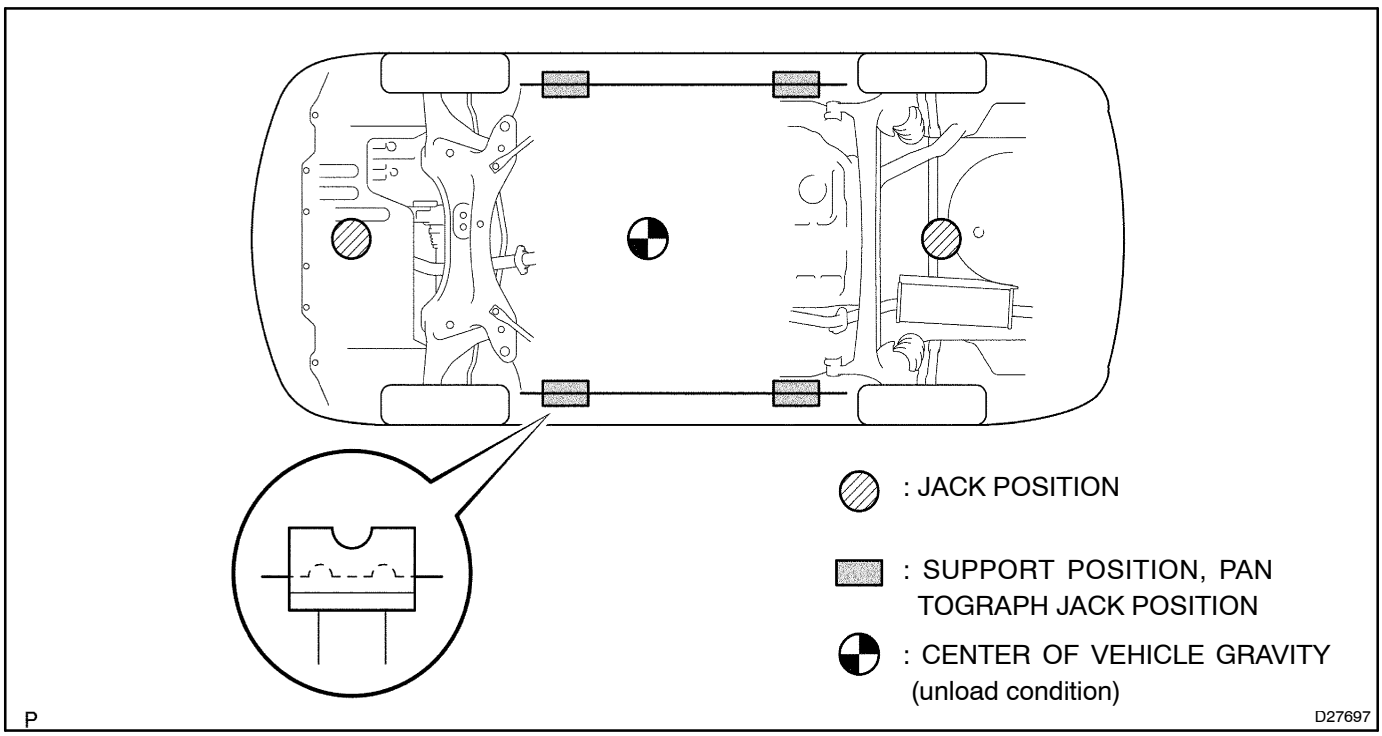

4. NOTICE FOR USING SWING ARM TYPE LIFT

(a) Follow the instruction manual of the lift for a safe operation.
(b) Use a cradle with a rubber attachment, as shown in the illustration.
(c) Set in the vehicle so as to make its center of gravity as close as possible to the center of the lift. (”L” becomes short.)
(d) Place the vehicle horizontally by adjusting the height of the cradle, and match the groove of the cradle and the safety stand support location accurately.
(e) Be sure to lock the swing arm during the operation.
(f) Lift the vehicle up until the tires float, and shake the vehicle to make sure that the vehicle is stable.

5. NOTICE FOR USING PLATE TYPE LIFT

(a) Follow the instruction manual of the lift for a safe operation.
(b) Use a plate lift attachment.
(c) Be sure to set the vehicle to the specified position.

Right and left set position	• Place the vehicle over the center of the lift.
Front and rear set position	• Align the cushion gum ends of the plate with the attachment lower ends (A and C). • Align the attachment upper end (B) with the rocker flange front side notch.

(d) Lift the vehicle up until the tires float a bit, and shake the vehicle to make sure that the vehicle is stable.

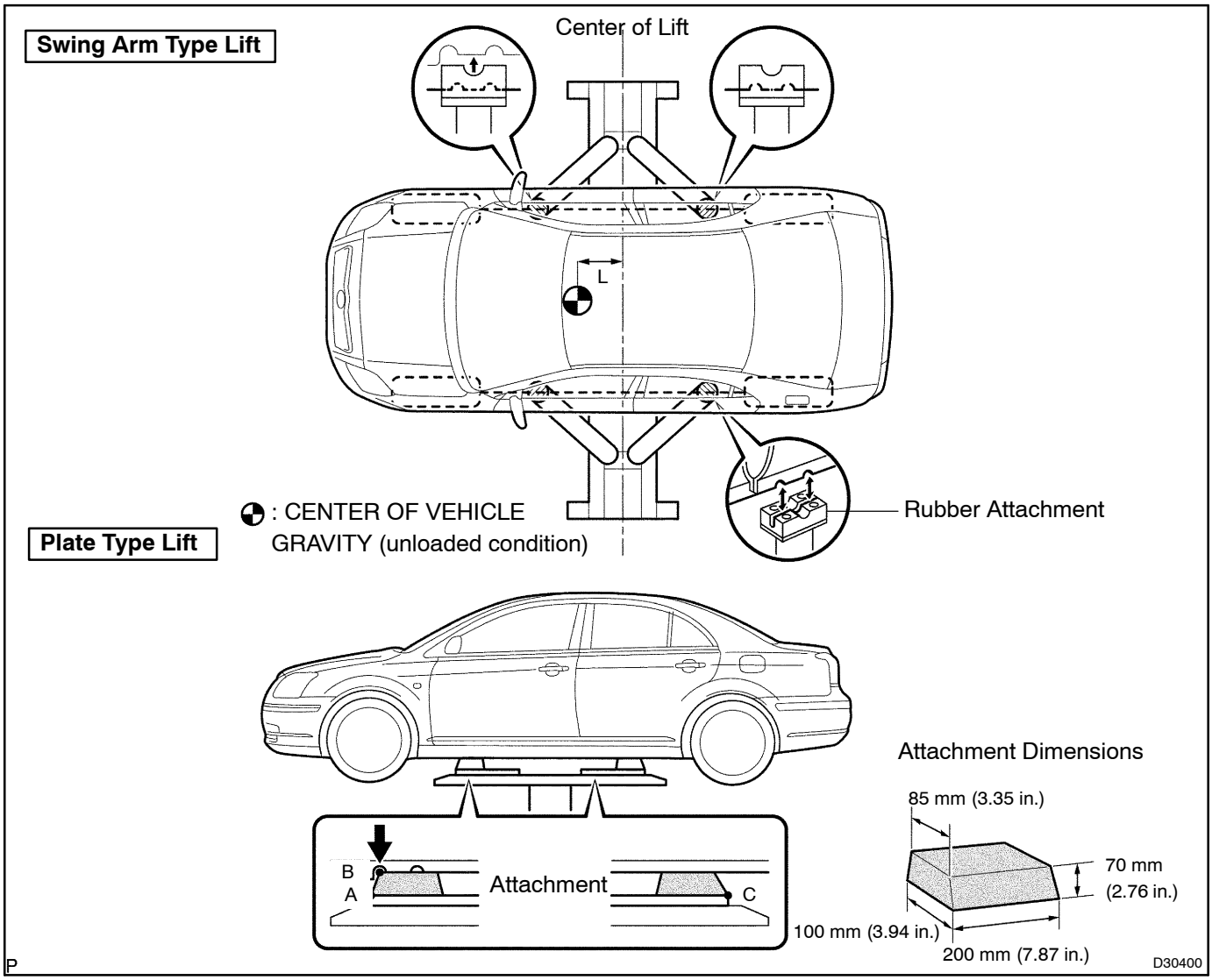

HOW TO TROUBLESHOOT ECU CONTROLLED SYSTEMS

010B6–18

GENERAL INFORMATION

There are many ECU controlled systems used in the AVENSIS. In general, ECU controlled system are considered to be very intricate and require a high level of technical knowledge and expert skill to troubleshoot. The fact is, however, that if you proceed by inspecting the circuits one by one, troubleshooting of these systems is not complex. If you have adequate understanding of the system and basic knowledge of electricity, the problem can be accurately diagnosed and fixed. This manual is designed based on the above principle to help service technicians perform accurate and effective troubleshooting, and is compiled for the following major ECU controlled systems:

The troubleshooting procedures are described on the following pages.

System	Page
1. SFI System [2AZ–FSE]	05–1
2. ECD System [1CD–FTV]	05–253
3. Electronic Controlled Automatic Transmission [ECT] [U151E]	05–525

FOR USING HAND–HELD TESTER

- Before using the tester, the tester's operator manual should be read thoroughly.
- If the tester cannot communicate with the ECU controlled systems when you have connected the cable of tester to the DLC3 with the ignition switch and tester turned ON, there is a problem on the vehicle side or tester side.
  (1) If the communication is normal when the tester is connected to another vehicle, inspect the diagnosis data link line (Bus⊕line) or ECU power circuit of the vehicle.
  (2) If the communication is still impossible when the tester is connected to another vehicle, the problem is probably in the tester itself, so perform the Self Test procedures outlined in the Tester Operator's Manual.

010B7–18

HOW TO PROCEED WITH TROUBLESHOOTING

HINT:

Carry out troubleshooting in accordance with the procedures on the following page. Here, only the basic procedures are shown. Details are provided in the Diagnostics Section, showing the most effective methods for each circuit. Confirm the troubleshooting procedures first for the relevant circuit before beginning troubleshooting of that circuit.

1 Vehicle brought to workshop

2 Customer problem analysis

(a) Ask the customer about the conditions and environment when the problem occurred.

3 Symptom confirmation and DTC (and freeze frame data) check

(a) Check the battery positive voltage.
Voltage: 11 to 14 V (Engine stopped)
(b) Visually check the wire harness, connectors and fuses for open and short, etc.
(c) Warm up the engine to the normal operating temperature.
(d) Confirm the problem symptoms and conditions, and check for DTCs according to the related chart.

OK → **Go to step 5**

NG

4 DTC chart

(a) Check the results obtained in step 3, then confirm the inspection procedures for the system or the part which should be checked using the DTC chart.

→ **Go to step 6**

5 Problem symptoms chart

(a) Check the results obtained in step 3, then confirm the inspection procedures for the system or the part which should be checked using the problem symptoms table.

6 Circuit inspection or parts inspection

(a) Confirm the circuit for the system or the part which should be checked using the problem symptoms table or the results obtained in step 4.

7 Repair

(a) Repair the affected system or part in accordance with the instructions in step 6.

8	Confirmation test

(a) After completing repairs, confirm that the problem has been solved (If the problem does not recur, perform a confirmation test under the same conditions and in the same environment as when it occurred for the first time).

END

CUSTOMER PROBLEM ANALYSIS

HINT:

- In troubleshooting, the problem symptoms must be confirmed accurately, meaning that all preconceptions must be set aside in order to make an accurate judgement. To ascertain what the problem symptoms are, it is extremely important to ask the customer about the problem and conditions when it occurred.
- The following 5 items are important points in the problem analysis. Past problems which are thought to be unrelated and the repair history, etc. may also help in some cases. Therefore, as much information as possible should be gathered and its relationship with the problem symptoms should be correctly ascertained for use as reference in troubleshooting. A customer problem analysis table is provided for your use in the Diagnostics Section for each system.

Important Points with Customer Problem Analysis

- What ––––– Vehicle model, system name
- When ––––– Date, time, occurrence frequency
- Where ––––– Road conditions
- Under what conditions? ––––– Running conditions, driving conditions, weather conditions
- How did it happen? ––––– Problem symptoms

(Sample) Supplemental restraint system check sheet.

CUSTOMER PROBLEM ANALYSIS CHECK

Supplemental Restraint System Check Sheet **Inspector's Name**

Customer's Name		**Registration No.**	
		Registration Year	/ /
		Frame No.	
Date Vehicle Brought In	/ /	**Odometer Reading**	**km miles**

Date Problem First Occurred	/ /
Weather	☐ Fine ☐ Cloudy ☐ Rainy ☐ Snowy ☐ Other
Temperature	Approx.

Vehicle Operation	☐ Starting ☐ Idling ☐ Driving [☐ Constant speed ☐ Acceleration ☐ Deceleration ☐ Other]

SYMPTOM CONFIRMATION AND DIAGNOSTIC TROUBLE CODE

HINT:

- The diagnostic system in AVENSIS has various functions. The first function is the Diagnostic Trouble Code (DTC) Check, in which a malfunction in the signal circuits to the ECU is stored in code form in the ECU memory. Another function is the Input Signal Check, which checks if the signals from various switches are sent to the ECU correctly. By using these check functions, it is possible to quickly narrow down potential problem areas and troubleshooting can be performed effectively. The diagnostic functions are incorporated in the following systems in the AVENSIS.

System	Diagnostic Trouble Code Check	Input Signal Check (Sensor Check)	Diagnostic Test Mode (Active Test)
SFI System [2AZ–FSE]	○ (with Check Mode)	○	○
ECD System [1CD–FTV]	○ (with Check Mode)	○	○
Electronically Controlled Automatic Transmission [ECT] [U151E]	○ (with Check Mode)	○	–

- In the DTC check, it is very important to determine whether the problem indicated by the DTC is still occurring or has occurred in the past but returned to normal at present. In addition during the problem symptom check, it a check must be made on whether the malfunction indicated by the DTC is directly related to the problem symptom or not. For this reason, the DTC should be checked before and after symptom confirmation to determine the current conditions. If this is not done, it may, depending on the case, result in unnecessary troubleshooting for systems that are operating normally. This would make more difficult to detect the problem area or to try to repair irrelevant areas. Therefore, always follow the procedures in the correct order and perform the DTC check.
- A flow chart showing how to proceed with troubleshooting using the diagnostic trouble code (DTC) check is shown the this page. This flow chart shows how to utilize the DTC check effectively. Then, by carefully checking the results, this chart indicates how to proceed either to the DTC troubleshooting or to the troubleshooting of the problem symptoms table.

1 **DTC check**

2 **Make a note of DTCs displayed and then clear the memory**

3 **Symptom confirmation**

a	Symptoms exist
b	No symptoms exist

a → **Go to step 5**

b

4 **Simulation test using the symptom simulation methods**

5 DTC check

a	DTC displayed
b	Normal code displayed

a → **Troubleshooting of problem indicated by DTC**

b

6 Symptom confirmation

a	No symptoms exist
b	Symptoms exist

If a DTC is displayed in the initial DTC check, it indicates that a trouble may have occurred in a wire harness or connector in that circuit in the past. Therefore, check the wire harness and connectors (See page 01–32).

a → **System normal**

b

Troubleshooting of each problem symptom

The problem is still occurring in a place other than the diagnostic circuit (The DTC displayed first is either for a past problem or a secondary problem).

SYMPTOM SIMULATION

HINT:

The most difficult case in troubleshooting is when no symptoms occurs. In such cases, a thorough customer problem analysis must be carried out. Then the same or similar conditions and environment in which the problem occurred in the customer's vehicle should be simulated. No matter how much experience a technician has, or how skilled he may be, if he proceeds to troubleshoot without confirming the problem symptoms, he will tend to overlook something important in the repair operation and make a wrong guess somewhere, which will only lead to a standstill. For example, for a problem which only occurs when the engine is cold, or for a problem which occurs due to vibration caused by the road during driving, etc., the problem can never be determined when the engine is hot or when the vehicles is at a standstill. Since vibration, heat or water penetration (moisture) is a likely cause for the problem which is difficult to reproduce, the symptom simulation tests introduced here are effective measures in a point that the external causes are applied to the vehicle in a stationary condition.

Important points in the symptom simulation test:

In the symptom simulation test, the problem symptoms should be confirmed, and the problem area or parts must also be discovered. To do so, reduce the possible problem circuits according to the symptoms before starting this type of test and have the hand–held tester connected beforehand. After that, carry out the symptom simulation test, judging whether the circuit being tested is defective or normal and also confirming the problem symptoms at the same time. Refer to the problem symptoms table of each system to narrow down the possible causes of the symptom.

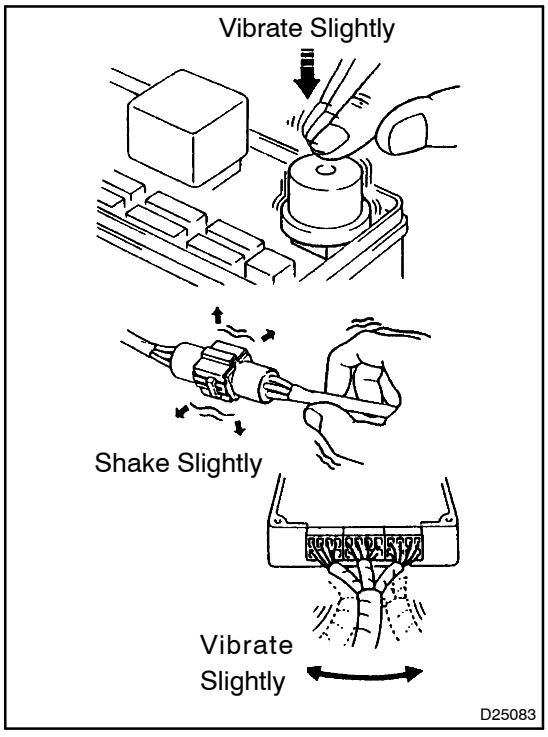

1. VIBRATION METHOD: When vibration seems to be the major cause.

(a) PART AND SENSOR

(1) Apply slight vibration with your finger to the part of the sensor considered to be the problem cause and check whether the malfunction occurs.

HINT:

Applying strong vibration to relays may result in open relays.

(b) CONNECTORS

(1) Slightly shake the connector vertically and horizontally.

(c) WIRE HARNESS

(1) Slightly shake the wire harness vertically and horizontally.

The connector joint and fulcrum of the vibration are the major areas that should be checked thoroughly.

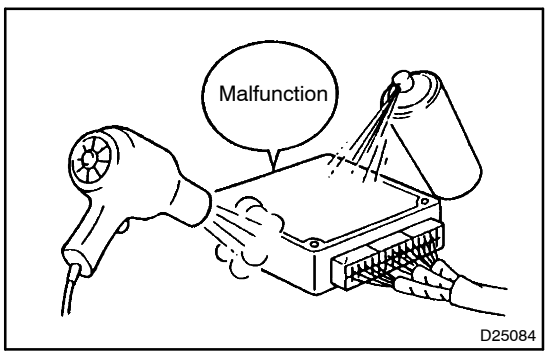

2. HEAT METHOD: If the problem seems to occur when the area in question is heated.

(a) Heat the component that is the possible cause of the malfunction with a hair dryer or similar object. Check if the malfunction occurs.

NOTICE:

- **Do not heat the components to more than 60°C (140°F) (Temperature is limited to keep the components from being damaged).**

- **Do not apply heat directly to the parts in the ECU.**

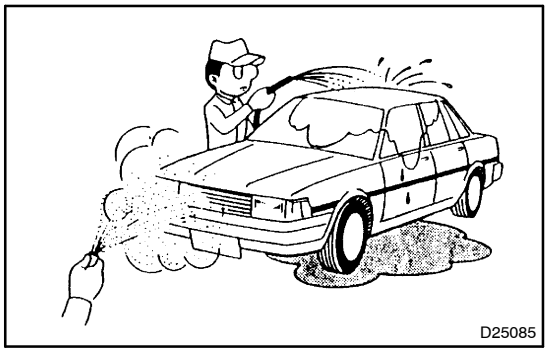

3. WATER SPRINKLING METHOD: When the malfunction seems to occur on a rainy day or in high–humidity.

(a) Sprinkle water onto the vehicle and check if the malfunction occurs.

NOTICE:

- **Never sprinkle water directly onto the engine compartment, but indirectly change the temperature and humidity by spraying a mist of water onto the radiator front surface.**
- **Never apply water directly onto the electronic components.**

HINT:

If a vehicle is subject to water leakage, the leaking water may contaminate the ECU. When testing a vehicle with a water leakage problem, this factor must also be considered.

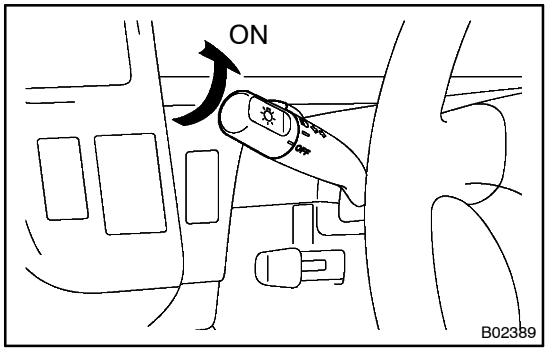

4. OTHERS: If the malfunction seems to occur when electrical load is excessive.

(a) Turn on all the electrical equipment including the heater blower, headlights, rear window defogger, etc., and check if the malfunction occurs.

DIAGNOSTIC TROUBLE CODE CHART

The inspection procedures are shown in the table below. This table allows efficient and accurate troubleshooting using the diagnostic trouble codes displayed in the diagnostic trouble code chart. Proceed with troubleshooting in accordance with the inspection procedures listed in the diagnostic chart corresponding to the diagnostic trouble codes displayed. The diagnostic trouble code chart for the Supplemental Restraint System is shown below as an example.

- DTC No.
  Indicates the diagnostic trouble code.
- Page or Instructions
  Indicates the page where the inspection procedures for each circuit is to be found, or gives instructions for checking and repairs.

- Trouble Area
  Indicates the suspect areas of the problem.

- Detection Item
  Indicates the system or details of the problem.

DIAGNOSTIC TROUBLE CODE CHART

If a malfunction code is displayed during the DTC check, check the circuit for that code listed in the table below (Proceed to the page given for that circuit).

DTC No. (See page)	Detection Item	Trouble Area	SRS Warning Light
B0100/13 (05–119)	● Short in D squib circuit	● Steering wheel pad (squib) ● Spiral cable ● Airbag sensor assembly ● Wire harness	ON
B0101/14 (05–124)	● Open in D squib circuit	● Steering wheel pad (squib) ● Spiral cable ● Airbag sensor assembly ● Wire harness	ON
B0102/11 (05–128)	● Short in D squib circuit (to ground)	● Steering wheel pad (squib) ● Spiral cable ● Airbag sensor assembly ● Wire harness	ON
B0103/12 (05–132)	● Short in D squib circuit (to B+)	● Steering wheel pad (squib) ● Spiral cable ● Airbag sensor assembly ● Wire harness	ON
B0105/53 (05–136)	● Short in P squib circuit	● Front passenger airbag assembly (squib) ● Airbag sensor assembly ● Wire harness	ON
B0106/54	● Open in P squib circuit	● Front passenger airbag assembly (squib) ● Airbag sensor assembly ● Wire harness	
	b circuit (to Ground)	● Front passenger airbag assembly (squib) ● Airbag sensor assembly ● Wire harness	

PROBLEM SYMPTOMS TABLE

The suspected circuits or parts for each problem symptom are shown in the table below. Use this table to troubleshoot the problem when a Normal code is displayed in the diagnostic trouble code chart but the problem is still occurring. Numbers in the table indicate the inspetion order in which the circuits or parts should be checked.

HINT:

When the problem is not detected by the diagnostic system even though the problem symptom is present, it may be that the problem is occurring outside the detection range of the diagnostic system.

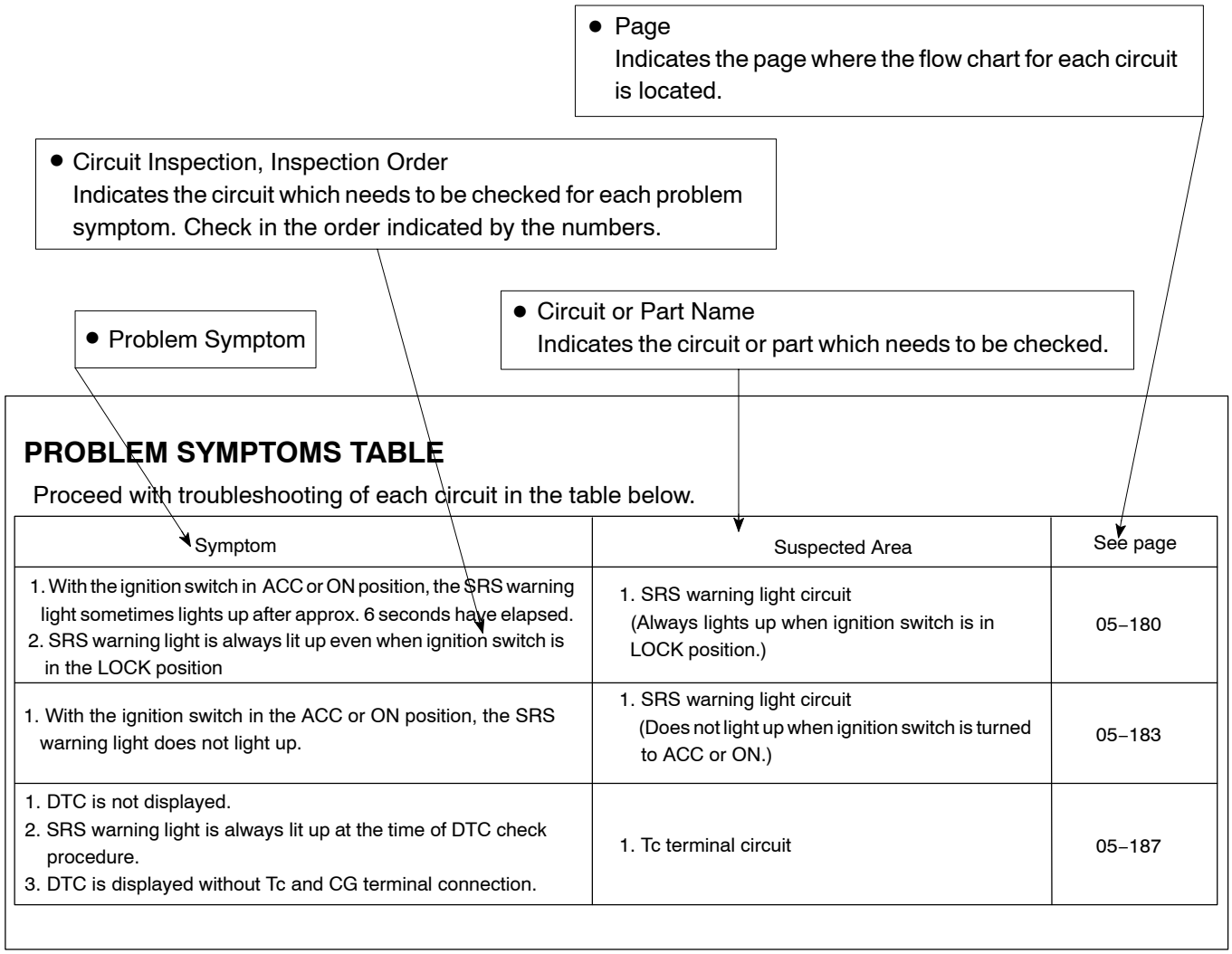

PROBLEM SYMPTOMS TABLE

Proceed with troubleshooting of each circuit in the table below.

Symptom	Suspected Area	See page
1. With the ignition switch in ACC or ON position, the SRS warning light sometimes lights up after approx. 6 seconds have elapsed. 2. SRS warning light is always lit up even when ignition switch is in the LOCK position	1. SRS warning light circuit (Always lights up when ignition switch is in LOCK position.)	05–180
1. With the ignition switch in the ACC or ON position, the SRS warning light does not light up.	1. SRS warning light circuit (Does not light up when ignition switch is turned to ACC or ON.)	05–183
1. DTC is not displayed. 2. SRS warning light is always lit up at the time of DTC check procedure. 3. DTC is displayed without Tc and CG terminal connection.	1. Tc terminal circuit	05–187

CIRCUIT INSPECTION

How to read and use each page is shown below.

● Circuit Description
The major role and, operation of the circuit and its component parts are explained.

● Diagnostic Trouble Code No. and Detection Item

● Indicates the diagnostic trouble codes, diagnostic trouble code settings and suspect areas for a problem.

● Inspection Procedures
Use the inspection procedures to determine if the circuit is normal or abnormal. If it is abnormal, use it to determine whether the problem is located in the sensors, actuators, wire harness or ECU.

DTC P0500/42 VEHICLE SPEED SENSOR MALFUNCTION

CIRCUIT DESCRIPTION

The vehicle speed sensor outputs a 4–pulse signal for every revolution of the rotor shaft, which is rotated by the transmission output shaft via the driven gear. After this signal is converted into a more precise rectangular waveform by the waveform shaping circuit inside the combination meter, it is then transmitted to the Engine ECU. The Engine ECU determines the vehicle speed based on the frequency of these pulse signals

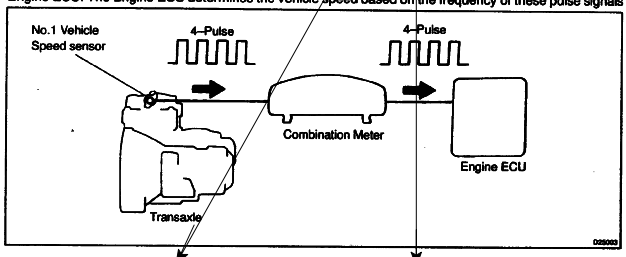

DTC No.	DTC Detecting Condition	Trouble Area
P0500/42	During vehicle is being driven, no vehicle speed sensor signal to engine ECU (2 trip detection logic)	• Combination meter • Open or short in No.1 vehicle speed sensor circuit • No.1 vehicle speed sensor • Engine ECU

WIRING DIAGRAM

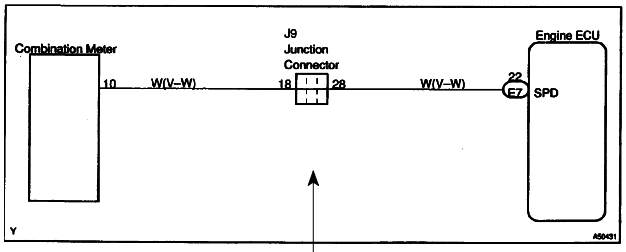

● Wiring Diagram
This shows a wiring diagram of the circuit.
Use this diagram together with ELECTRICAL WIRING DIAGRAM to thoroughly understand the circuit.
Wire colors are indicated by an alphabetical code.
B = Black, L = Blue, R = Red, BR = Brown,
LG = Light Green, V = Violet, G = Green,
O = Orange, W = White, GR = Gray, P = Pink,
Y = Yellow, SB = Sky Blue
The first letter indicates the basic wire color and the second letter indicates the color of the stripe.

INSPECTION PROCEDURE

1 READ VALUE OF VEHICLE SPEED VALUE(SPEEDOMETER OPERATION)

(a) Select data monitor on the hand–held tester.
(b) Perform a test drive of the vehicle.
(c) Read the vehicle speed on the hand–held tester.
RESULT: The same as the speed displayed on the speed meter.

NG > **REPLACE COMBINATION METER ASSY**

OK

2 INSPECT ECU

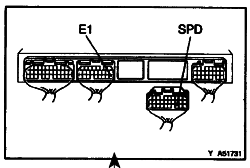

(a) Check the output waveform.
HINT:
Using the oscilloscope function of hand–held tester, it is possible to check the function between the engine ECU and the knock control sensor. The waveform shown in the illustration is an example without noise and chattering.
(1) Connect the hand–held tester between the terminals SPD of the engine ECU E7 connector and E1 of the engine ECU E8 connector.
(2) Select the oscilloscope function on the hand–held tester. (Refer to the hand–held tester's instruction book for operating instructions.)

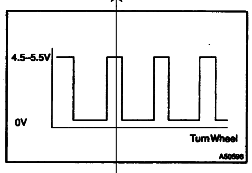

RESULT: Voltage is intermittently generated

ITEM	CONTENTS
TERMINAL	SPD⇔E1
EQUIPMENT SET	5V/DIV, 20ms/DIV
CONDITION	Running at 20 km/h

HINT:
- The multitude gets shorter as the engine speed becomes faster.

OK > **CHECK AND REPLACE ECU**

NG

● Indicates the condition of the connector of the ECU during the check.

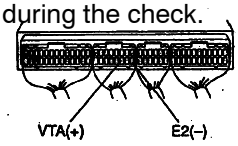

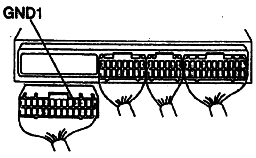

Connector being checked is connected.
Connections of tester are indicated by (+), (–) after terminals name.

Connector being checked is disconnected.
For inspection of connector with body ground, there is nothing about the body ground written down.

D25842

010B8–13

ELECTRONIC CIRCUIT INSPECTION PROCEDURE

1. BASIC INSPECTION

(a) RESISTANCE MEASURING CONDITION OF ELECTRONIC PARTS

(1) Unless stated, all resistance is measured at an ambient temperature of 20°C (68°F). As the resistance may be outside the specifications if measured at high temperatures immediately after the vehicle has been running, measurements should be made when the engine has cooled down.

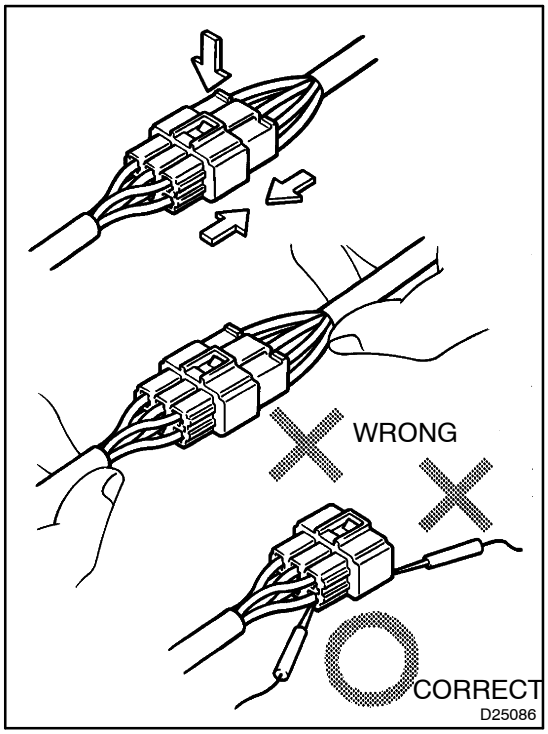

(b) HANDLING OF CONNECTOR

(1) When removing the connector with lock, press the connector in the direction of the engagement and remove the lock by lightly pressing the lock claw.

(2) When removing the connector, do not hold the harness, but hold the connector.

(3) Before connecting the connector, check that there is no deformation, damage or missing terminals.

(4) The connector with a lock should be securely connected until it makes a ”click” sound.

(5) When checking the connector with a Toyota electrical tester, check it from the backside (harness side) of the connector using a mini test lead.

NOTICE:

- **As a water proof connector cannot be checked from the backside, check by connecting the sub–harness.**
- **Do not damage the terminals by moving the inserted tester needle.**

(c) CONNECTOR CHECKING POINTS

(1) Checking when the connector is connected:
By holding the connector, check the inserted condition and locking efficiency (engaged condition).

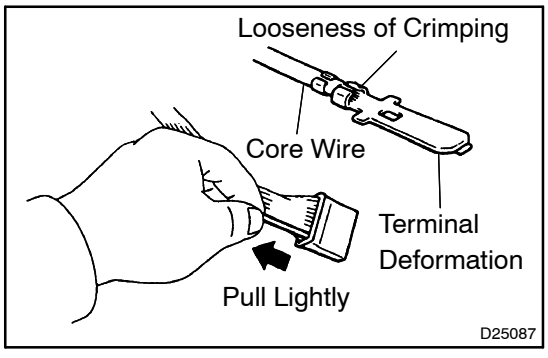

(2) Checking when the connector is removed:
Check by lightly pulling the wire harness (missing terminal, terminal crimping condition, core wire break).
Check visually for any rust, metal particles, water and bent terminals (rust, mixing of foreign object, terminal deformation).

NOTICE:

When testing a gold–plated female terminal, always use a gold–plated male terminal.

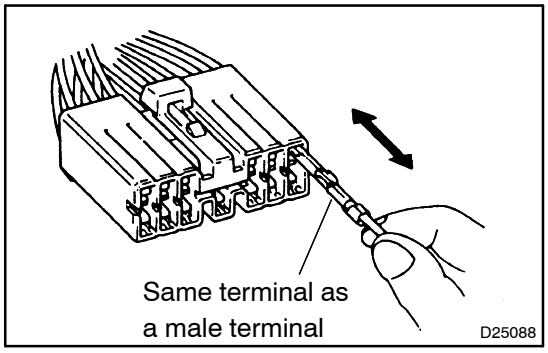

(3) Checking of the contact pressure of the terminal:
Prepare a spare male terminal.
Insert it into a female terminal, check the engaged condition and sliding resistance.

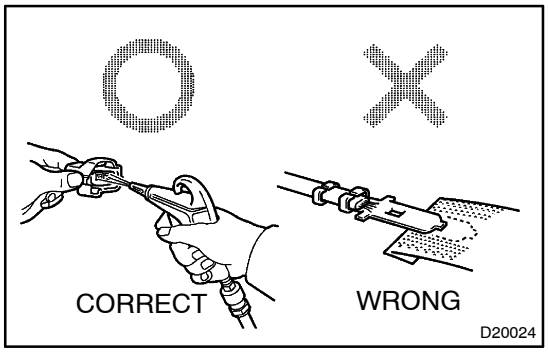

(d) REPAIR METHOD OF CONNECTOR TERMINAL

(1) If there is any dirt on the terminal, clean the contact point using an air gun or shop rag. Never polish the contact point using sandpaper as the platings may come off.

(2) In case of abnormal contact pressure, replace the female terminal. However, if a male terminal is gold–plated (gold color), use gold–plated female terminal and if it is silver–plated (silver color), use silver–plated female terminal.

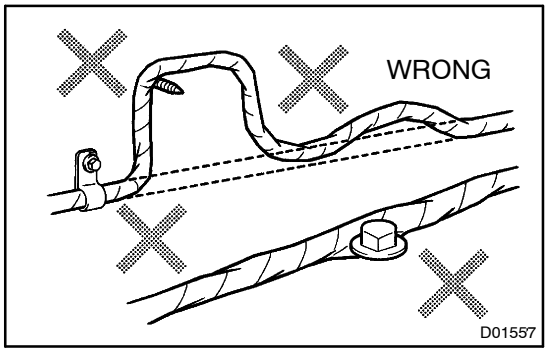

(e) HANDLING OF WIRE HARNESS

(1) When removing the wire harness, check the positioning of the wiring and clamping before starting work in order to be able to restore it correctly.

(2) Never twist, pull or loosen the wire harness more than necessary.

(3) Never allow the wire harness to come into contact with a high–temperature, rotating, moving, vibrating or sharp (edge of the panel, tip of the screw, etc.) part.

(4) When installing parts, never let the wire harness be interfered with.

(5) Never cut or break the cover of the wire harness. If one is cut or broken, replace it or securely repair it with electrical tape.

Fig. 1

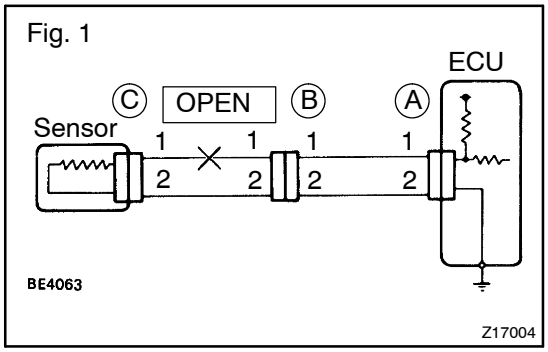

2. CHECK OPEN CIRCUIT

(a) For the open circuit in the wire harness in Fig. 1, perform a continuity check in step (b) or a voltage check in step (c) to locate the section.

Fig. 2

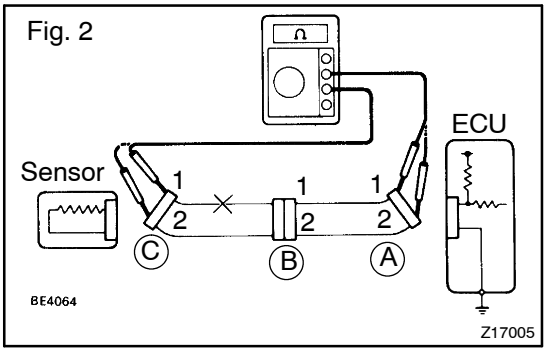

(b) Check the continuity.

(1) Disconnect connectors A and C and measure the resistance between them.

Resistance: 1 Ω or less

HINT:

Measure the resistance while lightly shaking the wire harness vertically and horizontally.

In the case of Fig. 2:

Between terminal 1 of connector A and terminal 1 of connector C → No continuity (open)

Between terminal 2 of connector A and terminal 2 of connector C → Continuity

Therefore, the cause is an open circuit between terminal 1 of connector A and terminal 1 of connector C.

Fig. 3

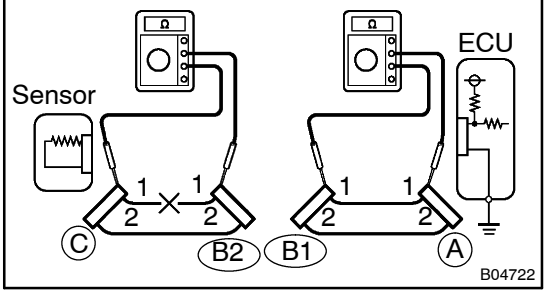

(2) Disconnect connector B and measure the resistance between the connectors.

In the case of Fig. 3:

Between terminal 1 of connector A and terminal 1 of connector B1 → Continuity

Between terminal 1 of connector B2 and terminal 1 of connector C → No continuity (open)

Therefore, the cause is an open circuit between terminal 1 of connector B2 and terminal 1 of connector C.

Fig. 4

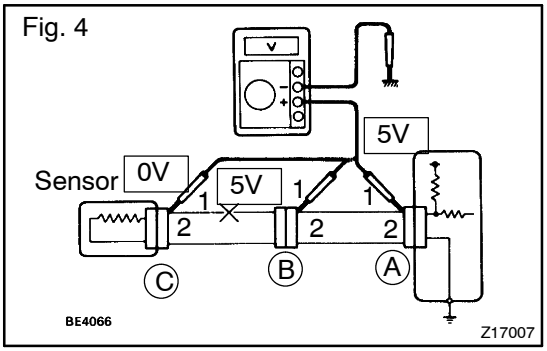

(c) Check the voltage.

(1) In a circuit in which voltage is applied (to the ECU connector terminal), an open circuit can be checked by conducting a voltage check.

As shown in Fig. 4, with each connector still connected, measure the voltage between the body ground and terminal 1 of connector A at the ECU 5 V output terminal, terminal 1 of connector B, and terminal 1 of connector C, in that order.

(2) If the results are:

5 V: Between terminal 1 of connector A and body ground

5 V: Between terminal 1 of connector B and body ground

0 V: Between terminal 1 of connector C and body ground

Therefore, the cause is an open circuit in the wire harness between terminal 1 of connector B and terminal 1 of connector C.

Fig. 5

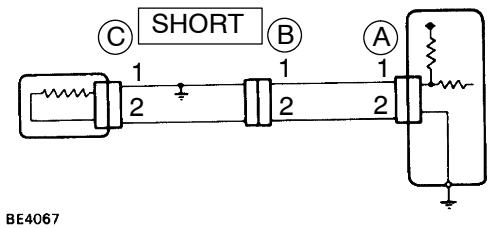

3. CHECK SHORT CIRCUIT

(a) If the wire harness is ground shorted as shown in Fig. 5, locate the section by conducting a continuity check with the body ground in step (b).

Fig. 6

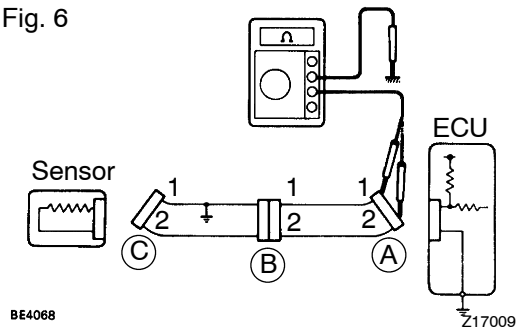

(b) Check the continuity with the body ground.

(1) Disconnect connectors A and C and measure the resistance between terminals 1 and 2 of connector A and the body ground.

Resistance: 10 kΩ or higher

HINT:

Measure the resistance while lightly shaking the wire harness vertically and horizontally.

In the case of Fig. 6:

Between terminal 1 of connector A and body ground → Continuity (short)

Between terminal 2 of connector A and body ground → No continuity

Therefore, the cause is a short circuit between terminal 1 of connector A and terminal 1 of connector C.

Fig. 7

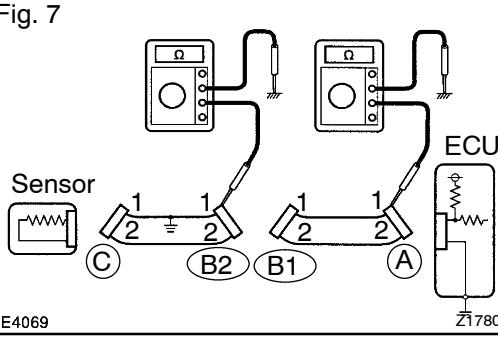

(2) Disconnect connector B and measure the resistance between terminal 1 of connector A and the body ground, and terminal 1 of connector B2 and the body ground.

In the case of Fig. 7:

Between terminal 1 of connector A and body ground → No continuity

Between terminal 1 of connector B2 and body ground → Continuity (short)

Therefore, the cause is a short circuit between terminal 1 of connector B2 and terminal 1 of connector C.

4. CHECK AND REPLACE ECU

NOTICE:

- **Start an inspection of the connector from the backside of the connector on the wire harness side with the connector connected to the ECU.**
- **When no measurement condition is specified, perform the inspection with the engine stopped and also the ignition switch ON.**

(a) First check the ECU ground circuit. If it is faulty, repair it. If it is normal, the ECU could be faulty. In this case, replace the ECU with one that functions normally and check if the symptoms appear.

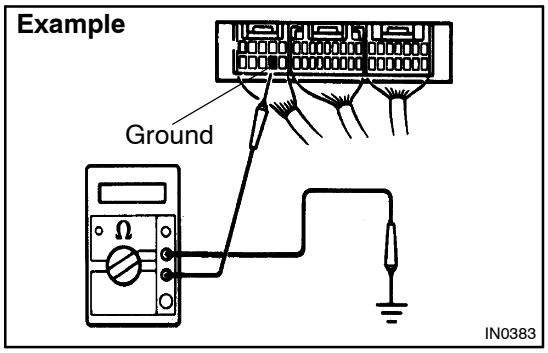

(1) Measure the resistance between the ECU ground terminal and body ground.

Resistance: 1 Ω or less

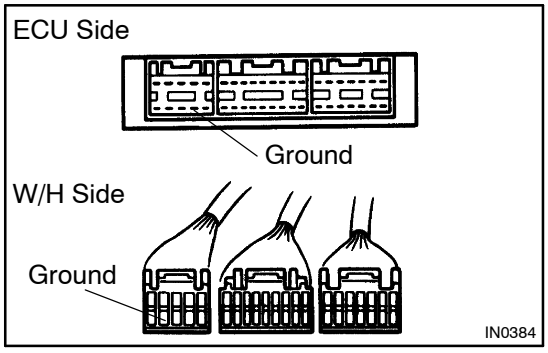

(2) Disconnect the ECU connector, check the ground terminals on the ECU side and wire harness side for bends and check the contact pressure.

TERMS

ABBREVIATIONS USED IN THIS MANUAL

010B9–18

Abbreviations	Meaning
ABS	Anti–Lock Brake System
A/C	Air Conditioner
AC	Alternating Current
ACC	Accessory
ACIS	Acoustic Control Induction System
ACSD	Automatic Cold Start Device
A.D.D.	Automatic Disconnecting Differential
A/F	Air–Fuel Ratio
AHC	Active Height Control Suspension
ALR	Automatic Locking Retractor
ALT	Alternator
AMP	Amplifier
ANT	Antenna
Approx.	Approximately
ASSY	Assembly
A/T, ATM	Automatic Transmission (Transaxle)
ATF	Automatic Transmission Fluid
AUTO	Automatic
AUX	Auxiliary
AVG	Average
AVS	Adaptive Variable Suspension
B+	Battery Voltage
BA	Brake Assist
BACS	Boost Altitude Compensation System
BAT	Battery
BDC	Bottom Dead Center
B/L	Bi–Level
B/S	Bore–Stroke Ratio
BTDC	Before Top Dead Center
BVSV	Bimetallic Vacuum Switching Valve
CAN	Controller Area Network
CB	Circuit Breaker
CCo	Catalytic Converter For Oxidation
CD	Compact Disc
CF	Cornering Force
CG	Center Of Gravity
CH	Channel
CKD	Complete Knock Down
COMB.	Combination
CPE	Coupe
CPS	Combustion Pressure Sensor
CPU	Central Processing Unit
CRS	Child Restraint System
CTR	Center
C/V	Check Valve
CV	Control Valve
CW	Curb Weight
DC	Direct Current

Abbreviations	Meaning
DEF	Defogger
DFL	Deflector
DIFF.	Differential
DIFF. LOCK	Differential Lock
D/INJ	Direct Injection
DLC	Data Link Connector
DLI	Distributorless Ignition
DOHC	Double Overhead Camshaft
DP	Dash Pot
DS	Dead Soak
DSP	Digital Signal Processor
DTC	Diagnostic Trouble Code
DVD	Digital Versatile Disc
EBD	Electric Brake Force Distribution
ECAM	Engine Control And Measurement System
ECD	Electronic Controlled Diesel
ECDY	Eddy Current Dynamometer
ECT	Electronic Control Transmission
ECU	Electronic Control Unit
ED	Electro–Deposited Coating
EDU	Electronic Driving Unit
EDIC	Electric Diesel Injection Control
EFI	Electronic Fuel Injection
E/G	Engine
EGR	Exhaust Gas Recirculation
EGR–VM	EGR–Vacuum Modulator
ELR	Emergency Locking Retractor
EMPS	Electric Motor Power Steering
ENG	Engine
ESA	Electronic Spark Advance
ETCS–i	Electronic Throttle Control System–intelligent
EVAP	Evaporative Emission Control
EVP	Evaporator
E–VRV	Electric Vacuum Regulating Valve
EX	Exhaust
FE	Fuel Economy
FF	Front–Engine Front–Wheel–Drive
F/G	Fuel Gauge
FIPG	Formed In Place Gasket
FL	Fusible Link
F/P	Fuel Pump
FPU	Fuel Pressure Up
Fr	Front
F/W	Flywheel
FW/D	Flywheel Damper
FWD	Front–Wheel–Drive
GAS	Gasoline
GND	Ground
GPS	Global Positioning System
HAC	High Altitude Compensator
H/B	Hatchback

Abbreviations	Meaning
H–FUSE	High Current Fuse
HI	High
HID	High Intensity Discharge (Head Lamp)
HSG	Housing
HT	Hard Top
HWS	Heated Windshield System
IC	Integrated Circuit
IDI	Indirect Diesel Injection
IFS	Independent Front Suspension
IG	Ignition
IIA	Integrated Ignition Assembly
IN	Intake (Manifold, Valve)
INT	Intermittent
I/P	Instrument Panel
IRS	Independent Rear Suspension
ISC	Idle Speed Control
J/B	Junction Block
J/C	Junction Connector
KD	Kick–Down
LAN	Local Area Network
LB	Liftback
LCD	Liquid Crystal Display
LED	Light Emitting Diode
LH	Left–Hand
LHD	Left–Hand Drive
L/H/W	Length, Height, Width
LLC	Long–Life Coolant
LNG	Liquified Natural Gas
LO	Low
LPG	Liquified Petroleum Gas
LSD	Limited Slip Differential
LSP & PV	Load Sensing Proportioning And Bypass Valve
LSPV	Load Sensing Proportioning Valve
MAP	Manifold Absolute Pressure
MAX.	Maximum
MIC	Microphone
MIL	Malfunction Indicator Lamp
MIN.	Minimum
MG1	Motor Generator No.1
MG2	Motor Generator No.2
MP	Multipurpose
MPI	Multipoint Electronic Injection
MPX	Multiplex Communication System
M/T, MTM	Manual Transmission (Transaxle)
MT	Mount
MTG	Mounting
N	Neutral
NA	Natural Aspiration
No.	Number
O2S	Oxygen Sensor
O/D	Overdrive

Abbreviations	Meaning
OEM	Original Equipment Manufacturing
OHC	Overhead Camshaft
OHV	Overhead Valve
OPT	Option
ORVR	On–board Refilling Vapor Recovery
O/S	Oversize
P & BV	Proportioning And Bypass Valve
PCS	Power Control System
PCV	Positive Crankcase Ventilation
PKB	Parking Brake
PPS	Progressive Power Steering
PTC	Positive Temperature Coefficient
PS	Power Steering
PTO	Power Take–Off
P/W	Power Window
R & P	Rack And Pinion
RAM	Random Access Memory
R/B	Relay Block
RBS	Recirculating Ball Type Steering
R/F	Reinforcement
RFS	Rigid Front Suspension
RH	Right–Hand
RHD	Right–Hand Drive
RLY	Relay
ROM	Read Only Memory
Rr	Rear
RRS	Rigid Rear Suspension
RWD	Rear–Wheel Drive
SDN	Sedan
SEN	Sensor
SICS	Starting Injection Control System
SOC	State Of Charge
SOHC	Single Overhead Camshaft
SPEC	Specification
SPI	Single Point Injection
SRS	Supplemental Restraint System
SSM	Special Service Materials
SST	Special Service Tools
STD	Standard
STJ	Cold–Start Fuel Injection
SW	Switch
SYS	System
T/A	Transaxle
TACH	Tachometer
TBI	Throttle Body Electronic Fuel Injection
TC	Turbocharger
TCCS	TOYOTA Computer–Controlled System
TCV	Timing Control Valve
TDC	Top Dead Center
TEMP.	Temperature
TEMS	TOYOTA Electronic Modulated Suspension

Abbreviations	Meaning
TFT	Toyota Free–Tronic
TIS	Total Information System For Vehicle Development
T/M	Transmission
TMC	TOYOTA Motor Corporation
TMMK	TOYOTA Motor Manufacturing Kentucky, Inc.
TRC	Traction Control System
TURBO	Turbocharge
TWC	Three–Way Catalyst
U/D	Underdrive
U/S	Undersize
VCV	Vacuum Control Valve
VENT	Ventilator
VIN	Vehicle Identification Number
VPS	Variable Power Steering
VSC	Vehicle Stability Control
VSV	Vacuum Switching Valve
VTV	Vacuum Transmitting Valve
VVT–i	Variable Valve Timing–intelligent
w/	With
WGN	Wagon
W/H	Wire Harness
w/o	Without
WU–TWC	Warm Up Three–way Catalytic Converter
WU–OC	Warm Up Oxidation Catalytic Converter
1st	First
2nd	Second
2WD	Two Wheel Drive Vehicle (4 x 2)
3rd	Third
4th	Fourth
4WD	Four Wheel Drive Vehicle (4 x 4)
4WS	Four Wheel Steering System
5th	Fifth

010BA–21

GLOSSARY OF SAE AND TOYOTA TERMS

This glossary lists all SAE–J1930 terms and abbreviations used in this manual in compliance with SAE recommendations, as well as their TOYOTA equivalents.

SAE ABBREVIATIONS	SAE TERMS	TOYOTA TERMS ( )––ABBREVIATIONS
A/C	Air Conditioning	Air Conditioner
ACL	Air Cleaner	Air Cleaner, A/CL
AIR	Secondary Air Injection	Air Injection (AI)
AP	Accelerator Pedal	–
B+	Battery Positive Voltage	+B, Battery Voltage
BARO	Barometric Pressure	HAC
CAC	Charge Air Cooler	Intercooler
CARB	Carburetor	Carburetor
CFI	Continuous Fuel Injection	–
CKP	Crankshaft Position	Crank Angle
CL	Closed Loop	Closed Loop
CMP	Camshaft Position	Cam Angle
CPP	Clutch Pedal Position	–
CTOX	Continuous Trap Oxidizer	–
CTP	Closed Throttle Position	LL ON, Idle ON
DFI	Direct Fuel Injection (Diesel)	Direct Injection (DI/INJ)
DI	Distributor Ignition	–
DLC1 DLC2 DLC3	Data Link Connector 1 Data Link Connector 2 Data Link Connector 3	1: Check Connector 2: Total Diagnosis Communication Link (TDCL) 3: OBD II Diagnostic Connector
DTC	Diagnostic Trouble Code	Diagnostic Trouble Code
DTM	Diagnostic Test Mode	–
ECL	Engine Control Level	–
ECM	Engine Control Module	Engine ECU (Electronic Control Unit)
ECT	Engine Coolant Temperature	Coolant Temperature, Water Temperature (THW)
EEPROM	Electrically Erasable Programmable Read Only Memory	Electrically Erasable Programmable Read Only Memory (EEPROM), Erasable Programmable Read Only Memory (EPROM)
EFE	Early Fuel Evaporation	Cold Mixture Heater (CMH), Heat Control Valve (HCV)
EGR	Exhaust Gas Recirculation	Exhaust Gas Recirculation (EGR)
EI	Electronic Ignition	Distributorless Ignition (DLI)
EM	Engine Modification	Engine Modification (EM)
EPROM	Erasable Programmable Read Only Memory	Programmable Read Only Memory (PROM)
EVAP	Evaporative Emission	Evaporative Emission Control (EVAP)
FC	Fan Control	–
FEEPROM	Flash Electrically Erasable Programmable Read Only Memory	–
FEPROM	Flash Erasable Programmable Read Only Memory	–
FF	Flexible Fuel	–
FP	Fuel Pump	Fuel Pump
GEN	Generator	Alternator
GND	Ground	Ground (GND)

HO2S	Heated Oxygen Sensor	Heated Oxygen Sensor (HO_2S)
IAC	Idle Air Control	Idle Speed Control (ISC)
IAT	Intake Air Temperature	Intake or Inlet Air Temperature
ICM	Ignition Control Module	–
IFI	Indirect Fuel Injection	Indirect Injection (IDL)
IFS	Inertia Fuel–Shutoff	–
ISC	Idle Speed Control	–
KS	Knock Sensor	Knock Sensor
MAF	Mass Air Flow	Air Flow Meter
MAP	Manifold Absolute Pressure	Manifold Pressure Intake Vacuum
MC	Mixture Control	Electric Bleed Air Control Valve (EBCV) Mixture Control Valve (MCV) Electric Air Control Valve (EACV)
MDP	Manifold Differential Pressure	–
MFI	Multiport Fuel Injection	Electronic Fuel Injection (EFI)
MIL	Malfunction Indicator Lamp	Check Engine Lamp
MST	Manifold Surface Temperature	–
MVZ	Manifold Vacuum Zone	–
NVRAM	Non–Volatile Random Access Memory	–
O2S	Oxygen Sensor	Oxygen Sensor, O_2 Sensor (O_2S)
OBD	On–Board Diagnostic	On–Board Diagnostic System (OBD)
OC	Oxidation Catalytic Converter	Oxidation Catalyst Convert (OC) Catalytic Converter for Oxidation (CCo)
OP	Open Loop	Open Loop
PAIR	Pulsed Secondary Air Injection	Air Suction (AS)
PCM	Powertrain Control Module	–
PNP	Park/Neutral Position	–
PROM	Programmable Read Only Memory	–
PSP	Power Steering Pressure	–
PTOX	Periodic Trap Oxidizer	Diesel Particulate Filter (DPF) Diesel Particulate Trap (DPT)
RAM	Random Access Memory	Random Access Memory (RAM)
RM	Relay Module	–
ROM	Read Only Memory	Read Only Memory (ROM)
RPM	Engine Speed	Engine Speed
SC	Supercharger	Supercharger
SCB	Supercharger Bypass	E–ABV
SFI	Sequential Multiport Fuel Injection	Electronic Fuel Injection (EFI), Sequential Injection
SPL	Smoke Puff Limiter	–
SRI	Service Reminder Indicator	–
SRT	System Readiness Test	–
ST	Scan Tool	–
TB	Throttle Body	Throttle Body
TBI	Throttle Body Fuel Injection	Single Point Injection Central Fuel Injection (Ci)
TC	Turbocharger	Turbocharger
TCC	Torque Converter Clutch	Torque Converter

TCM	Transmission Control Module	Transmission ECU, ECT ECU
TP	Throttle Position	Throttle Position
TR	Transmission Range	–
TVV	Thermal Vacuum Valve	Bimetallic Vacuum Switching Valve (BVSV) Thermostatic Vacuum Switching Valve (TVSV)
TWC	Three–Way Catalytic Converter	Three–Way Catalytic (TWC) Manifold Converter CC_{RO}
TWC+OC	Three–Way + Oxidation Catalytic Converter	CC_R + CCo
VAF	Volume Air Flow	Air Flow Meter
VR	Voltage Regulator	Voltage Regulator
VSS	Vehicle Speed Sensor	Vehicle Speed Sensor
WOT	Wide Open Throttle	Full Throttle
WU–OC	Warm Up Oxidation Catalytic Converter	–
WU–TWC	Warm Up Three–Way Catalytic Converter	–
3GR	Third Gear	–
4GR	Fourth Gear	–

DIAGNOSTICS

PREPARATION

023NW–01

Recomended Tools

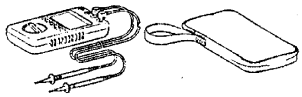	09082–00040	TOYOTA Electrical Tester	ECD SYSTEM(1CD–FTV)(From September, 2003) SFI SYSTEM(2AZ–FSE) ELECTRONIC CONTROLLED AUTOMATIC TRANSAXLE [ECT](U151E)
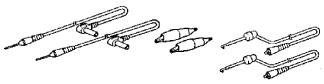	(09083–00150)	Test Lead Set	ECD SYSTEM(1CD–FTV)(From September, 2003) SFI SYSTEM(2AZ–FSE) ELECTRONIC CONTROLLED AUTOMATIC TRANSAXLE [ECT](U151E)

ENGINE CONTROL SYSTEM

023FL–01

PREPARATION

SST

	09023–12900	Union Nut Wrench 19mm	KNOCK SENSOR(2AZ–FSE)
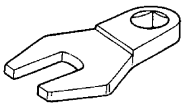	(09617–24011)	Steering Rack Wrench	KNOCK SENSOR(2AZ–FSE)

Recommended Tools

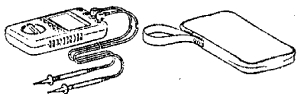	09082–00040	TOYOTA Electrical Tester	SFI SYSTEM(2AZ–FSE)
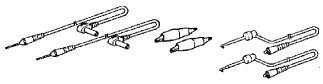	(09083–00150)	Test Lead Set	SFI SYSTEM(2AZ–FSE)

Equipment

Ohmmeter	
Radiator cap tester	
Service wire harness	
Torque wrench	
Torx socket E7	
Voltmeter	

FUEL

PREPARATION

023FM–01

SST

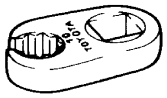	09023–12700	Union Nut Wrench 17mm	INJECTOR ASSY(1CD–FTV)(From September, 2003) INJECTION OR SUPPLY PUMP ASSY(1CD–FTV)(From September, 2003) COMMON RAIL ASSY(1CD–FTV)(From September, 2003)
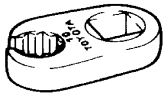	09023–12900	Union Nut Wrench 19mm	FUEL INJECTOR ASSY(2AZ–FSE)
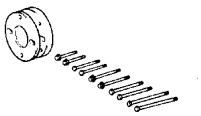	09213–54015	Crankshaft Pulley Holding Tool	INJECTION OR SUPPLY PUMP ASSY(1CD–FTV)(From September, 2003)
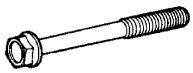	(90105–08076)	Bolt	INJECTION OR SUPPLY PUMP ASSY(1CD–FTV)(From September, 2003)
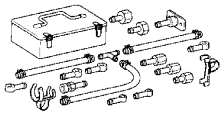	09268–41047	Injection Measuring Tool Set	FUEL SYSTEM(2AZ–FSE)
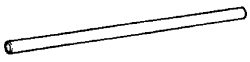	(95336–08070)	Hose	FUEL SYSTEM(2AZ–FSE)
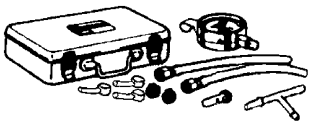	09268–45014	EFI Fuel Pressure Gauge	FUEL SYSTEM(2AZ–FSE)
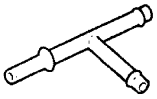	(09268–41250)	T Joint	FUEL SYSTEM(2AZ–FSE)
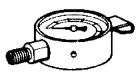	(09268–41200)	Gauge	FUEL SYSTEM(2AZ–FSE)
	(09268–41220)	Hose	FUEL SYSTEM(2AZ–FSE)
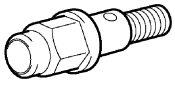	09280–00010	Union Bolt,inspection	INJECTOR ASSY(1CD–FTV)(From September, 2003)

	09330–00021	Companion Flange Holding Tool	INJECTION OR SUPPLY PUMP ASSY(1CD–FTV)(From September, 2003)
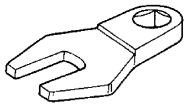	(09617–24011)	Steering Rack Wrench	FUEL INJECTOR ASSY(2AZ–FSE) FUEL PUMP ASSY(2AZ–FSE)
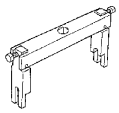	09808–14010	Fuel Sender Gauge Tool Assy	FUEL SUCTION W/ PUMP & GAUGE TUBE ASSY(2AZ–FSE) FUEL TANK ASSY(2AZ–FSE)
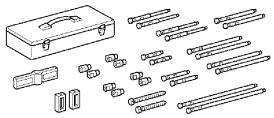	09950–50013	Puller C Set	INJECTION OR SUPPLY PUMP ASSY(1CD–FTV)(From September, 2003)
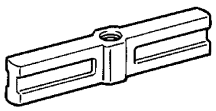	(09951–05010)	Hanger 150	INJECTION OR SUPPLY PUMP ASSY(1CD–FTV)(From September, 2003)
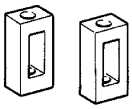	(09952–05010)	Slide Arm	INJECTION OR SUPPLY PUMP ASSY(1CD–FTV)(From September, 2003)
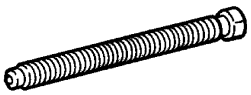	(09953–05020)	Center Bolt 150	INJECTION OR SUPPLY PUMP ASSY(1CD–FTV)(From September, 2003)
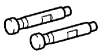	(09954–05021)	Claw No.2	INJECTION OR SUPPLY PUMP ASSY(1CD–FTV)(From September, 2003)
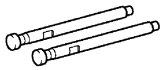	(09954–05031)	Claw No.3	INJECTION OR SUPPLY PUMP ASSY(1CD–FTV)(From September, 2003)
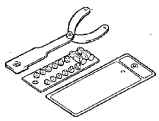	09960–10010	Variable Pin Wrench Set	INJECTION OR SUPPLY PUMP ASSY(1CD–FTV)(From September, 2003)
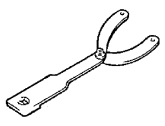	(09962–01000)	Variable Pin Wrench Arm Assy	INJECTION OR SUPPLY PUMP ASSY(1CD–FTV)(From September, 2003)
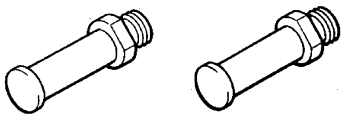	(09963–01000)	Pin 10	INJECTION OR SUPPLY PUMP ASSY(1CD–FTV)(From September, 2003)
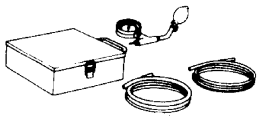	09992–00242	Turbocharger Pressure Gauge	INJECTOR ASSY(1CD–FTV)(From September, 2003)

Recommended Tools

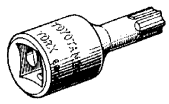	09042–00020	Torx Socket T40	FUEL INJECTOR ASSY(2AZ–FSE)
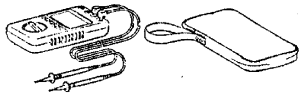	09082–00040	TOYOTA Electrical Tester	FUEL SYSTEM(1CD–FTV)(From September, 2003) FUEL SYSTEM(2AZ–FSE)
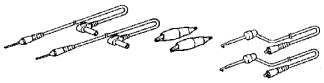	(09083–00150)	Test Lead Set	FUEL SYSTEM(2AZ–FSE)
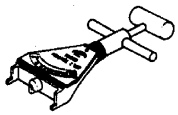	09216–00021	Belt Tension Gauge	INJECTION OR SUPPLY PUMP ASSY(1CD–FTV)(From September, 2003)

SSM

	08826–00080	Seal Packing Black or equivalent (FIPG)	INJECTOR ASSY(1CD–FTV)(From September, 2003)

Equipment

Clip	
Hexagon wrench (6 mm)	
Ohmmeter	
Plastic bag	
Radiator cap tester	
Service wire harness	
Torque wrench	
Torx socket E7	
Vernier calipers	
Vinyl bag	
Wooden block	

EMISSION CONTROL

PREPARATION

023FN–01

Recommended Tools

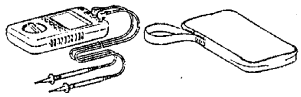	09082–00040	TOYOTA Electrical Tester	EMISSION CONTROL SYSTEM (2AZ–FSE)
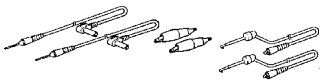	(09083–00150)	Test Lead Set	EMISSION CONTROL SYSTEM (2AZ–FSE)

Equipment

Hand–held vacuum pump	
Hose	
Ohmmeter	
Service wire harness	
Vacuum gauge	

INTAKE

PREPARATION

023FO–01

SST

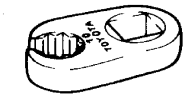	09023–38200	Union Nut Wrench 12mm	TURBOCHARGER SUB–ASSY(1CD–FTV)(From September, 2003)
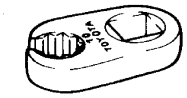	09023–38400	Union Nut Wrench 14mm	TURBOCHARGER SUB–ASSY(1CD–FTV)(From September, 2003)

Recommended Tools

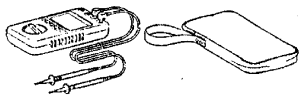	09082–00040	TOYOTA Electrical Tester	INTAKE AIR CONTROL SYSTEM (2AZ–FSE)
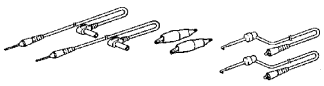	(09083–00150)	Test Lead Set	INTAKE AIR CONTROL SYSTEM (2AZ–FSE)

Equipment

3–way connector	
Hand–held vacuum pump	
Ohmmeter	
Radiator cap tester	
Service wire harness	
Torque wrench	
Vernier calipers	
Vacuum gauge	
Wooden block	

ENGINE MECHANICAL

PREPARATION

023ET–01

SST

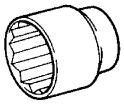	09011–12271	Socket Wrench for 27 mm	PARTIAL ENGINE ASSY(1CD–FTV)(From September, 2003)
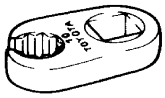	09023–00100	Union Nut Wrench 10 mm	PARTIAL ENGINE ASSY(1CD–FTV)(From September, 2003)
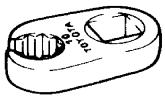	09023–12700	Union Nut Wrench 17mm	VALVE CLEARANCE(1CD–FTV)(From September, 2003) PARTIAL ENGINE ASSY(1CD–FTV)(From September, 2003) CAMSHAFT(1CD–FTV)(From September, 2003) CYLINDER HEAD GASKET(1CD–FTV)(From September, 2003)
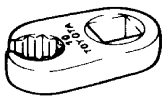	09023–12900	Union Nut Wrench 19mm	VALVE CLEARANCE(2AZ–FSE) PARTIAL ENGINE ASSY(2AZ–FSE) CHAIN SUB–ASSY(2AZ–FSE) CAMSHAFT(2AZ–FSE) CYLINDER HEAD GASKET(2AZ–FSE)
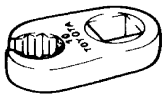	09023–38200	Union Nut Wrench 12mm	PARTIAL ENGINE ASSY(1CD–FTV)(From September, 2003) CYLINDER HEAD GASKET(1CD–FTV)(From September, 2003)
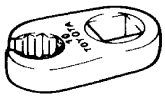	09023–38400	Union Nut Wrench 14mm	PARTIAL ENGINE ASSY(1CD–FTV)(From September, 2003) CYLINDER HEAD GASKET(1CD–FTV)(From September, 2003)
	09032–00100	Oil Pan Seal Cutter	CHAIN SUB–ASSY(2AZ–FSE) CYLINDER HEAD GASKET(2AZ–FSE)

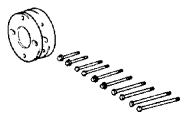	09213–54015	Crankshaft Pulley Holding Tool	PARTIAL ENGINE ASSY(1CD–FTV)(From September, 2003) TIMING BELT(1CD–FTV)(From September, 2003) CAMSHAFT(1CD–FTV)(From September, 2003) CYLINDER HEAD GASKET(1CD–FTV)(From September, 2003) CRANKSHAFT SEAL(1CD–FTV)(From September, 2003) ENGINE REAR OIL SEAL(1CD–FTV)(From September, 2003) PARTIAL ENGINE ASSY(2AZ–FSE) CHAIN SUB–ASSY(2AZ–FSE) CYLINDER HEAD GASKET(2AZ–FSE) ENGINE REAR OIL SEAL(2AZ–FSE) TIMING GEAR CASE OR TIMING CHAIN CASE OIL SEAL(2AZ–FSE)
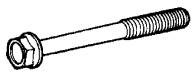	(09213–70020)	Bolt	PARTIAL ENGINE ASSY(1CD–FTV)(From September, 2003) TIMING BELT(1CD–FTV)(From September, 2003) CAMSHAFT(1CD–FTV)(From September, 2003) CYLINDER HEAD GASKET(1CD–FTV)(From September, 2003) CRANKSHAFT SEAL(1CD–FTV)(From September, 2003) ENGINE REAR OIL SEAL(1CD–FTV)(From September, 2003)
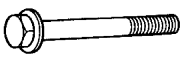	(91651–60855)	Bolt	PARTIAL ENGINE ASSY(2AZ–FSE) CHAIN SUB–ASSY(2AZ–FSE) CYLINDER HEAD GASKET(2AZ–FSE) ENGINE REAR OIL SEAL(2AZ–FSE) TIMING GEAR CASE OR TIMING CHAIN CASE OIL SEAL(2AZ–FSE)
	09223–15030	Oil Seal & Bearing Replacer	ENGINE REAR OIL SEAL(1CD–FTV)(From September, 2003) ENGINE REAR OIL SEAL(2AZ–FSE)
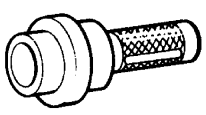	09223–22010	Crankshaft Front Oil Seal Replacer	TIMING GEAR CASE OR TIMING CHAIN CASE OIL SEAL(2AZ–FSE)

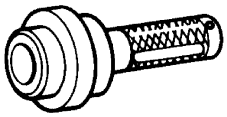	09223–46011	Crankshaft Front Oil Seal Replacer	CAMSHAFT(1CD–FTV)(From September, 2003) CYLINDER HEAD GASKET(1CD–FTV)(From September, 2003) CRANKSHAFT SEAL(1CD–FTV)(From September, 2003)
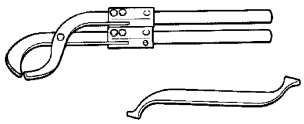	09248–55050	Valve Clearance Adjust Tool Set	VALVE CLEARANCE(1CD–FTV)(From September, 2003)
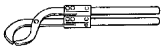	(09248–05510)	Valve Lifter Press	VALVE CLEARANCE(1CD–FTV)(From September, 2003)
	(09248–05520)	Valve Lifter Stopper	VALVE CLEARANCE(1CD–FTV)(From September, 2003)
	09249–63010	Torque Wrench Adaptor	FAN AND GENERATOR V BELT(2AZ–FSE) CHAIN SUB–ASSY(2AZ–FSE) CYLINDER HEAD GASKET(2AZ–FSE) TIMING GEAR CASE OR TIMING CHAIN CASE OIL SEAL(2AZ–FSE)
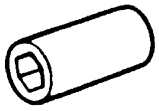	09268–46021	Nozzle Holder Retaining Nut Wrench	PARTIAL ENGINE ASSY(2AZ–FSE)
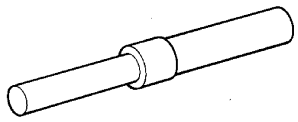	09301–00210	Clutch Guide Tool	PARTIAL ENGINE ASSY(1CD–FTV)(From September, 2003)
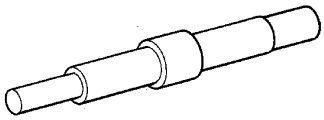	09301–00220	Clutch Guide Tool	ENGINE REAR OIL SEAL(1CD–FTV)(From September, 2003)
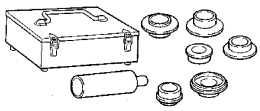	09316–60011	Transmission & Transfer Bearing Replacer	CRANKSHAFT SEAL(1CD–FTV)(From September, 2003)
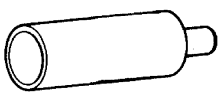	(09316–00011)	Replacer Pipe	CRANKSHAFT SEAL(1CD–FTV)(From September, 2003)

	09330–00021	Companion Flange Holding Tool	PARTIAL ENGINE ASSY(1CD–FTV)(From September, 2003) TIMING BELT(1CD–FTV)(From September, 2003) CAMSHAFT(1CD–FTV)(From September, 2003) CYLINDER HEAD GASKET(1CD–FTV)(From September, 2003) CRANKSHAFT SEAL(1CD–FTV)(From September, 2003) ENGINE REAR OIL SEAL(1CD–FTV)(From September, 2003) PARTIAL ENGINE ASSY(2AZ–FSE) CHAIN SUB–ASSY(2AZ–FSE) CYLINDER HEAD GASKET(2AZ–FSE) ENGINE REAR OIL SEAL(2AZ–FSE) TIMING GEAR CASE OR TIMING CHAIN CASE OIL SEAL(2AZ–FSE)
	(09330–00030)	Pin	PARTIAL ENGINE ASSY(2AZ–FSE)
	09520–01010	Drive Shaft Remover Attachment	ENGINE REAR OIL SEAL(1CD–FTV)(From September, 2003)
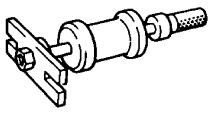	09520–24010	Differential Side Gear Shaft Puller	ENGINE REAR OIL SEAL(1CD–FTV)(From September, 2003)
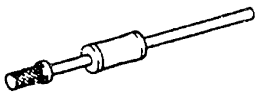	(09520–32040)	Shocker Set	ENGINE REAR OIL SEAL(1CD–FTV)(From September, 2003)
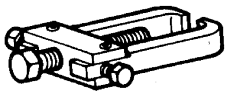	09628–62011	Boll Joint Puller	PARTIAL ENGINE ASSY(1CD–FTV)(From September, 2003) ENGINE REAR OIL SEAL(1CD–FTV)(From September, 2003)
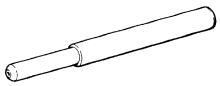	09670–00010	Front Crossmember Guide Tool	ENGINE REAR OIL SEAL(1CD–FTV)(From September, 2003)
	09817–33190	Sensor Socket Wrench	PARTIAL ENGINE ASSY(2AZ–FSE)
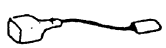	09843–18030	Tacho–pulse Pickup Wire No.2	ENGINE(2AZ–FSE)

	09843–18040	Diagnosis Check Wire No.2	ENGINE(1CD–FTV)(From September, 2003) ENGINE(2AZ–FSE)
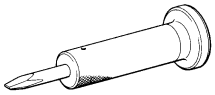	09930–00010	Drive Shaft Nut Chisel	PARTIAL ENGINE ASSY(1CD–FTV)(From September, 2003) ENGINE REAR OIL SEAL(1CD–FTV)(From September, 2003)
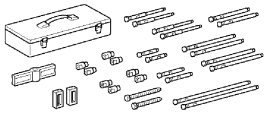	09950–50013	Puller C Set	PARTIAL ENGINE ASSY(1CD–FTV)(From September, 2003) TIMING BELT(1CD–FTV)(From September, 2003) CAMSHAFT(1CD–FTV)(From September, 2003) CYLINDER HEAD GASKET(1CD–FTV)(From September, 2003) CRANKSHAFT SEAL(1CD–FTV)(From September, 2003) CHAIN SUB–ASSY(2AZ–FSE) CYLINDER HEAD GASKET(2AZ–FSE) TIMING GEAR CASE OR TIMING CHAIN CASE OIL SEAL(2AZ–FSE)
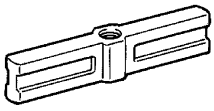	(09951–05010)	Hanger 150	PARTIAL ENGINE ASSY(1CD–FTV)(From September, 2003) TIMING BELT(1CD–FTV)(From September, 2003) CAMSHAFT(1CD–FTV)(From September, 2003) CYLINDER HEAD GASKET(1CD–FTV)(From September, 2003) CRANKSHAFT SEAL(1CD–FTV)(From September, 2003) CHAIN SUB–ASSY(2AZ–FSE) CYLINDER HEAD GASKET(2AZ–FSE) TIMING GEAR CASE OR TIMING CHAIN CASE OIL SEAL(2AZ–FSE)

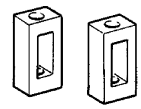	(09952–05010) Slide Arm	PARTIAL ENGINE ASSY(1CD–FTV)(From September, 2003) TIMING BELT(1CD–FTV)(From September, 2003) CAMSHAFT(1CD–FTV)(From September, 2003) CYLINDER HEAD GASKET(1CD–FTV)(From September, 2003) CRANKSHAFT SEAL(1CD–FTV)(From September, 2003) CHAIN SUB–ASSY(2AZ–FSE) CYLINDER HEAD GASKET(2AZ–FSE) TIMING GEAR CASE OR TIMING CHAIN CASE OIL SEAL(2AZ–FSE)
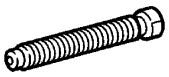	(09953–05010) Center Bolt 100	CRANKSHAFT SEAL(1CD–FTV)(From September, 2003)
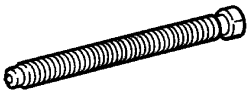	(09953–05020) Center Bolt 150	PARTIAL ENGINE ASSY(1CD–FTV)(From September, 2003) TIMING BELT(1CD–FTV)(From September, 2003) CAMSHAFT(1CD–FTV)(From September, 2003) CYLINDER HEAD GASKET(1CD–FTV)(From September, 2003) CRANKSHAFT SEAL(1CD–FTV)(From September, 2003) CHAIN SUB–ASSY(2AZ–FSE) CYLINDER HEAD GASKET(2AZ–FSE) TIMING GEAR CASE OR TIMING CHAIN CASE OIL SEAL(2AZ–FSE)
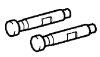	(09954–05021) Claw No.2	CRANKSHAFT SEAL(1CD–FTV)(From September, 2003) CHAIN SUB–ASSY(2AZ–FSE) CYLINDER HEAD GASKET(2AZ–FSE) TIMING GEAR CASE OR TIMING CHAIN CASE OIL SEAL(2AZ–FSE)
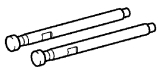	(09954–05031) Claw No.3	PARTIAL ENGINE ASSY(1CD–FTV)(From September, 2003) TIMING BELT(1CD–FTV)(From September, 2003) CAMSHAFT(1CD–FTV)(From September, 2003) CYLINDER HEAD GASKET(1CD–FTV)(From September, 2003) CRANKSHAFT SEAL(1CD–FTV)(From September, 2003)

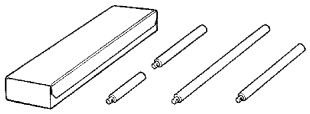	09950–70010	Handle Set	ENGINE REAR OIL SEAL(1CD–FTV)(From September, 2003) ENGINE REAR OIL SEAL(2AZ–FSE)
	(09951–07100)	Handle 100	ENGINE REAR OIL SEAL(1CD–FTV)(From September, 2003) ENGINE REAR OIL SEAL(2AZ–FSE)
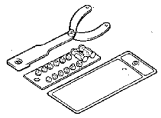	09960–10010	Variable Pin Wrench Set	PARTIAL ENGINE ASSY(1CD–FTV)(From September, 2003) TIMING BELT(1CD–FTV)(From September, 2003) CAMSHAFT(1CD–FTV)(From September, 2003) CYLINDER HEAD GASKET(1CD–FTV)(From September, 2003) CRANKSHAFT SEAL(1CD–FTV)(From September, 2003)
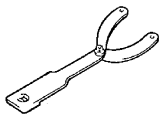	(09962–01000)	Variable Pin Wrench Arm Assy	PARTIAL ENGINE ASSY(1CD–FTV)(From September, 2003) TIMING BELT(1CD–FTV)(From September, 2003) CAMSHAFT(1CD–FTV)(From September, 2003) CYLINDER HEAD GASKET(1CD–FTV)(From September, 2003) CRANKSHAFT SEAL(1CD–FTV)(From September, 2003)
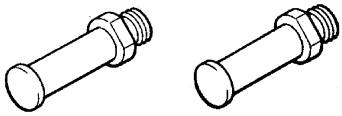	(09963–01000)	Pin 10	PARTIAL ENGINE ASSY(1CD–FTV)(From September, 2003) TIMING BELT(1CD–FTV)(From September, 2003) CAMSHAFT(1CD–FTV)(From September, 2003) CYLINDER HEAD GASKET(1CD–FTV)(From September, 2003) CRANKSHAFT SEAL(1CD–FTV)(From September, 2003)
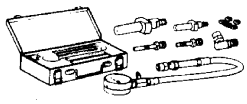	09992–00025	Cylinder Compression Check Gauge Set	ENGINE(1CD–FTV)(From September, 2003)
	(09992–00121)	No. 4 Attachment	ENGINE(1CD–FTV)(From September, 2003)
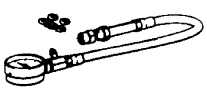	(09992–00211)	Gauge Assy	ENGINE(1CD–FTV)(From September, 2003)

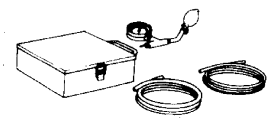	09992–00242	Turbocharger Pressure Gauge	VALVE CLEARANCE(1CD–FTV)(From September, 2003) CAMSHAFT(1CD–FTV)(From September, 2003) CYLINDER HEAD GASKET(1CD–FTV)(From September, 2003)
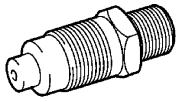	09992–00500	Compression Gauge Attachment	ENGINE(2AZ–FSE)

Recommended Tools

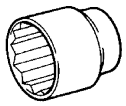	09011–12301	Socket Wrench 30 mm	PARTIAL ENGINE ASSY(1CD–FTV)(From September, 2003) ENGINE REAR OIL SEAL(1CD–FTV)(From September, 2003)
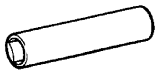	09017–38120	Deep Socket Wrench 12 mm	PARTIAL ENGINE ASSY(1CD–FTV)(From September, 2003)
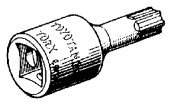	09042–00020	Torx Socket T40	CYLINDER HEAD GASKET(1CD–FTV)(From September, 2003)
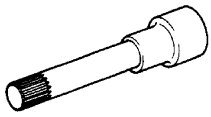	09043–50100	Bi–hexagon Wrench 10 mm	CYLINDER HEAD GASKET(2AZ–FSE)
	09090–04020	Engine Sling Device	PARTIAL ENGINE ASSY(1CD–FTV)(From September, 2003)
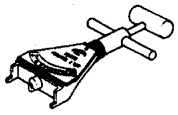	09216–00021	Belt Tension Gauge	ENGINE(1CD–FTV)(From September, 2003) PARTIAL ENGINE ASSY(1CD–FTV)(From September, 2003) TIMING BELT(1CD–FTV)(From September, 2003) CAMSHAFT(1CD–FTV)(From September, 2003) CYLINDER HEAD GASKET(1CD–FTV)(From September, 2003) CRANKSHAFT SEAL(1CD–FTV)(From September, 2003)
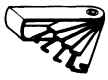	(09857–00031)	Spark Plug Gap Gauge	ENGINE(2AZ–FSE)

Equipment

Slide calipers	
Wooden block	
Chain Block	
Spark plug cleaner	
Angle gauge	
Universal engine lifter	
Hexagon wrench (6 mm)	
CO/HC meter	
Compression gauge	
Dial indicator	
Dial indicator or dial indicator with magnetic base	
Feeler gauge	
Micrometer	
Radiator cap tester	
Tachometer	
Torque wrench	
Vernier calipers	
Dial indicator with magnetic base	
Tire pressure gauge	
Alignment tester	
Toe–in gauge	

SSM

08826–00080	Seal Packing Black or equivalent (FIPG)	VALVE CLEARANCE(1CD–FTV)(From September, 2003) PARTIAL ENGINE ASSY(1CD–FTV)(From September, 2003) TIMING BELT(1CD–FTV)(From September, 2003) CAMSHAFT(1CD–FTV)(From September, 2003) CYLINDER HEAD GASKET(1CD–FTV)(From September, 2003) CRANKSHAFT SEAL(1CD–FTV)(From September, 2003) VALVE CLEARANCE(2AZ–FSE) CYLINDER HEAD GASKET(2AZ–FSE)
08833–00070	”Adhesive 1324,” THREE BOND 1324 or equivalent	PARTIAL ENGINE ASSY(1CD–FTV)(From September, 2003) ENGINE REAR OIL SEAL(1CD–FTV)(From September, 2003) PARTIAL ENGINE ASSY(2AZ–FSE) ENGINE REAR OIL SEAL(2AZ–FSE)

EXHAUST

PREPARATION

023FP-01

Equipment

Torque wrench	
Vernier calipers	
Wooden block	

COOLING

PREPARATION

023DG–02

SST

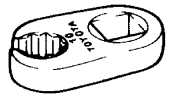	09023–12700	Union Nut Wrench 17mm	WATER PUMP ASSY(1CD–FTV)(From September, 2003)
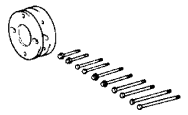	09213–54015	Crankshaft Pulley Holding Tool	WATER PUMP ASSY(1CD–FTV)(From September, 2003)
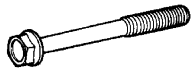	(09213–70020)	Bolt	WATER PUMP ASSY(1CD–FTV)(From September, 2003)
	09249–63010	Torque Wrench Adaptor	WATER PUMP ASSY(2AZ–FSE) THERMOSTAT(2AZ–FSE)
	09330–00021	Companion Flange Holding Tool	WATER PUMP ASSY(1CD–FTV)(From September, 2003)
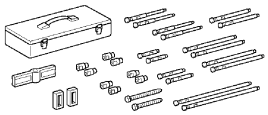	09950–50013	Puller C Set	WATER PUMP ASSY(1CD–FTV)(From September, 2003)
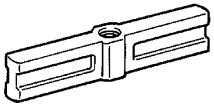	(09951–05010)	Hanger 150	WATER PUMP ASSY(1CD–FTV)(From September, 2003)
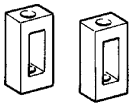	(09952–05010)	Slide Arm	WATER PUMP ASSY(1CD–FTV)(From September, 2003)
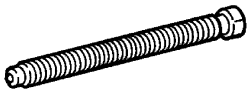	(09953–05020)	Center Bolt 150	WATER PUMP ASSY(1CD–FTV)(From September, 2003)
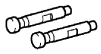	(09954–05021)	Claw No.2	WATER PUMP ASSY(1CD–FTV)(From September, 2003)
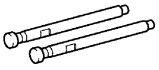	(09954–05031)	Claw No.3	WATER PUMP ASSY(1CD–FTV)(From September, 2003)
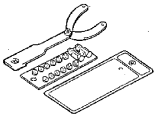	09960–10010	Variable Pin Wrench Set	WATER PUMP ASSY(1CD–FTV)(From September, 2003) WATER PUMP ASSY(2AZ–FSE)

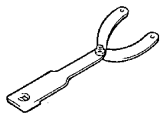	(09962–01000)	Variable Pin Wrench Arm Assy	WATER PUMP ASSY(1CD–FTV)(From September, 2003) WATER PUMP ASSY(2AZ–FSE)
	(09963–00700)	Pin 7	WATER PUMP ASSY(2AZ–FSE)
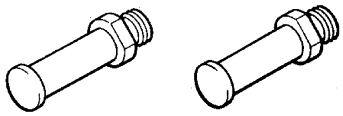	(09963–01000)	Pin 10	WATER PUMP ASSY(1CD–FTV)(From September, 2003)

Recommended Tools

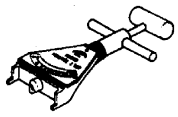	09216–00021	Belt Tension Gauge	WATER PUMP ASSY(1CD–FTV)(From September, 2003)

Equipment

Slide calipers	
Wooden block	
Heater	
Hexagon wrench (8 mm)	
Ohmmeter	
Radiator cap tester	
Thermometer	
Torque wrench	

SSM

	08826–00080	Seal Packing Black or equivalent (FIPG)	WATER PUMP ASSY(1CD–FTV)(From September, 2003) WATER PUMP ASSY(2AZ–FSE)

Coolant

Item	Capacity	Classification
Engine coolant (2AZ–FSE) Left–hand drive vehicles Right–hand drive vehicles	 6.3 liters (6.7 US qts, 5.5 Imp. qts) 6.4 liters (6.8 US qts, 5.6 Imp. qts)	”TOYOTA Super Long Life Coolant” or similar high quality ethylene glycol based non–silicate, non–amine, non–nitrite, and non–borate coolant with long–life hybrid organic acid technology
Engine coolant (1CD–FTV) w/ power heater w/o power heater	 7.6 liters (8.0 US qts, 6.7 Imp. qts) 7.4 liters (7.8 US qts, 6.5 Imp. qts)	”TOYOTA Super Long Life Coolant” or similar high quality ethylene glycol based non–silicate, non–amine, non–nitrite, and non–borate coolant with long–life hybrid organic acid technology

LUBRICATION

PREPARATION

023DH–02

SST

	09023–12900	Union Nut Wrench 19mm	OIL PUMP ASSY(2AZ–FSE)
	09032–00100	Oil Pan Seal Cutter	OIL PUMP ASSY(1CD–FTV)(From September, 2003) OIL PUMP ASSY(2AZ–FSE)
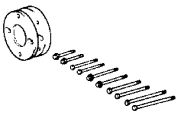	09213–54015	Crankshaft Pulley Holding Tool	OIL PUMP ASSY(1CD–FTV)(From September, 2003) OIL PUMP ASSY(2AZ–FSE)
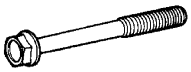	(09213–70020)	Bolt	OIL PUMP ASSY(1CD–FTV)(From September, 2003)
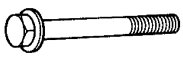	(91651–60855)	Bolt	OIL PUMP ASSY(2AZ–FSE)
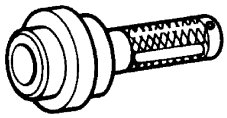	09223–46011	Crankshaft Front Oil Seal Replacer	OIL PUMP ASSY(1CD–FTV)(From September, 2003)
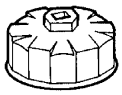	09228–06501	Oil Filter Wrench	OIL FILTER SUB–ASSY(2AZ–FSE) OIL COOLER ASSY(2AZ–FSE)
	09249–63010	Torque Wrench Adaptor	OIL PUMP ASSY(2AZ–FSE)
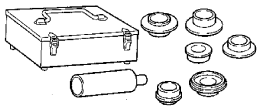	09316–60011	Transmission & Transfer Bearing Replacer	OIL PUMP ASSY(1CD–FTV)(From September, 2003)
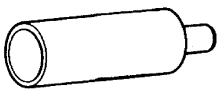	(09316–00011)	Replacer Pipe	OIL PUMP ASSY(1CD–FTV)(From September, 2003)
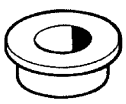	(09316–00021)	Replacer "A"	OIL PUMP ASSY(1CD–FTV)(From September, 2003)
	09330–00021	Companion Flange Holding Tool	OIL PUMP ASSY(1CD–FTV)(From September, 2003) OIL PUMP ASSY(2AZ–FSE)

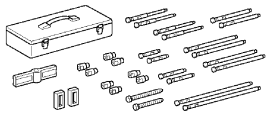	09950–50013	Puller C Set	OIL PUMP ASSY(1CD–FTV)(From September, 2003) OIL PUMP ASSY(2AZ–FSE)
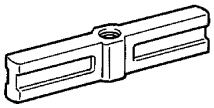	(09951–05010)	Hanger 150	OIL PUMP ASSY(1CD–FTV)(From September, 2003) OIL PUMP ASSY(2AZ–FSE)
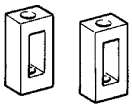	(09952–05010)	Slide Arm	OIL PUMP ASSY(1CD–FTV)(From September, 2003) OIL PUMP ASSY(2AZ–FSE)
	(09953–05010)	Center Bolt 100	OIL PUMP ASSY(1CD–FTV)(From September, 2003)
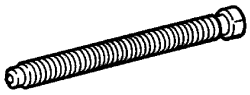	(09953–05020)	Center Bolt 150	OIL PUMP ASSY(1CD–FTV)(From September, 2003) OIL PUMP ASSY(2AZ–FSE)
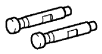	(09954–05021)	Claw No.2	OIL PUMP ASSY(1CD–FTV)(From September, 2003) OIL PUMP ASSY(2AZ–FSE)
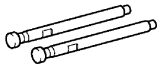	(09954–05031)	Claw No.3	OIL PUMP ASSY(1CD–FTV)(From September, 2003)
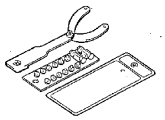	09960–10010	Variable Pin Wrench Set	OIL PUMP ASSY(1CD–FTV)(From September, 2003)
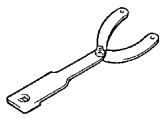	(09962–01000)	Variable Pin Wrench Arm Assy	OIL PUMP ASSY(1CD–FTV)(From September, 2003)
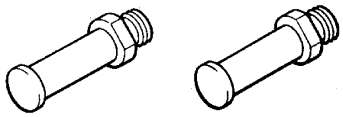	(09963–01000)	Pin 10	OIL PUMP ASSY(1CD–FTV)(From September, 2003)

Recommended Tools

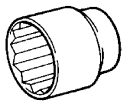	09011–12301	Socket Wrench 30 mm	OIL COOLER ASSY(2AZ–FSE)
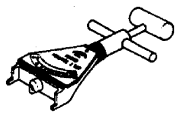	09216–00021	Belt Tension Gauge	OIL PUMP ASSY(1CD–FTV)(From September, 2003)

Equipment

Wooden block	
Radiator cap tester	

Torque wrench	
Vernier calipers	

SSM

08826–00080	Seal Packing Black or equivalent (FIPG)	OIL PUMP ASSY(1CD–FTV)(From September, 2003)

Lubricant

Item	Capacity	Classification
Oil grade (gasoline engine)	–	API grade "SL" Energy–Conserving or ILSAC multi grade engine oil.
Oil grade (diesel engine)	–	ACEA B1, API CF–4, CF or G–DLD–1 (You may also use API CE or CD.)
Drain and refill (2AZ–FSE) w/ oil filter change w/o oil filter change	 3.8 liters (4.0 US qts, 3.3 Imp. qts) 3.6 liters (3.8 US qts, 3.2 Imp. qts)	–
Drain and refill (1CD–FTV) w/ oil filter change w/o oil filter change	 5.9 liters (6.2 US qts, 5.2 Imp. qts) 5.3 liters (5.6 US qts, 4.7 Imp. qts)	–
Dry fill (2AZ–FSE)	4.5 liters (4.8 US qts, 4.0 Imp. qts)	–
Dry fill (1CD–FTV)	6.7 liters (7.1 US qts, 5.9 Imp. qts)	–

IGNITION

PREPARATION

023FC–01

SST

	09249–63010	Torque Wrench Adaptor	CRANKSHAFT POSITION SENSOR (2AZ–FSE)

Recommended Tools

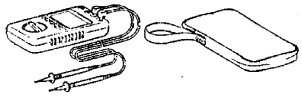	09082–00040	TOYOTA Electrical Tester	IGNITION SYSTEM(2AZ–FSE)
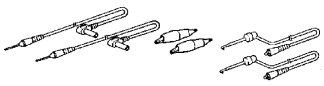	(09083–00150)	Test Lead Set	IGNITION SYSTEM(2AZ–FSE)
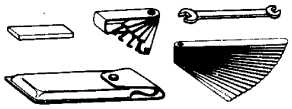	09200–00010	Engine Adjust Kit	IGNITION SYSTEM(2AZ–FSE)
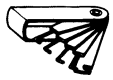	(09857–00031)	Spark Plug Gap Gauge	IGNITION SYSTEM(2AZ–FSE)

Equipment

Ohmmeter	
Spark plug cleaner	
Torque wrench	
Voltmeter	

STARTING & CHARGING

023FQ–01

PREPARATION

SST

	09249–63010	Torque Wrench Adaptor	GENERATOR ASSY(2AZ–FSE)

Recommended Tools

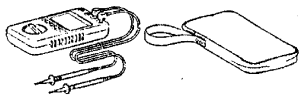	09082–00040	TOYOTA Electrical Tester	STARTING SYSTEM(2AZ–FSE)
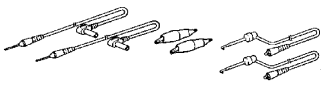	(09083–00150)	Test Lead Set	STARTING SYSTEM(2AZ–FSE)

Equipment

Ammeter (A)	
Ohmmeter	
Service wire harness	
Torque wrench	
Voltmeter	

FRONT SUSPENSION

PREPARATION

023NN–01

SST

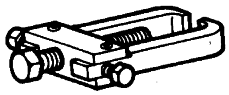	09628–62011	Boll Joint Puller	LOWER BALL JOINT ASSY FRONT LH STABILIZER BAR FRONT FRONT SUSPENSION ARM SUB–ASSY LOWER NO.1 LH(ATM)
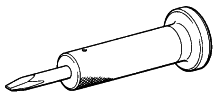	09930–00010	Drive Shaft Nut Chisel	LOWER BALL JOINT ASSY FRONT LH

Recomended Tools

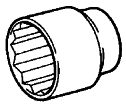	09011–12301	Socket Wrench 30 mm	LOWER BALL JOINT ASSY FRONT LH
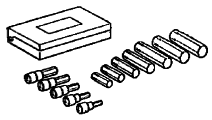	09040–00011	Hexagon Wrench Set	FRONT SHOCK ABSORBER WITH COIL SPRING STABILIZER BAR FRONT FRONT SUSPENSION ARM SUB–ASSY LOWER NO.1 LH(ATM) FRONT SUSPENSION ARM SUB–ASSY LOWER NO.1 LH(MTM)
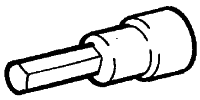	(09043–20060)	Socket Hexagon Wrench 6	FRONT SHOCK ABSORBER WITH COIL SPRING STABILIZER BAR FRONT FRONT SUSPENSION ARM SUB–ASSY LOWER NO.1 LH(ATM) FRONT SUSPENSION ARM SUB–ASSY LOWER NO.1 LH(MTM)

Equipment

Torque wrench	
Tire pressure gauge	
Alignment tester	
Toe–in gauge	
Angle gauge	
Camber–caster–kingpin gauge	
Engine Sling Device	

TIRE & WHEEL

PREPARATION

023NM–01

Equipment

Tire pressure gauge	
Dial indicator with magnetic base	
Wheel balancer	

DRIVE SHAFT / PROPELLER SHAFT

PREPARATION

023BA–01

SST

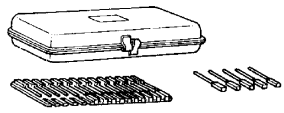	09240–00020	Wire Gauge Set	FRONT DRIVE SHAFT(2AZ–FSE)
	09520–01010	Drive Shaft Remover Attachment	FRONT DRIVE SHAFT(2AZ–FSE)
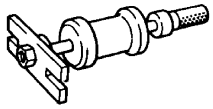	09520–24010	Differential Side Gear Shaft Puller	FRONT DRIVE SHAFT(2AZ–FSE)
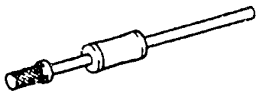	(09520–32040)	Shocker Set	FRONT DRIVE SHAFT(2AZ–FSE)
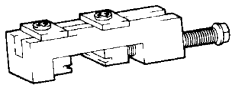	09521–24010	Rear Axle Shaft Puller	FRONT DRIVE SHAFT(2AZ–FSE)
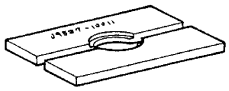	09527–10011	Rear Axle Shaft Bearing Remover	FRONT DRIVE SHAFT(2AZ–FSE)
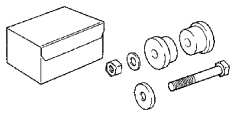	09608–16042	Front Hub Bearing Adjusting Tool	FRONT DRIVE SHAFT(2AZ–FSE)
	(09608–02021)	Bolt & Nut	FRONT DRIVE SHAFT(2AZ–FSE)
	(09608–02041)	Retainer	FRONT DRIVE SHAFT(2AZ–FSE)
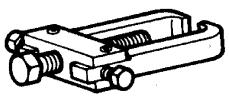	09628–62011	Boll Joint Puller	FRONT DRIVE SHAFT(2AZ–FSE)
	09710–04081	Base	FRONT DRIVE SHAFT(2AZ–FSE)
	09726–40010	Lower Control Shaft Bearing Replacer	FRONT DRIVE SHAFT(2AZ–FSE)

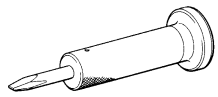	09930–00010	Drive Shaft Nut Chisel	FRONT DRIVE SHAFT(2AZ–FSE)
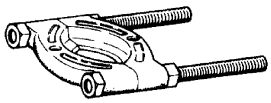	09950–00020	Bearing Remover	FRONT DRIVE SHAFT(2AZ–FSE)
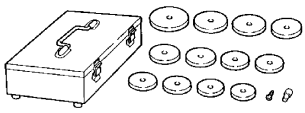	09950–60020	Replacer Set No.2	FRONT DRIVE SHAFT(2AZ–FSE)
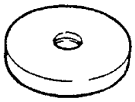	(09951–00710)	Replacer 71	FRONT DRIVE SHAFT(2AZ–FSE)
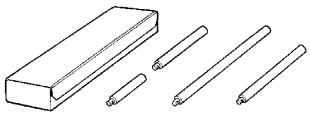	09950–70010	Handle Set	FRONT DRIVE SHAFT(2AZ–FSE)
	(09951–07100)	Handle 100	FRONT DRIVE SHAFT(2AZ–FSE)

Recomended Tools

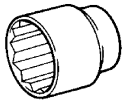	09011–12301	Socket Wrench 30 mm	FRONT DRIVE SHAFT(2AZ–FSE)
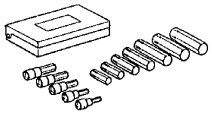	09040–00011	Hexagon Wrench Set	FRONT DRIVE SHAFT(2AZ–FSE)
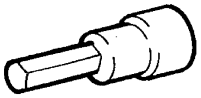	(09043–20060)	Socket Hexagon Wrench 6	FRONT DRIVE SHAFT(2AZ–FSE)
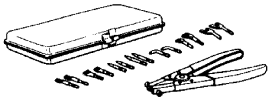	09904–00010	Expander Set	FRONT DRIVE SHAFT(2AZ–FSE)
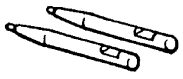	(09904–00050)	No. 4 Claw	FRONT DRIVE SHAFT(2AZ–FSE)
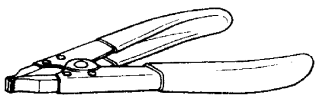	09905–00012	Snap Ring No.1 Expander	FRONT DRIVE SHAFT(2AZ–FSE)
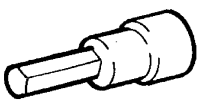	(09043–20060)	Socket Hexagon Wrench 6	FRONT DRIVE SHAFT(2AZ–FSE)

Equipment

Torque wrench	
Dial gauge with magnetic base	

Lubricant

Item	Capacity
Front drive shaft	
Outboard joint grease	152 to 162 g (5.4 to 5.7 oz.)
Inboard joint grease	170 to 190 g (6.0 to 6.7 oz.)

BRAKE

PREPARATION

022ZQ–01

SST

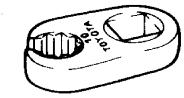	09023–00100	Union Nut Wrench 10 mm	BRAKE BOOSTER ASSY(RHD) (2AZ–FSE)

Equipment

Torque wrench	

AUTOMATIC TRANSMISSION / TRANS

023N8–01

PREPARATION

SST

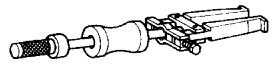	09308–00010	Oil Seal Puller	FRONT DIFFERENTIAL OIL SEAL(U151E)
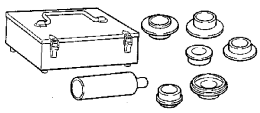	09316–60011	Transmission & Transfer Bearing Replacer	FRONT DIFFERENTIAL OIL SEAL(U151E)
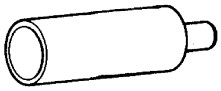	(09316–00011)	Replacer Pipe	FRONT DIFFERENTIAL OIL SEAL(U151E)
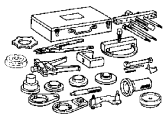	09350–32014	TOYOTA Automatic Transmission Tool Set	AUTOMATIC TRANSAXLE ASSY(U151E)
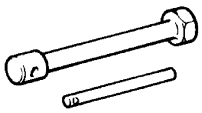	(09351–32010)	One–way Clutch Test Tool	AUTOMATIC TRANSAXLE ASSY(U151E)
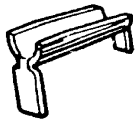	(09351–32020)	Stator Stopper	AUTOMATIC TRANSAXLE ASSY(U151E)
	09520–01010	Drive Shaft Remover Attachment	AUTOMATIC TRANSAXLE ASSY(U151E)
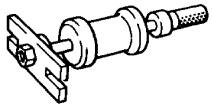	09520–24010	Differential Side Gear Shaft Puller	AUTOMATIC TRANSAXLE ASSY(U151E)
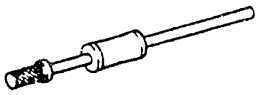	(09520–32040)	Shocker Set	AUTOMATIC TRANSAXLE ASSY(U151E)
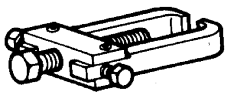	09628–62011	Boll Joint Puller	AUTOMATIC TRANSAXLE ASSY(U151E)
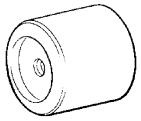	09649–17010	Steering Knuckle Tool	FRONT DIFFERENTIAL OIL SEAL(U151E)
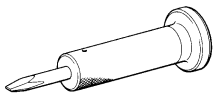	09930–00010	Drive Shaft Nut Chisel	AUTOMATIC TRANSAXLE ASSY(U151E)

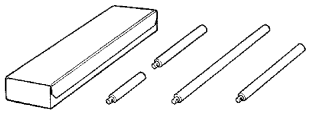	09950–70010	Handle Set	FRONT DIFFERENTIAL OIL SEAL(U151E)
	(09951–07150)	Handle 150	FRONT DIFFERENTIAL OIL SEAL(U151E)

Recomended Tools

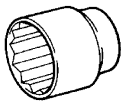	09011–12301	Socket Wrench 30 mm	AUTOMATIC TRANSAXLE ASSY(U151E)
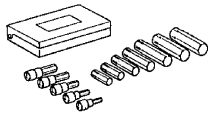	09040–00011	Hexagon Wrench Set	TRANSMISSION OIL COOLER(U151E) AUTOMATIC TRANSAXLE ASSY(U151E) TRANSMISSION WIRE(U151E) TRANSMISSION VALVE BODY ASSY(U151E) FRONT DIFFERENTIAL OIL SEAL(U151E)
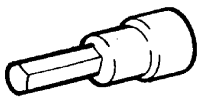	(09043–20100)	Socket Hexagon Wrench 10	TRANSMISSION OIL COOLER(U151E) AUTOMATIC TRANSAXLE ASSY(U151E) TRANSMISSION WIRE(U151E) TRANSMISSION VALVE BODY ASSY(U151E) FRONT DIFFERENTIAL OIL SEAL(U151E)
	09090–04020	Engine Sling Device	AUTOMATIC TRANSAXLE ASSY(U151E)

SSM

	08833–00080	Adhesive 1344 THREE BOND 1344 LOCTITE 242 or equivalent	TRANSMISSION WIRE(U151E) TRANSMISSION VALVE BODY ASSY(U151E)

Equipment

Straight edge	
Torque wrench	
Vernier calipers	
Dial indicator with magnetic base	
Slide calipers	

Lubricant

U151E Automatic transaxle fluid Dry fill Drain and refill	 8.8 liter (9.3 USqts, 7.7 Imp.qts) 3.5 liter (3.7 USqts, 3.1 Imp.qts)	ATF type T–IV

HEATER & AIR CONDITIONER

PREPARATION

023N3–01

SST

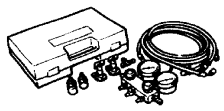	07110–58060	Air Conditioner Service Tool Set	W/PULLEY COMPRESSOR ASSY(2AZ–FSE)
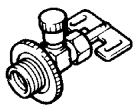	(07117–58060)	Refrigerant Drain Service Valve	W/PULLEY COMPRESSOR ASSY(2AZ–FSE)
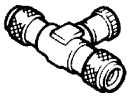	(07117–58070)	T–Joint	W/PULLEY COMPRESSOR ASSY(2AZ–FSE)
	(07117–58080)	Quick Disconnect Adapter	W/PULLEY COMPRESSOR ASSY(2AZ–FSE)
	(07117–58090)	Quick Disconnect Adapter	W/PULLEY COMPRESSOR ASSY(2AZ–FSE)
	(07117–78050)	Refrigerant Charging Gauge	W/PULLEY COMPRESSOR ASSY(2AZ–FSE)
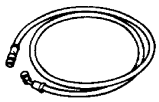	(07117–88060)	Refrigerant Charging Hose	W/PULLEY COMPRESSOR ASSY(2AZ–FSE)
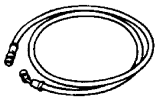	(07117–88070)	Refrigerant Charging Hose	W/PULLEY COMPRESSOR ASSY(2AZ–FSE)
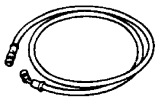	(07117–88080)	Refrigerant Charging Hose	W/PULLEY COMPRESSOR ASSY(2AZ–FSE)
	09249–63010	Torque Wrench Adaptor	W/PULLEY COMPRESSOR ASSY(2AZ–FSE)

Recomended Tools

	95416–00140	Gas Leak Detector (Halogen Leak Detector) (DENSO Part No.)	W/PULLEY COMPRESSOR ASSY(2AZ–FSE)

Equipment

Voltmeter	
Anmeter	
Ohmmeter	
Vinyl tape	
Gas leak detector	
Torque wrench	

Lubricant

Item	Capacity	Classification
Compressor oil	–	ND–OIL 8 or equivalent

STANDARD BOLT

HOW TO DETERMINE BOLT STRENGTH

030LK–08

Bolt Type				Class
Hexagon Head Bolt		Stud Bolt	Weld Bolt	
Normal Recess Bolt	Deep Recess Bolt			
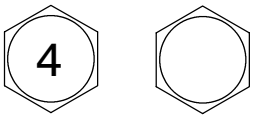 No Mark	 No Mark	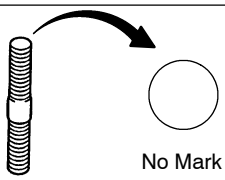 No Mark	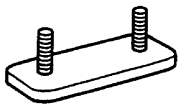	4T
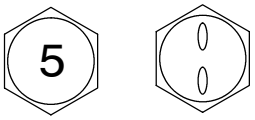	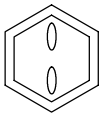			5T
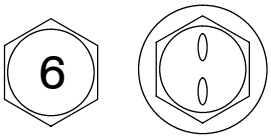 w/ Washer	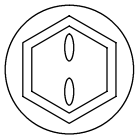 w/ Washer			6T
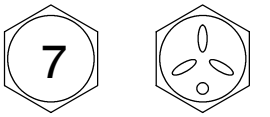	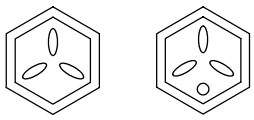			7T
				8T
				9T
	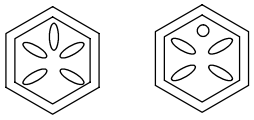			10T
	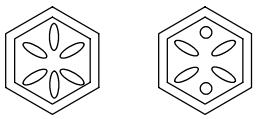			11T

B06431

030LL–08

SPECIFIED TORQUE FOR STANDARD BOLTS

Class	Diameter mm	Pitch mm	Specified torque					
			Hexagon head bolt			Hexagon flange bolt		
			N·m	kgf·cm	ft·lbf	N·m	kgf·cm	ft·lbf
4T	6	1	5	55	48 in.·lbf	6	60	52 in.·lbf
	8	1.25	12.5	130	9	14	145	10
	10	1.25	26	260	19	29	290	21
	12	1.25	47	480	35	53	540	39
	14	1.5	74	760	55	84	850	61
	16	1.5	115	1,150	83	–	–	–
5T	6	1	6.5	65	56 in.·lbf	7.5	75	65 in.·lbf
	8	1.25	15.5	160	12	17.5	175	13
	10	1.25	32	330	24	36	360	26
	12	1.25	59	600	43	65	670	48
	14	1.5	91	930	67	100	1,050	76
	16	1.5	140	1,400	101	–	–	–
6T	6	1	8	80	69 in.·lbf	9	90	78 in.·lbf
	8	1.25	19	195	14	21	210	15
	10	1.25	39	400	29	44	440	32
	12	1.25	71	730	53	80	810	59
	14	1.5	110	1,100	80	125	1,250	90
	16	1.5	170	1,750	127	–	–	–
7T	6	1	10.5	110	8	12	120	9
	8	1.25	25	260	19	28	290	21
	10	1.25	52	530	38	58	590	43
	12	1.25	95	970	70	105	1,050	76
	14	1.5	145	1,500	108	165	1,700	123
	16	1.5	230	2,300	166	–	–	–
8T	8	1.25	29	300	22	33	330	24
	10	1.25	61	620	45	68	690	50
	12	1.25	110	1,100	80	120	1,250	90
9T	8	1.25	34	340	25	37	380	27
	10	1.25	70	710	51	78	790	57
	12	1.25	125	1,300	94	140	1,450	105
10T	8	1.25	38	390	28	42	430	31
	10	1.25	78	800	58	88	890	64
	12	1.25	140	1,450	105	155	1,600	116
11T	8	1.25	42	430	31	47	480	35
	10	1.25	87	890	64	97	990	72
	12	1.25	155	1,600	116	175	1,800	130

030LM–08

HOW TO DETERMINE NUT STRENGTH

Nut Type			Class
Present Standard Hexagon Nut	Old Standard Hexagon Nut		
	Cold Forging Nut	Cutting Processed Nut	
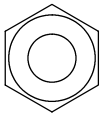 No Mark			4N
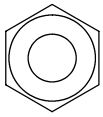 No Mark (w/ Washer)	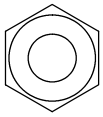 No Mark (w/ Washer)	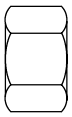 No Mark	5N (4T)
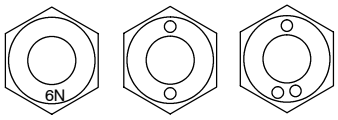 6N			6N
	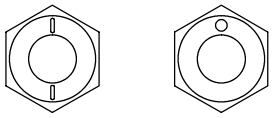	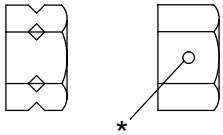 *	7N (5T)
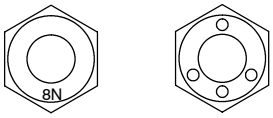 8N			8N
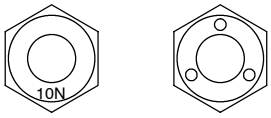 10N	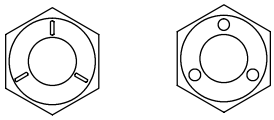	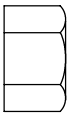 No Mark	10N (7T)
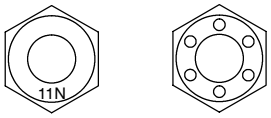 11N			11N
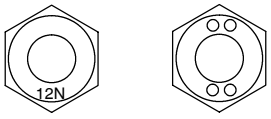 12N			12N

*: Nut with 1 or more marks on one side surface of the nut.

B06432

HINT:

Use the nut with the same number of the nut strength classification or the greater than the bolt strength classification number when tightening parts with a bolt and nut.

Example: Bolt = 4T

Nut = 4N or more

ENGINE CONTROL SYSTEM

031TB–01

SERVICE DATA

2AZ–FSE:

Camshaft timing oil control valve assy		
Resistance	1 (–) – 2 (+)	6.9 to 7.9 Ω at 20°C (68°F)
Mass air flow meter		
Resistance	4 (THA) – 5 (E2)	13.6 to 18.4 kΩ at –20°C (–4°F) 2.21 to 2.69 kΩ at 20°C (68°F) 0.493 to 0.667 kΩ at 60°C (140°F)
Engine coolant temperature sensor		
Resistance	1 (E2) – 2 (THW)	2.32 to 2.59 kΩ at 20°C (68°F) 0.310 to 0.326 kΩ at 80°C (176°F)
Throttle body assy		
Resistance	1 (M–) – 2 (M+)	0.3 to 100 Ω at 20°C (68°F)
	3 (E2) – 5 (VC)	1.2 to 3.2 kΩ at 20°C (68°F)
Knock sensor		
Resistance	1 (Ground) – 2 (Output)	120 to 280 kΩ at 20°C (68°F)
Accelerator pedal rod assy		
Resistance	3 (EP1) – 6 (VCP1)	2.25 to 4.75 kΩ
	1 (EP2) – 4 (VCP2)	2.25 to 4.75 kΩ
Voltage	3 (EP1) – 5 (VPA1)	0.4 to 4.6 V
	1 (EP2) – 2 (VPA2)	0.9 to 4.7 V
Main relay		
Resistance	3 – 5	10 kΩ or higher
	3 – 5 (Apply battery voltage to terminal 1 and 2)	Below 1 Ω
Circuit opening relay		
Resistance	3 – 5	10 kΩ or higher
	3 – 5 (Apply battery voltage to terminal 1 and 2)	Below 1 Ω

1CD–FTV:

Mass air flow meter		
Resistance	2 (THA) – 1 (E2)	
	at –20°C (–4°F)	12.5 to 16.9 kΩ
	at 20°C (68°F)	2.19 to 2.67 kΩ
	at 60°C (140°F)	0.50 to 0.68 kΩ
Intake shutter assy		
Resistance	1 (VC) – 2 (E2)	4.0 to 8.0 kΩ
Accelerator pedal assy		
Resistance	VPA1 – EP1	5.0 kΩ or less
	VPA2 – EP2	5.0 kΩ or less
	VCP1 – EP1	1.5 to 6.0 kΩ
	VCP2 – EP2	1.5 to 6.0 kΩ
Diesel turbo inlet air temperature sensor		
Resistance	at 20°C (68°F)	2.21 to 2.65 kΩ
Crankshaft position sensor		
Resistance	at cold	1630 to 2740 Ω
	at hot	2065 to 3225 Ω
Camshaft position sensor		
Resistance	at cold	1630 to 2740 Ω
	at hot	2065 to 3225 Ω
Diesel engine engine coolant temperature sensor		
Resistance	at 20°C (68°F)	2.32 to 2.59 kΩ
	at 80°C (176°F)	0.310 to 0.326 kΩ
Fuel temperature sensor		
Resistance	THF – E2	
	at 20°C (68°F)	2.21 to 2.69 kΩ
	at 80°C (176°F)	0.287 to 0.349 kΩ

EDU relay	
Specified condition 3 – 5	10 kΩ or higher
3 – 5 (When battery voltage is applied to terminals 1 and 2)	Below 1 Ω
EFI main relay	
Specified condition 3 – 5	10 kΩ or higher
3 – 5 (When battery voltage is applied to terminals 1 and 2)	Below 1 Ω

031TC–01

TORQUE SPECIFICATION

2AZ–FSE:

Part Tightened	N·m	kgf·cm	ft·lbf
Throttle body assy x Intake manifold	9.0	90	80 in.·lbf
Throttle body bracket x Cylinder head sub–assy	20	210	15
Throttle body bracket x Throttle body assy	20	210	15
Ground terminal x Throttle body bracket	8.4	86	74 in.·lbf
Wiring harness protector x Throttle body bracket	8.4	86	74 in.·lbf
Air cleaner hose No. 1 x Throttle body assy	1.5	15	13 in.·lbf
Engine cover sub–assy x Cylinder head cover sub–assy	9.0	92	80 in.·lbf
Engine wire No. 3 x Battery	5.4	55	48 in.·lbf
Knock sensor x Cylinder block sub–assy	20	204	15
Accelerator pedal assy x Body	5.4	55	48 in.·lbf

1CD–FTV:

Part Tightened	N·m	kgf·cm	ft·lbf
Intake shutter assy x Intake air connector	21	209	15
Engine cover sub–assy No. 1 x Cylinder head cover sub–assy	8.0	82	71 in.·lbf
Engine cover sub–assy No. 1 x Intake manifold	8.0	82	71 in.·lbf
Air tube No. 2 x Transmission	25	255	18
Air tube No. 1 x Air tube No. 2	25	255	18
ECM x Body	5.5	56	49 in.·lbf
Air hose No. 4 x Intake shutter assy	6.0	61	53 in.·lbf
Battery clamp x Body	5.0	51	44 in.·lbf

FUEL

SERVICE DATA

031E0–02

2AZ–FSE:

Fuel pressure		
	at idle	196 to 588 kPa (2 to 6 kgf/cm^2, 28 to 85 psi)
	Engine stopped	147 kPa (1.5 kgf/cm^2, 21 psi) or more
Fuel high pressure	at idle	9.5 to 10.5 MPa (97 to 107 kgf/cm^2, 1,380 to 1,520 psi)
Fuel injector assy		
Resistance	1 – 2	2.55 to 2.85 Ω at 20°C (68°F)
Fuel pump assy		
Resistance	1 – 2	1.19 to 1.39 Ω at 20°C (68°F)
Fuel pump assy		
Resistance	4 – 5	0.2 to 3.0 Ω at 20°C (68°F)
Compression spring (Exhaust pipe assy center x Exhaust pipe assy tail)		
Free length	Minimum	38.5 mm (1.516 in.)

1CD–FTV:

Injection or supply pump assy		
Resistance	at 20°C (68°F)	1.6 to 2.6 Ω
Injector assy		
Resistance	at 20°C (68°F)	0.45 to 1.45 Ω
Common rail assy		
Resistance	PR – E2	16.4 kΩ or less
	PR2 – E2S	16.4 kΩ or less
	VC – PR	3 kΩ or less
	VCS – PR2	3 kΩ or less
Pressure discharge valve		
Resistance	at 20°C (68°F)	0.45 to 1.45 Ω
Fuel heater assy		
Resistance	at 20°C (68°F)	0.5 to 20 Ω
Level warning switch		
Specified condition	When raising the float	Below 1 Ω
	When letting the float down	10 kΩ or higher
Fuel temperature sensor		
Resistance	at 20°C (68°F)	2.21 to 2.69 Ω
	at 80°C (176°F)	0.287 to 0.349 Ω

031E1–03

TORQUE SPECIFICATION

2AZ–FSE:

Part Tightened	N·m	kgf·cm	ft·lbf
Nozzle holder clamp x Cylinder head sub–assy	13	127	9
Fuel delivery pipe sub–assy x Cylinder head sub–assy	19	194	14
Surge tank stay No. 1 x Cylinder block sub–assy	21	210	15
Engine wire x Surge tank stay No. 1	9.8	100	7
Stud bolt x Cylinder head sub–assy	9.5	97	84 in.·lbf
Intake manifold x Cylinder head sub–assy	30	306	22
Intake manifold x Cylinder block sub–assy	30	306	22
Vacuum sensor assy x Body (LHD Steering position type)	5.5	56	49 in.·lbf
Engine wire No. 3 (Battery negative terminal) x Battery	5.4	55	48 in.·lbf
Fuel pump assy x Cylinder head cover sub–assy	25	255	18
Fuel pipe sub–assy No. 1 x Fuel delivery pipe sub–assy	9.0	92	80 in.·lbf
Fuel pipe sub–assy No. 1 x Fuel pump assy	30	306	22
Fuel tube sub–assy x Fuel pump assy	33	331	24
Fuel tank band sub–assy No. 1 x Body	40	400	29
Fuel tank band sub–assy No. 1 LH x Body	40	400	29
Parking brake cable assy No. 3 x Body	5.0	51	44 in.·lbf
Parking brake cable assy No. 2 x Body	5.0	51	44 in.·lbf
Fuel tank protector No. 1 x Body	5.4	55	48 in.·lbf
Fuel tank protector No. 1 x Fuel tank band sub–assy No. 1	5.4	55	48 in.·lbf
Rear floor heat insulator front x Body	5.5	56	49 in.·lbf
Rear floor heat insulator front x Fuel tank band sub–assy	5.5	55	49 in.·lbf
Exhaust pipe assy center x Exhaust pipe assy front	43	440	32
Exhaust pipe assy center x Exhaust pipe assy tail	43	440	32

1CD–FTV:

Part Tightened		N·m	kgf·cm	ft·lbf
Nozzle holder clamp x Cylinder head sub–assy		27	270	20
Nozzle leakage pipe assy x Injector assy	Hollow screw	16	163	12
	Union bolt	20	204	15
Nozzle leakage pipe No. 2 x Cylinder head sub–assy		8.8	90	78 in.·lbf
Injection pipe sub–assy No. 1 – No. 4 x Injector assy				
	Used pipe with SST	36	372	27
	Used pipe without SST	40	408	30
	New pipe with SST	31	316	23
	New pipe without SST	34	347	25
Injection pipe sub–assy No. 1 – No. 4 x Common rail assy				
	with SST	31	316	23
	without SST	34	347	25
Injection pipe No. 3 x Exhaust fuel addition injector				
	with SST	22	223	16
	without SST	24	240	17
Fuel inlet pipe sub–assy x Common rail assy				
	with SST	31	316	23
	without SST	34	347	25
Fuel inlet pipe sub–assy x Injection pump assy				
	with SST	31	316	23
	without SST	34	347	25
Air cleaner case x Body		7.0	71	62 in.·lbf
Engine cover sub–assy No. 1 x Cylinder head cover sub–assy		8.0	82	71 in.·lbf
Engine cover sub–assy No. 1 x Intake manifold		8.0	82	71 in.·lbf
Vacuum reservoir sub–assy x Cowl top panel outer		8.3	85	73 in.·lbf
Injection or supply pump assy x Water pump assy		21	209	15

Part Tightened	N·m	kgf·cm	ft·lbf
Injection pump drive pulley x Injection pump assy	64	653	47
Intake manifold insulator No. 1 x Intake manifold	5.0	51	44 in.·lbf
Common rail assy x Cylinder head sub–assy	43	438	32
Front wheel	103	1,050	76
Injector driver x Body	5.5	56	49 in.·lbf
Cylinder head cover sub–assy x Cylinder head sub–assy	13	135	9.8
Fuel pipe No. 3 x Cylinder head cover sub–assy	5.0	51	44 in.·lbf
Fuel pipe No. 3 x Injection or supply pump	27	275	20
Air tube No. 1 x Turbocharger	6.0	61	53 in.·lbf
Air tube No. 1 x Air tube No. 2	25	255	18
Injection pump stay No. 1 x Cylinder block	21	209	15

EMISSION CONTROL

031FP–02

SERVICE DATA

2AZ–FSE:

Vacuum switching valve assy No. 1 Resistance	1 – 2	26 to 30 Ω at 20°C (68°F)
Heated oxygen sensor Resistance	1 (HT) – 2 (+B) 1 (HT) – 4 (E1)	11 to 16 Ω at 20°C (68°F) 10 kΩ or higher

1CD–FTV:

Exhaust fuel addition injector assy Resistance	at 20°C (68°F)	11.6 to 12.4 Ω
Exhaust gas temperature sensor Resistance	at 20°C (68°F)	242kΩ
Air fuel ratio sensor Resistance	1 (HT) – 2 (+B) 1 (HT) – 4 (AF–)	0.8 to 1.4 Ω at 20°C (68°F) 10 kΩ or higher
EGR valve position sensor Resistance	at 20°C (68°F)	4.0 to 6.0 kΩ
EGR valve assy Resistance	at 20°C (68°F)	6.5 to 7.5 Ω

INTAKE

031FQ–02

SERVICE DATA

2AZ–FSE:

Vacuum switching valve assy No. 1		
Resistance	1 – 2	33 to 39 Ω at 20°C (68°F)
	1 – Body	10 kΩ or higher
	2 – Body	10 kΩ or higher

1CD–FTV:

Turbocharging pressure		
Standard pressure		15 to 45 kPa (0.15 to 0.46 kgf/cm^2, 2.2 to 6.5 psi)
Turbo pressure sensor		
Voltage	3 (VC) – 1 (E2)	4.5 to 5.5 V
Voltage drop	apply vacuum 13.3 kPa (100 mmHg, 3.94 in.Hg)	0.1 to 0.3 V
	apply vacuum 26.7 kPa (200 mmHg, 7.87 in.Hg)	0.3 to 0.5 V
	apply vacuum 40.0 kPa (300 mmHg, 11.81 in.Hg)	0.5 to 0.7 V
	apply vacuum 57.3 kPa (400 mmHg, 15.75 in.Hg)	0.7 to 0.9 V
	apply vacuum 66.7 kPa (500 mmHg, 19.96 in.Hg)	0.9 to 1.0 V
Voltage up	applied vacuum 19.6 kPa (0.20 kgf/cm2, 2.84 psi)	0.1 to 0.4 V
	applied vacuum 39.2 kPa (0.40 kgf/cm2, 5.69psi)	0.4 to 0.7 V
	applied vacuum 58.8 kPa (0.60 kgf/cm2, 8.53psi)	0.7 to 1.0 V
	applied vacuum 78.5 kPa (0.80 kgf/cm2, 11.4psi)	1.0 to 1.3 V
	applied vacuum 98.0 kPa (1.00 kgf/cm2, 14.2psi)	1.3 to 1.6 V
Vacuum regulating valve assy		
Resistance	at 20°C (68°F)	10 to 14Ω

031FR–03

TORQUE SPECIFICATION

1CD–FTV:

Part Tightened		N·m	kgf·cm	ft·lbf
Turbo water pipe sub–assy No.1 x Turbocharger sub–assy		13	135	9.8
Turbocharger sub–assy x Exhaust manifold		60	612	44
Turbo oil outlet pipe x Turbocharger sub–assy		13	135	9.8
Manifold converter sub–assy x Turbocharger sub–assy	1st	8.0	82	71 in.·lbf
	2nd	25	255	18
Manifold stay x Manifold converter sub–assy	1st	8.0	82	71 in.·lbf
	2nd	61	622	45
Manifold stay x Cylinder block sub–assy	1st	8.0	82	71 in.·lbf
	2nd	61	622	45
Turbohcharger stay x Turbocharger sub–assy	1st	8.0	82	71 in.·lbf
	2nd	56	571	41
Turbocharger stay x Cylinder head sub–assy	1st	8.0	82	71 in.·lbf
	2nd	56	571	41
Manifold stay No. 2 x Manifold converter sub–assy	1st	8.0	82	71 in.·lbf
	2nd	56	571	41
Manifold stay No. 2 x Cylinder head sub–assy	1st	8.0	82	71 in.·lbf
	2nd	56	571	41
Exhaust manifold heat insulator No. 2 x Turbocharger sub–assy		12	122	8.9
Turbo insulator No. 1 x Manifold converter sub–assy		20	204	15
Turbo insulator No. 1 x Turbocharger sub–assy		20	204	15
Turbo insulator No. 2 x Manifold converter sub–assy		20	204	15
Exhaust pipe assy x Heater bracket sub–assy	w/ Cold area	7.5	76	66 in.·lbf
Exhaust pipe assy x Body	w/ Cold area	7.5	76	66 in.·lbf
Heater bracket x Body	w/ Cold area	7.5	76	66 in.·lbf
Heater pump assy x Heater bracket	w/ Cold area	7.5	76	66 in.·lbf
Air tube No. 1 x Air tube No. 2		25	255	18
Air tube No. 1 x Intake air connector		25	255	18
Air tube No. 1 x Cylinder head cover		25	255	18
Air tube No. 1 x Engine mounting bracket FR		25	255	18
Air cleaner case x Body		7.0	71	62 in.·lbf
Engine cover No. 1 x Cylinder head cover sub–assy		8.0	82	71 in.·lbf
Engine cover No. 1 x Intake manifold		8.0	82	71 in.·lbf
Vacuum reservoir sub–assy x Cowl top panel outer		8.3	85	73 in.·lbf
EGR pipe insulator x EGR		12	122	8.9

ENGINE MECHANICAL

031H1–02

SERVICE DATA

2AZ–FSE:

Battery specific gravity	at 20°C (68°F)	1.25 to 1.29
Ignition timing	w/ Terminals TC and CG of DLC3 connected	8 to 12° BTDC
	w/ Terminals TC and CG of DLC3 disconnected	5 to 23° BTDC
Idle speed		625 to 725 rpm
Compression		
	Compression pressure	1.3 MPa (13.3 kgf/cm^2, 189 psi)
	Minimum pressure	1.0 MPa (10.2 kgf/cm^2, 145 psi)
	Difference between each cylinder	0.1 MPa (1.0 kgf/cm^2, 14 psi)
Cylinder head set bolt		
Bolt length	Standard	161.3 to 162.3 mm (6.350 to 6.390 in.)
	Maximum	164.2 mm (6.465 in.)
Valve clearance		
Intake	(Cold)	0.19 to 0.29 mm (0.0075 to 0.0114 in.)
Exhaust		0.30 to 0.40 mm (0.0118 to 0.0157 in.)

1CD–FTV:

New drive belt deflection	Pressing force: 98 N (10 kgf, 22 lbf)	
	For vane pump V belt (A/C equipped)	8.0 to 10.5 mm (0.31 to 0.41 in.)
	For vane pump V belt (A/C not equipped)	10 to 12 mm (0.39 to 0.47 in.)
Used drive belt deflection	Pressing force: 98 N (10 kgf, 22 lbf)	
	For vane pump V belt (A/C equipped)	10.5 to 12.5 mm (0.41 to 0.49 in.)
	For vane pump V belt (A/C not equipped)	14 to 17 mm (0.55 to 0.67 in.)
New drive belt tension		
	For vane pump V belt (A/C equipped)	647 to 843 N (66 to 86 kgf, 145 to 189 lbf)
	For vane pump V belt (A/C not equipped)	686 to 784 N (70 to 80 kgf, 154 to 176 lbf)
Used drive belt tension		
	For vane pump V belt (A/C equipped)	441 to 637 N (45 to 65 kgf, 99 to 143 lbf)
	For vane pump V belt (A/C not equipped)	294 to 441 N (30 to 45 kgf, 66 to 99 lbf)
Idle speed		750 to 850 rpm.
Maximum speed		5,100 to 5,250 rpm.
Compression pressure		
	at 250 rpm.	2,628 kPa (26.8 kgf/cm^2, 381 psi) or more
	Minimum	2,157 kPa (22.0 kgf/cm^2, 312 psi) or more
Difference between each cylinder		490 kPa (5.0 kgf/cm2, 71 psi) or less
Cylinder head set bolt		
Outside diameter	Standard	10.40 to 11.00 mm (0.4094 to 0.4331 in.)
Valve clearance		
Intake	(cold)	0.20 to 0.30 mm (0.008 to 0.012 in.)
Exhaust		0.35 to 0.45 mm (0.014 to 0.018 in.)
Adjusting shim thickness	Mark 2.500	2.500 mm (0.0984 in.)
	Mark 2.550	2.550 mm (0.1004 in.)
	Mark 2.600	2.600 mm (0.1024 in.)
	Mark 2.650	2.650 mm (0.1043 in.)
	Mark 2.700	2.700 mm (0.1063 in.)
	Mark 2.750	2.750 mm (0.1083 in.)
	Mark 2.800	2.800 mm (0.1102 in.)
	Mark 2.850	2.850 mm (0.1122 in.)
	Mark 2.900	2.900 mm (0.1142 in.)
	Mark 2.950	2.950 mm (0.1161 in.)
	Mark 3.000	3.000 mm (0.1181 in.)
	Mark 3.050	3.050 mm (0.1201 in.)
	Mark 3.100	3.100 mm (0.1220 in.)
	Mark 3.150	3.150 mm (0.1240 in.)
	Mark 3.200	3.200 mm (0.1260 in.)
	Mark 3.250	3.250 mm (0.1280 in.)
	Mark 3.300	3.300 mm (0.1299 in.)

031H2–02

TORQUE SPECIFICATION

2AZ–FSE:

Part Tightened		N·m	kgf·cm	ft·lbf
Front wheel RH		103	1,050	76
Drain plug (M/T)		49	500	36
Engine hanger No.1 x Cylinder head		38	387	28
Engine hanger No.2 x Cylinder head		38	387	28
Engine coolant temperature sensor x Cylinder head		20	208	15
Knock sensor x Cylinder block		20	208	15
Engine oil pressure switch assy x Cylinder head		15	153	11
Water by–pass pipe No.1 x Cylinder block		9.0	92	80 in.·lbf
Water by–pass pipe No. 3 x Cylinder block		9.0	92	80 in.·lbf
Oil cooler pipe x Cylinder block		9.0	92	80 in.·lbf
Drive shaft bearing bracket x Cylinder block		54	551	40
Oil level gauge guide x Cylinder block		9.0	92	80 in.·lbf
V–ribbed belt tensioner assy x Timing chain cover		60	607	44
Ignition coil assy x Cylinder head		9.0	92	80 in.·lbf
Water inlet x Cylinder block		9.0	92	80 in.·lbf
Exhaust manifold converter x Cylinder head		37	378	27
Exhaust manifold stay x Exhaust manifold converter		44	449	32
Exhaust manifold heat insulator No. 1 x Exhaust manifold converter		12	122	9
Surge tank stay No. 1 x Intake manifold		21	210	15
Intake manifold x Cylinder head		30	306	22
Throttle Body bracket x Throttle body		21	210	15
Drive plate & ring gear x Crankshaft		98	1,000	72
Transverse engine engine mounting bracket front x Transverse engine engine mounting insulator front		87	887	64
Transverse engine engine mounting bracket rear x Transverse engine engine mounting insulator rear		87	887	64
Front suspension cross member sub–assy front x Body	Bolt	45	459	33
	Nut	133	1,356	98
Front suspension brace RH x Frame	Bolt A	133	1,356	98
	Bolt B	80	816	59
Front suspension brace LH x Frame	Bolt A	133	1,356	98
	Bolt B	80	816	59
Transverse engine engine mounting insulator LH x Engine mounting bracket LH		87	887	64
Transverse engine engine mounting insulator RH x Engine mounting bracket RH		52	530	38
Engine mounting bracket x No. 2 RH x Transverse engine engine mounting insulator	A	52	530	38
	B	113	1,152	83
Vane pump assy x Timing chain cover		37	370	27
Front suspension arm sub–assy lower No. 1 x Lower ball joint		127	1,296	94
Front stabilizer link assy x Front suspension		74	755	55
Floor panel brace front x Floor		30	306	22
Engine service cover bracket RH x Body	RHD steering position type	9.0	92	80 in.·lbf
Cooler bracket x Body	LHD steering position type	9.0	92	80 in.·lbf
Oil reservoir bracket No. 1 x Body		8.0	82	71 in.·lbf
Return tube sub–assy x Frame		8.0	82	71 in.·lbf
Radiator reserve tank Sub–assy x Body		5.0	51	44 in.·lbf
Compressor and magnetic clutch x Cylinder block		25	255	18
Radiator relay block x Frame		5.0	51	44 in.·lbf

Part Tightened		N·m	kgf·cm	ft·lbf
Engine cover No. 1 x Cylinder head cover		9.0	92	80 in.·lbf
Air cleaner assy x Body		5.0	51	44 in.·lbf
Cylinder head x Cylinder block	1st 2nd	79 Turn 90°	806 Turn 90°	58 Turn 90°
Camshaft timing oil control valve assy x Cylinder head		9.0	92	79 in.·lbf
Camshaft timing gear assy x Camshaft		54	551	40
Battery carrier x Frame		13	131	9.5
Battery clamp x Body	Bolt Nut	5.0 3.5	51 36	44 in. lbf 31 in. lbf
Camshaft timing sprocket x Camshaft		54	551	40
Camshaft bearing cap No. 1 x Cylinder head		30	301	22
Camshaft bearing cap No. 2 x Cylinder head		30	301	22
Camshaft bearing cap No. 3 x Cylinder head		9.0	92	80 in.·lbf
Chain tensioner assy No. 1 x Timing chain cover		9.0	92	80 in.·lbf
Chain tensioner plate x Stiffening crankcase assy		12	122	9
Oil pump drive sprocket x Oil pump		30	301	22
Chain vibration damper No. 1 x Cylinder head		9.0	92	80 in.·lbf
Chain vibration damper No. 1 x Cylinder block		9.0	92	80 in.·lbf
Timing chain guide x Cylinder block		9.0	92	80 in.·lbf
Chain tensioner slipper x Cylinder block		19	194	14
Timing chain cover (See page 14–45)	Bolt A Bolt B Bolt C Nut	9.0 21 43 9.0	92 214 438 92	80 in.·lbf 15 32 80 in.·lbf
Oil pan x Stiffening crankcase assy		9.0	92	80 in.·lbf
Oil pan drain plug x Oil pan		25	255	18
Crankshaft pulley x Crankshaft		170	1,733	125
Cylinder head cover x Cylinder head	Bolt A Bolt B Bolt C	11 14 21	112 143 214	8.0 10 15

1CD–FTV:

Part Tightened		N·m	kgf·cm	ft·lbf
Air tube No. 1 hose clamp bolt		6.0	61	53 in.·lbf
Air tube No. 1 x Air tube No. 2		25	255	18
Air tube No. 1 x Intake air connector		25	255	18
Air tube No. 1 x Cylinder head cover sub–assy		25	255	18
Air tube No. 1 x Engine mounting bracket FR		25	255	18
Engine cover No. 1 x Cylinder head cover sub–assy		8.0	82	71 in.·lbf
Engine cover No. 1 x Intake manifold		8.0	82	71 in.·lbf
Front wheel		103	1,050	76
Drain plug (Manual transaxle)		49	500	36
Engine hanger No.1 x Cylinder head		37	377	27
Engine hanger No.2 x Cylinder head		37	377	27
Engine hanger No. 1 UPR x Engine hanger No. 1		37	377	27
Engine coolant temperature sensor x Cylinder head		20	200	14
Crankshaft position sensor x Oil pump assy		8.8	90	78 in.·lbf
Camshaft position sensor x Camshaft oil seal retainer		8.8	90	78 in.·lbf
Fuel filler to injection pump fuel pipe x Cylinder block	M6 M8	8.8 21	90 209	78 in.·lbf 15
Oil cooler pipe x Cylinder block		56	575	42
Compressor mounting bracket x Cylinder block		42	428	31
Timing belt No.3 cover x Cylinder head		7.4	75	65 in.·lbf

Part Tightened		N·m	kgf·cm	ft·lbf
Intake manifold x Cylinder head		21	209	15
Power steering idle pulley bracket x Cylinder head				
(See page 14–108)	Bolt A	72	734	53
	Bolt B	39	398	29
Intake manifold insulator No. 1 x Intake manifold		5.0	51	44 in.·lbf
Injection pipe x Common rail				
	With SST	31	316	23
	Without SST	34	347	25
Injection pipe x Injector				
For used pipe	With SST	36	372	27
	Without SST	40	408	30
For new pipe	With SST	31	316	23
	Without SST	34	347	25
Injection pipe clamp x Intake manifold		5.0	51	44 in.·lbf
Fuel inlet pipe x Common rail				
	With SST	31	316	23
	Without SST	34	347	25
Fuel inlet pipe x injection pump				
	With SST	31	316	23
	Without SST	34	347	25
Nozzle leakage pipe No.2 x Cylinder head cover sub–assy		8.8	90	78 in.·lbf
Nozzle leakage pipe No.2 x Cylinder head		8.8	90	78 in.·lbf
Vacuum pump x Cylinder head		21	214	15
EGR valve assy x Cylinder head		18	184	13
Intake air connector with diesel throttle body x Intake manifold		21	209	15
Water inlet x Cylinder block		8.8	90	78 in.·lbf
Water outlet sub–assy x Cylinder head		21	209	15
Exhaust manifold x Cylinder head		47	474	34
EGR pipe sub–assy x Cylinder head	Bolt	37	375	27
	Nut	25	250	18
Vacuum pump oil pipe x Cylinder block	Bolt	21	214	15
	Nut	8.8	90	78 in.·lbf
Vacuum transmitting pipe No. 2 x Manifold converter				
For nut	With SST	27	275	20
	Without SST	30	306	22
For bolt		25	255	18
Vacuum transmitting pipe No. 1 x Manifold converter				
For nut	With SST	27	275	20
	Without SST	30	306	22
For bolt		25	255	18
Exhaust gas temperature sensor x Manifold converter	With SST	27	275	20
	Without SST	30	306	22
Exhaust gas temperature sensor x Vacuum transmitting pipe No. 2		6.4	65	57 in.·lbf
Oil filter bracket x Oil pan sub–assy		34	347	25
V–ribbed belt tensioner bracket x Cylinder block		20	204	15
V–ribbed belt tensioner assy x Oil pump		31	316	23
Generator bracket No.1 x Cylinder block		37	377	27
Idler pulley Sub–assy x V–ribbed belt tensioner assy		40	408	30
Engine mounting bracket RR x Engine mounting insulator RR		64	653	47
Engine mounting bracket FR x Engine mounting insulator FR		64	653	47
Drive shaft bearing bracket x Cylinder block		64	653	47
Rear end plate x Cylinder block		8.4	86	74 in.·lbf
Flywheel x Crankshaft		71	720	52
Engine mounting member sub–assy center x Body		45	459	33

Part Tightened		N·m	kgf·cm	ft·lbf
Front suspension crossmember sub–assy x Rear engine mounting bracket		87	887	64
Front suspension crossmember sub–assy x Front engine mounting bracket		52	530	38
Front suspension crossmember sub–assy x Body		133	1,356	98
Front suspension member brace x Front suspension crossmember sub–assy		133	1,356	98
Front suspension member brace x Body		80	816	59
Return tube sub–assy x Body		8.0	82	71 in.·lbf
Engine mounting insulator RH x Body		52	530	38
Engine mounting insulator RH x Transverse engine engine mounting blacket		52	530	38
Engine mounting bracket LH x Engine mounting insulator LH		80	816	59
Air tube No. 2 hose clamp bolt	Intake shutter side Air hose No. 3 side	6.0 5.3	61 54	53 in.·lbf 47 in.·lbf
Injector driver x Engine mounting insulator RH		5.5	56	49 in.·lbf
Engine wire x Body		8.4	85	74 in.·lbf
Air tube No.2 x Manual transaxle		25	255	18
Relay block x Radiator assy		5.3	54	47 in.·lbf
Differential pressure sensor x Body		5.5	56	49 in.·lbf
Air cleaner assy x Body x Engine mounting bracket LH		7.0	71	62 in.·lbf
Battery clamp x Body	Body Nut	5.0 3.0 to 4.0	51 31 to 41	44 in.·lbf 27 to 35 in.·lbf
Battery terminal		5.4	55	48 in.·lbf
Timing belt tensioner x Cylinder block		21	214	15
Timing chain cover plate x Camshaft oil seal retainer		9.0	92	80 in.·lbf
Transverse engine engine mounting bracket x Cylinder block (See page 14–138)	Bolt A Bolt B	37 64	375 650	27 47
Timing belt No. 1 cover x Transverse engine engine mounting bracket		7.4	75	65 in.·lbf
Timing belt No. 1 cover x Oil pump assy		7.4	75	65 in.·lbf
Timing belt No. 2 cover x Transverse engine engine mounting bracket		7.4	75	65 in.·lbf
Timing belt No. 2 cover x Cylinder head cover sub–assy		7.4	75	65 in.·lbf
Timing belt No. 2 cover x Camshaft oil seal retainer		7.4	75	65 in.·lbf
Timing belt No. 2 cover x Timing belt cover No. 3		7.4	75	65 in.·lbf
Crankshaft pulley x Crankshaft		180	1,835	133
Camshaft bearing cap x Cylinder head		20	204	15
Camshaft oil seal retainer x Cylinder head		9.8	100	7.2
Camshaft timing pulley x Camshaft		88	899	65
Nozzle leakage pipe x Injector		16	163	12
Nozzle leakage pipe x Camshaft bearing cap No. 4		20	204	15
Cylinder head cover x Cylinder head		13	135	9.7
Vacuum reservoir sub–assy x Cowl top panel outer		8.3	85	73 in.·lbf
Cylinder head x Cylinder block	1st 2nd 3rd 4th	45 Turn 90° Turn 90° Turn 90°	459 Turn 90° Turn 90° Turn 90°	33 Turn 90° Turn 90° Turn 90°
Exhaust fuel addition injector x Cylinder head		12	117	8.5
Drain plug (oil pan)		34	350	25

EXHAUST

031E2–03

SERVICE DATA

2AZ–FSE:

Compression spring (Exhaust pipe assy front x Exhaust manifold converter sub–assy) Free length Minimum	41.5 mm (1.634 in.)
Compression spring (Exhaust pipe assy tail x Exhaust pipe assy center) Free length Minimum	38.5 mm (1.516 in.)

1CD–FTV:

Compression spring Minimum length Exhaust pipe assy front x Exhaust manifold	41.5 mm (1.634 in)
Compression spring Minimum length Exhaust pipe assy front x Tail pipe assy	38.5 mm (1.515 in)

031E3–03

TORQUE SPECIFICATION

2AZ–FSE:

Part Tightened	N·m	kgf·cm	ft·lbf
Exhaust pipe assy front x Exhaust manifold converter sub–assy	43	440	32
Exhaust pipe assy center x Exhaust pipe assy front	43	440	32
Exhaust pipe assy tail x Exhaust pipe assy center	43	44	32
Floor panel brace front x Body	30	302	22

1CD–FTV:

Part Tightened	N·m	kgf·cm	ft·lbf
Exhaust pipe assy front x Exhaust manifold	43	440	32
Exhaust pipe assy front x Tail pipe assy	43	440	32
Floor panel brace front x Body	30	302	22
Air fuel ratio sensor x Exhaust pipe assy front	44	449	33

COOLING

031H3–02

SERVICE DATA

2AZ–FSE:

Thermostat		
Valve opening temperature		80 to 84°C (176 to 183°F)
Valve lift	at 95°C (203°F)	10 mm (0.394 in.) or more
Radiator cap sub–assy		
Standard opening pressure		74 to 103 kPa (0.75 to 1.05 kgf/cm^2, 10.7 to 14.9 psi)
Cooling fan		
Standard amperage	at 20°C (68°F)	8.5 to 11.5 A
Standard amperage (No. 2)	at 20°C (68°F)	5.2 to 8.2 A
Cooling fan relay		
Specified condition	Between terminals 3 and 5	10 kΩ or higher
		Below 1 Ω (Apply battery voltage terminals 1 and 2)
Cooling fan relay No. 2		
Specified condition	Between terminals 3 and 4	Below 1 Ω
		10 kΩ or higher (Apply battery voltage terminals 1 and 2)
	Between terminals 3 and 5	10 kΩ or higher
		Below 1 Ω (Apply battery voltage terminals 1 and 2)
Cooling fan relay No. 3		
Specified condition	Between terminals 3 and 5	10 kΩ or higher
		Below 1 Ω (Apply battery voltage terminals 1 and 2)

1CD–FTV:

Thermostat		
Valve opening temperature		80 to 84°C (176 to 183°F)
Valve lift	at 95°C (203°F)	8.5 mm (0.335 in.) or more
Radiator cap sub–assy		
Standard opening pressure		93 to 122 kPa (0.95 to 1.25 kgf/cm2, 13.4 to 17.6 psi)
Minimum opening pressure		78 kPa (0.8 kgf/cm^2, 11.4 psi)

031H4–02

TORQUE SPECIFICATION

2AZ–FSE:

Part Tightened	N·m	kgf·cm	ft·lbf
Water pump x Cylinder block	9.0	92	80 in.·lbf
Water pump x Water pump pulley	26	265	19
Water inlet x Cylinder block	9.0	92	80 in.·lbf
Radiator support upper x Body	19	194	14
Fan assy w/ motor x Radiator	6.0	61	53 in.·lbf
Radiator relay block x Radiator	5.0	54	46 in.·lbf

1CD–FTV:

Part Tightened		N·m	kgf·cm	ft·lbf
Drain plug		13	133	10
Water pump x Cylinder block		31	320	23
Injection pipe x Common rail				
	With SST	31	316	23
	Without SST	34	347	25
Injection pipe x Injector				
For used pipe	With SST	36	372	27
	Without SST	40	408	30
For new pipe	With SST	31	316	23
	Without SST	34	347	25
Fuel inlet pipe sub–assy x Common rail assy				
	With SST	31	316	23
	Without SST	34	347	25
Fuel inlet pipe sub–assy x Injection pump				
	With SST	31	316	23
	Without SST	34	347	25
Timing belt idler Sub–assy No.1 x Cylinder head		35	357	26
Front wheel		103	1,050	76

LUBRICATION

SERVICE DATA

031H5–02

2AZ–FSE:

Oil pressure	at idle speed at 3,000 rpm	29 kPa (0.3 kgf·cm^2, 4.3 psi) or more 245 to 539 kPa (2.5 to 5.5 kgf·cm^2, 36 to 78 psi) or more
Adhesive		Part No. 08833–00080, THREE BOND 1344, LOCTITE 242, or equivalent

1CD–FTV:

Oil pressure	at idle speed at 4,500 rpm	29 kPa (0.3 kgf·cm^2, 4.3 psi) or more 245 to 588 kPa (2.5 to 6.0 kgf·cm^2, 36 to 85 psi)
Adhesive		Part No. 08833 – 00080, THREE BOND 1344, LOCTITE 242, or equivalent

031H6–02

TORQUE SPECIFICATION

2AZ–FSE:

Part Tightened	N·m	kgf·cm	ft·lbf
Oil pressure switch x Cylinder head	15	153	11
Oil cooler assy x Cylinder block Union bolt Nut	 79 9.0	 800 92	 58 80 in.·lbf
Oil pan drain plug x Oil pan	25	250	18
Oil pump x Cylinder block	19	195	15
Timing chain guide x Cylinder block	9.0	92	80 in.·lbf
Chain vibration damper No.1 x Cylinder block	9.0	92	80 in.·lbf
Oil pan sub–assy x Cylinder block	9.0	92	80 in.·lbf
Transverse engine engine mounting insulator x Cylinder block	52	530	38
Engine service cover bracket RH x Body RHD steering position type	9.0	92	80 in.·lbf
Cooler bracket RH x Body LHD steering position type	9.0	92	80 in.·lbf
Engine x Wire	7.0	71	62 in.·lbf
Oil reservoir bracket No. 1 x Body	8.0	82	71 in.·lbf
Cooler refrigerant suction hose No. 1 x Cooler bracket No. 1 LHD steering position type	9.0	92	80 in.·lbf
Return tube x Body	8.0	82	71 in.·lbf
Ignition coil assy x Cylinder head cover	9.0	92	80 in.·lbf
Vane pump x Cylinder block	37	377	27
Engine cover sub–assy x Cylinder block	7.0	71	62 in.·lbf
Front wheel RH	103	1,050	76

1CD–FTV:

Part Tightened	N·m	kgf·cm	ft·lbf
Oil pump x Cylinder block	31	320	23
Oil pan sub–assy x Cylinder block (See page 17–11) Bolt A Bolt B Bolt C Nut D	42 21 11 11	428 209 112 112	31 15 8 8
Oil pan insulator x Oil pan sub–assy	7.5	76	66 in.·lbf
Oil strainer sub–assy x Oil pan sub–assy Bolt Nut	21 13	209 135	15 10
Oil pan Sub–assy No.2 x Oil pan sub–assy	12	119	9
Engine oil level sensor x Oil pan sub–assy No.2	7.0	71	62 in.·lbf
Oil level gage guide x Injection pump stay No. 1	18	184	13
Timing belt idler sub–assy No. 2 x Oil pump assy	47	479	34
Front wheel RH	103	1,050	76

IGNITION

031E4–02

SERVICE DATA

2AZ–FSE:

Spark plug		
Recommended spark plug	DENSO	SK20BE11
Electrode gap	Maximum (for used)	1.3 mm (0.051 in.)
	Standard (for new)	1.00 to 1.10 mm (0.0394 to 0.0433 in.,)
Camshaft position sensor		
Resistance	1 (G+) – 2 (G–)	835 to 1,400 Ω at cold 1,060 to 1,645 Ω at hot
Crankshaft position sensor		
Resistance	1 (NE+) – 2 (NE–)	985 to 1,600 Ω at cold 1,265 to 1,890 Ω at hot

031E5–02

TORQUE SPECIFICATION

2AZ–FSE:

Part Tightened	N·m	kgf·cm	ft·lbf
Ignition coil assy x Cylinder head cover sub–assy	9.0	92	80 in.·lbf
Spark plug x Cylinder head sub–assy	19	194	14
Camshaft position sensor x Cylinder head sub–assy	9.0	92	79 in.·lbf
Wire harness protector x throttle body bracket	8.4	86	74 in.·lbf
Engine wire No. 3 (battery negative terminal) x Battery	5.4	55	48 in.·lbf
Crankshaft position sensor x Timing chain cover sub–assy	9.0	92	79 in.·lbf

STARTING & CHARGING

031E6–03

SERVICE DATA

2AZ–FSE:

Starter assy		
Specified current	Standard	75 A or less at 11.5 V
Starter relay		
Resistance	3 – 5	10 kΩ or higher
	3 – 5 (Apply battery voltage to terminal 1 and 2)	Below 1 Ω
Charging circuit		
Amperage	Standard	10 A or less
Voltage	Standard	12.9 to 14.9 V

1CD–FTV:

Glow plugs		
Resistance	at 20 °C (68 °F)	Approx. 1.1 Ω
Glow plug relay		
Specified condition	1 – 2	10 kΩ or higher
	1 – 2 (When battery voltage is applied to terminals 3 and 4)	Below 1 Ω

031E7–04

TORQUE SPECIFICATION

2AZ–FSE:

Part Tightened		N·m	kgf·cm	ft·lbf
Lead wire x Starter magnetic switch assy		5.9	60	52 in.·lbf
Wire harness clamp x Starter assy		8.4	86	74 in.·lbf
Starter assy x Cylinder block sub–assy		37	380	28
Starter wire x Starter assy		13	130	9
Battery carrier x Body		13	131	9
Battery clamp sub–assy x Body		5.0	51	44 in.·lbf
Battery clamp sub–assy x Battery clamp bolt		3.5	36	31 in.·lbf
Engine wire No. 3 (battery negative terminal) x Battery		5.4	55	48 in.·lbf
Wire harness clamp bracket x Generator assy		8.4	86	74 in.·lbf
Generator assy x Cylinder block sub–assy (see page 19–8)	Bolt A	52	530	38
	Bolt B	21	214	16
Generator wire x Generator assy		9.8	100	7

FRONT SUSPENSION

TORQUE SPECIFICATION

0313A–07

Part Tightened		N·m	kgf·cm	ft·lbf
Suspension crossmember sub–assy x Engine mounting insulator		80	816	59
Suspension crossmember sub–assy x Center member		96	979	71
Suspension member brace x Body	Bolt A:	80	816	59
	Bolt B:	133	1,360	98
Stabilizer bar link set nut		74	755	55
Lower suspension arm x Lower ball joint		89	908	66
Lower suspension arm x Suspension crossmember		137	1,400	101

TIRE & WHEEL

SERVICE DATA

0313C–07

	Engine type: 2AZ–FSE		
	Tire size	Front kPa (kgf/cm^2, psi)	Rear kPa (kgf/cm^2, psi)
Cold tire inflation pressure	205/55R16 91V:		
	with 4 or less occupants	220 (2.2, 32) *1	220 (2.2, 32) *1
		250 (2.5, 36) *2	250 (2.5, 36) *2
	with 5 or more occupants	220 (2.2, 32) *1	220 (2.2, 32) *1
		270 (2.7, 39) *2	280 (2.8, 41) *2
	215/45R17 87W:		
	with 4 or less occupants	240 (2.4, 35) *1	240 (2.4, 35) *1
		290 (2.9, 42) *2	290 (2.9, 42) *2
	with 5 or more occupants	240 (2.4, 35) *1	240 (2.4, 35) *1
		310 (3.1, 45) *2	330 (3.3, 48) *2
Tire runout	1.4 mm (0.055 in.) or less		
Imbalance after adjustment	8.0 g (0.018 lb) or less		

***1: For driving under 160 km/h (100 mph)**

***2: For driving at 160 km/h (100 mph) or over**

DRIVE SHAFT / PROPELLER SHAFT / AXLE

SERVICE DATA

030KB–09

Front axle hub bearing	Backlash	Maximum: 0.05 mm (0.0020 in.)
Front axle hub sub–assy	Deviation	Maximum: 0.05 mm (0.0020 in.)
Rear axle hub & bearing assy	Backlash Deviation	Maximum: 0.05 mm (0.0020 in.) Maximum: 0.07 mm (0.0028 in.)

030KC–10

TORQUE SPECIFICATION

Part Tightened	N·m	kgf·cm	ft·lbf
Front wheel set nut	103	1,050	76
Tie rod end sub–assy x Steering knuckle	49	500	36
Flexible hose and speed sensor front x Shock absorber assy front	19	194	14
Speed sensor front x Steering knuckle	8.0	82	71 in.·lbf
Front stabilizer link assy x Shock absorber assy front	74	755	55
Front axle hub nut	216	2,200	159
Automatic transaxle fluid drain plug	49	500	36
Drive shaft bearing case x Bearing bracket	64	650	47
Suspension arm sub–assy lower NO.1 x Steering knuckle	89	908	66

BRAKE

TORQUE SPECIFICATION

030MV–04

Part Tightened	N·m	kgf·cm	ft·lbf
Brake booster clevis lock nut	22	224	16
Brake booster assy x Body	13	133	10
Brake line union nut 10 mm	15	155	11
Brake tube clamp x body	6	61	53 in.·lbf
Wheel nut	103	1,050	76

AUTOMATIC TRANSMISSION / TRANSAXLE

030A9–12

SERVICE DATA

U151E		
Line pressure (Wheel locked)		
	Engine idling	
	D position	372 to 412 kPa (3.8 to 4.2 kgf·cm^2, 54 to 60 psi)
	R position	672 to 742 kPa (6.9 to 7.6 kgf·cm^2, 97 to 108 psi)
	AT stall (Throttle valve fully open)	
	D position	931 to 1,031 kPa (9.5 to 10.5 kgf·cm^2, 135 to 150 psi)
	R position	1,768 to 1,968 kPa (18.0 to 20.1 kgf·cm^2, 256 to 285 psi)
Engine stall revolution	D and R positions	2,250 ± 150 rpm
Time lag	N → D position	Less than 1.2 seconds
	N → R position	Less than 1.5 seconds
Engine idle speed (A/C OFF)	N position	650 to 750 rpm
Drive plate runout	Max.	0.20 mm (0.0079 in.)
Torque converter runout	Max.	0.30 mm (0.0118 in.)
Differential oil seal drive in depth	LH side	0 ± 0.5 mm (0 ± 0.020 in.)
	RH side	0 ± 0.5 mm (0 ± 0.020 in.)
U151E (with Kick down switch)		
Shift schedule (Shift lever with Multi–mode automatic transmission & Gate shift type)		
D position		
(Throttle valve fully open)	1 → 2	38 to 44 km/h (24 to 27 mph)
	2 → 3	73 to 81 km/h (45 to 50 mph)
	3 → 4	119 to 130 km/h (74 to 81 mph)
	4 → 5	174 to 187 km/h (108 to 116 mph)
	5 → 4	136 to 148 km/h (85 to 92 mph)
	4 → 3	86 to 93 km/h (53 to 58 mph)
	3 → 2	50 to 56 km/h (31 to 35 mph)
	2 → 1	– to 11 km/h (– to 7 mph)
(Throttle valve fully closed)	4 → 5	43 to 48 km/h (27 to 30 mph)
	5 → 4	34 to 39 km/h (21 to 24 mph)
D position		
Kick down switch ON		
	5 → 4	167 to 180 km/h (104 to 112 mph)
	4 → 3	115 to 126 km/h (71 to 78 mph)
	3 → 2	69 to 76 km/h (43 to 47 mph)
	2 → 1	33 to 38 km/h (21 to 24 mph)
Manual down shift		
	4 → 3	119 to 130 km/h (74 to 81 mph)
	3 → 2	73 to 80 km/h (45 to 50 mph)
	2 → 1	36 to 42 km/h (22 to 26 mph)
Lock–up point	Throttle valve opening 5 %	
D position		
5th gear	Lock–up ON	58 to 64 km/h (36 to 40 mph)
	Lock–up OFF	56 to 62 km/h (35 to 39 mph)
4th gear	Lock–up ON	95 to 103 km/h (59 to 64 mph)
	Lock–up OFF	93 to 100 km/h (58 to 62 mph)

U151E (without kick down switch)		
Shift schedule (Shift lever with Multi–mode automatic transmission & Gate shift type)		
D position		
(Throttle valve fully open)	1 → 2	38 to 44 km/h (24 to 27 mph)
	2 → 3	73 to 81 km/h (45 to 50 mph)
	3 → 4	119 to 130 km/h (74 to 81 mph)
	4 → 5	174 to 187 km/h (108 to 116 mph)
	5 → 4	167 to 180 km/h (104 to 112 mph)
	4 → 3	115 to 126 km/h (71 to 78 mph)
	3 → 2	69 to 76 km/h (43 to 47 mph)
	2 → 1	33 to 38 km/h (21 to 24 mph)
(Throttle valve fully closed)	4 → 5	43 to 48 km/h (27 to 30 mph)
	5 → 4	34 to 39 km/h (21 to 24 mph)
Manual down shift		
	4 → 3	119 to 130 km/h (74 to 81 mph)
	3 → 2	73 to 80 km/h (45 to 50 mph)
	2 → 1	36 to 42 km/h (22 to 26 mph)
Lock–up point	Throttle valve opening 5 %	
D position		
5th gear	Lock–up ON	58 to 64 km/h (36 to 40 mph)
	Lock–up OFF	56 to 62 km/h (35 to 39 mph)
4th gear	Lock–up ON	95 to 103 km/h (59 to 64 mph)
	Lock–up OFF	93 to 100 km/h (58 to 62 mph)

030AA–12

TORQUE SPECIFICATION

U151E			
Part Tightened	N·m	kgf·cm	ft·lbf
Park/neutral position switch x Transaxle Bolt	5.4	55	48 in.·lbf
Battery carrier x Body	13	133	10
Engine hanger x Engine	38	387	28
Drain plug x Oil pan	47	479	35
Transaxle x Engine Bolt A:	64	653	47
Bolt B:	46	469	34
Bolt C:	44	449	32
Torque converter clutch x Drive plate	41	418	30
Engine mounting bracket RR x Transaxle	64	653	47
Engine mounting bracket FR x Transaxle	64	653	47
Center member x Body	45	459	33
Front suspension Crossmember sub–assy x Engine mounting insulator RR	52	530	38
Front suspension Crossmember sub–assy x Engine mounting insulator FR	52	530	38
Engine mounting insulator RR x Engine mounting bracket RR	87	887	64
Engine mounting insulator FR x Engine mounting bracket FR	52	530	38
Engine mounting bracket LH x Transaxle	64	653	47
Engine mounting insulator LH x Body	52	530	38
Engine mounting insulator LH x Engine mounting bracket LH	80	816	59
Starter x Transaxle	37	377	27
Starter wire x Starter	9.8	99	87 in.·lbf
Oil filler tube x Transaxle	5.5	56	49 in.·lbf
Transmission Oil cooler x Engine mounting bracket FR	12	122	9
Transmission Oil cooler x Transmission control cable bracket No.1	12	122	9
Transmission control cable bracket No.1 x Transaxle	12	122	9
Transmission control cable clamp	12	122	9
Wire harness x Transaxle Bolt A:	5.0	51	44 in.·lbf
Bolt B:	8.4	86	74
Air cleaner assy x Body	5.0	51	44 in.·lbf
Engine cover sub–assy No. 1 x Engine	9.0	92	80 in.·lbf
Speed sensor x Transaxle	11	115	8
Transmission wire x Transaxle	5.4	55	48 in. lbf
Solenoid valve x Valve body Bolt A,B:	11	110	8
Bolt C,D:	6.6	67	58 in. lbf
Valve body x Transaxle	11	110	8
ATF temperature sensor x Valve body	6.6	67	58 in. lbf
Oil strainer x Valve body	11	110	8
Oil pan x Transaxle	7.8	80	69 in.·lbf
Control cable x Control shaft lever	12	122	9

HEATER AND AIR CONDITIONING

031HH–02

SERVICE DATA

Refrigerant charge volume	Standard:	440 ± 30 g (15.51 ± 1.06 oz.)

031HI–02

TORQUE SPECIFICATION

Part Tightened	N·m	kgf·cm	ft·lbf
W/PULLEY COMPRESSOR ASSY (2AZ–FSE)			
W/pulley compressor assy x Engine	29	300	21
Cooler refrigerant discharge hose No. 1 x W/pulley compressor assy	9.8	100	87 in.·lbf
Cooler refrigerant suction hose No. 1 x W/pulley compressor assy	9.8	100	87 in.·lbf

SFI SYSTEM (2AZ–FSE)

PRECAUTION

05HHT–01

NOTICE:

Perform the RESET MEMORY (AT initialization) when replacing the automatic transaxle assembly, engine assembly or ECM.

HINT:

Initialization can not be completed by only removing the battery.

05CDV–02

LOCATION

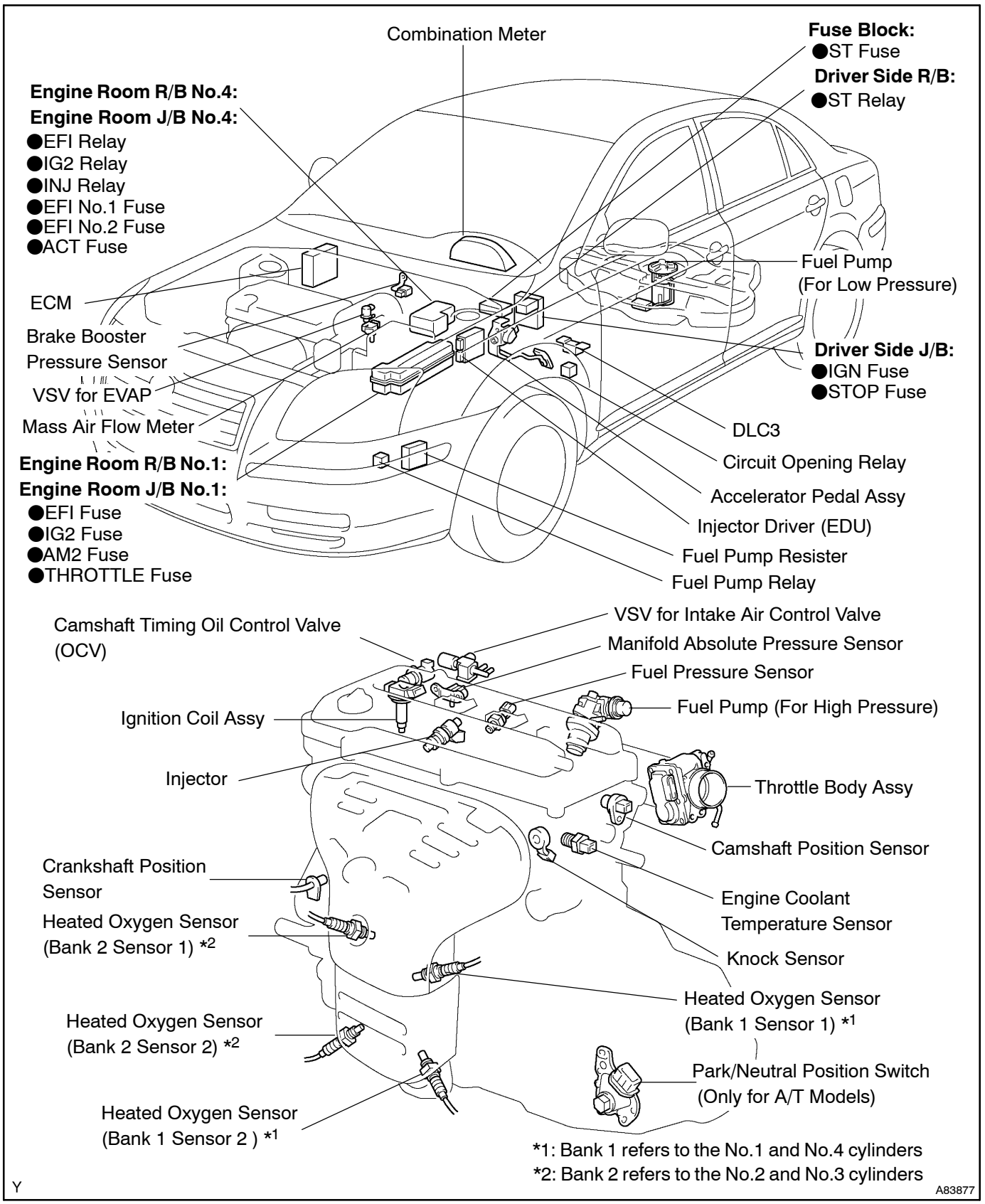

05CDS–02

HOW TO PROCEED WITH TROUBLESHOOTING

HINT:
The hand–held tester can be used at step 3, 4, 5, 7 and 10.

1	VEHICLE BROUGHT TO WORKSHOP

2	CUSTOMER PROBLEM ANALYSIS (See page 05–6)

3	CONNECT THE HAND–HELD TESTER TO DLC3

HINT:
If the display indicates a communication fault in the tool, inspect the DLC3.

4	CHECK DTC AND FREEZE FRAME DATA (See page 05–19)

HINT:
Record or print DTC and freeze frame data, if needed.

5	CLEAR DTC AND FREEZE FRAME DATA (See page 05–19)

6	VISUAL INSPECTION

7	SETTING THE CHECK (TEST) MODE DIAGNOSIS (See page 05–20)

8	PROBLEM SYMPTOM CONFIRMATION

HINT:
If the engine does not start, perform steps 10 and 12 first.

A	Malfunction does not occur
B	Malfunction occurs

B → GO TO STEP 10

A

9	SYMPTOM SIMULATION

10	DTC CHECK (See page 05–19)

A	Malfunction code
B	No code

B → GO TO STEP 12

A

11	DTC CHART (See page 05–31)

GO TO STEP 14

12	BASIC INSPECTION (See page 05–8)

A	Wrong parts not confirmed
B	Wrong parts confirmed

B → GO TO STEP 17

A

13	PROBLEM SYMPTOMS TABLE (See page 05–10)

A	Wrong circuit confirmed
B	Wrong parts confirmed

B → GO TO STEP 17

A

14	CHECK ECM POWER SOURCE CIRCUIT (See page 05–236)

15	CIRCUIT INSPECTION

A	Malfunction not confirmed
B	Malfunction confirmed

B → GO TO STEP 18

A

16	CHECK FOR INTERMITTENT PROBLEMS (See page 05–7)

GO TO STEP 18

17	PARTS INSPECTION

18	IDENTIFICATION OF PROBLEM

19	ADJUSTMENT AND/OR REPAIR

20	CONFIRMATION TEST

END

05CDT–02

CUSTOMER PROBLEM ANALYSIS CHECK

ENGINE CONTROL SYSTEM Check Sheet

Inspector's Name _____

Customer's Name		VIN	
Date Vehicle Brought in		Production Date	
License Plate No.		Odometer Reading	km miles

Problem Symptoms	☐ Engine does not Start	☐ Engine does not crank ☐ No initial combustion ☐ No complete combustion
	☐ Difficult to Start	☐ Engine cranks slowly ☐ Other _____
	☐ Poor Idling	☐ Incorrect first idle ☐ Idling rpm is abnormal ☐ High (rpm) ☐ Low (rpm) ☐ Rough idling ☐ Other _____
	☐ Poor Driveability	☐ Hesitation ☐ Back fire ☐ Muffler explosion (after–fire) ☐ Surging ☐ Knocking ☐ Other _____
	☐ Engine Stall	☐ Soon after starting ☐ After accelerator pedal depressed ☐ After accelerator pedal released ☐ During A/C operation ☐ Shifting from N to D ☐ Other _____
	☐ Others	

Data Problem Occurred		
Problem Frequency		☐ Constant ☐ Sometimes (times per day/month) ☐ Once only ☐ Other _____
Condition When Problem Occurs	Weather	☐ Fine ☐ Cloudy ☐ Rainy ☐ Snowy ☐ Various/Other _____
	Outdoor Temperature	☐ Hot ☐ Warm ☐ Cool ☐ Cold (approx. ____ °C/____ °F)
	Place	☐ Highway ☐ Suburbs ☐ Inner City ☐ Uphill ☐ Downhill ☐ Rough road ☐ Other _____
	Engine Temp.	☐ Cold ☐ Warming up ☐ After Warming up ☐ Any temp. ☐ Other _____
	Engine Operation	☐ Starting ☐ Just after starting (min.) ☐ Idling ☐ Racing ☐ Driving ☐ Constant speed ☐ Acceleration ☐ Deceleration ☐ A/C switch ON/OFF ☐ Other _____

Condition of check engine warning lamp (CHK ENG)		☐ Remains on ☐ Sometimes lights up ☐ Does not light up
DTC Inspection	Normal mode (Pre–check)	☐ Normal ☐ Malfunction code(s) (code) ☐ Freeze frame data ( )
	Check Mode	☐ Normal ☐ Malfunction code(s) (code) ☐ Freeze frame data ( )

05HHW–01

CHECK FOR INTERMITTENT PROBLEMS

HINT:

Hand–held tester only:

Inspect the vehicle's ECM using check mode. Intermittent problems are easier to detect when the ECM is in check mode with a hand–held tester. In check mode, the ECM uses 1 trip detection logic, which has a higher sensitivity to malfunctions than normal mode (default) using uses 2 trip detection logic.

(a) Clear the DTCs (see page 05–19).
(b) Set the check mode (see page 05–20).
(c) Perform a simulation test (see page 01–22).
(d) Check the connector and terminal (see page 01–32).
(e) Wiggle the harness and the connector (see page 01–32).

05HHY–01

BASIC INSPECTION

When the malfunction is not confirmed in the DTC check, troubleshooting should be carried out in all the possible circuits considered as causes of the problem. In many cases, by carrying out the basic engine check shown in the following flowchart, the location causing the problem can be found quickly and efficiently. Therefore, using this check is essential in the engine troubleshooting.

1 CHECK BATTERY VOLTAGE

NOTICE:
Carry out this check with the engine stopped and ignition switch OFF.

	OK	NG
Voltage	11 V or more	Less than 11 V

NG → **CHARGE OR REPLACE BATTERY**

OK

2 CHECK IF ENGINE WILL CRANK

NG → **PROCEED TO PROBLEM SYMPTOMS TABLE ON PAGE 05–10**

OK

3 CHECK IF ENGINE STARTS

NG → **GO TO STEP 7**

OK

4 CHECK AIR FILTER

(a) Visually check that the air filter is not excessively dirty or oily.

NG → **REPLACE AIR FILTER**

OK

5 CHECK IDLE SPEED (See page 14–1)

NG → **PROCEED TO PROBLEM SYMPTOMS TABLE ON PAGE 05–10**

OK

6	CHECK IGNITION TIMING (See page 14–1)

NG → PROCEED TO PAGE 18–1 AND CONTINUE TO TROUBLESHOOT

OK

PROCEED TO PROBLEM SYMPTOMS TABLE ON PAGE 05–10

7	CHECK FUEL PRESSURE (See page 11–4)

NG → PROCEED TO PAGE 11–1 AND CONTINUE TO TROUBLESHOOT

OK

8	CHECK FOR SPARK (See page 18–1)

NG → PROCEED TO PAGE 18–1 AND CONTINUE TO TROUBLESHOOT

OK

PROCEED TO PROBLEM SYMPTOMS TABLE ON PAGE 05–10

05CDX–02

PROBLEM SYMPTOMS TABLE

When the malfunction is not confirmed in the diagnostic trouble code check and the problem still can not be confirmed in the basic inspection, proceed to this matrix chart and troubleshoot according to the numbered order given below.

Symptom	Suspected Area	See page
Engine does not crank (Does not start)	1. Starter	19–1
	2. Starter relay	19–1
	3. Park/neutral position switch	*1
No initial combustion (Does not start)	1. ECM power source circuit	05–236
	2. Ignition coil assy	05–167
	3. Fuel pump control circuit	05–241
	4. Injector circuit	05–136
No complete combustion (Does not start)	1. Ignition coil assy	05–167
	2. Fuel pump control circuit	05–241
	3. Injector circuit	05–136
Difficult to start (Engine cranks normally)	1. Starter signal circuit	05–249
	2. Ignition coil assy	05–167
	3. Spark plug	18–3
	4. Compression	14–1
	5. Injector circuit	05–136
	6. Fuel pump control circuit	05–241
Difficult to start with cold engine	1. Starter signal circuit	05–249
	2. Injector circuit	05–136
	3. Ignition coil assy	05–167
	4. Spark plug	18–3
	5. Fuel pump control circuit	05–241
Difficult to start with hot engine	1. Starter signal circuit	05–249
	2. Injector circuit	05–136
	3. Ignition coil assy	05–167
	4. Spark plug	18–3
	5. Fuel pump control circuit	05–241
High engine idle speed (Poor idling)	1. ECM power source circuit	05–236
	2. Park/neutral position switch	*1
	3. Back up power source circuit	05–199
Low engine idle speed (Poor idling)	1. Park/neutral position switch	*1
	2. Injector circuit	05–136
	3. Back up power source circuit	05–199
	4. Fuel pump control circuit	05–241
Rough idling (Poor idling)	1. Mass air flow meter circuit	05–55
	2. Vacuum sensor circuit	05–61
	3. Injector circuit	05–136
	4. Fuel pump control circuit	05–241
	5. Ignition coil assy	05–167
	6. Compression	14–1
	7. Back up power source circuit	05–199
Hunting (Poor idling)	1. Mass air flow meter circuit	05–55
	2. Vacuum sensor circuit	05–61
	3. ECM power source circuit	05–236
Hesitation/Poor acceleration (Poor driveability)	1. Mass air flow meter circuit	05–55
	2. Vacuum sensor circuit	05–61
	3. Injector circuit	05–136
	4. Ignition coil assy	05–167
	5. Fuel pump control circuit	05–241
Muffler explosion after fire (Poor driveability)	1. Ignition coil assy	05–167
	2. Spark plug	18–3
	3. Injector circuit	05–136

Symptom	Suspected Area	See page
Surging (Poor driveability)	1. Spark plug 2. Injector circuit	18–3 05–136
Engine stalls soon after starting	1. Mass air flow meter circuit 2. Vacuum sensor circuit	05–55 05–61
Engine stalls after accelerator pedal depressed	1. Mass air flow meter circuit 2. Vacuum sensor circuit	05–55 05–61
Engine stalls after accelerator pedal release	1. Mass air flow meter circuit 2. Vacuum sensor circuit 3. ECM	05–55 05–61 05–12
Engine stalls during A/C operation	1. A/C signal circuit (Compressor circuit) 2. ECM	*1 05–12
Engine stalls when shifting from N to D	1. Park/neutral position switch	*1

*1: See page 40–8 of Pub. No. RM1018E AVENSIS.

05CDW–02

TERMINALS OF ECM

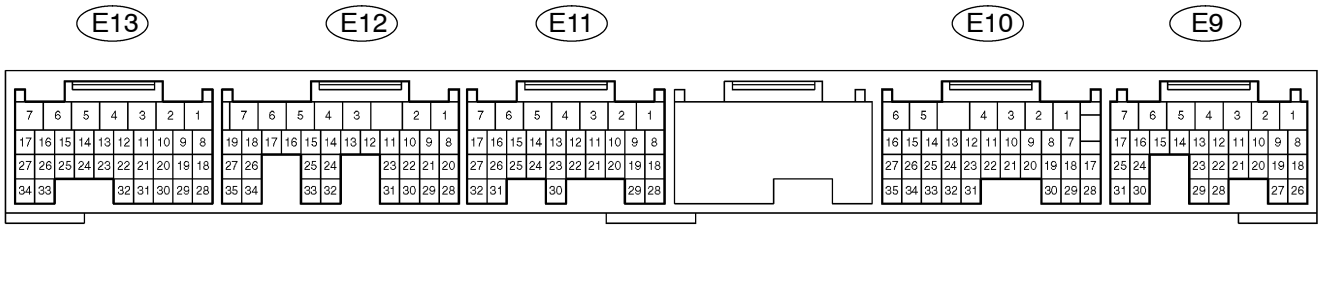

Each ECM terminal's standard normal voltage is shown in the table below.
In the table, first follow the information under "Condition". Look under "Symbols (Terminals No.)" for the terminals to be inspected. The standard normal voltage between the terminals is shown under "STD Voltage".
Use the illustration above as a reference for the ECM terminals.

Symbols (Terminals No.)	Wiring Color	Terminal Description	Condition	STD Voltage
BATT (E9–3) – E1 (E11–1)	B–Y – BR	Battery (for measuring the battery voltage and for the ECM memory)	Always	9 to 14 V
+BM (E10–6) – E1 (E11–1)	G–Y – BR	Power source of throttle motor	Always	9 to 14 V
IGSW (E9–9) – E1 (E11–1)	B–W – BR	Ignition switch	Ignition switch ON	9 to 14 V
+B (E9–1) – E1 (E11–1)	B–R – BR	Power source of ECM	Ignition switch ON	9 to 14 V
+B2 (E9–2) – E1 (E11–1)	B–R – BR	Power source of ECM	Ignition switch ON	9 to 14 V
MREL (E9–8) – E1 (E11–1)	GR – BR	EFI relay	Ignition switch ON	9 to 14 V
IREL (E10–35) – E1 (E11–1)	V – BR	INJ relay	Ignition switch ON	9 to 14 V
VC (E13–18) – E2 (E13–28)	R–W – BR	Power source of sensor (a specific voltage)	Ignition switch ON	4.5 to 5.5 V
VTA1 (E13–21) – E2 (E13–28)	L–W – BR	Throttle position sensor (for the engine control)	Ignition switch ON, Accelerator pedal fully released	0.4 to 1.0 V
VTA1 (E13–21) – E2 (E13–28)	L–W – BR	Throttle position sensor (for the engine control)	Ignition switch ON, Accelerator pedal fully depressed	3.2 to 4.8 V
VTA2 (E13–31) – E2 (E13–28)	B–R – BR	Throttle position sensor (for the sensor malfunction detection)	Ignition switch ON, Accelerator pedal fully released	2.1 to 3.1 V
VTA2 (E13–31) – E2 (E13–28)	B–R – BR	Throttle position sensor (for the sensor malfunction detection)	Ignition switch ON, Accelerator pedal fully depressed	4.5 to 5.5 V
VPA (E9–22) – EPA (E9–28)	G – Y	Accelerator pedal position sensor (for the engine control)	Ignition switch ON, Accelerator pedal fully released	0.5 to 1.1 V
VPA (E9–22) – EPA (E9–28)	G – Y	Accelerator pedal position sensor (for the engine control)	Ignition switch ON, Accelerator pedal fully depressed	2.5 to 4.6 V
VPA2 (E9–23) – EPA2 (E9–29)	W – Y	Accelerator pedal position sensor (for the sensor malfunction detection)	Ignition switch ON, Accelerator pedal fully released	1.5 to 2.9 V
VPA2 (E9–23) – EPA2 (E9–29)	W – Y	Accelerator pedal position sensor (for the sensor malfunction detection)	Ignition switch ON, Accelerator pedal fully depressed	3.5 to 5.5 V
VCPA (E9–26) – EPA (E9–28)	B – Y	Power source of accelerator pedal position sensor (for VPA)	Ignition switch ON	4.5 to 5.5 V

Symbols (Terminals No.)	Wiring Color	Terminal Description	Condition	STD Voltage
VCP2 (E9–27) – EPA2 (E9–29)	B – Y	Power source of accelerator pedal position sensor (for VPA2)	Ignition switch ON	4.5 to 5.5 V
VG (E13–30) – EVG (E13–29)	L–Y – G	Mass air flow meter	Idling, P or N position, A/C switch OFF	0.5 to 3.0 V
THA (E13–20) – E2 (E13–28)	GR – BR	Intake air temperature sensor	Idling, Intake air temperature 20°C (68°F)	0.5 to 3.4 V
THW (E13–19) – E2 (E13–28)	B–W – BR	Engine coolant temperature sensor	Idling, Coolant temperature 80°C (176°F)	0.2 to 1.0 V
#1 (E13–1) – E01 (E13–7) #2 (E13–2) – E01 (E13–7) #3 (E13–3) – E01 (E13–7) #4 (E13–4) – E01 (E13–7)	G–W – W–B W–R – W–B R–W – W–B W–L – W–B	Injector	Ignition switch ON	9 to 14 V
#1 (E13–1) – E01 (E13–7) #2 (E13–2) – E01 (E13–7) #3 (E13–3) – E01 (E13–7) #4 (E13–4) – E01 (E13–7)	G–W – W–B W–R – W–B R–W – W–B W–L – W–B	Injector	Idling	Pulse generation (See page 05–136)
IJF1 (E13–25) – E01 (E13–7)	R–B – W–B	Injector	Idling	Pulse generation (See page 05–136)
IGT1 (E13–8) – E1 (E11–1) IGT2 (E13–9) – E1 (E11–1) IGT3 (E13–10) – E1 (E11–1) IGT4 (E13–11) – E1 (E11–1)	R–W – BR P – BR LG–B – BR L–Y – BR	Ignition coil with igniter (ignition signal)	Idling	Pulse generation (See page 05–167)
IGF1 (E13–24) – E1 (E11–1)	W–R – BR	Ignition coil with igniter (ignition confirmation signal)	Ignition switch ON	4.5 to 5.5 V
IGF1 (E13–24) – E1 (E11–1)	W–R – BR	Ignition coil with igniter (ignition confirmation signal)	Idling	Pulse generation (See page 05–167)
G2+ (E11–27) – NE– (E11–24)	W – R	Camshaft position sensor	Idling	Pulse generation (See page 05–164)
NE+ (E11–25) – NE– (E11–24)	G – R	Crankshaft position sensor	Idling	Pulse generation (See page 05–160)
FPR (E12–7) – E01 (E13–7)	LG – BR	Fuel pump relay	Ignition switch ON	0 – 3.0 V
FC (E9–10) – E1 (E11–1)	G–Y – BR	Fuel pump control	Ignition switch ON	9 to 14 V
M+ (E11–3) – ME01 (E11–4) M– (E11–2) – ME01 (E11–4)	B – W–B W – W–B	Throttle motor	Idling	Pulse generation
OX1A (E12–22) – E2 (E13–28)	B – BR	Heated oxygen sensor	Maintain engine speed at 2,500 rpm for 2 minutes after warming up	Pulse generation (See page 05–82)
OX1B (E12–21) – O1B– (E11–26)	B – W	Heated oxygen sensor	Maintain engine speed at 2,500 rpm for 2 minutes after warming up	Pulse generation (See page 05–82)
OX2A (E12–23) – E2 (E13–28)	R – BR	Heated oxygen sensor	Maintain engine speed at 2,500 rpm for 2 minutes after warming up	Pulse generation (See page 05–82)
OX2B (E12–29) – O2B– (E11–31)	R – G	Heated oxygen sensor	Maintain engine speed at 2,500 rpm for 2 minutes after warming up	Pulse generation (See page 05–82)
HT1A (E12–5) – E03 (E11–7) HT1B (E12–25) – E03 (E11–7) HT2A (E12–4) – E03 (E11–7) HT2B (E12–33) – E03 (E11–7)	Y – W–B P – W–B L – W–B L–B – W–B	Heated oxygen sensor heater	Idling	Below 3.0 V
HT1A (E12–5) – E03 (E11–7) HT1B (E12–25) – E03 (E11–7) HT2A (E12–4) – E03 (E11–7) HT2B (E12–33) – E03 (E11–7)	Y – W–B P – W–B L – W–B L–B – W–B	Heated oxygen sensor heater	Ignition switch ON	9 to 14 V
KNK1 (E12–1) – EKNK (E12–2)	B – W	Knock sensor	Maintain engine speed at 4,000 rpm after warming up	Pulse generation (See page 05–156)

Symbols (Terminals No.)	Wiring Color	Terminal Description	Condition	STD Voltage
OC1+ (E11–16) – OC1– (E11–15)	W–G – Y–B	Camshaft timing oil control valve (OCV)	Ignition switch ON	Pulse generation (See page 05–41)
EVP1 (E13–34) – E01 (E13–7)	W–G – W–B	VSV for EVAP	Ignition switch ON	9 to 14 V
SCV (E13–5) – E1 (E11–1)	L–B – BR	VSV for IACV	Ignition switch ON	9 to 14 V
PIM (E13–33) – E2 (E13–28)	G–W – BR	Vacuum sensor	Ignition switch ON	3.3 to 3.9 V
PIM (E13–33) – E2 (E13–28)	G–W – BR	Vacuum sensor	Apply vacuum of 26.7 kPa (200 mmHg, 7.9 in.Hg)	2.6 to 3.0 V
PB (E13–26) – E2 (E13–28)	Y – BR	Brake booster pressure sensor	Ignition switch ON	3.3 to 3.9 V
PB (E13–26) – E2 (E13–28)	Y – BR	Brake booster pressure sensor	Apply vacuum of 26.7 kPa (200 mmHg, 7.9 in.Hg)	2.6 to 3.0 V
PR (E13–23) – E2 (E13–28)	Y–G – BR	Fuel pressure sensor	Idling	2.1 to 3.2 V
FP+ (E12–6) – E01 (E13–7) FP– (E12–3) – E01 (E13–7)	R – BR G – BR	Spill valve	Idling	Pulse generation (See page 05–207)
STA (E13–17) – E1 (E11–1)	B–Y – BR	Starter signal	Shift position in neutral, Ignition switch START	6.0 V or more
STP (E10–19) – E1 (E11–1)	G–W – BR	Stop lamp switch	Brake pedal depressed	9 to 14 V
STP (E10–19) – E1 (E11–1)	G–W – BR	Stop lamp switch	Brake pedal released	Below 1.5 V
ST1– (E10–12) – E1 (E11–1)	G–W – BR	Stop lamp switch	Ignition switch ON, Brake pedal depressed	Below 1.5 V
ST1– (E10–12) – E1 (E11–1)	G–W – BR	Stop lamp switch	Ignition switch ON, Brake pedal released	7.5 to 14 V
W (E9–11) – E1 (E11–1)	W – W–B	CHK ENG	Idling	9 to 14 V
W (E9–11) – E1 (E11–1)	W – W–B	CHK ENG	Ignition switch ON	Below 3.0 V
ELS (E9–12) – E1 (E11–1)	G – BR	Electric load	Taillight switch ON, Defogger switch ON	7.5 to 14 V
ELS (E9–12) – E1 (E11–1)	G – BR	Electric load	Taillight switch OFF, Defogger switch OFF	0 to 1.5 V
TACH (E9–5) – E1 (E11–1)	GR–R – BR	Engine speed	Idling	Pulse generation
SPD (E10–17) – E1 (E11–1)	V–W – W–B	Speed signal from combination meter	Ignition switch ON, Rotate driving wheel slowly	4.5 to 5.5 V
TC (E9–20) – E1 (E11–1)	W–L – BR	Terminal TC of DLC 3	Ignition switch ON	9 to 14 V
SIL (E9–18) – E1 (E11–1)	W–G – BR	Terminal SIL of DLC3	Connect the hand–held tester to DLC3	Pulse generation
PSW (E11–10) – E1 (E11–1)	G – BR	Power steering oil pressure switch	While turning the steering wheel	Below 1.5 V
F/PS (E9–14) – E1 (E11–1)	LG–B – BR	Airbag sensor assembly	Ignition switch ON	Below 1.5 V

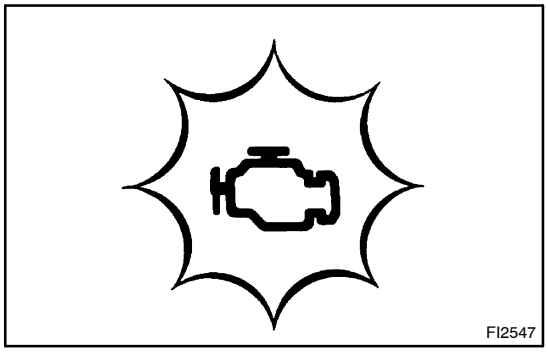
FI2547

05HI0–01

DIAGNOSIS SYSTEM

1. DESCRIPTION for EURO–OBD (European spec.)

- When troubleshooting Euro–OBD vehicles, the only difference from the usual troubleshooting procedure is that you connect an OBD scan tool complying with ISO 15031–4 or a hand–held tester to the vehicle, and read the various data output from the vehicle's ECM.
- Euro–OBD regulations require that the vehicle's on–board computer illuminates the check engine warning light (CHK ENG) on the instrument panel when the computer detects a malfunction in: 1) the emission control system / components, or 2) the powertrain control components (which affect vehicle emissions), or 3) the computer. In addition, the applicable Diagnostic Trouble Codes (DTCs) prescribed by ISO 15031–4 are recorded in the ECM memory (see page 05–31).

If the malfunction does not reoccur in 3 consecutive trips, the CHK ENG goes off automatically but the DTCs remain recorded in the ECM memory.

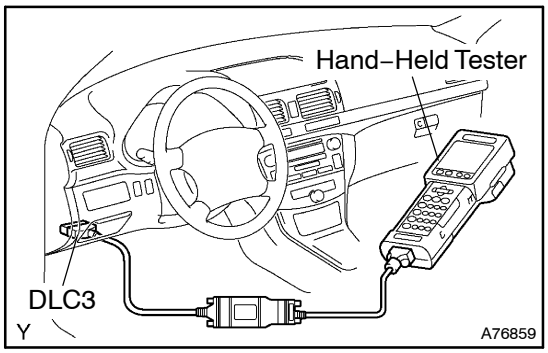

- To check the DTCs, connect the OBD scan tool or hand–held tester to Data Link Connector 3 (DLC3) on the vehicle. The OBD scan tool or hand–held tester also enables you to erase the DTCs and check the freeze frame data and various forms of engine data. (See the instruction manual for the OBD scan tool or the hand–held tester).
- DTCs include ISO controlled codes and manufacturer controlled codes. ISO controlled codes must be set according to the ISO, while manufacturer controlled codes can be set by a manufacturer within certain restrictions (see the DTC chart on page 05–31).
- The diagnosis system operates in normal mode during normal vehicle use. In "normal mode", 2 trip detection logic* is used to ensure accurate detection of malfunctions. A "check mode", is also available to technicians as an option. In "check mode", 1 trip detection logic is used for simulating malfunction symptoms and increasing the system's ability to detect malfunctions, including intermittent malfunctions (hand–held tester only)
  (see page 05–19).
- *2 trip detection logic:
  When a malfunction is first detected, the malfunction is temporarily stored in the ECM memory (1st trip). If the ignition switch is turned OFF and then ON again, and the same malfunction is detected again, the CHK ENG will illuminate (2nd trip).

- Freeze frame data:
  The freeze frame data records the engine conditions (fuel system, calculated load, engine coolant temperature, fuel trim, engine speed, vehicle speed, etc.) when a malfunction is detected. When troubleshooting, freeze frame data can help determine if the vehicle was running or stopped, if the engine was warmed up or not, if the air–fuel ratio was lean or rich, and other data from the time the malfunction occurred.

Priorities for troubleshooting:
When multiple DTCs occur, find out the order in which the DTCs should be inspected by checking the component's DTC chart. If no instructions are written in the DTC chart, check DTCs in the following order of priority:

(a) DTCs other than fuel trim malfunction DTCs (P0171, P0172, P0174 and P0175) and misfire DTCs (P0300 to P0304).
(b) Fuel trim malfunction DTCs (P0171, P0172, P0174 and P0175).
(c) Misfire DTCs (P0300 to P0304).

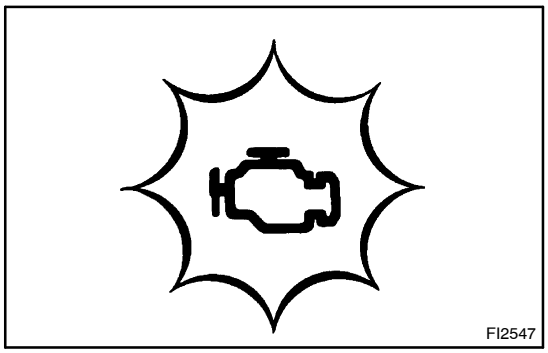
FI2547

2. DESCRIPTION for M–OBD (Except European spec.)

- When troubleshoot Multiplex OBD (M–OBD) vehicles, the only difference from the usual troubleshooting procedure is that you connect the hand–held tester to the vehicle, and read the various data output from the vehicle's ECM.
- The vehicle's on–board computer illuminates the check engine warning lamp (CHK ENG) on the instrument panel when the computer detects a malfunction in the computer itself or in drive system components. In addition, the applicable Diagnostic Trouble Codes (DTCs) are recorded in the ECM memory (see page 05–31).

If the malfunction does not recur, the CHK ENG goes off be disappeared by turning the ignition switch to OFF, but the recorded DTCs remain in the ECM memory.

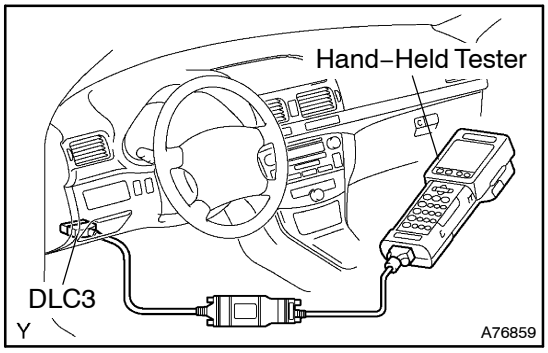

- To check the DTCs, connect the hand–held tester to the Data Link Connector 3 (DLC3) on the vehicle or connect terminals TC and CG on the DLC3(DTCs will be displayd on the multi–information display).
- The diagnosis system operates in normal mode during normal vehicle use. In "normal mode", 2 trip detection logic* is used to ensure accurate detection of malfunctions. A "check mode", is also available to technicians as an option. In "check mode", 1 trip detection logic is used for simulating malfunction symptoms and increasing the system's ability to detect malfunctions, including intermittent malfunctions (hand–held tester only)
  (see page 05–20).

- *2 trip detection logic:
  When a malfunction is first detected, the malfunction is temporarily stored in the ECM memory (1st trip). If the ignition switch is turned OFF and then ON again, and the same malfunction is detected again, the CHK ENG will illuminate (2nd trip).
- Freeze frame data:
  The freeze frame data records the engine conditions (fuel system, calculated load, engine coolant temperature, fuel trim, engine speed, vehicle speed, etc.) when a malfunction is detected. When troubleshooting, freeze frame data can help determine if the vehicle was running or stopped, if the engine was warmed up or not, if the air–fuel ratio was lean or rich, and other data from the time the malfunction occurred.

Priorities for troubleshooting:
When multiple DTCs occur, find out the order in which the DTCs should be inspected by checking the component's DTC chart. If no instructions are written in the DTC chart, check DTCs in the following order of priority:

(a) DTCs other than fuel trim malfunction DTCs (P0171, P0172, P0174 and P0175) and misfire DTCs (P0300 to P0304).
(b) Fuel trim malfunction DTCs (P0171, P0172, P0174 and P0175).
(c) Misfire DTCs (P0300 to P0304).

3. CHECK DLC3.

(a) The vehicle's ECM uses the ISO 9141–2 (Euro–OBD)/ ISO 14230(M–OBD) communication protocol. The terminal arrangement of the DLC3 complies with ISO 15031–03 and matches the ISO 9141–2/ ISO 14230 format.

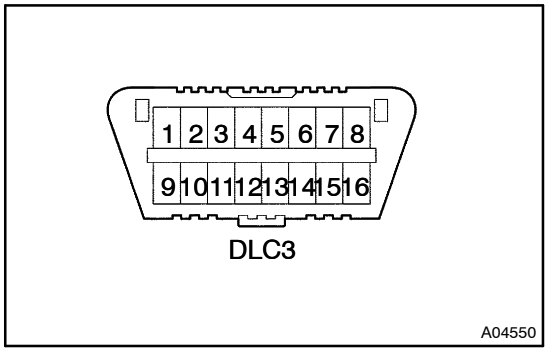

Symbol	Terminal No.	Name	Reference Terminal	Result	Condition
SIL	7	Bus "+" line	5 – Signal ground	Pulse generation	During transmission
CG	4	Chassis ground	Body ground	1 Ω or less	Always
SG	5	Signal ground	Body ground	1 Ω or less	Always
BAT	16	Battery positive	Body ground	9 to 14 V	Always

HINT:
Connect the cable of the OBD II scan tool or the hand–held tester to the DLC3, turn the ignition switch ON and attempt to use the hand–held tester. If the screen displays UNABLE TO CONNECT TO VEHICLE, a problem exists in the vehicle side or the tester side.

- If communication is normal when the tool is connected to another vehicle, inspect the DLC3 on the original vehicle.

- If communication is still impossible when the tool is connected to another vehicle, the problem is probably in the tool itself, so consult the Service Department listed in the tool's instruction manual.

4. INSPECT BATTERY VOLTAGE

Battery voltage: 11 to 14 V

If voltage is below 11 V, recharge the battery before proceeding.

5. CHECK CHK ENG

(a) The CHK ENG comes on when the ignition switch is turned to ON and the engine is not running.

HINT:

If the CHK ENG is not illuminated, troubleshoot the CHK ENG circuit (see page 05–251).

(b) When the engine is started, the CHK ENG should not illuminate. If the lamp remains on, the diagnosis system has detected a malfunction or abnormality in the system.

05HI1–01

DTC CHECK/CLEAR

NOTICE:

Hand–held tester only:

When the diagnosis system is changed from normal mode to check mode or vice–versa, all DTCs and freeze frame data recorded in normal mode will be erased. Before changing modes, always check and make a note of DTCs and freeze frame data.

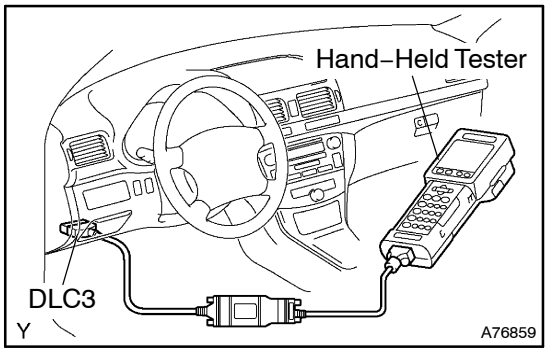

1. CHECK DTC (Using the hand–held tester)

(a) Connect the hand–held tester to the DLC3.

(b) Turn the ignition switch to ON.

(c) Use the hand–held tester to check the DTCs and freeze frame data and then write them down. For the hand–held tester, select the item: DIAGNOSIS / ENHANCED OBD II / DTC INFO / CURRENT CODEDS.

HINT:

If you need help with the hand–held tester, refer to its instruction book.

(d) See page 05–31 to confirm the details of the DTCs.

2. FREEZE FRAME DATA

(a) Connect the hand–held tester to the DLC3.

(b) Turn the ignition switch to ON.

(c) Use the hand–held tester to check the DTCs and freeze frame data and then write them down. For the hand–held tester, select the item: DIAGNOSIS / OBD/MOBD / FREEZE FRAME DATA.

HINT:

If you need help with the hand–held tester, refer to its instruction book.

3. CLEAR DTCs AND FREEZE FRAME DATA (using the hand–held tester)

(a) Connect the hand–held tester to the DLC3.

(b) Turn the ignition switch to ON. (Do not start the engine start)

(c) Use the hand–held tester to check the DTCs and freeze frame data and then write them down. For the hand–held tester, select the item: DIAGNOSIS / OBD/MOBD / DTC INFO / CLEAR CODES.

HINT:

If you need help with the hand–held tester, refer to its instruction book.

4. CLEAR DTCs AND FREEZE FRAME DATA (not using the hand–held tester)

(a) Remove the EFI and THROTTLE fuses from the engine room R/B No. 1 for more than 60 seconds, or disconnect the battery terminal for more than 60 seconds. When disconnecting the battery terminal, perform the ”INITIALIZE” procedure.

05HI2–01

CHECK MODE PROCEDURE

HINT:
Hand–held tester only:
Check mode has a higher sensitivity to detect malfunctions and can detect malfunctions that normal mode cannot detect.
Check mode can also detect all the malfunctions that normal mode can detect.

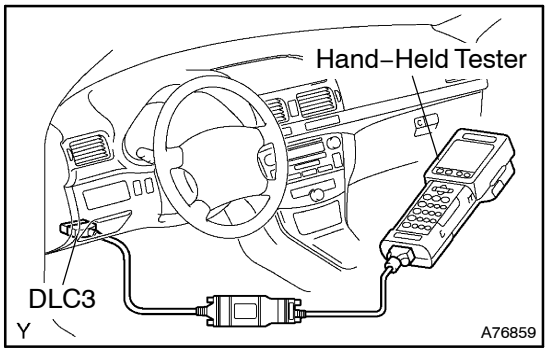

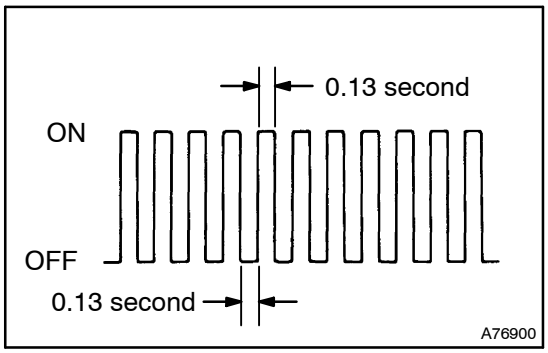

1. CHECK MODE PROCEDURE(Using the hand–held tester)

(a) Make sure that the items below are true.
  (1) Battery positive voltage 11 V or more.
  (2) Throttle valve fully closed.
  (3) Transmission in the P or N position.
  (4) A/C switched to OFF.
(b) Turn the ignition switch to OFF.
(c) Connect the hand–held tester to the DLC3.
(d) Turn the ignition switch to ON.
(e) Change the ECM to check mode with the hand–held tester. Make sure the CHK ENG flashes as shown in the illustration.

NOTICE:
All DTCs and freeze frame data recorded will be erased if: 1) the hand–held tester is used to change the ECM from normal mode to check mode or vice–versa; or 2) during check mode, the ignition switch is turned from ON to ACC or OFF.

(f) Start the engine. The CHK ENG should turn off after the engine starts.
(g) Simulate the conditions of the malfunction described by the customer.
(h) After simulating the malfunction conditions, use the hand–held tester diagnosis selector to check the DTC, freeze frame data and other data.
(i) After checking the DTC, inspect the applicable circuit.

2. CLEAR DTCs (Using the hand–held tester)

(a) Connect the hand–held tester to the DLC3.
(b) Turn the ignition switch to ON.
(c) Erase DTCs and freeze frame data with the hand–held tester. For the hand–held tester: 1) enter the following menus: DIAGNOSIS ENHANCED OBD II / DTC INFO / CLEAR CODES; and 2) press YES.

HINT:
If you need help with the hand–held tester, refer to its instruction book.

3. CLEAR DTCs (Not using the hand–held tester)

(a) Disconnect the battery terminal or remove the EFI and THROTTLE fuses from the engine room R/B No. 1 for more than 60 seconds.

(b) Remove the EFI and THROTTLE fuse from the engine room R/B No.1 for more than 60 seconds, or disconnect the battery terminal for more than 60 seconds. When disconnecting the battery terminal, perform the ”INITIALIZE” procedure.

05HI3–01

FAIL–SAFE CHART

If any of the following codes is recorded, the ECM enters the fail–safe mode.

DTC No.	Fail–Safe Operation	Fail–Safe Deactivation Conditions
P0031 P0032 P0037 P0038 P0051 P0052 P0057 P0058	Faulty heater circuit is turned off	Ignition switch is turned to OFF
P0100 P0102 P0103	Ignition timing is calculated from engine RPM and TP (Throttle Position)	”Pass” condition is detected
P0105 P0107 P0108	• Intake air pressure is controlled with a calculated value in proportion to the throttle opening angle and the engine speed • Limit the engine speed to 3,000 rpm or less	”Pass” condition is detected
P0110 P0112 P0113	IAT (Intake Air Temperature) is fixed at 20°C (68°F)	”Pass” condition is detected
P0115 P0117 P0118	ECT (Engine Coolant Temperature) is fixed at 80°C (176°F)	”Pass” condition is detected
P0120 P0121 P0122 P0123 P0220 P0222 P0223 P2135	If the Electronic Throttle Control System (ETCS) has a malfunction, the ECM cuts off current to the throttle control motor. The throttle control valve returns to a predetermined opening angle (approximately 16°) by the force of the return spring. The ECM then adjusts the engine output by controlling the fuel injection (intermittent fuel–cut) and ignition timing in accordance with the accelerator pedal opening angle to enable the vehicle to continue at a minimal speed. If the accelerator pedal is depressed firmly and slowly, the vehicle can be driven slowly. If the accelerator pedal is depressed quickly, the vehicle may speed up and slow down erratically.	”Pass” condition is detected, and then the ignition switch is turned to OFF
P0190 P0191	• Stop the high–pressure pump operation • Limit the engine speed to 2,000 rpm or less	”Pass” condition is detected, and then the ignition switch is turned to OFF
P0200	Turn off the INJ relay and cut the power for the EDU	”Pass” condition is detected, and then the ignition switch is turned to OFF
P0201 P0202 P0203 P0204	• Stop fuel injection for an abnormal cylinder and related other cylinders • Limit the engine speed to 3,000 rpm or less	”Pass” condition is detected, and then the ignition switch is turned to OFF
P0325 P0327 P0328	Maximum ignition timing retardation	Ignition switch is turned to OFF
P0351 P0352 P0353 P0354	Stop fuel injection for all the cylinders	”Pass” condition is detected
P0604 P0606 P0607 P0657	Turn off the power for the throttle motor, return the throttle valve in position using the return spring, and fuel cut intermittent	”Pass” condition is detected, and then the ignition switch is turned to OFF
P1235	• Stop the high–pressure pump operation • Limit the engine speed to 2,000 rpm or less	”Pass” condition is detected, and then the ignition switch is turned to OFF
P2008	Force IACV to close	”Pass” condition is detected, and then the ignition switch is turned to OFF

DTC No.	Fail–Safe Operation	Fail–Safe Deactivation Conditions
P2102 P2103 P2111 P2112 P2118 P2119	Turn off the power for the throttle motor, return the throttle valve in position using the return spring, and fuel cut intermittent	”Pass” condition is detected, and then the ignition switch is turned to OFF
P2120 P2121 P2122 P2123 P2125 P2127 P2128 P2138	• If both VPA1 and VPA2 are malfunctioning: Engine RPM is fixed at idle • If either of VPA1 or VPA2 is malfunctioning: Fuel cut intermittently	”Pass” condition is detected, and then the ignition switch is turned to OFF

05HI4–01

DATA LIST/ACTIVE TEST

1. DATA LIST

HINT:

Using the hand–held tester DATA LIST allows switch, sensor, actuator and other item values to be read without removing any parts. Reading the DATA LIST early in troubleshooting is one way to shorten labor time.

NOTICE:

In the table below, the values listed under ”Normal Condition” are reference values. Do not depend solely on these reference values when deciding whether a part is faulty or not.

(a) Warm up the engine.
(b) Turn the ignition switch to OFF.
(c) Connect the hand–held tester to the DLC3.
(d) Turn the ignition switch to ON.
(e) Turn the hand–held tester ON.
(f) Select the item: DIAGNOSIS / OBD/MOBD / DATA LIST.
(g) According to the display on the tester, perform the DATA LIST.

Hand–held Tester Display	Measurement Item/Range (Display)	Normal Condition *1	Diagnostic Note
INJECTOR	Injection period of the No. 1 cylinder/ Min.: 0 ms, Max.: 32.64 ms	Idling: 0.5 to 1.3 ms	—
IGN ADVANCE	Ignition timing advance for No. 1 cylinder/ Min.: –64 deg., Max.: 63.5 deg	Idling: BTDC 4 to 23˚	—
CALC LOAD	Calculated load by ECM/ Min.: 0 %, Max.: 100 %	• Idling: 12 to 27 % • Running without load (2,500 rpm): 10 to 25 %	—
MAF	Air flow rate from MAF meter/ Min.: 0 gm/s, Max.: 655 gm/s	• Idling: 2.0 to 4.7 gm/s • Running without load (2,500 rpm): 7.0 to 14.0 gm/s	If value is approximately 0.0 gm/s: • Mass air flow meter power source circuit open • VG circuit open or short If the value is 160.0 gm/s or more: • E2G circuit open
MAP	Absolute pressure inside intake manifold/ Min.: 0 kPa, Max.: 224 kPa	• Idling: 24 to 36 kPa • Running without load (2,500 rpm): 20 to 32 kPa	If value is approximately 0.0 kPa: • PIM circuit short If the value is 142.0 kPa or more: • VC circuit open or short • PIM circuit open • E2 circuit open
ENGINE SPD	Engine speed/ Min.: 0 rpm, Max.: 16383 rpm	Idling: 625 to 725 rpm	—
COOLANT TEMP	Coolant temperature/ Min.: –40°C, Max.: 140°C	After warming up: 80 to 96˚C (176 to 203˚F)	If value is –40 °C or 140 °C, sensor circuit is open or shorted
INTAKE AIR	Intake air temperature/ Min.: –40°C, Max.: 140°C	Equivalent to ambient air temperature (after cold soak)	If value is –40 °C or 140 °C, sensor circuit is open or shorted
THROTTLE POS	Absolute throttle position sensor/ Min.: 0 %, Max.: 100 %	• Throttle fully closed: 10 to 24 % • Throttle fully open: 64 to 96 %	Read the value with ignition switch ON (Do not start engine)
CTP SW	Closed throttle position switch/ ON or OFF	• Throttle fully closed: ON • Throttle open: OFF	—
VEHICLE SPD	Vehicle speed/ Min.: 0 km/h, Max.: 255 km/h	Actual vehicle speed	Speed indicated on speedometer
ACCEL POS #1	Accelerator pedal position sensor No.1 output voltage/ Min.: 0 V, Max.: 5 V	• Accelerator pedal released: 0.5 to 1.1 V • Accelerator pedal depressed: 2.5 to 4.6 V	Read the value with ignition switch ON (Do not start engine)

Hand–held Tester Display	Measurement Item/Range (Display)	Normal Condition *1	Diagnostic Note
ACCEL POS #2	Accelerator pedal position sensor No.2 output voltage/ Min.: 0 V, Max.: 5 V	• Accelerator pedal released: 1.5 to 2.9 V • Accelerator pedal depressed: 3.5 to 5.5 V	Read the value with ignition switch ON (Do not start engine)
THROTTLE POS #2	Throttle position sensor No.2 output voltage/ Min.: 0 V, Max.: 5 V	• Throttle fully closed: 2.1 to 3.1 V • Throttle fully open: 4.5 to 5.5 V	Read the value with ignition switch ON (Do not start engine)
THROTTLE TARGT	Target position of throttle valve/ Min.: 0 V, Max.: 5 V	Idling: 0.4 to 1.1 V	—
THROTTLE OPN DUTY	Throttle motor opening duty ratio/ Min.: 0 %, Max.: 100 %	Throttle fully closed: 0 %	• When accelerator pedal is depressed, duty ratio is increased • Read the value with ignition switch ON (Do not start engine)
THROTTLE CLS DUTY	Throttle motor closed duty ratio/ Min.: 0 %, Max.: 100 %	Throttle fully closed: 0 %	• When accelerator pedal is released quickly, duty ratio is increased • Read the value with ignition switch ON (Do not start engine)
THROTTLE MOT	Whether or not throttle motor control is permitted/ ON or OFF	Idling: ON	—
ETCS MAG CLUTCH	Electromagnetic clutch/ ON or OFF	Idling: ON	
+BM	Whether or not electric throttle control system power is inputted/ ON or OFF	Idling: ON	—
ACCEL IDL POS	Whether or not accelerator pedal position sensor is detecting idle/ ON or OFF	Idling: ON	—
THROTTLE IDL POS	Whether or not throttle position sensor is detecting idle/ ON or OFF	Idling: ON	—
FAIL #1	Whether or not fail safe function is executed/ ON or OFF	ETCS has failed: ON	—
FAIL #2	Whether or not fail safe function is executed/ ON or OFF	ETCS has failed: ON	—
THROTTLE INITIAL	Throttle fully closed learned value Min.: 0 V, Max.: 5 V	0.5 to 0.9 V	—
ACCEL LEARN VAL	Accelerator fully closed learned value Min.: 0 V, Max.: 5 V	0.4 to 1.4 V	—
THROTTLE MOT	Throttle motor current Min.: 0 A, Max.: 20 A	Idling: 0 to 3.0 A	—
ETCS MAG CLUTCH	Electromagnetic clutch current Min.: 0 A, Max.: 2.5 A	Idling: ON	
O2S B1 S1	Heated oxygen sensor output voltage for bank 1 sensor 1/ Min.: 0 V, Max.: 1.275 V	Driving (50 km/h, 31 mph): 0.1 to 0.9 V	Performing the INJ VOL or A/F CONTROL function of the ACTIVE TEST enables the technician to check the voltage output of each sensor
O2S B1 S2	Heated oxygen sensor output voltage for bank 1 sensor 2/ Min.: 0 V, Max.: 1.275 V	Driving (50 km/h, 31 mph): 0.1 to 0.9 V	Performing the INJ VOL or A/F CONTROL function of the ACTIVE TEST enables the technician to check the voltage output of each sensor

Hand–held Tester Display	Measurement Item/Range (Display)	Normal Condition *1	Diagnostic Note
O2S B2 S1	Heated oxygen sensor output voltage for bank 2 sensor 1/ Min.: 0 V, Max.: 1.0 V	Driving (50 km/h, 31 mph): 0.1 to 0.9 V	Performing the INJ VOL or A/F CONTROL function of the ACTIVE TEST enables the technician to check the voltage output of each sensor
O2S B2 S2	Heated oxygen sensor output voltage for bank 2 sensor 2/ Min.: 0 V, Max.: 1.0 V	Driving (50 km/h, 31 mph): 0.1 to 0.9 V	Performing the INJ VOL or A/F CONTROL function of the ACTIVE TEST enables the technician to check the voltage output of each sensor
SHORT FT #1	Short–term fuel trim of bank 1/ Min.: –100 %, Max.: 100%	0 ± 20 %	This item is short–term fuel compensation used to maintain air–fuel ratio at stoichiometric air–fuel ratio
LONG FT #1	Long–term fuel trim of bank 1/ Min.: –100 %, Max.: 100 %	0 ± 20 %	This item is overall long–term fuel compensation that helps to maintain air–fuel ratio at stoichiometric air–fuel ratio (steadies long term deviations of short–term fuel trim from central value)
TOTAL FT #1	Total fuel trim of bank 1/ Min.: 0.5, Max.: 1.496	Idling: 0.5 to 1.4	—
SHORT FT #2	Short–term fuel trim of bank 2/ Min.: –100 %, Max.: 100 %	0 ± 20 %	This item is short–term fuel compensation used to maintain air–fuel ratio at stoichiometric air–fuel ratio
LONG FT #2	Long–term fuel trim of bank 2/ Min.: –100 %, Max.: 100 %	0 ± 20 %	This item is overall long–term fuel compensation that helps to maintain air–fuel ratio at stoichiometric air–fuel ratio (steadies long term deviation of short–term fuel trim from central value)
TOTAL FT #2	Total fuel trim of bank 2/ Min.: 0.5, Max.: 1.496	Idling: 0.5 to 1.4	—
O2FT B1 S1	Short–term fuel trim associated with the bank 1 sensor 1/ Min.: –100 %, Max.: 100 %	0 ± 20 %	Same as SHORT FT #1
O2FT B1 S2	Short–term fuel trim associated with the bank 1 sensor 2/ Min.: –100 %, Max.: 100 %	0 ± 20 %	Same as SHORT FT #1
O2FT B2 S1	Short–term fuel trim associated with the bank 2 sensor 1/ Min.: –100 %, Max.: 100 %	0 ± 20 %	Same as SHORT FT #2
O2FT B2 S2	Short–term fuel trim associated with the bank 2 sensor 2/ Min.: –100 %, Max.: 100 %	0 ± 20 %	Same as SHORT FT #2

Hand–held Tester Display	Measurement Item/Range (Display)	Normal Condition *1	Diagnostic Note
FUEL SYS #1	Fuel system status (Bank1) / OL or CL or OL DRIVE or OL FAULT or CL FAULT	Idling after warming up: CL	• OL (Open Loop): Has not yet satisfied conditions to go closed loop • CL (Closed Loop): Using heated oxygen sensor(s) as feedback for fuel control • OL DRIVE: Open loop due to driving conditions (fuel enrichment) • OL FAULT: Open loop due to detected system fault • CL FAULT: Closed loop but one of heated oxygen sensors, which is used for fuel control, is malfunctioning
FUEL SYS #2	Fuel system status (Bank2) / OL or CL or OL DRIVE or OL FAULT or CL FAULT	Idling after warming up: CL	• OL (Open Loop): Has not yet satisfied conditions to go closed loop • CL (Closed Loop): Using heated oxygen sensor(s) as feedback for fuel control • OL DRIVE: Open loop due to driving conditions (fuel enrichment) • OL FAULT: Open loop due to detected system fault • CL FAULT: Closed loop but one of heated oxygen sensors, which is used for fuel control, is malfunctioning
FC IDL	Fuel cut idle/ ON or OFF	Fuel cut operation: ON	FC IDL= ”ON” when throttle valve fully closed and engine speed is over 1,500 rpm
O2 LR B1 S1	Oxygen sensor lean rich bank 1 sensor 1: Response time for oxygen sensor output to switch from lean to rich/ Min.: 0 ms, Max.: 16,711 ms	Idling after warming up: 0 to 1,000 msec	—
O2 LR B2 S1	Oxygen sensor lean rich bank 2 sensor 1: Response time for oxygen sensor output to switch from lean to rich/ Min.: 0 ms, Max.: 16,711 ms	Idling after warming up: 0 to 1,000 msec	—
O2 RL B1 S1	Oxygen sensor rich lean bank 1 sensor 1: Response time for oxygen sensor output to switch from rich to lean/ Min.: 0 ms, Max.: 16,711 ms	Idling after warming up: 0 to 1,000 msec	—
O2 RL B2 S1	Oxygen sensor rich lean bank 2 sensor 1: Response time for oxygen sensor output to switch from rich to lean/ Min.: 0 ms, Max.: 16,711 ms	Idling after warming up: 0 to 1,000 msec	—
STARTER SIG	Starter signal/ ON or OFF	Cranking: ON	—
A/C SIG	A/C signal/ ON or OFF	A/C ON: ON	—
PNP SW [NSW] *2	Park/neutral position switch signal/ ON or OFF	P or N position: ON	—

Hand–held Tester Display	Measurement Item/Range (Display)	Normal Condition *1	Diagnostic Note
ELECT LOAD SIG	Electrical load signal/ ON or OFF	• Taillight switch ON: ON • Defogger switch ON: ON	—
STOP LIGHT SW	Stop lamp switch/ ON or OFF	• Brake pedal depressed: ON • Brake pedal released: OFF	—
PS OIL PRESS SW	Power steering signal/ ON or OFF	• While turning the steering wheel: ON • While not turning the steering wheel: OFF	The idle–up control is performed when power steering signel is ON
PS SIGNAL	Power steering signal/ ON or OFF	When the steering wheel is turned: ON	This signal is usually ON status until the IG switch is turned to OFF
FUEL SP CTL PMP	Fuel pump speed control status/ ON or OFF	Idling: ON Cranking: OFF	
SCV VSV	VSV status for intake air control valve/ ON or OFF	VSV operation: ON	—
FUEL PUMP/ SPD	Fuel pump/speed status/ ON/H or OFF/M,L	Idling: ON	—
EVAP VSV	VSV status for EVAP control/ ON or OFF	VSV operating: ON	VSV for EVAP is controlled by the ECM (ground side duty control)
VVT CTRL B1	VVT control status (bank 1)/ ON or OFF	VVT system operation: ON	—
IGNITION	Ignition counter/ Min.: 0, Max.: 400	0 to 400	—
CYL #1, #2, #3, #4	Misfire ratio of the cylinder 1 to 4/ Min.: 0 %, Max.: 50 %	0 %	This item is displayed in only idling
MISFIRE LOAD	Engine load for first misfire range/ Min.: 0 g/rev, Max.: 3.98 g/rev	Misfire 0: 0 g/rev	—
MISFIRE RPM	Engine RPM for first misfire range/ Min.: 0 rpm, Max.: 6,375 rpm	Misfire 0: 0 rpm	—
FC TAU	Fuel Cut TAU: Fuel cut during very light load/ ON or OFF	Fuel cut operating: ON	The fuel cut is being performed under very light load to prevent the engine combustion from becoming incomplete
O2 RL B1 S2	Oxygen sensor rich lean bank 1 sensor 2: Response time for oxygen sensor output to switch from rich to lean/ Min.: 0 ms, Max.: 16,700 ms	Idling after warming up: 0 to 1,000 msec.	—
O2 RL B2 S2	Oxygen sensor rich lean bank 2 sensor 2: Response time for oxygen sensor output to switch from rich to lean/ Min.: 0 ms, Max.: 16,700 ms	Idling after warming up: 0 to 1,000 msec.	—
O2 RL B1 S2	Oxygen sensor rich lean bank 1 sensor 2: Response time for oxygen sensor output to switch from rich to lean/ Min.: 0 ms, Max.: 16,702.5 ms	Idling after warming up: 0 to 1,000 msec.	—
O2 RL B2 S2	Oxygen sensor rich lean bank 2 sensor 2: Response time for oxygen sensor output to switch from rich to lean/ Min.: 0 ms, Max.: 16,702.5 ms	Idling after warming up: 0 to 1,000 msec.	—
CHECK MODE	Check mode/ ON or OFF	Check mode ON: ON	See page 05–20

Hand–held Tester Display	Measurement Item/Range (Display)	Normal Condition *1	Diagnostic Note
CHK ENG ON RUN DIST	Distance since activation of check engine warning light/ Min.: 0 km, Max.: 65,535 km	When there is no DTC: 0 km	—
FUEL PRESS	Fuel high pressure inside fuel delivery pipe/ Min.: 0 MPa, Max.: 819 MPa	• Idling: 8 to 13 MPa • Running without load (3,000 rpm): 9.5 to 10.5 MPa	—

*1: If no conditions are specifically stated for ”Idling”, the shift lever is in the N or P position, the A/C switch is OFF and all accessory switches are OFF.
*2: For A/T only

2. ACTIVE TEST

HINT:

Performing the ACTIVE TEST using the hand–held tester allows the relay, VSV, actuator and so on to operate without parts removal. Performing the ACTIVE TEST as a first step of troubleshooting is one method to shorten diagnostic time.

It is possible to display the DATA LIST during the ACTIVE TEST.

(a) Warm up the engine.
(b) Turn the ignition switch to OFF.
(c) Connect the hand–held tester to the DLC3.
(d) Turn the ignition switch to ON.
(e) Turn the hand–held tester ON.
(f) Select the item: DIAGNOSIS / OBD/MOBD / ACTIVE TEST.
(g) According to the display on the tester, perform the ACTIVE TEST.

Hand–held Tester Display	Test Details	Diagnostic Note
INJ VOL	[Test Details] Control the injection volume Min.: –12.5 %, Max.: 25 % [Vehicle Condition] Engine speed: 3,000 rpm or less	• All injectors are tested at once • Injection volume is gradually changed between –12.5 and 25 %
A/F CONTROL	[Test Details] Control the injection volume –12.5 or 25 % (Change the injection volume –12.5 % or 25 %) [Vehicle Condition] Engine speed: 3,000 rpm or less	Following A/F CONTROL procedure enables the technician to check and graph voltage output of both the heated oxygen sensors To display the graph, enter ACTIVE TEST / A/F CONTROL / USER DATA, select ”O2S B1S1 and B1S2” or ”O2S B2S1 and B2S2” by pressing ”YES” followed by ”ENTER” and then ”F4”
SCV VSV	[Test Details] Activate the VSV for intake air control valve ON or OFF	—
FUEL PMP SP CTL	[Test Details] Activate the fuel pump speed control ON or OFF	—
EVAP (PURGE) VSV	[Test Details] Activate the VSV for EVAP (Purge) control ON or OFF	—
FUEL PUMP / SPD	[Test Details] Control the fuel pump / speed ON or OFF	—
VVT CTRL B1	[Test Details] Activate the VVT system (Bank 1) ON or OFF	• ON: Rough idle or engine stall • OFF: Normal engine speed
TC/TE1	[Test Details] Connect the TC and TE1 ON or OFF	—
FC IDL PROHBT	[Test Details] Control the idle fuel cut prohibit ON or OFF	—

05CID–02

DIAGNOSTIC TROUBLE CODE CHART

HINT:

Parameters listed in the chart may be different than your readings depending on the type of instrument used and other factors.

During the DTC check, refer to the table below if a malfunction code is displayed. For details about each code, refer to the page number in the DTC Chart's left column.

DTC No. (See Page)	Detection Item	Trouble Area	*1 CHK ENG	Memory
P0010 (05–41)	Camshaft Position "A" Actuator Circuit (Bank 1)	• Open or short in OCV circuit • OCV • ECM	○	○
P0011 (05–44)	Camshaft Position "A" –Timing Over– Advanced or System Performance (Bank 1)	• Valve timing • OCV • Camshaft timing gear assy • ECM	○	○
P0012 (05–41)	Camshaft Position "A" –Timing Over– Retarded (Bank 1)	• Valve timing • OCV • Camshaft timing gear assy • ECM	○	○
P0016 (05–48)	Crankshaft Position – Camshaft Position Correlation (Bank 1 Sensor A)	• Mechanical system (Timing chain has jumped a tooth, chain stretched) • ECM	○	○
P0031 (05–49)	Oxygen Sensor Heater Circuit Low (Bank 1 Sensor 1) *7	• Open or short in heater circuit of heated oxygen sensor • Heated oxygen sensor heater (Bank 1 Sensor 1) *7 • EFI relay • EFI No. 2 fuse • ECM	○	○
P0032 (05–49)	Oxygen Sensor Heater Circuit High (Bank 1 Sensor 1) *7	• Open or short in heater circuit of heated oxygen sensor • Heated oxygen sensor heater (Bank 1 Sensor 1) *7 • EFI relay • ECM	○	○
P0037 (05–49)	Oxygen Sensor Heater Control Circuit Low (Bank 1 Sensor 2) *7	• Open in heater circuit of heated oxygen sensor • Heated oxygen sensor heater (Bank 1 Sensor 2) *7 • EFI relay • EFI No. 2 fuse • ECM	○	○
P0038 (05–49)	Oxygen Sensor Heater Control Circuit High (Bank 1 Sensor 2) *7	• Short in heater circuit of heated oxygen sensor • Heated oxygen sensor heater (Bank 1 Sensor 2) *7 • EFI relay • ECM	○	○
P0051 (05–49)	Oxygen Sensor Heater Circuit Low (Bank 2 Sensor 1) *8	• Open in heater circuit of heated oxygen sensor • Heated oxygen sensor heater (Bank 2 Sensor 1) *8 • EFI relay • EFI No. 2 fuse • ECM	○	○
P0052 (05–49)	Oxygen Sensor Heater Circuit High (Bank 2 Sensor 1) *8	• Short in heater circuit of heated oxygen sensor • Heated oxygen sensor heater (Bank 2 Sensor 1) *8 • EFI relay • ECM	○	○
P0057 (05–49)	Oxygen Sensor Heater Control Circuit Low (Bank 2 Sensor 2) *8	• Open in heater circuit of heated oxygen sensor • Heated oxygen sensor heater (Bank 2 Sensor 2) *8 • EFI relay • EFI No. 2 fuse • ECM	○	○
P0058 (05–49)	Oxygen Sensor Heater Control Circuit High (Bank 2 Sensor 2) *8	• Short in heater circuit of heated oxygen sensor • Heated oxygen sensor heater (Bank 2 Sensor 2) *8 • EFI relay • ECM	○	○

DTC No. (See Page)	Detection Item	Trouble Area	*1 CHK ENG	Memory
P0100 (05–55)	Mass or volume Air Flow Circuit	• Open or short in mass air flow meter circuit • Mass air flow meter • ECM	○	○
P0102 (05–55)	Mass or volume Air Flow Circuit Low Input	• Open in mass air flow meter circuit • Short in ground circuit • Mass air flow meter • ECM	○	○
P0103 (05–55)	Mass or volume Air Flow Circuit High Input	• Open in mass air flow meter circuit (EVG circuit) • Short in mass air flow meter circuit (+B circuit) • Mass air flow meter • ECM	○	○
P0105 (05–61)	Manifold Absolute Pressure/ Barometric Pressure Circuit	• Open or short in manifold absolute pressure sensor circuit • Manifold absolute pressure sensor • ECM	○	○
P0107 (05–61)	Manifold Absolute Pressure/ Barometric Pressure Circuit Low Input	• Open or short in manifold absolute pressure sensor circuit • Manifold absolute pressure sensor • ECM	○	○
P0108 (05–61)	Manifold Absolute Pressure/ Barometric Pressure Circuit High Input	• Open or short in manifold absolute pressure sensor circuit • Manifold absolute pressure sensor • ECM	○	○
P0110 (05–66)	Intake Air Temperature Circuit	• Open or short in intake air temperature sensor circuit • Intake air temperature sensor (built in mass air flow meter) • ECM	○	○
P0112 (05–66)	Intake Air Temperature Circuit Low Input	• Short in intake air temperature sensor circuit • Intake air temperature sensor (built in mass air flow meter) • ECM	○	○
P0113 (05–66)	Intake Air Temperature Circuit High Input	• Open in intake air temperature sensor circuit • Intake air temperature sensor (built in mass air flow meter) • ECM	○	○
P0115 (05–70)	Engine Coolant Temperature Circuit	• Open or short in engine coolant temperature sensor circuit • Engine coolant temperature sensor • ECM	○	○
P0116 (05–74)	Engine Coolant Temperature Circuit Range/Performance Problem	• Engine coolant temperature sensor	○	○
P0117 (05–70)	Engine Coolant Temperature Circuit Low Input	• Short in engine coolant temperature sensor circuit • Engine coolant temperature sensor • ECM	○	○
P0118 (05–70)	Engine Coolant Temperature Circuit High Input	• Open in engine coolant temperature sensor circuit • Engine coolant temperature sensor • ECM	○	○
P0120 (05–75)	Throttle/Pedal Position Sensor/ Switch "A" Circuit	• Throttle position sensor (built in throttle body) • ECM	○	○
P0121 (05–81)	Throttle/Pedal Position Sensor/ Switch "A" Circuit Range/Performance Problem	• Throttle position sensor (built in throttle body)	○	○
P0122 (05–75)	Throttle/Pedal Position Sensor/ Switch "A" Circuit Low Input	• Throttle position sensor (built in throttle body) • Short in VTA1 circuit • Open in VC circuit • ECM	○	○
P0123 (05–75)	Throttle/Pedal Position Sensor/ Switch "A" Circuit High Input	• Throttle position sensor (built in throttle body) • Open in VTA1 circuit • Open in E2 circuit • VC and VTA1 circuit are short–circuited • ECM	○	○

DTC No. (See Page)	Detection Item	Trouble Area	*1 CHK ENG	Memory
P0130 *3 (05–82)	Oxygen Sensor Circuit (Bank 1 Sensor 1) *7	• Open or short in heated oxygen sensor circuit • Heated oxygen sensor (Bank 1 Sensor 1) *7 • Heated oxygen sensor heater (Bank 1 Sensor 1) *7 • EFI relay • Air induction system • Fuel pressure • Injector • ECM	○	○
P0133 *3 (05–94)	Oxygen Sensor Circuit Slow Response (Bank 1 Sensor 1) *7	• Open or short in heated oxygen sensor circuit • Heated oxygen sensor (Bank 1 Sensor 1) *7 • Heated oxygen sensor heater (Bank 1 Sensor 1) *7 • EFI relay • Air induction system • Fuel pressure • Injector • ECM	○	○
P0134 (05–101)	Oxygen Sensor Circuit No Activity Detected (Bank 1 Sensor 1) *7	• Open or short in heated oxygen sensor circuit • Heated oxygen sensor (Bank 1 Sensor 1) *7 • Heated oxygen sensor heater (Bank 1 Sensor 1) *7 • EFI relay • Air induction system • Fuel pressure • PCV hose connection • PCV valve and hose • Injector • Gas leakage in exhaust system • ECM	○	○
P0136 *3 (05–109)	Oxygen Sensor Circuit Malfunction (Bank 1 Sensor 2) *7	• Open or short in heated oxygen sensor circuit • Heated oxygen sensor (Bank 1 Sensor 2) *7 • Heated oxygen sensor heater (Bank 1 Sensor 2) *7 • EFI relay	○	○
P0150 *3 (05–82)	Oxygen Sensor Circuit (Bank 2 Sensor 1) *8	• Open or short in heated oxygen sensor circuit • Heated oxygen sensor (Bank 2 Sensor 1) *8 • Heated oxygen sensor heater (Bank 2 Sensor 1) *8 • EFI relay • Air induction system • Fuel pressure • Injector • ECM	○	○
P0153 *3 (05–94)	Oxygen Sensor Circuit Slow Response (Bank 2 Sensor 1) *8	• Open or short in heated oxygen sensor circuit • Heated oxygen sensor (Bank 2 Sensor 1) *8 • Heated oxygen sensor heater (Bank 2 Sensor 1) *8 • EFI relay • Air induction system • Fuel pressure • Injector • ECM	○	○
P0154 (05–101)	Oxygen Sensor Circuit No Activity Detected (Bank 2 Sensor 1) *8	• Open or short in heated oxygen sensor circuit • Heated oxygen sensor (Bank 2 Sensor 1) *8 • Heated oxygen sensor heater (Bank 2 Sensor 1) *8 • EFI relay • Air induction system • Fuel pressure • PCV hose connection • PCV valve and hose • Injector • Gas leakage in exhaust system • ECM	○	○

DTC No. (See Page)	Detection Item	Trouble Area	*1 CHK ENG	Memory
P0156 *3 (05–109)	Oxygen Sensor Circuit Malfunction (Bank 2 Sensor 2) *8	• Open or short in heated oxygen sensor circuit • Heated oxygen sensor (Bank 2 Sensor 2) *8 • Heated oxygen sensor heater (Bank 2 Sensor 2) *8 • EFI relay	○	○
P0171 *3 (05–115)	System too Lean (Bank 1) *7	• Air induction system • Injector blockage • Mass air flow meter • Manifold absolute pressure sensor • Engine coolant temperature sensor • Fuel pressure • Gas leakage in exhaust system • Open or short in heated oxygen sensor circuit • Heated oxygen sensor (Bank 1 Sensor 1) *7 • Heated oxygen sensor heater (Bank 1 Sensor 1) *7 • EFI relay • PCV valve and hose • PCV hose connection • ECM	○	○
P0172 *3 (05–115)	System too Rich (Bank 1) *7	• Injector leakage or blockage • Mass air flow meter • Manifold absolute pressure sensor • Engine coolant temperature sensor • Ignition system • Fuel pressure • Gas leakage in exhaust system • Open or short in heated oxygen sensor circuit • Heated oxygen sensor (Bank 1 Sensor 1) *7 • ECM	○	○
P0174 *3 (05–115)	System too Lean (Bank2) *8	• Air induction system • Injector blockage • Mass air flow meter • Manifold absolute pressure sensor • Engine coolant temperature sensor • Fuel pressure • Gas leakage in exhaust system • Open or short in heated oxygen sensor circuit • Heated oxygen sensor (Bank 2 Sensor 1) *8 • Heated oxygen sensor heater (Bank 2 Sensor 1) *8 • EFI relay • PCV valve and hose • PCV hose connection • ECM	○	○
P0175 *3 (05–115)	System too Rich (Bank2) *8	• Injector leakage or blockage • Mass air flow meter • Manifold absolute pressure sensor • Engine coolant temperature sensor • Ignition system • Fuel pressure • Gas leakage in exhaust system • Open or short in heated oxygen sensor circuit • Heated oxygen sensor (Bank 2 Sensor 1) *8 • ECM	○	○
P0190 (05–127)	Fuel Rail Pressure Sensor Circuit	• Open or short in fuel pressure sensor circuit • Fuel pressure sensor • ECM	○	○

DTC No. (See Page)	Detection Item	Trouble Area	*1 CHK ENG	Memory
P0191 (05–131)	Fuel Rail Pressure Sensor Circuit Range/Performance	• Open or short in high–pressure fuel pump (spill valve) circuit • High–pressure fuel pump • Low–pressure fuel pump • Fuel pipe • Fuel relief valve • Fuel pressure regulator • ECM	○	○
P0200 (05–136)	Injector Circuit/Open	• Open or short in EDU circuit • EDU (Injector driver) • Fuel injector assy • ECM	○	○
P0201 (05–136)	Injector Circuit/Open – (Cylinder 1)	• Open or short in EDU circuit • EDU (Injector driver) • Fuel injector assy • ECM	○	○
P0202 (05–136)	Injector Circuit/Open – (Cylinder 2)	• Open or short in EDU circuit • EDU (Injector driver) • Fuel injector assy • ECM	○	○
P0203 (05–136)	Injector Circuit/Open – (Cylinder 3)	• Open or short in EDU circuit • EDU (Injector driver) • Fuel injector assy • ECM	○	○
P0204 (05–136)	Injector Circuit/Open – (Cylinder 4)	• Open or short in EDU circuit • EDU (Injector driver) • Fuel injector assy • ECM	○	○
P0220 (05–75)	Throttle/Pedal Position Sensor/ Switch "B" Circuit	• Throttle position sensor (built in throttle body) • ECM	○	○
P0222 (05–75)	Throttle/Pedal Position Sensor/ Switch "B" Circuit Low Input	• Throttle position sensor (built in throttle body) • Short in VTA2 circuit • Open in VC circuit • ECM	○	○
P0223 (05–75)	Throttle/Pedal Position Sensor/ Switch "B" Circuit High Input	• Throttle position sensor (built in throttle body) • Open in VTA2 circuit • Open in E2 circuit • VC and VTA2 circuit are short–circuited • ECM	○	○
P0230 (05–141)	Fuel Pump Primary Circuit	• Open or short in fuel pump relay circuit • Fuel pump relay • ECM	—	○
P0300 *3 (05–146)	Random/Multiple Cylinder Misfire Detected	• Open or short in engine wire harness • Connector connection • Vacuum hose connection • Ignition system • Injector • Fuel pressure • Mass air flow meter • Engine coolant temperature sensor • Compression pressure • Valve clearance • Valve timing • PCV hose connection • PCV hose • ECM	○*2	○
P0301 *3 (05–146)	Cylinder 1 Misfire Detected	• Same as DTC P0300	○*2	○

DTC No. (See Page)	Detection Item	Trouble Area	*1 CHK ENG	Memory
P0302 *3 (05–146)	Cylinder 2 Misfire Detected	• Same as DTC P0300	○*2	○
P0303 *3 (05–146)	Cylinder 3 Misfire Detected	• Same as DTC P0300	○*2	○
P0304 *3 (05–146)	Cylinder 4 Misfire Detected	• Same as DTC P0300	○*2	○
P0325 (05–156)	Knock Sensor 1 Circuit (Bank 1 or Single Sensor)	• Knock sensor • Knock sensor (under–torqued or loose) • ECM	○	○
P0327 (05–156)	Knock Sensor 1 Circuit Low Input (Bank 1 or Single Sensor)	• Short in knock sensor circuit • Knock sensor • ECM	○	○
P0328 (05–156)	Knock Sensor 1 Circuit High Input (Bank 1 or Single Sensor)	• Open in knock sensor circuit • Knock sensor • ECM	○	○
P0335 (05–160)	Crankshaft Position Sensor ”A” Circuit	• Open or short in crankshaft position sensor circuit • Crankshaft position sensor • Signal plate (crankshaft position sensor plate No. 1) • ECM	○	○
P0339 (05–160)	Crankshaft Position Sensor ”A” Circuit Intermittent	• Open or short in crankshaft position sensor circuit • Crankshaft position sensor • Signal plate (crankshaft position sensor plate No. 1) • ECM	—	○
P0340 (05–164)	Camshaft Position Sensor ”A” Circuit (Bank 1 or Single Sensor)	• Open or short in camshaft position sensor circuit • Camshaft position sensor • Camshaft timing gear • Jumped tooth of timing chain • ECM	○	○
P0341 (05–164)	Camshaft Position Sensor ”A” Circuit Range/Performance (Bank 1 or Single Sensor)	• Open or short in camshaft position sensor circuit • Camshaft position sensor • Camshaft timing gear • Jumped tooth of timing chain • ECM	○	○
P0351 (05–167)	Ignition Coil ”A” Primary/Secondary Circuit	• Ignition system • Open or short in IGF and IGT circuits between ignition coil with igniter and ECM (ignition coil circuit 1) • Ignition coil with igniter (ignition coil 1) • IG2 relay • ECM	○	○
P0352 (05–167)	Ignition Coil ”B” Primary/Secondary Circuit	• Ignition system • Open or short in IGF and IGT circuits between ignition coil with igniter and ECM (ignition coil circuit 2) • Ignition coil with igniter (ignition coil 2) • IG2 relay • ECM	○	○
P0353 (05–167)	Ignition Coil ”C” Primary/Secondary Circuit	• Ignition system • Open or short in IGF and IGT circuits between ignition coil with igniter and ECM (ignition coil circuit 3) • Ignition coil with igniter (ignition coil 3) • IG2 relay • ECM	○	○
P0354 (05–167)	Ignition Coil ”D” Primary/Secondary Circuit	• Ignition system • Open or short in IGF and IGT circuits between ignition coil with igniter and ECM (ignition coil circuit 4) • Ignition coil with igniter (ignition coil 4) • IG2 relay • ECM	○	○

DTC No. (See Page)	Detection Item	Trouble Area	*1 CHK ENG	Memory
P0420 *3 (05–174)	Catalyst System Efficiency Below Threshold (Bank 1)	• Gas leakage in exhaust system • Heated oxygen sensor • Three–way catalytic converter (inside exhaust manifold)	○	○
P0430 *3 (05–174)	Catalyst System Efficiency Below Threshold (Bank 2)	• Gas leakage in exhaust system • Heated oxygen sensor • Three–way catalytic converter (inside exhaust manifold)	○	○
P0443 (05–179)	Evaporative Emission Control System Purge Control Valve Circuit	• Open of short in VSV circuit for EVAP • VSV for EVAP • ECM	○	○
P0500 (05–183)	Vehicle Speed Sensor ”A”	• Combination meter • Open or short in speed sensor circuit • Vehicle speed sensor • ECM • Skid control ECU • Clutch or brake slips or gear is broken	○	○
P0503 (05–183)	Vehicle Speed Sensor ”A” Intermittent/Erratic/high	• Combination meter • Open or short in vehicle speed sensor circuit • Vehicle speed sensor • ECM • Skid control ECU • Clutch or brake slips or gear is broken	—	○
P0504 (05–185)	Brake Switch Correlation	• Short in stop lamp switch signal circuit • Stop lamp switch • ECM	—	○
P0505 *3 (05–189)	Idle Air Control System	• Electric throttle control system • Air induction system • PCV hose connection	○	○
P0555 (05–191)	Brake Booster Pressure Sensor Circuit	• Open or short in brake booster pressure sensor circuit • Brake booster pressure sensor • Vacuum hose • ECM	○	○
P0556 (05–194)	Brake Booster Pressure Sensor Circuit Range/Performance	• Vacuum hose (between the brake booster and intake manifold, the brake booster and brake booster pressure sensor, and the intake manifold and manifold absolute pressure sensor) • Open or short in brake booster pressure sensor circuit • Brake booster pressure sensor • Manifold absolute pressure sensor • Brake booster • Open or short in stop lamp switch circuit • Stop lamp switch • ECM	○	○
P0557 (05–191)	Brake Booster Pressure Sensor Circuit Low Input	• Open or short in brake booster pressure sensor circuit • Brake booster pressure sensor • Vacuum hose • ECM	○	○
P0558 (05–191)	Brake Booster Pressure Sensor Circuit High Input	• Open or short in brake booster pressure sensor circuit • Brake booster pressure sensor • Vacuum hose • ECM	○	○
P0560 (05–199)	System Voltage	• Open in back–up power source circuit • ECM	○	○
P0571 (*5)	Brake Switch ”A” Circuit	• Cruise control system	—	○
P0604 (05–202)	Internal Control Module Random Access Memory (RAM) Error	• ECM	○	○
P0606 (05–202)	ECM/PCM Processor	• ECM	○	○

DTC No. (See Page)	Detection Item	Trouble Area	*1 CHK ENG	Memory
P0607 (05–202)	Control Module Performance	• ECM	○	○
P0617 (05–203)	Starter Relay Circuit High	• Short in Park/Neutral position switch (A/T) • Park/Neutral position switch (A/T) • Ignition switch • ECM	○	○
P0657 (05–202)	Actuator Supply Voltage Circuit / Open	• ECM	○	○
P0705 *4 (05–566)	Transmission Range Sensor Circuit Malfunction (PRNDL Input)	• Electronic controlled automatic transmission (ECT)	○	○
P0710 *4 (05–571)	Transmission Fluid Temperature Sensor ”A” circuit	• Electronic controlled automatic transmission (ECT)	○	○
P0711 *3,4 (05–574)	Transmission Fluid Temperature Sensor ”A” Performance	• Electronic controlled automatic transmission (ECT)	○	○
P0712 *4 (05–574)	Transmission Fluid Temperature Sensor ”A” Circuit Low Input	• Electronic controlled automatic transmission (ECT)	○	○
P0713 *4 (05–574)	Transmission Fluid Temperature Sensor ”A” Circuit High Input	• Electronic controlled automatic transmission (ECT)	○	○
P0717 *4 (05–577)	Input/Turbine Speed Sensor ”A” Circuit No Signal	• Electronic controlled automatic transmission (ECT)	○	○
P0724 *4 (05–580)	Brake Switch ”B” Circuit High	• Electronic controlled automatic transmission (ECT)	○	○
P0741 *3,4 (05–582)	Torque Converter Clutch Circuit Performance or Stuck Off	• Electronic controlled automatic transmission (ECT)	○	○
P0743 *4 (05–586)	Torque Converter Clutch Circuit Electrical	• Electronic controlled automatic transmission (ECT)	○	○
P0746 *3,4 (05–589)	Pressure Control Solenoid ”A” Performance (Shift Solenoid Valve SL1)	• Electronic controlled automatic transmission (ECT)	○	○
P0748 *4 (05–592)	Pressure Control Solenoid ”A” Electrical (Shift Solenoid Valve SL1)	• Electronic controlled automatic transmission (ECT)	○	○
P0766 *3,4 (05–595)	Shift Solenoid ”D” Performance (Shift Solenoid Valve S4)	• Electronic controlled automatic transmission (ECT)	○	○
P0771 *3,4 (05–598)	Shift Solenoid ”E” Performance (Shift Solenoid Valve SR)	• Electronic controlled automatic transmission (ECT)	○	○
P0776 *3,4 (05–601)	Pressure Control Solenoid ”B” Performance (Shift Solenoid Valve SL2)	• Electronic controlled automatic transmission (ECT)	○	○
P0778 *4 (05–604)	Pressure Control Solenoid ”B” Electrical (Shift Solenoid Valve SL2)	• Electronic controlled automatic transmission (ECT)	○	○
P0793 *4 (05–607)	Intermediate Shaft Speed Sensor ”A” Circuit No Signal	• Electronic controlled automatic transmission (ECT)	○	○
P0796 *3,4 (05–610)	Pressure Control Solenoid ”C” performance (Shift Solenoid Valve SL3)	• Electronic controlled automatic transmission (ECT)	○	○
P0798 *4 (05–613)	Pressure Control Solenoid ”C” Electrical (Shift Solenoid Valve SL3)	• Electronic controlled automatic transmission (ECT)	○	○
P0982 *4 (05–616)	Shift Solenoid ”D” Control Low	• Electronic controlled automatic transmission (ECT)	○	○
P0983 *4 (05–616)	Shift Solenoid ”D” Control High	• Electronic controlled automatic transmission (ECT)	○	○

DTC No. (See Page)	Detection Item	Trouble Area	*1 CHK ENG	Memory
P0985 *4 (05–619)	Shift Solenoid "E" Control Circuit Low (Shift Solenoid Valve SR)	• Electronic controlled automatic transmission (ECT)	○	○
P0986 *4 (05–619)	Shift Solenoid "E" Control Circuit High (Shift Solenoid Valve SR)	• Electronic controlled automatic transmission (ECT)	○	○
P1235 (05–207)	High Pressure Fuel Pump Circuit	• Open or short in fuel pump (high pressure) • Fuel pump (high pressure) • ECM	○	○
P2008 (05–210)	Intake Manifold Runner Control Circuit/Open (Bank 1)	• Open of short in VSV for IACV circuit • VSV for IACV • ECM	○	○
P2102 (05–214)	Throttle Actuator Control Motor Circuit Low	• Open in throttle control motor circuit • Throttle control motor • ECM	○	○
P2103 (05–214)	Throttle Actuator Control Motor Circuit High	• Short in throttle control motor circuit • Throttle control motor • Throttle valve • Throttle body assembly • ECM	○	○
P2111 (05–217)	Throttle Actuator Control System – Stuck Open	• Throttle control motor circuit • Throttle control motor • Throttle body • Throttle valve	○	○
P2112 (05–217)	Throttle Actuator Control System – Stuck Closed	• Throttle control motor circuit • Throttle control motor • Throttle body • Throttle valve	○	○
P2118 (05–219)	Actuator Control Motor Current Range/Performance	• Open in ETCS power source circuit • THROTTLE fuse • ECM	○	○
P2119 (05–222)	Throttle Actuator Control Throttle Body Range/Performance	• Electric throttle control system • ECM	○	○
P2120 (05–224)	Throttle/Pedal Position Sensor/ Switch "D" Circuit	• Accelerator pedal position sensor • ECM	○	○
P2121 (05–232)	Throttle/Pedal Position Sensor/ Switch "D" Circuit Range/Performance	• Open or short in accelerator pedal position sensor circuit • Accelerator pedal position sensor • ECM	○	○
P2122 (05–224)	Throttle/Pedal Position Sensor/ Switch "D" Circuit Low Input	• Accelerator pedal position sensor • Open in VCPA circuit • VPA circuit open or ground short • ECM	○	○
P2123 (05–224)	Throttle/Pedal Position Sensor/ Switch "D" Circuit High Input	• Accelerator pedal position sensor • Open in EPA circuit • ECM	○	○
P2125 (05–224)	Throttle/Pedal Position Sensor/ Switch "E" Circuit	• Accelerator pedal position sensor • ECM	○	○
P2127 (05–224)	Throttle/Pedal Position Sensor/ Switch "E" Circuit Low Input	• Accelerator pedal position sensor • Open in VCP2 circuit • VPA2 circuit open or ground short • ECM	○	○
P2128 (05–224)	Throttle/Pedal Position Sensor/ Switch "E" Circuit High Input	• Accelerator pedal position sensor • Open in EPA 2circuit • ECM	○	○
P2135 (05–75)	Throttle Pedal Position Sensor/ Switch "A"/"B" Voltage Correlation	• VTA1 and VTA2 circuits are short–circuited • Throttle position sensor (built in throttle body) • ECM	○	○

DTC No. (See Page)	Detection Item	Trouble Area	*1 CHK ENG	Memory
P2138 (05–224)	Throttle Pedal Position Sensor/ Switch "D"/"E" Voltage Correlation	• VPA and VPA2 circuits are short–circuit • Accelerator pedal position sensor • ECM	○	○
P2195 *3 (05–82)	Oxygen Sensor Signal Stuck Lean (Bank 1 Sensor 1) *7	• Open or short in heated oxygen sensor circuit • Heated oxygen sensor (Bank 1 Sensor 1) *7 • Heated oxygen sensor heater (Bank 1 Sensor 1) *7 • EFI relay • Air induction system • Fuel pressure • Injector • ECM	○	○
P2196 *3 (05–82)	Oxygen Sensor Signal Stuck Rich (Bank 1 Sensor 1) *7	• Open or short in heated oxygen sensor circuit • Heated oxygen sensor (Bank 1 Sensor 1) *7 • Heated oxygen sensor heater (Bank 1 Sensor 1) *7 • EFI relay • Air induction system • Fuel pressure • Injector • ECM	○	○
P2197 *3 (05–82)	Oxygen Sensor Signal Stuck Lean (Bank 2 Sensor 1) *8	• Open or short in heated oxygen sensor circuit • Heated oxygen sensor (Bank 2 Sensor 1) *8 • Heated oxygen sensor heater (Bank 2 Sensor 1) *8 • EFI relay • Air induction system • Fuel pressure • Injector • ECM	○	○
P2198 *3 (05–82)	Oxygen Sensor Signal Stuck Rich (Bank 2 Sensor 1) *8	• Open or short in heated oxygen sensor circuit • Heated oxygen sensor (Bank 2 Sensor 1) *8 • Heated oxygen sensor heater (Bank 2 Sensor 1) *8 • EFI relay • Air induction system • Fuel pressure • Injector • ECM	○	○
P2716 *4 (05–622)	Pressure Control Solenoid "D" Electrical	• Electronic controlled automatic transmission (ECT)	○	○
B2799 (*6)	Engine Immobilizer System Malfunction	• Immobilizer system	—	○

*1: —···CHK ENG (Check engine warning light) dese not illuminate, ○···CHK ENG (Check engine warning light) illuminates.
*2: CHK ENG (Check engine warning light) illuminates or blinks.
*3: For Euro–OBD vehicles only.
*4: For A/T only.
*5: See page 05–1714 of Pub. No. RM1018E AVENSIS.
*6: See page 05–1628 of Pub. No. RM1018E AVENSIS.
*7: Bank 1 refers to the No. 1 and No. 4 cylinders.
*8: Bank 2 refers to the No. 2 and No. 3 cylinders.

DTC	P0010	CAMSHAFT POSITION ”A” ACTUATOR CIRCUIT (BANK 1)

HINT:
This is the troubleshooting procedure of the oil control valve (OCV).

CIRCUIT DESCRIPTION

The Variable Valve Timing (VVT) system includes the ECM, the Oil Control Valve (OCV) and the VVT controller. The ECM sends a target ”duty–cycle” control signal to the OCV. This control signal, applied to the OCV, regulates the oil pressure supplied to the VVT controller. Camshaft timing control is performed based on engine operation conditions such as intake air volume, throttle position and engine coolant temperature.
The ECM controls the OCV based on the signals output from several sensors. The VVT controller regulates the intake camshaft angle using oil pressure through the OCV. As result, the relative position between the camshaft and the crankshaft is optimized, and the engine torque improves, fuel economy improves, and exhaust emissions decrease. The ECM detects the actual valve timing using signals from the camshaft position sensor and the crankshaft position sensor. The ECM performs feedback control and verifies target valve timing.

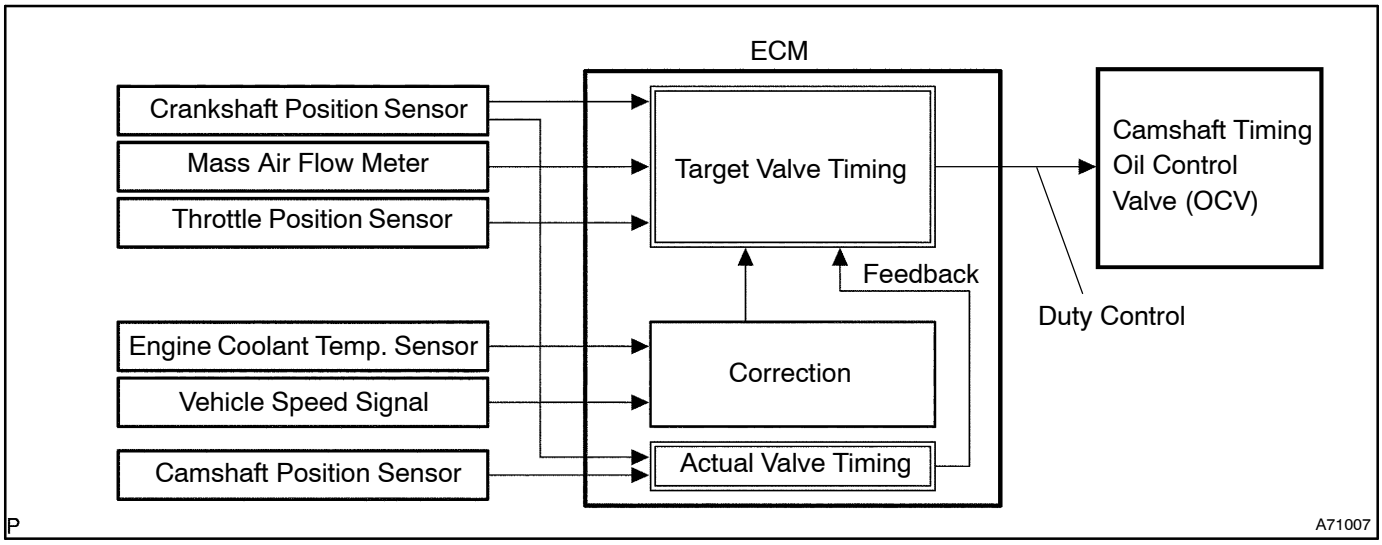

DTC No.	DTC Detection Condition	Trouble Area
P0010	Open or short in OCV circuit	• Open or short in OCV circuit • OCV • ECM

WIRING DIAGRAM

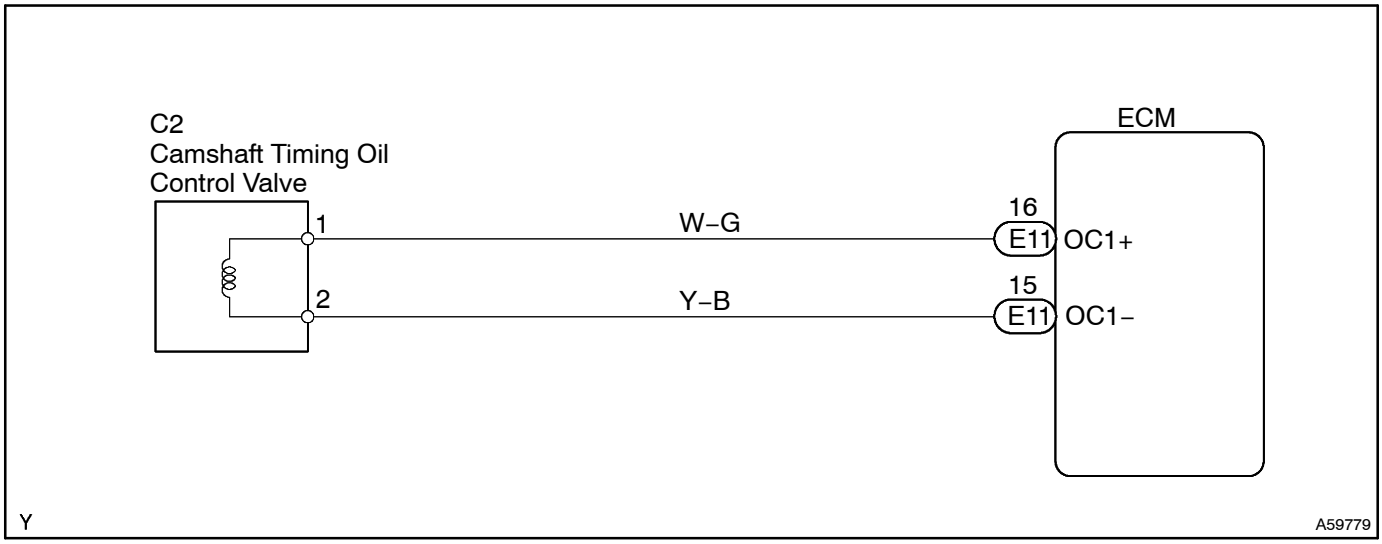

INSPECTION PROCEDURE

HINT:
Read freeze frame data using the hand–held tester. Freeze frame data records the engine conditions when a malfunction is detected. When troubleshooting, freeze frame data can help determine if the vehicle was running or stopped, if the engine was warmed up or not, if the air–fuel ratio was lean or rich, and other data from the time the malfunction occurred.

1	PERFORM ACTIVE TEST BY HAND–HELD TESTER(OPERATE OCV)

(a) Connect the hand–held tester to the DLC3.
(b) Start the engine and warm it up.
(c) Turn the ignition switch to ON and turn the hand–held tester ON.
(d) Select the item: DIAGNOSIS / OBD/MOBD / ACTIVE TEST / VVT CTRL B1.
(e) Using the hand–held tester, operate the OCV and check the engine speed.
Standard:

Tester Operation	Specified Condition
OCV is OFF	Normal engine speed
OCV is ON	Rough idle or engine stall

OK → **CHECK FOR INTERMITTENT PROBLEMS (See Page 05–7)**

NG

2	INSPECT CAMSHAFT TIMING OIL CONTROL VALVE ASSY(OCV) (See page 10–2)

NG → **REPLACE CAMSHAFT TIMING OIL CONTROL VALVE ASSY**

OK

3 INSPECT ECM(OCV SIGNAL)

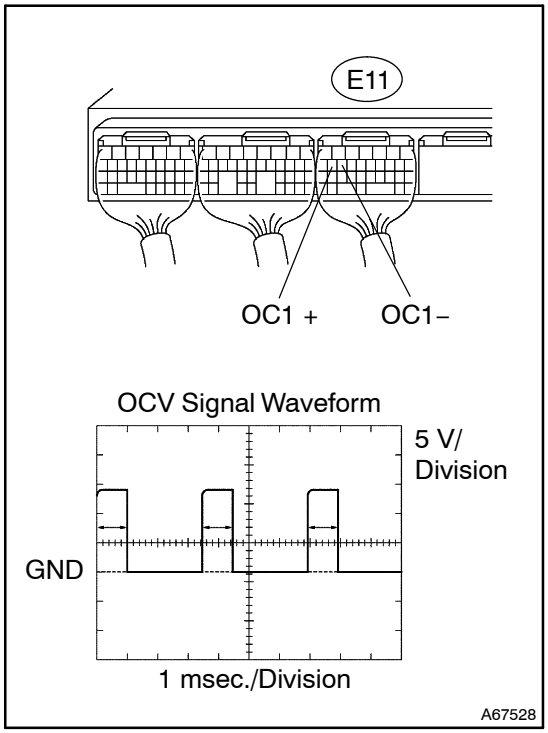

(a) Inspect using an oscilloscope.
(b) During idling, check the waveform between the specified terminals of the E11 ECM connectors.

Standard:

Tester Connection	Specified Condition
OC1+ (E11–16) – OC1– (E11–15)	Correct waveform is as shown

NG → **REPLACE ECM (See page 10–65 of Pub. No. RM1018E AVENSIS)**

OK

4 CHECK HARNESS AND CONNECTOR(ECM – OCV)

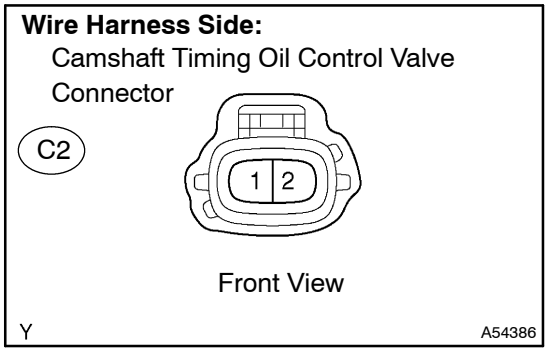

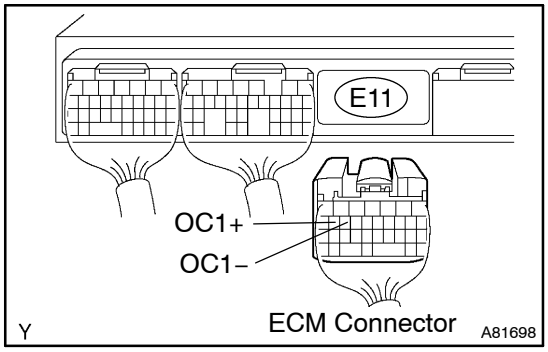

(a) Disconnect the C2 OCV connector.
(b) Disconnect the E11 ECM connector.
(c) Check the resistance between the wire harness side connectors.

Standard (Check for open):

Tester Connection	Specified Condition
OCV (C2–1) – OC1+ (E11–16)	Below 1 Ω
OCV (C2–2) – OC1– (E11–15)	

Standard (Check for short):

Tester Connection	Specified Condition
OCV (C2–1) or OC1+ (E11–16) – Body ground	10 kΩ or higher
OCV (C2–2) or OC1– (E11–15) – Body ground	

(d) Reconnect the OCV connector.
(e) Reconnect the ECM connector.

NG → **REPAIR OR REPLACE HARNESS OR CONNECTOR**

OK

CHECK FOR INTERMITTENT PROBLEMS (See Page 05–7)

DTC	P0011	CAMSHAFT POSITION ”A” –TIMING OVER–ADVANCED OR SYSTEM PERFORMANCE (BANK 1)

DTC	P0012	CAMSHAFT POSITION ”A” –TIMING OVER–RETARDED (BANK 1)

CIRCUIT DESCRIPTION

Refer to DTC P0010 on page 05–41.

DTC No.	DTC Detection Condition	Trouble Area
P0011	Advanced cam timing: After engine is warmed up, valve timing does not change from current valve timing while driving at engine speed of 400 to 4,000 rpm (1 trip detection logic)	• Valve timing • OCV • Camshaft timing gear assy • ECM
P0012	Retarded cam timing: After engine is warmed up, valve timing does not change from current valve timing while driving at engine speed of 400 to 4,000 rpm (2 trip detection logic)	• Valve timing • OCV • Camshaft timing gear assy • ECM

WIRING DIAGRAM

Refer to DTC P0010 on page 05–41.

INSPECTION PROCEDURE

HINT:

The problem of advanced OCV	P0011
The problem of retarded OCV	P0012

- If DTC P0011 or P0012 is displayed, check VVT system circuit.
- Read freeze frame data using the hand–held tester. Freeze frame data records the engine conditions when a malfunction is detected. When troubleshooting, freeze frame data can help determine if the vehicle was running or stopped, if the engine was warmed up or not, if the air–fuel ratio was lean or rich, and other data from the time the malfunction occurred.

1	CHECK VALVE TIMING(CHECK FOR LOOSE AND A JUMPED TOOTH OF TIMING CHAIN) (See page 14–6)

NG → ADJUST VALVE TIMING (See page 14–45)

OK

2	PERFORM ACTIVE TEST BY HAND–HELD TESTER(OPERATE OCV)

(a) Connect the hand–held tester to the DLC3.
(b) Start the engine and warm it up.
(c) Turn the ignition switch to ON and turn the hand–held tester ON.
(d) Select the item: DIAGNOSIS / OBD/MPBD / ACTIVE TEST / VVT CTRL B1.
(e) Using the hand–held tester, operate the OCV and check the engine speed.
Standard:

Tester Operation	Specified Condition
OCV is OFF	Normal engine speed
OCV is ON	Rough idle or engine stall

NG → **Go to step 4**

OK

3	CHECK IF DTC OUTPUT REOCCURS

(a) Clear the DTC.
(1) Erase the code using one of the following methods: 1) use the hand–held tester, 2) disconnect the battery terminal, 3) remove the EFI and ETCS fuses for 60 seconds or more.

NOTICE:
When disconnecting the battery terminal, perform the ”INITIALIZE” procedure.

(b) Start the engine and warm it up.
(c) Drive the vehicle around for 10 minutes or more.
(d) Read output DTC using the hand–held tester.

Standard: No DTC output.

HINT:
*: DTC P0011 or P0012 is output when a foreign object in engine oil is caught in some part of the system. These codes will stay registered even if the system returns to normal after a short time. Foreign objects are filtered out by the oil filter.

OK → **VVT SYSTEM OK ***

NG

4	INSPECT ECM(OCV SIGNAL)

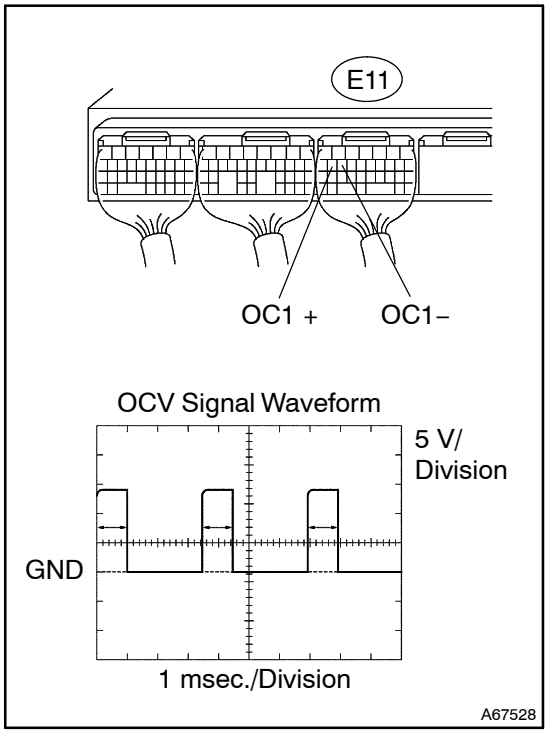

(a) Inspect using an oscilloscope.
(b) During idling, check the waveform between the specified terminals of the E11 ECM connectors.

Standard:

Tester Connection	Specified Condition
OC1+ (E11–16) – OC1– (E11–15)	Correct waveform is as shown

NG → **REPLACE ECM (See page 10–65 of Pub. No. RM1018E AVENSIS)**

OK

5	INSPECT OIL CONTROL VALVE FILTER

NG → **REPLACE OIL CONTROL VALVE FILTER**

OK

6	INSPECT CAMSHAFT TIMING OIL CONTROL VALVE ASSY(OCV) (See page 10–2)

OK → **Go to step 8**

NG

7	REPLACE CAMSHAFT TIMING OIL CONTROL VALVE ASSY(OCV)

GO

8	INSPECT CAMSHAFT TIMING GEAR ASSY (See page 14–64)

OK → **Go to step 10**

NG

9	REPLACE CAMSHAFT TIMING GEAR ASSY (See page 14–64)

GO

10	CHECK BLOCKAGE(OCV, OIL CHECK VALVE AND OIL HOLE)

NG > REPAIR OR REPLACE

OK

11	CHECK CHECK IF DTC OUTPUT REOCCURS

(a) Clear the DTC.
  (1) Erase the code using one of the following methods: 1) use the hand–held tester, 2) disconnect the battery terminal, 3) remove the EFI and ETCS fuses for 60 seconds or more.

NOTICE:
When disconnecting the battery terminal, perform the ”INITIALIZE” procedure.

(b) Start the engine and warm it up.
(c) Drive the vehicle around for 10 minutes or more.
(d) Read output DTC using the hand–held tester.

Standard: No DTC output.

HINT:
*: DTC P0011 or P0012 is output when a foreign object in engine oil is caught in some part of the system. These codes will stay registered even if the system returns to normal after a short time. Foreign objects are filtered out by the oil filter.

OK > VVT SYSTEM OK*

NG

REPLACE ECM (See page 10–65 of Pub. No. RM1018E AVENSIS)

DTC	P0016	CRANKSHAFT POSITION – CAMSHAFT POSITION CORRELATION (BANK 1 SENSOR A)

CIRCUIT DESCRIPTION

Refer to DTC P0335 on page 05–160.

DTC No.	DTC Detection Condition	Trouble Area
P0016	Deviation in crankshaft position sensor signal and camshaft position sensor (bank 1) signal (2 trip detection logic)	• Mechanical system (Timing chain has jumped a tooth, chain stretched) • ECM

WIRING DIAGRAM

Refer to DTC P0335 on page 05–160.

INSPECTION PROCEDURE

HINT:

Read freeze frame data using the hand–held tester. Freeze frame data records the engine conditions when a malfunction is detected. When troubleshooting, freeze frame data can help determine if the vehicle was running or stopped, if the engine was warmed up or not, if the air–fuel ratio was lean or rich, and other data from the time the malfunction occurred.

1	CHECK VALVE TIMING(CHECK FOR LOOSE AND A JUMPED TOOTH OF TIMING CHAIN) (See page 14–45)

NG → ADJUST VALVE TIMING (See page 14–45) (REPAIR OR REPLACE TIMING CHAIN)

OK

REPLACE ECM (See page 10–65 of Pub. No. RM1018E AVENSIS)

DTC	**P0031**	**OXYGEN SENSOR HEATER CONTROL CIRCUIT LOW (BANK 1 SENSOR 1)**

DTC	**P0032**	**OXYGEN SENSOR HEATER CONTROL CIRCUIT HIGH (BANK 1 SENSOR 1)**

DTC	**P0037**	**OXYGEN SENSOR HEATER CONTROL CIRCUIT LOW (BANK 1 SENSOR 2)**

DTC	**P0038**	**OXYGEN SENSOR HEATER CONTROL CIRCUIT HIGH (BANK 1 SENSOR 2)**

DTC	**P0051**	**OXYGEN SENSOR HEATER CONTROL CIRCUIT LOW (BANK 2 SENSOR 1)**

DTC	**P0052**	**OXYGEN SENSOR HEATER CONTROL CIRCUIT HIGH (BANK 2 SENSOR 1)**

DTC	**P0057**	**OXYGEN SENSOR HEATER CONTROL CIRCUIT LOW (BANK 2 SENSOR 2)**

DTC	**P0058**	**OXYGEN SENSOR HEATER CONTROL CIRCUIT HIGH (BANK 2 SENSOR 2)**

HINT:

- Bank 1 refers to the No. 1 and No. 4 cylinders.
- Bank 2 refers to the No. 2 and No. 3 cylinders.
- Sensor 1 refers to the sensor closest to the engine assembly.
- Sensor 2 refers to the sensor farthest away from the engine assembly.

CIRCUIT DESCRIPTION

Refer to DTC P0130 on page 05–82.

HINT:

The ECM provides a pulse width modulated control circuit to adjust current through the heater. The heated oxygen sensor heater circuit uses a relay on the B+ side of the circuit.

Reference (Bank 1 Sensor 1 System Drawing)

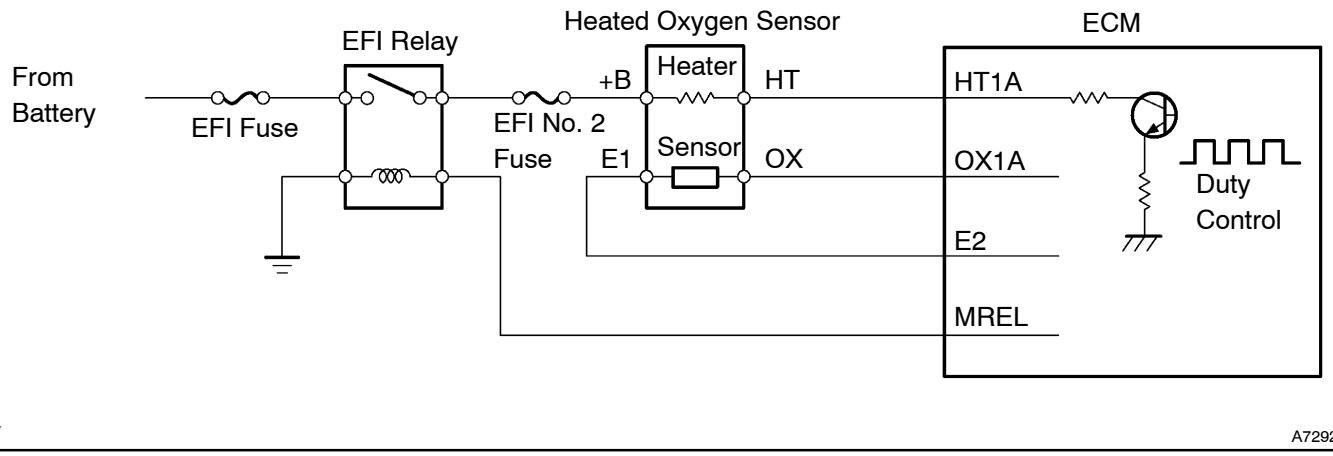

DTC No.	DTC Detection Condition	Trouble Area
P0031 P0037 P0051 P0057	(1) Heated current is 0.2 A or less when heater operates with +B voltage between 10.5 V and 11.5 V (1 trip detection logic) (2) Heated current is 0.25 A or less when heater operates with +B greater than 11.5 V (1 trip detection logic)	• Open in heater circuit of heated oxygen sensor • Heated oxygen sensor heater • EFI relay • EFI No. 2 fuse • ECM
P0032 P0038 P0052 P0058	When heater operates, heater current exceeds 2 A (1 trip detection logic)	• Short in heater circuit of heated oxygen sensor • Heated oxygen sensor heater • EFI relay • ECM

WIRING DIAGRAM

Refer to DTC P0130 on page 05–82.

INSPECTION PROCEDURE

HINT:

- If different DTCs related to different systems that have terminal E2 as the ground terminal are output simultaneously, terminal E2 may have an open circuit.
- Read freeze frame data using the hand–held tester. Freeze frame data records the engine conditions when a malfunction is detected. When troubleshooting, freeze frame data can help determine if the vehicle was running or stopped, if the engine was warmed up or not, if the air–fuel ratio was lean or rich, and other data from the time the malfunction occurred.

1 INSPECT HEATED OXYGEN SENSOR(HEATER RESISTANCE)

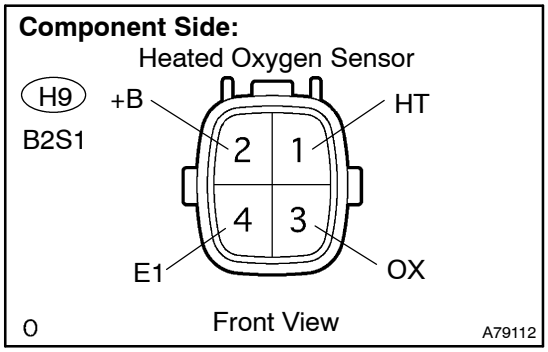

(a) Disconnect the H7, H8, H9 or H10 heated oxygen sensor connector.

(b) Measure the resistance between the terminals of the heated oxygen sensor connector.

Standard (Bank 2 sensor 1):

Tester Connection	Resistance
1 (HT) – 2 (+B)	11 to 16 Ω at 20°C (68°F)
1 (HT) – 4 (E1)	10 kΩ or higher

Standard (Except Bank 2 sensor 1):

Tester Connection	Resistance
1 (HT) – 2 (+B)	11 to 16 Ω at 20°C (68°F)
1 (HT) – 4 (E1)	10 kΩ or higher

(c) Reconnect the heated oxygen sensor connector.

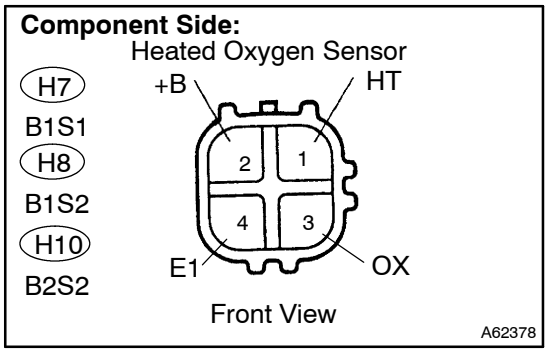

NG → **REPLACE HEATED OXYGEN SENSOR**

OK

2 INSPECT EFI RELAY

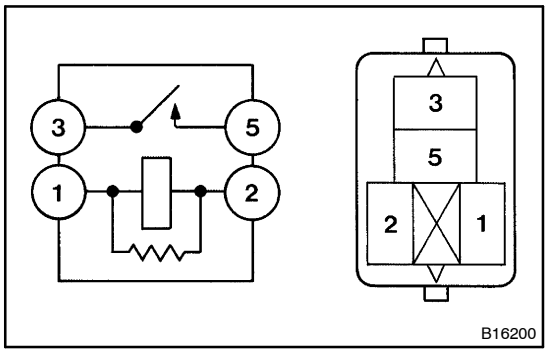

(a) Remove the EFI relay from the engine room R/B No. 4.

(b) Check for continuity in the EFI relay.

Standard:

Tester Connection	Specified Condition
1 – 2	Continuity
3 – 5	No continuity
3 – 5	Continuity (Apply battery voltage to terminals 1 and 2)

(c) Reinstall the EFI relay.

NG → **REPLACE EFI RELAY**

OK

3	INSPECT ECM(HT1A, HT1B, HT2A OR HT2B VOLTAGE)

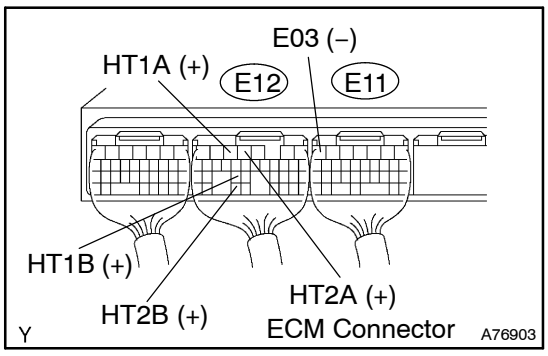

(a) Turn the ignition switch to ON.
(b) Measure the voltage between the applicable terminals of the E11 and E12 ECM connectors.

Standard:

Tester Connection	Specified Condition
HT1A (E12–5) – E03 (E11–7)	9 to 14 V
HT1B (E12–25) – E03 (E11–7)	9 to 14 V
HT2A (E12–4) – E03 (E11–7)	9 to 14 V
HT2B (E12–33) – E03 (E11–7)	9 to 14 V

HINT:

- The HT1A means the heated oxygen sensor bank 1 sensor 1.
- The HT1B means the heated oxygen sensor bank 1 sensor 2.
- The HT2A means the heated oxygen sensor bank 2 sensor 1.
- The HT2B means the heated oxygen sensor bank 2 sensor 2.

OK → **REPLACE ECM (See page 10–65 of Pub. No. RM1018E AVENSIS)**

NG

4 CHECK HARNESS AND CONNECTOR(HEATED OXYGEN SENSOR – ECM, HEATED OXYGEN SENSOR – EFI RELAY)

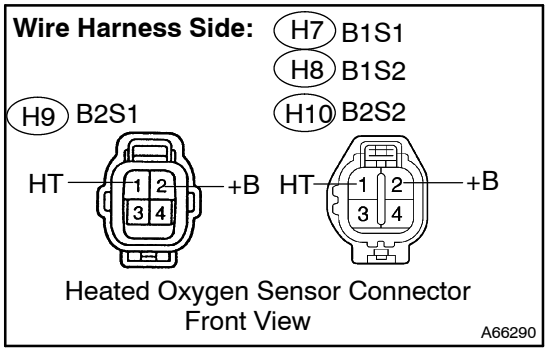

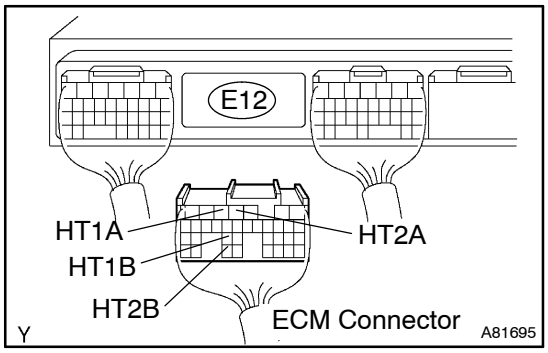

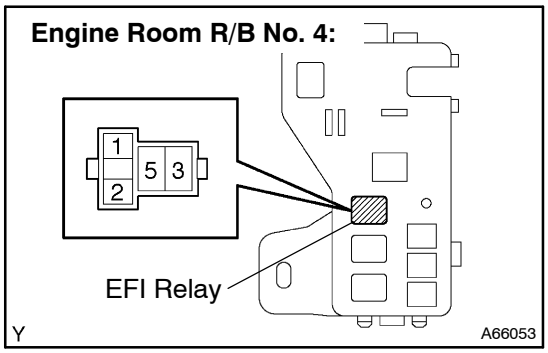

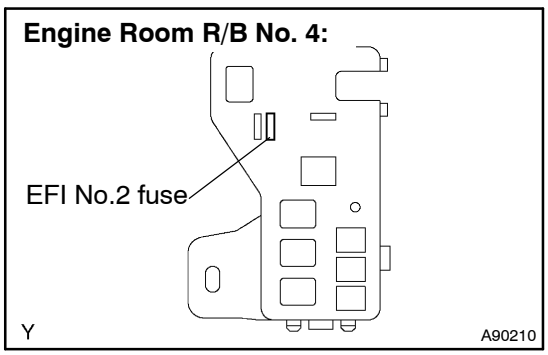

(a) Check the harness and connector between the ECM and heated oxygen sensor connectors.

(1) Disconnect the H7, H8, H9 or H10 heated oxygen sensor connector.

(2) Disconnect the E12 ECM connector.

(3) Check the resistance between the wire harness side connectors.

Standard (Check for open):

Tester Connection	Specified Condition
HT (H7–1) – HT1A (E12–5)	Below 1 Ω
HT (H8–1) – HT1B (E12–25)	Below 1 Ω
HT (H9–1) – HT2A (E12–4)	Below 1 Ω
HT (H10–1) – HT2B (E12–33)	Below 1 Ω

Standard (Check for short):

Tester Connection	Specified Condition
HT (H7–1) or HT1A (E12–5) – Body ground	10 kΩ or higher
HT (H8–1) or HT1B (E12–25) – Body ground	10 kΩ or higher
HT (H9–1) or HT2A (E12–4) – Body ground	10 kΩ or higher
HT (H10–1) or HT2B (E12–33) – Body ground	10 kΩ or higher

(4) Reconnect the heated oxygen sensor connector.

(5) Reconnect the ECM connector.

(b) Check the harness and connector between the heated oxygen sensor and EFI relay.

(1) Inspect the EFI No.2 fuse.

- Remove the EFI No.2 fuse from the engine room R/B No. 4.
- Check for continuity in the EFI No.2 fuse.

Standard: Continuity

- Reinstall the EFI No. 2 fuse.

(2) Disconnect the H7, H8, H9 or H10 heated oxygen sensor connector.

(3) Remove the EFI relay from the engine room R/B No. 4.

(4) Check the resistance between the wire harness side connectors.

Standard (Check for open):

Tester Connection	Specified Condition
+B (H7–2) – Engine room R/B No. 4 (EFI relay terminal 3)	Below 1 Ω
+B (H8–2) – Engine room R/B No. 4 (EFI relay terminal 3)	Below 1 Ω
+B (H9–2) – Engine room R/B No. 4 (EFI relay terminal 3)	Below 1 Ω
+B (H10–2) – Engine room R/B No. 4 (EFI relay terminal 3)	Below 1 Ω

Standard (Check for short):

Tester Connection	Specified Condition
+B (H7–2) or Engine room R/B No. 4 (EFI relay terminal 3) – Body ground	10 kΩ or higher
+B (H8–2) or Engine room R/B No. 4 (EFI relay terminal 3) – Body ground	10 kΩ or higher
+B (H9–2) or Engine room R/B No. 4 (EFI relay terminal 3) – Body ground	10 kΩ or higher
+B (H10–2) or Engine room R/B No. 4 (EFI relay terminal 3) – Body ground	10 kΩ or higher

(5) Reconnect the heated oxygen sensor connector.
(6) Reinstall the EFI relay.

NG → **REPAIR OR REPLACE HARNESS OR CONNECTOR**

OK

REPLACE ECM (See page 10–65 of Pub. No. RM1018E AVENSIS)

DTC	P0100	MASS OR VOLUME AIR FLOW CIRCUIT

DTC	P0102	MASS OR VOLUME AIR FLOW CIRCUIT LOW INPUT

DTC	P0103	MASS OR VOLUME AIR FLOW CIRCUIT HIGH INPUT

CIRCUIT DESCRIPTION

The MAF (Mass Air Flow) meter measures the amount of air flowing through the throttle valve. The ECM uses this information to determine the fuel injection time and provide a proper air–fuel ratio. Inside the MAF meter, there is a heated platinum wire exposed to the flow of intake air.

By applying a specific current to the wire, the ECM heats this wire to a given temperature. The flow of incoming air cools the wire and an internal thermistor, changing their resistance. To maintain a constant current value, the ECM varies the voltage applied to these components in the MAF meter. The voltage level is proportional to the airflow through the sensor and the ECM interprets this voltage as the intake air amount.

The circuit is constructed so that the platinum hot wire and temperature sensor provide a bridge circuit, with the power transistor controlled so that the potential of A and B remains equal to maintain the set temperature.

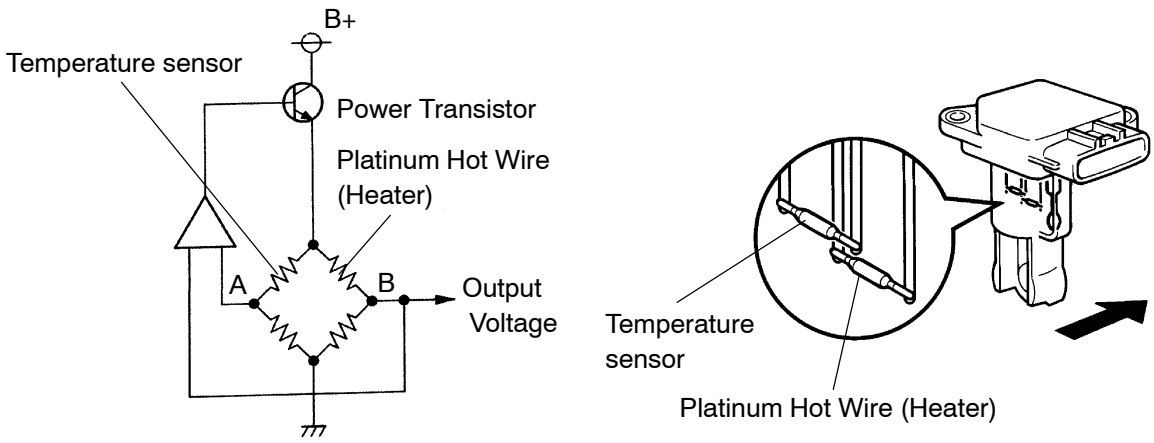

DTC No.	DTC Detection Condition	Trouble Area
P0100	Open or short in mass air flow meter circuit for more than 3 seconds at engine speed of 4,000 rpm or less	• Open or short in mass air flow meter circuit • Mass air flow meter • ECM
P0102	Open or short in mass air flow meter circuit for more than 3 seconds at engine speed of 4,000 rpm or less	• Open in mass air flow meter circuit • Short in ground circuit • Mass air flow meter • ECM
P0103	Open in mass air flow meter circuit for more than 3 seconds (EVG circuit) at engine speed of 4,000 rpm or less Short in mass air flow meter circuit for more than 3 seconds (+B circuit) at engine speed of 4,000 rpm or less	• Open in mass air flow meter circuit (EVG circuit) • Short in mass air flow meter circuit (+B circuit) • Mass air flow meter • ECM

HINT:
After confirming DTC P0100, P0102 or P0103, use the hand–held tester to confirm the air flow rate from the DIAGNOSIS / OBD/MOBD / DATA LIST / ALL.

Air flow rate (gm/s)	Malfunction
Approximately 0.0	• Mass air flow meter power source circuit open • VG circuit open or short
271.0 or more	• EVG circuit open

WIRING DIAGRAM

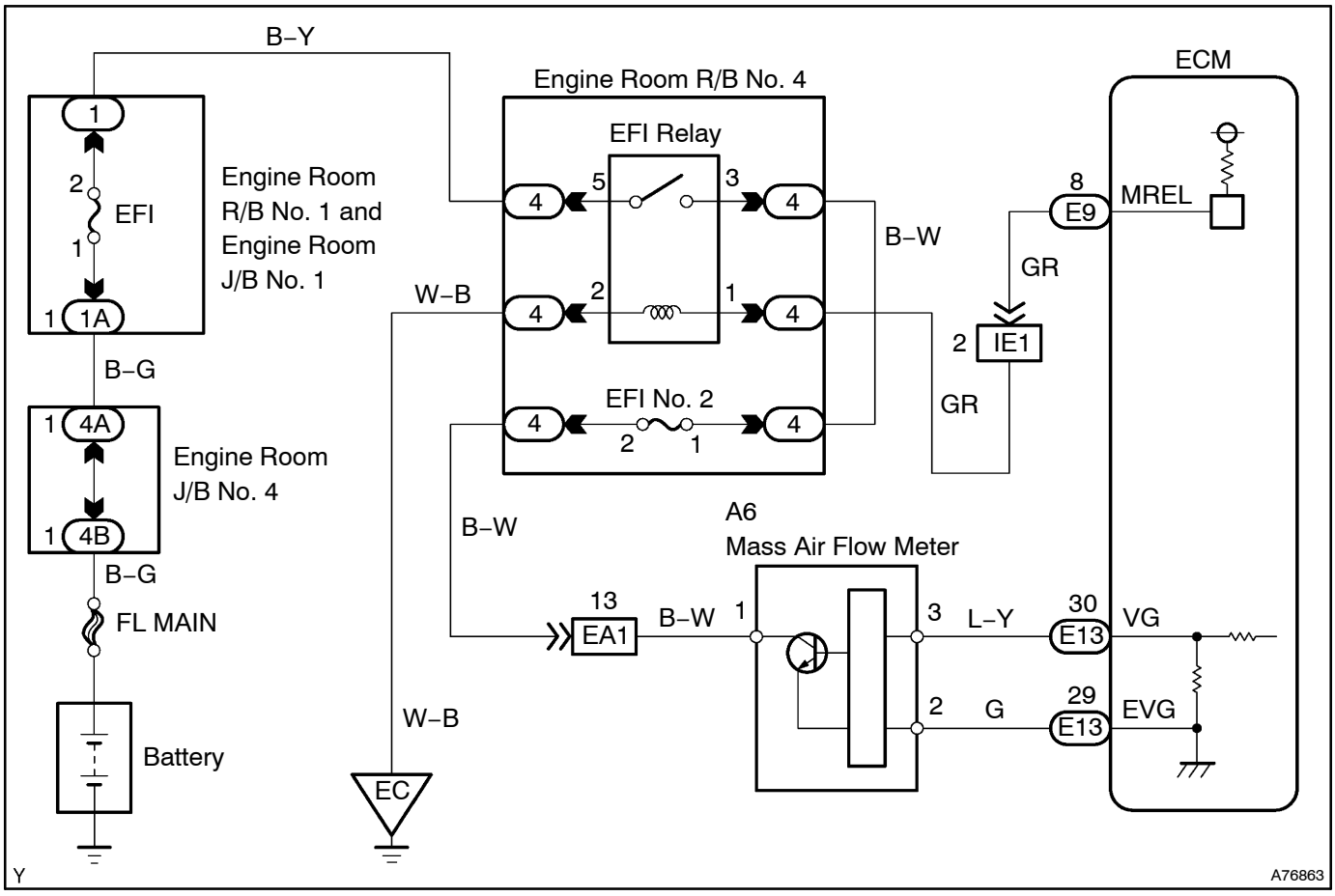

INSPECTION PROCEDURE

HINT:
Read freeze frame data using the hand–held tester. Freeze frame data records the engine conditions when a malfunction is detected. When troubleshooting, freeze frame data can help determine if the vehicle was running or stopped, if the engine was warmed up or not, if the air–fuel ratio was lean or rich, and other data from the time the malfunction occurred.

1 READ VALUE OF HAND–HELD TESTER(MASS AIR FLOW RATE)

(a) Connect the hand–held tester to the DLC3.
(b) Start the engine.
(c) Turn the hand–held tester ON.
(d) On the hand–held tester, selsct the item: DIAGNOSIS / OBD/MOBD / DATA LIST / ALL / MAF.
(e) Read the values.
Result:

Air flow rate (gm/s)	Proceed to
0.0	A
271.0 or more	B
Between 1.0 and 270.0 (*1)	C

*1: The value must be changed when the throttle valve is opened or closed.

B → **Go to step 6**

C → **CHECK FOR INTERMITTENT PROBLEMS** **(See page 05–7)**

A

2 INSPECT MASS AIR FLOW METER(POWER SOURCE)

Wire Harness Side:
Mass Air Flow Meter Connector

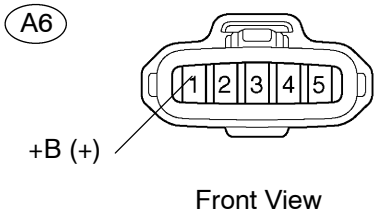

Front View

Y A54396

(a) Disconnect the A6 mass air flow meter connector.
(b) Turn the ignition switch to ON.
(c) Measure the voltage between the terminal of the wire harness side connector and body ground.
Standard:

Tester Connection	Specified Condition
+B (A6–1) – Body ground	9 to 14 V

(d) Reconnect the mass air flow meter connector.

NG → **Go to step 5**

OK

3 INSPECT ECM(VG VOLTAGE)

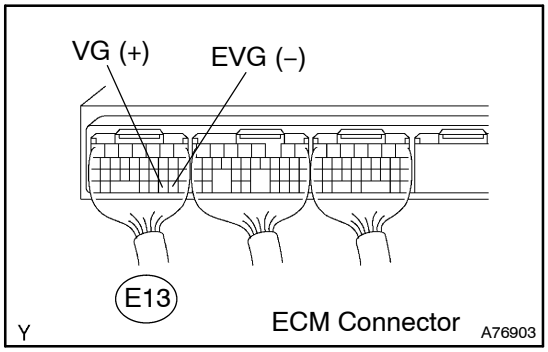

(a) Start the engine.
(b) Measure the voltage between the specified terminals of the E13 ECM connector.

Standard:

Tester Connection	Condition	Specified Condition
VG (E13–30) – EVG (E13–29)	Engine is idling	0.5 to 3.0 V

HINT:
The shift position should be P or N and the A/C switch should be turned OFF.

OK → **REPLACE ECM (See page 10–65 of Pub. No. RM1018E AVENSIS)**

NG

4 CHECK HARNESS AND CONNECTOR(ECM – MASS AIR FLOW METER)

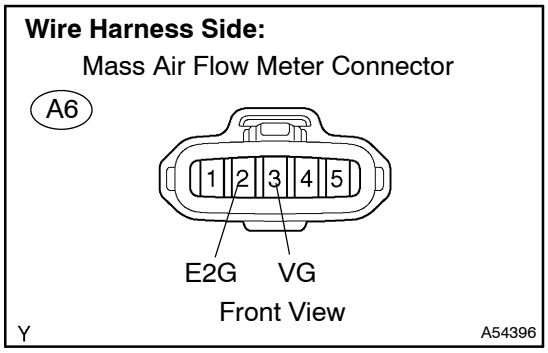

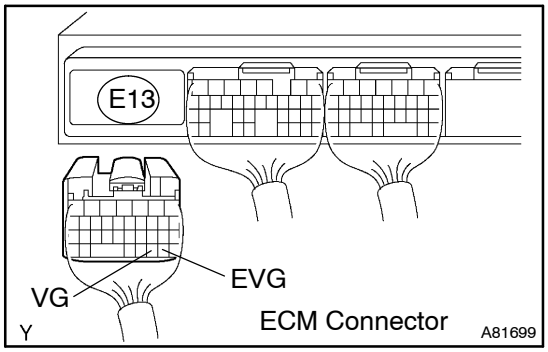

(a) Disconnect the A6 mass air flow meter connector.
(b) Disconnect the E13 ECM connector.
(c) Check the resistance between the wire harness side connectors.

Standard (Check for open):

Tester Connection	Specified Condition
VG (A6–3) – VG (E13–30)	Below 1 Ω
E2G (A6–2) – EVG (E13–29)	Below 1 Ω

Standard (Check for short):

Tester Connection	Specified Condition
VG (A6–3) or VG (E13–30) – Body ground	10 kΩ or higher

(d) Reconnect the mass air flow meter connector.
(e) Reconnect the ECM connector.

NG → **REPAIR OR REPLACE HARNESS OR CONNECTOR**

OK

REPLACE MASS AIR FLOW METER

5 CHECK HARNESS AND CONNECTOR(MASS AIR FLOW METER – EFI RELAY)

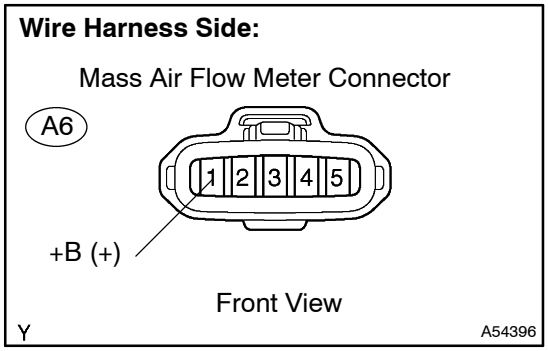

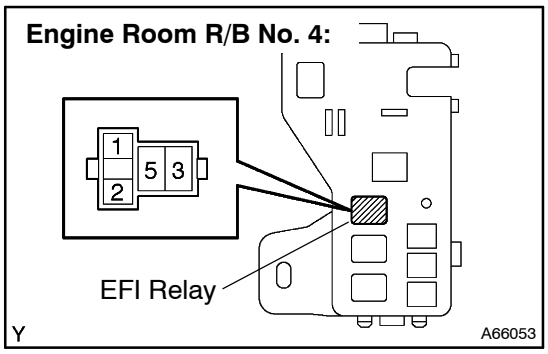

(a) Inspect the EFI No. 2 fuse.
  (1) Remove the EFI No. 2 fuse from the engine room R/B No. 4.
  (2) Check for continuity in the EFI No. 2 fuse.
  Standard: Continuity
  (3) Reinstall EFI No. 2 fuse.

(b) Remove the EFI relay from the engine room R/B No. 4.

(c) Disconnect the A6 mass air flow meter connector.

(d) Measure the resistance between the wire harness side connectors.

Standard (Check for open):

Tester Connection	Specified Condition
+B (A6–1) – Engine room R/B No. 4 (EFI relay terminal 3)	Below 1 Ω

Standard (Check for short):

Tester Connection	Specified Condition
+B (A6–1) or Engine room R/B No. 4 (EFI relay terminal 3) – Body ground	10 kΩ or higher

(e) Reconnect the mass air flow meter connector.

(f) Reinstall the EFI relay.

NG → **REPAIR OR REPLACE HARNESS OR CONNECTOR**

OK

CHECK FOR ECM POWER SOURCE CIRCUIT (See Page 05–236)

6 INSPECT ECM(SENSOR GROUND)

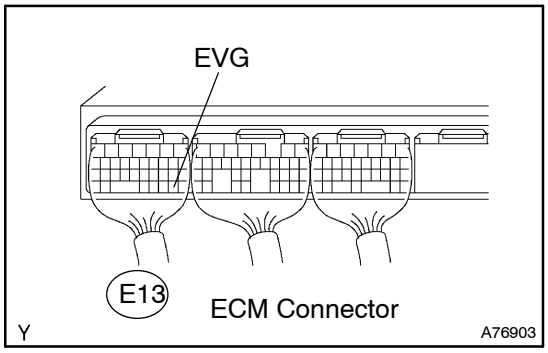

(a) Measure the resistance between the terminal of the E13 ECM connector and body ground.

Standard:

Tester Connection	Specified Condition
EVG (E13–29) – Body ground	Below 1 Ω

NG → **REPLACE ECM (See page 10–65 of Pub. No. RM1018E AVENSIS)**

OK

7 CHECK HARNESS AND CONNECTOR(ECM – MASS AIR FLOW METER)

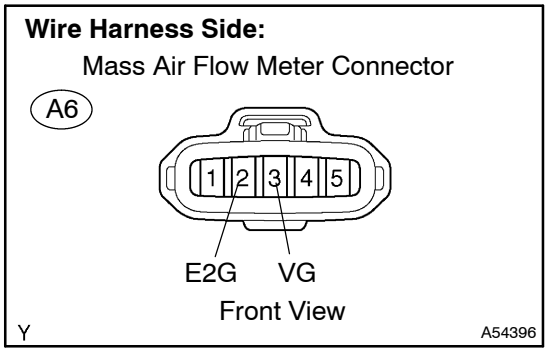

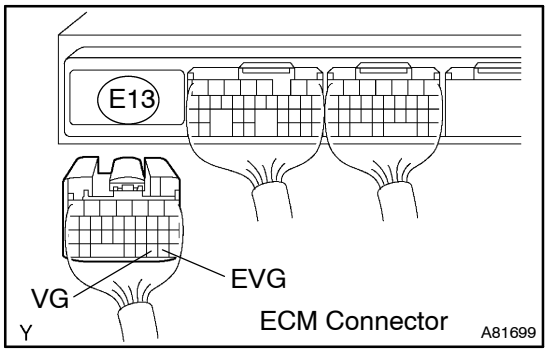

(a) Disconnect the A6 mass air flow meter connector.
(b) Disconnect the E13 ECM connector.
(c) Check the resistance between the wire harness side connectors.

Standard (Check for open):

Tester Connection	Specified Condition
VG (A6–3) – VG (E13–30)	Below 1 Ω
E2G (A6–2) – EVG (E13–29)	Below 1 Ω

Standard (Check for short):

Tester Connection	Specified Condition
VG (A6–3) or VG (E13–30) – Body ground	10 kΩ or higher

(d) Reconnect the mass air flow meter connector.
(e) Reconnect the ECM connector.

NG → **REPAIR OR REPLACE HARNESS OR CONNECTOR**

OK

REPLACE MASS AIR FLOW METER

DTC	P0105	MANIFOLD ABSOLUTE PRESSURE/BAROMETRIC PRESSURE CIRCUIT

DTC	P0107	MANIFOLD ABSOLUTE PRESSURE/BAROMETRIC PRESSURE CIRCUIT LOW INPUT

DTC	P0108	MANIFOLD ABSOLUTE PRESSURE/BAROMETRIC PRESSURE CIRCUIT HIGH INPUT

CIRCUIT DESCRIPTION

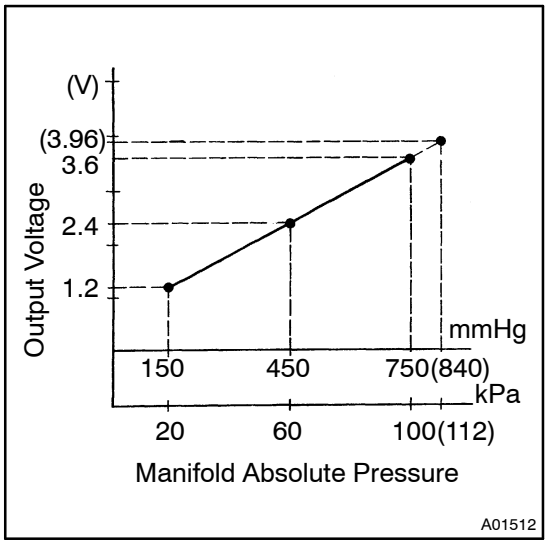

By a built–in sensor unit, the manifold absolute pressure sensor detects the intake manifold pressure as a voltage. The ECM then determines the basic injection duration and basic ignition advance angle based on this voltage.

Since the manifold absolute pressure sensor does not use the atmospheric pressure as a standard, but senses the absolute pressure inside the intake manifold (the pressure in proportion to the preset absolute vacuum 0), it is not influenced by fluctuations in the atmospheric pressure due to high altitude and other factors. This permits it to control the air–fuel ratio at the proper level under all conditions.

If the ECM detects the DTC P0105, P0107 or P0108, it operates the fail–safe function, keeping the ignition timing and fuel injection volume constant and making it possible to drive the vehicle.

DTC No.	DTC Detection Condition	Trouble Area
P0105	Open or short in manifold absolute pressure sensor circuit for 0.5 second or more	• Open or short in manifold absolute pressure sensor circuit • Manifold absolute pressure sensor • ECM
P0107	Open in manifold absolute pressure sensor circuit for 0.5 second or more	• Open or short in manifold absolute pressure sensor circuit • Manifold absolute pressure sensor • ECM
P0108	Short in manifold absolute pressure sensor circuit for 0.5 second or more	• Open or short in manifold absolute pressure sensor circuit • Manifold absolute pressure sensor • ECM

HINT:

After confirming DTC P0105, P0107 or P0108, use the hand–held tester to confirm the manifold absolute pressure in DIAGNOSIS / OBD/MOBD / DATA LIST / ALL.

Manifold Absolute Pressure (kPa)	Malfunction
Approximately 0	• PIM circuit short
142 or more	• VC circuit open or short • PIM circuit open • E2 circuit open

WIRING DIAGRAM

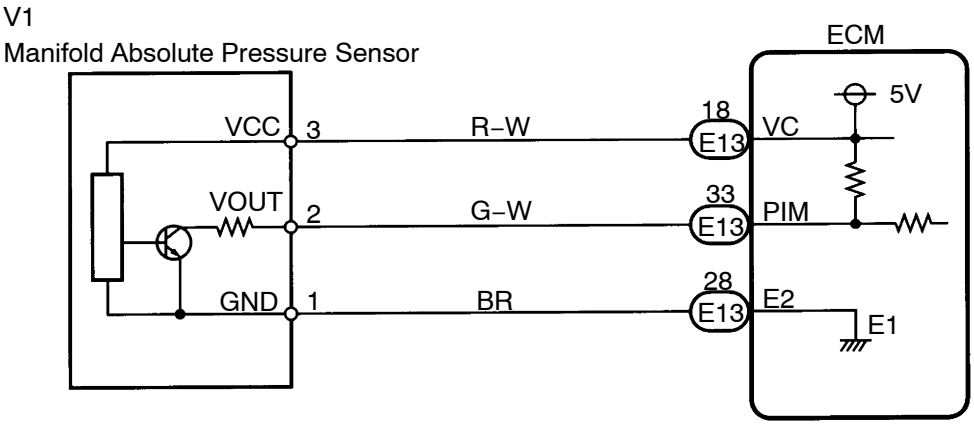

INSPECTION PROCEDURE

HINT:

- If DTCs related to different systems that have terminal E2 as the ground terminal are output simultaneously, terminal E2 may have an open circuit.
- Read freeze frame data using the hand−held tester. Freeze frame data records the engine conditions when a malfunction is detected. When troubleshooting, freeze frame data can help determine if the vehicle was running or stopped, if the engine was warmed up or not, if the air–fuel ratio was lean or rich, and other data from the time the malfunction occurred.

1	**READ VALUE OF HAND–HELD TESTER(INTAKE MANIFOLD ABSOLUTE PRESSURE)**

(a) Connect the hand–held tester to the DLC3.
(b) Turn the ignition switch to ON.
(c) Turn the hand–held tester ON.
(d) On the hand–held tester, select the item: DIAGNOSIS / OBD/MOBD / DATA LIST / ALL / MAP.
(e) Read the values.
Pressure: Same as the atmospheric pressure
Result:

Manifold Absolute Pressure (kPa)	Proceed to
142 or more	A
0.0	B
OK (Same as actual atmospheric pressure) (*1)	C

*1: The value must be changed when the engine is run or stopped.

B → **Go to step 3**

C → **CHECK FOR INTERMITTENT PROBLEMS (See Page 05–7)**

A

2 INSPECT MANIFOLD ABSOLUTE PRESSURE SENSOR(VCC VOLTAGE)

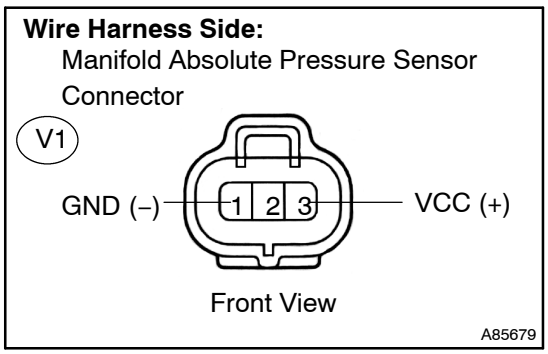

(a) Disconnect the V1 manifold absolute pressure sensor connector.
(b) Turn the ignition switch to ON.
(c) Measure the voltage between the specified terminals of the V1 manifold absolute pressure sensor connector.

Standard:

Tester Connection	Specified Condition
VCC (V1–3) – GND (V1–1)	4.5 to 5.5 V

NG → **Go to step 4**

OK

3 INSPECT ECM(PIM VOLTAGE)

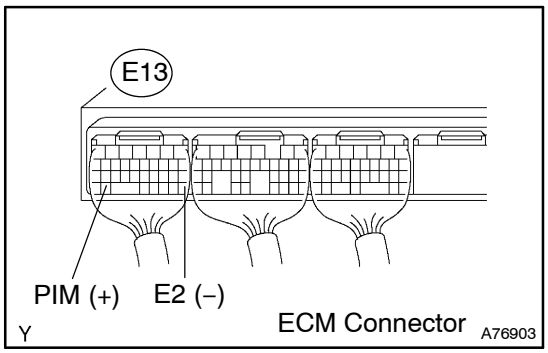

(a) Turn the ignition switch to ON.
(b) Measure the voltage between the specified terminals of the E13 ECM connector.

Standard:

Tester Connection	Specified Condition
PIM (E13–33) – E2 (E13–28)	3.4 to 3.8 V

NG → **Go to step 5**

OK

REPLACE ECM (See page 10–65 of Pub. No. RM1018E AVENSIS)

4	CHECK HARNESS AND CONNECTOR(ECM – MANIFOLD ABSOLUTE PRESSURE SENSOR)

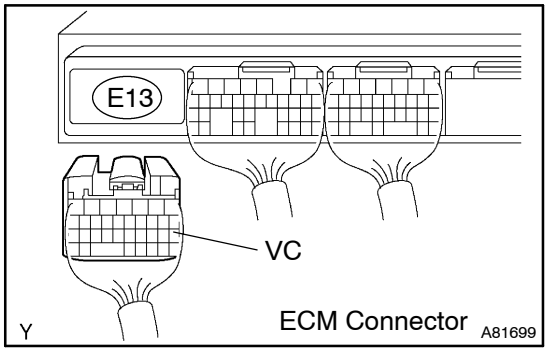

(a) Disconnect the E13 ECM connector.
(b) Disconnect the V1 manifold absolute pressure sensor connector.
(c) Check the resistance between the wire harness side connectors.

Standard (Check for open):

Tester Connection	Specified Condition
VC (E13–18) – VCC (V1–3)	Below 1 Ω

Standard (Check for short):

Tester Connection	Specified Condition
VC (E13–18) or VCC (V1–3) – Body ground	10 kΩ or higher

(d) Reconnect the ECM connector.
(e) Reconnect the manifold absolute pressure sensor connector.

Wire Harness Side:
Manifold Absolute Pressure Sensor Connector

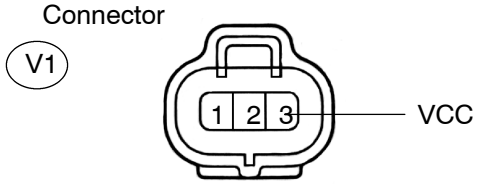

NG → **REPAIR OR REPLACE HARNESS OR CONNECTOR**

OK

REPLACE ECM (See page 10–65 of Pub. No. RM1018E AVENSIS)

5	CHECK HARNESS AND CONNECTOR(ECM – MANIFOLD ABSOLUTE PRESSURE SENSOR)

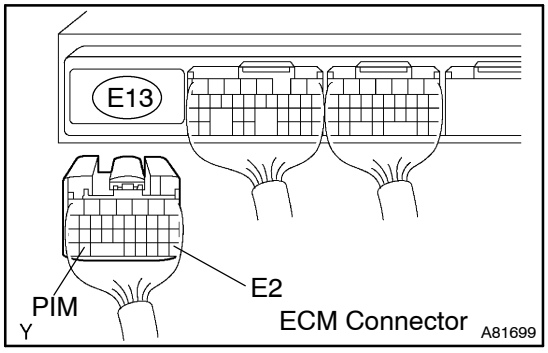

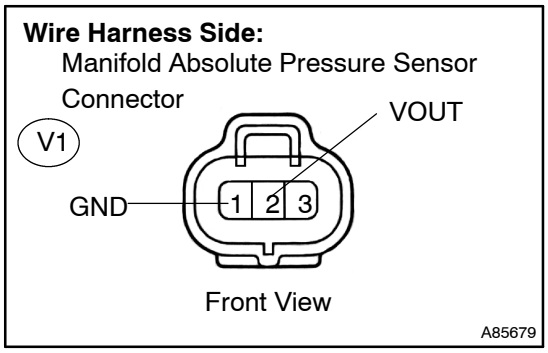

(a) Disconnect the E13 ECM connector.
(b) Disconnect the V1 manifold absolute pressure sensor connector.
(c) Check the resistance between the wire harness side connectors.

Standard (Check for open):

Tester Connection	Specified Condition
PIM (E13–33) – VOUT (V1–2)	Below 1 Ω
E2 (E13–28) – GND (V1–1)	Below 1 Ω

Standard (Check for short):

Tester Connection	Specified Condition
PIM (E13–33) or VOUT (V1–2) – Body ground	10 kΩ or higher

(d) Reconnect the ECM connector.
(e) Reconnect the manifold absolute pressure sensor connector.

NG → **REPAIR OR REPLACE HARNESS OR CONNECTOR**

OK

REPLACE MANIFOLD ABSOLUTE PRESSURE SENSOR

DTC	P0110	INTAKE AIR TEMPERATURE CIRCUIT

DTC	P0112	INTAKE AIR TEMPERATURE CIRCUIT LOW INPUT

DTC	P0113	INTAKE AIR TEMPERATURE CIRCUIT HIGH INPUT

CIRCUIT DESCRIPTION

(Figure 1)

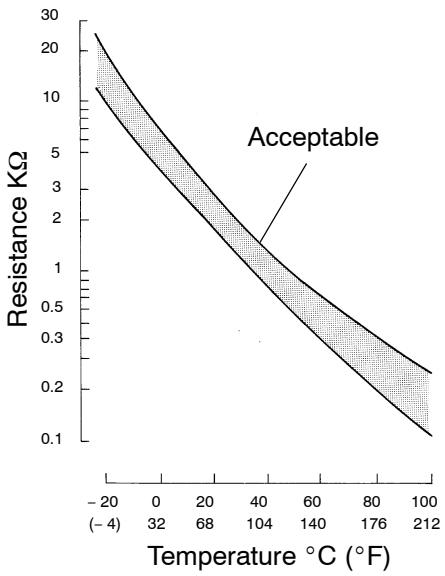

The intake air temperature (IAT) sensor, mounted on the mass air flow (MAF) meter, monitors the intake air temperature. The IAT sensor has a thermistor that varies its resistance depending on the temperature of the intake air. When the air temperature is low, the resistance in the thermistor increases. When the temperature is high, the resistance drops. The variations in resistance are reflected as voltage changes to the ECM terminal. (See Figure 1).

The intake air temperature sensor is connected to the ECM. The 5 V power source voltage in the ECM is applied to the intake air temperature sensor from terminal THA (THAR) via resistor R.

That is, the resistor R and the intake air temperature sensor are connected in series. When the resistance value of the intake air temperature sensor changes in accordance with changes in the intake air temperature, the voltage at terminal THA (THAR) also changes. Based on this signal, the ECM increases the fuel injection volume to improve the driveability during cold engine operation.

DTC No.	Proceed to	DTC Detection Condition	Trouble Area
P0110	Step 1	Open or short in intake air temperature sensor circuit for 0.5 second	• Open or short in intake air temperature sensor circuit • Intake air temperature sensor (built in mass air flow meter) • ECM
P0112	Step 4	Short in intake air temperature sensor circuit for 0.5 second	• Short in intake air temperature sensor circuit • Intake air temperature sensor (built in mass air flow meter) • ECM
P0113	Step 2	Open in intake air temperature sensor circuit for 0.5 second	• Open in intake air temperature sensor circuit • Intake air temperature sensor (built in mass air flow meter) • ECM

HINT:

After confirming DTC P0110, P0112 or P0113, use the hand–held tester to confirm the intake air temperature DIAGNOSIS / OBD/MOBD / DATA LIST / ALL.

Temperature Displayed	Malfunction
–40°C (–40°F)	Open circuit
140°C (284°F) or more	Short circuit

WIRING DIAGRAM

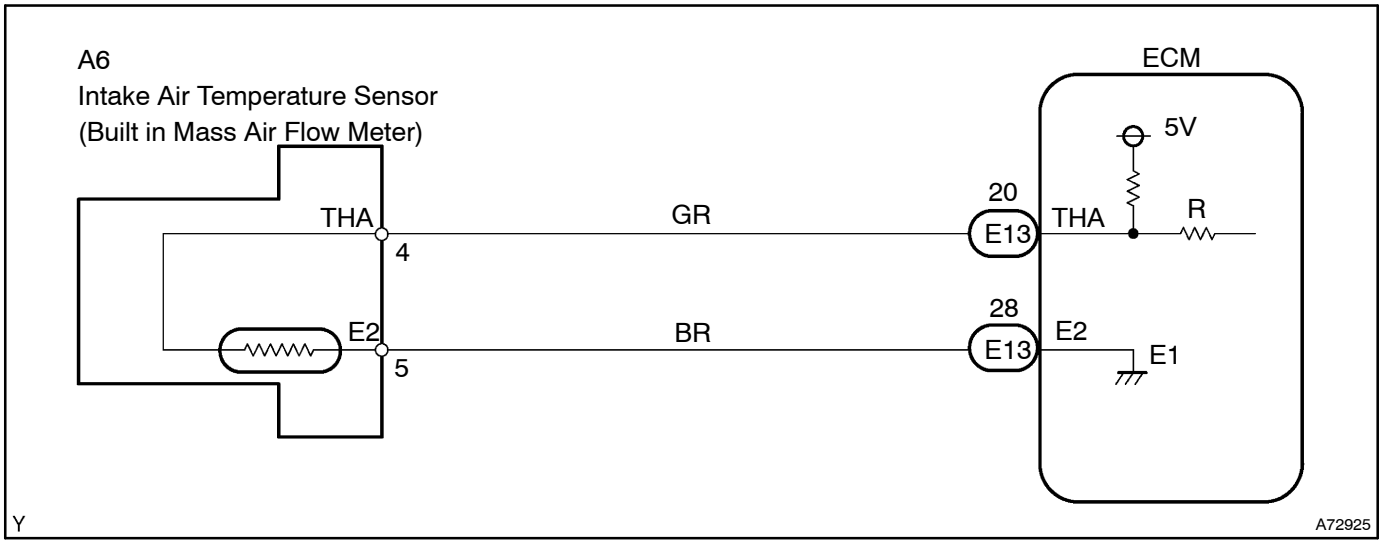

INSPECTION PROCEDURE

HINT:

- If different DTCs related to different systems that have terminal E2 as the ground terminal are output simultaneously, terminal E2 may have an open circuit.
- Read freeze frame data using the hand–held tester. Freeze frame data records the engine conditions when a malfunction is detected. When troubleshooting, freeze frame data can help determine if the vehicle was running or stopped, if the engine was warmed up or not, if the air–fuel ratio was lean or rich, and other data from the time the malfunction occurred.

1	READ VALUE OF HAND–HELD TESTER(INTAKE AIR TEMPERATURE)

(a) Connect the hand–held tester to the DLC3.
(b) Turn the ignition switch to ON and turn the hand–held tester ON.
(c) On the hand–held tester, selsct the item: DIAGNOSIS / OBD/MOBD / DATA LIST / ALL / INTAKE AIR.
(d) Read the values.
Temperature: Same value as the ambient air temperature
Result:

Display	Proceed to
–40°C (–40°F)	A
140°C (284°F) or more	B
OK (Same as ambient air temperature)	C

HINT:

- If there is an open circuit, the hand–held tester indicates –40°C (–40°F).
- If there is a short circuit, the hand–held tester indicates 140°C (284°F) or more.

B → **Go to step 4**

C → **CHECK FOR INTERMITTENT PROBLEMS (See Page 05–7)**

A

2 READ VALUE OF HAND–HELD TESTER(CHECK FOR OPEN IN HARNESS)

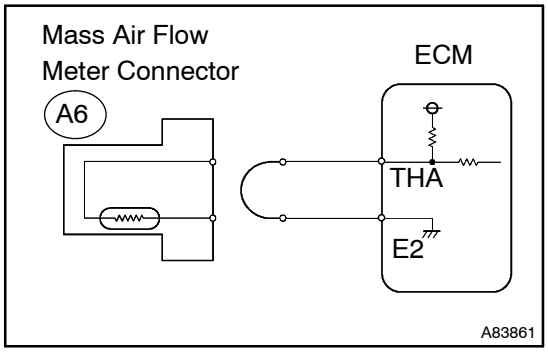

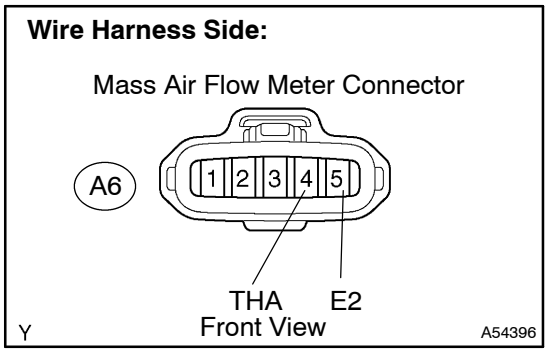

(a) Disconnect the A6 mass air flow meter connector.
(b) Connect terminals THA and E2 of the mass air flow meter wire harness side connector.
(c) Connect the hand–held tester to the DLC3.
(d) Turn the ignition switch to ON.
(e) Turn the hand–held tester ON.
(f) On the hand–held tester, select the item: DIAGNOSIS / OBD/MOBD / DATA LIST / ALL / INTAKE AIR.
(g) Read the values.
Temperature value: 140°C (284°F) or more
(h) Reconnect the mass air flow meter connector.

OK → **CONFIRM GOOD CONNECTION AT SENSOR. IF OK, REPLACE MASS AIR FLOW METER**

NG

3 READ VALUE OF HAND–HELD TESTER(CHECK FOR OPEN IN ECM)

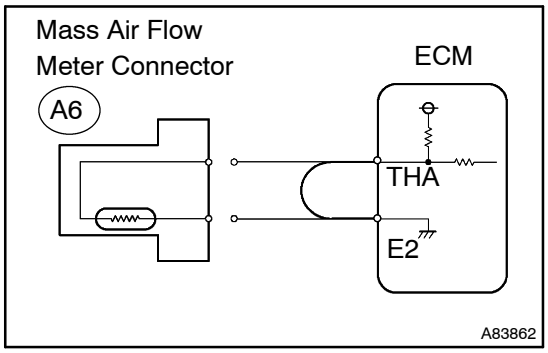

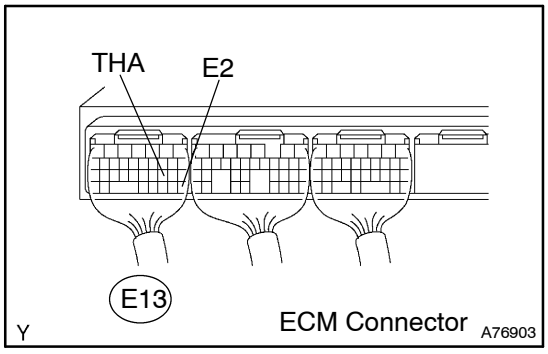

(a) Disconnect the A6 mass air flow meter connector.
(b) Connect terminals THA and E2 of the E13 ECM connector.

HINT:
Before checking, do a visual and contact pressure check on the ECM connector.

(c) Connect the hand–held tester to the DLC3.
(d) Turn the ignition switch to ON.
(e) Turn the hand–held tester ON.
(f) On the hand–held tester, selset the item: DIAGNOSIS / OBD/MOBD / DATA LIST / ALL / INTAKE AIR.
(g) Read the values.
Temperature value: 140°C (284°F) or more
(h) Reconnect the mass air flow meter connector.

OK → **REPAIR OR REPLACE HARNESS OR CONNECTOR**

NG

CONFIRM GOOD CONNECTION AT ECM. IF OK, REPLACE ECM
(See page 10–65 of Pub. No. RM1018E AVENSIS)

4 READ VALUE OF HAND–HELD TESTER(CHECK FOR SHORT IN HARNESS)

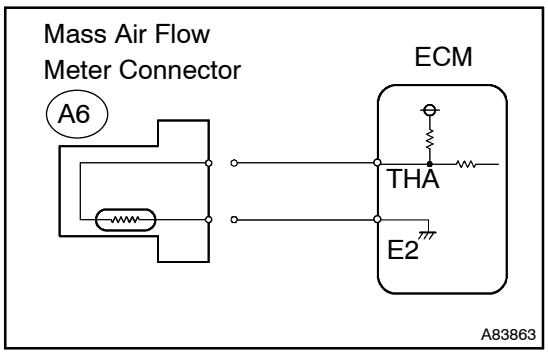

(a) Disconnect the A6 mass air flow meter connector.
(b) Connect the hand–held tester to the DLC3.
(c) Turn the ignition switch to ON.
(d) Turn the hand–held tester ON.
(e) On the hand–held tester, select the item: DIAGNOSIS / MOBD / DATA LIST / ALL / INTAKE AIR.
(f) Read the values.
Temperature value: –40°C (–40°F)
(g) Reconnect the mass air flow meter connector.

OK → **REPLACE MASS AIR FLOW METER**

NG

5 READ VALUE OF HAND–HELD TESTER(CHECK FOR SHORT IN ECM)

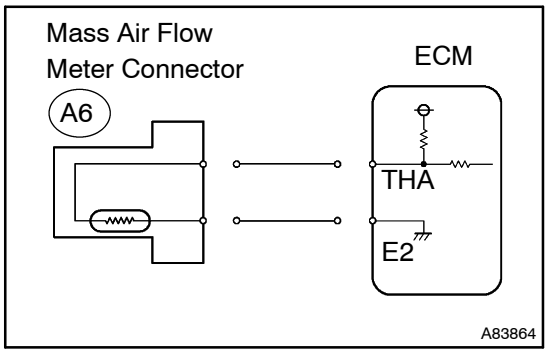

(a) Disconnect the E13 ECM connector.
(b) Disconnect the A6 mass air flow meter connector.
(c) Connect the hand–held tester to the DLC3.
(d) Turn the ignition switch to ON.
(e) Turn the hand–held tester ON.
(f) On the hand–held tester, select the item: DIAGNOSIS / OBD/MOBD / DATA LIST / ALL / INTAKE AIR.
(g) Read the values.
Temperature value: –40°C (–40°F)
(h) Reconnect the ECM connector.
(i) Reconnect the mass air flow meter connector.

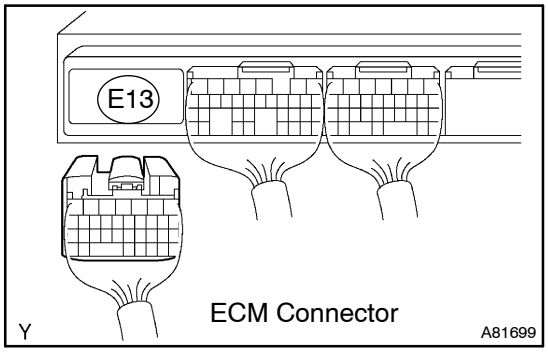

OK → **REPAIR OR REPLACE HARNESS OR CONNECTOR**

NG

REPLACE ECM (See page 10–65 of Pub. No. RM1018E AVENSIS)

DTC	P0115	ENGINE COOLANT TEMPERATURE CIRCUIT

DTC	P0117	ENGINE COOLANT TEMPERATURE CIRCUIT LOW INPUT

DTC	P0118	ENGINE COOLANT TEMPERATURE CIRCUIT HIGH INPUT

CIRCUIT DESCRIPTION

A thermistor is built in the engine coolant temperature sensor and changes the resistance value according to the engine coolant temperature.

The structure of the sensor and connection to the ECM is the same as those of the intake air temperature sensor.

HINT:

If the ECM detects the DTC P0115, P0117 or P0118, it operates the fail–safe function in which the engine coolant temperature is assumed to be 80 °C (176 °F).

DTC No.	Proceed to	DTC Detection Condition	Trouble Area
P0115	Step 1	Open or short in engine coolant temperature sensor circuit for 0.5 second	• Open or short in engine coolant temperature sensor circuit • Engine coolant temperature sensor • ECM
P0117	Step 4	Short in engine coolant temperature sensor circuit for 0.5 second	• Short in engine coolant temperature sensor circuit • Engine coolant temperature sensor • ECM
P0118	Step 2	Open in engine coolant temperature sensor circuit for 0.5 second	• Open in engine coolant temperature sensor circuit • Engine coolant temperature sensor • ECM

HINT:

After confirming DTC P0115, P0117 or P0118, use the hand–held tester to confirm the engine coolant temperature in DIAGNOSIS / OBD/MOBD / DATA LIST / ALL.

Temperature Displayed	Malfunction
–40°C (–40°F)	Open circuit
140°C (284°F) or more	Short circuit

WIRING DIAGRAM

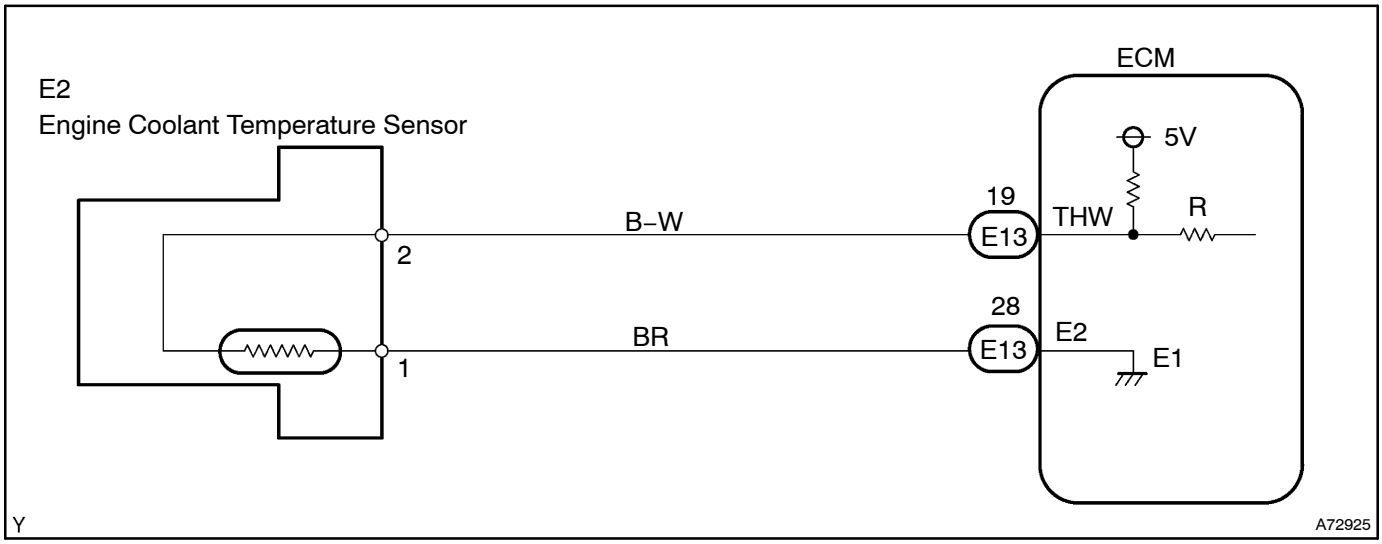

INSPECTION PROCEDURE

HINT:

- If DTCs related to different systems that have terminal E2 as the ground terminal are output simultaneously, terminal E2 may have an open circuit.
- Read freeze frame data using the hand–held tester. Freeze frame data records the engine conditions when a malfunction is detected. When troubleshooting, freeze frame data can help determine if the vehicle was running or stopped, if the engine was warmed up or not, if the air–fuel ratio was lean or rich, and other data from the time the malfunction occurred.

1	READ VALUE OF HAND–HELD TESTER(ENGINE COOLANT TEMPERATURE)

(a) Connect the hand–held tester to the DLC3.
(b) Turn the ignition switch to ON and turn the hand–held tester ON.
(c) On the hand–held tester, select the item: DIAGNOSIS / OBD/MOBD / DATA LIST / ALL / COOLANT TEMP.
(d) Read the values.
Temperature: 80 to 95°C (176 to 203°F) after warming up
Result:

Display	Proceed to
–40°C (–40°F)	A
140°C (284°F) or more	B
OK (Same as actual engine coolant temperature)	C

HINT:

- If there is an open circuit, the hand–held tester indicates –40°C (–40°F).
- If there is a short circuit, the hand–held tester indicates 140°C (284°F) or more.

B → **Go to step 4**

C → **CHECK FOR INTERMITTENT PROBLEMS (See Page 05–7)**

A

2 READ VALUE OF HAND–HELD TESTER(CHECK FOR OPEN IN HARNESS)

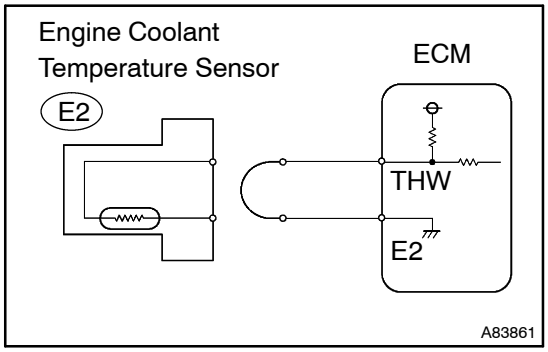

(a) Disconnect the E2 engine coolant temperature sensor connector.
(b) Connect terminals 1 and 2 of the engine coolant temperature sensor wire harness side connector.
(c) Connect the hand–held tester to the DLC3.
(d) Turn the ignition switch to ON.
(e) Turn the hand–held tester ON.
(f) On the hand–held tester, select the item: DIAGNOSIS / OBD/MOBD / DATA LIST / ALL / COOLANT TEMP.
(g) Read the values.
Temperature value: 140°C (284°F) or more
(h) Reconnect the engine coolant temperature sensor connector.

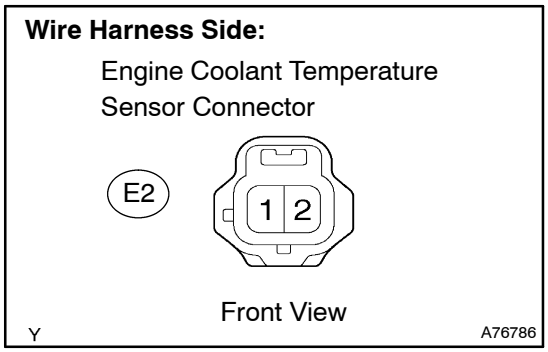

OK → **CONFIRM GOOD CONNECTION AT SENSOR. IF OK, REPLACE ENGINE COOLANT TEPMERATURE SENSOR**

NG

3 READ VALUE OF HAND–HELD TESTER(CHECK FOR OPEN IN ECM)

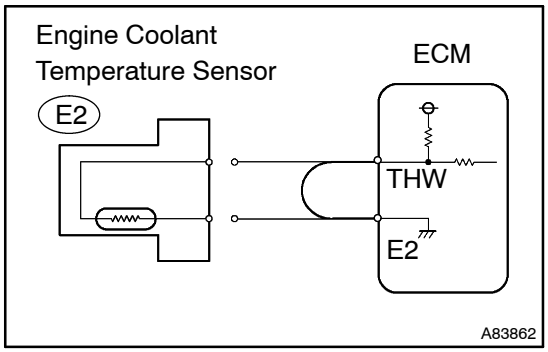

(a) Disconnect the E2 engine coolant temperature sensor connector.
(b) Connect terminals THW and E2 of the E13 ECM connector.

HINT:
Before checking, do a visual and contact pressure check on the ECM connector.

(c) Connect the hand–held tester to the DLC3.
(d) Turn the ignition switch to ON.
(e) Turn the hand–held tester ON.
(f) On the hand–held tester, select the item: DIAGNOSIS / OBD/MOBD / DATA LIST / ALL / COOLANT TEMP.
(g) Read the values.
Temperature value: 140°C (284°F) or more
(h) Reconnect the engine coolant temperature sensor connector.

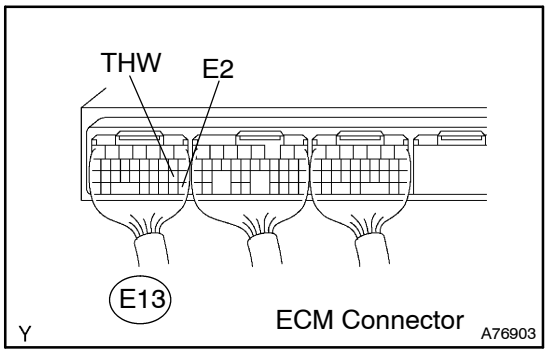

OK → **REPAIR OR REPLACE HARNESS OR CONNECTOR**

NG

CONFIRM GOOD CONNECTION AT ECM. IF OK, REPLACE ECM
(See page 10–65 of Pub. No. RM1018E AVENSIS)

4 READ VALUE OF HAND–HELD TESTER(CHECK FOR SHORT IN HARNESS)

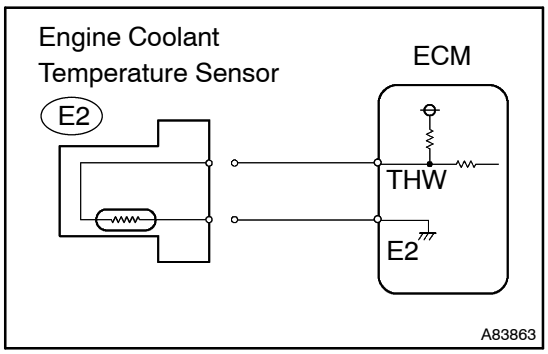

(a) Disconnect the E2 engine coolant temperature sensor connector.
(b) Connect the hand–held tester to the DLC3.
(c) Turn the ignition switch to ON.
(d) Turn the hand–held tester ON.
(e) On the hand–held tester, select the item: DIAGNOSIS / OBD/MOBD / DATA LIST / ALL / COOLANT TEMP.
(f) Read the values.
Temperature value: –40°C (–40°F)
(g) Reconnect the engine coolant temperature sensor connector.

OK	REPLACE ENGINE COOLANT TEMPERATURE SENSOR

NG

5 READ VALUE OF HAND–HELD TESTER(CHECK FOR SHORT IN ECM)

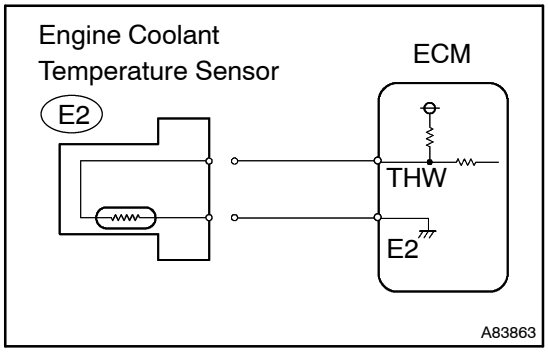

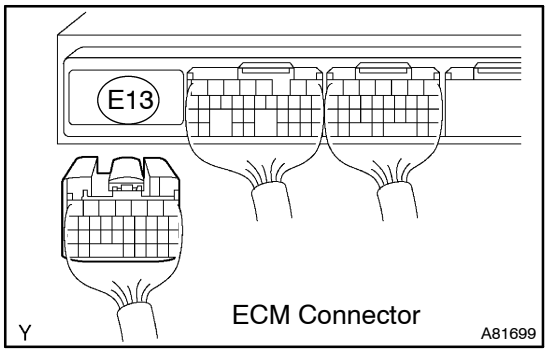

(a) Disconnect the E13 ECM connector.
(b) Disconnect the E2 engine coolant temperature sensor connector.
(c) Connect the hand–held tester to the DLC3.
(d) Turn the ignition switch to ON.
(e) Turn the hand–held tester ON.
(f) On the hand–held tester, select the item: DIAGNOSIS / OBD/MOBD / DATA LIST / ALL / COOLANT TEMP.
(g) Read the values.
Temperature: –40°C (–40°F)
(h) Reconnect the ECM connector.
(i) Reconnect the engine coolant temperature sensor connector.

OK	REPAIR OR REPLACE HARNESS OR CONNECTOR

NG

REPLACE ECM (See page 10–65 of Pub. No. RM1018E AVENSIS)

DTC	P0116	ENGINE COOLANT TEMPERATURE CIRCUIT RANGE/PERFORMANCE PROBLEM

CIRCUIT DESCRIPTION

Refer to DTC P0115 on page 05–70.

DTC No.	DTC Detection Condition	Trouble Area
P0116	(1) With the engine coolant temperature was –40°C (–40°F) or more but less than 60°C (140°F) when the engine was started, and if conditions (a) and (b) are met: (a) Vehicle has accelerated and decelerated. (b) Engine coolant temperature remains within 3°C (5.4°F) of the initial engine coolant temperature (2 trip detection logic) (2) If the engine coolant temperature is more than 60°C (140°F) when the engine is started and the vehicle has accelerated and decelerated (3) If the engine coolant temperature sensor records a temperature variation below 1°C (1.8°F) successively 6 times (6 trip detection logic)	• Engine coolant temperature sensor

INSPECTION PROCEDURE

HINT:

- If DTCs related to different systems that have terminal E2 as the ground terminal are output simultaneously, terminal E2 may have an open circuit.
- Read freeze frame data using the hand–held tester. Freeze frame data records the engine conditions when a malfunction is detected. When troubleshooting, freeze frame data can help determine if the vehicle was running or stopped, if the engine was warmed up or not, if the air–fuel ratio was lean or rich, and other data from the time the malfunction occurred.

1	REPLACE ENGINE COOLANT TEMPERATURE SENSOR

DTC	**P0120**	**THROTTLE/PEDAL POSITION SENSOR/SWITCH ”A” CIRCUIT**

DTC	**P0122**	**THROTTLE/PEDAL POSITION SENSOR/SWITCH ”A” CIRCUIT LOW INPUT**

DTC	**P0123**	**THROTTLE/PEDAL POSITION SENSOR/SWITCH ”A” CIRCUIT HIGH INPUT**

DTC	**P0220**	**THROTTLE/PEDAL POSITION SENSOR/SWITCH ”B” CIRCUIT**

DTC	**P0222**	**THROTTLE/PEDAL POSITION SENSOR/SWITCH ”B” CIRCUIT LOW INPUT**

DTC	**P0223**	**THROTTLE/PEDAL POSITION SENSOR/SWITCH ”B” CIRCUIT HIGH INPUT**

DTC	**P2135**	**THROTTLE/PEDAL POSITION SENSOR/SWITCH ”A”/”B” VOLTAGE CORRELATION**

HINT:
This is the purpose of troubleshooting on the throttle position sensor.

CIRCUIT DESCRIPTION

HINT:

- This Electrical Throttle Control System (ETCS) does not use a throttle cable.
- This throttle position sensor uses 2 hall ICs.

The throttle position sensor is mounted on the throttle body and it detects the opening angle of the throttle valve. This sensor is electronically controlled and uses Hall–effect elements, so that accurate control and reliability can be obtained. The throttle position sensor has 2 sensor elements / 2 signal output: VTA1 and VTA2. VTA1 used to detect the throttle opening angle and VTA2 is used to detect malfunctions in VTA1. Voltage applied to VTA1 and VTA2 change between 0V and 5V in proportion to the opening angle of the throttle valve. There are several checks that the ECM performs to confirm proper operation of the throttle position sensor and VTA1.

The ECM judges the current opening angle of the throttle valve from these signals input from terminals VTA1 and VTA2, and the ECM controls the throttle motor to make the throttle valve angle properly in response to driver inputs.

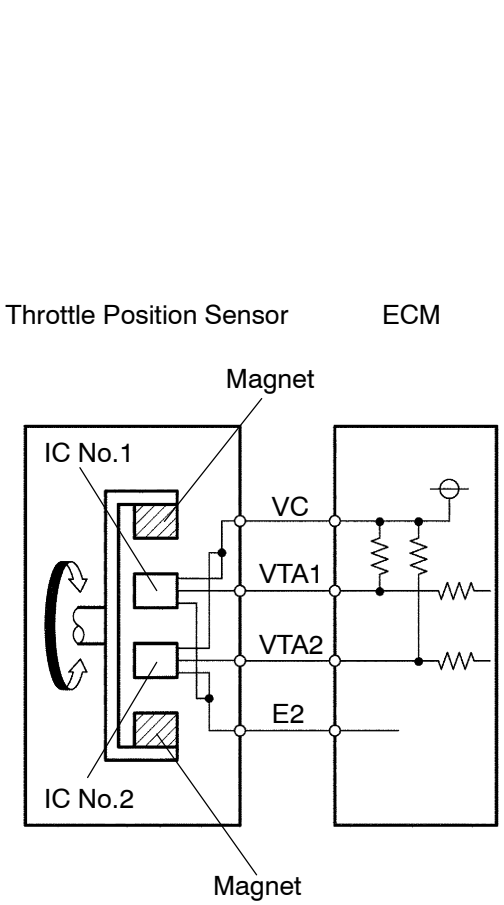

A19755

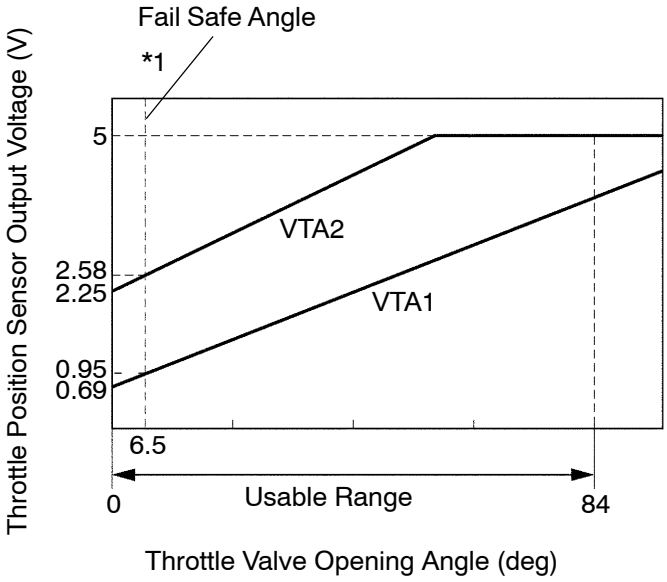

A19802

Throttle Valve Fully Closed
(Throttle Position expressed as percentage
(VTA1) 10 to 24 %)

Throttle Valve Fully Opened
(Throttle Position expressed as percentage
(VTA1) 64 to 96 %)

*1: Fail Safe Angle 7°
(Throttle Position expressed as percentage
(VTA1) about10 to 16 %)

DTC No.	DTC Detection Condition	Trouble Area
Condition (a) of DTC P0120, P0122, P0123, P0220, P0222 or P0223 continues for 2 seconds (Open or short in the throttle position sensor circuit)		
P0120	Detection conditions for DTCs P0122 and P0123 are not satisfied but condition (a) is satisfied (a) VTA1 is "0.2 V or less" or "4.8 V or more"	• Throttle position sensor (built in throttle body) • ECM
P0122	(a) VTA1 is 0.2 V or less	• Throttle position sensor (built in throttle body) • Short in VTA1 circuit • Open in VC circuit • ECM
P0123	(a) VTA1 is 4.8 V or more	• Throttle position sensor (built in throttle body) • Open in VTA1 circuit • Open in E2 circuit • VC and VTA1 circuits are short–circuited • ECM
P0220	Detection conditions for DTCs P0222 and P0223 are not satisfied but condition (a) is satisfied (a) VTA2 is "0.5 V or less" or "4.8 V or more" and VTA1 is "0.2 V or more" and "1.8 V or less"	• Throttle position sensor (built in throttle body) • ECM
P0222	(a) VTA2 is 0.5 V or less	• Throttle position sensor (built in throttle body) • Short in VTA2 circuit • Open in VC circuit • ECM
P0223	(a) VTA2 is "4.8 V or more" and VTA1 is "0.2 V or more" or "1.8 V or less"	• Throttle position sensor (built in throttle body) • Open in VTA2 circuit • Open in E2 circuit • VC and VTA2 circuits are short–circuited • ECM
P2135	Condition (a) continues for 0.5 second or more, or condition (b) continues for 0.4 second or more: (a) Difference between VTA1 and VTA2 is 0.02 V or less (b) VTA1 is "0.2 V or less" and VTA2 is "0.5 V or less"	• VTA1 and VTA2 circuits are short–circuited • Throttle position sensor (built in throttle body) • ECM

NOTICE:

When a malfunction is detected, the throttle valve is locked at a certain opening angle. Also, the whole electronically controlled throttle operation is cancelled until the system returns to normal and the ignition switch is turned OFF.

HINT:

- After confirming DTCs, use the hand–held tester to confirm the throttle valve opening percentage and closed throttle position switch condition.
- The THROTTLE POS means VTA1 signal as well as the THROTTLE POS #2 for the VTA2 signal.

Reference (Normal condition):

Tester display	Accelerator pedal fully released	Accelerator pedal fully depressed
THROTTLE POS	10 to 24 %	64 to 96 %
THROTTLE POS #2	2.1 to 3.1 V	4.5 to 5.5 V

WIRING DIAGRAM

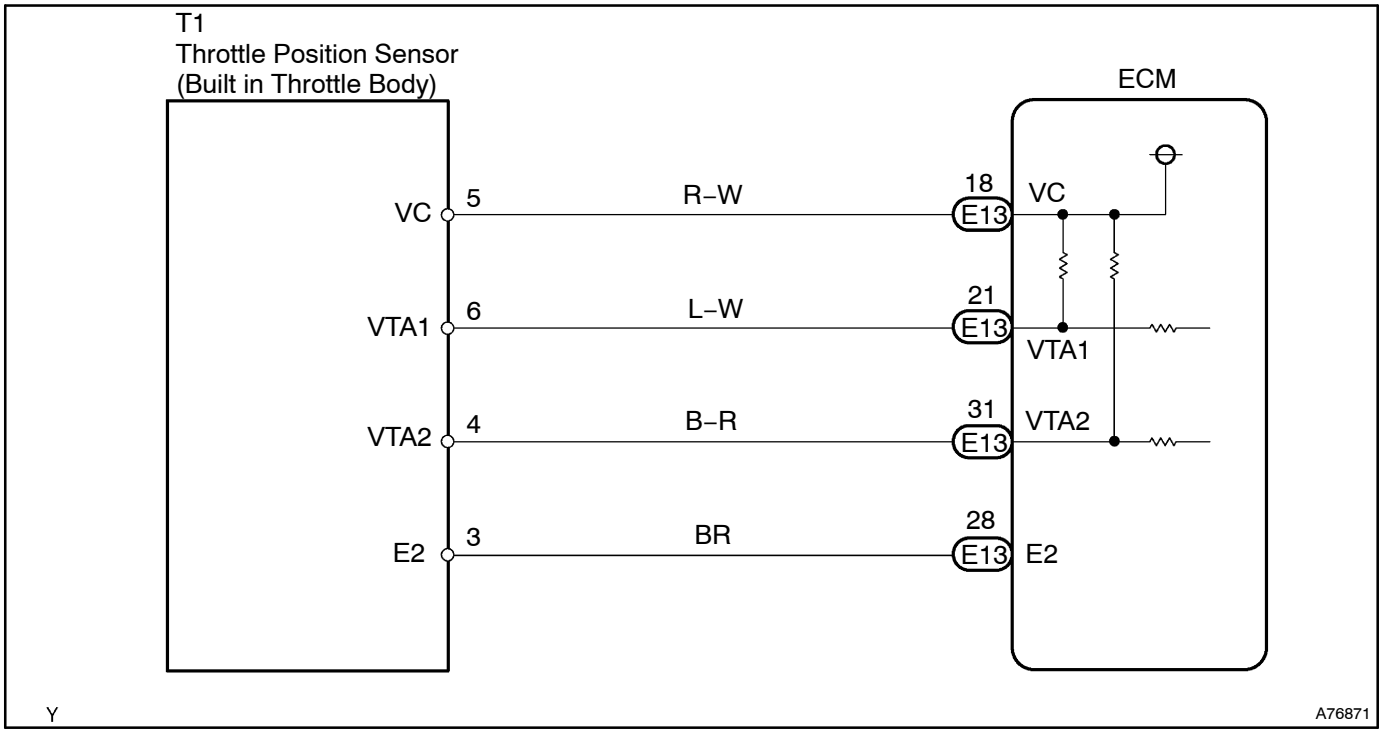

INSPECTION PROCEDURE

HINT:

- If different DTCs related to different systems that have terminal E2 as the ground terminal are output simultaneously, terminal E2 may have an open circuit.
- Read freeze frame data using the hand–held tester. Freeze frame data records the engine conditions when a malfunction is detected. When troubleshooting, freeze frame data can help determine if the vehicle was running or stopped, if the engine was warmed up or not, if the air–fuel ratio was lean or rich, and other data from the time the malfunction occurred.

1 READ VALUE OF HAND–HELD TESTER(THROTTLE POS AND THROTTLE POS #2)

(a) Connect the hand–held tester to the DLC3.
(b) Turn the ignition switch to ON and turn the hand–held tester ON.
(c) On the hand–held tester, select the items: DIAGNOSIS / OBD/MOBD / DATA LIST / ETCS / THROTTLE POS and THROTTLE POS #2.
(d) Read the values.

Result:

Throttle position expressed as percentage and voltage				Trouble area	Proceed to
Accelerator pedal released		Accelerator pedal depressed			
THROTTLE POS (VTA1)	THROTTLE POS #2 (VTA2)	THROTTLE POS (VTA1)	THROTTLE POS #2 (VTA2)		
0 %	0 to 0.2 V	0 %	0 to 0.2 V	VC circuit open	A
100 %	4.5 to 5.5 V	100 %	4.5 to 5.5 V	E2 circuit open	
0 % or 100 %	2.1 to 3.1 V (Fail safe)	0 % or 100 %	2.1 to 3.1 V (Fail safe)	VTA1 circuit open or ground short	
About 16 % (Fail safe)	0 to 0.2 or 4.5 to 5.5 V	About 16 % (Fail safe)	0 to 0.2 or 4.5 to 5.5 V	VTA2 circuit open or ground short	
10 to 24 %	2.1 to 3.1 V	64 to 96 % (Does not fail safe)	4.5 to 5.5 V (Does not fail safe)	Throttle position sensor circuit is normal	B

B → **Go to step 5**

A

2 CHECK HARNESS AND CONNECTOR(THROTTLE POSITION SENSOR – ECM)

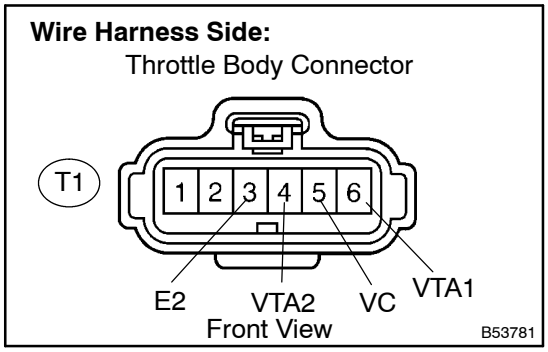

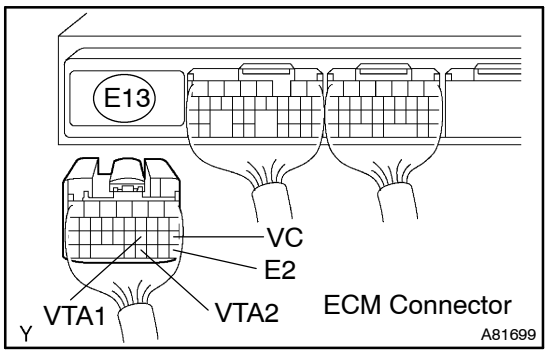

(a) Disconnect the T1 throttle body connector.
(b) Disconnect the E13 ECM connector.
(c) Check the resistance between the wire harness side connectors.

Standard (Check for open):

Tester Connection	Specified Condition
VC (T1–5) – VC (E13–18)	Below 1 Ω
VTA1 (T1–6) – VTA1 (E13–21)	Below 1 Ω
VTA2 (T1–4) – VTA2 (E13–31)	Below 1 Ω
E2 (T1–3) – E2 (E13–28)	Below 1 Ω

Standard (Check for short):

Tester Connection	Specified Condition
VC (T1–5) or VC (E13–18) – Body ground	10 kΩ or higher
VTA1 (T1–6) or VTA1 (E13–21) – Body ground	10 kΩ or higher
VTA2 (T1–4) or VTA2 (E13–31) – Body ground	10 kΩ or higher

(d) Reconnect the ECM connector.
(e) Reconnect the throttle body connector.

NG → **REPAIR OR REPLACE HARNESS OR CONNECTOR**

OK

3	INSPECT ECM(VC VOLTAGE)

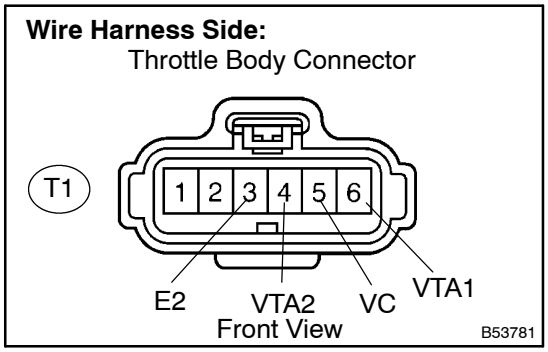

(a) Disconnect the T1 throttle body connector.
(b) Measure the voltage between the specified terminals of the E13 ECM connector.
(c) Reconnect the throttle body connector.

Standard:

Tester Connection	Specified Condition
VC (E13–18) – E2 (E13–28)	4.5 to 5.5 V

(d) Reconnect the throttle body connector.

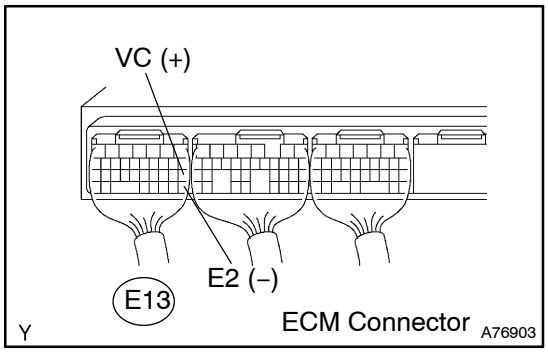

NG → **REPLACE ECM (See page 10–65 of Pub. No. RM1018E AVENSIS)**

OK

4	REPLACE THROTTLE BODY ASSY (See page 10–8)

GO

5	READ OUTPUT DTC(SEE IF THROTTLE POSTION SENSOR DTCS ARE OUTPUT AGAIN)

(a) Clear the DTCs (see page 05–19).
(b) Start the engine.
(c) Drive the engine at idle for 15 seconds or more.
(d) Read DTCs (see page 05–19).

Result:

Display (DTC output)	Proceed to
P0120, P0122, P0123, P0220, P0222, P0223 and/or P2135	A
No output	B

B → **SYSTEM OK**

A

REPLACE ECM (See page 10–65 of Pub. No. RM1018E AVENSIS)

DTC	P0121	THROTTLE/PEDAL POSITION SENSOR/SWITCH ”A” CIRCUIT RANGE/PERFORMANCE PROBLEM

HINT:
This is the troubleshooting procedure of the throttle position sensor.

CIRCUIT DESCRIPTION

Refer to DTC P0120 on page 05–75.

DTC No.	DTC Detection Condition	Trouble Area
P0121	Difference between VTA1 and VTA2 deviates from the threshold for 2.0 seconds	Throttle position sensor (built in throttle body)

INSPECTION PROCEDURE

HINT:
Read freeze frame data using the hand–held tester. Freeze frame data records the engine conditions when a malfunction is detected. When troubleshooting, freeze frame data can help determine if the vehicle was running or stopped, if the engine was warmed up or not, if the air–fuel ratio was lean or rich, and other data from the time the malfunction occurred.

1	**REPLACE THROTTLE BODY ASSY (See page 10–8)**

DTC	P0130	OXYGEN SENSOR CIRCUIT (BANK 1 SENSOR 1)

DTC	P0150	OXYGEN SENSOR CIRCUIT MALFUNCTION (BANK 2 SENSOR 1)

DTC	P2195	OXYGEN SENSOR SIGNAL STUCK LEAN (BANK 1 SENSOR 1)

DTC	P2196	OXYGEN SENSOR SIGNAL STUCK RICH (BANK 1 SENSOR 1)

DTC	P2197	OXYGEN SENSOR SIGNAL STUCK LEAN (BANK 2 SENSOR 1)

DTC	P2198	OXYGEN SENSOR SIGNAL STUCK RICH (BANK 2 SENSOR 1)

CIRCUIT DESCRIPTION

To obtain a high purification rate for the CO, HC and NOx components of the exhaust gas, a three–way catalytic converter is used. For the most efficient use of the three–way catalytic converter, the air–fuel ratio must be precisely controlled so that it is always close to the stoichiometric air–fuel ratio.

The heated oxygen sensor has the characteristic whereby its output voltage changes suddenly in the vicinity of the stoichiometric air–fuel ratio. This is used to detect the oxygen concentration in the exhaust gas and to provide the ECM with feedback to control the air–fuel ratio.

When the air–fuel ratio becomes LEAN, the oxygen concentration in the exhaust gas increases. And the heated oxygen sensor informs the ECM of the LEAN condition (low voltage, i. e. less than 0.45 V).

When the air–fuel ratio is RICHER than the stoichiometric air–fuel ratio, the oxygen concentration in the exhaust gas is reduced. And the heated oxygen sensor informs the ECM of the RICH condition (high voltage, i. e. more than 0.45 V). The ECM judges whether the air–fuel ratio is RICH or LEAN by voltage from the heated oxygen sensor, and controls the injection timing accordingly. However, if the malfunction of the heated oxygen sensor causes abnormal voltage output, the ECM becomes unable to perform the accurate air–fuel ratio control.

The heated oxygen sensors include a heater which heats the zirconia element. The heater is controlled by the ECM. When the intake air volume is low (the temperature of the exhaust gas is low), the current flows to the heater in order to heat the sensor for the accurate oxygen concentration detection.

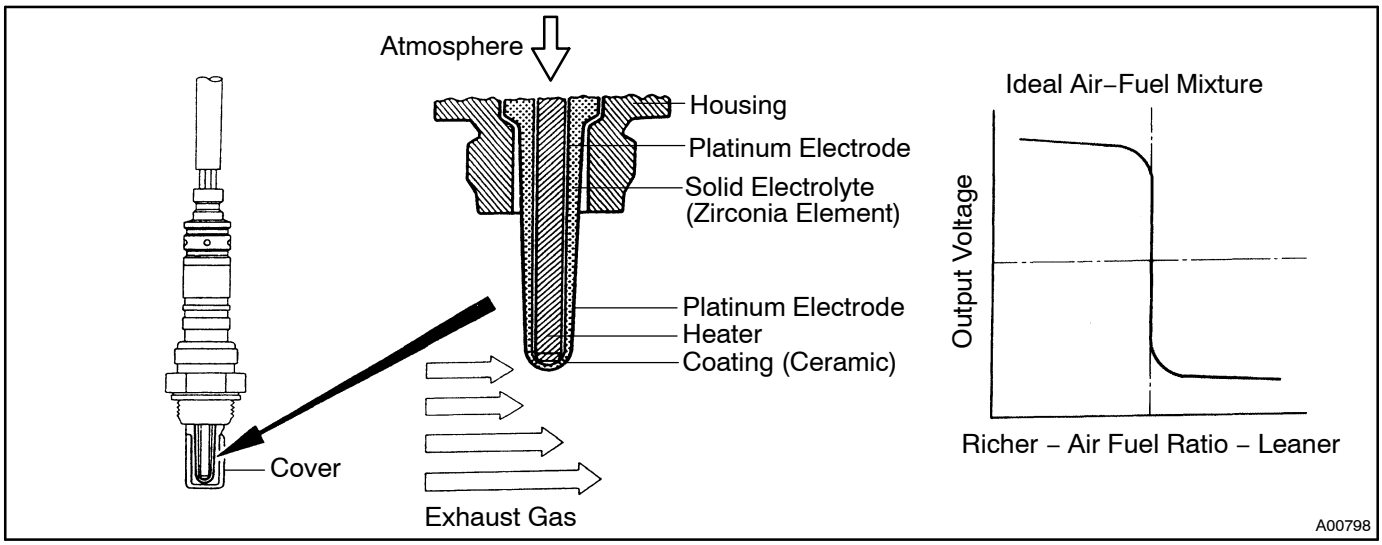

DTC No.	DTC Detection Condition	Trouble Area
P0130 P0150	After engine is warmed up, output voltage of heated oxygen sensor remains at 0.4 V or more, or 0.55 V or less, during idling (2 trip detection logic)	• Open or short in heated oxygen sensor circuit • Heated oxygen sensor (Bank 1, 2 Sensor 1) • Heated oxygen sensor heater (Bank 1, 2 Sensor 1) • EFI relay • Air induction system • Fuel pressure • Injector • ECM
P2195 P2197	After engine is warmed up, output voltage of heated oxygen sensor remains at 0.55 V or less, during idling (2 trip detection logic)	• Open or short in heated oxygen sensor circuit • Heated oxygen sensor (Bank 1, 2 Sensor 1) • Heated oxygen sensor heater (Bank 1, 2 Sensor 1) • EFI relay • Air induction system • Fuel pressure • Injector • ECM
P2196 P2198	After engine is warmed up, output voltage of heated oxygen sensor remains at 0.4 V or more, during idling (2 trip detection logic)	• Open or short in heated oxygen sensor circuit • Heated oxygen sensor (Bank 1, 2 Sensor 1) • Heated oxygen sensor heater (Bank 1, 2 Sensor 1) • EFI relay • Air induction system • Fuel pressure • Injector • ECM

HINT:

- Bank 1 refers to the No. 1 and No. 4 cylinders.
- Bank 2 refers to the No. 2 and No. 3 cylinders.
- Sensor 1 refers to the sensor closest to the engine assembly.
- The output voltage of the heated oxygen sensor and the short–term fuel trim value can be read using the hand–held tester.

WIRING DIAGRAM

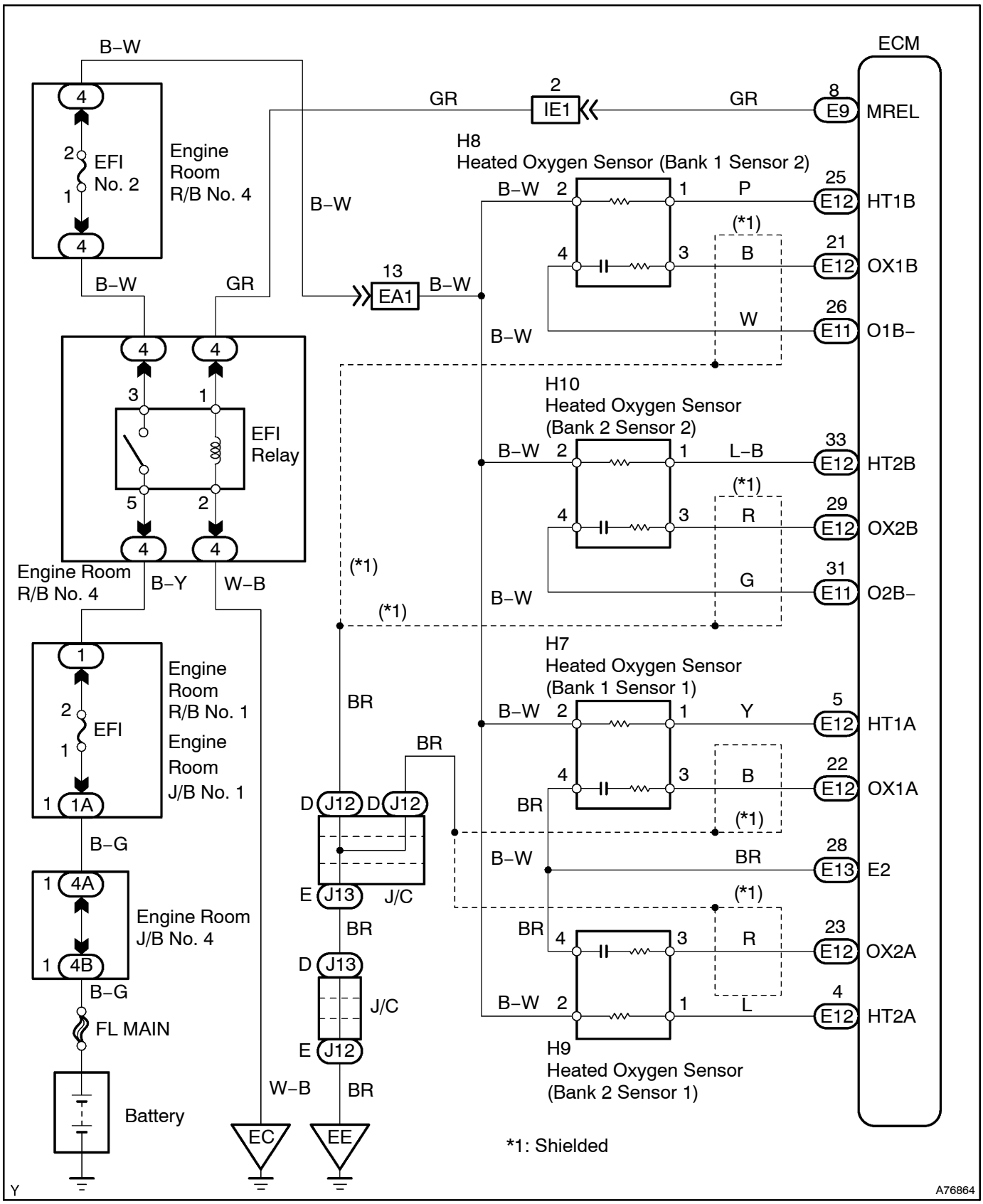

CONFIRMATION DRIVING PATTERN

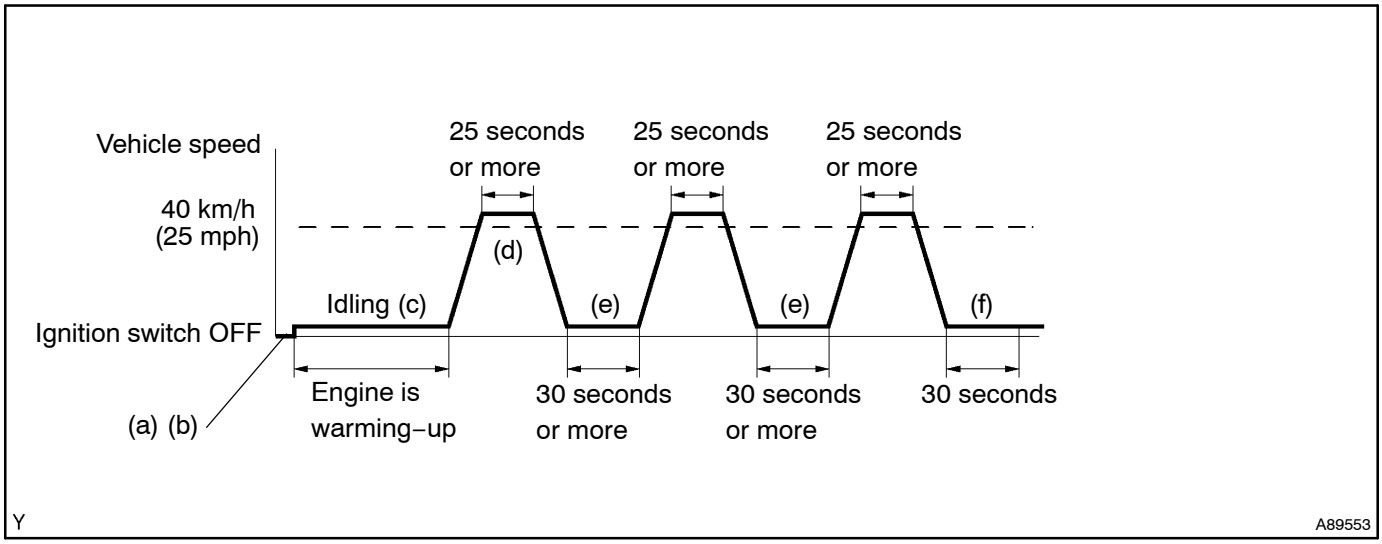

(a) Connect the hand–held tester to the DLC3.
(b) Switch the hand–held tester from normal mode to check mode (see page 05–20).
(c) Start the engine and let the engine idle.
(d) Drive the vehicle at 40 km/h (25 mph) or more for 25 seconds or more.
(e) Let the engine idle for 30 seconds or more. Perform steps (d) and (e) at least 3 times.
(f) Let the engine idle for 30 seconds.

HINT:
If malfunction exists, the CHK ENG will be illuminated during step (f).

NOTICE:
If the conditions in this test are not strictly followed, no malfunction will be detected.
If you do not have the hand–held tester, turn the ignition switch to OFF after performing steps from (c) to (f), then perform steps (c) to (f) again.

INSPECTION PROCEDURE

HINT:

Hand–held tester only:

It is possible the malfunctioning area can be found using the ACTIVE TEST A/F CONTROL operation. The A/F CONTROL operation can determine if the A/F sensor, heated oxygen sensor or other potential trouble areas are malfunctioning or not.

(a) Perform the ACTIVE TEST A/F CONTROL operation.

HINT:

The A/F CONTROL operation lowers the injection volume 12.5% or increases the injection volume 25%.

(1) Connect the hand–held tester to the DLC3 on the vehicle.
(2) Turn the ignition switch to ON.
(3) Warm up the engine by running the engine at 2,500 rpm for approximately 3 minutes.
(4) Select the item: DIAGNOSIS / OBD/MOBD / ACTIVE TEST / A/F CONTROL.
(5) Perform the A/F CONTROL operation with the engine in an idle condition (press the right or left button).

Result:

Heated oxygen sensor reacts in accordance with increase and decrease of injection volume:
+25 % → rich output: More than 0.5 V
–12.5 % → lean output: Less than 0.4 V

NOTICE:

There is a delay of few seconds in the sensor 1 (front sensor) output, and there is about 20 seconds delay at maximum in the sensor 2 (rear sensor).

	Output voltage of heated oxygen sensor (sensor 1: front sensor)	Output voltage of heated oxygen sensor (sensor 2: rear sensor)	Main suspect trouble area
Case 1	Injection volume +25 % –12.5 % Output voltage More than 0.5 V Less than 0.4V **OK**	Injection volume +25 % –12.5 % Output voltage More than 0.5 V Less than 0.4V **OK**	—
Case 2	Injection volume +25 % –12.5 % Output voltage Almost no reaction **NG**	Injection volume +25 % –12.5 % Output voltage More than 0.5 V Less than 0.4V **OK**	Sensor 1: front sensor (sensor 1, heater, sensor 1 circuit)
Case 3	Injection volume +25 % –12.5 % Output voltage More than 0.5 V Less than 0.4V **OK**	Injection volume +25 % –12.5 % Output voltage Almost no reaction **NG**	Sensor 2: rear sensor (sensor 2, heater, sensor 2 circuit)
Case 4	Injection volume +25 % –12.5 % Output voltage Almost no reaction **NG**	Injection volume +25 % –12.5 % Output voltage Almost no reaction **NG**	Extremely rich or lean actual air–fuel ratio (Injector, fuel pressure, gas leakage in exhaust system, etc.)

The following A/F CONTROL procedure enables the technician to check and graph the voltage outputs of both the heated oxygen sensor.
To display the graph, enter ACTIVE TEST/ A/F CONTROL/USER DATA, then select ”O2S B1S1 and O2S B1S2” or ”O2S B2S1 and O2S B2S2” by pressing the ”YES” button followed by the ”ENTER” button and then the ”F4” button.

NOTICE:

If the vehicle is short of fuel, the air–fuel ratio becomes LEAN and heated oxygen sensor DTCs will be recorded, and the CHK ENG then illuminates.

HINT:

- If different DTCs related to different systems that have terminal E2 as the ground terminal are output simultaneously, terminal E2 may have an open circuit.
- Read freeze frame data using the hand−held tester. Freeze frame data records the engine conditions when a malfunction is detected. When troubleshooting, freeze frame data can help determine if the vehicle was running or stopped, if the engine was warmed up or not, if the air–fuel ratio was lean or rich, and other data from the time the malfunction occurred.
- A high heated oxygen sensor (sensor 1) voltage (0.5 V or more) could be caused by a rich air–fuel mixture. Check for conditions that would cause the engine to run rich.
- A low heated oxygen sensor (sensor 1) voltage (0.4 V or less) could be caused by a lean air–fuel mixture. Check for conditions that would cause the engine to run lean.

1	CHECK OTHER DTC OUTPUT(IN ADDITION TO HEATED OXYGEN SENSOR DTCS)

(a) Connect the hand–held tester to the DLC3.
(b) Turn the ignition switch to ON and turn the hand–held tester ON.
(c) Select the item: DIAGNOSIS / OBD/MOBD / DTC INFO / CURRENT CODES.
(d) Read the DTCs using the hand–held tester.

Result:

Display (DTC output)	Proceed to
P0130, P0150, P2195, P2196, P2197 and/or P2198	A
P0130, P0150, P2195, P2196, P2197 or P2198 and other DTCs	B

HINT:
If any other codes besides P0130, P0150, P2195, P2196, P2197 and/or P2198 are output, perform troubleshooting for those DTCs first.

B → **GO TO RELEVANT DTC CHART** (See page 05–31)

A

2	READ VALUE OF HAND–HELD TESTER(OUTPUT VOLTAGE OF HEATED OXYGEN SENSOR)

(a) Connect the hand–held tester to the DLC3.
(b) Start the engine and turn the hand–held tester ON.
(c) Select the item: DIAGNOSIS / OBD/MOBD / DATA LIST / ALL / O2S B1S1 or O2S B2S1.
(d) Warm up the heated oxygen sensor with the engine speed at 2,500 rpm for approximately 90 seconds.
(e) Read the output voltage of the heated oxygen sensor during idling.
Heated oxygen sensor (sensor 1) output voltage:
Alternates repeatedly between less than 0.4 V and more than 0.55 V (see the following table).

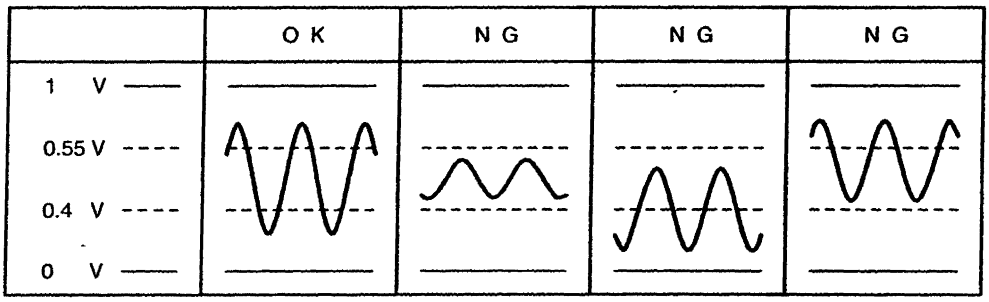

P18349

NG	Go to step 5

OK

3	PERFORM CONFIRMATION DRIVING PATTERN

HINT:
Clear all DTCs prior to performing the confirmation driving pattern.

GO

4	READ OUTPUT DTC(SEE IF HEATED OXYGEN SENSOR DTCS ARE OUTPUT AGAIN)

(a) Connect the hand–held tester to the DLC3.
(b) Turn the ignition switch to ON and turn the hand–held tester ON.
(c) Select the item: DIAGNOSIS / OBD/MOBD / DTC INFO / CURRENT CODES.
(d) Read the DTCs using the hand–held tester.
Result:

Display (DTC output)	Proceed to
P0130, P0150, P2195, P2196, P2197 and/or P2198	A
No output	B

B	CHECK FOR INTERMITTENT PROBLEMS (See Page 05–7)

A

REPLACE HEATED OXYGEN SENSOR

5 INSPECT HEATED OXYGEN SENSOR(HEATER RESISTANCE)

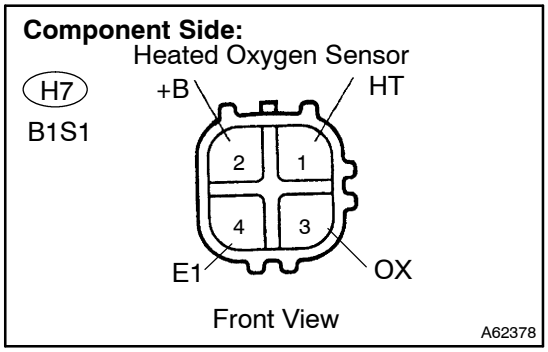

(a) Disconnect the H7 or H9 heated oxygen sensor connector.

(b) Measure the resistance between the terminals of the heated oxygen sensor connector.

Standard (Bank 1, 2 Sensor 1):

Tester Connection	Resistance
1 (HT) – 2 (+B)	11 to 16 Ω at 20°C (68°F)
1 (HT) – 4 (E1)	10 kΩ or higher

(c) Reconnect the heated oxygen sensor connector.

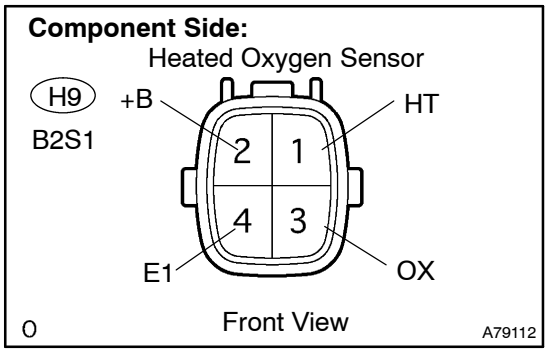

NG → **REPLACE HEATED OXYGEN SENSOR**

OK

6 INSPECT EFI RELAY

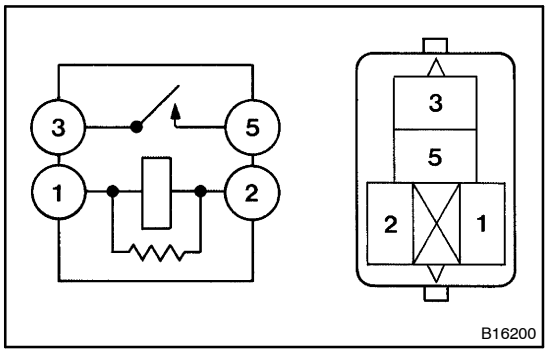

(a) Remove the EFI relay from the engine room R/B No. 4.

(b) Check for continuity in the EFI relay.

Standard:

Tester Connection	Specified Condition
1 – 2	Continuity
3 – 5	No Continuity
3 – 5	Continuity (Apply battery voltage to terminals 1 and 2)

(c) Reinstall the EFI relay.

NG → **REPLACE EFI RELAY**

OK

7 CHECK HARNESS AND CONNECTOR(HEATED OXYGEN SENSOR – ECM)

Wire Harness Side:

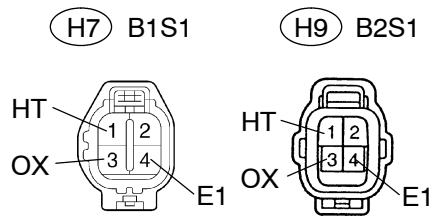

Heated Oxygen Sensor Connector

A76821

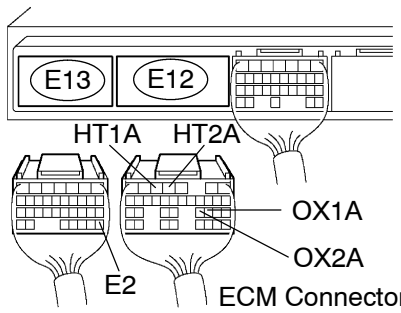

A76823

(a) Disconnect the H7 or H9 heated oxygen sensor connector.

(b) Disconnect the E12 and E13 ECM connectors.

(c) Check the resistance between the wire harness side connectors.

Standard (Check for open):

Tester Connection	Specified Condition
OX (H7–3) – OX1A (E12–22)	Below 1 Ω
HT (H7–1) – HT1A (E12–5)	Below 1 Ω
E1 (H7–4) – E2 (E13–28)	Below 1 Ω
OX (H9–3) – OX2A (E12–23)	Below 1 Ω
HT (H9–1) – HT2A (E12–4)	Below 1 Ω
E1 (H9–4) – E2 (E13–28)	Below 1 Ω

Standard (Check for short):

Tester Connection	Specified Condition
OX (H7–3) or OX1A (E12–22) – Body ground	10 kΩ or higher
HT (H7–1) or HT1A (E12–5) – Body ground	10 kΩ or higher
OX (H9–3) or OX2A (E12–23) – Body ground	10 kΩ or higher
HT (H9–1) or HT2A (E12–4) – Body ground	10 kΩ or higher

(d) Reconnect the heated oxygen sensor connector.

(e) Reconnect the ECM connector.

HINT:

- The OX1A and HT1A means the heated oxygen sensor bank 1 sensor 1.
- The OX2A and HT2A means the heated oxygen sensor bank 2 sensor 1.

Reference (Bank 1 Sensor 1 System Drawing)

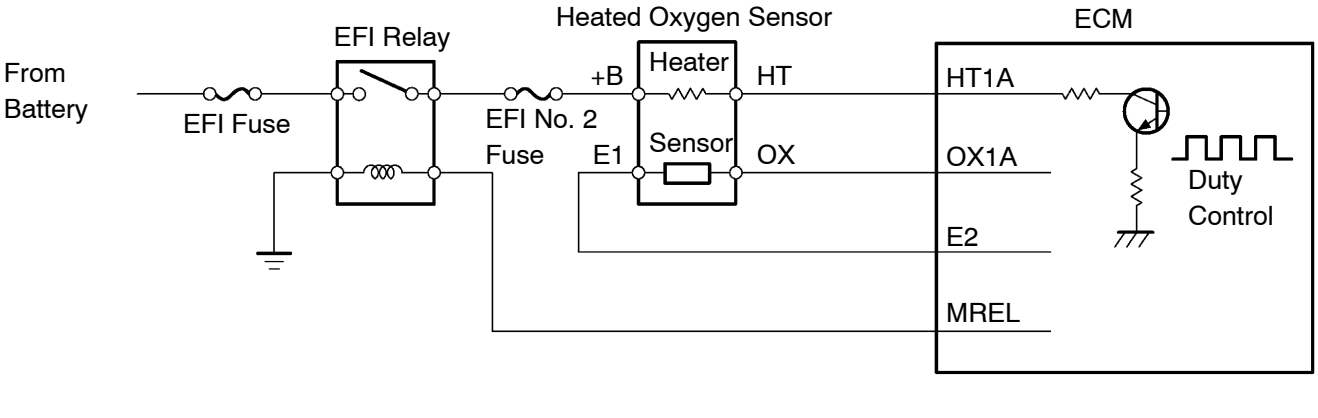

A72920

NG → **REPAIR OR REPLACE HARNESS OR CONNECTOR**

OK

8	CHECK AIR INDUCTION SYSTEM

(a) Check for vacuum leaks in the air induction system.

NG → REPAIR OR REPLACE AIR INDUCTION SYSTEM

OK

9	CHECK FUEL PRESSURE(LOW PRESSURE) (See page 11–4)

NG → CHECK AND REPLACE FUEL PUMP, PRESSURE REGULATOR, FUEL PIPE LINE AND FILTER

OK

10	CHECK FUEL PRESSURE(HIGH PRESSURE) (See page 11–4)

NG → CHECK AND REPLACE FUEL PUMP, FUEL PRESSURE SENSOR, WIRING AND FUEL LEAKAGE

OK

11	CONFIRM IF ANY MISFIRING DTCS WERE PRESENT AT STEP 1

(a) Misfiring DTC P0301, P0302, P0303 and/or P0304 was present at step 1.

NO → REPLACE HEATED OXYGEN SENSOR

YES

12	REPLACE FUEL INJECTOR ASSY (See page 11–13)

HINT:
If one or more the misfiring DTCs P0301, P0302, P0303 and/or P0304 were present at step 1, replace the injector(s) mounted on the misfiring cylinder(s) that is referred by the DTC(s) with normal injector(s).

GO

13	PERFORM CONFIRMATION DRIVING PATTERN

HINT:
Clear all DTCs prior to performing the confirmation driving pattern.

GO

14	READ OUTPUT DTC(SEE IF HEATED OXYGEN SENSOR DTCS ARE OUTPUT AGAIN)

(a) Connect the hand–held tester to the DLC3.
(b) Turn the ignition switch to ON and turn the hand–held tester ON.
(c) Select the item: DIAGNOSIS / OBD/MOBD / DTC INFO / CURRENT CODES.
(d) Read the DTCs using the hand–held tester.

Result:

Display (DTC output)	Proceed to
P0130, P0150, P2195, P2196, P2197 and/or P2198	A
No output	B

B → **REPLACE FUEL INJECTOR ASSY**

A

REPLACE HEATED OXYGEN SENSOR

DTC	P0133	OXYGEN SENSOR CIRCUIT SLOW RESPONSE (BANK 1 SENSOR 1)

DTC	P0153	OXYGEN SENSOR CIRCUIT SLOW RESPONSE (BANK 2 SENSOR 1)

CIRCUIT DESCRIPTION

Refer to DTC P0130 on page 05–82.

DTC No.	DTC Detection Condition	Trouble Area
P0133 P0153	(1) After engine has been warmed up, if response time that heated oxygen sensor output voltage reaches from RICH to LEAN, or from LEAN to RICH, is 0.6 second or more during idling (2 trip detection logic) (2) If response time of heated oxygen sensor output voltage in one RICH–LEAN cycle is 9 seconds or more (M/T vehicle: 5.5 seconds or more) during idling (2 trip detection logic)	• Open or short in heated oxygen sensor circuit • Heated oxygen sensor (Bank 1, 2 Sensor 1) • Heated oxygen sensor heater (Bank 1, 2 Sensor 1) • EFI relay • Air induction system • Fuel pressure • Injector • ECM

HINT:

- Bank 1 refers to the No. 1 and No. 4 cylinders.
- Bank 2 refers to the No. 2 and No. 3 cylinders.
- Sensor 1 refers to the sensor closest to the engine assembly.

WIRING DIAGRAM

Refer to DTC P0130 on page 05–82.

INSPECTION PROCEDURE

HINT:

Hand–held tester only:

It is possible the malfunctioning area can be found using the ACTIVE TEST A/F CONTROL operation. The A/F CONTROL operation can determine if the A/F sensor, heated oxygen sensor or other potential trouble areas are malfunctioning or not.

(a) Perform the ACTIVE TEST A/F CONTROL operation.

HINT:

The A/F CONTROL operation lowers the injection volume 12.5% or increases the injection volume 25%.

(1) Connect the hand–held tester to the DLC3 on the vehicle.
(2) Turn the ignition switch to ON.
(3) Warm up the engine by running the engine at 2,500 rpm for approximately 3 minutes.
(4) Select the item: DIAGNOSIS / OBD/MOBD / ACTIVE TEST / A/F CONTROL.
(5) Perform the A/F CONTROL operation with the engine in an idle condition (press the right or left button).

Result:

Heated oxygen sensor reacts in accordance with increase and decrease of injection volume:

+25 % → rich output: More than 0.5 V

–12.5 % → lean output: Less than 0.4 V

NOTICE:

There is a delay of few seconds in the sensor 1 (front sensor) output, and there is about 20 seconds delay at maximum in the sensor 2 (rear sensor).

	Output voltage of heated oxygen sensor (sensor 1: front sensor)	Output voltage of heated oxygen sensor (sensor 2: rear sensor)	Main suspect trouble area
Case 1	Injection volume +25 % –12.5 % Output voltage More than 0.5 V Less than 0.4V **OK**	Injection volume +25 % –12.5 % Output voltage More than 0.5 V Less than 0.4V **OK**	—
Case 2	Injection volume +25 % –12.5 % Output voltage Almost no reaction **NG**	Injection volume +25 % –12.5 % Output voltage More than 0.5 V Less than 0.4V **OK**	Sensor 1: front sensor (sensor 1, heater, sensor 1 circuit)
Case 3	Injection volume +25 % –12.5 % Output voltage More than 0.5 V Less than 0.4V **OK**	Injection volume +25 % –12.5 % Output voltage Almost no reaction **NG**	Sensor 2: rear sensor (sensor 2, heater, sensor 2 circuit)
Case 4	Injection volume +25 % –12.5 % Output voltage Almost no reaction **NG**	Injection volume +25 % –12.5 % Output voltage Almost no reaction **NG**	Extremely rich or lean actual air–fuel ratio (Injector, fuel pressure, gas leakage in exhaust system, etc.)

The following A/F CONTROL procedure enables the technician to check and graph the voltage outputs of both the heated oxygen sensor.
To display the graph, enter ACTIVE TEST/ A/F CONTROL/USER DATA, then select ”O2S B1S1 and O2S B1S2” or ”O2S B2S1 and O2S B2S2” by pressing the ”YES” button followed by the ”ENTER” button and then the ”F4” button.

NOTICE:

If the vehicle is short of fuel, the air–fuel ratio becomes LEAN and heated oxygen sensor DTCs will be recorded, and the CHK ENG then illuminates.

HINT:

- If different DTCs related to different systems that have terminal E2 as the ground terminal are output simultaneously, terminal E2 may have an open circuit.
- Read freeze frame data using the hand–held tester. Freeze frame data records the engine conditions when a malfunction is detected. When troubleshooting, freeze frame data can help determine if the vehicle was running or stopped, if the engine was warmed up or not, if the air–fuel ratio was lean or rich, and other data from the time the malfunction occurred.
- A high heated oxygen sensor (sensor 1) voltage (0.5 V or more) could be caused by a rich air–fuel mixture. Check for conditions that would cause the engine to run rich.
- A low heated oxygen sensor (sensor 1) voltage (0.4 V or less) could be caused by a lean air–fuel mixture. Check for conditions that would cause the engine to run lean.

1	CHECK OTHER DTC OUTPUT(IN ADDITION TO DTC P0133 AND/OR P0153)

(a) Connect the hand–held tester to the DLC3.
(b) Turn the ignition switch to ON and turn the hand–held tester ON.
(c) Select the item: DIAGNOSIS / OBD/MOBD / DTC INFO / CURRENT CODES.
(d) Read the DTCs using the hand–held tester.
Result:

Display (DTC output)	Proceed to
P0133 and/or P0153	A
P0133 or P0153 and other DTCs	B

HINT:
- If any other codes besides P0133 and/or P0153 are output, perform troubleshooting for those DTCs first.
- If a misfiring DTC(s) is present, record the DTC(s) that indicates misfiring cylinder(s), then proceed to A.

B → **GO TO RELEVANT DTC CHART** (See page 05–31)

A

2	READ VALUE OF HAND–HELD TESTER(HEATED OXYGEN SENSOR DURING IDLING)

(a) Connect the hand–held tester to the DLC3.
(b) Start the engine and turn the hand–held tester ON.
(c) Select the item: DIAGNOSIS / OBD/MOBD / DATA LIST / ALL / O2S B1S1 or O2S B2S1.
(d) Warm up the heated oxygen sensor with the engine speed at 2,500 rpm for approximately 90 seconds.
(e) Read the output voltage of the heated oxygen sensor during idling.
Heated oxygen sensor output voltage:
Alternates repeatedly between less than 0.4 V and more than 0.55 V, and period of "t" must be less than 1.0 second (see the following table).

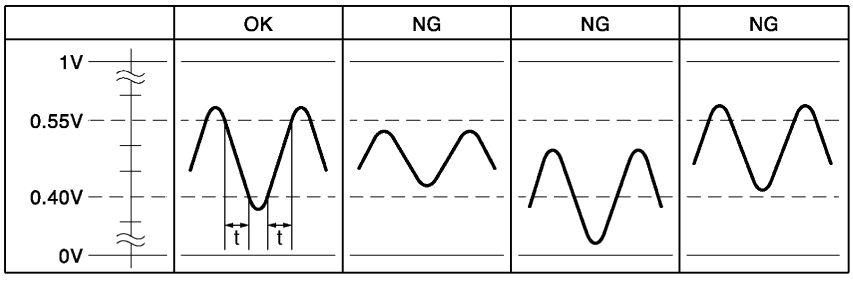

N A73686

NG → **Go to step 5**

OK

3	PERFORM CONFIRMATION DRIVING PATTERN (See page 05–82)

HINT:
Clear all DTCs prior to performing the confirmation driving pattern.

GO

4	READ OUTPUT DTC(SEE IF DTC P0133 AND/OR P0153 ARE OUTPUT AGAIN)

(a) Connect the hand–held tester to the DLC3.
(b) Turn the ignition switch to ON and turn the hand–held tester ON.
(c) Select the item: DIAGNOSIS / OBD/MOBD / DTC INFO / CURRENT CODES.
(d) Read the DTCs using the hand–held tester.

Result:

Display (DTC output)	Proceed to
P0133 and/or P0153	A
No output	B

B → CHECK FOR INTERMITTENT PROBLEMS (See Page 05–7)

A

REPLACE HEATED OXYGEN SENSOR

5	INSPECT HEATED OXYGEN SENSOR(HEATER RESISTANCE)

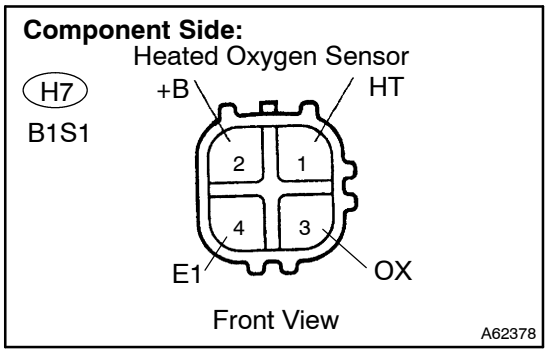

(a) Disconnect the H7 or H9 heated oxygen sensor connector.
(b) Measure the resistance between the terminals of the heated oxygen sensor connector.

Standard (Bank 1, 2 Sensor 1):

Tester Connection	Resistance
1 (HT) – 2 (+B)	11 to 16 Ω at 20°C (68°F)
1 (HT) – 4 (E1)	10 kΩ or higher

(c) Reconnect the heated oxygen sensor connector.

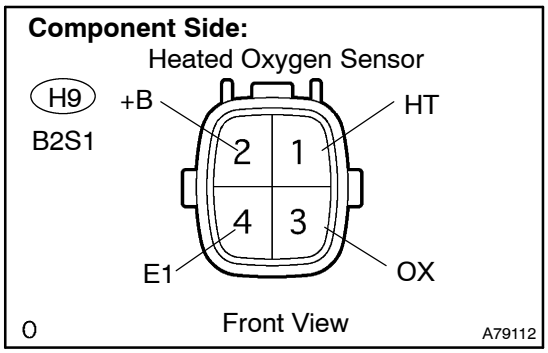

NG → REPLACE HEATED OXYGEN SENSOR

OK

6 INSPECT EFI RELAY

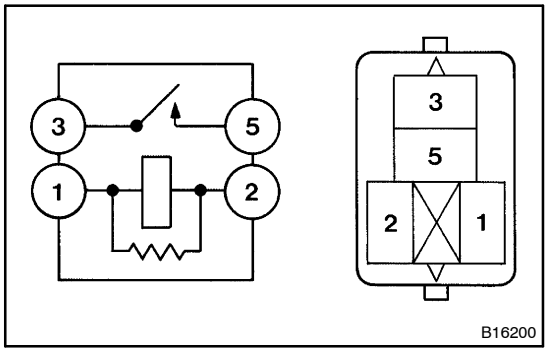

(a) Remove the EFI relay from the engine room R/B No. 4.
(b) Check for continuity in the EFI relay.

Standard:

Tester Connection	Specified Condition
1 – 2	Continuity
3 – 5	No Continuity
3 – 5	Continuity (Apply battery voltage to terminals 1 and 2)

(c) Reinstall the EFI relay.

NG → REPLACE EFI RELAY

OK

7 CHECK HARNESS AND CONNECTOR(HEATED OXYGEN SENSOR – ECM)

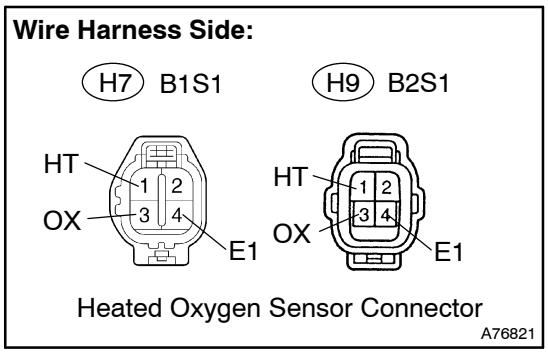

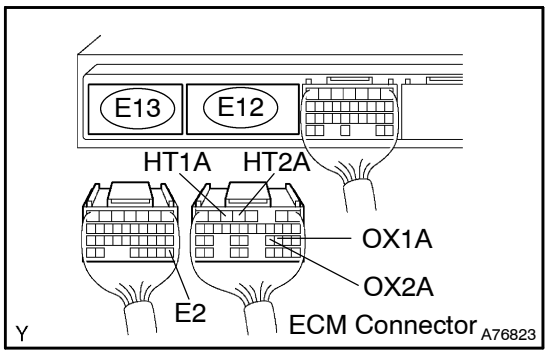

(a) Disconnect the H7 or H9 heated oxygen sensor connector.
(b) Disconnect the E12 and E13 ECM connectors.
(c) Check the resistance between the wire harness side connectors.

Standard (Check for open):

Tester Connection	Specified Condition
OX (H7–3) – OX1A (E12–22)	Below 1 Ω
HT (H7–1) – HT1A (E12–5)	Below 1 Ω
E1 (H7–4) – E2 (E13–28)	Below 1 Ω
OX (H8–3) – OX2A (E12–23)	Below 1 Ω
HT (H8–1) – HT2A (E12–4)	Below 1 Ω
E1 (H8–4) – E2 (E13–28)	Below 1 Ω

Standard (Check for short):

Tester Connection	Specified Condition
OX (H7–3) or OX1A (E12–22) – Body ground	10 kΩ or higher
HT (H7–1) or HT1A (E12–5) – Body ground	10 kΩ or higher
OX (H8–3) or OX2A (E12–23) – Body ground	10 kΩ or higher
HT (H8–1) or HT2A (E12–4) – Body ground	10 kΩ or higher

(d) Reconnect the heated oxygen sensor connector.
(e) Reconnect the ECM connector.

HINT:

- The OX1A and HT1A means the heated oxygen sensor bank 1 sensor 1.
- The OX2A and HT2A means the heated oxygen sensor bank 2 sensor 1.

Reference (Bank 1 Sensor 1 System Drawing)

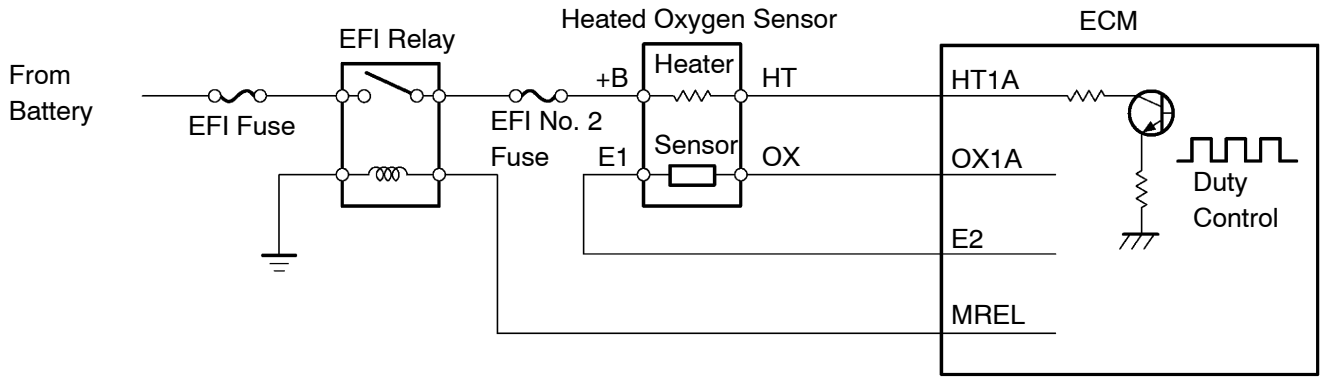

NG	REPAIR OR REPLACE HARNESS OR CONNECTOR

OK

8	CHECK AIR INDUCTION SYSTEM

(a) Check for vacuum leaks in the air induction system.

NG	REPAIR OR REPLACE AIR INDUCTION SYSTEM

OK

9	CHECK FUEL PRESSURE(LOW PRESSURE) (See page 11–4)

NG	CHECK AND REPLACE FUEL PUMP, PRESSURE REGULATOR, FUEL PIPE LINE AND FILTER

OK

10	CHECK FUEL PRESSURE(HIGH PRESSURE) (See page 11–4)

NG	CHECK AND REPLACE FUEL PUMP, PRESSURE REGULATOR, FUEL PIPE LINE AND FILTER

OK

11	CONFIRM IF ANY MISFIRING DTCS WERE PRESENT AT STEP 1

(a) Misfiring DTC P0301, P0302, P0303 and/or P0304 was present at step 1.

NO	REPLACE HEATED OXYGEN SENSOR

YES

12	REPLACE FUEL INJECTOR ASSY (See page 11–13)

HINT:
If one or more the misfiring DTCs P0301, P0302, P0303 and/or P0304 were present at step 1, replace the injector(s) mounted on the misfiring cylinder(s) that is referred by the DTC(s) with normal injector(s).

GO

13	PERFORM CONFIRMATION DRIVING PATTERN (See page 05–82)

HINT:
Clear all DTCs prior to performing the confirmation driving pattern.

GO

14	READ OUTPUT DTC(SEE IF DTC P0133 AND/OR P0153 ARE OUTPUT AGAIN)

(a) Connect the hand–held tester to the DLC3.
(b) Turn the ignition switch to ON and turn push the hand–held tester ON.
(c) Select the item: DIAGNOSIS / OBD/MOBD / DTC INFO / CURRENT CODES.
(d) Read the DTCs using the hand–held tester.
Result:

Display (DTC output)	Proceed to
P0133 and/or P0153	A
No output	B

B → REPLACE FUEL INJECTOR ASSY

A

REPLACE HEATED OXYGEN SENSOR

DTC	P0134	OXYGEN SENSOR CIRCUIT NO ACTIVITY DETECTED (BANK 1 SENSOR 1)

DTC	P0154	OXYGEN SENSOR CIRCUIT NO ACTIVITY DETECTED (BANK 2 SENSOR 1)

CIRCUIT DESCRIPTION

Refer to DTC P0130 on page 05–82.

DTC No.	DTC Detection Condition	Trouble Area
P0134 P0154	After engine is warmed up, heated oxygen sensor (sensor 1) output does not indicate RICH (greater than 0.45 V) even once when conditions (a), (b), (c), (d) and (e) continue for at least 65 seconds (1 trip detection logic): (a) Engine speed: 1,400 rpm or more (b) Vehicle speed: 130 km/h (81 mph) (c) Throttle valve is not fully closed (d) 180 seconds or more after starting engine (e) Engine coolant temperature is more than 40 °C (104°F)	• Open or short in heated oxygen sensor circuit • Heated oxygen sensor (Bank 1, 2 Sensor 1) • Heated oxygen sensor heater (Bank 1, 2 Sensor 1) • EFI relay • Air induction system • Fuel pressure • PCV hose connection • PCV valve and hose • Injector • Gas leakage in exhaust system • ECM

HINT:

- After confirming DTCs P0134 and P0154, confirm the output voltage of the heated oxygen sensor (bank 1, 2 sensor 1) in the DIAGNOSIS / OBD/MOBD / DATA LIST / ALL using the hand–held tester If the output voltage of the heated oxygen sensor is less than 0.1 V, the heated oxygen sensor circuit may be open or short.
- Bank 1 refers to the No. 1 and No. 4 cylinders.
- Bank 2 refers to the No. 2 and No. 3 cylinders.
- Sensor 1 refers to the sensor closest to the engine assembly.

WIRING DIAGRAM

Refer to DTC P0130 on page 05–82.

INSPECTION PROCEDURE

HINT:

Hand–held tester only:

It is possible the malfunctioning area can be found using the ACTIVE TEST A/F CONTROL operation. The A/F CONTROL operation can determine if the A/F sensor, heated oxygen sensor or other potential trouble areas are malfunctioning or not.

(a) Perform the ACTIVE TEST A/F CONTROL operation.

HINT:

The A/F CONTROL operation lowers the injection volume 12.5% or increases the injection volume 25%.

(1) Connect the hand–held tester to the DLC3 on the vehicle.
(2) Turn the ignition switch to ON.
(3) Warm up the engine by running the engine at 2,500 rpm for approximately 3 minutes.
(4) Select the item: DIAGNOSIS / OBD/MOBD / ACTIVE TEST / A/F CONTROL.
(5) Perform the A/F CONTROL operation with the engine in an idle condition (press the right or left button).

Result:

Heated oxygen sensor reacts in accordance with increase and decrease of injection volume:
+25 % → rich output: More than 0.5 V
–12.5 % → lean output: Less than 0.4 V

NOTICE:

There is a delay of few seconds in the sensor 1 (front sensor) output, and there is about 20 seconds delay at maximum in the sensor 2 (rear sensor).

	Output voltage of heated oxygen sensor (sensor 1: front sensor)	Output voltage of heated oxygen sensor (sensor 2: rear sensor)	Main suspect trouble area
Case 1	Injection volume +25 % –12.5 % Output voltage More than 0.5 V Less than 0.4V **OK**	Injection volume +25 % –12.5 % Output voltage More than 0.5 V Less than 0.4V **OK**	—
Case 2	Injection volume +25 % –12.5 % Output voltage Almost no reaction **NG**	Injection volume +25 % –12.5 % Output voltage More than 0.5 V Less than 0.4V **OK**	Sensor 1: front sensor (sensor 1, heater, sensor 1 circuit)
Case 3	Injection volume +25 % –12.5 % Output voltage More than 0.5 V Less than 0.4V **OK**	Injection volume +25 % –12.5 % Output voltage Almost no reaction **NG**	Sensor 2: rear sensor (sensor 2, heater, sensor 2 circuit)
Case 4	Injection volume +25 % –12.5 % Output voltage Almost no reaction **NG**	Injection volume +25 % –12.5 % Output voltage Almost no reaction **NG**	Extremely rich or lean actual air–fuel ratio (Injector, fuel pressure, gas leakage in exhaust system, etc.)

The following A/F CONTROL procedure enables the technician to check and graph the voltage outputs of both the heated oxygen sensor.
To display the graph, enter ACTIVE TEST/ A/F CONTROL/USER DATA, then select ”O2S B1S1 and O2S B1S2” or ”O2S B2S1 and O2S B2S2” by pressing the ”YES” button followed by the ”ENTER” button and then the ”F4” button.

NOTICE:

If the vehicle is short of fuel, the air–fuel ratio becomes LEAN and heated oxygen sensor DTCs will be recorded, and the CHK ENG then illuminates.

HINT:

- If different DTCs related to different systems that have terminal E2 as the ground terminal are output simultaneously, terminal E2 may have an open circuit.
- Read freeze frame data using the hand−held tester. Freeze frame data records the engine conditions when a malfunction is detected. When troubleshooting, freeze frame data can help determine if the vehicle was running or stopped, if the engine was warmed up or not, if the air–fuel ratio was lean or rich, and other data from the time the malfunction occurred.
- A high heated oxygen sensor (sensor 1) voltage (0.5 V or more) could be caused by a rich air–fuel mixture. Check for conditions that would cause the engine to run rich.
- A low heated oxygen sensor (sensor 1) voltage (0.4 V or less) could be caused by a lean air–fuel mixture. Check for conditions that would cause the engine to run lean.

1	CHECK OTHER DTC OUTPUT(IN ADDITION TO DTC P0134 AND/OR P0154)

(a) Connect the hand–held tester to the DLC3.
(b) Turn the ignition switch to ON and turn the hand–held tester ON.
(c) Select the item: DIAGNOSIS / OBD/MOBD / DTC INFO / CURRENT CODES.
(d) Read the DTCs using the hand–held tester.

Result:

Display (DTC output)	Proceed to
P0134 and/or P0154	A
P0134 or P0154” and other DTCs	B

HINT:

- If any other codes besides P0134 and/or P0154 are output, perform troubleshooting for those DTCs first.
- If a misfiring DTC(s) is present, record the DTC(s) that indicates misfiring cylinder(s), then proceed to A.

B → **GO TO RELEVANT DTC CHART**
(See page 05–31)

A

2	READ VALUE OF HAND–HELD TESTER(OUTPUT VOLTAGE OF HEATED OXYGEN SENSOR)

(a) Connect the hand–held tester to the DLC3.
(b) Turn the ignition switch to ON and turn the hand–held tester ON.
(c) Warm up the engine to the normal operating temperature above 75°C (169°F).
(d) Read the output voltage of the heated oxygen sensor (sensor 1) when the engine rpm is suddenly increased.

HINT:
Quickly accelerate the engine to 4,000 rpm 3 times using the accelerator pedal.

Standard:
Heated oxygen sensor (sensor 1) outputs a RICH signal (0.45 V or more) at least once.

NG → **Go to step 6**

OK

3	PERFORM CONFIRMATION DRIVING PATTERN (See page 05–82)

HINT:
Clear all DTCs prior to performing the confirmation driving pattern.

GO

4	READ OUTPUT DTC(SEE IF DTC P0134 AND/OR P0154 ARE OUTPUT AGAIN)

(a) Connect the hand–held tester to the DLC3.
(b) Turn the ignition switch to ON and turn the hand–held tester ON.
(c) Enter the following menus: DIAGNOSIS / OBD/MOBD / DTC INFO / CURRENT CODES.
(d) Read the DTC using the hand–held tester.

Result:

Display (DTC output)	Proceed to
No output	A
P0134 and/or P0154	B

B → **REPLACE ECM (See page 10–65 of Pub. No. RM1018E AVENSIS)**

A

5	CONFIRM IF VEHICLE HAS RUN OUT OF FUEL IN PAST

NO → **CHECK FOR INTERMITTENT PROBLEMS (See Page 05–7)**

YES

DTC IS CAUSED BY RUNNING OUT OF FUEL (DTC P0134 AND/OR P0154)

6 CHECK CONNECTION OF PCV HOSE

NG → REPAIR OR REPLACE PCV HOSE

OK

7 INSPECT HEATED OXYGEN SENSOR(HEATER RESISTANCE)

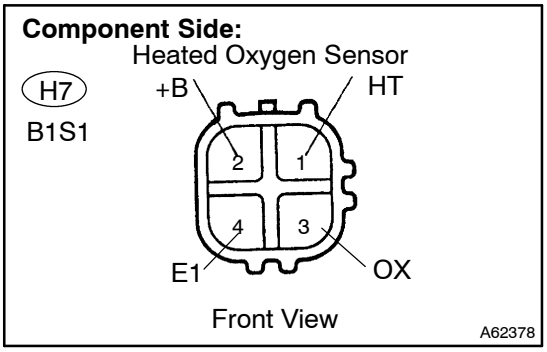

(a) Disconnect the H7 or H9 heated oxygen sensor connector.

(b) Measure the resistance between the terminals of the heated oxygen sensor connector.

Standard (Bank 1, 2 Sensor 1):

Tester Connection	Resistance
1 (HT) – 2 (+B)	11 to 16 Ω at 20°C (68°F)
1 (HT) – 4 (E1)	10 kΩ or higher

(c) Reconnect the heated oxygen sensor connector.

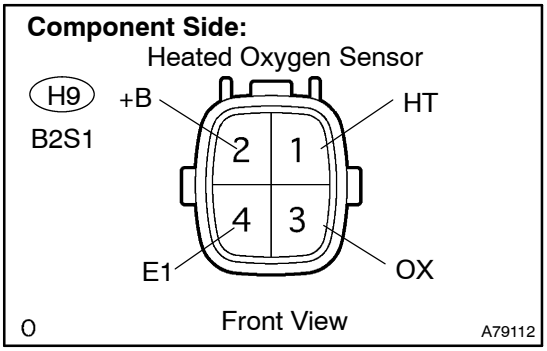

NG → REPLACE HEATED OXYGEN SENSOR

OK

8 INSPECT EFI RELAY

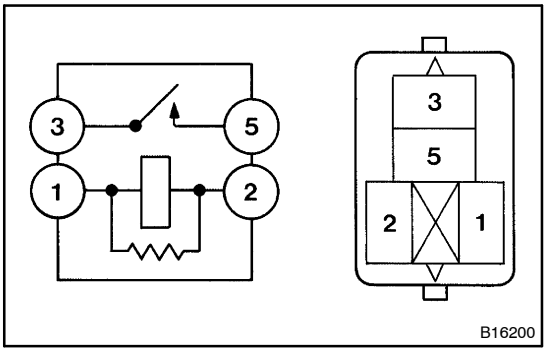

(a) Remove the EFI relay from the engine room R/B No. 4.

(b) Check for continuity in the EFI relay.

Standard:

Tester Connection	Specified Condition
1 – 2	Continuity
3 – 5	No Continuity
3 – 5	Continuity (Apply battery voltage to terminals 1 and 2)

(c) Reinstall the EFI relay.

NG → REPLACE EFI RELAY

OK

9 CHECK HARNESS AND CONNECTOR(HEATED OXYGEN SENSOR – ECM)

Wire Harness Side:

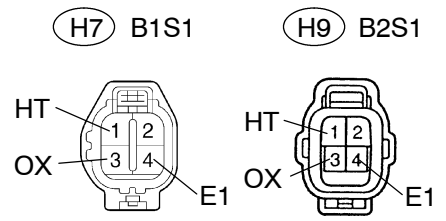

Heated Oxygen Sensor Connector

A76821

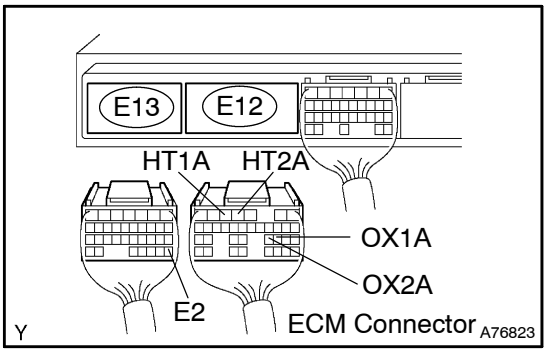

A76823

(a) Disconnect the H7 or H9 heated oxygen sensor connector.

(b) Disconnect the E12 and E13 ECM connectors.

(c) Check the resistance between the wire harness side connectors.

Standard (Check for open):

Tester Connection	Specified Condition
OX (H7–3) – OX1A (E12–22)	Below 1 Ω
HT (H7–1) – HT1A (E12–5)	Below 1 Ω
E1 (H7–4) – E2 (E13–28)	Below 1 Ω
OX (H8–3) – OX2A (E12–23)	Below 1 Ω
HT (H8–1) – HT2A (E12–4)	Below 1 Ω
E1 (H8–4) – E2 (E13–28)	Below 1 Ω

Standard (Check for short):

Tester Connection	Specified Condition
OX (H7–3) or OX1A (E12–22) – Body ground	10 kΩ or higher
HT (H7–1) or HT1A (E12–5) – Body ground	10 kΩ or higher
OX (H8–3) or OX2A (E12–23) – Body ground	10 kΩ or higher
HT (H8–1) or HT2A (E12–4) – Body ground	10 kΩ or higher

(d) Reconnect the heated oxygen sensor connector.

(e) Reconnect the ECM connector.

HINT:

- The OX1A and HT1A means the heated oxygen sensor bank 1 sensor 1.
- The OX2A and HT2A means the heated oxygen sensor bank 2 sensor 1.

Reference (Bank 1 Sensor 1 System Drawing)

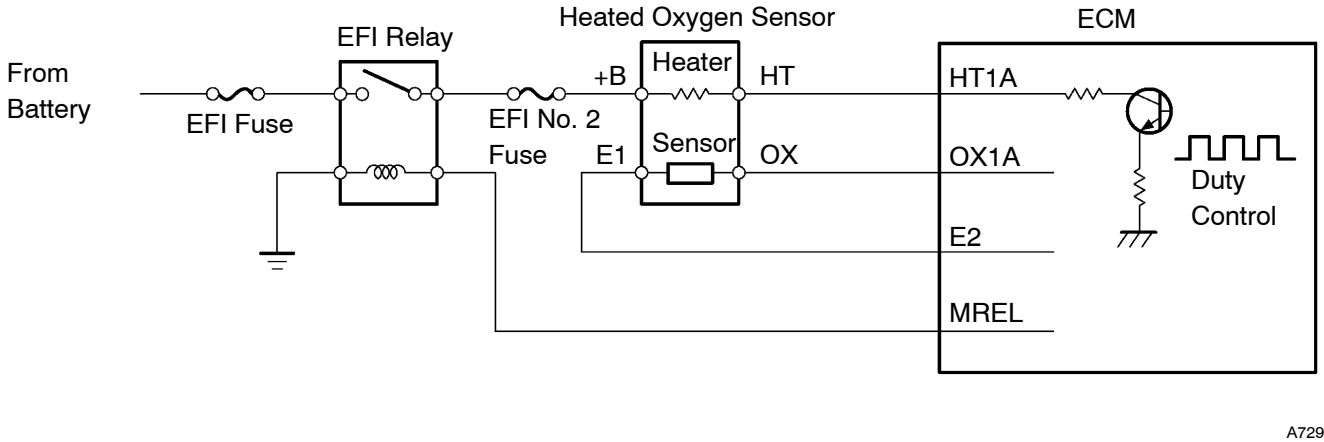

A72920

NG → **REPAIR OR REPLACE HARNESS OR CONNECTOR**

OK

10	CHECK WHETHER MISFIRE IS OCCURRED OR NOT BY MONITORING DTC AND DATA LIST

NG → PERFORM TROUBLESHOOTING FOR MISFIRE (See page 05–146)

OK

11	CHECK AIR INDUCTION SYSTEM

(a) Check for vacuum leaks in the air induction system.

NG → REPAIR OR REPLACE AIR INDUCTION SYSTEM

OK

12	CHECK FUEL PRESSURE(LOW PRESSURE) (See page 11–4)

NG → CHECK AND REPLACE FUEL PUMP, PRESSURE REGULATOR, FUEL PIPE LINE AND FILTER

OK

13	CHECK FUEL PRESSURE(HIGH PRESSURE) (See page 11–4)

NG → CHECK AND REPLACE FUEL PUMP, FUEL PRESSURE SENSOR, WIRING AND FUEL LEAKAGE

OK

14	CHECK FOR EXHAUST GAS LEAKS

NG → REPAIR OR REPLACE EXHAUST GAS LEAKAGE POINT (See Page 15–2)

OK

15	CONFIRM IF ANY MISFIRING DTCS WERE PRESENT AT STEP 1

(a) Misfiring DTC P0301, P0302, P0303 and/or P0304 was present at step 1.

NO → REPLACE HEATED OXYGEN SENSOR

YES

16	REPLACE FUEL INJECTOR ASSY (See page 11–13)

HINT:
If one or more the misfiring DTCs P0301, P0302, P0303 and/or P0304 were present at step 1, replace the injector(s) mounted on the misfiring cylinder(s) that is referred by the DTC(s) with normal injector(s).

GO

17	PERFORM CONFIRMATION DRIVING PATTERN (See page 05–82)

HINT:
Clear all DTCs prior to performing the confirmation driving pattern.

GO

18	READ OUTPUT DTC(SEE IF DTC P0134 AND/OR P0154 ARE OUTPUT AGAIN)

(a) Connect the hand–held tester to the DLC3.
(b) Turn the ignition switch to ON and turn the hand–held tester ON.
(c) Select the item: DIAGNOSIS / OBD/MOBD / DTC INFO / CURRENT CODES.
(d) Read the DTCs using the hand–held tester.
Result:

Display (DTC output)	Proceed to
P0134 and/or P0154	A
No output	B

B → REPLACE FUEL INJECTOR ASSY

A

REPLACE HEATED OXYGEN SENSOR

DTC	P0136	OXYGEN SENSOR CIRCUIT MALFUNCTION (BANK 1 SENSOR 2)

DTC	P0156	OXYGEN SENSOR CIRCUIT MALFUNCTION (BANK 2 SENSOR 2)

CIRCUIT DESCRIPTION

Refer to DTC P0130 on page 05–82.

DTC No	DTC Detection Condition	Trouble Area
P0136 P0156	If the following two conditions are satisfied at a time (2 trip detection logic): (a) The ECM records cycles which the vehicle runs and stops 8 times or more (b) There was no change in the rich and lean output from heated oxygen sensor (sensor 2) for the 360 seconds under air–fuel ratio feedback control (Throttle was not closed)	• Open or short in heated oxygen sensor circuit • Heated oxygen sensor (Bank 1, 2 Sensor 2) • Heated oxygen sensor heater (Bank 1, 2 Sensor 2) • EFI relay

HINT:

- Bank 1 refers to the No. 1 and No. 4 cylinders.
- Bank 2 refers to the No. 2 and No. 3 cylinders.
- Sensor 2 refers to the sensor farthest away from the engine assembly.

WIRING DIAGRAM

Refer to DTC P0130 on page 05–82.

CONFIRMATION DRIVING PATTERN

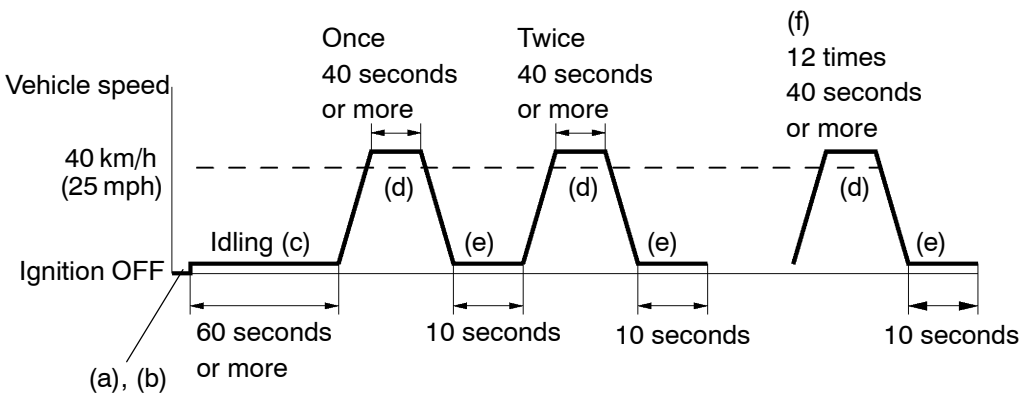

(a) Connect the hand–held tester to the DLC3.
(b) Switch the hand–held tester from normal mode to check mode (see page 05–20).
(c) Start the engine and let it idle for 60 seconds or more.
(d) Drive the vehicle at 40 km/h (25 mph) or more for 40 seconds or more.
(e) Let the engine idle for 10 seconds or more.
(f) Perform steps (d) and (e) 12 times.

HINT:
If a malfunction exists, the CHK ENG will be illuminated during step (f).

NOTICE:
If the conditions in this test are not strictly followed, no malfunction will be detected. If you do not have the hand–held tester, turn the ignition switch to OFF after performing steps from (c) to (f), then perform steps (c) to (f) again.

INSPECTION PROCEDURE

HINT:
Hand–held tester only:
It is possible the malfunctioning area can be found using the ACTIVE TEST A/F CONTROL operation. The A/F CONTROL operation can determine if the A/F sensor, heated oxygen sensor or other potential trouble areas are malfunctioning or not.

(a) Perform the ACTIVE TEST A/F CONTROL operation.

HINT:
The A/F CONTROL operation lowers the injection volume 12.5% or increases the injection volume 25%.

(1) Connect the hand–held tester to the DLC3 on the vehicle.
(2) Turn the ignition switch to ON.
(3) Warm up the engine by running the engine at 2,500 rpm for approximately 3 minutes.
(4) Select the item: DIAGNOSIS / OBD/MOBD / ACTIVE TEST / A/F CONTROL.
(5) Perform the A/F CONTROL operation with the engine in an idle condition (press the right or left button).

Result:
Heated oxygen sensor reacts in accordance with increase and decrease of injection volume:
+25 % → rich output: More than 0.5 V
–12.5 % → lean output: Less than 0.4 V

NOTICE:
There is a delay of few seconds in the sensor 1 (front sensor) output, and there is about 20 seconds delay at maximum in the sensor 2 (rear sensor).

	Output voltage of heated oxygen sensor (sensor 1: front sensor)	Output voltage of heated oxygen sensor (sensor 2: rear sensor)	Main suspect trouble area
Case 1	Injection volume +25 % –12.5 % 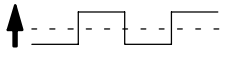 Output voltage More than 0.5 V Less than 0.4V  **OK**	Injection volume +25 % –12.5 % 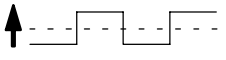 Output voltage More than 0.5 V Less than 0.4V 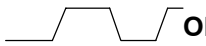 **OK**	—
Case 2	Injection volume +25 % –12.5 % 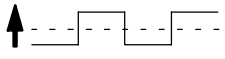 Output voltage Almost no reaction **NG**	Injection volume +25 % –12.5 % 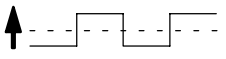 Output voltage More than 0.5 V Less than 0.4V 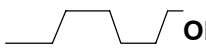 **OK**	Sensor 1: front sensor (sensor 1, heater, sensor 1 circuit)
Case 3	Injection volume +25 % –12.5 % 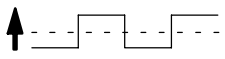 Output voltage More than 0.5 V Less than 0.4V  **OK**	Injection volume +25 % –12.5 % 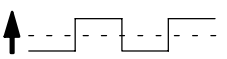 Output voltage Almost no reaction **NG**	Sensor 2: rear sensor (sensor 2, heater, sensor 2 circuit)
Case 4	Injection volume +25 % –12.5 % 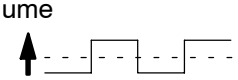 Output voltage Almost no reaction **NG**	Injection volume +25 % –12.5 % 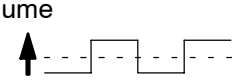 Output voltage Almost no reaction **NG**	Extremely rich or lean actual air–fuel ratio (Injector, fuel pressure, gas leakage in exhaust system, etc.)

The following A/F CONTROL procedure enables the technician to check and graph the voltage outputs of both the heated oxygen sensor.
To display the graph, enter ACTIVE TEST/ A/F CONTROL/USER DATA, then select ”O2S B1S1 and O2S B1S2” or ”O2S B2S1 and O2S B2S2” by pressing the ”YES” button followed by the ”ENTER” button and then the ”F4” button.

NOTICE:
If the vehicle is short of fuel, the air–fuel ratio becomes LEAN and heated oxygen sensor DTCs will be recorded, and the CHK ENG then illuminates.

HINT:

- If different DTCs related to different systems that have terminal E2 as the ground terminal are output simultaneously, terminal E2 may have an open circuit.
- Read freeze frame data using the hand–held tester. Freeze frame data records the engine conditions when a malfunction is detected. When troubleshooting, freeze frame data can help determine if the vehicle was running or stopped, if the engine was warmed up or not, if the air–fuel ratio was lean or rich, and other data from the time the malfunction occurred.
- A high heated oxygen sensor (sensor 1) voltage (0.5 V or more) could be caused by a rich air–fuel mixture. Check for conditions that would cause the engine to run rich.

- A low heated oxygen sensor (sensor 1) voltage (0.4 V or less) could be caused by a lean air–fuel mixture. Check for conditions that would cause the engine to run lean.

1	CHECK OTHER DTC OUTPUT(IN ADDITION TO DTC P0136 AND/OR P0156)

(a) Connect the hand–held tester to the DLC3.
(b) Turn the ignition switch to ON and turn the hand–held tester ON.
(c) Select the item: DIAGNOSIS / OBD/MOBD / DTC INFO / CURRENT CODES.
(d) Read the DTCs using the hand–held tester.

Result:

Display (DTC output)	Proceed to
P0136 and/or P0156	A
P0136 or P0156 and other DTCs	B

HINT:
If any other codes besides P0136 and/or P0156 are output, perform troubleshooting for those DTCs first.

B → **GO TO RELEVANT DTC CHART (See page 05–31)**

A

2	READ VALUE OF HAND–HELD TESTER(OUTPUT VOLTAGE OF HEATED OXYGEN SENSOR)

(a) Connect the hand–held tester to the DLC3.
(b) Start the engine and turn the hand–held tester ON.
(c) Select the item: DIAGNOSIS / OBD/MOBD / DTC INFO / CURRENT CODES.
(d) After warming up the engine, run the engine at 2,500 rpm for 3 minutes.
(e) Read the output voltage of the heated oxygen sensor when the engine speed is suddenly increased.

HINT:
Quickly accelerate the engine to 4,000 rpm 3 times by using the accelerator pedal.

The output voltage of heated oxygen sensor (sensor 2): Alternates from 0.4 V or less to 0.5 V or more.

OK → **Go to step 6**

NG

3	INSPECT HEATED OXYGEN SENSOR(HEATER RESISTANCE)

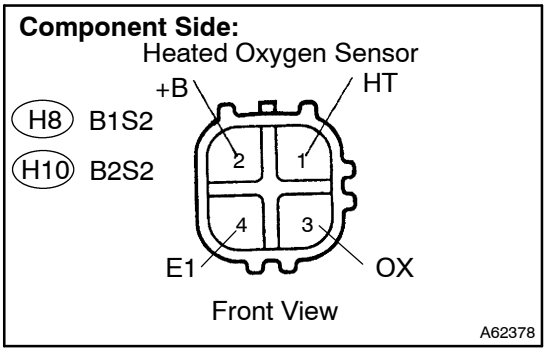

(a) Disconnect the H8 or H10 heated oxygen sensor connector.
(b) Measure the resistance between the terminals of the heated oxygen sensor connector.

Standard (Bank 1, 2 Sensor 2):

Tester Connection	Resistance
1 (HT) – 2 (+B)	11 to 16 Ω at 20°C (68°F)
1 (HT) – 4 (E1)	10 kΩ or higher

(c) Reconnect the heated oxygen sensor connector.

NG → **REPLACE HEATED OXYGEN SENSOR**

OK

4 INSPECT EFI RELAY

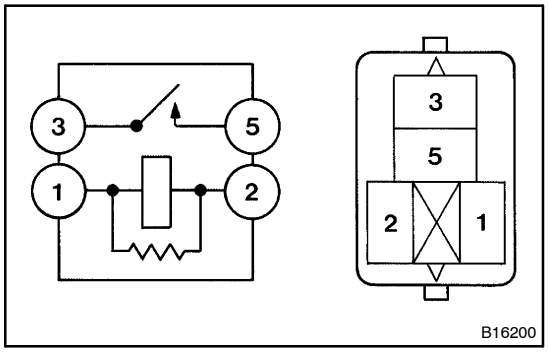

(a) Remove the EFI relay from the engine room R/B No. 4.
(b) Check for continuity in the EFI relay.

Standard:

Tester Connection	Specified Condition
1 – 2	Continuity
3 – 5	No Continuity
3 – 5	Continuity (Apply battery voltage to terminals 1 and 2)

(c) Reinstall the EFI relay.

NG → REPLACE EFI RELAY

OK

5 CHECK HARNESS AND CONNECTOR(HEATED OXYGEN SENSOR – ECM)

Wire Harness Side:

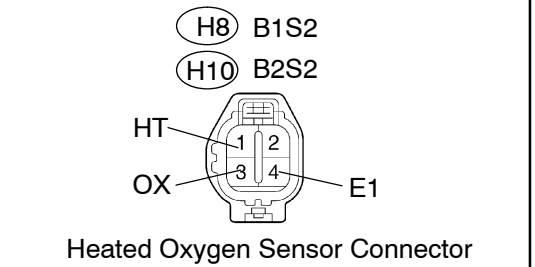

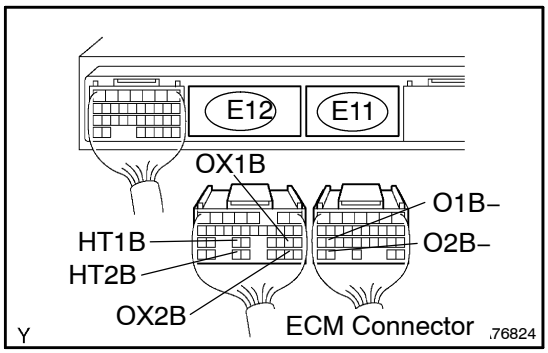

(a) Disconnect the H8 or H10 heated oxygen sensor connector.
(b) Disconnect the E11 and E12 ECM connectors.
(c) Check the resistance between the wire harness side connectors.

Standard (Check for open):

Tester Connection	Specified Condition
OX (H8–3) – OX1B (E12–21)	Below 1 Ω
HT (H8–1) – HT1B (E12–25)	Below 1 Ω
E1 (H8–4) – O1B– (E11–26)	Below 1 Ω
OX (H10–3) – OX2B (E12–29)	Below 1 Ω
HT (H10–1) – HT2B (E12–33)	Below 1 Ω
E1 (H10–4) – O2B– (E11–31)	Below 1 Ω

Standard (Check for short):

Tester Connection	Specified Condition
OX (H8–3) or OX1B (E12–21) – Body ground	10 kΩ or higher
HT (H8–1) or HT1B (E12–25) – Body ground	10 kΩ or higher
OX (H10–3) or OX2B (E12–29) – Body ground	10 kΩ or higher
HT (H10–1) or HT2B (E12–33) – Body ground	10 kΩ or higher

(d) Reconnect the heated oxygen sensor connector.
(e) Reconnect the ECM connector.

HINT:

- The OX1B and HT1B means the heated oxygen sensor bank 1 sensor 2.
- The OX2B and HT2B means the heated oxygen sensor bank 2 sensor 2.

Reference (Bank 1 Sensor 2 System Drawing)

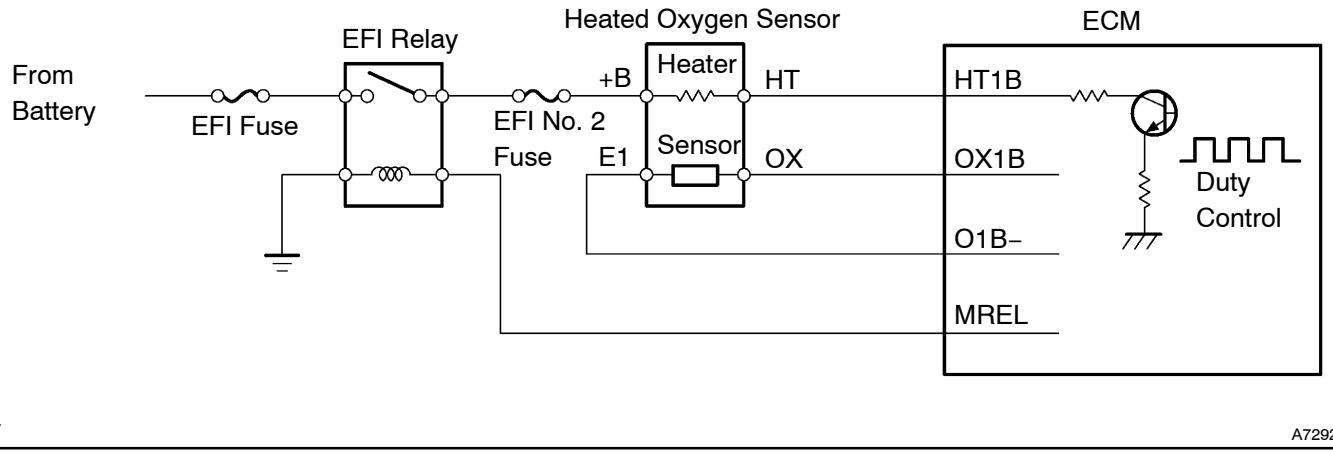

NG	REPAIR OR REPLACE HARNESS OR CONNECTOR

OK

REPLACE HEATED OXYGEN SENSOR

6	PERFORM CONFIRMATION DRIVING PATTERN

HINT:
Clear all DTCs prior to performing the confirmation driving pattern.

GO

7	READ OUTPUT DTC(SEE IF DTC P0136 AND/OR P0156 ARE OUTPUT AGAIN)

(a) Connect the hand–held tester to the DLC3.
(b) Turn the ignition switch to ON and turn the hand–held tester ON.
(c) Select the item: DIAGNOSIS / OBD/MOBD / DTC INFO / CURRENT CODES.
(d) Read the DTCs using the hand–held tester.

Result:

Display (DTC output)	Proceed to
No output	A
P0136 and/or P0156	B

B	REPLACE HEATED OXYGEN SENSOR

A

CHECK FOR INTERMITTENT PROBLEMS (See Page 05–7)

DTC	P0171	SYSTEM TOO LEAN (BANK 1)

DTC	P0172	SYSTEM TOO RICH (BANK 1)

DTC	P0174	SYSTEM TOO LEAN (BANK 2)

DTC	P0175	SYSTEM TOO RICH (BANK 2)

CIRCUIT DESCRIPTION

The fuel trim is related to the feedback compensation value, not to the basic injection time. The fuel trim includes the short–term fuel trim and the long–term fuel trim.

The short–term fuel trim is the short–term fuel compensation used to maintain the air–fuel ratio at stoichiometric air–fuel ratio. The signal from the heated oxygen sensor indicates whether the air–fuel ratio is RICH or LEAN compared to the stoichiometric air–fuel ratio. This variance triggers a reduction in the fuel volume if the air–fuel ratio is RICH, and an increase in the fuel volume if it is LEAN.

The short–term fuel trim varies from the central value due to individual engine differences, wear over time and changes in operating environment. The long–term fuel trim, which controls overall fuel compensation, steadies long–term deviations of the short–term fuel trim from the central value.

If both the short–term fuel trim and the long–term fuel trim are LEAN or RICH beyond a certain value, it is detected as a malfunction and the CHK ENG is illuminated and a DTC is set.

DTC No.	DTC Detection Condition	Trouble Area
P0171 P0174	When air–fuel ratio feedback is stable after warming up engine, fuel trim is considerably in error on LEAN side (2 trip detection logic)	• Air induction system • Injector blockage • Mass air flow meter • Manifold absolute pressure sensor • Engine coolant temperature sensor • Fuel pressure • Gas leakage in exhaust system • Open or short in heated oxygen sensor circuit • Heated oxygen sensor (Bank 1, 2 Sensor 1) • Heated oxygen sensor heater (Bank 1, 2 Sensor 1) • EFI relay • PCV valve and hose • PCV hose connection • ECM
P0172 P0175	When air–fuel ratio feedback is stable after warming up engine, fuel trim is considerably in error on RICH side (2 trip detection logic)	• Injector leakage or blockage • Mass air flow meter • Manifold absolute pressure sensor • Engine coolant temperature sensor • Ignition system • Fuel pressure • Gas leakage in exhaust system • Open or short in heated oxygen sensor circuit • Heated oxygen sensor (Bank 1, 2 Sensor 1) • ECM

HINT:

- When DTC P0171 or P0174 is recorded, the actual air–fuel ratio is on the LEAN side. When DTC P0172 or P0175 is recorded, the actual air–fuel ratio is on the RICH side.
- If the vehicle runs out of fuel, the air–fuel ratio is LEAN and DTC P0171 or P0174 is recorded. The CHK ENG then comes on.
- If the total of the short–term fuel trim value and long–term fuel trim value is within ± 25 % (engine coolant temperature is greater than 75°C), the system is functioning normally.
- Bank 1 refers to the No. 1 and No. 4 cylinders.
- Bank 2 refers to the No. 2 and No. 3 cylinders.

WIRING DIAGRAM

Refer to DTC P0130 on page 05–82.

INSPECTION PROCEDURE

HINT:

Hand–held tester only:

It is possible the malfunctioning area can be found using the ACTIVE TEST A/F CONTROL operation. The A/F CONTROL operation can determine if the A/F sensor, heated oxygen sensor or other potential trouble areas are malfunctioning or not.

(a) Perform the ACTIVE TEST A/F CONTROL operation.

HINT:

The A/F CONTROL operation lowers the injection volume 12.5% or increases the injection volume 25%.

(1) Connect the hand–held tester to the DLC3 on the vehicle.
(2) Turn the ignition switch to ON.
(3) Warm up the engine by running the engine at 2,500 rpm for approximately 3 minutes.
(4) Select the item: DIAGNOSIS / OBD/MOBD / ACTIVE TEST / A/F CONTROL.
(5) Perform the A/F CONTROL operation with the engine in an idle condition (press the right or left button).

Result:

Heated oxygen sensor reacts in accordance with increase and decrease of injection volume:
+25 % → rich output: More than 0.5 V
–12.5 % → lean output: Less than 0.4 V

NOTICE:

There is a delay of few seconds in the sensor 1 (front sensor) output, and there is about 20 seconds delay at maximum in the sensor 2 (rear sensor).

	Output voltage of heated oxygen sensor (sensor 1: front sensor)	Output voltage of heated oxygen sensor (sensor 2: rear sensor)	Main suspect trouble area
Case 1	Injection volume +25 % –12.5 % Output voltage More than 0.5 V Less than 0.4V **OK**	Injection volume +25 % –12.5 % Output voltage More than 0.5 V Less than 0.4V **OK**	—
Case 2	Injection volume +25 % –12.5 % Output voltage Almost no reaction **NG**	Injection volume +25 % –12.5 % Output voltage More than 0.5 V Less than 0.4V **OK**	Sensor 1: front sensor (sensor 1, heater, sensor 1 circuit)
Case 3	Injection volume +25 % –12.5 % Output voltage More than 0.5 V Less than 0.4V **OK**	Injection volume +25 % –12.5 % Output voltage Almost no reaction **NG**	Sensor 2: rear sensor (sensor 2, heater, sensor 2 circuit)
Case 4	Injection volume +25 % –12.5 % Output voltage Almost no reaction **NG**	Injection volume +25 % –12.5 % Output voltage Almost no reaction **NG**	Extremely rich or lean actual air–fuel ratio (Injector, fuel pressure, gas leakage in exhaust system, etc.)

The following A/F CONTROL procedure enables the technician to check and graph the voltage outputs of both the heated oxygen sensor.
To display the graph, enter ACTIVE TEST/ A/F CONTROL/USER DATA, then select ”O2S B1S1 and O2S B1S2” or ”O2S B2S1 and O2S B2S2” by pressing the ”YES” button followed by the ”ENTER” button and then the ”F4” button.

NOTICE:

If the vehicle is short of fuel, the air–fuel ratio becomes LEAN and heated oxygen sensor DTCs will be recorded, and the CHK ENG then illuminates.

HINT:

- If different DTCs related to different systems that have terminal E2 as the ground terminal are output simultaneously, terminal E2 may have an open circuit.
- Read freeze frame data using the hand–held tester. Freeze frame data records the engine conditions when a malfunction is detected. When troubleshooting, freeze frame data can help determine if the vehicle was running or stopped, if the engine was warmed up or not, if the air–fuel ratio was lean or rich, and other data from the time the malfunction occurred.
- A high heated oxygen sensor (sensor 1) voltage (0.5 V or more) could be caused by a rich air–fuel mixture. Check for conditions that would cause the engine to run rich.
- A low heated oxygen sensor (sensor 1) voltage (0.4 V or less) could be caused by a lean air–fuel mixture. Check for conditions that would cause the engine to run lean.

1	CHECK OTHER DTC OUTPUT(IN ADDITION TO DTC P0171, P0172, P0174 AND/OR P0175)

(a) Connect the hand–held tester to the DLC3.
(b) Turn the ignition switch to ON and turn the hand–held tester ON.
(c) Select the item: DIAGNOSIS / OBD/MOBD / DTC INFO / CURRENT CODES.
(d) Read the DTCs using the hand–held tester.
Result:

Display (DTC output)	Proceed to
P0171, P0172, P0174 and/or P0175	A
P0171, P0172, P0174 or P0175 and other DTCs	B

HINT:
- If any other codes besides P0171, P0172, P0174 and/or P0175 are output, perform troubleshooting for those DTCs first.
- If a misfiring DTC(s) is present, record the DTC(s) that indicates misfiring cylinder(s), then proceed to A.

B → **GO TO RELEVANT DTC CHART** (See page 05–31)

A

2	CHECK AIR INDUCTION SYSTEM

(a) Check for vacuum leaks in the air induction system.

NG → **REPAIR OR REPLACE AIR INDUCTION SYSTEM**

OK

3	CHECK CONNECTION OF PCV HOSE

NG → **REPAIR OR REPLACE PCV HOSE**

OK

4 INSPECT MASS AIR FLOW METER

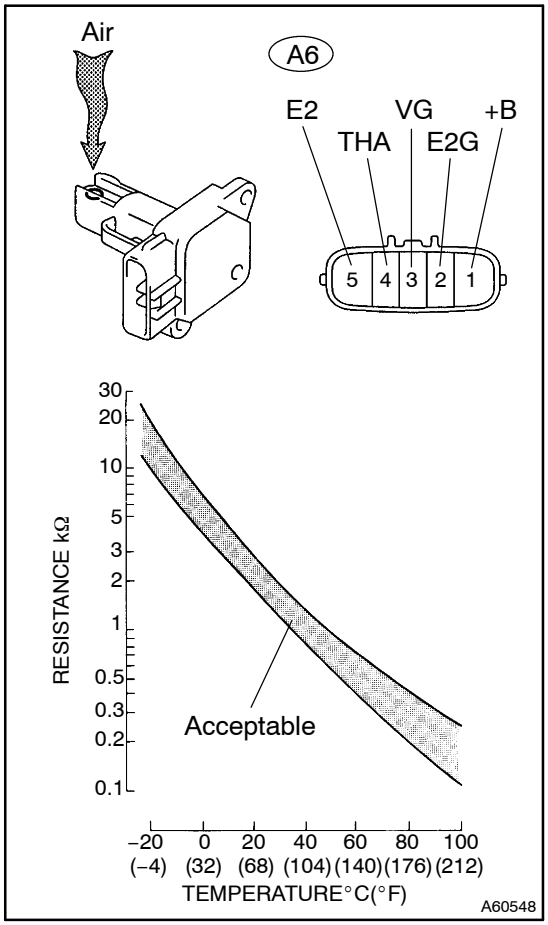

(a) Remove the mass air flow meter.

(b) Inspect output voltage.

(1) Apply battery voltage across terminals +B and E2G.

(2) Connect the positive (+) tester prove to terminal VG, and negative (–) tester prove to terminal E2G.

(3) Blow air into the mass air flow meter, and check that the voltage fluctuates.

(c) Resistance inspection.

(1) Measure the resistance between the terminals of the mass air flow meter.

Standard:

Tester Connection	Temperature	Specified Condition
THA (A6–4) – E2 (A6–5)	–20 °C (–4 °F)	13.6 to 18.4 kΩ
THA (A6–4) – E2 (A6–5)	20 °C (68 °F)	2.21 to 2.69 kΩ
THA (A6–4) – E2 (A6–5)	60 °C (140 °F)	0.49 to 0.67 kΩ

(d) Reinstall the mass air flow meter.

NG → **REPLACE MASS AIR FLOW METER**

OK

5	INSPECT ENGINE COOLANT TEMPERATURE SENSOR(RESISTANCE)

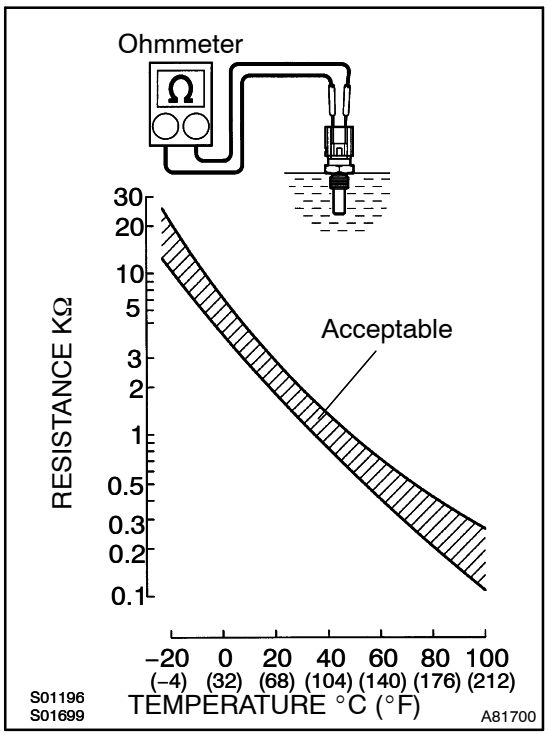

(a) Remove the engine coolant temperature sensor.
(b) Measure the resistance between the terminals of the engine coolant temperature sensor.

Standard:

Tester Connection	Temperature	Specified Condition
1 – 2	20°C (68°F)	2.32 to 2.59 kΩ
1 – 2	80°C (176°F)	0.310 to 0.326 kΩ

NOTICE:

When checking the engine coolant temperature sensor in water, be careful not to allow water to contact the terminals. After checking, dry the sensor.

HINT:

Alternate procedure: Connect an ohmmeter to the installed engine coolant temperature sensor and read the resistance. Use an infrared thermometer to measure the engine temperature in the immediate vicinity of the sensor. Compare these values to the resistance/temperature graph. Change the engine temperature (warm up or allow to cool down) and repeat the test.

(c) Reinstall the engine coolant temperature sensor.

NG	REPLACE ENGINE COOLANT TEMPERATURE SENSOR

OK

6	CHECK FOR SPARK AND IGNITION (See page 18–1)

NG	REPAIR OR REPLACE

OK

7	CHECK FUEL PRESSURE(LOW PRESSURE) (See page 11–4)

NG	CHECK AND REPLACE FUEL PUMP, PRESSURE REGULATOR, FUEL PIPE LINE AND FILTER

OK

8	CHECK FUEL PRESSURE(HIGH PRESSURE) (See page 11–4)

NG	CHECK AND REPLACE FUEL PUMP, FUEL PRESSURE SENSOR, WIRING AND FUEL LEAKAGE

OK

9	CHECK FOR EXHAUST GAS LEAKAGE

NG → REPAIR OR REPLACE EXHAUST GAS LEAKAGE POINT

OK

10	CONFIRM IF ANY MISFIRING DTCS WERE PRESENT AT STEP 1

(a) Misfiring DTC P0301, P0302, P0303 and/or P0304 was present at step 1.

NO → Go to step 14

YES

11	REPLACE FUEL INJECTOR ASSY (See page 11–13)

HINT:
If one or more the misfiring DTCs P0301, P0302, P0303 and/or P0304 were present at step 1, replace the injector(s) mounted on the misfiring cylinder(s) that is referred by the DTC(s) with normal injector(s).

GO

12	PERFORM CONFIRMATION DRIVING PATTERN

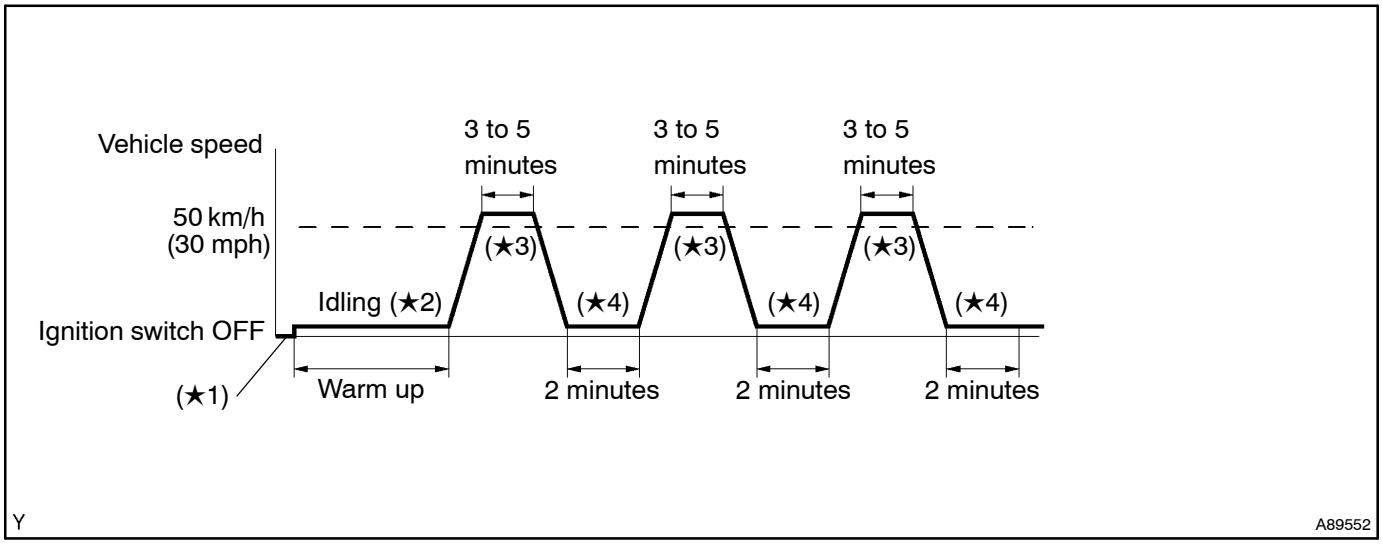

(a) Disconnect the battery cable for more than 1 minute (clear learning value of the air fuel ratio). (★1)
(b) Connect the hand–held tester to the DLC3. (★1)
(c) Switch the hand–held tester from normal mode to check mode (see page 05–20). (★1)
(d) Start the engine and let it idle until engine coolant temperature reaches 75 °C (167 °F) or higher. (★2)
(e) Drive the vehicle at 50 km/h (30 mph) or more for 3 minutes or more. (★3)
(f) Let the engine idle for approximately 2minutes. (★4)
(g) Perform steps (e) and (f) at least 3 times.

HINT:
If a malfunction exists, the MIL will be illuminated during step (g).

NOTICE:
If the conditions in this test are not strictly followed, no malfunction will be detected.
If you do not have the hand–held tester, turn the ignition switch to OFF after performing steps from (d) to (g), then perform steps (d) to (g) again.

GO

13	READ OUTPUT DTC(SEE IF DTC P0171, P0172, P0174 AND/OR P0175 ARE OUTPUT AGAIN)

(a) Connect the hand–held tester to the DLC3.
(b) Turn the ignition switch to ON and turn the hand–held tester ON.
(c) Select the item: DIAGNOSIS / OBD/MOBD / DTC INFO / CURRENT CODES.
(d) Read the DTCs using the hand–held tester.
Result:

Display (DTC output)	Proceed to
P0171, P0172, P0174 and/or P0175	A
No output	B

B → **REPLACE FUEL INJECTOR ASSY**

A

14	READ VALUE OF HAND–HELD TESTER(OUTPUT VOLTAGE OF HEATED OXYGEN SENSOR (BANK 1, 2 SENSOR 1))

(a) Connect the hand–held tester to the DLC3.
(b) Start the engine and turn the hand–held tester ON.
(c) Select the item: DIAGNOSIS / OBD/MOBD / DATA LIST / ALL / O2S B1S1 or O2S B2S1.
(d) Warm up the heated oxygen sensor with the engine speed at 2,500 rpm for approximately 90 seconds.
(e) Read the output voltage of the heated oxygen sensor during idling.
The output voltage of heated oxygen sensor (sensor 1):
Alternates repeatedly between less than 0.4 V and more than 0.55 V (See the following table).

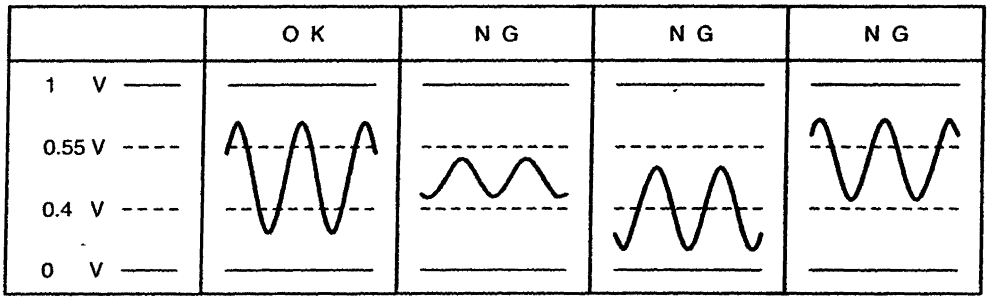

P18349

NG → **Go to step 21**

OK

15	PERFORM CONFIRMATION DRIVING PATTERN (See step 12)

HINT:
Clear all DTCs prior to performing the confirmation driving pattern.

GO

16	READ OUTPUT DTC(SEE IF DTC P0171, P0172, P0174 AND/OR P0175 ARE OUTPUT AGAIN)

(a) Connect the hand–held tester to the DLC3.
(b) Turn the ignition switch to ON and turn the hand–held tester ON.
(c) Select the item: DIAGNOSIS / OBD/MOBD / DTC INFO / CURRENT CODES.
(d) Read the DTCs using the hand–held tester.

Result:

Display (DTC output)	Proceed to
P0171, P0172, P0174 and/or P0175	A
No output	B

B → **Go to step 20**

A

17	REPLACE HEATED OXYGEN SENSOR

GO

18	PERFORM CONFIRMATION DRIVING PATTERN (See step 12)

HINT:
Clear all DTCs prior to performing the confirmation driving pattern.

GO

19	READ OUTPUT DTC(SEE IF DTC P0171, P0172, P0174 AND/OR P0175 ARE OUTPUT AGAIN)

(a) Connect the hand–held tester to the DLC3.
(b) Turn the ignition switch to ON and turn the hand–held tester ON.
(c) Select the item: DIAGNOSIS / OBD/MOBD / DTC INFO / CURRENT CODES.
(d) Read the DTCs using the hand–held tester.

Result:

Display (DTC output)	Proceed to
No output	A
P0171, P0172, P0174 and/or P0175	B

B → **REPLACE ECM (See page 10–65 of Pub. No. RM1018E AVENSIS) AND PERFORM CONFIRMATION DRIVING PATTERN (See ptep 12)**

A

20	CONFIRM IF VEHICLE HAS RUN OUT OF FUEL IN PAST

NO → **CHECK FOR INTERMITTENT PROBLEMS** (See page 05–7)

YES

DTC IS CAUSED BY RUNNING OUT OF FUEL (DTCS P0171, P0172, P0174 AND/OR P0175)

21	INSPECT HEATED OXYGEN SENSOR(HEATER RESISTANCE)

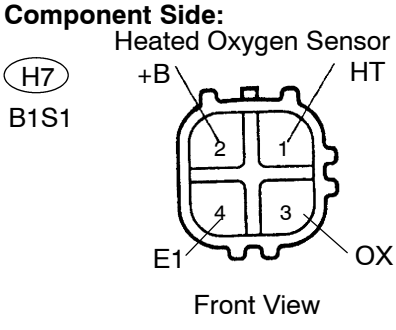

(a) Disconnect the H7 or H9 heated oxygen sensor connector.

(b) Measure the resistance between the terminals of the heated oxygen sensor connector.

Standard (Bank 1, 2 Sensor 1):

Tester Connection	Resistance
1 (HT) – 2 (+B)	11 to 16 Ω at 20°C (68°F)
1 (HT) – 4 (E1)	10 kΩ or higher

(c) Reconnect the heated oxygen sensor connector.

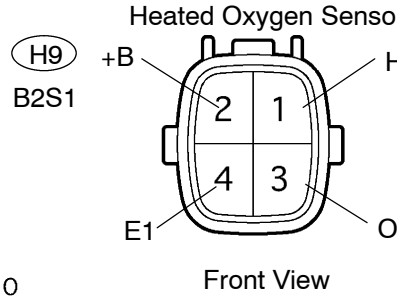

NG → **REPLACE HEATED OXYGEN SENSOR**

OK

22	INSPECT EFI RELAY

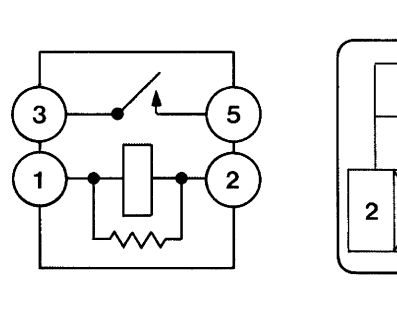

(a) Remove the EFI relay from the engine room R/B No. 4.

(b) Check for continuity in the EFI relay.

Standard:

Tester Connection	Specified Condition
1 – 2	Continuity
3 – 5	No Continuity
3 – 5	Continuity (Apply battery voltage to terminals 1 and 2)

(c) Reinstall the EFI relay.

NG → **REPLACE EFI RELAY**

OK

23 CHECK HARNESS AND CONNECTOR(HEATED OXYGEN SENSOR – ECM)

Wire Harness Side:

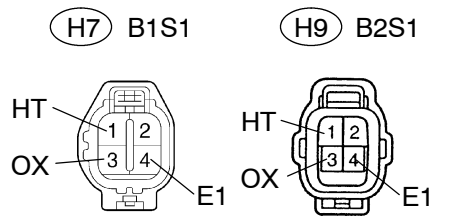

Heated Oxygen Sensor Connector
Front View

A76821

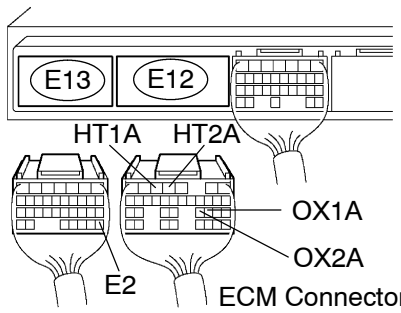

A76823

(a) Disconnect the H7 or H9 heated oxygen sensor connector.
(b) Disconnect the E12 and E13 ECM connectors.
(c) Check the resistance between the wire harness side connectors.

Standard (Check for open):

Tester Connection	Specified Condition
OX (H7–3) – OX1A (E12–22)	Below 1 Ω
HT (H7–1) – HT1A (E12–5)	Below 1 Ω
E1 (H7–4) – E2 (E13–28)	Below 1 Ω
OX (H9–3) – OX2A (E12–23)	Below 1 Ω
HT (H9–1) – HT2A (E12–4)	Below 1 Ω
E1 (H9–4) – E2 (E13–28)	Below 1 Ω

Standard (Check for short):

Tester Connection	Specified Condition
OX (H7–3) or OX1A (E12–22) – Body ground	10 kΩ or higher
HT (H7–1) or HT1A (E12–5) – Body ground	10 kΩ or higher
OX (H9–3) or OX2A (E12–23) – Body ground	10 kΩ or higher
HT (H9–1) or HT2A (E12–4) – Body ground	10 kΩ or higher

(d) Reconnect the heated oxygen sensor connector.
(e) Reconnect the ECM connector.

HINT:

- The OX1A and HT1A means the heated oxygen sensor bank 1 sensor 1.
- The OX2A and HT2A means the heated oxygen sensor bank 2 sensor 1.

Reference (Bank 1 Sensor 1 System Drawing)

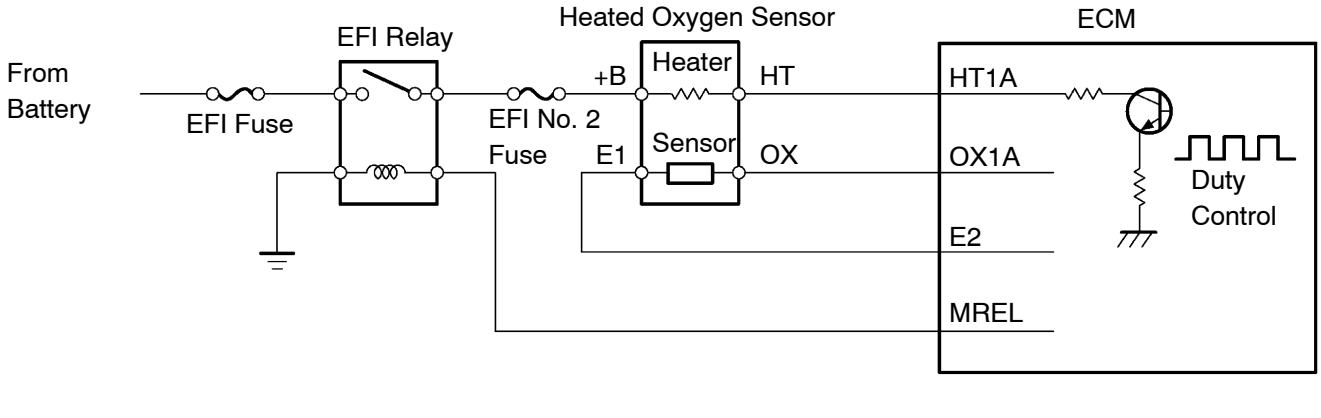

A72920

NG → **REPAIR OR REPLACE HARNESS OR CONNECTOR**

OK

24	REPLACE HEATED OXYGEN SENSOR

GO

25	PERFORM CONFIRMATION DRIVING PATTERN (See step 12)

HINT:
Clear all DTCs prior to performing the confirmation driving pattern.

GO

26	READ OUTPUT DTC(SEE IF DTC P0171, P0172, P0174 AND/OR P0175 ARE OUTPUT AGAIN)

(a) Connect the hand–held tester to the DLC3.
(b) Turn the ignition switch to ON and turn the hand–held tester ON.
(c) Select the item: DIAGNOSIS / OBD/MOBD / DTC INFO / CURRENT CODES.
(d) Read the DTCs using the hand–held tester.

Result:

Display (DTC output)	Proceed to
No output	A
P0171, P0172, P0174 and/or P0175	B

B → **REPLACE ECM (See page 10–65 of Pub. No. RM1018E AVENSIS) AND PERFORM CONFIRMATION DRIVING PATTERN (See ptep 12)**

A

27	CONFIRM IF VEHICLE HAS RUN OUT OF FUEL IN PAST

NO → **CHECK FOR INTERMITTENT PROBLEMS (See Page 05–7)**

YES

DTC IS CAUSED BY RUNNING OUT OF FUEL (DTCS P0171, P0172, P0174 AND/OR P0175)

DTC P0190 FUEL RAIL PRESSURE SENSOR CIRCUIT

CIRCUIT DESCRIPTION

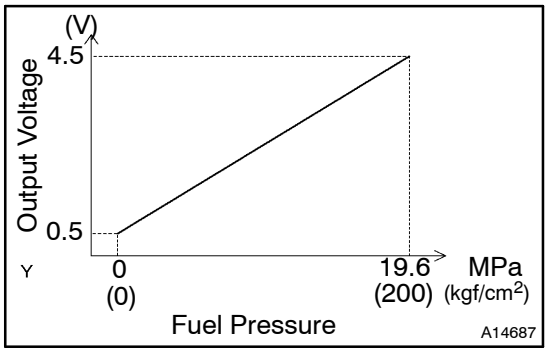

The fuel pressure sensor is installed on a fuel delivery pipe and detects the fuel pressure. It controls of feedback the pump discharge in order to keep the fuel at target pressure 8 to 13 MPa (81.6 to 132.6 kgf/cm^2, 1,160 to 1,885 psi) by the ECM.

DTC No.	DTC Detection Condition	Trouble Area
P0190	Open or short in fuel pressure sensor circuit	• Open or short in fuel pressure sensor circuit • Fuel pressure sensor • ECM

HINT:
After confirming DTC P0190, use the hand–held tester to confirm the fuel pressure in the delivery pipe in DIAGNOSIS / OBD/MOBD / DATA LIST / ALL.

Fuel Pressure (MPa)	Malfunction
Approximately 0	• PR circuit short
19.6 or more	• VC circuit open or short • PR circuit open • E2 circuit open

WIRING DIAGRAM

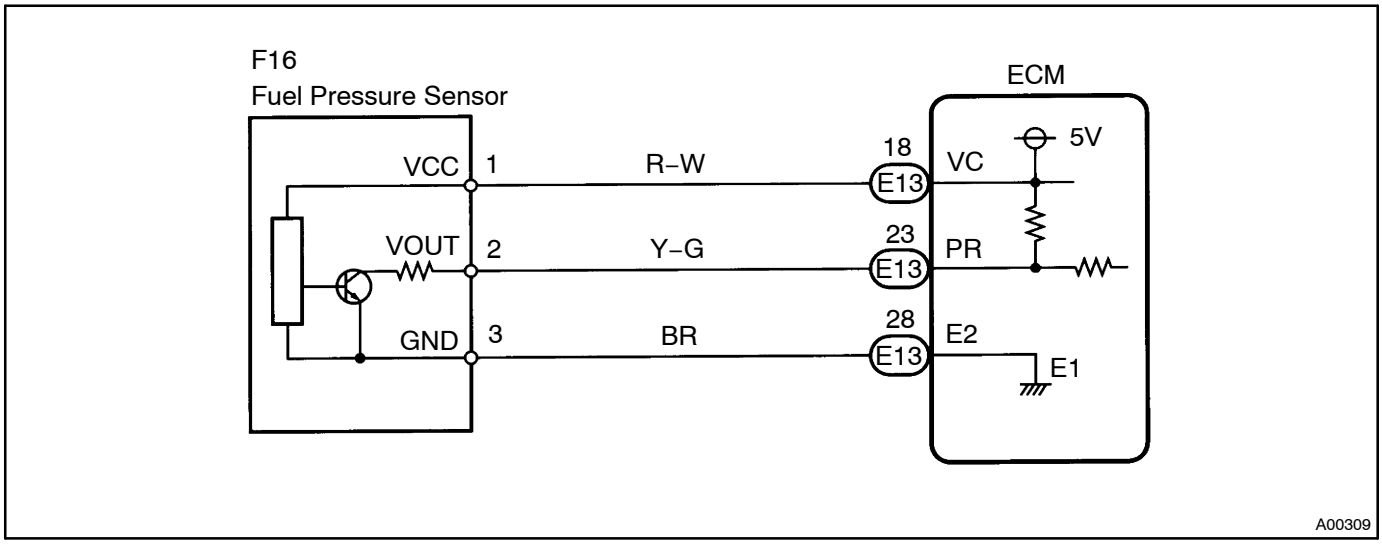

INSPECTION PROCEDURE

HINT:

- If different DTCs related to different systems that have terminal E2 as the ground terminal are output simultaneously, terminal E2 may have an open circuit.
- Read freeze frame data using the hand–held tester. Freeze frame data records the engine conditions when a malfunction is detected. When troubleshooting, freeze frame data can help determine if the vehicle was running or stopped, if the engine was warmed up or not, if the air–fuel ratio was lean or rich, and other data from the time the malfunction occurred.

1 READ VALUE OF HAND–HELD TESTER(FUEL PRESSURE)

(a) Connect the hand–held tester to the DLC3.
(b) Start the engine.
(c) Turn the hand–held tester ON.
(d) On the hand–held tester, select the item: DIAGNOSIS / OBD/MOBD / DATA LIST / ALL / FUEL PRESS. Read the values.
Pressure: 8 to 13 MPa (81.6 to 132.6 kgf/cm^2, 1,160 to 1,885 psi)
Result:

Fuel Pressure (MPa)	Proceed to
19.6 or more	A
0.0	B
OK (8 to 13 MPa (81.6 to 132.6 kgf/cm^2, 1,160 to 1,885 psi)) (*1)	C

*1: The value must be changed when the engine is run or stopped.

B → **Go to step 3**

C → **CHECK FOR INTERMITTENT PROBLEMS (See Page 05–7)**

A

2 INSPECT FUEL PRESSURE SENSOR(VCC VOLTAGE)

Wire Harness Side:
Fuel Pressure Sensor Connector

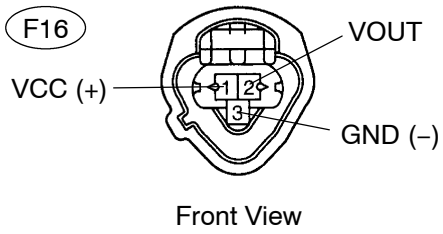

Front View
A59674

(a) Turn the ignition switch to ON.
(b) Measure the voltage between the specified terminals of the F16 fuel pressure sensor connector.
Standard:

Tester Connection	Specified Condition
VCC (F16–1) – GND (F16–3)	4.5 to 5.5 V

NG → **Go to step 4**

OK

3 INSPECT ECM(PR VOLTAGE)

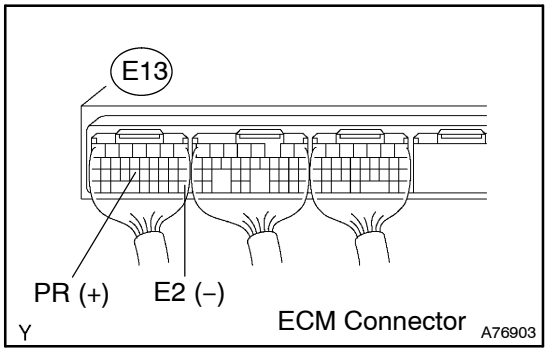

(a) Start the engine.
(b) Measure the voltage between the specified terminals of the E13 ECM connector.

Standard:

Tester Connection	Specified Condition
PR (E13–23) – E2 (E13–28)	2.1 to 3.2 V at 25°C (77°F)

HINT:
The fuel pressure in the delivery pipe is 8 to 13 MPa (81.6 to 132.6 kgf/cm^2, 1,160 to 1,885 psi)

NG → **Go to step 5**

OK

REPLACE ECM (See page 10–65 of Pub. No. RM1018E AVENSIS)

4 CHECK HARNESS AND CONNECTOR(ECM – FUEL PRESSURE SENSOR)

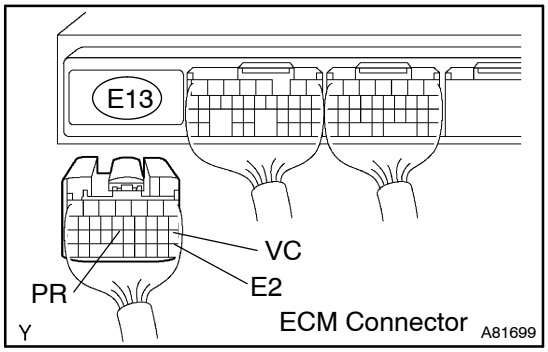

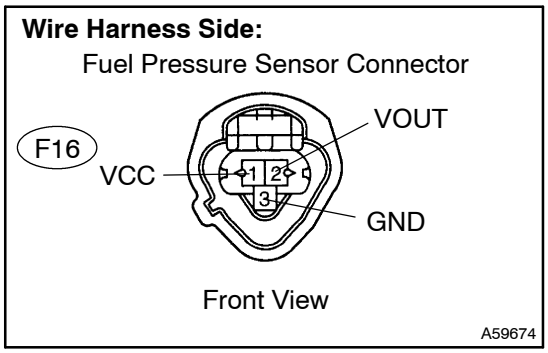

(a) Disconnect the E13 ECM connector.
(b) Disconnect the F16 fuel pressure sensor connector.
(c) Check the resistance between the wire harness side connectors.

Standard (Check for open):

Tester Connection	Specified Condition
VC (E13–18) – VCC (F16–1)	Below 1 Ω
PR (E13–23) – VOUT (F16–2)	Below 1 Ω
E2 (E13–28) – GND (F16–3)	Below 1 Ω

Standard (Check for short):

Tester Connection	Specified Condition
VC (E13–18) or VCC (F16–1) – Body ground	10 kΩ or higher
PR (E13–23) or VOUT (F16–2) – Body ground	10 kΩ or higher

(d) Reconnect the ECM connector.
(e) Reconnect the fuel pressure sensor connector.

NG → **REPAIR OR REPLACE HARNESS OR CONNECTOR**

OK

REPLACE ECM (See page 10–65 of Pub. No. RM1018E AVENSIS)

5 CHECK HARNESS AND CONNECTOR(ECM – FUEL PRESSURE SENSOR)

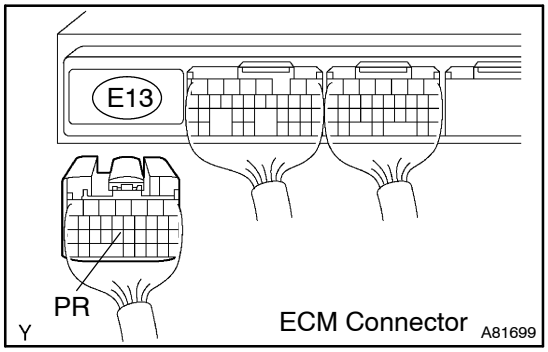

(a) Disconnect the E13 ECM connector.
(b) Disconnect the F16 fuel pressure sensor connector.
(c) Check the resistance between the wire harness side connectors.

Standard (Check for short):

Tester Connection	Specified Condition
PR (E13–23) or VOUT (F16–2) – Body ground	10 kΩ or higher

(d) Reconnect the ECM connector.
(e) Reconnect the fuel pressure sensor connector.

Wire Harness Side:

Fuel Pressure Sensor Connector

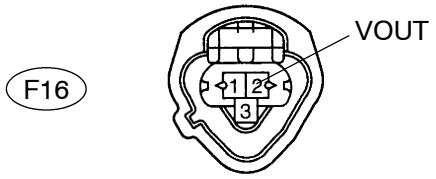

NG → **REPAIR OR REPLACE HARNESS OR CONNECTOR**

OK

REPLACE FUEL PRESSURE SENSOR

DTC	P0191	FUEL RAIL PRESSURE SENSOR CIRCUIT RANGE/PERFORMANCE

CIRCUIT DESCRIPTION

The high–pressure fuel system consists of the spill valve, pump plunger, check valve, fuel relief valve and fuel pressure sensor. The spill valve opens and closes the low–pressure fuel line (from the fuel tank), the pump plunger operated by the camshaft pressurizes fuel, the check valve mechanically opens and closes the high–pressure fuel line (to the fuel delivery pipe), the fuel relief valve prevents fuel pressure from becoming extremely high, and the fuel pressure sensor located on the fuel delivery pipe monitors fuel pressure.
The high–pressure fuel pump is mounted on the cylinder head cover, and its plunger is operated by the cam located between cylinders #3 and #4 on the intake camshaft. Let the plunger moves up and down by the camshaft rotations, it produces vacuum to suck fuel and pressurizes the fuel. This fuel then pushes the check valve open and flows into the fuel delivery pipe. The ECM opens and closes the spill valve to regulate the fuel pressure to the target fuel pressure 8 to 13 MPa (81.6 to 132.6 kgf/cm^2, 1,160 to 1,885 psi). In order to obtain and maintain the target pressure, the ECM monitors the fuel pressure using the fuel pressure sensor and performs the feedback control.
If the internal fuel pressure of the fuel delivery pipe exceeds the standard pressure 14 MPa (142.8 kgf/cm^2, 2,030 psi), the fuel relief valve installed on gateway of the fuel delivery pipe discharges the fuel pressure and then returns the fuel back to the fuel tank.

Reference (Fuel system diagram)

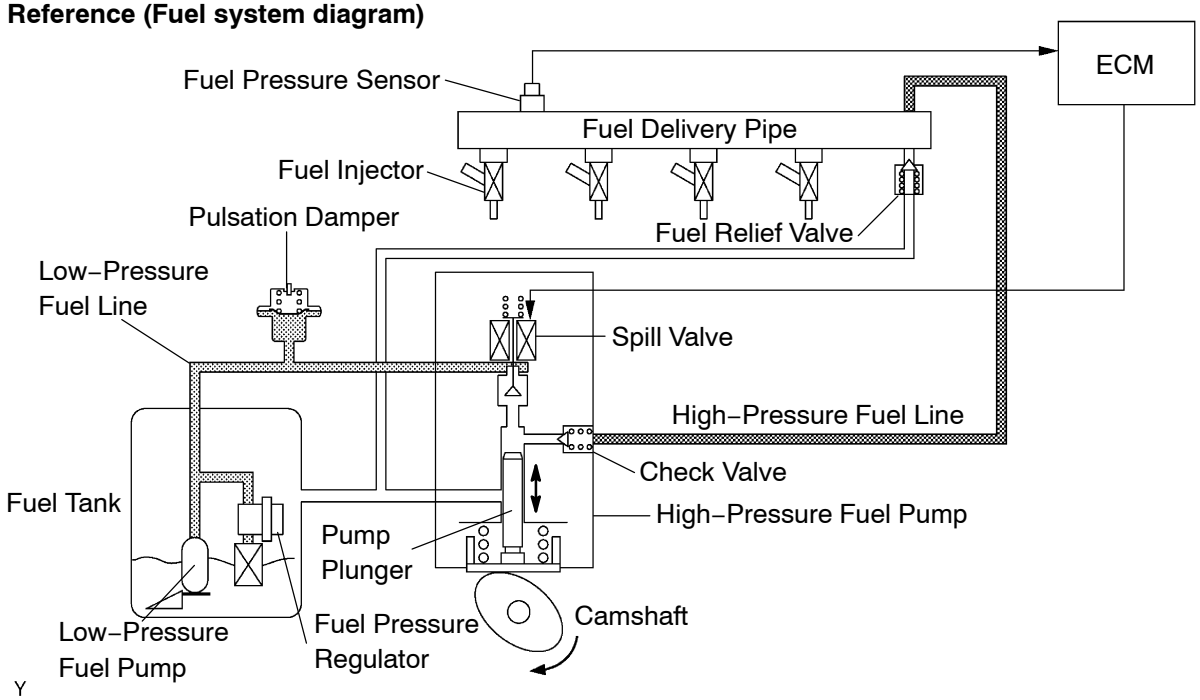

DTC No.	DTC Detection Condition	Trouble Area
P0191	After the fuel pressure is stable for 3 seconds or more, the following condition (a) or (b) continues for more than 10 seconds: (a) ECM did not command that the high–pressure fuel pump opens the spill valve, but fuel pressure increases 3 MPa (30.6 kgf/cm^2, 435 psi) (b) Despite ECM commanded that the high–pressure fuel pump opens the spill valve, fuel pressure decreases 5 MPa (51.0 kgf/cm^2, 725 psi)	• Open or short in high–pressure fuel pump (spill valve) circuit • High–pressure fuel pump • Low–pressure fuel pump • Fuel pipe • Fuel relief valve • Fuel pressure regulator • ECM

WIRING DIAGRAM

Refer to DTC P1235 on page 05–207.

INSPECTION PROCEDURE

HINT:

- If different DTCs related to different systems that have terminal E2 as the ground terminal are output simultaneously, terminal E2 may have an open circuit.
- Read freeze frame data using the hand–held tester. Freeze frame data records the engine conditions when a malfunction is detected. When troubleshooting, freeze frame data can help determine if the vehicle was running or stopped, if the engine was warmed up or not, if the air–fuel ratio was lean or rich, and other data from the time the malfunction occurred.

1	CHECK OTHER DTCS OUTPUT(IN ADDITION TO DTC P0191)

(a) Connect the hand–held tester to the DLC3.
(b) Turn the ignition switch to ON and turn the hand–held tester ON.
(c) Select the item: DIAGNOSIS / OBD/MOBD / DTC INFO / CURRENT CODES.
(d) Read the DTCs using the hand–held tester.
Result:

Display (DTC output)	Proceed to
P0191	A
P0191 and other DTCs	B

HINT:
If any other codes besides P0191 are output, perform troubleshooting for those DTCs first.

B → **GO TO RELEVANT DTC CHART (See page 05–31)**

A

2	READ VALUE OF HAND–HELD TESTER(FUEL PRESSURE)

(a) Connect the hand–held tester to the DLC3.
(b) Start the engine.
(c) Turn the hand–held tester ON.
(d) On the hand–held tester, select the item: DIAGNOSIS / OBD/MOBD / DATA LIST / ALL / FUEL PRESS. Read the values.
Pressure: 8 to 13 MPa (81.6 to 132.6 kgf/cm^2, 1,160 to 1,885 psi)

NG → **Go to step 10**

OK

3	CHECK FUEL PRESSURE(LOW PRESSURE) (See page 11–4)

NG → **Go to step 12**

OK

4 CHECK FOR FUEL LEAKS(HIGH PRESSURE)

(a) Check if there is leakage in the fuel pipe located between the high–pressure fuel pump and the injectors.

NG → **REPAIR OR REPLACE COMPONENTS WHICH CAUSE FUEL LEAKS**

OK

5 CHECK FUEL PUMP(HIGH PRESSURE)

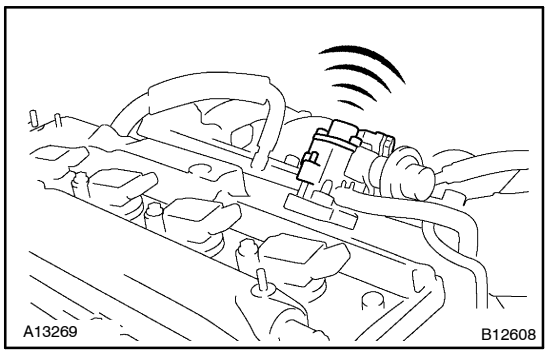

(a) With the engine running or cranking, use a sound scope to check that there is the normal operating sounds of the fuel pump (high–pressure) when it is operated.
Standard:
There is the operating sounds of the fuel pump (high–pressure).

NG → **REPAIR OR REPLACE FUEL PUMP ASSY**

OK

6 CHECK HARNESS AND CONNECTOR(ECM – HIGH PRESSURE FUEL PUMP (SPILL VALVE))

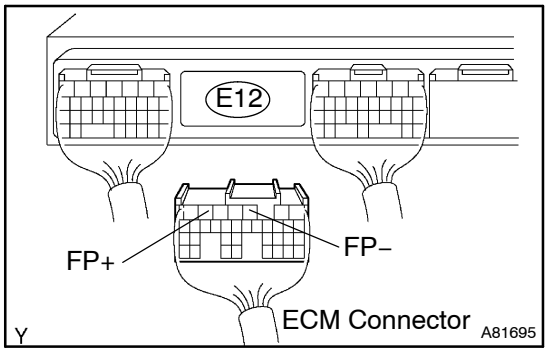

(a) Disconnect the E12 ECM connector.
(b) Disconnect the S3 high–pressure fuel pump (spill valve) connector.
(c) Check the resistance between the wire harness side connectors.

Standard (Check for open):

Tester Connection	Specified Condition
FP+ (E12–6) – Fuel pump (S3–1)	Below 1 Ω
FP– (E12–3) – Fuel pump (S3–2)	Below 1 Ω

Standard (Check for short):

Tester Connection	Specified Condition
FP+ (E12–6) or Fuel pump (S3–1) – Body ground	10 kΩ or higher
FP– (E12–3) or Fuel pump (S3–2) – Body ground	10 kΩ or higher

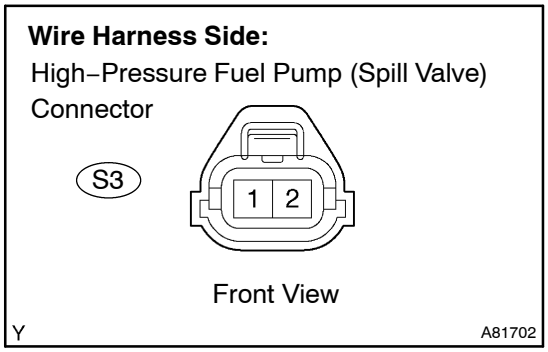

(1) Reconnect the ECM connector.
(2) Reconnect the high–pressure fuel pump (spill valve) connector.

NG → **REPAIR OR REPLACE HARNESS OR CONNECTOR**

OK

7	CHECK IF DTC OUTPUT REOCCURS(SEE IF DTC P0191 IS OUTPUT AGAIN)

(a) Connect the hand–held tester to the DLC3.
(b) Turn the ignition switch to ON and turn the hand–held tester ON.
(c) Select the item: DIAGNOSIS / OBD/MOBD / DTC INFO / CURRENT CODES.
(d) Read the DTCs using the hand–held tester.
Result:

Display (DTC output)	Proceed to
P0191	A
No output	B

B → **CHECK FOR INTERMITTENT PROBLEMS (See Page 05–7)**

A

8	REPLACE FUEL RELIEF VALVE ASSY

GO

9	CHECK IF DTC OUTPUT REOCCURS(SEE IF DTC P0191 IS OUTPUT AGAIN)

(a) Connect the hand–held tester to the DLC3.
(b) Turn the ignition switch to ON and turn the hand–held tester ON.
(c) Select the item: DIAGNOSIS / OBD/MOBD / DTC INFO / CURRENT CODES.
(d) Read the DTCs using the hand–held tester.
Result:

Display (DTC output)	Proceed to
P0191	A
No output	B

B → **SYSTEM OK**

A

REPLACE FUEL PUMP ASSY (HIGH PRESSURE)

10	CHECK OPERATION OF FUEL PUMP(LOW PRESSURE) (See page 11–4)

OK → **Go to step 3**

NG

11	CHECK VOLTAGE FUEL PUMP(LOW PRESSURE) (See page 11–7)

OK → **Go to step 3**

NG

CHECK FOR FUEL PUMP CONTROL CIRCUIT (See page 05–241)

12	CHECK FOR FUEL LEAKS(LOW PRESSURE)

(a) Check if there is leakage in the fuel pipe located between the fuel tank and the high–pressure fuel pump.

NG → REPAIR OR REPLACE COMPONENTS WHICH CAUSE FUEL LEAKS

OK

REPLACE FUEL PRESSURE REGULATOR ASSY

DTC	P0200	INJECTOR CIRCUIT / OPEN

DTC	P0201	INJECTOR CIRCUIT / OPEN – (CYLINDER 1)

DTC	P0202	INJECTOR CIRCUIT / OPEN – (CYLINDER 2)

DTC	P0203	INJECTOR CIRCUIT / OPEN – (CYLINDER 3)

DTC	P0204	INJECTOR CIRCUIT / OPEN – (CYLINDER 4)

CIRCUIT DESCRIPTION

The Electronic Driver Unit (EDU) has been adopted to operate the injector at high speed. The EDU enables the injector to drive in high–speed rate under high–pressure fuel condition using its internal DC/DC converter that provides high voltage and quick–charging system.
The ECM constantly monitors the EDU. If the ECM detects abnormal condition, it will stop the engine.

DTC No.	DTC Detection Condition	Trouble Area
P0200	No IJF signals to ECM despite crankshaft rotating 10 times (1 trip detection logic)	• Open or short in EDU circuit • EDU (Injector driver) • Fuel injector assy • ECM
P0200	No IJF signals to ECM despite crankshaft rotating 20 times during cranking (2 trip detection logic)	• Open or short in EDU circuit • EDU (Injector driver) • Fuel injector assy • ECM
P0201 P0202 P0203 P0204	No IJF signals of each cylinder to ECM 20 times successively (1 trip detection logic)	• Open or short in EDU circuit • EDU (Injector driver) • Fuel injector assy • ECM

WIRING DIAGRAM

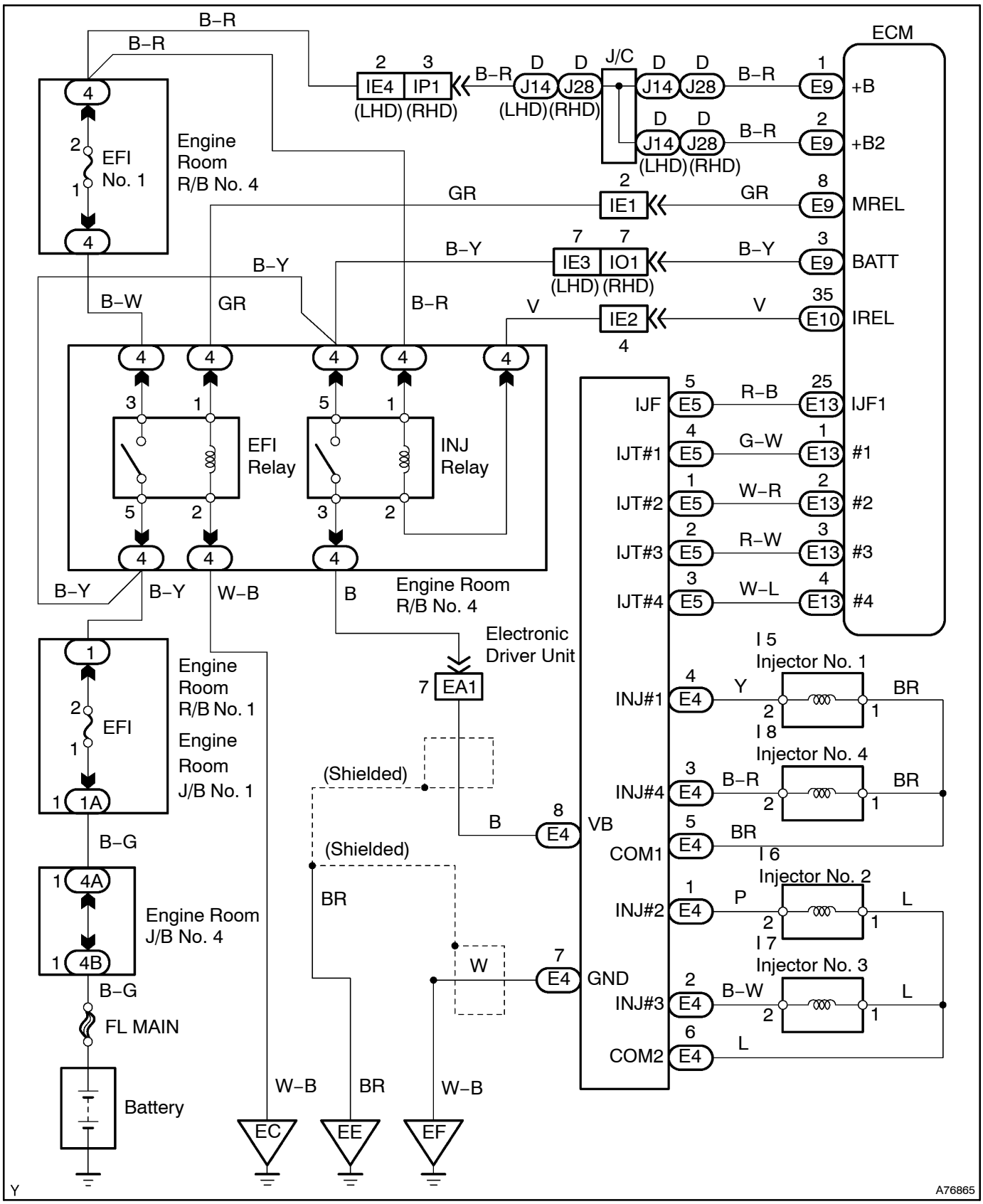

INSPECTION PROCEDURE

HINT:

Read freeze frame data using the hand–held tester. Freeze frame data records the engine conditions when a malfunction is detected. When troubleshooting, freeze frame data can help determine if the vehicle was running or stopped, if the engine was warmed up or not, if the air–fuel ratio was lean or rich, and other data from the time the malfunction occurred.

1 INSPECT INJECTOR DRIVER(POWER SOURCE OF EDU)

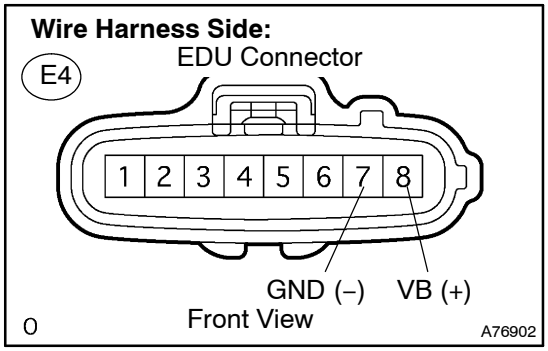

(a) Disconnect the E4 EDU connector.
(b) Turn the ignition switch to ON.
(c) Measure the voltage between the specified terminals of the EDU connector.

Standard:

Tester Connection	Specified Condition
VB (E4–8) – GND (E4–7)	9 to 14 V

(d) Reconnect the EDU connector.

NG → **CHECK EDU POWER SOURCE CIRCUIT**

OK

2 CHECK HARNESS AND CONNECTOR(EDU – FUEL INJECTOR)

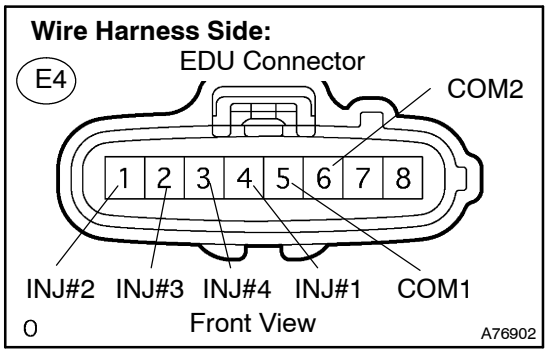

(a) Disconnect the E4 EDU connector.
(b) Measure the resistance between the specified terminals of the EDU connector.

Standard:

Tester Connection	Specified Condition
INJ#1 (E4–4) – COM1 (E4–5)	2.55 to 2.85 Ω at 20 °C (68 °F)
INJ#2 (E4–1) – COM2 (E4–6)	2.55 to 2.85 Ω at 20 °C (68 °F)
INJ#3 (E4–2) – COM2 (E4–6)	2.55 to 2.85 Ω at 20 °C (68 °F)
INJ#4 (E4–3) – COM1 (E4–5)	2.55 to 2.85 Ω at 20 °C (68 °F)

(c) Reconnect the EDU connector.

NG → **Go to step 6**

OK

3 CHECK HARNESS AND CONNECTOR(ECM – EDU)

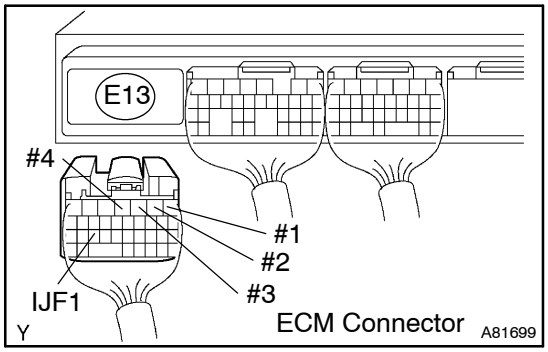

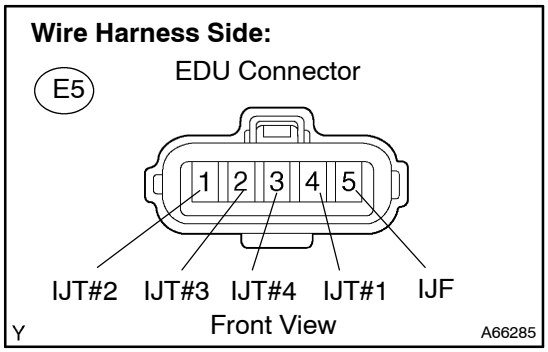

(a) Disconnect the E13 ECM connector.
(b) Disconnect the E5 EDU connector.
(c) Measure the resistance between the wire harness side connectors.

Standard (Check for open):

Tester Connection	Specified Conditio
IJF1 (E13–25) – IJF (E5–5)	Below 1 Ω
#1 (E13–1) – IJT#1 (E5–4)	Below 1 Ω
#2 (E13–2) – IJT#2 (E5–1)	Below 1 Ω
#3 (E13–3) – IJT#3 (E5–2)	Below 1 Ω
#4 (E13–4) – IJT#4 (E5–3)	Below 1 Ω

Standard (Check for short):

Tester Connection	Specified Condition
IJF1 (E13–25) or IJF (E5–5) – Body ground	10 kΩ or higher
#1 (E13–1) or IJT#1 (E5–4) – Body ground	10 kΩ or higher
#2 (E13–2) or IJT#2 (E5–1) – Body ground	10 kΩ or higher
#3 (E13–3) or IJT#3 (E5–2) – Body ground	10 kΩ or higher
#4 (E13–4) or IJT#4 (E5–3) – Body ground	10 kΩ or higher

(1) Reconnect the ECM connector.
(2) Reconnect the EDU connector.

NG → **REPAIR OR REPLACE HARNESS OR CONNECTOR**

OK

4 CHECK ECM(#1, #2, #3 AND #4 VOLTAGE)

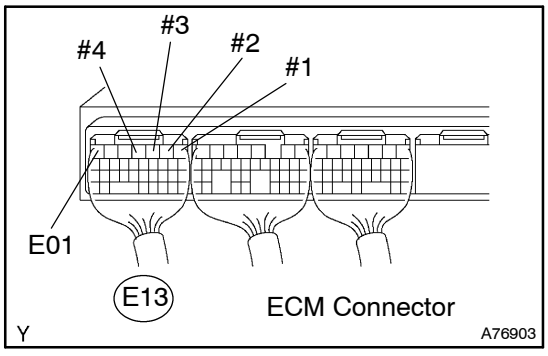

(a) Connect an oscilloscope to terminals #1 to #4 and E01 of the E13 ECM harness side connector.

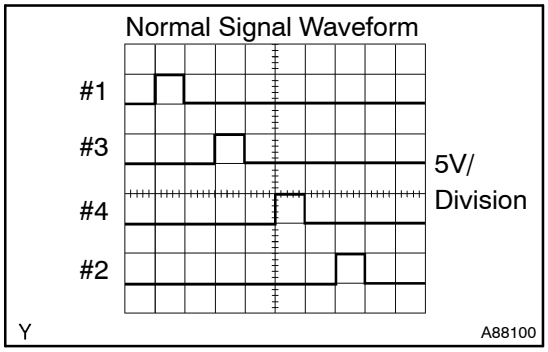

(b) With the engine cranking or idling, check the signal waveform.

Standard:

Signal waveform appears as shown in the illustration.

HINT:

Check the waveform before the ECM detects the DTC(s) and enters the fail–safe mode, because the ECM will no more indicate the voltage output once it enters the fail–safe mode.

NG → REPLACE ECM (See page 10–65 of Pub. No. RM1018E AVENSIS)

OK

5 CHECK ECM(IJF1 VOLTAGE)

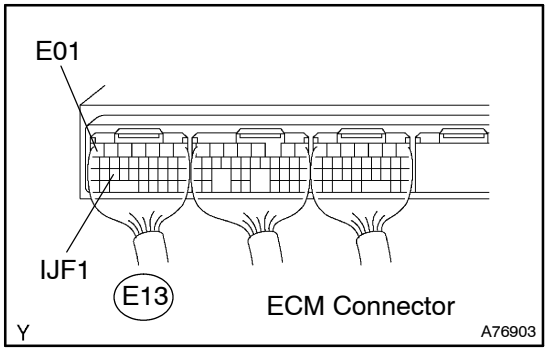

(a) Connect an oscilloscope to terminals IJF1 and E01 of the E13 ECM harness side connector.

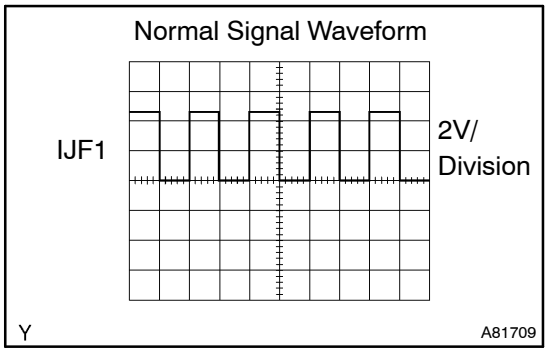

(b) With the engine cranking or idling, check the signal waveform.

Standard:

Signal waveform appears as shown in the illustration.

HINT:

Check the waveform before the ECM detects the DTC(s) and enters the fail–safe mode, because the EDU will no more indicate the voltage output once the ECM enters the fail–safe mode.

NG → REPLACE INJECTOR DRIVER

OK

CHECK FOR INTERMITTENT PROBLEMS (See Page 05–7)

6 INSPECT FUEL INJECTOR ASSY (See page 11–7)

NG → REPLACE FUEL INJECTOR ASSY (See Page 11–13)

OK

REPAIR OR REPLACE HARNESS OR CONNECTOR

DTC	P0230	FUEL PUMP PRIMARY CIRCUIT

CIRCUIT DESCRIPTION

When the engine is cranked, current flows from terminal ST of the ignition switch to the starter relay coil and also current flows to terminal STA of the ECM (STA signal).
When the STA signal and NE signal are input to the ECM, the Tr1 is turned ON, current flows to the coil of the circuit opening relay, the relay switches on, power is supplied to the fuel pump, and the fuel pump operates.
While the NE signal is generated (engine running), the ECM keeps the Tr1 ON (circuit opening relay ON) and the fuel pump also keeps operating.
The fuel pump speed is controlled at two levels (high speed or low speed) by the engine condition (starting, light load, heavy load). When the engine starts (STA ON), the Tr2 in the ECM is OFF, so the fuel pump relay closes and positive battery voltage is applied directly to the fuel pump. The fuel pump operates at high speed. During idling or under light loads, Tr2 goes ON, and then power is supplied to the fuel pump via the fuel pump resistor. The fuel pump operates at low speed.

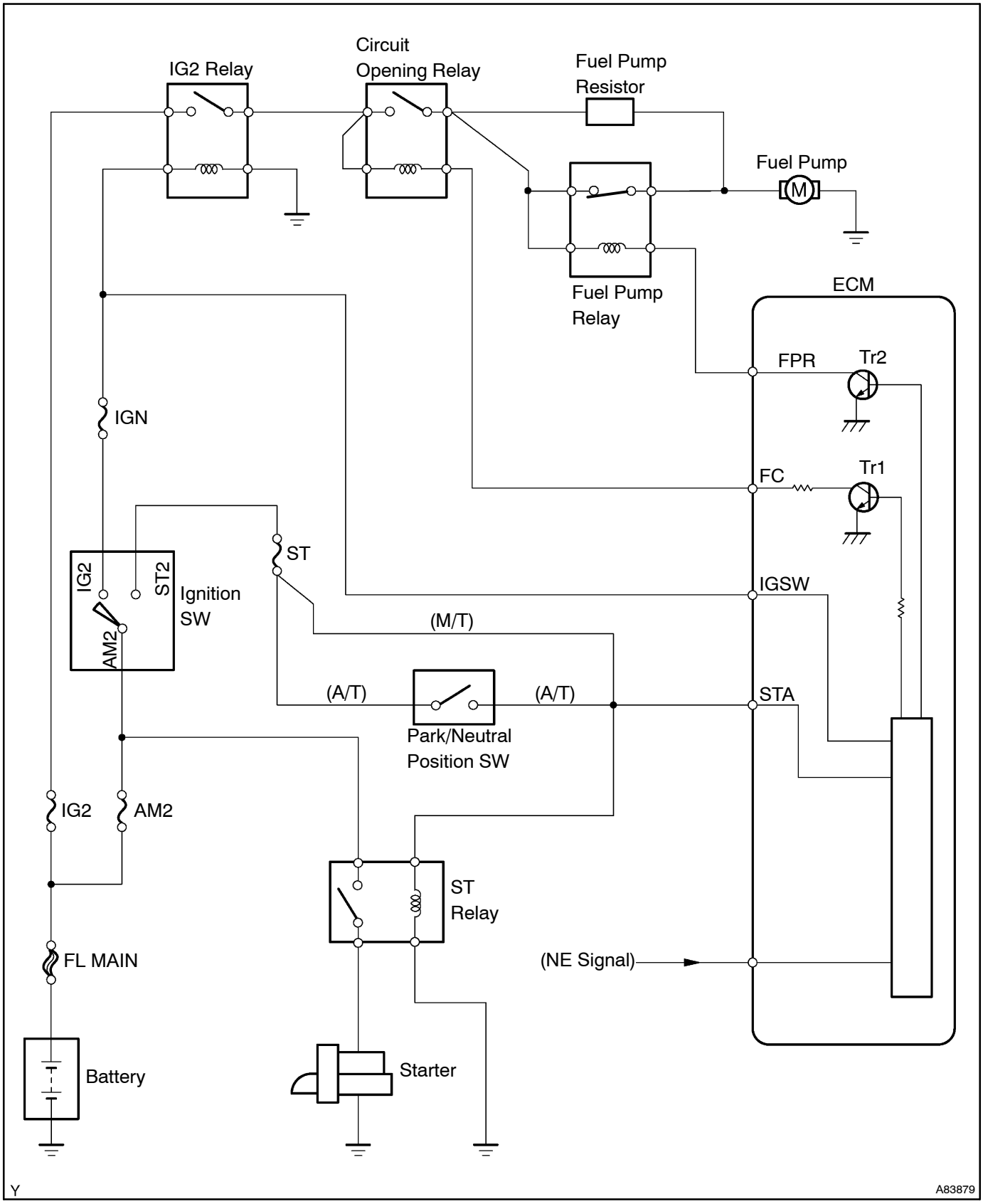

DTC No	DTC Detection Condition	Trouble Area
P230	Open or short in fuel pump circuit	• Open or short in fuel pump relay circuit • Fuel pump relay • ECM

WIRING DIAGRAM

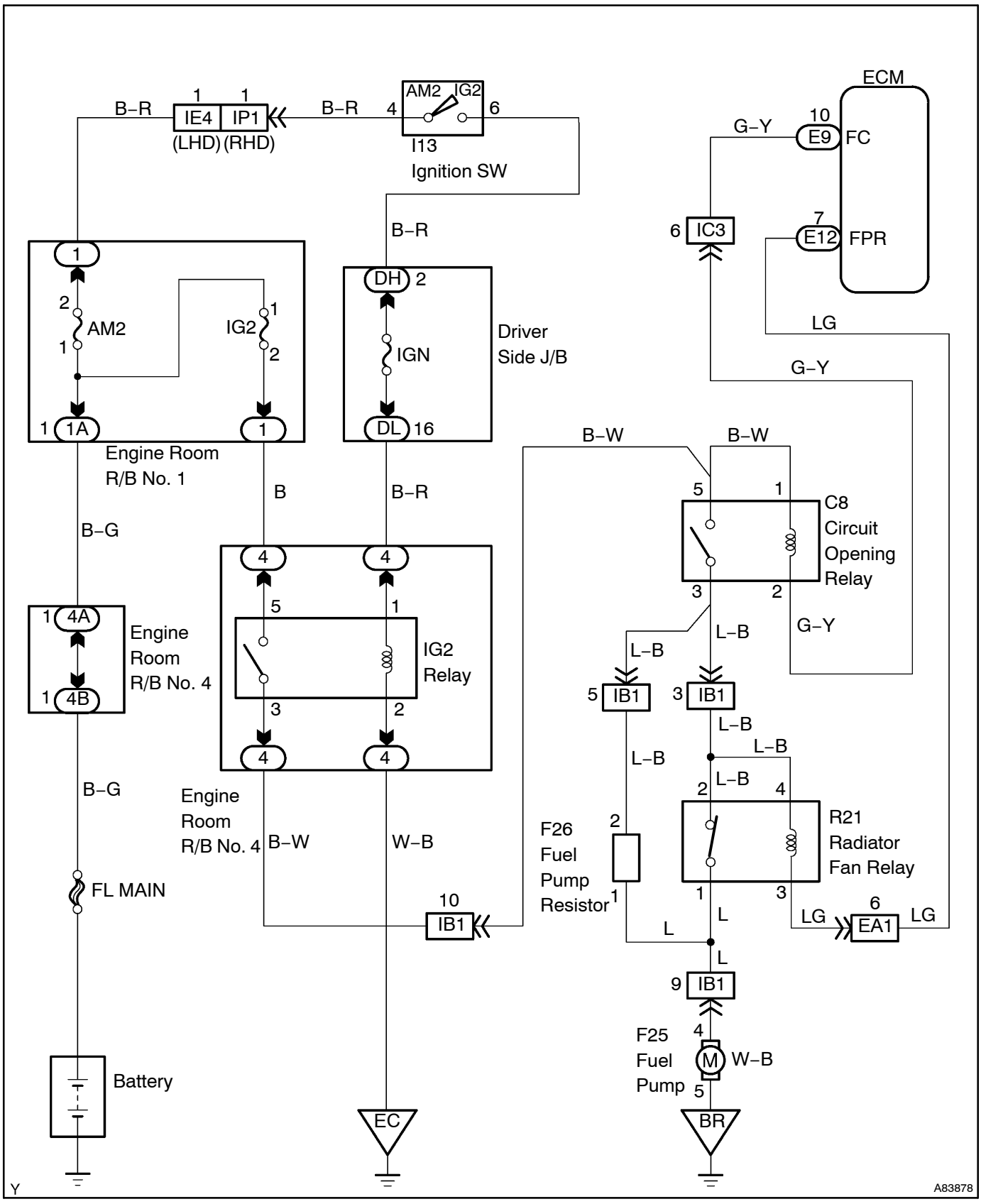

INSPECTION PROCEDURE

HINT:

Read freeze frame data using the hand–held tester. Freeze frame data records the engine conditions when a malfunction is detected. When troubleshooting, freeze frame data can help determine if the vehicle was running or stopped, if the engine was warmed up or not, if the air–fuel ratio was lean or rich, and other data from the time the malfunction occurred.

1	INSPECT ECM(FPR VOLTAGE)

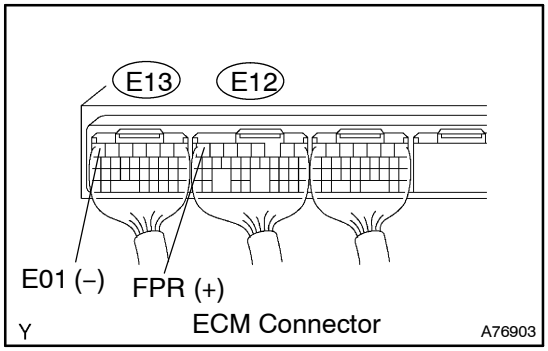

(a) Measure the voltage between the applicable terminals of the E12 and E13 ECM connectors.

Standard:

Tester Connection	Condition	Specified Condition
FPR (E12–7) – E01 (E13–7)	STA signal ON	9 to 14 V
FPR (E12–7) – E01 (E13–7)	STA signal OFF	0 to 3 V

NG → **REPLACE ECM (See page 10–65 of Pub. No. RM1018E AVENSIS)**

OK

2	INSPECT RADIATOR FAN RELAY

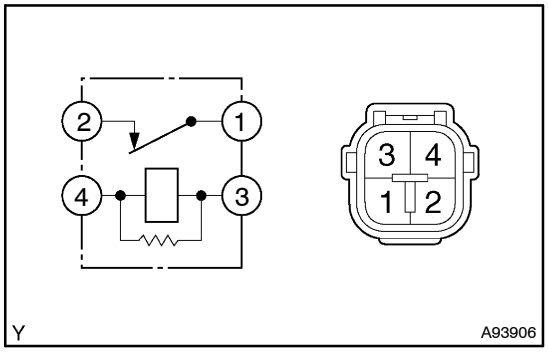

(a) Remove the R21 radiator fan relay.

(b) Check for continuity in the radiator fan relay.

Standard:

Tester Connection	Specified Condition
3 – 4	Continuity
1 – 2	Continuity
1 – 2	No Continuity (Apply battery voltage to terminals 3 and 4)

(c) Reinstall the fuel pump relay.

NG → **REPLACE FUEL PUMP RELAY**

OK

3 CHECK HARNESS AND CONNECTOR(RADIATOR FAN RELAY – ECM)

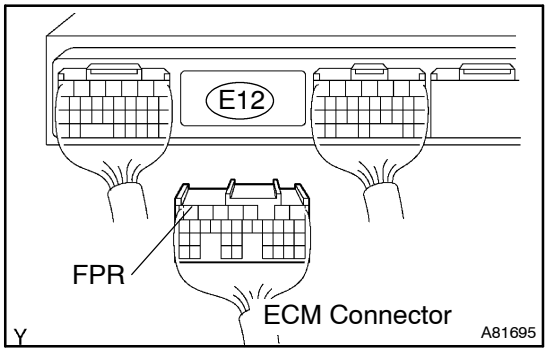

(a) Disconnect the E12 ECM connector.
(b) Remove the radiator fan relay.
(c) Check the resistance between the wire harness side connectors.

Standard (Check for open):

Tester Connection	Specified Condition
FPR (E12–7) – Radiator fan relay (R21–3)	Below 1 Ω

Standard (Check for short):

Tester Connection	Specified Condition
FPR (E12–7) – Rdiator fan relay (R21–3) – Body ground	10 kΩ or higher

(d) Reconnect the ECM connector.
(e) Reinstall the radiator fan relay.

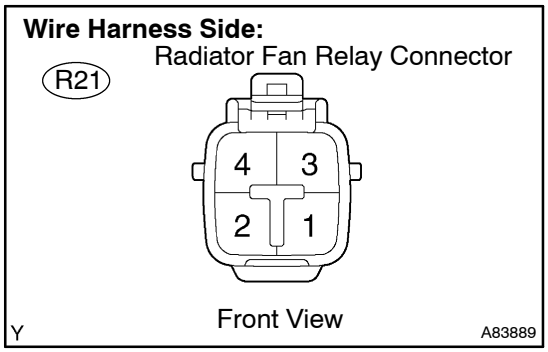

NG → **REPAIR OR REPLACE HARNESS OR CONNECTOR**

OK

REPLACE ECM (See page 10–65 of Pub. No. RM1018E AVENSIS)

DTC	P0300	RANDOM/MULTIPLE CYLINDER MISFIRE DETECTED

DTC	P0301	CYLINDER 1 MISFIRE DETECTED

DTC	P0302	CYLINDER 2 MISFIRE DETECTED

DTC	P0303	CYLINDER 3 MISFIRE DETECTED

DTC	P0304	CYLINDER 4 MISFIRE DETECTED

CIRCUIT DESCRIPTION

When a misfire occurs in the engine, hydrocarbons (HC) enter the exhaust in high concentrations. If this HC concentration is high enough, there could be an increase in exhaust emissions levels. High concentrations of HC can also cause to temperature of the catalyst to increase, possibly damaging the catalyst. To prevent this increase in emissions and limit the possibility of thermal damage, the ECM monitors the misfire rate. When the temperature of the catalyst reaches a point of thermal degradation, the ECM will blink the CHK ENG. For monitoring misfire, the ECM uses both the camshaft position sensor and the crankshaft position sensor. The camshaft position sensor is used to identify misfiring cylinders and the crankshaft position sensor is used to measure variations in the crankshaft rotation speed. The misfire counter increments when crankshaft rotation speed variations exceed threshold values.

If the misfiring rate exceeds the threshold value and could cause emissions deterioration, the ECM illuminates the CHK ENG.

HINT:

- For any particular 200 revolutions of the engine, misfiring which would result in overheating of catalyst is detected. This cause CHK ENG to blink (1 trip detection logic).
- For any particular 1,000 revolutions of the engine, misfiring which would result in a deterioration of emissions is detected. This illuminates CHK ENG (2 trip detection logic).

DTC No.	DTC Detection Condition	Trouble Area
P0300	Misfiring of random cylinders is detected	• Open or short in engine wire harness • Connector connection • Vacuum hose connection • Ignition system • Injector • Fuel pressure • Mass air flow meter • Engine coolant temperature sensor • Compression pressure • Valve clearance • Valve timing • PCV hose connection • PCV hose • ECM
P0301 P0302 P0303 P0304	Misfiring of each cylinder is detected	• Open or short in engine wire harness • Connector connection • Vacuum hose connection • Ignition system • Injector • Fuel pressure • Mass air flow meter • Engine coolant temperature sensor • Compression pressure • Valve clearance • Valve timing • PCV hose connection • PCV hose • ECM

HINT:

When several codes for a misfiring cylinder are recorded repeatedly but no random misfire code is recorded, it indicates that the misfires have been detected and recorded at different times.

Reference: Inspection using oscilloscope

With the engine idling, check the waveform between terminals #1 to #4 and E01 of the ECM connectors.

HINT:

The correct waveform is as shown.

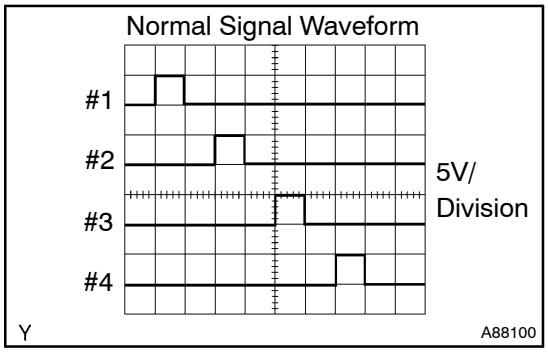

WIRING DIAGRAM

Refer to DTC P0200 on page 05–136 for the wiring diagram of the injector system.

Refer to DTC P0351 on page 05–167 for the wiring diagram of the ignition system.

CONFIRMATION DRIVING PATTERN

(a) Connect the hand–held tester to the DLC3.
(b) Record DTCs and freeze frame data.
(c) Switch the hand–held tester from normal mode to check mode (see page 05–20).
(d) Read the value on the misfire counter for each cylinder when idling. If the value is displayed on the misfire counter, skip the following procedure of confirmation driving.
(e) Drive the vehicle several times with the engine speed, load and its surrounding range shown with ENGINE SPD, CALC LOAD in the freeze frame data or MISFIRE RPM, MISFIRE LOAD in the DATA LIST.

If you have no hand–held tester, turn the ignition switch to OFF after the symptom is simulated once. Then repeat the simulation process again.

HINT:

In order to memorize the misfire DTC, it is necessary to drive with MISFIRE RPM, MISFIRE LOAD in the DATA LIST for the period of time in the chart below. Take care not to turn the ignition switch to OFF. Turning the ignition switch to OFF switches the diagnosis system from check mode to normal mode and all DTCs, freeze frame data and other data are erased.

Engine Speed	Time
Idling	3 minutes and 30 seconds or more
1,000 rpm	3 minutes or more
2,000 rpm	1 minutes and 30 seconds or more
3,000 rpm	1 minute or more

(f) Check if there is misfire and DTC and the freeze frame data. Record the DTCs, freeze frame data and misfire counter data.
(g) Turn the ignition switch to OFF and wait at least for 5 seconds.

INSPECTION PROCEDURE

HINT:

- If DTCs besides misfire DTCs are memorized simultaneously, troubleshoot the non–misfire DTCs first.
- Read freeze frame data using the hand–held tester. Freeze frame data records the engine conditions when a malfunction is detected. When troubleshooting, freeze frame data can help determine if the vehicle was running or stopped, if the engine was warmed up or not, if the air–fuel ratio was lean or rich, and other data from the time the malfunction occurred.
- If the misfire does not occur when the vehicle is brought to the workshop, the misfire can be confirmed by reproducing the condition of the freeze frame data. Also, after finishing the repair, confirm that there is no misfire (see confirmation driving pattern).

When only a general misfire fault code like P0300 is stored:

- Erase the general misfire fault code from the hand–held tester.
- Start the engine and drive the confirmation patten.
- Read the value of the misfire ratio for each cylinder. Or read the DTC.
- Perform repairs on the cylinder that has a high misfire ratio. Or repair the cylinder indicated by the DTC.
- After finishing repairs, drive the confirmation pattern again and confirm that no misfire occurs.
- When any one of SHORT FT #1, LONG FT #1, SHORT FT #2 and LONG FT #2 in the freeze frame data is over the range of ±20 %, there is a possibility that the air–fuel ratio is becoming RICH (–20 % or less) or LEAN (+20 % or more).
- When COOLANT TEMP in the freeze frame data is less than 80°C (176°F), there is a possibility of misfire only during engine warm–up.
- If the misfire cannot be reproduced, the following reasons may apply: 1) the vehicle has low fuel, 2) improper fuel is being used, and 3) the ignition plug is contaminated.
- Be sure to check the value on the misfire counter after the repair.

1	CHECK OTHER DTC OUTPUT(IN ADDITION TO MISFIRE DTCS)

(a) Connect the hand–held tester to the DLC3.
(b) Turn the ignition switch to ON and turn the hand–held tester ON.
(c) Select the item: DIAGNOSIS / OBD/MOBD / DTC INFO / CURRENT CODES.
(d) Read the DTCs using the hand–held tester.

Result :

Display	Proceed to
P0300, P0301, P0302, P0303 and/or P0304	A
P0300, P0301, P0302, P0303 or P0304 and other DTCs	B

HINT:
If any other codes besides P0300, P0301, P0302, P0303 and/or P0304 are output, perform troubleshooting for those DTCs first.

B → **GO TO RELEVANT DTC CHART (See page 05–31)**

A

2	CHECK WIRE HARNESS, CONNECTOR AND VACUUM HOSE IN ENGINE ROOM

(a) Check the connection conditions of the wire harness and connector.
(b) Check the piping the vacuum hose.
(c) Check the vacuum hose for disconnection or breakage.

NG → **REPAIR OR REPLACE, THEN CONFIRM THAT THERE IS NO MISFIRE**

OK

3	CHECK CONNECTION OF PCV HOSE

NG → **REPAIR OR REPLACE PCV HOSE**

OK

4	READ VALUE OF HAND–HELD TESTER(NUMBER OF MISFIRE)

(a) Connect the hand–held tester to the DLC3.
(b) Turn the ignition switch to ON and turn the hand–held tester ON.
(c) Start the engine.
(d) Select each item: DIAGNOSIS / OBD/MOBD / DATA LIST / ALL / CYL#1 to CYL#4.
(e) Read the number of misfire on each cylinder on the hand–held tester.

HINT:

When a misfire is not reproduced, be sure to branch below based on the stored DTC.

Result:

High Misfire Rate Cylinder	Proceed to
1 or 2 cylinders	A
More than 3 cylinders	B

B → **Go to step 12**

A

5	CHECK SPARK PLUG AND SPARK OF MISFIRING CYLINDER

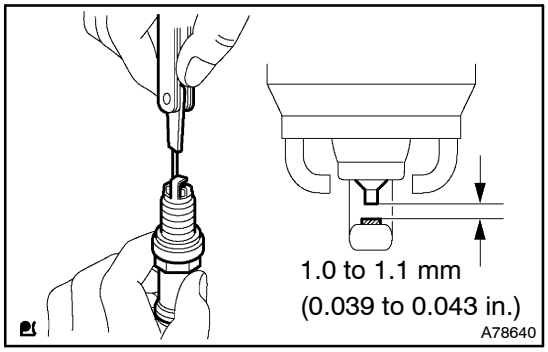

(a) Remove the ignition coil with igniter assembly.
(b) Remove the spark plug.
(c) Check the spark plug type.

Recommended spark plug:

DENSO made	SK20BR11

(d) Check the spark plug electrode gap.

Electrode gap: 1.0 to 1.1 mm (0.039 to 0.043 in.)
Maximum electrode gap: 1.3 mm (0.051 in.)

NOTICE:

If adjusting the gap of a new spark plug, bend only the base the ground electrode. Do not touch the tip. Never attempt to adjust the gap on a used plug.

(e) Check the electrode for carbon deposits.
(f) Perform a spark test.

CAUTION:

Each injector connector must be disconnected.

NOTICE:

Do not crank the engine for more than 2 seconds.

(1) Install the spark plug to the ignition coil with igniter, and connect the ignition coil with igniter connector.
(2) Disconnect the injector connectors.
(3) Ground the spark plug.
(4) Check if spark occurs while the engine is being cranked.

Standard: Spark jumps across electrode gap.

(g) Reinstall the spark plug.
(h) Reinstall the ignition coil with igniter.

NG → **Go to step 19**

OK

6	CHECK CYLINDER COMPRESSION PRESSURE OF MISFIRING CYLINDER (See page 14–1)

NG → REPAIR OR REPLACE

OK

7	CHECK VALVE CLEARANCE OF MISFIRING CYLINDER (See page 14–6)

NG → ADJUST VALVE CLEARANCE (See page 14–6)

OK

8	REPLACE FUEL INJECTOR OF MISFIRING CYLINDER

(a) Read the DTC and check which of the cylinders causes the misfiring DTC (see page 11–7).
(b) Remove the injector of the misfiring cylinder and other normal injector (see page 11–13).
(c) Swap the injector of misfiring cylinder for the normal injector.

GO

9	PERFORM CONFIRMATION DRIVING PATTERN

HINT:
Clear all DTCs prior to performing the confirmation driving pattern.

GO

10	READ OUTPUT DTC(SEE IF MISFIRE DTCS ARE OUTPUT AGAIN)

(a) Connect the hand–held tester to the DLC3.
(b) Turn the ignition switch to ON and turn the hand–held tester ON.
(c) Select the item: DIAGNOSIS / OBD/MOBD / DTC INFO / CURRENT CODES.
(d) Read the DTCs using the hand–held tester.

Result:

Display (DTC output)	Proceed to
P0300, P0301, P0302, P0303 and/or P0304	A
No output	B

B → REPLACE FUEL INJECTOR ASSY

A

11	SWITCH STEP BY NUMBER OF MISFIRE CYLINDER(REFER TO RESULT OF STEP 4)

- If the result of step 4 is ”1 or 2 cylinders”, proceed to A.
- If the result of step 4 is ”more than 3 cylinders”, proceed to B.

B → CHECK FOR INTERMITTENT PROBLEMS

A

12	CHECK VALVE TIMING(CHECK FOR LOOSE AND JUMPED TOOTH OF TIMING BELT)

NG → ADJUST VALVE TIMING

OK

13	CHECK FUEL PRESSURE(LOW PRESSURE) (See page 11–4)

NG → CHECK AND REPLACE FUEL PUMP, PRESSURE REGULATOR, FUEL PIPE LINE AND FILTER

OK

14	CHECK FUEL PRESSURE(HIGH PRESSURE) (See page 11–4)

NG → CHECK AND REPLACE FUEL PUMP, FUEL PRESSURE SENSOR, WIRING AND FUEL LEAKAGE

OK

15	READ VALUE OF HAND–HELD TESTER(INTAKE AIR TEMPERATURE AND MASS AIR FLOW RATE)

(a) Connect the hand–held tester to the DLC3.
(b) Turn the ignition switch to ON.
(c) Check the intake air temperature.
  (1) On the hand–held tester, select the item: DIAGNOSIS / OBD/MOBD / DATA LIST / ALL / INTAKE AIR. Read the values.

  Temperature: Equivalent to ambient air temperature
(d) Check the air flow rate.
  (1) On the hand–held tester, select the item: DIAGNOSIS / OBD/MOBD / DATA LIST / ALL / MAF. Read the values.

  Standard:

Condition	Air flow rate (gm/s)
Ignition switch ON (do not start engine)	0
Idling	4 to 6
Running without load (2,500 rpm)	13 to 20
Idling to quickly accelerating	Air flow rate fluctuates

NG → **REPLACE MASS AIR FLOW METER**

OK

16	INSPECT ENGINE COOLANT TEMPERATURE SENSOR

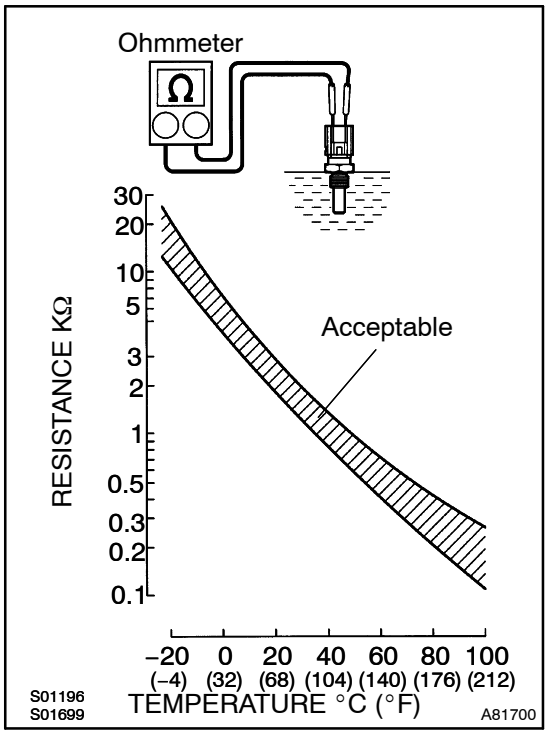

(a) Remove the engine coolant temperature sensor.
(b) Measure the resistance between the terminals of the engine coolant temperature sensor.

  Standard:

Tester Connection	Temperature	Specified Condition
1 – 2	20°C (68°F)	2.32 to 2.59 kΩ
1 – 2	80°C (176°F)	0.310 to 0.326 kΩ

NOTICE:
When checking the engine coolant temperature sensor in water, be careful not to allow water to contact the terminals. After checking, dry the sensor.
HINT:
Alternate procedure: Connect an ohmmeter to the installed engine coolant temperature sensor and read the resistance. Use an infrared thermometer to measure the engine temperature in the immediate vicinity of the sensor. Compare these values to the resistance/temperature graph. Change the engine temperature (warm up or allow to cool down) and repeat the test.
(c) Reinstall the engine coolant temperature sensor.

NG → **REPLACE ENGINE COOLANT TEMPERATURE SENSOR**

OK

17	INSPECT MANIFOLD ABSOLUTE PRESSURE SENSOR

NG → REPLACE MANIFOLD ABSOLUTE PRESSURE SENSOR

OK

18	SWITCH STEP BY NUMBER OF MISFIRE CYLINDER(REFER TO RESULT OF STEP 4)

- If the result of step 4 is ”1 or 2 cylinders”, proceed to A.
- If the result of step 4 is ”more than 3 cylinders”, proceed to B.

B → AGAIN GO TO STEP 5

A

CHECK FOR INTERMITTENT PROBLEMS (See page 05–7)

19	CHANGE NORMAL SPARK PLUG AND CHECK SPARK OF MISFIRING CYLINDER

(a) Change for a normal spark plug.
(b) Perform a spark test.

CAUTION:
Absolutely disconnect the each injector connector.
NOTICE:
Do not crank the engine for more than 2 seconds.

(1) Install the spark plug to the ignition coil, and connect the ignition coil connector.
(2) Disconnect the injector connectors.
(3) Ground the spark plug.
(4) Check if spark occurs while the engine is being cranked.

Standard: Spark jumps across electrode gap.

OK → REPLACE SPARK PLUG

NG

20	CHECK HARNESS AND CONNECTOR OF MISFIRING CYLINDER(IGNITION COIL ASSY – ECM)

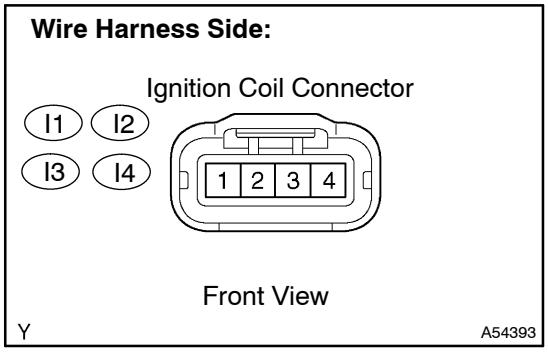

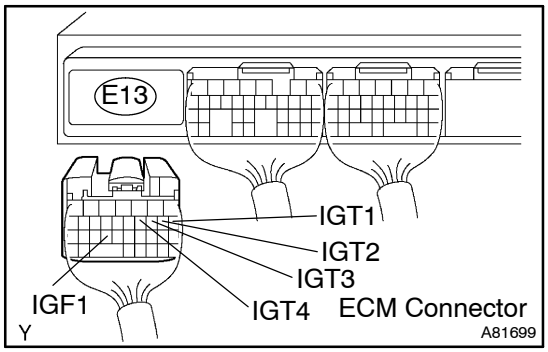

(a) Check the harness and connectors between the ignition coil and ECM (IGF terminal).
(1) Disconnect the I1, I2, I3 or I4 ignition coil connector.
(2) Disconnect the E13 ECM connector.
(3) Check the resistance between the wire harness side connectors.

Standard (Check for open):

Tester Connection	Specified Condition
Ignition coil (I1–2) – IGF1 (E13–24)	Below 1 Ω
Ignition coil (I2–2) – IGF1 (E13–24)	Below 1 Ω
Ignition coil (I3–2) – IGF1 (E13–24)	Below 1 Ω
Ignition coil (I4–2) – IGF1 (E13–24)	Below 1 Ω

Standard (Check for short):

Tester Connection	Specified Condition
Ignition coil (I1–2) or IGF1 (E13–24) – Body ground	10 kΩ or higher
Ignition coil (I2–2) or IGF1 (E13–24) – Body ground	10 kΩ or higher
Ignition coil (I3–2) or IGF1 (E13–24) – Body ground	10 kΩ or higher
Ignition coil (I4–2) or IGF1 (E13–24) – Body ground	10 kΩ or higher

(4) Reconnect the ECM connector.
(5) Reconnect the ignition coil connector.

(b) Check the harness and connectors between the ignition coil and ECM (IGT terminal).
(1) Disconnect the I1, I2, I3 or I4 ignition coil connector.
(2) Disconnect the E13 ECM connector.
(3) Check the resistance between the wire harness side connectors.

Standard (Check for open):

Tester Connection	Specified Condition
Ignition coil (I1–3) – IGT1 (E13–8)	Below 1 Ω
Ignition coil (I2–3) – IGT2 (E13–9)	Below 1 Ω
Ignition coil (I3–3) – IGT3 (E13–10)	Below 1 Ω
Ignition coil (I4–3) – IGT4 (E13–11)	Below 1 Ω

Standard (Check for short):

Tester Connection	Specified Condition
Ignition coil (I1–3) or IGT1 (E13–8) – Body ground	10 kΩ or higher
Ignition coil (I2–3) or IGT2 (E13–9) – Body ground	10 kΩ or higher
Ignition coil (I3–3) or IGT3 (E13–10) – Body ground	10 kΩ or higher
Ignition coil (I4–3) or IGT4 (E13–11) – Body ground	10 kΩ or higher

(4) Reconnect the ECM connector.
(5) Reconnect the ignition coil connector.

NG → **REPAIR OR REPLACE HARNESS OR CONNECTOR**

OK

REPLACE IGNITION COIL ASSY (THEN CONFIRM THAT THERE IS NO MISFIRE)

DTC	P0325	KNOCK SENSOR 1 CIRCUIT (BANK 1 OR SINGLE SENSOR)

DTC	P0327	KNOCK SENSOR 1 CIRCUIT LOW INPUT (BANK 1 OR SINGLE SENSOR)

DTC	P0328	KNOCK SENSOR 1 CIRCUIT HIGH INPUT (BANK 1 OR SINGLE SENSOR)

CIRCUIT DESCRIPTION

The flat type engine knock sensor (non–resonant type) has a structure that can detect vibration in a wide frequency range, from about 6 kHz to 15 kHz.

The sensor, located on the cylinder block, detects spark knock. When ”spark knock” occurs, the knock sensor picks–up vibrates in a specific frequency range. When the ECM detects signal voltage in this frequency range, it retards the ignition timing to suppress knocking. The ECM also senses background engine noise with the knock sensor and uses this noise to check for faults in the sensor.

DTC No.	DTC Detection Condition	Trouble Area
P0325	Output voltage of the knock sensor decreases below a threshold value (Threshold varies according to engine speeds)	• Knock sensor • Knock sensor (under–torqued or loose) • ECM
P0327	Output voltage of the knock sensor is 0.5 V or less	• Short in knock sensor circuit • Knock sensor • ECM
P0328	Output voltage of the knock sensor is 4.5 V or more	• Open in knock sensor circuit • Knock sensor • ECM

HINT:

If the ECM detects any one of above conditions, it operates the fail–safe function in which the corrective retard angle value is set to the maximum value.

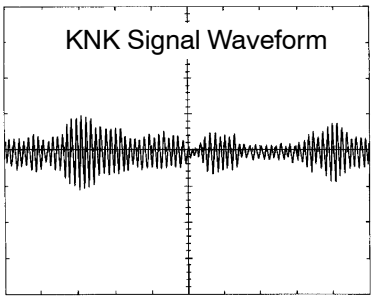

Reference: Inspection using the oscilloscope.

HINT:

The correct waveform is as shown on the left.

Item	Details
Terminal	KNK1 – EKNK
Equipment Settings	0.01 to 10 V/ Division, 0.01 to 10 msec./ Division
Condition	After warming up the engine, keep the engine speed at 4,000 rpm.

WIRING DIAGRAM

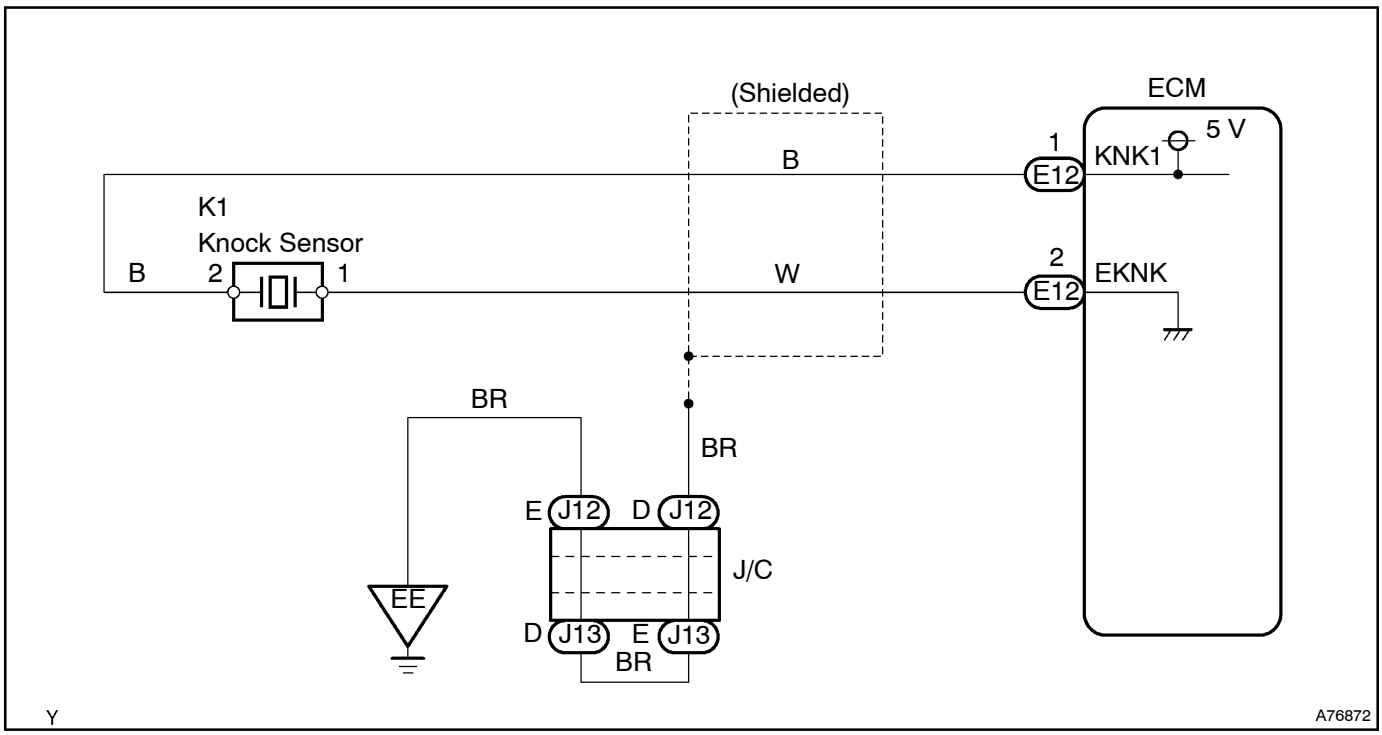

INSPECTION PROCEDURE

HINT:

Read freeze frame data using the hand–held tester. Freeze frame data records the engine conditions when a malfunction is detected. When troubleshooting, freeze frame data can help determine if the vehicle was running or stopped, if the engine was warmed up or not, if the air–fuel ratio was lean or rich, and other data from the time the malfunction occurred.

1	READ OUTPUT DTC

(a) Connect the hand–held tester to the DLC3.
(b) Turn the ignition switch to ON and turn the hand–held tester ON.
(c) Select the item: DIAGNOSIS / OBD/MOBD / DTC INFO / CURRENT CODES.
(d) Read the DTCs using the hand–held tester.

Result :

Display (DTC output)	Proceed to
P0325	A
P0325, P0327 and/or P0328	B
No output	C

B → **Go to step 3**

C → **CHECK FOR INTERMITTENT PROBLEMS (See Page 05–7)**

A

2 CHECK KNOCK SENSOR

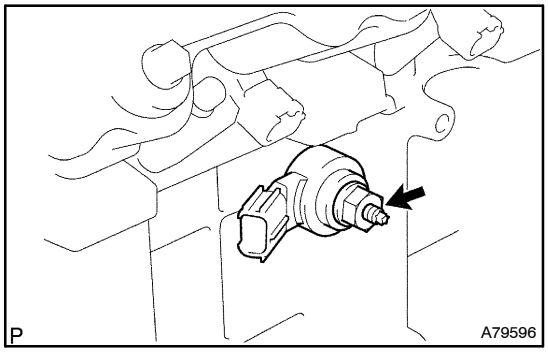

(a) Check the knock sensor installation.
Torque: 20 N·m (204 kgf·cm, 15 ft·lbf)

NG → **TIGHTEN SENSOR**

OK

REPLACE KNOCK SENSOR

3 CHECK HARNESS AND CONNECTOR(ECM – KNOCK SENSOR)

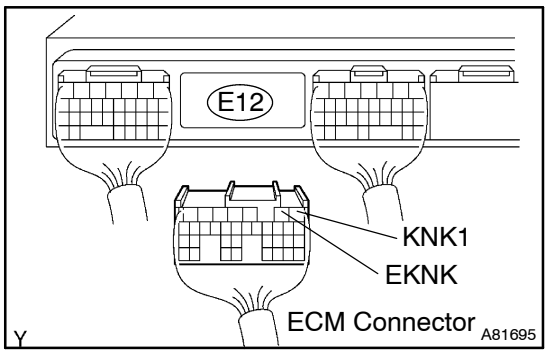

(a) Disconnect the E12 ECM connector.
(b) Check the resistance between the wire harness side connector.
Standard:

Tester Connection	Specified Condition
KNK1 (E12–1) – EKNK (E12–2)	120 to 280 kΩ at 20°C (68°F)

(c) Reconnect the ECM connector.

NG → **Go to step 5**

OK

4 INSPECT ECM(KNK1 VOLTAGE)

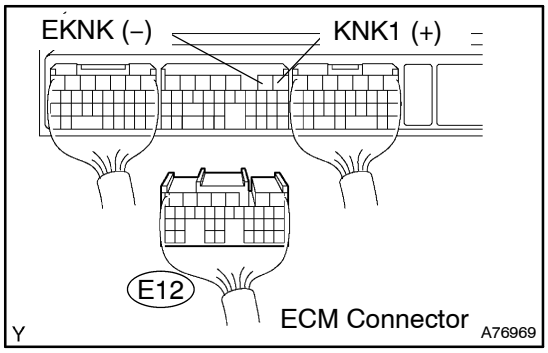

(a) Disconnect the E12 ECM connector.
(b) Turn the ignition switch to ON.
(c) Measure the voltage between the applicable terminals of the ECM connector.
Standard:

Tester Connection	Specified Condition
KNK1 (E12–1) – EKNK (E12–2)	4.5 to 5.5 V

(d) Reconnect the ECM connector.

NG → **REPLACE ECM (See page 10–65 of Pub. No. RM1018E AVENSIS)**

OK

CHECK FOR INTERMITTENT PROBLEMS (See Page 05–7)

NOTICE:
Fault may be intermittent. Check harness and connectors carefully and its result.

5 INSPECT KNOCK SENSOR

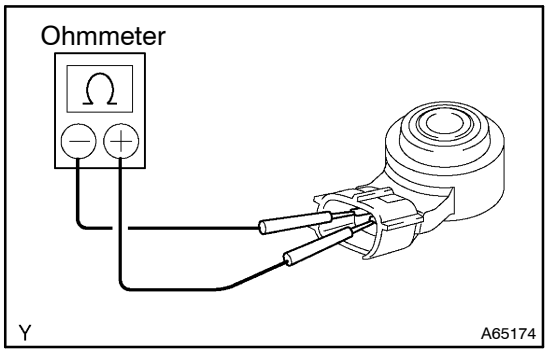

(a) Remove the knock sensor.
(b) Measure the resistance between the terminals.
Standard: 120 to 280 kΩ at 20°C (68°F)
(c) Reinstall the knock sensor.
Torque: 20 N·m (204 kgf·cm, 15 ft·lbf)

NG → **REPLACE KNOCK SENSOR**

OK

REPAIR OR REPLACE HARNESS OR CONNECTOR

DTC	P0335	CRANKSHAFT POSITION SENSOR ”A” CIRCUIT

DTC	P0339	CRANKSHAFT POSITION SENSOR ”A” CIRCUIT INTERMITTENT

CIRCUIT DESCRIPTION

The crankshaft position sensor system consists of a crankshaft position sensor plate and a pick–up coil. The sensor plate has 34 teeth and is installed on the crankshaft. The pick–up coil is made of an iron core and magnet. The sensor plate rotates and as each tooth passes through the pick–up coil, a pulse signal is created. The pick–up coil generates 34 signals for each engine revolution. Based on these signals, the ECM calculates the crankshaft position and engine RPM. Using these calculations, the fuel injection time and ignition timing are controlled.

DTC No.	DTC Detection Condition	Trouble Area
P0335	(1) No crankshaft position sensor (NE) signal to ECM during cranking for 3 seconds or more (2 trip detection logic) (2) No crankshaft position sensor (NE) signal to ECM at engine speed of 600 rpm or more (2 trip detection logic)	• Open or short in crankshaft position sensor circuit • Crankshaft position sensor • Signal plate (crankshaft position sensor plate No. 1) • ECM
P0339	No crankshaft position sensor signal to ECM for 0.05 second or more, and conditions (a), (b) and (c) are met (1 trip detection logic): (a) Engine speed is 1,000 rpm or more (b) STA signal is OFF (c) 3 seconds or more has been lapsed after STA signal is switched from ON to OFF	• Open or short in crankshaft position sensor circuit • Crankshaft position sensor • Signal plate (crankshaft position sensor plate No. 1) • ECM

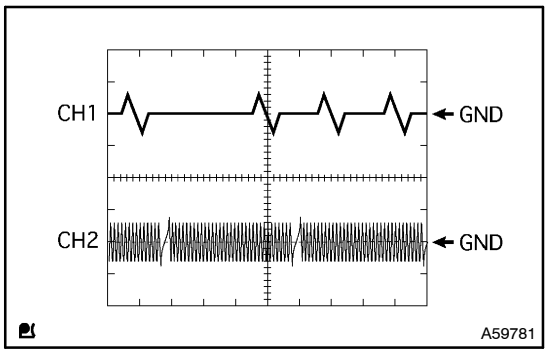

Reference: Inspection using the oscilloscope.

HINT:

The correct waveforms are as shown on the left.

Item	Details
Terminal	CH1: G2+ – NE– CH2: NE+ – NE–
Equipment Setting	5 V/Division, 20 ms/Division
Condition	During Cranking or idling

WIRING DIAGRAM

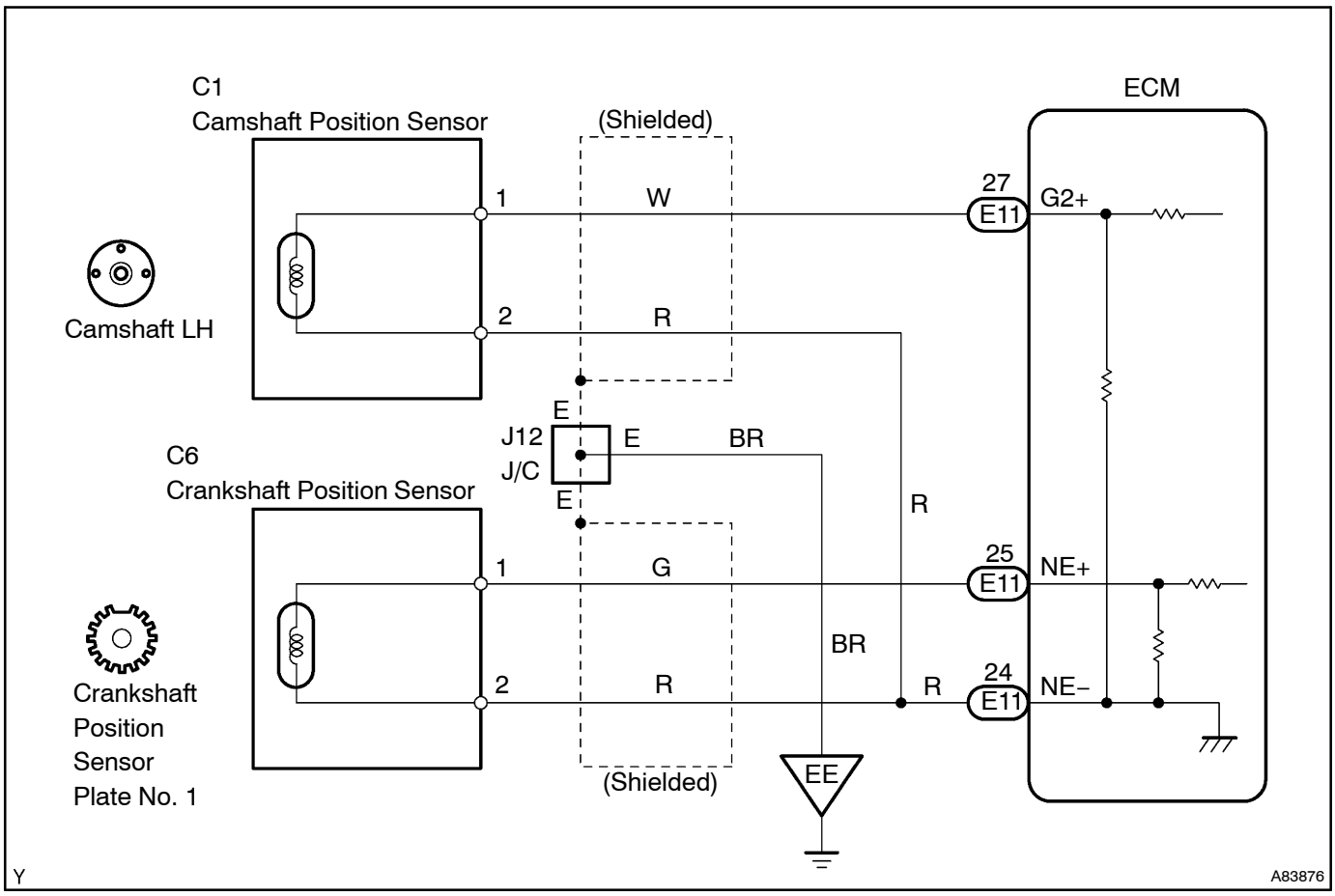

INSPECTION PROCEDURE

HINT:

- If no trouble is found in troubleshooting of DTC P0335 troubleshoot the engine mechanical system.
- Read freeze frame data using the hand−held tester. Freeze frame data records the engine conditions when a malfunction is detected. When troubleshooting, freeze frame data can help determine if the vehicle was running or stopped, if the engine was warmed up or not, if the air−fuel ratio was lean or rich, and other data from the time the malfunction occurred.

- Read value of hand−held tester
  (a) Connect the hand−held tester to the DLC3.
  (b) Start the engine and turn the hand−held tester ON.
  (c) Select the item: DIAGNOSIS / OBD/MOBD / DATA LIST / ALL / ENGINE SPD.

The engine speed can be observed in DATA LIST using the hand−held tester. If there is no NE signals from the crankshaft position sensor despite the engine revolving, the engine speed will be indicated as zero. If voltage output from the crankshaft position sensor is insufficient, the engine speed will be indicated as lower PRM (than the actual RPM).

1 INSPECT CRANKSHAFT POSITION SENSOR(RESISTANCE)

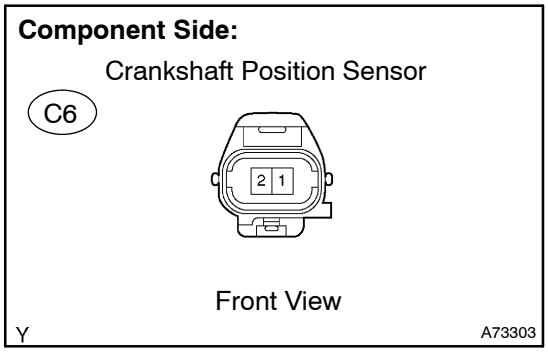

(a) Disconnect the C6 crankshaft position sensor connector.
(b) Measure the resistance between the terminals of the crankshaft position sensor.

Standard:

Tester Connection	Specified Condition
1 – 2	985 to 1,600 Ω at cold
1 – 2	1,265 to 1,890 Ω at hot

NOTICE:

The terms "cold" and "hot" refer to the temperature of the coils. "Cold" means approximately –10°C to 50°C (14°F to 122°F). "Hot" means approximately 50°C to 100°C (122°F to 212°F).

(c) Reconnect the crankshaft position sensor connector.

NG → **REPLACE CRANKSHAFT POSITION SENSOR**

OK

2 CHECK HARNESS AND CONNECTOR(ECM – CRANKSHAFT POSITION SENSOR)

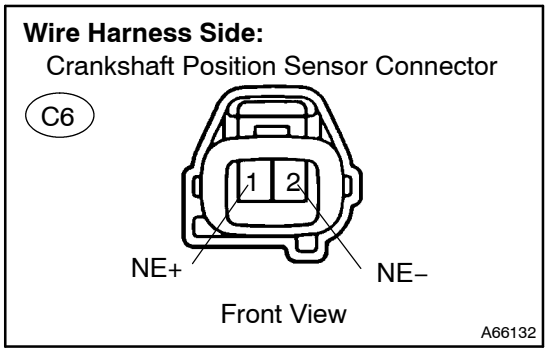

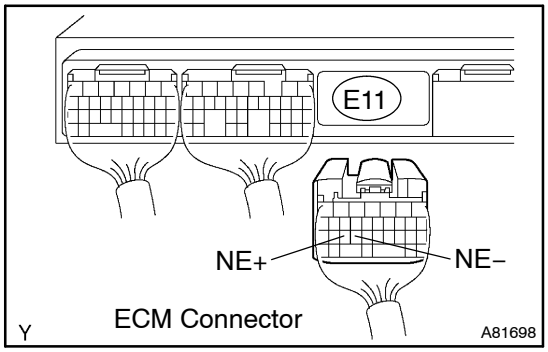

(a) Disconnect the C6 crankshaft position sensor connector.
(b) Disconnect the E11 ECM connector.
(c) Check the resistance between the wire harness side connectors.

Standard (Check for open):

Tester Connection	Specified Condition
Crankshaft position sensor (C6–1) – NE+ (E11–25)	Below 1 Ω
Crankshaft position sensor (C6–2) – NE– (E11–24)	Below 1 Ω

Standard (Check for short):

Tester Connection	Specified Condition
Crankshaft position sensor (C6–1) or NE+ (E11–25) – Body ground	10 kΩ or higher
Crankshaft position sensor (C6–2) or NE– (E11–24) – Body ground	10 kΩ or higher

(d) Reconnect the crankshaft position sensor connector.
(e) Reconnect the ECM connector.

NG → **REPAIR OR REPLACE HARNESS OR CONNECTOR**

OK

3	CHECK SENSOR INSTALLATION(CRANKSHAFT POSITION SENSOR)

(a) Check the crankshaft position sensor installation.

NG → TIGHTEN SENSOR

OK

4	INSPECT CRANKSHAFT POSITION SENSOR PLATE NO.1(TOOTH OF SIGNAL PLATE)

(a) Remove the crankshaft position sensor plate No. 1.
(b) Check the teeth of the signal plate.

NG → REPLACE CRANKSHAFT POSITION SENSOR PLATE NO.1

OK

REPLACE ECM (See page 10–65 of Pub. No. RM1018E AVENSIS)

DTC	P0340	CAMSHAFT POSITION SENSOR ”A” CIRCUIT (BANK 1 OR SINGLE SENSOR)

DTC	P0341	CAMSHAFT POSITION SENSOR ”A” CIRCUIT RANGE/PERFORMANCE (BANK 1 OR SINGLE SENSOR)

CIRCUIT DESCRIPTION

The Camshaft Position sensor (G2 signal), like the Crankshaft Position sensor, consists of a magnet and an iron core wrapped in copper wire. The camshaft has 3 teeth and the Camshaft Position sensor is installed so that it can detect these teeth passing by. When the camshaft rotates and the teeth pass by the Camshaft Position sensor, the magnet on the Camshaft Position sensor creates a magnetic field and voltage is generated in the copper wire. When the crankshaft makes two rotation, voltage will be generated in the Camshaft Position sensor 3 times.

The NE signal plate (crankshaft timing pulley) has 34 teeth and is installed to the crankshaft. The NE signal sensor generates 34 signals at every engine revolution. Using the NE signal, the ECM detects both crankshaft angle and engine speed. In order to locate the top dead center position of the No. 1 cylinder, the ECM uses the G2 and NE signals.

DTC No.	DTC Detection Condition	Trouble Area
P0340	• No camshaft position sensor (G2) signal to ECM during cranking for 4 seconds or more (2 trip detection logic) • No camshaft position sensor (G2) signal to ECM at engine speed of 600 rpm or more for 5 seconds or more (1 trip detection logic)	• Open or short in camshaft position sensor circuit • Camshaft position sensor • Camshaft timing gear • Jumped tooth of timing chain • ECM
P0341	While crankshaft rotates twice, camshaft position sensor (G2) signal will be input to ECM 12 times or more (1 trip detection logic)	• Open or short in camshaft position sensor circuit • Camshaft position sensor • Camshaft timing gear • Jumped tooth of timing chain • ECM

HINT:

- DTC P0340 indicates a malfunction related to the camshaft position sensor (+) circuit. (Wire harness [ECM – camshaft position sensor] and camshaft position sensor.)
- DTC P0341 indicates a malfunction related to the camshaft position sensor (–) circuit. (Wire harness [ECM – camshaft position sensor] and camshaft position sensor.)

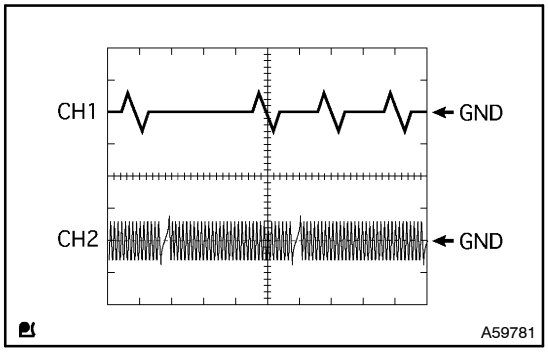

Reference: Inspection using the oscilloscope.
HINT:
The correct waveforms are as shown on the left.

Item	Details
Terminal	CH1: G2+ – NE– CH2: NE+ – NE–
Equipment Setting	5 V/Division, 20 ms/Division
Condition	During Cranking or idling

WIRING DIAGRAM

Refer to DTC P0335 on page 05–160.

INSPECTION PROCEDURE

HINT:
Read freeze frame data using the hand–held tester. Freeze frame data records the engine conditions when a malfunction is detected. When troubleshooting, freeze frame data can help determine if the vehicle was running or stopped, if the engine was warmed up or not, if the air–fuel ratio was lean or rich, and other data from the time the malfunction occurred.

1	INSPECT CAMSHAFT POSITION SENSOR(RESISTANCE)

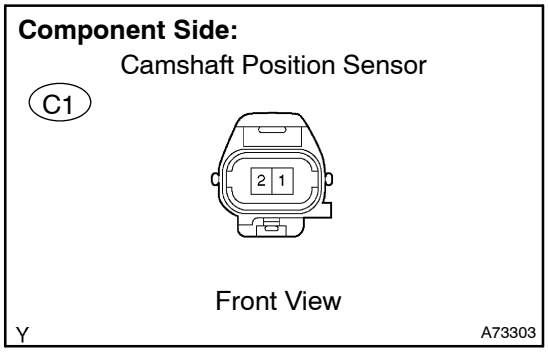

(a) Disconnect the C1 camshaft position sensor connector.
(b) Measure the resistance between the terminals of the camshaft position sensor.

Standard:

Tester Connection	Specified Condition
1 – 2	835 to 1,400 Ω at cold
1 – 2	1,060 to 1,645 Ω at hot

NOTICE:
The terms ”cold” and ”hot” refer to the temperature of the coils. ”Cold” means approximately –10°C to 50°C (14°F to 122°F). ”Hot” means approximately 50°C to 100°C (122°F to 212°F).

(c) Reconnect the camshaft position sensor connector.

NG → **REPLACE CAMSHAFT POSITION SENSOR**

OK

2 CHECK HARNESS AND CONNECTOR(ECM – CAMSHAFT POSITION SENSOR)

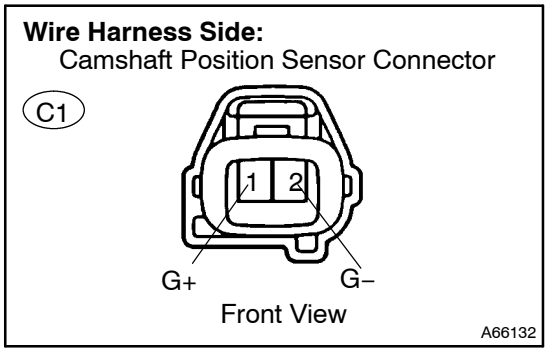

(a) Disconnect the C1 camshaft position sensor connector.
(b) Disconnect the E11 ECM connector.
(c) Check the resistance between the wire harness side connectors.

Standard (Check for open):

Tester Connection	Specified Condition
Camshaft position sensor (C1–1) – G2+ (E11–27)	Below 1 Ω
Camshaft position sensor (C1–2) – NE– (E11–24)	Below 1 Ω

Standard (Check for short):

Tester Connection	Specified Condition
Camshaft position sensor (C1–1) or G2+ (E11–27) – Body ground	10 kΩ or higher
Camshaft position sensor (C1–2) or NE– (E11–24) – Body ground	10 kΩ or higher

(d) Reconnect the camshaft position sensor connector.
(e) Reconnect the ECM connector.

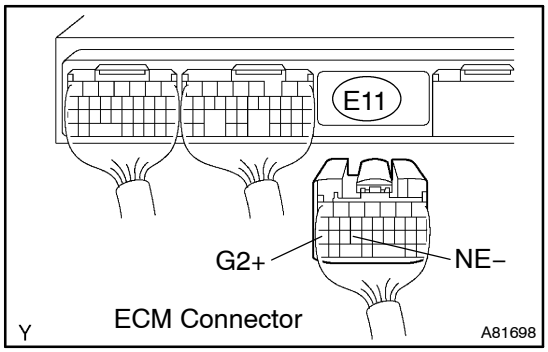

NG → **REPAIR OR REPLACE HARNESS OR CONNECTOR**

OK

3 CHECK SENSOR INSTALLATION(CAMSHAFT POSITION SENSOR)

(a) Inspect the camshaft position sensor installation.

NG → **TIGHTEN SENSOR**

OK

4 INSPECT CAMSHAFT

(a) Remove the camshafts (see page 14–64).
(b) Check the camshaft lobes.

NG → **REPLACE CAMSHAFT (See Page 14–64)**

OK

REPLACE ECM (See page 10–65 of Pub. No. RM1018E AVENSIS)

DTC	P0351	IGNITION COIL ”A” PRIMARY/SECONDARY CIRCUIT

DTC	P0352	IGNITION COIL ”B” PRIMARY/SECONDARY CIRCUIT

DTC	P0353	IGNITION COIL ”C” PRIMARY/SECONDARY CIRCUIT

DTC	P0354	IGNITION COIL ”D” PRIMARY/SECONDARY CIRCUIT

HINT:

- These DTCs indicate a malfunction related to the primary circuit.
- If DTC P0351 is displayed, check No. 1 ignition coil with igniter circuit.
- If DTC P0352 is displayed, check No. 2 ignition coil with igniter circuit.
- If DTC P0353 is displayed, check No. 3 ignition coil with igniter circuit.
- If DTC P0354 is displayed, check No. 4 ignition coil with igniter circuit.

CIRCUIT DESCRIPTION

A Direct Ignition System (DIS) is used on this vehicle. The DIS improves the ignition timing accuracy, reduces high–voltage loss, and enhances the overall reliability of the ignition system by eliminating the distributor.
The DIS is a 1–cylinder ignition system which ignites one cylinder with one ignition coil. In the 1–cylinder ignition system, the one spark plug is connected to the end of the secondary winding. High voltage generated in the secondary winding is applied directly to the spark plug. The spark of the spark plug passes from the center electrode to the ground electrode.
The ECM determines the ignition timing and outputs the ignition signals (IGT) for each cylinder. Using the ignition (IGT) signal, the ECM turns on and off the power transistor inside the igniter and this switches on and off the current to the primary coil. When the current flow to the primary coil is cut off, high–voltage is generated in the secondary coil and this voltage is applied to the spark plugs to spark inside the cylinders. As the ECM cuts the current to the primary coil, the igniter sends back the ignition confirmation (IGF) signal for each cylinder ignition to the ECM.

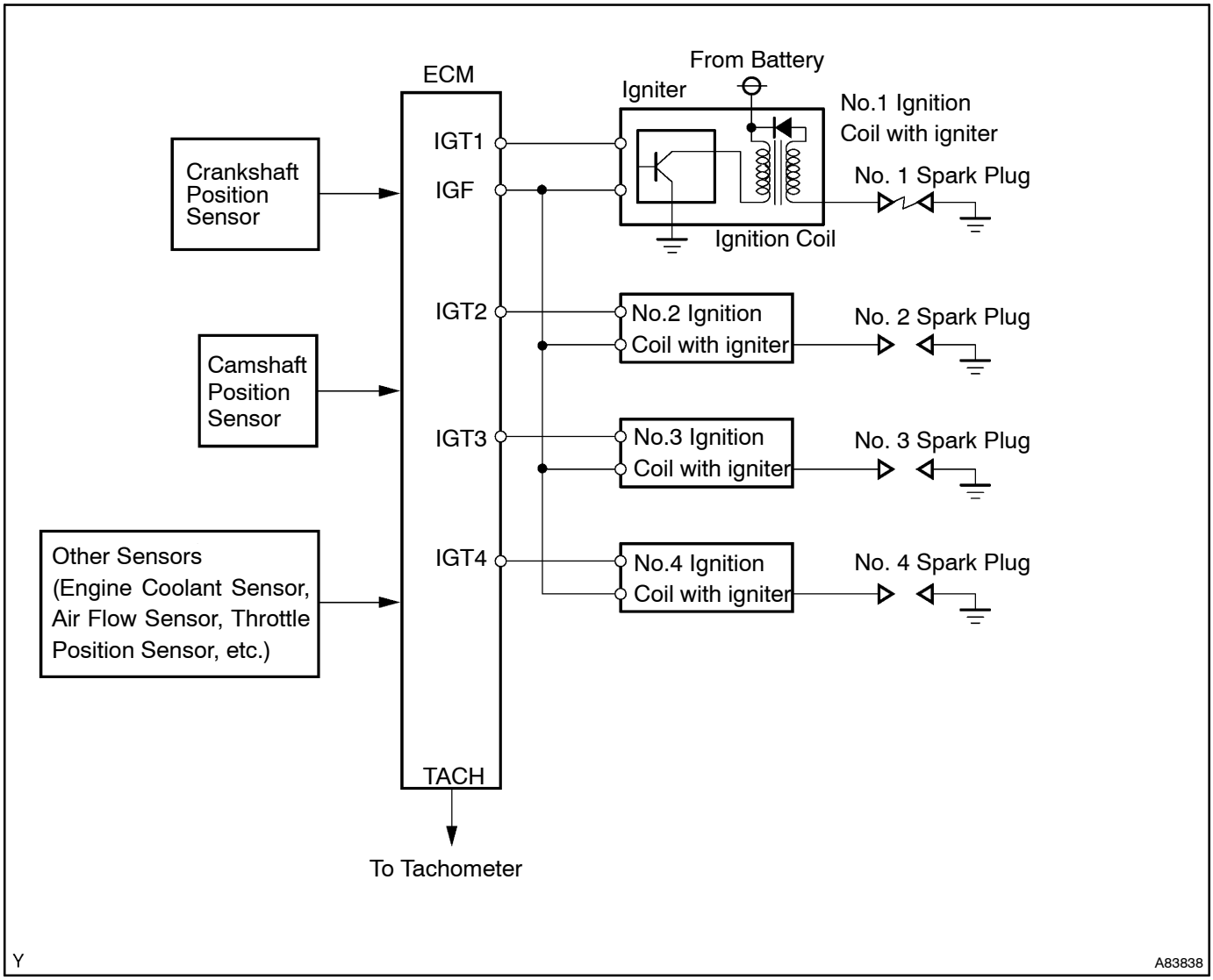

DTC No.	DTC Detection Condition	Trouble Area
P0351 P0352 P0353 P0354	No IGF signal to ECM while engine is running	• Ignition system • Open or short in IGF and IGT circuit between ignition coil with igniter and ECM (ignition coil circuit 1 through 4) • Ignition coil with igniter (ignition coil 1 through 4) • IG2 relay • ECM

Normal Signal Waveforms

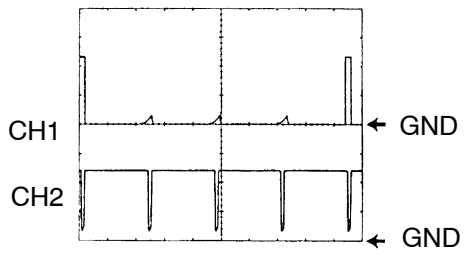

A35500

Reference: Inspection using the oscilloscope.

HINT:

The correct waveforms are as shown on the left.

Item	Details
Terminal	CH1: IGT1, IGT2, IGT3, IGT4 – E1 CH2: IGF1 – E1
Equipment Setting	2 V/Division, 20 ms/Division
Condition	While the engine is cranking or idling

WIRING DIAGRAM

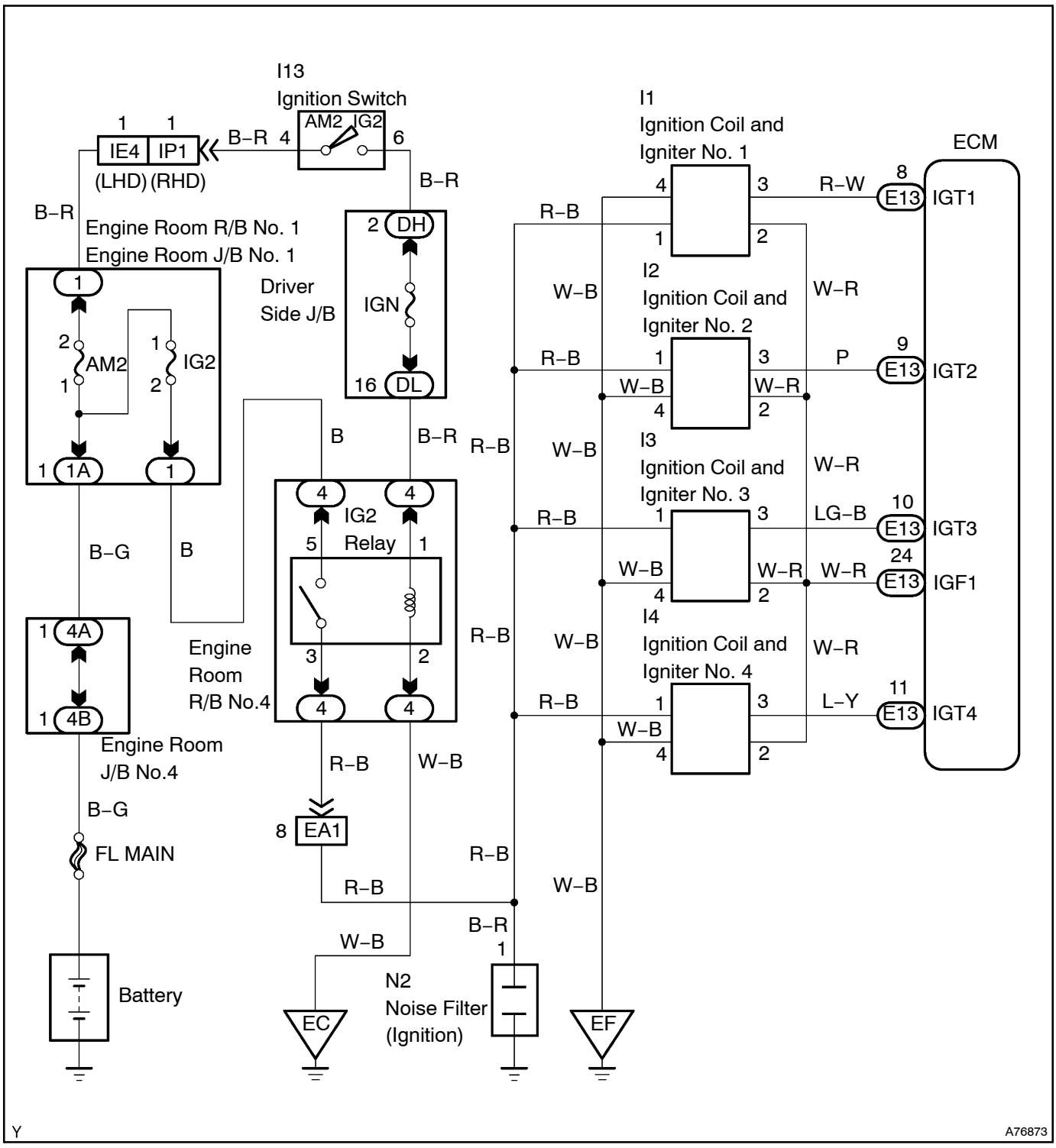

INSPECTION PROCEDURE

HINT:
Read freeze frame data using the hand–held tester. Freeze frame data records the engine conditions when a malfunction is detected. When troubleshooting, freeze frame data can help determine if the vehicle was running or stopped, if the engine was warmed up or not, if the air–fuel ratio was lean or rich, and other data from the time the malfunction occurred.

1	PERFORM SIMULATION TEST(CHECK DTC)

(a) Read the DTC and check which of the cylinders causes the DTC (see page 05–19).
(b) Clear the DTC (see page 05–19).
(c) Swap the ignition coil with igniter of the cylinder that is referred by the DTC for the others.

NOTICE:
Do not swap the ignition coil with igniter connector for the others.

(d) Start the engine.
(e) Read the DTC (see page 05–19).
Result:

Display (DTC output)	Proceed to
P0351, P0352, P0353, and/or P0354	A
Other than shown above	B

B → **REPLACE IGNITION COIL ASSY**

A

2	INSPECT ECM(IGF1 VOLTAGE)

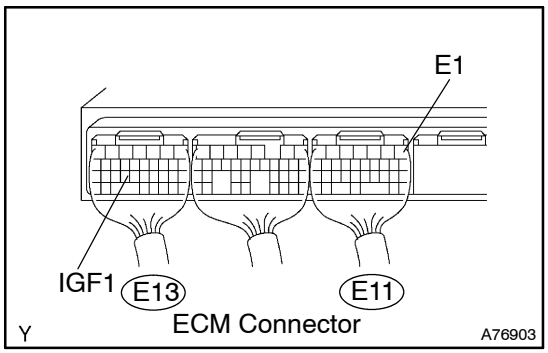

(a) Disconnect the I1, I2, I3 or I4 ignition coil connector.
(b) Turn the ignition switch to ON.
(c) Measure the voltage between the specified terminals of the E11 and E13 ECM connector.
Standard:

Tester Connection	Specified Condition
IGF1 (E13–24) – E1 (E11–1)	4.5 to 5.5 V

(d) Reconnect the ignition coil connector.

NG → **REPLACE ECM (See page 10–65 Pub. No. RM1018E AVENSIS)**

OK

3 INSPECT ECM(IGT1, IGT2, IGT3 OR IGT4 VOLTAGE)

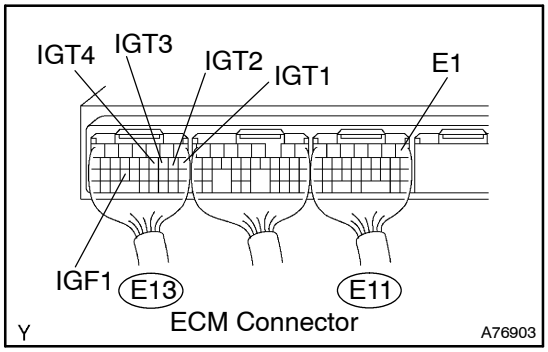

(a) Measure the voltage between the applicable terminals of the E11 and E13 ECM connectors when the engine is cranked.

Standard:

Tester Connection	Specified Condition
IGT1 (E13–8) – E1 (E11–1)	Between 0.1 V and 4.5 V
IGT2 (E13–9) – E1 (E11–1)	Between 0.1 V and 4.5 V
IGT3 (E13–10) – E1 (E11–1)	Between 0.1 V and 4.5 V
IGT4 (E13–11) – E1 (E11–1)	Between 0.1 V and 4.5 V

NG → **REPLACE ECM (See page 10–65 Pub. No. RM1018E AVENSIS)**

OK

4 INSPECT ECM(IGT1, IGT2, IGT3 OR IGT4 VOLTAGE)

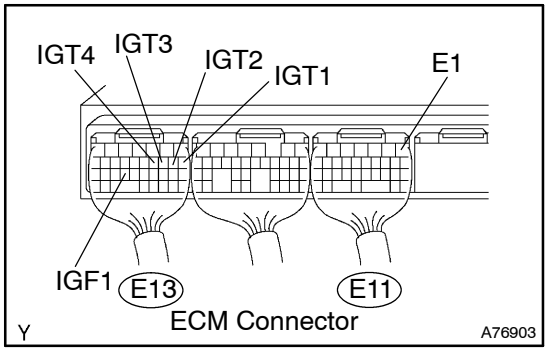

(a) Disconnect the I1, I2, I3 or I4 ignition coil connector.

(b) Measure the voltage between the applicable terminals of the E11 and E13 ECM connectors when the engine is cranked.

Standard:

Tester Connection	Specified Condition
IGT1 (E13–8) – E1 (E11–1)	4.5 V or more
IGT2 (E13–9) – E1 (E11–1)	4.5 V or more
IGT3 (E13–10) – E1 (E11–1)	4.5 V or more
IGT4 (E13–11) – E1 (E11–1)	4.5 V or more

(c) Reconnect the ignition coil connector.

NG → **REPLACE ECM (See page 10–65 Pub. No. RM1018E AVENSIS)**

OK

5 CHECK IGNITION COIL ASSY(POWER SOURSE)

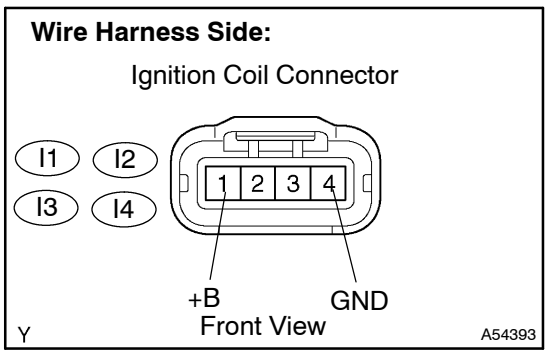

(a) Disconnect the I1, I2, I3 or I4 ignition coil connector.

(b) Check the resistance between terminal GND of the ignition coil connector and body ground.

Standard: 1 Ω or less

(c) Turn the ignition switch to ON.

(d) Measure the voltage between terminals +B and GND of the ignition coil connector.

Standard: 9 to 14 V

(e) Reconnect the ignition coil connector.

NG → **Go to step 7**

OK

6 CHECK HARNESS AND CONNECTOR(ECM – IGNITION COIL)

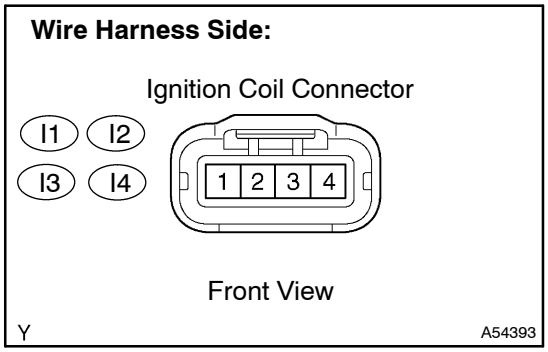

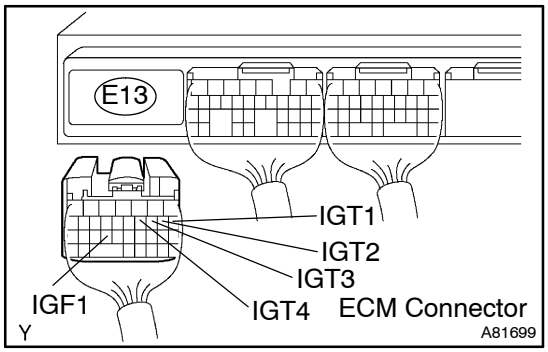

(a) Check the harness and connector between the ignition coil and ECM (IGF terminal) connectors
(1) Disconnect the I1, I2, I3 or I4 ignition coil connector.
(2) Disconnect the E13 ECM connector.
(3) Check the resistance between the wire harness side connectors.

Standard (Check for open):

Tester Connection	Specified Condition
Ignition coil (I1–2) – IGF1 (E13–24)	Below 1 Ω
Ignition coil (I2–2) – IGF1 (E13–24)	Below 1 Ω
Ignition coil (I3–2) – IGF1 (E13–24)	Below 1 Ω
Ignition coil (I4–2) – IGF1 (E13–24)	Below 1 Ω

Standard (Check for short):

Tester Connection	Specified Condition
Ignition coil (I1–2) or IGF1 (E13–24) – Body ground	10 kΩ or higher
Ignition coil (I2–2) or IGF1 (E13–24) – Body ground	10 kΩ or higher
Ignition coil (I3–2) or IGF1 (E13–24) – Body ground	10 kΩ or higher
Ignition coil (I4–2) or IGF1 (E13–24) – Body ground	10 kΩ or higher

(4) Reconnect the ignition coil connector.
(5) Reconnect the ECM connector.

(b) Check the harness and connector between the ignition coil and ECM (IGT terminal) connectors
(1) Disconnect the I1, I2, I3 or I4 ignition coil connector.
(2) Disconnect the E13 ECM connector.
(3) Check the resistance between the wire harness side connectors.

Standard (Check for open):

Tester Connection	Specified Condition
Ignition coil (I1–3) – IGT1 (E13–8)	Below 1 Ω
Ignition coil (I2–3) – IGT2 (E13–9)	Below 1 Ω
Ignition coil (I3–3) – IGT3 (E13–10)	Below 1 Ω
Ignition coil (I4–3) – IGT4 (E13–11)	Below 1 Ω

Standard (Check for short):

Tester Connection	Specified Condition
Ignition coil (I1–3) or IGT1 (E13–8) – Body ground	10 kΩ or higher
Ignition coil (I2–3) or IGT2 (E13–9) – Body ground	10 kΩ or higher
Ignition coil (I3–3) or IGT3 (E13–10) – Body ground	10 kΩ or higher
Ignition coil (I4–3) or IGT4 (E13–11) – Body ground	10 kΩ or higher

(4) Reconnect the ignition coil connector.
(5) Reconnect the ECM connector.

NG → **REPAIR OR REPLACE HARNESS OR CONNECTOR**

OK

REPLACE IGNITION COIL ASSY

7 INSPECT IG2 RELAY

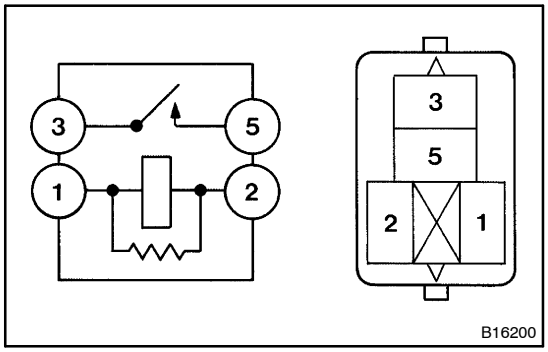

(a) Remove the IG2 relay from the engine room R/B No. 4.
(b) Check for continuity in the IG2 relay.

Standard:

Tester Connection	Specified Condition
1 – 2	Continuity
3 – 5	No Continuity
3 – 5	Continuity (Apply battery voltage to terminals 1 and 2)

(c) Reinstall the IG2 relay.

NG → **REPLACE IG2 RELAY**

OK

8 CHECK HARNESS AND CONNECTOR(IG2 RELAY – IGNITION COIL)

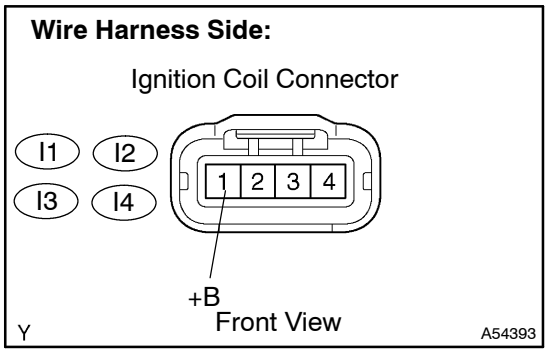

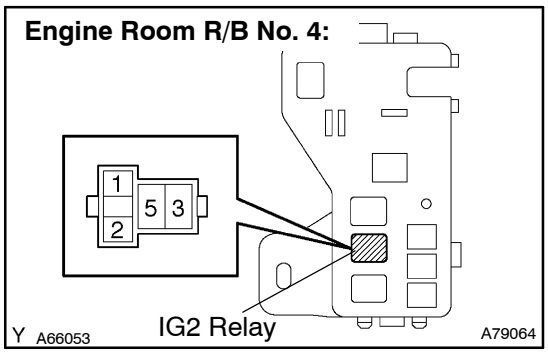

(a) Disconnect the I1, I2, I3 or I4 ignition coil connector.
(b) Remove the IG2 relay from the engine room R/B No. 4.
(c) Check the resistance between the wire harness side connectors.

Standard (Check for open):

Tester Connection	Specified Condition
+B (I1–1) – Engine room R/B No. 4 (IG2 relay terminal 3)	Below 1 Ω
+B (I2–1) – Engine room R/B No. 4 (IG2 relay terminal 3)	Below 1 Ω
+B (I3–1) – Engine room R/B No. 4 (IG2 relay terminal 3)	Below 1 Ω
+B (I4–1) – Engine room R/B No. 4 (IG2 relay terminal 3)	Below 1 Ω

Standard (Check for short):

Tester Connection	Specified Condition
+B (I1–1) or Engine room R/B No. 4 (IG2 relay terminal 3) – Body ground	10 kΩ or higher
+B (I2–1) or Engine room R/B No. 4 (IG2 relay terminal 3) – Body ground	10 kΩ or higher
+B (I3–1) or Engine room R/B No. 4 (IG2 relay terminal 3) – Body ground	10 kΩ or higher
+B (I4–1) or Engine room R/B No. 4 (IG2 relay terminal 3) – Body ground	10 kΩ or higher

(d) Reconnect the ignition coil connector.
(e) Reinstall the IG2 relay.

NG → **REPAIR OR REPLACE HARNESS OR CONNECTOR**

OK

CHECK FOR FUEL PUMP CONTROL CIRCUIT (See page 05–241)

DTC	P0420	CATALYST SYSTEM EFFICIENCY BELOW THRESHOLD (BANK 1)

DTC	P0430	CATALYST SYSTEM EFFICIENCY BELOW THRESHOLD (BANK 2)

CIRCUIT DESCRIPTION

The ECM compares the 2 waveforms of the heated oxygen sensors located before and after the catalyst to determine whether or not the catalyst performance has deteriorated.
Air–fuel ratio feedback compensation keeps the waveform of the heated oxygen sensor in front of the catalyst alternates between back and forth, from RICH to LEAN.
If the catalyst is functioning normally, the waveform of the heated oxygen sensor behind the catalyst switches back and forth between RICH and LEAN much more slowly than the waveform of the heated oxygen sensor in front of the catalyst.
When both waveforms change at a similar rate, it indicates that the catalyst performance has deteriorated.

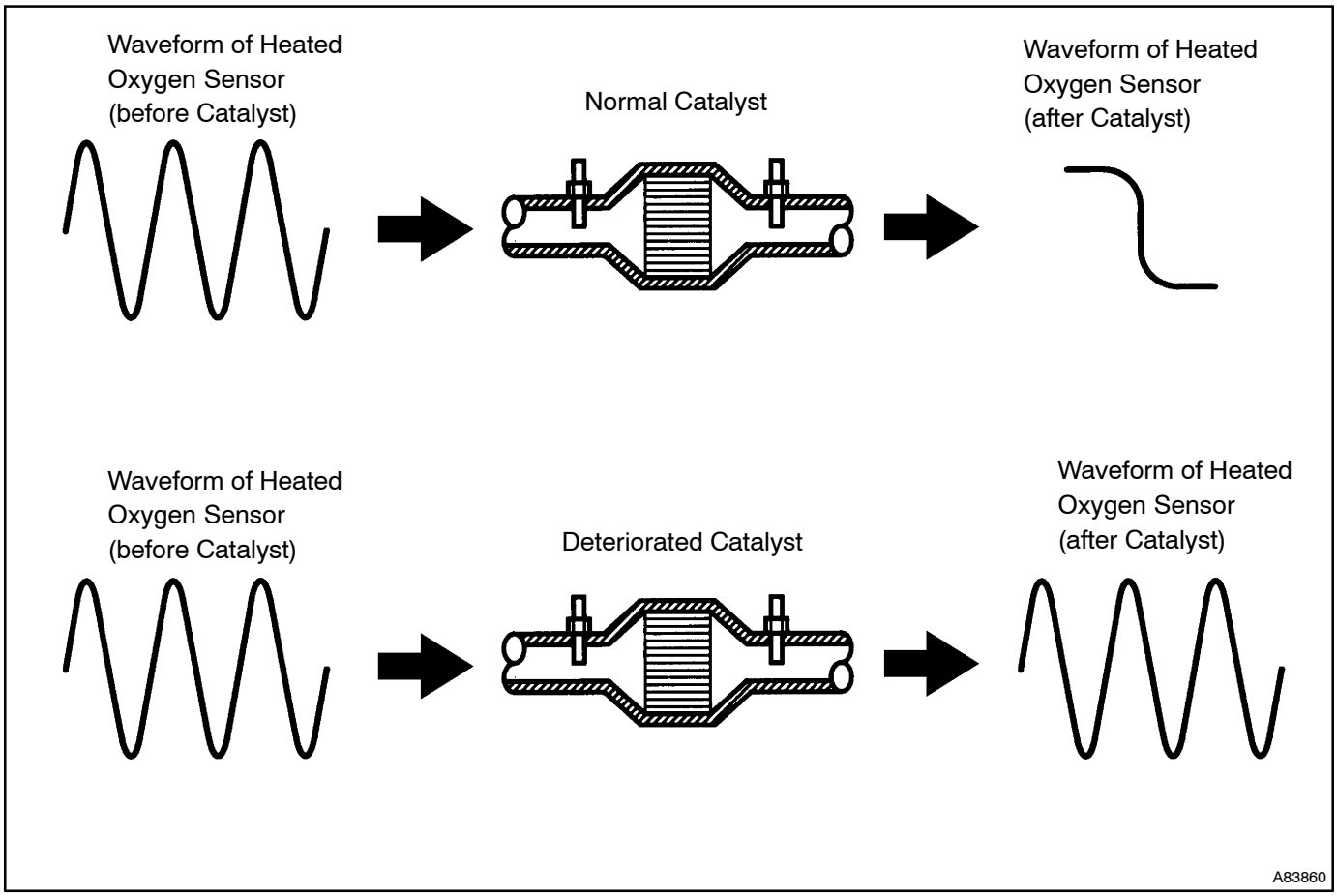

DTC No.	DTC Detection Condition	Trouble Area
P0420 P0430	After engine and catalyst are warmed up, and while vehicle is driven within set vehicle speed and engine speed ranges, waveforms of heated oxygen sensors have the same amplitude (2 trip detection logic)	• Gas leakage in exhaust system • Heated oxygen sensor • Three–way catalytic converter (inside exhaust manifold)

HINT:

- Bank 1 refers to the No. 1 and No. 4 cylinders.
- Bank 2 refers to the No. 2 and No. 3 cylinders.
- Sensor 1 refers to the sensor closest to the engine assembly.
- Sensor 2 refers to the sensor farthest away from the engine assembly.

CONFIRMATION ENGINE RACING PATTERN

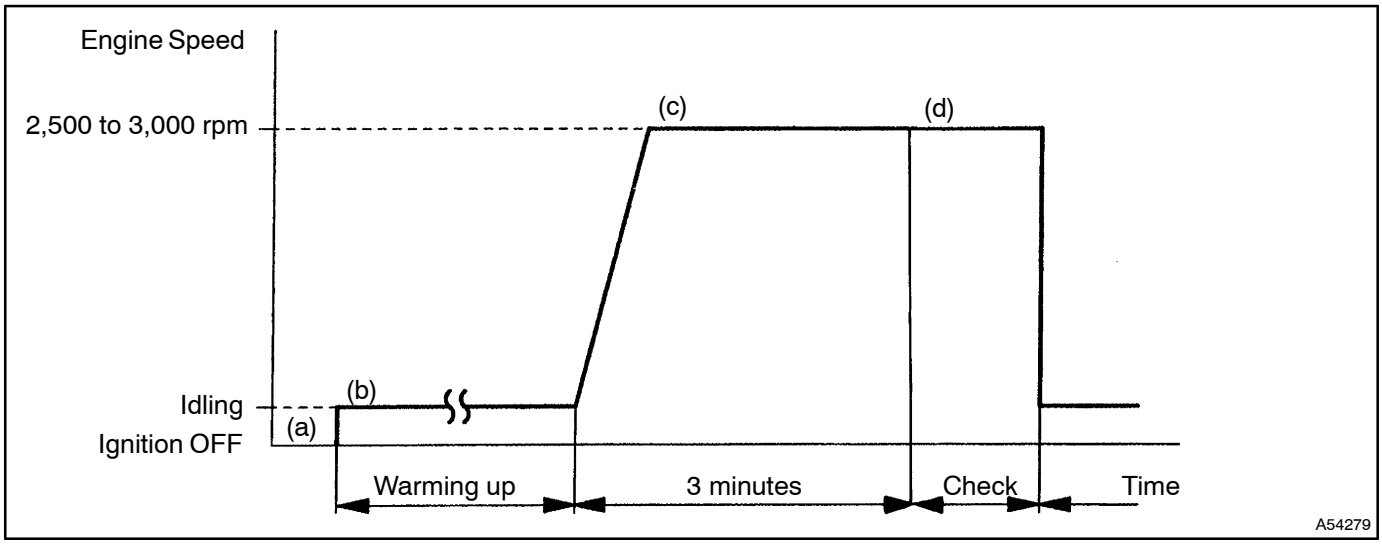

HINT:

Follow this procedure to active and condition the heated oxygen sensors prior to observation of their respective waveform output.

(a) Connect the hand–held tester to the DLC3, or connect the oscilloscope probe between terminals OX1A (bank 1, sensor 1), OX2A (bank 1, sensor 2), OX1B (bank 2, sensor 1), OX2B (bank 2, sensor 2) and E2 of the ECM connectors.

(b) Start the engine and warm it up with all accessories switched OFF until the engine coolant temperature becomes stable.

(c) Run the engine at 2,500 to 3,000 rpm for approximately 3 minutes.

(d) First, check the waveforms of each front heated oxygen sensor (OX1A and OX2A) at the engine speed of 2,500 to 3,000 rpm. The voltage output should alternate between 0 V and 1 V as shown.

(e) Then, check the waveform of each rear heated oxygen sensor (OX1B and OX2B) likewise.

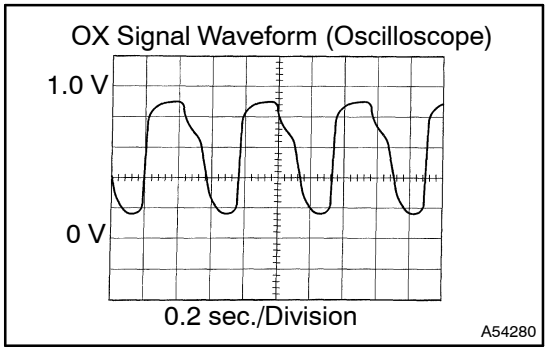

HINT:

If the voltage fluctuation of either of the rear heated oxygen sensors is similar to the respective front sensors' waveform output, it may be that the three–way catalytic converter has deteriorated.

INSPECTION PROCEDURE

HINT:
Read freeze frame data using the hand–held tester. Freeze frame data records the engine conditions when a malfunction is detected. When troubleshooting, freeze frame data can help determine if the vehicle was running or stopped, if the engine was warmed up or not, if the air–fuel ratio was lean or rich, and other data from the time the malfunction occurred.

1	CHECK OTHER DTC OUTPUT(IN ADDITION TO P0420 AND/OR P0430)

(a) Connect the hand–held tester to the DLC3.
(b) Turn the ignition switch to ON and turn the hand–held tester ON.
(c) Select the item: DIAGNOSIS / OBD/MOBD / DTC INFO / CURRENT CODES.
(d) Read the DTCs using the hand–held tester.
Result:

Display (DTC output)	Proceed to
P0420 and/or P0430	A
P0420 or P0430 and other DTCs	B

HINT:
If any other codes besides P0420 and/or P0430 are output, perform troubleshoot for those DTCs first.

B → GO TO RELEVANT DTC CHART (See page 05–31)

A

2	CHECK FOR EXHAUST GAS LEAKS

NG → REPAIR OR REPLACE EXHAUST GAS LEAKAGE POINT (See Page 15–2)

OK

3	INSPECT HEATED OXYGEN SENSOR(BANK 1, 2 SENSOR 1) (See page 05–82)

Refer to the hint below.

NG → REPLACE HEATED OXYGEN SENSOR

OK

4	INSPECT HEATED OXYGEN SENSOR(BANK 1, 2 SENSOR 2) (See page 05–82)

Refer to the hint below.

NG → REPLACE HEATED OXYGEN SENSOR

OK

REPLACE THREE–WAY CATALYTIC CONVERTER (EXHAUST MANIFOLD, AND REAR CATALYTIC CONVERTER)

HINT:
Hand–held tester only:
It is possible the malfunctioning area can be found using the ACTIVE TEST A/F CONTROL operation. The A/F CONTROL operation can determine if the A/F sensor, heated oxygen sensor or other potential trouble areas are malfunctioning or not.
(a) Perform the ACTIVE TEST A/F CONTROL operation.
HINT:
The A/F CONTROL operation lowers the injection volume 12.5% or increases the injection volume 25%.
(1) Connect the hand–held tester to the DLC3 on the vehicle.
(2) Turn the ignition switch to ON.
(3) Warm up the engine by running the engine at 2,500 rpm for approximately 3 minutes.
(4) Select the item: DIAGNOSIS / OBD/MOBD / ACTIVE TEST / A/F CONTROL.
(5) Perform the A/F CONTROL operation with the engine in an idle condition (press the right or left button).

Result:

Heated oxygen sensor reacts in accordance with increase and decrease of injection volume:
+25 % → rich output: More than 0.5 V
–12.5 % → lean output: Less than 0.4 V

NOTICE:
There is a delay of few seconds in the sensor 1 (front sensor) output, and there is about 20 seconds delay at maximum in the sensor 2 (rear sensor).

	Output voltage of heated oxygen sensor (sensor 1: front sensor)	Output voltage of heated oxygen sensor (sensor 2: rear sensor)	Main suspect trouble area
Case 1	Injection volume +25 % –12.5 % Output voltage More than 0.5 V Less than 0.4V **OK**	Injection volume +25 % –12.5 % Output voltage More than 0.5 V Less than 0.4V **OK**	—
Case 2	Injection volume +25 % –12.5 % Output voltage Almost no reaction **NG**	Injection volume +25 % –12.5 % Output voltage More than 0.5 V Less than 0.4V **OK**	Sensor 1: front sensor (sensor 1, heater, sensor 1 circuit)
Case 3	Injection volume +25 % –12.5 % Output voltage More than 0.5 V Less than 0.4V **OK**	Injection volume +25 % –12.5 % Output voltage Almost no reaction **NG**	Sensor 2: rear sensor (sensor 2, heater, sensor 2 circuit)
Case 4	Injection volume +25 % –12.5 % Output voltage Almost no reaction **NG**	Injection volume +25 % –12.5 % Output voltage Almost no reaction **NG**	Extremely rich or lean actual air–fuel ratio (Injector, fuel pressure, gas leakage in exhaust system, etc.)

The following A/F CONTROL procedure enables the technician to check and graph the voltage outputs of both the heated oxygen sensor.
To display the graph, enter ACTIVE TEST/ A/F CONTROL/USER DATA, then select ”O2S B1S1 and O2S B1S2” or ”O2S B2S1 and O2S B2S2” by pressing the ”YES” button followed by the ”ENTER” button and then the ”F4” button.

DTC	P0443	EVAPORATIVE EMISSION CONTROL SYSTEM PURGE CONTROL VALVE CIRCUIT

CIRCUIT DESCRIPTION

To reduce HC emissions, evaporated fuel from the fuel tank is routed through the charcoal canister to the intake manifold for combustion in the cylinders.

The ECM changes the duty signal to the VSV for EVAP so that the intake amount of HC emissions is appropriate for the driving conditions (engine load, engine speed, vehicle speed, etc.) after the engine is warmed up.

DTC No.	DTC Detection Condition	Trouble Area
P0443	Proper response to ECM command does not occur	• Open of short in VSV for EVAP circuit • VSV for EVAP • ECM

WIRING DIAGRAM

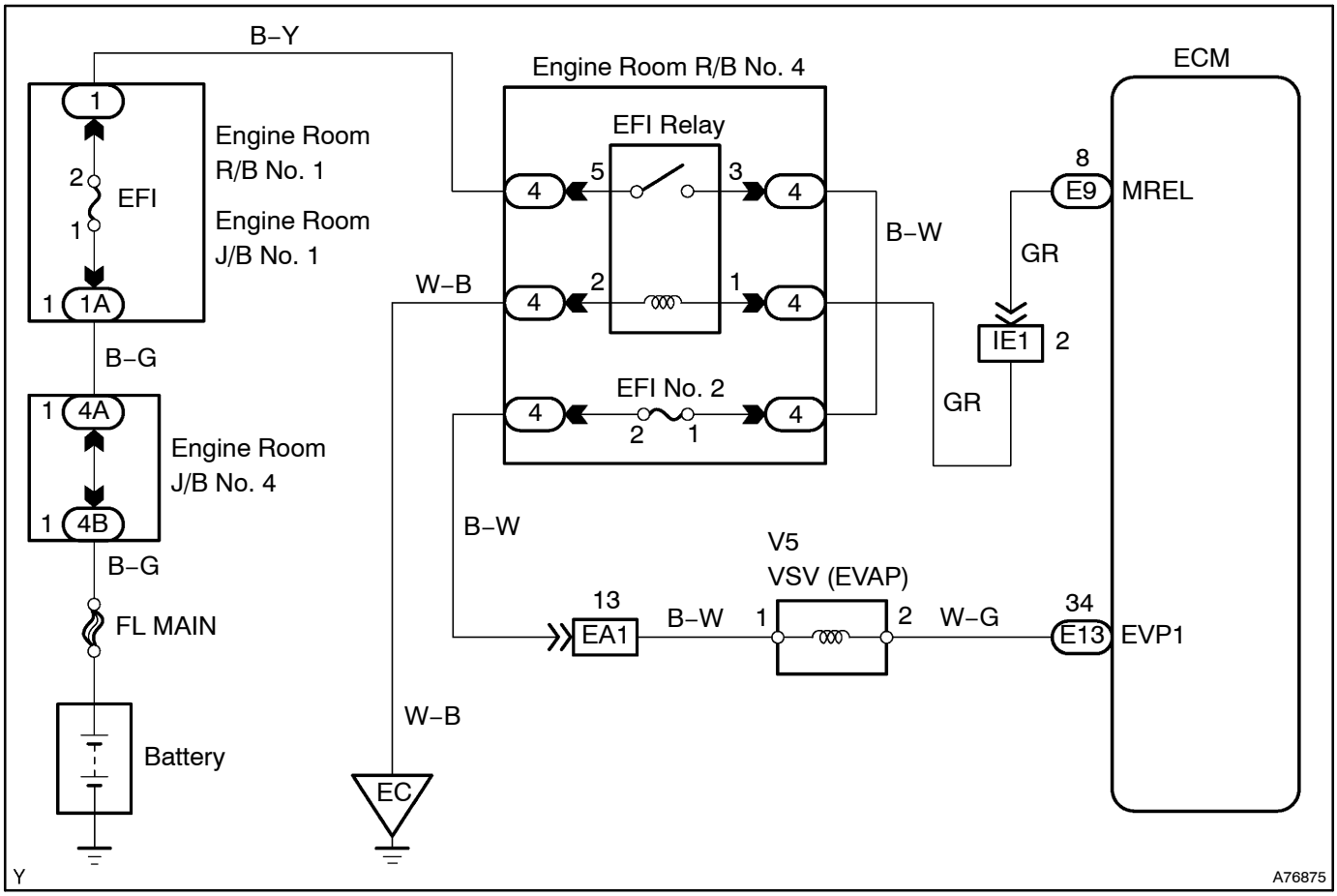

INSPECTION PROCEDURE

HINT:

Read freeze frame data using the hand–held tester. Freeze frame data records the engine conditions when a malfunction is detected. When troubleshooting, freeze frame data can help determine if the vehicle was running or stopped, if the engine was warmed up or not, if the air–fuel ratio was lean or rich, and other data from the time the malfunction occurred.

1	PERFORM ACTIVE TEST BY HAND–HELD TESTER(VSV FOR EVAP)

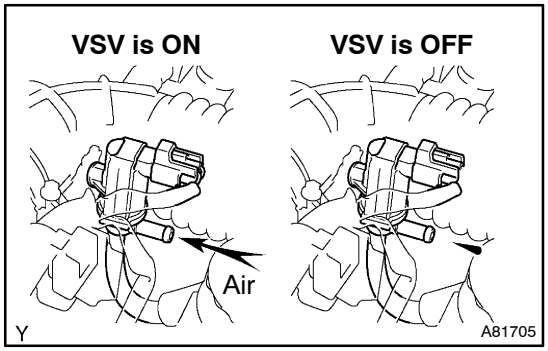

(a) Disconnect the vacuum hose from the VSV for EVAP.
(b) Start the engine.
(c) Select the item: DIAGNOSIS / OBD/MOBD / ACTIVE TEST / EVAP VSV (press the right or left button).
(d) When the VSV for EVAP is operated by the hand–held tester, check whether the disconnected hose applies suction to your finger.

Standard:

Tester Operation	Specified Condition
VSV is ON	Disconnected hose applies suction to your finger
VSV is OFF	Disconnected hose applies no suction to your finger

(e) Reconnect the vacuum hose.

OK → **CHECK FOR INTERMITTENT PROBLEMS (See Page 05–7)**

NG

2	INSPECT VACUUM SWITCHING VALVE ASSY NO.1(VSV FOR EVAP) (See page 12–3)

NG → **REPLACE VACUUM SWITCHING VALVE ASSY NO.1 (VSV FOR EVAP)**

OK

3	INSPECT ECM(EVP1 VOLTAGE)

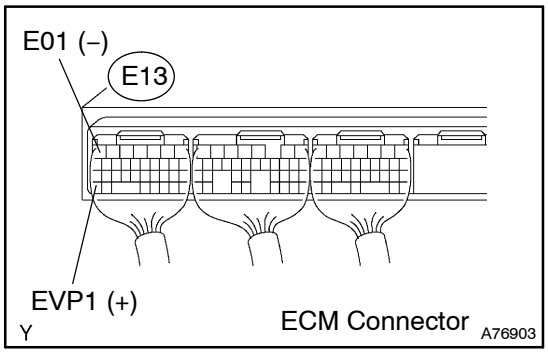

(a) Turn the ignition switch to ON.
(b) Measure the voltage between the specified terminals of the E13 ECM connector.

Standard:

Tester Connection	Specified Condition
EVP1 (E13–34) – E01 (E13–7)	9 to 14 V

OK → **CHECK AND REPLACE ECM (See page 10–65 of Pub. No. RM1018E AVENSIS)**

NG

4 CHECK HARNESS AND CONNECTOR(ECM – VSV FOR EVAP)

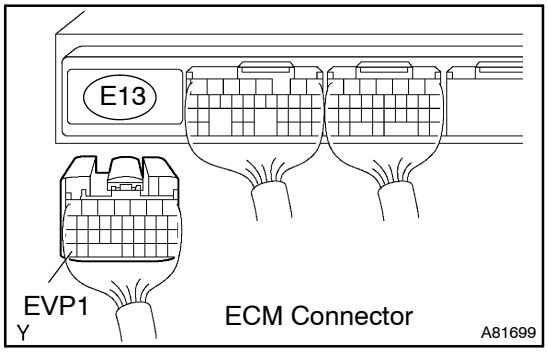

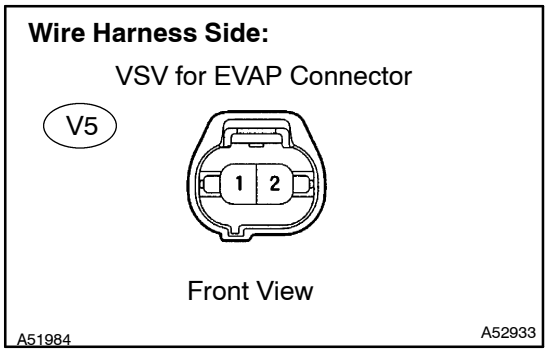

(a) Disconnect the E13 ECM connector.
(b) Disconnect the V5 VSV for EVAP connector.
(c) Check the resistance between the wire harness side connectors.

Standard (Check for open):

Tester Connection	Specified Condition
VSV for EVAP (V5–2) – EVP1 (E13–34)	Below 1 Ω

Standard (Check for short):

Tester Connection	Specified Condition
VSV for EVAP (V5–2) or EVP1 (E13–34) – Body ground	10 kΩ or higher

(d) Reconnect the ECM connector.
(e) Reconnect the VSV for EVAP connector.

NG → **REPAIR OR REPLACE HARNESS OR CONNECTOR**

OK

5 CHECK HARNESS AND CONNECTOR(EFI RELAY – VSV FOR EVAP)

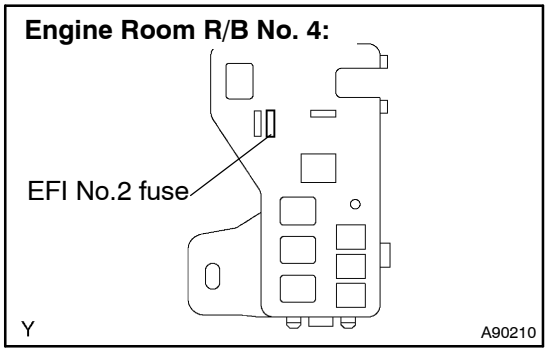

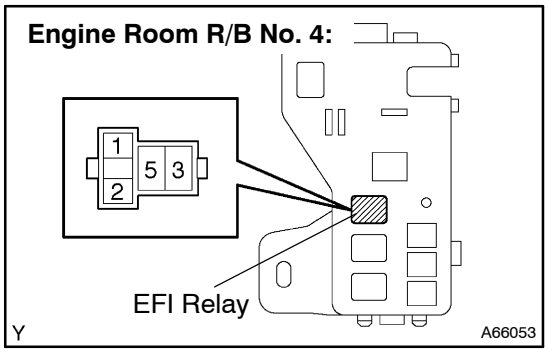

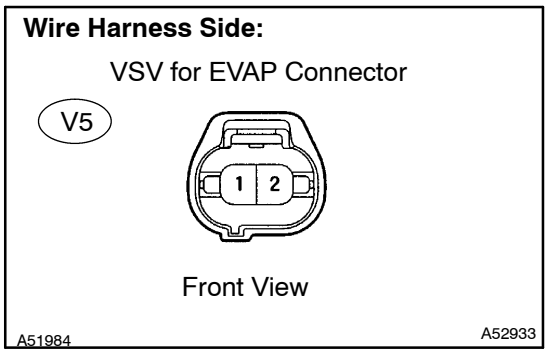

(a) Inspect the EFI No. 2 fuse.
  (1) Remove the EFI No. 2 fuse from the engine room R/B No. 4.
  (2) Check for continuity in the EFI No. 2 fuse.
  Standard: Continuity
  (3) Reinstall the EFI No. 2 fuse.
(b) Remove the EFI relay from the engine room R/B No. 4.
(c) Disconnect the V5 VSV for EVAP connector.
(d) Check the resistance between the wire harness side connectors.

Standard (Check for open):

Tester Connection	Specified Condition
Engine room R/B No.4 (EFI relay terminal 3) – VSV for EVAP (V5–1)	Below 1 Ω

Standard (Check for short):

Tester Connection	Specified Condition
Engine room R/B No.4 (EFI relay terminal 3) or VSV for EVAP (V5–1) – Body ground	10 kΩ or higher

(e) Reinstall the EFI relay.
(f) Reconnect the VSV for EVAP connector.

NG → **REPAIR OR REPLACE HARNESS OR CONNECTOR**

OK

CHECK FOR ECM POWER SOURCE CIRCUIT (See page 05–236)

DTC	P0500	VEHICLE SPEED SENSOR ”A”

DTC	P0503	VEHICLE SPEED SENSOR ”A” INTERMITTENT/ERRATIC/HIGH

CIRCUIT DESCRIPTION

The speed sensor detects the wheel speed and sends the appropriate signals to the skid control ECU. The skid control ECU converts these wheel speed signals into a 4–pulse signal and outputs it to the ECM via the combination meter. The ECM determines the vehicle speed based on the frequency of these pulse signals.

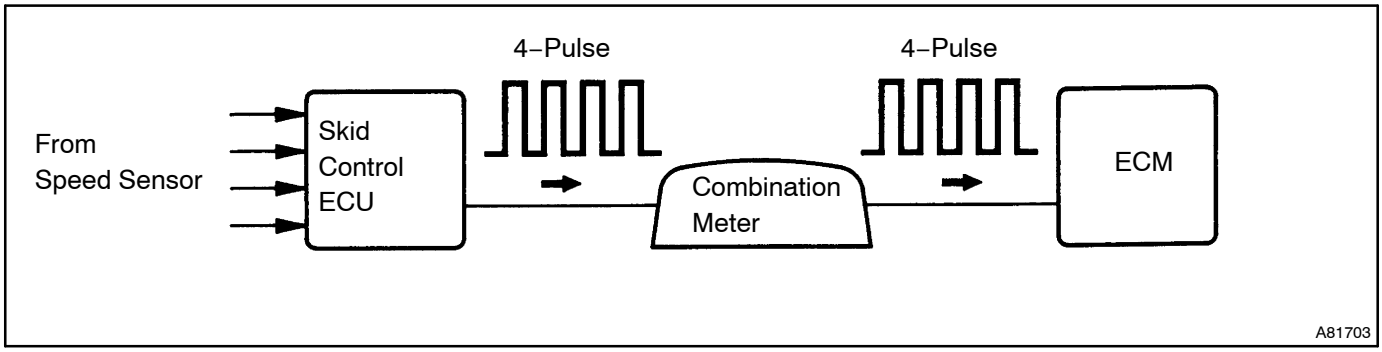

DTC No.	DTC Detection Condition	Trouble Area
P0500 P0503	No vehicle speed sensor signal to ECM under the following condition (1 trip detection logic): (a) Vehicle is being driven	• Combination meter • Open or short in vehicle speed sensor circuit • Vehicle speed sensor • ECM • Skid control ECU • Clutch or brake slips or gear is broken

WIRING DIAGRAM

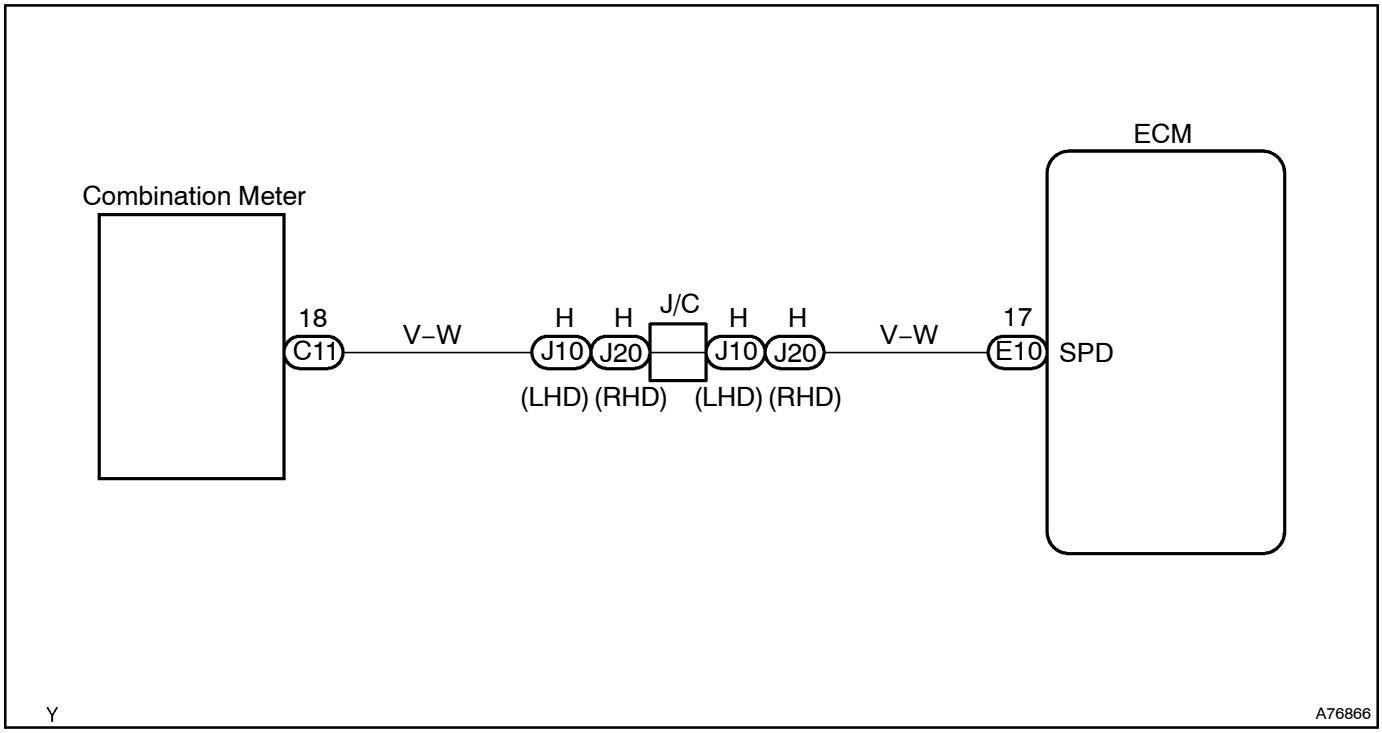

INSPECTION PROCEDURE

HINT:
Read freeze frame data using the hand–held tester. Freeze frame data records the engine conditions when a malfunction is detected. When troubleshooting, freeze frame data can help determine if the vehicle was running or stopped, if the engine was warmed up or not, if the air–fuel ratio was lean or rich, and other data from the time the malfunction occurred.

1	CHECK OPERATION OF SPEEDOMETER

(a) Drive the vehicle and check if the operation of the speedometer in the combination meter is normal.
HINT:
The vehicle speed sensor is operating normally if the speedometer display is normal.

NG → **CHECK SPEEDOMETER CIRCUIT (See page 05–1510 of Pub. No. RM1018E AVENSIS)**

OK

2	INSPECT ECM(SPD VOLTAGE)

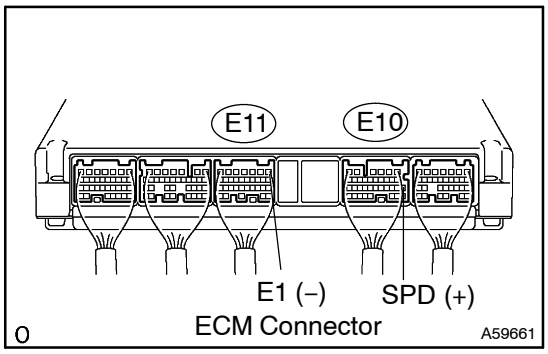

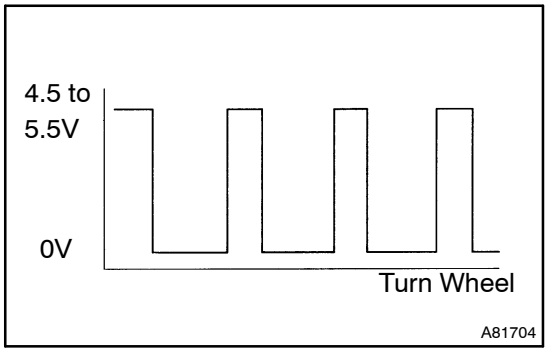

(a) Shift the lever to the neutral position.
(b) Jack up the vehicle.
(c) Turn the ignition switch to ON.
(d) Check the voltage between the specified terminals of the E10 and E11 ECM connectors as the wheel is turned slowly.
Standard:

Tester Connection	Specified Condition
SPD (E10–17) – E1 (E11–1)	Generated intermittently

HINT:
The output voltage should fluctuate up and down similarly to the diagram on the left as the wheel is turned slowly.

NG → **REPAIR OR REPLACE HARNESS OR CONNECTOR**

OK

REPLACE ECM (See page 10–65 of Pub. No. RM1018E AVENSIS)

DTC	P0504	BRAKE SWITCH ”A”/”B” CORRELATION

CIRCUIT DESCRIPTION

In addition to turning on the stop lamps, the stop lamp switch signals are used for a variety of engine, transmission, and suspension functions as well as being an input for diagnostic checks. It is important that the switch operates properly, therefore this switch is designed with two complementary signal output: STP and ST1–. The ECM analyzes these signal output to detect malfunctions in the stop lamp switch.

HINT:

Normal condition is as shown in the table.

Signal	Brake pedal released	In transition	Brake pedal depressed
STP	OFF	ON	ON
ST1–	ON	ON	OFF

DTC No.	DTC Detection Condition	Trouble Area
P0504	Condition (a), (b) and (c) continue for 0.5 second or more: (a) Ignition switch ON (b) Brake pedal released (c) STP signal is OFF when the ST1– signal is OFF	• Short in stop lamp switch signal circuit • Stop lamp switch • ECM

WIRING DIAGRAM

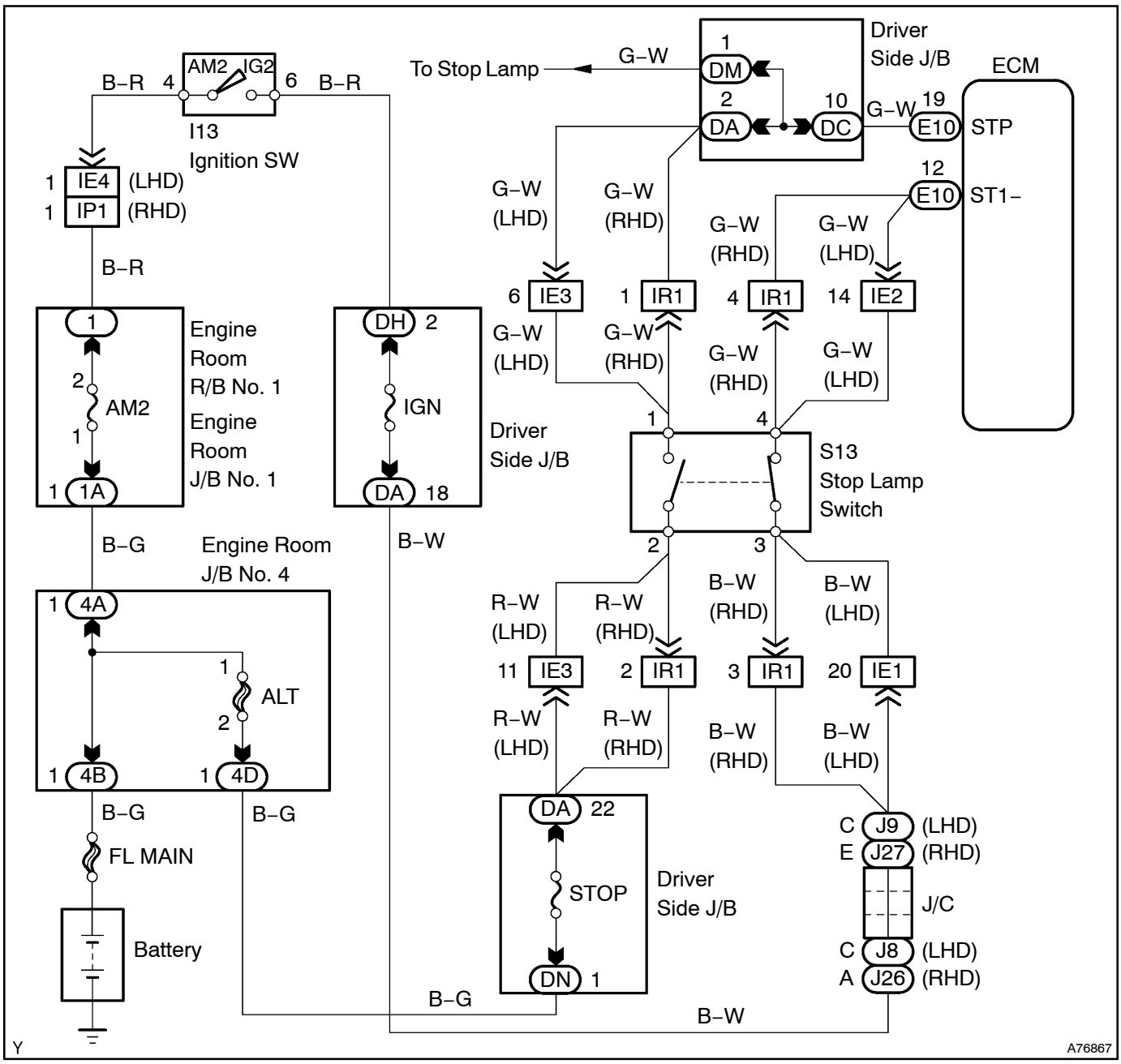

INSPECTION PROCEDURE

HINT:

Read freeze frame data using the hand–held tester. Freeze frame data records the engine conditions when a malfunction is detected. When troubleshooting, freeze frame data can help determine if the vehicle was running or stopped, if the engine was warmed up or not, if the air–fuel ratio was lean or rich, and other data from the time the malfunction occurred.

1 CHECK OPERATION OF STOP LAMP

(a) Check if the stop lamps go on and off normally when the brake pedal is depressed and released.

NG → REPAIR OR REPLACE STOP LAMP SWITCH CIRCUIT

OK

2 INSPECT STOP LAMP SWITCH ASSY

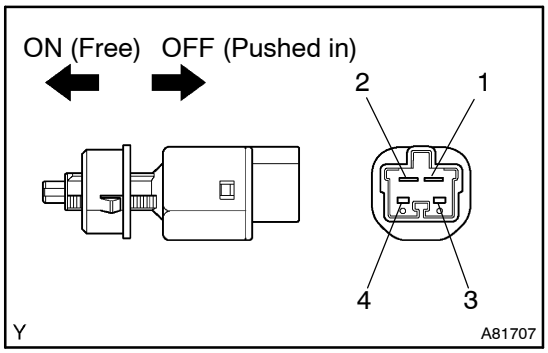

(a) Check for continuity between each pair of the terminals when the switch is ON and OFF.

Standard:

Switch Position	Tester Connection	Specified Condition
Switch pin free	1 – 2	Continuity
Switch pin free	3 – 4	No continuity
Switch pin pushed in	1 – 2	No Continuity
Switch pin pushed in	3 – 4	Continuity

NG → REPLACE STOP LAMP SWITCH ASSY

OK

3 READ VALUE OF HAND–HELD TESTER(STP SIGNAL AND ST1– VOLTAGE)

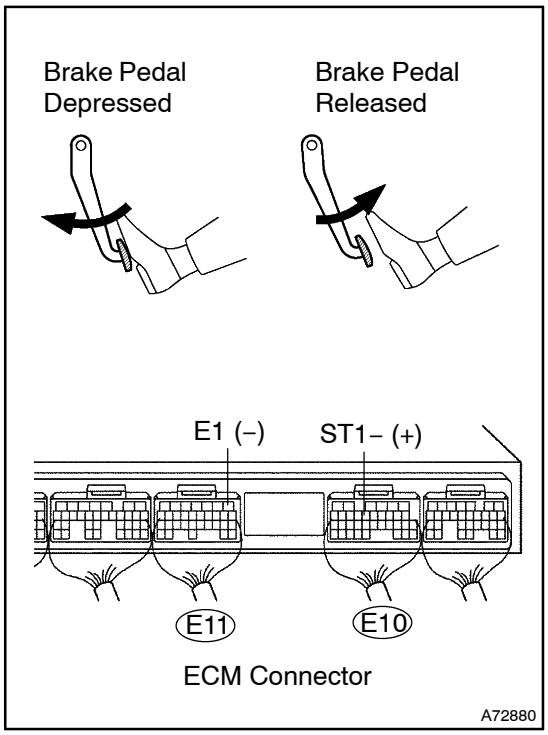

(a) Turn the ignition switch to ON.

(b) On the hand–held tester, select the item: DIAGNOSIS / OBD/MOBD / DATA LIST / ALL / STOP LIGHT SW. Read the values.

Standard:

Brake Pedal	Specified Condition
Depressed	STP Signal ON
Released	STP Signal OFF

(c) Measure the voltage between the terminals of the E10 and E11 ECM connectors.

Standard:

Tester Connection	Brake Pedal	Specified Condition
ST1– (E10–12) – E1 (E11–1)	Depressed	Below 1.5 V
ST1– (E10–12) – E1 (E11–1)	Released	7.5 to 14 V

NG → Go to step 4

OK

CHECK FOR INTERMITTENT PROBLEMS (See Page 05–7)

4 CHECK HARNESS AND CONNECTOR(ECM – STOP LAMP SWITCH)

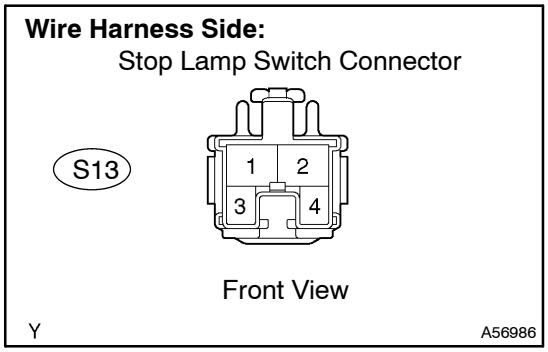

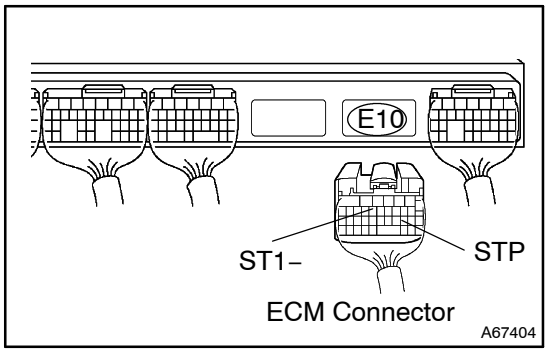

(a) Disconnect the S13 stop lamp switch connector.
(b) Disconnect the E10 ECM connector.
(c) Check the resistance between the wire harness side connectors.

Standard (Check for open):

Tester Connection	Specified Condition
Stop lamp switch (S13–1) – STP (E10–19)	Below 1 Ω
Stop lamp switch (S13–4) – ST1– (E10–12)	Below 1 Ω

Standard (Check for short):

Tester Connection	Specified Condition
Stop lamp switch (S13–1) or STP (E10–19) – Body ground	10 kΩ or higher
Stop lamp switch (S13–4) or ST1– (E10–12) – Body ground	10 kΩ or higher

(d) Reconnect the stop lamp switch connector.
(e) Reconnect the ECM connector.

NG → **REPAIR OR REPLACE HARNESS OR CONNECTOR**

OK

REPLACE ECM (See page 10–65 of Pub. No. RM1018E AVENSIS)

DTC P0505 IDLE AIR CONTROL SYSTEM

CIRCUIT DESCRIPTION

The idle speed is controlled by the Electric Throttle Control System (ETCS).
ETCS is composed of the throttle motor which operates the throttle valve, the throttle position sensor which detects the opening angle of the throttle valve, the accelerator pedal position sensor which detects the accelerator pedal position,and the one valve type throttle body.
The ECM controls the throttle motor to make the throttle valve opening angle properly for the target idle speed.

DTC No.	DTC Detection Condition	Trouble Area
P0505	Idle speed continues to vary greatly from target speed (2 trip detection logic)	• Electric throttle control system • Air induction system • PCV hose connection

INSPECTION PROCEDURE

HINT:
Read freeze frame data using the hand–held tester. Freeze frame data records the engine conditions when a malfunction is detected. When troubleshooting, freeze frame data can help determine if the vehicle was running or stopped, if the engine was warmed up or not, if the air–fuel ratio was lean or rich, and other data from the time the malfunction occurred.

1 CHECK OTHER DTC OUTPUT(IN ADDITION TO DTC P0505)

(a) Connect the hand–held tester to the DLC3.
(b) Turn the ignition switch to ON and turn the hand–held tester ON.
(c) Select the item: DIAGNOSIS / OBD/MOBD / DTC INFO / CURRENT CODES.
(d) Read the DTCs using the hand–held tester.
Result:

Display (DTC output)	Proceed to
P0505	A
P0505 and other DTCs	B

HINT:
If any other codes besides P0505 are output, perform troubleshoot for those DTCs first.

B → **GO TO RELEVANT DTC CHART (See page 05–31)**

A

2 CHECK CONNECTION OF PCV HOSE

NG → **REPAIR OR REPLACE PCV HOSE**

OK

3	CHECK AIR INDUCTION SYSTEM

(a) Check for vacuum leaks in the air induction system.

NG → REPAIR OR REPLACE AIR INDUCTION SYSTEM

OK

CHECK ELECTRIC THROTTLE CONTROL SYSTEM (See page 10–1)

DTC	P0555	BRAKE BOOSTER PRESSURE SENSOR CIRCUIT

DTC	P0557	BRAKE BOOSTER PRESSURE SENSOR CIRCUIT LOW INPUT

DTC	P0558	BRAKE BOOSTER PRESSURE SENSOR CIRCUIT HIGH INPUT

CIRCUIT DESCRIPTION

The brake booster pressure sensor detects internal pressure of the brake booster as voltage. A structure of the sensor and its connection to the ECM are the same as those of the intake air pressure sensor (refer to DTC P0105 on page 05–61).

In order to purify emission gas when starting a cold engine, drastically retard the ignition timing to quickly activate tha catalyst. Upon this, the throttle valve is opened larger than the throttle opening angle with a warm engine, therefore the intake manifold pressure will be closer to atmospheric pressure. If the negative pressure (vacuum) applied inside the brake booster drops, the ECM cancels the drastic retarding timing and introduces the negative pressure (vacuum) into the intake manifold, and the ECM then resumes the drastic retarding timing after the brake booster negative pressure (vacuum) is ensured at required level.

DTC No.	DTC Detection Condition	Trouble Area
P0555	Open or short in brake booster pressure sensor circuit for 5 seconds or more	• Open or short in brake booster pressure sensor circuit • Brake booster pressure sensor • Vacuum hose • ECM
P0557	Open in brake booster pressure sensor circuit for 5 seconds or more	• Open or short in brake booster pressure sensor circuit • Brake booster pressure sensor • Vacuum hose • ECM
P0558	Short in brake booster pressure sensor circuit for 5 seconds or more	• Open or short in brake booster pressure sensor circuit • Brake booster pressure sensor • Vacuum hose • ECM

WIRING DIAGRAM

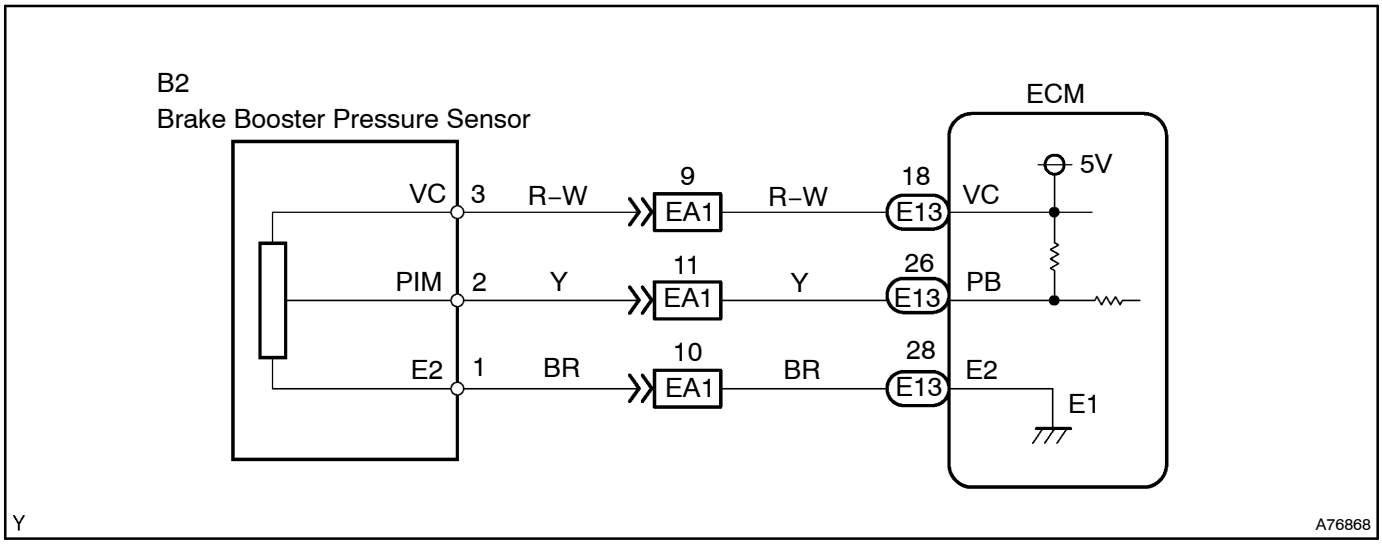

INSPECTION PROCEDURE

HINT:

- If different DTCs related to different systems that have terminal E2 as the ground terminal are output simultaneously, terminal E2 may have an open circuit.
- Read freeze frame data using the hand–held tester. Freeze frame data records the engine conditions when a malfunction is detected. When troubleshooting, freeze frame data can help determine if the vehicle was running or stopped, if the engine was warmed up or not, if the air–fuel ratio was lean or rich, and other data from the time the malfunction occurred.

1 CHECK VACUUM HOSES(BRAKE BOOSTER PRESSURE SENSOR – BRAKE BOOSTER, INTAKE MANIFOLD – BRAKE BOOSTER)

(a) Check that the vacuum hoses are connected correctly.
(b) Check that the vacuum hoses are not loose or disconnected.
(c) Check the vacuum hoses and tubes for clogs, cracks, holes, damage, or blockage.

NG → **REPAIR OR REPLACE VACUUM HOSES**

OK

2 INSPECT ECM(VC VOLTAGE)

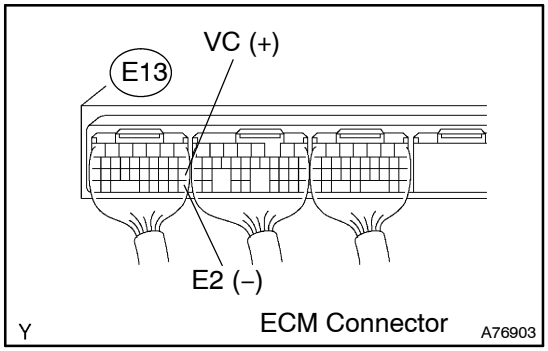

(a) Turn the ignition switch to ON.
(b) Measure the voltage between the specified terminals of the E13 ECM connector.

Standard:

Tester Connection	Specified Condition
VC (E13–18) – E2 (E13–28)	4.5 to 5.5 V

NG → **REPLACE ECM (See page 10–65 of Pub. No. RM1018E AVENSIS)**

OK

3 INSPECT ECM(PB VOLTAGE)

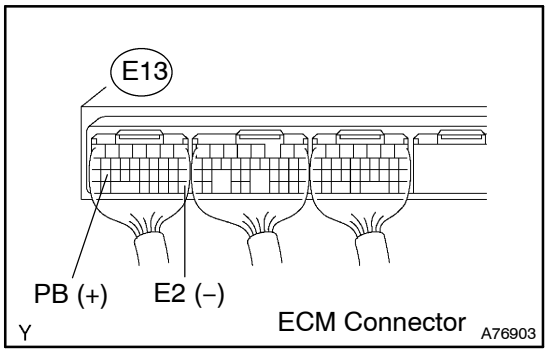

(a) Measure the voltage between the specified terminals of the E13 ECM connector.

Standard:

Tester Connection	Condition	Specified Condition
PB (E13–26) – E2 (E13–28)	Ignition switch ON (do not start engine)	0.5 to 4.5 V
PB (E13–26) – E2 (E13–28)	Idling	0.5 to 4.5 V

NG → **Go to step 4**

OK

CHECK FOR INTERMITTENT PROBLEMS (See Page 05–7)

4	CHECK HARNESS AND CONNECTOR(ECM – BRAKE BOOSTER PRESSURE SENSOR)

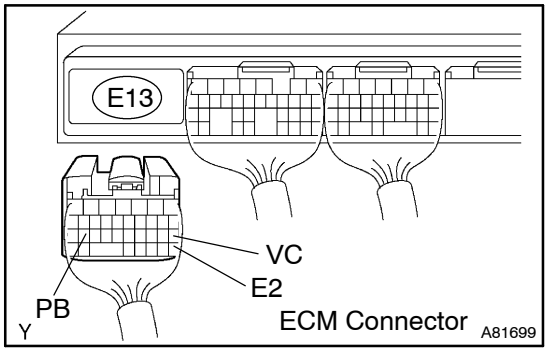

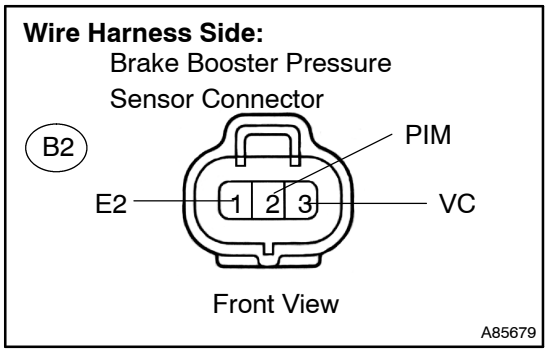

(a) Disconnect the E13 ECM connector.
(b) Disconnect the B2 brake booster pressure sensor connector.
(c) Check the resistance between the wire harness side connectors.

Standard (Check for open):

Tester Connection	Specified Condition
VC (E13–18) – VC (B2–3)	Below 1 Ω
PB (E13–26) – PIM (B2–2)	Below 1 Ω
E2 (E13–28) – E2 (B2–1)	Below 1 Ω

Standard (Check for short):

Tester Connection	Specified Condition
VC (E13–18) or VC (B2–3) – Body ground	10 kΩ or higher
PB (E13–26) or PIM (B2–2) – Body ground	10 kΩ or higher

(d) Reconnect the ECM connector.
(e) Reconnect the brake booster pressure sensor connector.

NG → **REPAIR OR REPLACE HARNESS OR CONNECTOR**

OK

REPLACE BRAKE BOOSTER PRESSURE SENSOR

DTC	P0556	BRAKE BOOSTER PRESSURE SENSOR CIRCUIT RANGE/PERFORMANCE

CIRCUIT DESCRIPTION

Refer to DTC P0555 on page 05–191.

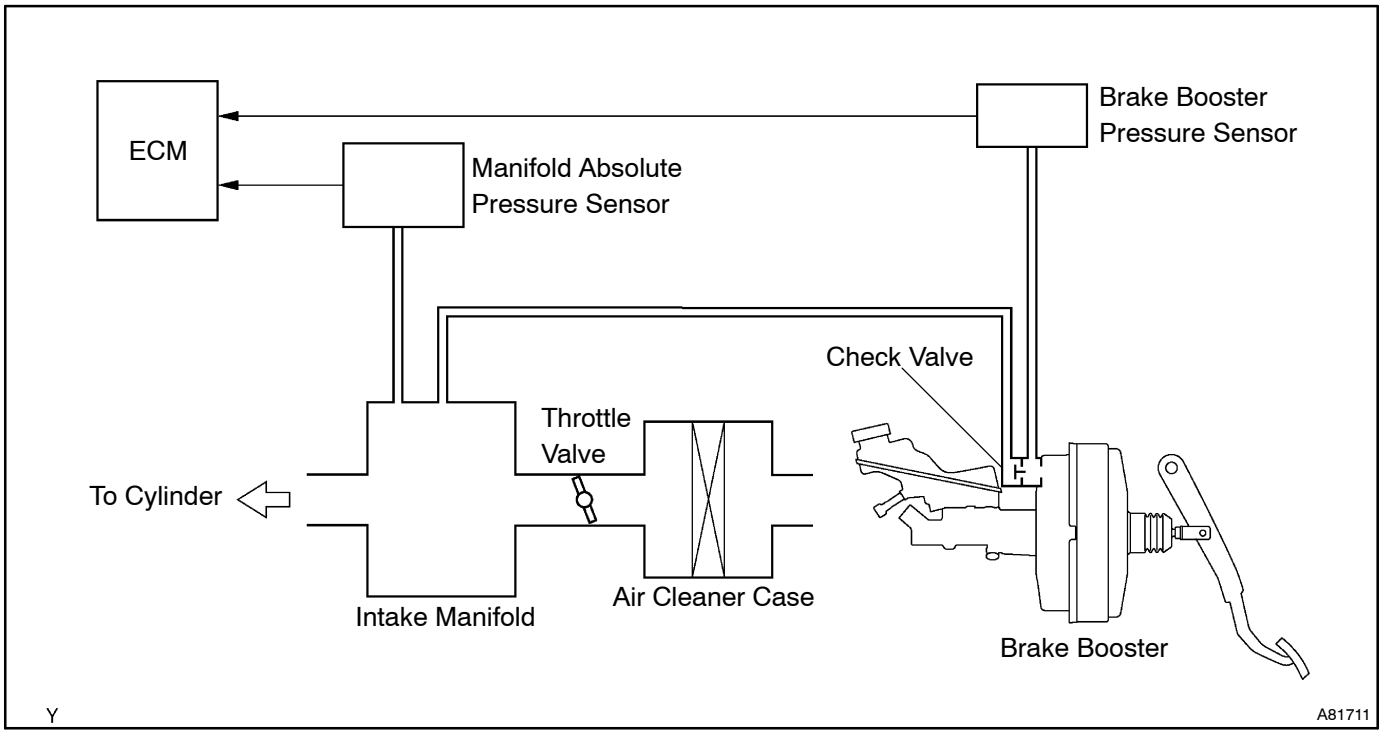

DTC No.	DTC Detection Condition	Trouble Area
P0556	When any one of the following conditions (a), (b), (c) or (d) is satisfied (1 trip detection logic): (a) If pressure inside the intake manifold is low, the brake booster internal pressure is 38 kPa (285 mmHg, 11.2 in.Hg) or more higher than the intake manifold internal pressure and this condition remains for more than 10 seconds (Pressure leaks caused by hose disconnection, etc) (b) Pressure inside the brake booster stays low or at fixed level, despite the vehicle has driven and stopped 10 times (Vacuum stuck caused by hose clogged, etc) (c) While the brake pedal is released, the pressure inside the brake booster is 32 kPa (240 mmHg, 9.4 in.Hg) or more higher than the intake manifold internal pressure and this condition remains for more than 1 second (Pressure leaks) (d) After running the engine for more than 100 seconds with the brake pedal released and the negative pressure (vacuum) has accumulated in the brake booster, the following two conditions are satisfied despite depressing the brake pedal for more than 1 second (Vacuum stuck): • Internal pressure of the brake booster does not increase • Internal pressure of the brake booster is 32 kPa (240 mmHg, 9.4 in.Hg) or more lower than the internal pressure of the intake manifold	• Vacuum hose (between the brake booster and intake manifold, the brake booster and brake booster pressure sensor, and the intake manifold and manifold absolute pressure sensor) • Open or short in brake booster pressure sensor circuit • Brake booster pressure sensor • Manifold absolute pressure sensor • Brake booster • Open or short in stop lamp switch circuit • Stop lamp switch • ECM

WIRING DIAGRAM

Refer to DTC P0555 on page 05–191.

INSPECTION PROCEDURE

HINT:
Read freeze frame data using the hand–held tester. Freeze frame data records the engine conditions when a malfunction is detected. When troubleshooting, freeze frame data can help determine if the vehicle was running or stopped, if the engine was warmed up or not, if the air–fuel ratio was lean or rich, and other data from the time the malfunction occurred.

1	CHECK OTHER DTC OUTPUT(IN ADDITION TO P0556)

(a) Connect the hand–held tester to the DLC3.
(b) Turn the ignition switch to ON and turn the hand–held tester ON.
(c) Select the item: DIAGNOSIS / OBD/MOBD / DTC INFO / CURRENT CODES.
(d) Read the DTCs using the hand–held tester.
Result :

Display	Proceed to
P0556	A
P0556 and other DTCs	B

HINT:
If any other codes besides P0556 are output, perform troubleshoot for those DTCs first.

B → **GO TO RELEVANT DTC CHART (See page 05–31)**

A

2	READ VALUE OF HAND–HELD TESTER(INTAKE MANIFOLD ABSOLUTE PRESSURE)

(a) Connect the hand–held tester to the DLC3.
(b) Warm up the engine.
(c) Turn the hand–held tester ON.
(d) On the hand–held tester, select the item: DIAGNOSIS / OBD/MOBD / DATA LIST / ALL / MAP. Read the values with the shift lever in the N position.
Standard :

Condition	Intake Manifold Absolute Pressure
Ignition switch ON (do not start engine)	70 to 110 kPa (525 to 825 mmHg, 20.7 to 32.5 in.Hg)
Running without load (2,500 rpm)	20 to 35 kPa (150 to 263 mmHg, 5.9 to 10.4 in.Hg)

NG → **Go to step 7**

OK

3	READ VALUE OF HAND–HELD TESTER(STOP LAMP SWITCH)

(a) Connect the hand–held tester to the DLC3.
(b) Turn the ignition switch to ON and turn the hand–held tester ON.
(c) On the hand–held tester, select the item: DIAGNOSIS / OBD/MOBD / DATA LIST / ALL / STOP LIGHT SW. Read the values.

Result :

Brake Pedal	STP Signal
Depressed	ON
Released	OFF

NG → **CHECK AND REPAIR STOP LAMP SWITCH CIRCUIT**

OK

4	CHECK VACUUM HOSES(BRAKE BOOSTER PRESSURE SENSOR – BRAKE BOOSTER, INTAKE MANIFOLD – BRAKE BOOSTER)

(a) Check that the vacuum hoses are connected correctly.
(b) Check that the vacuum hoses are not loose or disconnected.
(c) Check the vacuum hoses and tubes for clogs, cracks, holes, damage, or blockage.

NG → **REPAIR OR REPLACE VACUUM HOSES**

OK

5	INSPECT ECM(PB VOLTAGE)

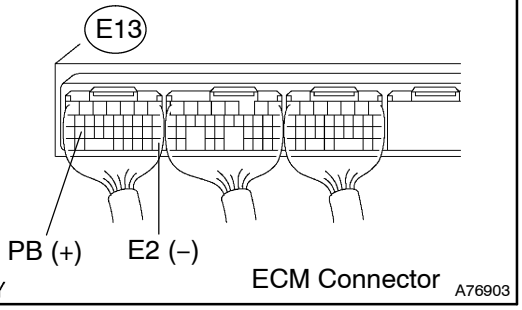

(a) Disconnect the vacuum hose from the brake booster pressure sensor.
(b) Turn the ignition switch to ON.
(c) Using the MITYVAC (Hand–Held Vacuum Pump), apply a vacuum to the brake booster pressure sensor, measure the voltage between the specified terminals of the E13 ECM connector.

Standard:

Tester Connection	Vacuum Pump Operation	Specified Condition
PB (E13–26) – E2 (E13–28)	0 kPa (0 mmHg, 0 in.Hg)	3.3 to 3.9 V
PB (E13–26) – E2 (E13–28)	40 kPa (300 mmHg, 11.8 in.Hg)	2.1 to 2.7 V
PB (E13–26) – E2 (E13–28)	80 kPa (600 mmHg, 23.6 in.Hg)	0.9 to 1.5 V

(d) Reconnect the vacuum hose.

NG → **Go to step 6**

OK

CHECK FUNCTION OF BRAKE BOOSTER
(See page 32–17,32–21 of Pub. No. RM1018E AVENSIS)

6 CHECK HARNESS AND CONNECTOR(ECM – BRAKE BOOSTER PRESSURE SENSOR)

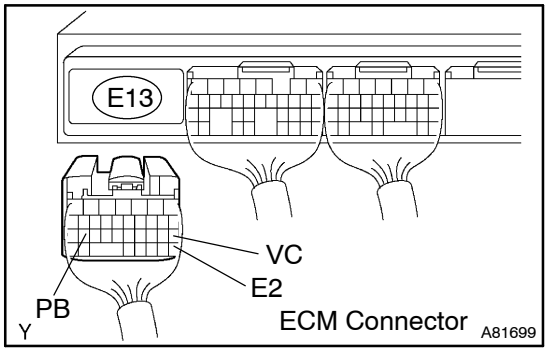

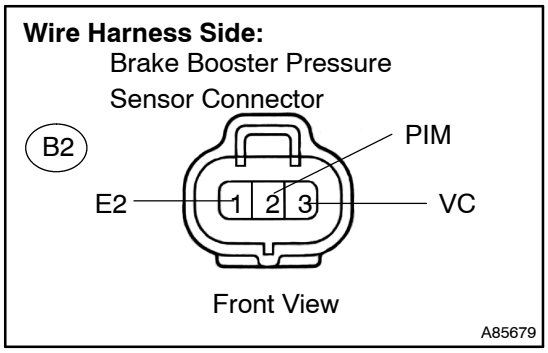

(a) Disconnect the E13 ECM connector.
(b) Disconnect the B2 brake booster pressure sensor connector.
(c) Check the resistance between the wire harness side connectors.

Standard (Check for open):

Tester Connection	Specified Condition
VC (E13–18) – VC (B2–3)	Below 1 Ω
PB (E13–26) – PIM (B2–2)	Below 1 Ω
E2 (E13–28) – E2 (B2–1)	Below 1 Ω

Standard (Check for short):

Tester Connection	Specified Condition
VC (E13–18) or VC (B2–3) – Body ground	10 kΩ or higher
PB (E13–26) or PIM (B2–2) – Body ground	10 kΩ or higher

(d) Reconnect the ECM connector.
(e) Reconnect the brake booster pressure sensor connector.

NG → **REPAIR OR REPLACE HARNESS OR CONNECTOR**

OK

REPLACE BRAKE BOOSTER PRESSURE SENSOR

7 CHECK VACUUM HOSES(MANIFOLD ABSOLUTE PRESSURE SENSOR – INTAKE MANIFOLD)

(a) Check that the vacuum hose is connected correctly.
(b) Check that the vacuum hose is not loose or disconnected.
(c) Check the vacuum hose for clogs, cracks, holes, damage, or blockage.

NG → **REPAIR OR REPLACE VACUUM HOSES**

OK

8	CHECK HARNESS AND CONNECTOR(ECM – MANIFOLD ABSOLUTE PRESSURE SENSOR)

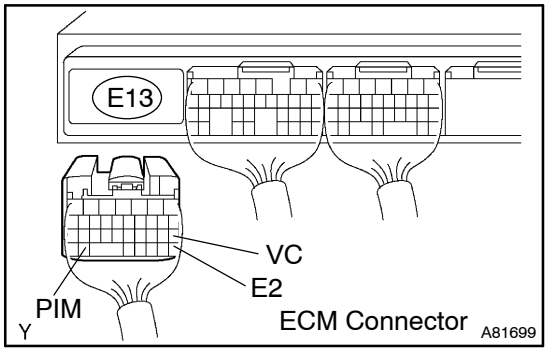

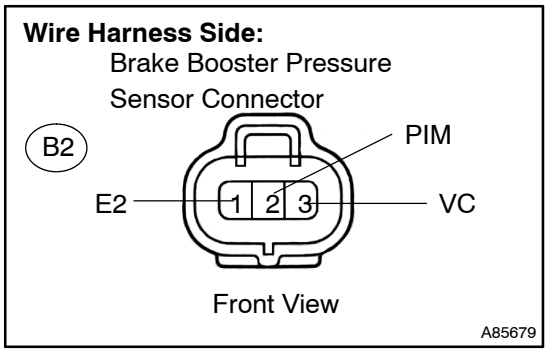

(a) Disconnect the E13 ECM connector.
(b) Disconnect the V1 manifold absolute pressure sensor connector.
(c) Check the resistance between the wire harness side connectors.

Standard (Check for open):

Tester Connection	Specified Condition
VC (E13–18) – VCC (V1–3)	Below 1 Ω
PIM (E13–33) – VOUT (V1–2)	Below 1 Ω
E2 (E13–28) – GND (V1–1)	Below 1 Ω

Standard (Check for short):

Tester Connection	Specified Condition
VC (E13–18) or VCC (V1–3) – Body ground	10 kΩ or higher
PIM (E13–33) or VOUT (V1–2) – Body ground	10 kΩ or higher

(d) Reconnect the ECM connector.
(e) Reconnect the manifold absolute pressure sensor connector.

NG → **REPAIR OR REPLACE HARNESS OR CONNECTOR**

OK

REPLACE MANIFOLD ABSOLUTE PRESSURE SENSOR

DTC	P0560	SYSTEM VOLTAGE

CIRCUIT DESCRIPTION

The battery supplies electricity to the ECM even when the ignition switch is OFF. This electricity allows the ECM to store data such as DTC history, freeze frame data, fuel trim values, and other data. If the battery voltage falls below a minimum level, the ECM will conclude that there is a fault in the power supply circuit. The next time the engine start, the ECM will turn on the MIL and a DTC will be set.

DTC No.	DTC Detection Condition	Trouble Area
P0560	Open in back–up power source circuit	• Open in back–up power source circuit • ECM

HINT:

If DTC P0560 is present, the ECM is unable to store other DTCs.

WIRING DIAGRAM

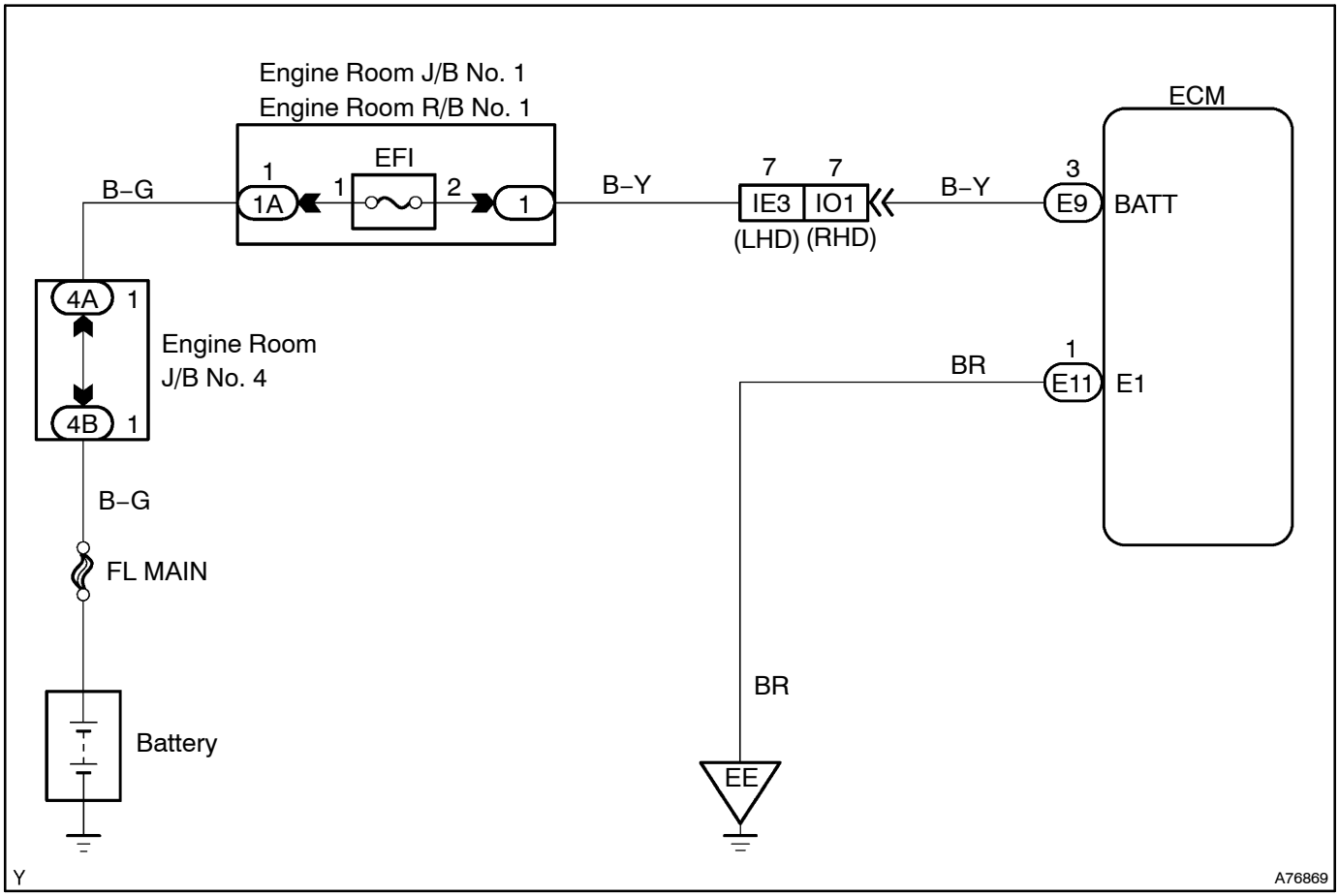

INSPECTION PROCEDURE

HINT:

Read freeze frame data using the hand–held tester. Freeze frame data records the engine conditions when a malfunction is detected. When troubleshooting, freeze frame data can help determine if the vehicle was running or stopped, if the engine was warmed up or not, if the air–fuel ratio was lean or rich, and other data from the time the malfunction occurred.

1 INSPECT FUSE(EFI FUSE)

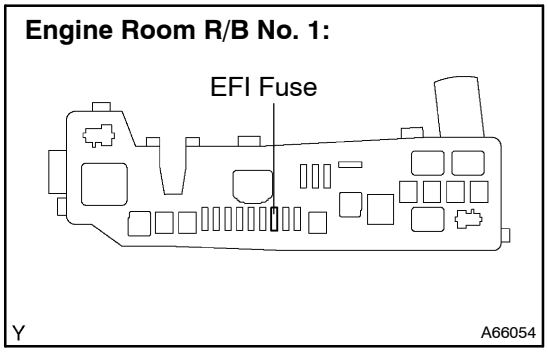

(a) Remove the EFI fuse from the engine room R/B No. 1.
(b) Check for continuity in the EFI fuse.
Standard: Continuity
(c) Reinstall the EFI fuse.

NG → **CHECK FOR SHORT IN ALL HARNESS AND COMPONENTS CONNECTED EFI FUSE**

OK

2 INSPECT ECM(BATT VOLTAGE)

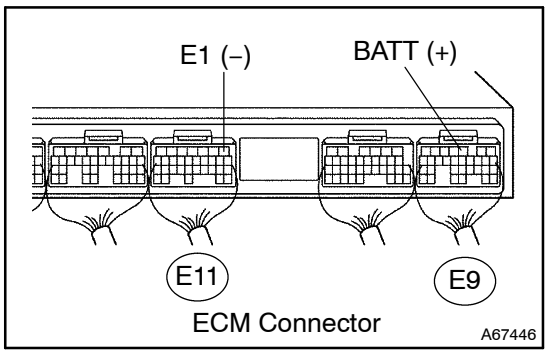

(a) Measure the voltage between the terminals of the E9 and E11 ECM connectors.
Standard:

Tester Connection	Specified Condition
BATT (E9–3) – E1 (E11–1)	9 to 14 V

NG → **Go to step 3**

OK

REPLACE ECM (See page 10–65 of Pub. No. RM1018E AVENSIS)

3 CHECK HARNESS AND CONNECTOR(ECM – EFI FUSE, EFI FUSE – BATTERY)

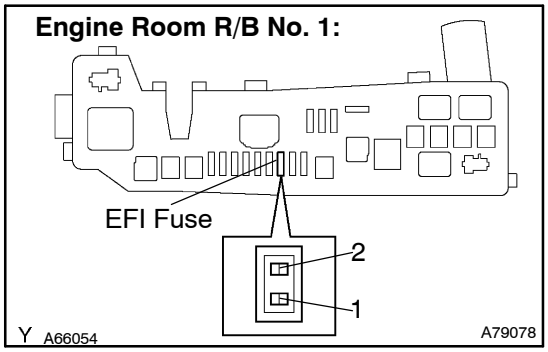

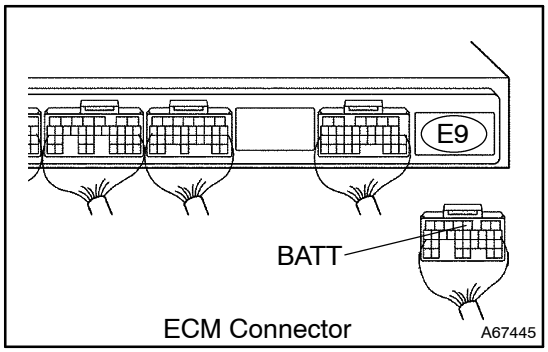

(a) Check the harness and connector between the EFI fuse and ECM.
  (1) Remove the EFI fuse from the engine room R/B No.1.
  (2) Disconnect the E9 ECM connector.
  (3) Check the resistance between the wire harness side connectors.

Standard (Check for open):

Tester Connection	Specified Condition
Engine room R/B No. 1 (EFI fuse terminal 2) – BATT (E9–3)	Below 1 Ω

Standard (Check for short):

Tester Connection	Specified Condition
Engine room R/B No. 1 (EFI fuse terminal 2) or BATT (E9–3) – Body ground	10 kΩ or higher

  (4) Reinstall the EFI fuse.
  (5) Reconnect the ECM connector.

(b) Check the harness and connector between the EFI fuse and battery.
  (1) Remove the EFI fuse from the engine room R/B No.1.
  (2) Disconnect the positive battery terminal.
  (3) Check the resistance between the wire harness side connectors.

Standard (Check for open):

Tester Connection	Specified Condition
Battery positive terminal – Engine room R/B No. 1 (EFI fuse terminal 1)	Below 1 Ω

Standard (Check for short):

Tester Connection	Specified Condition
Battery positive terminal or Engine room R/B No. 1 (EFI fuse terminal 1) – Body ground	10 kΩ or higher

  (4) Reinstall the EFI fuse.
  (5) Reconnect the positive battery terminal.

NG → **REPAIR OR REPLACE HARNESS OR CONNECTOR**

OK

CHECK AND REPLACE ENGINE ROOM RELAY BLOCK

DTC	P0604	INTERNAL CONTROL MODULE RANDOM ACCESS MEMORY (RAM) ERROR

DTC	P0606	ECM/PCM PROCESSOR

DTC	P0607	CONTROL MODULE PERFORMANCE

DTC	P0657	ACTUATOR SUPPLY VOLTAGE CIRCUIT/OPEN

CIRCUIT DESCRIPTION

DTC No.	DTC Detection Condition	Trouble Area
P0604 P0606 P0607 P0657	ECM internal error	ECM

INSPECTION PROCEDURE

HINT:

Read freeze frame data using the hand–held tester. Freeze frame data records the engine conditions when a malfunction is detected. When troubleshooting, freeze frame data can help determine if the vehicle was running or stopped, if the engine was warmed up or not, if the air–fuel ratio was lean or rich, and other data from the time the malfunction occurred.

1	**REPLACE ECM (See page 10–65 of Pub. No. RM1018E AVENSIS)**

DTC	P0617	STARTER RELAY CIRCUIT HIGH

CIRCUIT DESCRIPTION

While the engine is being cranked, the positive battery voltage is applied to terminal STA of the ECM.
If the vehicle is being driven and the ECM detects the starter control signal (STA), the ECM concludes that the starter control circuit is malfunctioning. The ECM will turn on the CHK ENG and a DTC is set.

DTC No.	DTC Detection Condition	Trouble Area
P0617	When all conditions (a), (b) and (c) are satisfied with battery (+B) voltage 10.5 V or more for 20 seconds: (a) Vehicle speed greater than 12 mph (20 km/h) (b) Engine speed greater than 1,000 rpm (c) STA signal ON	• Short in Park/Neutral position switch (A/T) • Park/Neutral position switch (A/T) • Ignition switch • ECM

WIRING DIAGRAM

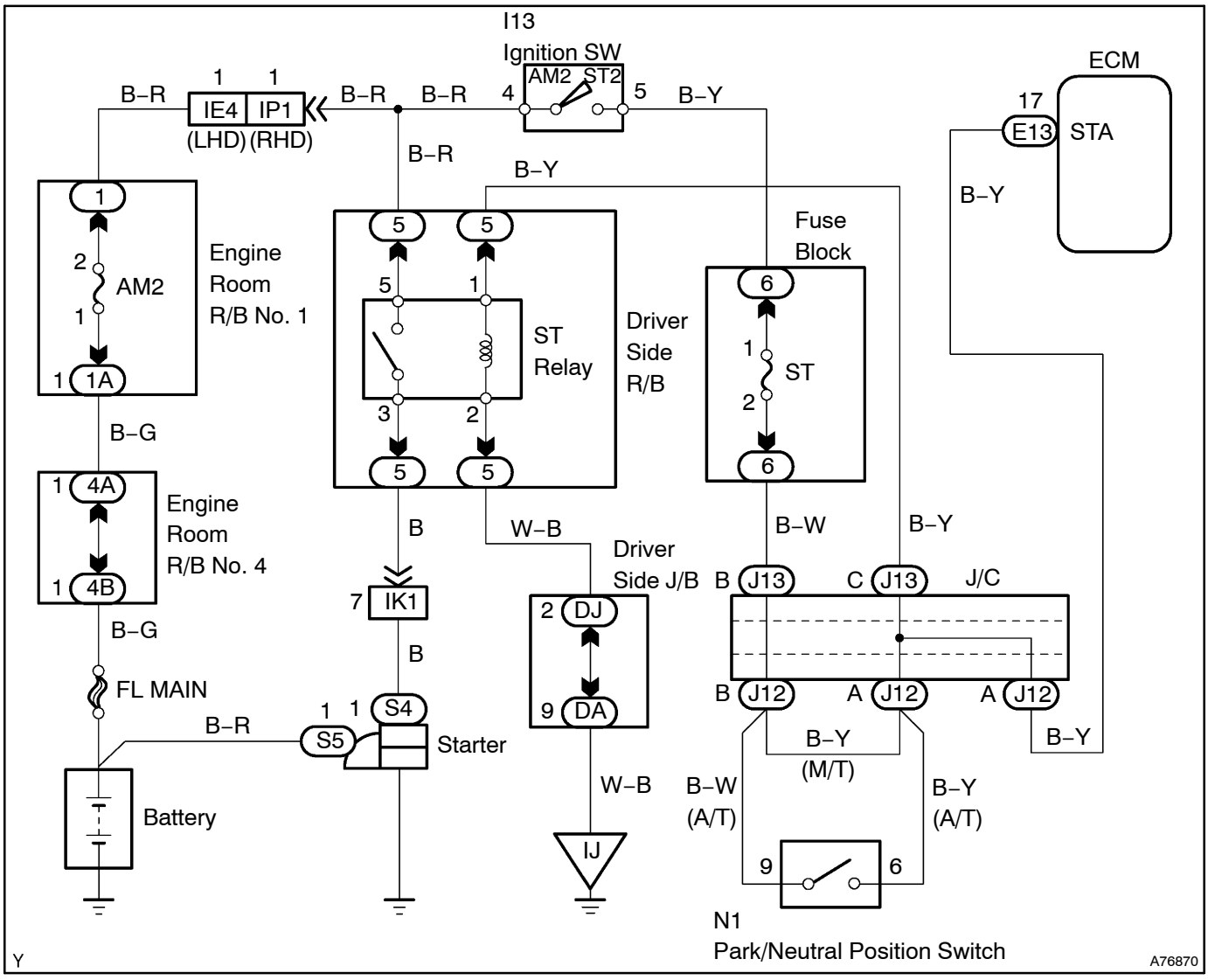

INSPECTION PROCEDURE

HINT:

Read freeze frame data using the hand–held tester. Freeze frame data records the engine conditions when a malfunction is detected. When troubleshooting, freeze frame data can help determine if the vehicle was running or stopped, if the engine was warmed up or not, if the air–fuel ratio was lean or rich, and other data from the time the malfunction occurred.

1 READ VALUE OF HAND–HELD TESTER(STARTER SIGNAL)

(a) Connect the hand–held tester to the DLC3.
(b) Turn the ignition switch to ON and turn the hand–held tester ON.
(c) On the hand–held tester, select the item: DIAGNOSIS / OBD/MOBD / DATA LIST / ALL / STARTER SIG. Read the values.

Result:

Ignition Switch Position	ON	START
STA Signal	OFF	ON

OK → **Go to step 6**

NG

2 INSPECT PARK/NEUTRAL POSITION SWITCH ASSY

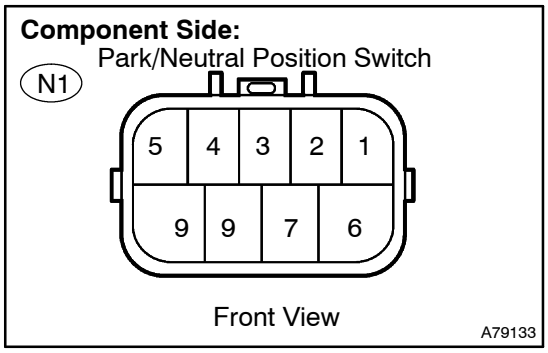

(a) Disconnect the N1 park/neutral position switch connector.
(b) Check the resistance between each terminal shown below when the shift lever is moved to each position.

Standard:

Shift Position	Tester Connection	Specified Condition
P	1 – 3, 6 – 9	Below 1 Ω
R	2 – 3	Below 1 Ω
N	3 – 5, 6 – 9	Below 1 Ω
D	3 – 7	Below 1 Ω
2	3 – 4	Below 1 Ω
L	3 – 8	Below 1 Ω

(c) Reconnect the park/neutral position switch connector.

NG → **REPLACE PARK/NEUTRAL POSITION SWITCH ASSY (GO TO STEP 3 AFTER THE REPLACEMENT)**

OK

3 READ VALUE OF HAND–HELD TESTER(STARTER SIGNAL)

(a) Connect the hand–held tester to the DLC3.
(b) Turn the ignition switch to ON and turn the hand–held tester ON.
(c) On the hand–held tester, select the item: DIAGNOSIS / OBD/MOBD / DATA LIST / ALL / STARTER SIG. Read the values.

Result:

Ignition Switch Position	ON	START
STA Signal	OFF	ON

OK → **SYSTEM OK**

NG

4 INSPECT IGNITION OR STARTER SWITCH ASSY

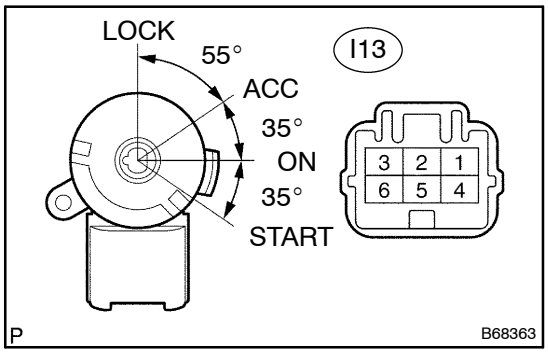

(a) Disconnect the I13 ignition switch connector.
(b) Measure the resistance between the connector terminals shown in the chart below.

Standard:

Switch Position	Tester Connection	Specified Condition
LOCK	All Terminals	10 kΩ or higher
ACC	2–3	Below 1 Ω
ON	1–3, 2–3, 4–6	Below 1 Ω
START	1–3, 4–5, 4–6	Below 1 Ω

(c) Reconnect the ignition switch connector.

NG → **REPLACE IGNITION OR STARTER SWITCH ASSY (GO TO STEP 5 AFTER THE REPLACEMENT)**

OK

5 READ VALUE OF HAND–HELD TESTER(STARTER SIGNAL)

(a) Connect the hand–held tester to the DLC3.
(b) Turn the ignition switch to ON and turn the hand–held tester ON.
(c) On the hand–held tester, select the item: DIAGNOSIS / OBD/MOBD / DATA LIST / ALL / STARTER SIG. Read the values.

Result:

Ignition Switch Position	ON	START
STA Signal	OFF	ON

NG → **REPAIR OR REPLACE HARNESS OR CONNECTOR**

OK

6	CHECK IF DTC OUTPUT REOCCURS

(a) Connect the hand–held tester to the DLC3.
(b) Turn the ignition switch to ON and turn the hand–held tester ON.
(c) Erease DTC, enter the following menus: DIAGNOSIS / ENHANCED OBD II / DTC INFO / CLEAR CODE; and press YES.
(d) Drive the vehicle more than 25 mph (40 km/h) for 20 seconds or more.
(e) Check DTC reoccur.

Result:

Display (DTC output)	Proceed to
P0617	A
No output	B

B → **CHECK FOR INTERMITTENT PROBLEMS (See page 05–7)**

A →

REPLACE ECM (See page 10–65 of Pub. No. RM1018E AVENSIS)

DTC	P1235	HIGH PRESSURE FUEL PUMP CIRCUIT

CIRCUIT DESCRIPTION

The fuel pump (high pressure) is an electronically controlled plunger type fuel pump which is driven by the cam provided on the intake camshaft rear end on the cylinder head.
The fuel pump (high pressure) increases the pressure of the fuel supplied from the fuel pump (low pressure) in the fuel tank to 8 to 13 MPa (81.6 to 132.6 kgf/cm^2, 1,160 to 1,885 psi) according to the operating condition, and it feeds the fuel to the fuel delivery pipe.

DTC No.	DTC Detection Condition	Trouble Area
P1235	Open or short in fuel pump (high pressure) circuit for 1 second or more	• Open or short in fuel pump (high pressure) • Fuel pump (high pressure) • ECM

WIRING DIAGRAM

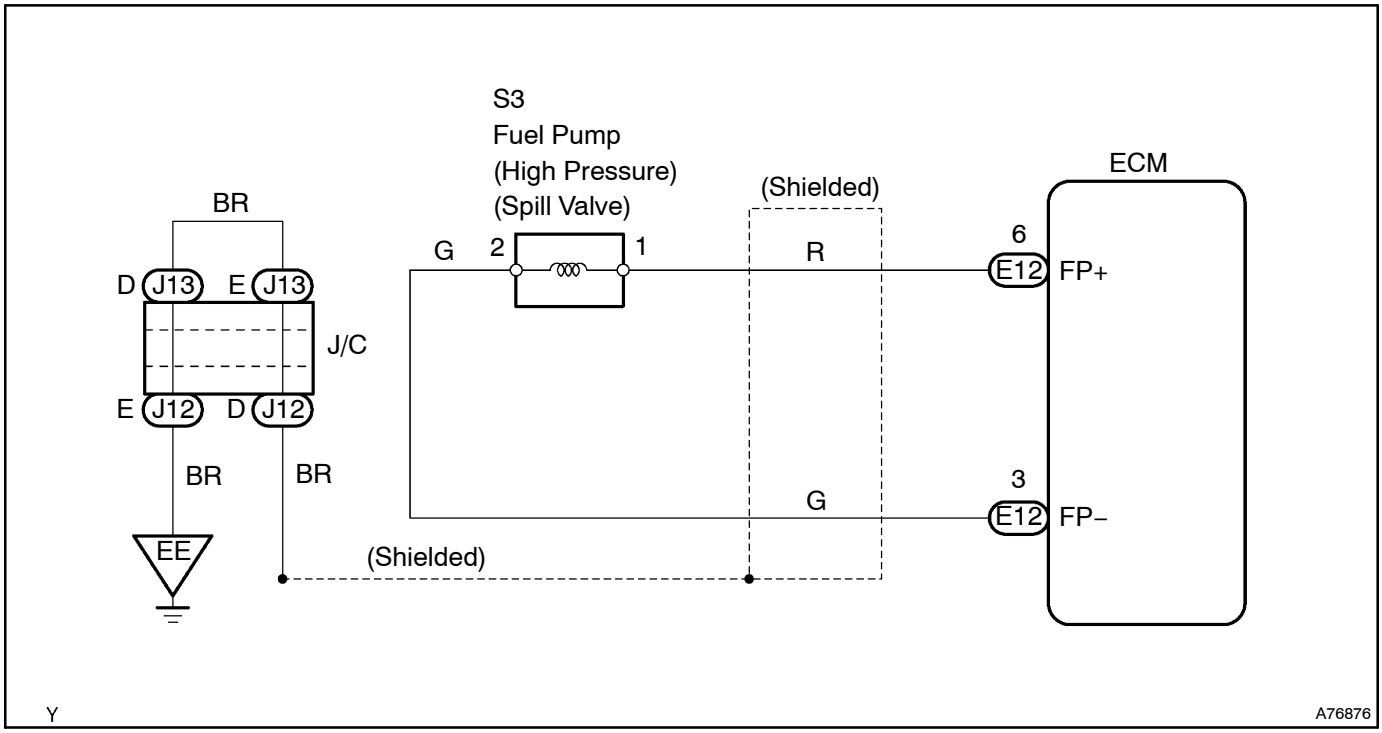

INSPECTION PROCEDURE

HINT:
Read freeze frame data using the hand–held tester. Freeze frame data records the engine conditions when a malfunction is detected. When troubleshooting, freeze frame data can help determine if the vehicle was running or stopped, if the engine was warmed up or not, if the air–fuel ratio was lean or rich, and other data from the time the malfunction occurred.

1	CHECK OPERATION OF FUEL PUMP(HIGH PRESSURE)

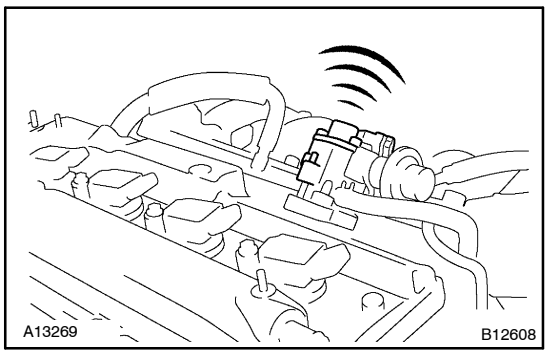

(a) With the engine running or cranking, use a sound scope to check that there is the normal operating sounds of the fuel pump (high–pressure) when it is operated.
Standard:
There is the operating sounds of the fuel pump (high–pressure).

NG → **REPLACE FUEL PUMP (HIGH PRESSURE)**

OK

2	INSPECT ECM(FP+ AND FP– VOLTAGE)

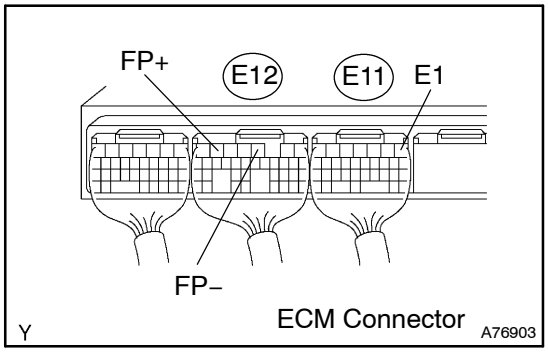

(a) Start the engine, and check the waveforms between terminals FP+ and E1, and FP– and E1 of the E11 and E12 ECM connectors.

HINT:
The correct waveform is as shown in the illustration.

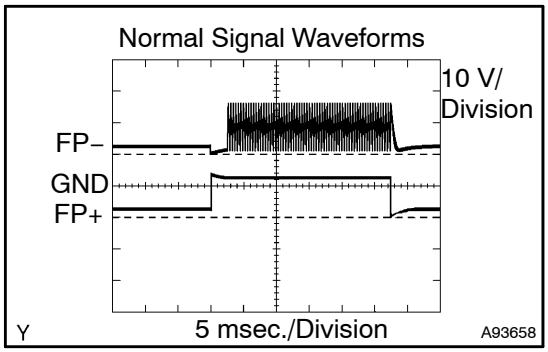

NG → **REPLACE ECM (See page 10–65 of Pub. No. RM1018E AVENSIS)**

OK

3	CHECK FUEL PUMP(HIGH PRESSURE) (See page 11–7)

NG → **REPLACE FUEL PUMP(HIGH PRESSURE)**

OK

4 CHECK HARNESS AND CONNECTOR(FUEL PUMP (HIGH PRESSURE) – ECM)

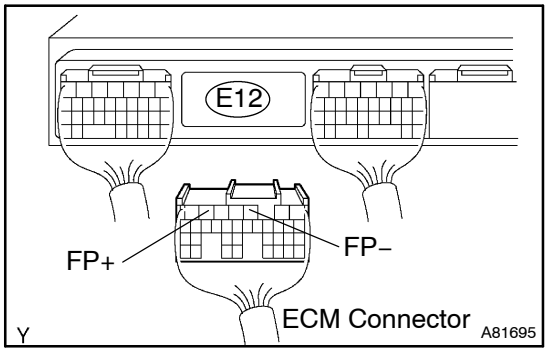

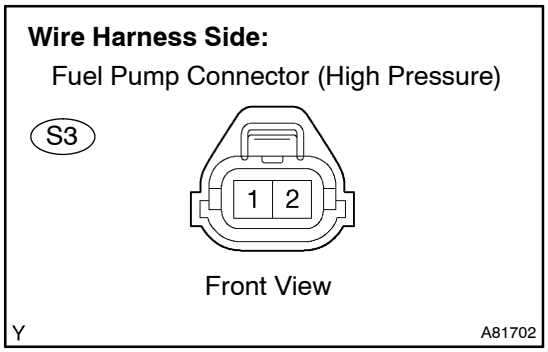

(a) Disconnect the E12 ECM connector.
(b) Disconnect the S3 fuel pump (high pressure) connector.
(c) Check the resistance between the wire harness side connectors.

Standard (Check for open):

Tester Connection	Specified Condition
FP+ (E12–6) – Fuel pump (S3–1)	Below 1 Ω
FP– (E12–3) – Fuel pump (S3–2)	Below 1 Ω

Standard (Check for short):

Tester Connection	Specified Condition
FP+ (E12–6) or Fuel pump (S3–1) – Body ground	10 kΩ or higher
FP– (E12–3) or Fuel pump (S3–2) – Body ground	10 kΩ or higher

(d) Reconnect the ECM connector.
(e) REconnect the fuel pump (high pressure) connector.

NG → **REPAIR OR REPLACE HARNESS OR CONNECTOR**

OK

CHECK FOR INTERMITTENT PROBLEMS (See Page 05–7)

DTC	P2008	INTAKE MANIFOLD RUNNER CONTROL CIRCUIT / OPEN (BANK 1)

CIRCUIT DESCRIPTION

The Intake Air Control Valve (IACV) is opened and shut by the actuator with intake manifold vacuum. It stabilizes the engine combustion. The IACV operation generates swirl air flow in the cylinder.

DTC No.	DTC Detection Condition	Trouble Area
P2008	Open or short in VSV for IACV circuit 0.5 second or more (2 trip detection logic)	• Open of short in VSV for IACV circuit • VSV for IACV • ECM

WIRING DIAGRAM

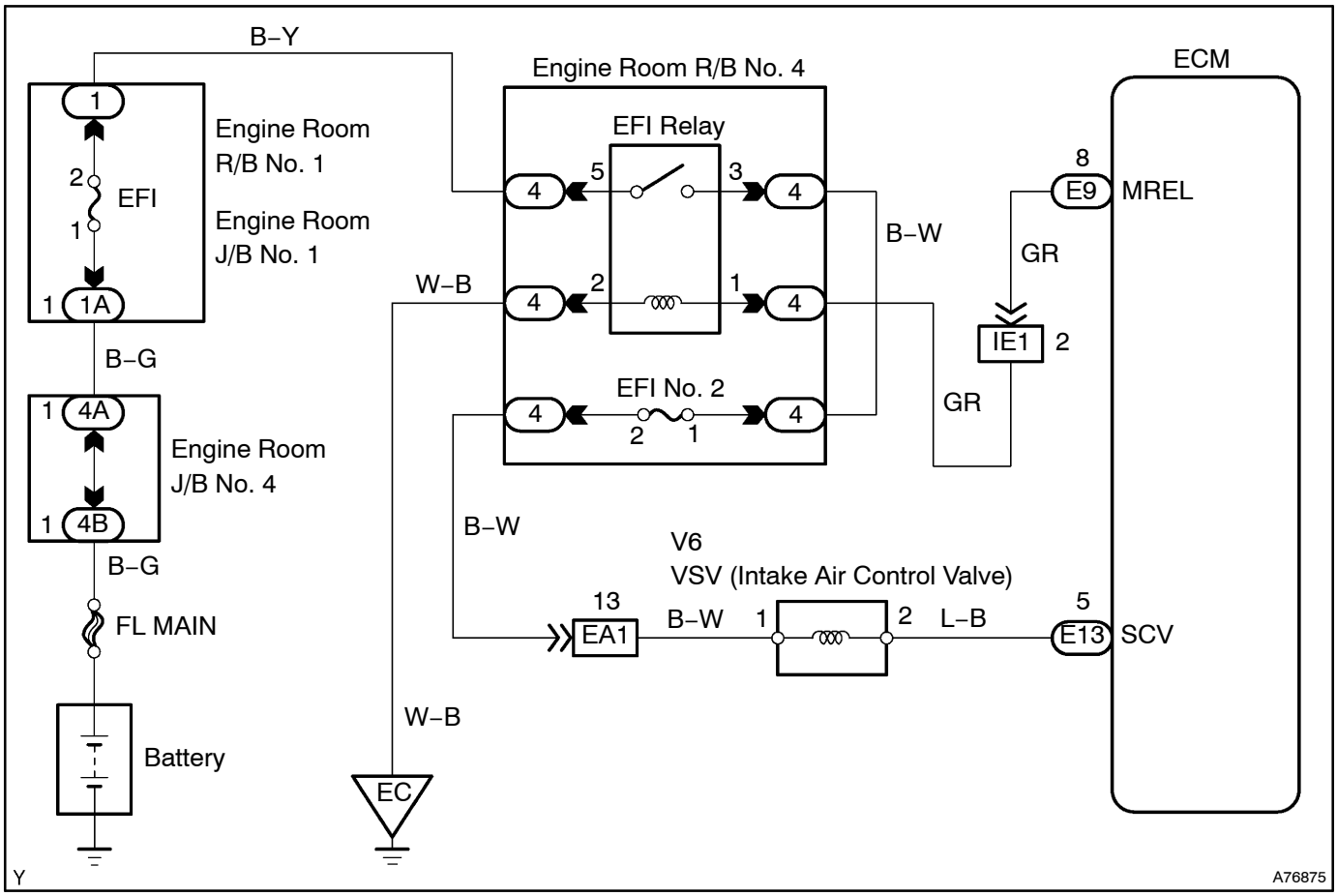

INSPECTION PROCEDURE

HINT:

- Read freeze frame data using the hand–held tester. Freeze frame data records the engine conditions when a malfunction is detected. When troubleshooting, freeze frame data can help determine if the vehicle was running or stopped, if the engine was warmed up or not, if the air–fuel ratio was lean or rich, and other data from the time the malfunction occurred.

1	PERFORM ACTIVE TEST BY HAND–HELD TESTER(VSV FOR IACV)

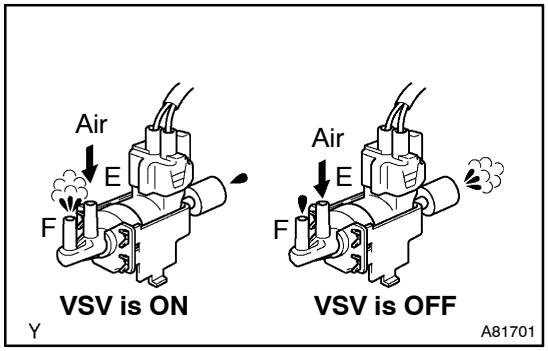

(a) Disconnect the vacuum hose from the VSV for IACV.
(b) Turn the ignition switch to ON.
(c) Select the item: DIAGNOSIS / OBD/MOBD / ACTIVE TEST / SCV VSV (press the right or left button).
(d) Check the VSV for IACV operation when it is operated by the hand–held tester.

Standard:

Tester Operation	Specified Condition
VSV is ON	Air from port E flows out through port F
VSV is OFF	Air does not flow from port E to port F

NG → **Go to step 2**

OK

CHECK FOR INTERMITTENT PROBLEMS (See Page 05–7)

2	INSPECT VACUUM SWITCHING VALVE ASSY NO.1(VSV FOR IACV) (See page 12–3)

NG → **REPLACE VACUUM SWITCHING VALVE ASSY NO.1 (VSV FOR IACV)**

OK

3	INSPECT ECM(SCV VOLTAGE)

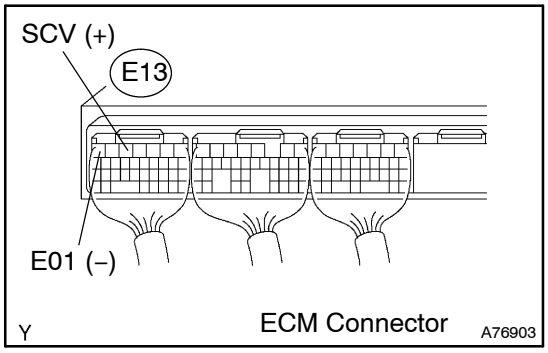

(a) Turn the ignition switch to ON.
(b) Measure the voltage between the specified terminals of the E13 ECM connector.

Standard:

Tester Connection	Specified Condition
SCV (E13–5) – E01 (E13–7)	9 to 14 V

NG → **Go to step 4**

OK

REPLACE ECM (See page 10–65 of Pub. No. RM1018E AVENSIS)

4 CHECK HARNESS AND CONNECTOR(ECM – VSV FOR IACV)

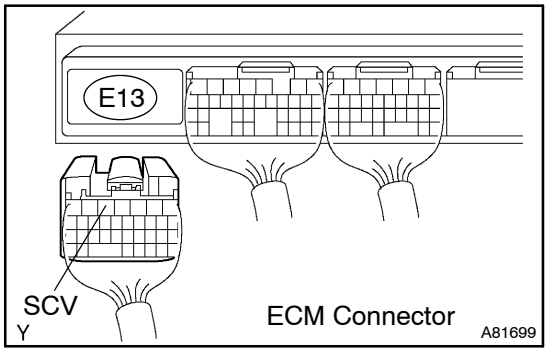

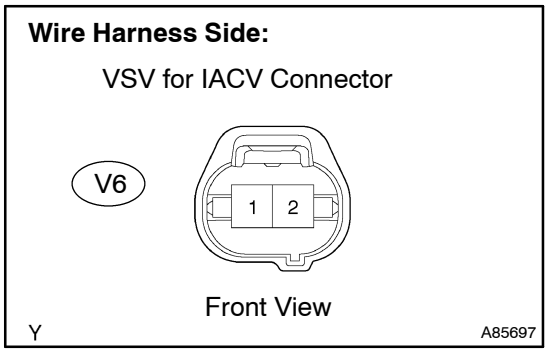

(a) Disconnect the V6 VSV for IACV connector.
(b) Disconnect the E13 ECM connector.
(c) Check the resistance between the wire harness side connectors.

Standard (Check for open):

Tester Connection	Specified Condition
VSV for IACV (V6–2) – SCV (E13–5)	Below 1 Ω

Standard (Check for short):

Tester Connection	Specified Condition
VSV for IACV (V6–2) or SCV (E13–5) – Body ground	10 kΩ or higher

(d) Reconnect the VSV for IACV connector.
(e) Reconnect the ECM connector.

NG → **REPAIR OR REPLACE HARNESS OR CONNECTOR**

OK

5 CHECK HARNESS AND CONNECTOR(EFI RELAY – VSV FOR IACV)

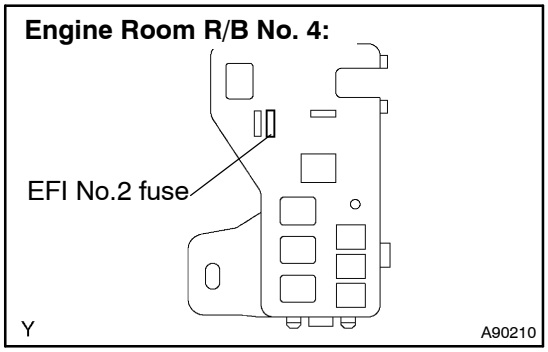

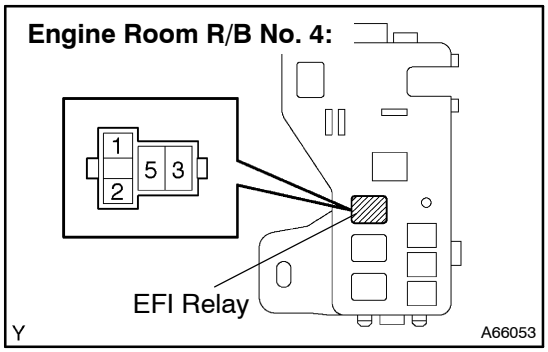

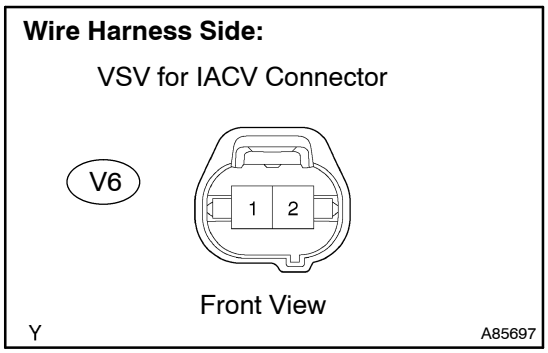

(a) Inspect the EFI No. 2 fuse.
  (1) Remove the EFI No. 2 fuse from the engine room R/B No. 4.
  (2) Check for continuity in the EFI No. 2 fuse.
  Standard: Continuity
  (3) Reinstall the EFI No. 2 fuse.
(b) Remove the EFI relay from the engine room R/B No. 4.
(c) Disconnect the V6 VSV for IACV connector.
(d) Check the resistance between the wire harness side connectors.

Standard (Check for open):

Tester Connection	Specified Condition
VSV for IACV (V6–1) – Engine room R/B No. 4 (EFI relay terminal 3)	Below 1 Ω

Standard (Check for short):

Tester Connection	Specified Condition
VSV for IACV (V6–1) or Engine room R/B No. 4 (EFI relay terminal 3) – Body ground	10 kΩ or higher

(e) Reinstall the EFI relay.
(f) Reconnect the VSV for IACV connector.

NG → **REPAIR OR REPLACE HARNESS OR CONNECTOR**

OK

CHECK FOR ECM POWER SOURCE CIRCUIT (See page 05–236)

DTC	P2102	THROTTLE ACTUATOR CONTROL MOTOR CIRCUIT LOW

DTC	P2103	THROTTLE ACTUATOR CONTROL MOTOR CIRCUIT HIGH

CIRCUIT DESCRIPTION

The throttle motor is operated by the ECM and it opens and closes the throttle valve.
The opening angle of the throttle valve is detected by the throttle position sensor which is mounted on the throttle body. The throttle position sensor provides feedback to the ECM. This feedback allows the ECM to control the throttle motor and monitor the throttle opening angle as the ECM responds to driver input.
HINT:
This Electrical Throttle Control System (ETCS) does not use a throttle cable.

DTC No.	DTC Detection Condition	Trouble Area
P2102	Conditions (a) and (b) continue for 2.0 seconds: (1 trip detection logic) (a) Throttle control motor output duty greater than 80 % (b) Throttle control motor current less than 0.5 A	• Open in throttle control motor circuit • Throttle control motor • ECM
P2103	Either of following conditions is met. (1 trip detection logic) • Throttle control motor current 10 A or more (0.1 second) • Throttle control motor current 7A or more (0.6second)	• Short in throttle control motor circuit • Throttle control motor • Throttle valve • Throttle body assembly • ECM

WIRING DIAGRAM

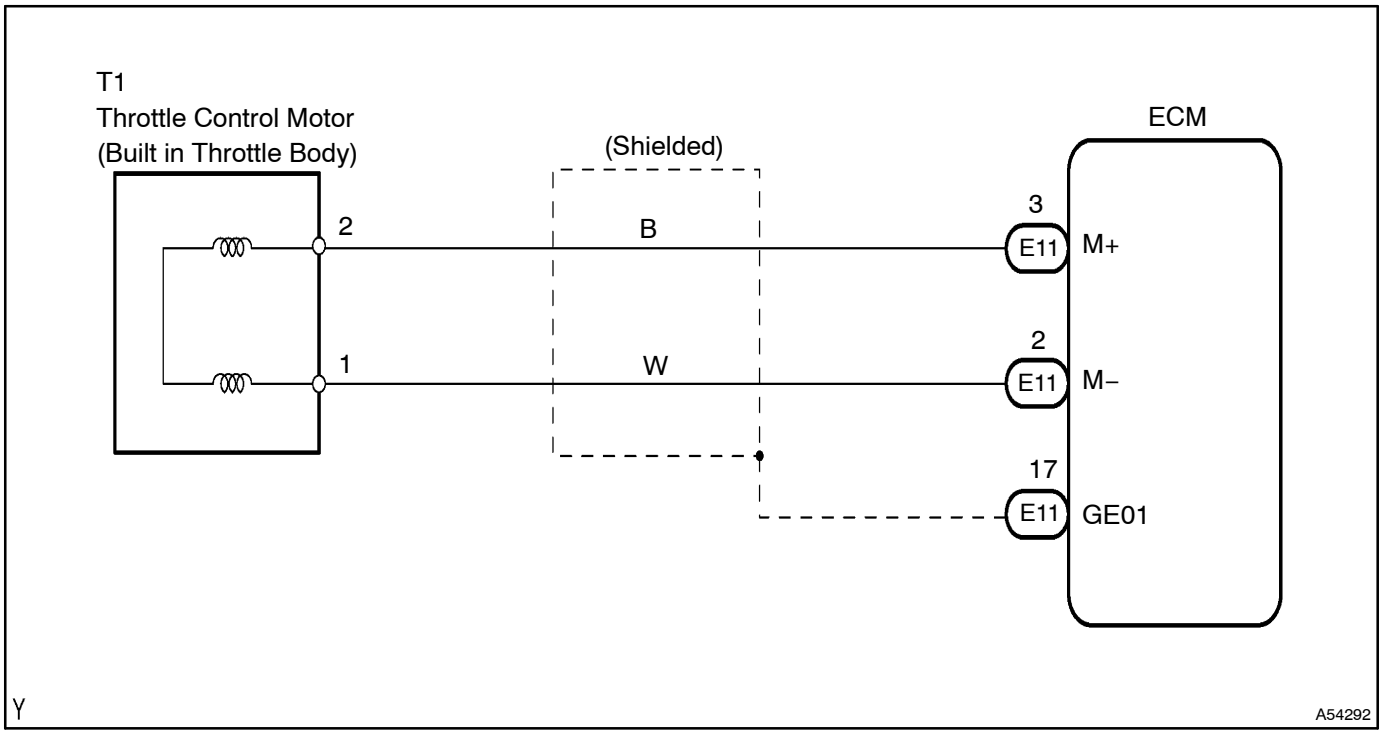

INSPECTION PROCEDURE

HINT:

Read freeze frame data using the hand–held tester. Freeze frame data records the engine conditions when a malfunction is detected. When troubleshooting, freeze frame data can help determine if the vehicle was running or stopped, if the engine was warmed up or not, if the air–fuel ratio was lean or rich, and other data from the time the malfunction occurred.

1	INSPECT THROTTLE BODY ASSY(RESISTANCE OF THROTTLE CONTROL MOTOR)

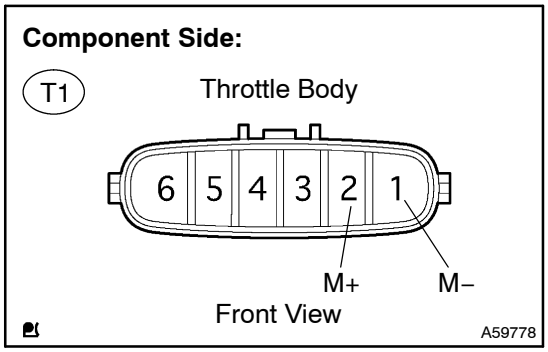

(a) Disconnect the T1 throttle body connector.

(b) Measure the resistance between terminals of the throttle body.

Standard:

Tester Connection	Specified Condition
M+ (T1–2) – M– (T1–1)	0.3 to 100 Ω at 20°C (68°F)

(c) Reconnect the throttle body connector.

NG → **REPLACE THROTTLE BODY ASSY (See page 10–8)**

OK

2	CHECK HARNESS AND CONNECTOR(THROTTLE CONTROL MOTOR – ECM)

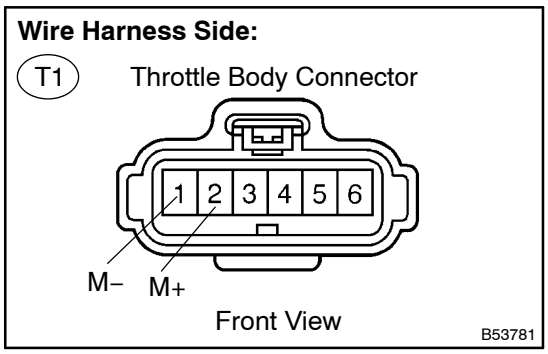

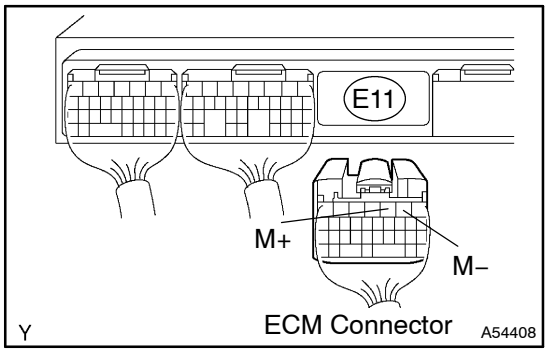

(a) Disconnect the T1 throttle body connector.

(b) Disconnect the E11 ECM connector.

(c) Check the resistance between the wire harness side connectors.

Standard (Check for open):

Tester Connection	Specified Condition
M+ (T1–2) – M+ (E11–3)	Below 1 Ω
M– (T1–1) – M– (E11–2)	Below 1 Ω

Standard (Check for short):

Tester Connection	Specified Condition
M+ (T1–2) or M+ (E11–3) – Body ground	10 kΩ or higher
M– (T1–1) or M– (E11–2) – Body ground	10 kΩ or higher

(d) Reconnect the throttle body connector.

(e) Reconnect the ECM connector.

NG → **REPAIR OR REPLACE HARNESS OR CONNECTOR**

OK

3	INSPECT THROTTLE BODY ASSY(VISUALLY CHECK THROTTLE VALVE)

(a) Check between the throttle valve and the housing for foreign objects.
Also, check if the valve can open and close smoothly.

NG → **REMOVE FOREIGN OBJECT AND CLEAN THROTTLE BODY**

OK

REPLACE ECM (See page 10–65 of Pub. No. RM1018E AVENSIS)

DTC	P2111	THROTTLE ACTUATOR CONTROL SYSTEM – STUCK OPEN

DTC	P2112	THROTTLE ACTUATOR CONTROL SYSTEM – STUCK CLOSED

CIRCUIT DESCRIPTION

The throttle motor is operated by the ECM and it opens and closes the throttle valve using gears. The opening angle of the throttle valve is detected by the throttle position sensor, which is mounted on the throttle body. The throttle position sensor provides feedback to the ECM to control the throttle motor and set the throttle valve angle in response to driver input.

HINT:

This Electrical Throttle Control System (ETCS) does not use a throttle cable.

DTC No.	DTC Detection Condition	Trouble Area
P2111	Throttle valve opening angle is stuck during ECM orders to close (1 trip detection logic)	• Throttle control motor circuit • Throttle control motor • Throttle body • Throttle valve
P2112	Throttle valve opening angle is stuck during ECM orders to open (1 trip detection logic)	• Throttle control motor circuit • Throttle control motor • Throttle body • Throttle valve

WIRING DIAGRAM

Refer to DTC P2102 on page 05–214.

INSPECTION PROCEDURE

HINT:

Read freeze frame data using the hand–held tester. Freeze frame data records the engine conditions when a malfunction is detected. When troubleshooting, freeze frame data can help determine if the vehicle was running or stopped, if the engine was warmed up or not, if the air–fuel ratio was lean or rich, and other data from the time the malfunction occurred.

1	INSPECT THROTTLE BODY ASSY(VISUALLY CHECK THROTTLE VALVE)

(a) Check if a foreign object has been caught between the throttle valve and the housing.

NG → REMOVE FOREIGN OBJECT AND CLEAN THROTTLE BODY

OK

2 INSPECT THROTTLE BODY ASSY(RESISTANCE OF THROTTLE CONTROL MOTOR)

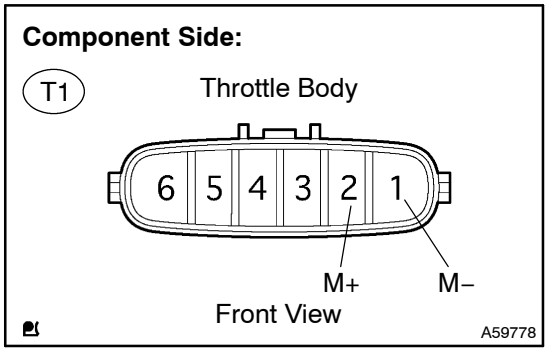

(a) Disconnect the T1 throttle body connector.
(b) Measure the resistance between terminals of the throttle body.

Standard:

Tester Connection	Specified Condition
M+ (T1–2) – M– (T1–1)	0.3 to 100 Ω at 20°C (68°F)

(c) Reconnect the throttle body connector.

NG → **REPLACE THROTTLE BODY ASSY (See Page 10–8)**

OK

3 CHECK HARNESS AND CONNECTOR(THROTTLE CONTROL MOTOR – ECM)

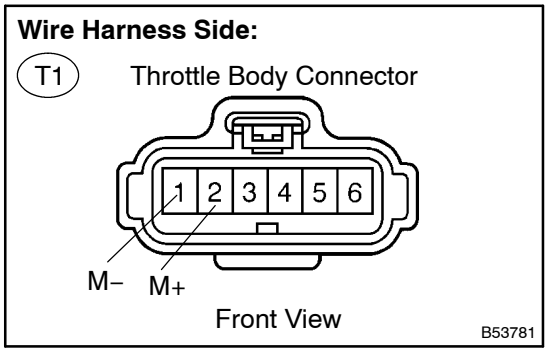

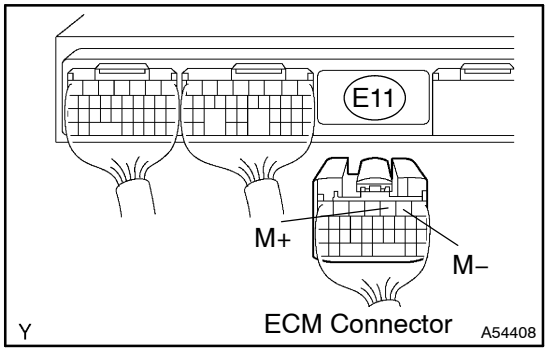

(a) Disconnect the T1 throttle body connector.
(b) Disconnect the E11 ECM connector.
(c) Check the resistance between the wire harness side connectors.

Standard (Check for open):

Tester Connection	Specified Condition
M+ (T1–2) – M+ (E11–3)	Below 1 Ω
M– (T1–1) – M– (E11–2)	Below 1 Ω

Standard (Check for short):

Tester Connection	Specified Condition
M+ (T1–2) or M+ (E11–3) – Body ground	10 kΩ or higher
M– (T1–1) or M– (E11–2) – Body ground	10 kΩ or higher

(d) Reconnect the throttle body connector.
(e) Reconnect the ECM connector.

NG → **REPAIR OR REPLACE HARNESS OR CONNECTOR**

OK

CHECK FOR INTERMITTENT PROBLEMS (See page 05–7)

DTC	P2118	THROTTLE ACTUATOR CONTROL MOTOR CURRENT RANGE/PERFORMANCE

CIRCUIT DESCRIPTION

The Electronic Throttle Control System (ETCS) has a dedicated power supply circuit. The voltage (+BM) is monitored and when the voltage is low (less than 4V), the ECM concludes that the ETCS has a fault and current to the throttle control motor is cut.
When the voltage becomes unstable, the ETCS itself becomes unstable. For this reason, when the voltage is low, the current to the motor is cut. If repairs are made and the system has returned to normal, turn the ignition switch to OFF. The ECM then allows current to flow to the motor and the motor can be restarted.
HINT:
This Electrical Throttle Control System (ETCS) does not use a throttle cable.

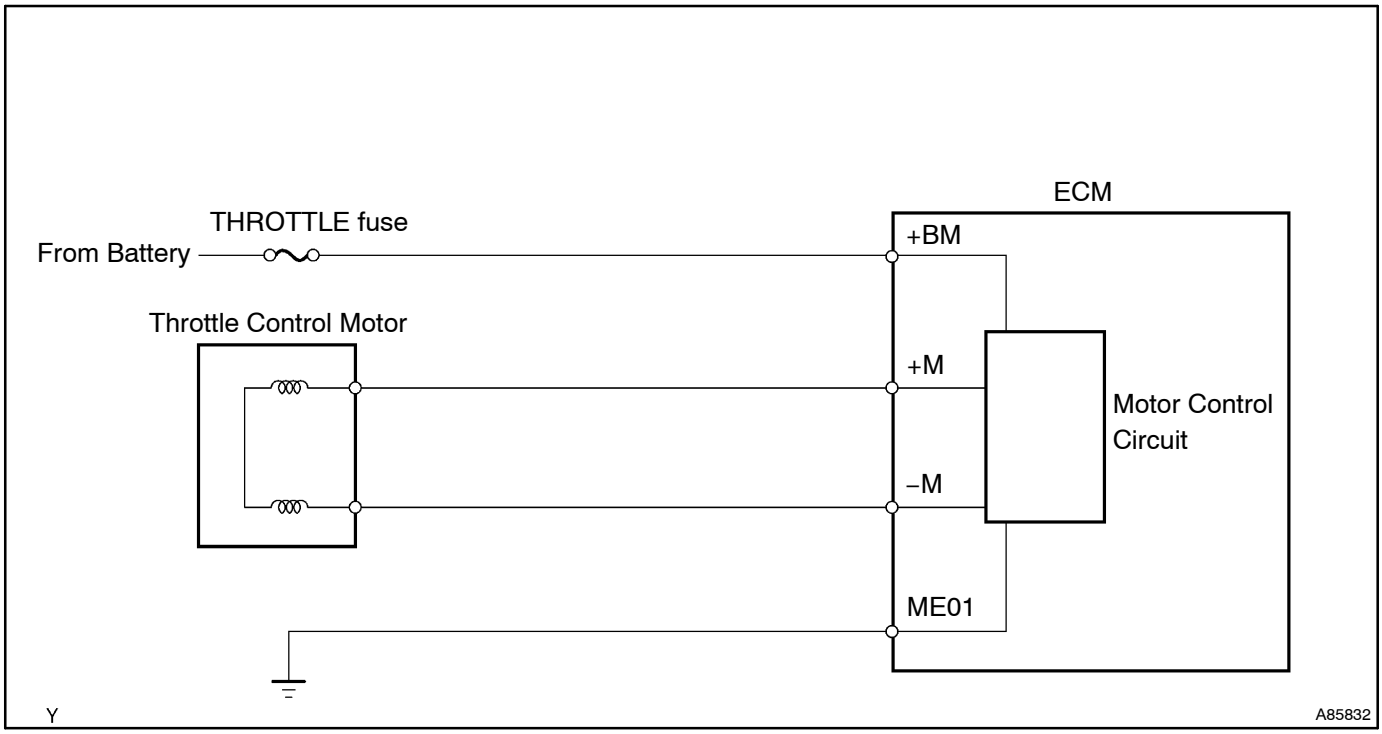

DTC No.	DTC Detection Condition	Trouble Area
P2118	Open in ETCS power source circuit (+BM) (1 trip detection logic)	• Open in ETCS power source circuit • THROTTLE fuse • ECM

WIRING DIAGRAM

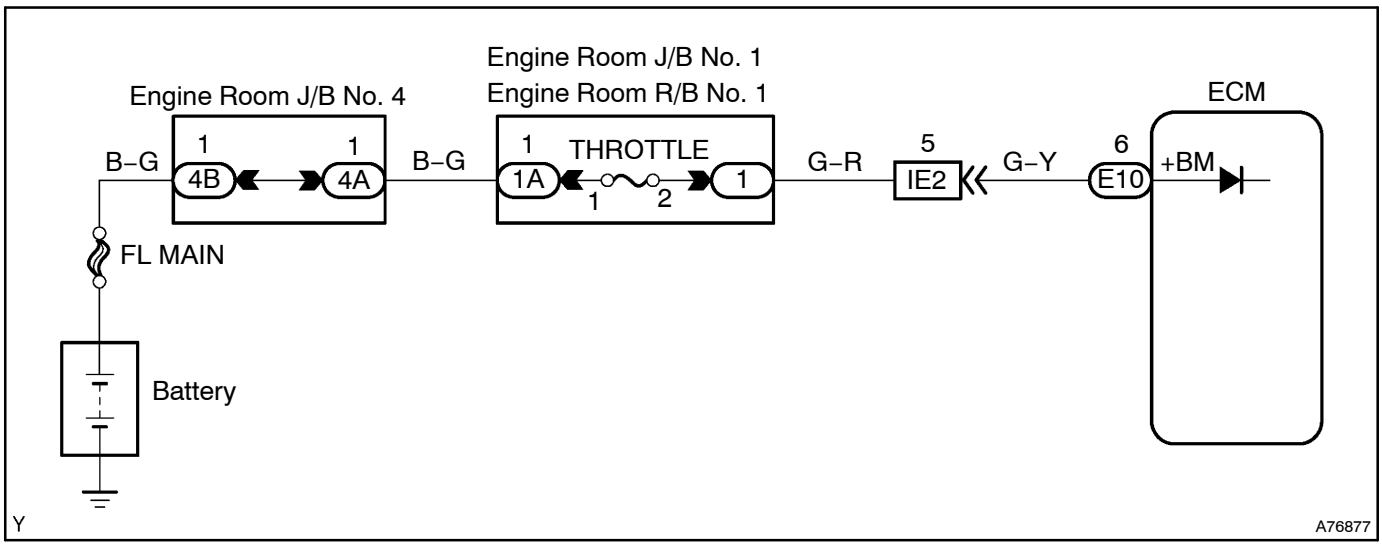

INSPECTION PROCEDURE

HINT:

Read freeze frame data using the hand–held tester. Freeze frame data records the engine conditions when a malfunction is detected. When troubleshooting, freeze frame data can help determine if the vehicle was running or stopped, if the engine was warmed up or not, if the air–fuel ratio was lean or rich, and other data from the time the malfunction occurred.

1	CHECK FUSE(THROTTLE FUSE)

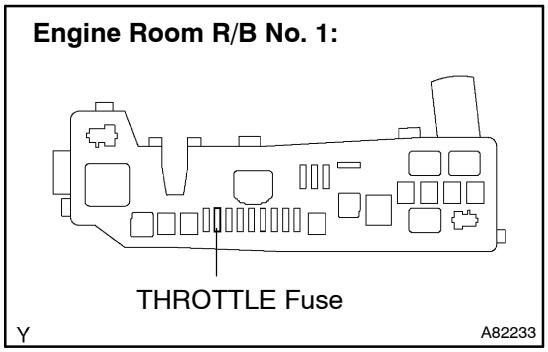

(a) Remove the THROTTLE fuse from the engine room R/B No. 1.

(b) Check for continuity in the THROTTLE fuse.

Standard: Continuity

(c) Reinstall the THROTTLE fuse.

NG → **CHECK FOR SHORT IN ALL HARNESSES AND COMPONENTS CONNECTED TO FUSE**

OK

2	INSPECT ECM(+BM VOLTAGE)

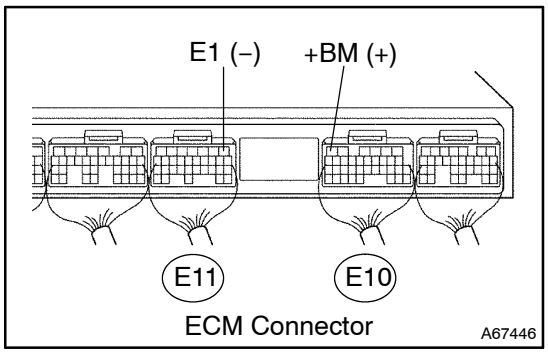

(a) Measure the voltage between the specified terminals of the E10 and E11 ECM connectors.

Standard:

Tester Connection	Specified Condition
+BM (E10–6) – E1 (E11–1)	9 to 14 V

OK	REPLACE ECM (See page 10–65 of Pub. No. RM1018E AVENSIS)

NG

3	CHECK HARNESS AND CONNECTOR(ECM – THROTTLE FUSE, THROTTLE FUSE – BATTERY)

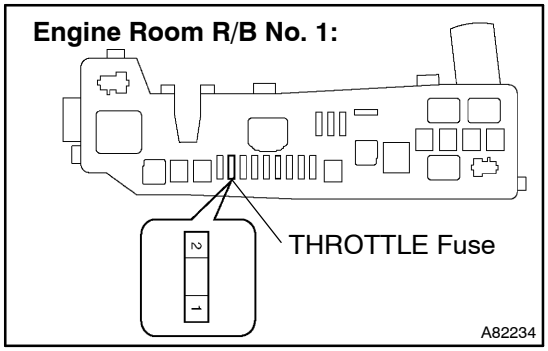

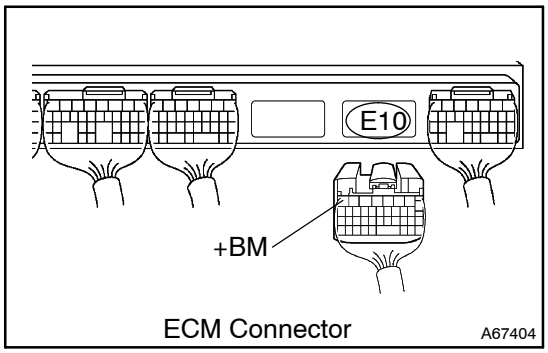

(a) Check the harness and the connector between the THROTTLE fuse and the ECM.
  (1) Remove the THROTTLE fuse from the engine room R/B No. 1.
  (2) Disconnect the E10 ECM connector.
  (3) Check the resistance between the wire harness side connectors.

Standard (Check for open):

Tester Connection	Specified Condition
Engine room R/B No. 1 (THROTTLE fuse terminal 2) – +BM (E10–6)	Below 1 Ω

Standard (Check for short):

Tester Connection	Specified Condition
Engine room R/B No. 1 (THROTTLE fuse terminal 2) or +BM (E10–6) – Body ground	10 kΩ or higher

  (4) Reinstall the THROTTLE fuse.
  (5) Reconnect the ECM connector.

(b) Check the harness and the connector between the THROTTLE fuse and the battery.
  (1) Remove the THROTTLE fuse from the engine room R/B No. 1.
  (2) Disconnect the positive battery cable.
  (3) Check the resistance between the wire harness side connectors.

Standard (Check for open):

Tester Connection	Specified Condition
Battery positive cable – Engine room R/B No. 1 (THROTTLE fuse terminal 1)	Below 1 Ω

Standard (Check for short):

Tester Connection	Specified Condition
Battery positive cable or Engine room R/B No. 1 (THROTTLE fuse terminal 1) – Body ground	10 kΩ or higher

  (4) Reinstall the THROTTLE fuse.
  (5) Reconnect the positive battery cable.

NG	REPAIR OR REPLACE HARNESS OR CONNECTOR

OK

CHECK AND REPLACE ENGINE ROOM RELAY BLOCK

DTC	P2119	THROTTLE ACTUATOR CONTROL THROTTLE BODY RANGE/PERFORMANCE

CIRCUIT DESCRIPTION

The Electric Throttle Control System (ETCS) is composed of a throttle motor that operates the throttle valve, a throttle position sensor that detects the opening angle of the throttle valve, an accelerator pedal position sensor that detects the accelerator pedal position, and the ECM that controls the ETCS system.
The ECM operates the throttle motor to position the throttle valve for proper response to driver inputs. The throttle position sensor, mounted on the throttle body, detects the opening angle of the throttle valve and provides this signal to the ECM so that the ECM can regulate the throttle motor.

DTC No.	DTC Detection Condition	Trouble Area
P2119	Throttle opening angle continues to vary greatly from target throttle opening angle (1 trip detection logic)	• Electric throttle control system • ECM

WIRING DIAGRAM

Refer to DTC P2102 on page 05–214.

INSPECTION PROCEDURE

HINT:
Read freeze frame data using the hand–held tester. Freeze frame data records the engine conditions when a malfunction is detected. When troubleshooting, freeze frame data can help determine if the vehicle was running or stopped, if the engine was warmed up or not, if the air–fuel ratio was lean or rich, and other data from the time the malfunction occurred.

1	CHECK OTHER DTC OUTPUT(IN ADDITION TO DTC P2119)

(a) Connect the hand–held tester to the DLC3.
(b) Turn the ignition switch to ON and turn the hand–held tester ON.
(c) Select the item: DIAGNOSIS / OBD/MOBD / DTC INFO / CURRENT CODES.
(d) Read the DTCs using the hand–held tester.
Result:

Display (DTC output)	Proceed to
P2119	A
P2119 and other DTCs	B

HINT:
If any other codes besides P2119 are output, perform troubleshoot for those DTCs first.

B	GO TO RELEVANT DTC CHART (See page 05–31)

A

2 INSPECT THROTTLE BODY ASSY

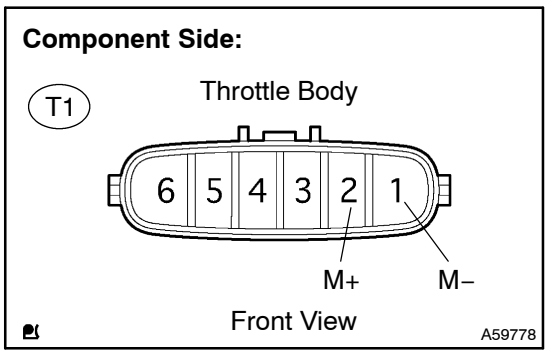

(a) Disconnect the T1 throttle body connector.
(b) Measure the resistance between the terminals of the throttle body.
Standard:

Tester Connection	Specified Condition
M+ (T1–2) – M– (T1–1)	0.3 to 100 Ω at 20°C (68°F)

(c) Reconnect the throttle body connector.

NG → **REPLACE THROTTLE BODY ASSY (See Page 10–8)**

OK

3 REPLACE ECM AND CLEAR DTC(CHECK IF DTC OUTPUT RECURS)

(a) Replace the ECM.
(b) Clear the DTC (see page 05–19).
(c) Start and warm up the engine.
(d) Run the engine at idle for 15 seconds or more.
(e) Read the DTC using the hand–held tester (see page 05–19).
Standard: No DTC output.

OK → **NORMAL**

NG

REPLACE THROTTLE BODY ASSY (See Page 10–8)

DTC	P2120	THROTTLE/PEDAL POSITION SENSOR/SWITCH ”D” CIRCUIT

DTC	P2122	THROTTLE/PEDAL POSITION SENSOR/SWITCH ”D” CIRCUIT LOW INPUT

DTC	P2123	THROTTLE/PEDAL POSITION SENSOR/SWITCH ”D” CIRCUIT HIGH INPUT

DTC	P2125	THROTTLE/PEDAL POSITION SENSOR/SWITCH ”E” CIRCUIT

DTC	P2127	THROTTLE/PEDAL POSITION SENSOR/SWITCH ”E” CIRCUIT LOW INPUT

DTC	P2128	THROTTLE/PEDAL POSITION SENSOR/ SWITCH ”E” CIRCUIT HIGH INPUT

DTC	P2138	THROTTLE/PEDAL POSITION SENSOR/SWITCH ”D”/”E” VOLTAGE CORRELATION

HINT:
This is the repair procedure for the accelerator pedal position sensor.

CIRCUIT DESCRIPTION

HINT:

- This Electrical Throttle Control System (ETCS) does not use a throttle cable.
- This accelerator pedal position sensor is a non–contact type.

The accelerator pedal position sensor is mounted on the accelerator pedal bracket. The accelerator pedal position sensor has 2 sensor elements / signal output: VPA1 and VPA2. VPA1 is used to detect the actual accelerator pedal angle (used for engine control) and VPA2 is used to detect malfunctions in VPA1. Voltage change of VPA1 and VPA2 change between 0V and 5V depending on the accelerator pedal angle.

The ECM monitors the accelerator pedal angle from VPA1 and VPA2 signal output, and controls the throttle motor based on these signals.

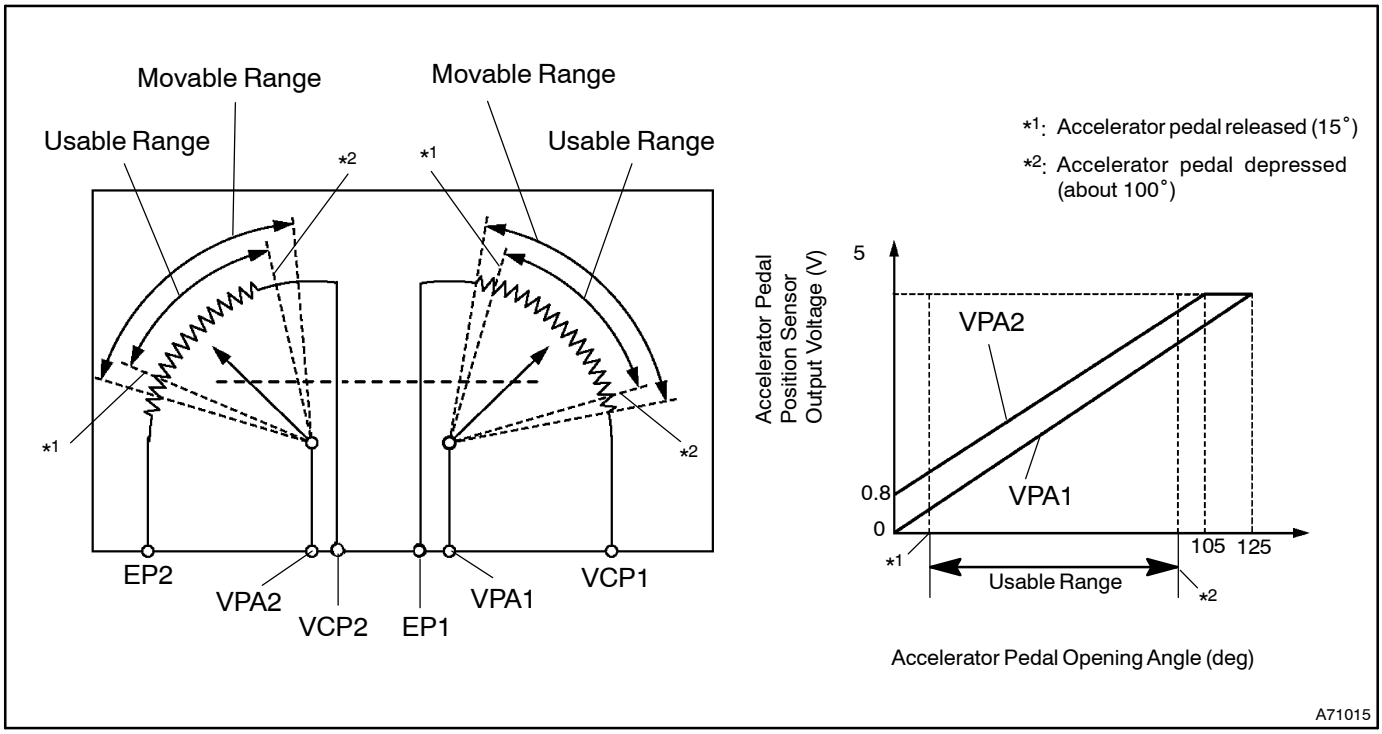

DTC No.	DTC Detection Condition	Trouble Area
P2120	Condition (a) continues for 0.5 second or more: (a) VPA is 0.2 V or less, or 4.8 V or more	• Accelerator pedal position sensor • ECM
P2122	Condition (a) continues for 0.5 second or more when accelerator pedal is fully released: (a) VPA is 0.2 V or less	• Accelerator pedal position sensor • Open in VCPA circuit • VPA circuit open or ground short • ECM
P2123	Condition (a) continues for 2.0 seconds or more: (a) VPA is 4.8 V or more	• Accelerator pedal position sensor • Open in EPA circuit • ECM
P2125	Condition (a) continues for 0.5 second or more: (a) VPA2 is 0.5 V or less, or 4.8 V or more	• Accelerator pedal position sensor • ECM
P2127	Condition (a) continues for 0.5 second or more when accelerator pedal is fully released: (a) VPA2 is 0.5 V or less	• Accelerator pedal position sensor • Open in VCP2 circuit • VPA2 circuit open or ground short • ECM
P2128	Conditions (a) and (b) continue for 2.0 seconds or more: (a) VPA2 is 4.8 V or more (b) VPA is 0.2 V or more, and 3.45 V or less	• Accelerator pedal position sensor • Open in EPA2 circuit • ECM
P2138	Condition (a) or (b) continues for 2.0 seconds or more: (a) Difference between VPA and VPA2 is 0.02 V or less (b) VPA is 0.2 V or less and VPA2 is 0.5 V or less	• VPA and VPA2 circuit are short–circuit • Accelerator pedal position sensor • ECM

HINT:

After confirming DTC P2120, P2122, P2123, P2125, P2127, P2128 and P2138, confirm the throttle valve opening using the hand–held tester.

Trouble area	Accelerator pedal position expressed as voltage output			
	Accelerator pedal released		Accelerator pedal depressed	
	ACCEL POS #1	ACCEL POS #2	ACCEL POS #1	ACCEL POS #2
VCP circuit open	0 to 0.2 V	0 to 0.2 V	0 to 0.2 V	0 to 0.2 V
VPA circuit open or ground short	0 to 0.2 V	1.2 to 2.0 V	0 to 0.2 V	3.4 to 5.3 V
VPA2 circuit open or ground short	0.5 to 1.1 V	0 to 0.2 V	2.6 to 4.5 V	0 to 0.2 V
EP circuit open	4.5 to 5.5 V	4.5 to 5.5 V	4.5 to 5.5 V	4.5 to 5.5 V

WIRING DIAGRAM

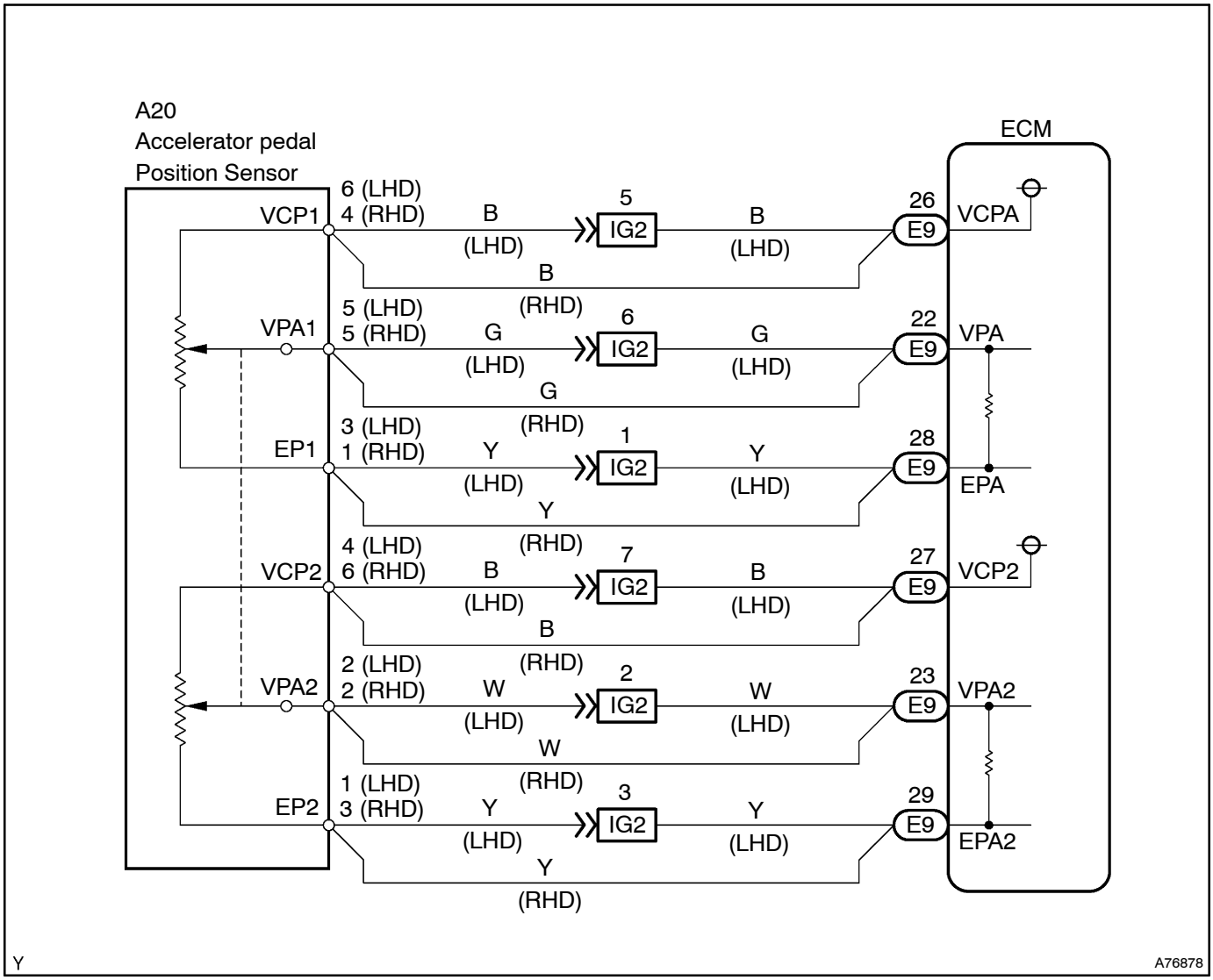

INSPECTION PROCEDURE

HINT:

Read freeze frame data using the hand–held tester. Freeze frame data records the engine conditions when a malfunction is detected. When troubleshooting, freeze frame data can help determine if the vehicle was running or stopped, if the engine was warmed up or not, if the air–fuel ratio was lean or rich, and other data from the time the malfunction occurred.

1 READ VALUE OF HAND–HELD TESTER(ACCEL POS #1 AND ACCEL POS #2)

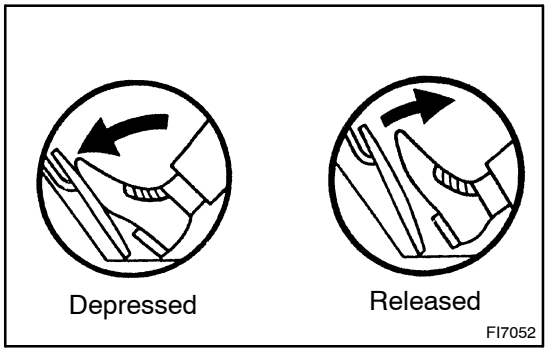

(a) Connect the hand–held tester to the DLC3.
(b) Turn the ignition switch to ON.
(c) On the hand–held tester, select the item: DIAGNOSIS / OBD/MOBD / DATA LIST / ETCS / ACCEL POS #1 and ACCEL POS #2. Read the values.

Standard:

Accelerator Pedal	ACCEL POS #1	ACCEL POS #2
Released	0.5 to 1.1 V	1.5 to 2.9 V
Depressed	2.5 to 4.6 V	3.5 to 5.5 V

OK → **REPLACE ECM (See page 10–65 of Pub. No. RM1018E AVENSIS)**

NG

2 INSPECT ACCELERATOR PEDAL ASSY(ACCELERATOR PEDAL POSITION SENSOR)

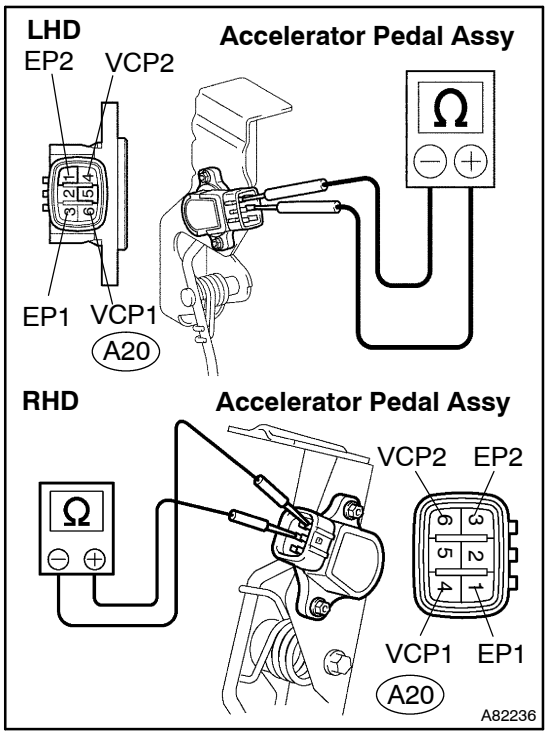

(a) Disconnect the A20 accelerator pedal position sensor connector.
(b) Measure the resistance between each terminal.

Standard (LHD):

Tester Connection	Specified Condition
EP1 (A20–3) – VCP1 (A20–6)	2.25 to 4.75 kΩ at 20°C (68°F)
EP2 (A20–1) – VCP2 (A20–4)	2.25 to 4.75 kΩ at 20°C (68°F)

Standard (RHD):

Tester Connection	Specified Condition
EP1 (A20–1) – VCP1 (A20–4)	2.25 to 4.75 kΩ at 20°C (68°F)
EP2 (A20–3) – VCP2 (A20–6)	2.25 to 4.75 kΩ at 20°C (68°F)

(c) Reconnect the accelerator pedal position sensor connector.

NG → **REPLACE ACCELERATOR PEDAL ASSY**

OK

3 INSPECT ECM(VCPA AND VCP2 VOLTAGE)

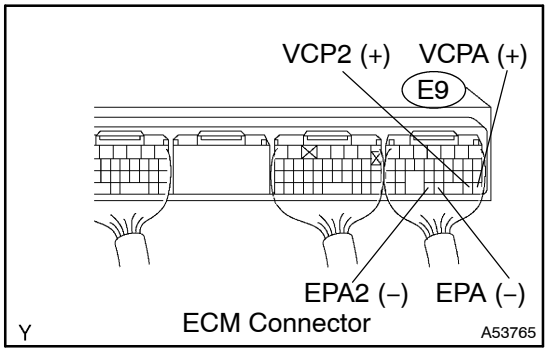

(a) Disconnect the A20 accelerator pedal position sensor connector.
(b) Turn the ignition switch to ON.
(c) Measure the voltage between the terminals of the E9 ECM connector.

Standard:

Tester Connection	Specified Condition
VCPA (E9–26) – EPA (E9–28)	4.5 to 5.5 V
VCP2 (E9–27) – EPA2 (E9–29)	4.5 to 5.5 V

(d) Reconnect the accelerator pedal position sensor connector.

NG → **REPLACE ECM (See page 10–65 of Pub. No. RM1018E AVENSIS)**

OK

4 INSPECT ECM(VPA AND VPA2 VOLTAGE)

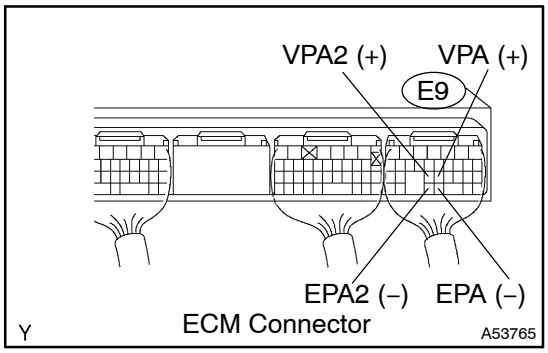

(a) Turn the ignition switch to ON.
(b) Measure the voltage between the terminals of the E9 ECM connector.

Accelerator Pedal Position	Tester Connection	Specified Condition
Released	VPA (E9–22) – EPA (E9–28)	0.5 to 1.1 V
Depressed	VPA (E9–22) – EPA (E9–28)	2.5 to 4.6 V
Released	VPA2 (E9–23) – EPA2 (E9–29)	1.5 to 2.9 V
Depressed	VPA2 (E9–23) – EPA2 (E9–29)	3.5 to 5.5 V

OK → **REPLACE ECM (See page 10–65 of Pub. No. RM1018E AVENSIS)**

NG

5 CHECK HARNESS AND CONNECTOR(ACCELERATOR PEDAL POSITION SENSOR – ECM)

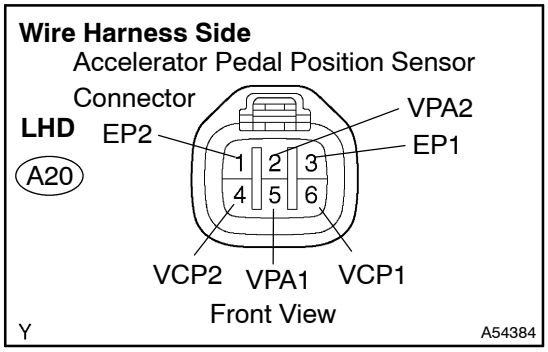

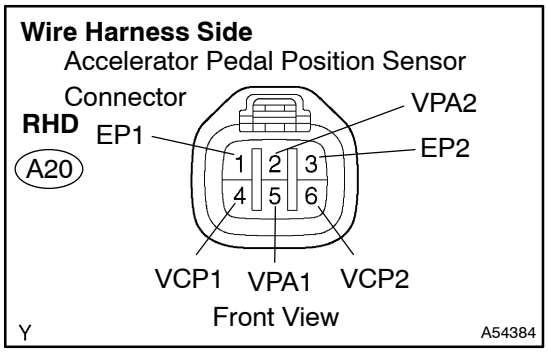

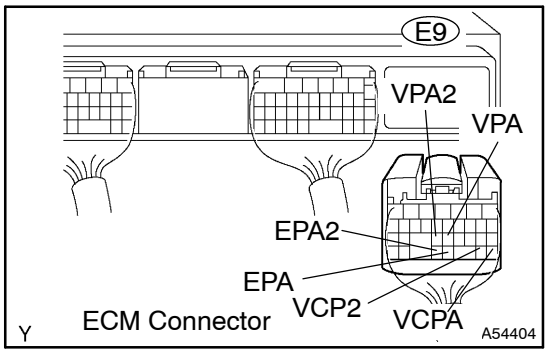

(a) Disconnect the A20 accelerator pedal position sensor connector.

(b) Disconnect the E9 ECM connector.

(c) Check the resistance between the wire harness side connectors.

Standard (LHD):

(Check for open)

Tester Connection	Specified Condition
VPA1 (A20–5) – VPA (E9–22)	Below 1 Ω
EP1 (A20–3) – EPA (E9–28)	Below 1 Ω
VCP1 (A20–6) – VCPA (E9–26)	Below 1 Ω
VPA2 (A20–2) – VPA2 (E9–23)	Below 1 Ω
EP2 (A20–1) – EPA2 (E9–29)	Below 1 Ω
VCP2 (A20–4) – VCP2 (E9–27)	Below 1 Ω

(Check for Short)

Tester Connection	Specified Condition
VPA1 (A20–5) or VPA (E9–22) – Body ground	10 kΩ or higher
EP1 (A20–3) or EPA (E9–28) – Body ground	10 kΩ or higher
VCP1 (A20–6) or VCPA (E9–26) – Body ground	10 kΩ or higher
VPA2 (A20–2) or VPA2 (E9–23) – Body ground	10 kΩ or higher
EP2 (A20–1) or EPA2 (E9–29) – Body ground	10 kΩ or higher
VCP2 (A20–4) or VCP2 (E9–27) – Body ground	10 kΩ or higher

Standard (RHD):

(Check for open)

Tester Connection	Specified Condition
VPA1 (A20–5) – VPA (E9–22)	Below 1 Ω
EP1 (A20–1) – EPA (E9–28)	Below 1 Ω
VCP1 (A20–4) – VCPA (E9–26)	Below 1 Ω
VPA2 (A20–2) – VPA2 (E9–23)	Below 1 Ω
EP2 (A20–3) – EPA2 (E9–29)	Below 1 Ω
VCP2 (A20–6) – VCP2 (E9–27)	Below 1 Ω

(Check for Short)

Tester Connection	Specified Condition
VPA1 (A20–5) or VPA (E9–22) – Body ground	10 kΩ or higher
EP1 (A20–1) or EPA (E9–28) – Body ground	10 kΩ or higher
VCP1 (A20–4) or VCPA (E9–26) – Body ground	10 kΩ or higher
VPA2 (A20–2) or VPA2 (E9–23) – Body ground	10 kΩ or higher
EP2 (A20–3) or EPA2 (E9–29) – Body ground	10 kΩ or higher
VCP2 (A20–6) or VCP2 (E9–27) – Body ground	10 kΩ or higher

(d) Reconnect the accelerator pedal position sensor connector.

(e) Reconnect the ECM connector.

NG	**REPAIR OR REPLACE HARNESS OR CONNECTOR**

OK

REPLACE ECM (See page 10–65 of Pub. No. RM1018E AVENSIS)

DTC	P2121	THROTTLE/PEDAL POSITION SENSOR/SWITCH ”D” CIRCUIT RANGE/PERFORMANCE

HINT:
This is the repair procedure of accelerator pedal position sensor.

CIRCUIT DESCRIPTION

Refer to DTC P2120 on page 05–224.

DTC No.	DTC Detection Condition	Trouble Area
P2121	Condition (a) and (b) continue for 0.5 second: (a) Difference between VPA1 and VPA2 deviates from the standard (b) Idling is OFF	• Open or short in accelerator pedal position sensor circuit • Accelerator pedal position sensor • ECM

WIRING DIAGRAM

Refer to DTC P2120 on page 05–224.

INSPECTION PROCEDURE

HINT:
Read freeze frame data using the hand–held tester. Freeze frame data records the engine conditions when a malfunction is detected. When troubleshooting, freeze frame data can help determine if the vehicle was running or stopped, if the engine was warmed up or not, if the air–fuel ratio was lean or rich, and other data from the time the malfunction occurred.

1	READ VALUE OF HAND–HELD TESTER(ACCEL POS #1 AND ACCEL POS #2)

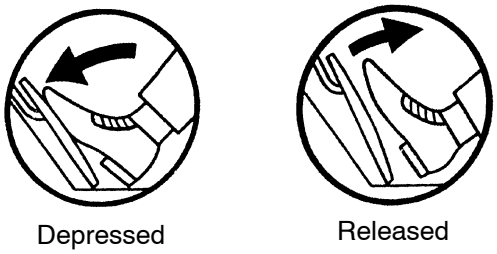

(a) Connect the hand–held tester to the DLC3.
(b) Turn the ignition switch to ON.
(c) On the hand–held tester, select the item: DIAGNOSIS / OBD/MOBD / DATA LIST / ETCS / ACCEL POS #1 and ACCEL POS #2. Read the values.

Standard:

Accelerator Pedal	ACCEL POS #1	ACCEL POS #2
Released	0.5 to 1.1 V	1.5 to 2.9 V
Depressed	2.5 to 4.6 V	3.5 to 5.5 V

OK → **REPLACE ECM (See page 10–65 of Pub. No. RM1018E AVENSIS)**

NG

2 INSPECT ACCELERATOR PEDAL ASSY(ACCELERATOR PEDAL POSITION SENSOR)

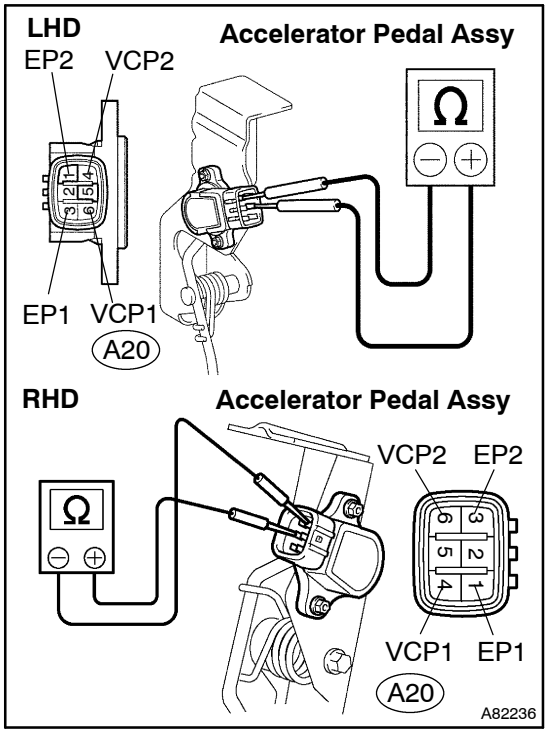

(a) Disconnect the A20 accelerator pedal position sensor connector.

(b) Measure the resistance between each terminal.

Standard (LHD):

Tester Connection	Resistance
EP1 (A20–3) – VCP1 (A20–6)	2.25 to 4.75 kΩ at 20°C (68°F)
EP2 (A20–1) – VCP2 (A20–4)	2.25 to 4.75 kΩ at 20°C (68°F)

Standard (RHD):

Tester Connection	Resistance
EP1 (A20–1) – VCP1 (A20–4)	2.25 to 4.75 kΩ at 20°C (68°F)
EP2 (A20–3) – VCP2 (A20–6)	2.25 to 4.75 kΩ at 20°C (68°F)

(c) Reconnect the accelerator pedal position sensor connector.

NG → **REPLACE ACCELERATOR PEDAL ASSY**

OK

3 INSPECT ECM(VPA AND VPA2 VOLTAGE)

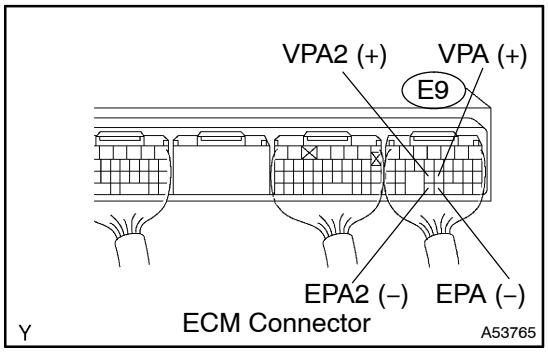

(a) Turn the ignition switch to ON.

(b) Measure the voltage between the terminals of the E9 ECM connector.

Standard:

Accelerator Pedal Position	Tester Connection	Specified Condition
Released	VPA (E9–22) – EPA (E9–28)	0.5 to 1.1 V
Depressed	VPA (E9–22) – EPA (E9–28)	2.5 to 4.6 V
Released	VPA2 (E9–23) – EPA2 (E9–29)	1.5 to 2.9 V
Depressed	VPA2 (E9–23) – EPA2 (E9–29)	3.5 to 5.5 V

OK → **REPLACE ECM (See page 10–65 of Pub. No. RM1018E AVENSIS)**

NG

4 CHECK HARNESS AND CONNECTOR(ACCELERATOR PEDAL POSITION SENSOR – ECM)

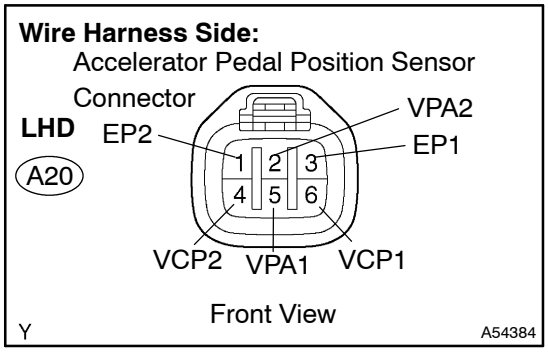

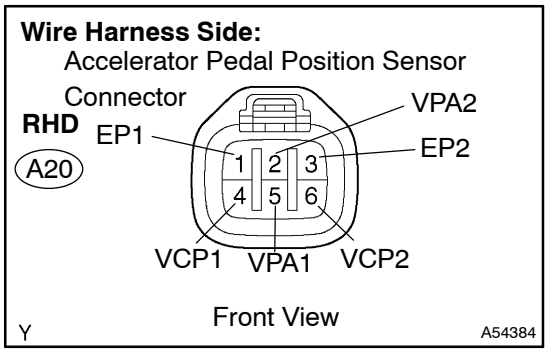

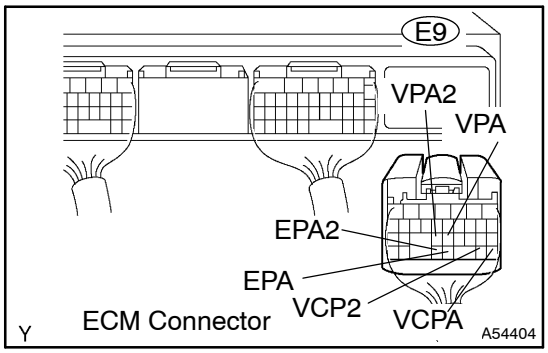

(a) Disconnect the accelerator pedal position sensor connector.

(b) Disconnect the E9 ECM connector.

(c) Check the resistance between the wire harness side connectors.

Standard (LHD):

(Check for open)

Tester Connection	Specified Condition
VPA1 (A20–5) – VPA (E9–22)	Below 1 Ω
EP1 (A20–3) – EPA (E9–28)	Below 1 Ω
VCP1 (A20–6) – VCPA (E9–26)	Below 1 Ω
VPA2 (A20–2) – VPA2 (E9–23)	Below 1 Ω
EP2 (A20–1) – EPA2 (E9–29)	Below 1 Ω
VCP2 (A20–4) – VCP2 (E9–27)	Below 1 Ω

(Check for Short)

Tester Connection	Specified Condition
VPA1 (A20–5) or VPA (E9–22) – Body ground	10 kΩ or higher
EP1 (A20–3) or EPA (E9–28) – Body ground	10 kΩ or higher
VCP1 (A20–6) or VCPA (E9–26) – Body ground	10 kΩ or higher
VPA2 (A20–2) or VPA2 (E9–23) – Body ground	10 kΩ or higher
EP2 (A20–1) or EPA2 (E9–29) – Body ground	10 kΩ or higher
VCP2 (A20–4) or VCP2 (E9–27) – Body ground	10 kΩ or higher

Standard (RHD):

(Check for open)

Tester Connection	Specified Condition
VPA1 (A20–5) – VPA (E9–22)	Below 1 Ω
EP1 (A20–1) – EPA (E9–28)	Below 1 Ω
VCP1 (A20–4) – VCPA (E9–26)	Below 1 Ω
VPA2 (A20–2) – VPA2 (E9–23)	Below 1 Ω
EP2 (A20–3) – EPA2 (E9–29)	Below 1 Ω
VCP2 (A20–6) – VCP2 (E9–27)	Below 1 Ω

(Check for Short)

Tester Connection	Specified Condition
VPA1 (A20–5) or VPA (E9–22) – Body ground	10 kΩ or higher
EP1 (A20–1) or EPA (E9–28) – Body ground	10 kΩ or higher
VCP1 (A20–4) or VCPA (E9–26) – Body ground	10 kΩ or higher
VPA2 (A20–2) or VPA2 (E9–23) – Body ground	10 kΩ or higher
EP2 (A20–3) or EPA2 (E9–29) – Body ground	10 kΩ or higher
VCP2 (A20–6) or VCP2 (E9–27) – Body ground	10 kΩ or higher

(d) Reconnect the accelerator pedal position sensor connector.

(e) Reconnect the ECM connector.

NG	**REPAIR OR REPLACE HARNESS OR CONNECTOR**

OK

REPLACE ECM (See page 10–65 of Pub. No. RM1018E AVENSIS)

ECM POWER SOURCE CIRCUIT

CIRCUIT DESCRIPTION

When the ignition switch is turned ON, the positive battery voltage is applied to terminal IGSW of the ECM and the EFI relay (Markied: EFI) control circuit in the ECM sends a signal to terminal MREL of the ECM switching on the EFI relay.

This signal causes current to flow to the coil, closing the contacts of the EFI relay and supplying power to terminals +B and +B2 of the ECM.

If the ignition switch is turned OFF, the ECM holds the EFI relay on for maximum of 2 seconds to allow for the initial setting of the throttle valve.

WIRING DIAGRAM

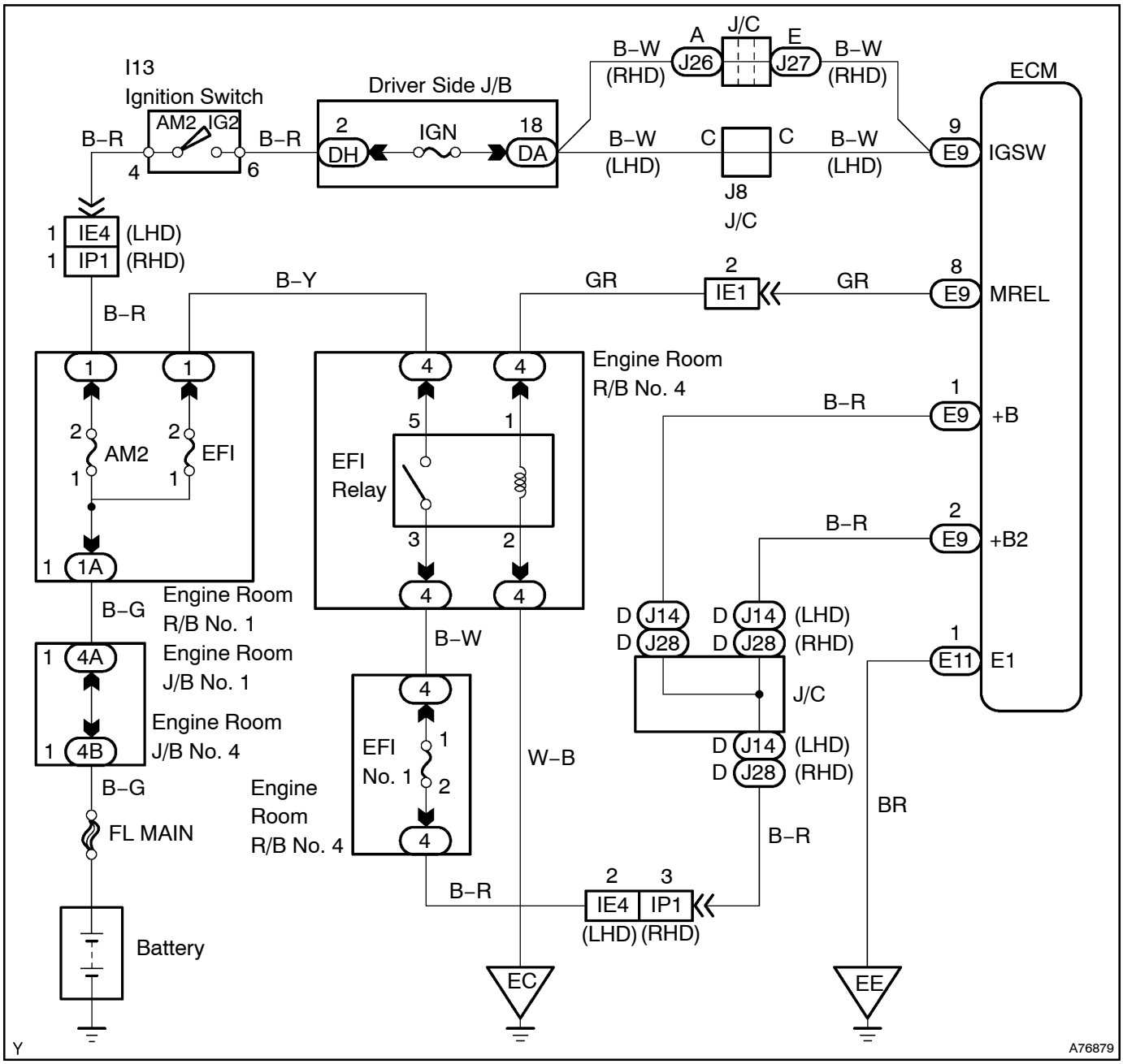

INSPECTION PROCEDURE

1 INSPECT ECM(+B VOLTAGE)

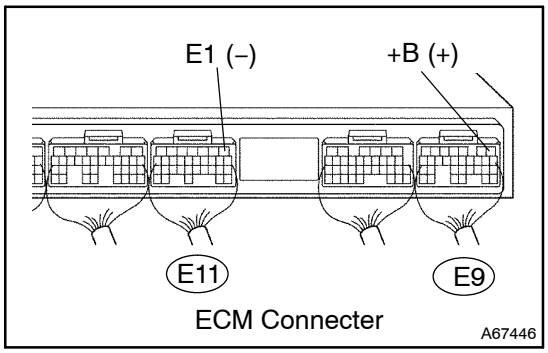

(a) Turn the ignition switch to ON.
(b) Measure the voltage between the terminals of the E9 and E11 ECM connectors.

Standard:

Tester Connection	Specified Condition
+B (E9–1) – E1 (E11–1)	9 to 14 V

OK → **PROCEED TO NEXT CIRCUIT INSPECTION SHOWN IN PROBLEM SYMPTOMS TABLE (See page 05–10)**

NG

2 CHECK HARNESS AND CONNECTOR(ECM – BODY GROUND)

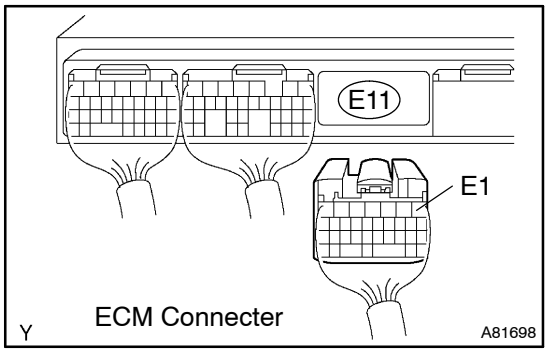

(a) Disconnect the negative (–) battery terminal.
(b) Disconnect the E11 ECM connectors.
(c) Check the resistance between the wire harness side connector.

Standard (Check for open):

Tester Connection	Specified Condition
E1 (E11–1) – Body ground	Below 1 Ω

(d) Reconnect the ECM connector.
(e) Reconnect the negative battery terminal.

NG → **REPAIR OR REPLACE HARNESS OR CONNECTOR**

OK

3 INSPECT ECM(IGSW VOLTAGE)

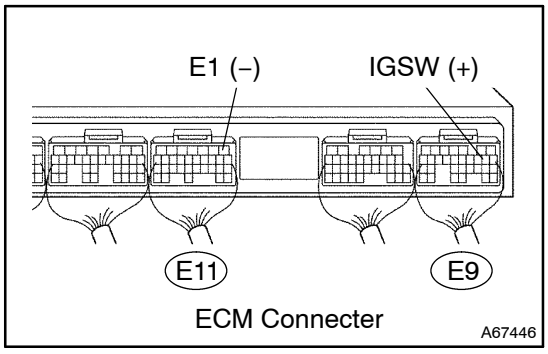

(a) Turn the ignition switch to ON.
(b) Measure the voltage between the terminals of the E9 and E11 ECM connectors.

Standard:

Tester Connection	Specified Condition
IGSW (E9–9) – E1 (E11–1)	9 to 14 V

OK → **Go to step 6**

NG

4 CHECK FUSE(IGN FUSE)

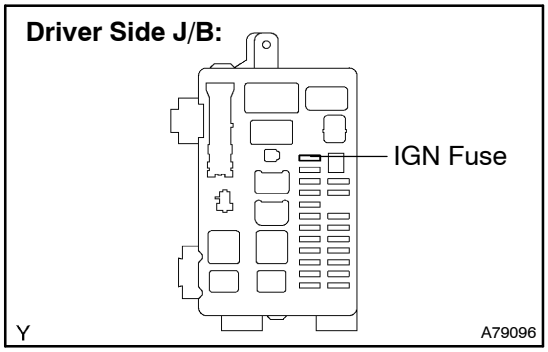

(a) Remove the IGN fuse from the driver side J/B.
(b) Check for continuity in the IGN fuse.
Standard: Continuity
(c) Reinstall the IGN fuse.

NG → **CHECK FOR SHORT IN ALL HARNESSES AND COMPONENTS CONNECTED TO FUSE**

OK

5 INSPECT IGNITION OR STARTER SWITCH ASSY

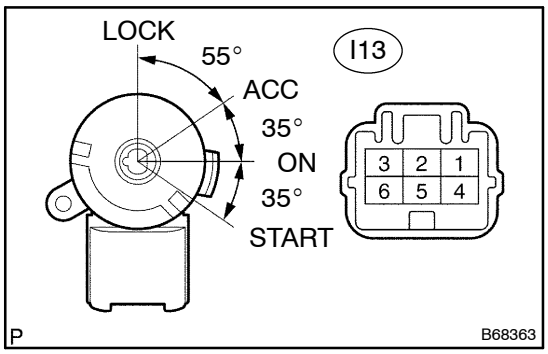

(a) Disconnect the I13 ignition switch connector.
(b) Measure the resistance between the connector terminals shown in the chart below.
Standard:

Switch Position	Tester Connection	Specified Condition
LOCK	All Terminals	10 kΩ or higher
ACC	2–3	Below 1 Ω
ON	1–3, 2–3, 4–6	Below 1 Ω
START	1–3, 4–5, 4–6	Below 1 Ω

(c) Reconnect the ignition switch connector.

NG → **REPLACE IGNITION OR STARTER SWITCH ASSY (GO TO NEXT STEP 6 AFTER THE REPLACEMENT)**

OK

CHECK AND REPAIR HARNESS AND CONNECTOR(BATTERY – IGNITION SWITCH, IGNITION SWITCH – ECM)

6 INSPECT ECM(MREL VOLTAGE)

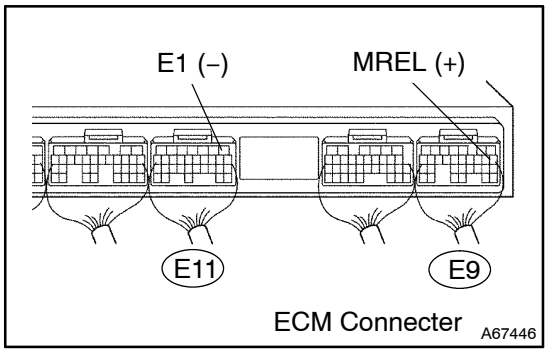

(a) Turn the ignition switch to ON.
(b) Measure the voltage between the terminals of the E9 and E11 ECM connectors.
Standard:

Tester Connection	Specified Condition
MREL (E9–8) – E1 (E11–1)	9 to 14 V

NG → **REPLACE ECM (See page 10–65 of Pub. No. RM1018E AVENSIS)**

OK

7 CHECK FUSE(EFI FUSE)

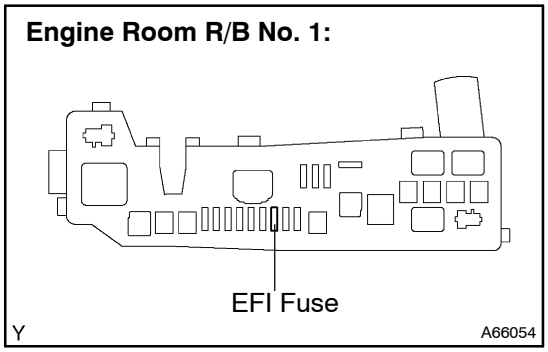

(a) Remove the EFI fuse from the engine room R/B No. 1.
(b) Check for continuity in the EFI fuse.
Standard: Continuity
(c) Reinstall the EFI fuse.

NG → **CHECK FOR SHORT IN ALL HARNESSES AND COMPONENTS CONNECTED TO FUSE**

OK

8 INSPECT EFI RELAY

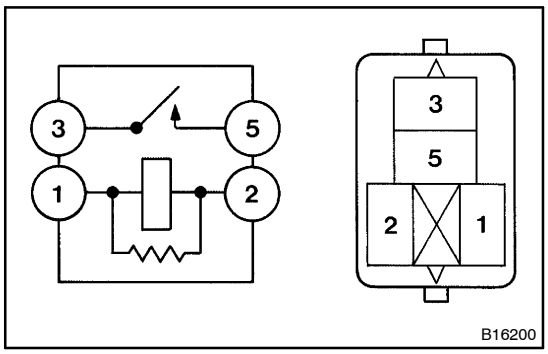

(a) Remove the EFI relay from the engine room R/B No. 4.
(b) Check for continuity in the EFI relay.
Standard:

Tester Connection	Specified Condition
1 – 2	Continuity
3 – 5	No Continuity
3 – 5	Continuity (Apply battery voltage to terminals 1 and 2)

(c) Reinstall the EFI relay.

NG → **REPLACE EFI RELAY**

OK

9 CHECK FUSE(EFI NO.1 FUSE)

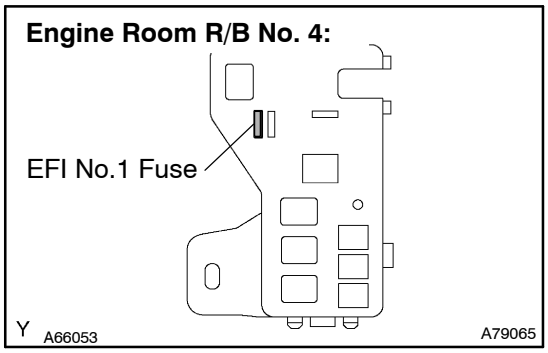

(a) Remove the EFI No. 1 fuse from the engine room R/B No. 4.
(b) Check for continuity in the EFI No. 1 fuse.
Standard: Continuity
(c) Reinstall the EFI No. 1 fuse.

NG → **CHECK FOR SHORT IN ALL HARNESSES AND COMPONENTS CONNECTED TO FUSE**

OK

10 CHECK HARNESS AND CONNECTOR(EFI RELAY – ECM, EFI RELAY – BODY GROUND)

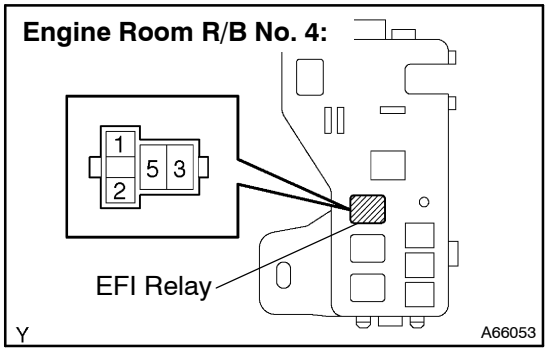

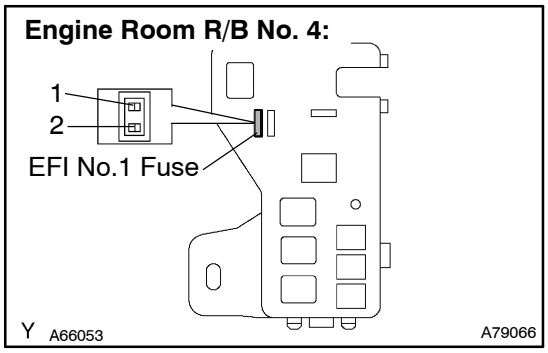

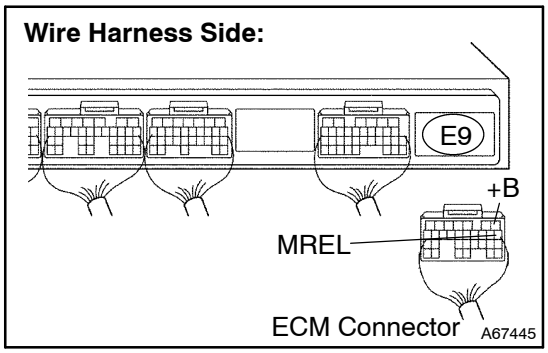

(a) Check harness and connector between the EFI relay and the ECM connector.

(1) Remove the EFI relay from the engine room R/B No. 4.

(2) Remove the EFI No.1 fuse from the engine room R/B No. 4.

(3) Disconnect the E9 ECM connector.

(4) Check the resistance between the wire harness side connectors.

Standard (Check for open):

Tester Connection	Specified Condition
Engine room R/B No. 4 (EFI relay terminal 1) – MREL (E9–8)	Below 1 Ω
Engine room R/B No. 4 (EFI relay terminal 3) – Engine room R/B No. 4 (EFI No. 1 fuse terminal 1)	Below 1 Ω
Engine room R/B No. 4 (EFI No. 1 fuse terminal 2) – +B (E9–1)	Below 1 Ω

Standard (Check for short):

Tester Connection	Specified Condition
Engine room R/B No. 4 (EFI relay terminal 1) or MREL (E9–8) – Body ground	10 kΩ or higher
Engine room R/B No. 4 (EFI relay terminal 3) or Engine room R/B No. 4 (EFI No. 1 fuse terminal 1) – Body ground	10 kΩ or higher
Engine room R/B No. 4 (EFI No. 1 fuse terminal 2) or +B (E9–1) – Body ground	10 kΩ or higher

(5) Reinstall the EFI relay.

(6) Reinstall the EFI No. 1 fuse.

(7) Reconnect the ECM connector.

(b) Check harness and connector between the EFI relay and the body ground.

(1) Remove the EFI relay from the engine room R/B No. 4.

(2) Check the resistance between the wire harness side connector and the body ground.

Standard (Check for open):

Tester Connection	Specified Condition
Engine room R/B No. 4 (EFI relay terminal 2) – Body ground	Below 1 Ω

(3) Reinstall the EFI relay.

OK → **REPAIR OR REPLACE HARNESS OR CONNECTOR**

NG

CHECK AND REPAIR HARNESS AND CONNECTOR(TERMINAL +B OF ECM – BATTERY POSITIVE TERMINAL)

FUEL PUMP CONTROL CIRCUIT

CIRCUIT DESCRIPTION

Refer to DTC P0230 on page 05–141.

WIRING DIAGRAM

Refer to DTC P0230 on page 05–141.

INSPECTION PROCEDURE

1	CHECK FUEL PUMP OPERATION (See page 11–4)

(a) Check if there is pressure in the fuel inlet hose.

HINT:

If there is fuel pressure, you will hear the sound of fuel flowing.

OK ⇒ Go to step 9

NG

2	PERFORM ACTIVE TEST BY HAND–HELD TESTER(OPERATION OF CIRCUIT OPENING RELAY)

(a) Connect the hand–held tester to the DLC3.
(b) Start the engine and warm it up.
(c) Turn the ignition switch to ON.
(d) Select the item: DIAGNOSIS / OBD/MOBD / ACTIVE TEST / FUEL PUMP/SPD.
(e) Check the relay operation when it is operated by the hand–held tester.
Standard: Operating sound can be heard from the relay.

OK ⇒ Go to step 4

NG

3	INSPECT RADIATOR FAN RELAY

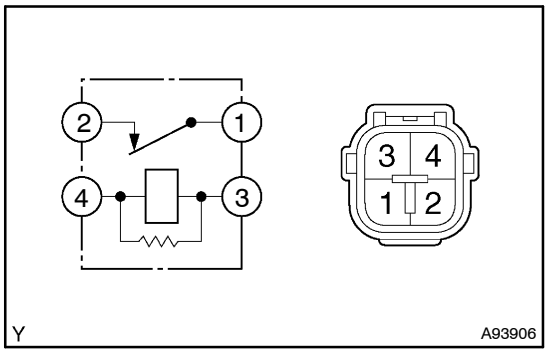

(a) Remove the R21 radiator fan relay.
(b) Check for continuity in the radiator fan relay relay.
Standard:

Tester Connection	Specified Condition
1 – 2	Continuity
3 – 4	Continuity
1 – 2	No Continuity (Apply battery voltage to terminals 3 and 4)

(c) Reinstall the radiator fan relay relay.

NG ⇒ REPLACE FUEL PUMP RELAY

OK

4	INSPECT FUEL PUMP ASSY (See page 11–7)

NG → REPLACE FUEL PUMP ASSY

OK

5	INSPECT CIRCUIT OPENING RELAY

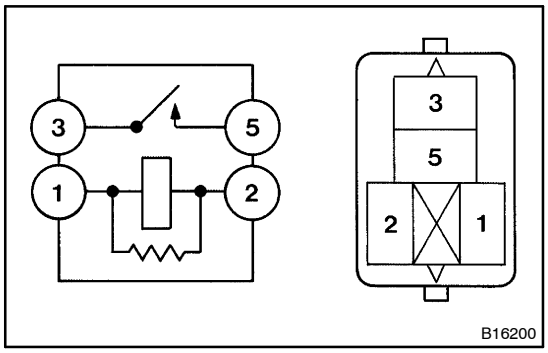

(a) Remove the C8 circuit opening relay.

(b) Check for continuity in the circuit opening relay.

Standard:

Tester Connection	Specified Condition
1 – 2	Continuity
3 – 5	No Continuity
3 – 5	Continuity (Apply battery voltage to terminals 1 and 2)

(c) Reinstall the circuit opening relay.

NG → REPLACE CIRCUIT OPENING RELAY

OK

6	CHECK HARNESS AND CONNECTOR(CIRCUIT OPENING RELY – RADIATOR FAN RELAY, RADIATOR FAN RELAY – FUEL PUMP, FUEL PUMP – BODY GROUND)

Wire Harness Side:

C8

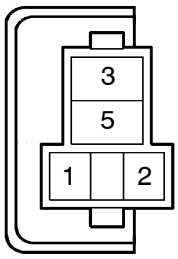

Circuit Opening Relay Connector A79099

Wire Harness Side:

R21 Radiator fun Relay Connector

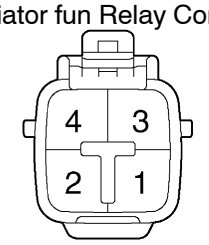

Y Front View A83889

Wire Harness Side:

F25

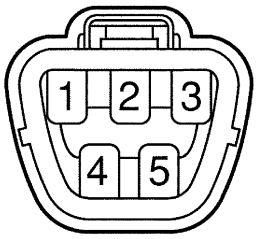

P Fuel Pump Connector A67586

(a) Check the harness and the connector between the circuit opening relay and the radiator fan relay.
  (1) Remove the C8 circuit opening relay.
  (2) Remove the R21 radiator fan relay.
  (3) Check the resistance between the wire harness side connectors.

Standard (Check for open):

Tester Connection	Specified Condition
Circuit opening relay (C8–3) – Radiator fun relay (R21–2)	Below 1 Ω
Circuit opening relay (C8–3) – Radiator fun relay (R21–4)	Below 1 Ω

Standard (Check for short):

Tester Connection	Specified Condition
Circuit opening relay (C8–3) or Radiator fun relay (R21–2) – Body ground	10 kΩ or higher
Circuit opening relay (C8–3) or Radiator fun relay (R21–4) – Body ground	10 kΩ or higher

  (4) Reinstall the circuit opening relay.
  (5) Reinstall the radiator fan relay relay.

(b) Check the harness and the connector between the fuel pump relay and the fuel pump.
  (1) Remove the R21 radiator fan relay.
  (2) Disconnect the F25 fuel pump connector.
  (3) Check the resistance between the wire harness side connectors.

Standard (Check for open):

Tester Connection	Specified Condition
Radiator fun relay (R21–1) – Fuel pump (F25–4)	Below 1 Ω

Standard (Check for short):

Tester Connection	Specified Condition
Radiator fun relay (R21–1) or Fuel pump (F25–4) – Body ground	10 kΩ or higher

  (4) Reinstall the radiator fan relay.
  (5) Disconnect the fuel pump connector.

(c) Check the harness and the connector between the fuel pump relay and the body ground.
  (1) Disconnect the F25 fuel pump connector.
  (2) Check the resistance between the wire harness side connector and body ground.

Standard (Check for open):

Tester Connection	Specified Condition
Fuel pump (F25–5) – Body ground	Below 1 Ω

  (3) Disconnect the fuel pump connector.

NG → **REPAIR OR REPLACE HARNESS OR CONNECTOR**

OK

7 INSPECT ECM(FC VOLTAGE)

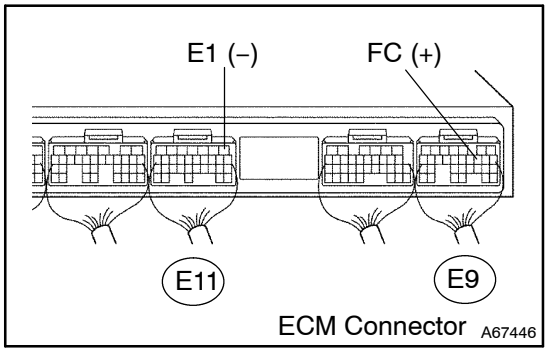

(a) Turn the ignition switch to ON.
(b) Measure the voltage between the terminals of the E9 and E11 ECM connectors.

Standard:

Tester Connection	Specified Condition
FC (E9–10) – E1 (E11–1)	9 to 14 V

NG → **PROCEED TO NEXT CIRCUIT INSPECTION SHOWN IN PROBLEM SYMPTOMS TABLE (See page 05–10)**

OK

8 CHECK HARNESS AND CONNECTOR(ECM – CIRCUIT OPENING RELAY)

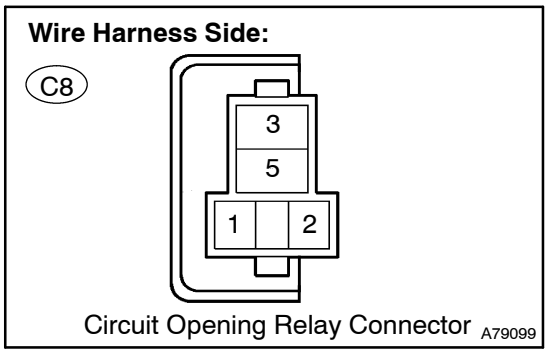

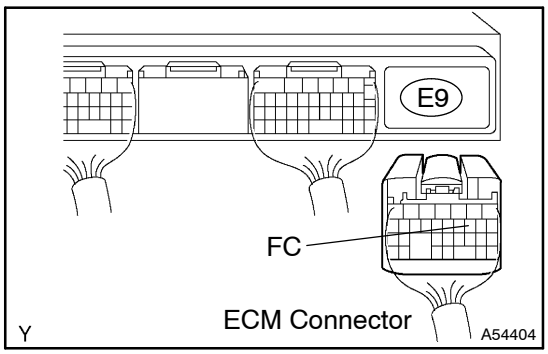

(a) Remove the C8 circuit opening relay.
(b) Disconnect the E9 ECM connector.
(c) Check the resistance between the wire harness side connectors.

Standard (Check for open):

Tester Connection	Specified Condition
Circuit opening relay (C8–2) – FC (E9–10)	Below 1 Ω

Standard (Check for short):

Tester Connection	Specified Condition
Circuit opening relay (C8–2) or FC (E9–10) – Body ground	10 kΩ or higher

(d) Reinstall the circuit opening relay.
(e) Reconnect the ECM connector.

NG → **REPAIR OR REPLACE HARNESS OR CONNECTOR**

OK

9 INSPECT FUEL PUMP RESISTOR

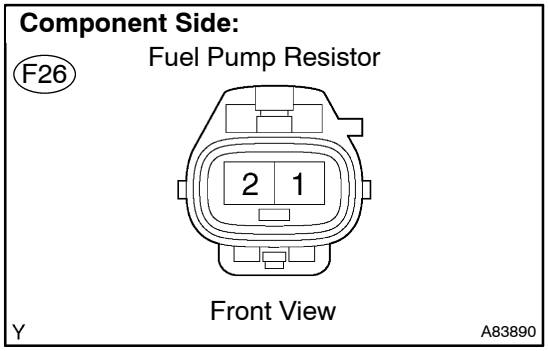

(a) Disconnect the F26 fuel pump resistor connector.
(b) Check the resistance between the terminals of the fuel pump resistor.

Standard:

Terminal No.	Specified condition
1 – 2	0.30 to 0.34 Ω at 20°C (68°F)

(c) Reconnect the fuel pump resistor connector.

NG → **REPLACE FUEL PUMP RESISTOR**

OK

10 CHECK HARNESS AND CONNECTOR(CIRCUIT OPENING RELAY – FUEL PUMP RESISTOR, FUEL PUMP – FUEL PUMP RESISTOR)

Wire Harness Side:

C8

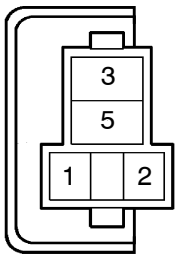

Circuit Opening Relay Connector A79099

Wire Harness Side:

F26 Fuel Pump Resistor Connector



Front View

Y A83891

Wire Harness Side:

F25

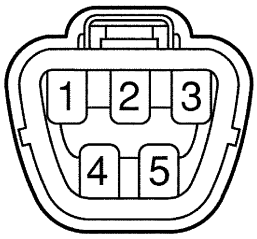

Fuel Pump Connector

P A67586

(a) Check the harness and the connector between the circuit opening relay and the fuel pump resistor.
  (1) Remove the C8 circuit opening relay.
  (2) Disconnect the F26 fuel pump resistor connector.
  (3) Check the resistance between the wire harness side connectors.

Standard (Check for open):

Tester Connection	Specified Condition
Circuit opening relay (C8–3) – Fuel pump resistor (F26–2)	Below 1 Ω

Standard (Check for short):

Tester Connection	Specified Condition
Circuit opening relay (C8–3) or Fuel pump resistor (F26–2) – Body ground	10 kΩ or higher

  (4) Reinstall the circuit opening relay.
  (5) Reconnect the fuel pump resistor connector.

(b) Check the harness and the connector between the fuel pimp resistor and the fuel pump resistor.
  (1) Disconnect the F25 fuel pump connector.
  (2) Disconnect the F26 fuel pump resistor connector.
  (3) Check the resistance between the wire harness side connectors.

Standard (Check for open):

Tester Connection	Specified Condition
Fuel pump (F25–4) – Fuel pump resistor (F26–1)	Below 1 Ω

Standard (Check for short):

Tester Connection	Specified Condition
Fuel pump (F25–4) or Fuel pump resistor (F26–1) – Body ground	10 kΩ or higher

  (4) Reconnect the fuel pump connector.
  (5) Reconnect the fuel pump resistor connector.

NG → **REPAIR OR REPLACE HARNESS OR CONNECTOR (See page 10–65 of Pub. No. RM1018E AVENSIS)**

OK

11 INSPECT IG2 RELAY

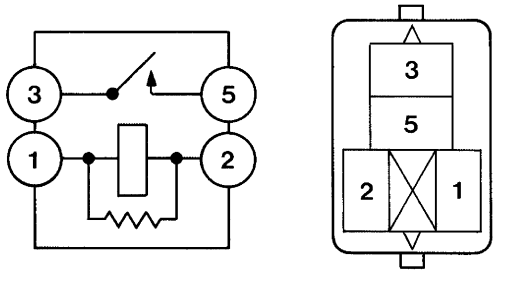

B16200

(a) Remove the IG2 relay from the engine room R/B No. 4.
(b) Check for continuity in the IG2 relay.

Standard:

Tester Connection	Specified Condition
1 – 2	Continuity
3 – 5	No Continuity
3 – 5	Continuity (Apply battery voltage to terminals 1 and 2)

(c) Reinstall the IG2 relay.

NG → REPLACE IG2 RELAY

OK

12	CHECK HARNESS AND CONNECTOR(IGNITION SWITCH – IG2 RELAY, IG2 FUSE – IG2 RELAY)

Driver Side J/B:

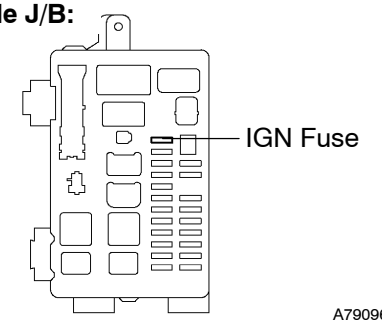

Wire Harness Side:

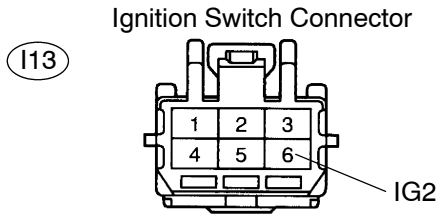

Engine Room R/B No. 4:

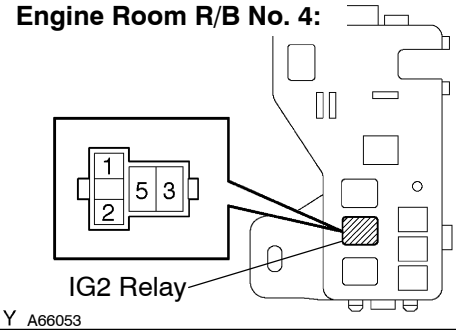

Engine Room R/B No. 1:

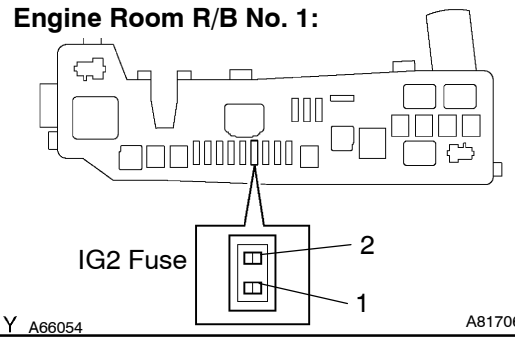

(a) Check the harness and the connector between the ignition switch and the IG2 relay.

(1) Inspect the IGN fuse.

- Remove the IGN fuse from the driver side J/B.
- Check for continuity in the IGN fuse.

Standard: Continuity

- Reinstall the IGN fuse.

(2) Disconnect the I13 ignition switch connector.

(3) Remove the IG2 relay from the engine room R/B No. 4.

(4) Check the resistance between the wire harness side connectors.

Standard (Check for open):

Tester Connection	Specified Condition
IG2 (I13–6) – Engine room R/B No. 4 (IG2 relay terminal 1)	Below 1 Ω

Standard (Check for short):

Tester Connection	Specified Condition
IG2 (I13–6) or Engine room R/B No. 4 (IG2 relay terminal 1) – Body ground	10 kΩ or higher

(5) Reconnect the ignition switch connector.

(6) Reinstall the IG2 relay.

(b) Check the harness and the connector between the IG2 fuse and the IG2 relay.

(1) Remove the IG2 fuse from the engine room R/B No. 1.

(2) Remove the IG2 relay from the engine room R/B No. 4.

(3) Check the resistance between the wire harness side connectors.

Standard (Check for open):

Tester Connection	Specified Condition
Engine room R/B No. 1 (IG2 fuse terminal 2) – Engine room R/B No. 4 (IG2 relay terminal 5)	Below 1 Ω

Standard (Check for short):

Tester Connection	Specified Condition
Engine room R/B No. 1 (IG2 fuse terminal 2) or Engine room R/B No. 4 (IG2 relay terminal 5) – Body ground	10 kΩ or higher

(4) Reinstall the IG2 fuse.

(5) Reinstall the IG2 relay.

NG	REPAIR OR REPLACE HARNESS OR CONNECTOR

OK

13	CHECK HARNESS AND CONNECTOR(IG2 RELAY – CIRCUIT OPENING RELAY, CIRCUIT OPENING RELAY – ECM)

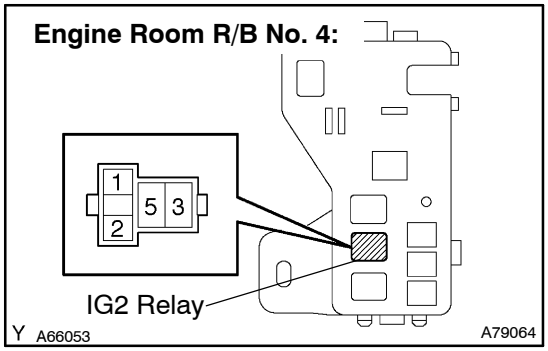

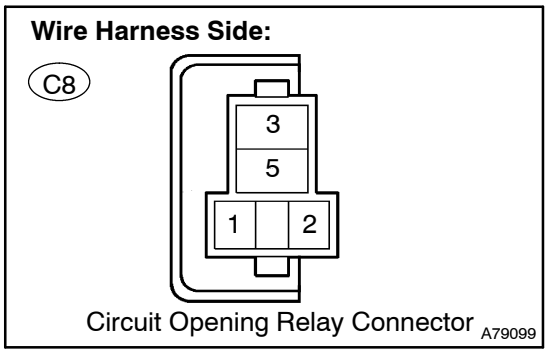

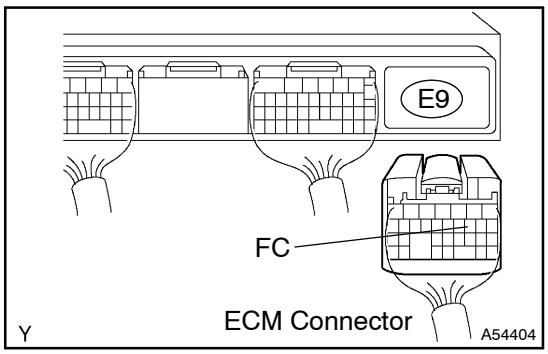

(a) Check the harness and the connector between the IG2 relay and the circuit opening relay.
  (1) Remove the IG2 relay from the engine room R/B No. 4.
  (2) Remove the C8 circuit opening relay.
  (3) Check the resistance between the wire harness side connectors.

Standard (Check for open):

Tester Connection	Specified Condition
Engine room R/B No. 4 (IG2 relay terminal 3) – Circuit opening relay (C8–1)	Below 1 Ω
Engine room R/B No. 4 (IG2 relay terminal 3) – Circuit opening relay (C8–5)	Below 1 Ω

Standard (Check for short):

Tester Connection	Specified Condition
Engine room R/B No. 4 (IG2 relay terminal 3) or Circuit opening relay (C8–1) – Body ground	10 kΩ or higher
Engine room R/B No. 4 (IG2 relay terminal 3) or Circuit opening relay (C8–5) – Body ground	10 kΩ or higher

  (4) Reinstall the IG2 relay.
  (5) Reinstall the circuit opening relay.

(b) Check the harness and the connector between the circuit opening relay and the ECM.
  (1) Remove the C8 circuit opening relay.
  (2) Disconnect the E9 ECM connector.
  (3) Check the resistance between the wire harness side connectors.

Standard (Check for open):

Tester Connection	Specified Condition
Circuit opening relay (2) – FC (E9–10)	Below 1 Ω

Standard (Check for short):

Tester Connection	Specified Condition
Circuit opening relay (2) or FC (E9–10) – Body ground	10 kΩ or higher

  (4) Reinstall the circuit opening relay.
  (5) Reconnect the ECM connector.

NG	REPAIR OR REPLACE HARNESS OR CONNECTOR

OK

14 CHECK HARNESS AND CONNECTOR(RADIATOR FAN RELAY – ECM)

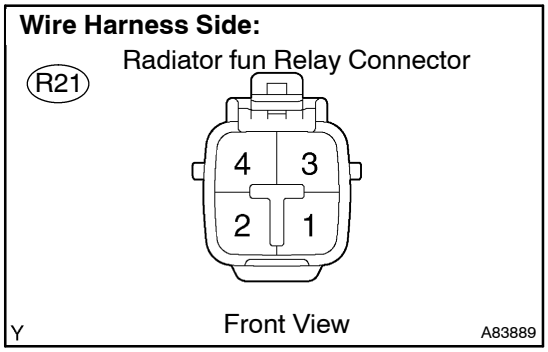

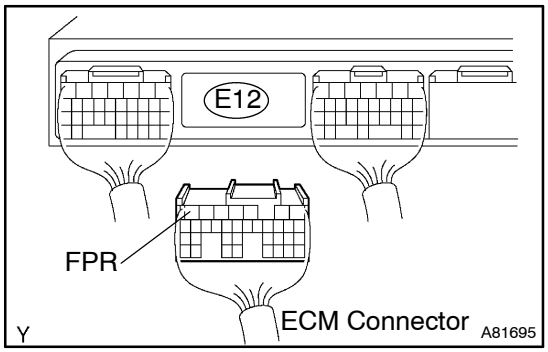

(a) Check the harness and the connector between the radiator fan relay and the ECM.
   (1) Remove the R21 radiator fan relay.
   (2) Disconnect the E12 ECM connector.
   (3) Check the resistance between the wire harness side connectors.

Standard (Check for open):

Tester Connection	Specified Condition
Radiator Fan relay (R21–3) – FPR (E12–7)	Below 1 Ω

Standard (Check for short):

Tester Connection	Specified Condition
Radiator Fan relay (R21–3) or FPR (E12–7) – Body ground	10 kΩ or higher

   (4) Reinstall the radiator fan relay.
   (5) Reconnect the ECM connector.

NG → **REPAIR OR REPLACE HARNESS OR CONNECTOR**

OK

REPLACE ECM (See page 10–65 of Pub. No. RM1018E AVENSIS)

STARTER SIGNAL CIRCUIT

CIRCUIT DESCRIPTION

When the engine is cranked, the intake air flow is slow, so fuel vaporization is poor. A rich mixture is therefore necessary in order to achieve good startability. While the engine is being cranked, the battery voltage is applied to terminal STA of the ECM. The starter signal is mainly used to increase the fuel injection volume for the starting injection control and after–start injection control.

WIRING DIAGRAM

Refer to DTC P0617 on page 05–203.

INSPECTION PROCEDURE

HINT:

This diagnostic troubleshooting procedure is on the premise that the engine is being cranked under normal conditions. If the engine does not crank, proceed to the problem symptoms table on page 05–10.

1	READ VALUE OF HAND–HELD TESTER(STARTER SIGNAL)

(a) Connect the hand–held tester to the DLC3.
(b) Turn the ignition switch to ON and turn the hand–held tester ON.
(c) On the hand–held tester, select the item: DIAGNOSIS / OBD/MOBD / DATA LIST / ALL / STARTER SIG. Read the values.

Result:

Ignition Switch Position	ON	START
STA Signal	OFF	ON

OK → **PROCEED TO NEXT CIRCUIT INSPECTION SHOWN IN PROBLEM SYMPTOMS TABLE (See page 05–10)**

NG

2 CHECK HARNESS AND CONNECTOR(ECM – STARTER RELAY)

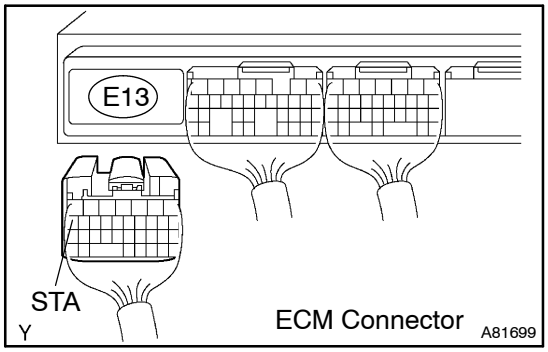

(a) Disconnect the E13 ECM connector.
(b) Remove the ST relay from the driver side R/B.
(c) Check the resistance between the wire harness side connectors.

Standard (Check for open):

Tester Connection	Specified Condition
STA (E13–17) – Driver side R/B (ST relay terminal 1)	Below 1 Ω

Standard (Check for short):

Tester Connection	Specified Condition
STA (E13–17) or Driver side R/B (ST relay terminal 1) – Body ground	10 kΩ or higher

(d) Reconnect the ECM connector.
(e) Reconnect the ST relay.

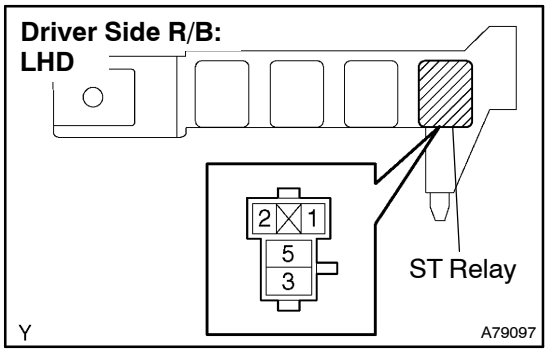

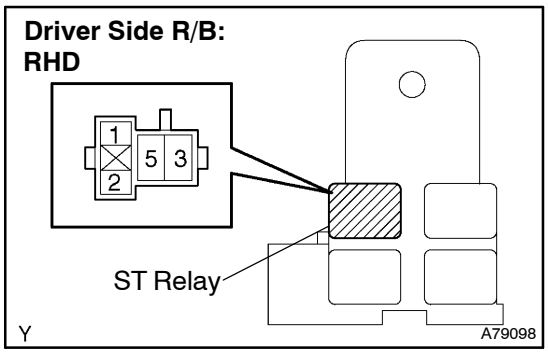

NG → **REPAIR OR REPLACE HARNESS OR CONNECTOR**

OK

REPLACE ECM (See page 10–65 of Pub. No. RM1018E AVENSIS)

CHECK ENGINE WARNING LIGHT CIRCUIT

CIRCUIT DESCRIPTION

The CHK ENG is used to indicate the ECM's detection of a vehicle malfunction.
The instrument panel IGN fuse provides the circuit power and the ECM provides the circuit ground that illuminates the CHK ENG.

CHK ENG operations should be checked visually:
The CHK ENG should be illuminated when the ignition is first turned to ON. If the CHK ENG is always ON or OFF, use the hand–held tester and follow the procedures below to determine the cause of the problem.

WIRING DIAGRAM

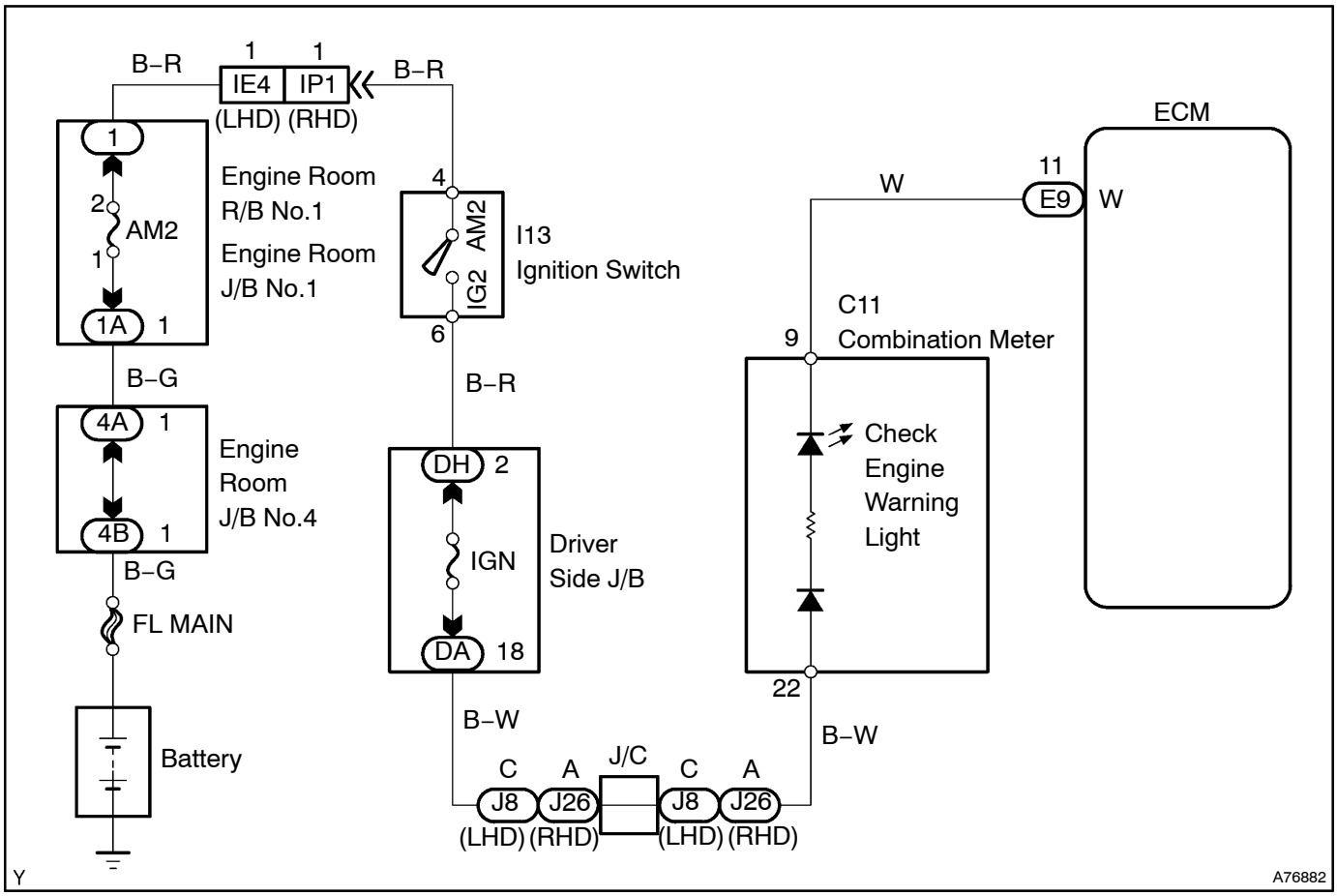

INSPECTION PROCEDURE

HINT:
Troubleshoot each trouble symptom in accordance with the chart below.

CHK ENG remains on	Start inspection from step 1
CHK ENG is not illuminated	Start inspection from step 3

1	CLEAR DTC

(a) Connect the hand–held tester to the DLC 3.
(b) Turn the ignition switch to ON and turn the hand–held tester ON.
(c) Read the DTC (see page 05–19).
(d) Clear the DTC (see page 05–19).
(e) Check that the CHK ENG is not illuminated.
Standard: CHK ENG is not illuminated

OK	REPAIR CIRCUIT INDICATED BY OUTPUT DTC (See page 05–7)

NG

2	CHECK HARNESS AND CONNECTOR(CHECK FOR SHORT IN WIRE HARNESS)

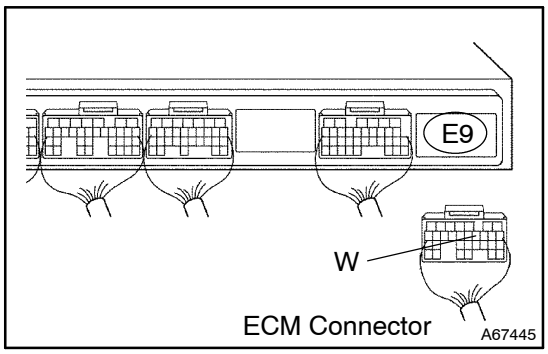

(a) Disconnect the E9 ECM connector.
(b) Turn the ignition switch to ON.
(c) Check that the CHK ENG is not illuminated.
Standard: CHK ENG is not illuminated
(d) Reconnect the ECM connector.

NG	CHECK AND REPAIR HARNESS AND CONNECTOR

OK

REPLACE ECM (See page 10–65 of Pub. No. RM1018E AVENSIS)

3	CHECK CHK ENG CONDITION

(a) Check that the CHK ENG is illuminated when turning the ignition switch to ON.
Standard: CHK ENG is illuminated

OK	SYSTEM OK

NG

4	INSPECT COMBINATION METER ASSY(CHK ENG CIRCUIT)

(a) See the combination meter troubleshooting procedure on page 05–10.

NG	REPAIR OR REPLACE BULB OR COMBINATION METER ASSEMBLY

OK

CHECK AND REPAIR HARNESS AND CONNECTOR (COMBINATION METER – ECM)

ECD SYSTEM (1CD–FTV)(From September, 2003)

PRECAUTION

05DVP–02

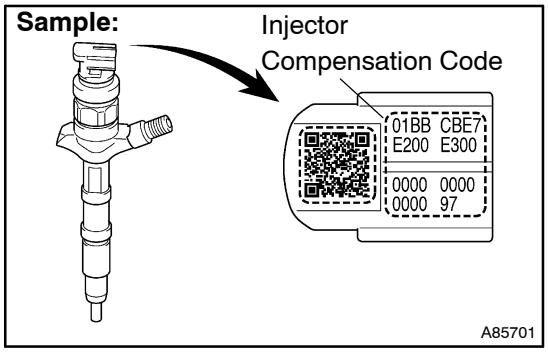

1. INJECTOR COMPENSATION CODE

(a) Since each injector has its own fuel injection characteristic, the ECM compensates this by slightly modifying injection duration in order to optimize fuel injection volume. Compensating data for the optimum injection volume, in the form of a 30–digit–alphanumeric value, has been imprinted on the head portion of each injector as the injector compensation code.

(b) The injector compensation code will be required to register to the ECM when replacing the injectors or the ECM (see page 05–277).

(c) If an incorrect injector compensation code was registered to the ECM, it may rattle the engine assembly or the engine idling may become rough. In addition, it may become a cause of engine failure or shorten the life of the engine.

2. DIFFICULT TO ENGINE START, ENGINE STALL OR BLACK SMOKE

(a) If the customer's problem description is applicable to one of the following problems, refer to the troubleshooting on the pages shown below:

(1) Engine start difficulties, or engine stall, see page 05–502.

(2) Black smoke, see page 05–512.

054JE–09

LOCATION

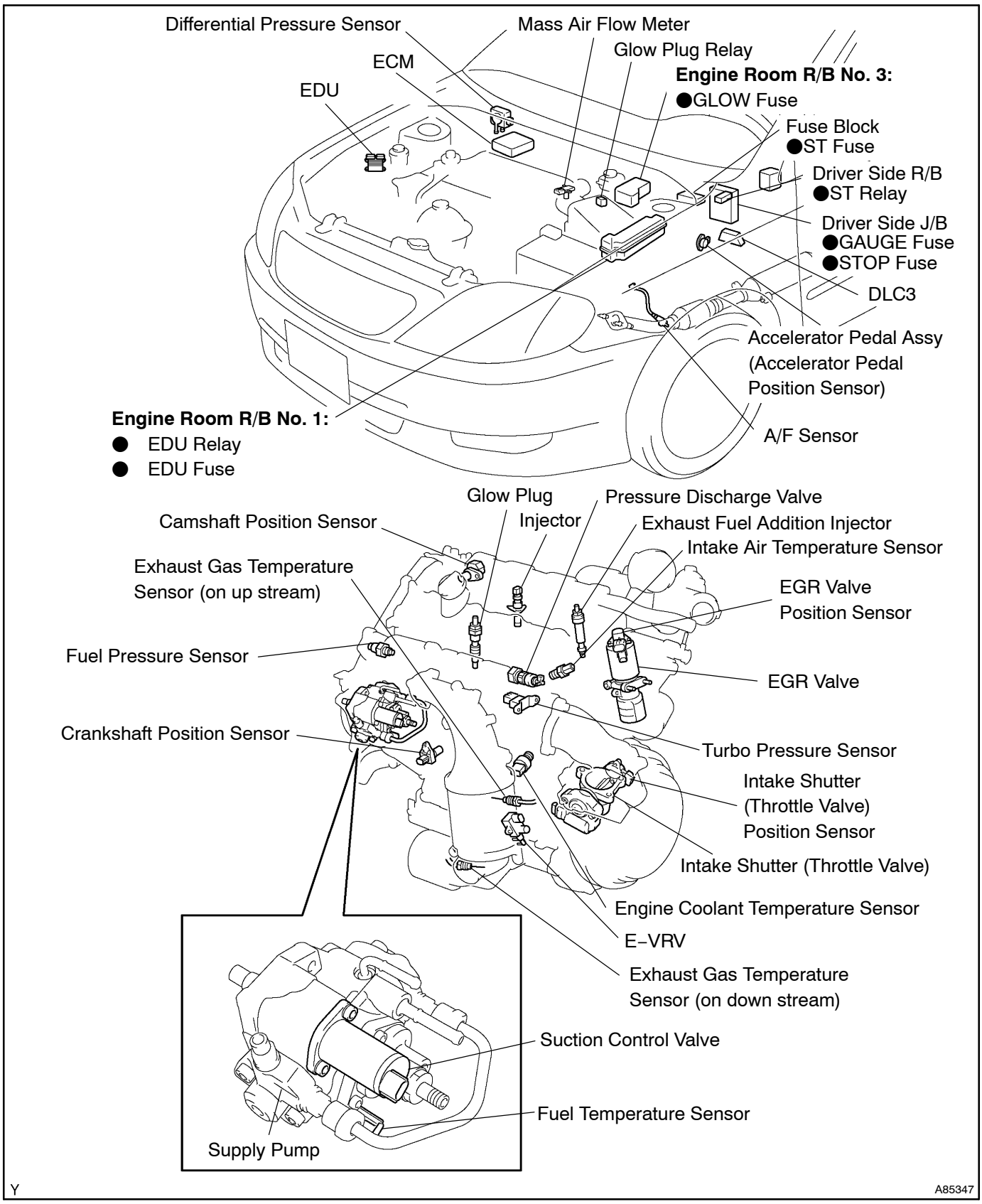

05I7Z–01

SYSTEM DESCRIPTION

1. ENGINE CONTROL SYSTEM

Engine Control System Diagram:

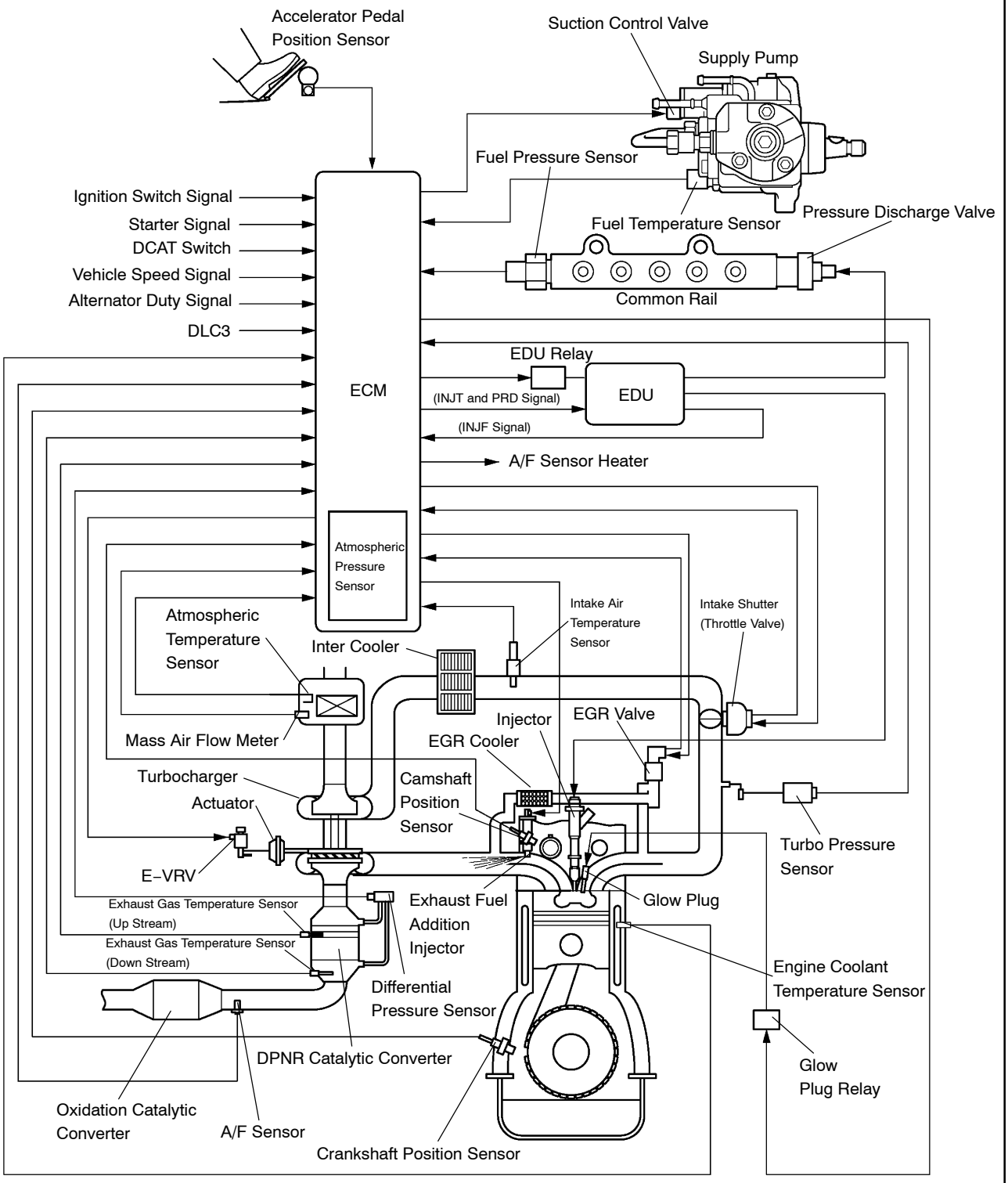

Y

A91210

2. TOYOTA D–CAT DESCRIPTION

(a) TOYOTA D–CAT:

Diesel Clean Advanced Technology (TOYOTA D–CAT) comprehensively regulates engine control (consists of a catalytic system and a fuel injection system) that purifies both particulate matter (PM) and nitrogen oxides (NOx) discharged by diesel engines.

The catalytic system purifies hydrocarbons (HC) and carbon monoxides (CO), and reduces PM and NOx with a catalytic converter with the Diesel Particulate–NOx Reduction system (DPNR). The fuel injection system adds fuel into the exhaust port using the exhaust fuel addition injector to produce RICH state for NOx reduction and maintain a proper catalyst temperature for DPNR catalyst regeneration.

TOYOTA D–CAT Diagram:

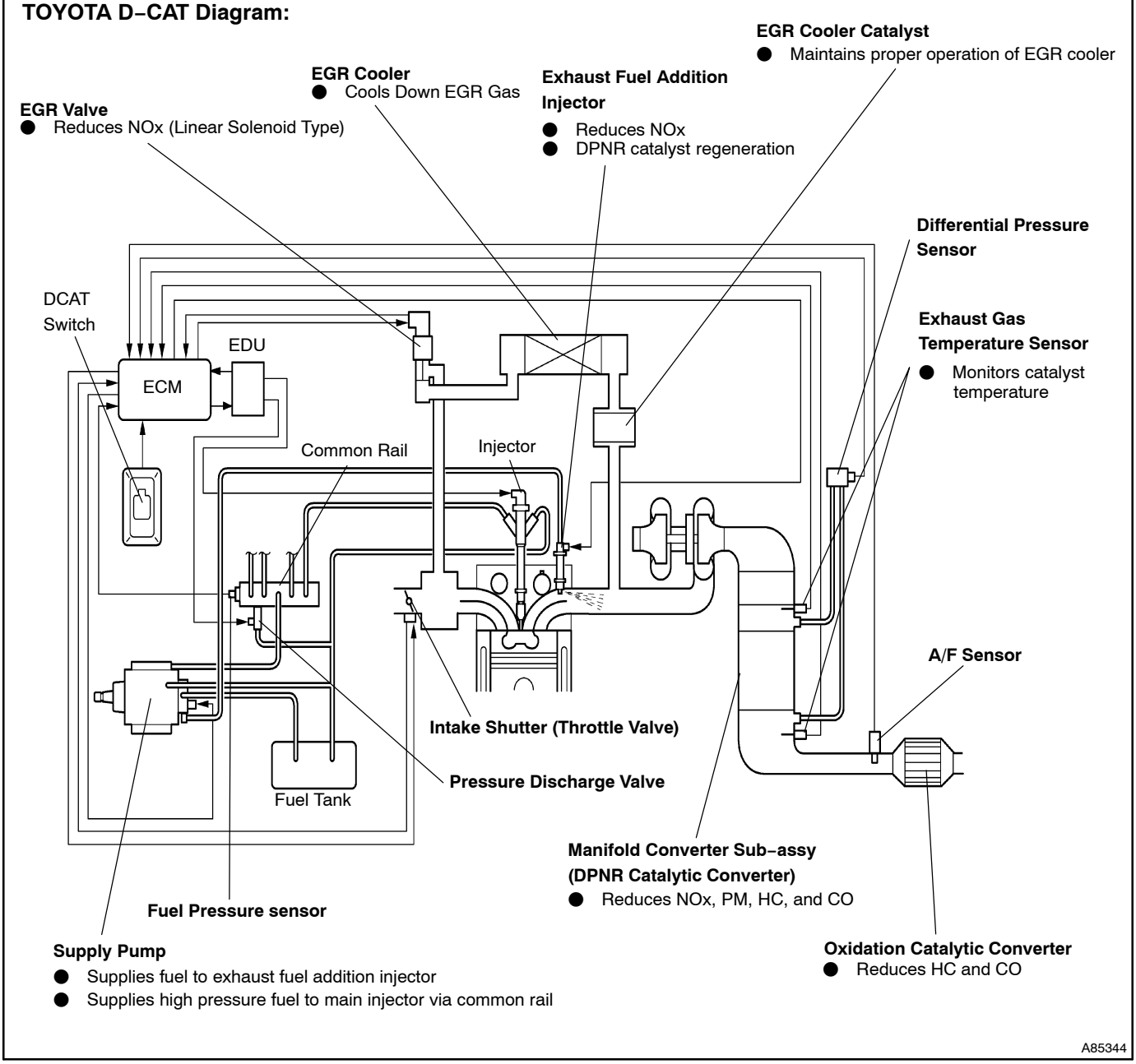

(b) TOYOTA D–CAT COMPONENTS:

Component	Description
DPNR catalytic converter	Reduces HC, CO, PM, and NOx.
Exhaust fuel addition injector	Adds fuel into the exhaust port in order to produce RICH air–fuel ratio for NOx reduction. Also, raises catalyst temperature for DPNR catalyst regeneration.
Exhaust gas temperature sensor	Used for estimating DPNR catalytic converter temperature and adjusting fuel addition by ECM while DPNR catalyst regeneration is performed. Also, detects DPNR catalytic converter temperature to prevent the catalytic converter temperature from rising too high.
Differential pressure sensor	Detects the volume of PM deposits in and incorrect vacuum hose arrangement on the DPNR catalytic converter.
A/F sensor	Used for controlling air–fuel ratio. By controlling the air–fuel ratio, combustion control for low temperature combustion and DPNR catalyst regeneration are properly regulated.

(c) DIAGNOSTICS TROUBLE CODES (DTCS) TABLE FOR TOYOTA D–CAT:

HINT:

This table indicates typical DTC combinations for each malfunction occurrence.

( ): Potential DTCs

DTC No.	A	B	C	D	E	F	G	H	I	J	K	L	M	N	O	P	Q	R	S	T
P0031 (See page 05–305)																●	●			
P0544 (See page 05–415)								●	●	●										
P0545 (See page 05–415)								●	●	●										
P0546 (See page 05–415)								●	●	●										
P1386 (See page 05–444)	(●)	●	●	●	●	●	●	●	(●)	(●)						(●)	(●)	(●)	(●)	(●)
P1425 (See page 05–457)											●	●	●							
P1426 (See page 05–462)														●	●					
P1427 (See page 05–457)											●	●	●							
P1428 (See page 05–457)											●	●	●							
P2002 (See page 05–466)	●		(●)	(●)	(●)		(●)		(●)		(●)	(●)	(●)	(●)	(●)			(●)		
P2031 (See page 05–415)								●	●	●										
P2032 (See page 05–415)								●	●	●										
P2033 (See page 05–415)								●	●	●										
P2047 (See page 05–470)					●	●	●													
P2238 (See page 05–484)																●	●			
P2239 (See page 05–484)																●	●			

Trouble Area	Malfunction	Refer to
DPNR catalytic converter	Deteriorated or clogged	A
Exhaust fuel addition injector	Stuck open	B
	Stuck close	C
	Low fuel addition volume	D
	Open in exhaust fuel addition injector circuit	E
	Short in exhaust fuel addition injector circuit	F
	Open or short in exhaust fuel addition injector	G
Exhaust gas temperature sensor	Open in exhaust gas temperature sensor circuit	H
	Short in exhaust gas temperature sensor circuit	I
	Exhaust gas temperature sensor	J
Differential pressure sensor	Open in differential pressure sensor circuit	K
	Short in differential pressure sensor circuit	L
	Differential pressure sensor	M
	Differential pressure sensor clogged	N
	Incorrect vacuum hose arrangement of the differential pressure sensor	O
A/F sensor	Open or short in A/F sensor or heater circuit	P
	A/F sensor	Q
Exhaust gas leaks	Exhaust gas leaks	R
Fuel leaks	Fuel leaks in fuel addition injector	S
Supply pump	Correct fuel pressure cannot be fed to the exhaust fuel addition injector	T

(d) DIAGNOSTICS TROUBLE CODE DESCRIPTION FOR TOYOTA D–CAT:

DTC No.	Description
P0031	Open or short in A/F sensor or heater circuit (Low output)
P0544	Open or short in exhaust gas temperature sensor circuit (Up stream)
P0545	Open or short in exhaust gas temperature sensor circuit (Up stream) (Low output)
P0546	Open or short in exhaust gas temperature sensor circuit (Up stream) (High output)
P1386	TOYOTA D–CAT fuel addition system malfunction
P1425	Open or short in differential pressure sensor circuit
P1426	Differential pressure sensor is clogged or has incorrect vacuum hose arrangement
P1427	Open or short in differential pressure sensor circuit (Low output)
P1428	Open or short in differential pressure sensor circuit (High output)
P2002	DPNR Catalytic converter malfunction
P2031	Open or short in exhaust gas temperature sensor circuit (Down stream)
P2032	Open or short in exhaust gas temperature sensor circuit (Down stream) (Low output)
P2033	Open or short in exhaust gas temperature sensor circuit (Down stream) (High output)
P2047	Open in exhaust fuel addition injector circuit
P2238	Open or short in A/F sensor or heater circuit (Low output)
P2239	Open or short in A/F sensor or heater circuit (High output)

3. COMMON RAIL SYSTEM DESCRIPTION

(a) COMMON RAIL SYSTEM:

The common rail system stores high–pressurized fuel supplied from the supply pump in the common rail and injects it using the injectors. Fuel injection timing and fuel injection volume are regulated by the ECM; it provides an electric current to the solenoid valve of the injector with the EDU to regulate them.

By storing high–pressurized fuel produced in the supply pump in the common rail, this system can always offer stable fuel injection pressure regardless of the engine speed and engine load, even if a driving speed is low. In addition, this system uses the injector that opens and closes its fuel passage with the Two–Way Valve (TWV) therefore both the fuel injection time and volume are precisely regulated by the ECM.

The ECM monitors internal fuel pressure of the common rail with the fuel pressure sensor and commands the supply pump to supply fuel to obtain a target internal pressure, approximately 30 to 180 MPa (306 to 1,835 kgf/cm^2, 4,351 to 26,106 psi). The ECM opens and closes the pressure discharge valve to improve controllability for the common rail internal fuel pressure.

This system has two split fuel injections. It performs ”pilot–injection” as subsidiary fuel injection prior to the main fuel injection to make combustion soft, and this helps to reduce engine vibration and noise.

Common Rail System Diagram (1CD–FTV Fuel System):

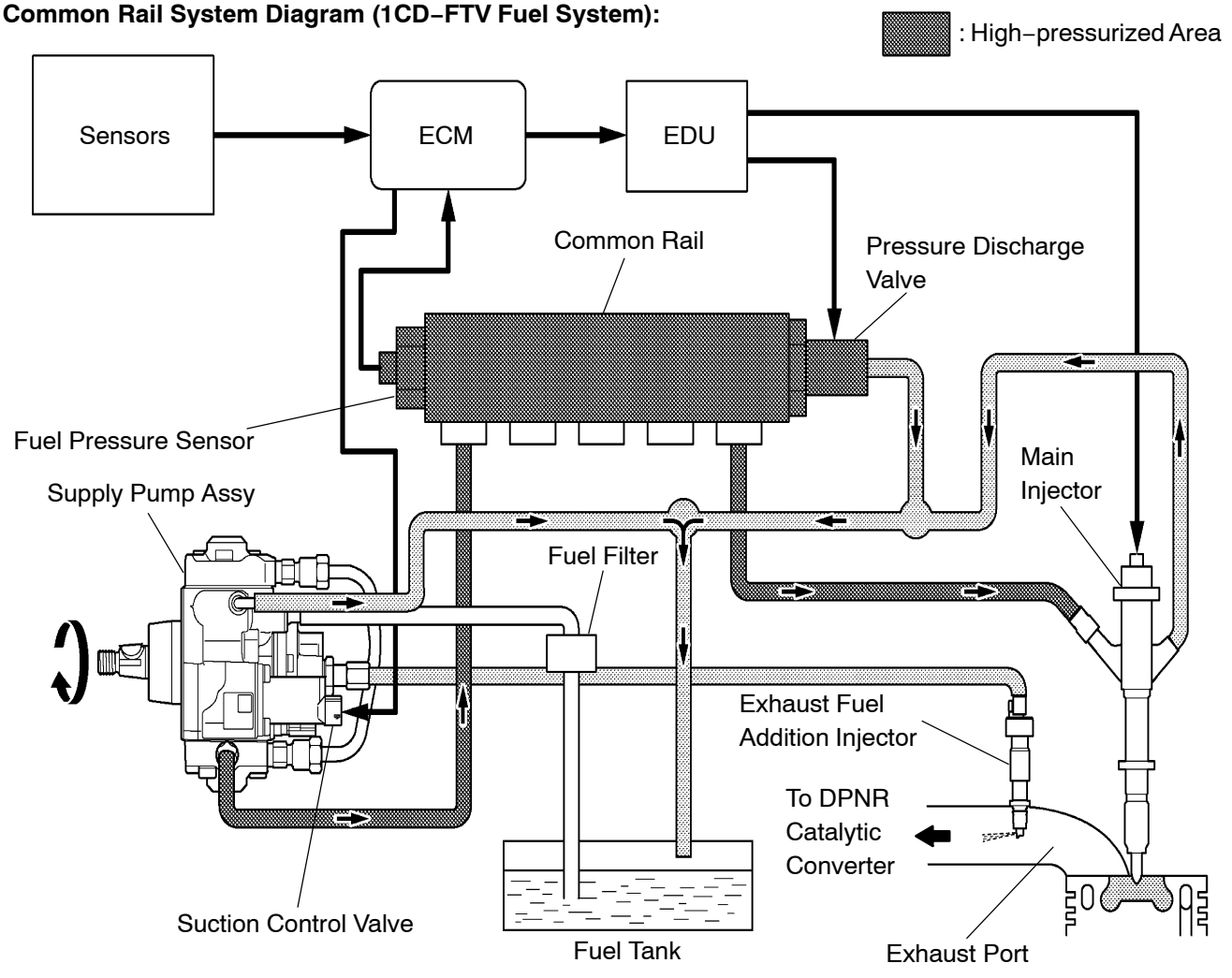

(b) COMMON RAIL SYSTEM COMPONENTS:

Component	Description
Common rail	Stores high–pressurized fuel produced by the supply pump
Supply pump	Operated by the crankshaft, and supplies high–pressure fuel to the common rail
Injector	Injects fuel to the combustion chamber based on signals from the ECM
Fuel pressure sensor	Monitors internal fuel pressure of the common rail and sends signals to the ECM
Pressure discharge valve	Based on signals from the ECM, opens the valve when sudden deceleration is occurred, or when the ignition switch is OFF to prevent the fuel pressure from becoming too high
Suction control valve	Based on signals from the ECM, adjusts fuel volume supplied to the common rail and regulates the internal fuel pressure

(c) DIAGNOSTICS TROUBLE CODES (DTCS) TABLE FOR COMMON RAIL SYSTEM:

HINT:

This table indicates typical DTC combinations for each malfunction occurrence.

( ): Potential DTCs

DTC No.	A	B	C	D	E	F	G	H	I	J	K	L
P0087 (See page 05–314)				●								
P0088 (See page 05–321)					(●)		(●)	(●)	(●)			
P0093 (See page 05–328)	(●)	●			(●)	●					(●)	●
P0190 (See page 05–314)				●								
P0191 (See page 05–367)				●								
P0192 (See page 05–314)				●								
P0193 (See page 05–314)				●								
P0200 (See page 05–368)	●										(●)	
P0627 (See page 05–429)								●				
P1229 (See page 05–321)					(●)			●	●			
P1238 (See page 05–431)	●	●	●								(●)	
P1271 (See page 05–435)					●						(●)	
P1272 (See page 05–435)					●		●				(●)	

Trouble Area	Malfunction	Refer to
Injector	Open or short in injector circuit	A
	Stuck open	B
	Stuck close	C
Fuel pressure sensor	Open or short in fuel pressure sensor circuit or pressure sensor output fixed	D
Pressure discharge valve	Open or short in pressure discharge valve circuit	E
	Stuck open	F
	Stuck close	G
Suction control valve	Open or short in suction control valve circuit	H
	Stuck open	I
	Stuck close	J
EDU	Faulty EDU	K
Common rail system (Fuel system)	Fuel leaks in high–pressurized area	L

(d) DIAGNOSTICS TROUBLE CODE DESCRIPTION FOR COMMON RAIL SYSTEM:

DTC No.	Description
P0087	Fuel pressure sensor output status at fixed value
P0088	Internal fuel pressure too high (200 MPa [2,039 kgf/cm^2, 29,007 psi] or more)
P0093	Fuel leaks in high–pressurized area
P0190	Open or short in fuel pressure sensor circuit (Low or high output)
P0191	Fuel pressure sensor output out of range (Low output)
P0192	Open or short in fuel pressure sensor circuit (High output)
P0193	Open or short in fuel pressure sensor circuit (Sensor 1 and/or 2 relation)
P0200	Open or short in EDU or injector circuit
P0627	Open or short in suction control valve circuit
P1229	Fuel over–feed
P1238	Injection malfunction, exclude open or short in injector circuit
P1271	Open or short in pressure discharge valve circuit
P1272	Closed malfunction of the pressure discharge valve

4. INJECTION CONTROL SYSTEM DESCRIPTION

The ECM controls the fuel injection system by using the injectors and supply pump. The ECM determines the fuel injection volume and timing by controlling both duration and timing of energization to the solenoid valve in the injector, and determines the injection pressure by controlling the suction control valve located on the supply pump.

The feed pump is used to pump fuel from the fuel tank into the supply pump.

Injection Control Diagram:

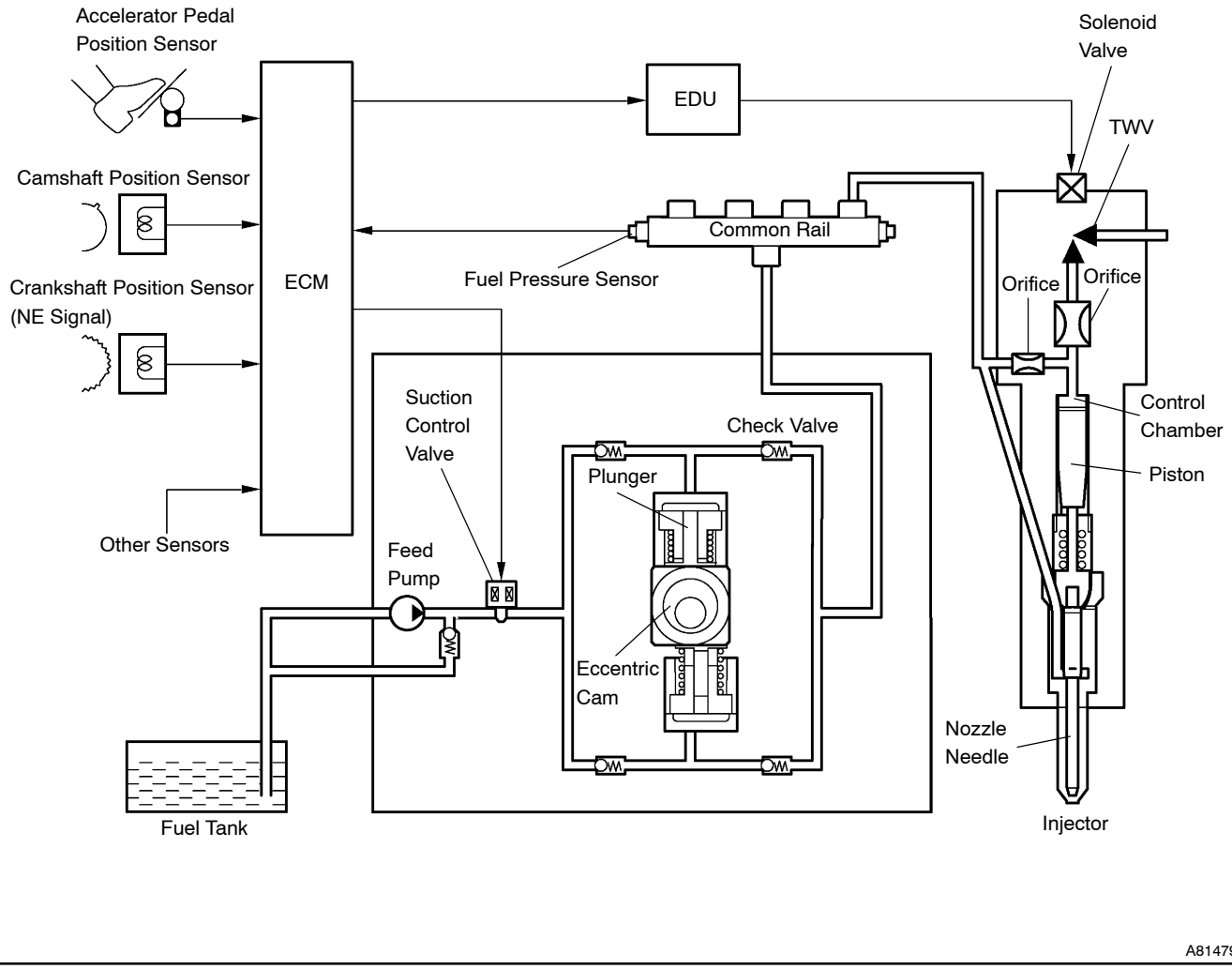

5. SUPPLY PUMP OPERATION SYSTEM DESCRIPTION

The rotation of the eccentric cam causes the ring cam pushes plunger A upward as illustrated below. The spring force pulls plunger B (located on the opposite of plunger A) upward. As a result, plunger B draws the fuel in, and plunger A pumps the fuel at the same time.

Supply Pump Operation Diagram:

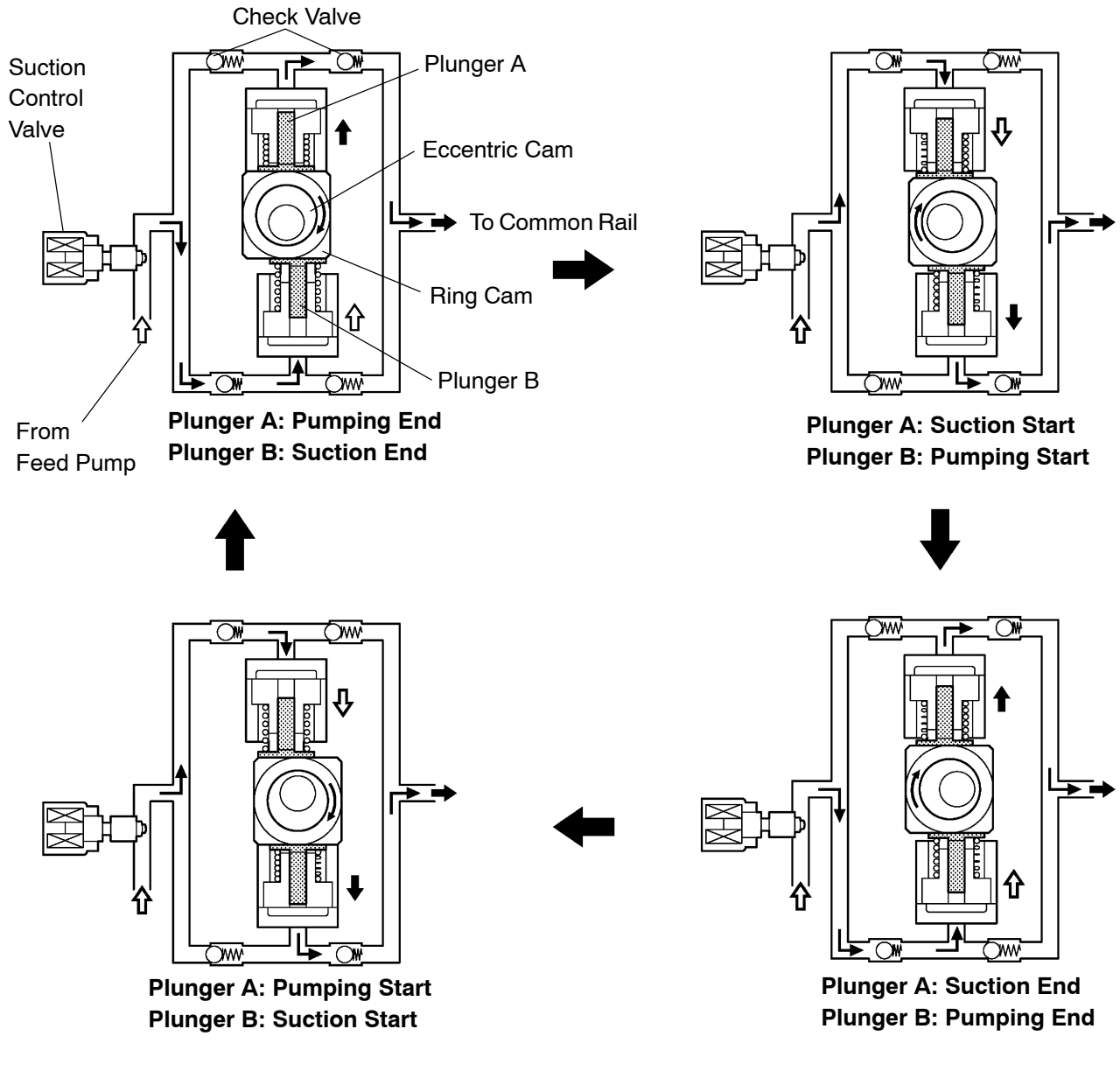

6. SUCTION CONTROL VALVE OPERATION SYSTEM DESCRIPTION

HINT:

The ECM controls the suction control valve operation to regulate the fuel volume that is pumped by the supply pump to the common rail. This control is performed to adjust the internal fuel pressure of the common rail to the targeted injection pressure.

(a) Small opening of the suction control valve:

(1) When the opening of the suction control valve is small, the fuel suction path is kept narrow. Therefore the transferable fuel volume is reduced.

(2) The suction volume becomes small due to the narrow path despite the plunger stroke being full. The difference between the geometrical volume and suction volume creates vacuum.

(3) Pumping will start at the time when the fuel pressure becomes higher than the common rail pressure.

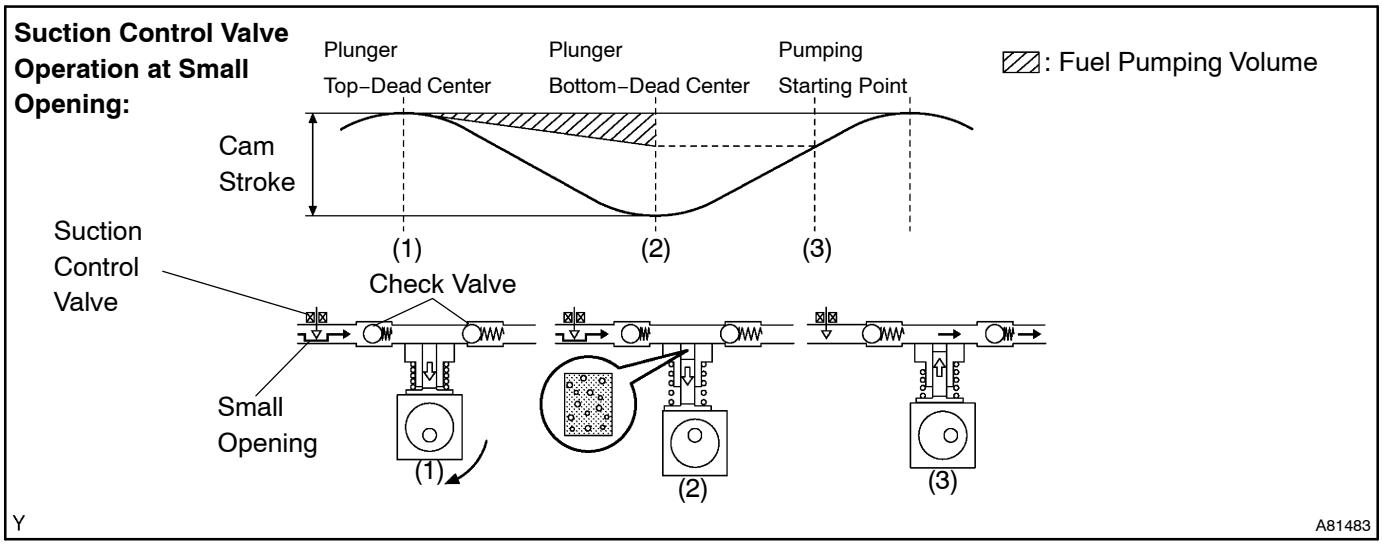

(b) Large opening of the suction control valve:

(1) When the opening of the suction control valve is large, the fuel suction path is kept wide. Therefore the transferable fuel volume is increased.

(2) If the plunger stroke is full, the suction volume becomes large because of the wide path.

(3) Pumping will start at the time when the fuel pressure becomes higher than the common rail pressure.

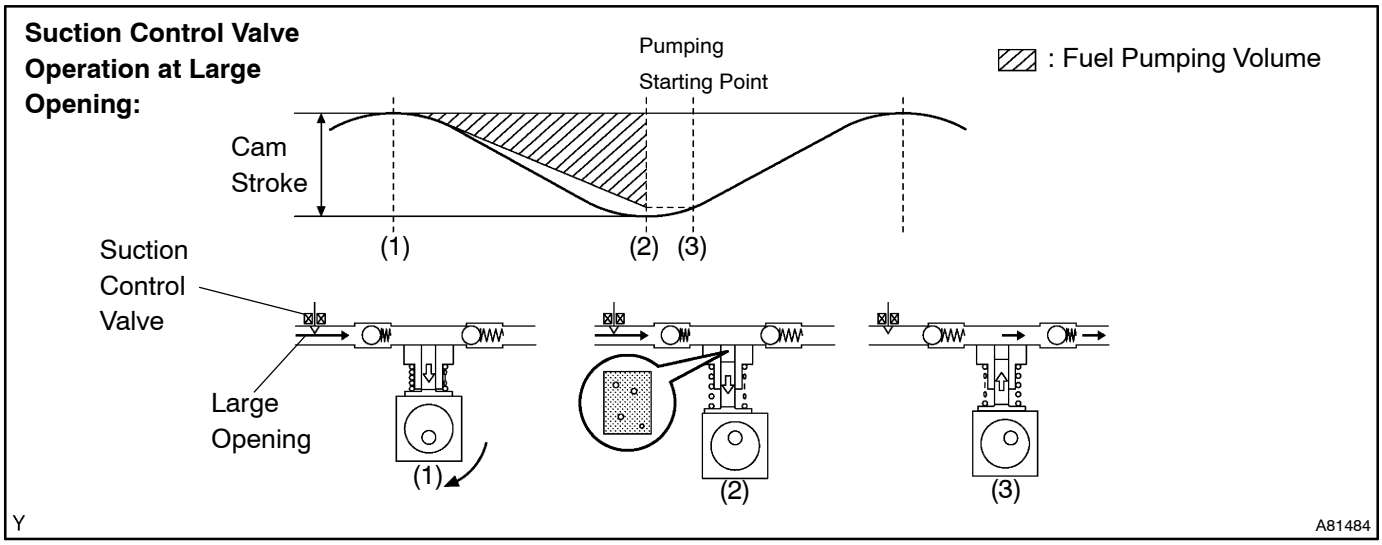

HOW TO PROCEED WITH TROUBLESHOOTING

054JB–11

The hand–held tester can be used at step 3, 4, 5, 7, 10.

1	VEHICLE BROUGHT TO WORKSHOP

2	CUSTOMER PROBLEM ANALYSIS (See page 05–269)

3	CONNECT THE HAND–HELD TESTER TO DLC3

HINT:
If the display indicates a communication fault in the tool, inspect DLC3.

4	CHECK DTC AND FREEZED FRAME DATA (See page 05–299)

HINT:
Record or print DTCs and Freezed Frame Data, if needed.

5	CLEAR DTC AND FREEZED FRAME DATA (See page 05–290)

6	VISUAL INSPECTION

7	SET CHECK (TEST) MODE DIAGNOSIS (See page 05–291)

8	PROBLEM SYMPTOM CONFIRMATION

HINT:
If the engine does not start, perform step 10 and 12 first.

A	Malfunction does not occur
B	Malfunction occurs

B → **GO TO STEP 10**

A

9	SYMPTOM SIMULATION (See page 05–282)

10	DTC CHECK (See page 05–290)

A	Malfunction code
B	No code

B → GO TO STEP 12

A

11	PROCEED TO DTC CHART (See page 05–299)

GO TO STEP 14

12	BASIC INSPECTION (See page 05–271)

A	Not confirm wrong parts
B	Confirm wrong parts

B → GO TO STEP 17

A

13	PROCEED TO PROBLEM SYMPTOMS TABLE (See page 05–282)

A	Confirm wrong circuit
B	Confirm wrong Parts

B → GO TO STEP 17

A

14	CHECK ECM POWER SOURCE CIRCUIT (See page 05–489)

15	CIRCUIT INSPECTION

A	Not confirm malfunction
B	Confirm malfunction

B → GO TO STEP 18

A

16	CHECK FOR INTERMITTENT PROBLEMS (See page 05–270)

GO TO STEP 18

17	PARTS INSPECTION

18	PROBLEM IDENTIFICATION

19	ADJUSTMENT AND/OR REPAIR

20	CONFIRMATION TEST

END

054JC–11

CUSTOMER PROBLEM ANALYSIS CHECK

ENGINE CONTROL SYSTEM Check Sheet

Inspector's Name _____

Customer's Name		VIN	
Production Date		Date Vehicle Brought in	
Licence Plate No.		Odometer Reading	km miles

Problem Symptoms	☐ Engine does not Start	☐ Engine does not crank ☐ No initial combustion ☐ No complete combustion
	☐ Difficult to Start	☐ Engine cranks slowly ☐ Other _____
	☐ Poor Idling	☐ Incorrect first idle ☐ Idling rpm is abnormal ☐ High (rpm) ☐ Low (rpm) ☐ Rough idling ☐ Other _____
	☐ Poor Driveability	☐ Hesitation ☐ Back fire ☐ Muffler explosion (after–fire) ☐ Surging ☐ Knocking ☐ Other _____
	☐ Engine Stall	☐ Soon after starting ☐ After accelerator pedal depressed ☐ After accelerator pedal released ☐ During A/C operation ☐ Shifting from N to D ☐ Other _____
	☐ Others	

Data Problem Occurred		
Problem Frequency		☐ Constant ☐ Sometimes (times per day/month) ☐ Once only ☐ Other _____
Condition When Problem Occurs	Weather	☐ Fine ☐ Cloudy ☐ Rainy ☐ Snowy ☐ Various/Other _____
	Outdoor Temperature	☐ Hot ☐ Warm ☐ Cool ☐ Cold (approx.____ °C/____ °F)
	Place	☐ Highway ☐ Suburbs ☐ Inner City ☐ Uphill ☐ Downhill ☐ Rough road ☐ Other _____
	Engine Temp.	☐ Cold ☐ Warming up ☐ After Warming up ☐ Any temp. ☐ Other _____
	Engine Operation	☐ Starting ☐ Just after starting (min.) ☐ Idling ☐ Racing ☐ Driving ☐ Constant speed ☐ Acceleration ☐ Deceleration ☐ A/C switch ON/OFF ☐ Other _____

Condition of malfunction indicator lamp (CHK ENG)		☐ Remains on ☐ Sometimes lights up ☐ Does not light up
DTC Inspection	Normal mode (Pre–check)	☐ Normal ☐ Malfunction code(s) (code) ☐ Freeze frame data ( )
	Check Mode	☐ Normal ☐ Malfunction code(s) (code) ☐ Freeze frame data ( )

05DVY–02

CHECK FOR INTERMITTENT PROBLEMS

HINT:

Hand–held tester only:

Inspect the vehicle's ECM using check mode. Intermittent problems are easier to detect when the ECM is in check mode with a hand–held tester. In check mode, the ECM uses 1 trip detection logic, which has a higher sensitivity to malfunctions than normal mode (default) using 2 trip detection logic.

(a) Clear DTCs (see page 05–290).
(b) Switch normal mode to check mode using the hand–held tester (see page 05–291).
(c) Perform a simulation test (see page 01–22).
(d) Check the connectors and terminals (see page 01–32).
(e) Wiggle the harness and connectors (see page 01–32).

05I7H–01

BASIC INSPECTION

When the malfunction is not confirmed in the DTC check, troubleshooting should be carried out in all the possible circuits considered as causes of the problem. In many cases, by carrying out the basic engine check shown in the following flowchart, the location causing the problem can be found quickly and efficiently. Therefore, using this check is essential in the engine troubleshooting.

1 CHECK BATTERY VOLTAGE

NOTICE:
Carry out this check with the engine stopped and ignition switch OFF.

	OK	NG
Voltage	11 V or more	Less than 11 V

NG → **CHARGE OR REPLACE BATTERY**

OK

2 CHECK IF ENGINE WILL CRANK

NG → **PROCEED TO PROBLEM SYMPTOMS TABLE ON PAGE 05–282**

OK

3 CHECK AIR FILTER

(a) Visually check if the air filter is not contaminated with dirt or oil.

NG → **CLEAN OR REPLACE**

OK

4 CHECK FUEL QUALITY

(a) Check that only diesel fuel is used.
(b) Check that the fuel does not contain any impurity.

NG → **REPLACE FUEL**

OK

5 CHECK ENGINE OIL (See page 17–9)

NG → **ADD OR REPLACE**

OK

6	CHECK ENGINE COOLANT (See page 16–15)

NG → REPLACE ENGINE COOLANT (See page 16–19)

OK

7	CHECK IDLE SPEED AND MAXIMUM SPEED (See page 14–87)

NG → REPLACE INJECTION OR SUPPLY PUMP ASSY (See page 11–58)

OK

8	CHECK DIAGNOSTIC CIRCUIT

NG → REPAIR OR REPLACE

OK

9	CHECK VACUUM PUMP

NG → REPAIR OR REPLACE VACUUM PUMP

OK

PROCEED TO PROBLEM SYMPTOMS TABLE (See page 05–282)

05DVV–02

READING REGISTERED DATA

NOTICE:

- **The injector compensation code will be required to register with the ECM when replacing injectors or the ECM.**
- **If an incorrect injector compensation code was registered with the ECM, it may rattle the engine assembly or the engine idling may become rough. In addition, it may become a cause of engine failure or shorten the life of the engine.**

1. If you replace the ECM with a new one, register all the injector compensation codes with the new ECM as follows:

(a) Prior to replacing the ECM, read all the injector compensation codes stored in the existing ECM using the hand–held tester, and then write them down (see page 05–273).

(b) After replacing the ECM, enter the written injector compensation codes into the ECM using the hand–held tester (see page 05–277).

(c) Turn the ignition switch to OFF and turn the hand–held tester OFF, then wait for 30 seconds or more.

(d) Turn the ignition switch to ON and turn the hand–held tester ON, then clear DTC P1601 using the hand–held tester (see page 05–290).

2. If you replace the injector with a new one, register its compensation code of the new injector as follows:

(a) Replace an injector.

(b) Read a new injector's compensation code which is imprinted on the head portion of the injector.

(c) Enter the compensation code into the ECM using the hand–held tester (see page 05–277).

(d) Turn the ignition switch to OFF and turn the hand–held tester OFF, then wait for 30 seconds or more.

(e) Turn the ignition switch to ON and turn the hand–held tester ON, then clear DTC P1601 using the hand–held tester (see page 05–290).

HINT:

- In order to optimize the injector's fuel injection characteristic, the ECM compensates the injection duration by each cylinder. The ECM stores and uses compensating data in the form of a 30–digit–alphanumeric value that is imprinted on the head portion of each injector as the injector compensation code.
- If you installed a new injector, its own injector compensation code is needed to register with the ECM. Also, if you replaced the ECM, the compensation codes of all the injectors are needed to register because the new ECM dose not have the codes until they are registered.
- Once the ECM is replaced, DTC P1601 will be present when turning the ignition switch to ON. This is to inform you that the injector compensation codes are required to register with the ECM. In order to clear the DTC, register the compensation codes first, then turn the ignition switch to OFF and wait for 30 seconds or more.

Process of reading injector compensation code(s):

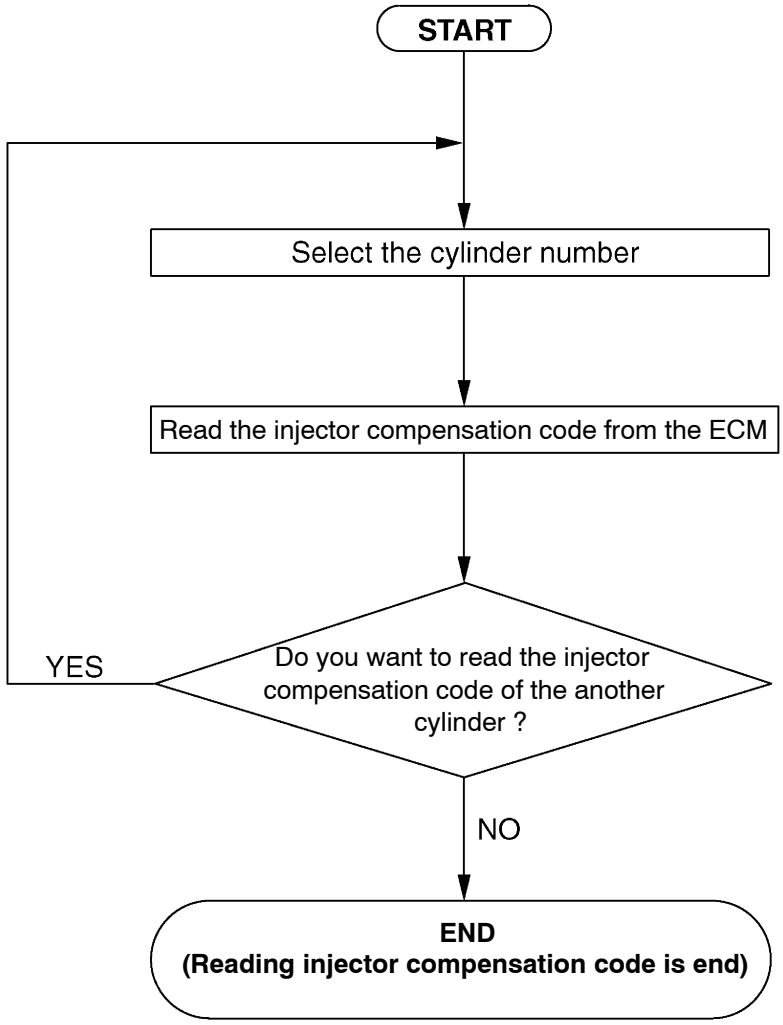

Y A91211

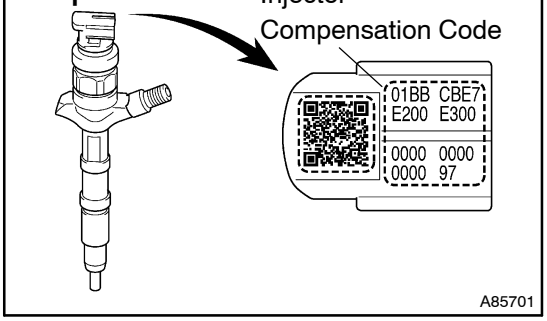

3. READ INJECTOR COMPENSATION CODE

(a) Connect the hand–held tester to the DLC 3.

(b) Turn the ignition switch to ON.

(c) Turn the hand–held tester ON.

NOTICE:

Do not start the engine in this operation.

HINT:

Injector compensation code is imprinted on the head portion of the injector.

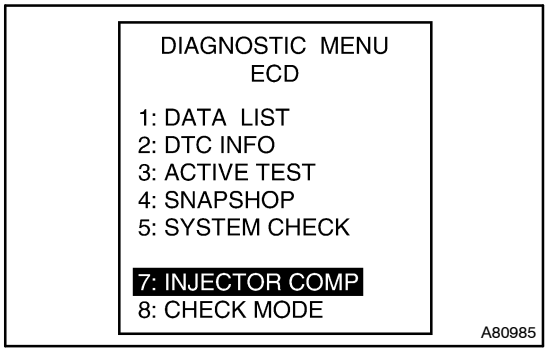

(d) Enter "DIAGNOSIS / OBD/MOBD / DIAGNOSTIC MENU ECD" and select the item "INJECTOR COMP".

(e) Press the "ENTER" button on the hand–held tester.

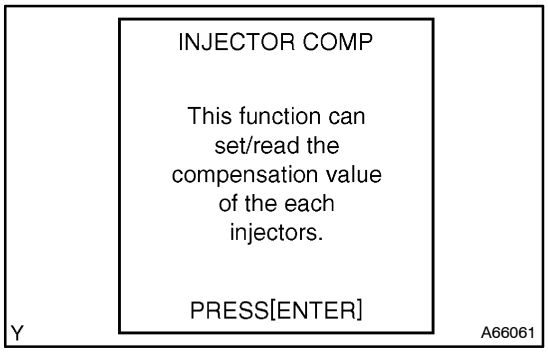

(f) Press the "ENTER" button again.

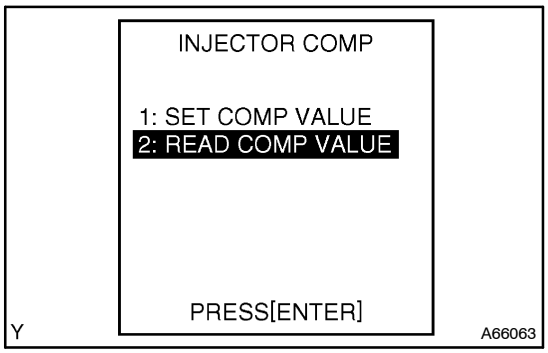

(g) Select "READ COMP VALUE" and press the "ENTER" button.

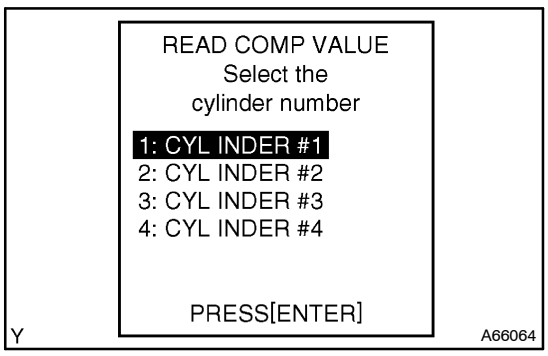

(h) Select a cylinder number which you want to read the compensation code.

(i) Press the "ENTER" button.

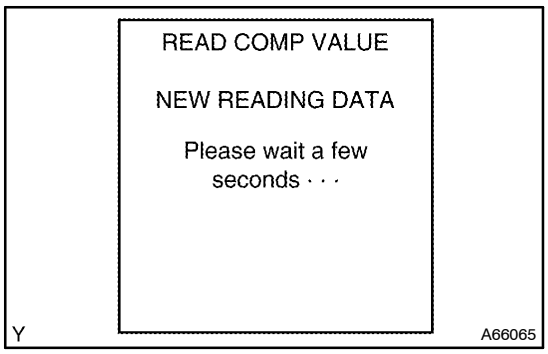

(j) Wait until the next screen comes up.

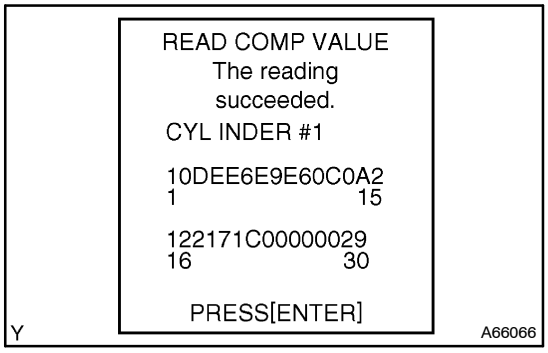

(k) Confirm the 30–digit–alphanumeric code which is displayed on the hand–held tester. This is the injection compensation code for the cylinder.

HINT:

The code shown in the illustration is an example.

(l) Press the ”ENTER” button to exit this screen.

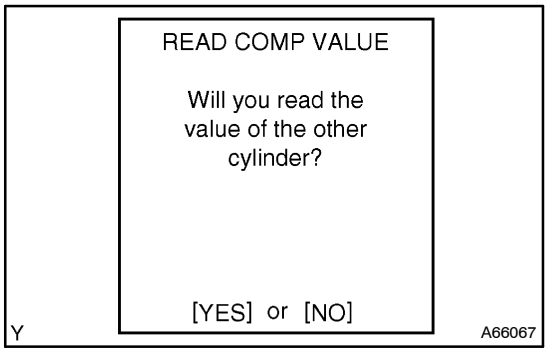

(m) Press the ”NO” button to complete the confirmation.

HINT:

- If you want to read other compensation codes for the other cylinders, press the ”YES” button instead of ”NO”.
- By pressing the ”NO” button, the hand–held tester returns to the ”DIAGNOSTIC MENU ECD” screen.

05DVW–02

REGISTRATION

NOTICE:

- **The injector compensation code will be required to register with the ECM when replacing injectors or the ECM.**
- **If an incorrect injector compensation code was registered with the ECM, it may rattle the engine assembly or the engine idling may become rough. In addition, it may become a cause of engine failure or shorten the life of the engine.**

1. If you replace the ECM with a new one, register all the injector compensation codes with the new ECM as follows:

(a) Prior to replacing the ECM, read all the compensation codes stored in the existing ECM using the hand–held tester, and then write them down (see page 05–273).

(b) After replacing the ECM, enter the written compensation codes into the ECM using the hand–held tester (see page 05–277).

(c) Turn the ignition switch to OFF and turn the hand–held tester OFF, then wait for 30 seconds or more.

(d) Turn the ignition switch to ON and turn the hand–held tester ON, then clear DTC P1601 using the hand–held tester (see page 05–290).

HINT:

- In order to optimize the injector's fuel injection characteristic, the ECM compensates the injection duration by each cylinder. The ECM stores and uses compensating data in the form of a 30–digit–alphanumeric value that is imprinted on the head portion of each injector as the injector compensation code.
- If you installed a new injector, its own injector compensation code is needed to register with the ECM. Also, if you replaced the ECM, the compensation codes of all the injectors are needed to register because the new ECM dose not have the codes until they are registered.
- Once the ECM is replaced, DTC P1601 will be present when turning the ignition switch to ON. This is to inform you that the injector compensation codes are required to register with the ECM. In order to clear the DTC, register the compensation codes first, then turn the ignition switch to OFF and wait for 30 seconds or more.

Process of setting injector compensation code(s):

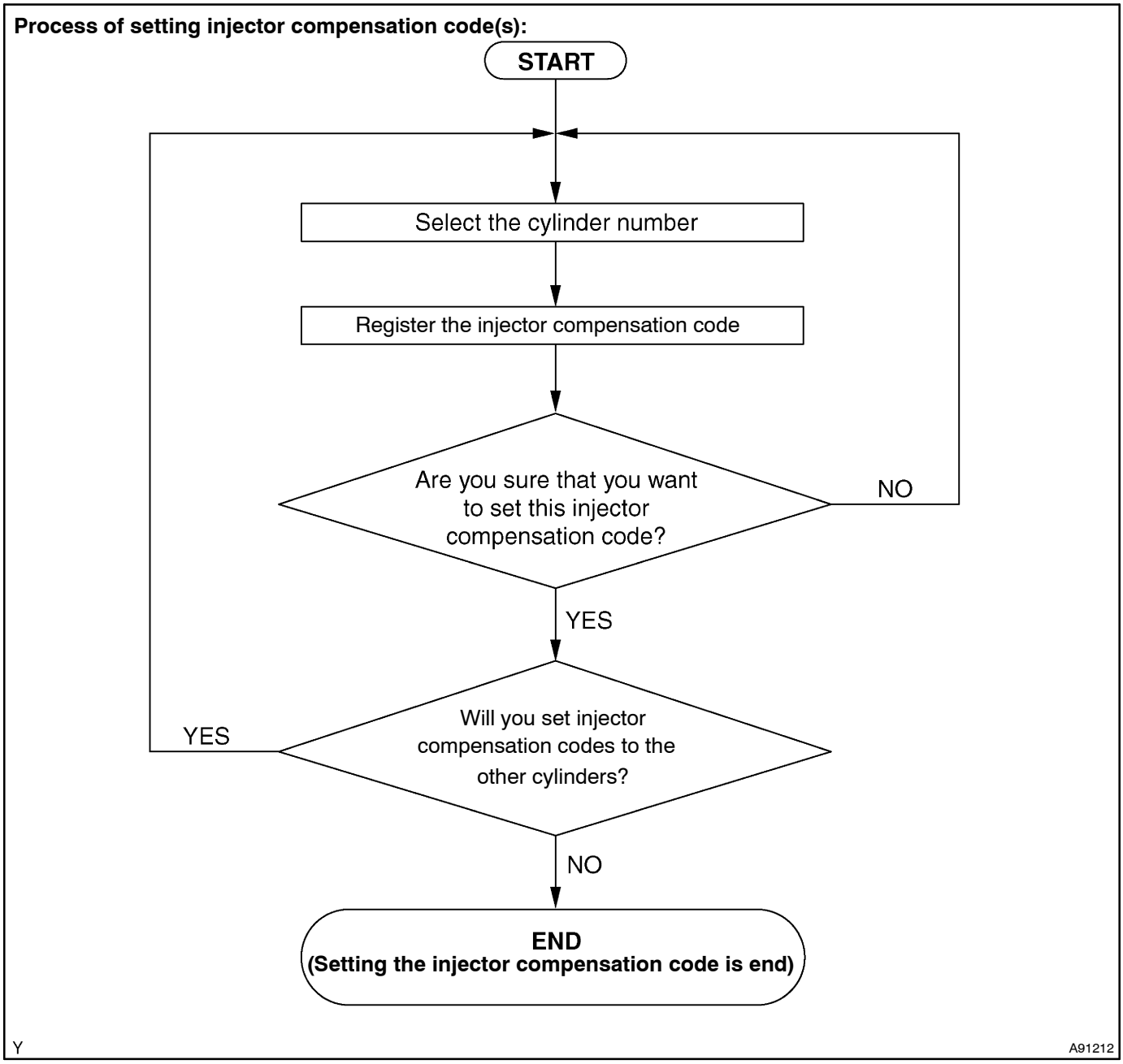

2. SET INJECTOR COMPENSATION CODE

(a) Connect the hand–held tester to the DLC 3.

(b) Turn the ignition switch to ON.

(c) Turn the hand–held tester ON.

NOTICE:

Do not start the engine in this operation.

HINT:

Injector compensation code is imprinted on the head portion of the injector.

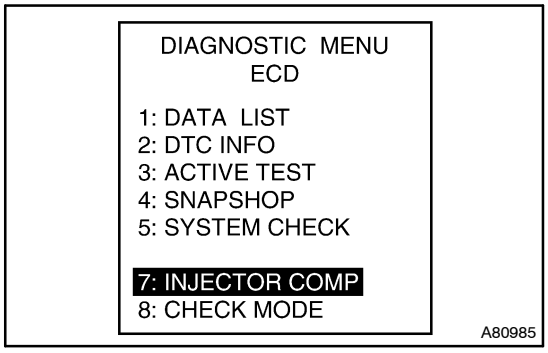

(d) Enter "DIAGNOSIS / OBD/MOBD / DIAGNOSTIC MENU ECD" and select the item "INJECTOR COMP".

(e) Press the "ENTER" button on the hand–held tester.

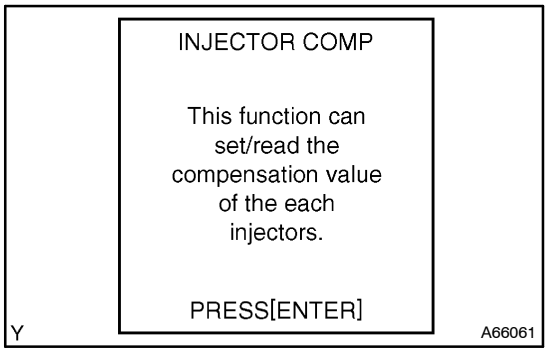

(f) Press the "Enter" button again.

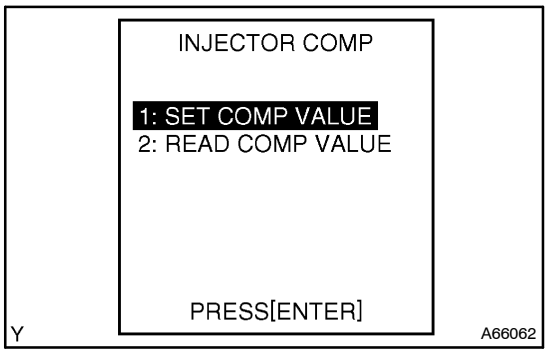

(g) Select "SET COMP VALUE" and press the "ENTER" button.

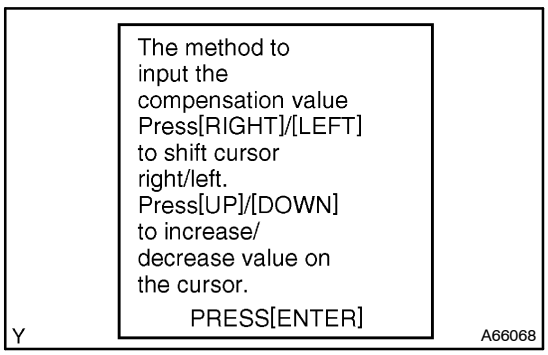

(h) Press the "ENTER" button.

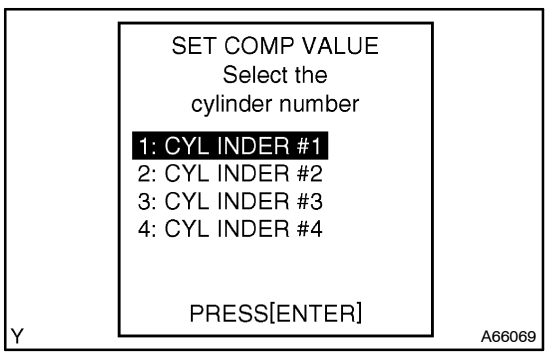

(i) Select a cylinder number which you want to register the compensation code.

(j) Press the "ENTER" button.

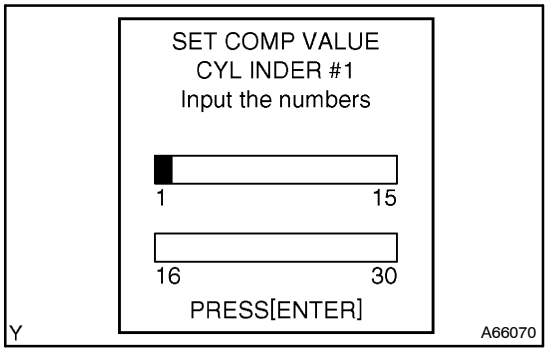

(k) Input the compensation code (30–digit–alphanumeric value).

(l) After inputting, press the ”ENTER” button.

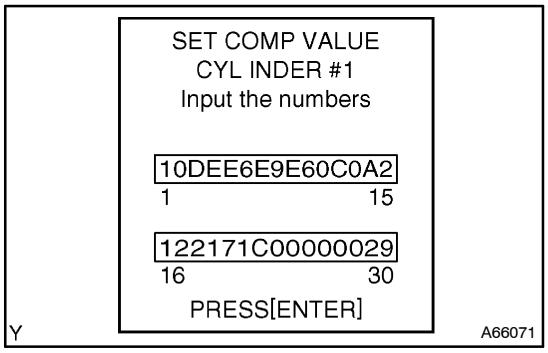

(m) Press the ”ENTER” button again.

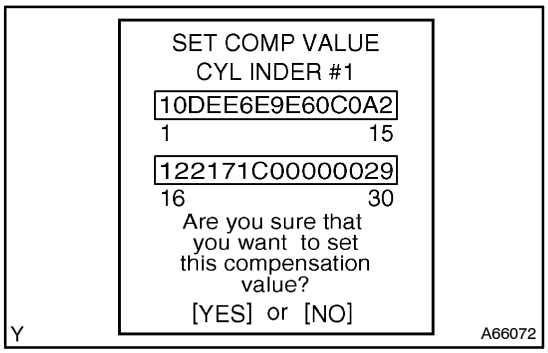

(n) Confirm the injection compensation code displayed on the hand–held tester.

NOTICE:

Be careful not to register a wrong compensation code to the ECM. If a wrong code is set to the ECM, rough idling or engine rattling may result. In addition, it may become a cause of engine failure or shorten the life of the engine.

HINT:

- The code shown in the illustration is an example.
- If a wrong compensation code was entered on the hand–held tester, select the ”NO” button to correct the error (Back to step [g]).

(o) Press the ”YES” button to set the code to the ECM.

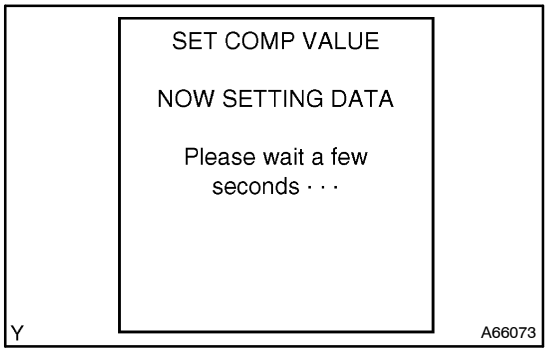

(p) Wait until the next screen comes up.

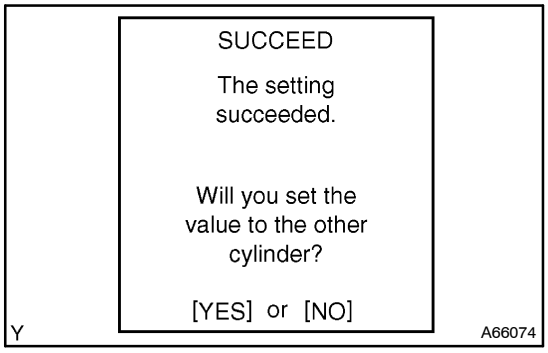

(q) Press the ”NO” button to complete the registration.

HINT:

- If you want to register other compensation codes for the other cylinders, press the ”YES” button instead of ”NO”.
- By pressing the ”NO” button, the hand–held tester returns to the ”DIAGNOSTIC MENU ECD” screen.

(r) Turn the ignition switch to OFF and wait for 30 seconds or more.

054JF–11

PROBLEM SYMPTOMS TABLE

When the malfunction is not confirmed in the DTC check and the problem still cannot be confirmed in the basic inspection, proceed to this table and troubleshoot according to the priority order given below.

Symptom	Suspect Area	See Page
Does not crank (Difficult to start)	1. Starter	*
	2. Starter relay	*
	3. Engine coolant temperature sensor	10–22
Difficult to start with cold engine	1. STA signal circuit	*
	2. Injector	11–42
	3. Fuel filter	*
	4. Compression	14–87
	5. ECM	*
	6. Supply pump	11–42
	7. Fuel pressure sensor	*
	8. Intake shutter (throttle valve)	10–22
	9. Glow system	*
	10.Manifold converter (DPNR catalytic converter)	–
	11.Exhaust fuel addition injector	–
Difficult to start with warm engine	1. STA signal circuit	*
	2. Injector	11–42
	3. Fuel filter	*
	4. Compression	14–87
	5. ECM	*
	6. Supply pump	11–42
	7. Fuel pressure sensor	*
	8. Intake shutter (throttle valve)	10–22
	9. Manifold converter (DPNR catalytic converter)	–
	10.Exhaust fuel addition injector	–
Engine stalls soon after starting	1. Fuel filter	*
	2. Injector	11–42
	3. ECM power source circuit	05–489
	4. ECM	*
	5. Supply pump	11–42
	6. Fuel pressure sensor	*
	7. Intake shutter (throttle valve)	10–22
	8. Manifold converter (DPNR catalytic converter)	–
	9. Exhaust fuel addition injector	–
Engine stalls (Other than the condition listed above)	1. ECM power source circuit	05–489
	2. Injector	11–42
	3. ECM	*
	4. Supply pump	11–42
	5. Fuel pressure sensor	*
	6. Intake shutter (throttle valve)	10–22
	7. Manifold converter (DPNR catalytic converter)	–
	8. Exhaust fuel addition injector	–
Incorrect first idle (Poor idling)	1. Fuel filter	*
	2. Injector	11–42
	3. ECM	*
	4. Supply pump	11–42
	5. Fuel pressure sensor	*
	6. Manifold converter (DPNR catalytic converter)	–

Symptom	Suspect Area	See Page
High engine idle speed (Poor idling)	1. A/C signal circuit	*
	2. Injector	11–42
	3. STA signal circuit	*
	4. ECM	*
	5. Supply pump	11–42
	6. Fuel pressure sensor	*
Lower engine idle speed (Poor idling)	1. A/C signal circuit	*
	2. Injector	11–42
	3. EGR system	12–8
	4. Compression	14–87
	5. Valve clearance	14–90
	6. Fuel line (Air bleed)	*
	7. ECM	*
	8. Supply pump	11–42
	9. Fuel pressure sensor	*
	10.Intake shutter (throttle valve)	10–22
	11.Manifold converter (DPNR catalytic converter)	–
Rough idling (Poor idling)	1. Injector	11–42
	2. Fuel line (Air bleed)	*
	3. EGR system	12–8
	4. Compression	14–87
	5. Valve clearance	14–90
	6. ECM	*
	7. Supply pump	11–42
	8. Fuel pressure sensor	*
	9. Intake shutter (throttle valve)	10–22
	10.Manifold converter (DPNR catalytic converter)	–
Hunting at hot engine (Poor idling)	1. Injector	11–42
	2. ECM power source circuit	05–489
	3. Compression	14–87
	4. Fuel line (Air bleed)	*
	5. Valve clearance	14–90
	6. ECM	*
	7. Supply pump	11–42
	8. Fuel pressure sensor	*
	9. Intake shutter (throttle valve)	10–22
Hunting at cold engine (Poor idling)	1. Injector	11–42
	2. ECM power source circuit	05–489
	3. Compression	14–87
	4. Fuel line (Air bleed)	*
	5. Valve clearance	14–90
	6. ECM	*
	7. Supply pump	11–42
	8. Fuel pressure sensor	*
	9. Intake shutter (throttle valve)	10–22
Hesitation/ Poor acceleration (Poor driveability)	1. Injector	11–42
	2. Fuel filter	*
	3. EGR system	12–8
	4. Compression	14–87
	5. ECM	*
	6. Supply pump	11–42
	7. Fuel pressure sensor	*
	8. Intake shutter (throttle valve)	10–22
	9. Manifold converter (DPNR catalytic converter)	–

Symptom	Suspect Area	See Page
Knocking (Poor driveability)	1. Injector	11–42
	2. EGR system	12–8
	3. ECM	*
	4. Supply pump	11–42
	5. Fuel pressure sensor	*
Black smoke (Poor driveability)	1. Injector	11–42
	2. EGR system	12–8
	3. ECM	*
	4. Supply pump	11–42
	5. Fuel pressure sensor	*
	6. Intake shutter (throttle valve)	10–22
White smoke (Poor driveability)	1. EGR system	12–8
	2. Injector	11–42
	3. Fuel filter	*
	4. ECM	*
	5. Supply pump	11–42
	6. Fuel pressure sensor	*
	7. Intake shutter (throttle valve)	10–22
	8. Exhaust fuel addition injector	–
Surging/ Hunting (Poor driveability)	1. Injector	11–42
	2. ECM	*
	3. Supply pump	11–42
	4. Fuel pressure sensor	*

*: See page 05–551 of Pub. No. RM1018E AVENSIS REPAIR MANUAL.

054KK–10

TERMINALS OF ECM

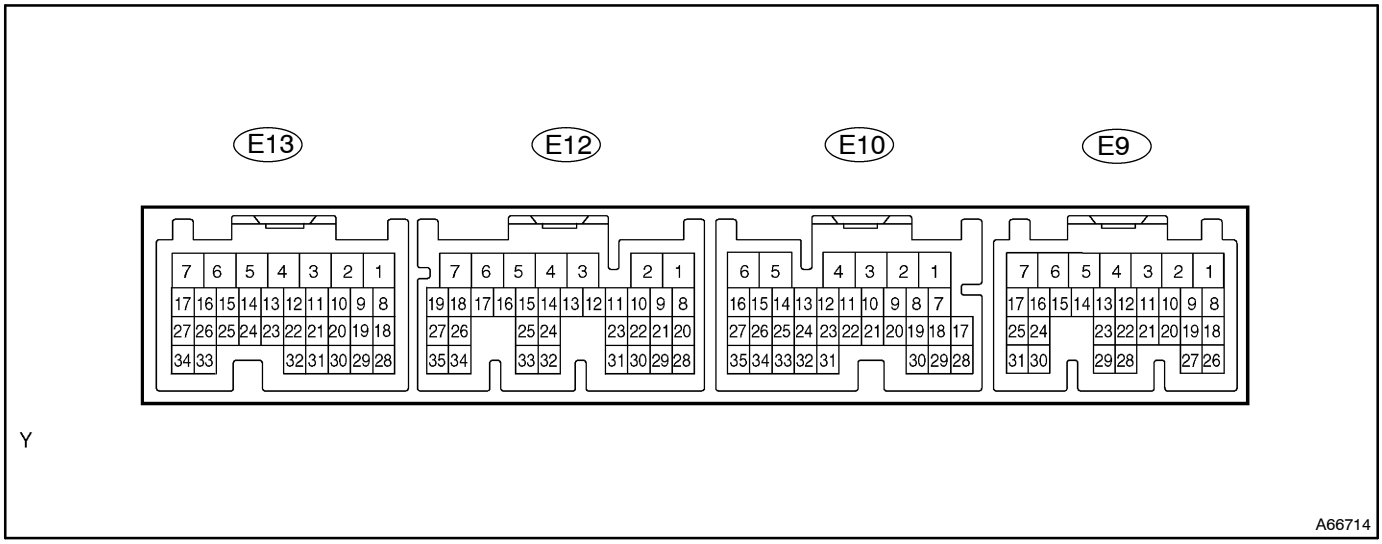

HINT:
Each ECM terminal's standard voltage is shown in the table below.
In the table, first follow the information under "Symbols (Terminals No.)". Look under "Tester Connection" for the terminals to be inspected. The standard voltage between the terminals is shown under "STD Voltage (V)".
Use the illustration above as a reference for the ECM terminals.

Symbols (Terminals No.)	Wiring Color	Terminal Description	Condition	STD Voltage (V)
BATT (E10–2) – E1 (E12–7)	B–Y – BR	Battery (for measuring the battery voltage and for the ECM memory)	Always	9 to 14
IGSW (E9–9) – E1 (E12–7)	B–W – BR	Ignition switch	Ignition switch ON	9 to 14
+B (E9–1) – E1 (E12–7)	B–W – BR	Power source of ECM	Ignition switch ON	9 to 14
MREL (E9–8) – E1 (E12–7)	GR – BR	ECD relay	Ignition switch ON	9 to 14
			Ignition switch OFF	0 to 1.5
VC (E13–18) – E1 (E12–7)	R–W – BR	Power source of sensor (a specific voltage)	Ignition switch ON	4.5 to 5.5
VPA (E9–22) – EPA (E9–28)	G – Y	Accelerator pedal position sensor (for the engine control)	Ignition switch ON, Accelerator pedal fully released	0.5 to 1.1
			Ignition switch ON, Accelerator pedal fully depressed	2.6 to 4.5
VPA2 (E9–23) – EPA2 (E9–29)	W – Y	Accelerator pedal position sensor (for the sensor malfunction detection)	Ignition switch ON, Accelerator pedal fully released	1.2 to 2.0
			Ignition switch ON, Accelerator pedal fully depressed	3.4 to 5.3
VCPA (E9–26) – EPA (E9–28)	B – Y	Power source of accelerator pedal position sensor (for VPA)	Ignition switch ON	4.5 to 5.5
VCP2 (E9–27) – EPA2 (E9–29)	B – Y	Power source of accelerator pedal position sensor (for VPA2)	Ignition switch ON	4.5 to 5.5
VG (E12–24) – EVG (E12–32)	G – L–Y	Mass air flow meter	Idling	0.5 to 3.4
THA (E13–31) – E2 (E13–28)	G–R – BR	Intake air temperature sensor	Idling, Intake air temperature at 20°C (68°F)	0.5 to 3.4
THIA (E13–20) – E2 (E13–28)	GR – BR	Intake air temperature sensor	Idling, Intake air temperature at 80°C (176°F)	0.3 to 0.9
THW (E13–19) – E2 (E13–28)	B–W – BR	Engine coolant temperature sensor	Idling, Engine coolant temperature at 80°C (176°F)	0.2 to 1.0

Symbols (Terminals No.)	Wiring Color	Terminal Description	Condition	STD Voltage (V)
STA (E9–7) – E1 (E12–7)	B–Y – BR	Starter signal	Cranking	6.0 or more
#1 (E13–24) – E1 (E12–7) #2 (E13–23) – E1 (E12–7) #3 (E13–22) – E1 (E12–7) #4 (E13–21) – E1 (E12–7)	G–W – BR W–R – BR R–W – BR W–L – BR	Injector	Idling	Pulse generation (See page 05–368)
G+ (E12–23) – G– (E12–31)	P – L	Camshaft position sensor	Idling	Pulse generation (See page 05–384)
NE+ (E13–27) – NE– (E13–34)	G – R	Crankshaft position sensor	Idling	Pulse generation (See page 05–381)
STP (E10–15) – E1 (E12–7)	G–W – BR	Stop lamp switch	Ignition switch ON, Brake pedal depressed	7.5 to 14
			Ignition switch ON, Brake pedal released	0 to 1.5
ST1– (E10–14) – E1 (E12–7)	G–W – BR	Stop lamp switch (opposite to STP)	Brake pedal depressed	0 to 1.5
			Brake pedal released	7.5 to 14
TC (E9–11) – E1 (E12–7)	W–L – BR	Terminal TC of DLC 3	Ignition switch ON	9 to 14
W (E9–12) – E1 (E12–7)	W – BR	Check engine warning light (CHK ENG)	CHK ENG illuminated	0 to 3
			CHK ENG not illuminated	9 to 14
SPD (E10–17) – E1 (E12–7)	V–W – BR	Speed signal from combination meter	Ignition switch ON, Rotate driving wheel slowly	Pulse generation (See page 05–408)
SIL (E9–18) – E1 (E12–7)	W–G – BR	Terminal SIL of DLC3	Connect the hand–held tester to the DLC3	Pulse generation
PIM (E12–28) – E2 (E13–28)	W–R – BR	Turbo pressure sensor	Applied negative pressure of 40 kPa (300 mmHg, 11.8 in.Hg)	1.4 to 2.0
			Same as atmospheric pressure	2.0 to 2.6
			Applied positive pressure of 69 kPa (518 mmHg, 20.4 in.Hg)	3.0 to 3.6
IREL (E9–10) – E1 (E12–7)	Y – BR	EDU relay	Ignition switch OFF	9 to 14
			Idling	0 to 1.5
TACH (E9–4) – E1 (E12–7)	GR–R – BR	Engine speed	Idling	Pulse generation
VCS (E12–2) – E2S (E12–1)	R–W – BR	Common rail pressure sensor	Ignition switch ON	4.5 to 5.5
PCR1 (E13–26) – E2 (E13–28)	P – BR	Common rail pressure sensor (main)	Idling	1.8 to 2.1
PCR2 (E13–33) – E2 (E13–28)	P–B – BR	Common rail pressure sensor (sub)	Idling	1.2 to 1.5
GREL (E9–15) – E1 (E12–7)	R – BR	Glow plug relay	Cranking	9 to 14
			Idling	0 to 1.5
THF (E13–29) – E2 (E13–28)	L – BR	Fuel temperature sensor	Ignition switch ON	0.5 to 3.4
ALT (E13–8) – E1 (E12–7)	B–L – BR	Generator (Alternator) duty signal	Idling	Pulse generation
PCV+ (E13–2) – PCV– (E13–1)	LG–R – LG	Suction control valve	Idling	Pulse generation (See page 05–429)
PRD (E13–32) – E1 (E12–7)	R–L – BR	Pressure relief valve drive signal	Ignition switch OFF	4 to 6.5
INJF (E13–25) – E1 (E12–7)	R–B – BR	EDU	Idling	Pulse generation (See page 05–368)
VN (E13–10) – E1 (E12–7)	W – BR	VRV (for VN turbocharger)	Ignition switch ON	Pulse generation (See page 05–312)
AF2+ (E10–35) – E1 (E12–7)	B – BR	A/F sensor	Ignition switch ON	3.0 to 3.6
AF2– (E10–34) – E1 (E12–7)	W – BR			2.7 to 3.3
HAF2 (E12–5) – E1 (E12–7)	L–R – BR	A/F sensor heater duty signal	Idling	Pulse generation
FIV (E13–3) – E1 (E12–7)	L–R – BR	Exhaust fuel addition injector	Engine warmed up, Idling, Every 1 to 2 minutes	Pulse generation (See page 05–470)

Symbols (Terminals No.)	Wiring Color	Terminal Description	Condition	STD Voltage (V)
THCO (E12–30) – E2 (E13–28)	B–Y – BR	Exhaust gas temperature sensor	Engine warmed up, Idling	4.6 to 4.9
THCI (E12–22) – E2 (E13–28)	B – BR			
EGRS (E12–3) – E2 (E13–28)	R–L – BR	EGR valve duty signal	Engine warmed up, Idling	Pulse generation (See page 05–393)
EGLS (E12–33) – E2 (E13–28)	R – BR	EGR valve position sensor	Ignition switch ON	0.6 to 1.4
PEX (E12–20) – E2 (E13–28)	W – BR	Differential pressure sensor	Ignition switch ON, differential pressure at 0 kPa	1.2 to 1.8
VLU (E12–29) – E2 (E13–28)	L–W – BR	Intake shutter (throttle valve) position sensor	Ignition switch ON, Intake shutter (throttle valve) fully opened	3.0 to 4.0
			Ignition switch ON, Intake shutter (throttle valve) fully closed	0.4 to 1.0
LUSL (E12–4) – E2 (E13–28)	G–R – BR	Intake shutter (throttle valve) duty signal	Engine warmed up, Racing engine	Pulse generation (See page 05–403)

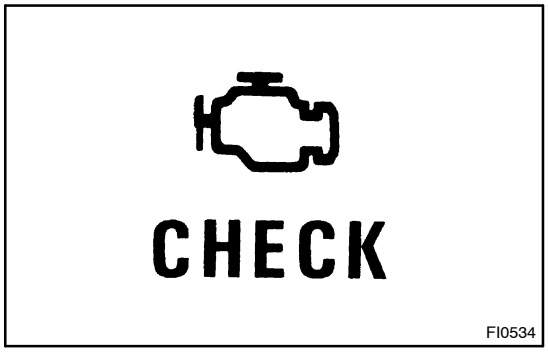

05I7I–01

DIAGNOSIS SYSTEM

1. DESCRIPTION

- When troubleshooting Euro–OBD vehicles, the only difference from the usual troubleshooting procedure is that you connect an OBD scan tool complying with ISO 15031–4 or a hand–held tester to the vehicle, and read the various data output from the vehicle's ECM.
- Euro–OBD regulations require that the vehicle's on–board computer illuminates the check engine warning light (CHK ENG) on the instrument panel when the computer detects a malfunction in the emission control system / components or in the power train control components which affect vehicle emissions, or a malfunction in the computer. In addition, the applicable Diagnostic Trouble Codes (DTCs) prescribed by ISO 15031–4 are recorded in the ECM memory (see page 05–299). If the malfunction does not reoccur in 3 consecutive trips, the CHK ENG goes off automatically but the DTCs remain recorded in the ECM memory.

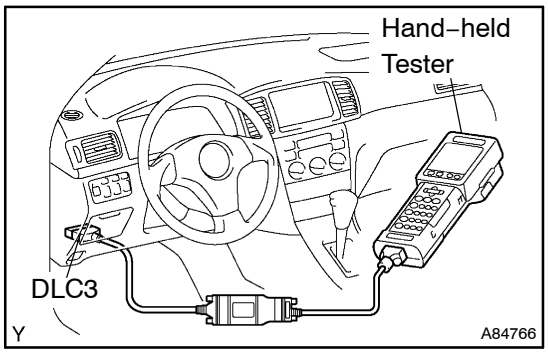

- To check the DTCs, connect the OBD scan tool or hand–held tester to Data Link Connector 3 (DLC3) on the vehicle. The OBD scan tool or hand–held tester also enables you to erase the DTCs and check the freeze frame data and various forms of engine data. (For operating instructions, see the OBD scan tool's instruction book.)
- DTCs include ISO controlled codes and manufacturer controlled codes. ISO controlled codes must be set as prescribed by the ISO, while manufacturer controlled codes can be set by the manufacturer within the prescribed limits (see DTC chart on page 05–299).
- The diagnosis system operates in normal mode during normal vehicle use. It also has check (test) mode for technicians to simulate malfunction symptoms and troubleshoot. Most DTCs use 2 trip detection logic* to prevent erroneous detection, and to ensure a thorough malfunction detection. By switching the ECM to check mode using hand–held tester when troubleshooting, a technician can cause the CHK ENG to illuminate for a malfunction that is only detected once or momentarily. (Hand–held tester only) (see page 05–291)
- * 2 trip detection logic
  When a malfunction is first detected, the pending fault code is stored in the ECM memory (1st trip). If the same malfunction is detected again during the second drive test, this second detection causes the CHK ENG to illuminate (2nd trip). (However, the ignition switch must be turned OFF between the 1st trip and 2nd trip.)

- Freeze frame data
  Freeze frame data records the engine conditions when a malfunction is detected. When troubleshooting, freeze frame data can help determine if the vehicle was running or stopped, if the engine was warmed up or not, if the air–fuel ratio was lean or rich, and other data from the time the malfunction occurred.

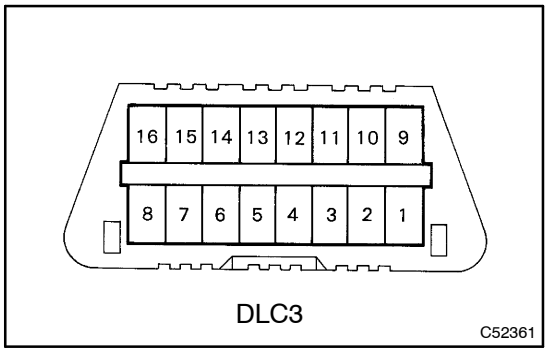

2. CHECK DLC3

(a) The vehicle's ECM uses the ISO 9141–2(Euro–OBD) communication protocol. The terminal arrangement of the DLC3 complies with ISO 15031–03 and matches the ISO 9141–2 format.

Symbol	Terminal No.	Name	Reference Terminal	Result	Condition
SIL	7	Bus "+" line	5 – Signal ground	Pulse generation	During transmission
CG	4	Chassis ground	Body ground	1 Ω or less	Always
SG	5	Signal ground	Body ground	1 Ω or less	Always
BAT	16	Battery positive	Body ground	9 to 14 V	Always

HINT:
Connect the cable of the hand–held tester to the DLC3, turn the ignition switch to ON and attempt to use the hand–held tester. If the screen displays UNABLE TO CONNECT TO VEHICLE, a problem exists in the vehicle side or the tester side.

- If the communication is normal when the tool is connected to another vehicle, inspect the DLC3 on the original vehicle.
- If the communication is still impossible when the tool is connected to another vehicle, the problem is probably in the tester itself, so consult the Service Department listed in its instruction manual.

3. INSPECT BATTERY VOLTAGE

Battery voltage: 11 to 14 V

If voltage is below 11V, recharge the battery before proceeding.

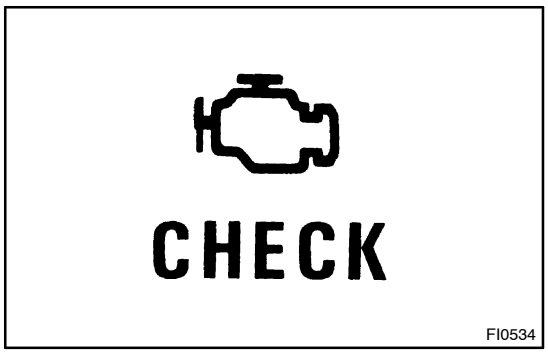

4. CHECK CHK ENG

(a) The CHK ENG comes on when the ignition switch is turned to the ON position and the engine is not running.

HINT:
If the CHK ENG is not illuminated, troubleshoot the combination meter circuit (see page 05–299).

(b) When the engine is started, the CHK ENG should turn off. If the CHK ENG illuminates again, the diagnosis system has detected a malfunction or abnormality in the system.

05DVR–02

DTC CHECK/CLEAR

NOTICE:

Hand–held tester only:

When the diagnosis system is switched from normal mode to check mode, it erases all DTCs and freeze frame data recorded in normal mode. So before switching modes, always check the DTCs and freeze frame data, and then write them down.

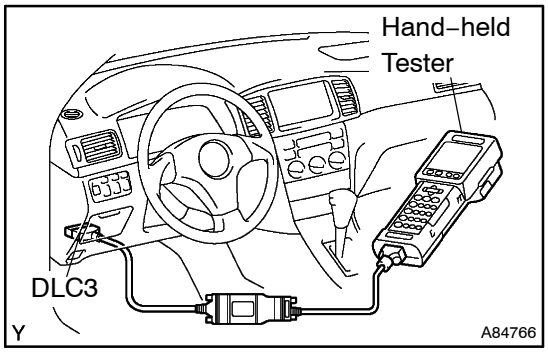

1. DTC CHECK (Using the hand–held tester)

(a) Connect the hand–held tester to the DLC3.

(b) Turn the ignition switch to ON and turn the hand–held tester ON.

(c) Select the item: DIAGNOSIS / OBD/MOBD / DTC INFO / CURRENT CODES.

(d) Read DTCs.

HINT:

- You can see also PENDING CODES which means malfunction is first detected at 1st driving cycle.
- If you need help with the hand–held tester, refer to its instruction book.

(e) See page 05–299 to confirm the details of the DTCs.

2. FREEZE FRAME DATA

(a) Connect the hand–held tester to the DLC3.

(b) Turn the ignition switch to ON and turn the hand–held tester ON.

(c) Select the item: DIAGNOSIS / OBD/MOBD / FREEZE FRAME DATA.

(d) Read the freeze frame data.

HINT:

If you need help with the hand–held tester, refer to its instruction book.

3. CLEAR DTCs AND FREEZE FRAME DATA (Using the hand–held tester)

(a) Connect the hand–held tester to the DLC3.

(b) Turn the ignition switch to ON and turn the hand–held tester ON. (Do not start the engine)

(c) Select the item: DIAGNOSIS / OBD/MOBD / DTC INFO / CLEAR CODES.

(d) Clear DTCs and freeze frame data.

HINT:

If you need help with the hand–held tester, refer to its instruction book.

4. CLEAR DTCs AND FREEZE FRAME DATA (Not using the hand–held tester)

(a) Disconnect the battery terminal or remove the ECD fuse from the engine room R/B for more than 60 seconds.

05DVS–02

CHECK MODE PROCEDURE

HINT:

Hand–held tester only:

Check mode has a higher sensitivity to detect malfunctions and can detect malfunctions that normal mode cannot detect.

Check mode can also detect all the malfunctions that normal mode can detect.

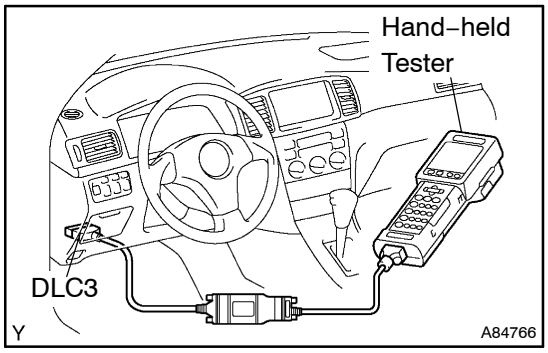

1. CHECK MODE PROCEDURE(Using the hand–held tester)

(a) Turn the ignition switch to OFF.

(b) Connect the hand–held tester to the DLC3.

(c) Turn the ignition switch to ON and turn the hand–held tester ON.

(d) Select the item: DIAGNOSIS / OBD/MOBD / CHECK MODE.

NOTICE:

All DTCs and freeze frame data recorded will be erased if: 1) the hand–held tester is used to change the ECM from normal mode to check mode or vice versa; or 2) during check mode, the ignition switch is turned from ON to ACC or OFF.

(e) Start the engine. The CHK ENG should turn off after the engine starts.

(f) Simulate condition of the malfunction described by the customer or freeze frame data.

(g) After simulating the malfunction condition, use the hand–held tester diagnosis selector to check the DTCs, freeze frame data and other data.

(h) After checking the DTCs, inspect the applicable parts.

2. CLEAR DTCs (Using the hand–held tester)

(a) Connect the hand–held tester to the DLC3.

(b) Turn the ignition switch to ON and turn the hand–held tester ON. (Do not start the engine)

(c) Select the item: DIAGNOSIS / OBD/MOBD / DTC INFO / CLEAR CODES.

(d) Clear DTCs and freeze frame data.

HINT:

If you need help with the hand–held tester, refer to its instruction book.

(e) Disconnect the battery terminal or remove the ECD fuse from the engine room R/B for more than 60 seconds.

05DVX–02

FAIL–SAFE CHART

1. FAIL–SAFE CHART

If any of the following codes is recorded, the engine ECM enters the fail–safe mode.

DTC No.	Detection Item	Fail–Safe Operation	Fail–Safe Deactivation Conditions
P0031	Oxygen (A/F) Sensor heater Control Circuit Low (Bank 1 Sensor 1)	Limits the engine power	”Pass” condition detected
P0087	Fuel Rail/System Pressure – Too Low	Limits the engine power	Ignition switch OFF
P0088	Fuel Rail/System Pressure – Too High	Limits the engine power	Ignition switch OFF
P0093	Fuel System Leak Detected – Large Leak	After shunt driving control is performed for 1 minute, engine stalls	Ignition switch OFF
P0095	Intake Air Temperature Sensor 2 Circuit	Intake air (intake manifold) temperature is fixed at 145°C (293°F)	”Pass” condition detected
P0097	Intake Air Temperature Sensor 2 Circuit Low		
P0098	Intake Air Temperature Sensor 2 Circuit High		
P0100	Mass or Volume Air Flow Circuit	Limits the engine power	”Pass” condition detected
P0102	Mass or Volume Air Flow Meter Circuit Low Input		
P0103	Mass or Volume Air Flow Meter Circuit High Input		
P0105	Manifold Absolute Pressure/Barometric Pressure Circuit	Turbo pressure is fixed value	”Pass” condition detected
P0107	Manifold Absolute Pressure/Barometric Pressure Circuit Low Input		
P0108	Manifold Absolute Pressure/Barometric Pressure Circuit High Input		
P0110	Intake Air Temperature Circuit	Intake air (built in mass air flow meter) temperature is fixed value	”Pass” condition detected
P0112	Intake Air Temperature Circuit Low Input		
P0113	Intake Air Temperature Circuit High Input		
P0115	Engine Coolant Temperature Circuit	Fuel temperature sensor is specified value	”Pass” condition detected
P0117	Engine Coolant Temperature Circuit Low Input		
P0118	Engine Coolant Temperature Circuit High Input		
P0120	Throttle/Pedal Position Sensor/Switch ”A” Circuit	Limits the engine power	Ignition switch OFF
P0122	Throttle/Pedal Position Sensor/Switch ”A” Circuit Low Input		
P0123	Throttle/Pedal Position Sensor/Switch ”A” Circuit High Input		
P0168	Fuel Temperature Too High	Limits the engine power	”Pass” condition detected
P0180	Fuel Temperature Sensor ”A” Circuit	Fuel temperature is fixed at 40°C (104°F)	”Pass” condition detected
P0182	Fuel Temperature Sensor ”A” Circuit Low Input		
P0183	Fuel Temperature Sensor ”A” Circuit High Input		

DTC No.	Detection Item	Fail–Safe Operation	Fail–Safe Deactivation Conditions
P0190	Fuel Rail Pressure Sensor Circuit	Limits the engine power	Ignition switch OFF
P0191	Fuel Rail Pressure Sensor Circuit Range/Performance		
P0192	Fuel Rail Pressure Sensor Circuit Low Input		
P0193	Fuel Rail Pressure Sensor Circuit High Input		
P0200	Injector Circuit/Open	Limits the engine power	Ignition switch OFF
P0234	Turbo/Super Charger Overboost Condition	Limits the engine power	Ignition switch OFF
P0335	Crankshaft Position Sensor ”A” Circuit	Limits the engine power	”Pass” condition detected
P0340	Camshaft Position Sensor ”A” Circuit (Bank 1 or Single Sensor)	Limits the engine power	”Pass” condition detected
P0400	Exhaust Gas Recirculation Flow	Limits the engine power	Ignition switch OFF
P0405	Exhaust Gas Recirculation Sensor ”A” Circuit Low	Limits the engine power	Ignition switch OFF
P0406	Exhaust Gas Recirculation Sensor ”A” Circuit High		
P0488	Exhaust Gas Recirculation Throttle Position Control Range/Performance	Limits the engine power	Ignition switch OFF
P0500	Vehicle Speed Sensor ”A”	Vehicle speed is fixed at 0 km/h (0 mph)	”Pass” condition detected
P0544	Exhaust Gas Temperature Sensor Circuit (Bank1 Sensor 1)	Limits the engine power	Ignition switch OFF
P0545	Exhaust Gas Temperature Sensor Circuit Low (Bank1 Sensor 1)		
P0546	Exhaust Gas Temperature Sensor Circuit High (Bank1 Sensor 1)		
P0627	Fuel Pump Control Circuit / Open	Limits the engine power	”Pass” condition detected
P1229	Fuel Pump System	Limits the engine power	Ignition switch OFF
P1251	Turbo/Super Charger Overboost Condition (Too High)	Limits the engine power	Ignition switch OFF
P1271	Fuel Regulator Circuit Malfunction (EDU Drive)	Limits the engine power	Ignition switch OFF
P1272	Fuel Pressure Regulator Malfunction	Limits the engine power	Ignition switch OFF
P1386	Injector For Exhaust Fuel Addition	• Low or excess fuel addition volume: No fail–safe operation • Low fuel addition volume: Limits the engine power (Driving at engine speed of up to approximately 80 km/h [50 mph] is permitted) • Stuck open: Limits the engine power (Driving at engine speed of up to approximately 10 km/h [6 mph] is permitted)	Ignition switch OFF
P1425	Differential Pressure Sensor Circuit	Differential pressure is fixed value	Ignition switch OFF
P1427	Differential Pressure Sensor Circuit Low		
P1428	Differential Pressure Sensor Circuit High		
P1611	IC Circuit Malfunction	Limits the engine power	Ignition switch OFF
P2002	Particulate Trap Efficiency Below Threshold (Bank 1)	Limits the engine power	Ignition switch OFF

DTC No.	Detection Item	Fail–Safe Operation	Fail–Safe Deactivation Conditions
P2031	Exhaust Gas Temperature Sensor Circuit (Bank1 Sensor 2)	Limits the engine power	Ignition switch OFF
P2032	Exhaust Gas Temperature Sensor Circuit Low (Bank1 Sensor 2)		
P2033	Exhaust Gas Temperature Sensor Circuit High (Bank1 Sensor 2)		
P2047	Reductant Injector Circuit/Open (Bank 1 Unit 1)	Limits the engine power	Ignition switch OFF
P2120	Throttle/Pedal Position Sensor/Switch ”D” Circuit	Limits the engine power	Ignition switch OFF
P2121	Throttle/Pedal Position Sensor/Switch ”D” Circuit Range/Performance		
P2122	Throttle/Pedal Position Sensor/Switch ”D” Circuit Low Input		
P2123	Throttle/Pedal Position Sensor/Switch ”D” Circuit High Input		
P2125	Throttle/Pedal Position Sensor/Switch ”E” Circuit		
P2127	Throttle/Pedal Position Sensor/Switch ”E” Circuit Low Input		
P2128	Throttle/Pedal Position Sensor/Switch ”E” Circuit High Input		
P2138	Throttle/Pedal Position Sensor/Switch ”D”/”E” Voltage Correlation		
P2226	Barometric Pressure Circuit	Atmospheric pressure is fixed value	”Pass” condition detected
P2228	Barometric Pressure Circuit Low Input		
P2229	Barometric Pressure Circuit High Input		
P2237	Oxygen Sensor Pumping Current Circuit/Open (For A/F Sensor) (Bank 1 Sensor 1)	Limits the engine power	”Pass” condition detected
P2238	Oxygen Sensor Pumping Current Circuit/Low (For A/F Sensor) (Bank 1 Sensor 1)	Limits the engine power	”Pass” condition detected or Ignition switch OFF
P2239	Oxygen Sensor Pumping Current Circuit/High (For A/F Sensor) (Bank 1 Sensor 1)	Limits the engine power	”Pass” condition detected

05DVU–02

DATA LIST/ACTIVE TEST

1. DATA LIST

HINT:

Using the hand–held tester DATA LIST allows switch, sensor, actuator and other item values to be read without removing any parts. Reading DATA LIST early in troubleshooting is one way to shorten labor time.

NOTICE:

In the table below, the values listed under ”Normal Condition” are reference values. Do not depend solely on these reference values when deciding whether a part is faulty or not.

(a) Warm up the engine.
(b) Turn the ignition switch to OFF.
(c) Connect the hand–held tester to the DLC3.
(d) Turn the ignition switch to ON.
(e) Turn the hand–held tester ON.
(f) Enter the following menus: DIAGNOSIS / OBD/MOBD / DATA LIST.
(g) According to the display on the tester, read DATA LIST.

Hand–held Tester Display	Measurement Item/Range (Display)	Normal Condition *	Diagnostic Note
INJ VOLUME	Injection volume/ Min.: 0 mm^3, Max.: 1279.98 mm^3	Idling: 3 to 10 mm^3	—
ENGINE SPD	Engine speed/ Min.: 0 rpm, Max.: 16383.75 rpm	Idling: 750 to 850 rpm	—
MAF	Air flow rate from MAF meter status/ Min.: 0 gm/s, Max.: 655.35 gm/s	• Idling: 3.2 to 4.7 gm/s • Running without load (2,500 rpm): 13.1 to 18.9 gm/s	If the value is approximately 0.0 gm/s: • Mass air flow meter power source circuit open • VG circuit open or short If the valve is 160 gm/s or more: • E2G circuit open
PIM	Absolute pressure inside intake manifold/ Min.: 0 kPa, Max.: 224 kPa	Ignition switch ON: Same as atmospheric pressure	Engine is not running
COOLANT TEMP	Coolant temperature/ Min.: –40°C, Max.: 215°C	After warming up: 75 to 95˚C (167 to 203˚F)	If the value is ”–40°C” or ”140°C or more”, sensor circuit is open or shorted
INTAKE AIR	Intake air temperature/ Min.: –40°C, Max.: 215°C	Equivalent to air temperature at the intake manifold	
FUEL TEMP	Fuel temperature status/ Min.: –40°C, Max.: 215°C	Actual fuel temperature	
ACCEL POSITION	Accel position status/ Min.: 0 %, Max.: 100 %	• Accelerator pedal released: 10 to 22 % • Accelerator pedal depressed: 52 to 90 %	Read the value with ignition switch ON (Do not start engine)
VEHICLE SPD	Vehicle speed/ Min.: 0 km/h, Max.: 255 km/h	Actual vehicle speed	Speed indicated on speedometer
THROTTLE POS	Throttle position sensor status/ Min.: 0 %, Max.: 100 %	• Throttle fully closed: 98 % • Throttle fully open: 0 %	100 % when the engine is at rest
COMN RAIL	Common rail pressure status/ Min.: 0 MPa, Max.: 255 MPa	• Idling: 30 to 40 MPa • Engine running at 3,000 rpm: 50 to 100 MPa	—
AMBI TEMP SENS	Ambient temperature sensor status/ Min.: –40°C, Max.: 215°C	Actual atmospheric air temperature	If the value is ”–40°C” or ”140°C or more”, sensor circuit is open or shorted

Hand–held Tester Display	Measurement Item/Range (Display)	Normal Condition *	Diagnostic Note
INJ VOL FB #1	Injection volume correction for cylinder 1/ Min.: –10 mm^3, Max.: 10 mm^3	Idling: –3.0 to 3.0 mm^3	—
INJ VOL FB #2	Injection volume correction for cylinder 2/ Min.: –10 mm^3, Max.: 10 mm^3	Idling: –3.0 to 3.0 mm^3	—
INJ VOL FB #3	Injection volume correction for cylinder 3/ Min.: –10 mm^3, Max.: 10 mm^3	Idling: –3.0 to 3.0 mm^3	—
INJ VOL FB #4	Injection volume correction for cylinder 4/ Min.: –10 mm^3, Max.: 10 mm^3	Idling: –3.0 to 3.0 mm^3	—
M–INJ/PILOT ON	Pilot–injection ON timing of main injector/ Min.: 0 μs Max.: 65,535 μs	Idling: 600 to 1,200 μs	—
M–INJ/PILOT OFF	Pilot–injection OFF timing of main injector/ Min.: 0 μs Max.: 65,535 μs	Idling: 600 to 1,200 μs	—
PILOT–INJ	Pilot–injection/ Min.: 0 μs, Max.: 65,535 μs	Idling: 400 to 700 μs	—
INJ FB VALUE	Injection volume feedback learning value/ Min.: –10 mm^3, Max.: 9,092 mm^3	Idling: –4.0 to 4.0 mm^3	—
STOP LIGHT SW	Stop lamp switch/ ON or OFF	• Brake pedal depressed: ON • Brake pedal released: OFF	—
STARTER SIG	Starter signal/ ON or OFF	Cranking: ON	—
CHECK MODE	Check mode/ ON or OFF	Check mode ON: ON	—
EGR VALVE POS	EGR position sensor status/ Min.: 0 V, Max.: 5 V	• Closed: 4.0 V • Open: 2.1 V	—
MIL ON RUN DIST	Travel distance after check engine warning light (CHK ENG) was illuminated/ Min.: 0 km, Max.: 65,535 km	Actual travel distance after check engine warning light was illuminated	—
AFS B1 S1	A/F sensor output voltage for bank 1 sensor 1/ Min.: 0 V, Max.: 7.999 V	Idling 2.8 to 3.8 V	—
DPNR DIFF PRESS	DPNR differential pressure/ Min.: –5 kPa, Max.: 100 kPa	Idling: approximately 0 kPa	—
GENERATOR	Generator (alternator) duty ratio status/ Min.: 0 %, Max.: 100 %	Idling: 10 to 100 %	—
EX TEMP IN	Exhaust gas temperature for IN/ Min.: 0°C, Max.: 1000°C	Actual exhaust gas temperature (on up stream)	—
EX TEMP OUT	Exhaust gas temperature for OUT/ Min.: 0°C, Max.: 1000°C	Actual exhaust gas temperature (on down stream)	—
EX FUEL ADD FB	Exhaust fuel addition correction value/ Min.: 0, Max.: 2	Vicinity of 1.0	—
AF FT B1 S1	Short–term fuel trim associated with the bank 1 sensor 1/ Min.: 0, Max.: 1.999	• Value less than 1 (0.000 to 0.999) = Correction to lean • Stoichiometric Air–fuel ratio=1 • Value greater than 1 (1.001 to 1.999) = Correction to rich	—

Hand–held Tester Display	Measurement Item/Range (Display)	Normal Condition *	Diagnostic Note
ATM PRESSURE	Atmospheric pressure value/ Min.: 0 kPa, Max.: 150 kPa	Actual atmospheric pressure	—
INJ PRS FB VAL	Injection pressure correction value/ Min.: –500 mm^3/s, Max.: 500 mm^3/s	Idling: –400 to 400 mm^3/s	—
ATM LEARN VAL	Atmospheric pressure learning value/ Min.: 0 V, Max.: 5 V	Ignition switch ON: 1.35 to 2.12 V	—
DIFF SEN FB VAL	Differential pressure correction value/ Min.: –10 kPa, Max.: 10 kPa	Idling: –1.5 to 1.5 kPa	—
EGR LEARN VAL	EGR valve learning value/ Min.: 0 V, Max.: 5 V	Idling: 3.5 to 4.5 V	—
DPNR REJU (PM)	Result of DPNR catalyst regeneration (PM)/ ON or OFF	• DPNR catalyst regeneration (PM) ON: ON • DPNR catalyst regeneration (PM) OFF: OFF	—
DPNR REJU (S)	Result of DPNR catalyst regeneration (S)/ ON or OFF	• DPNR catalyst regeneration (S) ON: ON • DPNR catalyst regeneration (S) OFF: OFF	—

*: If no conditions are specifically stated for "Idling," it means the A/C switch is OFF and all accessory switches are OFF.

2. ACTIVE TEST

HINT:

Performing ACTIVE TEST using the hand–held tester allows the relay, VSV, actuator and so on to operate without parts removal. Performing ACTIVE TEST as a first step of troubleshooting is one of the methods to shorten diagnostic time.

It is possible to display DATA LIST during ACTIVE TEST.

(a) Turn the ignition switch to OFF.
(b) Connect the hand–held tester to the DLC3.
(c) Turn the ignition switch to ON.
(d) Turn the hand–held tester ON.
(e) Enter the following menus: DIAGNOSIS / OBD/MOBD / ACTIVE TEST.
(f) According to the display on the tester, perform ACTIVE TEST.

Hand–held Tester Display	Test Details	Diagnostic Note
TC/TE1	Same condition as the connection of TC and TE1 ON or OFF	—
FUEL LEAK TEST	Maintain the engine speed at 2,000 rpm, and pressurize the common rail internal fuel pressure to 175 MPa ON or OFF	Confirm that there is no leak in the fuel system when the common rail internal fuel pressure is pressurized high
INJECTOR CUT #1	Stop injection of Injector No. 1 ON or OFF	—
INJECTOR CUT #2	Stop injection of Injector No. 2 ON or OFF	—
INJECTOR CUT #3	Stop injection of Injector No. 3 ON or OFF	—
INJECTOR CUT #4	Stop injection of Injector No. 4 ON or OFF	—
DPNR REJU (PM)	DPNR catalyst regeneration (PM) Raise temperature of DPNR to more than 600°C (1,112°F) by adding fuel intermittently using the exhaust fuel addition injector	—
DPNR REJU (S)	DPNR catalyst regeneration (S) Raise temperature of DPNR to more than 600°C (1,112°F) by adding fuel intermittently using the exhaust fuel addition injector	—

054JD–11

DIAGNOSTIC TROUBLE CODE CHART

HINT:

Parameters listed in the chart may be different than your readings depending on the type of instrument used and other factors.

During the DTC check, refer to the table below if a malfunction code is displayed. For details about each code, refer to the page number in the DTC Chart's left column.

DTC No. (See Page)	Detection Item	Trouble Area	*1 CHK ENG	Memory
P0031 (05–305)	Oxygen (A/F) Sensor Heater Control Circuit Low (Bank 1 Sensor 1)	• Open in A/F sensor heater circuit • A/F sensor heater • A/F sensor heater relay • ECM	○	○
P0045 (05–312)	Turbo/Super Charger Boost Control Solenoid Circuit / Open	• VRV • Open or short in VRV circuit • ECM	○	○
P0087 (05–314)	Fuel Rail/System Pressure – Too Low	• Open or short in fuel pressure sensor circuit • Fuel pressure sensor • ECM	○	○
P0088 (05–321)	Fuel Rail/System Pressure – Too High	• Supply pump (Suction control valve) • Pressure discharge valve • Short in supply pump (Suction control valve) circuit • Open in pressure discharge valve circuit • ECM	○	○
P0093 (05–328)	Fuel System Leak Detected – Large Leak	• Fuel line between supply pump and common rail • Fuel line between common rail and injector • Supply pump • Common rail • Injector (P1238 is set simultaneously) • Pressure discharge valve • Open or short in EDU circuit (P0200 is set simultaneously) • Open or short in injector circuit (P0200 and P1238 are set simultaneously) • EDU (P0200 is set simultaneously) • ECM	○	○
P0095 (05–331)	Intake Air Temperature Sensor 2 Circuit	• Open or short in diesel turbo inlet air temperature sensor circuit • Diesel turbo inlet air temperature sensor • ECM	○	○
P0097 (05–331)	Intake Air Temperature Sensor 2 Circuit Low		○	○
P0098 (05–331)	Intake Air Temperature Sensor 2 Circuit High		○	○
P0100 (05–336)	Mass or Volume Air Flow Circuit	• Open or short in mass air flow meter circuit • Mass air flow meter • ECM	○	○
P0101 (05–341)	Mass or Volume Air Flow Circuit Range/Performance Problem	• Mass air flow meter	○	○
P0102 (05–336)	Mass or Volume Air Flow Meter Circuit Low Input	• Open or short in mass air flow meter circuit • Mass air flow meter • ECM	○	○
P0103 (05–336)	Mass or Volume Air Flow Meter Circuit High Input		○	○
P0105 (05–342)	Manifold Absolute Pressure/ Barometric Pressure Circuit	• Open or short in manifold absolute pressure sensor circuit • Manifold absolute pressure sensor • Turbocharger assembly • EGR valve assembly • ECM	○	○
P0106 (05–346)	Manifold Absolute Pressure/ Barometric Pressure Circuit Range/Performance Problem	• Manifold absolute pressure sensor	○	○

DTC No. (See Page)	Detection Item	Trouble Area	*1 CHK ENG	Memory
P0107 (05–342)	Manifold Absolute Pressure/ Barometric Pressure Circuit Low Input	• Open or short in manifold absolute pressure sensor circuit • Manifold absolute pressure sensor • Turbocharger assy • EGR valve assy • ECM	○	○
P0108 (05–342)	Manifold Absolute Pressure/ Barometric Pressure Circuit High Input		○	○
P0110 (05–347)	Intake Air Temperature Circuit	• Open or short in intake air temperature sensor circuit • Intake air temperature sensor (built in mass air flow meter) • ECM	○	○
P0112 (05–347)	Intake Air Temperature Circuit Low Input		○	○
P0113 (05–347)	Intake Air Temperature Circuit High Input		○	○
P0115 (05–352)	Engine Coolant Temperature Circuit	• Open or short in engine coolant temperature sensor circuit • Engine coolant temperature sensor • ECM	○	○
P0116 (05–356)	Engine Coolant Temperature Circuit Range/Performance Problem	• Engine coolant temperature sensor	○	○
P0117 (05–352)	Engine Coolant temperature Circuit Low Input	• Open or short in engine coolant temperature sensor circuit • Engine coolant temperature sensor • ECM	○	○
P0118 (05–352)	Engine Coolant temperature Circuit High Input		○	○
P0120 (05–357)	Throttle/Pedal Position Sensor/ Switch "A" Circuit	• Open or short in intake shutter (throttle valve) position sensor circuit • Intake shutter (throttle valve) position sensor • ECM	○	○
P0122 (05–357)	Throttle/Pedal Position Sensor/ Switch "A" Circuit Low Input	• Intake shutter (throttle valve) position sensor • Open or short in VLU circuit • Open in VC circuit • ECM	○	○
P0123 (05–357)	Throttle/Pedal Position Sensor/ Switch "A" Circuit High Input	• Intake shutter (throttle valve) position sensor • Open in E2 circuit • VC and VTA circuits are short–circuited • ECM	○	○
P0168 (05–361)	Fuel Temperature Too High	• Fuel temperature sensor	○	○
P0180 (05–362)	Fuel Temperature Sensor "A" Circuit	• Open or short in fuel temperature sensor circuit • Fuel temperature sensor • ECM	○	○
P0182 (05–362)	Fuel Temperature Sensor "A" Circuit Low Input		○	○
P0183 (05–362)	Fuel Temperature Sensor "A" Circuit High Input		○	○
P0190 (05–314)	Fuel Rail Pressure Sensor Circuit	• Open or short in fuel pressure sensor circuit • Fuel pressure sensor • ECM	○	○
P0191 (05–367)	Fuel Rail Pressure Sensor Circuit Range/Performance	• Fuel pressure sensor	○	○
P0192 (05–314)	Fuel Rail Pressure Sensor Circuit Low Input	• Open or short in fuel pressure sensor circuit • Fuel pressure sensor • ECM	○	○
P0193 (05–314)	Fuel Rail Pressure Sensor Circuit High Input		○	○
P0200 (05–368)	Injector Circuit / Open	• Open or short in EDU circuit • Injector • EDU • ECM	○	○

DTC No. (See Page)	Detection Item	Trouble Area	*1 CHK ENG	Memory
P0234 (05–376)	Turbo/Super Charger Overboost Condition	• VRV • Open or short in VRV circuit • Turbocharger	○	○
P0299 (05–376)	Turbo/Super Charger Under-boost	• EGR valve • Vacuum hose • ECM	○	○
P0335 (05–381)	Crankshaft Position Sensor ”A” Circuit	• Open or short in crankshaft position sensor circuit • Crankshaft position sensor • Signal plate (crankshaft timing pulley) • ECM	○	○
P0339 (05–381)	Crankshaft Position Sensor ”A” Circuit Intermittent		—	○
P0340 (05–384)	Camshaft Position Sensor ”A” Circuit (Bank 1 or Single Sensor)	• Open or short in camshaft position sensor circuit • Camshaft position sensor • Camshaft timing pulley • ECM	○	○
P0380 (05–386)	Glow Plug/Heater Circuit ”A”	• Open or short in glow plug circuit • Glow fuse • Glow plug relay • Glow plug • ECM	○	○
P0400 (05–393)	Exhaust Gas Recirculation Flow	• EGR valve stuck • EGR valve does not move smoothly • Open or short in EGR circuit • Open or short in EGR valve position sensor circuit • EGR valve position sensor • ECM	○	○
P0405 (05–399)	Exhaust Gas Recirculation Sensor ”A” Circuit Low	• Open or short in EGR valve position sensor circuit • EGR valve position sensor • ECM	○	○
P0406 (05–399)	Exhaust Gas Recirculation Sensor ”A” Circuit High		○	○
P0488 (05–403)	Exhaust Gas Recirculation Throttle Position Control Range/ Performance	• Intake shutter stuck • Intake shutter does not move smoothly • Open or short in intake shutter circuit • Open or short in intake shutter position sensor circuit • Intake shutter position sensor (built in intake shutter valve) • ECM	○	○
P0500 (05–408)	Vehicle Speed Sensor ”A”	• Open or short in speed sensor circuit • Speed sensor • Combination meter • ECM • Skid control ECU	○	○
P0504 (05–411)	Brake Switch ”A”/”B” Correlation	• Short in stop lamp switch signal circuit • Stop lamp switch • ECM	—	○
P0544 (05–415)	Exhaust Gas Temperature Sensor Circuit (Bank1 Sensor 1)	• Open or short in exhaust gas temperature sensor (on up stream) circuit • Exhaust gas temperature sensor (on up stream) • ECM	○	○
P0545 (05–415)	Exhaust Gas Temperature Sensor Circuit Low (Bank1 Sensor 1)		○	○
P0546 (05–415)	Exhaust Gas Temperature Sensor Circuit High (Bank1 Sensor 1)		○	○
P0560 (05–422)	System Voltage	• Open in back–up power source circuit • Low battery voltage • ECM	○	○

DTC No. (See Page)	Detection Item	Trouble Area	*1 CHK ENG	Memory
P0606 (05–425)	ECM/PCM Processor	• ECM	—	—
P0607 (05–425)	Control Module Performance		○	○
P0622 (05–426)	Generator Field "F" Terminal Circuit	• Open in generator (alternator) circuit • Generator (alternator) • Drive belt • ECM	○	○
P0627 (05–429)	Fuel Pump Control Circuit / Open	• Open or shot in suction control valve circuit • Suction control valve • ECM	○	○
P1229 (05–321)	Fuel Pump System	• Short in supply pump (suction control valve) circuit • Supply pump (suction control valve) • ECM	○	○
P1238 (05–431)	Injector Malfunction	• Injector • EDU (P0200 is set simultaneously) • Open or short in engine wire harness (P0200 is set simultaneously) • Connector connection (P0200 is set simultaneously) • Compression pressure • Valve clearance • Valve timing • ECM	○	○
P1251 (05–376)	Turbo/Super Charger Overboost Condition (Too High)	• VRV • Open or short in VRV circuit • Turbocharger • EGR valve • Vacuum hose • ECM	○	○
P1271 (05–435)	Fuel Regulator Circuit Malfunction (EDU Drive)	• Open or short in pressure discharge valve circuit • Open or short in pressure discharge valve itself • EDU • ECM	○	○
P1272 (05–435)	Fuel Pressure Regulator Malfunction	• Open or short in pressure discharge valve circuit (P1271 is set simultaneously) • Pressure discharge valve • Supply pump • ECM	○	○
P1386 (05–444)	Injector For Exhaust Fuel Addition	• Open or short in exhaust fuel addition injector circuit • Exhaust fuel addition injector • DPNR catalytic converter (Manifold converter sub–assy) • Open in exhaust temperature sensor circuit • A/F sensor • Exhaust gas temperature sensor • Supply pump assy • Mass air flow meter • Fuel leaks in exhaust fuel addition injector • Main injector • Cylinder compression pressure • Valve clearance • Valve timing • Air intake system has blockages • Air intake system has leakage • Exhaust system has blockages • Exhaust system has leakage • EGR system has blockages • EGR system has leakage • ECM	○	○

DTC No. (See Page)	Detection Item	Trouble Area	*1 CHK ENG	Memory
P1425 (05–457)	Differential Pressure Sensor Circuit	• Open or short in differential pressure sensor circuit • Incorrect arrangement differential pressure sensor hose piping • Differential pressure sensor • ECM	○	○
P1426 (05–462)	Differential Pressure Sensor (Installation)	• Incorrect arrangement differential pressure sensor hose piping • Differential pressure sensor vacuum hose is clogged • Blockage in vacuum transmitting pipe sub–assy • Differential pressure sensor • ECM	○	○
P1427 (05–457)	Differential Pressure Sensor Circuit Low	• Open or short in differential pressure sensor circuit • Incorrect arrangement differential pressure sensor hose piping • Differential pressure sensor • ECM	○	○
P1428 (05–457)	Differential Pressure Sensor Circuit High		○	○
P1601 (05–465)	Injector Correction Circuit Malfunction (EEPROM)	• Injector compensation code • ECM	○	○
P1611 (05–425)	IC Circuit Malfunction	• ECM	○	○
P2002 (05–466)	Particulate Trap Efficiency Below Threshold (Bank 1)	• DPNR catalytic converter (manifold converter sub–assy) • Differential pressure sensor • Differential pressure sensor vacuum hose is clogged • Blockage in vacuum transmitting pipe sub–assy • Exhaust gas temperature sensor • Exhaust gas leaks in TOYOTA D–CAT • Mass air flow meter • ECM	○	○
P2031 (05–415)	Exhaust Gas Temperature Sensor Circuit (Bank1 Sensor 2)	• Open or short in exhaust gas temperature sensor (on down stream) circuit • Exhaust gas temperature sensor (on down stream) • ECM	○	○
P2032 (05–415)	Exhaust Gas Temperature Sensor Circuit Low (Bank1 Sensor 2)		○	○
P2033 (05–415)	Exhaust Gas Temperature Sensor Circuit High (Bank1 Sensor 2)		○	○
P2047 (05–470)	Reductant Injector Circuit/Open (Bank 1 Unit 1)	• Open in exhaust fuel addition injector circuit • Exhaust fuel addition injector • ECM	○	○
P2120 (05–473)	Throttle/Pedal Position Sensor/ Switch ”D” Circuit	• Open or short in accelerator pedal position sensor circuit • Accelerator pedal position sensor • ECM	○	○
P2121 (05–479)	Throttle/Pedal Position Sensor/ Switch ”D” Circuit Range/Performance	• Accelerator pedal position sensor circuit • Accelerator pedal position sensor • ECM	○	○
P2122 (05–473)	Throttle/Pedal Position Sensor/ Switch ”D” Circuit Low Input	• Open or short in accelerator pedal position sensor circuit • Accelerator pedal position sensor • ECM	○	○
P2123 (05–473)	Throttle/Pedal Position Sensor/ Switch ”D” Circuit High Input		○	○
P2125 (05–473)	Throttle/Pedal Position Sensor/ Switch ”E” Circuit		○	○
P2127 (05–473)	Throttle/Pedal Position Sensor/ Switch ”E” Circuit Low Input		○	○
P2128 (05–473)	Throttle/Pedal Position Sensor/ Switch ”E” Circuit High Input		○	○
P2138 (05–473)	Throttle/Pedal Position Sensor/ Switch ”D”/”E” Voltage Correlation		○	○

DTC No. (See Page)	Detection Item	Trouble Area	*1 CHK ENG	Memory
P2226 (05–482)	Barometric Pressure Circuit	• ECM	○	○
P2227 (05–483)	Barometric Pressure Circuit Range/Performance		○	○
P2228 (05–482)	Barometric Pressure Circuit Low Input		○	○
P2229 (05–482)	Barometric Pressure Circuit High Input		○	○
P2237 (05–484)	Oxygen (A/F) Sensor Pumping Current Circuit/Open (For A/F Sensor) (Bank 1 Sensor 1)	• ECM	○	○
P2238 (05–484)	Oxygen (A/F) Sensor Pumping Current Circuit/Low (For A/F Sensor) (Bank 1 Sensor 1)	• Open or short in A/F sensor circuit • A/F sensor • A/F sensor heater • A/F sensor heater relay • A/F sensor heater and relay circuit • ECM	○	○
P2239 (05–484)	Oxygen (A/F) Sensor Pumping Current Circuit/High (For A/F Sensor) (Bank 1 Sensor 1)		○	○
B2799	Engine Immobilizer System Malfunction	• Immobilizer system	—	○

*1: Check that the check engine warning light (CHK ENG) is illuminated.

DTC	P0031	OXYGEN (A/F) SENSOR HEATER CONTROL CIRCUIT LOW (BANK 1 SENSOR 1)

HINT:

- For more information on the A/F sensor and TOYOTA D–CAT (*1), see page 05–255.
- If P0031 is present, refer to the diagnostic trouble codes (DTCs) table for the TOYOTA D–CAT on page 05–255.
- This DTC is related to the A/F sensor, although the caption is the oxygen sensor.

*1: Diesel Clean Advanced Technology.

CIRCUIT DESCRIPTION

The A/F sensor has the characteristic that it provides output voltage which is proportional to the existing air–fuel ratio. The A/F sensor output voltage (*2) is used to provide the ECM with feedback to control the air–fuel ratio.

The A/F sensor is located after the DPNR (*3) catalytic converter. This sensor has been developed based on structure and technology of a sensor that is being used for gasoline engines. Its cover portion of the sensor has been changed for application of use to the diesel engine with TOYOTA D–CAT in order to eliminate influence of the sensor temperature and particulate matter (PM).

In order to reduce both PM and nitrogen oxides (NOx), the ECM adjusts the air–fuel ratio to slightly RICH (but it is LEAN compared with a stoichiometric air–fuel ratio) with signals from the A/F sensor, if needed. When the ECM exercises DPNR catalyst regeneration by adding fuel using the exhaust fuel addition injector, the air–fuel ratio is also properly adjusted through the sensor.

*2: The voltage value changes inside the ECM only.

*3: Diesel Particulate–NOx Reduction system.

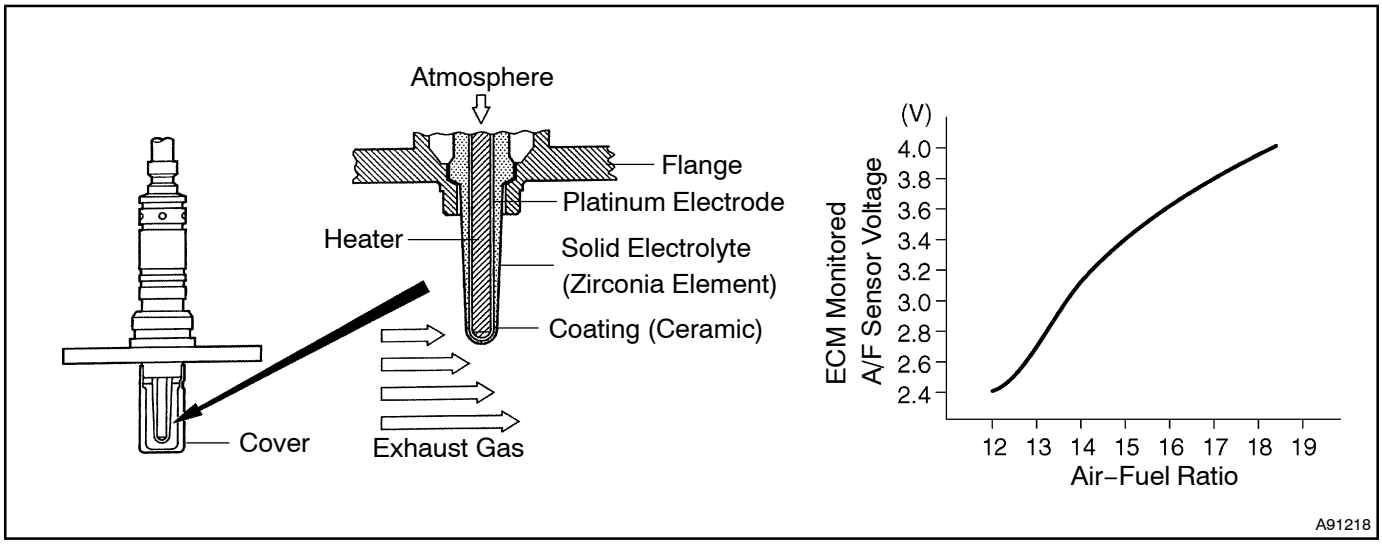

HINT:
The ECM provides a pulse width modulated control circuit to adjust current through the heater. The A/F sensor heater circuit uses a relay on the B+ side of the circuit.

Reference:

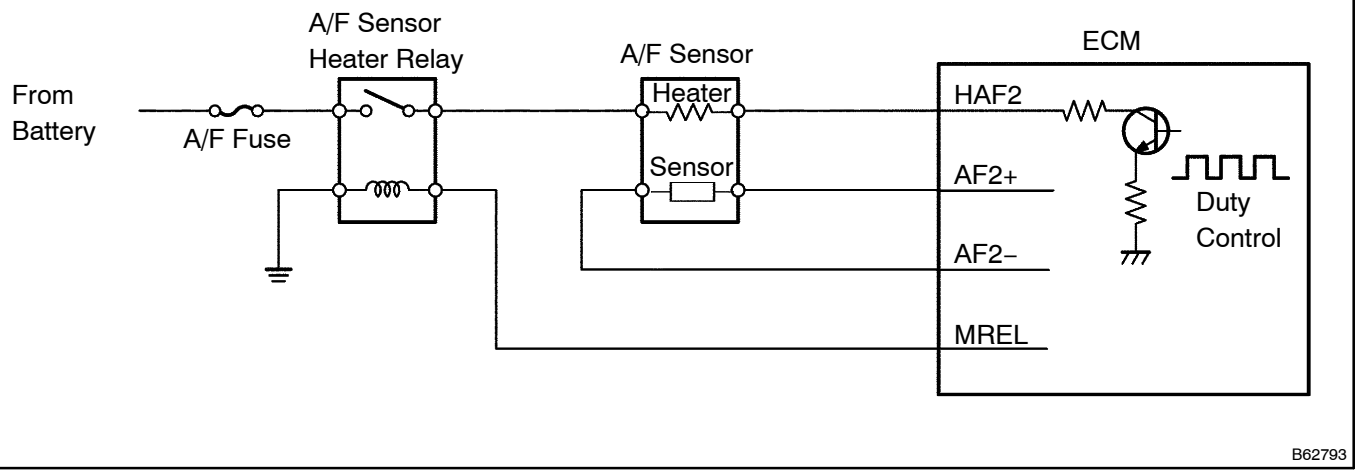

DTC No.	DTC Detection Condition	Trouble Area
P0031	Heated current is 1.5 A or less when the heater operates (1 trip detection logic)	• Open in A/F sensor heater circuit • A/F sensor heater • A/F sensor heater relay • ECM

MONITOR DESCRIPTION

The inner surface of the A/F sensor element is exposed to outside air. The outer surface of the sensor element is exposed to exhaust gases. The sensor element is made of platinum coated zirconia and includes an integrated heating element. The zirconia element generates small voltage when there is a large difference in the oxygen concentrations of the exhaust and the outside air. The platinum coating amplifies the voltage generation. When heated, the sensor becomes very efficient. If the temperature of the exhaust is low, the sensor will not generate useful voltage signals without supplemental heating. The ECM regulates the supplemental heating using a duty–cycle approach to regulate the average current in the heater element. If the heater current is out of the normal range, the sensor's output signals will be inaccurate and the ECM can not regulate the air–fuel ratio properly. When the heater current is out of the normal operating range, the ECM interprets this as a malfunction and sets a DTC.

WIRING DIAGRAM

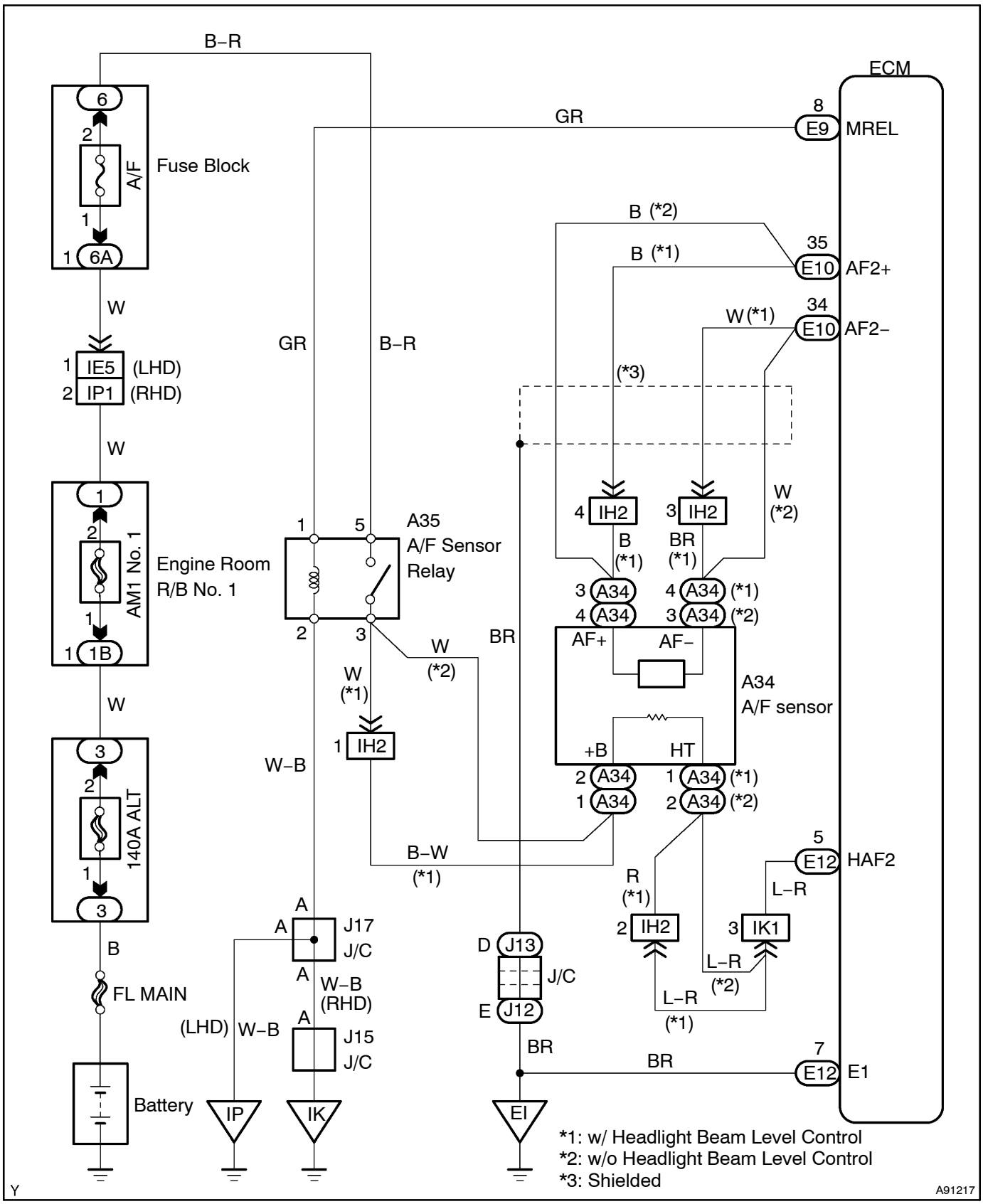

INSPECTION PROCEDURE

1 INSPECT AIR FUEL RATIO SENSOR(RESISTANCE)

Component Side
(w/ Headlight Beam Level Control):

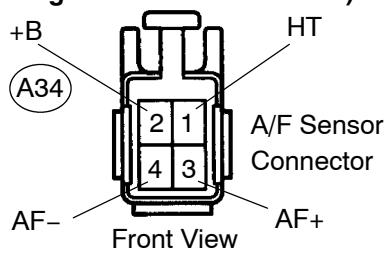

Component Side
(w/o Headlight Beam Level Control):

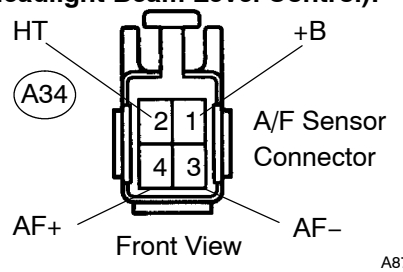

(a) Disconnect the A34 A/F sensor connector.
(b) Measure the resistance between the terminals of the A/F sensor.

Resistance (w/ Headlight beam level control):

Tester Connection	Specified Condition
HT (1) – +B (2)	0.86 to 1.1 Ω at 20°C (68°F)

Resistance (w/o Headlight beam level control):

Tester Connection	Specified Condition
HT (2) – +B (1)	0.86 to 1.1 Ω at 20°C (68°F)

(c) Reconnect the A/F sensor connector.

NG → **REPLACE AIR FUEL RATIO SENSOR**

OK

2 INSPECT AIR FUEL RATIO SENSOR HEATER RELAY

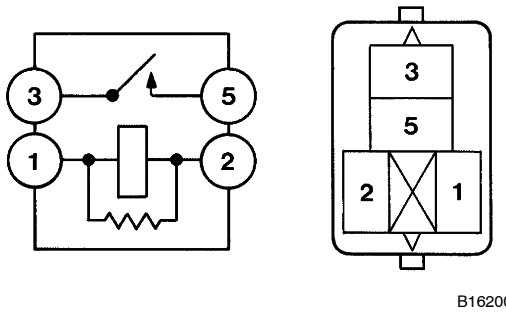

(a) Remove the A/F sensor heater relay.
(b) Inspect the A/F sensor heater relay.

Standard:

Tester Connection	Specified Condition
1 – 2	Continuity
3 – 5	No continuity
	Continuity (Apply battery voltage to terminals 1 and 2)

(c) Reinstall the A/F sensor heater relay.

NG → **REPLACE AIR FUEL RATIO SENSOR HEATER RELAY**

OK

3 INSPECT ECM(A/F SENSOR HEATER VOLTAGE)

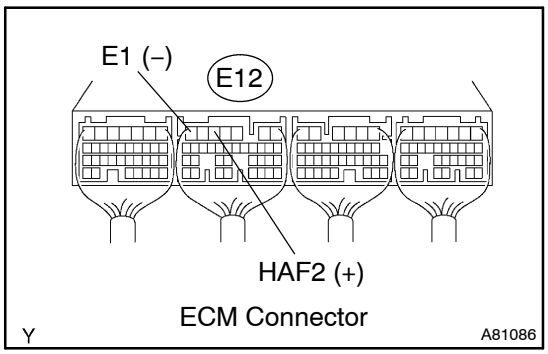

(a) Turn the ignition switch to ON.
(b) Measure the voltage between the applicable terminals of the E12 ECM connector.

Standard:

Tester Connection	Specified Condition
HAF2 (E12–5) – E1 (E12–7)	9 to 14 V

OK → **REPLACE ECM (See page 10–29)**

NG

4 CHECK HARNESS AND CONNECTOR(A/F SENSOR – ECM, A/F SENSOR – A/F SENSOR HEATER RELAY)

Wire Harness Side
(w/ Headlight Beam Level Control):

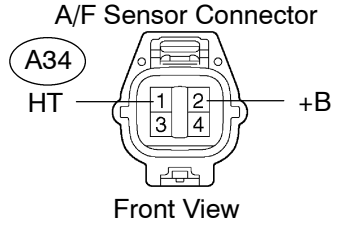

A90355

Wire Harness Side
(w/o Headlight Beam Level Control):

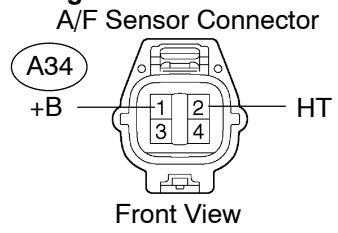

A90355

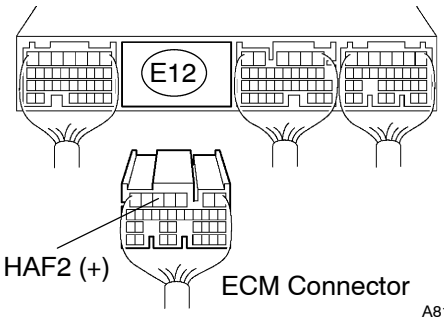

A81087

Wire Harness Side:

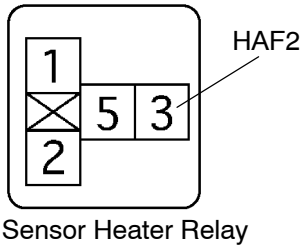

A90544

(a) Check the harness and the connectors between the ECM and the A/F sensor.
  (1) Disconnect the A34 A/F sensor connector.
  (2) Disconnect the E12 ECM connector.
  (3) Check the resistance between the wire harness side connectors.

Standard (Check for open)
(w/ Headlight beam level control):

Tester Connection	Specified Condition
HT (A34–1) – HAF2 (E12–5)	Below 1 Ω

Standard (Check for open)
(w/o Headlight beam level control):

Tester Connection	Specified Condition
HT (A34–2) – HAF2 (E12–5)	Below 1 Ω

Standard (Check for short)
(w/ Headlight beam level control):

Tester Connection	Specified Condition
HT (A34–1) or HAF2 (E12–5) – Body ground	10 kΩ or higher

Standard (Check for short)
(w/o Headlight beam level control):

Tester Connection	Specified Condition
HT (A34–2) or HAF2 (E12–5) – Body ground	10 kΩ or higher

  (4) Reconnect the A/F sensor connector.
  (5) Reconnect the ECM connector.

(b) Check the harness and connectors between the A/F sensor connector and the A/F sensor heater relay.
  (1) Disconnect the A34 A/F sensor connector.
  (2) Remove the A/F sensor heater relay from the engine room R/B.
  (3) Check the resistance between the wire harness side connectors.

Standard (Check for open)
(w/ Headlight beam level control):

Tester Connection	Specified Condition
+B (A34–2) – A/F sensor heater relay (3)	Below 1 Ω

Standard (Check for open)
(w/o Headlight beam level control):

Tester Connection	Specified Condition
+B (A34–1) – A/F sensor heater relay (3)	Below 1 Ω

Standard (Check for short)
(w/ Headlight beam level control):

Tester Connection	Specified Condition
+B (A34–2) or A/F sensor heater relay (3) – Body ground	10 kΩ or higher

Standard (Check for short)
(w/o Headlight beam level control):

Tester Connection	Specified Condition
+B (A34–1) or A/F sensor heater relay (3) – Body ground	10 kΩ or higher

(4) Reconnect the A/F sensor connector.
(5) Reinstall the A/F sensor heater relay.

NG → **REPAIR OR REPLACE HARNESS OR CONNECTOR**

OK

REPLACE ECM (See page 10–29)

DTC	P0045	TURBO/SUPER CHARGER BOOST CONTROL SOLENOID CIRCUIT / OPEN

CIRCUIT DESCRIPTION

DTC No.	DTC Detection Condition	Trouble Area
P0045	Open or short in VRV circuit for 0.5 second or more (1 trip detection logic)	• VRV • Open or short in VRV circuit • ECM

WIRING DIAGRAM

Refer to DTC P0234 on page 05–376.

INSPECTION PROCEDURE

1	INSPECT VACUUM REGULATING VALVE ASSY (See page 13–8)

NG → REPLACE VACUUM REGULATING VALVE ASSY

OK

2	INSPECT ECM(VN VOLTAGE)

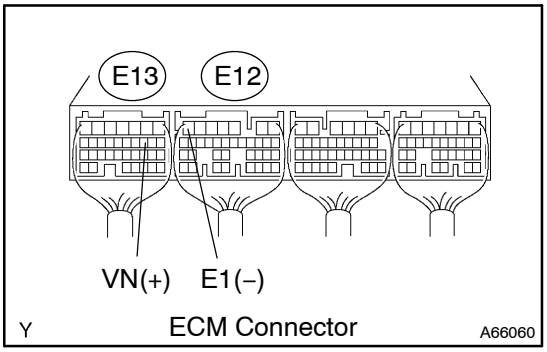

(a) Inspect using the oscilloscope.
(b) During idling, check the waveform between terminals E12 and E13 of the ECM connectors.

Standard:

Tester Connection	Specified Condition
VN (E13–10) – E1 (E12–7)	Correct waveform is as shown

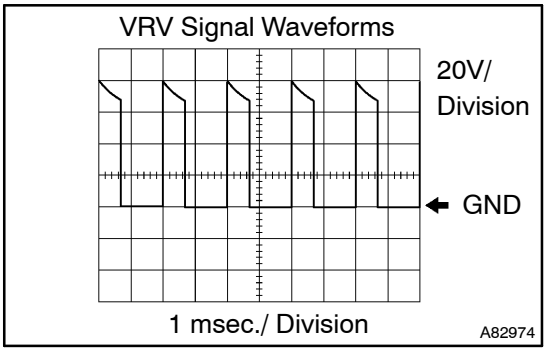

OK → REPLACE ECM (See page 10–29)

NG

3 CHECK HARNESS AND CONNECTOR(VRV – ECM)

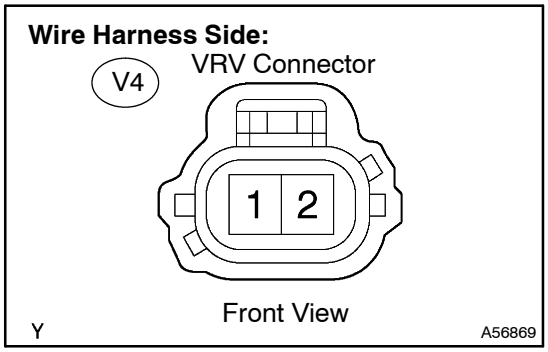

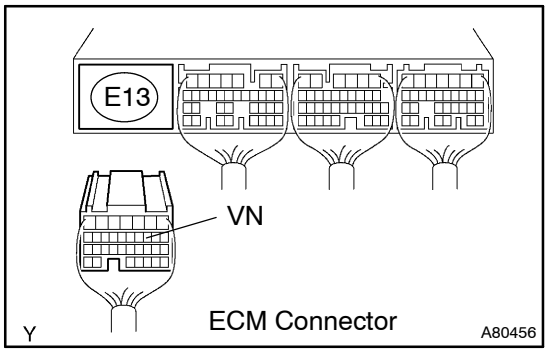

(a) Disconnect the V4 VRV connector.
(b) Disconnect the E13 ECM connector.
(c) Check the resistance between the wire harness side connectors.

Standard (Check for open):

Tester Connection	Specified Condition
VN (E13–10) – (V4–2)	Below 1 Ω

Standard (Check for short):

Tester Connection	Specified Condition
VN (E13–10) or (V4–2) – Body ground	10 kΩ or higher

(d) Reconnect the VRV connector.
(e) Reconnect the ECM connector.

NG → **REPAIR OR REPLACE HARNESS OR CONNECTOR**

OK

4 CHECK HARNESS AND CONNECTOR(VRV – EFI MAIN RELAY)

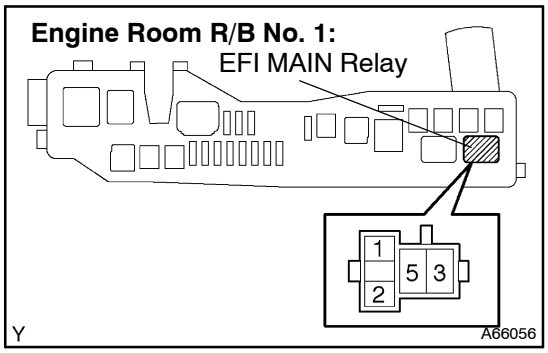

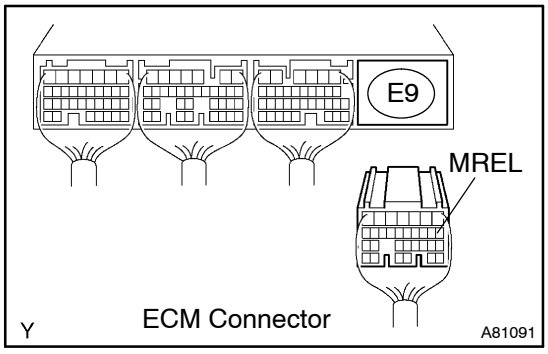

(a) Remove the EFI MAIN relay from the engine room R/B No. 1.
(b) Disconnect the E9 ECM connector.
(c) Check the resistance between the wire harness side connectors.

Standard (Check for open):

Tester Connection	Specified Condition
EFI MAIN relay (1) – MREL (E9–8)	Below 1 Ω

Standard (Check for short):

Tester Connection	Specified Condition
EFI MAIN relay (1) or MREL (E9–8) – Body ground	10 kΩ or higher

(d) Reinstall the EFI MAIN relay.
(e) Reconnect the ECM connector.

NG → **REPAIR OR REPLACE HARNESS OR CONNECTOR**

OK

REPLACE ECM (See page 10–29)

DTC	P0087	FUEL RAIL/SYSTEM PRESSURE – TOO LOW

DTC	P0190	FUEL RAIL PRESSURE SENSOR CIRCUIT

DTC	P0192	FUEL RAIL PRESSURE SENSOR CIRCUIT LOW INPUT

DTC	P0193	FUEL RAIL PRESSURE SENSOR CIRCUIT HIGH INPUT

HINT:

- For more information on the fuel pressure sensor and the common rail system, see page 05–255.
- If P0087, P0190, P0192 and/or P0193 is present, refer to the diagnostic trouble codes (DTCs) table for fuel system on page 05–255.

CIRCUIT DESCRIPTION

The ECM monitors internal fuel pressure of the common rail using the fuel pressure sensor and controls the suction control valve to regulate the internal fuel pressure to the target pressure, approximately 30 to 180 MPa (306 to 1,835 kgf/cm^2, 4,351 to 26,106 psi).

The pressure sensor is a semiconductor pressure sensor that varies electric resistance when applying pressure to its silicon. This sensor output voltage changes in proportion to the internal fuel pressure. The sensor has been designed as a duplicate circuit, and its main (PR) circuit is used under normal condition. Even if either of the sensor circuit is failed, the other normal circuit will be used to monitor the internal fuel pressure.

Property of Output Voltage:

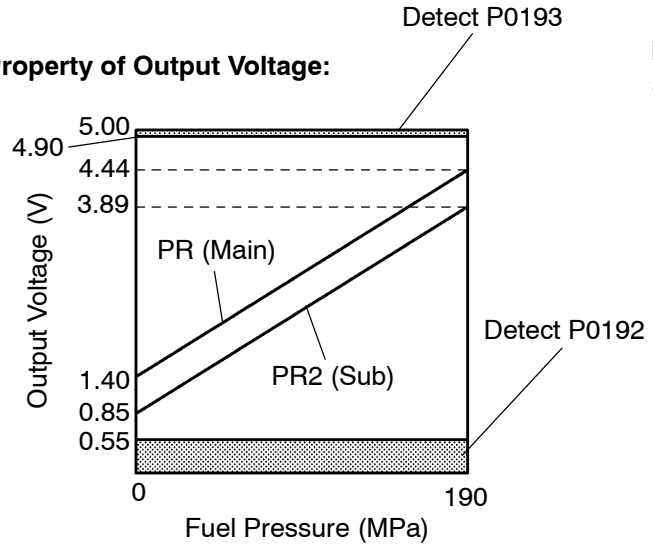

Internal Structure of the Pressure Sensor (Duplicates System):

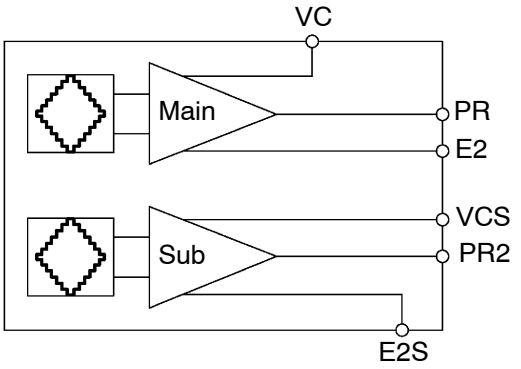

Y

A91222

DTC No.	DTC Detection Condition	Trouble Area
P0087	Fuel pressure sensor output voltage stays at fixed value (1 trip detection logic)	• Open or short in fuel pressure sensor circuit • Fuel pressure sensor • ECM
P0190	Fuel pressure sensor output voltage is 0.55 V or less, or 4.9 V or more for 0.5 second (1 trip detection logic)	
P0192	Fuel pressure sensor output voltage is 0.55 V or less for 0.5 second (1 trip detection logic)	
P0193	Fuel pressure sensor output voltage is 4.9 V or more for 0.5 second (1 trip detection logic)	

HINT:
After confirming DTC P0087, P0190, P0192 and P0193, check the internal fuel pressure of the common rail in "DIAGNOSIS / OBD/MOBD / DATA LIST / ALL / COMN RAIL" using the hand–held tester.

Reference:

Engine Speed	Fuel Pressure (MPa)
Idling	Approximately 30 to 40
Running the engine at 2,500 rpm (No engine load)	Approximately 50 to 100

MONITOR DESCRIPTION

P0087 (Fuel pressure sensor output stays at fixed value):
Under normal condition, an internal fuel pressure of the common rail usually fluctuates 1 to 2 MPa (10 to 20 kgf/cm^2, 145 to 290 psi) even if the driving condition is constant. The internal fuel pressure is approximately 30 to 40 MPa (306 to 408 kgf/cm^2, 4,351 to 5,801 psi) at idling, and it increases to approximately 50 to 100 MPa (510 to 1,020 kgf/cm^2, 7,251 to 14,503 psi) when running the engine at 2,500 rpm. This DTC is set if there is no fluctuation in the internal fuel pressure.
If this DTC is present, the ECM enters the fail–safe mode and limits the engine power. The fail–safe mode continues until the ignition switch is turned to OFF.

P0190, P0192 and P0193 (Open or short in fuel pressure sensor circuit):
These DTCs are set if the fuel pressure sensor output voltage is out of the standard range. The DTCs stand for open or short malfunction of the sensor circuit.
If these DTCs are present, the ECM enters the fail–safe mode and limits the engine power. The fail–safe mode continues until the ignition switch is turned to OFF.

P0087 Malfunction Detection:

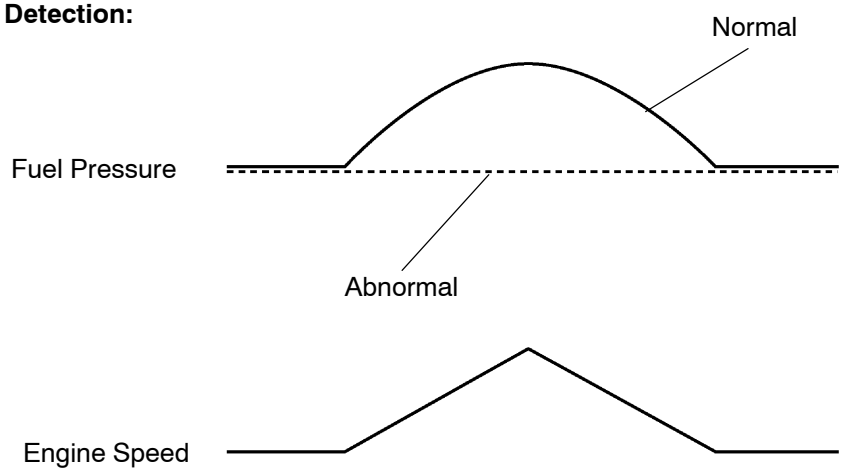

MONITOR STRATEGY

P0087:

Required sensors	Fuel pressure sensor
Frequency of operation	Continuous
Duration	1 second
CHK ENG operation	1 driving cycle

P0190:

Required sensors	Fuel pressure sensor
Frequency of operation	Continuous
Duration	0.5 second
CHK ENG operation	1 driving cycle

P0192:

Required sensors	Fuel pressure sensor
Frequency of operation	Continuous
Duration	0.5 second
CHK ENG operation	1 driving cycle

P0193:

Required sensors	Fuel pressure sensor
Frequency of operation	Continuous
Duration	0.5 second
CHK ENG operation	1 driving cycle

TYPICAL ENABLING CONDITIONS

P0087:

Item	Specification	
	Minimum	Maximum
Engine speed	500 rpm	–
Battery voltage	8 V	–
Fuel volume	5 mm^3	–
The monitor will not run if the fuel pressure sensor circuit (P0190, P0192 and P0193) is malfunctioning		

TYPICAL MALFUNCTION THRESHOLDS

P0087:

Detection Criteria	Threshold
Changing value of fuel pressure	Virtually no fluctuation

P0190:

Detection Criteria	Threshold
Fuel pressure sensor output voltage	Less than 0.55 V or more than 4.9 V

P0192:

Detection Criteria	Threshold
Fuel pressure sensor output voltage	Less than 0.55 V

P0193:

Detection Criteria	Threshold
Fuel pressure sensor output voltage	More than 4.9 V

WIRING DIAGRAM

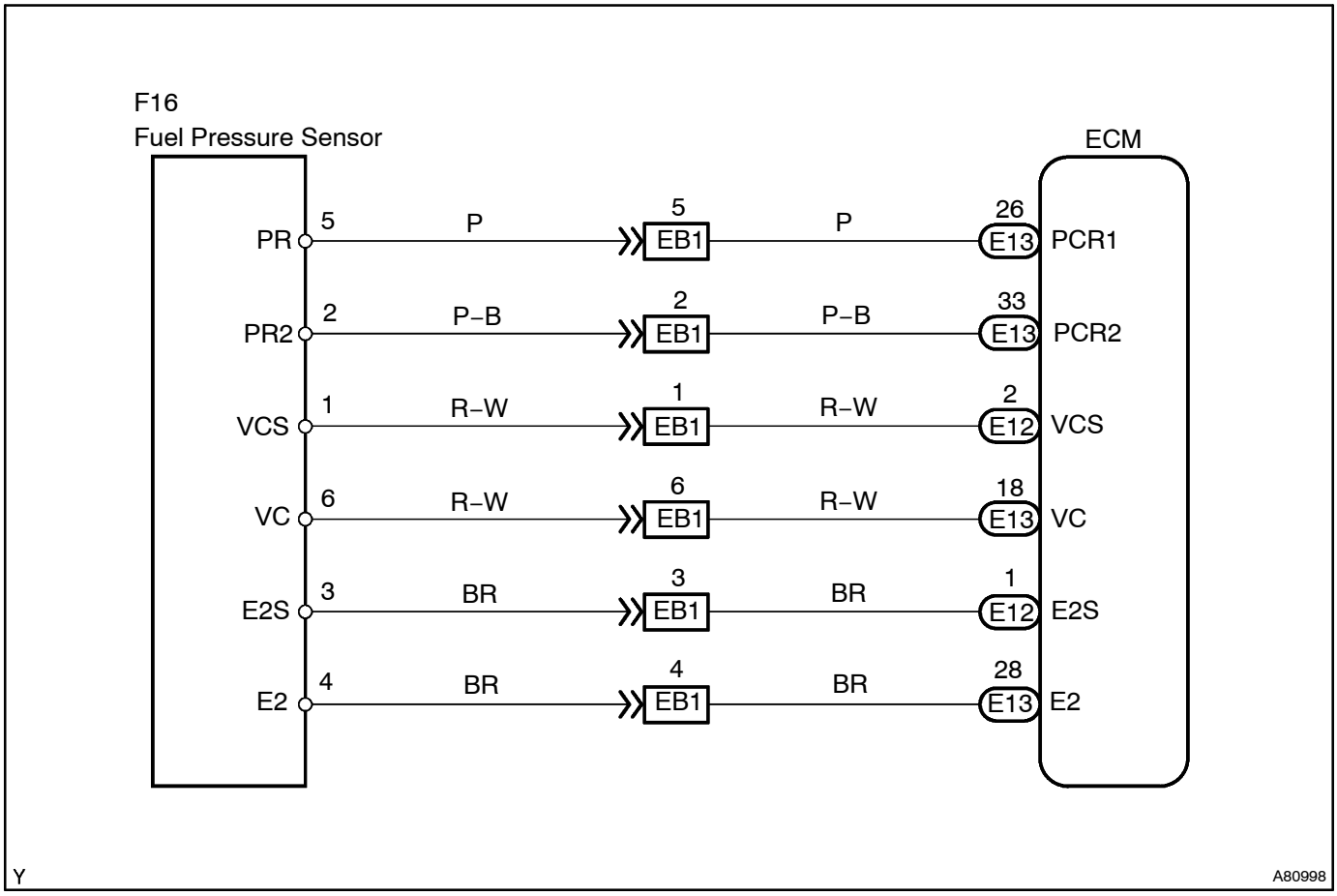

INSPECTION PROCEDURE

HINT:

- After completing repairs, check that P0087 is not present again.
- If different DTCs related to different systems that have terminal E2 as the ground terminal are output simultaneously, terminal E2 may have an open circuit.
- Read freeze frame data using the hand–held tester. Freeze frame data records the engine conditions when a malfunction is detected. When troubleshooting, freeze frame data can help determine if the vehicle was running or stopped, if the engine was warmed up or not, if the air–fuel ratio was lean or rich, and other data from the time the malfunction occurred.

1	READ VALUE OF HAND–HELD TESTER(FUEL PRESSURE)

(a) Connect the hand–held tester to the DLC3.
(b) Turn the ignition switch to ON and turn the hand–held tester ON.
(c) Start the engine.
(d) Select the item ”DIAGNOSIS / OBD/MOBD / DATA LIST / ALL / COMN RAIL”.
(e) Check that internal fuel pressure of the common rail is within the specification below.
Reference:

Engine Speed	Fuel Pressure (MPa)
Idling	Approximately 30 to 40
2,500 rpm (No engine load)	Approximately 50 to 100

NG → **Go to step 3**

OK

2 CHECK IF DTCS OUTPUT RECUR(FUEL PRESSURE SENSOR DTCS)

(a) Connect the hand–held tester to the DLC3.
(b) Turn the ignition switch to ON and turn the hand–held tester ON.
(c) Select the item "DIAGNOSIS / OBD/MOBD / DTC INFO / CLEAR CODES".
(d) Clear the DTCs.
(e) Let the engine idle for 60 seconds, and repeat quick engine RPM acceleration (to 2,500 rpm) for 30 seconds.
(f) Select the item "DIAGNOSIS / OBD/MOBD / DTC INFO / CURRENT CODES".
(g) Read DTCs.

Result:

Display (DTC output)	Proceed to
P0087, P0190, P0192 and/or P0193	A
No output	B

B → **CHECK FOR INTERMITTENT PROBLEMS (See page 05–270)**

A

REPLACE ECM (See page 10–29)

3 CHECK HARNESS AND CONNECTOR(FUEL PRESSURE SENSOR – ECM)

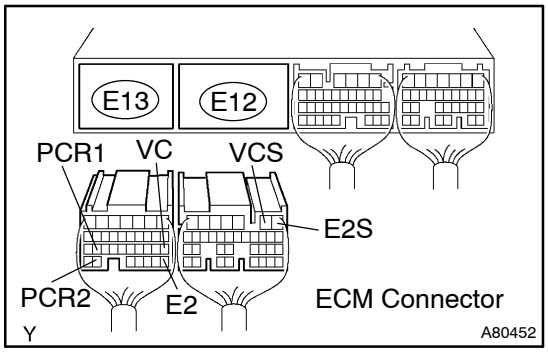

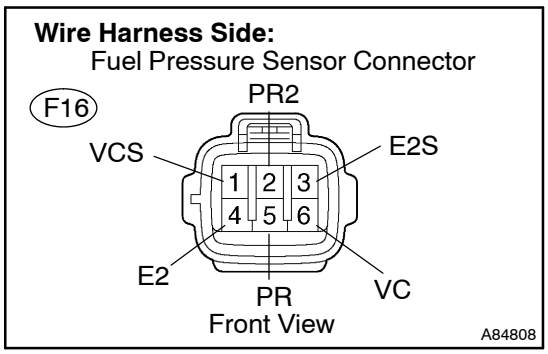

(a) Disconnect the E12 and E13 ECM connectors.
(b) Disconnect the F16 fuel pressure sensor connector.
(c) Check the resistance between the wire harness side connectors.

Standard (Check for open):

Tester Connection	Specified Condition
PCR1 (E13–26) – PR (F16–5)	Below 1 Ω
PCR2 (E13–33) – PR2 (F16–2)	
VCS (E12–2) – VCS (F16–1)	
VC (E13–18) – VC (F16–6)	
E2 (E13–28) – E2 (F16–4)	
E2S (E12–1) – E2S (F16–3)	

Standard (Check for short):

Tester Connection	Specified Condition
PCR1 (E13–26) or PR (F16–5) – Body ground	10 kΩ or higher
PCR2 (E13–33) or PR2 (F16–2) – Body ground	
VCS (E12–2) or VCS (F16–1) – Body ground	
VC (E13–18) or VC (F16–6) – Body ground	
E2 (E13–28) or E2 (F16–4) – Body ground	
E2S (E12–1) or E2S (F16–3) – Body ground	

(d) Reconnect the ECM connectors.
(e) Reconnect the fuel pressure sensor connector.

NG → REPAIR OR REPLACE HARNESS OR CONNECTOR

OK

REPLACE COMMON RAIL ASSY (FUEL PRESSURE SENSOR) (See page 11–67)

DTC	P0088	FUEL RAIL/SYSTEM PRESSURE – TOO HIGH

DTC	P1229	FUEL PUMP SYSTEM

HINT:

- For more information on the supply pump (suction control valve) and the common rail system, see page 05–255.
- If P0088 and/or P1229 is present, refer to the diagnostic trouble codes (DTCs) table for the fuel system on page 05–255.

CIRCUIT DESCRIPTION

Refer to the description on page 05–255.

DTC No.	DTC Detection Condition	Trouble Area
P0088	• Internal fuel pressure of the common rail is too high: The fuel pressure exceeds 200 MPa (2,039 kgf/cm^2, 29,007 psi) (1 trip detection logic)	• Supply pump (Suction control valve) • Pressure discharge valve • Short in supply pump (Suction control valve) circuit • Open in pressure discharge valve circuit • ECM
P1229	• Fuel over–feed: Internal fuel pressure is beyond the target fuel pressure despite the ECM closing the suction control valve (1 trip detection logic)	• Short in supply pump (Suction control valve) circuit • Supply pump (Suction control valve) • ECM

HINT:

After confirming DTC P0088 and P1229, check the fuel rail pressure in the ”DIAGNOSIS / OBD/MOBD / DATA LIST / ALL / COMN RAIL” using the hand–held tester.

Reference:

Engine Speed	Fuel Pressure (MPa)
Idling	Approximately 30 to 40
2,500 rpm (No engine load)	Approximately 50 to 100

MONITOR DESCRIPTION

P0088 (Internal fuel pressure too high):

The ECM will set this DTC if the fuel pressure inside the common rail is beyond 200 MPa (2,039 kgf/cm^2, 29,007 psi). This DTC indicates that the suction control valve may be stuck open, or there may be short in its circuit, and the pressure discharge valve may be stuck closed, or there may be open in its circuit.

If this DTC is present, the ECM enters the fail–safe mode and limits the engine power. The fail–safe mode continues until the ignition switch is turned to OFF.

P1229 (Fuel over–feed):

The ECM will set this DTC if the actual fuel pressure inside the common rail stays higher than the target fuel pressure, despite the ECM closing the suction control valve. This DTC represents that the suction control valve may be stuck open, or there may be short in its circuit. Under this condition, the pressure discharge valve operates frequently.

If this DTC is present, the ECM enters the fail–safe mode and limits the engine power. The fail–safe mode continues until the ignition switch is turned to OFF.

MONITOR STRATEGY

P0088:

Required sensors	Fuel pressure sensor
Frequency of operation	Continuous
Duration	1 second
CHK ENG operation	1 driving cycle

P1229:

Required sensors	Fuel pressure sensor
Frequency of operation	Continuous
Duration	1 minute
CHK ENG operation	1 driving cycle

TYPICAL ENABLING CONDITIONS

P0088:

Specification
The monitor will not run if the fuel pressure sensor, or suction control valve circuit, or pressure discharge valve is malfunctioning

P1229:

Item	Specification
Target fuel pressure variation	Small
The monitor will not run if the fuel pressure sensor, or suction control valve circuit, or pressure discharge valve is malfunctioning	

TYPICAL MALFUNCTION THRESHOLDS

P0088:

Detection Criteria	Threshold
Fuel pressure sensor	200 MPa (2,039 kgf/cm^2, 29,007 psi) or more

P1229:

Item	Threshold
The internal fuel pressure of the common rail with the suction control valve closed	Stays at higher than targeted fuel pressure
Behavior of the pressure discharge valve	Frequently operates

WIRING DIAGRAM

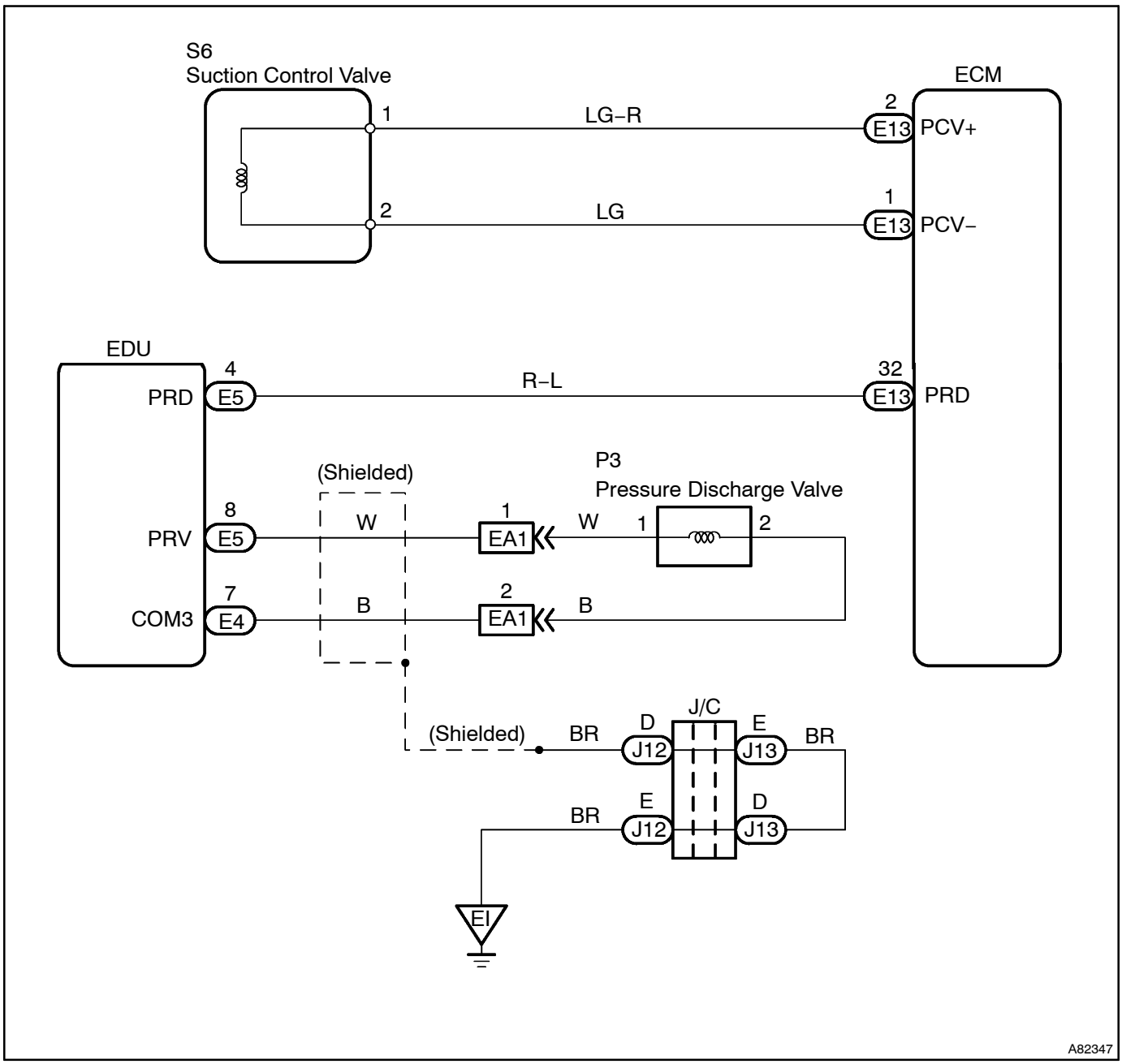

INSPECTION PROCEDURE

HINT:

Read freeze frame data using the hand–held tester. Freeze frame data records the engine conditions when a malfunction is detected. When troubleshooting, freeze frame data can help determine if the vehicle was running or stopped, if the engine was warmed up or not, if the air–fuel ratio was lean or rich, and other data from the time the malfunction occurred.

1	CHECK OTHER DTC OUTPUT(IN ADDITION TO DTC P0088 AND/OR P1229)

(a) Connect the hand–held tester to the DLC3.
(b) Turn the ignition switch to ON and turn the hand–held tester ON.
(c) Select the item ”DIAGNOSIS / OBD/MOBD / DTC INFO / CURRENT CODES”.
(d) Read DTCs.

Result:

Display (DTC output)	Proceed to
P0088, or P0088 and P1229	A
P1229	B
P0190, P0191, P0192, P0193 and/or P1271	C
P1272	D

B → **Go to step 4**

C → **GO TO RELEVANT DTC CHART (See page 05–299)**

D → **Go to step 3**

A

2	READ OUTPUT DTC(SEE IF DTC P1272 IS OUTPUT)

(a) Connect the hand–held tester to the DLC3.
(b) Turn the ignition switch to ON and turn the hand–held tester ON.
(c) Select the item ”DIAGNOSIS / OBD/MOBD / DTC INFO / CLEAR CODES”.
(d) Clear the DTCs.
(e) Start the engine and turn the ignition switch to OFF. Wait for 10 seconds and then restart the engine and turn the ignition switch to OFF again.
(f) Select the item ”DIAGNOSIS / OBD/MOBD / DTC INFO / CURRENT CODES”.
(g) Read DTCs.

Result:

Display (DTC output)	Proceed to
P1272	A
No output	B

B → **Go to step 4**

A

3	REPLACE COMMON RAIL ASSY(PRESSURE DISCHARGE VALVE) (See page 11–67)

GO

CHECK IF DTCS OUTPUT RECUR (DTC P0088 AND/OR P1229 OUTPUT AGAIN)

HINT:
After clearing the DTCs, drive the vehicle at 50 km/h (31 mph) for 5 minutes, and then confirm that P0088 and/or P1229 is not present again.

4 INSPECT INJECTION OR SUPPLY PUMP ASSY(SUCTION CONTROL VALVE)

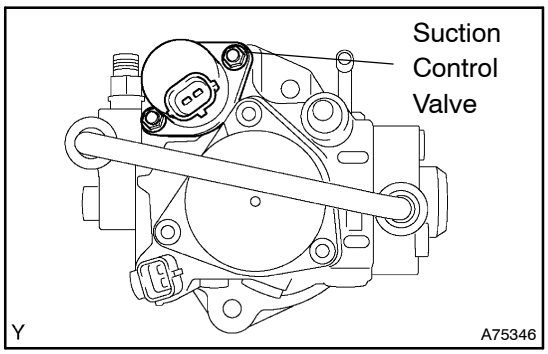

(a) Measure the resistance between the terminals of the suction control valve.
Standard: 1.9 to 2.3 Ω at 20°C (68°F)

NG → **REPLACE INJECTION OR SUPPLY PUMP ASSY (SUCTION CONTROL VALVE)** (See page 11–58)

OK

5 READ OUTPUT DTC(SEE IF DTC P1229 IS OUTPUT)

(a) Connect the hand–held tester to the DLC3.
(b) Turn the ignition switch to ON and turn the hand–held tester ON.
(c) Select the item ”DIAGNOSIS / OBD/MOBD / DTC INFO / CLEAR CODES”.
(d) Clear the DTCs.
(e) Disconnect the suction control valve connector and then start the engine. Wait for 1 minute.

HINT:

If the engine does not start, the suction control valve is normal. Therefore proceed to step 6.

(f) Select the item ”DIAGNOSIS / OBD/MOBD / DTC INFO / CURRENT CODES”.
(g) Read DTCs.
Result:

Display (DTC output)	Proceed to
No output	A
P1229	B

B → **REPLACE INJECTION OR SUPPLY PUMP ASSY (SUCTION CONTROL VALVE)** (See page 11–58)

A

6 CHECK HARNESS AND CONNECTOR(SUCTION CONTROL VALVE – ECM)

Wire Harness Side:

Suction Control Valve Connector

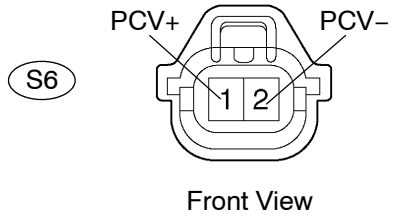

Front View

A81460

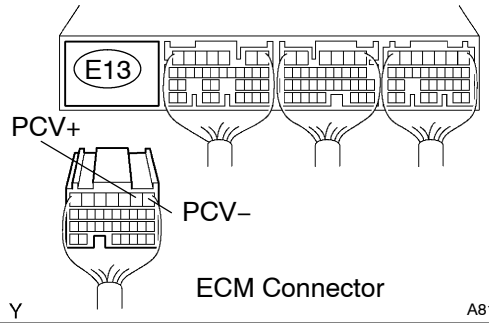

ECM Connector

A81089

(a) Disconnect the S6 suction control valve connector.
(b) Disconnect the E13 ECM connector.
(c) Check the resistance between the wire harness side connector.

Standard (Check for open):

Tester Connection	Specified Condition
PCV+ (S6–1) – PCV+ (E13–2)	Below 1 Ω
PCV– (S6–2) – PCV– (E13–1)	

Standard (Check for short):

Tester Connection	Specified Condition
PCV+ (S6–1) or PCV+ (E13–2) – Body ground	10 kΩ higher
PCV– (S6–2) or PCV– (E13–1) – Body ground	

(d) Reconnect the suction control valve connector.
(e) Reconnect the ECM connector.

NG → **REPAIR OR REPLACE HARNESS AND CONNECTOR**

OK

7 INSPECT ECM(PCV VOLTAGE)

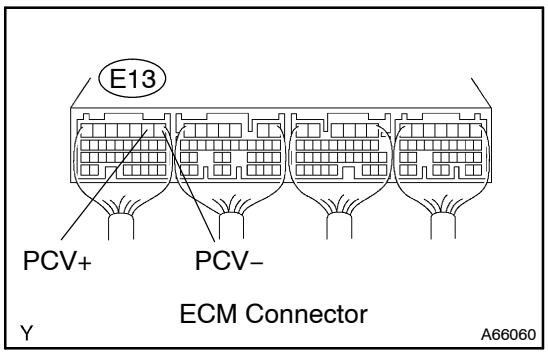

(a) Inspect using the oscilloscope.
(b) During cranking or idling, check the waveform between the specified terminals of the E13 ECM connector.

Standard :

Tester Connection	Specified Condition
PCV+ (E13–2) – PCV– (E13–1)	Correct waveform is as shown

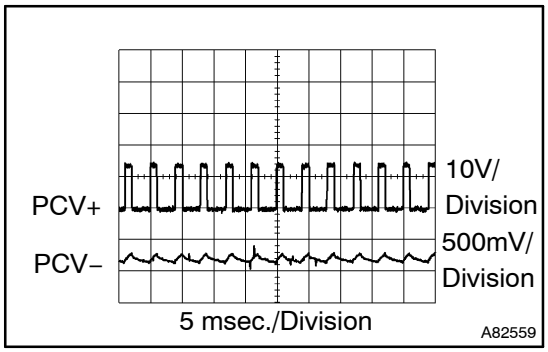

NG → **REPLACE ECM (See page 10–29)**

OK

CHECK IF DTCS OUTPUT RECUR (DTC P0088 AND/OR P1229)

HINT:
After clearing the DTCs, drive the vehicle at 50 km/h (31 mph) for 5 minutes, and then confirm that P0088 and/or P1229 is not present again.

DTC	P0093	FUEL SYSTEM LEAK DETECTED – LARGE LEAK

HINT:

- If DTC P1229 is detected, P0093 (fuel leaks in high–pressurized area) may be detected simultaneously. Because of the extremely high internal fuel pressure in the common rail opens the pressure limiter, and the ECM may interpret this as a fault and set P0093.
- For more information on the common rail system, see page 05–255.
- If P0093 is present, refer to the diagnostic trouble codes (DTCs) table for the fuel system on page 05–255.

CIRCUIT DESCRIPTION

Refer to the description on page 05–255.

DTC No.	DTC Detection Condition	Trouble Area
P0093	Fuel leaks in high–pressurized area (1 trip detection logic)	• Fuel line between supply pump and common rail • Fuel line between common rail and injector • Supply pump • Common rail • Injector (P1238 is set simultaneously) • Pressure discharge valve • Open or short in EDU circuit (P0200 is set simultaneously) • Open or short in injector circuit (P0200 and P1238 are set simultaneously) • EDU (P0200 is set simultaneously) • ECM

HINT:

After confirming DTC P0093, check the internal fuel pressure of the common rail in the ”DIAGNOSIS / OBD/MOBD / DATA LIST / ALL / COMN RAIL” using the hand–held tester.

Reference:

Engine Speed	Fuel Pressure (MPa)
Idling	Approximately 30 to 40
2,500 rpm (No engine load)	Approximately 50 to 100

MONITOR DESCRIPTION

P0093 (Fuel leaks in high–pressurized area):

This DTC stands for fuel leaks that are existing in high–pressurized area in the common rail system. The ECM constantly monitors the internal fuel pressure of the common rail after the engine is started, and the ECM then will set this DTC if the drop of the internal fuel pressure is large when injecting the fuel.

In the common rail system, high–pressurized fuel, approximately 30 to 180 MPa (306 to 1,835 kgf/cm^2, 4,351 to 26,106 psi), is always applied to the high–pressurized area including the supply pump, common rail, injector and piping. The ECM adjusts the suction control valve control current (by applying duty ratio signal) to obtain the target internal fuel pressure.

If this DTC is present, the ECM enters the fail–safe mode. The fail–safe mode suspends both fuel injection and supply pump operation, and then stops the engine. Before stopping the engine, the ECM permits driving the vehicle for 1 minute. The fail–safe mode continues until the ignition switch is turned to OFF.

MONITOR STRATEGY

Required sensors	Fuel pressure sensor
Frequency of operation	Continuous
Duration	1 second
CHK ENG operation	1 driving cycle

TYPICAL ENABLING CONDITIONS

Item	Specification	
	Minimum	Maximum
Engine speed	600 rpm	–
The monitor will not run if the fuel pressure sensor, suction control valve circuit, or pressure discharge valve is malfunctioning		

TYPICAL MALFUNCTION THRESHOLDS

Threshold
Drop of the internal fuel pressure is large when injecting fuel

INSPECTION PROCEDURE

HINT:
Read freeze frame data using the hand–held tester. Freeze frame data records the engine conditions when a malfunction is detected. When troubleshooting, freeze frame data can help determine if the vehicle was running or stopped, if the engine was warmed up or not, if the air–fuel ratio was lean or rich, and other data from the time the malfunction occurred.

1	CHECK OTHER DTC OUTPUT(IN ADDITION TO DTC P0093)

(a) Connect the hand–held tester to the DLC3.
(b) Turn the ignition switch to ON and turn the hand–held tester ON.
(c) Select the item ”DIAGNOSIS / OBD/MOBD / DTC INFO / CURRENT CODES”.
(d) Read DTCs.
Result:

Display (DTC output)	Proceed to
P0093	A
P0093 and P1238	B
P0093 and P0200 and/or P1271	C

HINT:
If any other codes besides P0093 are output, perform troubleshooting for those DTCs first.

B → **Go to step 3**

C → **GO TO RELEVANT DTC CHART**
(See page 05–299)

A

2	CHECK FUEL LEAKAGE(IN HIGH–PRESSURIZED FUEL PARTS AND AREA)

(a) Visually check the supply pump, injector and fuel line located between the supply pump and common rail for fuel leaks or fuel pressure leaks. Also, perform the same on the fuel line between the common rail and the injector (see page 11–67, 11–46).

HINT:
There is possibility that fuel leaks inside the components (supply pump, etc) have been occurred.

NG → **REPAIR OR REPLACE**

OK

3	READ VALUE OF HAND–HELD TESTER(COMPENSATION OF INJECTION VOLUME FOR EACH CYLINDER)

(a) Connect the hand–held tester to the DLC3.
(b) Turn the ignition switch to ON and turn the hand–held tester ON.
(c) Start the engine.
(d) Select the item ”DIAGNOSIS / OBD/MOBD / DATA LIST / ALL / INJ VOLUME FB” and read its value displayed on the hand–held tester.

Result:

Result	Compensatory Injection Volume (mm^3)
Standard	–3 to 3
Maximum	–4.9 to 4.9

NG → **REPLACE INJECTOR ASSY (See page 11–46)**

OK

4	PERFORM ACTIVE TEST USING HAND–HELD TESTER(FUEL LEAK TEST)

(a) Connect the hand–held tester to the DLC3.
(b) Start the engine.
(c) Turn the ignition switch to ON and turn the hand–held tester ON.
(d) Select the item ”DIAGNOSIS / OBD/MOBD / ACTIVE TEST / FUEL LEAK TEST”.
(e) Check for fuel leaks in the high–pressurized area.

GO

CHECK IF DTC OUTPUT RECURS (DTC P0093)

HINT:

- After clearing the DTC, let the engine idle for 1 minute and then run it at 2,500 rpm for 30 seconds.
- At the same time, check the fuel pressure inside the common rail in the ”DIAGNOSIS / OBD/MOBD / DATA LIST / ALL / COMN RAIL” using the hand–held tester.
- The internal fuel pressure of the common rail must be stable under each driving condition.

Reference:

Engine Speed	Fuel Pressure (MPa)
Idling	Approximately 30 to 40
2,500 rpm (No engine load)	Approximately 50 to 100

DTC	P0095	INTAKE AIR TEMPERATURE SENSOR 2 CIRCUIT

DTC	P0097	INTAKE AIR TEMPERATURE SENSOR 2 CIRCUIT LOW

DTC	P0098	INTAKE AIR TEMPERATURE SENSOR 2 CIRCUIT HIGH

CIRCUIT DESCRIPTION

(Figure 1)

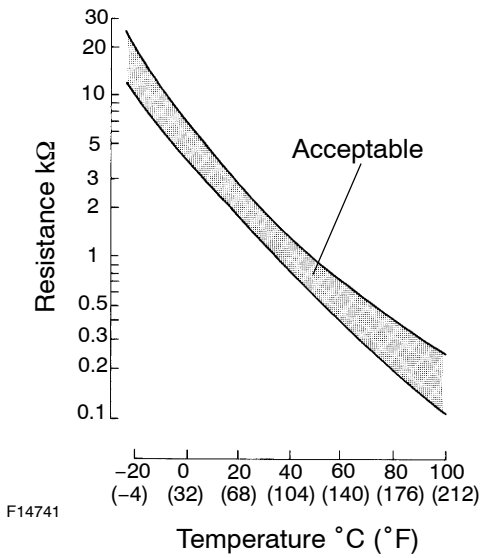

The diesel turbo inlet air temperature sensor is built into the intake air connector and senses the intake air temperature. A thermistor built in the sensor changes the resistance value according to the intake air temperature. The lower the intake air temperature, the greater the thermistor resistance value, and the higher the intake air temperature, the lower the thermistor resistance value (see figure 1).

The intake air temperature sensor is connected to the ECM. The 5 V power source voltage in the ECM is applied to the intake air temperature sensor from terminal THIA via resistor R. Resistor R and the intake air temperature sensor are connected in series. When the resistance value of the intake air temperature sensor changes in accordance with changes in the intake air temperature, the potential at terminal THIA also changes. Based on this signal, the ECM corrects the fuel injection volume to improve the driveability with a cold engine.

DTC No.	Proceed to	DTC Detection Condition	Trouble Area
P0095	Step 1	Open or short in diesel turbo inlet air temperature sensor circuit for 0.5 second (1 trip detection logic)	• Open or short in diesel turbo inlet air temperature sensor circuit • Diesel turbo inlet air temperature sensor • ECM
P0097	Step 4	• Short in diesel turbo inlet air temperature sensor circuit for 0.5 second (Sensor resistance value is less than 25 Ω [Sensor output voltage is less than 0.05 V]) (1 trip detection logic)	
P0098	Step 2	• Open in diesel turbo inlet air temperature sensor circuit for 0.5 second (Sensor resistance value is more than 156 kΩ [Sensor output voltage is more than 4.9 V]) (1 trip detection logic)	

HINT:

After confirming DTC P0095, P0097 or P0098, check the intake air temperature in the ”DIAGNOSIS / OBD/ MOBD / DATA LIST / ALL / AMBI TEMP SENS” using the hand–held tester.

Reference:

Temperature Displayed	Malfunction
–40°C (–40°F)	Open circuit
140°C (284°F) or more	Short circuit

WIRING DIAGRAM

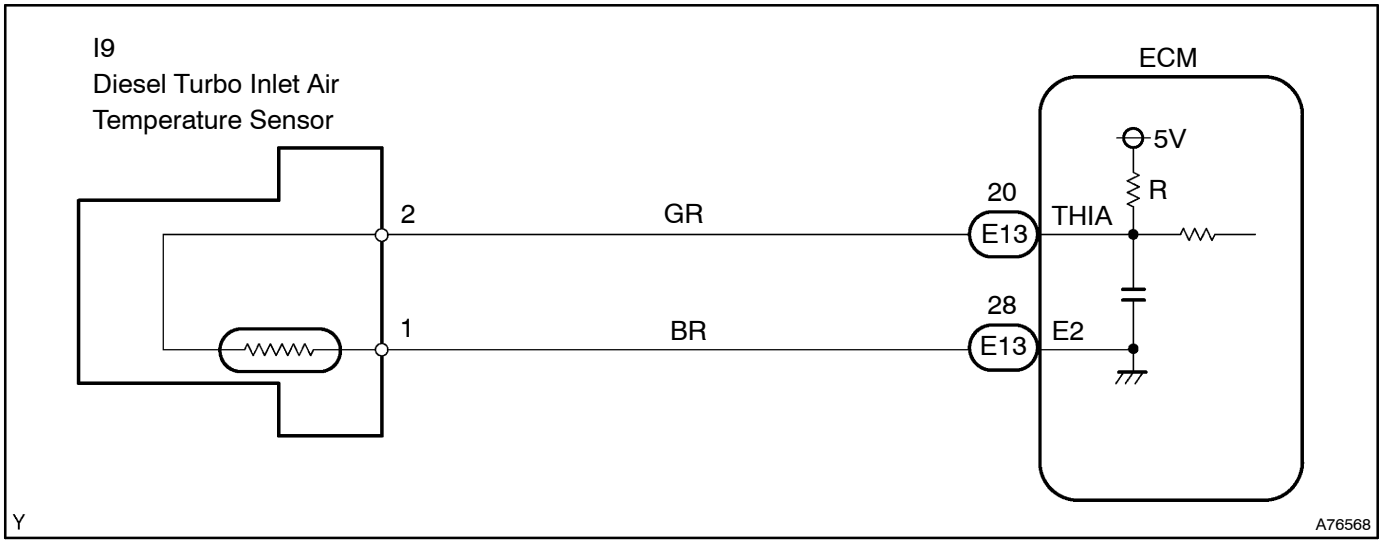

INSPECTION PROCEDURE

HINT:

- If different DTCs related to different systems that have terminal E2 as the ground terminal are output simultaneously, terminal E2 may have an open circuit.
- Read freeze frame data using the hand–held tester. Freeze frame data records the engine conditions when a malfunction is detected. When troubleshooting, freeze frame data can help determine if the vehicle was running or stopped, if the engine was warmed up or not, if the air–fuel ratio was lean or rich, and other data from the time the malfunction occurred.

1 READ VALUE OF HAND–HELD TESTER(INTAKE AIR TEMPERATURE)

(a) Connect the hand–held tester to the DLC3.
(b) Turn the ignition switch to ON and turn the hand–held tester ON.
(c) Select the item "DIAGNOSIS / OBD/MOBD / DATA LIST / ALL / AMBI TEMP SENS" and read its value displayed on the hand–held tester.
Standard: Same value as air temperature at the intake manifold.
Result:

Temperature Displayed	Proceed to
–40°C (–40°F)	A
140°C (284°F) or more	B
OK (Same as air temperature near to intake manifold)	C

HINT:
- If there is an open circuit, the hand–held tester indicates –40°C (–40°F).
- If there is a short circuit, the hand–held tester indicates 140°C (284°F) or more.

B → **Go to step 4**

C → **CHECK FOR INTERMITTENT PROBLEMS** **(See page 05–270)**

A

2 READ VALUE OF HAND–HELD TESTER(CHECK FOR OPEN IN WIRE HARNESS)

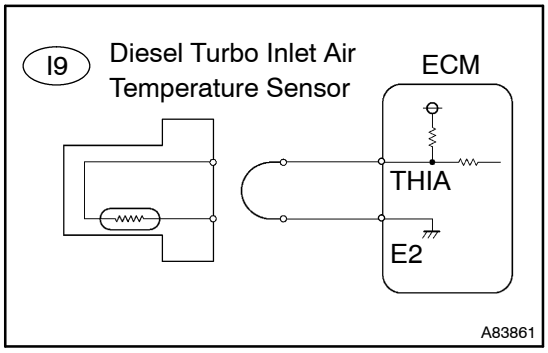

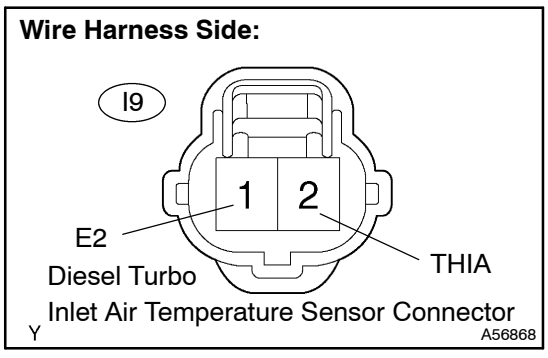

(a) Disconnect the I9 diesel turbo inlet air temperature sensor connector.
(b) Connect terminals 1 and 2 of the diesel turbo inlet air temperature sensor wire harness side connector.
(c) Connect the hand–held tester to the DLC 3.
(d) Turn the ignition switch to ON and turn the hand–held tester ON.
(e) Select the item "DIAGNOSIS / OBD/MOBD / DATA LIST / ALL / AMBI TEMP SENS" and read its value displayed on the hand–held tester.
Standard: 140°C (284°F) or more
(f) Reconnect the diesel turbo inlet air temperature sensor connector.

OK → **CONFIRM GOOD CONNECTION AT SENSOR. IF OK, REPLACE DIESEL TURBO INLET AIR TEMPERATURE SENSOR**

NG

3 READ VALUE OF HAND–HELD TESTER(CHECK FOR OPEN IN ECM)

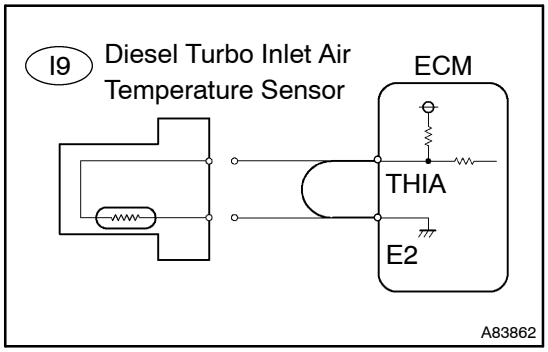

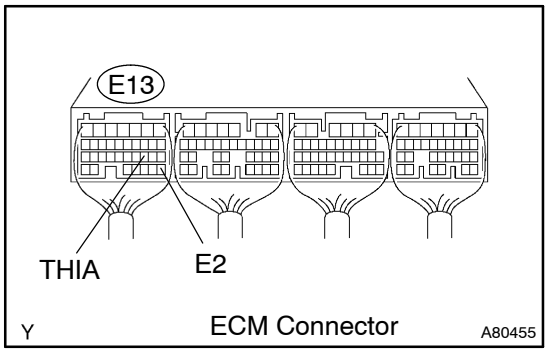

(a) Disconnect the I9 diesel turbo inlet air temperature sensor connector.
(b) Connect terminals THIA and E2 of the E13 ECM connector.

HINT:
Before checking, do a visual and contact pressure check on the ECM connector.

(c) Connect the hand–held tester to the DLC 3.
(d) Turn the ignition switch to ON and turn the hand–held tester ON.
(e) Select the item ”DIAGNOSIS / OBD/MOBD / DATA LIST / ALL / AMBI TEMP SENS” and read its value displayed on the hand–held tester.
Standard: 140°C (284°F) or more
(f) Reconnect the diesel turbo inlet air temperature sensor connector.

OK	**REPAIR OR REPLACE HARNESS OR CONNECTOR**

NG

CONFIRM GOOD CONNECTION AT ECM. IF OK, REPLACE ECM (See page 10–29)

4 READ VALUE OF HAND–HELD TESTER(CHECK FOR SHORT IN WIRE HARNESS)

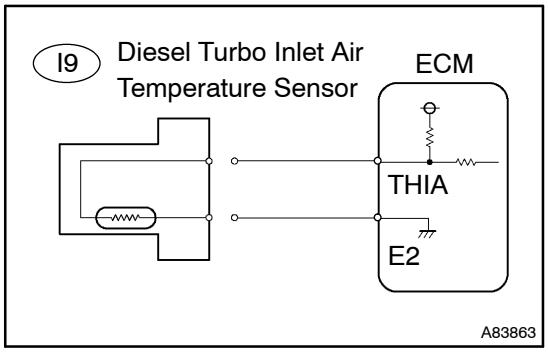

(a) Disconnect the I9 diesel turbo inlet air temperature sensor connector.
(b) Connect the hand–held tester to the DLC 3.
(c) Turn the ignition switch to ON and turn the hand–held tester ON.
(d) Select the item ”DIAGNOSIS / OBD/MOBD / DATA LIST / ALL / AMBI TEMP SENS” and read its value displayed on the hand–held tester.
Standard: –40°C (–40°F)
(e) Reconnect the diesel turbo inlet air temperature sensor connector.

OK	**REPLACE DIESEL TURBO INLET AIR TENPERATURE SENSOR**

NG

5	READ VALUE OF HAND–HELD TESTER(CHECK FOR SHORT IN ECM)

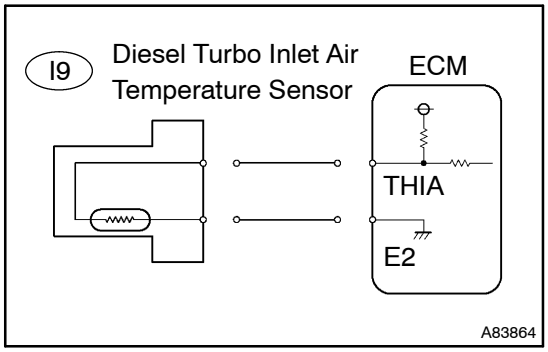

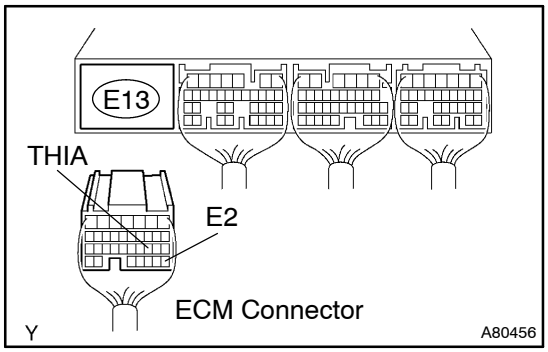

(a) Disconnect the I9 diesel turbo inlet air temperature sensor connector.
(b) Disconnect the E13 ECM connector.
(c) Connect the hand–held tester to the DLC 3.
(d) Turn the ignition switch to ON and turn the hand–held tester ON.
(e) Select the item "DIAGNOSIS / OBD/MOBD / DATA LIST / ALL / AMBI TEMP SENS" and read its value displayed on the hand–held tester.
Standard: –40°C (–40°F)
(f) Reconnect the diesel turbo inlet air temperature sensor connector.
(g) Reconnect the ECM connector.

OK → **REPAIR OR REPLACE HARNESS OR CONNECTOR**

NG

REPLACE ECM (See page 10–29)

DTC	P0100	MASS OR VOLUME AIR FLOW CIRCUIT

DTC	P0102	MASS OR VOLUME AIR FLOW CIRCUIT LOW INPUT

DTC	P0103	MASS OR VOLUME AIR FLOW CIRCUIT HIGH INPUT

CIRCUIT DESCRIPTION

The mass air flow meter uses a platinum hot wire. The mass air flow meter consists of a platinum hot wire, a temperature sensor and a control circuit installed in a plastic housing. The mass air flow meter works on the principle that the hot wire and temperature sensor located in the intake air by–pass of the housing detect any changes in the intake air temperature.

The hot wire is maintained at the predetermined temperature by controlling the current flow through the hot wire. This current flow is then measured as the output voltage of the mass air flow meter.

The circuit is constructed so that the platinum hot wire and temperature sensor provide a bridge circuit, with the power transistor controlled so that the potential of A and B remains equal to maintain the predetermined temperature.

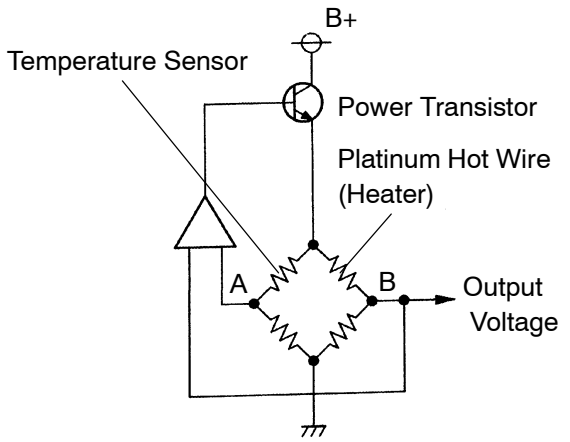

FI6929
A09074

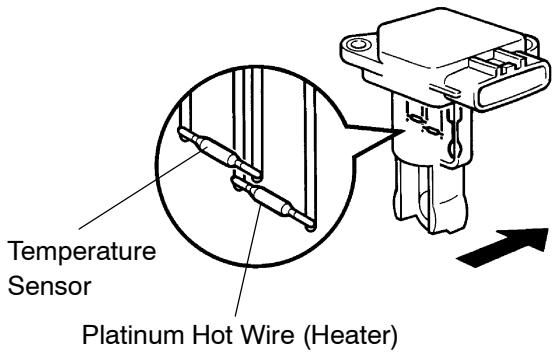

A85670

DTC No.	DTC Detection Condition	Trouble Area
P0100	Open or short in mass air flow meter circuit for more than 3 seconds with engine speed at 4,000 rpm or less (1 trip detection logic)	• Open or short in mass air flow meter circuit • Mass air flow meter • ECM
P0102	Open in mass air flow meter circuit for more than 3 seconds with engine speed at 4,000 rpm or less (1 trip detection logic)	
P0103	Short in mass air flow meter circuit for more than 3 seconds with engine speed at 4,000 rpm or less (1 trip detection logic)	

HINT:
After confirming DTC P0100, P0102 or P0103, check the mass air flow ratio in the ”DIAGNOSIS / OBD/ MOBD / DATA LIST / ALL / MAF” using the hand–held tester.

Reference:

Air Flow Value (gm/s)	Malfunction
Approximately 0.0	• Open in Mass air flow meter power source circuit • Open or short in VG circuit
174.0 or more	• Open in EVG circuit

WIRING DIAGRAM

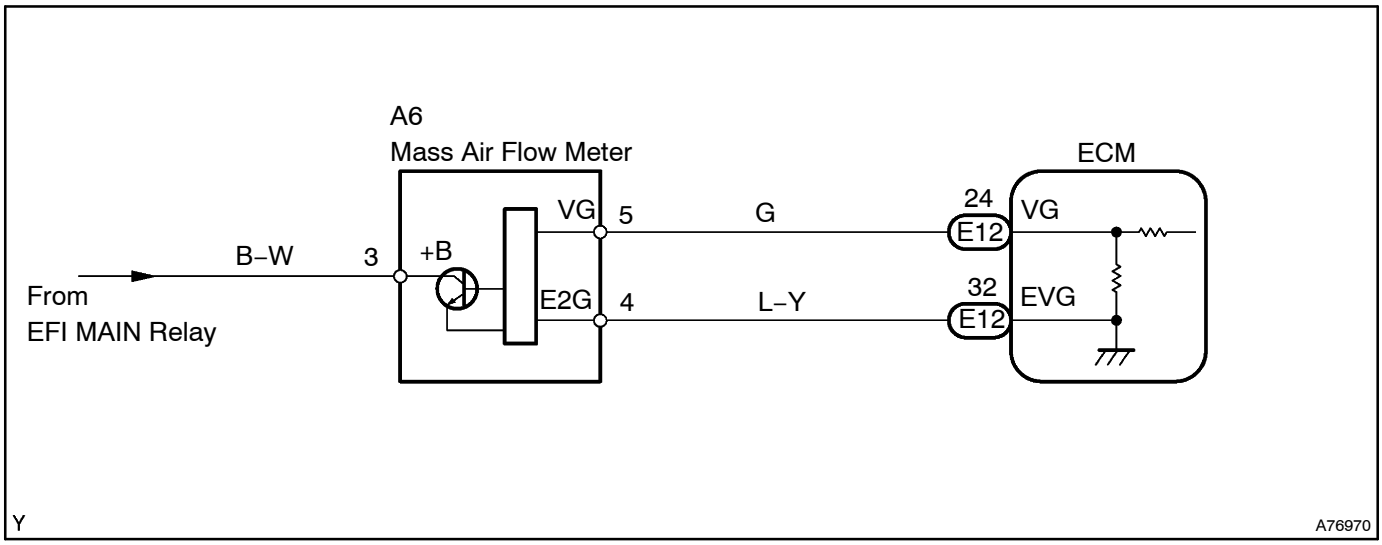

INSPECTION PROCEDURE

HINT:
Read freeze frame data using the hand–held tester. Freeze frame data records the engine conditions when a malfunction is detected. When troubleshooting, freeze frame data can help determine if the vehicle was running or stopped, if the engine was warmed up or not, if the air–fuel ratio was lean or rich, and other data from the time the malfunction occurred.

1	READ VALUE OF HAND–HELD TESTER(MASS AIR FLOW RATE)

(a) Connect the hand–held tester to the DLC3.
(b) Start the engine.
(c) Turn the hand–held tester ON.
(d) Select the item ”DIAGNOSIS / OBD/MOBD / DATA LIST / ALL / MAF” and read its value displayed on the hand–held tester.

Result:

Air flow rate (gm/s)	Proceed to
0.0	A
174.0 or more	B
Between 1 and 173.0 (*1)	C

*1: The value must be changed when the throttle valve is opened or closed.

B	**Go to step 6**
C	**CHECK FOR INTERMITTENT PROBLEMS (See page 05–270)**

A

2 INSPECT MASS AIR FLOW METER(POWER SOURCE)

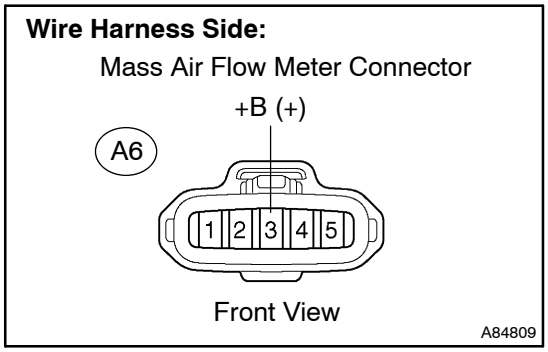

(a) Turn the ignition switch to ON.
(b) Disconnect the A6 mass air flow meter connector.
(c) Measure the voltage between the terminal of the wire harness side connector and the body ground.

Standard:

Tester Connection	Specified Condition
+B (A6–3) – Body ground	9 to 14 V

(d) Reconnect the mass air flow meter connector.

NG → **Go to step 5**

OK

3 INSPECT ECM(VG VOLTAGE)

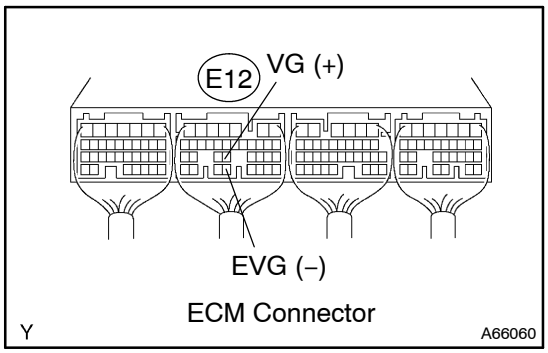

(a) Start the engine.
(b) Measure the voltage between the specified terminals of the E12 ECM connector.

HINT:
The A/C switch should be turned OFF.

Standard:

Tester Connection	Condition	Specified Condition
VG (E12–24) – EVG (E12–32)	Engine is idling	0.5 to 3.4 V

OK → **REPLACE ECM (See page 10–29)**

NG

4 CHECK HARNESS AND CONNECTOR(MASS AIR FLOW METER – ECM)

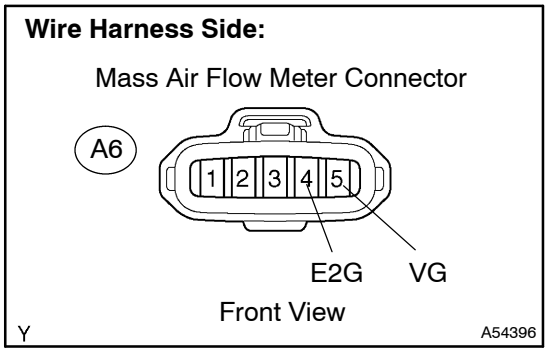

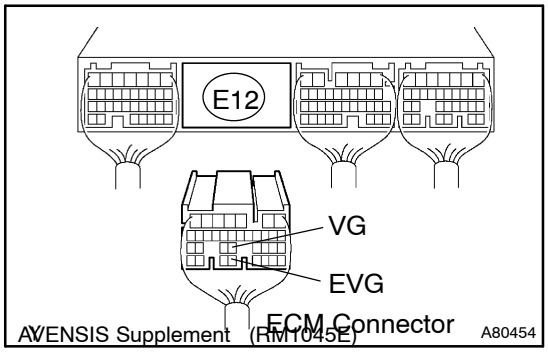

(a) Disconnect the A6 mass air flow meter connector.
(b) Disconnect the E12 ECM connector.
(c) Check the resistance between the wire harness side connectors.

Standard (Check for open):

Tester Connection	Specified Condition
VG (A6–5) – VG (E12–24)	Below 1 Ω
E2G (A6–4) – EVG (E12–32)	

Standard (Check for short):

Tester Connection	Specified Condition
VG (A6–5) or VG (E12–24) – Body ground	10 kΩ or higher

(d) Reconnect the mass air flow meter connector.
(e) Reconnect the ECM connector.

NG → REPAIR OR REPLACE HARNESS OR CONNECTOR

OK

REPLACE MASS AIR FLOW METER

5 CHECK HARNESS AND CONNECTOR(MASS AIR FLOW METER – EFI MAIN RELAY)

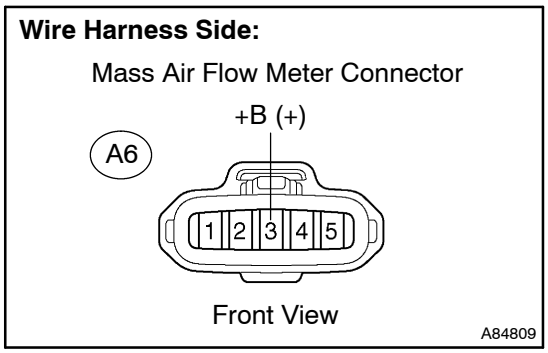

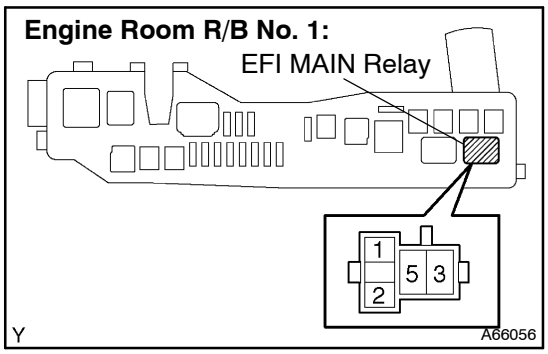

(a) Disconnect the A6 mass air flow meter connector.
(b) Remove the EFI MAIN relay from the engine room R/B No. 1.
(c) Check the resistance between the wire harness side connectors.

Standard (Check for open):

Tester Connection	Specified Condition
+B (A6–3) – EFI MAIN relay (3)	Below 1 Ω

Standard (Check for short):

Tester Connection	Specified Condition
+B (A6–3) or EFI MAIN relay (3) – Body ground	10 kΩ or higher

(d) Reconnect the mass air flow meter connector.
(e) Reinstall the EFI MAIN relay.

NG → REPAIR OR REPLACE HARNESS OR CONNECTOR

OK

CHECK ECM POWER SOURCE CIRCUIT (See page 05–489)

6 INSPECT ECM(SENSOR GROUND)

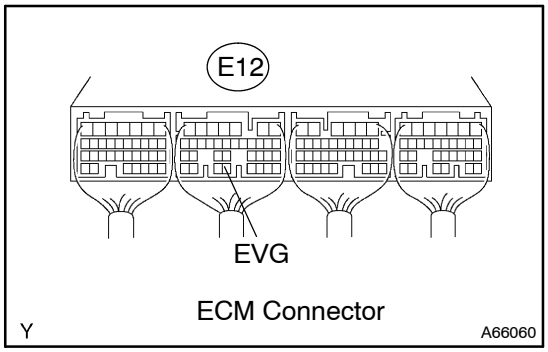

(a) Check the resistance between the terminal of the E12 ECM connector and body ground.

Standard:

Tester Connection	Specified Condition
EVG (E12–32) – Body ground	Below 1 Ω

NG → REPLACE ECM (See page 10–29)

OK

7 CHECK HARNESS AND CONNECTOR(MASS AIR FLOW METER – ECM)

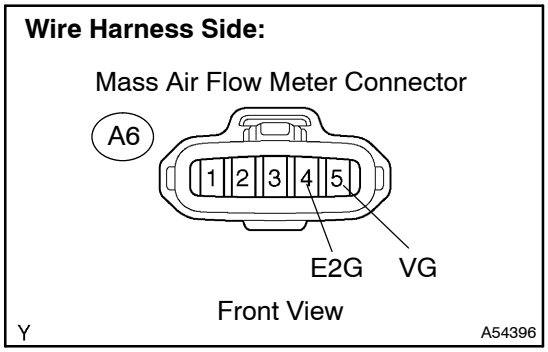

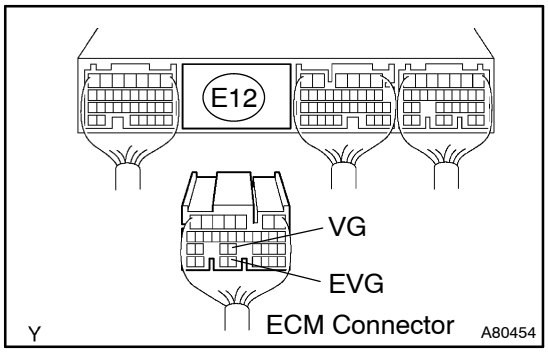

(a) Disconnect the A6 mass air flow meter connector.
(b) Disconnect the E12 ECM connector.
(c) Check the resistance between the wire harness side connectors.

Standard (Check for open):

Tester Connection	Specified Condition
VG (A6–5) – VG (E12–24)	Below 1 Ω
E2G (A6–4) – EVG (E12–32)	

Standard (Check for short):

Tester Connection	Specified Condition
VG (A6–5) or VG (E12–24) – Body ground	10 kΩ or higher

(d) Reconnect the mass air flow meter connector.
(e) Reinstall the ECM connector.

NG → **REPAIR OR REPLACE HARNESS OR CONNECTOR**

OK

REPLACE MASS AIR FLOW METER

DTC	P0101	MASS OR VOLUME AIR FLOW CIRCUIT RANGE/PERFORMANCE PROBLEM

CIRCUIT DESCRIPTION

Refer to DTC P0100 on page 05–336.

DTC No.	DTC Detection Condition	Trouble Area
P0101	After engine is warmed up, condition (a) continues for more than 10 seconds at idling: (2 trip detection logic) (a) Mass air flow meter output greater than 2.2 V	• Mass air flow meter
	Conditions (a) and (b) continue for more than 6 seconds with engine speed at 2,000 rpm or more: (2 trip detection logic) (a) VTA greater than 0.1 V (b) Mass air flow meter output less than 0.25 V	

INSPECTION PROCEDURE

HINT:

Read freeze frame data using the hand–held tester. Freeze frame data records the engine conditions when a malfunction is detected. When troubleshooting, freeze frame data can help determine if the vehicle was running or stopped, if the engine was warmed up or not, if the air–fuel ratio was lean or rich, and other data from the time the malfunction occurred.

1	CHECK OTHER DTC OUTPUT(IN ADDITION TO DTC P0101)

(a) Connect the hand–held tester to the DLC3.
(b) Turn the ignition switch to ON and turn the hand–held tester ON.
(c) Select the item ”DIAGNOSIS / OBD/MOBD / DTC INFO / CURRENT CODES”.
(d) Read DTCs.

Result:

Display (DTC output)	Proceed to
P0101 and other DTCs	A
P0101	B

HINT:

If any other codes besides P0101 are output, perform troubleshoot for those DTCs first.

B → REPLACE MASS AIR FLOW METER

A

GO TO RELEVANT DTC CHART (See page 05–299)

DTC	P0105	MANIFOLD ABSOLUTE PRESSURE/BAROMETRIC PRESSURE CIRCUIT

DTC	P0107	MANIFOLD ABSOLUTE PRESSURE/BAROMETRIC PRESSURE CIRCUIT LOW INPUT

DTC	P0108	MANIFOLD ABSOLUTE PRESSURE/BAROMETRIC PRESSURE CIRCUIT HIGH INPUT

CIRCUIT DESCRIPTION

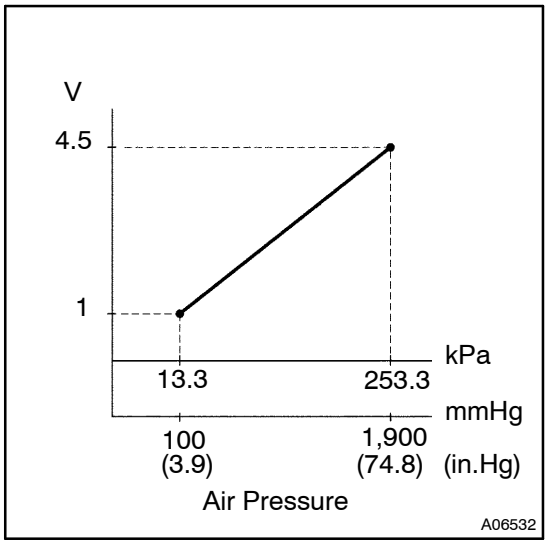

By a built–in sensor unit, the manifold absolute pressure sensor detects the intake manifold pressure as voltage. The ECM then determines the basic injection duration and basic injection advance angle based on this voltage.
Since the manifold absolute pressure sensor does not use the atmospheric pressure as a standard level, but senses the absolute pressure inside the intake manifold (the pressure in proportion to the preset absolute vacuum 0), it is not influenced by fluctuations in the atmospheric pressure due to high altitude and other factors. This permits the ECM to control the air–fuel ratio at the proper level under all conditions.

DTC No.	DTC Detection Condition	Trouble Area
P0105 P0107 P0108	Open or short in manifold absolute pressure sensor circuit for 0.5 second or more (1 trip detection logic)	• Open or short in manifold absolute pressure sensor circuit • Manifold absolute pressure sensor • Turbocharger assembly • EGR valve assembly • ECM

HINT:
After confirming DTC P0105, P0107 or P0108, check the intake manifold pressure in the ”DIAGNOSIS / OBD/MOBD / DATA LIST / ALL / PIM” using the hand–held tester.

Reference:

Intake Manifold Pressure (kPa)	Malfunction
Approximately 0	• Short in PIM circuit
250 or more	• Open or short in VC circuit • Open in PIM circuit • Open in E2 circuit

WIRING DIAGRAM

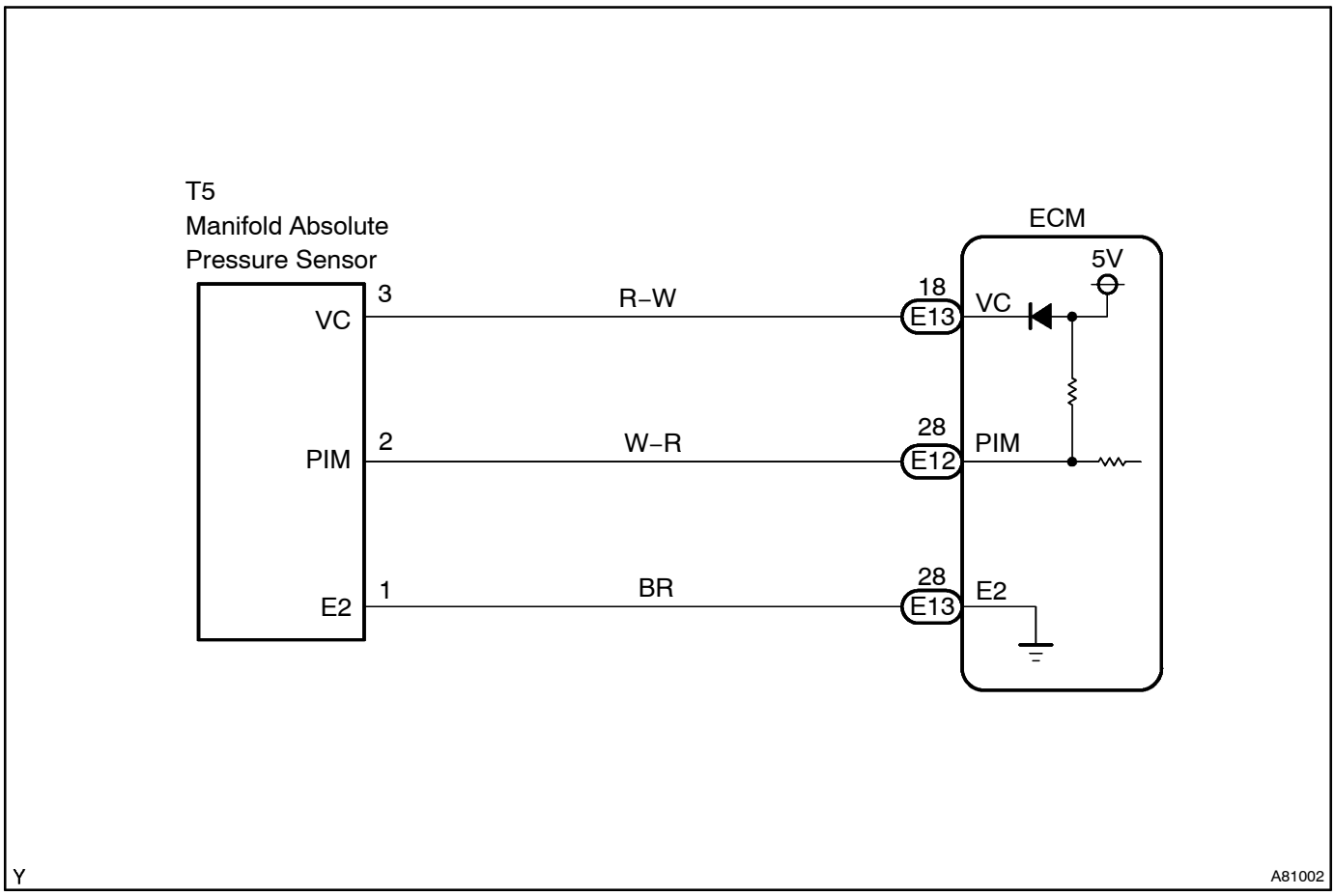

INSPECTION PROCEDURE

HINT:

- If different DTCs related to different systems that have terminal E2 as the ground terminal are output simultaneously, terminal E2 may have an open circuit.
- Read freeze frame data using the hand–held tester. Freeze frame data records the engine conditions when a malfunction is detected. When troubleshooting, freeze frame data can help determine if the vehicle was running or stopped, if the engine was warmed up or not, if the air–fuel ratio was lean or rich, and other data from the time the malfunction occurred.

1	READ VALUE OF HAND–HELD TESTER(MANIFOLD ABSOLUTE PRESSURE)

(a) Connect the hand–held tester to the DLC3.
(b) Turn the ignition switch to ON and turn the hand–held tester ON.
(c) Select the item ”DIAGNOSIS / OBD/MOBD / DATA LIST / ALL / PIM” and read its value displayed on the hand–held tester.
Standard: Same value as the actual atmospheric pressure.

OK	CHECK FOR INTERMITTENT PROBLEMS (See page 05–270)

NG

2 INSPECT ECM(VC VOLTAGE)

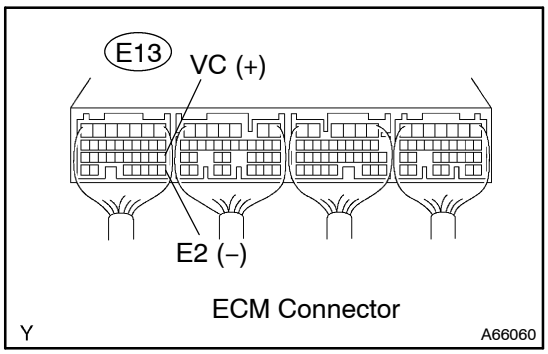

(a) Turn the ignition switch to ON.
(b) Measure the voltage between the specified terminals of the E13 ECM connector.

Standard:

Tester Connection	Specified Condition
VC (E13–18) – E2 (E13–28)	4.5 to 5.5 V

NG → **REPLACE ECM (See page 10–29)**

OK

3 INSPECT ECM(PIM VOLTAGE)

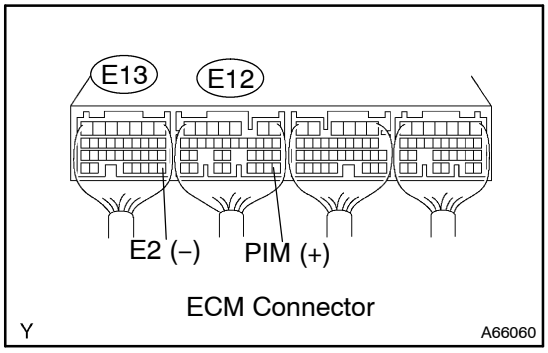

(a) Turn the ignition switch to ON.
(b) Measure the voltage between the terminals of the E12 and E13 ECM connectors.

Standard:

Tester Connection	Condition	Specified Condition
PIM (E12–28) – E2 (E13–28)	Applied negative pressure of 40 kPa (300 mmHg, 11.8 in.Hg)	1.4 to 2.0 V
PIM (E12 – 28) – E2 (E13–28)	Same as atmospheric pressure	2.0 to 2.6 V
PIM (E12 – 28) – E2 (E13–28)	Applied positive pressure of 69 kPa (518 mmHg, 20.4 in.Hg)	3.0 to 3.6 V

NG → **REPLACE ECM (See page 10–29)**

OK

4 CHECK HARNESS AND CONNECTOR(MANIFOLD ABSOLUTE PRESSURE SENSOR – ECM)

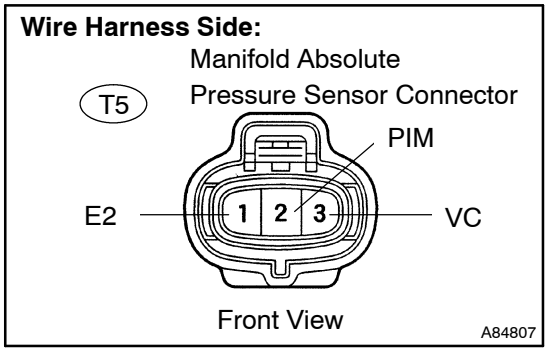

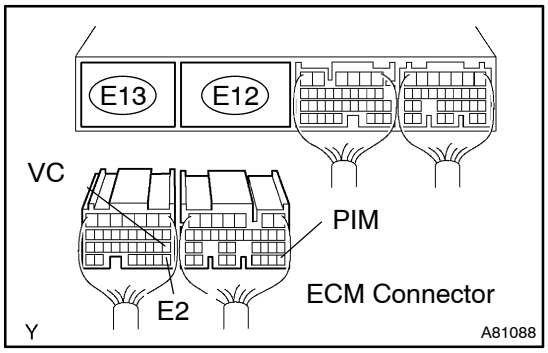

(a) Disconnect the T5 manifold absolute pressure sensor connector.
(b) Disconnect the E12 and E13 ECM connectors.
(c) Check the resistance between the wire harness side connectors.

Standard (Check for open):

Tester Connection	Specified Condition
PIM (T5–2) – PIM (E12–28)	Below 1 Ω
VC (T5–3) – VC (E13–18)	
E2 (T5–1) – E2 (E13–28)	

Standard (Check for short):

Tester Connection	Specified Condition
PIM (T5–2) or PIM (E12–28) – Body ground	10 kΩ higher
VC (T5–3) or VC (E13–18) – Body ground	
E2 (T5–1) or E2 (E13–28) – Body ground	

(d) Reconnect the manifold absolute pressure sensor connector.
(e) Reconnect the ECM connectors.

NG → **REPAIR OR REPLACE HARNESS OR CONNECTOR**

OK

5 INSPECT TURBOCHARGER SUB–ASSY (See page 13–6)

NG → **REPLACE TURBOCHARGER SUB–ASSY (See page 13–12)**

OK

6 INSPECT EGR VALVE ASSY(RESISTANCE)

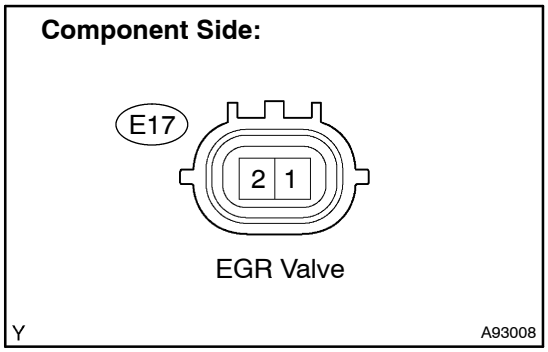

(a) Disconnect the E17 EGR valve connector.
(b) Measure the resistance between the terminals of the EGR valve connector.

Standard:

Tester Connection	Specified Condition
1 – 2	4.0 to 6.0 Ω at 20°C (68°F)

(c) Reconnect the EGR valve connector.

NG → **REPLACE EGR VALVE ASSY (See page 14–166)**

OK

REPLACE MANIFOLD ABSOLUTE PRESSURE SENSOR

DTC	P0106	MANIFOLD ABSOLUTE PRESSURE/ BAROMETRIC PRESSURE CIRCUIT RANGE/ PERFORMANCE PROBLEM

CIRCUIT DESCRIPTION

Refer to DTC P0105 on page 05–342.

DTC No.	DTC Detection Condition	Trouble Area
P0106	Voltage output of the manifold absolute pressure sensor is out of the standard range (2 trip detection logic)	• Manifold absolute pressure sensor

INSPECTION PROCEDURE

HINT:

- If DTCs P0105, P0107, and P0108 are output simultaneously, the manifold absolute pressure sensor circuit may be open or short. Perform troubleshooting for those DTCs first.
- Read freeze frame data using the hand–held tester. Freeze frame data records the engine conditions when a malfunction is detected. When troubleshooting, freeze frame data can help determine if the vehicle was running or stopped, if the engine was warmed up or not, if the air–fuel ratio was lean or rich, and other data from the time the malfunction occurred.

1	CHECK OTHER DTC OUTPUT(IN ADDITION TO DTC P0106)

(a) Connect the hand–held tester to the DLC3.
(b) Turn the ignition switch to ON and turn the hand–held tester ON.
(c) Select the item ”DIAGNOSIS / OBD/MOBD / DTC INFO / CURRENT CODES”.
(d) Read DTCs.

Result:

Display (DTC output)	Proceed to
P0106	A
P0106 and other DTCs	B

HINT:

If any other codes besides P0106 are output, perform troubleshooting for those DTCs first.

B → **GO TO RELEVANT DTC CHART (See page 05–299)**

A

REPLACE MANIFOLD ABSOLUTE PRESSURE SENSOR

DTC	P0110	INTAKE AIR TEMPERATURE CIRCUIT

DTC	P0112	INTAKE AIR TEMPERATURE CIRCUIT LOW INPUT

DTC	P0113	INTAKE AIR TEMPERATURE CIRCUIT HIGH INPUT

CIRCUIT DESCRIPTION

(Figure 1)

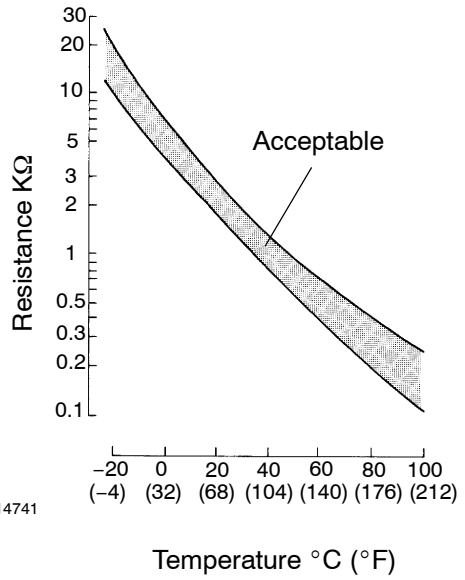

The intake air temperature sensor is built in the mass air flow meter and senses the intake air temperature.
A thermistor built in the sensor changes the resistance value according to the intake air temperature.
The lower the intake air temperature is, the greater the thermistor resistance value becomes, and the higher the intake air temperature is, the lower the thermistor resistance value becomes (see figure 1).
The intake air temperature sensor is connected to the ECM. The 5 V power source voltage in the ECM is applied to the intake air temperature sensor from terminal THA (THAR) via resistor R.
The resistor R and the intake air temperature sensor are connected in series. When the resistance value of the intake air temperature sensor changes in accordance with changes in the intake air temperature, the potential at terminal THA (THAR) also changes. Based on this signal, the ECM increases the fuel injection volume to improve the driveability with a cold engine.

DTC No.	Proceed to	DTC Detection Condition	Trouble Area
P0110	Step 1	Open or short in intake air temperature sensor circuit for 0.5 second (1 trip detection logic)	• Open or short in intake air temperature sensor circuit • Intake air temperature sensor (built in mass air flow meter) • ECM
P0112	Step 4	Short in intake air temperature sensor circuit for 0.5 second (1 trip detection logic)	
P0113	Step 2	Open in intake air temperature sensor circuit for 0.5 second (1 trip detection logic)	

HINT:
After confirming DTC P0110, P0112 or P0113, check the intake air temperature in the ”DIAGNOSIS / OBD/ MOBD / DATA LIST / ALL” using the hand–held tester.

Reference:

Temperature Displayed	Malfunction
–40˚C (–40˚F)	Open circuit
140˚C (284˚F) or more	Short circuit

WIRING DIAGRAM

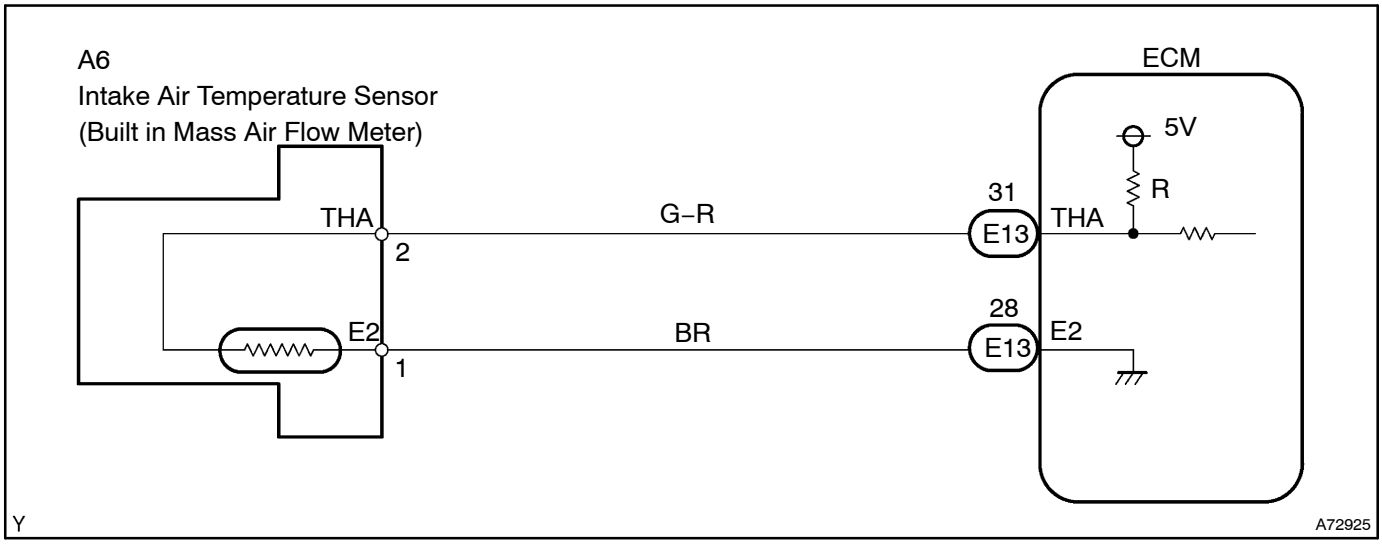

INSPECTION PROCEDURE

HINT:

- If different DTCs related to different systems that have terminal E2 as the ground terminal are output simultaneously, terminal E2 may have an open circuit.
- Read freeze frame data using the hand–held tester. Freeze frame data records the engine conditions when a malfunction is detected. When troubleshooting, freeze frame data can help determine if the vehicle was running or stopped, if the engine was warmed up or not, if the air–fuel ratio was lean or rich, and other data from the time the malfunction occurred.

1	READ VALUE OF HAND–HELD TESTER(INTAKE AIR TEMPERATURE)

(a) Connect the hand–held tester to the DLC3.
(b) Turn the ignition switch to ON and turn the hand–held tester ON.
(c) Select the item ”DIAGNOSIS / OBD/MOBD / DATA LIST / ALL / INTAKE AIR” and read its value displayed on the hand–held tester.
Temperature: Same value as air temperature at the intake manifold.
Result:

Temperature Displayed	Proceed to
–40˚C (–40˚F)	A
140˚C (284˚F) or more	B
OK (Same as air temperature near to intake manifold)	C

HINT:

- If there is an open circuit, the hand–held tester indicates –40˚C (–40˚F).
- If there is a short circuit, the hand–held tester indicates 140˚C (284˚F) or more.

B	Go to step 4
C	CHECK FOR INTERMITTENT PROBLEMS (See page 05–270)

A

2 READ VALUE OF HAND–HELD TESTER(CHECK FOR OPEN IN WIRE HARNESS)

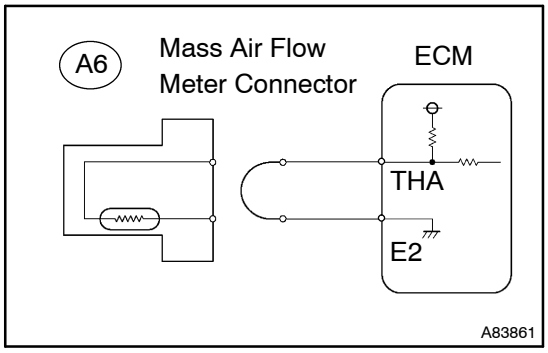

(a) Disconnect the A6 mass air flow meter connector.
(b) Connect terminals 1 and 2 of the mass air flow meter wire harness side connector.
(c) Connect the hand–held tester to the DLC 3.
(d) Turn the ignition switch to ON and turn the and–held tester ON.
(e) Select the item ”DIAGNOSIS / OBD/MOBD / DATA LIST / ALL / INTAKE AIR” and read its value displayed on the hand–held tester.
Standard: 140°C (284°F) or more
(f) Reconnect the mass air flow meter connector.

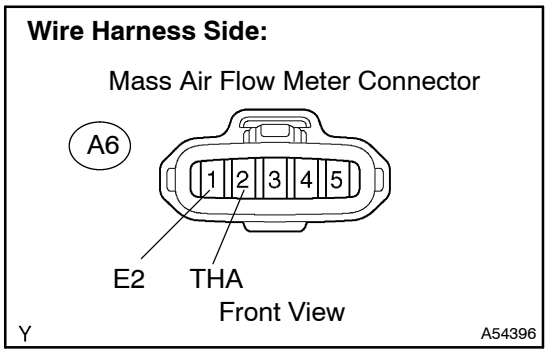

OK	CONFIRM GOOD CONNECTION AT SENSOR. IF OK, REPLACE MASS AIR FLOW METER

NG

3 READ VALUE OF HAND–HELD TESTER(CHECK FOR OPEN IN ECM)

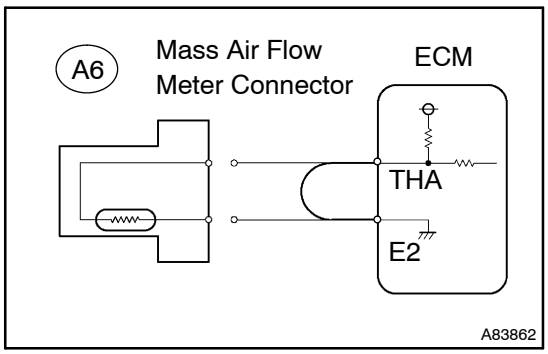

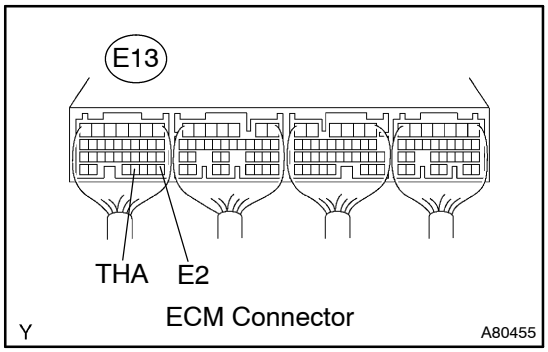

(a) Disconnect the A6 mass air flow meter connector.
(b) Connect terminals THA and E2 of the E13 ECM connector.

HINT:
Before checking, do a visual and contact pressure check on the ECM connector.

(c) Connect the hand–held tester to the DLC 3.
(d) Turn the ignition switch to ON and turn the and–held tester ON.
(e) Select the item ”DIAGNOSIS / OBD/MOBD / DATA LIST / ALL / INTAKE AIR” and read its value displayed on the hand–held tester.
Standard: 140°C (284°F) or more
(f) Reconnect the mass air flow meter connector.

OK	REPAIR OR REPLACE HARNESS OR CONNECTOR

NG

CONFIRM GOOD CONNECTION AT ECM. IF OK, REPLACE ECM (See page 10–29)

4 READ VALUE OF HAND–HELD TESTER(CHECK FOR SHORT IN WIRE HARNESS)

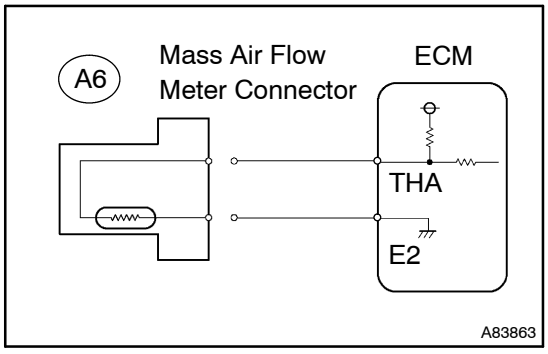

(a) Disconnect the A6 mass air flow meter connector.
(b) Connect the hand–held tester to the DLC 3.
(c) Turn the ignition switch to ON and turn the and–held tester ON.
(d) Select the item ”DIAGNOSIS / OBD/MOBD / DATA LIST / ALL / INTAKE AIR” and read its value displayed on the hand–held tester.
Standard: –40°C (–40°F)
(e) Reconnect the mass air flow meter connector.

OK	REPLACE MASS AIR FLOW METER

NG

5	READ VALUE OF HAND–HELD TESTER(CHECK FOR SHORT IN ECM)

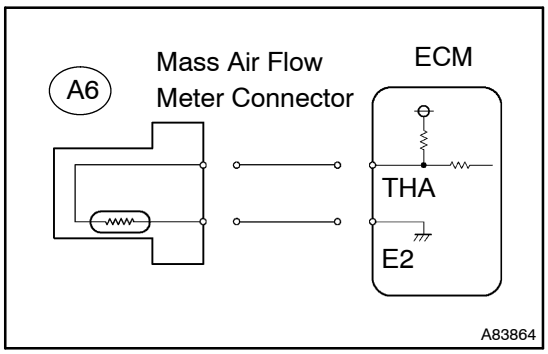

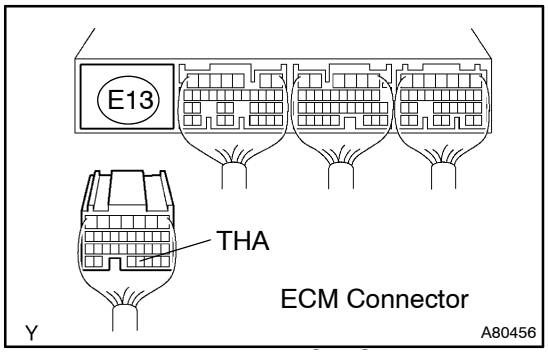

(a) Disconnect the A6 mass air flow meter connector.
(b) Disconnect the E13 ECM connector.
(c) Connect the hand–held tester to the DLC 3.
(d) Turn the ignition switch to ON and turn the and–held tester ON.
(e) Select the item ”DIAGNOSIS / OBD/MOBD / DATA LIST / ALL / INTAKE AIR” and read its value displayed on the hand–held tester.
Standard: –40°C (–40°F)
(f) Reconnect the ECM sensor connector.
(g) Reconnect the mass air flow meter connector.

OK → **REPAIR OR REPLACE HARNESS OR CONNECTOR**

NG

REPLACE ECM (See page 10–29)

DTC	P0115	ENGINE COOLANT TEMPERATURE CIRCUIT

DTC	P0117	ENGINE COOLANT TEMPERATURE CIRCUIT LOW INPUT

DTC	P0118	ENGINE COOLANT TEMPERATURE CIRCUIT HIGH INPUT

CIRCUIT DESCRIPTION

A thermistor built in the engine coolant temperature sensor changes its resistance value according to the engine coolant temperature.

The structure of the sensor and connection to the ECM is the same as those of the intake air temperature sensor.

DTC No.	Proceed to	DTC Detection Condition	Trouble Area
P0115	Step 1	Open or short in engine coolant temperature sensor circuit for 0.5 second (1 trip detection logic)	• Open or short in engine coolant temperature sensor circuit • Engine coolant temperature sensor • ECM
P0117	Step 4	• Short in engine coolant temperature sensor circuit for 0.5 second (Sensor resistance value is less than 79 Ω) (1 trip detection logic)	
P0118	Step 2	• Open in engine coolant temperature sensor circuit for 0.5 second (Sensor resistance value is more than 156 kΩ) (1 trip detection logic)	

HINT:

After confirming DTC P0115, P0117 or P0118, check the engine coolant temperature in the ”DIAGNOSIS / OBD/MOBD / DATA LIST / ALL” using the hand–held tester.

Reference:

Temperature Displayed	Malfunction
–40°C (–40°F)	Open circuit
140°C (284°F) or more	Short circuit

WIRING DIAGRAM

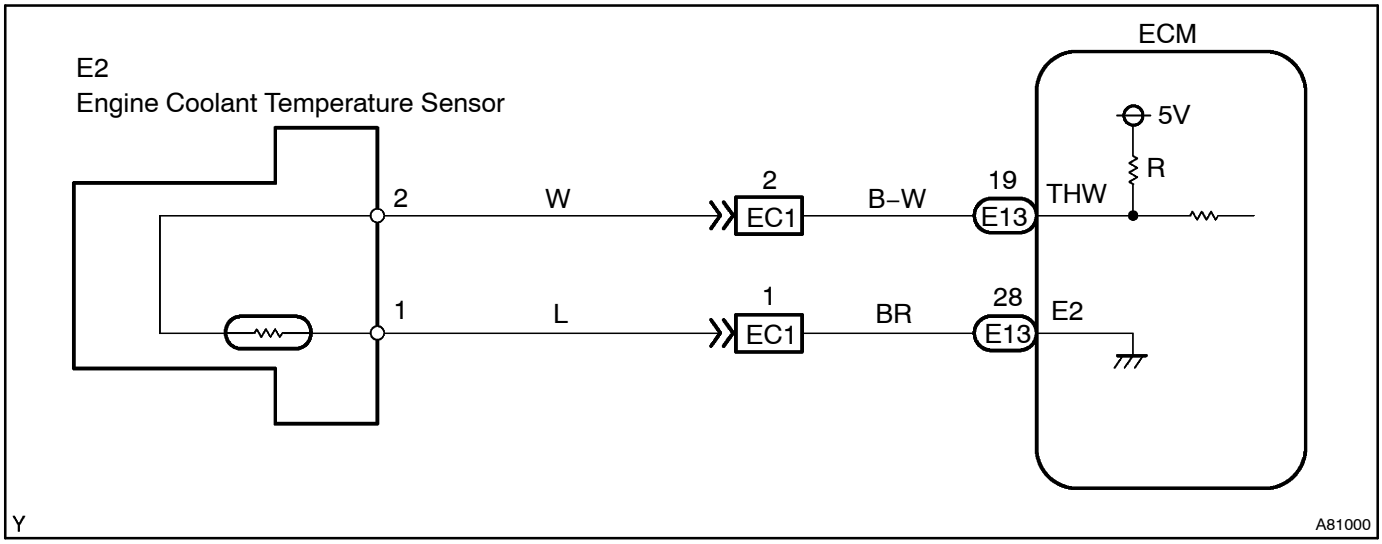

INSPECTION PROCEDURE

HINT:

- If different DTCs related to different systems that have terminal E2 as the ground terminal are output simultaneously, terminal E2 may have an open circuit.
- Read freeze frame data using the hand–held tester. Freeze frame data records the engine conditions when a malfunction is detected. When troubleshooting, freeze frame data can help determine if the vehicle was running or stopped, if the engine was warmed up or not, if the air–fuel ratio was lean or rich, and other data from the time the malfunction occurred.

1	READ VALUE OF HAND–HELD TESTER(ENGINE COOLANT TEMPERATURE)

(a) Connect the hand–held tester to the DLC3.
(b) Turn the ignition switch to ON and turn the hand–held tester ON.
(c) Select the item "DIAGNOSIS / OBD/MOBD / DATA LIST / ALL / COOLANT TEMP" and read its value displayed on the hand–held tester.
Standard: 75 to 95°C (167 to 203°F) after warming up the engine.
Result:

Temperature Displayed	Proceed to
–40°C (–40°F)	A
140°C (284°F) or more	B
OK (Same as actual engine coolant temperature)	C

HINT:

- If there is an open circuit, the hand–held tester indicates –40°C (–40°F).
- If there is a short circuit, the hand–held tester indicates 140°C (284°F) or more.

B	**Go to step 4**
C	**CHECK FOR INTERMITTENT PROBLEMS (See page 05–270)**

A

2 READ VALUE OF HAND–HELD TESTER(CHECK FOR OPEN IN WIRE HARNESS)

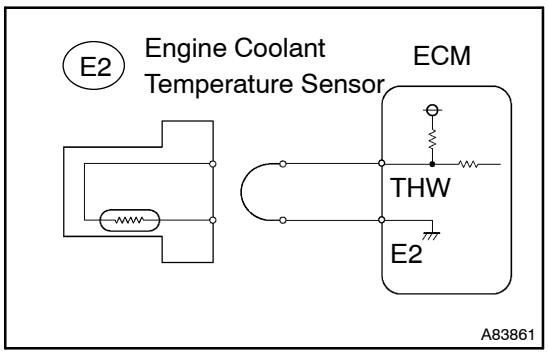

(a) Disconnect the E2 engine coolant temperature sensor connector.
(b) Connect terminals 1 and 2 of the engine coolant temperature sensor wire harness side connector.
(c) Connect the hand–held tester to the DLC 3.
(d) Turn the ignition switch to ON and turn the hand–held tester ON.
(e) Select the item ”DIAGNOSIS / OBD/MOBD / DATA LIST / ALL / COOLANT TEMP” and read its value displayed on the hand–held tester.
Standard: 140°C (284°F) or more
(f) Reconnect the engine coolant temperature sensor connector.

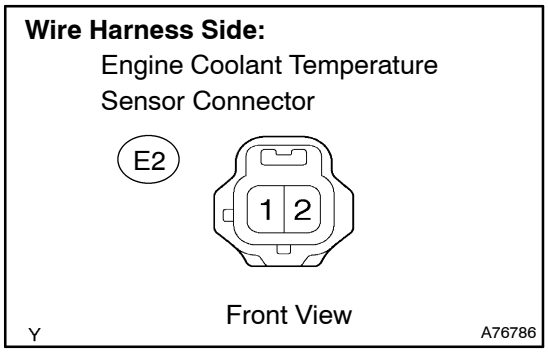

OK → **CONFIRM GOOD CONNECTION AT SENSOR. IF OK, REPLACE ENGINE COOLANT TEPMERATURE SENSOR**

NG

3 READ VALUE OF HAND–HELD TESTER(CHECK FOR OPEN IN ECM)

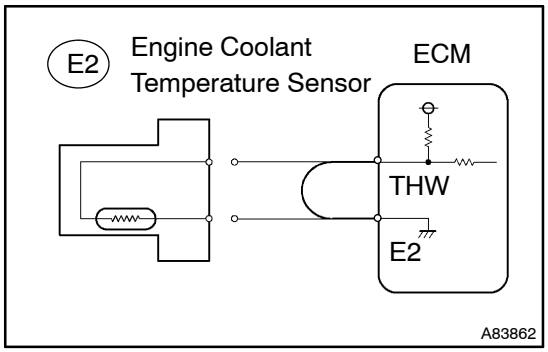

(a) Disconnect the E2 engine coolant temperature sensor connector.
(b) Connect terminals THW and E2 of the E13 ECM connector.

HINT:
Before checking, do a visual and contact pressure check on the ECM connector.

(c) Connect the hand–held tester to the DLC 3.
(d) Turn the ignition switch to ON and turn the hand–held tester ON.
(e) Select the item ”DIAGNOSIS / OBD/MOBD / DATA LIST / ALL / COOLANT TEMP” and read its value displayed on the hand–held tester.
Standard: 140°C (284°F) or more
(f) Reconnect the engine coolant temperature sensor connector.

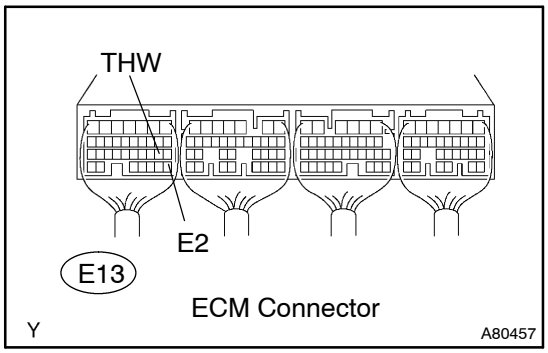

OK → **REPAIR OR REPLACE HARNESS OR CONNECTOR**

NG

CONFIRM GOOD CONNECTION AT ECM. IF OK, REPLACE ECM (See page 10–29)

4 READ VALUE OF HAND–HELD TESTER(CHECK FOR SHORT IN WIRE HARNESS)

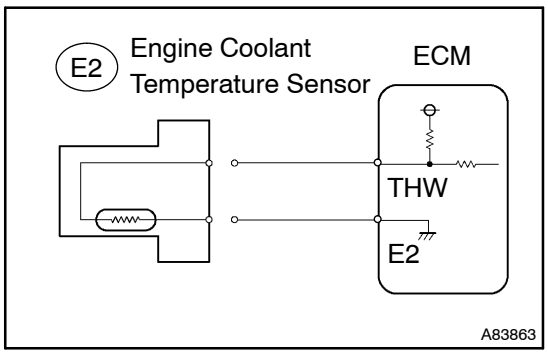

(a) Disconnect the E2 engine coolant temperature sensor connector.
(b) Connect the hand–held tester to the DLC 3.
(c) Turn the ignition switch to ON and turn the hand–held tester ON.
(d) Select the item "DIAGNOSIS / OBD/MOBD / DATA LIST / ALL / COOLANT TEMP" and read its value displayed on the hand–held tester.
Standard: –40°C (–40°F)
(e) Reconnect the engine coolant temperature sensor connector.

OK	**REPLACE ENGINE COOLANT TEMPERATURE SENSOR**

NG

5 READ VALUE OF HAND–HELD TESTER(CHECK FOR SHORT IN ECM)

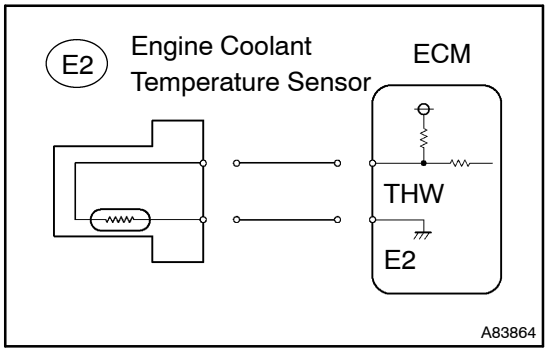

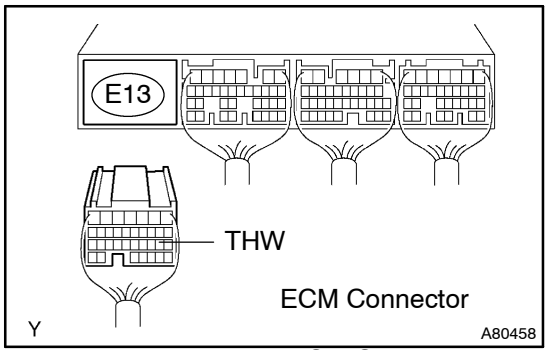

(a) Disconnect the E2 engine coolant temperature sensor connector.
(b) Disconnect the E13 ECM connector.
(c) Connect the hand–held tester to the DLC 3.
(d) Turn the ignition switch to ON and turn the hand–held tester ON.
(e) Select the item "DIAGNOSIS / OBD/MOBD / DATA LIST / ALL / COOLANT TEMP" and read its value displayed on the hand–held tester.
Standard: –40°C (–40°F)
(f) Reconnect the engine coolant temperature sensor connector.
(g) Reconnect the ECM connector.

OK	**REPAIR OR REPLACE HARNESS OR CONNECTOR**

NG

REPLACE ECM (See page 10–29)

DTC	P0116	ENGINE COOLANT TEMPERATURE CIRCUIT RANGE/PERFORMANCE PROBLEM

CIRCUIT DESCRIPTION

Refer to DTC P0115 on page 05–352.

DTC No.	DTC Detection Condition	Trouble Area
P0116	If the engine coolant temperature between was –40°C (–40°F) and 60°C (140°F) at engine start, and condition (a) and (b) are met: (2 trip detection logic) (a) Vehicle is driven at varying speeds (under acceleration and deceleration) (b) Engine coolant temperature remains within 3°C (37°F) of the engine starting temperature	• Engine coolant temperature sensor
	If the engine coolant temperature was more than 90°C (194°F) at engine start, and conditions (a) and (b) are met: (6 trip detection logic) (a) Vehicle is driven at varying speeds (under acceleration and deceleration) (b) Engine coolant temperature remains within 1°C (34°F) of the engine starting temperature, and this is successively recorded 6 times	

MONITOR DESCRIPTION

The engine coolant temperature sensor is used to monitor the engine coolant temperature. The engine coolant temperature sensor has a thermistor that varies its resistance depending on the temperature of the engine coolant. When the coolant temperature is low, the resistance in the thermistor increases. When the temperature is high, the resistance drops. The variations in resistance are reflected in the voltage output from the sensor. The ECM monitors the sensor voltage and uses this value to calculate the engine coolant temperature. When the sensor's voltage output is virtually in no variation, the ECM interprets this as a fault in the engine coolant temperature sensor and sets a DTC.

Examples:

1) Upon starting the engine, the engine coolant temperature was between –40°C (–40°F) and 60°C (140°F). If after driving for a few minutes, the engine coolant temperature still remains within 3°C (37°F) of the staring temperature, a DTC will be set. (2 trip detection logic)

2) Upon starting the engine, the engine coolant temperature was over 90°C (194°F). If after driving for a few minutes, the engine coolant temperature still remains within 1°C (34°F) of the starting temperature, a DTC will be set. (6 trip detection logic)

INSPECTION PROCEDURE

HINT:

- If DTCs P0115, P0116, P0117 and P0118 are output simultaneously, the engine coolant temperature sensor circuit may be open or short. Perform troubleshooting for those DTCs first.
- Read freeze frame data using the hand–held tester. Freeze frame data records the engine conditions when a malfunction is detected. When troubleshooting, freeze frame data can help determine if the vehicle was running or stopped, if the engine was warmed up or not, if the air–fuel ratio was lean or rich, and other data from the time the malfunction occurred.

REPLACE ENGINE COOLANT TEMPERATURE SENSOR

DTC	P0120	THROTTLE/PEDAL POSITION SENSOR/SWITCH ”A” CIRCUIT

DTC	P0122	THROTTLE/PEDAL POSITION SENSOR/SWITCH ”A” CIRCUIT LOW INPUT

DTC	P0123	THROTTLE/PEDAL POSITION SENSOR/SWITCH ”A” CIRCUIT HIGH INPUT

HINT:

- This is the purpose of troubleshooting the intake shutter (throttle valve) position sensor.
- This electrical throttle system does not use a throttle cable.
- This intake shutter position sensor is a non–contact type.

CIRCUIT DESCRIPTION

The intake shutter (throttle valve) position sensor is mounted on the intake shutter body and it detects the opening angle of the intake shutter. This sensor is electronically controlled and uses Hall–effect elements. The ECM judges the vehicle driving conditions from this signals input from terminal VLU, uses them as one of the conditions for EGR control etc.

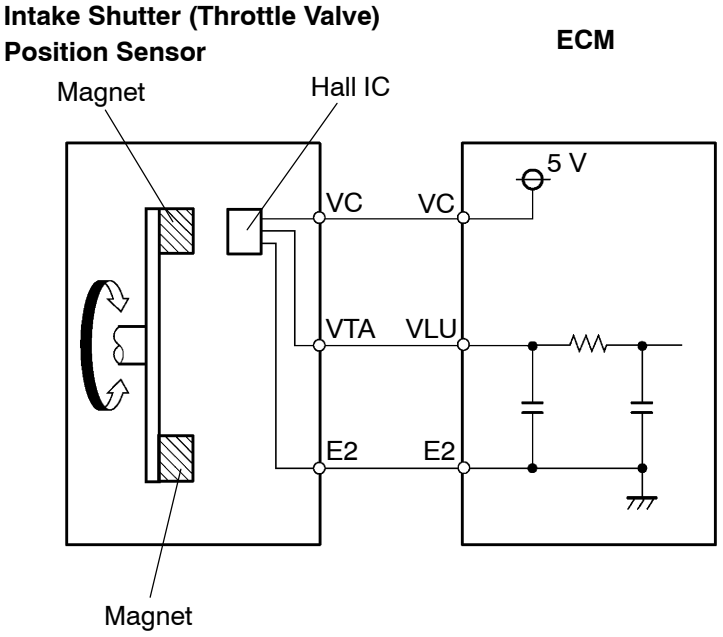

A92196

DTC No.	DTC Detection Condition	Trouble Area
Condition of DTC P0120, P0122 or P0123 continues for 3 seconds (Open or short in intake shutter [throttle valve] position sensor circuit)		
P0120	Intake shutter position sensor output (VLU) flutters up and down beyond the normal operating range (Less than 0.2 V or more than 4.8 V) (1 trip detection logic)	• Open or short in intake shutter position sensor circuit • Intake shutter position sensor • ECM
P0122	Intake shutter position sensor output (VLU) is less than 0.2 V (1 trip detection logic)	• Intake shutter position sensor • Open or short in VLU circuit • Open in VC circuit • ECM
P0123	Intake shutter position sensor output (VLU) is more than 4.8 V (1 trip detection logic)	• Intake shutter position sensor • Open in E2 circuit • VC and VLU circuits are short–circuited • ECM

MONITOR DESCRIPTION

When output voltage of the intake shutter position sensor deviates from the normal operating range (between 0.2 V and 4.8 V) for more than 3 seconds, the ECM interprets this as malfunction of the sensor circuit, and illuminates the CHK ENG.

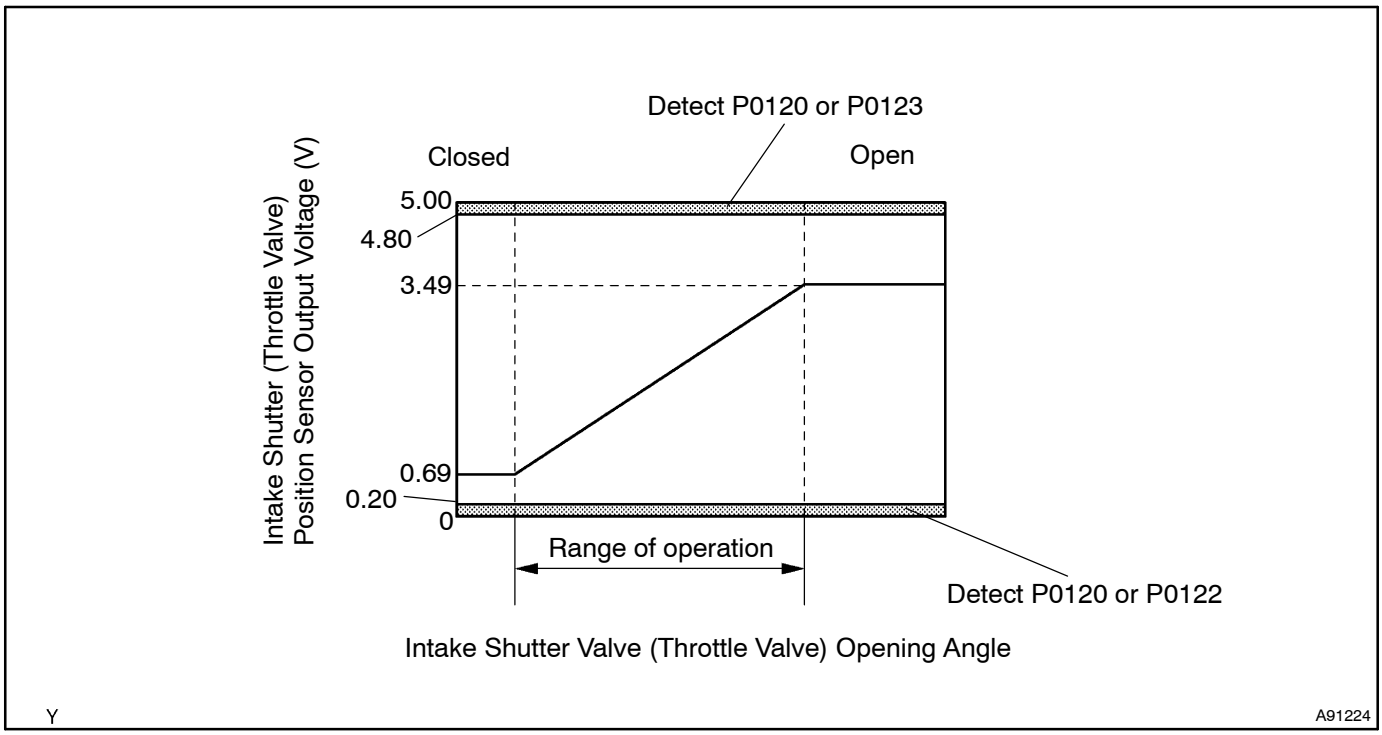

WIRING DIAGRAM

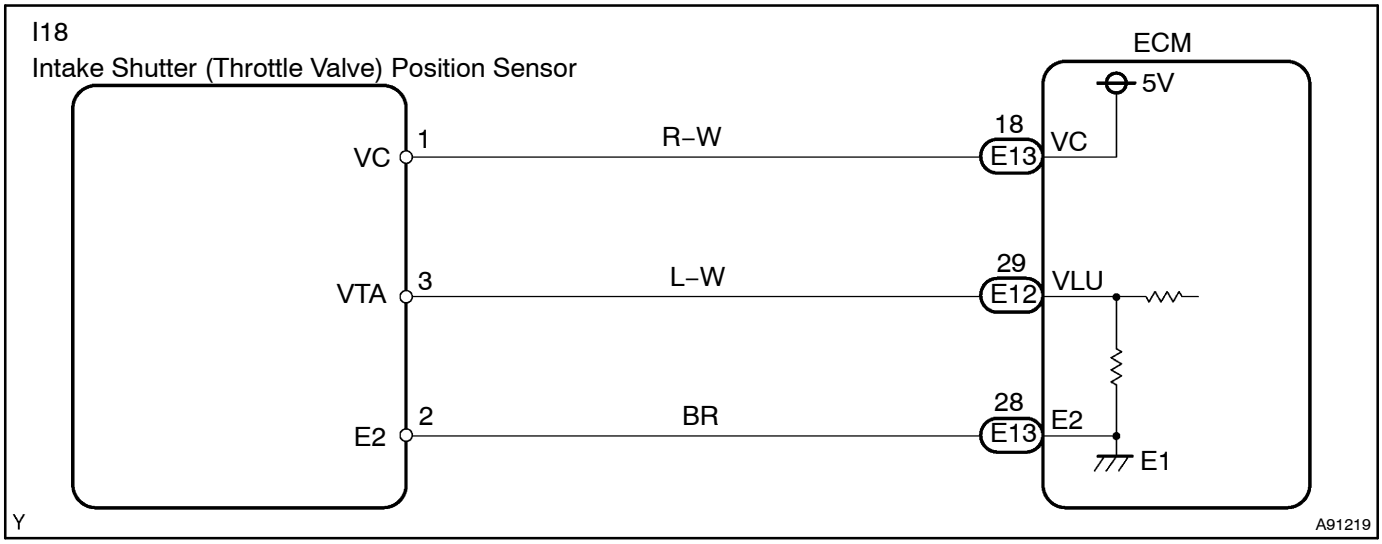

INSPECTION PROCEDURE

HINT:

- If different DTCs related to different systems that have terminal E2 as the ground terminal are output simultaneously, terminal E2 may have an open circuit.
- Read freeze frame data using the hand–held tester. Freeze frame data records the engine conditions when a malfunction is detected. When troubleshooting, freeze frame data can help determine if the vehicle was running or stopped, if the engine was warmed up or not, if the air–fuel ratio was lean or rich, and other data from the time the malfunction occurred.

1	CHECK HARNESS AND CONNECTOR(INTAKE SHUTTER (THROTTLE VALVE) POSITION SENSOR – ECM)

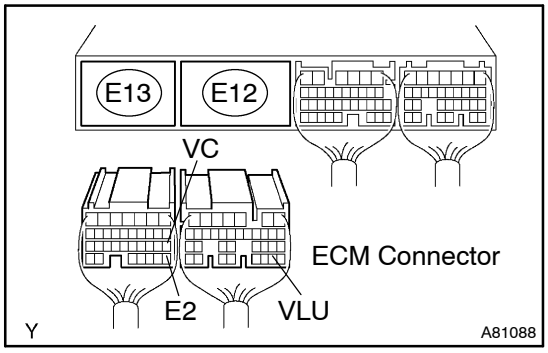

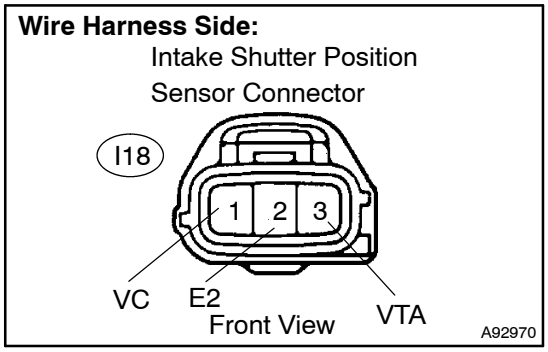

(a) Disconnect the I18 intake shutter position sensor connector.

(b) Disconnect the E12 and E13 ECM connectors.

(c) Measure the resistance between the terminals of the E12 and E13 ECM connectors.

Standard:

Tester Connection	Intake Shutter	Specified Condition
VC (E13–18) – E2 (E13–28)	—	2.5 to 5.9 kΩ
VLU (E12–29) – E2 (E13–28)	Fully closed	0.2 to 5.7 kΩ
	Fully open	2.0 to 10.2 kΩ

(d) Measure the resistance between the terminals of the E12 ECM connector.

Standard (Check for short):

Tester Connection	Specified Condition
VC (E13–18) – Body ground	10 kΩ or higher
VLU (E12–29) – Body ground	

(e) Reconnect the intake shutter position sensor connector.

(f) Reconnect the ECM connectors.

NG → REPAIR OR REPLACE HARNESS OR CONNECTOR

OK

2 INSPECT ECM(VC VOLTAGE)

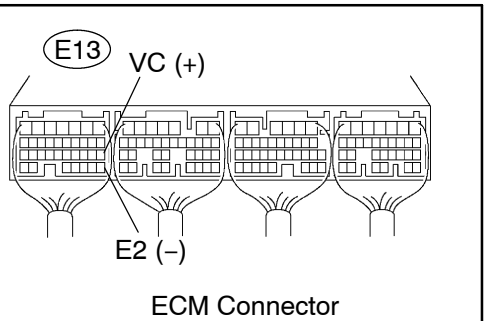

(a) Turn the ignition switch to ON.
(b) Measure the voltage between the specified terminals of the E13 ECM connector.
Standard:

Tester Connection	Specified Condition
VC (E13–18) – E2 (E13–28)	4.5 to 5.5 V

NG → REPLACE ECM (See page 10–29)

OK

3 REPLACE INTAKE SHUTTER ASSY (THROTTLE VALVE) (See page 10–27)

GO

4 CHECK IF DTC OUTPUT RECURS(DTC P0120, P0122 AND/OR P123)

(a) Connect the hand–held tester to the DLC3.
(b) Turn the ignition switch to ON and turn the hand–held tester ON.
(c) Select the item ”DIAGNOSIS / OBD/MOBD / DTC INFO / CLEAR CODES”.
(d) Clear the DTCs.
(e) Let the engine idle for 60 seconds and perform quick acceleration engine RPM (to 2,500 rpm) for 30 seconds.
(f) Select the item ”DIAGNOSIS / OBD/MOBD / DTC INFO / CURRENT CODES”.
(g) Read DTCs.
Result:

Display (DTC output)	Proceed to
P0120, P0122 and/or P0123	A
No output	B

B → SYSTEM OK

A

REPLACE ECM (See page 10–29)

DTC	P0168	FUEL TEMPERATURE TOO HIGH

CIRCUIT DESCRIPTION

Refer to DTC P0180 on page 05–362.

DTC No.	DTC Detection Condition	Trouble Area
P0168	If the fuel temperature between was 35°C (95°F) and 60°C (140°F) at engine start, and condition (a) and (b) are met: (2 trip detection logic) (a) Vehicle is driven at varying speeds (under acceleration and deceleration) (b) Fuel temperature remains within 3°C (37°F) of the engine starting temperature	• Fuel temperature sensor
	If the fuel temperature was more than 60°C (140°F) at engine start, and conditions (a) and (b) are met: (6 trip detection logic) (a) Vehicle is driven at varying speeds (under acceleration and deceleration) (b) fuel temperature remains within 1°C (34°F) of the engine starting temperature, and this is successively recorded 6 times	

INSPECTION PROCEDURE

HINT:

- If DTCs P0180, P0182 and P0183 are output simultaneously, the fuel temperature sensor circuit may be open or short. Perform troubleshooting for those DTCs first.
- Read freeze frame data using the hand–held tester. Freeze frame data records the engine conditions when a malfunction is detected. When troubleshooting, freeze frame data can help determine if the vehicle was running or stopped, if the engine was warmed up or not, if the air–fuel ratio was lean or rich, and other data from the time the malfunction occurred.

1	CHECK OTHER DTC OUTPUT(IN ADDITION TO DTC P0168)

(a) Connect the hand–held tester to the DLC3.
(b) Turn the ignition switch to ON and turn the hand–held tester ON.
(c) Select the item ”DIAGNOSIS / OBD/MOBD / DTC INFO / CURRENT CODES”.
(d) Read DTCs.

Result:

Display (DTC output)	Proceed to
P0168	A
P0168 and other DTCs	B

HINT:

If any other codes besides P0168 are output, perform troubleshooting for those DTCs first.

B → **GO TO RELEVANT DTC CHART (See page 05–299)**

A

REPLACE FUEL TEMPERATURE SENSOR

DTC	P0180	FUEL TEMPERATURE SENSOR ”A” CIRCUIT

DTC	P0182	FUEL TEMPERATURE SENSOR ”A” CIRCUIT LOW INPUT

DTC	P0183	FUEL TEMPERATURE SENSOR ”A” CIRCUIT HIGH INPUT

CIRCUIT DESCRIPTION

(Figure 1)

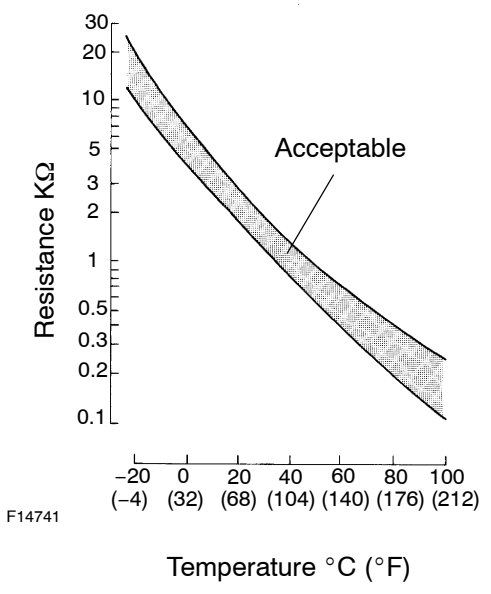

The fuel temperature sensor senses the fuel temperature. A thermistor built into the sensor changes the resistance value according to the fuel temperature. The lower the fuel temperature is, the greater the thermistor resistance becomes, and the higher the fuel temperature is, the lower the thermistor resistance becomes (see figure 1).

The fuel temperature sensor is connected to the ECM. The 5 V power source voltage in the ECM is applied to the fuel temperature sensor from terminal THF via resistor R. The resistor R and the fuel temperature sensor are connected in series. When the resistance value of the fuel temperature sensor changes in accordance with the fuel temperature, the voltage at terminal THF also changes. Based on this signal, the ECM corrects the pressure control compensation of the supply pump and an error.

DTC No.	Proceed to	DTC Detection Condition	Trouble Area
P0180	Step 1	Open or short in fuel temperature sensor circuit for 0.5 second (1 trip detection logic)	• Open or short in fuel temperature sensor circuit • Fuel temperature sensor • ECM
P0182	Step 4	Short in fuel temperature sensor circuit for 0.5 second (1 trip detection logic)	
P0183	Step 2	Open in fuel temperature sensor circuit for 0.5 second (1 trip detection logic)	

HINT:
After confirming DTC P0180, P0182 or P0183, check the fuel temperature in the ”DIAGNOSIS / OBD/MOBD / DATA LIST / ALL / FUEL TEMP” using the hand–held tester.

Reference:

Temperature Displayed	Malfunction
–40˚C (–40˚F)	Open circuit
140˚C (284˚F) or more	Short circuit

WIRING DIAGRAM

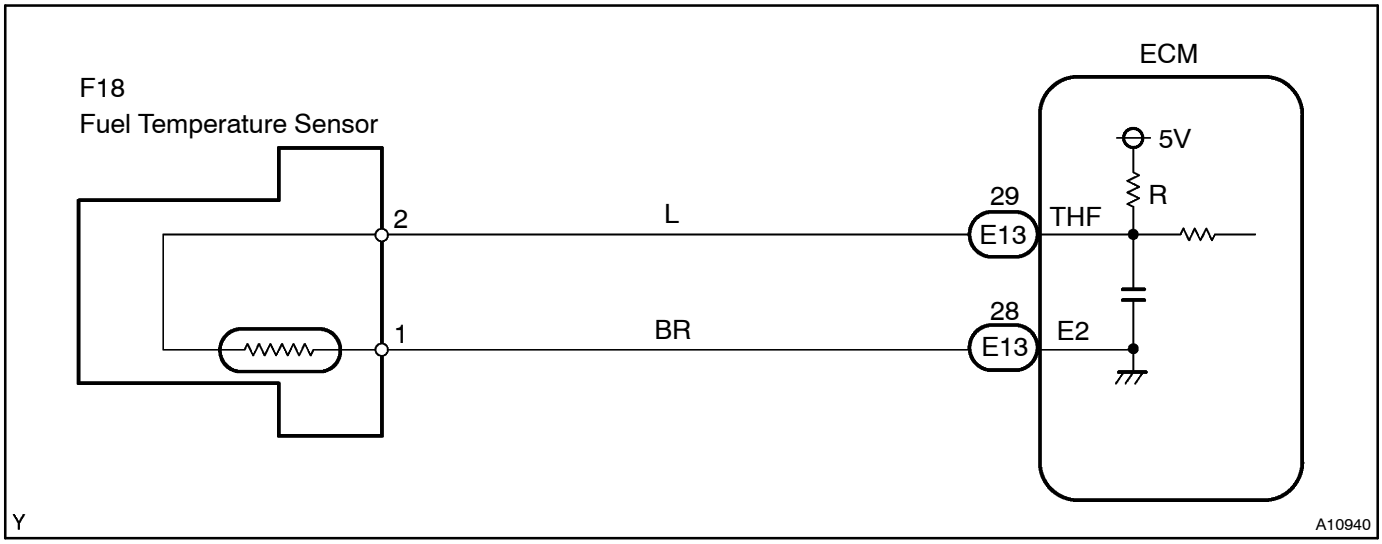

INSPECTION PROCEDURE

HINT:

- If different DTCs related to different systems that have terminal E2 as the ground terminal are output simultaneously, terminal E2 may have an open circuit.
- Read freeze frame data using the hand–held tester. Freeze frame data records the engine conditions when a malfunction is detected. When troubleshooting, freeze frame data can help determine if the vehicle was running or stopped, if the engine was warmed up or not, if the air–fuel ratio was lean or rich, and other data from the time the malfunction occurred.

1	READ VALUE OF HAND–HELD TESTER(FUEL TEMPARATURE)

(a) Connect the hand–held tester to the DLC3.
(b) Turn the ignition switch to ON and turn the hand–held tester ON.
(c) Select the item ”DIAGNOSIS / OBD/MOBD / DATA LIST / ALL / FUEL TEMP” and read its value displayed on the hand–held tester.

Temperature: Same value as the actual fuel temperature.

Result:

Temperature Displayed	Proceed to
–40˚C (–40˚F)	A
140˚C (284˚F) or more	B
OK (Same as actual fuel temperature)	C

HINT:

- If there is an open circuit, the hand–held tester indicates –40˚C (–40˚F).
- If there is a short circuit, the hand–held tester indicates 140˚C (284˚F) or more.

B	Go to step 4
C	CHECK FOR INTERMITTENT PROBLEMS (See page 05–270)

A

2 READ VALUE OF HAND–HELD TESTER(CHECK FOR OPEN IN WIRE HARNESS)

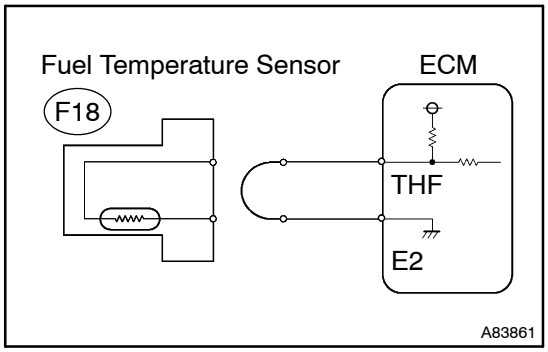

(a) Disconnect the F18 fuel temperature sensor connector.
(b) Connect terminals 1 and 2 of the fuel temperature sensor wire harness side connector.
(c) Connect the hand–held tester to the DLC 3.
(d) Turn the ignition switch to ON and turn the hand–held tester ON.
(e) Select the item ”DIAGNOSIS / OBD/MOBD / DATA LIST / ALL / FUEL TEMP” and read its value displayed on the hand–held tester.
Standard: 140°C (284°F) or more
(f) Reconnect the fuel temperature sensor connector.

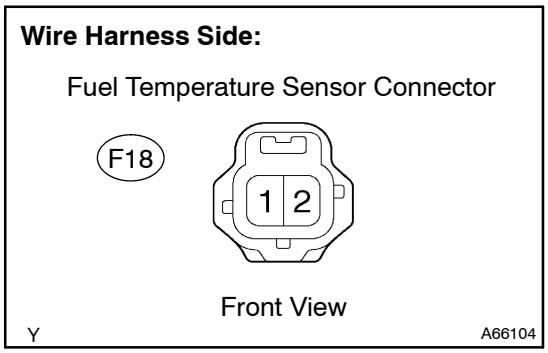

OK	CONFIRM GOOD CONNECTION AT SENSOR. IF OK, REPLACE FUEL TEMPERATURE SENSOR

NG

3 READ VALUE OF HAND–HELD TESTER(CHECK FOR OPEN IN ECM)

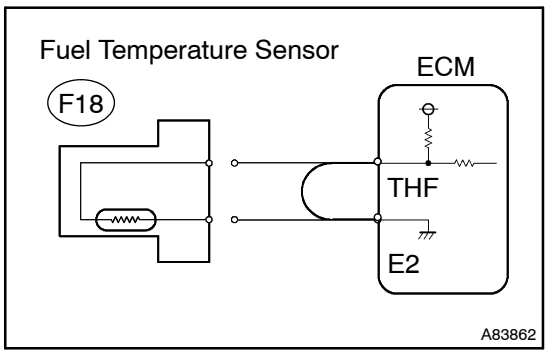

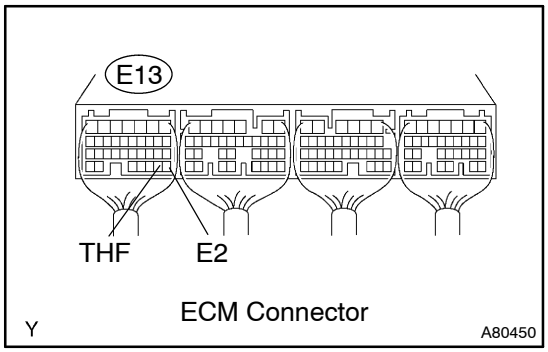

(a) Disconnect the F18 fuel temperature sensor connector.
(b) Connect terminals THF and E2 of the E13 ECM connector.

HINT:
Before checking, do a visual and contact pressure check on the ECM connector.

(c) Connect the hand–held tester to the DLC 3.
(d) Turn the ignition switch to ON and turn the hand–held tester ON.
(e) Select the item "DIAGNOSIS / OBD/MOBD / DATA LIST / ALL / FUEL TEMP" and read its value displayed on the hand–held tester.
Standard: 140°C (284°F) or more
(f) Reconnect the fuel temperature sensor connector.

OK → **REPAIR OR REPLACE HARNESS OR CONNECTOR**

NG

CONFIRM GOOD CONNECTION AT ECM. IF OK, REPLACE ECM (See page 10–29)

4 READ VALUE OF HAND–HELD TESTER(CHECK FOR SHORT IN WIRE HARNESS)

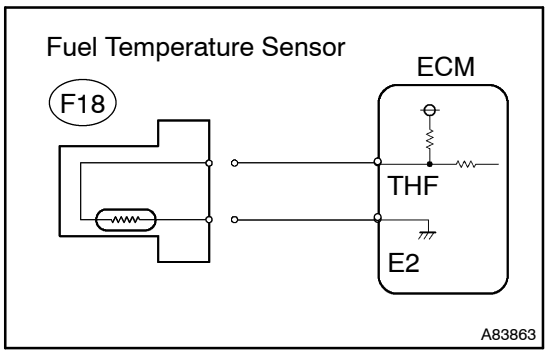

(a) Disconnect the F18 fuel temperature sensor connector.
(b) Connect the hand–held tester to the DLC 3.
(c) Turn the ignition switch to ON and turn the hand–held tester ON.
(d) Select the item "DIAGNOSIS / OBD/MOBD / DATA LIST / ALL / FUEL TEMP" and read its value displayed on the hand–held tester.
Standard: –40°C (–40°F)
(e) Reconnect the fuel temperature sensor connector.

OK → **REPLACE FUEL TEMPERATURE SENSOR**

NG

5	READ VALUE OF HAND–HELD TESTER(CHECK FOR SHORT IN ECM)

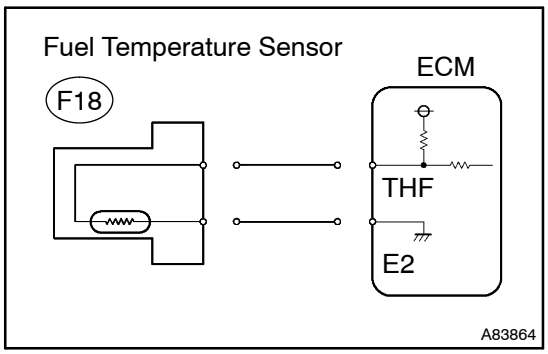

(a) Disconnect the F18 fuel temperature sensor connector.
(b) Disconnect the E13 ECM connector.
(c) Connect the hand–held tester to the DLC 3.
(d) Turn the ignition switch to ON and turn the hand–held tester ON.
(e) Select the item ”DIAGNOSIS / OBD/MOBD / DATA LIST / ALL / FUEL TEMP” and read its value displayed on the hand–held tester.
Standard: –40°C (–40°F)
(f) Reconnect the fuel temperature sensor connector.
(g) Reconnect the ECM connector.

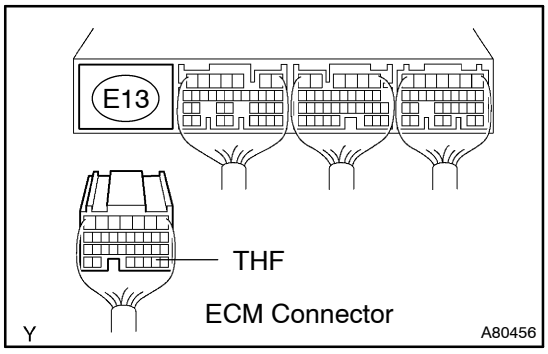

OK → **REPAIR OR REPLACE HARNESS OR CONNECTOR**

NG

REPLACE ECM (See page 10–29)

DTC	P0191	FUEL RAIL PRESSURE SENSOR CIRCUIT RANGE/PERFORMANCE

CIRCUIT DESCRIPTION

Refer to DTC P0087 on page 05–314.

INSPECTION PROCEDURE

HINT:

- If DTCs P0087, P0190, P0192, and P0193 are output simultaneously, the manifold absolute pressure sensor circuit may be open or short. Perform troubleshooting for those DTCs first.
- Read freeze frame data using the hand–held tester. Freeze frame data records the engine conditions when a malfunction is detected. When troubleshooting, freeze frame data can help determine if the vehicle was running or stopped, if the engine was warmed up or not, if the air–fuel ratio was lean or rich, and other data from the time the malfunction occurred.

DTC No.	DTC Detection Condition	Trouble Area
P0191	Voltage output of the fuel pressure sensor for the common rail is out of the standard range (1 trip detection logic)	• Fuel pressure sensor

1	CHECK OTHER DTC OUTPUT(IN ADDITION TO DTC P0191)

(a) Connect the hand–held tester to the DLC3.
(b) Turn the ignition switch to ON and turn the hand–held tester ON.
(c) Select the item ”DIAGNOSIS / OBD/MOBD / DTC INFO / CURRENT CODES”.
(d) Read DTCs.

Result:

Display (DTC output)	Proceed to
P0191	A
P0191 and other DTCs	B

HINT:

If any other codes besides P0191 are output, perform troubleshoot for those DTCs first.

B → **GO TO RELEVANT DTC CHART (See page 05–299)**

A

REPLACE COMMON RAIL ASSY (FUEL PRESSURE SENSOR) (See page 11–67)

DTC	P0200	INJECTOR CIRCUIT / OPEN

HINT:

- For more information on the EDU, see page 05–255.
- If P0200 is present, refer to the diagnostic trouble codes (DTCs) table for the fuel system on page 05–255.

CIRCUIT DESCRIPTION

The EDU has been adopted to drive the injector at high speeds. The EDU has realized the high–speed driving under high–pressurized fuel conditions using the DC/DC converter that provides a high–voltage, and the quick–charging system.

Soon after the EDU receives an injection command (IJT) signal from the ECM, the EDU responds to the command with injector injection confirmation (IJF) signal when the current is applied to the injector.

EDU Wiring Diagram:

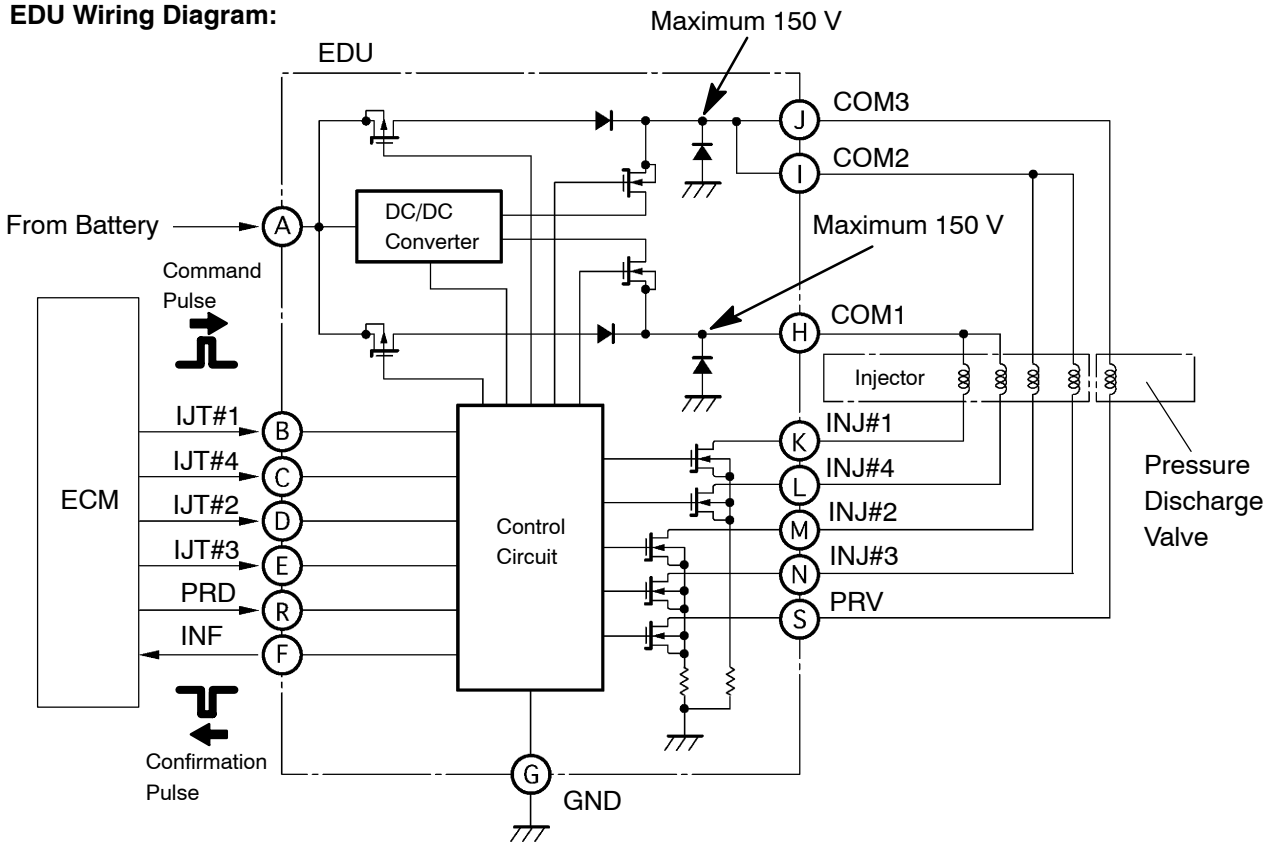

EDU Connector

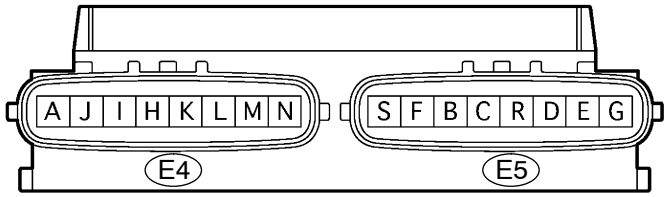

Warning: Terminal J, I, H, K, L, M, N and S are high voltage

Y A81481

DTC No.	DTC Detection Condition	Trouble Area
P0200	• Open or short in EDU or injector circuit After engine is started, there is no injection confirmation (IJF) signal from EDU to ECM, despite the ECM sending injection command (IJT) signal to the EDU (1 trip detection logic)	• Open or short in EDU circuit • Injector • EDU • ECM

MONITOR DESCRIPTION

P0200 (Open or short in EDU or injector circuit):

ECM continuously monitors both injection command (IJT) signal and injection confirmation (IJF) signal. This DTC will be set if the ECM judges that the number of IJT signals and IJF signals are inconsistent.

The injectors are grounded over a FET (field effect transistor) and a serial resistor. This resistor creates a voltage drop, which is monitored by the EDU, in relation to the current drawn by the injector. When the injector current becomes too high, the voltage drop over the resistor becomes higher than a specified level and for that injector no IJF signal is sent to the ECM.

P0200 refers to a malfunction of the injector drive circuit (EDU) or injector circuit.

If this DTC is present, the ECM enters the fail–safe mode and limits the engine power. The fail–safe mode continues until the ignition switch is turned to OFF.

Malfunction Detection:

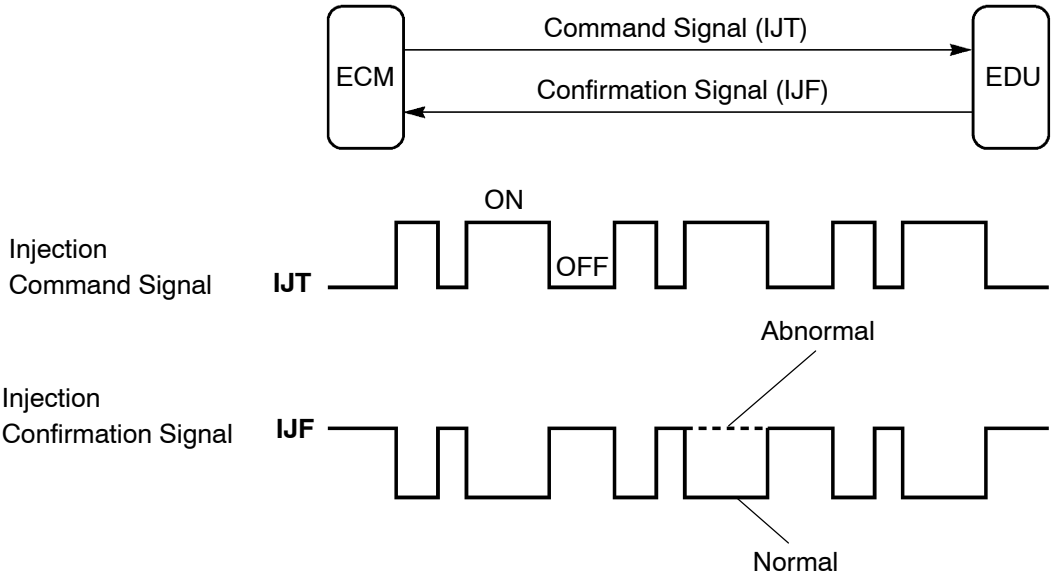

Y A81495

MONITOR STRATEGY

Required Sensors	IJF signal from EDU
Frequency of operation	Continuous
Duration	10 seconds
CHK ENG Operation	1 driving cycle

TYPICAL ENABLING CONDITIONS

Item	Specification	
	Minimum	Maximum
Engine speed	500 rpm	–
Battery voltage	11 V	–
Ignition switch	ON	

TYPICAL MALFUNCTION THRESHOLDS

Threshold
If injection missing counter* is accumulated the specified number of times successively, or if injection missing counter for one of the cylinders is accumulated the specified number of times successively (Approximately 1 second or more) *: Injection missing counter increments when no IJF signal from the EDU is sent despite the ECM sending the IJT signals

WIRING DIAGRAM

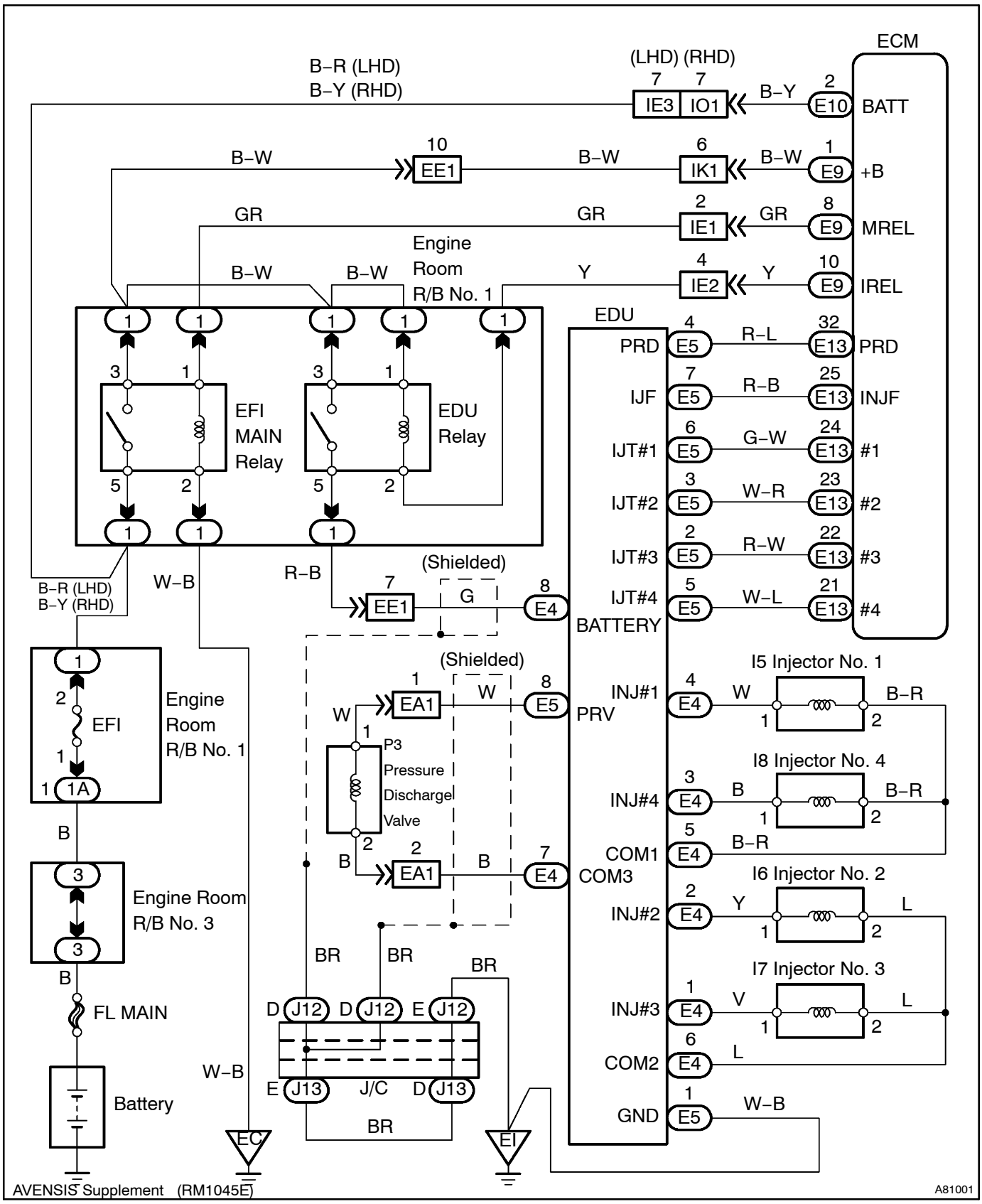

PULSE GENERATION INSPECTION

HINT:

Problem area can be identified by checking the waveform at the following terminals.

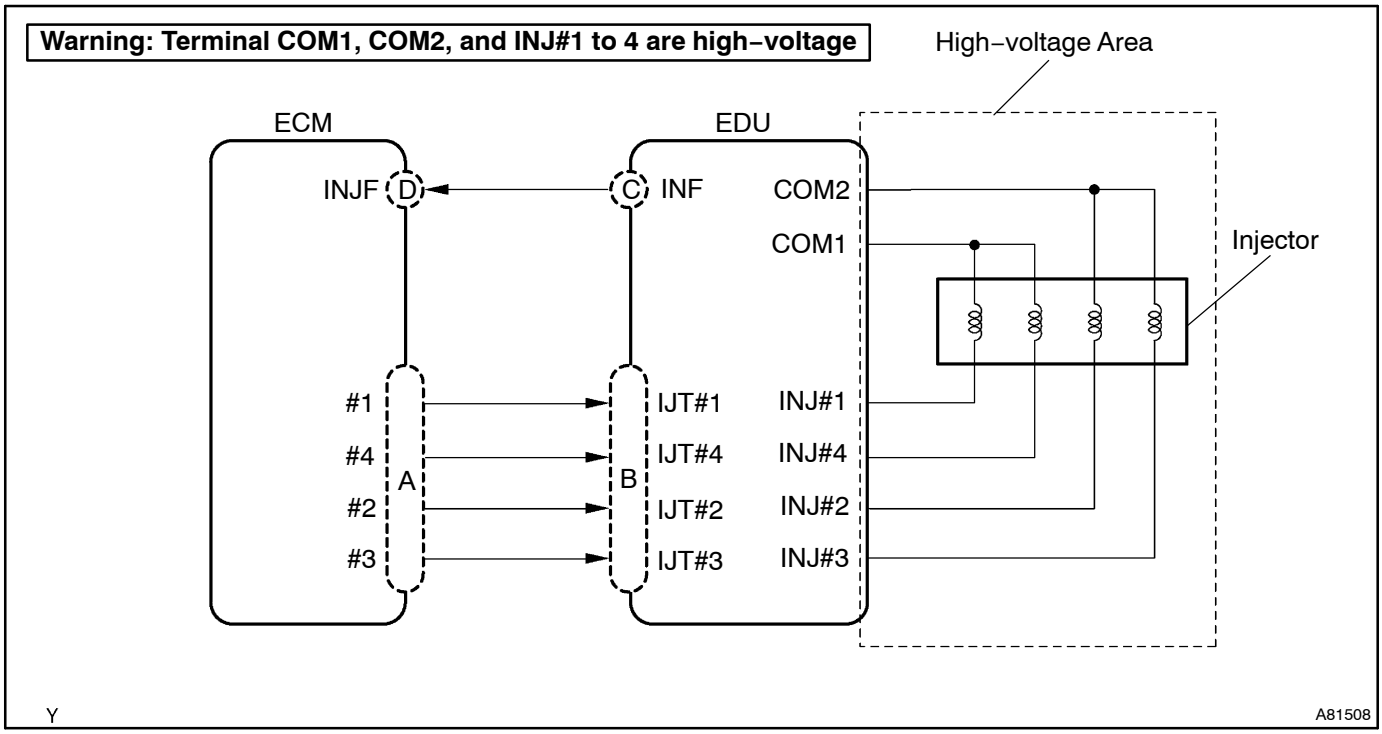

HINT:

If you check the ECM side first, inspect the following A and D in sequence. If you check the EDU side first, inspect the following B and C in sequence. This shortens inspecting time.

Malfunction Point	Trouble Area
A	• ECM
B (if A is normal)	• Open or short in "#1 to #4 (ECM)" – "IJT#1 to IJT#4 (EDU)" harness or connector
C (if A and B are normal)	• Open or short in "INJ#1 to INJ#4 (EDU)" – "COM1 and/or COM2" (EDU) circuit • Injector • EDU
D (if A, B and C are normal)	• Open or short in "INJ (EDU)" – "INJF (ECM)" circuit (P1271 is set simultaneously)

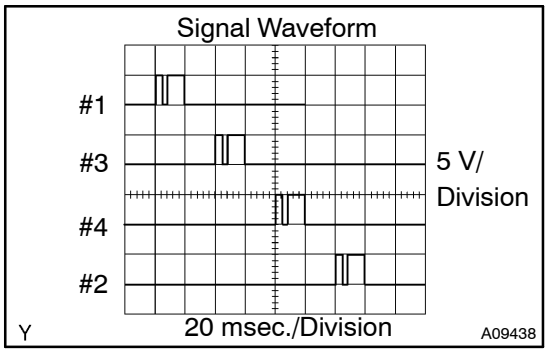

(a) Reference: Inspection using the oscilloscope.
During idling, the correct waveform is as shown in the diagram on the left.

Inspection Points	Specified Condition
A and B	Correct waveform is as shown

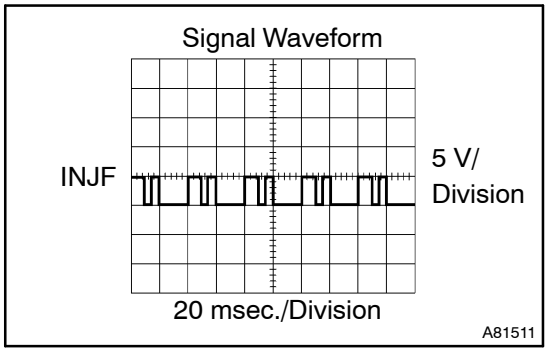

(b) Reference: Inspection using the oscilloscope.
During idling, the correct waveform is as shown in the diagram on the left.

Inspection Points	Specified Condition
C and D	Correct waveform is as shown

INSPECTION PROCEDURE

HINT:

- If P0200 and P1271 are present simultaneously, there is open in the INJF wire harness between the EDU and ECM, or there is open in the wire harness for both injector and pressure discharge valve.
- Read freeze frame data using the hand–held tester. Freeze frame data records the engine conditions when a malfunction is detected. When troubleshooting, freeze frame data can help determine if the vehicle was running or stopped, if the engine was warmed up or not, if the air–fuel ratio was lean or rich, and other data from the time the malfunction occurred.

1	CHECK OTHER DTC OUTPUT(IN ADDTION TO DTC P0200)

(a) Connect the hand–held tester to the DLC3.
(b) Turn the ignition switch to ON and turn the hand–held tester ON.
(c) Select the item ”DIAGNOSIS / OBD/MOBD / DTC INFO / CURRENT CODES”.
(d) Read DTCs.
Result:

Display (DTC output)	Proceed to
P0200 and P1238	A
P0200	B

B → **Go to step 3**

A

2	READ VALUE OF HAND–HELD TESTER(COMPENSATION OF INJECTION VOLUME BETWEEN CYLINDERS)

(a) Connect the hand–held tester to the DLC3.
(b) Turn the ignition switch to ON and turn the hand–held tester ON.
(c) Start the engine.
(d) Select the item ”DIAGNOSIS / OBD/MOBD / DATA LIST / ALL / INJ VOLUME FB” and read its value displayed on the hand–held tester.
Result:

Result	Compensatory Injection Volume (mm^3)
Standard	–3 to 3
Maximum	–4.9 to 4.9

(e) Inspect and repair the cylinder that has an improper compensation value according to the following steps.

GO

3 INSPECT INJECTOR ASSY

Component Side:

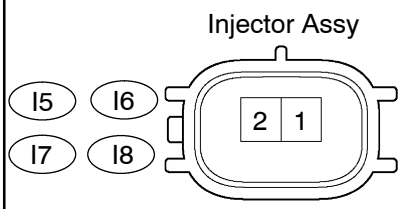

(a) Disconnect the I5, I6, I7 or I8 injector connectors.
(b) Measure the resistance between the terminals of the injector assy.

Standard:

Tester Connection	Specified Condition
1 – 2	0.85 to 1.05 Ω at 20°C (68°F)

(c) Reconnect the injector connector.

NG → **REPLACE INJECTOR ASSY (See page 11–46)**

OK

4 CHECK HARNESS AND CONNECTOR(EDU – INJECTOR ASSY)

Wire Harness Side:

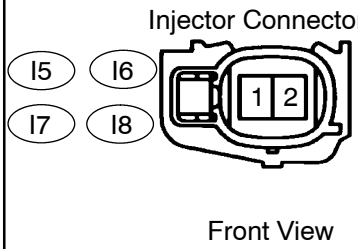

Wire Harness Side:

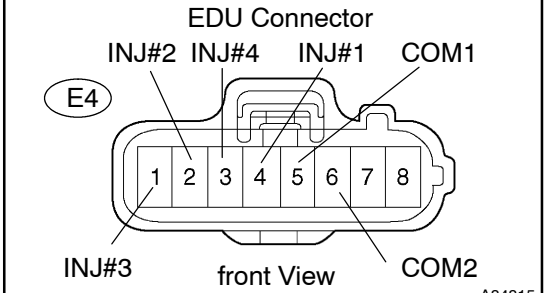

(a) Check the harness and connector between the injector and EDU (INJ terminal).
(1) Disconnect the I5, I6, I7, or I8 injector connector.
(2) Disconnect the E4 EDU connector.
(3) Check the resistance between the wire harness side connectors.

Standard (Check for open):

Tester Connection	Specified Condition
Injector (I5–1) – INJ#1 (E4–4)	Below 1 Ω
Injector (I6–1) – INJ#2 (E4–2)	
Injector (I7–1) – INJ#3 (E4–1)	
Injector (I8–1) – INJ#4 (E4–3)	
Injector (I5–2) – COM1 (E4–5)	
Injector (I6–2) – COM2 (E4–6)	
Injector (I7–2) – COM2 (E4–6)	
Injector (I8–2) – COM1 (E4–5)	

Standard (Check for short):

Tester Connection	Specified Condition
Injector (I5–1) or INJ#1 (E4–4) – Body ground	10 kΩ or higher
Injector (I6–1) or INJ#2 (E4–2) – Body ground	
Injector (I7–1) or INJ#3 (E4–1) – Body ground	
Injector (I8–1) or INJ#4 (E4–3) – Body ground	
Injector (I5–2) or COM1 (E4–5) – Body ground	
Injector (I6–2) or COM2 (E4–6) – Body ground	
Injector (I7–2) or COM2 (E4–6) – Body ground	
Injector (I8–2) or COM1 (E4–5) – Body ground	

(4) Reconnect the injector connector.
(5) Reconnect the EDU connector.

NG → **REPAIR OR REPLACE HARNESS OR CONNECTOR**

OK

5 CHECK HARNESS AND CONNECTOR(EDU – ECM)

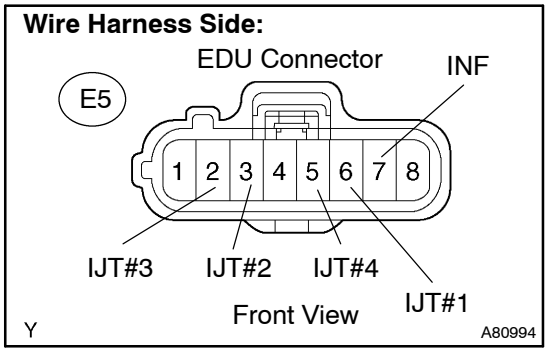

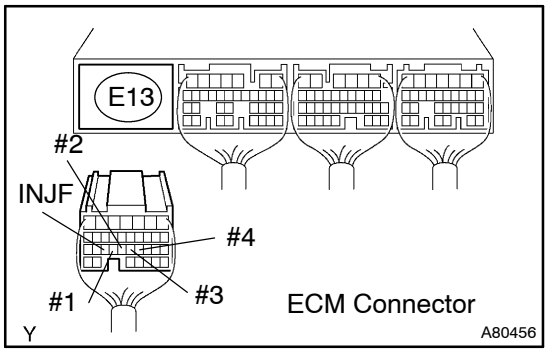

(a) Disconnect the E5 EDU connector.
(b) Disconnect the E13 ECM connector.
(c) Check the resistance between the terminals of the wire harness side connectors.

Standard (Check for open):

Tester Connection	Specified Condition
IJT#1 (E5–6) – #1 (E13–24)	Below 1 Ω
IJT#2 (E5–3) – #2 (E13–23)	
IJT#3 (E5–2) – #3 (E13–22)	
IJT#4 (E5–5) – #4 (E13–21)	
INF (E5–7) – INJF (E13–25)	

Standard (Check for short):

Tester Connection	Specified Condition
#1 (E13–24) or IJT#1 (E5–6) – Body ground	10 kΩ or higher
#2 (E13–23) or IJT#2 (E5–3) – Body ground	
#3 (E13–22) or IJT#3 (E5–2) – Body ground	
#4 (E13–21) or IJT#4 (E5–5) – Body ground	
INJF (E13–25) or INF (E5–7) – Body ground	

(d) Reconnect the EDU connector.
(e) Reconnect the ECM connector.

NG → **REPAIR OR REPLACE HARNESS OR CONNECTOR**

OK

6 INSPECT INJECTOR DRIVER(BATTERY VOLTAGE)

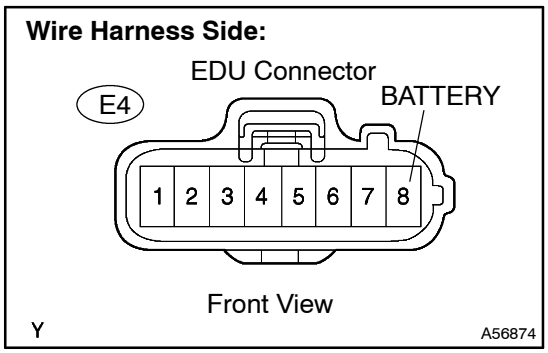

(a) Disconnect the E4 and E5 EDU connectors.
(b) Turn the ignition switch to ON.
(c) Measure the voltage between the specified terminals of the EDU connectors.

Standard:

Tester Connection	Specified Condition
BATTERY (E4–8) – GND (E5–1)	9 to 14 V

(d) Reconnect the EDU connectors.

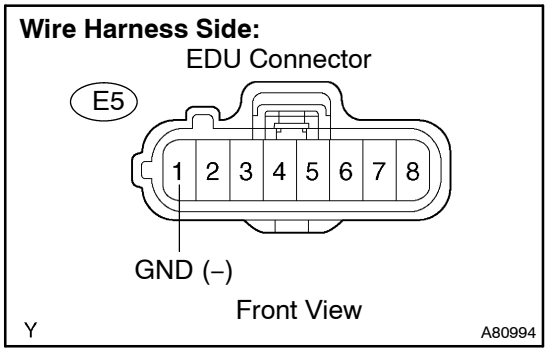

NG → CHECK INJECTOR DRIVER POWER SOURCE CIRCUIT (BATTERY – EDU)

OK

7 INSPECT ECM(INJECTOR VOLTAGE)

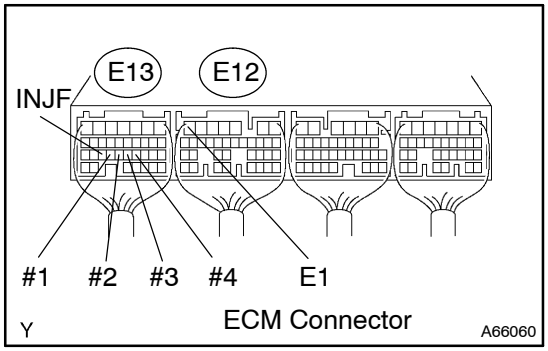

(a) Inspect using the oscilloscope.
(b) During idling, check the waveform between the specified terminals of the E12 and E13 ECM connectors.
Standard:

Tester Connection	Specified Condition
#1 (E13–24) – E1 (E12–7)	Correct waveform is as shown
#2 (E13–23) – E1 (E12–7)	
#3 (E13–22) – E1 (E12–7)	
#4 (E13–21) – E1 (E12–7)	
INJF (E13–25) – E1 (E12–7)	

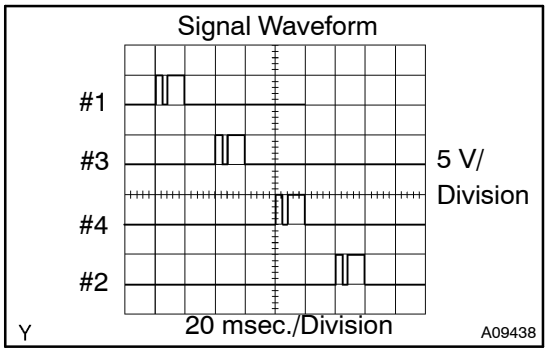

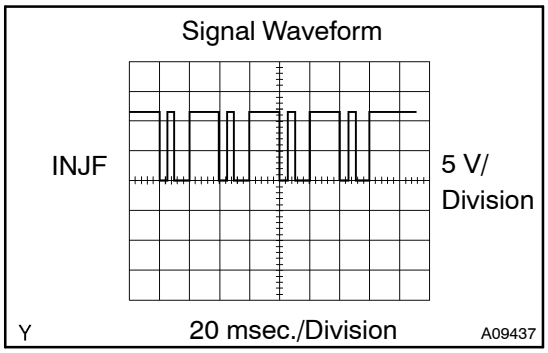

NG → REPLACE ECM (See page 10–29)

OK

8 REPLACE INJECTOR DRIVER

GO

CHECK IF DTC OUTPUT RECURS (DTC P0200)

HINT:
After clearing the DTC, start the engine and let it idle for 30 seconds, and then confirm that P0200 is not present again.

DTC	P0234	TURBO/SUPER CHARGER OVERBOOST CONDITION

DTC	P0299	TURBO/SUPER CHARGER UNDERBOOST

DTC	P1251	TURBO/SUPER CHARGER OVERBOOST CONDITION (TOO HIGH)

CIRCUIT DESCRIPTION

DTC No.	DTC Detection Condition	Trouble Area
P0234 P0299 P1251	When the condition that the turbocharger pressure exceeds the standard value for 0.5 second or more (1 trip detection logic)	• VRV • Open or short in VRV circuit • Turbocharger • Vacuum hose • EGR valve • ECM
	Actual turbocharger pressure is deviated 20 kPa (150 mmHg, 5.9 in.Hg) or more from the simulated target pressure for 60 seconds (1 trip detection logic)	

WIRING DIAGRAM

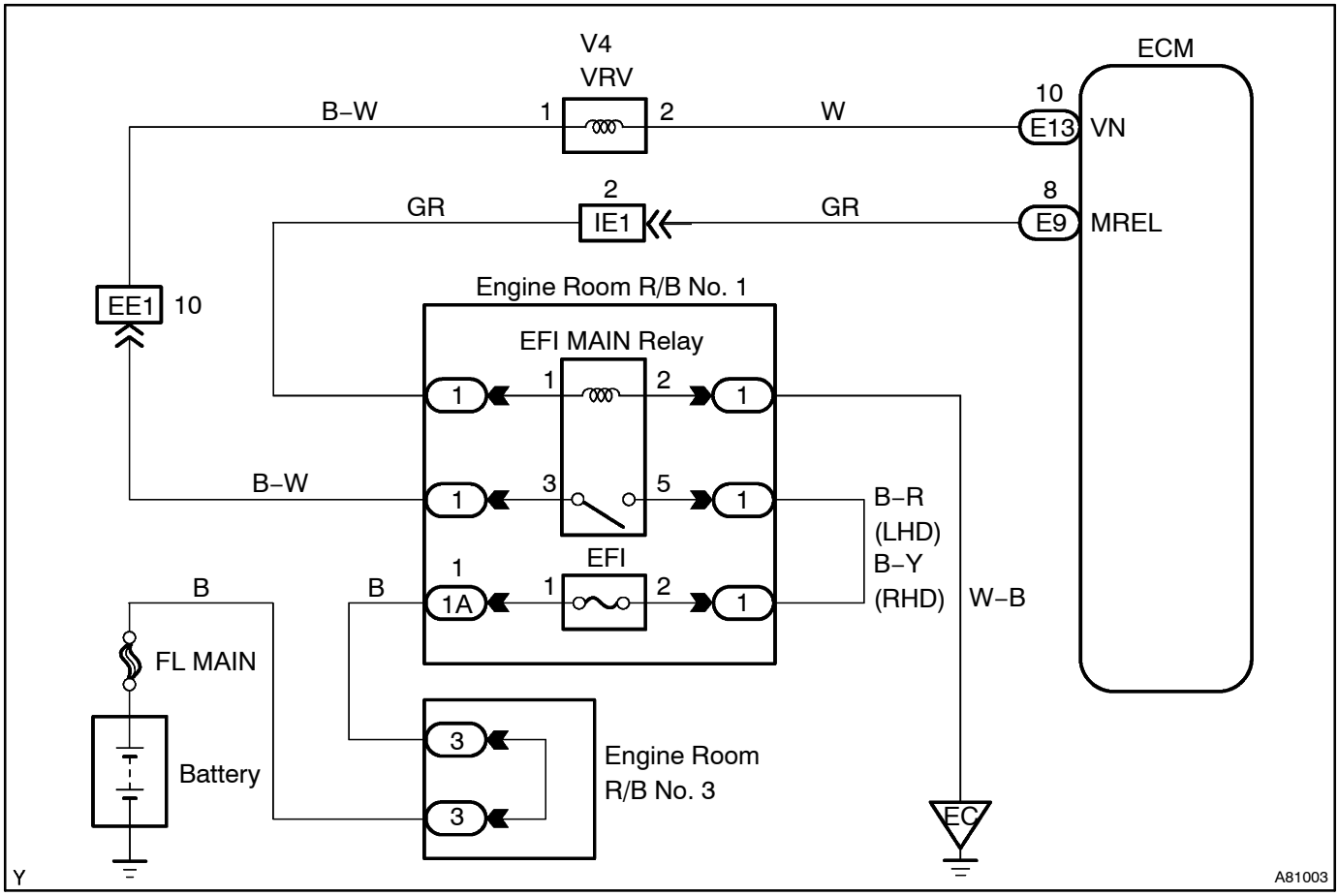

INSPECTION PROCEDURE

HINT:
Read freeze frame data using the hand–held tester. Freeze frame data records the engine conditions when a malfunction is detected. When troubleshooting, freeze frame data can help determine if the vehicle was running or stopped, if the engine was warmed up or not, if the air–fuel ratio was lean or rich, and other data from the time the malfunction occurred.

1	CHECK OTHER DTCS OUTPUT(IN ADDITION TO DTC P0234, P0299 AND/OR P1251)

(a) Connect the hand–held tester to the DLC3.
(b) Turn the ignition switch to ON and turn the hand–held tester ON.
(c) Select the item ”DIAGNOSIS / OBD/MOBD / DTC INFO / CURRENT CODES”.
(d) Read DTCs.
Result:

Display (DTC output)	Proceed to
P0234, P0299 and/or P1251	A
P0234, P0299 and/or P1251 and other DTCs	B

B → **GO TO RELEVANT DTC CHART (See page 05–299)**

A

2	CONNECTION OF VACUUM HOSES

HINT:
Check the vacuum hoses of turbocharger system connections.

NG → **REPAIR OR REPLACE VACUUM HOSES**

OK

3	CHECK VACUUM HOSES(CHECK VACUUM BETWEEN TURBOCHARGER – VRV FOR TURBO CHARGER)

(a) Using a three–way connector, connect a vacuum gauge to the hoses between the E–VRV and turbocharger.
(b) Warm up the engine coolant temperature to above 75°C (167°F).
(c) Check the vacuum at the engine speed of 900 rpm.
Result:

Proceed to	Vacuum
A	0 kPa (0 mmHg, 0 in.Hg) to 50 kPa (375 mmHg, 14.8 in.Hg)
B	Above 50 kPa (375 mmHg, 14.8 in.Hg)

B → **Go to step 8**

A

4	INSPECT ECM(VN VOLTAGE)

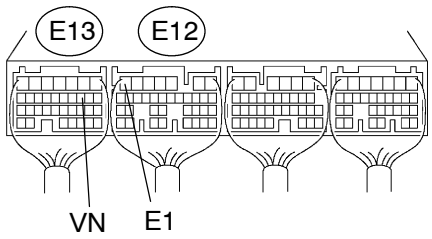

Y ECM Connector A66060

(a) Inspect using the oscilloscope.
(b) During idling, check the waveform between the specified terminals of the E12 and E13 ECM connectors.

Standard:

Tester Connection	Specified Condition
VN (E13–10) – E1 (E12–7)	Correct waveform is as shown

E–VRV Signal Waveforms

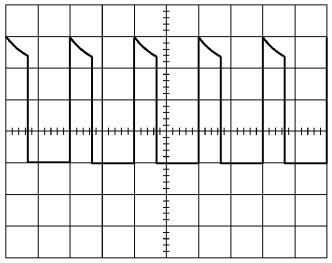

1 msec./ Division A05967

OK → REPLACE ECM (See page 10–29)

NG

5	INSPECT VACUUM REGULATING VALVE ASSY(OPERATION) (See page 13–8)

NG → REPLACE VACUUM REGULATING VALVE ASSY

OK

6	INSPECT VACUUM REGULATING VALVE ASSY(RESISTANCE) (See page 13–8)

NG → REPLACE VACUUM REGULATING VALVE ASSY

OK

7 CHECK HARNESS AND CONNECTOR(VRV – ECM)

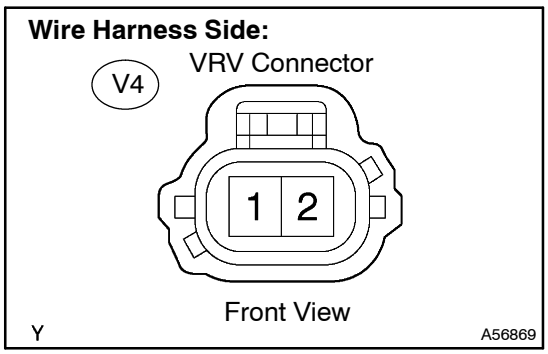

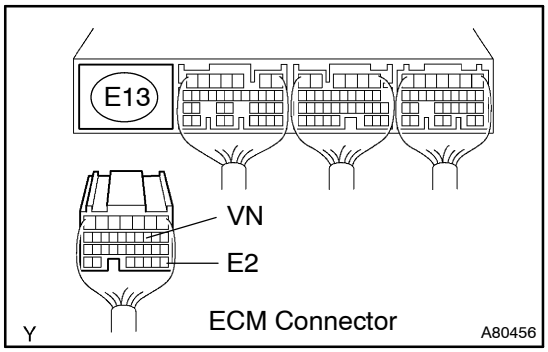

(a) Disconnect the V4 VRV connector.
(b) Disconnect the E13 ECM connector.
(c) Check the resistance between the wire harness side connectors.

Standard (Check for open):

Tester Connection	Specified Condition
VN (E13–10) – (V4–2)	Below 1 Ω
E2 (E13–28) – (V4–1)	

Standard (Check for short):

Tester Connection	Specified Condition
VN (E13–10) or (V4–2) – Body ground	10 kΩ or higher
E2 (E13–28) or (V4–1) – Body ground	

(d) Reconnect the VRV connector.
(e) Reconnect the ECM connector.

NG → **REPAIR OR REPLACE HARNESS AND CONNECTOR**

OK

8 INSPECT TURBOCHARGER SUB–ASSY (See page 13–6)

NG → **REPLACE TURBOCHARGER SUB–ASSY (See page 13–12)**

OK

9 INSPECT EGR VALVE ASSY

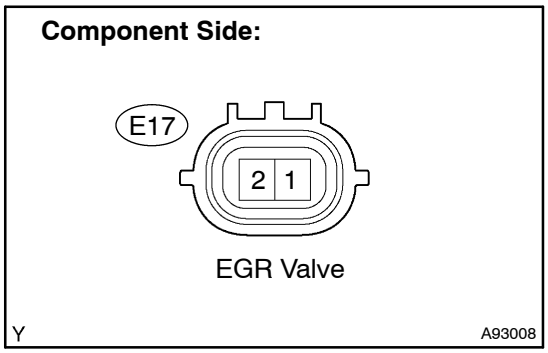

(a) Disconnect the E17 EGR valve connector.
(b) Measure the resistance between the terminals of the EGR valve.

Standard:

Tester Connection	Specified Condition
1 – 2	6.8 Ω at 20°C (68°F)

(c) Reconnect the EGR valve connector.

NG → **REPLACE EGR VALVE ASSY (See page 14–108)**

OK

10 CHECK AND REPLACE MANIFOLD ABSOLUTE SENSOR

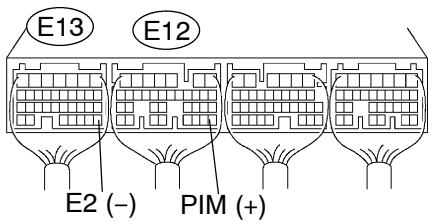

ECM Connector

Y A66060

(a) Turn the ignition switch to ON.

(b) Measure the voltage between the terminals of the E12 and E13 ECM connectors.

Standard:

Tester Connection	Condition	Specified Condition
PIM (E12–28) – E2 (E13–28)	Applied negative pressure of 40 kPa (300 mmHg, 11.8 in.Hg)	1.4 to 2.0 V
PIM (E12 – 28) – E2 (E13–28)	Same as atmospheric pressure	2.0 to 2.6 V
PIM (E12 – 28) – E2 (E13–28)	Applied positive pressure of 69 kPa (518 mmHg, 20.4 in.Hg)	3.0 to 3.6 V

HINT:

Even if the voltage output from the manifold absolute sensor is within the standard level, there may be a problem in the sensor by age deterioration.

NG → **REPLACE MANIFOLD ABSOLUTE PRESSURE SENSOR**

OK

REPLACE ECM (See page 10–29)

DTC	P0335	CRANKSHAFT POSITION SENSOR ”A” CIRCUIT

DTC	P0339	CRANKSHAFT POSITION SENSOR ”A” CIRCUIT INTERMITTENT

CIRCUIT DESCRIPTION

Crankshaft position sensor (NE signal) consists of a magnet, iron core and pickup coil.
The NE signal plate has 34 teeth and is installed on the crankshaft timing pulley. The NE signal sensor generates 34 signals of every engine revolution. The ECM detects the standard crankshaft angle based on the G signal from the camshaft position sensor, and the actual crankshaft angle and the engine speed by the NE signal.

DTC No.	DTC Detection Condition	Trouble Area
P0335	No crankshaft position sensor signal to ECM during cranking (2 trip detection logic)	• Open or short in crankshaft position sensor circuit • Crankshaft position sensor • Signal plate (crankshaft timing pulley) • ECM
	No crankshaft position sensor signal to ECM at engine speed of 650 rpm or more (2 trip detection logic)	
P0339	In conditions (a), (b) and (c), no crankshaft position sensor (NE) signal for 0.05 second or more (1 trip detection logic) (a) Engine revolution is 1,000 rpm or more (b) STA signal is OFF (c) 3 seconds or more has lapsed after STA signal was switched from ON to OFF	

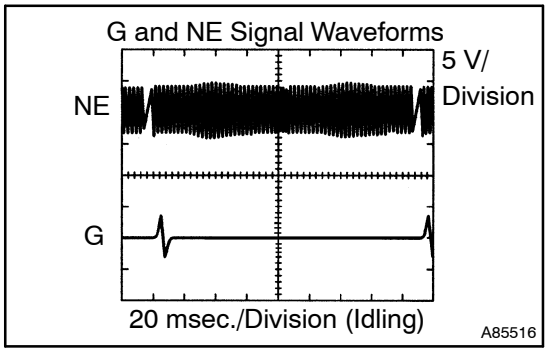

Reference: Inspection using the oscilloscope.
During idling, the correct waveform is as shown in the diagram on the left.

Tester Connection	Specified Condition
NE+ (E13–27) – NE– (E13–34)	Correct waveform is as shown

WIRING DIAGRAM

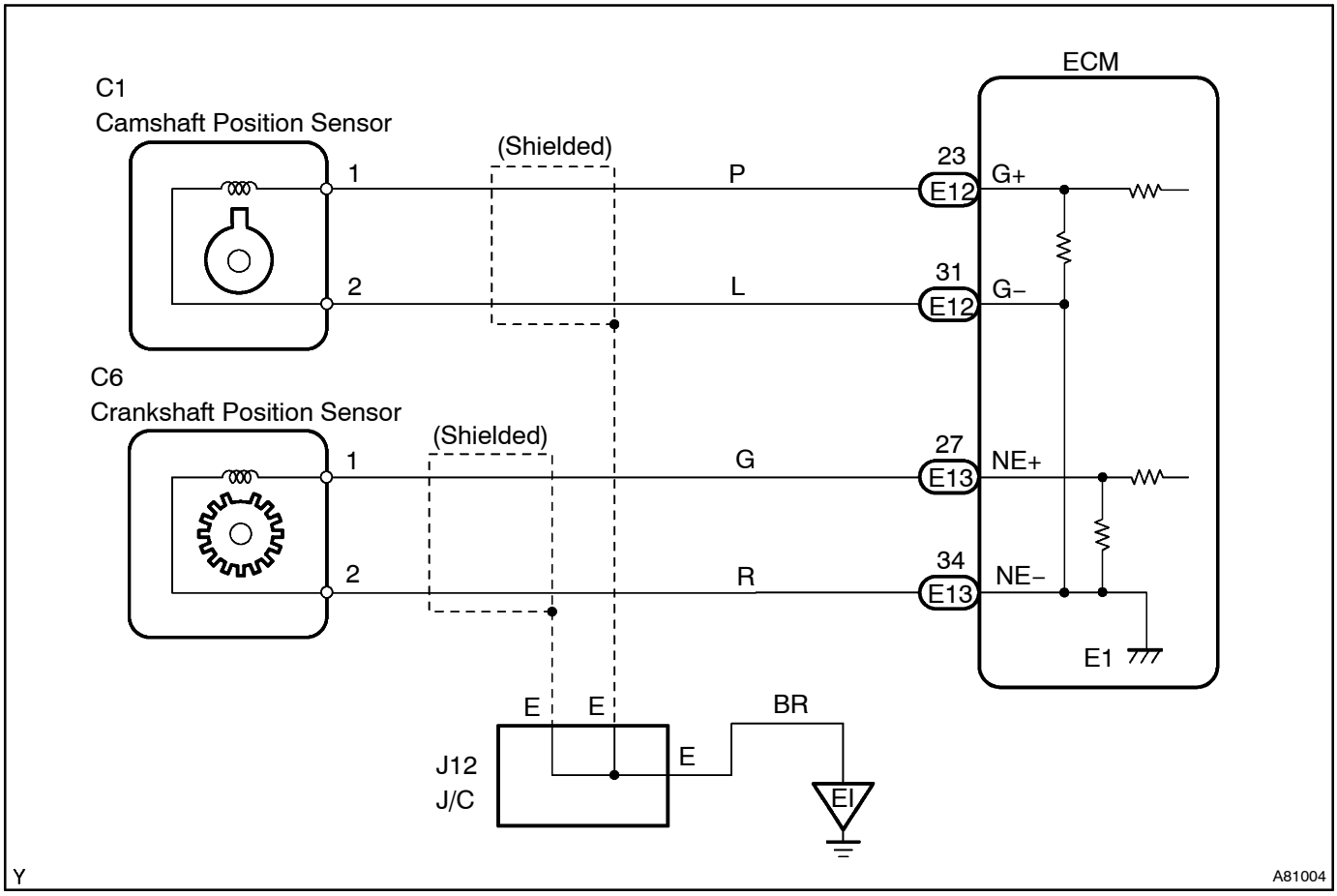

INSPECTION PROCEDURE

HINT:

- If no trouble is found in troubleshooting of DTC P0335, troubleshoot the engine mechanical system.
- Read freeze frame data using the hand–held tester. Freeze frame data records the engine conditions when a malfunction is detected. When troubleshooting, freeze frame data can help determine if the vehicle was running or stopped, if the engine was warmed up or not, if the air–fuel ratio was lean or rich, and other data from the time the malfunction occurred.

1	INSPECT CRANKSHAFT POSITION SENSOR(RESISTANCE)

Component Side:

Crankshaft Position Sensor

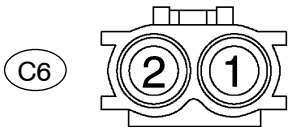

A78431

(a) Disconnect the C6 crankshaft position sensor connector.

(b) Measure the resistance between the terminals of the crankshaft position sensor.

Standard:

Tester Connection	Specified Condition
1 – 2	1,630 to 2,740 Ω at cold
	2,065 to 3,225 Ω at hot

NOTICE:

"Cold" and "Hot" shown above mean the temperature of the coils themselves. "Cold" is from –10°C (14°F) to 50°C (122°F) and "Hot" is from 50°C (122°F) to 100°C (212°F).

(c) Reconnect the crankshaft position sensor connector.

NG → REPLACE CRANKSHAFT POSITION SENSOR

OK

2 CHECK HARNESS AND CONNECTOR(CRANKSHAFT POSITION SENSOR – ECM)

Wire Harness Side:

Crankshaft Position Sensor Connector

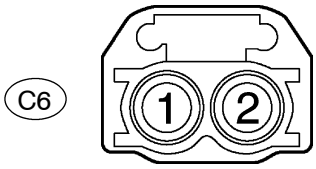

Front View

A76790

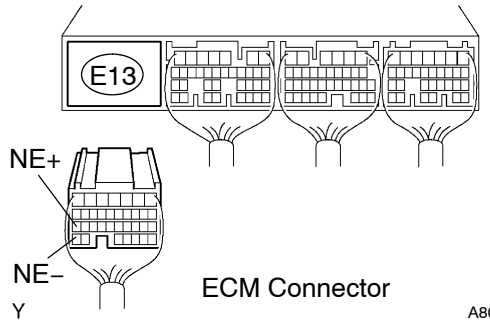

ECM Connector

Y

A80459

(a) Disconnect the C6 crankshaft position sensor connector.
(b) Disconnect the E13 ECM connector.
(c) Check the resistance between the wire harness side connectors.

Standard (Check for open):

Tester Connection	Specified Condition
Crankshaft position sensor (C6–1) – NE+ (E13–27)	Below 1 Ω
Crankshaft position sensor (C6–2) – NE– (E13–34)	

Standard (Check for short):

Tester Connection	Specified Condition
Crankshaft position sensor (C6–1) or NE+ (E13–27) – Body ground	10 kΩ or higher
Crankshaft position sensor (C6–2) or NE– (E13–34) – Body ground	

(d) Reconnect the crankshaft position sensor connector.
(e) Reconnect the ECM connector.

NG → REPAIR OR REPLACE HARNESS OR CONNECTOR

OK

3 CHECK SENSOR INSTALLATION(CRANKSHAFT POSITION SENSOR)

NG → TIGHTEN SENSOR

OK

4 CHECK CRANKSHAFT POSITION SENSOR PLATE(TEETH OF SENSOR PLATE(CRANKSHAFT TIMING PULLEY))

(a) Check the teeth of the sensor plate.

NG → REPLACE CRANKSHAFT POSITION SENSOR PLATE (CAMSHAFT TIMING PULLEY)

OK

REPLACE ECM (See page 10–29)

DTC	P0340	CAMSHAFT POSITION SENSOR "A" CIRCUIT (BANK 1 OR SINGLE SENSOR)

CIRCUIT DESCRIPTION

Camshaft position sensor (G signal) consists of a magnet, iron core and pickup coil.
The G signal plate has one tooth on its outer circumference and is installed on the camshaft timing pulley. When the camshafts rotate, the protrusion on the signal plate and the air gap on the pickup coil change, causing fluctuations in the magnetic field and generating voltage in the pickup coil.
The ECM detects each cylinder position based on a combination of the G signal and a signal from the crankshaft position sensor (NE signal).

DTC No.	DTC Detection Condition	Trouble Area
P0340	No camshaft position sensor signal to ECM during cranking (2 trip detection logic)	• Open or short in camshaft position sensor circuit • Camshaft position sensor • Camshaft timing pulley • ECM
	No camshaft position sensor signal to ECM at engine speed of 650 rpm or more (1 trip detection logic)	

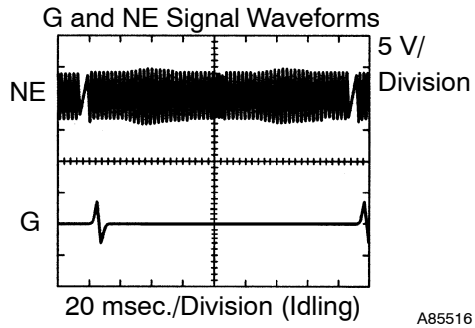

Reference: Inspection using the oscilloscope.
During idling the correct waveform is as shown in the diagram on the left.

Tester Connection	Specified Condition
G+ (E12–23) – G– (E12–31)	Correct waveform is as shown

WIRING DIAGRAM

Refer to DTC P0335 on page 05–381.

INSPECTION PROCEDURE

HINT:
Read freeze frame data using the hand–held tester. Freeze frame data records the engine conditions when a malfunction is detected. When troubleshooting, freeze frame data can help determine if the vehicle was running or stopped, if the engine was warmed up or not, if the air–fuel ratio was lean or rich, and other data from the time the malfunction occurred.

1	INSPECT CAMSHAFT POSITION SENSOR

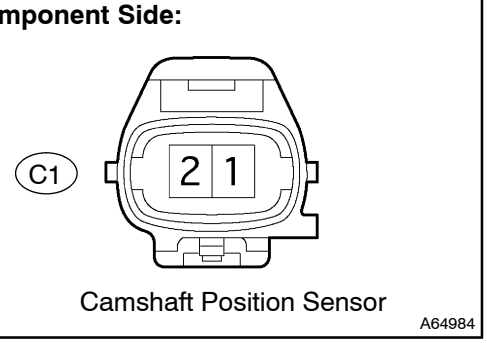

(a) Disconnect the C1 camshaft position sensor connector.
(b) Measure the resistance between the terminals of the crankshaft position sensor.
Standard:

Tester Connection	Specified Condition
1 – 2	835 to 1,400 Ω at cold
	1,060 to 1,645 Ω at hot

NOTICE:
"Cold" and "Hot" shown above mean the temperature of the coils themselves. "Cold" is from –10°C (14°F) to 50°C (122°F) and "Hot" is from 50°C (122°F) to 100°C (212°F).
(c) Reconnect the camshaft position sensor.

NG → REPLACE CAMSHAFT POSITION SENSOR

OK

2 CHECK HARNESS AND CONNECTOR(CAMSHAFT POSITION SENSOR – ECM)

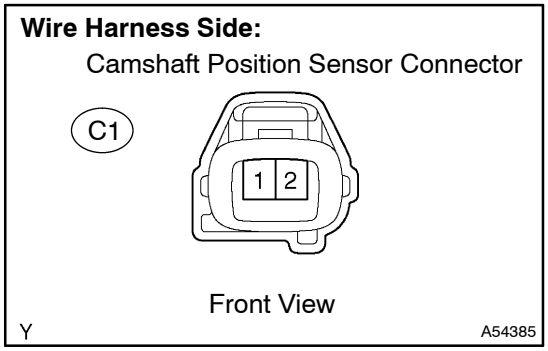

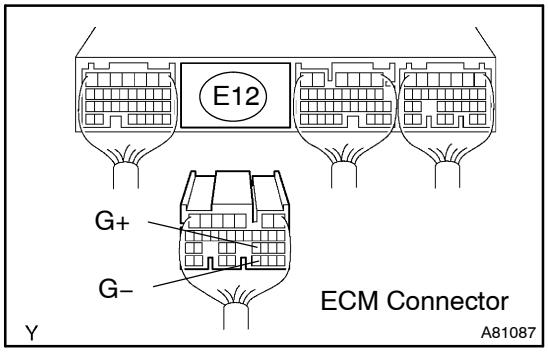

(a) Disconnect the C1 camshaft position sensor connector.
(b) Disconnect the E12 ECM connector.
(c) Check the resistance between the wire harness side connectors.

Standard (Check for open):

Tester Connection	Specified Condition
Camshaft position sensor (C1–1) – G+ (E12–23)	Below 1 Ω
Camshaft position sensor (C1–2) – G– (E12–31)	

Standard (Check for short):

Tester Connection	Specified Condition
Camshaft position sensor (C1–1) or G+ (E12–23) – Body ground	10 kΩ or higher
Camshaft position sensor (C1–2) or G– (E12–31) – Body ground	

(d) Reconnect the camshaft position sensor connector.
(e) Reconnect the ECM connector.

NG → REPAIR OR REPLACE HARNESS OR CONNECTOR

OK

3 CHECK SENSOR INSTALLATION(CAMSHAFT POSITION SENSOR)

NG → TIGHTEN SENSOR

OK

4 CHECK CAMSHAFT TIMING PULLEY(TEETH OF PLATE)

(a) Check the teeth of the signal plate.

NG → REPLACE CAMSHAFT TIMING PULLEY

OK

REPLACE ECM (See page 10–29)

DTC	P0380	GLOW PLUG/HEATER CIRCUIT ”A”

CIRCUIT DESCRIPTION

The glow plug is mounted inside the engine combustion chamber. To ensure the efficient engine starting with a cold engine, the ECM calculates a time interval of the current needs to flow through the glow plug depending on the starting engine coolant temperature when the ignition switch is turned to ON. The ECM then turns on the glow plug relay and permits the current to flow through the glow plug based on the ECM’s calculated time. The glow plug is then heated and enhances fuel combustion with a cold engine.
This DTC will be set if there is open in glow plug itself or its circuit.

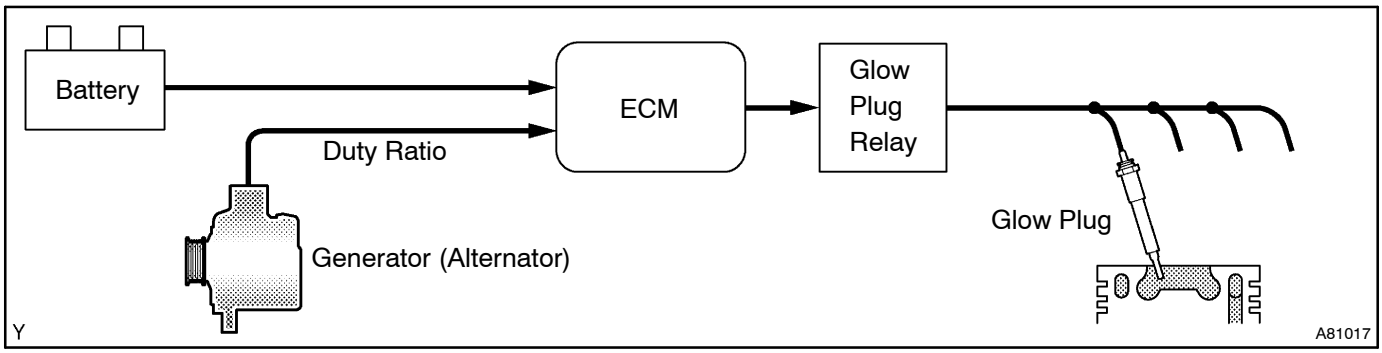

HINT:
After the engine is started, the ECM performs an ”after–glow” for a certain period of time. In proportion to the actual engine coolant temperature, the time period varies. The after–grow reduces diesel engine knocking, white smoke and engine noises with a cold engine.

After Glow System:

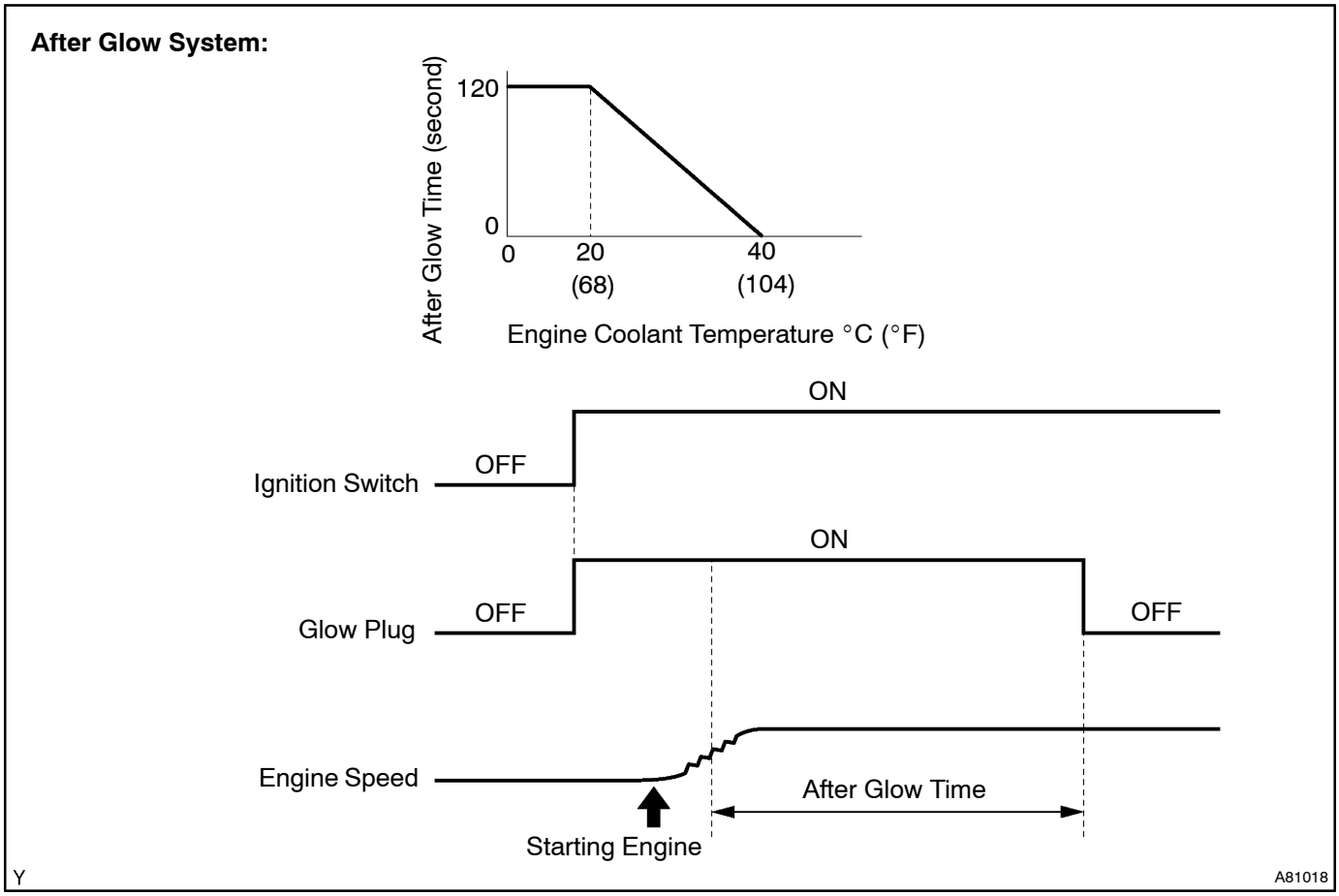

DTC No.	DTC Detection Condition	Trouble Area
P0380	When the glow plug is turned from ON to OFF, or vice versa, conditions (a) and (b) are satisfied: (2 trip detection logic) (a) Battery voltage does not change (b) Duty signal from terminal M of the generator (alternator) does not change	• Open or short in glow plug circuit • Glow fuse • Glow plug relay • Glow plug • ECM

MONITOR DESCRIPTION

When starting a cold engine, the ECM supplies current to the glow plug for a certain period of time. As supplying the current to the glow plug is terminated, the large current is suddenly cut off, therefore the battery voltage then varies and also the output (duty ratio) from terminal M of the generator (alternator) varies. If these variations are not occurred when the glow plug is turned from ON to OFF, or vice versa, the ECM judges the current has not been supplied to the glow plug, and interprets this as open malfunction of the glow plug or glow plug circuit.

MONITOR STRATEGY

Required Sensors	Glow plug circuit
Frequency of operation	Twice per driving cycle
Duration	3 minutes
CHK ENG Operation	2 driving cycles

TYPICAL ENABLING CONDITIONS

Item	Specification	
	Minimum	Maximum
Battery voltage	11 V	–
Engine speed	700 rpm	2,000 rpm
Engine coolant temperature	–	40°C (104°F)
Engine speed is stable	–	
Time after engine start	8 seconds	–
Any switches that vary electrical load have not been being operated	–	
The monitor will not run if the generator (alternator) circuit is malfunctioning		

TYPICAL MALFUNCTION THRESHOLDS

Threshold
When the battery voltage, or output (duty ratio) from terminal M of the generator (alternator) does not change, despite the ECM turning the glow plug from ON to OFF, or vice versa

WIRING DIAGRAM

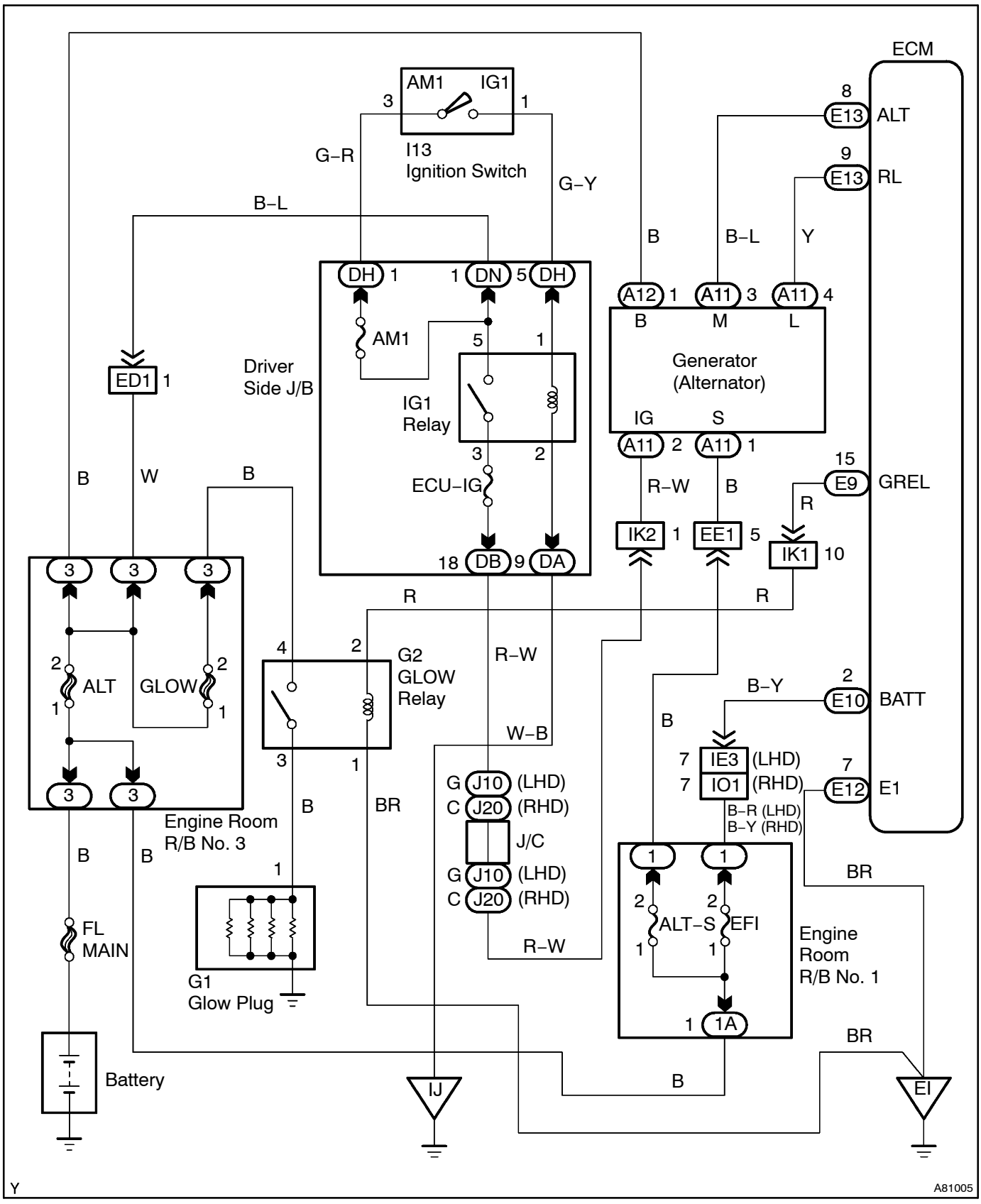

INSPECTION PROCEDURE

HINT:

- After completing repairs, confirm that P0380 is not present again.
- Read freeze frame data using the hand–held tester. Freeze frame data records the engine conditions when a malfunction is detected. When troubleshooting, freeze frame data can help determine if the vehicle was running or stopped, if the engine was warmed up or not, if the air–fuel ratio was lean or rich, and other data from the time the malfunction occurred.

Glow System Wiring Diagram:

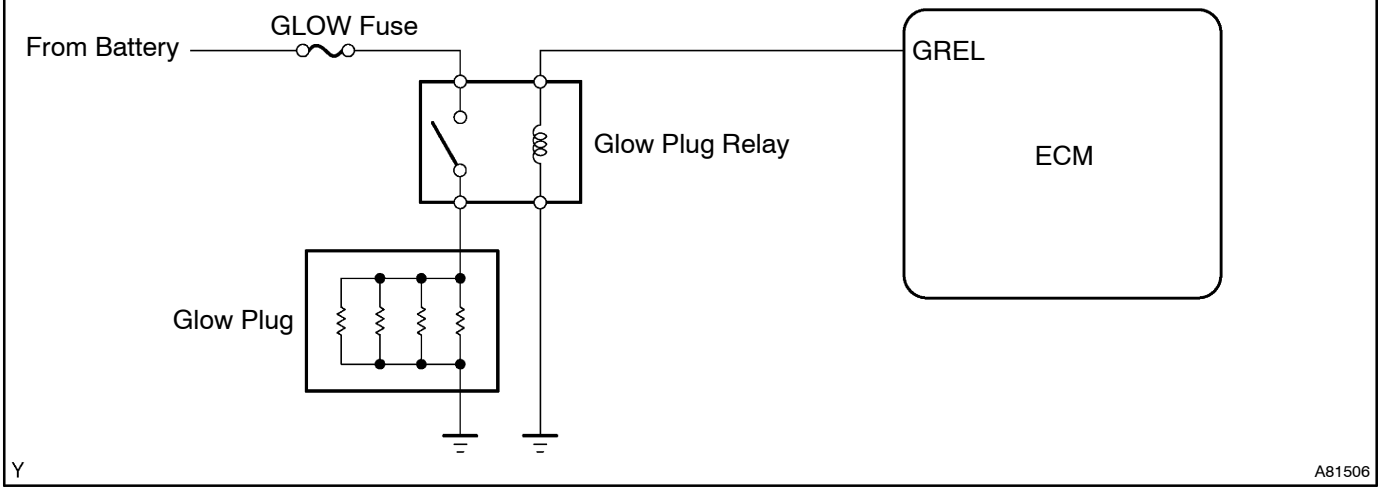

1	CHECK OTHER DTC OUTPUT(IN ADDITION TO DTC P0380)

(a) Connect the hand–held tester to the DLC3.
(b) Turn the ignition switch to ON and turn the hand–held tester ON.
(c) Select the item ”DIAGNOSIS / OBD/MOBD / DTC INFO / CURRENT CODES”.
(d) Read DTCs.

Result:

Display (DTC output)	Proceed to
P0380	A
P0380 and P0622	B

HINT:

If any other codes besides P0380 and P0622 are output, perform troubleshooting for those DTCs first.

B → **GO TO RELEVANT DTC CHART**
(See page 05–299)

A

2 INSPECT GLOW PLUG RELAY ASSY

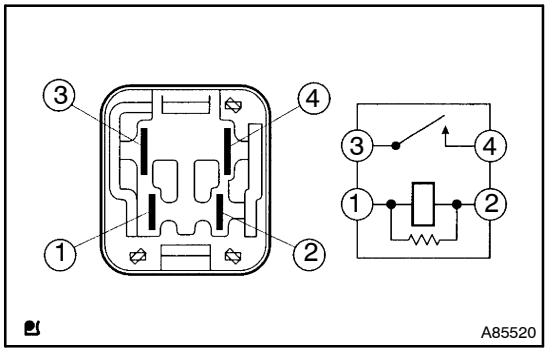

(a) Remove the glow plug relay.
(b) Check for continuity in the glow plug relay.
(1) Check that there is continuity between the terminals.
Standard:

Tester Connection	Specified Condition
3 – 4	No continuity
	Continuity (Apply battery voltage to terminals 1 and 2)
1 – 2	Continuity

(c) Reinstall the glow plug relay.

NG → **REPLACE GLOW PLUG RELAY ASSY**

OK

3 INSPECT FUSE(GLOW FUSE)

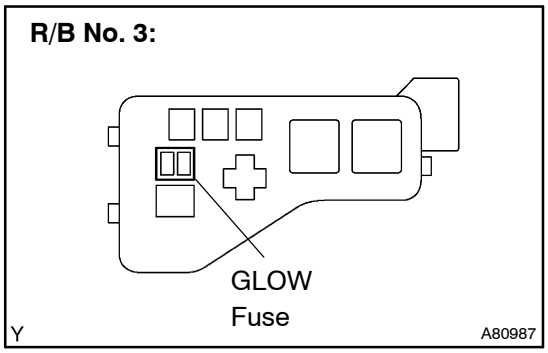

(a) Remove the GLOW fuse from the R/B No. 3.
(b) Check for continuity in the GLOW fuse.
Standard: Continuity
(c) Reinstall the GLOW fuse.

NG → **CHECK FOR SHORT IN ALL HARNESS AND COMPONENTS CONNECTED TO FUSE**

OK

4 INSPECT GLOW PLUG ASSY

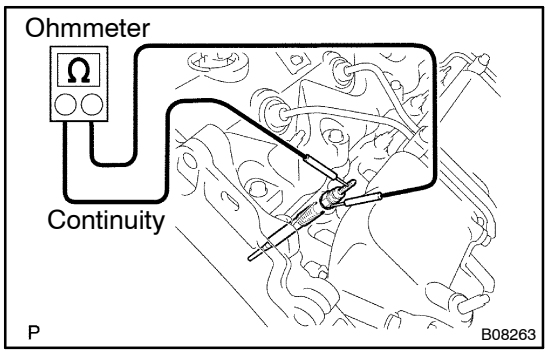

(a) Disconnect the glow plug wire.
(b) Measure the resistance in the glow plug.
Standard:

Tester Connection	Specified Condition
Glow plug terminal – Body ground	Approximately 1.1 Ω at 20°C (68°F)

NOTICE:

- **Exercise extreme care not to damage the glow plug pipes. Damaging them could cause an open circuit, or shorten the life of the glow plugs.**
- **Keep the glow plug free of oil and fuel while cleaning.**
- **Wipe any oil off the terminal and Bakelite washer with a clean–dry cloth during inspection.**
- **Do not apply more than 11 V to the glow plug as it could cause an open circuit.**

(c) Reconnect the glow plug wire.

NG → **REPLACE GLOW PLUG ASSY (See page 19–33 of Pub. No. RM1018E AVENSIS REPAIR MANUAL)**

OK

5 INSPECT GLOW PLUG ASSY(INSTALLATION)

NG → **TIGHTEN GLOW PLUG**

OK

6 CHECK HARNESS AND CONNECTOR(GLOW PLUG RELAY – ECM, AND GLOW PLUG RELAY – BODY GROUND)

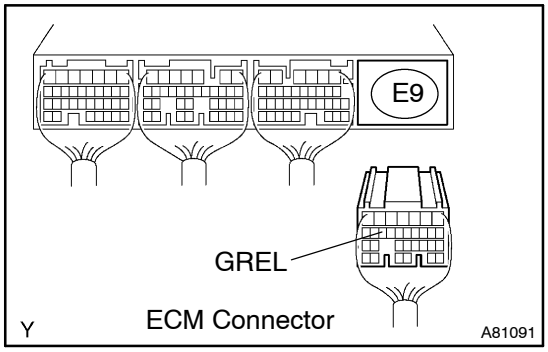

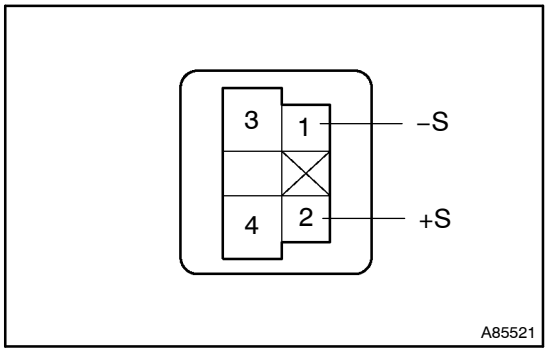

(a) Disconnect the E9 ECM connector.
(b) Remove the glow plug relay.
(c) Check the resistance between the wire harness side connectors.

Standard (Check for open):

Tester Connection	Specified Condition
+S (Glow plug relay terminal 2) – GREL (E9–15)	Below 1 Ω
–S (Glow plug relay terminal 1) – Body ground	

Standard (Check for short):

Tester Connection	Specified Condition
GREL (E9–15) – Body ground	10 kΩ or higher

(d) Reconnect the ECM connector.
(e) Reinstall the glow plug relay.

NG → **REPAIR OR REPLACE HARNESS OR CONNECTOR**

OK

7 CHECK HARNESS AND CONNECTOR(GLOW PLUG RELAY – GLOW PLUG, AND GLOW PLUG RELAY – BATTERY)

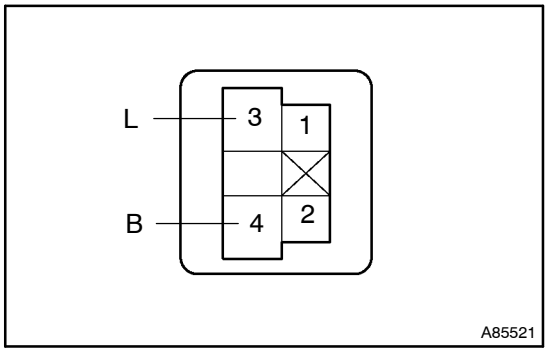

(a) Remove the glow plug relay.
(b) Disconnect the glow plug wire.
(c) Check the resistance between the wire harness.

Standard (Check for open):

Tester Connection	Specified Condition
L (Glow plug relay terminal 3) – Glow plug wire	Below 1 Ω
B (Glow plug relay terminal 4) – Positive terminal of the battery	

(d) Reinstall the glow plug relay.
(e) Reconnect the glow plug wire.

NG → REPAIR OR REPLACE HARNESS OR CONNECTOR

OK

8 INSPECT ECM(GREL VOLTAGE)

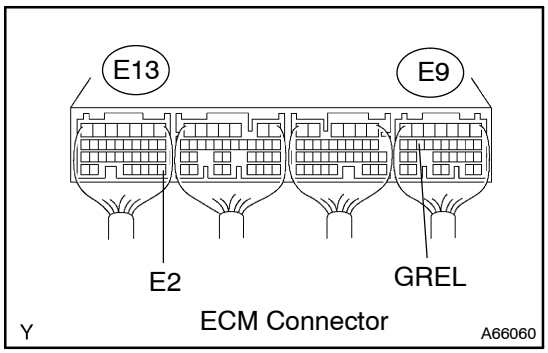

(a) Turn the ignition switch to START.
(b) Measure the voltage between the specified terminals of the E9 and E13 ECM connectors.

Standard:

Tester Connection	Condition	Specified Condition
GREL (E9–15) – E2 (E13–28)	Engine coolant temperature is 40°C (104°F) or less	9 to 14 V

NG → REPLACE ECM (See page 10–29)

OK

9 INSPECT ECM(BATT VOLTAGE)

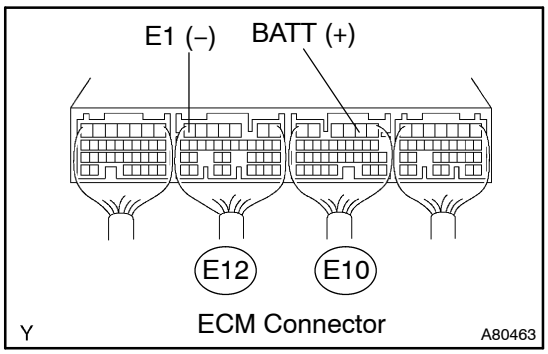

(a) Measure the voltage between the specified terminals of the E10 and E12 ECM connectors.

Standard:

Tester Connection	Specified Condition
BATT (E10–2) – E1 (E12–7)	9 to 14 V

NG → REPAIR OR REPLACE HARNESS OR CONNECTOR (BATTERY – ECM)

OK

CHECK FOR INTERMITTENT PROBLEMS (See page 05–270)

DTC P0400 EXHAUST GAS RECIRCULATION FLOW

CIRCUIT DESCRIPTION

The EGR system recirculates exhaust gases, and which is controlled to the proper volume to be suited every driving condition. The recirculated gas mingles with the intake air, therefore the EGR system can slow down engine combustion and let the combustion temperature down. This helps reduce a NOx emission.
In order to increase a circulatory efficiency, the ECM adjusts the lift amount of the EGR valve and intake shutter valve (throttle valve).

DTC No.	DTC Detection Condition	Trouble Area
P0400	Target and actual positions of the EGR valve is different (1 trip detection logic)	• EGR valve stuck • EGR valve does not move smoothly • Open or short in EGR circuit • Open or short in EGR valve position sensor circuit • EGR valve position sensor • ECM

MONITOR DESCRIPTION

When the target and actual positions of the EGR valve is different, the ECM interprets this as malfunction of the EGR valve and illuminates the CHK ENG.

Malfunction Detection:

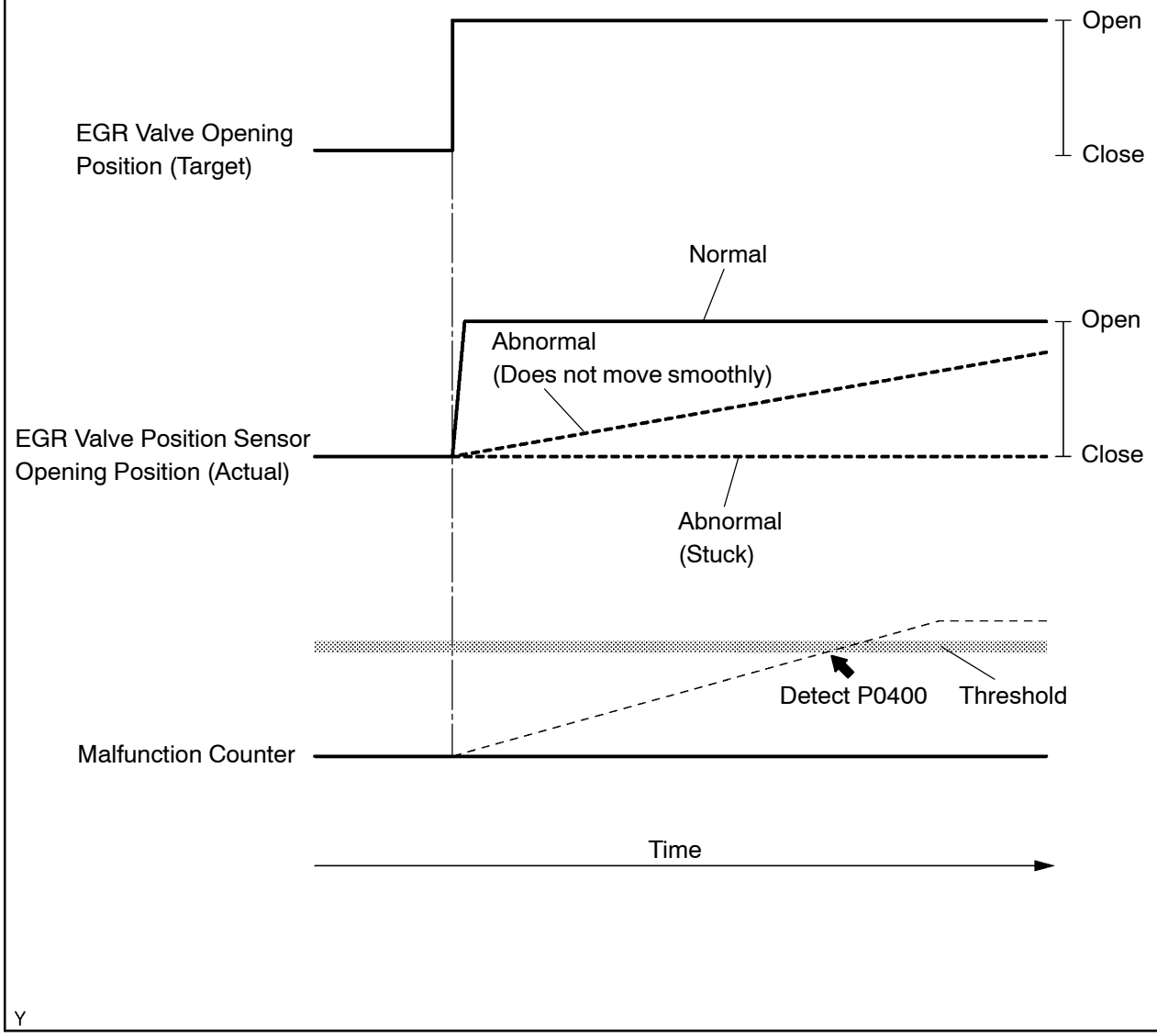

WIRING DIAGRAM

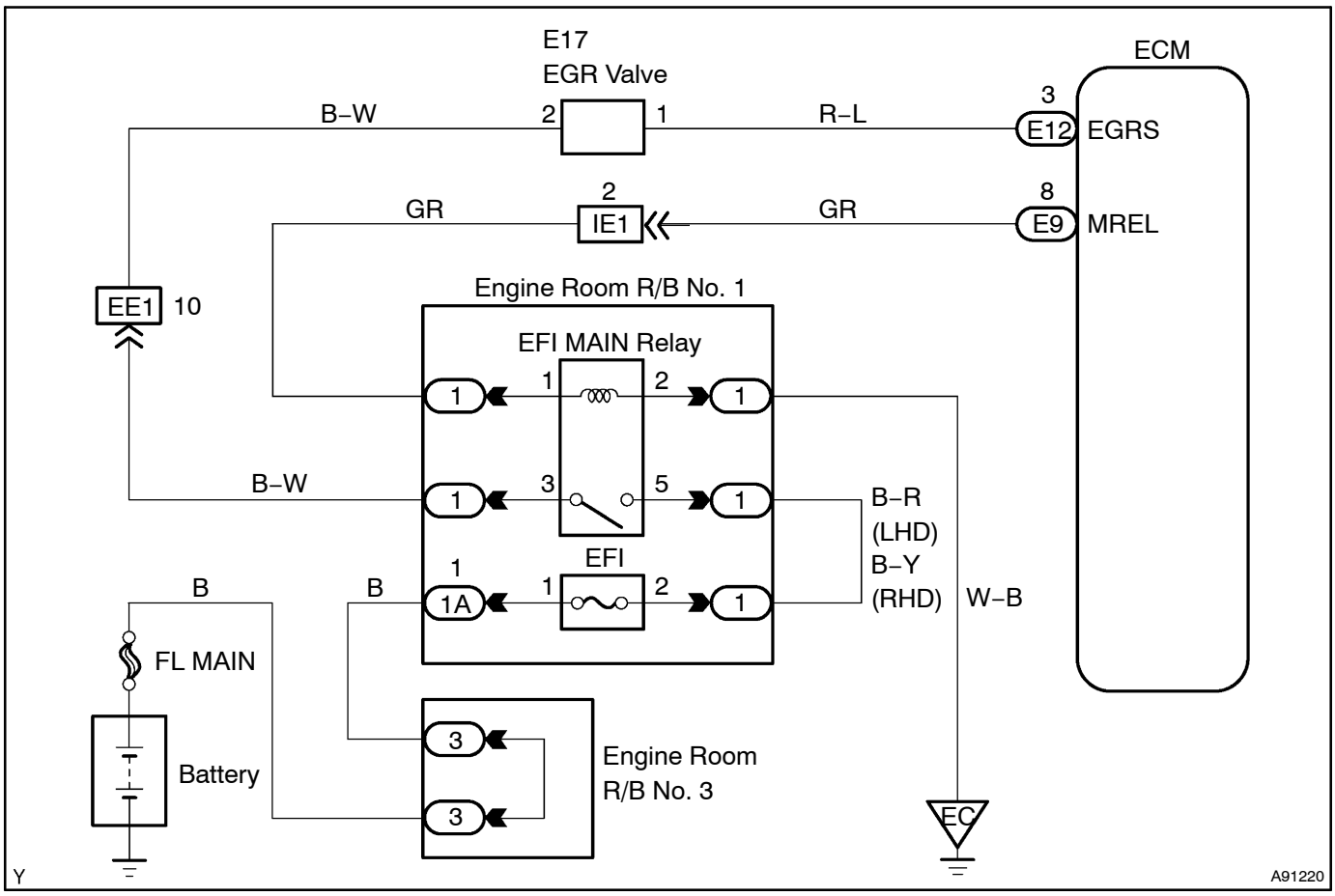

INSPECTION PROCEDURE

HINT:

- Read freeze frame data using the hand−held tester. Freeze frame data records the engine conditions when a malfunction is detected. When troubleshooting, freeze frame data can help determine if the vehicle was running or stopped, if the engine was warmed up or not, if the air−fuel ratio was lean or rich, and other data from the time the malfunction occurred.
- After engine warm−up, DTC P0400 malfunction is set 1 second or more passed after quickly accelerating the engine from idling.

1	CHECK OTHER DTC OUTPUT(IN ADDITION TO P0400)

(a) Connect the hand−held tester to the DLC3.
(b) Turn the ignition switch to ON and turn the hand−held tester ON.
(c) Select the item ”DIAGNOSIS / OBD/MOBD / DTC INFO / CURRENT CODES”.
(d) Read DTCs.

Result:

Display (DTC output)	Proceed
P0400	A
P0400 and P0405 and/or P0406	B

HINT:
If any other codes besides P0400 are output, perform troubleshooting for those DTCs first.

B → GO TO RELEVANT DTC CHART (See page 05–299)

A

2 READ VALUE OF HAND–HELD TESTER(EGR VALVE POS)

(a) Connect the hand–held tester to the DLC3.
(b) Turn the ignition switch to ON and turn the hand–held tester ON.
(c) Select the item ”DIAGNOSIS / OBD/MOBD / DATA LIST / ALL EGR VALVE POS” and read its value displayed on the hand–held tester.

Result:

Condition	Result	Proceed to
After engine warm–up, quickly accelerate the engine from idling to 3,000 rpm by using accelerator pedal	Constant or changes slowly	A
	Smooth changes from approximately 3.0 V to approximately 2.0 V	B

HINT:
EGR valve closed: EGR VALVE POS is 4.0 V
EGR valve open: EGR VALVE POS is 2.1 V

B → CHECK FOR INTERMITTENT PROBLEMS (See page 05–270)

A

3 INSPECT EGR VALVE ASSY(RESISTANCE)

Component Side:

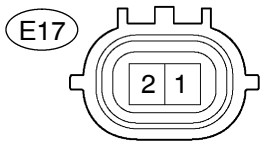

EGR Valve

Y A93008

(a) Disconnect the E17 EGR valve connector.
(b) Measure the resistance between the terminals of the EGR valve.

Standard:

Tester Connection	Specified Condition
1 – 2	approximately 7.0 Ω at 20°C (68°F)

(c) Reconnect the EGR valve connector.

NG → REPLACE EGR VALVE ASSY (See page 14–108)

OK

4 CHECK HARNESS AND CONNECTOR(EGR VALVE ASSY – ECM)

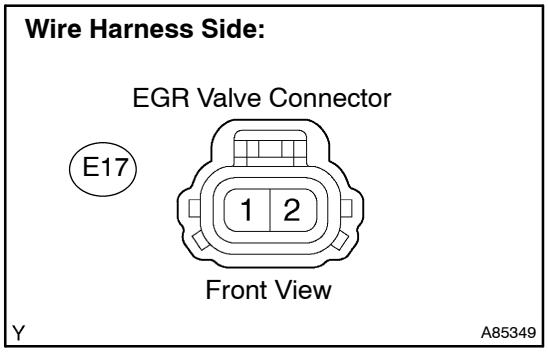

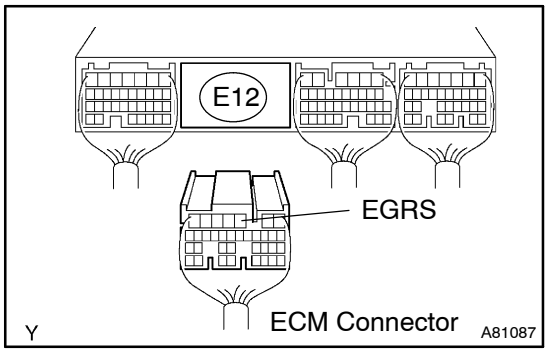

(a) Disconnect the E17 EGR valve connector.
(b) Disconnect the E12 ECM connector.
(c) Check the resistance between the wire harness side connectors.

Standard (Check for open):

Tester Connection	Specified Condition
EGRS (E12–3) – EGR valve (E17–1)	Below 1 Ω
E2 (E13–28) – (E17–2)	

Standard (Check for short):

Tester Connection	Specified Condition
EGRS (E12–3) or EGR valve (E17–1) – Body ground	10 kΩ or higher

(d) Reconnect the EGR valve connector.
(e) Reconnect the ECM connector.

NG → **REPAIR OR REPLACE HARNESS OR CONNECTOR**

OK

5 CHECK HARNESS AND CONNECTOR(EGR VALVE – EFI MAIN RELAY)

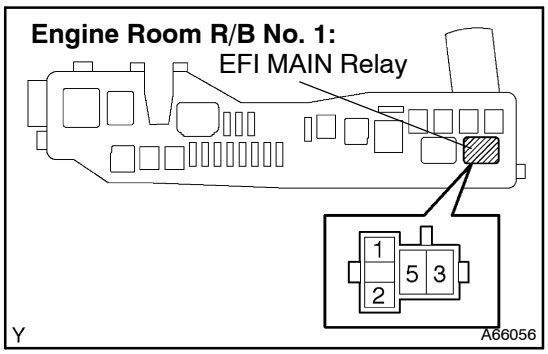

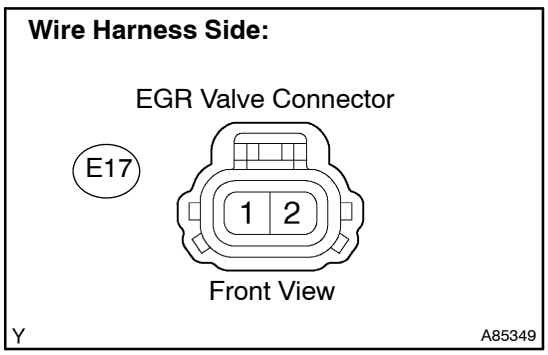

(a) Remove the EFI MAIN relay from the engine room R/B No. 1.
(b) Disconnect the E17 EGR valve connector.
(c) Check the resistance between the wire harness side connectors.

Standard (Check for open):

Tester Connection	Specified Condition
EFI MAIN relay (1) – EGR valve (E17–2)	Below 1 Ω

Standard (Check for short):

Tester Connection	Specified Condition
EFI MAIN relay (1) or EGR valve (E17–8) – Body ground	10 kΩ or higher

(d) Reinstall the EFI MAIN relay.
(e) Reconnect the EGR valve connector.

NG → **REPAIR OR REPLACE HARNESS OR CONNECTOR**

OK

6 INSPECT ECM(EGR VALVE ASSY VOLTAGE)

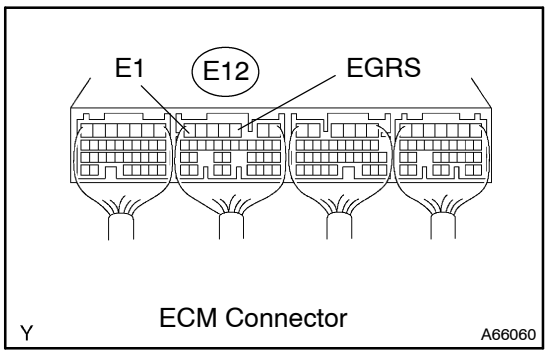

(a) Inspect using the oscilloscope.
(b) During idling, check the waveform between the specified terminals of the E12 ECM connector.

Standard:

Tester Connection	Specified Condition
EGRS (E12–3) – E1 (E12–7)	Correct waveform is as shown

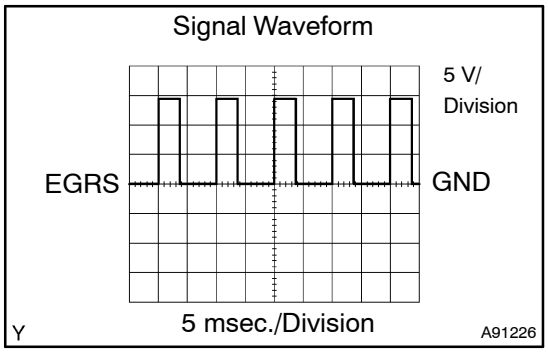

NG → **REPLACE ECM (See page 10–29)**

OK

REPLACE EGR VALVE ASSY (See page 14–108)

DTC	P0405	EXHAUST GAS RECIRCULATION SENSOR ”A” CIRCUIT LOW

DTC	P0406	EXHAUST GAS RECIRCULATION SENSOR ”A” CIRCUIT HIGH

CIRCUIT DESCRIPTION

The EGR valve position sensor is mounted on the EGR valve and used for detecting the lift amount of the valve. The lift amount detected by the sensor is provided to the ECM as feedback, the ECM then regulates the lift amount of the valve in accordance with engine running condition.

DTC No.	DTC Detection Condition	Trouble Area
P0405	EGR valve position sensor output voltage is less than 0.1 V for more than 0.5 second (1 trip detection logic)	• Open or short in EGR valve position sensor circuit • EGR valve position sensor • ECM
P0406	EGR valve position sensor output voltage is more than 4.9 V for more than 0.5 second (1 trip detection logic)	

HINT:

After confirming DTC P0405 and P0406, check the EGR valve opening angle condition in the ”DIAGNOSIS / OBD/MOBD / DATA LIST / ALL / EGR VALVE POS” using the hand–held tester.

Result		Condition
Ignition switch ON (Engine is stop)	Idling after warmed up	
Changes between 2.1 V and 4.0 V		Normal
Less than 0.1 V		P0405 (Low input voltage)
More than 4.9 V		P0406 (High input voltage)

MONITOR DESCRIPTION

Property of Output Voltage:

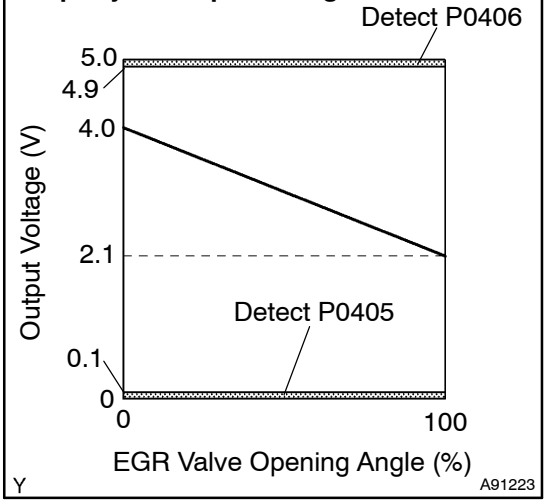

When output voltage of the EGR valve position sensor deviates from the normal operating range (between 0.1 V and 4.9 V) for more than 0.5 second, the ECM interprets this as malfunction of the sensor circuit, and illuminates the CHK ENG.

WIRING DIAGRAM

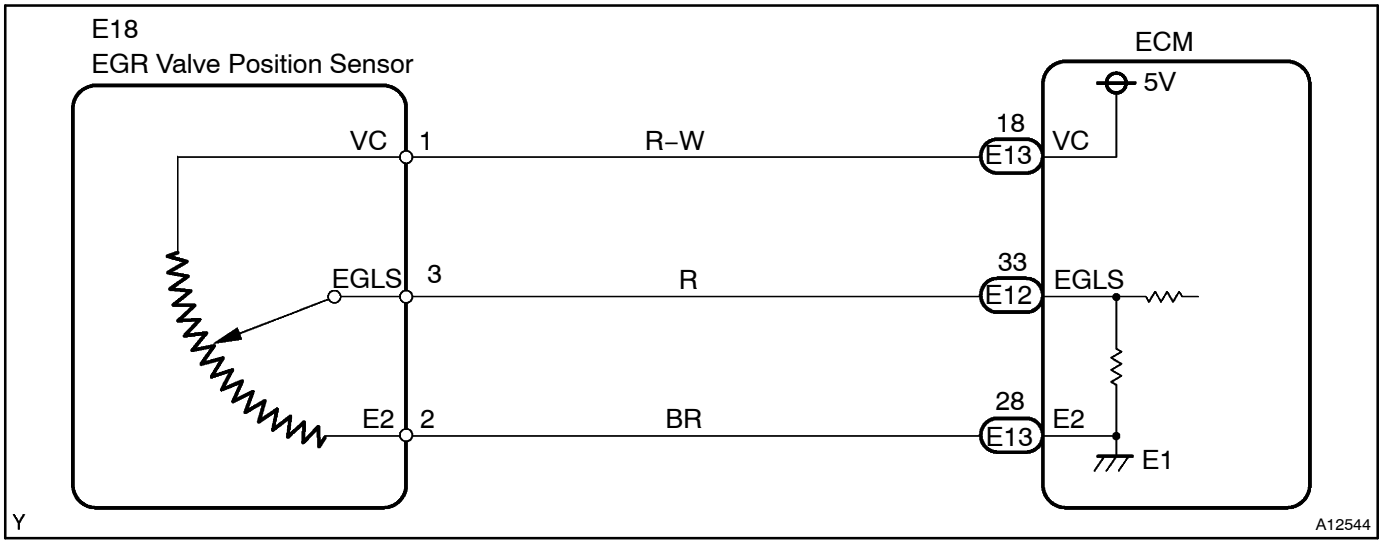

INSPECTION PROCEDURE

HINT:

Read freeze frame data using the hand–held tester. Freeze frame data records the engine conditions when a malfunction is detected. When troubleshooting, freeze frame data can help determine if the vehicle was running or stopped, if the engine was warmed up or not, if the air–fuel ratio was lean or rich, and other data from the time the malfunction occurred.

1	CHECK HARNESS AND CONNECTOR(EGR VALVE POSITION SENSOR VOLTAGE)

Wire Harness Side:
EGR valve position Sensor Connector

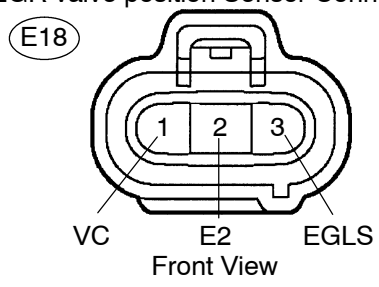

(a) Disconnect the E18 EGR valve position sensor connector.

(b) Measure the voltage between the specified terminals of the E18 EGR valve position sensor connector.

Standard:

Tester Connection	Specified Condition
VC (E18–1) – E2 (E18–2)	4.5 to 5.5 V

(c) Reconnect the EGR valve position sensor connector.

NG → **Go to step 4**

OK

2	INSPECT EGR VALVE POSITION SENSOR(RESISTANCE) (See page 12–9)

NG → **REPLACE EGR VALVE POSITION SENSOR (See page 14–108)**

OK

3 CHECK HARNESS AND CONNECTOR(EGR VALVE POSITION SENSOR – ECM)

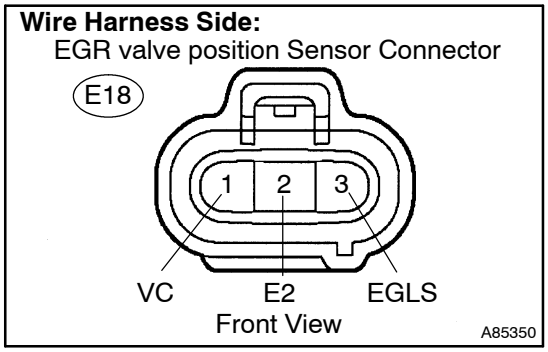

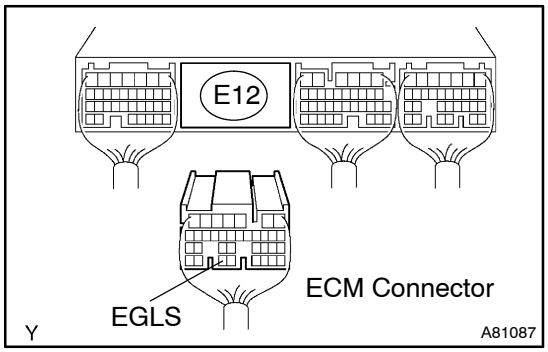

(a) Disconnect the E18 EGR valve position sensor connector.
(b) Disconnect the E12 ECM connector.
(c) Check the resistance between the wire harness side connectors.

Standard (Check for open):

Tester Connection	Specified Condition
EGLS (E18–3) – EGLS (E12–33)	Below 1 Ω
E2 (E18–2) – E2 (E13–28)	

Standard (Check for short):

Tester Connection	Specified Condition
EGLS (E18–3) or EGLS (E12–33) – Body ground	10 kΩ or higher

(d) Reconnect the EGR valve position sensor connector.
(e) Reconnect the ECM connector.

NG → **REPAIR OR REPLACE HARNESS OR CONNECTOR**

OK

REPLACE ECM (See page 10–29)

4 CHECK HARNESS AND CONNECTOR(EGR VALVE POSITION SENSOR – ECM)

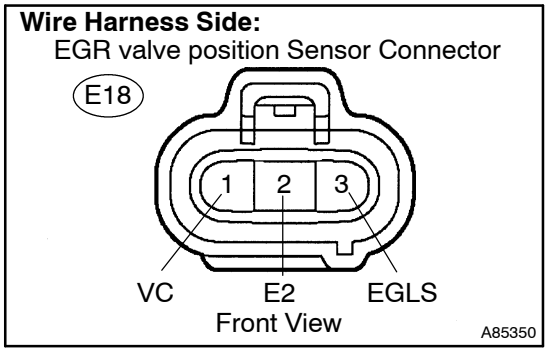

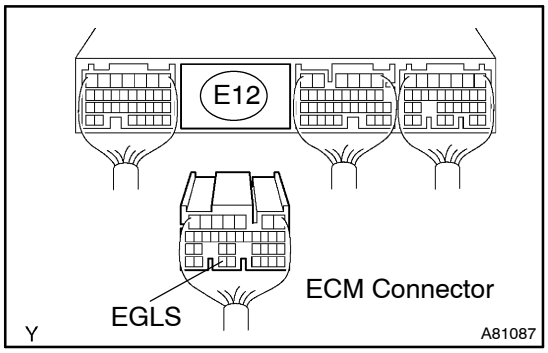

(a) Disconnect the E18 EGR valve position sensor connector.
(b) Disconnect the E12 ECM connector.
(c) Check the resistance between the wire harness side connectors.

Standard (Check for open):

Tester Connection	Specified Condition
EGLS (E18–3) – EGLS (E12–33)	Below 1 Ω
E2 (E18–2) – E2 (E13–28)	

Standard (Check for short):

Tester Connection	Specified Condition
EGLS (E18–3) or EGLS (E12–33) – Body ground	10 kΩ or higher

(d) Reconnect the EGR valve position sensor connector.
(e) Reconnect the ECM connector.

NG	**REPAIR OR REPLACE HARNESS OR CONNECTOR**

OK

REPLACE ECM (See page 10–29)

DTC	P0488	EXHAUST GAS RECIRCULATION THROTTLE POSITION CONTROL RANGE/PERFORMANCE

CIRCUIT DESCRIPTION

The ECM opens and closes the intake shutter valve (throttle valve) using the rotary solenoid type actuator. Upon opening and closing the valve, the exhaust gas recirculation volume is properly controlled. Also, engine vibration and noise will be reduced by closing the valve when the engine is stopped.

DTC No.	DTC Detection Condition	Trouble Area
P0488	Duty ratio during valve movement control stuck in its maximum or minimum value for more than 1 second (1 trip detection logic)	• Intake shutter stuck • Intake shutter does not move smoothly • Open or short in intake shutter circuit • Open or short in intake shutter position sensor circuit • Intake shutter position sensor (built in intake shutter valve) • ECM

HINT:

After confirming DTC P0488, check the intake shutter position in the ”DIAGNOSIS / OBD/MOBD / DATA LIST / ALL / THROTTLE POS” using the hand–held tester.

Reference:

Condition	Intake Shutter (Throttle Valve) Position
Quickly accelerate the engine from idling to 3,000 rpm	Opening angle varies smoothly

MONITOR DESCRIPTION

ECM opens and closes the intake shutter (throttle valve) by adjusting duration of current flowing to the rotary solenoid with the duty ratio. If the intake shutter does not move smoothly or stuck, the duty ratio during the valve movement control increases or decreases largely, the ECM judges the intake shutter abnormal and illuminates the CHK ENG.

Malfunction Detection:

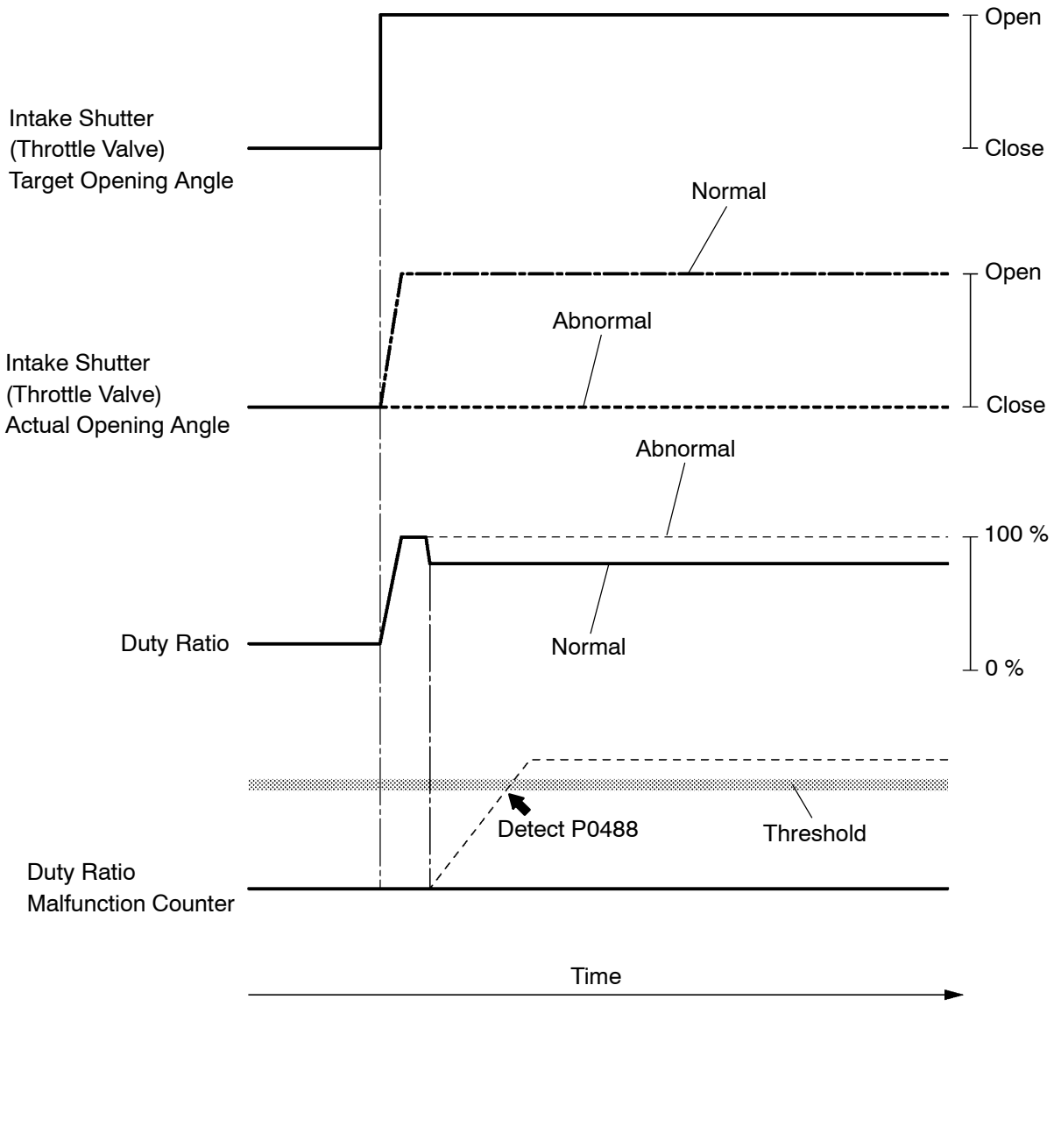

WIRING DIAGRAM

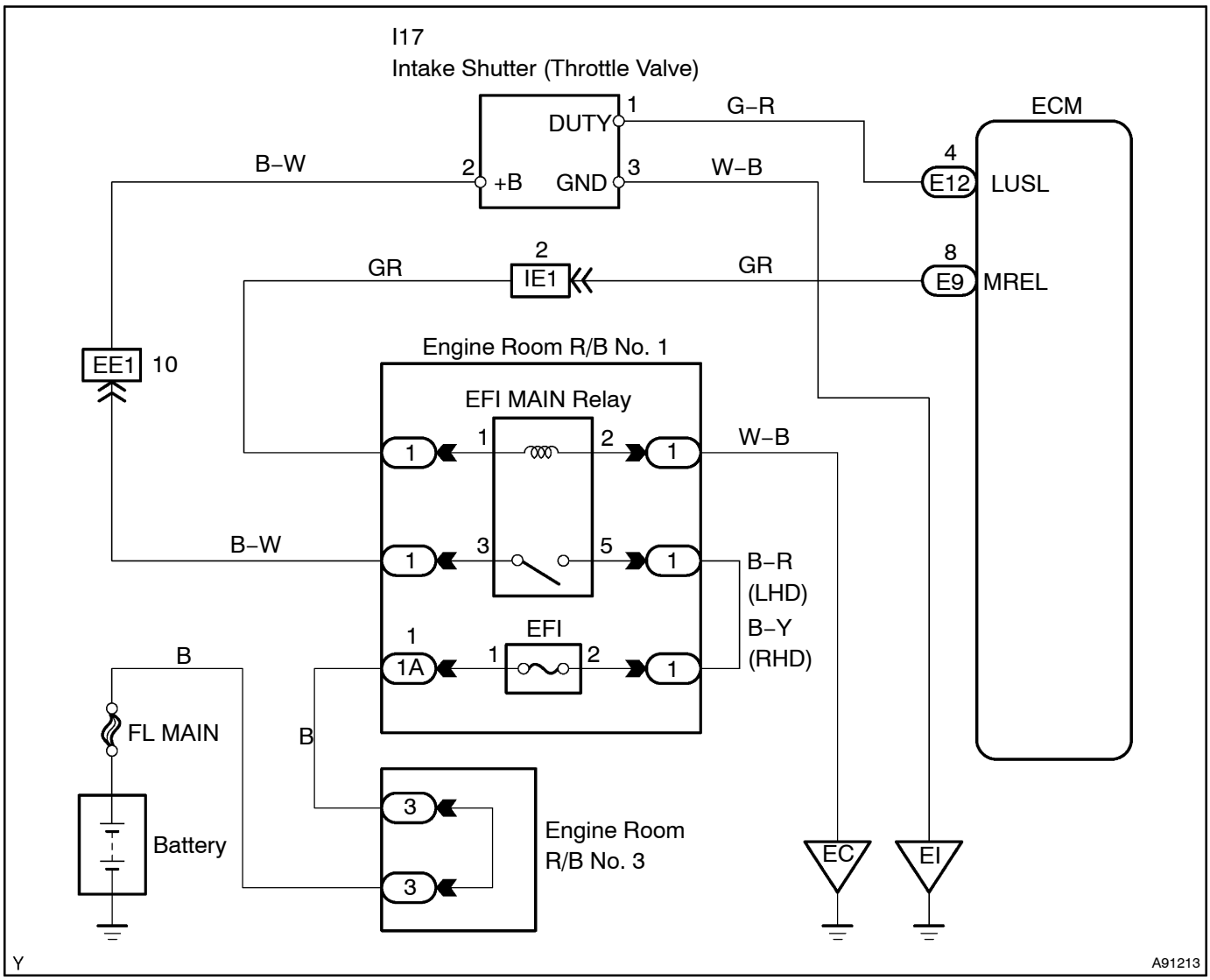

INSPECTION PROCEDURE

HINT:

- Read freeze frame data using the hand–held tester. Freeze frame data records the engine conditions when a malfunction is detected. When troubleshooting, freeze frame data can help determine if the vehicle was running or stopped, if the engine was warmed up or not, if the air–fuel ratio was lean or rich, and other data from the time the malfunction occurred.
- After engine warm–up, DTC P0488 malfunction is set 1 second or more passed after quickly accelerating the engine from idling.

1	CHECK OTHER DTC OUTPUT(IN ADDITION TO P0488)

(a) Connect the hand–held tester to the DLC3.
(b) Turn the ignition switch to ON and turn the hand–held tester ON.
(c) Select the item ”DIAGNOSIS / OBD/MOBD / DTC INFO / CURRENT CODES”.
(d) Read DTCs.

Result:

Display (DTC output)	Proceed to
P0488	A
P0488 and P0120, P0122 and/or P0123	B

HINT:
If any other codes besides P0488 are output, perform troubleshooting for those DTCs first.

B → **GO TO RELEVANT DTC CHART**
(See page 05–299)

A

2	READ OUTPUT DTC(DTC P0488 OUTPUT)

(a) Connect the hand–held tester to the DLC3.
(b) Turn the ignition switch to ON and push the hand–held tester ON.
(c) Select the item ”DIAGNOSIS / OBD/MOBD / DTC INFO / CLEAR CODES”.
(d) Clear the DTCs.
(e) Start the engine and perform quick engine RPM acceleration from idling to 3,000 rpm 3 times.
(f) Select the item ”DIAGNOSIS / OBD/MOBD / DTC INFO / CURRENT CODES”.
(g) Read DTCs.

Result:

Display (DTC output)	Proceed to
P0488	A
No output	B

HINT:
The normal operation of the intake shutter (throttle valve) is as follows.

Reference:

Condition	Throttle Position
Quickly accelerate the engine from idling to 3,000 rpm	Opening angle varies smoothly

B → **CHECK FOR INTERMITTENT PROBLEMS**
(See page 05–270)

A

3 INSPECT ECM(LUSL VOLTAGE)

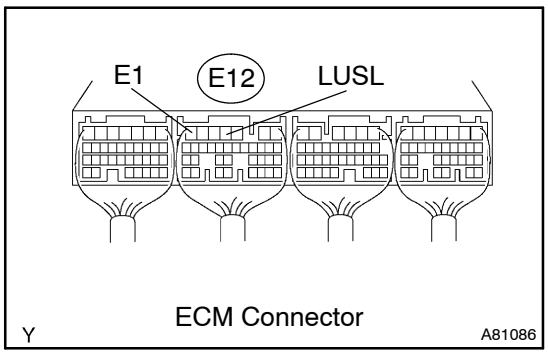

(a) Inspect using the oscilloscope.
(b) During rev–up, check the waveform between the specified terminals of the E12 ECM connector.

Standard:

Tester Connection	Specified Condition
LUSL (E12–4) – E1 (E19–7)	Correct waveform is as shown

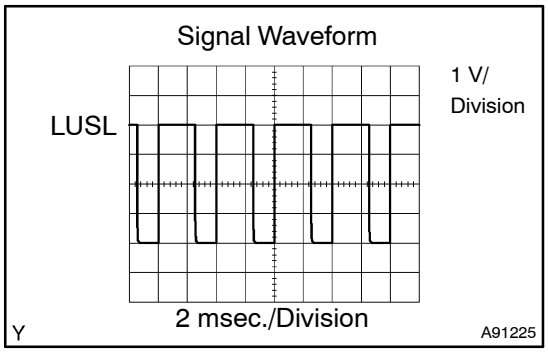

NG → **REPLACE ECM (See page 10–29)**

OK

4 CHECK HARNESS AND CONNECTOR(INTAKE SHUTTER (THROTTLE VALVE) – ECM)

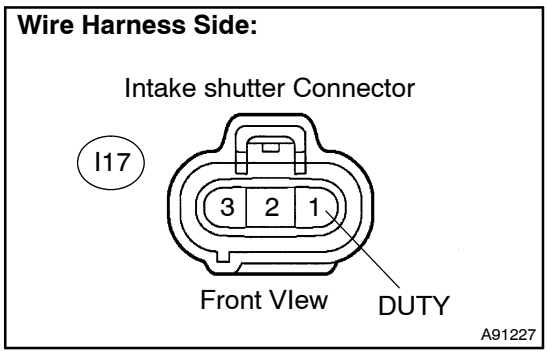

(a) Disconnect the I17 intake shutter connector.
(b) Disconnect the E12 ECM connector.
(c) Check the resistance between the wire harness side connectors.

Standard (Check for open):

Tester Connection	Specified Condition
LUSL (E12–4) – DUTY (I17–1)	Below 1 Ω

Standard (Check for short):

Tester Connection	Specified Condition
LUSL (E12–4) or DUTY (I17–1) – Body ground	10 kΩ or higher

(d) Reconnect the intake shutter connector.
(e) Reconnect the ECM connector.

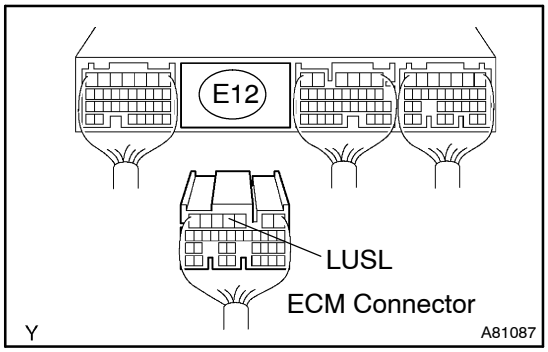

NG → **REPAIR OR REPLACE HARNESS OR CONNECTOR**

OK

REPLACE INTAKE SHUTTER ASSY (THROTTLE VALVE) (See page 10–27)

DTC	P0500	VEHICLE SPEED SENSOR ”A”

CIRCUIT DESCRIPTION

The speed sensor for skid control ECU detects the wheel speed and sends the appropriate signals to the skid control ECU.
The skid control ECU converts these signals into a 4–pulse signal and outputs it to the combination meter. After this signal is converted into a more precise rectangular waveform by the waveform shaping circuit inside the combination meter, it is then transmitted to the ECM. The ECM determines the vehicle speed based on the frequency of these pulse signals.

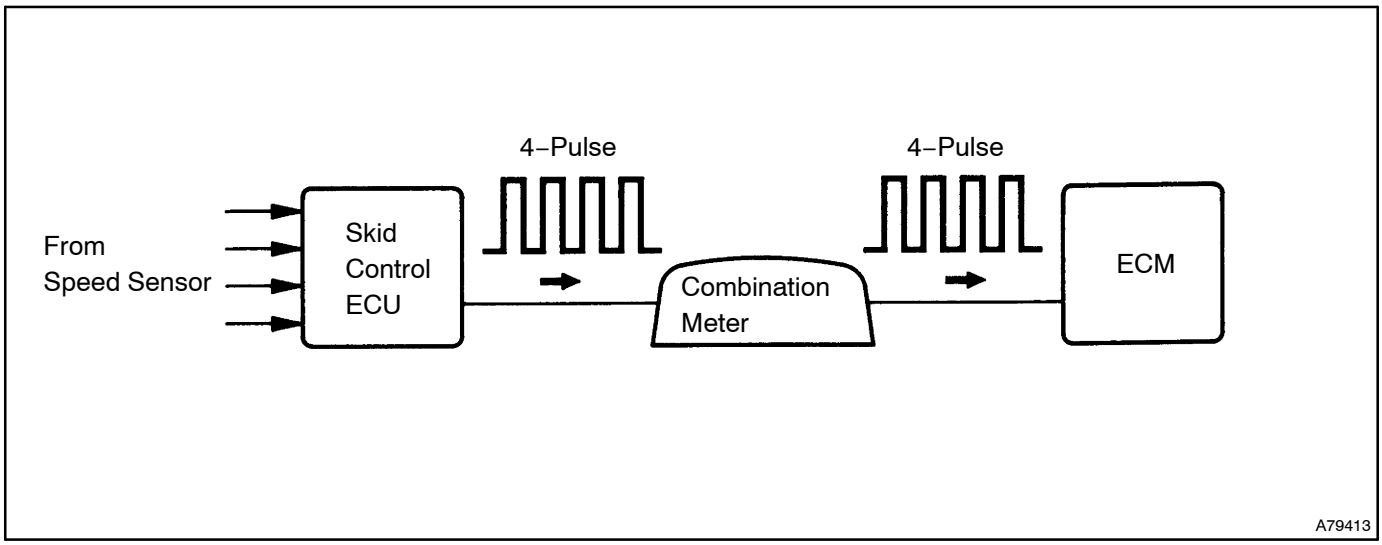

DTC No.	DTC Detection Condition	Trouble Area
P0500	Conditions (a), (b) and (c) continue for 7 seconds or more: (2 trip detection logic) (a) Engine coolant temperature is more than 70°C (158°F) (b) Engine speed is between 2,000 and 3,500 rpm (c) Speed signal is not entering to ECM	• Open or short in speed sensor circuit • Speed sensor • Combination meter • ECM • Skid control ECU

WIRING DIAGRAM

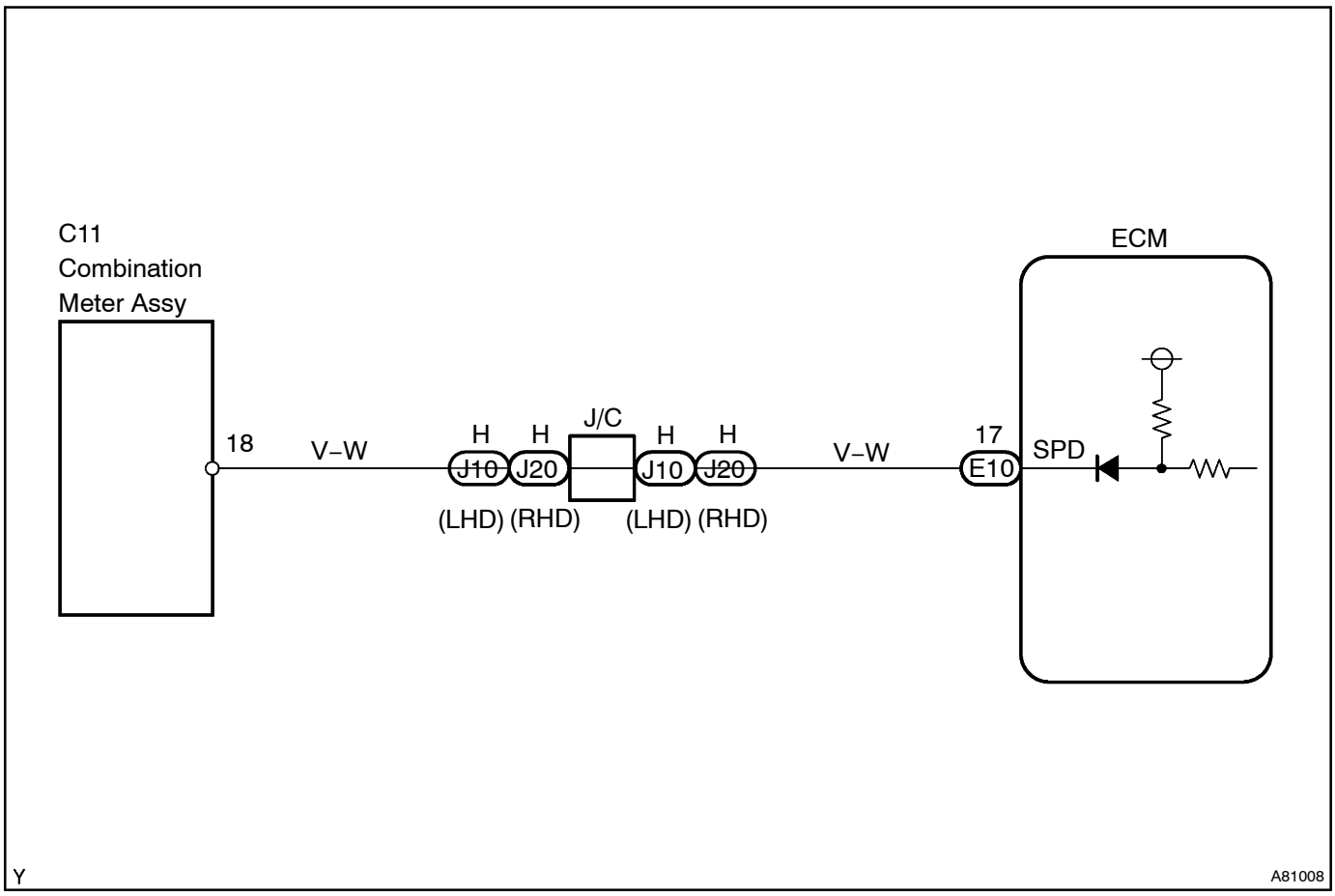

INSPECTION PROCEDURE

HINT:
Read freeze frame data using the hand–held tester. Freeze frame data records the engine conditions when a malfunction is detected. When troubleshooting, freeze frame data can help determine if the vehicle was running or stopped, if the engine was warmed up or not, if the air–fuel ratio was lean or rich, and other data from the time the malfunction occurred.

1	CHECK OPERATION OF SPEEDOMETER

(a) Drive the vehicle and check if the operation of the speedometer in the combination meter is normal.
HINT:
The vehicle speed sensor is operating normally if the speedometer display is normal.

NG → CHECK SPEEDOMETER CIRCUIT (INCLUDE SPEED SENSOR)

OK

2 READ VALUE OF HAND–HELD TESTER(VEHICLE SPEED)

(a) Connect the hand–held tester to the DLC3.
(b) Turn the ignition switch to ON and turn the hand–held tester ON.
(c) Start the engine.
(d) Select the item "DIAGNOSIS / OBD/MOBD / DATA LIST / ALL / VEHICLE SPD".
(e) Check the vehicle speed at the engine speed of 2,000 rpm or more when the vehicle is running.
Standard: Same value as the actual vehicle speed.

YES → **CHECK FOR INTERMITTENT PROBLEMS (See page 05–270)**

NO

3 INSPECT ECM(SP1 VOLTAGE)

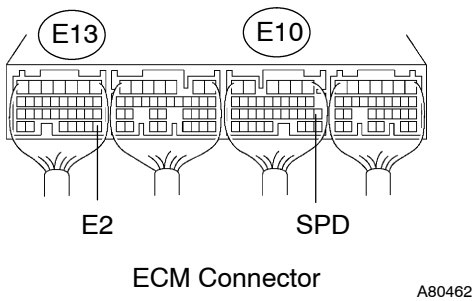

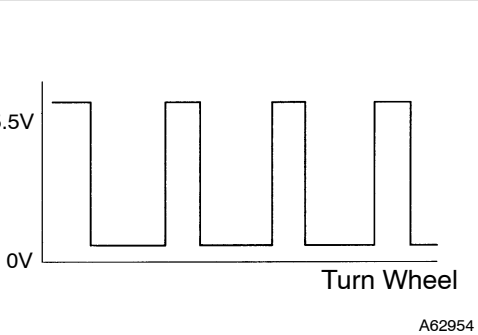

(a) Shift the transmission gear selector lever to the neutral position.
(b) Jack up the vehicle.
(c) Turn the ignition switch to ON.
(d) Check the voltage between the specified terminals of the E10 and E13 ECM connectors as the wheel is turned slowly.
Standard:

Tester Connection	Specified Condition
SPD (E10–17) – E2 (E13–28)	Generated intermittently

HINT:
The output voltage should fluctuate up and down similarly to the diagram on the left when the wheel is turned slowly.

NG → **REPAIR OR REPLACE HARNESS OR CONNECTOR**

OK

REPLACE ECM (See page 10–29)

DTC P0504 BRAKE SWITCH "A"/"B" CORRELATION

CIRCUIT DESCRIPTION

In this system, the signal of the stop lamp switch is used to judge whether the brake system is abnormal or not.

The stop lamp switch has a duplex system (signals STP and ST1–) to detect abnormality. When the signals of depressing and releasing the brake pedal are detected simultaneously, the ECM interprets this as malfunction of the stop lamp switch.

HINT:

Normal condition is as shown in the table below.

Signal	Brake Pedal Released	In Transition	Brake Pedal Depressed
STP	OFF	ON	ON
ST1–	ON	ON	OFF

DTC No.	DTC Detection Condition	Trouble Area
P0504	Conditions (a) and (b) continue for 0.5 second or more: (1 trip detection logic) (a) Ignition switch is in ON (b) STP signal is OFF when the ST1– signal is OFF (when brake pedal is released)	• Short in stop lamp switch signal circuit • Stop lamp switch • ECM

WIRING DIAGRAM

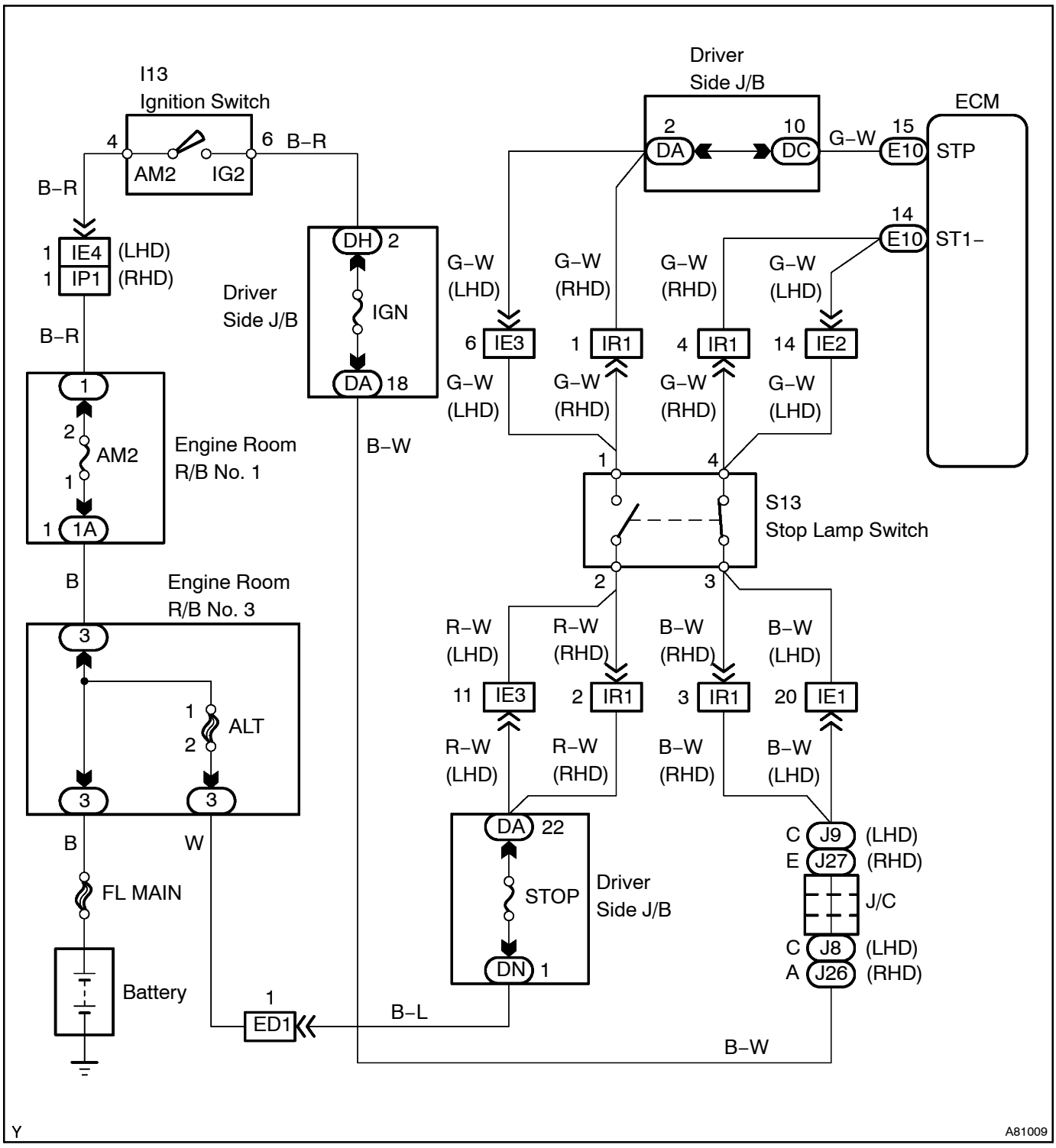

INSPECTION PROCEDURE

HINT:

Read freeze frame data using the hand–held tester. Freeze frame data records the engine conditions when a malfunction is detected. When troubleshooting, freeze frame data can help determine if the vehicle was running or stopped, if the engine was warmed up or not, if the air–fuel ratio was lean or rich, and other data from the time the malfunction occurred.

1 CHECK OPERATION OF STOP LAMP

(a) Check if the stop lamps go on and off normally when the brake pedal is depressed and released.

NG → **REPAIR OR REPLACE STOP LAMP SWITCH CIRCUIT**

OK

2 INSPECT STOP LAMP SWITCH ASSY

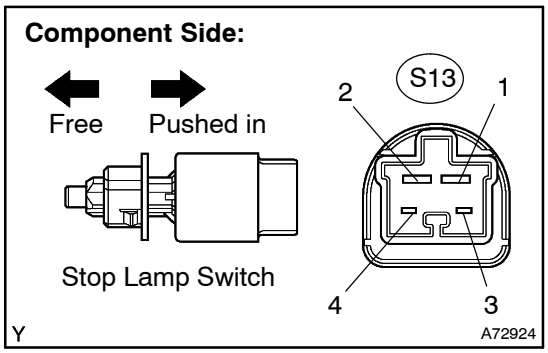

(a) Remove the S13 stop lamp switch.

(b) Check for continuity between each pair of the terminals.

Standard:

Switch Position	Tester Connection	Specified Condition
Switch pin free	1 – 2	Continuity
	3 – 4	No continuity
Switch pin pushed in	1 – 2	No continuity
	3 – 4	Continuity

(c) Reinstall the stop lamp switch.

NG → **REPLACE STOP LAMP SWITCH ASSY**

OK

3 READ VALUE OF HAND–HELD TESTER(STP SIGNAL AND ST1– VOLTAGE)

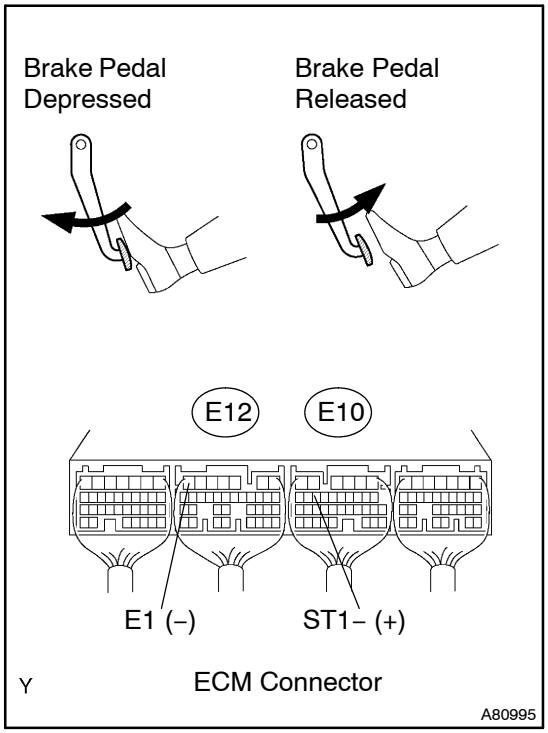

(a) Turn the ignition switch to ON.

(b) Select the item "DIAGNOSIS / OBD/MOBD / DATA LIST / ALL / STOP LIGHT SW" and read its value displayed on the hand–held tester.

Standard:

Brake Pedal	Specified Condition
Depressed	STP signal ON
Released	STP signal OFF

(c) Measure the voltage between the specified terminals of the E10 and E12 ECM connectors.

Standard:

Tester Connection	Brake Pedal	Specified Condition
ST1– (E10–14) – E1 (E12–7)	Depressed	Below 1.5 V
	Released	7.5 to 14 V

OK → **CHECK FOR INTERMITTENT PROBLEMS** **(See page 05–270)**

NG

4 CHECK HARNESS AND CONNECTOR(STOP LAMP SWITCH – ECM)

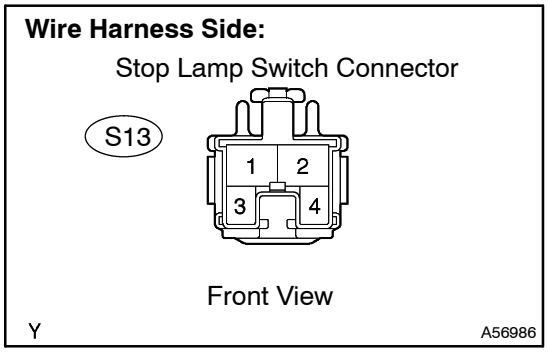

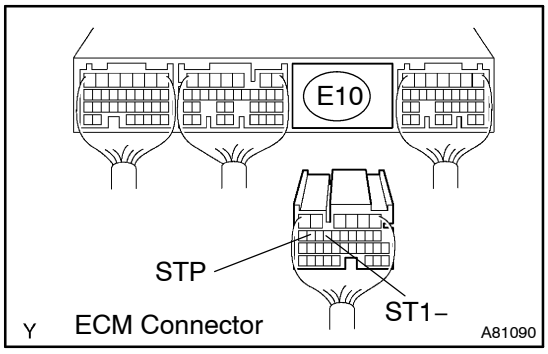

(a) Disconnect the S13 stop lamp switch connector.
(b) Disconnect the E10 ECM connector.
(c) Measure the resistance between the wire harness side connectors.

Standard (Check for open):

Tester Connection	Specified Condition
Stop lamp switch (S13–1) – STP (E10–15)	Below 1 Ω
Stop lamp switch (S13–3) – ST1– (E10–14)	

Standard (Check for short):

Tester Connection	Specified Condition
Stop lamp switch (S13–1) or STP (E10–15) – Body ground	10 kΩ or higher
Stop lamp switch (S13–3) or ST1– (E10–14) – Body ground	

(d) Reconnect the ECM connector.
(e) Reconnect the stop lamp switch connector.

NG → **REPAIR OR REPLACE HARNESS OR CONNECTOR**

OK

REPLACE ECM (See page 10–29)

DTC	P0544	EXHAUST GAS TEMPERATURE SENSOR CIRCUIT (BANK 1 SENSOR 1)

DTC	P0545	EXHAUST GAS TEMPERATURE SENSOR CIRCUIT LOW (BANK 1 SENSOR 1)

DTC	P0546	EXHAUST GAS TEMPERATURE SENSOR CIRCUIT HIGH (BANK 1 SENSOR 1)

DTC	P2031	EXHAUST GAS TEMPERATURE SENSOR CIRCUIT (BANK 1 SENSOR 2)

DTC	P2032	EXHAUST GAS TEMPERATURE SENSOR CIRCUIT LOW (BANK 1 SENSOR 2)

DTC	P2033	EXHAUST GAS TEMPERATURE SENSOR CIRCUIT HIGH (BANK 1 SENSOR 2)

HINT:

- For more information on the exhaust gas temperature sensor and TOYOTA D–CAT (*1), see page 05–255.
- If P0544, P0545, P0546, P2031, P2032, and/or P2033 is present, refer to the diagnostic trouble codes (DTCs) table for TOYOTA D–CAT on page 05–255.
- Sensor 1 represents a sensor located upstream on the DPNR (*2) catalytic converter.
- Sensor 2 represents a sensor located downstream on the DPNR catalytic converter.

*1: Diesel Clean Advanced Technology.

*2: Diesel Particulate–NOx Reduction system.

CIRCUIT DESCRIPTION

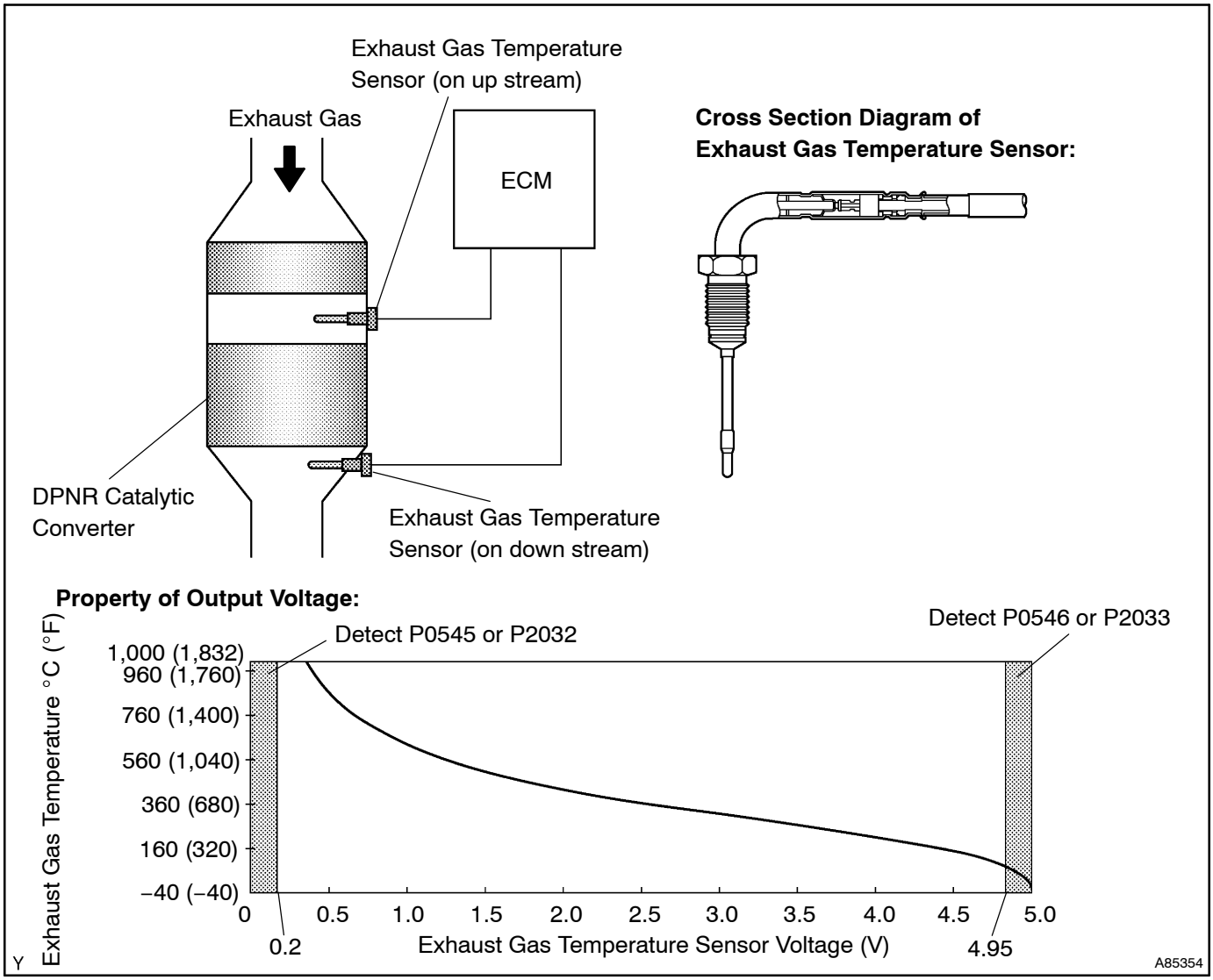

The exhaust gas temperature sensors are installed before and after the DPNR (*1) catalytic converter and senses the exhaust gas temperature.

A thermistor built in the sensor changes the resistance value according to the exhaust gas temperature. The lower the exhaust gas temperature is, the greater the thermistor resistance value becomes, and the higher the exhaust gas temperature is, the lower the thermistor resistance value becomes.

The exhaust gas temperature sensor is connected to the ECM. The 5 V power source voltage in the ECM is applied to the exhaust gas temperature sensor from terminal THCI (on up stream) and THCO (on down stream) via resistor R.

The resistor R and the exhaust gas temperature sensor are connected in series. When the resistance value of the exhaust gas temperature sensor changes in accordance with changes in the exhaust gas temperature, the potential at terminals THCI (on up stream) and THCO (on down stream) also changes. Based on this signal, when DPNR catalyst regeneration is needed, the ECM operates the exhaust fuel addition injector to obtain target temperature of the DPNR catalytic converter through the sensor 1. In addition, the ECM monitors an increasing rate in the temperature of the DPNR catalytic converter with the sensor 2.

*1: Diesel Particulate–NOx Reduction system.

DTC No.	DTC Detection Condition	Trouble Area
P0544	Sensor 1 output is less than 0.2 V or more than 4.95 V for 3 seconds or more (1 trip detection logic)	• Open or short in exhaust gas temperature sensor (on up stream) circuit • Exhaust gas temperature sensor (on up stream) • ECM
P0545	Sensor 1 output is less than 0.2 V for 3 seconds or more (1 trip detection logic)	
P0546	Sensor 1 output is more than 4.95 V for 3 seconds or more (1 trip detection logic)	
P2031	Sensor 2 output is less than 0.2 V or more than 4.95 V for 3 seconds or more (1 trip detection logic)	• Open or short in exhaust gas temperature sensor (on down stream) circuit • Exhaust gas temperature sensor (on down stream) • ECM
P2032	Sensor 2 output is less than 0.2 V for 3 seconds or more (1 trip detection logic)	
P2033	Sensor 2 output is more than 4.95 V for 3 seconds or more (1 trip detection logic)	

HINT:

- DTC P1386 (Exhaust fuel addition injector malfunction) will be present if there is an open malfunction in the exhaust gas temperature sensor circuit.
- Sensor 1 represents a sensor located up stream on the DPNR (*1) catalytic converter.
- Sensor 2 represents a sensor located down stream on the DPNR catalytic converter.
- After confirming DTC P0544, P0545, P0546, P2031, P2032 and P2033, check the upstream and downstream exhaust gas temperature in the "DIAGNOSIS / OBD/MOBD / DATA LIST / ALL / EX TEMP (IN)" and "DIAGNOSIS / OBD/MOBD / DATA LIST / ALL / EX TEMP (OUT)" using the hand–held tester.

*1: Diesel Particulate–NOx Reduction system.

Reference:

Condition	Exhaust Gas Temperature	Exhaust Gas Temperature Sensor Condition
Idling after warm–up	Constant at 50 to 700°C (122 to 1,292°F)	Normal
	0°C (32°F)	Short circuit
	1,000°C (1,832°F)	Open circuit

MONITOR DESCRIPTION

In order to detect abnormality in the exhaust gas temperature sensor at any time, the ECM always monitors output voltage from the sensor. When the sensor output voltage after engine warm–up deviates from the normal operating range (between 0.2 V and 4.95 V) for more than 3 seconds, the ECM interprets this as malfunction of the sensor circuit, and illuminates the CHK ENG.

WIRING DIAGRAM

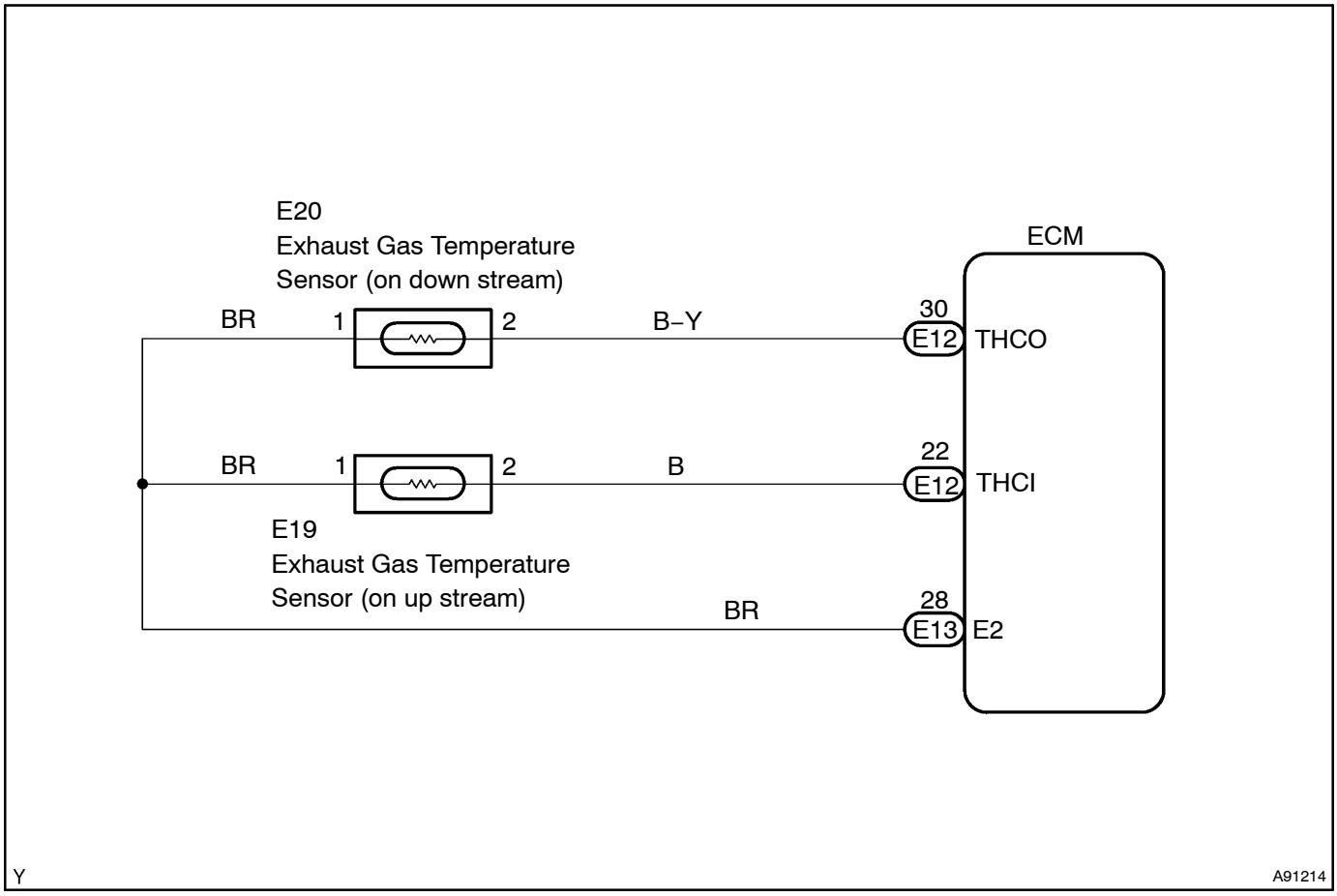

INSPECTION PROCEDURE

HINT:

Read freeze frame data using the hand–held tester. Freeze frame data records the engine conditions when a malfunction is detected. When troubleshooting, freeze frame data can help determine if the vehicle was running or stopped, if the engine was warmed up or not, if the air–fuel ratio was lean or rich, and other data from the time the malfunction occurred.

1 READ VALUE OF HAND–HELD TESTER(EXHAUST GAS TEMPERATURE)

(a) Connect the hand–held tester to the DLC3.
(b) Turn the ignition switch to ON and turn the hand–held tester ON.
(c) Select the item ”DIAGNOSIS / OBD/MOBD / DATA LIST / ALL / EX TEMP (IN)” and ”DIAGNOSIS / OBD/MOBD / DATA LIST / ALL / EX TEMP (OUT)” and read its value displayed on the hand–held tester.

Standard:

Same as the actual exhaust gas temperature (50 to 700°C [122 to 1,292°F] during idling after warm–up), and varies after maintaing the engine speed of 3,000 rpm for 1 minute after accelerating the engine from idling to 3,000 rpm.

Result:

Temperature Displayed	Proceed to
1,000°C (1,832°F)	A
0°C (32°F) (After engine warm–up)	B
OK: same as the actual exhaust gas temperature (50 to 700°C [122 to 1,292°F] during idling after warm–up), and varies after maintaing the engine speed of 3,000 rpm for 1 minute after accelerating the engine from idling to 3,000 rpm	C

HINT:

- If there is an short circuit, the hand–held tester always indicates 0°C (32°F).
- If there is a open circuit, the hand–held tester always indicates 1,000°C (1,832°F).

B → **Go to step 4**

C → **CHECK FOR INTERMITTENT PROBLEMS (See page 05–270)**

A

2 READ VALUE OF HAND–HELD TESTER(CHECK FOR OPEN IN WIRE HARNESS)

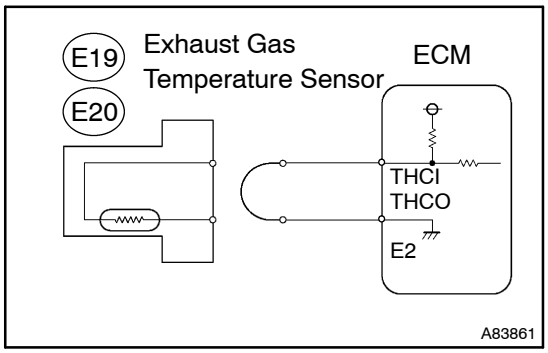

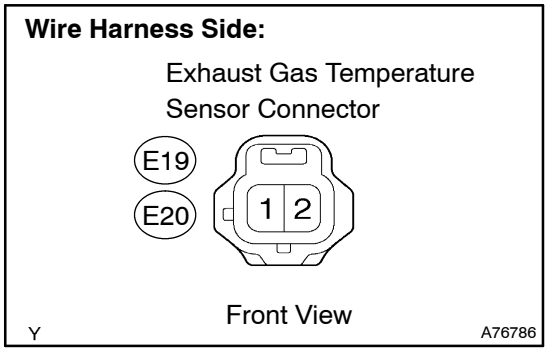

(a) Disconnect the E19 or E20 exhaust gas temperature sensor connector.
(b) Connect terminals 1 and 2 of the exhaust gas temperature sensor wire harness side connector.
(c) Connect the hand–held tester to the DLC 3.
(d) Turn the ignition switch to ON and turn the hand–held tester ON.
(e) Select the item ”DIAGNOSIS / OBD/MOBD / DATA LIST / ALL / EX TEMP (IN)” and ”DIAGNOSIS / OBD/MOBD / DATA LIST / ALL / EX TEMP (OUT)” and read its value displayed on the hand–held tester.

Standard: 0°C (32°F)

(f) Reconnect the exhaust gas temperature sensor connector.

OK	CONFIRM GOOD CONNECTION AT SENSOR. IF OK, REPLACE EXHAUST GAS TEMPERATURE SENSOR (See page 14–108)

NG

3 READ VALUE OF HAND–HELD TESTER(CHECK FOR OPEN IN ECM)

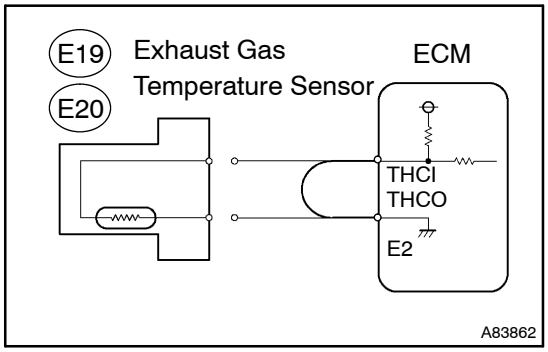

(a) Disconnect the E19 or E20 exhaust gas temperature sensor connector.
(b) Connect terminals THCI and E2 or THCO and E2 of the E12 and E13 ECM connectors.

HINT:
Before checking, do a visual and contact pressure check on the ECM connector.

(c) Connect the hand–held tester to the DLC 3.
(d) Turn the ignition switch to ON and turn the hand–held tester ON.
(e) Select the item ”DIAGNOSIS / OBD/MOBD / DATA LIST / ALL / EX TEMP (IN)” and ”DIAGNOSIS / OBD/MOBD / DATA LIST / ALL / EX TEMP (OUT)” and read its value displayed on the hand–held tester.
Standard: 0°C (32°F)
(f) Reconnect the exhaust gas temperature sensor connector.

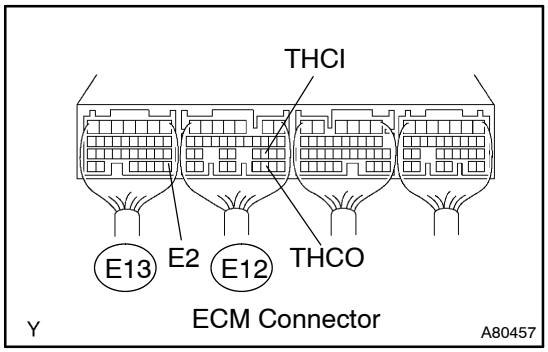

OK	REPAIR OR REPLACE HARNESS OR CONNECTOR

NG

CONFIRM GOOD CONNECTION AT ECM. IF OK, REPLACE ECM (See page 10–29)

4 READ VALUE OF HAND–HELD TESTER(CHECK FOR SHORT IN WIRE HARNESS)

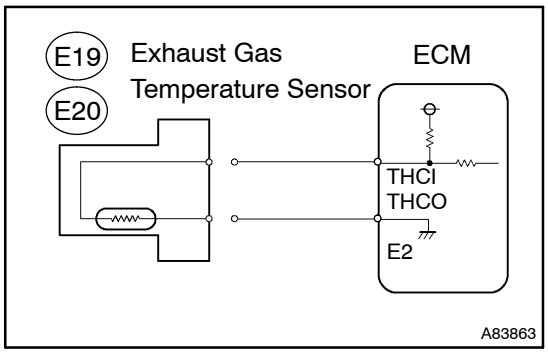

(a) Disconnect the E19 or E20 exhaust gas temperature sensor connector.
(b) Connect the hand–held tester to the DLC 3.
(c) Turn the ignition switch to ON and turn the hand–held tester ON.
(d) Select the item ”DIAGNOSIS / OBD/MOBD / DATA LIST / ALL / EX TEMP (IN)” and ”DIAGNOSIS / OBD/MOBD / DATA LIST / ALL / EX TEMP (OUT)” and read its value displayed on the hand–held tester.
Standard: 1,000°C (1,832°F)
(e) Reconnect the exhaust gas temperature sensor connector.

OK	REPLACE EXHAUST GAS TEMPERATURE SENSOR (See page 14–108)

NG

5 READ VALUE OF HAND–HELD TESTER(CHECK FOR SHORT IN ECM)

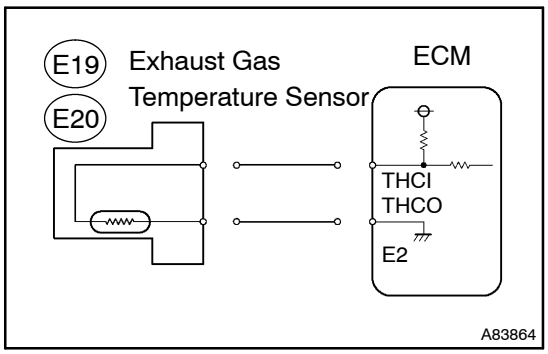

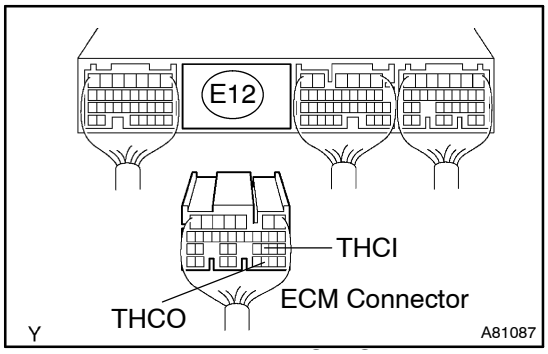

(a) Disconnect the E19 or E20 exhaust gas temperature sensor connector.
(b) Disconnect the E12 ECM connector.
(c) Connect the hand–held tester to the DLC 3.
(d) Turn the ignition switch to ON and turn the hand–held tester ON.
(e) Select the item "DIAGNOSIS / OBD/MOBD / DATA LIST / ALL / EX TEMP (IN)" and "DIAGNOSIS / OBD/MOBD / DATA LIST / ALL / EX TEMP (OUT)" and read its value displayed on the hand–held tester.
Standard: 1,000°C (1,832°F)
(f) Reconnect the exhaust gas temperature sensor connector.
(g) Reconnect the ECM connector.

OK → **REPAIR OR REPLACE HARNESS OR CONNECTOR**

NG

REPLACE ECM (See page 10–29)

DTC P0560 SYSTEM VOLTAGE

CIRCUIT DESCRIPTION

While the ignition switch is OFF, the battery voltage is supplied to terminal BATT of the ECM for storing DTCs and fuel injection feedback learning values.

DTC No.	DTC Detection Condition	Trouble Area
P0560	Condition (a) or (b) continues: (a) Significant decrease in battery voltage (b) Open in back–up power source circuit (1 trip detection logic)	• Open in back–up power source circuit • Low battery voltage • ECM

HINT:
If DTC P0560 appears, the ECM does not store other DTCs.

WIRING DIAGRAM

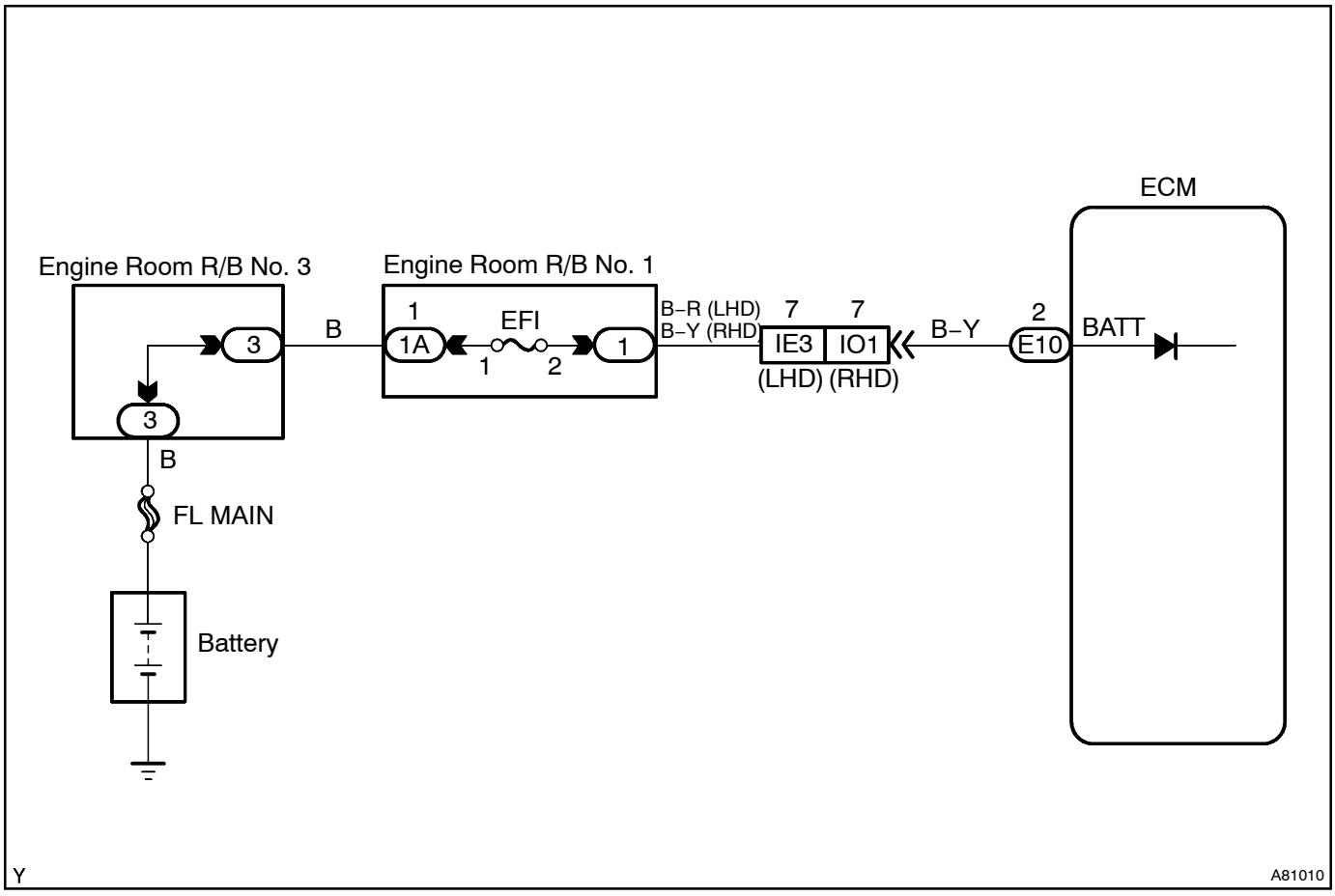

INSPECTION PROCEDURE

HINT:
Read freeze frame data using the hand–held tester. Freeze frame data records the engine conditions when a malfunction is detected. When troubleshooting, freeze frame data can help determine if the vehicle was running or stopped, if the engine was warmed up or not, if the air–fuel ratio was lean or rich, and other data from the time the malfunction occurred.

1 CHECK FUSE(EFI FUSE)

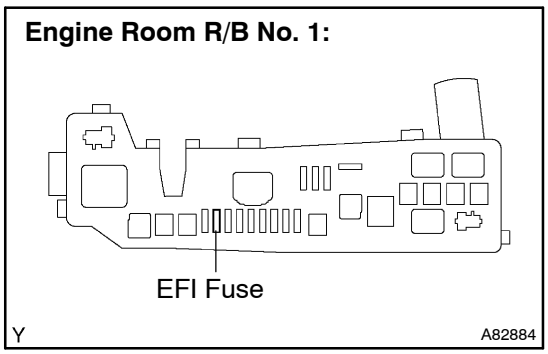

(a) Remove the EFI fuse from the engine room R/B No. 1.
(b) Check for continuity in the EFI fuse.
Standard: Continuity
(c) Reinstall the EFI fuse.

NG → **CHECK FOR SHORT IN ALL HARNESSES AND COMPONENTS CONNECTED TO FUSE**

OK

2 INSPECT ECM(BATT VOLTAGE)

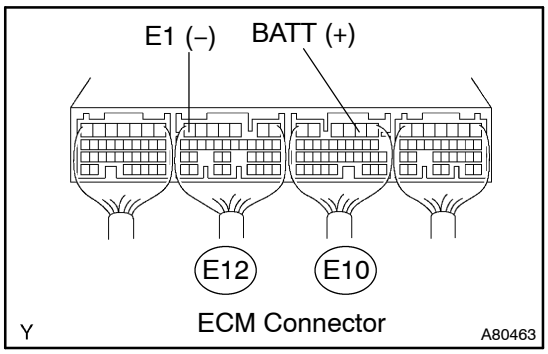

(a) Measure the voltage between the specified terminals of the E10 and E12 ECM connectors.
Standard:

Tester Connection	Specified Condition
BATT (E10–2) – E1 (E12–7)	9 to 14 V

OK → **REPLACE ECM (See page 10–29)**

NG

3	CHECK HARNESS AND CONNECTOR(EFI FUSE – ECM, EFI FUSE – BATTERY)

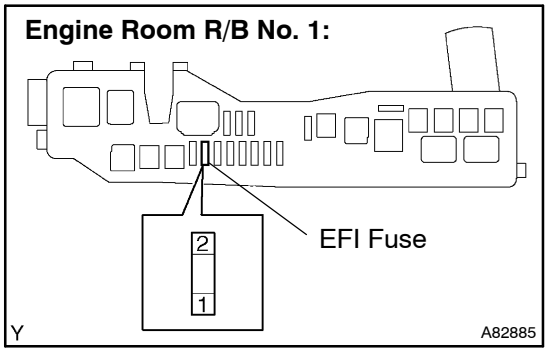

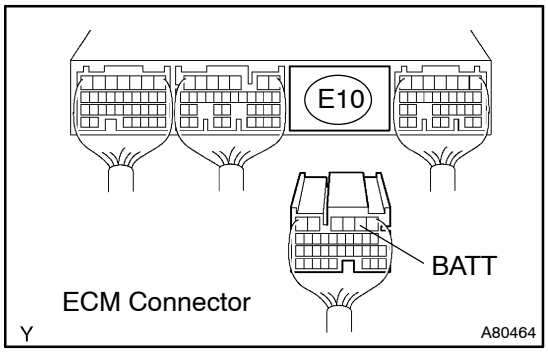

(a) Check the harness and connectors between the EFI fuse and ECM.
  (1) Remove the EFI fuse from the engine room R/B No.1.
  (2) Disconnect the E10 ECM connector.
  (3) Check the resistance between the wire harness side connectors.

Standard (Check for open):

Tester Connection	Specified Condition
EFI fuse (2) – BATT (E10–2)	Below 1 Ω

Standard (Check for short):

Tester Connection	Specified Condition
EFI fuse (2) or BATT (E10–2) – Body ground	10 kΩ or higher

  (4) Reinstall the EFI fuse.
  (5) Reconnect the ECM connector.

(b) Check the harness and connectors between the EFI fuse and battery.
  (1) Remove the EFI fuse from the engine room R/B No. 1.
  (2) Disconnect the positive battery cable.
  (3) Check the resistance between the wire harness side connectors.

Standard (Check for open):

Tester Connection	Specified Condition
Battery positive cable – EFI fuse (1)	Below 1 Ω

Standard (Check for short):

Tester Connection	Specified Condition
Battery positive cable or EFI fuse (1) – Body ground	10 kΩ or higher

  (4) Reinstall the EFI fuse.
  (5) Reconnect the positive battery terminal.

NG → **REPAIR OR REPLACE HARNESS OR CONNECTOR**

OK

4	INSPECT BATTERY(VOLTAGE) (See page 19–26 of Pub. No. RM1018E AVENSIS REPAIR MANUAL)

NG → **REPAIR OR REPLACE BATTERY**

OK

REPLACE JUNCTION BLOCK

DTC	P0606	ECM/PCM PROCESSOR

DTC	P0607	CONTROL MODULE PERFORMANCE

DTC	P1611	IC CIRCUIT MALFUNCTION

CIRCUIT DESCRIPTION

DTC No.	DTC Detection Condition	Trouble Area
P0606 P0607 P1611	ECM internal error (1 trip detection logic)	• ECM

INSPECTION PROCEDURE

HINT:

Read freeze frame data using the hand–held tester. Freeze frame data records the engine conditions when a malfunction is detected. When troubleshooting, freeze frame data can help determine if the vehicle was running or stopped, if the engine was warmed up or not, if the air–fuel ratio was lean or rich, and other data from the time the malfunction occurred.

REPLACE ECM (See page 10–29)

DTC P0622 GENERATOR FIELD ”F” TERMINAL CIRCUIT

CIRCUIT DESCRIPTION

While the generator (alternator) is generating current, a duty ratio is sent from terminal M of the generator to the ECM terminal ALT. This duty ratio is used for detecting an open malfunction of the generator circuit and DTC P0380.

HINT:

DTC P0380 is prepared for indicating an open or short malfunction in the glow plug circuit. If this DTC is detected, inspect the glow plug circuit. (See page 05–386)

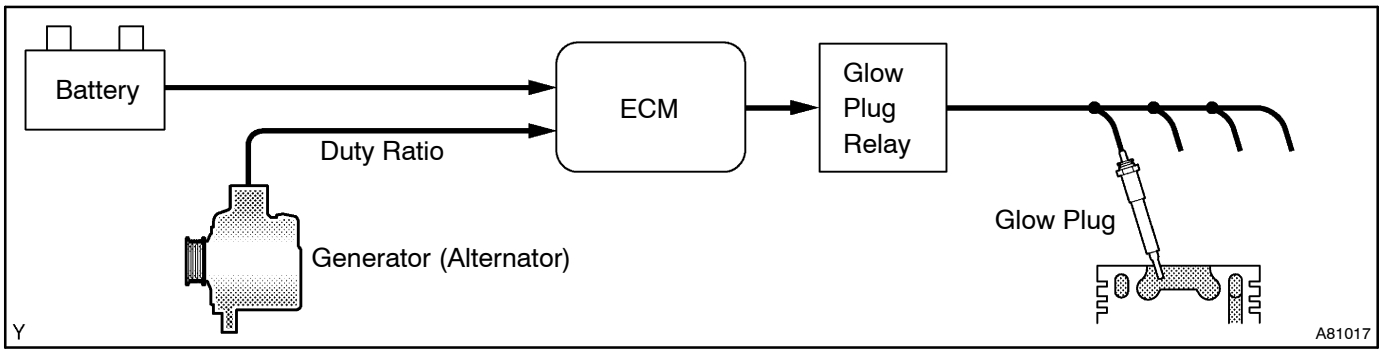

DTC No.	DTC Detection Condition	Trouble Area
P0622	No duty ratio from terminal M of the generator (alternator) at the engine running (1 trip detection logic)	• Open in generator (alternator) circuit • Generator (alternator) • Drive belt • ECM

HINT:

After confirming DTC P0622, check the internal fuel pressure of the common rail in the ”DIAGNOSIS / OBD/ MOBD / DATA LIST / ALL / GENERATOR” using the hand–held tester.

Result:

Engine Speed	Generator Duty Ratio (%)
Idling	10 to 100
When increasing engine speed	Generator duty ratio drops
When decreasing engine speed	Generator duty ratio rises

MONITOR DESCRIPTION

The ECM will detect a generator (alternator) failure or an open malfunction of the circuit, if the duty ratio is not output from terminal M of the generator (alternator) despite running the engine.

MONITOR STRATEGY

Required Sensors	Generator (alternator) circuit
Frequency of operation	Continuous
Duration	10 seconds
CHK ENG Operation	1 driving cycle

TYPICAL ENABLING CONDITIONS

Item	Specification	
	Minimum	Maximum
Battery voltage	11 V	–
Engine speed	700 rpm	2,000 rpm

TYPICAL MALFUNCTION THRESHOLDS

Threshold
There is no duty ratio output from terminal M of the generator (alternator)

WIRING DIAGRAM

Refer to DTC P0380 on page 05–386.

INSPECTION PROCEDURE

HINT:

- If different DTCs related to different systems that have terminal E2 as the ground terminal are output simultaneously, terminal E2 may have an open circuit.
- Read freeze frame data using the hand–held tester. Freeze frame data records the engine conditions when a malfunction is detected. When troubleshooting, freeze frame data can help determine if the vehicle was running or stopped, if the engine was warmed up or not, if the air–fuel ratio was lean or rich, and other data from the time the malfunction occurred.

1 CHECK IF CHARGE LAMP IS ILLUMINATED

HINT:

Run the engine at 2,000 rpm, and check if the charge lamp located in the combination meter remains illuminated.

YES → **Go to step 3**

NO

2 CHECK HARNESS AND CONNECTOR(GENERATOR (ALTERNATOR) – ECM)

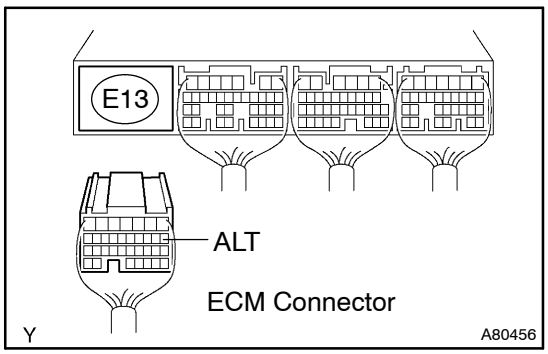

(a) Disconnect the E13 ECM connector.
(b) Disconnect the A11 generator (alternator) connector.
(c) Check the resistance between the wire harness side connectors.

Standard (Check for open):

Tester Connection	Specified Condition
ALT (E13–8) – M (A11–3)	Below 1 Ω

Standard (Check for short):

Tester Connection	Specified Condition
ALT (E13–8) or M (A11–3) – Body ground	10 kΩ or higher

(d) Reconnect the ECM connector.
(e) Reconnect the generator (alternator) connector.

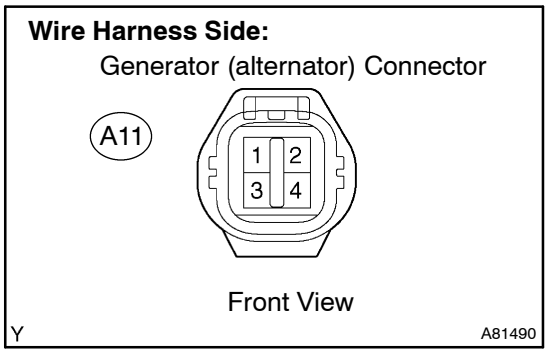

NG → **REPAIR OR REPLACE HARNESS OR CONNECTOR**

OK

3	INSPECT DRIVE BELT (See page 14–87)

NG → REPAIR OR REPLACE DRIVE BELT (See page 14–269 of Pub. No. RM1018E AVENSIS REPAIR MANUAL)

OK

4	INSPECT CHARGING SYSTEM (See page 19–26 of Pub. No. RM1018E AVENSIS REPAIR MANUAL)

GO

CHECK IF DTC OUTPUT RECURS (DTC P0622)

HINT:
After clearing the DTC, start the engine and let it idle for 10 seconds or more, and then confirm that P0622 is not present again.

DTC P0627 FUEL PUMP CONTROL CIRCUIT / OPEN

CIRCUIT DESCRIPTION

Refer to the description on page 05–255.

DTC No.	DTC Detection Condition	Trouble Area
P0627	Open or short in suction control valve circuit for more than 0.5 second (1 trip detection logic)	• Open or short in suction control valve circuit • Suction control valve • ECM

WIRING DIAGRAM

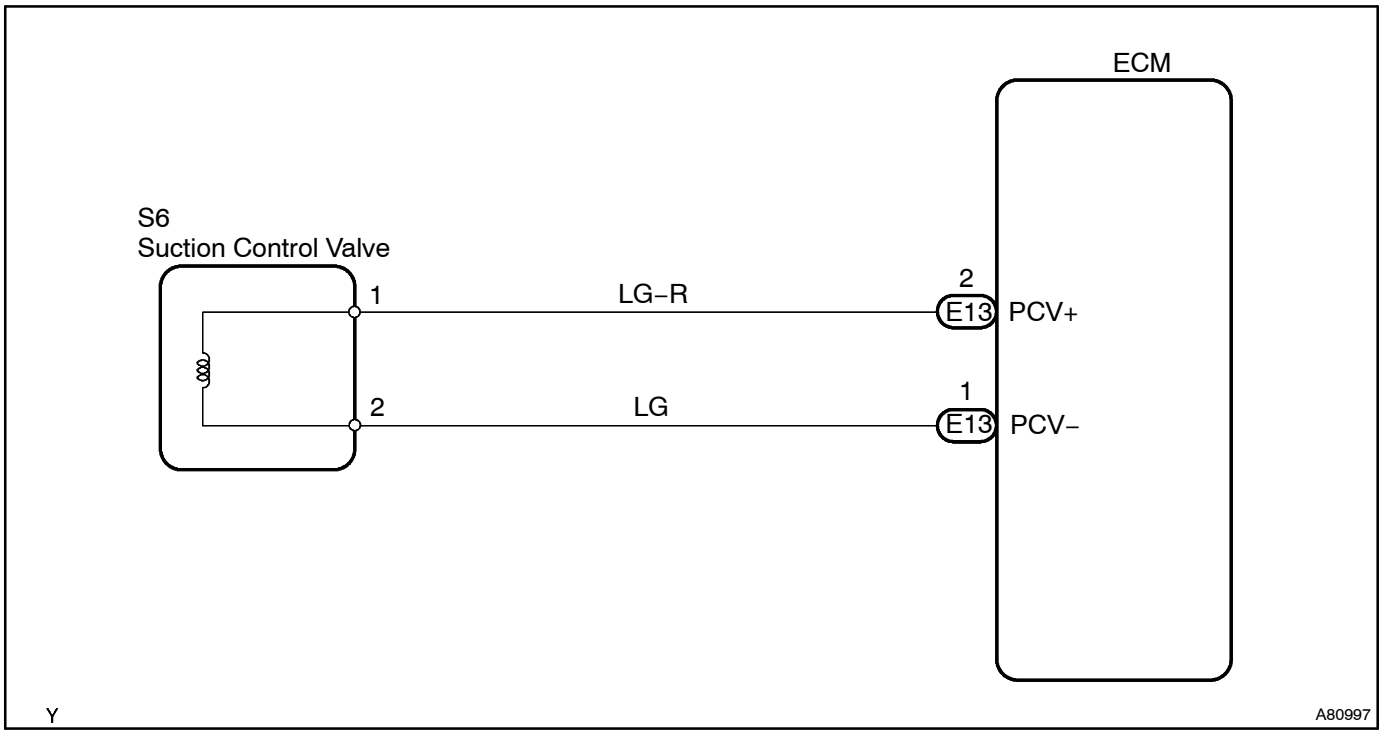

INSPECTION PROCEDURE

HINT:

Read freeze frame data using the hand–held tester. Freeze frame data records the engine conditions when a malfunction is detected. When troubleshooting, freeze frame data can help determine if the vehicle was running or stopped, if the engine was warmed up or not, if the air–fuel ratio was lean or rich, and other data from the time the malfunction occurred.

1	INSPECT INJECTION OR SUPPLY PUMP ASSY

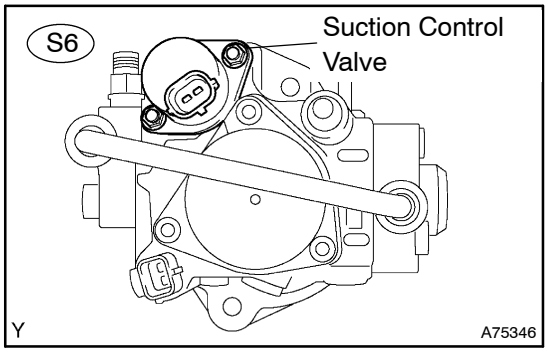

(a) Disconnect the S6 suction control valve connector.
(b) Measure the resistance between the terminals of the suction control valve.
Standard: 1.9 to 2.3 Ω at 20°C (68°F)
(c) Reconnect the suction control valve connector.

NG → **REPLACE INJECTION OR SUPPLY PUMP ASSY (SUCTION CONTROL VALVE) (See page 11–58)**

OK

2 CHECK HARNESS AND CONNECTOR(SUCTION CONTROL VALVE – ECM)

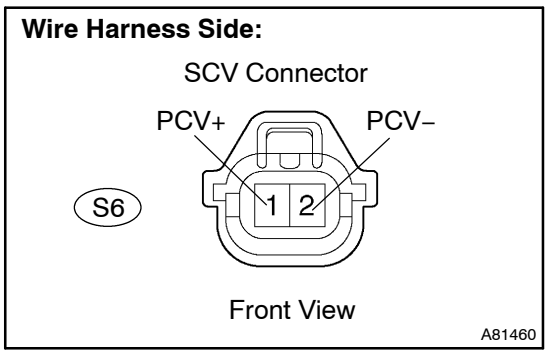

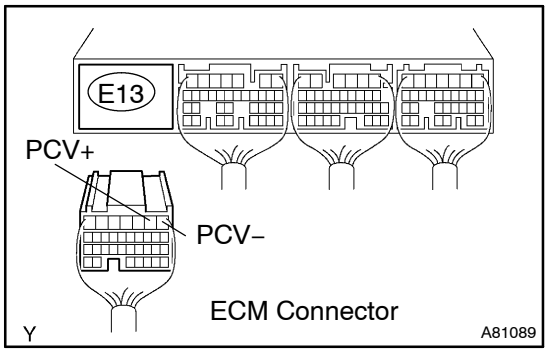

(a) Disconnect the S6 suction control valve connector.
(b) Disconnect the E13 ECM connector.
(c) Check the resistance between the wire harness side connector.

Standard (Check for open):

Tester Connection	Specified Condition
PCV+ (S6–1) – PCV+ (E13–2)	Below 1 Ω
PCV– (S6–2) – PCV– (E13–1)	

Standard (Check for short):

Tester Connection	Specified Condition
PCV+ (S6–1) or PCV+ (E13–2) – Body ground	10 kΩ or higher
PCV– (S6–2) or PCV– (E13–1) – Body ground	

(d) Reconnect the suction control valve connector.
(e) Reconnect ECM connector.

NG → **REPAIR OR REPLACE HARNESS AND CONNECTOR**

OK

3 INSPECT ECM(PCV VOLTAGE)

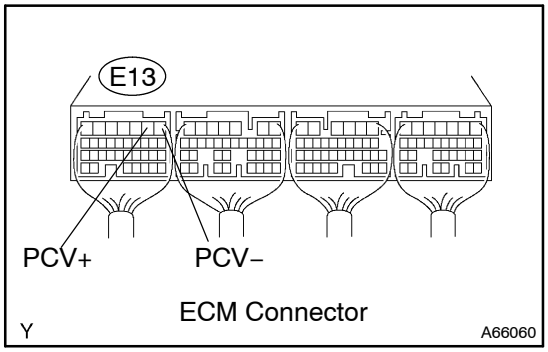

(a) Inspect using the oscilloscope.
(b) During cranking or idling, check the waveform between the specified terminals of the E13 ECM connector.

Standard :

Tester Connection	Specified Condition
PCV+ (E13–2) – PCV– (E13–1)	Correct waveform is as shown

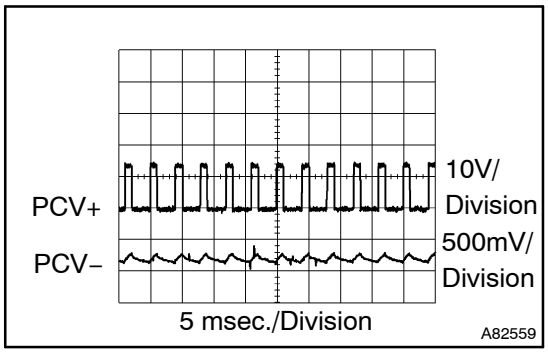

NG → **REPLACE ECM (See page 10–29)**

OK

CHECK FOR INTERMITTENT PROBLEMS (See page 05–270)

DTC P1238 INJECTOR MALFUNCTION

HINT:

- For more information on the injector and the common rail system, see page 05–255.
- If P1238 is present, refer to the diagnostic trouble codes (DTCs) table for the fuel system on page 05–255.

CIRCUIT DESCRIPTION

Injector Cross Section Diagram:

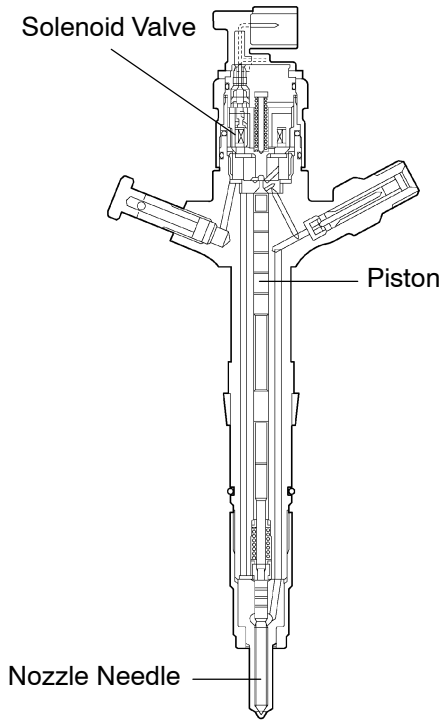

The ECM detects combustion deterioration for a specific cylinder.

HINT:

- The cylinder, which has compensation value for INJ VOL that varies from other cylinders, may be malfunctioning.
- If DTC P0093 (Fuel leaks in high–pressure area) is present simultaneously, leakage malfunction of the cylinder probably be occurred.
- If DTC P0200 (Open or short in EDU or injector circuit) is present simultaneously, there probably be faulty circuit located between the ECM and the injector including the EDU.
- If only DTC P1238 (Injector malfunction) is present, probably injector mechanical malfunction or insufficient compression (valve clearance etc) has occurred, not an open or short malfunction of the ECM, EDU and injector circuit.
- Solenoid valve of the injector is the same type that of the pressure discharge valve.

DTC No.	DTC Detection Condition	Main Trouble Area	Related Trouble Area
P1238	Engine speed fluctuation is large when idling (2 trip detection logic)	• Injector • EDU (P0200 is set simultaneously) • Open or short in engine wire harness (P0200 is set simultaneously) • Connector connection (P0200 is set simultaneously) • Compression pressure • Valve clearance	• Valve timing • ECM

HINT:

After confirming DTC P1238, check the internal fuel pressure in ”DIAGNOSIS / OBD/MOBD / DATA LIST / ALL / COMN RAIL” using the hand–held tester.

Reference:

Engine Speed	Fuel Pressure (MPa)
Idling	Approximately 30 to 40
2,500 rpm (No engine load)	Approximately 50 to 100

MONITOR DESCRIPTION

P1238 (Injection malfunction, exclude open or short in injector circuit):

This DTC will be set if the engine speed fluctuation between each cylinder is large. The ECM monitors changes in the crankshaft rotation speed using the crankshaft position sensor for detecting poor combustion. Also, it identifies a faulty cylinder using the camshaft position sensor. The fluctuation counter increments when irregular crankshaft rotation speed variation exceeds the threshold at idling. Therefore, either one of the cylinders has very poor combustion (Rough idle), the ECM sets this DTC.

MONITOR STRATEGY

Required Sensors	Crankshaft position sensor
Frequency of operation	Continuous
Duration	10 minutes
CHK ENG Operation	2 driving cycles

TYPICAL ENABLING CONDITIONS

Item	Specification	
	Minimum	Maximum
Engine	At idling	
Engine speed	500 rpm	–
Engine coolant temperature	20°C (68°F)	–

TYPICAL MALFUNCTION THRESHOLDS

Threshold
The number of irregular changes in the crankshaft rotation speed

HINT:

The number of irregular changes in the crankshaft rotation speed indicates the insufficient combustion.

WIRING DIAGRAM

Refer to DTC P0200 on page 05–368.

INSPECTION PROCEDURE

HINT:

- If DTCs other than P1238 are present simultaneously, first perform troubleshooting for them.
- Read freeze frame data using the hand–held tester. Freeze frame data records the engine conditions when a malfunction is detected. When troubleshooting, freeze frame data can help determine if the vehicle was running or stopped, if the engine was warmed up or not, if the air–fuel ratio was lean or rich, and other data from the time the malfunction occurred.

1	CHECK OTHER DTC OUTPUT(IN ADDITION TO DTC P1238)

(a) Connect the hand–held tester to the DLC3.
(b) Turn the ignition switch to ON and turn the hand–held tester ON.
(c) Select the item ”DIAGNOSIS / OBD/MOBD / DTC INFO / CURRENT CODES”.
(d) Read DTCs.

Result:

Display (DTC output)	Proceed to
P1238	A
P1238 and other DTCs	B

HINT:

If any other codes besides P1238 are output, perform troubleshooting for those DTCs first.

B → GO TO RELEVANT DTC CHART (See page 05–299)

A

2 CHECK WIRE HARNESS AND CONNECTOR IN ENGINE ROOM

HINT:
Check the wire harness and connector connections.

NG → REPAIR OR REPLACE

OK

3 READ VALUE OF HAND–HELD TESTER(COMPENSATION OF INJECTION VOLUME BETWEEN CYLINDERS FOR IDENTIFYING MALFUNCTION CYLINDER)

(a) Connect the hand–held tester to the DLC3.
(b) Turn the ignition switch to ON and turn the hand–held tester ON.
(c) Select the item "DIAGNOSIS / OBD/MOBD / DATA LIST / ALL / INJ VOLUME FB #1, #2, #3 and #4" and read its value displayed on the hand–held tester.
Standard:

Result	Compensatory Injection Volume (mm^3)
Standard	4.9 or less

HINT:
Usually compensation injection value is 3.0 mm^3 or less.
(d) Cylinders that have a compensation value which is more than standard value shown above are considered to be faulty cylinders. Use the following steps to inspect and repair the cylinder.
Result:

Result	Proceed to
Faulty cylinder is not identified	A
Faulty cylinder is identified	B

B → Go to step 5

A

4 PERFORM ACTIVE TEST USING HAND–HELD TESTER(INJECTION CUT FOR IDENTIFYING MALFUNCTION CYLINDER)

(a) Connect the hand–held tester to the DLC3.
(b) Start the engine.
(c) Turn the hand–held tester ON.
(d) Select the item "DIAGNOSIS / OBD/MOBD / ACTIVE TEST / INJECTOR CUT #1, #2, #3 and #4".
(e) Check the four cylinders in sequence to identify a faulty cylinder by performing the power–balance inspection.

HINT:
If the engine idling stays normal despite cutting off the fuel injection, the cylinder is malfunctioning.

GO

5	CHECK CYLINDER COMPRESSION PRESSURE OF MALFUNCTION CYLINDER (See page 14–87)

NG → REPAIR OR REPLACE

OK

6	CHECK VALVE CLEARANCE OF MALFUNCTION CYLINDER (See page 14–90)

NG → ADJUST VALVE CLEARANCE (See page 14–90)

OK

7	CHECK IF DTC OUTPUT RECURS(DTC P1238)

HINT:
After clearing the DTC, let the engine idle for 10 minutes after warm–up, and then confirm that P1238 is not present again.

OK → CHECK FOR INTERMITTENT PROBLEMS (See page 05–270)

NG

8	REPLACE INJECTOR ASSY (See page 11–46)

GO

CHECK IF DTC OUTPUT RECURS (DTC P1238)

HINT:
After clearing the DTC, let the engine idle for 10 minutes after warm–up, and then confirm that P1238 is not present again.

DTC	P1271	FUEL REGULATOR CIRCUIT MALFUNCTION (EDU DRIVE)

DTC	P1272	FUEL PRESSURE REGULATOR MALFUNCTION

HINT:

- For more information on the pressure discharge valve and the common rail system, see page 05–255.
- For more information on the EDU, see page 05–255.
- If P1271 and/or P1272 is present, refer to the diagnostic trouble codes (DTCs) table for the fuel system on page 05–255.

CIRCUIT DESCRIPTION

The ECM controls the internal fuel pressure of the common rail by opening and closing the pressure discharge valve. When sudden deceleration is occurred, the internal fuel pressure will temporarily become higher than usual and combustion noise may result, therefore the ECM will open the valve temporarily to discharge the pressure inside the common rail. Also, the pressure discharge valve opens when the ignition switch is turned to OFF, and the internal pressure is then promptly discharged.

Pressure Discharge Valve Operation by Sudden Deceleration:

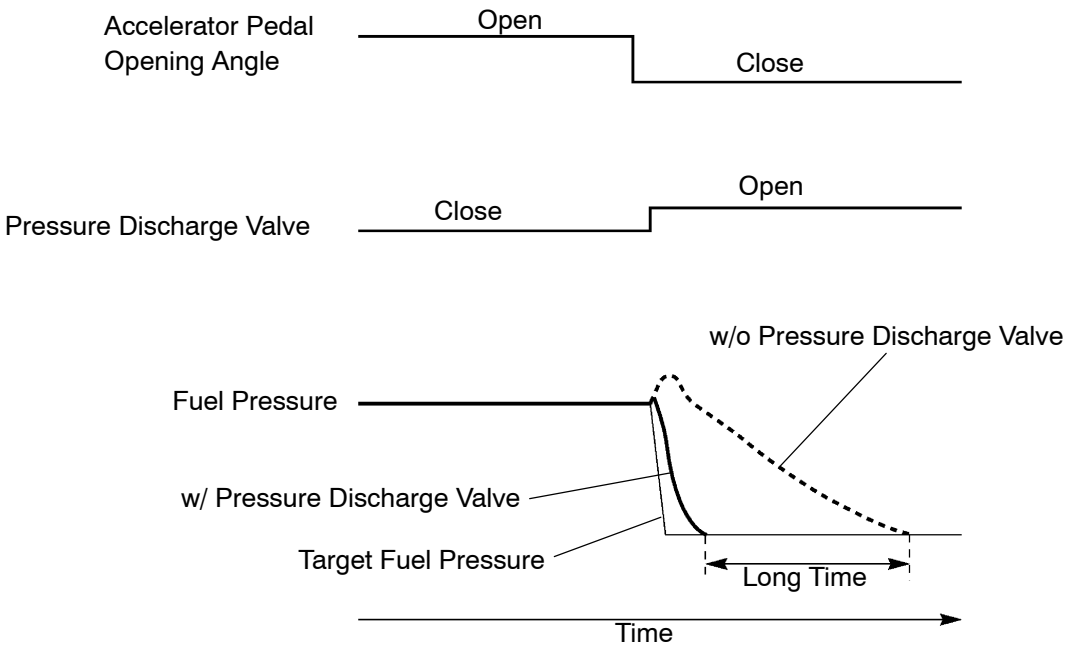

HINT:
The solenoid valve of the pressure discharge valve is the same type that of the injector solenoid valve.

Cross Section Diagram of Pressure Discharge Valve:

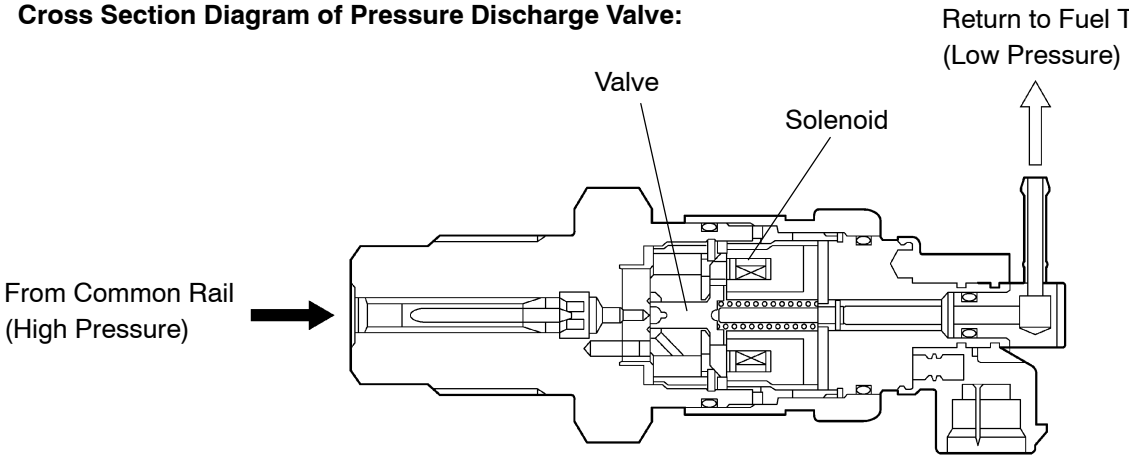

DTC No.	DTC Detection condition	Trouble Area
P1271	• Open or short in pressure discharge valve circuit There is no valve opening confirmation (IJF) signal from EDU to ECM despite the ECM sending valve opening command (PRD) signal after the engine is started (1 trip detection)	• Open or short in pressure discharge valve circuit • Open or short in pressure discharge valve itself • EDU • ECM
P1272	• Pressure discharge valve closed malfunction Actual pressure decreasing rate deviates from the simulated pressure decreasing rate after the ignition switch is turned to OFF (2 trip detection)	• Open or short in pressure discharge valve circuit (P1271 is set simultaneously) • Pressure discharge valve • Supply pump • ECM

HINT:
After confirming DTC P1271 and/or P1272, check the fuel pressure inside the common rail in the ”DIAGNOSIS / OBD/MOBD / DATA LIST / ALL / COMN RAIL” using the hand–held tester.

Reference:

Engine Speed	Fuel Pressure (MPa)
Idling	Approximately 30 to 40
2,500 rpm (No engine load)	Approximately 50 to 100

MONITOR DESCRIPTION

P1271 (Open or short in pressure discharge valve circuit):

This DTC will be set if there is no valve opening confirmation (IJF) signal from the EDU to the ECM, despite the ECM commanding the pressure discharge valve to open with the EDU. This DTC refers to an open or short malfunction of the pressure discharge valve circuit, therefore the malfunction that the valve is stuck open or closed can be excluded.

The EDU monitors the current supplied to the pressure discharge valve and indicates that the current flows into the valve. If the current exceeds the specified level, the EDU interprets this as the IJF signal is low.

If this DTC is present, the ECM enters the fail–safe mode and limits the engine power. The fail–safe mode continues until the ignition switch is turned to OFF.

P1271 Malfunction:

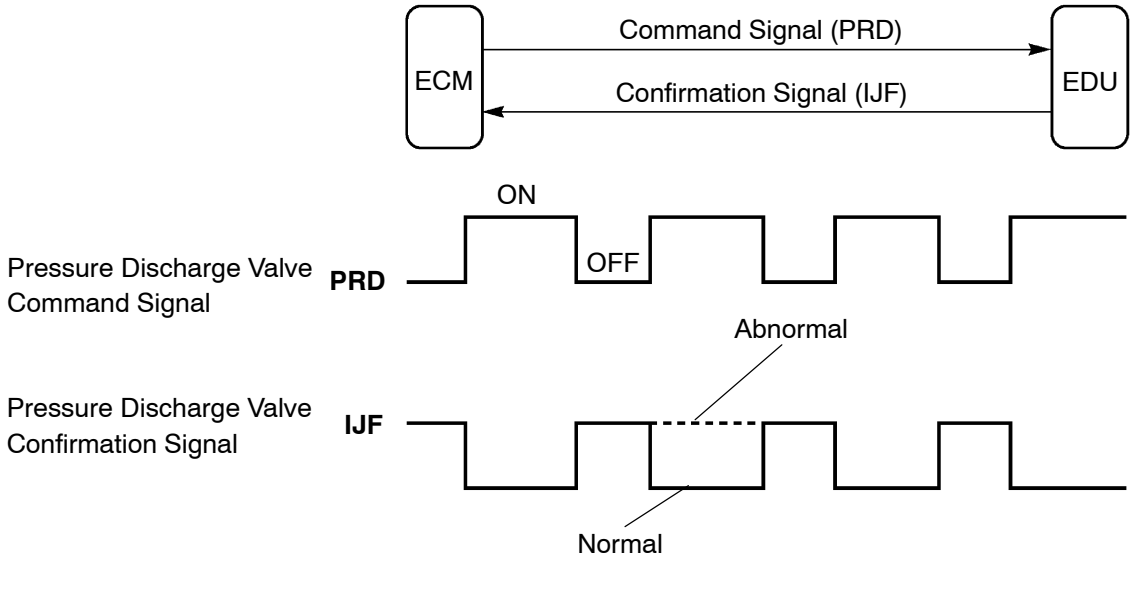

P1272 (Closed malfunction of the pressure discharge valve):

The pressure discharge valve will open and discharge the internal fuel pressure from the common rail to the fuel tank when the ignition switch is turned to OFF. In this event, the ECM compares the actual dropping rate of the internal fuel pressure and the simulated dropping rate. If the ECM judges the actual dropping rate is smaller than the simulation, the ECM then judges that the valve has stuck closed and sets this DTC. This DTC detection will be activated if the internal fuel pressure does not drop below the specified level after the ignition switch has been turned to OFF.

If this DTC is present, the ECM enters the fail–safe mode and limits the engine power. The fail–safe mode continues until the ignition switch is turned to OFF.

MONITOR STRATEGY

P1271:

Required sensors	EDU
Frequency of operation	Continuous
Duration	3 seconds
CHK ENG operation	1 driving cycle

P1272:

Required sensors	Fuel pressure sensor
Frequency of operation	Once per driving cycle
Duration	1 second
CHK ENG operation	2 driving cycles

TYPICAL ENABLING CONDITIONS

P1271:

Specification
Drive the vehicle at 50 km/h (31 mph) with the 3rd gear and then decelerate it by completely releasing the accelerator pedal

P1272:

Item	Specification	
	Minimum	Maximum
Fuel pressure	30 MPa (306 kgf/cm^2, 4,351 psi)	–
Fuel temperature	0°C (32°F)	–
Battery voltage	11 V	–
The monitor will not run if the fuel pressure sensor, pressure discharge valve circuit, or fuel temperature sensor is malfunctioning		

TYPICAL MALFUNCTION THRESHOLDS

P1271:

Threshold
If the confirmation signals from the EDU is not present, despite the ECM sending the command signals regularly during decelerating

P1272:

Threshold
If the internal pressure stays beyond the specified level after the ignition switch was turned to OFF

WIRING DIAGRAM

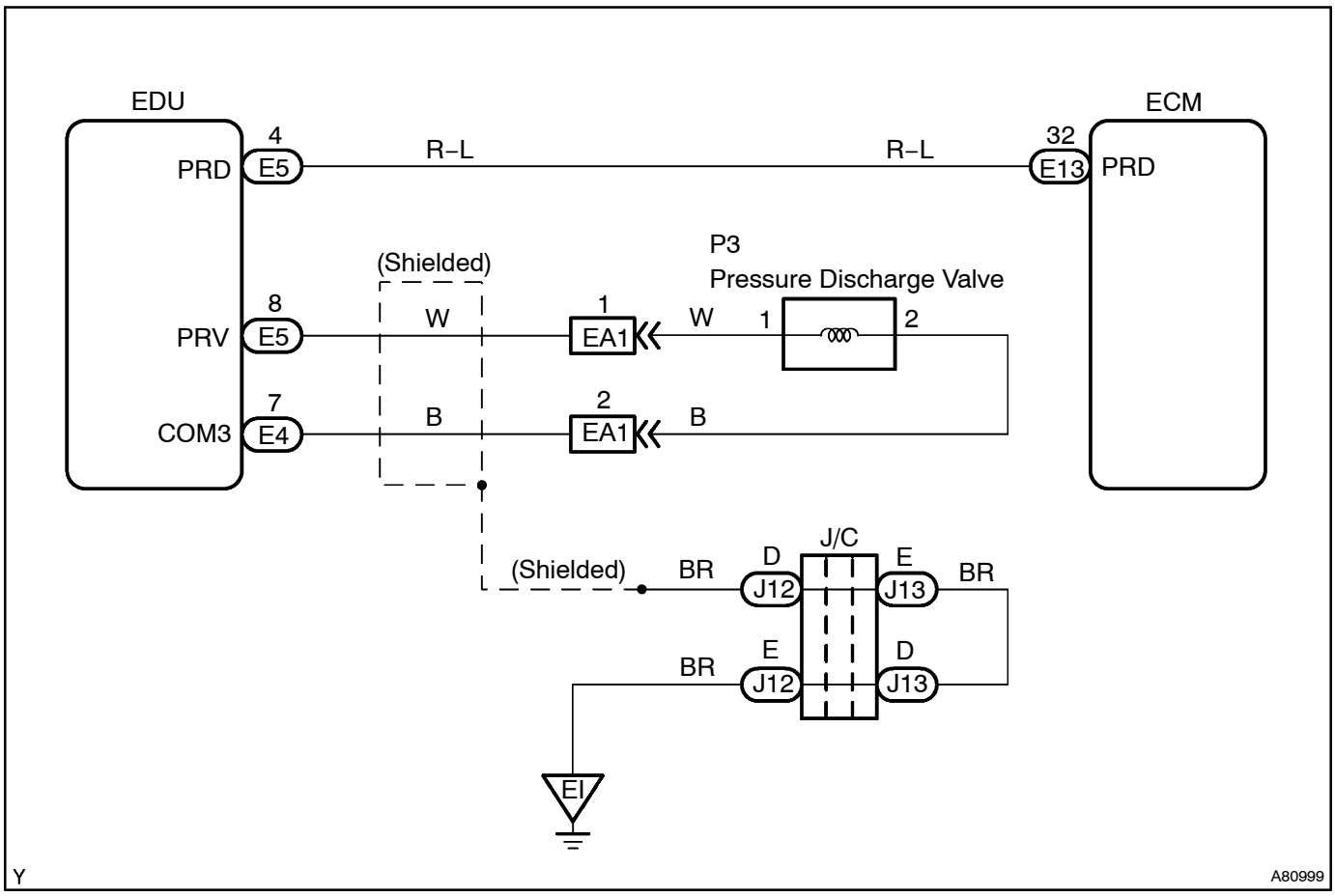

PULSE GENERATION INSPECTION

HINT:

Problem area can be identified by checking the waveform at the following terminals.

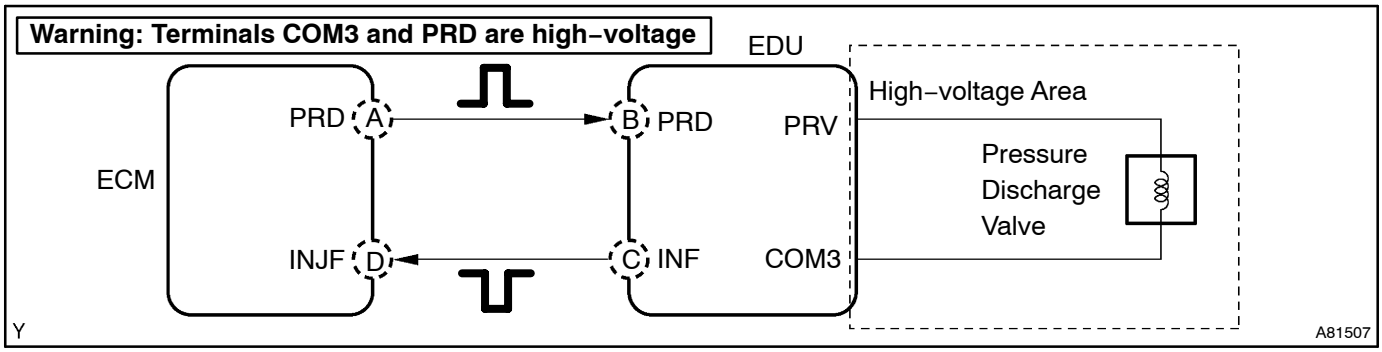

HINT:

If you check the ECM side first, inspect the following A and D in sequence. If you check the EDU side first, inspect the following B and C in sequence. This shortens inspecting time.

Inspection Point	Trouble Area
A	• ECM
B (If A is normal)	• Open or short in "PRD (ECM)" – "PRD (EDU)" circuit
C (If A and B are normal)	• Open or short in "PRV (EDU)" – "COM3 (EDU)" circuit • Pressure discharge valve • EDU
D (If A, B and C are normal)	• Open or short in "INF (EDU)" – "INJF (ECM)" circuit (P0200 is set simultaneously)

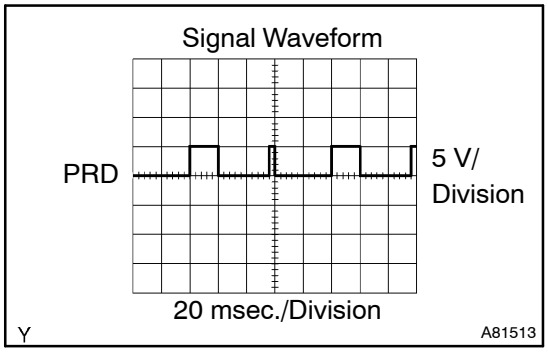

(a) Reference: Inspection using the oscilloscope.
During idling, the correct waveform is as shown in the diagram on the left.

Inspection Point	Specified Condition
A and B	Correct waveform is as shown

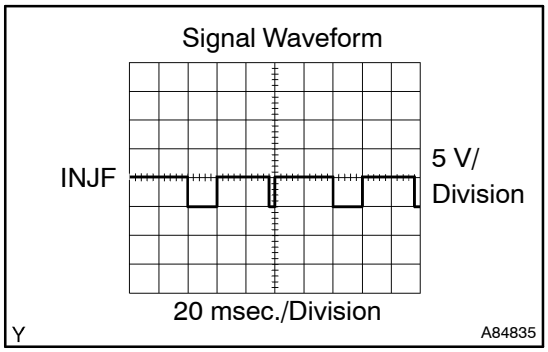

(b) Reference: Inspection using the oscilloscope.
During idling, the correct waveform is as shown in the diagram on the left.

Inspection Point	Specified Condition
C and D	Correct waveform is as shown

INSPECTION PROCEDURE

HINT:

- After completing repairs, confirm that P1271 and/or P1272 is not present again.
- If P0200 and P1271 are present simultaneously, there is open in the INJF wire harness between the EDU and ECM, or there is open in the wire harness for both injector and pressure discharge valve.
- Read freeze frame data using the hand–held tester. Freeze frame data records the engine conditions when a malfunction is detected. When troubleshooting, freeze frame data can help determine if the vehicle was running or stopped, if the engine was warmed up or not, if the air–fuel ratio was lean or rich, and other data from the time the malfunction occurred.

1 READ OUTPUT DTC(DTC P1271 AND/OR P1272)

(a) Connect the hand–held tester to the DLC3.
(b) Turn the ignition switch to ON and turn the hand–held tester ON.
(c) Select the item ”DIAGNOSIS / OBD/MOBD / DTC INFO / CURRENT CODES”.
(d) Read DTCs.

Result:

Display (DTC output)	Proceed to
P1271 and/or P1272	A
P1272	B

B → **Go to step 8**

A

2 INSPECT COMMON RAIL ASSY (PRESSURE DISCHARGE VALVE)

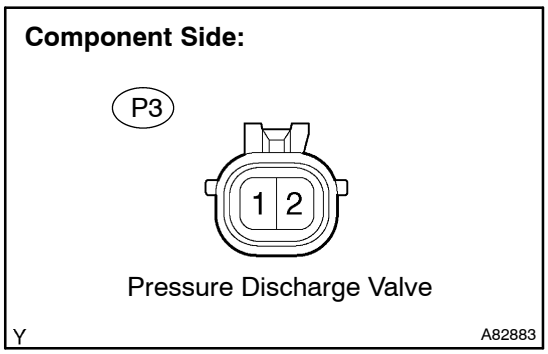

(a) Disconnect the P3 pressure discharge valve connector.
(b) Measure the resistance between the terminals of the pressure discharge valve.
Standard: 0.85 to 1.05 Ω at 20°C (68°F)
(c) Reconnect the pressure discharge valve connector.

NG → **REPLACE COMMON RAIL ASSY (PRESSURE DISCHARGE VALVE) (See page 11–67)**

OK

3 CHECK HARNESS AND CONNECTOR(PRESSURE DISCHARGE VALVE – EDU)

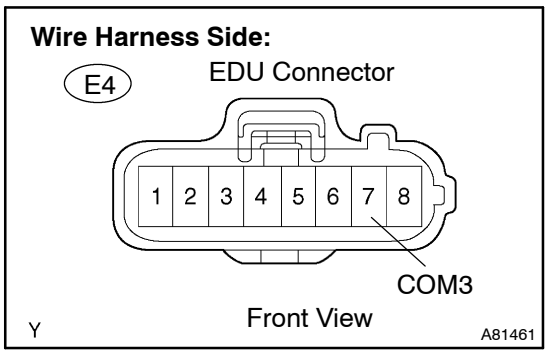

(a) Disconnect the E4 and E5 EDU connectors.
(b) Disconnect the P3 pressure discharge valve connector.
(c) Check the resistance between the wire harness side connectors.

Standard (Check for open):

Tester Connection	Specified Condition
COM3 (E4–7) – (P3–2)	Below 1 Ω
PRV (E5–8) – (P3–1)	

Standard (Check for short):

Tester Connection	Specified Condition
COM3 (E4–7) or (P3–2) – Body ground	10 kΩ or higher
PRV (E5–8) or (P3–1) – Body ground	

(d) Reconnect the EDU connectors.
(e) Reconnect the pressure discharge valve connector.

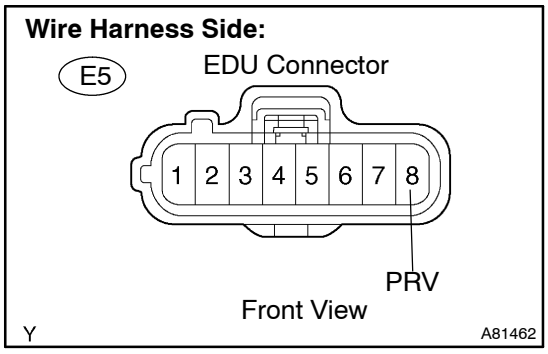

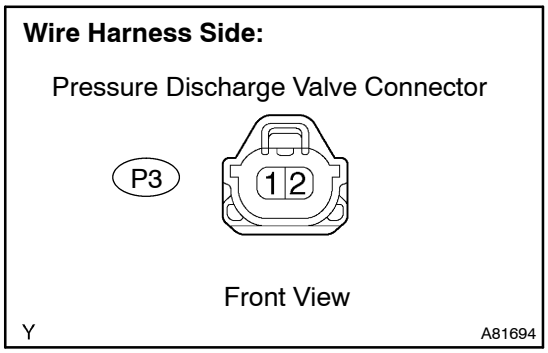

NG → **REPAIR OR REPLACE HARNESS OR CONNECTOR**

OK

4 CHECK HARNESS AND CONNECTOR(EDU – ECM)

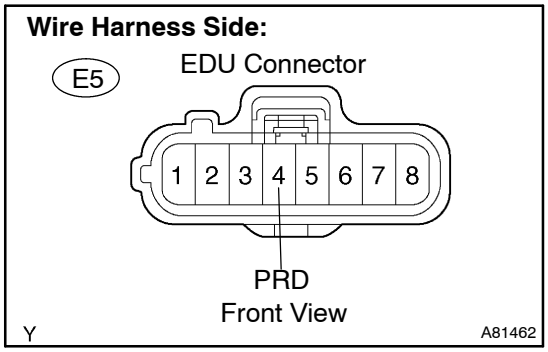

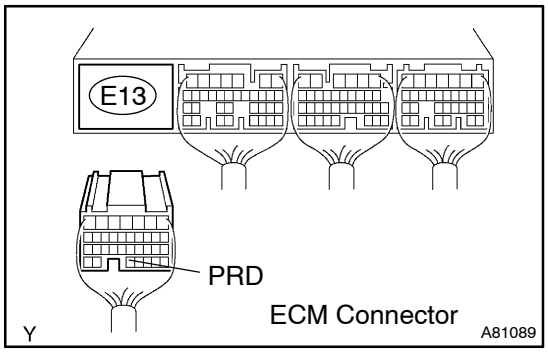

(a) Disconnect the E5 EDU connector.
(b) Disconnect the E13 ECM connector.
(c) Check the resistance between the wire harness side connectors.

Standard (Check for open):

Tester Connection	Specified Condition
PRD (E5–4) – PRD (E13–32)	Below 1 Ω

Standard (Check for short):

Tester Connection	Specified Condition
PRD (E5–4) or PRD (E13–32) – Body ground	10 kΩ or higher

(d) Reconnect the EDU connector.
(e) Reconnect the ECM connector.

NG → **REPAIR OR REPLACE HARNESS OR CONNECTOR**

OK

5 INSPECT INJECTOR DRIVER(BATTERY VOLTAGE)

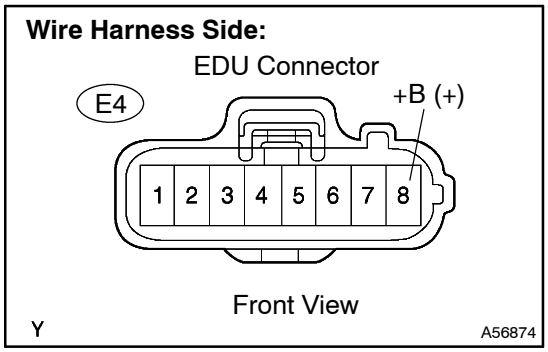

(a) Disconnect the E4 and E5 EDU connectors.
(b) Turn the ignition switch to ON.
(c) Measure the voltage between the specified terminals of each EDU connector.

Standard:

Tester Connection	Specified Condition
+B (E4–8) – GND (E5–1)	9 to 14 V

(d) Reconnect the EDU connectors.

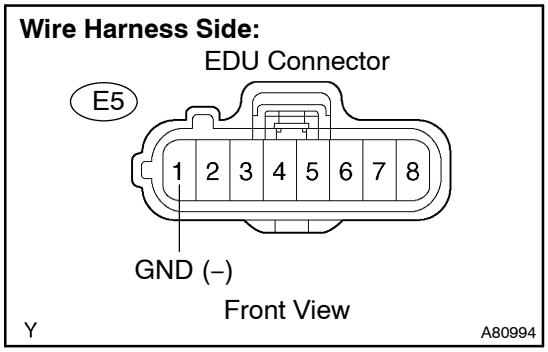

NG → **CHECK INJECTOR DRIVER POWER SOURCE CIRCUIT (EDU – BATTERY)**

OK

6	INSPECT ECM(PRD VOLTAGE)

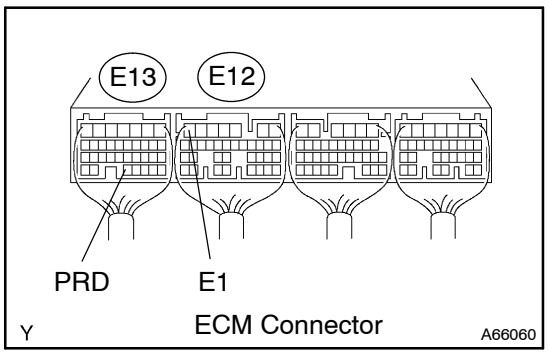

(a) Inspect using the oscilloscope.
(b) Drive the vehicle at 50 km/h (31 mph) with the third gear, and then decelerate by releasing the accelerator pedal.
(c) Check the waveform between the specified terminal of the E12 and E13 ECM connectors.

Standard:

Tester Connection	Specified Condition
PRD (E13–32) – E1 (E12–7)	Correct waveform is as shown

HINT:
Alternative Inspection:
Run the engine at 2,500 rpm for 10 seconds and then decrease the engine speed to an idle with the accelerator pedal completely released.

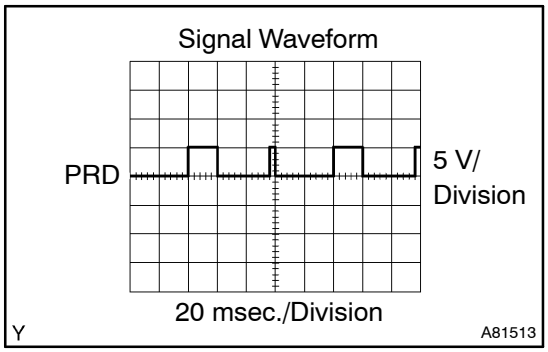

NG → **REPLACE ECM (See page 10–29)**

OK

7	REPLACE INJECTOR DRIVER

GO

CHECK IF DTCS OUTPUT RECUR (DTC P1271 AND/OR P1272)

HINT:
P1271:
After clearing the DTC, drive the vehicle at 50 km/h (31 mph) with the third gear and then decelerate by releasing the accelerator pedal. Check that P1271 is not present.
P1272:
After clearing the DTC, start and stop the engine twice, and then confirm that P1272 is not present.

8	REPLACE COMMON RAIL ASSY(PRESSURE DISCHARGE VALVE) (See page 11–67)

GO

CHECK IF DTCS OUTPUT RECUR (DTC P1271 AND/OR P1272)

HINT:
P1271:
After clearing the DTC, drive the vehicle at 50 km/h (31 mph) with the third gear and then decelerate by releasing the accelerator pedal. Check that P1271 is not present.
P1272:
After clearing the DTC, start and stop the engine twice, and then confirm that P1272 is not present.

DTC	P1386	INJECTOR FOR EXHAUST FUEL ADDITION

HINT:

- For more information on the exhaust fuel addition injector and TOYOTA D–CAT (*1), see page 05–255.
- If P1386 is present, refer to the diagnostic trouble codes (DTCs) table for TOYOTA D–CAT on page 05–255.
- ”Learning value” used in here represents a correction learning value of the fuel addition volume to raise the DPNR (*2) catalyst temperature to a target range.

*1: Diesel Clean Advanced Technology.
*2: Diesel Particulate–NOx Reduction system.

CIRCUIT DESCRIPTION

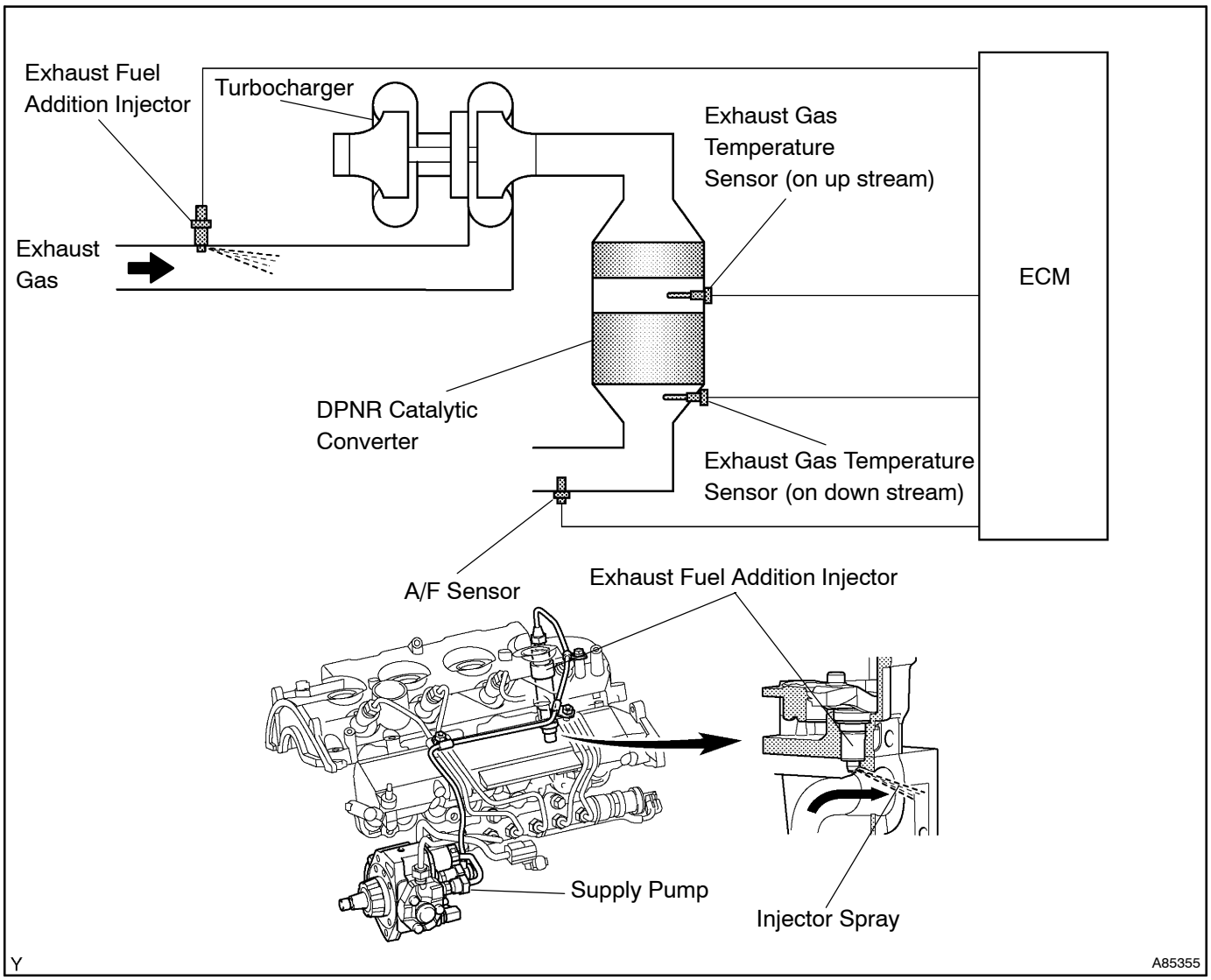

The exhaust fuel addition injector is mounted on the exhaust port of the cylinder head, and low pressure is provided to the injector by the feed pump in the supply pump. This injector adds fuel by a control signal from the ECM.

This injector is used for two different controls: DPNR catalyst regeneration and nitrogen oxides (NOx) reduction.

Under the DPNR catalyst regeneration control, the injector adds fuel to raise a catalyst temperature.

In the other control, the injector helps the air–fuel ratio become RICH. As a result, NOx in the exhaust gas will be reduced in response to the RICH air–fuel ratio.

DTC No.	DTC Detection Condition	Main Trouble Area	Related Trouble Area
P1386	• Excess or low fuel addition volume from exhaust fuel addition injector: When air–fuel ratio deviates from a value estimated by ECM while the injector adds fuel (1 trip detection logic)	• Open or short in exhaust fuel addition injector circuit • Exhaust fuel addition injector • DPNR catalytic converter (Manifold converter sub–assy)	• Open in exhaust temperature sensor circuit • A/F sensor • Exhaust gas temperature sensor • Supply pump assy • Mass air flow meter • Fuel leaks in exhaust fuel addition injector • Main injector • Cylinder compression pressure • Valve clearance • Valve timing • Air intake system has blockages • Air intake system has leakage • Exhaust system has blockages • Exhaust system has leakage • EGR system has blockages • EGR system has leakage • ECM
	• Low fuel addition volume from exhaust fuel addition injector: When learning value (*3) exceeds standard level (1 trip detection logic)		
	• Exhaust fuel addition injector nozzle stuck open: When air–fuel ratio becomes RICHER than standard level, or exhaust gas temperature reaches higher than standard level (1 trip detection logic)		

*3: Correction learning value of the fuel addition volume to raise the DPNR catalyst temperature to a target range.

HINT:

DTC P2047 (Reductant injector circuit/open [bank1 unit1]) will be present if there is an open malfunction in the exhaust fuel addition injector circuit.

MONITOR DESCRIPTION

HINT:
”Learning value” used in here represents a correction learning value of the fuel addition volume to raise the DPNR (*4) catalyst temperature to a target range.
*4: Diesel Particulate–NOx Reduction system.
In order to detect malfunction in the exhaust fuel addition injector, the ECM monitors: the air–fuel ratio, DPNR catalytic temperature and learning value.

- When the exhaust fuel addition injector adds fuel during NOx reduction, the ECM monitors the air–fuel ratio when the exhaust fuel addition injector adds fuel. If the air–fuel ratio is too RICH or too LEAN against the ECM predetermined air–fuel ratio, the ECM judges the fuel addition volume small or large, and illuminates the CHK ENG. In this malfunction, there is no fail–safe operation.

- The ECM always monitors the DPNR catalytic converter temperature and the air–fuel ratio. When the temperature reaches higher than its usual level or the air–fuel ratio becomes extremely RICH, the ECM judges that the injector has stuck open and illuminates the CHK ENG. If this malfunction occurs, the ECM enters the fail–safe mode to limits its acceptable vehicle speed to approximately 10 km/h (6 mph) at maximum by restraining the engine power.

- Under DPNR catalyst regeneration, the ECM monitors the learning value. Normally, the learning value for the DPNR catalyst regeneration is in the vicinity of 1.0. Thus the learning value is at 1.4 or more for a certain period of time, the ECM judges the fuel addition volume from the injector insufficient and illuminates the CHK ENG. If this malfunction occurs, the ECM enters the fail–safe mode to limit its acceptable vehicle speed to approximately 80 km/h (50 mph) at maximum by restraining the engine power.

Malfunction Condition by Fail–Safe Operation:

Fail–Safe Operation	Malfunction Condition	Malfunction Detection Condition	Drive Pattern
No fail–safe operation	Low or excess fuel addition volume from the exhaust fuel addition injector	When the exhaust fuel addition injector adds fuel during NOx reduction, if actual air–fuel ratio deviates from a value estimated by the ECM when the exhaust fuel addition injector adds fuel	After engine warm–up, perform DPNR REJU (PM) in the ACTIVE TEST menu using the hand–held tester, and drive at constant vehicle speed within 50 to 100 km/h (31 to 62 mph) for more than 15 minutes
Limits engine power by permitting driving at vehicle speed of approximately 10 km/h (6 mph) at maximum	Exhaust fuel addition injector has stuck open	DPNR catalytic converter temperature reaches higher than 800°C (1,472°F) or air–fuel ratio is less than approximately 12 for a couple of seconds	Idling engine for more than 5 minutes (*5)
Limits engine power by permitting driving at vehicle speed of approximately 80 km/h (50 mph) at maximum (HINT: DPNR catalyst regeneration is prohibited)	Low fuel addition volume from the exhaust fuel addition injector	Under DPNR catalyst regeneration, when learning value of 1.4 or more continues for a certain period of time (*6)	After engine warm–up, perform DPNR REJU (PM) in the ACTIVE TEST menu using the hand–held tester, and drive at constant vehicle speed within 50 to 100 km/h (31 to 62 mph) for more than 30 minutes

*5: The DPNR catalytic converter temperature will not reach 800°C (1,472°F) or higher during idling even if the exhaust fuel addition injector has stuck open.
*6: While the DPNR catalyst regeneration is exercised, the ECM raises the DPNR catalytic converter temperature to more than approximately 600°C (1,112°F) by adding fuel using the exhaust fuel addition injector. If the temperature does not reach that temperature regardless of the attempt, the correction learning value of the fuel addition volume increments to raise the DPNR catalytic converter temperature to a target range.

Malfunction Detection:

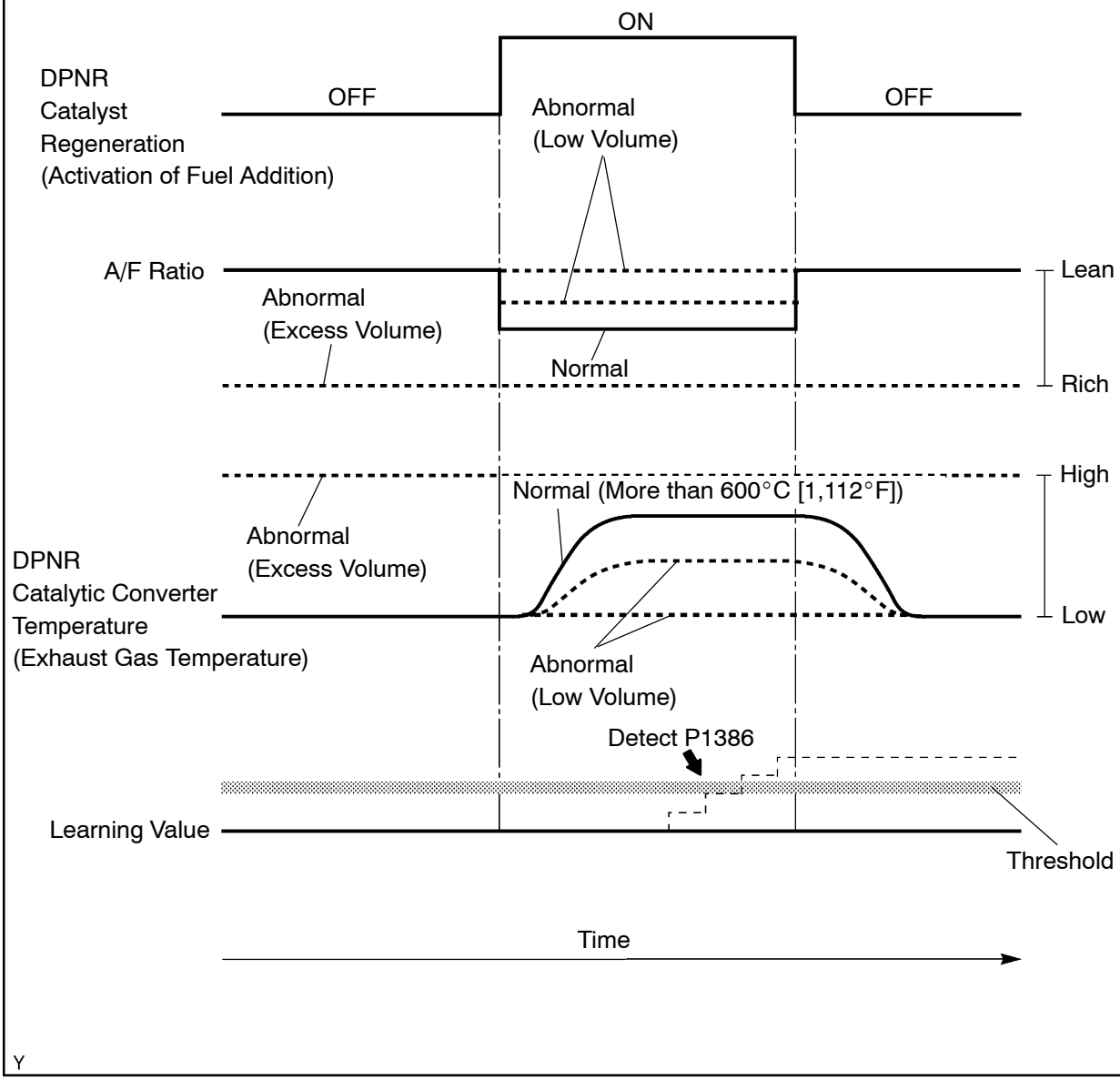

WIRING DIAGRAM

Refer to DTC P2047 on page 05–470.

INSPECTION PROCEDURE

HINT:

- Read freeze frame data using the hand–held tester. Freeze frame data records the engine conditions when a malfunction is detected. When troubleshooting, freeze frame data can help determine if the vehicle was running or stopped, if the engine was warmed up or not, if the air–fuel ratio was lean or rich, and other data from the time the malfunction occurred.
- ”Learning value” used in here represents a correction learning value of the fuel addition volume to raise the DPNR catalyst temperature to a target range.

1 CHECK OTHER DTC OUTPUT(IN ADDITION TO P1386)

(a) Connect the hand–held tester to the DLC3.
(b) Turn the ignition switch to ON and turn the hand–held tester ON.
(c) Select the item ”DIAGNOSIS / OBD/MOBD / DTC INFO / CURRENT CODES”.
(d) Read DTCs.

Result:

Display (DTC output)	Proceed to
P1386	A
P1386 and other DTCs	B

HINT:
If any other codes besides P1386 are output, perform troubleshooting for those DTCs first.

B → **GO TO RELEVANT DTC CHART (See page 05–299)**

A

2 CHECK FAIL–SAFE CONDITION

(a) Check the condition of fail–safe operation while the CHK ENG is being illuminated.

Result:

Condition of Fail–Safe Operation	Proceed to
Permits driving at vehicle speed of approximately 10 km/h (6 mph) at maximum	A
Permits driving at vehicle speed of approximately 80 km/h (50 mph) at maximum	B
No fail–safe operation	C

B → **Go to step 7**

C → **Go to step 4**

A

3 READ VALUE OF HAND–HELD TESTER(EXHAUST GAS TEMPERATURE)

(a) Connect the hand–held tester to the DLC3.
(b) Turn the ignition switch to ON and turn the hand–held tester ON. (Do not start the engine)
(c) Select the item ”DIAGNOSIS / OBD/MOBD / DATA LIST / ALL / EX TEMP (IN)” and ”DIAGNOSIS / OBD/MOBD / DATA LIST / ALL / EX TEMP (OUT)” and read its value displayed on the hand–held tester.

Result:

Temperature Displayed	Proceed to
OK (Same value as actual exhaust gas temperature)	A
1,000°C (1,832°F)	B

HINT:
If there is a open circuit, the hand–held tester indicates 1,000°C (1,832°F).

B → GO TO DTC P0544, P0545, P0546, P2031, P2032 AND P2033 (RELATED TO EXHAUST GAS TEMPERATURE SENSOR) (See page 05–415)

A

4 PERFORM ENGINE RPM ACCELERATION(WHITE SMOKE AND FUEL SMELL)

CAUTION:
Stop the engine immediately if you observe that there is white smoke or a fuel smell during the following inspection. Fuel may be leaked from the exhaust fuel addition injector.

(a) Remove the battery cable for 1 minute, and then reconnect the cable.
(b) After the engine starts, promptly accelerate the engine to approximately 3,000 rpm with no load 3 times.
(c) Check for white smoke in exhaust gases.
(d) Check for a smell in exhaust gases.

Result:

Result	Proceed to
Other than above	A
Either white smoke or fuel smells in exhaust gases	B

B → Go to step 17

A

5 READ VALUE OF HAND–HELD TESTER(A/F RATIO)

CAUTION:
Stop the engine immediately if you observe that there is white smoke or a fuel smell during the following inspection. Fuel may be leaked from the exhaust fuel addition injector.

(a) Connect the hand–held tester to the DLC3.
(b) Turn the ignition switch to ON and turn the hand–held tester ON.
(c) Start the engine.
(d) Select the item ”DIAGNOSIS / OBD/MOBD / DATA LIST / ALL / AF FT B1 S1”.
(e) Read the air–fuel ratio displayed on the tester after 3–minute idling.

Result:

A/F Ratio	Proceed to
More than 12	A
Less than 12	B

B → Go to step 17

A

6 READ VALUE OF HAND–HELD TESTER(EXHAUST GAS TEMPERATURE)

CAUTION:
Stop the engine immediately if you observe that there is white smoke or a fuel smell during the following inspection. Fuel may be leaked from the exhaust fuel addition injector.

(a) Connect the hand–held tester to the DLC3.
(b) Turn the ignition switch to ON and turn the hand–held tester ON.
(c) Start the engine.
(d) Select the item "DIAGNOSIS / OBD/MOBD / DATA LIST / ALL / EX TEMP (IN) and EX TEMP (OUT)".
(e) Check that exhaust gas temperature is within the specification below.
Result:

Condition	Exhaust Gas Temperature (°C)
Idling after engine warm–up	Constant at approximately 50 to 700 (122 to 1,292°F)

NG → **GO TO DTC P0544, P0545, P0546, P2031, P2032 AND P2033 (RELATED TO EXHAUST GAS TEMPERATURE SENSOR) (See page 05–415)**

OK

7 READ VALUE OF HAND–HELD TESTER(A/F RATIO)

(a) Connect the hand–held tester to the DLC3.
(b) Turn the ignition switch to ON and turn the hand–held tester ON.
(c) Start the engine.
(d) Select the item "DIAGNOSIS / OBD/MOBD / DATA LIST / ALL / AF FT B1 S1".
(e) After warming up the engine, check if the air–fuel ratio varies when accelerating the engine from idling to 3,000 rpm by fully depressing the accelerator pedal 3 times.
Result:

Air–fuel Ratio	Proceed to
Varies	OK
Not varies once	NG

NG → **GO TO DTC P2237, P2238 AND P2239 (RELATED TO A/F SENSOR) (See page 05–484)**

OK

8 INSPECT EXHAUST FUEL ADDITION INJECTOR ASSY(RESISTANCE)

Component Side:
Exhaust Fuel Addition Injector

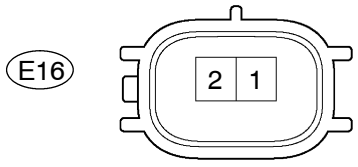

Y A81503

(a) Disconnect the E16 exhaust fuel addition injector connector.
(b) Measure the resistance between the terminals of the exhaust fuel addition injector.
Standard:

Tester Connection	Specified Condition
1 – 2	11.6 to 12.4 Ω at 20°C (68°F)

(c) Reconnect the exhaust fuel addition injector connector.

NG	REPLACE EXHAUST FUEL ADDITION INJECTOR ASSY (See page 14–166)

OK

9 CHECK HARNESS AND CONNECTOR(EXHAUST FUEL ADDITION INJECTOR – ECM)

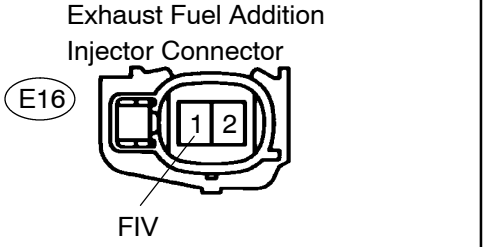

(a) Disconnect the E16 exhaust fuel addition injector connector.
(b) Disconnect the E13 ECM connector.
(c) Check the resistance between the wire harness side connectors.

Standard (Check for open):

Tester Connection	Specified Condition
FIV (E13–3) – (E16–1)	Below 1 Ω
E2 (E13–28) – (E16–2)	

Standard (Check for short):

Tester Connection	Specified Condition
FIV (E13–3) or (E16–1) – Body ground	10 kΩ or higher

(d) Reconnect the exhaust fuel addition injector connector.
(e) Reconnect the ECM connector.

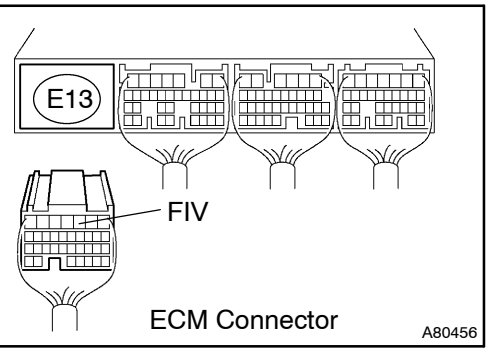

NG	REPAIR OR REPLACE HARNESS OR CONNECTOR

OK

10 CHECK FUEL LEAKAGE(IN EXHAUST FUEL ADDITION INJECTOR)

(a) Visually check if there is no fuel leak between the supply pump and exhaust fuel addition injector.

HINT:

- Primary pressure of maximum 1 MPa (10 kgf/cm^2, 145 psi) is provided from a feed pump inside the supply pump to the exhaust fuel addition injector.
- There is possibility that fuel leaks inside the components (supply pump, etc) have been occurred.

NG	REPAIR OR REPLACE

OK

11	READ VALUE OF HAND–HELD TESTER(COMPENSATION OF INJECTION VOLUME FOR EACH CYLINDER)

(a) Connect the hand–held tester to the DLC3.
(b) Turn the ignition switch to ON and turn the hand–held tester ON.
(c) Start the engine.
(d) Select the item ”DIAGNOSIS / OBD/MOBD / DATA LIST / ALL / INJ VOLUME FB” and read its value displayed on the hand–held tester.
Result:

Result	Proceed to
Compensatory Injection Volume is more than 3.0 mm^3	A
Compensatory Injection Volume is 3.0 mm^3 or less	B

HINT:
Usually compensation injection volume is 3.0 mm^3 or less.

B → **Go to step 13**

A

12	CHECK ENGINE COMPONENTS PARTS

(a) Check that there is no abnormality in the main injector, cylinder compression pressure, valve timing and valve clearance.
(b) Check that there is no leakage or blockage in the air intake, exhaust and EGR systems.

NG → **REPAIR OR REPLACE**

OK

13 INSPECT EXHAUST FUEL ADDITION INJECTOR ASSY(INJECTION VOLUME)

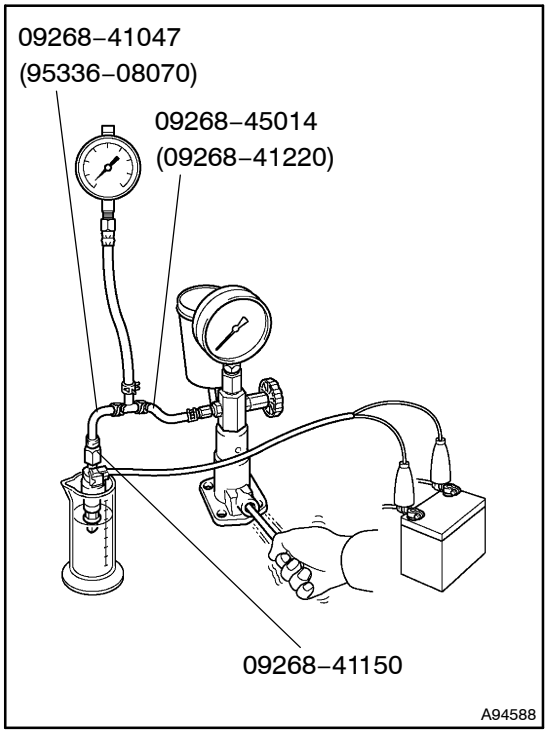

(a) Remove the exhaust fuel addition injector.
(b) Attach a exhaust fuel addition injector to a nozzle tester.
(c) Apply pressure of 0.29 MPa (3.0 kgf/cm^2, 42 psi) to the nozzle tester.
(d) Connect SST (Wire) to the exhaust fuel addition injector.
Standard:

Condition	Result
Let the injector undisturbed for 1minute with fuel pressurized	No leak from the injector
Applies battery voltage to the injector	Fuel is emitted from the injector

HINT:
- Injection volume after letting the exhaust fuel addition injector undisturbed for 10 seconds with the pressurized fuel applied as follows.
Reference: 25 cm^3 (1.5 cuin.)
- The reference is informative values, thus, your reading will be out of this range on account of measuring condition errors etc.
- Check that a nozzle of the exhaust fuel addition injector is not clogged.

(e) Reinstall the exhaust fuel addition injector.

NG → **REPLACE EXHAUST FUEL ADDITION INJECTOR ASSY (See page 14–166)**

OK

14 PERFORM ACTIVE TEST USING HAND–HELD TESTER(DPNR CATALYST REGENERATION)

(a) Clear the learning value by removing the negative battery for more than 1 minute.
(b) Connect the hand–held tester to the DLC3.
(c) Turn the ignition switch to ON and turn the hand–held tester ON.
(d) Select the item ”DIAGNOSIS / OBD/MOBD / ACTIVE TEST / DPNR REJU (PM)”.
(e) After warming up the engine, drive the vehicle at constant vehicle speed within 50 to 100 km/h (31 to 62 mph) (with smooth throttle operations) for more than 15 minutes.
(f) Select the item ”DIAGNOSIS / OBD/MOBD / DATA LIST / ALL / AF FT B1 S1”.
(g) Select the item ”DIAGNOSIS / OBD/MOBD / DATA LIST / ALL / EX TEMP (IN) and EX TEMP (OUT)”.
(h) Select the item ”DIAGNOSIS / OBD/MOBD / DATA LIST / ALL / EX FUEL ADD FB”.
(i) Check that the exhaust gas temperatures (EX TEMP [IN] and [OUT]) and the learning value (EX FUEL ADD FB) are within the specification below.
Result:

Result	Proceed to
Exhaust gas temperature does not reach higher than 600°C (1,112°F)	A
Exhaust gas temperature reaches higher than 600°C (1,112°F), and the learning value remains in the vicinity of 1.0	B

B → CHECK FOR INTERMITTENT PROBLEMS (See page 05–270)

A

15	REPLACE EXHAUST FUEL ADDITION INJECTOR ASSY (See page 14–166)

GO

16	PERFORM ACTIVE TEST USING HAND–HELD TESTER(DPNR CATALYST REGENERATION)

(a) Clear the learning value by removing the negative battery cable for more than 1 minute.
(b) Connect the hand–held tester to the DLC3.
(c) Turn the ignition switch to ON and turn the hand–held tester ON.
(d) Select the item ”DIAGNOSIS / OBD/MOBD / ACTIVE TEST / DPNR REJU (PM)”.
(e) After warming up the engine, drive the vehicle at constant vehicle speed within 50 to 100 km/h (31 to 62 mph) (with smooth throttle operations) for more than 15 minutes.
(f) Select the item ”DIAGNOSIS / OBD/MOBD / DATA LIST / ALL / AF FT B1 S1”.
(g) Select the item ”DIAGNOSIS / OBD/MOBD / DATA LIST / ALL / EX TEMP (IN) and EX TEMP (OUT)”.
(h) Select the item ”DIAGNOSIS / OBD/MOBD / DATA LIST / ALL / EX FUEL ADD FB”.
(i) Check that the exhaust gas temperatures (EX TEMP [IN] and [OUT]) and the learning value (EX FUEL ADD FB) are within the specification below.

Result:

Result	Proceed to
Exhaust gas temperature does not reach higher than 600°C (1,112°F)	A
Exhaust gas temperature reaches higher than 600°C (1,112°F), and the learning value remains in the vicinity of 1.0	B

B → SYSTEM OK

A

REPLACE MANIFOLD CONVERTER SUB–ASSY (DPNR CATALYTIC CONVERTER) (See page 14–108)

17 INSPECT EXHAUST FUEL ADDITION INJECTOR ASSY(INJECTION VOLUME)

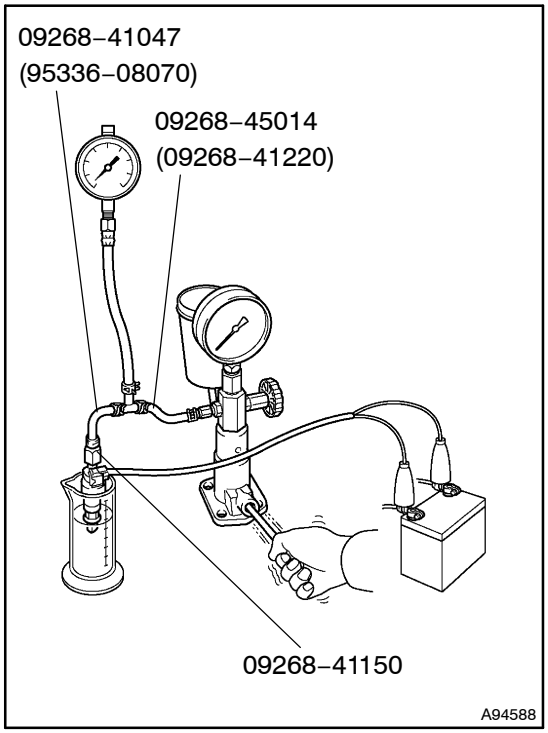

(a) Remove the exhaust fuel addition injector.
(b) Attach a exhaust fuel addition injector to a nozzle tester.
(c) Apply pressure of 0.29 MPa (3.0 kgf/cm^2, 42 psi) to the nozzle tester.
(d) Connect SST (Wire) to the exhaust fuel addition injector.
Standard:

Condition	Result
Let the injector undisturbed for 1minute with fuel pressurized	No leak from the injector
Applies battery voltage to the injector	Fuel is emitted from the injector

HINT:

- Injection volume after letting the exhaust fuel addition injector undisturbed for 10 seconds with the pressurized fuel applied as follows.
  Reference: 25 cm^3 (1.5 cuin.)
- The reference is informative values, thus, your reading will be out of this range on account of measuring condition errors etc.
- Check that a nozzle of the exhaust fuel addition injector is not clogged.

(e) Reinstall the exhaust fuel addition injector.

NG → **REPLACE EXHAUST FUEL ADDITION INJECTOR ASSY (See page 14–166)**

OK

GO TO DTC P1238 (RELATED MAIN INJECTOR) (See page 05–431)

HINT:

- If any one of the main injectors is in a closed valve malfunction, rough idle will result. Compensatory injection volume learning values of each cylinder can be read by using the hand–held tester. When the value is more than 3.0 mm^3, the cylinder is malfunctioning.
- Usually compensation injection volume is 3.0 mm^3 or less.

DTC	P1425	DIFFERENTIAL PRESSURE SENSOR CIRCUIT

DTC	P1427	DIFFERENTIAL PRESSURE SENSOR CIRCUIT LOW

DTC	P1428	DIFFERENTIAL PRESSURE SENSOR CIRCUIT HIGH

HINT:

- For more information on the differential pressure sensor and TOYOTA D–CAT (*1), see page 05–255.
- If P1425, P1427 and/or P1428 is present, refer to the diagnostic trouble codes (DTCs) table for TOYOTA D–CAT on page 05–255.

*1: Diesel Clean Advanced Technology.

CIRCUIT DESCRIPTION

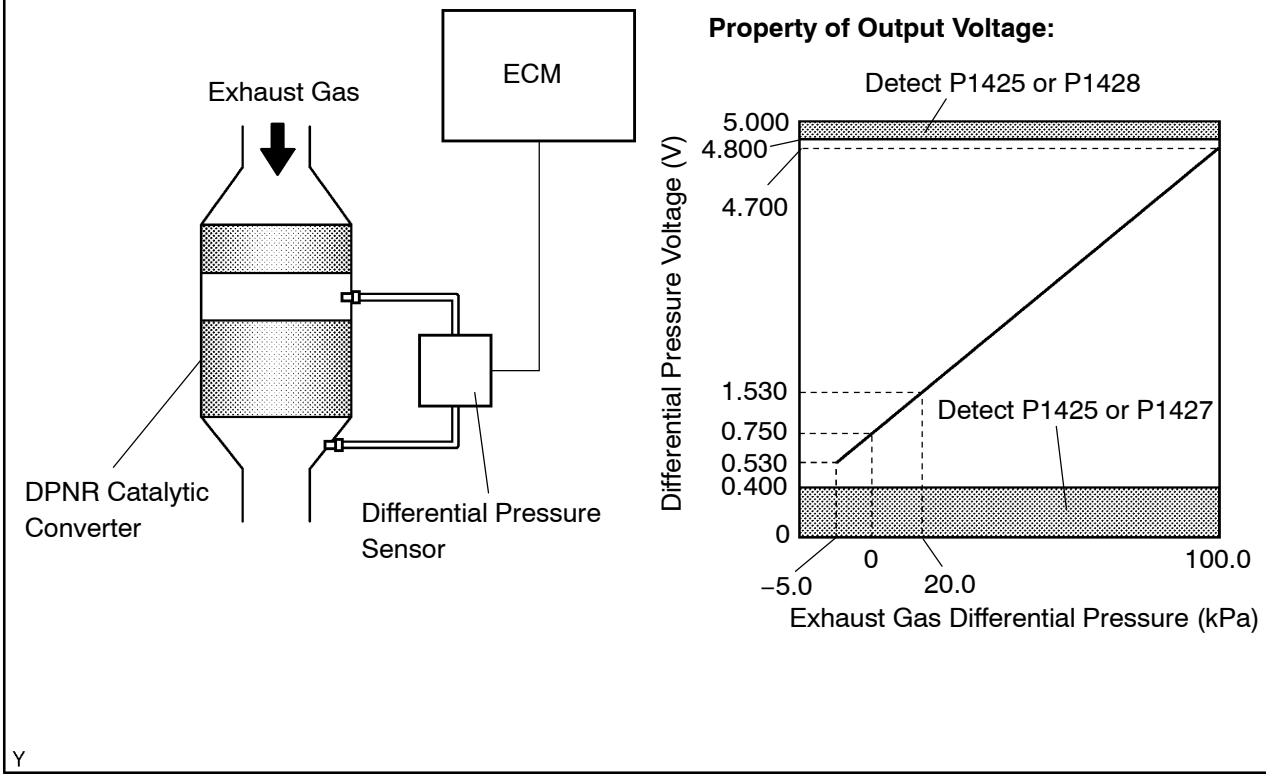

Two sensible portions of the differential pressure sensor are mounted before and after the DPNR (*2) catalytic converter and monitor exhaust gas differential pressure. The sensor itself is located far from the engine assembly to reduce the influence of vibration, and is a semiconductor–type that is not influenced by exhaust gases.

The ECM compares the exhaust gas pressure before and after DPNR catalytic converter by monitoring the pressure using the up–and downstream sensible portions of the differential pressure sensor. If difference between the pressure before and after the catalytic converter exceeds a standard level, the ECM judges that the catalytic converter has clogged with particulate matter (PM). When once the ECM judges it, the ECM begins to exercise the DPNR catalyst regeneration.

When output voltage of the sensor deviates from the normal operating range, the ECM interprets this as malfunction of the sensor circuit, and sets DTC P1425, P1427, or P1428 and then illuminates the CHK ENG.

*2: Diesel Particulate–NOx Reduction system.

HINT:

If vacuum hoses of the differential pressure sensor for up–and downstream sensible portions are connected to a upside down, the ECM interprets this as abnormal pressure difference, therefore DTC P1426 (Differential Pressure Sensor [Installation]) will be set and the CHK ENG will illuminate.

DTC No.	DTC Detection Condition	Trouble Area
P1425	Differential pressure sensor output voltage is less than 0.4 V, or more than 4.8 V for 3 seconds or more (1 trip detection logic)	• Open or short in differential pressure sensor circuit • Incorrect arrangement differential pressure sensor hose piping • Differential pressure sensor • ECM
P1427	Differential pressure sensor output voltage is less than 0.4 V for 3 seconds or more (1 trip detection logic)	
P1428	Differential pressure sensor output voltage is more than 4.8 V for 3 seconds or more (1 trip detection logic)	

HINT:

- DTC P1426 (Differential pressure sensor [installation]) will be present if there is incorrect vacuum hose arrangement of the differential pressure sensor.
- After confirming DTC P1425, P1427 and P1428, check the differential pressure in the ”DIAGNOSIS / OBD/MOBD / DATA LIST / ALL / DPNR DIFF PRESS ” using the hand–held tester.

Reference:

Engine Condition	Differential Pressure Output	Sensor Condition
Ignition Switch ON	Approximately 0 kPa	Normal
Always	3 kPa	Open or short circuit
3,000 rpm (No engine load)	Negative output	Incorrect arrangement of hose piping

MONITOR DESCRIPTION

In order to detect abnormality in the differential pressure sensor at any time, the ECM always monitors output voltage from the sensor. When the sensor output voltage deviates from the normal operating range (between 0.4 V and 4.8 V) for more than 3 seconds, the ECM interprets this as malfunction of the sensor circuit and illuminates the CHK ENG.

WIRING DIAGRAM

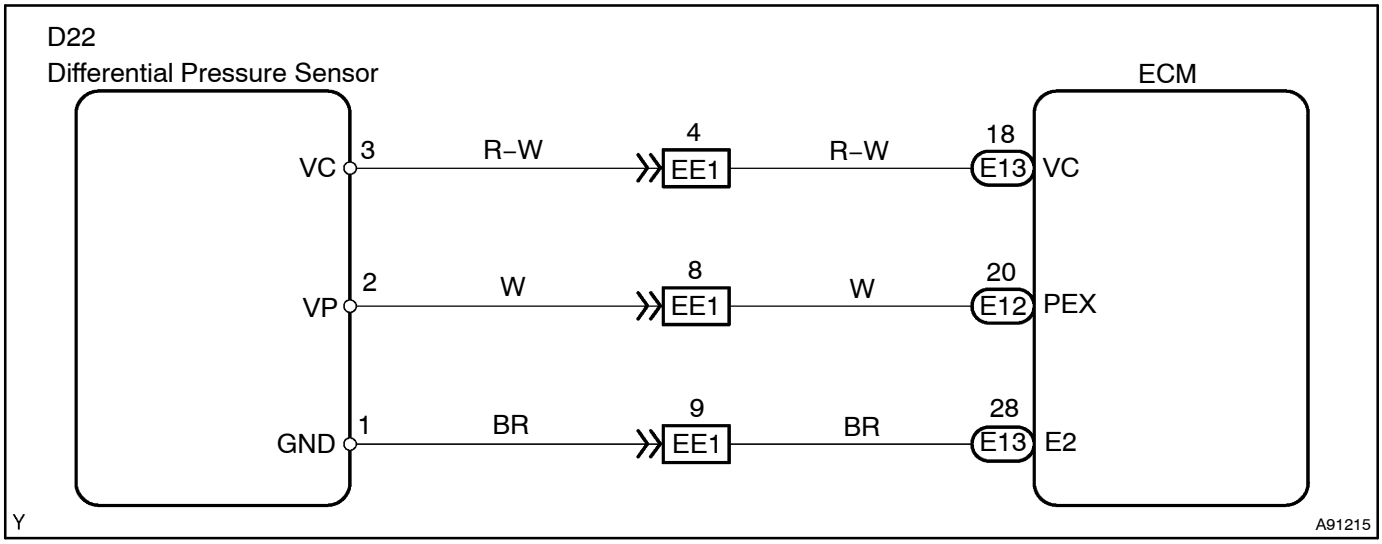

INSPECTION PROCEDURE

HINT:

Read freeze frame data using the hand–held tester. Freeze frame data records the engine conditions when a malfunction is detected. When troubleshooting, freeze frame data can help determine if the vehicle was running or stopped, if the engine was warmed up or not, if the air–fuel ratio was lean or rich, and other data from the time the malfunction occurred.

1	READ VALUE OF HAND–HELD TESTER(DIFFERENTIAL PRESSURE)

(a) Connect the hand–held tester to the DLC3.
(b) Turn the ignition switch to ON and turn the hand–held tester ON.
(c) Select the item ”DIAGNOSIS / OBD/MOBD / DATA LIST / ALL / DPNR DIFF PRESS”.
(d) Check that differential pressure is within the specification below.
Result:

Condition	Differential Pressure	Proceed to
Always	–5 kPa or less	A
Ignition Switch ON	–4 kPa to 98 kPa	B
Always	99 kPa	C

B → **CHECK FOR INTERMITTENT PROBLEMS (See page 05–270)**

C → **Go to step 3**

A

2	CHECK CONNECTION OF VACUUM HOSE(DIFFERENTIAL PRESSURE SENSOR – VACUUM TRANSMITTING PIPE)

(a) Check if vacuum hose arrangement between the differential pressure sensor and the vacuum transmitting pipe is not incorrect arrangement (see page 14–108).
(b) Check that there is no exhaust gas leak between the differential pressure sensor and the vacuum transmitting pipe (see page 14–108).

NG → **CORRECT TO NORMAL CONNECTION**

OK

3	CHECK BLOCKAGE(DIFFERENTIAL PRESSURE SENSOR)

CAUTION:
Be careful for being burned by exhaust gases during the following inspection.
(a) Disconnect the vacuum hose (both up–and downstream) on the differential pressure sensor side.
(b) Start the engine.
(c) Check if there is exhaust gas pulsations from both vacuum hoses during idling.

NG → **REPLACE CLOGGED PARTS (See page 14–108)**

OK

4	CHECK HARNESS AND CONNECTOR(DIFFERENTIAL PRESSURE SENSOR – ECM)

Wire Harness Side:

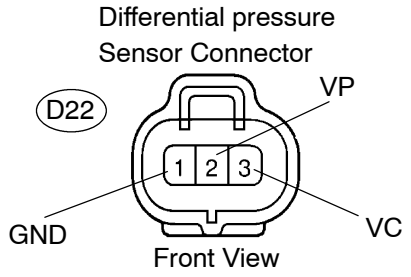

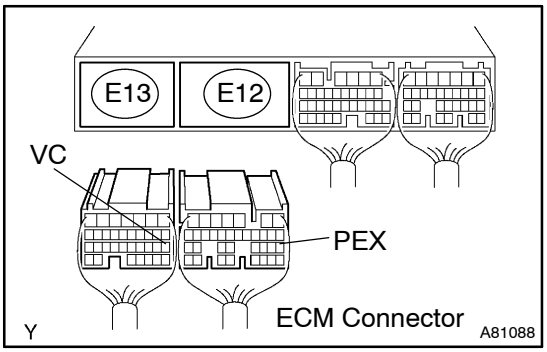

(a) Disconnect the D22 differential pressure sensor connector.
(b) Disconnect the E12 and E13 ECM connectors.
(c) Check the resistance between the wire harness side connectors.

Standard (Check for open):

Tester Connection	Specified Condition
PEX (E12–20) – VP (D22–2)	Below 1 Ω
VC (E13–18) – VC (D22–3)	
E2 (E13–28) – GND (D22–1)	

Standard (Check for short):

Tester Connection	Specified Condition
PEX (E12–20) or VP (D22–2) – Body ground	10 kΩ or higher
VC (E13–18) or VC (D22–3) – Body ground	

(d) Reconnect the differential pressure sensor connector.
(e) Reconnect the ECM connectors.

NG → **REPAIR OR REPLACE HARNESS OR CONNECTOR**

OK

REPLACE DIFFERENTIAL PRESSURE SENSOR ASSY (See page 14–108)

DTC	P1426	DIFFERENTIAL PRESSURE SENSOR (INSTALLATION)

HINT:

- For more information on the differential pressure sensor and TOYOTA D–CAT (*1), see page 05–255.
- If P1426 is present, refer to the diagnostic trouble codes (DTCs) table for TOYOTA D–CAT on page 05–255.

*1: Diesel Clean Advanced Technology.

CIRCUIT DESCRIPTION

Refer to DTC P1425, P1427 and P1428 on page 05–457.

DTC No.	DTC Detection Condition	Trouble Area
P1426	When output voltage from the differential pressure sensor indicates positive pressure as negative pressure (and vice versa) (1 trip detection logic)	• Incorrect arrangement differential pressure sensor hose piping • Differential pressure sensor vacuum hose is clogged • Blockage in Vacuum transmitting pipe sub–assy • Differential pressure sensor • ECM

HINT:

- DTC P1425 (Differential pressure sensor circuit), DTC P1427 (Differential pressure sensor circuit low) and/or DTC P1428 (Differential pressure sensor high) will be present if there is an open or short malfunction in the differential pressure sensor circuit.
- After confirming DTC P1426, check the differential pressure in the ”DIAGNOSIS / OBD/MOBD / DATA LIST / ALL / DPNR DIFF PRESS ” using the hand–held tester.

  Reference:

Engine Condition	Differential Pressure Output	Sensor Condition
Ignition Switch ON	Approximately 0 kPa	Normal
Always	3 kPa	Open or short circuit
3,000 rpm (No engine load)	Negative output	Incorrect arrangement of hose piping

MONITOR DESCRIPTION

In order to detect abnormality in the differential pressure sensor, the ECM always monitors output voltage from the sensor. When the sensor output voltage is a reversal of positive and negative pressure, the ECM interprets this as incorrect vacuum hose arrangement of the sensor, or judges that the vacuum hoses have clogged, thus the CHK ENG will be illuminated.

INSPECTION PROCEDURE

HINT:

Read freeze frame data using the hand–held tester. Freeze frame data records the engine conditions when a malfunction is detected. When troubleshooting, freeze frame data can help determine if the vehicle was running or stopped, if the engine was warmed up or not, if the air–fuel ratio was lean or rich, and other data from the time the malfunction occurred.

1	CHECK OTHER DTC OUTPUT(IN ADDITION TO P1426)

(a) Connect the hand–held tester to the DLC3.
(b) Turn the ignition switch to ON and turn the hand–held tester ON.
(c) Select the item ”DIAGNOSIS / OBD/MOBD / DTC INFO / CURRENT CODES”.
(d) Read DTCs.
Result:

Display (DTC output)	Proceed to
P1426	A
P1426 and other DTCs	B

HINT:
If any other codes besides P1426 are output, perform troubleshooting for those DTCs first.

B → **GO TO RELEVANT DTC CHART (See page 05–299)**

A

2	CHECK CONNECTION OF VACUUM HOSE(DIFFERENTIAL PRESSURE SENSOR – VACUUM TRANSMITTING PIPE)

(a) Check if vacuum hose arrangement between the differential pressure sensor and the vacuum transmitting pipe has not incorrect (see page 14–108).
(b) Check that there is no exhaust gas leak between the differential pressure sensor and the vacuum transmitting pipe (see page 14–108).

NG → **CORRECT TO NORMAL CONNECTION**

OK

3	CHECK BLOCKAGE(DIFFERENTIAL PRESSURE SENSOR)

CAUTION:
Be careful for being burned by exhaust gases during the following inspection.
(a) Disconnect the vacuum hose (both up–and downstream) on the differential pressure sensor side.
(b) Start the engine.
(c) Check if there is exhaust gas pulsations from both vacuum hoses during idling.

NG → **REPLACE CLOGGED PARTS (See page 14–108)**

OK

4	READ VALUE OF HAND–HELD TESTER(DIFFERENTIAL PRESSURE)

(a) Connect the hand–held tester to the DLC3.
(b) Turn the ignition switch to ON and turn the hand–held tester ON.
(c) Select the item ”DIAGNOSIS / OBD/MOBD / DATA LIST / ALL / DPNR DIFF PRESS”.
(d) Check that differential pressure is within the specification below.
Result:

Engine Condition	Differential Pressure Output	Sensor Condition
Ignition Switch ON	Approximately 0 kPa	Normal
Always	3 kPa	Open or short circuit
3,000 rpm (No engine load)	Negative output	Incorrect arrangement of hose piping

OK → **CHECK FOR INTERMITTENT PROBLEMS (See page 05–270)**

NG

REPLACE DIFFERENTIAL PRESSURE SENSOR ASSY (See page 14–108)

DTC	P1601	INJECTOR CORRECTION CIRCUIT MALFUNCTION (EEPROM)

NOTICE:

- **If an incorrect injector compensation code was registered with the ECM, it may rattle the engine assembly or the engine idling may become rough. In addition, it may become a cause of engine failure or shorten the life of the engine.**

1. If you replace the ECM with a new one, register all the injector compensation codes with the new ECM as follows:

(a) Prior to replacing the ECM, read all the compensation codes stored in the existing ECM using the hand–held tester, and then write them down (see page 05–273).

(b) After replacing the ECM, enter the written compensation codes into the ECM using the hand–held tester (see page 05–277).

(c) Turn the ignition switch to OFF and wait for 30 seconds or more.

(d) Turn the ignition switch to ON, then clear DTC P1601 using the hand–held tester (see page 05–290).

HINT:

- In order to optimize the injector's fuel injection characteristic, the ECM compensates the injection duration by each cylinder. The ECM stores and uses compensating data in the form of a 30–digit–alphanumeric value that is imprinted on the head portion of each injector as the injector compensation code.
- If you installed a new injector, its own injector compensation code is needed to register with the ECM. Also, if you replaced the ECM, the compensation codes of all the injectors are needed to register because the new ECM dose not have the codes until they are registered.
- Once the ECM is replaced, DTC P1601 will be present when turning the ignition switch to ON. This is to inform you that the injector compensation codes are required to register with the ECM. In order to clear the DTC, register the compensation codes first, then turn the ignition switch to OFF and wait for 30 seconds or more.

CIRCUIT DESCRIPTION

DTC No.	DTC Detection Condition	Trouble Area
P1601	Injector compensation code is not registered (1 trip detection logic)	• Injector compensation code • ECM
	Wrong injector compensation code is registered (1 trip detection logic)	

INSPECTION PROCEDURE

HINT:

Read freeze frame data using the hand–held tester. Freeze frame data records the engine conditions when a malfunction is detected. When troubleshooting, freeze frame data can help determine if the vehicle was running or stopped, if the engine was warmed up or not, if the air–fuel ratio was lean or rich, and other data from the time the malfunction occurred.

1	CHECK INJECTOR COMPENSATION CODE (See page 05–273)

NG → SET INJECTOR COMPENSATION CODE (See page 05–277)

OK

REPLACE ECM (See page 10–29)

DTC	P2002	PARTICULATE TRAP EFFICIENCY BELOW THRESHOLD (BANK1)

HINT:

- For more information on the DPNR (*1) catalytic converter and TOYOTA D–CAT (*2), see page 05–255.
- If P2002 is present, refer to the diagnostic trouble codes (DTCs) table for TOYOTA D–CAT on page 05–255.

*1: Diesel Particulate–NOx Reduction system.
*2: Diesel Clean Advanced Technology.

CIRCUIT DESCRIPTION

DPNR (Diesel Particulate–NOx Reduction System):

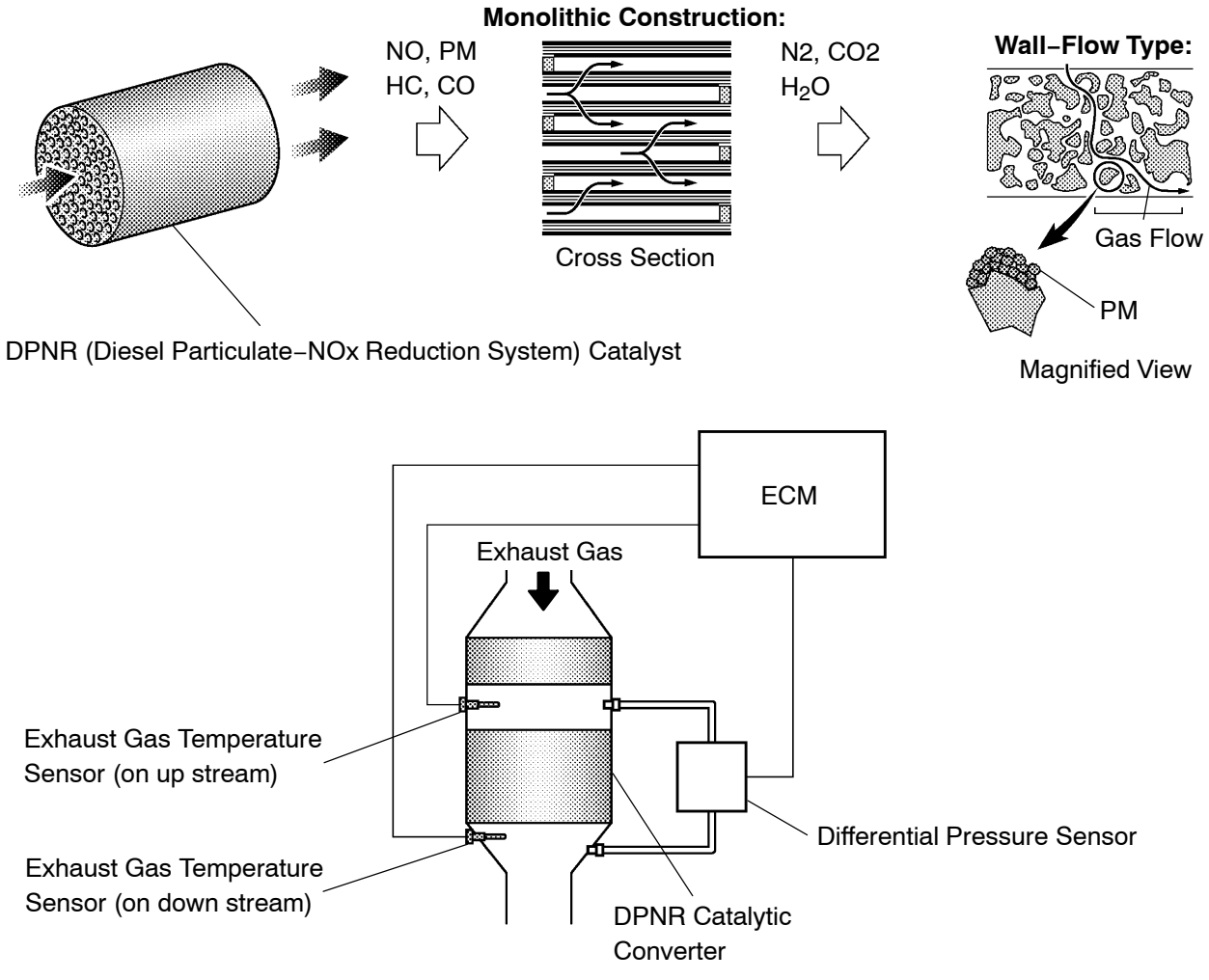

DPNR catalyst has ability to reduce nitrogen oxides (NOx) and particulate matter (PM) in addition to purification of hydrocarbons (HC) and carbon monoxides (CO). DPNR material is monolithic construction. Its inlets and outlets block up with each other, and its surface is coated with NOx absorptive deduction–type catalyst. Because exhaust gases flow through micro–cavities inside walls, it is called ”wall–flow” type.

DTC No.	DTC Detection Condition	Trouble Area
P2002	Condition (a) or (b) is met (1 trip detection logic): (a) Differential pressure exceeds a standard level for more than 10 seconds (b) Exhaust gas temperature does not raise during DPNR catalyst regeneration	• DPNR catalytic converter (Manifold converter sub–assy) • Differential pressure sensor • Differential pressure sensor vacuum hose is clogged • Blockage in Vacuum transmitting pipe sub–assy • Exhaust gas temperature sensor • Exhaust gas leaks in TOYOTA D–CAT • Mass air flow meter • ECM

MONITOR DESCRIPTION

In order to detect abnormality in the DPNR (*3) catalytic converter, the ECM monitors an exhaust gas temperature as well as a differential pressure of the exhaust gas. For monitoring the differential pressure, the ECM compares the up–and downstream pressure of the DPNR catalytic converter. If the difference between the pressure is large, the ECM judges that the DPNR has contaminated or deteriorated, and then illuminates the CHK ENG.

Furthermore, the ECM monitors increase in the exhaust gas temperature while the exhaust fuel addition injector adds fuel under DPNR catalyst regeneration. The exhaust gas temperature during the DPNR catalyst regeneration normally rises from approximately 300°C (572°F) to approximately 600°C (1,112°F) or higher. If the temperature does not rise even if a certain period of time has elapsed, the ECM interprets this as malfunction of the DPNR and illuminates the CHK ENG.

*3: Diesel Particulate–NOx Reduction system.

Malfunction Detection:

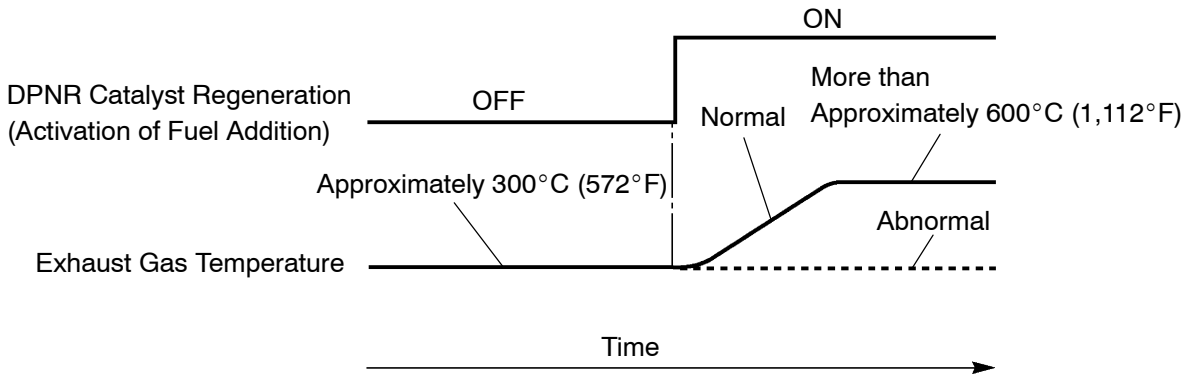

Y A91205

INSPECTION PROCEDURE

HINT:

- Read freeze frame data using the hand–held tester. Freeze frame data records the engine conditions when a malfunction is detected. When troubleshooting, freeze frame data can help determine if the vehicle was running or stopped, if the engine was warmed up or not, if the air–fuel ratio was lean or rich, and other data from the time the malfunction occurred.
- If (exhaust gas) differential pressure (DPNR DIFF PRESS) of the DPNR catalytic converter does not virtually develop when increasing the engine speed, the DPNR catalytic converter may be malfunctioning.

1 CHECK OTHER DTC OUTPUT(IN ADDITION TO P2002)

(a) Connect the hand–held tester to the DLC3.
(b) Turn the ignition switch to ON and turn the hand–held tester ON.
(c) Select the item ”DIAGNOSIS / OBD/MOBD / DTC INFO / CURRENT CODES”.
(d) Read DTCs.

Result:

Display (DTC output)	Proceed to
P2002	A
P2002 and other DTCs	B

HINT:
If any other codes besides P2002 are output, perform troubleshooting for those DTCs first.

B → **GO TO RELEVANT DTC CHART (See page 05–299)**

A

2 READ VALUE OF HAND–HELD TESTER(DIFFERENTIAL PRESSURE)

(a) Connect the hand–held tester to the DLC3.
(b) Turn the ignition switch to ON and turn the hand–held tester ON.
(c) Start the engine.
(d) Select the item ”DIAGNOSIS / OBD/MOBD / DATA LIST / ALL / DPNR DIFF PRESS”.
(e) Select the item ”DIAGNOSIS / OBD/MOBD / DATA LIST / ALL / MAF”.
(f) Check that differential pressure.

Result:

Engine Speed (Vehicle is stop)	Differential Pressure (kPa)	Proceed to
3,000 rpm (No engine load)	Less than MAF rate (mass air flow rate) × 0.4	A
3,000 rpm (No engine load)	More than MAF rate (mass air flow rate) × 0.4	B

HINT:
- If the differential pressure is more than a value that the intake air amount (MAF: g/sec) is multiplied by 0.4, DTC P2002 (Particulate Trap Efficiency Below Threshold [Bank 1]) will be present.
- The standards for the differential pressure sensor are as follows.

Reference:

Engine Condition	Differential Pressure Output	Sensor Condition
Ignition Switch ON	Approximately 0 kPa	Normal
Always	3 kPa	Open or short circuit
3,000 rpm (No engine load)	Negative output	Incorrect arrangement of hose piping

B → **Go to step 4**

A

3	READ VALUE OF HAND–HELD TESTER(EXHAUST GAS TEMPERETURE)

(a) Connect the hand–held tester to the DLC3.
(b) Turn the ignition switch to ON and turn the hand–held tester ON.
(c) Start the engine.
(d) Select the item ”DIAGNOSIS / OBD/MOBD / DATA LIST / ALL / EX TEMP (IN) and EX TEMP (OUT)”.
(e) Check that exhaust gas temperature is within the specification below.
Reference:

Condition	Exhaust Gas Temperature (°C)
Idling after engine warm–up	Constant at approximately 50 to 700 (122 to 1,292°F) *3

*3: There should be no noise.

NG → **REPAIR OR REPLACE EXHAUST GAS TEMPERATURE SENSOR, HARNESS OR CONNECTOR**

OK

4	CHECK BLOCKAGE(DIFFRENTIAL PRESSURE SENSOR)

CAUTION:
Be careful for being burned by exhaust gases during the following inspection.
(a) Disconnect the vacuum hose (both up–and downstream) on the differential pressure sensor side.
(b) Start the engine.
(c) Check if there is exhaust gas pulsations from both vacuum hoses during idling.

NG → **REPLACE CLOGGED PARTS (See page 14–108)**

OK

5	CHECK FOR EXHAUST GAS LEAKS

(a) Check that there is no exhaust gas leak in the exhaust system components and differential pressure sensor vacuum hoses.

NG → **REPAIR OR REPLACE LEAKAGE POINT**

OK

REPLACE MANIFOLD CONVERTER SUB–ASSY (See page 14–108)

DTC	P2047	REDUCTANT INJECTOR CIRCUIT/OPEN (BANK 1 UNIT 1)

HINT:

- For more information on the exhaust fuel addition injector and TOYOTA D–CAT (*1), see page 05–255.
- If P2047 is present, refer to the diagnostic trouble codes (DTCs) table for TOYOTA D–CAT on page 05–255.

*1: Diesel Clean Advanced Technology.

CIRCUIT DESCRIPTION

Refer to DTC P1386 on page 05–444.

DTC No.	DTC Detection Condition	Trouble Area
P2047	• Open or short in EDU or injector circuit There is no injection confirmation (FIVM) signal from monitor circuit to CPU, despite the CPU sending injection command (FIV) signal to the command circuit (1 trip detection logic)	• Open in exhaust fuel addition injector circuit • Exhaust fuel addition injector • ECM

HINT:

DTC P1386 (injector for exhaust fuel addition) will be present if there is an open malfunction in the exhaust fuel addition injector circuit.

MONITOR DESCRIPTION

In order to detect abnormality in the fuel addition injector, an internal CPU of the ECM monitors injection command (FIV) signals and injection confirmation (FIVM) signals. The FIV signal is sent from the CPU to the (exhaust) fuel addition injector via a dive circuit inside the ECM. The FIVM signal, originally it is output current from the internal drive circuit of the ECM, is transmitted to the CPU via a monitor circuit. By receiving the FIVM signal, the ECM judges that the current is truly applied to the (exhaust) fuel addition injector.

This DTC will be set if the ECM judges that the number of signals of the FIV and the FIVM are inconsistent.

Fuel Addition Injector System:

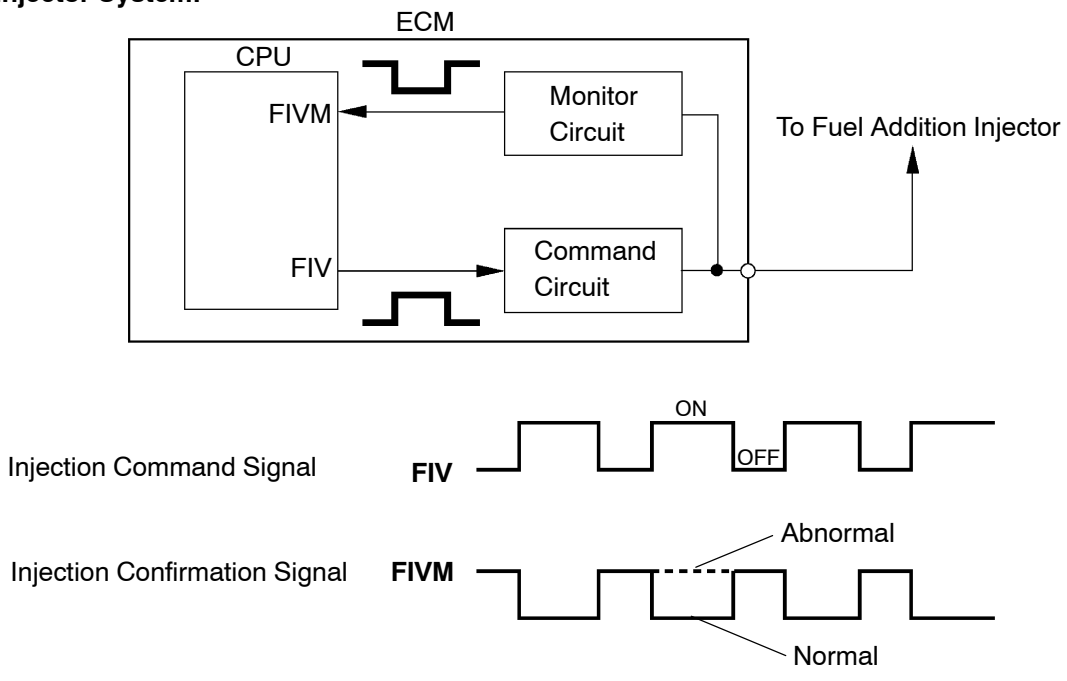

WIRING DIAGRAM

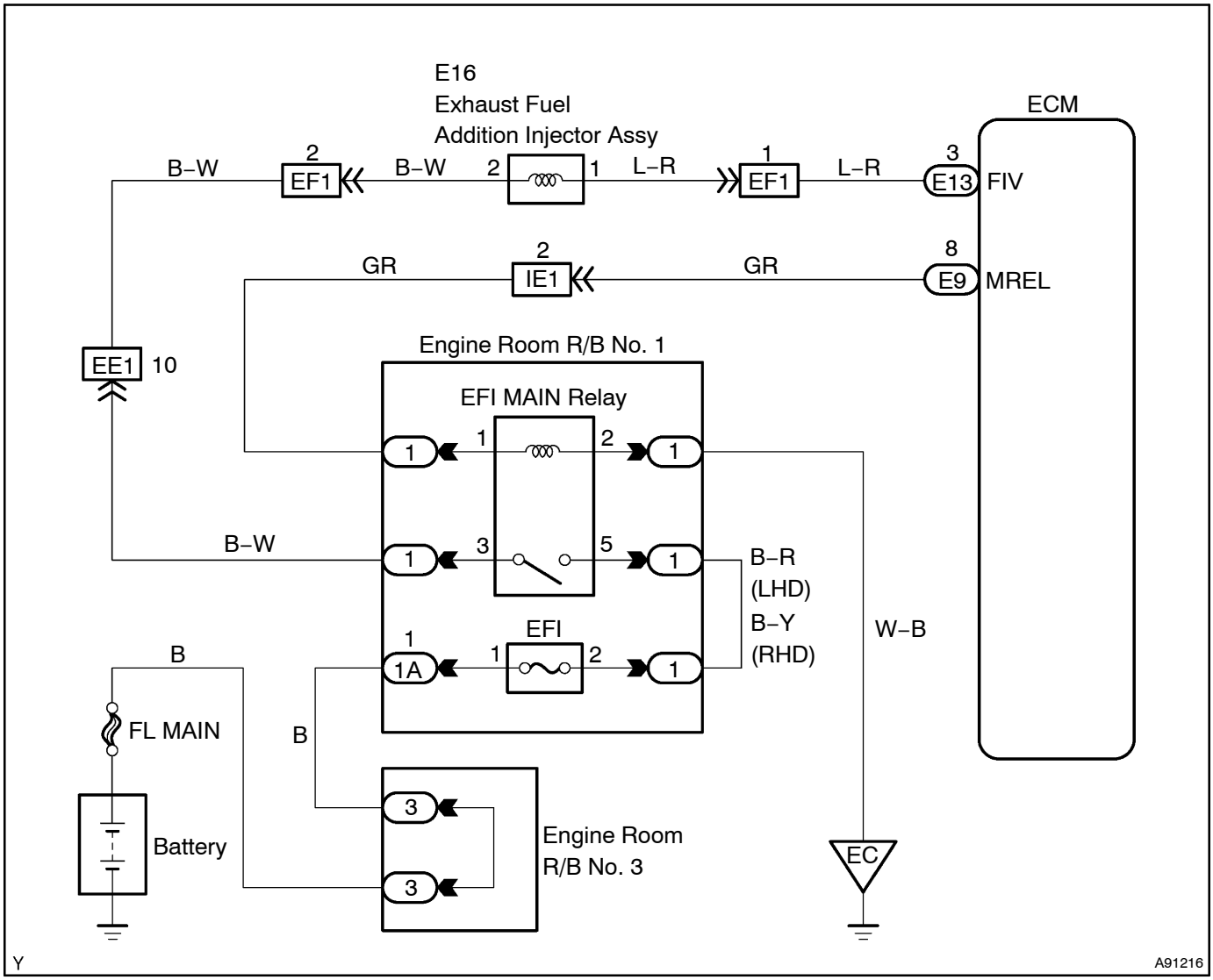

INSPECTION PROCEDURE

HINT:

Read freeze frame data using the hand–held tester. Freeze frame data records the engine conditions when a malfunction is detected. When troubleshooting, freeze frame data can help determine if the vehicle was running or stopped, if the engine was warmed up or not, if the air–fuel ratio was lean or rich, and other data from the time the malfunction occurred.

1	**INSPECT EXHAUST FUEL ADDITION INJECTOR ASSY(RESISTANCE) (See page 12–7)**

NG → **REPLACE EXHAUST FUEL ADDITION INJECTOR ASSY (See page 14–166)**

OK

2	CHECK HARNESS AND CONNECTOR(EXHAUST FUEL ADDITION INJECTOR ASSY – ECM)

Wire Harness Side:
Exhaust Fuel Addition
Injector Assy Connector

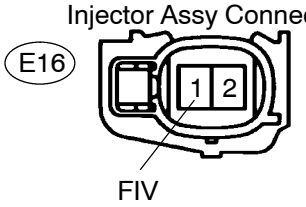

Front View
A80992

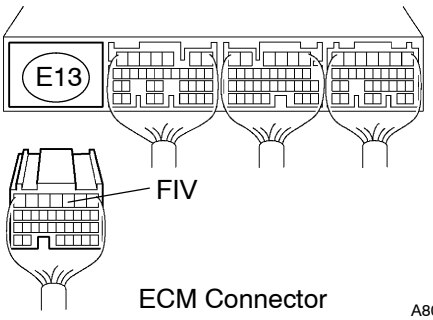

ECM Connector
A80456

(a) Disconnect the E16 exhaust fuel addition injector assy connector.
(b) Disconnect the E13 ECM connector.
(c) Check the resistance between the wire harness side connectors.

Standard (Check for open):

Tester Connection	Specified Condition
FIV (E13–3) – (E16–1)	Below 1 Ω
E2 (E13–28) – (E16–2)	

Standard (Check for short):

Tester Connection	Specified Condition
FIV (E13–3) or (E16–1) – Body ground	10 kΩ or higher

(d) Reconnect the exhaust fuel addition injector assy connector.
(e) Reconnect the ECM connector.

NG → **REPAIR OR REPLACE HARNESS OR CONNECTOR**

OK

REPLACE ECM (See page 10–29)

DTC	P2120	THROTTLE/PEDAL POSITION SENSOR/SWITCH ”D” CIRCUIT

DTC	P2122	THROTTLE/PEDAL POSITION SENSOR/SWITCH ”D” CIRCUIT LOW INPUT

DTC	P2123	THROTTLE/PEDAL POSITION SENSOR/SWITCH ”D” CIRCUIT HIGH INPUT

DTC	P2125	THROTTLE/PEDAL POSITION SENSOR/SWITCH ”E” CIRCUIT

DTC	P2127	THROTTLE/PEDAL POSITION SENSOR/SWITCH ”E” CIRCUIT LOW INPUT

DTC	P2128	THROTTLE/PEDAL POSITION SENSOR/SWITCH ”E” CIRCUIT HIGH INPUT

DTC	P2138	THROTTLE/PEDAL POSITION SENSOR/SWITCH ”D”/”E” VOLTAGE CORRELATION

HINT:
This is the procedure of troubleshooting the accelerator pedal position sensor.

CIRCUIT DESCRIPTION

HINT:

This electrical throttle system does not use a throttle cable.

The accelerator pedal position sensor is mounted on the accelerator pedal bracket and it has the 2 sensors to detect the accelerator position and malfunction of the accelerator position sensor itself.

In the accelerator pedal position sensor, the voltage applied to pedal terminals VPA1 and VPA2 of the ECM changes between 0 V and 5 V in proportion to the opening angle of the accelerator pedal. The VPA1 is a signal to indicate the actual accelerator pedal opening angle which is used for the engine control, and the VPA2 is a signal to indicate the information about the opening angle which is used for detecting malfunction. The ECM judges the current accelerator pedal opening angle with the signals from pedal terminals VPA1 and VPA2, and the ECM controls the throttle motor based on these signals.

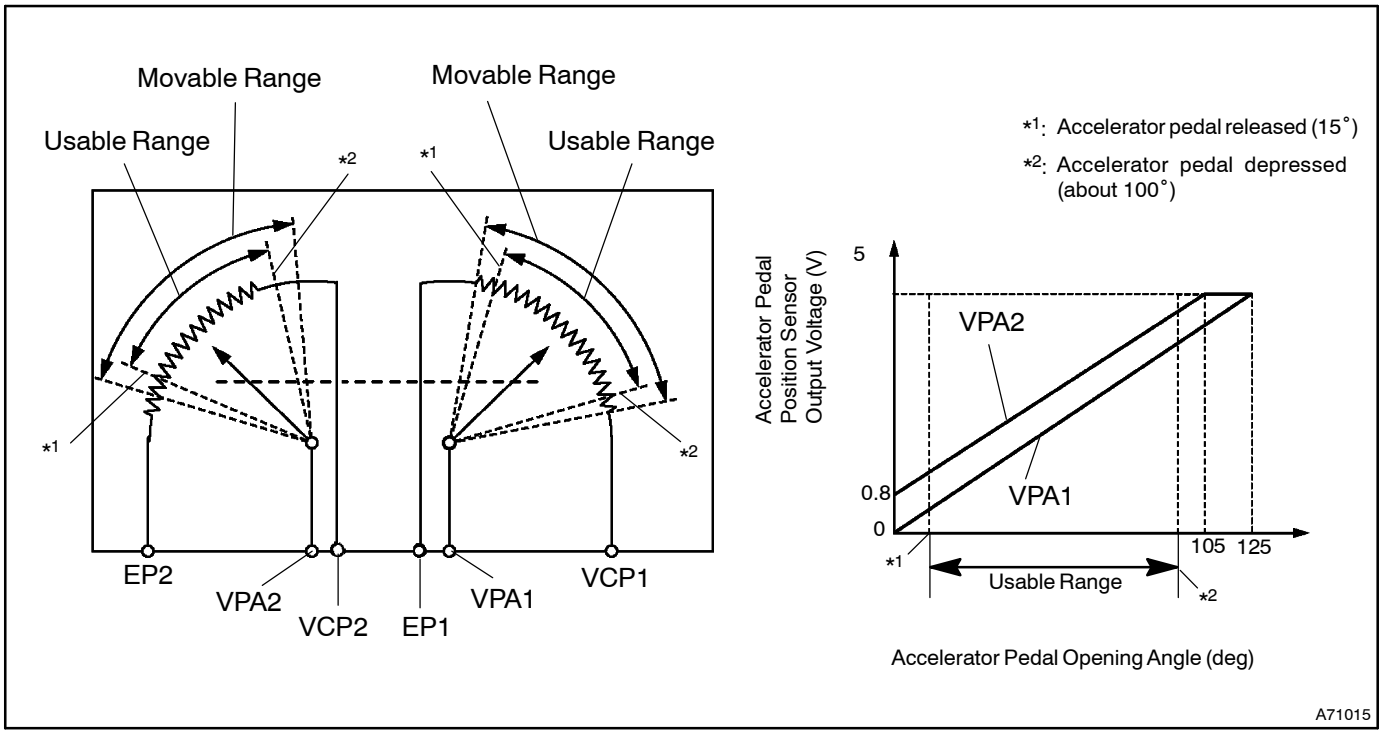

DTC No.	DTC Detection Condition	Trouble Area
P2120	Condition (a) continues for 0.5 second or more: VPA is less than 0.2 V for when accelerator pedal is fully released, or VPA is more than 4.8 V	• Open or short in accelerator pedal position sensor circuit • Accelerator pedal position sensor • ECM
P2122	VPA is less than 0.2 V for 0.5 second or more when accelerator pedal is fully released	
P2123	VPA is more than 4.8 V for 2.0 seconds or more	
P2125	Condition (a) continues for 0.5 second or more: (a) VPA2 less than 0.5 V when accelerator pedal is fully released, or VPA2 is more than 4.8 V when VPA is between 0.2 V and 3.45 V	
P2127	VPA2 less than 0.5 V for 0.5 second or more when accelerator pedal is fully released	
P2128	VPA2 is more than 4.8 V for 2.0 seconds or more when VPA between 0.2 V and 3.45 V	
P2138	Condition (a) or (b) continues for 2.0 seconds or more: (a) Difference between VPA and VPA2 is less than 0.02 V (b) VPA is less than 0.2 V and VPA2 is less than 0.5 V	

HINT:
After confirming DTC P2120, P2122, P2123, P2125, P2127, P2128 and P2138, check the accelerator pedal position sensor output voltage using the hand–held tester.

Reference:

Trouble Area	Accelerator Pedal Position (Voltage Output)			
	Accelerator Pedal Released		Accelerator Pedal Depressed	
	ACCEL POS #1	ACCEL POS #2	ACCEL POS #1	ACCEL POS #2
Normal condition	0.5 to 1.1 V	1.2 to 2.0 V	2.6 to 4.5 V	3.4 to 5.3 V
VCP circuit open	0 to 0.2 V	0 to 0.2 V	0 to 0.2 V	0 to 0.2 V
VPA circuit open or ground short	0 to 0.2 V	1.2 to 2.0 V	0 to 0.2 V	3.4 to 5.3 V
VPA2 circuit open or ground short	0.5 to 1.1 V	0 to 0.2 V	2.6 to 4.5 V	0 to 0.2 V
EP circuit open	4.5 to 5.5 V	4.5 to 5.5 V	4.5 to 5.5 V	4.5 to 5.5 V

WIRING DIAGRAM

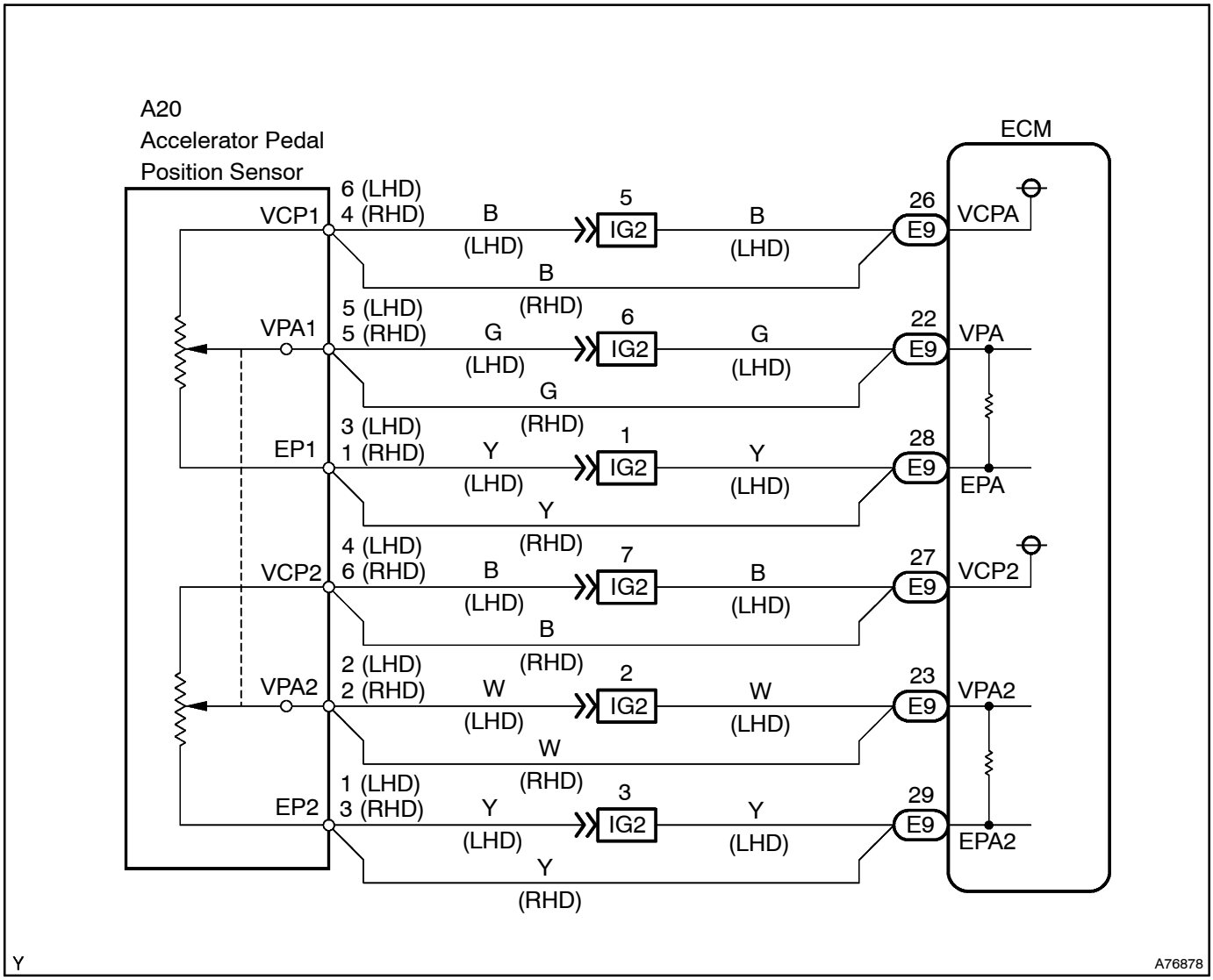

INSPECTION PROCEDURE

HINT:
Read freeze frame data using the hand–held tester. Freeze frame data records the engine conditions when a malfunction is detected. When troubleshooting, freeze frame data can help determine if the vehicle was running or stopped, if the engine was warmed up or not, if the air–fuel ratio was lean or rich, and other data from the time the malfunction occurred.

1 READ VALUE OF HAND–HELD TESTER(ACCEL POS #1 AND ACCEL POS #2)

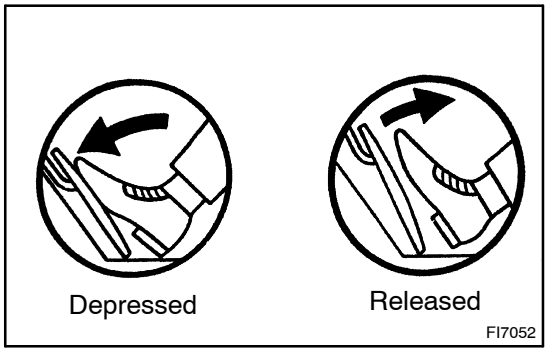

(a) Connect the hand–held tester to the DLC3.
(b) Turn the ignition switch to ON.
(c) Select the item ”DIAGNOSIS / OBD/MOBD / DATA LIST / ETCS / ACCEL POS #1 and ACCEL POS #2” and read its value displayed on the hand–held tester.

Standard:

Accelerator Pedal	ACCEL POS #1	ACCEL POS #2
Released	0.5 to 1.1 V	1.2 to 2.0 V
Depressed	2.6 to 4.5 V	3.4 to 5.3 V

OK → **REPLACE ECM (See page 10–29)**

NG

2 INSPECT ACCELERATOR PEDAL ASSY(ACCELERATOR PEDAL POSITION SENSOR)

Component Side (RHD):

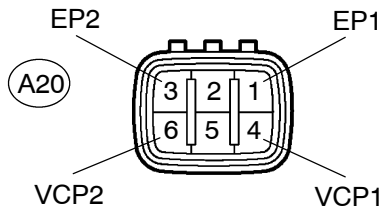

(a) Disconnect the A20 accelerator pedal position sensor connector.
(b) Measure the resistance between each terminal.

Standard (RHD):

Tester Connection	Specified Condition
EP1 (1) – VCP1 (4)	2.25 to 4.75 kΩ at 20°C (68°F)
EP2 (3) – VCP2 (6)	

Standard (LHD):

Tester Connection	Specified Condition
EP1 (3) – VCP1 (6)	2.25 to 4.75 kΩ at 20°C (68°F)
EP2 (1) – VCP2 (4)	

(c) Reconnect the accelerator pedal position sensor connector.

Component Side (LHD):

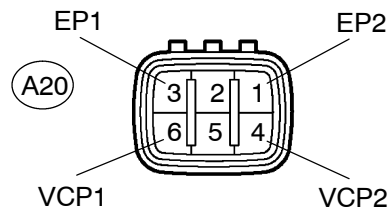

NG → **REPLACE ACCELERATOR PEDAL ASSY (See page 10–66 of Pub. No. RM1018E AVENSIS REPAIR MANUAL)**

OK

3 INSPECT ECM(VCPA AND VCP2 VOLTAGE)

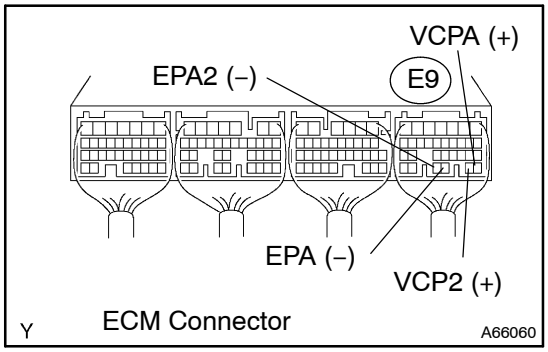

(a) Turn the ignition switch to ON.
(b) Measure the voltage between the specified terminals of the E9 ECM connector.

Standard:

Tester Connection	Specified Condition
VCPA (E9–26) – EPA (E9–28)	4.5 to 5.5 V
VCP2 (E9–27) – EPA2 (E9–29)	

NG → **REPLACE ECM (See page 10–29)**

OK

4 INSPECT ECM(VPA AND VPA2 VOLTAGE)

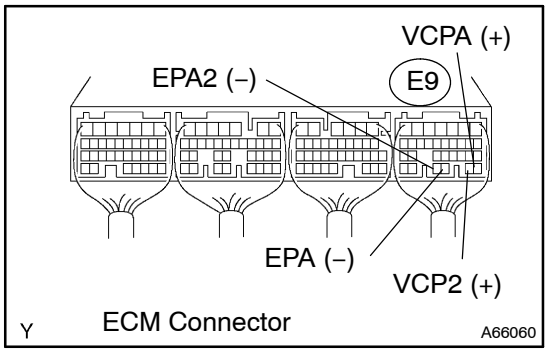

(a) Turn the ignition switch to ON.
(b) Measure the voltage between the specified terminals of the E9 ECM connector.

Standard:

Accelerator Pedal Position	Tester Connection	Specified Condition
Released	VPA (E9–22) – EPA (E9–28)	0.5 to 1.1 V
Depressed		2.6 to 4.5 V
Released	VPA2 (E9–23) – EPA2 (E9–29)	1.2 to 2.0 V
Depressed		3.4 to 5.3 V

OK → **REPLACE ECM (See page 10–29)**

NG

5 CHECK HARNESS AND CONNECTOR(ACCELERATOR PEDAL POSITION SENSOR – ECM)

Wire Harness Side (RHD):

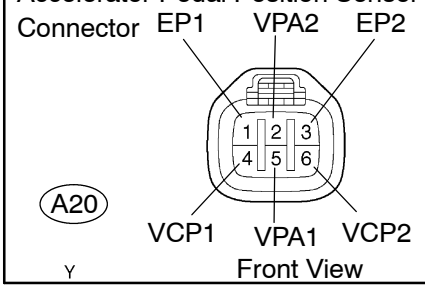

Wire Harness Side (LHD):

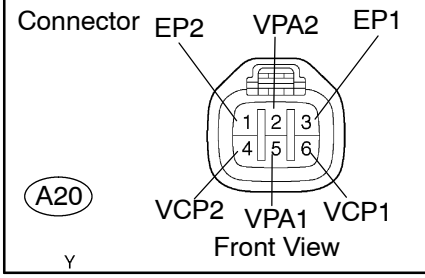

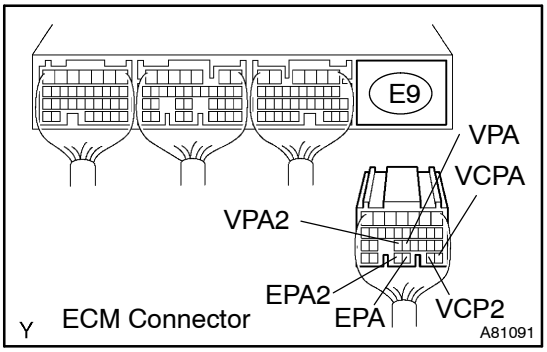

(a) Disconnect the A20 accelerator pedal position sensor connector.

(b) Disconnect the E9 ECM connector.

(c) Check the resistance between the wire harness side connectors.

Standard (Check for open) (RHD):

Tester Connection	Specified Condition
VPA1 (A20–5) – VPA (E9–22)	Below 1 Ω
EP1 (A20–1) – EPA (E9–28)	
VCP1 (A20–4) – VCPA (E9–26)	
VPA2 (A20–2) – VPA2 (E9–23)	
EP2 (A20–3) – EPA2 (E9–29)	
VCP2 (A20–6) – VCP2 (E9–27)	

Standard (Check for open) (LHD):

Tester Connection	Specified Condition
VPA1 (A20–5) – VPA (E9–22)	Below 1 Ω
EP1 (A20–3) – EPA (E9–28)	
VCP1 (A20–6) – VCPA (E9–26)	
VPA2 (A20–2) – VPA2 (E9–23)	
EP2 (A20–1) – EPA2 (E9–29)	
VCP2 (A20–4) – VCP2 (E9–27)	

Standard (Check for short) (RHD):

Tester Connection	Specified Condition
VPA1 (A20–5) or VPA (E9–22) – Body ground	10 kΩ or higher
EP1 (A20–1) or EPA (E9–28) – Body ground	
VCP1 (A20–4) or VCPA (E9–26) – Body ground	
VPA2 (A20–2) or VPA2 (E9–23) – Body ground	
EP2 (A20–3) or EPA2 (E9–29) – Body ground	
VCP2 (A20–6) or VCP2 (E9–27) – Body ground	

Standard (Check for short) (LHD):

Tester Connection	Specified Condition
VPA1 (A20–5) or VPA (E9–22) – Body ground	10 kΩ or higher
EP1 (A20–3) or EPA (E9–28) – Body ground	
VCP1 (A20–6) or VCPA (E9–26) – Body ground	
VPA2 (A20–2) or VPA2 (E9–23) – Body ground	
EP2 (A20–1) or EPA2 (E9–29) – Body ground	
VCP2 (A20–4) or VCP2 (E9–27) – Body ground	

(d) Reconnect the accelerator pedal position sensor connector.

(e) Reconnect the ECM connector.

NG → **REPAIR OR REPLACE HARNESS OR CONNECTOR**

OK

REPLACE ECM (See page 10–29)

DTC	P2121	THROTTLE/PEDAL POSITION SENSOR/ SWITCH ”D” CIRCUIT RANGE/ PERFORMANCE

CIRCUIT DESCRIPTION

Refer to DTC P2120 on page 05–473.

DTC No.	DTC Detection Condition	Trouble Area
P2121	Conditions (a) and (b) continue for 0.5 second: (a) Difference between VPA and VPA2 exceeds the threshold (b) IDL is OFF	• Accelerator pedal position sensor circuit • Accelerator pedal position sensor • ECM

HINT:

After confirming DTC P2121, check the accelerator pedal position sensor output voltage using the hand–held tester.

Reference:

Trouble Area	Accelerator Pedal Position (Voltage Output)			
	Accelerator Pedal Released		Accelerator Pedal Depressed	
	ACCEL POS #1	ACCEL POS #2	ACCEL POS #1	ACCEL POS #2
Normal condition	0.5 to 1.1 V	1.2 to 2.0 V	2.6 to 4.5 V	3.4 to 5.3 V
VCP circuit open	0 to 0.2 V	0 to 0.2 V	0 to 0.2 V	0 to 0.2 V
VPA circuit open or ground short	0 to 0.2 V	1.2 to 2.0 V	0 to 0.2 V	3.4 to 5.3 V
VPA2 circuit open or ground short	0.5 to 1.1 V	0 to 0.2 V	2.6 to 4.5 V	0 to 0.2 V
EP circuit open	4.5 to 5.5 V	4.5 to 5.5 V	4.5 to 5.5 V	4.5 to 5.5 V

WIRING DIAGRAM

Refer to DTC P2120 on page 05–473.

INSPECTION PROCEDURE

HINT:

Read freeze frame data using the hand–held tester. Freeze frame data records the engine conditions when a malfunction is detected. When troubleshooting, freeze frame data can help determine if the vehicle was running or stopped, if the engine was warmed up or not, if the air–fuel ratio was lean or rich, and other data from the time the malfunction occurred.

1 INSPECT ACCELERATOR PEDAL ASSY(ACCELERATOR PEDAL POSITION SENSOR)

Component Side (RHD):

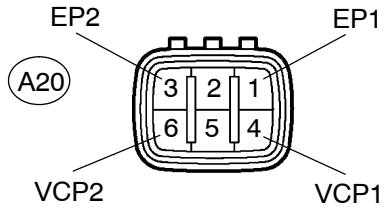

Component Side (LHD):

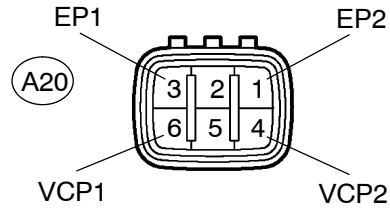

(a) Disconnect the A20 accelerator pedal position sensor connector.

(b) Measure the resistance between each terminal.

Standard (RHD):

Tester Connection	Specified Condition
EP1 (1) – VCP1 (4)	2.25 to 4.75 kΩ at 20°C (68°F)
EP2 (3) – VCP2 (6)	

Standard (LHD):

Tester Connection	Specified Condition
EP1 (3) – VCP1 (6)	2.25 to 4.75 kΩ at 20°C (68°F)
EP2 (1) – VCP2 (4)	

(c) Reconnect the accelerator pedal position sensor connector.

NG → **REPLACE ACCELERATOR PEDAL ASSY (See page 10–66 of Pub. No. 1018E AVENSIS REPAIR MANUAL)**

OK

2 INSPECT ECM(VPA AND VPA2 VOLTAGE)

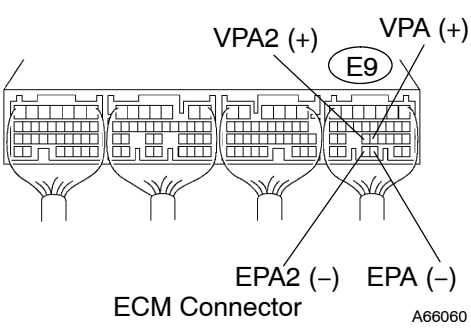

(a) Turn the ignition switch to ON.

(b) Measure the voltage between the specified terminals of the E9 ECM connector.

Accelerator Pedal Position	Tester Connection	Specified Condition
Released	VPA (E9–22) – EPA (E9–28)	0.5 to 1.1 V
Depressed		2.6 to 4.5 V
Released	VPA2 (E9–23) – EPA2 (E9–29)	1.2 to 2.0 V
Depressed		3.4 to 5.3 V

OK → **REPLACE ECM (See page 10–29)**

NG

3 CHECK HARNESS AND CONNECTOR(ACCELERATOR PEDAL POSITION SENSOR – ECM)

Wire Harness Side (RHD):

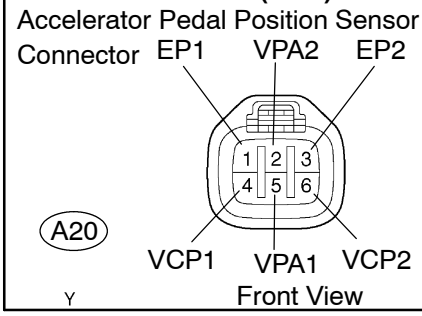

Wire Harness Side (LHD):

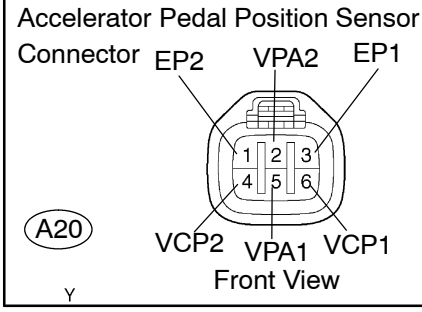

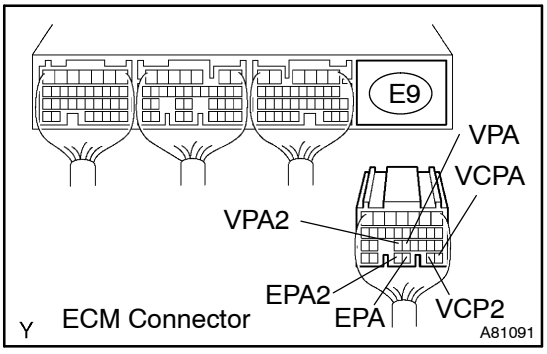

(a) Disconnect the A20 accelerator pedal position sensor connector.

(b) Disconnect the E9 ECM connector.

(c) Check the resistance between the wire harness side connectors.

Standard (Check for open) (RHD):

Tester Connection	Specified Condition
VPA1 (A20–5) – VPA (E9–22)	Below 1 Ω
EP1 (A20–1) – EPA (E9–28)	
VCP1 (A20–4) – VCPA (E9–26)	
VPA2 (A20–2) – VPA2 (E9–23)	
EP2 (A20–3) – EPA2 (E9–29)	
VCP2 (A20–6) – VCP2 (E9–27)	

Standard (Check for open) (LHD):

Tester Connection	Specified Condition
VPA1 (A20–5) – VPA (E9–22)	Below 1 Ω
EP1 (A20–3) – EPA (E9–28)	
VCP1 (A20–6) – VCPA (E9–26)	
VPA2 (A20–2) – VPA2 (E9–23)	
EP2 (A20–1) – EPA2 (E9–29)	
VCP2 (A20–4) – VCP2 (E9–27)	

Standard (Check for short) (RHD):

Tester Connection	Specified Condition
VPA1 (A20–5) or VPA (E9–22) – Body ground	10 kΩ or higher
EP1 (A20–1) or EPA (E9–28) – Body ground	
VCP1 (A20–4) or VCPA (E9–26) – Body ground	
VPA2 (A20–2) or VPA2 (E9–23) – Body ground	
EP2 (A20–3) or EPA2 (E9–29) – Body ground	
VCP2 (A20–6) or VCP2 (E9–27) – Body ground	

Standard (Check for short) (LHD):

Tester Connection	Specified Condition
VPA1 (A20–5) or VPA (E9–22) – Body ground	10 kΩ or higher
EP1 (A20–3) or EPA (E9–28) – Body ground	
VCP1 (A20–6) or VCPA (E9–26) – Body ground	
VPA2 (A20–2) or VPA2 (E9–23) – Body ground	
EP2 (A20–1) or EPA2 (E9–29) – Body ground	
VCP2 (A20–4) or VCP2 (E9–27) – Body ground	

(d) Reconnect the accelerator pedal position sensor connector.

(e) Reconnect the ECM connector.

NG → **REPAIR OR REPLACE HARNESS OR CONNECTOR**

OK

REPLACE ACCELERATOR PEDAL ASSY
(See page 10–66 of Pub. No. RM1018E AVENSIS REPAIR MANUAL)

DTC	P2226	BAROMETRIC PRESSURE CIRCUIT

DTC	P2228	BAROMETRIC PRESSURE CIRCUIT LOW INPUT

DTC	P2229	BAROMETRIC PRESSURE CIRCUIT HIGH INPUT

CIRCUIT DESCRIPTION

To detect atmospheric pressure, the atmospheric pressure sensor built in the ECM is used in the common rail system. Following the changes in the atmospheric pressure, the ECM corrects the fuel injection volume, timing and duration, and adjusts the common rail internal fuel pressure for optimizing combustion.

DTC No.	DTC Detection Condition	Trouble Area
P2226 P2228 P2229	Atmospheric pressure sensor malfunction (1 trip detection logic)	• ECM

INSPECTION PROCEDURE

HINT:

Read freeze frame data using the hand–held tester. Freeze frame data records the engine conditions when a malfunction is detected. When troubleshooting, freeze frame data can help determine if the vehicle was running or stopped, if the engine was warmed up or not, if the air–fuel ratio was lean or rich, and other data from the time the malfunction occurred.

REPLACE ECM (See page 10–29)

DTC	P2227	BAROMETRIC PRESSURE CIRCUIT RANGE/PERFORMANCE

CIRCUIT DESCRIPTION

To detect atmospheric pressure, the atmospheric pressure sensor built in the ECM is used in the common rail system. Following the changes in the atmospheric pressure, the ECM corrects the fuel injection volume, timing and duration, and adjusts the common rail internal fuel pressure for optimizing combustion.

DTC No.	DTC Detection Condition	Trouble Area
P2227	Atmospheric pressure sensor malfunction (2 trip detection logic)	• ECM

INSPECTION PROCEDURE

HINT:

Read freeze frame data using the hand–held tester. Freeze frame data records the engine conditions when a malfunction is detected. When troubleshooting, freeze frame data can help determine if the vehicle was running or stopped, if the engine was warmed up or not, if the air–fuel ratio was lean or rich, and other data from the time the malfunction occurred.

1	CHECK OTHER DTC OUTPUT(IN ADDITION TO DTC P2227)

(a) Read the DTCs using the hand–held tester.

Result:

Display (DTC output)	Proceed to
P2227 and other DTCs	A
P2227	B

HINT:

If any other codes besides P2227 are output, perform troubleshooting for those DTCs first.

B → **REPLACE ECM (See page 10–29)**

A

GO TO RELEVANT DTC CHART (See page 05–299)

DTC	P2237	OXYGEN (A/F) SENSOR PUMPING CURRENT CIRCUIT/OPEN (FOR A/F SENSOR)(BANK 1 SENSOR 1)

DTC	P2238	OXYGEN (A/F)SENSOR PUMPING CURRENT CIRCUIT LOW (FOR A/F SENSOR)(BANK 1 SENSOR 1)

DTC	P2239	OXYGEN (A/F) SENSOR PUMPING CURRENT CIRCUIT HIGH (FOR A/F SENSOR)(BANK 1 SENSOR 1)

HINT:

- For more information on the A/F sensor and TOYOTA D–CAT (*1) system, see page 05–255.
- If P2237, P2238 and/or P2239 is present, refer to the diagnostic trouble codes (DTCs) table for TOYOTA D–CAT system on page 05–255.
- These DTCs are recorded when A/F sensor has malfunction, although the caption is the oxygen sensor.

*1: Diesel Clean Advanced Technology.

CIRCUIT DESCRIPTION

Refer to DTC P0031 on page 05–305.

DTC No.	DTC Detecting Condition	Trouble Area
P2237	ECM internal error (10 seconds) (1 trip detection logic)	• ECM
P2238	• A/F sensor circuit low (bank 1 sensor 1) AF+ is less than 0.4 V for 5.0 seconds or more (1 trip detection logic)	Main trouble area: Open in A/F sensor circuit • Open or short in A/F sensor circuit • A/F sensor • A/F sensor heater • A/F sensor heater relay • A/F sensor heater and relay circuit • ECM
P2239	• A/F sensor circuit high (bank 1 sensor 1) AF+ is more than 4.4 V for 5.0 seconds or more (1 trip detection logic)	Main trouble area: Short in A/F sensor circuit • Open or short in A/F sensor circuit • A/F sensor • A/F sensor heater • A/F sensor heater relay • A/F sensor heater and relay circuit • ECM

MONITOR DESCRIPTION

The A/F sensor has a characteristic that it varies its voltage output in proportion to the air–fuel ratio. If impedance (alternating current resistance) or voltage output of the sensor extraordinarily deviates from the standard range, the ECM interprets this as an open or short malfunction of the A/F sensor circuit.

WIRING DIAGRAM

Refer to DTC P0031 on page 05–305.

INSPECTION PROCEDURE

HINT:
Read freeze frame data using the hand–held tester. Freeze frame data records the engine conditions when a malfunction is detected. When troubleshooting, freeze frame data can help determine if the vehicle was running or stopped, if the engine was warmed up or not, if the air–fuel ratio was lean or rich, and other data from the time the malfunction occurred.

1 CHECK OTHER DTC(IN ADDITION TO P2237)

(a) Connect the hand–held tester to the DLC3.
(b) Turn the ignition switch to ON and turn the hand–held tester ON.
(c) Select the item ”DIAGNOSIS / OBD/MOBD / DTC INFO / CURRENT CODES”.
(d) Read DTCs.

Result:

Display (DTC output)	Proceed to
P2237 and P2238 and/or P2239	A
P2237	B

B → **REPLACE ECM (See page 10–29)**

A

2 INSPECT AIR FUEL RATIO SENSOR(RESISTANCE)

Component Side
(w/ Headlight Beam Level Control):

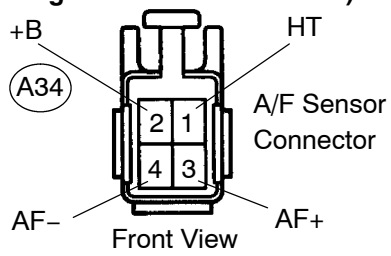

Component Side
(w/o Headlight Beam Level Control):

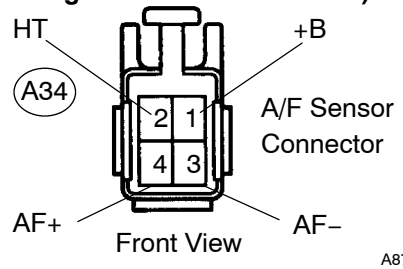

(a) Disconnect the A34 A/F sensor connector.
(b) Measure the resistance between the terminals of the A/F sensor.

Resistance (w/ Headlight beam level control):

Tester Connection	Specified Condition
HT (1) – +B (2)	0.86 to 1.1 Ω at 20°C (68°F)

Resistance (w/o Headlight beam level control):

Tester Connection	Specified Condition
HT (2) – +B (1)	0.86 to 1.1 Ω at 20°C (68°F)

(c) Reconnect the A/F sensor connector.

NG → **REPLACE AIR FUEL RATIO SENSOR**

OK

3	INSPECT AIR FUEL RATIO SENSOR HEATER RELAY

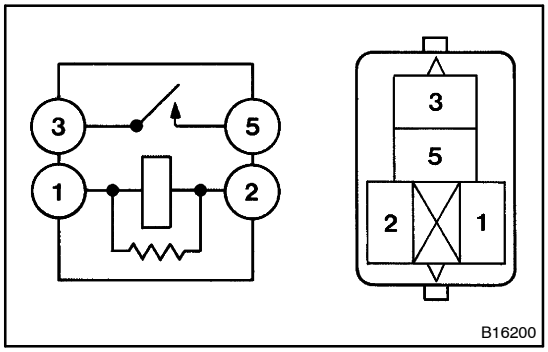

(a) Remove the A/F sensor heater relay.

(b) Check for continuity in the A/F sensor heater relay.

Standard:

Tester Connection	Specified Condition
1 – 2	Continuity
3 – 5	No continuity
	Continuity (Apply battery voltage to terminals 1 and 2)

(c) Reinstall the A/F sensor heater relay.

NG → **REPLACE AIR FUEL RATIO SENSOR HEATER RELAY**

OK

4 CHECK HARNESS AND CONNECTOR(A/F SENSOR – ECM)

Wire Harness Side
(w/ Headlight Beam Level Control):

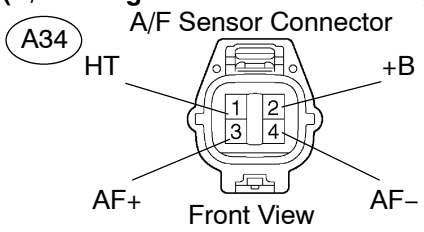

Wire Harness Side
(w/o Headlight Beam Level Control):

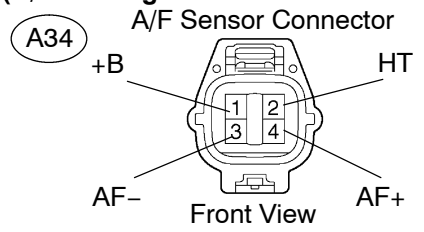

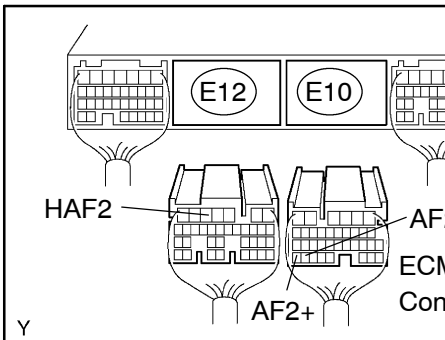

(a) Disconnect the A34 A/F sensor connector.
(b) Disconnect the E10 and E12 ECM connectors.
(c) Check the resistance between the wire harness side connectors.

Standard (Check for open)
(w/ Headlight beam level control):

Tester Connection	Specified Condition
AF+ (A34–3) – AF2+ (E10–35)	Below 1 Ω
AF– (A34–4) – AF2– (E10–34)	
HT (A34–1) – HAF2 (E12–5)	

Standard (Check for open)
(w/o Headlight beam level control):

Tester Connection	Specified Condition
AF+ (A34–4) – AF2+ (E10–35)	Below 1 Ω
AF– (A34–3) – AF2– (E10–34)	
HT (A34–2) – HAF2 (E12–5)	

Standard (Check for short)
(w/ Headlight beam level control):

Tester Connection	Specified Condition
AF+ (A34–3) or AF2+ (E10–35) – Body ground	10 kΩ or higher
AF– (A34–4) or AF2– (E10–34) – Body ground	
HT (A34–1) or HAF2 (E12–5) – Body ground	

Standard (Check for short)
(w/o Headlight beam level control):

Tester Connection	Specified Condition
AF+ (A34–4) or AF2+ (E10–35) – Body ground	10 kΩ or higher
AF– (A34–3) or AF2– (E10–34) – Body ground	
HT (A34–2) or HAF2 (E12–5) – Body ground	

(d) Reconnect the A/F sensor connector.
(e) Reconnect the ECM connectors.

Reference:

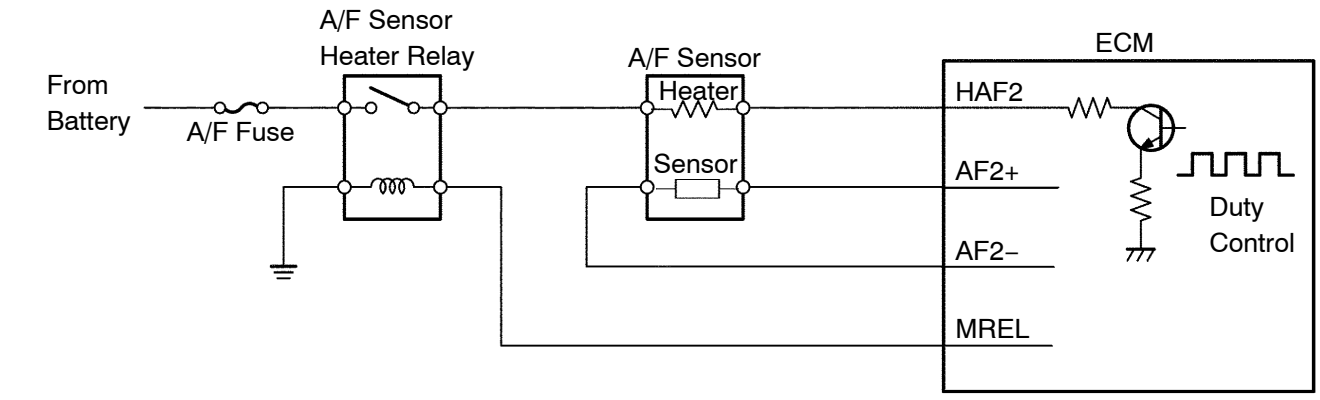

NG	**REPAIR OR REPLACE HARNESS OR CONNECTOR**

OK

REPLACE ECM (See page 10–29)

ECM POWER SOURCE CIRCUIT

CIRCUIT DESCRIPTION

When the ignition switch is turned to ON, the positive battery voltage is applied to terminal IGSW of the ECM and the EFI MAIN relay control circuit in the ECM sends a signal to terminal MREL of the ECM switching on the EFI MAIN relay.

This signal causes current to flow to the coil, closing the contacts of the EFI MAIN relay and supplying power to terminal +B of the ECM.

WIRING DIAGRAM

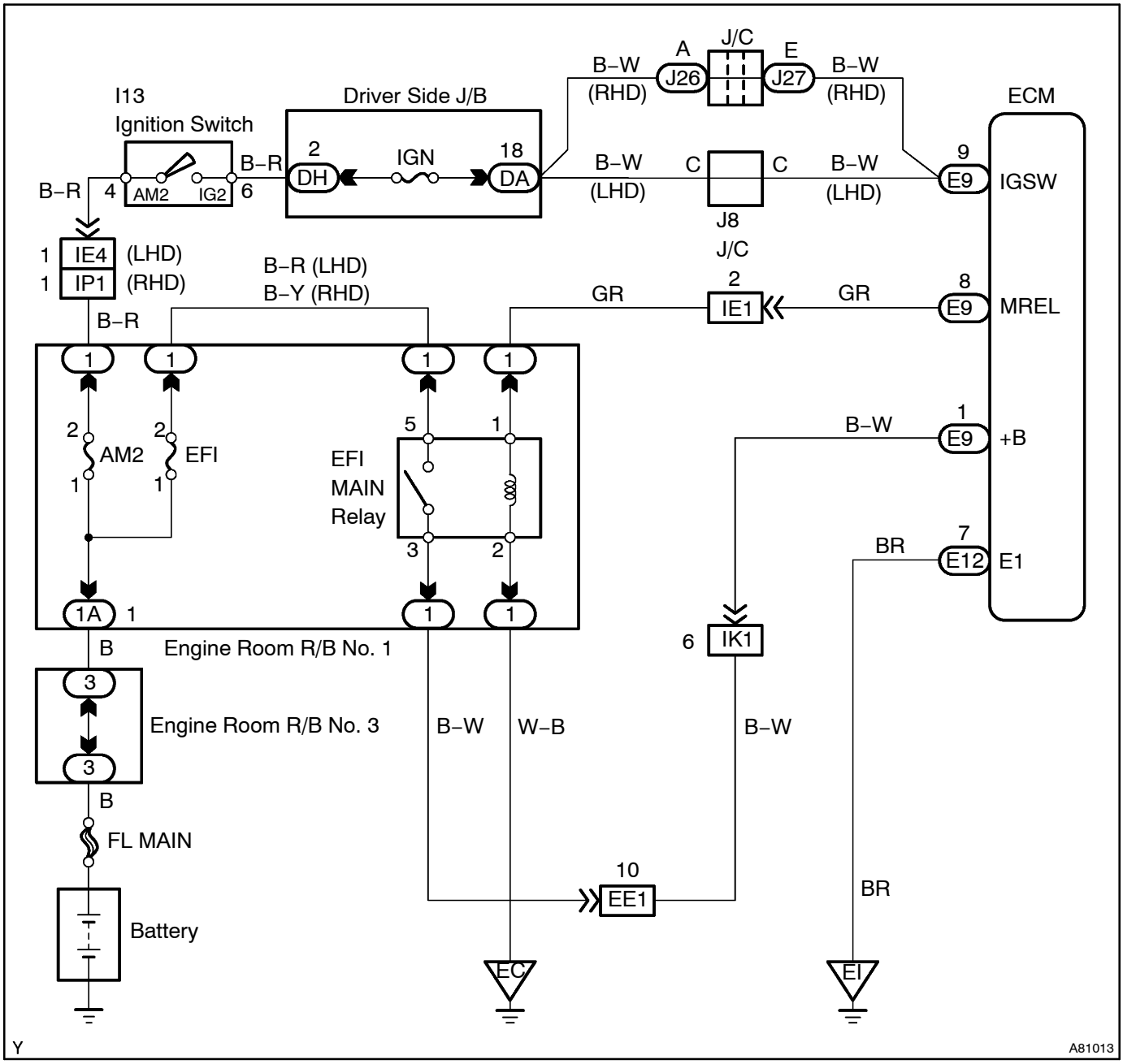

INSPECTION PROCEDURE

1 INSPECT ECM(+B VOLTAGE)

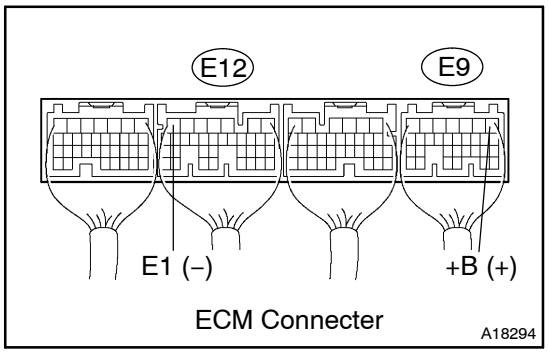

(a) Turn the ignition switch to ON.
(b) Measure the voltage between the specified terminals of the E9 and E12 ECM connectors.
Standard:

Tester Connection	Specified Condition
+B (E9–1) – E1 (E12–7)	9 to 14 V

OK → **PROCEED TO NEXT CIRCUIT INSPECTION SHOWN PROBLEM SYMPTOMS TABLE (See page 05–282)**

NG

2 CHECK HARNESS AND CONNECTOR(ECM – BODY GROUND)

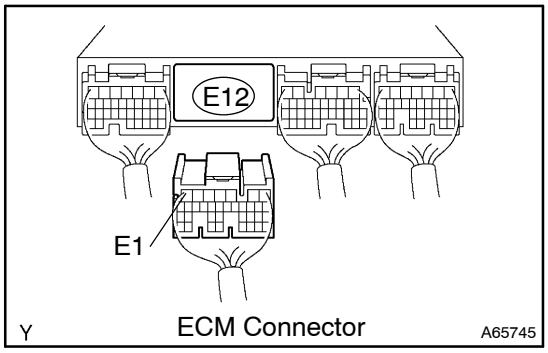

(a) Disconnect the E12 ECM connector.
(b) Check the resistance between the wire harness side connectors.
Standard (Check for open):

Tester Connection	Specified Condition
E1 (E12–7) – Body ground	Below 1 Ω

(c) Reconnect the ECM connector.

NG → **REPAIR OR REPLACE HARNESS OR CONNECTOR**

OK

3 INSPECT ECM(IGSW VOLTAGE)

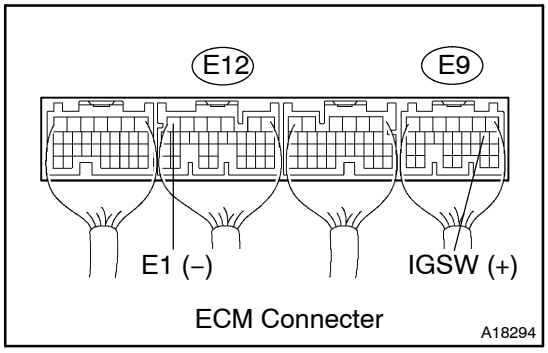

(a) Turn the ignition switch to ON.
(b) Measure the voltage between the specified terminals of the E9 and E12 ECM connectors.
Standard:

Tester Connection	Specified Condition
IGSW (E9–9) – E1 (E12–7)	9 to 14 V

OK → **Go to step 6**

NG

4 INSPECT FUSE(IGN FUSE)

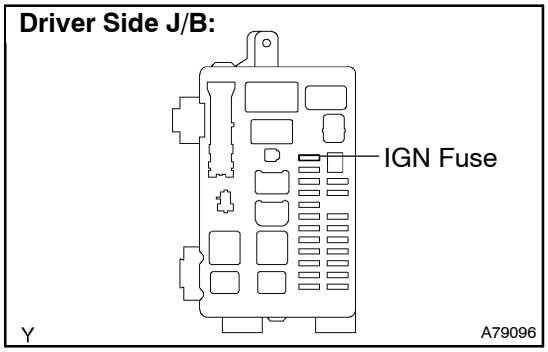

(a) Remove the IGN fuse from the driver side J/B.
(b) Check for continuity in the IGN fuse.
Standard: Continuity
(c) Reinstall the IG2 fuse.

NG → **CHECK FOR SHORT IN ALL HARNESSES AND COMPONENTS CONNECTED TO FUSE**

OK

5 INSPECT IGNITION OR STARTER SWITCH ASSY

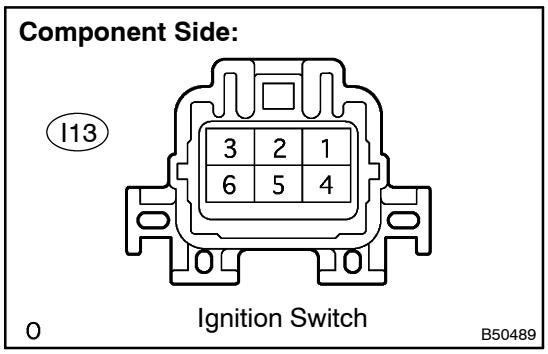

(a) Disconnect the I13 ignition switch connector.
(b) Check for continuity between the connector terminals shown in the chart below.
Standard:

Switch	Tester Connection	Specified Condition
LOCK	All Terminals	No continuity
ACC	1–3	Continuity
ON	1–2, 1–3, 2–3, 5–6	Continuity
START	4–5, 4–6, 5–6, 1–2	Continuity

(c) Reconnect the ignition switch connector.

NG → **REPLACE IGNITION OR STARTER SWITCH ASSY**

OK

CHECK AND REPAIR HARNESS AND CONNECTOR (BATTERY – IGNITION SWITCH, IGNITION SWITCH – ECM)

6 INSPECT ECM(MREL VOLTAGE)

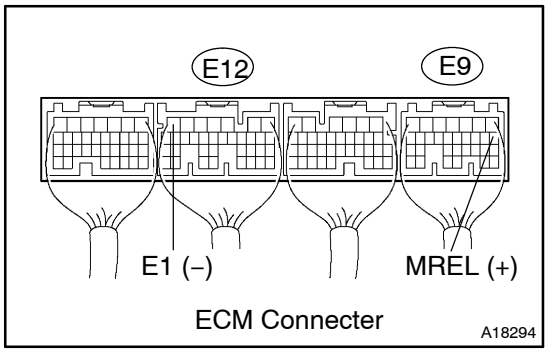

(a) Turn the ignition switch to ON.
(b) Measure the voltage between the specified terminals of the E9 and E12 ECM connectors.
Standard:

Tester Connection	Specified Condition
MREL (E9–8) – E1 (E12–7)	9 to 14 V

NG → **REPLACE ECM (See page 10–29)**

OK

7 INSPECT FUSE(EFI FUSE)

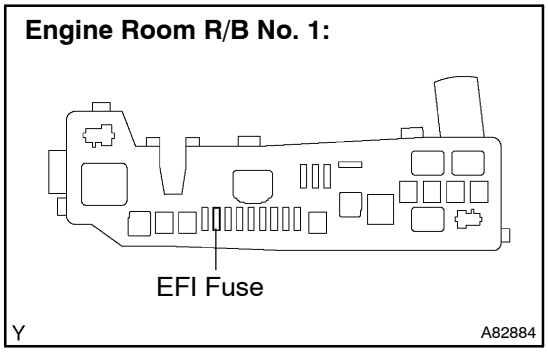

(a) Remove the EFI fuse from the engine room R/B No. 1.
(b) Check for continuity in the EFI fuse.
Standard: Continuity
(c) Reinstall the EFI fuse.

NG → **CHECK FOR SHORT IN ALL HARNESSES AND COMPONENTS CONNECTED TO FUSE**

OK

8 INSPECT EFI MAIN RELAY

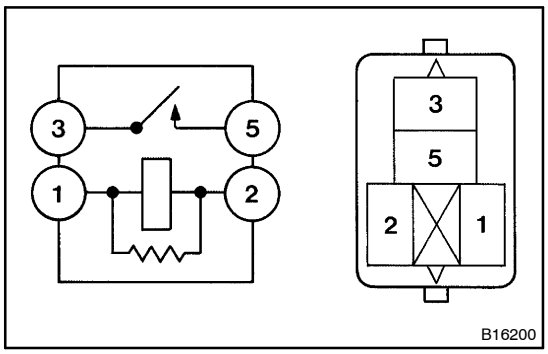

(a) Remove the EFI MAIN relay from the engine room R/B No. 1.
(b) Check for continuity in the EFI MAIN relay.
Standard:

Tester Connection	Specified Condition
1 – 2	Continuity
3 – 5	No continuity
	Continuity (Apply battery voltage to terminals 1 and 2)

(c) Reinstall the EFI MAIN relay.

NG → **REPLACE EFI MAIN RELAY**

OK

9	CHECK HARNESS AND CONNECTOR(EFI MAIN RELAY – ECM, EFI MAIN RELAY – BODY GROUND)

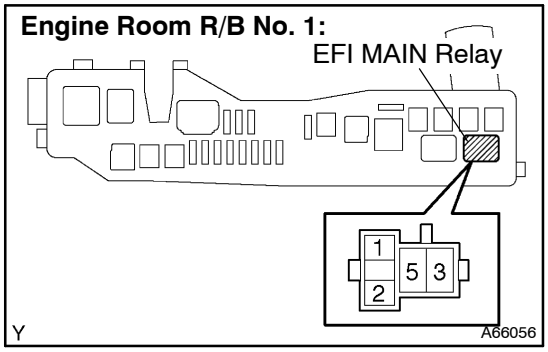

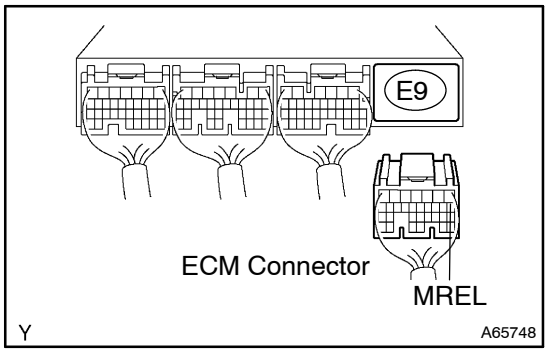

(a) Check the harness and connector between the EFI MAIN relay and ECM.
  (1) Remove the EFI MAIN relay from the engine room R/B No. 1.
  (2) Disconnect the E9 ECM connector.
  (3) Check the resistance between the wire harness side connectors.

Standard (Check for open):

Tester Connection	Specified Condition
EFI MAIN relay (1) – MREL (E9–8)	Below 1 Ω

Standard (Check for short):

Tester Connection	Specified Condition
EFI MAIN relay (1) or MREL (E9–8) – Body ground	10 kΩ or higher

  (4) Reinstall the EFI MAIN relay.
  (5) Reconnect the ECM connector.

(b) Check the harness and connector between the EFI MAIN relay and body ground.
  (1) Remove the EFI MAIN relay from the engine room R/B No. 1.
  (2) Check the resistance between the wire harness side connector and body ground.

Standard (Check for open):

Tester Connection	Specified Condition
EFI MAIN relay (2) – Body ground	Below 1 Ω

  (3) Reinstall the EFI MAIN relay.

OK → **REPAIR OR REPLACE HARNESS OR CONNECTOR**

NG

CHECK AND REPAIR HARNESS AND CONNECTOR (TERMINAL +B OF ECM – BATTERY POSITIVE TERMINAL)

STARTER SIGNAL CIRCUIT

CIRCUIT DESCRIPTION

HINT:

While the engine is being cranked, current flows from terminal ST2 of the ignition switch to the ST relay coil and also current flows to terminal STA of the ECM (STA signal).

WIRING DIAGRAM

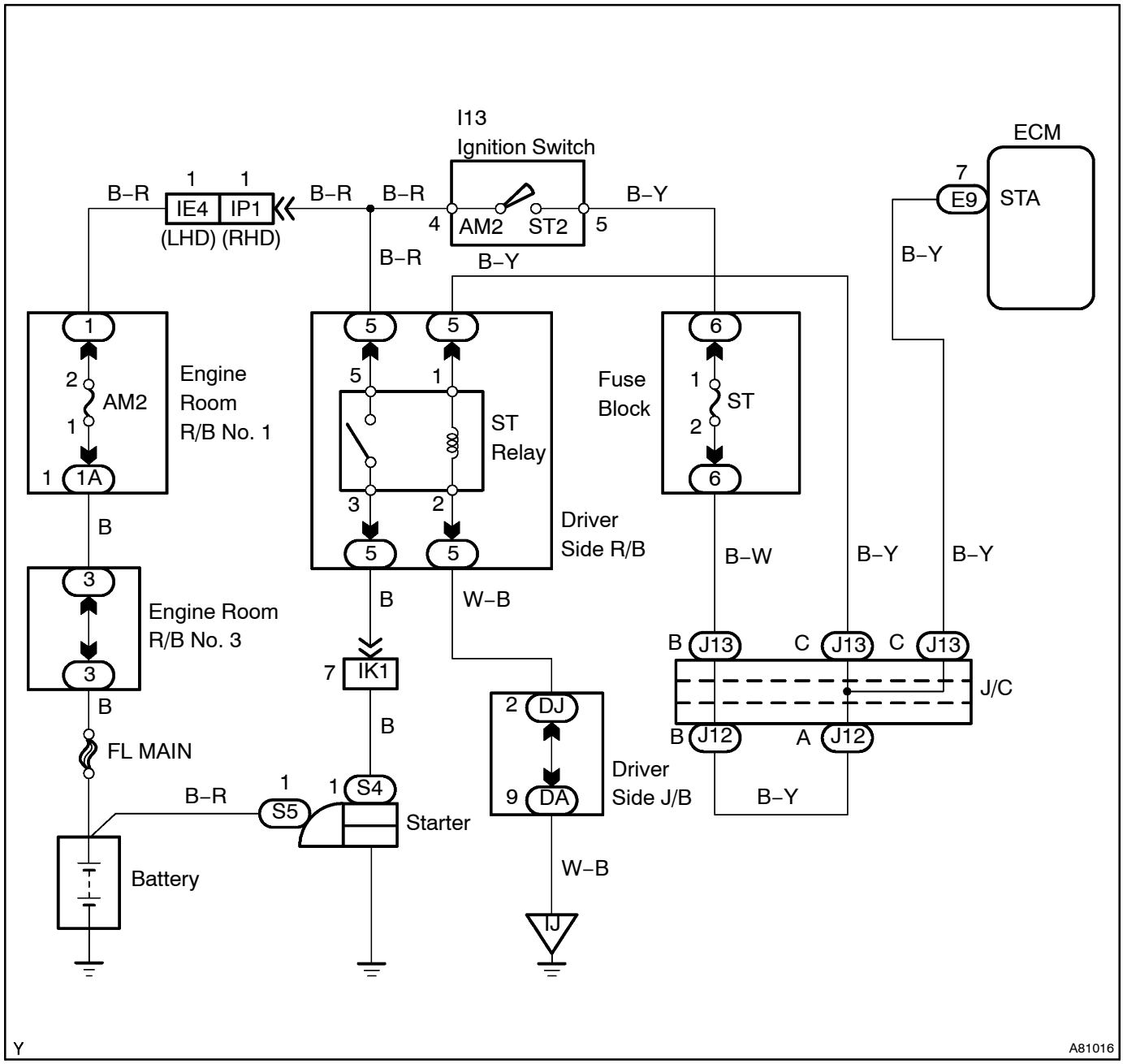

INSPECTION PROCEDURE

HINT:
This chart is on the premise that the engine is cranked normally. If the engine is not cranked, proceed to the problem symptoms table on page 05–282.

1	READ VALUE OF HAND–HELD TESTER(STA SIGNAL)

(a) Connect the hand–held tester to the DLC3.
(b) Turn the ignition switch to ON and turn the hand–held tester ON.
(c) Select the item "DIAGNOSIS / OBD/MOBD / DATA LIST / ALL / STARTER SIG" and read its value displayed on the hand–held tester.

Standard:

Ignition Switch Position	ON	START
STARTER SIG	OFF	ON

OK → **PROCEED TO NEXT CIRCUIT INSPECTION SHOWN PROBLEM SYMPTOMS TABLE (See page 05–282)**

NG

2 CHECK HARNESS AND CONNECTOR(ECM – ST RELAY)

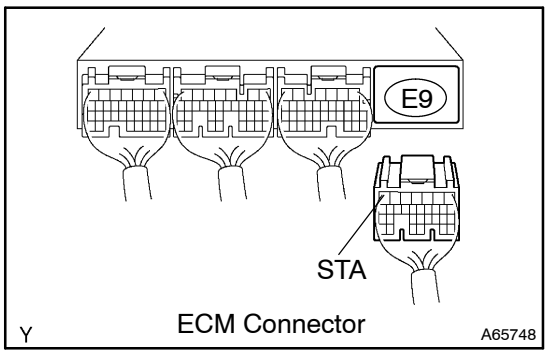

(a) Disconnect the E9 ECM connector.
(b) Remove the ST relay from the driver side R/B.
(c) Check the resistance between the wire harness side connectors.

Standard (Check for open):

Tester Connection	Specified Condition
ST relay (1) – STA (E9–7)	Below 1 Ω

Standard (Check for short):

Tester Connection	Specified Condition
ST relay (1) or STA (E9–7) – Body ground	10 kΩ or higher

(d) Reconnect the ECM connector.
(e) Reinstall the ST relay.

Driver Side R/B LHD:

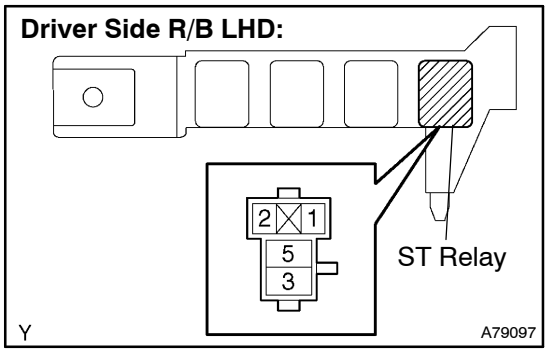

Driver Side R/B RHD:

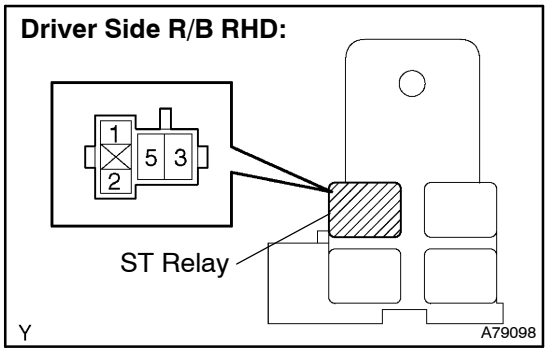

NG → **REPAIR OR REPLACE HARNESS OR CONNECTOR**

OK

REPLACE ECM (See page 10–29)

CHECK ENGINE WARNING LIGHT CIRCUIT

CIRCUIT DESCRIPTION

If the ECM detects a trouble, the CHK ENG is illuminated. At this time, the ECM records the DTC in its memory.

WIRING DIAGRAM

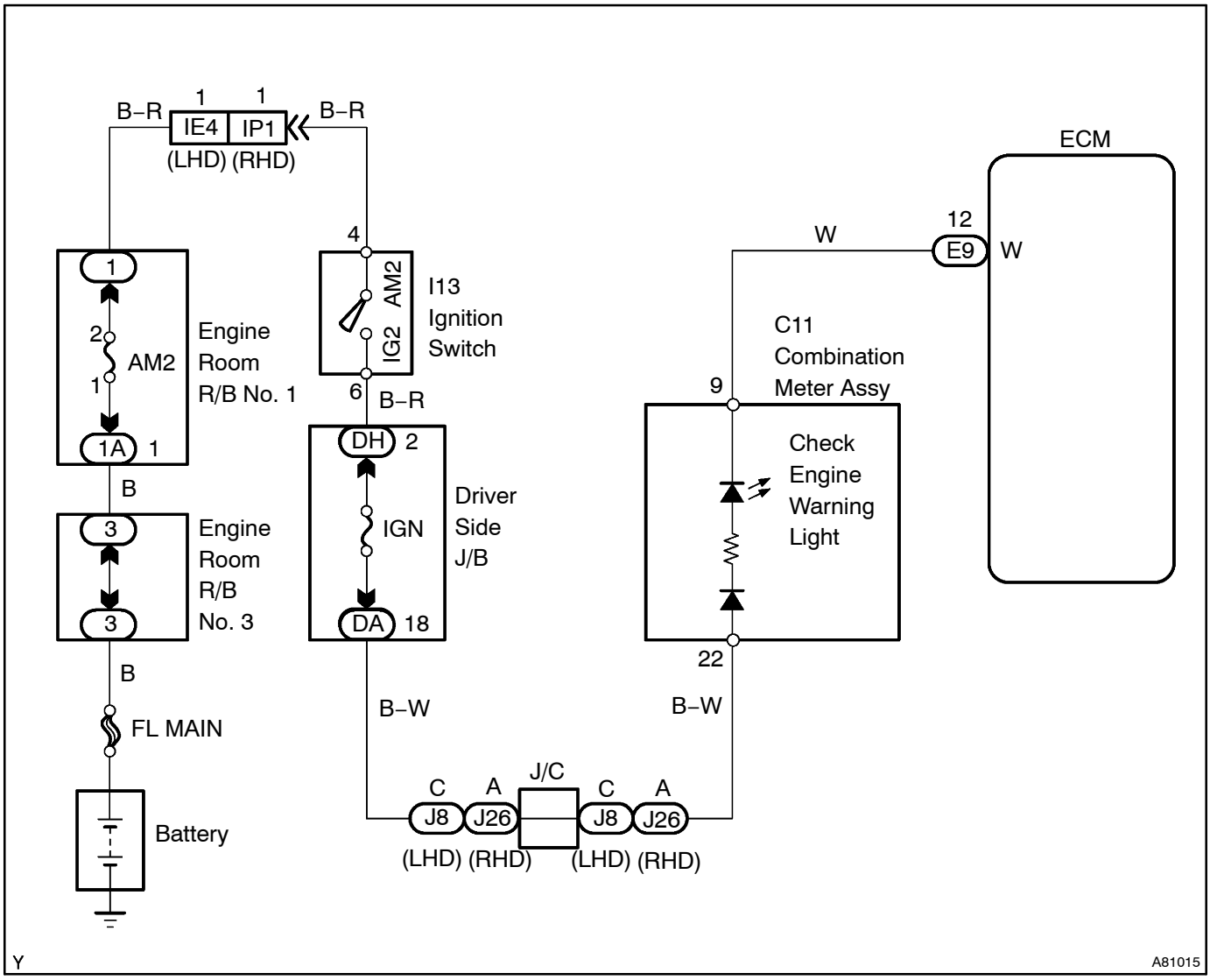

INSPECTION PROCEDURE

HINT:

Troubleshoot each trouble symptom in accordance with the chart below .

Reference:

Result	Proceed to
CHK ENG remains on	Start inspection from step 1
CHK ENG is not illuminated	Start inspection from step 3

1	CLEAR DTC

(a) Connect the hand–held tester to the DLC 3.
(b) Turn the ignition switch to ON and turn the hand–held tester ON.
(c) Select the item ”DIAGNOSIS / OBD/MOBD / DTC INFO / CURRENT CODES”.
(d) Read DTCs.
(e) Select the item ”DIAGNOSIS / OBD/MOBD / DTC INFO / CLEAR CODES”.
(f) Clear the DTCs.
(g) Check that the CHK ENG is not illuminated.
Standard: CHK ENG is not illuminated.

OK → **REPAIR CIRCUIT INDICATED BY OUTPUT DTC (See page 05–299)**

NG

2	CHECK HARNESS AND CONNECTOR(CHECK FOR SHORT IN WIRE HARNESS)

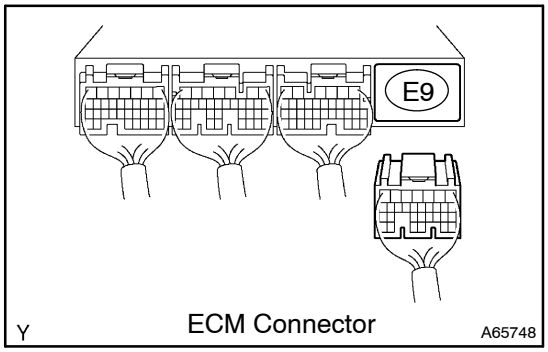

(a) Disconnect the E9 ECM connector.
(b) Turn the ignition switch to ON.
(c) Check that the CHK ENG is not illuminated.
Standard: CHK ENG is not illuminated.
(d) Reconnect the ECM connector.

OK → **REPLACE ECM (See page 10–29)**

NG

CHECK AND REPAIR HARNESS AND CONNECTOR

3	CHECK CHK ENG CONDITION

(a) Check that the CHK ENG is illuminated when the ignition switch is turned to ON.
Standard: CHK ENG is illuminated.

OK → **SYSTEM OK**

NG

4	INSPECT COMBINATION METER ASSY(CHECK ENGINE WARNING LIGHT CIRCUIT)

NG → **REPAIR OR REPLACE BULB OR COMBINATION METER ASSEMBLY**

OK

CHECK AND REPAIR HARNESS AND CONNECTOR (COMBINATION METER – ECM)

CLUTCH SWITCH CIRCUIT

CIRCUIT DESCRIPTION

The clutch switch is mounted on the clutch pedal. The switch is turned ON when depressing the clutch pedal, and sends a signal to the ECM.

HINT:

Normal condition is as shown in the table below.

Clutch Pedal Condition	Clutch Start Switch (CLSW) Terminal of ECM (Voltage)
Depressed	9 to 14 V
Released	0 V

WIRING DIAGRAM

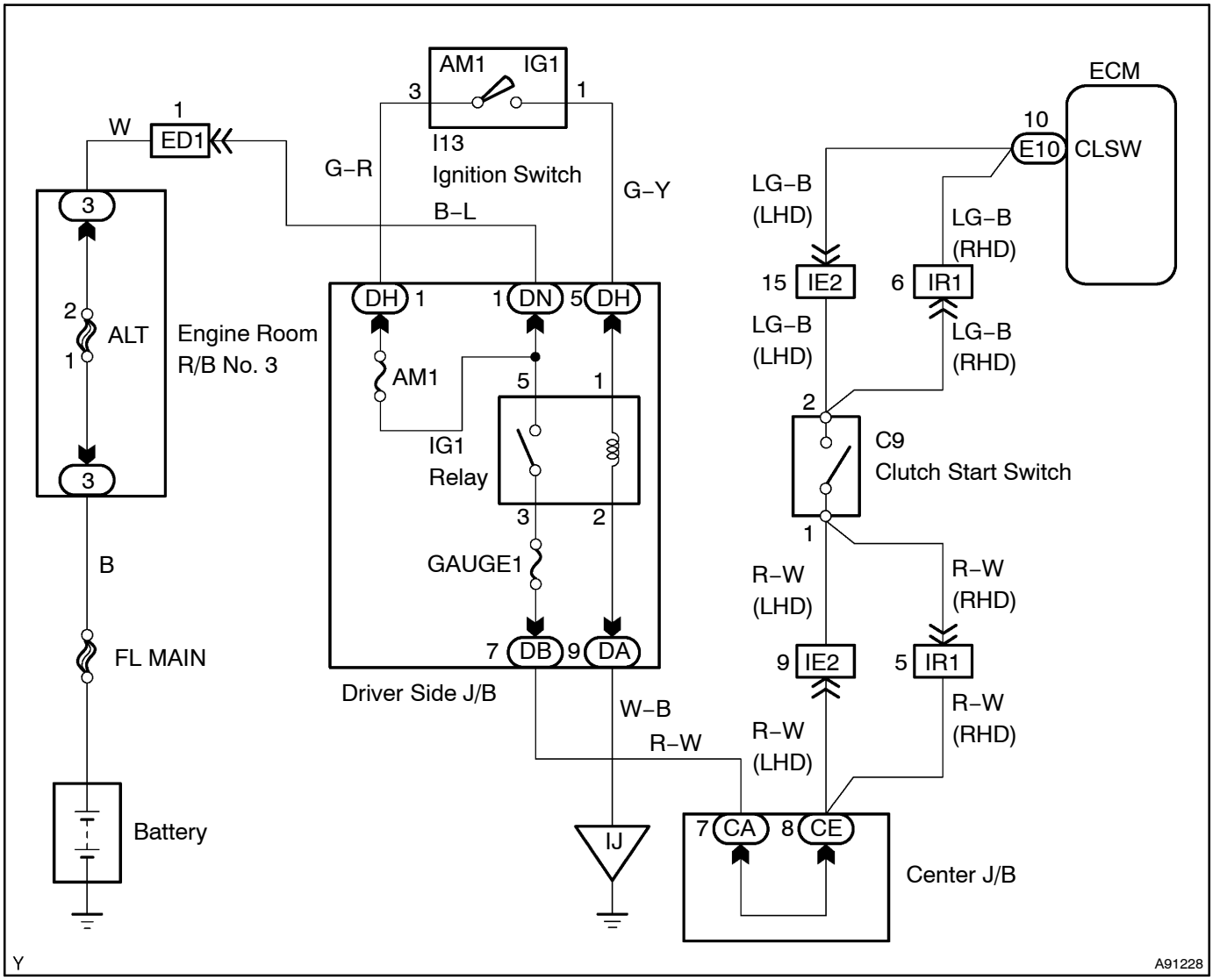

INSPECTION PROCEDURE

1 INSPECT CLUTCH START SWITCH ASSY(RESISTANCE)

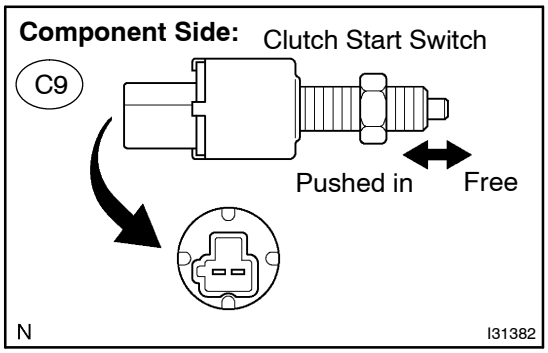

(a) Remove the C9 clutch start switch.
(b) Check for continuity between each pair of the terminals.
Standard:

Switch Position	Specified Condition
Switch pin free	No continuity
Switch pin pushed in	Continuity

(c) Reinstall the clutch start switch.

NG → **REPLACE CLUTCH START SWITCH ASSY**

OK

2 CHECK HARNESS AND CONNECTOR(CLUTCH START SWITCH – ECM)

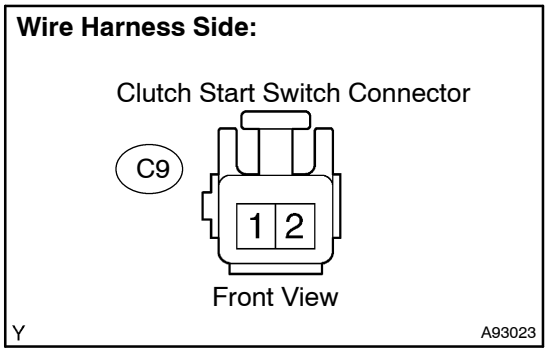

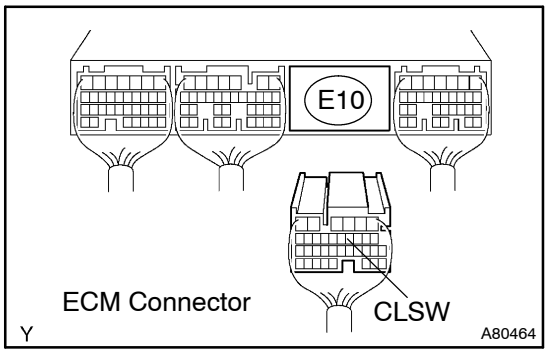

(a) Disconnect the C9 clutch start switch connector.
(b) Disconnect the E10 ECM connector.
(c) Check the resistance between the wire harness side connector.
Standard (Check for open):

Tester Connection	Specified Condition
CLSW (E10–10) – (C9–2)	Below 1 Ω

Standard (Check for short):

Tester Connection	Specified Condition
CLSW (E10–10) or (C9–2) – Body ground	10 kΩ or higher

(d) Reconnect the clutch start switch connector.
(e) Reconnect the ECM connector.

NG → **REPAIR OR REPLACE HARNESS OR CONNECTOR**

OK

3 CHECK HARNESS AND CONNECTOR(CLTCH START SWITCH – IG1 RELAY)

Wire Harness Side:

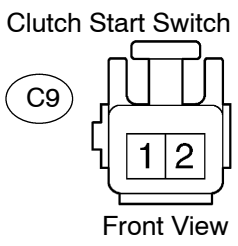

Driver Side J/B:

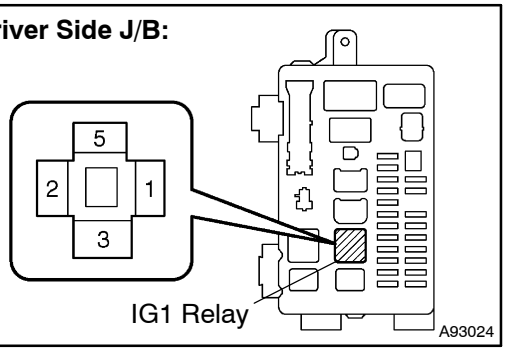

(a) Disconnect the C9 clutch start switch connector.
(b) Remove the IG1 relay from the driver side J/B.
(c) Check the resistance between the wire harness side connectors.

Standard (Check for open):

Tester Connection	Specified Condition
IG1 relay (3) – Clutch start switch (C9–1)	Below 1 Ω

Standard (Check for short):

Tester Connection	Specified Condition
IG1 relay (3) or Clutch start switch (C9–1) – Body ground	10 kΩ or higher

(d) Reconnect the clutch start switch connector.
(e) Reinstall the IG1 relay.

NG → **REPAIR OR REPLACE HARNESS OR CONNECTOR**

OK

REPLACE ECM (See page 10–29)

DIFFICULT TO ENGINE START AND ENGINE STALL

HINT:
Specified values in the following troubleshooting flowchart are the reference information.
Because of resultant values in DATA LIST vary depending on measuring conditions, or vehicle's model years. Do not judge the vehicle normal even if the DATA LIST values indicate a standard level. There is a possibility that factors of the malfunction are hiding.

INSPECTION PROCEDURE

1 READ OUTPUT DTCS(RELATED TO ENGINE)

(a) Connect the hand–held tester to the DLC3.
(b) Turn the ignition switch to ON and turn the hand–held tester ON.
(c) Select the item "DIAGNOSIS / OBD/MOBD / DTC INFO / CURRENT CODES".
(d) Read DTCs.
Result:

Display (DTC Output)	Proceed to
Other than engine–related DTCs (See page 05–266)	A
DTCs related to the engine (See page 05–299)	B

B → **REPAIR OR REPLACE ENGINE CONTROL SYSTEM ACCORDING TO DTC OUTPUT (See page 05–299)**

A

2 CHECK OPERATION OF ENGINE CRANKING

(a) Check the operation of the engine cranking.
(b) Compare the operation with that of a normal engine of the same model, and carefully check if there is no difference between them.

NG → **CHECK AND REPAIR BATTERY, CHARGING SYSTEM, STARTER ASSY AND STARTING SYSYTEM**

OK

3 READ VALUE OF HAND–HELD TESTER(FUEL PRESSURE)

(a) Connect the hand–held tester to the DLC3.
(b) Turn the ignition switch to ON and turn the hand–held tester ON.
(c) Select the item "DIAGNOSIS / OBD/MOBD / DATA LIST / ALL / COMN RAIL" and read its value displayed on the hand–held tester.
Reference:

Item	Inspection Condition	Reference Value
COMN RAIL	Cranking, engine coolant temperature is 0°C (32°F) or more	30 MPa

NG → **BLEED AIR FOR FUEL SYSTEM**

OK

4	CHECK INITIAL COMBUSTION

(a) Check that initial combustion occurs.
Result:

Result	Proceed to
NG (Cold engine)	A
NG (Hot engine)	B
OK	C

B → **Go to step 6**

C → **Go to step 7**

A

5	CHECK INDICATOR LIGHTING TIME AND AFTER GLOW TIME (See page 05–386)

HINT:
DTC P0380 (2 trip detection logic when the engine coolant temperature is less than 40°C [104°F]) will be present if there is an open or short malfunction in the glow plug circuit.

NG → **REPAIR OR REPLACE PRE–HEATING SYSTEM**

OK

6	READ VALUE OF HAND–HELD TESTER(FUEL PRESSURE)

(a) Connect the hand–held tester to the DLC3.
(b) Turn the ignition switch to ON and turn the hand–held tester ON.
(c) Start the engine.
(d) Select the item ”DIAGNOSIS / OBD/MOBD / DATA LIST / ALL / COMN RAIL”.
(e) Check that an internal fuel pressure of the common rail is within specification below.
Standard:

Engine Speed	Fuel Pressure (MPa)
Idling	Approximately 30 to 40
2,500 rpm (No engine load)	Approximately 50 to 100

NG → **Go to step 12**

OK

7 CHECK AIR INTAKE SYSTEM AND EXHAUST SYSTEM

(a) Remove the air cleaner filter.
(b) Inspect the EGR valve operation.
  (1) Start the engine and warm it up.
  (2) Check that a clicking sound is heard from the EGR valve when the vacuum hose is disconnected from EGR valve with the engine in an idle.
(c) Inspect the intake shutter (throttle valve) operation.
  (1) Start the engine.
  (2) Check if the intake shutter (throttle valve) fully opens when accelerating the engine speed.

HINT:
Under quick accelerating of the engine speed, the EGR valve is fully closed and the intake shutter is fully opened. If the systems are normal, the volume of the black smoke will result in decrease.

NG → **CHECK AND REPAIR LOCATION WHERE MALFUNCTION EXIST**

OK

8 READ VALUE OF HAND–HELD TESTER

(a) Connect the hand–held tester to the DLC3.
(b) Start the engine and turn the hand–held tester ON.
(c) Select the item "DIAGNOSIS / OBD/MOBD / DATA LIST / ALL / COMN RAIL, INJ VOLUME and INJ TIMING" and read its value displayed on the hand–held tester.
  Standard:

Item	Engine Speed *	Reference Value
COMN RAIL	Idling	30 to 40 MPa
COMN RAIL	2,000 rpm (No engine load)	35 to 80 MPa
COMN RAIL	3,000 rpm (No engine load)	50 to 100 MPa
INJ VOLUME	Idling	3 to 10 mm^3
INJ VOLUME	2,000 rpm (No engine load)	3 to 10 mm^3
INJ VOLUME	3,000 rpm (No engine load)	5 to 12 mm^3
INJ TIMING	Idling	–1 to 5°CA
INJ TIMING	2,000 rpm (No engine load)	0 to 4°CA
INJ TIMING	3,000 rpm (No engine load)	1 to 5°CA

*: If no conditions are specifically stated for "Idling", it means the A/C switch is OFF and all accessory switches are OFF.

NG → **Go to step 13**

OK

9	INSPECT CYLINDER COMPRESSION PRESSURE (See page 14–87)

NG → CHECK AND REPAIR ENGINE

OK

10	CHECK HARNESS AND CONNECTOR(INJECTOR – EDU)

HINT:
DTC P0200 (1 trip detection logic) will be present if there is an open or short malfunction in the EDU circuit.

Wire Harness Side:

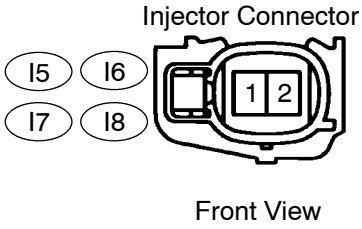

Wire Harness Side: EDU Connector

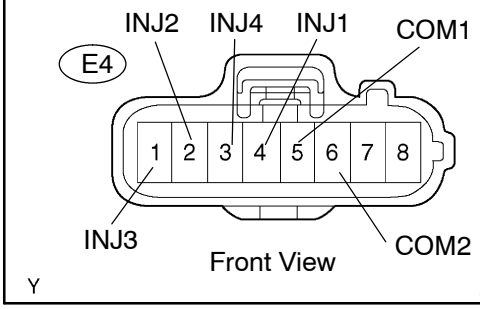

(a) Disconnect the I5, I6, I7, or I8 injector connector.
(b) Disconnect the E4 EDU connector.
(c) Check the resistance between the wire harness side connectors.

Standard (Check for open):

Tester Connection	Specified Condition
Injector (I5–1) – INJ1 (E4–4)	Below 1 Ω
Injector (I6–1) – INJ2 (E4–2)	
Injector (I7–1) – INJ3 (E4–1)	
Injector (I8–1) – INJ4 (E4–3)	
Injector (I5–2) – COM1 (E4–5)	
Injector (I6–2) – COM2 (E4–6)	
Injector (I7–2) – COM2 (E4–6)	
Injector (I8–2) – COM1 (E4–5)	

Standard (Check for short):

Tester Connection	Specified Condition
Injector (I5–1) or INJ1 (E4–4) – Body ground	10 kΩ or higher
Injector (I6–1) or INJ2 (E4–2) – Body ground	
Injector (I7–1) or INJ3 (E4–1) – Body ground	
Injector (I8–1) or INJ4 (E4–3) – Body ground	
Injector (I5–2) or COM1 (E4–5) – Body ground	
Injector (I6–2) or COM2 (E4–6) – Body ground	
Injector (I7–2) or COM2 (E4–6) – Body ground	
Injector (I8–2) or COM1 (E4–5) – Body ground	

(d) Reconnect the injector connector.
(e) Reconnect the EDU connector.

NG → REPAIR OR REPLACE HARNESS OR CONNECTOR

OK

11 PERFORM ACTIVE TEST BY HAND–HELD TESTER(INJECTOR CUT #1 TO #4)

(a) Connect the hand–held tester to the DLC3.
(b) Start the engine and turn the hand–held tester ON.
(c) Select the item ”DIAGNOSIS / OBD/MOBD / ACTIVE TEST / INJECTOR CUT #1 to #4”.
(d) Check the engine idling condition while the fuel injection of each cylinder is cut by the hand–held tester.
Result:

Engine Idle Condition	Proceed to
Becomes unstable	A
Does not change	B

HINT:
Replace the injector mounted on the cylinder that causes rough idling.

B → **GO TO DTC P1238 (See page 05–431)**

A

REPLACE INJECTOR DRIVER

12 CHECK IF FUEL IS BEING SUPPLIED TO SUPPLY PUMP

(a) Disconnect the inlet hose from the supply pump.
(b) Operate the priming pump and check that the fuel is being supplied to the supply pump.

OK → **REPLACE INJECTION OR SUPPLY PUMP ASSY (See page 11–58)**

NG

CHECK AND REPAIR FUEL PIPING CLOG (INCLUDING FUEL FREEZING) (FUEL TANK – SUPPLY PUMP)

13 INSPECT ECM(THW VOLTAGE)

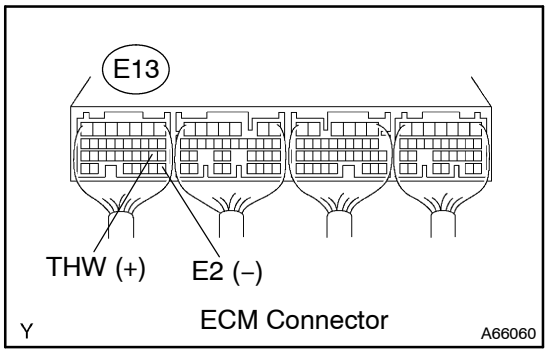

(a) Start the engine.
(b) Measure the voltage between the specified terminals of the E13 ECM connector.
Standard:

Tester Connection	Condition	Specified Condition
THW (E13–19) – E2 (E13–28)	Idling, engine coolant temperature at 60 to 120°C (140 to 248°F)	0.2 to 1.0 V

NG → **Go to step 17**

OK

14 INSPECT ECM(NE SIGNAL)

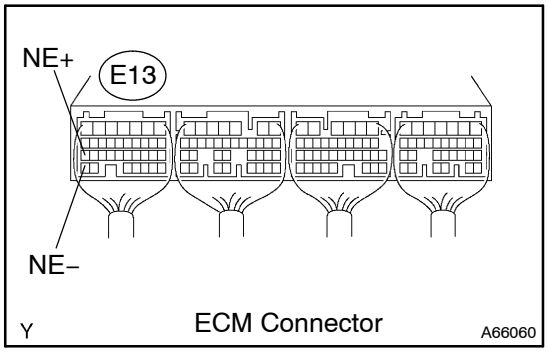

(a) Inspect using the oscilloscope.
(b) During idling, check the waveform between the specified terminals of the E13 ECM connector.

Standard:

Tester Connection	Specified Condition
NE+ (E13–27) – NE– (E13–34)	Correct waveform is as shown

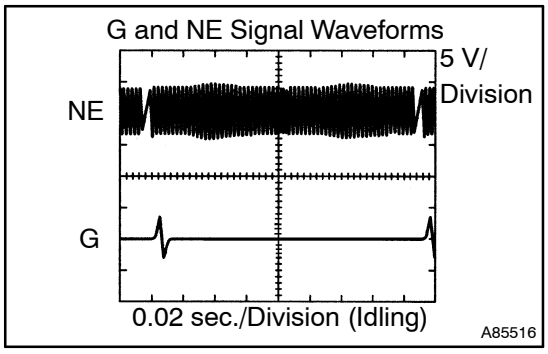

NG → **Go to step 18**

OK

15 CHECK HARNESS AND CONNECTOR(ECM – STARTER RELAY)

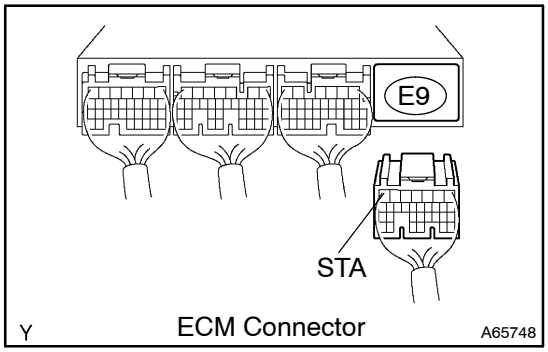

(a) Disconnect the E9 ECM connector.
(b) Remove the ST relay from the driver side R/B.
(c) Check the resistance between the wire harness side connectors.

Standard (Check for open):

Tester Connection	Specified Condition
ST relay (1) – STA (E9–7)	Below 1 Ω

Standard (Check for short):

Tester Connection	Specified Condition
ST relay (1) or STA (E9–7) – Body ground	10 kΩ or higher

(d) Reconnect the ECM connector.
(e) Reinstall the ST relay.

Driver Side R/B LHD:

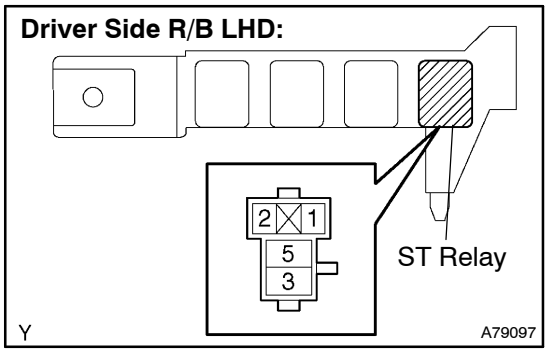

Driver Side R/B RHD:

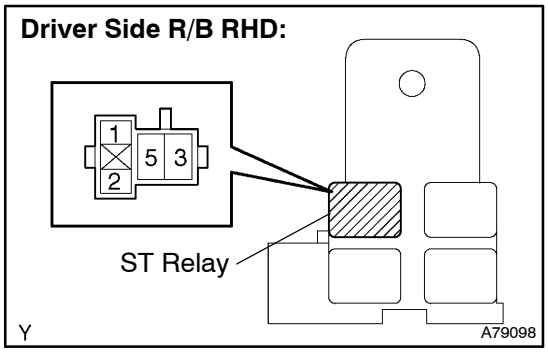

NG → **REPAIR OR REPLACE HARNESS OR CONNECTOR**

OK

16 INSPECT ECM(PCR1 AND PCR2 VOLTAGE)

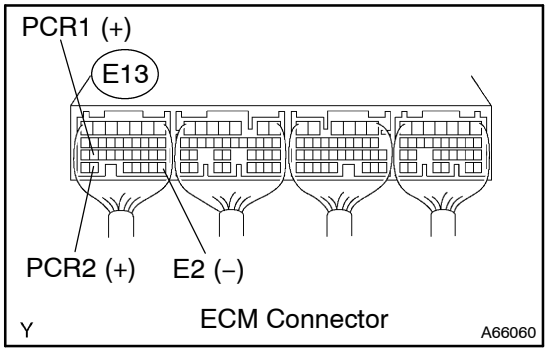

(a) Start the engine.
(b) Measure the voltage between the specified terminals of the E13 ECM connector.

Standard:

Tester Connection	Condition	Specified Condition
PCR1 (E13–26) – E2 (E13–28)	Idling	1.8 to 2.1 V
PCR2 (E13–33) – E2 (E13–28)	Idling	1.2 to 1.5 V

NG → **Go to step 19**

OK

REPLACE ECM (See page 10–29)

17 INSPECT ENGINE COOLANT TEMPERATURE SENSOR

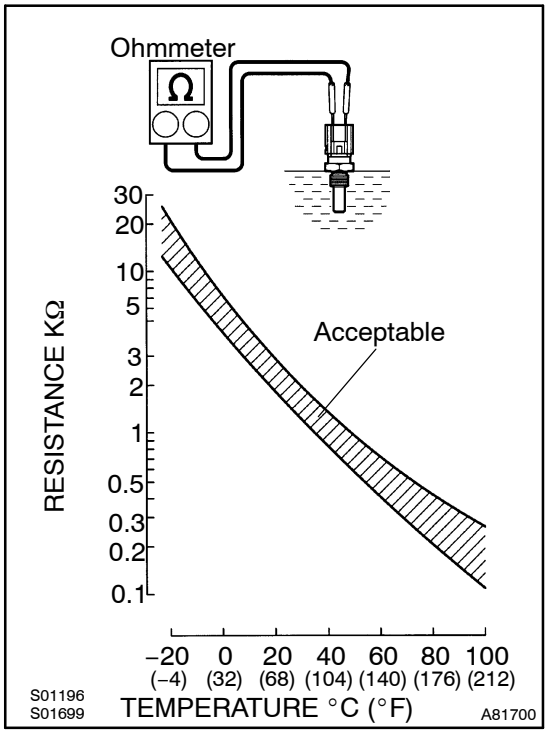

(a) Remove the engine coolant temperature sensor.
(b) Measure the resistance between the terminals.
Standard:
2.32 to 2.59 kΩ at 20°C (68°F)
0.310 to 0.326 kΩ at 80°C (176°F)

NOTICE:
If you check the engine coolant temperature sensor in water, be careful not to allow water to contact the terminals. After checking, dry the sensor.

HINT:
Alternate procedure: Connect an ohmmeter to the installed engine coolant temperature sensor and read the resistance. Use an infrared thermometer to measure the engine temperature in the immediate vicinity of the sensor. Compare these values to the resistance/temperature graph. Change the engine temperature (warm up or allow to cool down) and repeat the test.

(c) Reinstall the engine coolant temperature sensor.

NG → **REPLACE ENGINE COOLANT TEMPERATURE SENSOR**

OK

REPAIR OR REPLACE HARNESS OR CONNECTOR

18 INSPECT CRANKSHAFT POSITION SENSOR

Component Side:

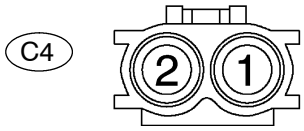

Crankshaft Position Sensor

A78431

(a) Disconnect the C4 crankshaft position sensor connector.
(b) Measure the resistance between terminals 1 and 2.
Standard:

Tester Connection	Specified Condition
1 – 2	1,630 to 2,740 Ω at cold
	2,065 to 3,225 Ω at hot

NOTICE:
"Cold" and "Hot" shown above mean the temperature of the coils themselves. "Cold" is from –10°C (14°F) to 50°C (122°F) and "Hot" is from 50°C (122°F) to 100°C (212°F).

(c) Reconnect the crankshaft position sensor connector.

NG → **REPLACE CRANKSHAFT POSITION SENSOR**

OK

REPAIR OR REPLACE HARNESS OR CONNECTOR

19 INSPECT COMMON RAIL ASSY(FUEL PRESSURE SENSOR)

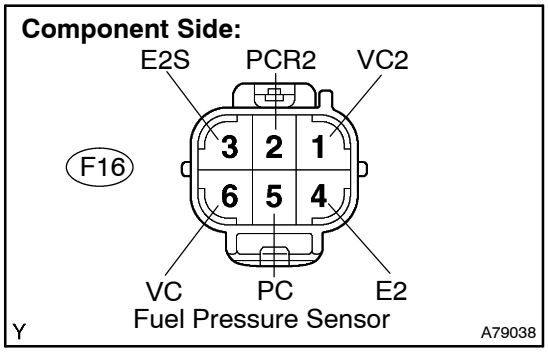

(a) Disconnect the F16 fuel pressure sensor connector.
(b) Measure the resistance between each pair of the terminals of the fuel pressure sensor.

Standard:

Tester Connection	Specified Condition
PC (F16–5) – E2 (F16–4)	16.4 kΩ or less
PCR2 (F16–2) – E2S (F16–3)	16.4 kΩ or less
PC (F16–5) – VC (F16–6)	3 kΩ or less
PCR2 (F16–2) – VC2 (F16–1)	3 kΩ or less

(c) Reconnect the fuel pressure sensor connector.

NG → **REPLACE COMMON RAIL ASSY (FUEL PRESSURE SENSOR) (See page 11–67)**

OK

20 CHECK HARNESS AND CONNECTOR(FUEL PRESSURE SENSOR – ECM)

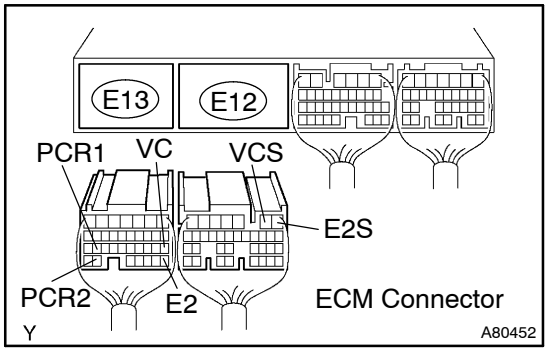

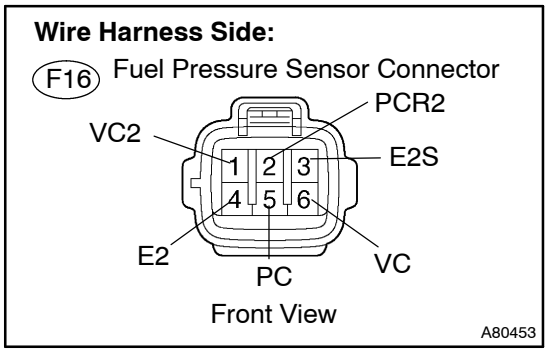

(a) Disconnect the F16 fuel pressure sensor connector.
(b) Disconnect the E12 and E13 ECM connectors.
(c) Check the resistance between the wire harness side connectors.

Standard (Check for open):

Tester Connection	Specified Condition
PCR1 (E13–26) – PC (F16–5)	Below 1 Ω
PCR2 (E13–33) – PCR2 (F16–2)	
VCS (E12–2) – VC2 (F16–1)	
VC (E13–18) – VC (F16–6)	
E2 (E13–28) – E2 (F16–4)	
E2S (E12–1) – E2S (F16–3)	

Standard (Check for short):

Tester Connection	Specified Condition
PCR1 (E13–26) or PC (F16–5) – Body ground	10 kΩ or higher
PCR2 (E13–33) or PCR2 (F16–2) – Body ground	
VCS (E12–2) or VC2 (F16–1) – Body ground	
VC (E13–18) or VC (F16–6) – Body ground	
E2 (E13–28) or E2 (F16–4) – Body ground	
E2S (E12–1) or E2S (F16–3) – Body ground	

(d) Reconnect the fuel pressure sensor connector.
(e) Reconnect the ECM connectors.

NG → **REPAIR OR REPLACE HARNESS OR CONNECTOR**

OK

21	REPLACE ECM (See page 10–29)

NG → REPLACE INJECTION OR SUPPLY PUMP ASSY (See page 11–58)

OK

END

BLACK SMOKE

HINT:
Specified values in the following troubleshooting flowchart are the reference information.
Because of resultant values in DATA LIST vary depending on measuring conditions, or vehicle's model years. Do not judge the vehicle normal even if the DATA LIST values indicate a standard level. There is a possibility that factors of the malfunction are hiding.

INSPECTION PROCEDURE

1 READ OUTPUT DTCS(RELATED TO ENGINE)

(a) Connect the hand–held tester to the DLC3.
(b) Turn the ignition switch to ON and turn the hand–held tester ON.
(c) Select the item "DIAGNOSIS / OBD/MOBD / DTC INFO / CURRENT CODES".
(d) Read DTCs.
Result:

Display (DTC Output)	Proceed to
Other than engine–related DTCs (See page 05–266)	A
DTCs related to the engine (See page 05–299)	B

B → **REPAIR OR REPLACE ENGINE CONTROL SYSTEM ACCORDING TO DTC OUTPUT (See page 05–299)**

A

2 READ VALUE OF HAND–HELD TESTER

(a) Connect the hand–held tester to the DLC3.
(b) Start the engine and push the hand–held tester ON.
(c) Select the item "DIAGNOSIS / OBD/MOBD / DATA LIST / ALL / INJ VOLUME and INJ VOL FB #1 to #4" and read its value displayed on the hand–held tester.
Standard:

Item	Engine Speed *	Reference Value
INJ VOLUME	Idling (No engine load)	3 to 10 mm^3
INJ VOL FB #1	Idling (No engine load)	–4.9 to 4.9 mm^3
INJ VOL FB #2	Idling (No engine load)	–4.9 to 4.9 mm^3
INJ VOL FB #3	Idling (No engine load)	–4.9 to 4.9 mm^3
INJ VOL FB #4	Idling (No engine load)	–4.9 to 4.9 mm^3

*: If no conditions are specifically stated for "Idling", it means the A/C switch is OFF and all accessory switches are OFF.

NG → **Go to step 11**

OK

3	PERFORM ENGINE RPM ACCELERATION

HINT:
If exhaust gas contain excessive black smoke, perform the following steps.
(a) Accelerate the engine speed up to the maximum RPM with no load 20 times.
(b) Check the volume of the black smoke in the exhaust gas.
Result:

Result	Proceed to
Black smoke is faded	OK
Black smoke remains in the exhaust gas	NG

HINT:
Deposited soot in the exhaust system is a source of the excessive black smoke.

NG → **Go to step 4**

OK

END

4	CHECK AIR INTAKE SYSTEM AND EXHAUST SYSTEM

(a) Remove the air cleaner filter.
(b) Inspect the EGR valve operation.
(1) Start the engine and warm it up.
(2) Check that a clicking sound is heard from the EGR valve when the vacuum hose is disconnected from EGR valve with the engine in an idle.
(c) Inspect the intake shutter (throttle valve) operation.
(1) Start the engine.
(2) Check if the intake shutter fully opens when accelerating the engine speed.

HINT:
Under quick accelerating of the engine speed, the EGR valve is fully closed and the intake shutter is fully opened. If the systems are normal, the volume of the black smoke will result in decrease.

NG → **Go to step 5**

OK

CHECK AND REPAIR LOCATION WHERE MALFUNCTION EXIST

5	READ VALUE OF HAND–HELD TESTER(MASS AIR FLOW RATE)

HINT:
DTC P0100, P0102 or P0103 (1 trip detection logic) will be present if there is an open or short malfunction in the mass air flow (MAF) meter, or P0101 (2 trip detection logic) will be present if there is other malfunction in the MAF meter.

(a) Disconnect the throttle control motor connector.
(b) Disconnect the EGR valve connector.
(c) Connect the hand–held tester to the DLC3.
(d) Start the engine and turn the hand–held tester ON.
(e) Select the item ”DIAGNOSIS / OBD/MOBD / DATA LIST / ALL / MAF” and read its value displayed on the hand–held tester.

Result:

Engine Speed Condition	Air Flow Rate (gm/s)
800 rpm	4 to 9

(f) Reconnect the throttle control motor connector.
(g) Reconnect the EGR valve connector.

NG → **REPLACE MASS AIR FLOW METER**

OK

6	CHECK TURBOCHARGING PRESSURE (See on page 13–6)

NG → **REPLACE TURBOCHARGER SUB–ASSY (See page 13–12)**

OK

7	READ VALUE OF HAND–HELD TESTER

(a) Connect the hand–held tester to the DLC3.
(b) Start the engine and turn the hand–held tester ON.
(c) Enter "DIAGNOSIS / OBD/MOBD / DATA LIST / ALL".
(d) Select the following items in order and read values displayed on the hand–held tester respectively.
(1) COMN RAIL
(2) PUMP VCM ANGLE
(3) INJ VOLUME
(4) M–INJ/PILOT ON
(5) M–INJ/PILOT OFF
(6) PILOT–INJ
(7) INJ TIMING
(8) INJ VOL FB #1 to #4

Reference:

Item	Engine Speed *	Reference Value
COMN RAIL	Idling	30 to 40 MPa
COMN RAIL	2,000 rpm (No engine load)	35 to 80 MPa
COMN RAIL	3,000 rpm (No engine load)	50 to 100 MPa
INJ VOLUME	Idling	3 to 10 mm^3
INJ VOLUME	2,000 rpm (No engine load)	3 to 10 mm^3
INJ VOLUME	3,000 rpm (No engine load)	5 to 12 mm^3
M–INJ/PILOT ON	Idling	600 to 1,200 μs
M–INJ/PILOT OFF	Idling	0 μs
PILOT–INJ	Idling	400 to 700 μs
INJ TIMING	Idling	–1 to 5°CA
INJ TIMING	2,000 rpm (No engine load)	0 to 4°CA
INJ TIMING	3,000 rpm (No engine load)	1 to 5°CA
INJ VOL FB #1	Idling	–4.9 to 4.9 mm^3
INJ VOL FB #2	Idling	–4.9 to 4.9 mm^3
INJ VOL FB #3	Idling	–4.9 to 4.9 mm^3
INJ VOL FB #4	Idling	–4.9 to 4.9 mm^3

*: If no conditions are specifically stated for "Idling", it means the A/C switch is OFF and all accessory switches are OFF.

Result:

Result	Proceed to
Within the reference value	A
One of the INJ VOL FB #1 to #4 indicates out of the reference value	B
Other than above	C

B → **GO TO DTC P1238 (See page 05–431)**

C → **Go to step 11**

A

8	INSPECT CYLINDER COMPRESSION PRESSURE (See page 14–87)

NG → **CHECK AND REPAIR ENGINE**

OK

9 CHECK HARNESS AND CONNECTOR(INJECTOR – EDU)

HINT:
DTC P0200 (1 trip detection logic) will be present if there is an open or short malfunction in the EDU circuit.

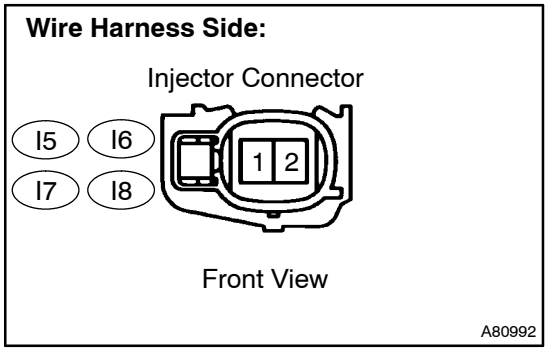

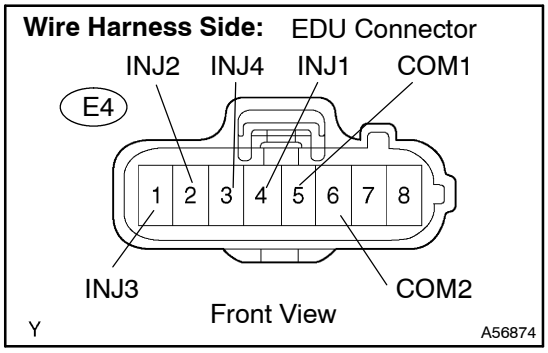

(a) Disconnect the I5, I6, I7, or I8 injector connector.
(b) Disconnect the E4 EDU connector.
(c) Measure the resistance between the wire harness side connectors.

Standard (Check for open):

Tester Connection	Specified Condition
Injector (I5–1) – INJ1 (E4–4)	Below 1 Ω
Injector (I6–1) – INJ2 (E4–2)	
Injector (I7–1) – INJ3 (E4–1)	
Injector (I8–1) – INJ4 (E4–3)	
Injector (I5–2) – COM1 (E4–5)	
Injector (I6–2) – COM2 (E4–6)	
Injector (I7–2) – COM2 (E4–6)	
Injector (I8–2) – COM1 (E4–5)	

Standard (Check for short):

Tester Connection	Specified Condition
Injector (I5–1) or INJ1 (E4–4) – Body ground	10 kΩ or higher
Injector (I6–1) or INJ2 (E4–2) – Body ground	
Injector (I7–1) or INJ3 (E4–1) – Body ground	
Injector (I8–1) or INJ4 (E4–3) – Body ground	
Injector (I5–2) or COM1 (E4–5) – Body ground	
Injector (I6–2) or COM2 (E4–6) – Body ground	
Injector (I7–2) or COM2 (E4–6) – Body ground	
Injector (I8–2) or COM1 (E4–5) – Body ground	

(d) Reconnect the injector connector.
(e) Reconnect the EDU connector.

NG → **REPAIR OR REPLACE HARNESS OR CONNECTOR**

OK

10 PERFORM ACTIVE TEST BY HAND–HELD TESTER(INJECTOR CUT #1 TO #4)

(a) Connect the hand–held tester to the DLC3.
(b) Start the engine and turn the hand–held tester ON.
(c) Select the item ”DIAGNOSIS / OBD/MOBD / ACTIVE TEST / INJECTOR CUT #1 to #4”.
(d) Check the engine idling condition while the fuel injection of each cylinder is cut by the hand–held tester.

Result:

Engine Idle Condition	Proceed to
Becomes unstable	A
Does not change	B

HINT:
Replace the injector mounted on the cylinder that causes rough idling.

B → GO TO DTC P1238 (See page 05–431)

A

REPLACE INJECTOR DRIVER

11 INSPECT ECM(THW VOLTAGE)

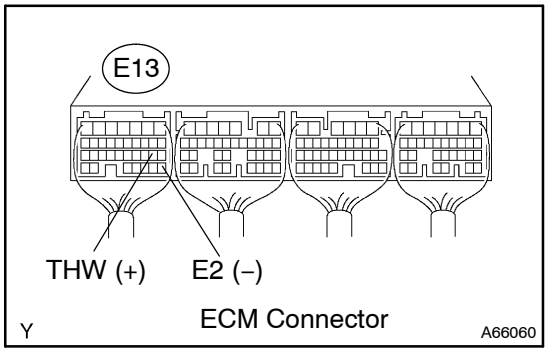

(a) Start the engine.
(b) Measure the voltage between the specified terminals of the E13 ECM connector.

Standard:

Tester Connection	Condition	Specified Condition
THW (E13–19) – E2 (E13–28)	Idling, engine coolant temperature is 60 to 120°C (140 to 248°F)	0.2 to 1.0 V

NG → Go to step 17

OK

12 INSPECT ECM(PIM VOLTAGE)

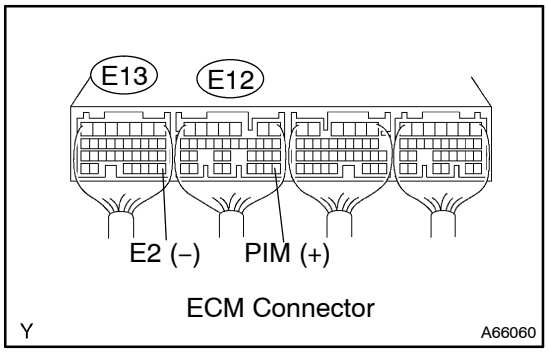

(a) Turn the ignition switch to ON.
(b) Measure the voltage between the specified terminals of the E12 and E13 ECM connectors.

Standard:

Tester Connection	Condition	Specified Condition
PIM (E12–28) – E2 (E13–28)	Applied negative pressure of 40 kPa (300 mmHg, 11.8 in.Hg)	1.4 to 2.0 V
PIM (E12 – 28) – E2 (E13–28)	Same as atmospheric pressure	2.0 to 2.6 V
PIM (E12 – 28) – E2 (E13–28)	Applied positive pressure of 69 kPa (518 mmHg, 20.4 in.Hg)	3.0 to 3.6 V

NG → Go to step 18

OK

13 INSPECT ECM(NE SIGNAL)

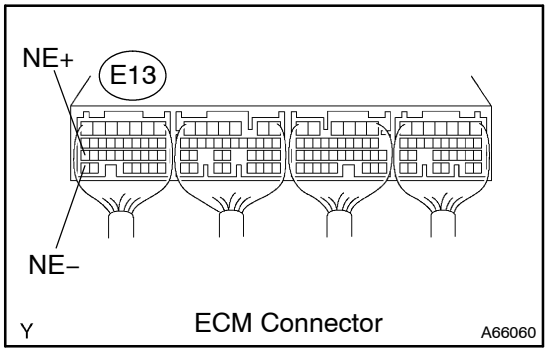

(a) Inspect using the oscilloscope.
(b) During idling, check the waveform between the specified terminals of the E13 ECM connector.

Standard:

Tester Connection	Specified Condition
NE+ (E13–27) – NE– (E13–34)	Correct waveform is as shown

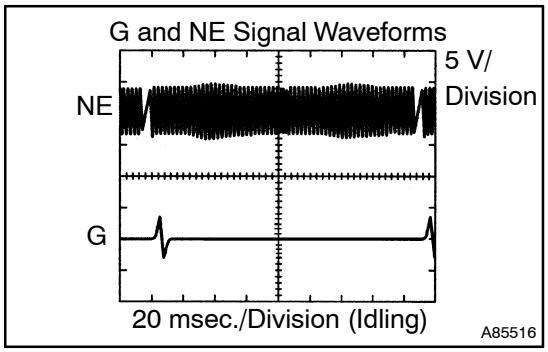

NG → **Go to step 19**

OK

14 INSPECT ECM(VPA AND VPA2 VOLTAGE)

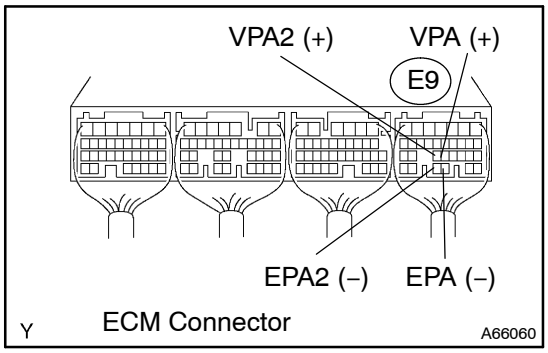

(a) Turn the ignition switch to ON.
(b) Measure the voltage between the specified terminals of the E9 ECM connector.

Standard:

Accelerator Pedal Position	Tester Connection	Specified Condition
Released	VPA (E9–22) – EPA (E9–28)	0.5 to 1.1 V
Depressed		2.5 to 4.6 V
Released	VPA2 (E9–23) – EPA2 (E9–29)	1.5 to 2.9 V
Depressed		3.5 to 5.5 V

NG → **Go to step 20**

OK

15 INSPECT ECM(THA VOLTAGE)

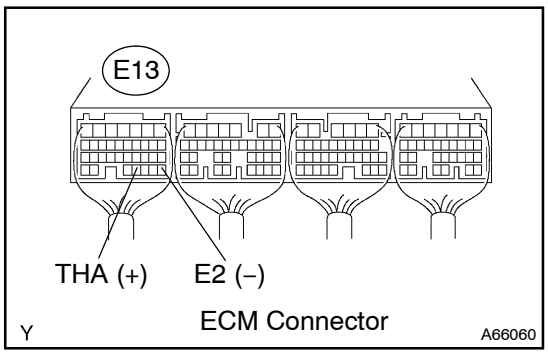

(a) Start the engine.
(b) Measure the voltage between the specified terminals of the E13 ECM connector.

Standard:

Tester Connection	Condition	Specified Condition
THA (E13–31) – E2 (E13–28)	Idling, intake air temperature at 20°C (68°F)	0.5 to 3.4 V

NG → **Go to step 21**

OK

16 INSPECT ECM(PCR1 AND PCR2 VOLTAGE)

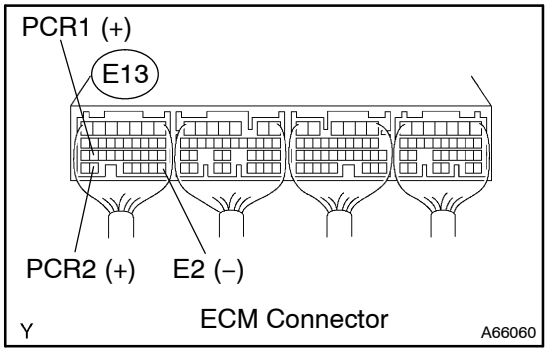

(a) Start the engine.
(b) Measure the voltage between the specified terminals of the E13 ECM connector.

Standard:

Tester Connection	Condition	Specified Condition
PCR1 (E13–26) – E2 (E13–28)	Idling	1.8 to 2.1 V
PCR2 (E13–33) – E2 (E13–28)	Idling	1.2 to 1.5 V

NG → **Go to step 22**

OK

REPLACE ECM (See page 10–29)

17 INSPECT ENGINE COOLANT TEMPERATURE SENSOR

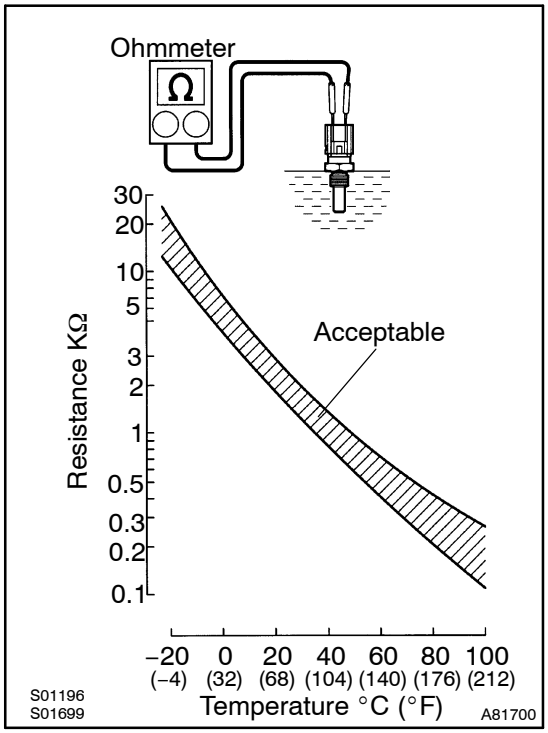

(a) Remove the engine coolant temperature sensor.
(b) Measure the resistance between the terminals.
Standard:
2.32 to 2.59 kΩ at 20°C (68°F)
0.310 to 0.326 kΩ at 80°C (176°F)

NOTICE:
If you check the engine coolant temperature sensor in water, be careful not to allow water to contact the terminals. After checking, dry the sensor.

HINT:
Alternate procedure: Connect an ohmmeter to the installed engine coolant temperature sensor and read the resistance. Use an infrared thermometer to measure the engine temperature in the immediate vicinity of the sensor. Compare these values to the resistance/temperature graph. Change the engine temperature (warm up or allow to cool down) and repeat the test.
(c) Reinstall the engine coolant temperature sensor.

NG → **REPLACE ENGINE COOLANT TEMPERATURE SENSOR**

OK

REPAIR OR REPLACE HARNESS OR CONNECTOR

18 CHECK HARNESS AND CONNECTOR(MANIFOLD ABSOLUTE PRESSURE SENSOR – ECM)

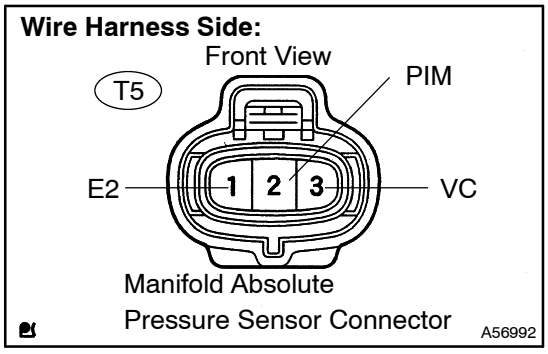

(a) Disconnect the T5 manifold absolute pressure sensor connector.
(b) Disconnect the E13 and E12 ECM connectors.
(c) Check the resistance between the wire harness side connectors.

Standard (Check for open):

Tester Connection	Specified Condition
PIM (T5–2) – PIM (E12–28)	Below 1 Ω
VC (T5–3) – VC (E13–18)	
E2 (T5–1) – E2 (E13–28)	

Standard (Check for short):

Tester Connection	Specified Condition
PIM (T5–2) or PIM (E12–28) – Body ground	10 kΩ or higher
VC (T5–3) or VC (E13–18) – Body ground	
E2 (T5–1) or E2 (E13–28) – Body ground	

(d) Reconnect the manifold absolute pressure sensor connector.
(e) Reconnect the ECM connectors.

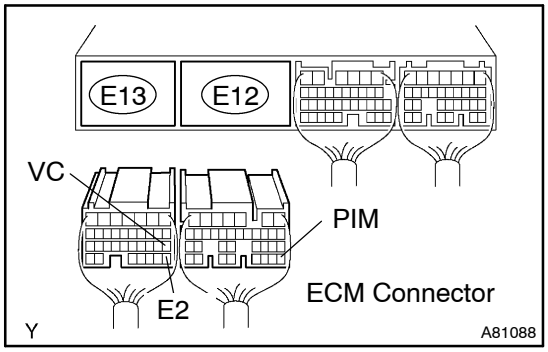

NG → REPAIR OR REPLACE HARNESS OR CONNECTOR

OK

REPLACE MANIFOLD ABSOLUTE PRESSURE SENSOR

19 INSPECT CRANKSHAFT POSITION SENSOR

Component Side:

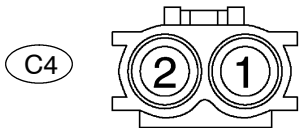

Crankshaft Position Sensor

A78431

(a) Disconnect the C4 crankshaft position sensor connector.
(b) Measure the resistance between terminals 1 and 2.

Standard:

Tester Connection	Specified Condition
1 – 2	1,630 to 2,740 Ω at cold
	2,065 to 3,225 Ω at hot

NOTICE:
"Cold" and "Hot" shown above mean the temperature of the coils themselves. "Cold" is from –10°C (14°F) to 50°C (122°F) and "Hot" is from 50°C (122°F) to 100°C (212°F).

(c) Reconnect the crankshaft position sensor connector.

NG → REPLACE CRANKSHAFT POSITION SENSOR

OK

REPAIR OR REPLACE HARNESS OR CONNECTOR

20 CHECK HARNESS AND CONNECTOR(ACCELERATOR PEDAL POSITION SENSOR – ECM)

Wire Harness Side (RHD):

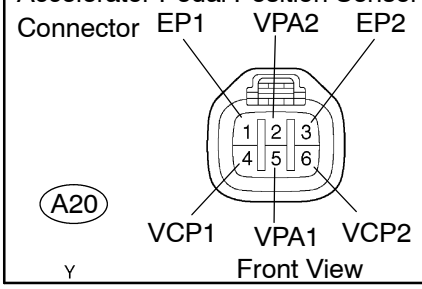

Wire Harness Side (LHD):

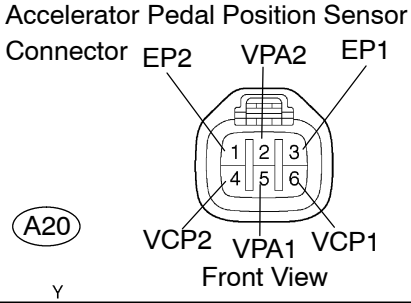

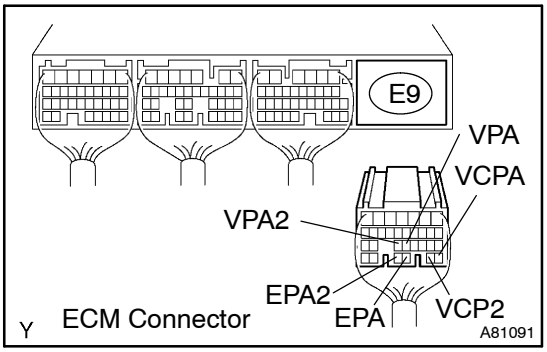

(a) Disconnect the A20 accelerator pedal position sensor connector.

(b) Disconnect E9 the ECM connector.

(c) Check the resistance between the wire harness side connectors.

Standard (Check for open) (RHD):

Tester Connection	Specified Condition
VPA1 (A20–5) – VPA (E9–22)	Below 1 Ω
EP1 (A20–1) – EPA (E9–28)	
VCP1 (A20–4) – VCPA (E9–26)	
VPA2 (A20–2) – VPA2 (E9–23)	
EP2 (A20–3) – EPA2 (E9–29)	
VCP2 (A20–6) – VCP2 (E9–27)	

Standard (Check for open) (LHD):

Tester Connection	Specified Condition
VPA1 (A20–5) – VPA (E9–22)	Below 1 Ω
EP1 (A20–3) – EPA (E9–28)	
VCP1 (A20–6) – VCPA (E9–26)	
VPA2 (A20–2) – VPA2 (E9–23)	
EP2 (A20–1) – EPA2 (E9–29)	
VCP2 (A20–4) – VCP2 (E9–27)	

Standard (Check for short) (RHD):

Tester Connection	Specified Condition
VPA1 (A20–5) or VPA (E9–22) – Body ground	10 kΩ or higher
EP1 (A20–1) or EPA (E9–28) – Body ground	
VCP1 (A20–4) or VCPA (E9–26) – Body ground	
VPA2 (A20–2) or VPA2 (E9–23) – Body ground	
EP2 (A20–3) or EPA2 (E9–29) – Body ground	
VCP2 (A20–6) or VCP2 (E9–27) – Body ground	

Standard (Check for short) (LHD):

Tester Connection	Specified Condition
VPA1 (A20–5) or VPA (E9–22) – Body ground	10 kΩ or higher
EP1 (A20–3) or EPA (E9–28) – Body ground	
VCP1 (A20–6) or VCPA (E9–26) – Body ground	
VPA2 (A20–2) or VPA2 (E9–23) – Body ground	
EP2 (A20–1) or EPA2 (E9–29) – Body ground	
VCP2 (A20–4) or VCP2 (E9–27) – Body ground	

(d) Reconnect the accelerator pedal position sensor connector.

(e) Reconnect the ECM connector.

NG → **REPAIR OR REPLACE HARNESS OR CONNECTOR**

OK

REPLACE ACCELERATOR PEDAL ASSY (ACCELERATOR PEDAL POSITION SENSOR) (See page 10–66 of Pub. No. RM1018E AVENSIS REPAIR MANUAL)

21 INSPECT DIESEL TURBO INLET AIR TENPERATURE SENSOR

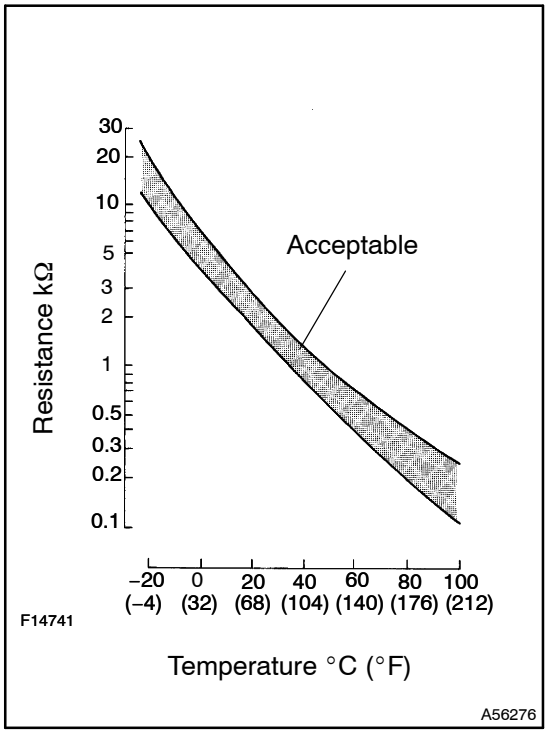

(a) Remove the diesel turbo inlet air temperature sensor.
(b) Measure the resistance between the terminals.
Standard:
2.21 to 2.65 kΩ at 20°C (68°F)
(c) Reinstall the diesel turbo inlet air temperature sensor.

NG → **REPLACE DIESEL TURBO INLET AIR TENPERATURE SENSOR**

OK

REPAIR OR REPLACE HARNESS OR CONNECTOR

22 INSPECT COMMON RAIL ASSY(FUEL PRESSURE SENSOR)

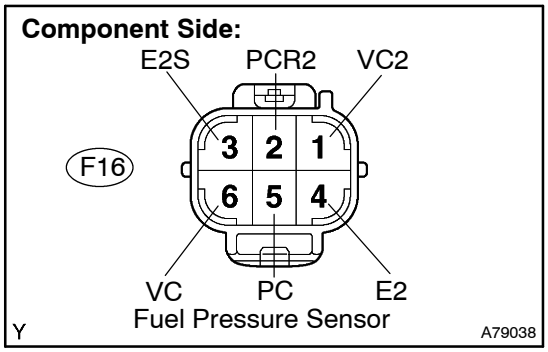

(a) Disconnect the F16 fuel pressure sensor connector.
(b) Measure the resistance between each terminal of the fuel pressure sensor connector.
Standard:

Tester Connection	Specified Condition
PC (F16–5) – E2 (F16–4)	16.4 kΩ or less
PCR2 (F16–2) – E2S (F16–3)	16.4 kΩ or less
PC (F16–5) – VC (F16–6)	3 kΩ or less
PCR2 (F16–2) – VC2 (F16–1)	3 kΩ or less

(c) Reconnect the fuel pressure sensor connector.

NG → **REPLACE COMMON RAIL ASSY (FUEL PRESSURE SENSOR) (See page 11–67)**

OK

23	CHECK HARNESS AND CONNECTOR(FUEL PRESSURE SENSOR – ECM)

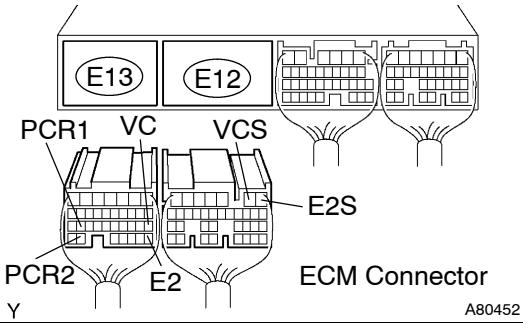

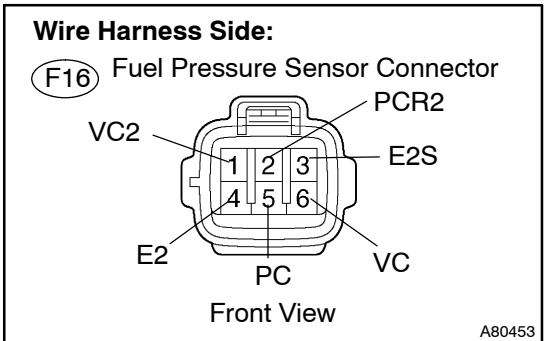

(a) Disconnect the F16 fuel pressure sensor connector.
(b) Disconnect the E12 and E13 ECM connectors.
(c) Check the resistance between the wire harness side connectors.

Standard (Check for open):

Tester Connection	Specified Condition
PCR1 (E13–26) – PC (F16–5)	Below 1 Ω
PCR2 (E13–33) – PCR2 (F16–2)	
VCS (E12–2) – VC2 (F16–1)	
VC (E13–18) – VC (F16–6)	
E2 (E13–28) – E2 (F16–4)	
E2S (E12–1) – E2S (F16–3)	

Standard (Check for short):

Tester Connection	Specified Condition
PCR1 (E13–26) or PC (F16–5) – Body ground	10 kΩ or higher
PCR2 (E13–33) or PCR2 (F16–2) – Body ground	
VCS (E12–2) or VC2 (F16–1) – Body ground	
VC (E13–18) or VC (F16–6) – Body ground	
E2 (E13–28) or E2 (F16–4) – Body ground	
E2S (E12–1) or E2S (F16–3) – Body ground	

(d) Reconnect the fuel pressure sensor connector.
(e) Reconnect the ECM connectors.

NG → **REPAIR OR REPLACE HARNESS OR CONNECTOR**

OK

24	REPLACE ECM (See page 10–29)

NG → **REPLACE INJECTION OR SUPPLY PUMP ASSY (See page 11–58)**

OK

END

ELECTRONIC CONTROLLED AUTOMATIC TRANSAXLE [ECT] (U151E)

05CVL–02

PRECAUTION

NOTICE:

Perform the RESET MEMORY (AT initialization) when replacing the automatic transaxle assy, engine assy or ECM (see page 05–541).

HINT:

Initialization can not be completed by only disconnecting the battery terminal.

05JL2–01

DEFINITION OF TERMS

Term	Definition
Monitor description	Description of what the ECM monitors and how it detects malfunctions (monitoring purpose and its details).

05CVN–02

LOCATION

LHD:

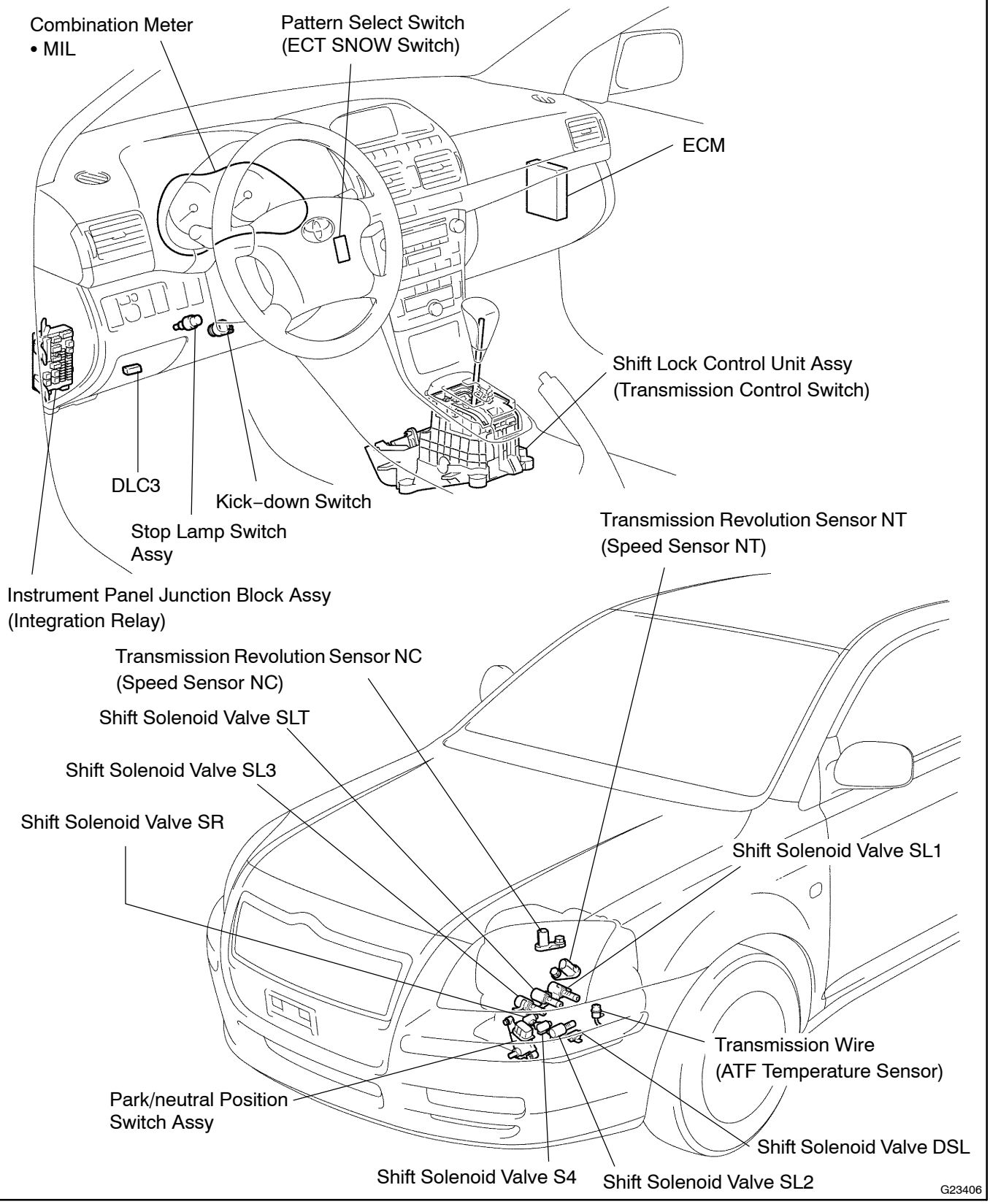

RHD:

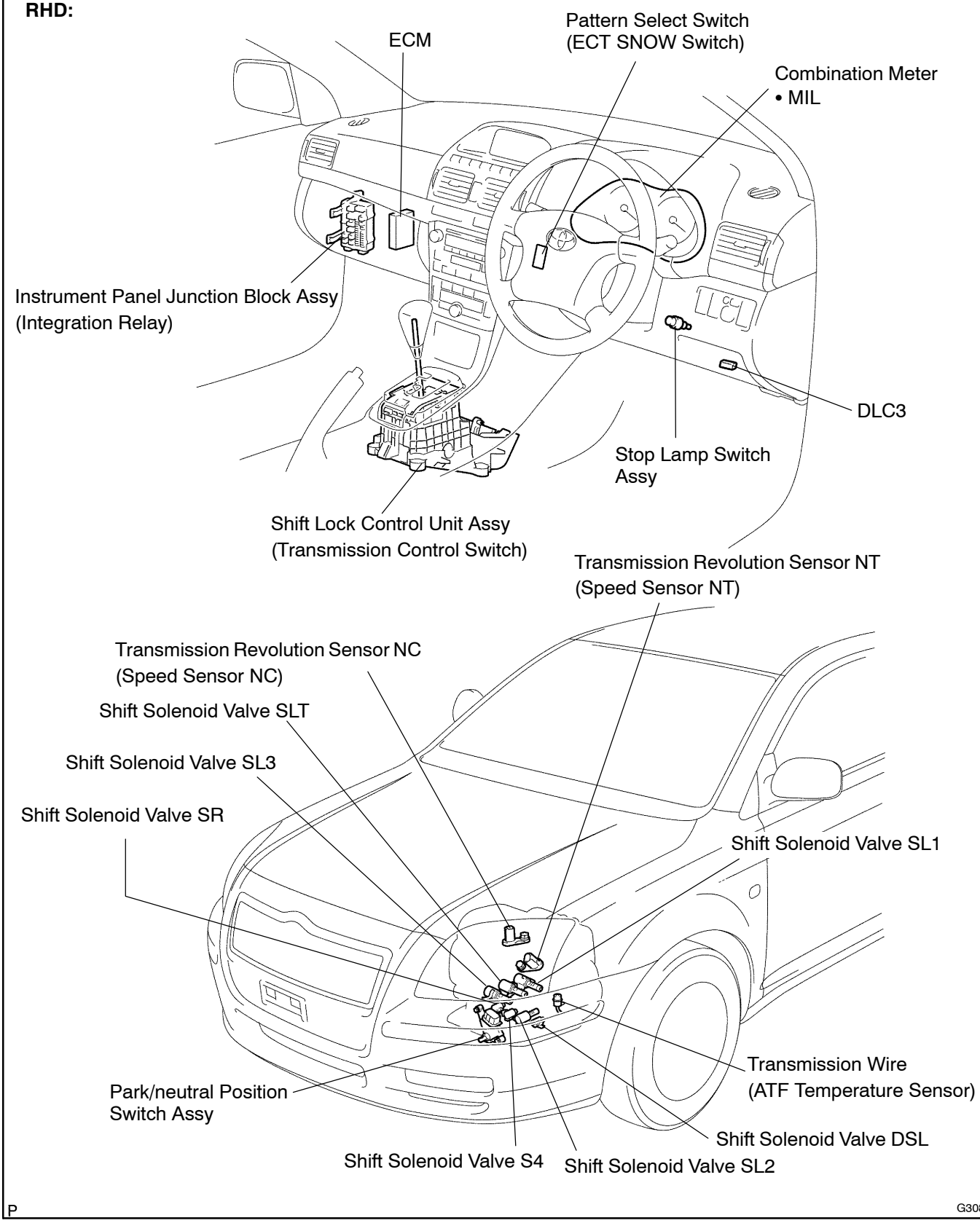
ECM
Pattern Select Switch
(ECT SNOW Switch)
Combination Meter
• MIL
Instrument Panel Junction Block Assy
(Integration Relay)
DLC3
Stop Lamp Switch
Assy
Shift Lock Control Unit Assy
(Transmission Control Switch)
Transmission Revolution Sensor NT
(Speed Sensor NT)
Transmission Revolution Sensor NC
(Speed Sensor NC)
Shift Solenoid Valve SLT
Shift Solenoid Valve SL3
Shift Solenoid Valve SR
Shift Solenoid Valve SL1
Transmission Wire
(ATF Temperature Sensor)
Park/neutral Position
Switch Assy
Shift Solenoid Valve DSL
Shift Solenoid Valve S4
Shift Solenoid Valve SL2
P
G30845

05JL3–01

SYSTEM DESCRIPTION

1. SYSTEM DESCRIPTION

(a) The ECT (Electronic controlled automatic transmission/transaxle) is an automatic transmission/transaxle that electronically controls shift timing using the ECM. The ECM detects electrical signals that indicate engine and driving conditions, controls the shift point, and selects the appropriate shift pattern based on driver habits and road conditions. As a result, fuel efficiency and power transmission/transaxle performance are improved.

Shift shock has been reduced by controlling the engine and transmission/transaxle simultaneously.

In addition, the ECT has the following features:

- Diagnostic function.
- Fail–safe function when a malfunction occurs.

056IH–05

HOW TO PROCEED WITH TROUBLESHOOTING

HINT:

- The ECM of this system is connected to the multiplex communication system. Therefore, before starting troubleshooting, make sure to check that there is no trouble in the multiplex communication system.
- The hand–held tester can be used at steps 3, 4, 6, and 9.

1	**Vehicle Brought to Workshop**

2	**Customer Problem Analysis (SEE PAGE 05–533)**

3	**Connect the hand–held tester to DLC3**

4	**Check and Clear DTC and Freeze Frame Data (SEE PAGE 05–557)**

5	**Visual Inspection**

6	**Setting the Check Mode Diagnosis (SEE PAGE 05–558)**

7	**Problem Symptom Confirmation (SEE PAGE 05–534)**

- **Symptom does not occur: Go to step 8**
- **Symptom occur: Go to step 9**

8	**Symptom Simulation (SEE PAGE 01–22)**

9	**DTC Check (SEE PAGE 05–557)**

- **DTC is not output: Go to step 10**
- **DTC is output: Go to step 17**

10	Basic Inspection (See Pub. No. RM1018E, page 40–2, 40–8 and 40–69)

NG → Go to step 19

OK

11	Mechanical System Test (SEE PAGE 05–536)

NG → Go to step 16

OK

12	Hydraulic Test (SEE PAGE 05–538)

NG → Go to step 16

OK

13	Manual Shifting Test (SEE PAGE 05–540)

NG → Go to step 15

OK

14	Problem Symptoms Table Chapter 1 (SEE PAGE 05–545)

NG → Go to step 18

OK

15	Problem Symptoms Table Chapter 2 (SEE PAGE 05–545)

16	Part Inspection

→ Go to step 19

17	DTC Chart (SEE PAGE 05–564)

18	Circuit Inspection

19	**Repair or Replace**

20	**Confirmation Test**

End

056II–05

CUSTOMER PROBLEM ANALYSIS CHECK

Automatic Transaxle System Check Sheet

Inspector's Name :

Customer's Name		VIN	
		Production Date	/ /
		Licence plate No.	
Date Vehicle Brought In	/ /	Odometer Reading	km mile

Date Problem Occurred	/ /
How Often Does Problem Occur?	☐ Continuous ☐ Intermittent (times a day)

Symptoms	☐ Vehicle does not move (☐ Any position ☐ particular position)
	☐ No up–shift (☐ 1st → 2nd ☐ 2nd → 3rd ☐ 3rd → 4th ☐ 4th → 5th)
	☐ No down–shift (☐ 5th → 4th ☐ 4th → 3rd ☐ 3rd → 2nd ☐ 2nd → 1st)
	☐ Lock–up malfunction
	☐ Shift point too high or too low
	☐ Harsh engagement (☐ N → D ☐ Lock–up ☐ Any drive position)
	☐ Slip or shudder
	☐ No kick–down
	☐ Others ( )

Check Item	Malfunction Indicator Lamp	☐ Normal ☐ Remains ON

DTC Check	1st Time	☐ Normal code ☐ Malfunction code (DTC)
	2nd Time	☐ Normal code ☐ Malfunction code (DTC)

05JL4–01

ROAD TEST

1. PROBLEM SYMPTOM CONFIRMATION

(a) Based on the result of the customer problem analysis, try to reproduce the symptoms. If the problem is that the transaxle does not shift up, shift down, or the shift point is too high or too low, conduct the following road test referring to the automatic shift schedule and simulate the problem symptoms.

2. ROAD TEST

NOTICE:

Perform the test at the ATF (Automatic Transmission Fluid) temperature 50 to 80°C (122 to 176°F) in the normal operation.

(a) D position test:

Shift into the D position and fully depress the accelerator pedal and check the following points.

(1) Check up–shift operation.

Check that 1 → 2, 2 → 3, 3 → 4 and 4 → 5th up–shifts take place, and that the shift points conform to the automatic shift schedule (see page 03–33).

HINT:

5th Gear Up–shift Prohibition Control

- ATF temperature is –2 °C (28 °F) or less.

5th and 4th Gear Lock–up Prohibition Control

- Brake pedal is depressed.
- Accelerator pedal is released.
- Engine coolant temperature is 60 °C (140 °F) or less.

(2) Check for shift shock and slip.

Check for shock and slip at the 1 → 2, 2 → 3, 3 → 4 and 4 → 5th up–shifts.

(3) Check for abnormal noise and vibration.

Check for abnormal noise and vibration when up–shifting from 1 → 2, 2 → 3, 3 → 4 and 4 → 5 while driving with the shift lever in the D position, and check while driving in the lock–up condition.

HINT:

The check for the cause of abnormal noise and vibration must be done thoroughly as it could also be due to loss of balance in the differential, torque converter clutch, etc.

(4) Check kick–down operation.

Check vehicle speeds when the 2nd to 1st, 3rd to 2nd, 4th to 3rd, and 5th to 4th kick–downs take place while driving with the shift lever in the D position. Confirm that each speed is within the applicable vehicle speed range indicated in the automatic shift schedule (see page 03–33).

(5) Check for abnormal shock and slip at kick–down.

(6) Check the lock–up mechanism.

- Drive in D position (5th gear), at a steady speed (lock–up ON).
- Lightly depress the accelerator pedal and check that the engine speed does not change abruptly.

HINT:

- There is no lock–up function in the 1st, 2nd and 3rd gear.
- 4th lock–up operates while uphill–downhill control is active in the D position.
- If there is a big jump in engine speed, there is no lock–up.

(b) S position test
Shift to the S position, depress the accelerator pedal and check the following points:
(1) Check shift operation.
- While driving in the D position and 5th gear, shift into the S position and back to the D position. Check that the gear change 5 → 4 down–shift and 4 → 5 up–shift can be performed.
- With the shift lever in the S position (while the vehicle is stopped), shift into the "+" position to check that the shift position on the combination meter changes as follows: 1 → 2, 2 → 3, 3 → 4 and 4 → 5.
- While driving in the 4(S) position and 4th gear (at a vehicle speed of approximately 40 to 50 km/h (25 to 31 mph)), shift into the "–" position and check if the 3rd gear down–shift occurs and the engine brake performs properly.
- While driving in the 3(S) position and 3rd gear (at a vehicle speed of approximately 30 to 40 km/h (19 to 25 mph)), shift into the "–" position and check if the 2nd gear down–shift occurs and the engine brake performs properly.
- While driving in the 2(S) position and 2nd gear (at a vehicle speed of approximately 20 to 30 km/h (12 to 19 mph)), shift into the "–" position and check if the 1st gear down–shift occurs and the engine brake performs properly.

HINT:
Manual shift (S position) is prohibited under either of the following conditions:
- Down–shifting may cause engine overrun.
- The driver continuously down–shifts. (Down–shifting to 1st gear may not be performed.)

(c) R position test:
Shift into the R position, lightly depress the accelerator pedal, and check that the vehicle moves backward without any abnormal noise or vibration.

CAUTION:
Before conducting this test ensure that the test area is free from people and obstruction.

(d) P position test:
Stop the vehicle on a grade (more than 5°) and after shifting into the P position, release the parking brake. Then, check that the parking lock pawl holds the vehicle in place.

(e) Uphill/downhill control function test:
(1) Check that the gear does not up–shift to the 4th or 5th gear while the vehicle is driving uphill.
(2) Check that the gear automatically down–shifts from the 5th to 4th or from the 4th to 3rd gear when brake is applied while the vehicle is driving downhill.

05JL5–01

MECHANICAL SYSTEM TESTS

1. PERFORM MECHANICAL SYSTEM TESTS

(a) Measure the stall speed.

The object of this test is to check the overall performance of the transaxle and engine by measuring the stall speeds in the D and R positions.

NOTICE:

- **Perform the test at the normal operating ATF (Automatic Transmission Fluid) temperature 50 to 80°C (122 to 176°F).**
- **Do not continuously run this test for longer than 10 seconds.**
- **To ensure safety, do this test in a wide, clear level area which provides good traction.**
- **The stall test should always be carried out in pairs. One technician should observe the conditions of wheels or wheel stoppers outside the vehicle while the other is doing the test.**

(1) Chock the 4 wheels.

(2) Connect an hand–held tester to the DLC3.

(3) Fully apply the parking brake.

(4) Keep your left foot pressed firmly on the brake pedal.

(5) Start the engine.

(6) Shift into the D position. Press all the way down on the accelerator pedal with your right foot.

(7) Quickly read the stall speed at this time.

Stall speed: 2,250 ± 150 rpm

(8) Do the same test in the R position.

Stall speed: 2,250 ± 150 rpm

Evaluation:

Problem	Possible cause
(a) Stall engine speed is low in D and R positions	• Engine power output may be insufficient • Stator one–way clutch not operating properly HINT: If the value is less than the specified value by 600 rpm or more, the torque converter could be faulty.
(b) Stall engine speed is high in D position	• Line pressure is too low • Forward clutch slipping • U/D (Underdrive) brake slipping • U/D (Underdrive) one–way clutch not operating properly • No.1 one–way clutch not operating properly
(c) Stall engine speed is high in R position	• Line pressure is too low • Reverse clutch slipping • 1st and reverse brake slipping • U/D (Underdrive) brake slipping
(d) Stall engine speed is high in D and R positions	• Line pressure is too low • Improper fluid level

(b) Measure the time lag.

(1) When the shift lever is shifted while the engine is idling, there will be a certain time lapse or lag before the shock can be felt. This is used for checking the condition of the direct clutch, forward clutch, and 1st and reverse brake.

NOTICE:

- **Perform the test at the normal operating ATF temperature 50 to 80°C (122 to 176°F).**
- **Be sure to allow 1 minute interval between tests.**
- **Perform the test three times, and measure the time lags. Calculate the average value of the three time lags.**

(2) Connect an hand–held tester to the DLC3.

(3) Fully apply the parking brake.

(4) Start and warm up the engine and check idle speed.

Idle speed: approx. 700 rpm (In N position and A/C OFF)

(5) Shift the lever from N to D position. Using a stop watch, measure the time from when the lever is shifted until the shock is felt.

Time lag: N → D less than 1.2 seconds

(6) In the same way, measure the time lag for N → R.

Time lag: N → R less than 1.5 seconds

Evaluation (If N → D or N → R time lag is longer than the specified):

Problem	Possible cause
N → D time lag is longer	• Line pressure is too low • Forward clutch worn • No.1 one–way clutch not operating properly • U/D (Underdrive) one–way clutch not operating • U/D (Underdrive) brake worn
N → R time lag is longer	• Line pressure is too low • Reverse clutch worn • 1st and reverse brake worn • U/D (Underdrive) brake worn

05JL6–01

HYDRAULIC TEST

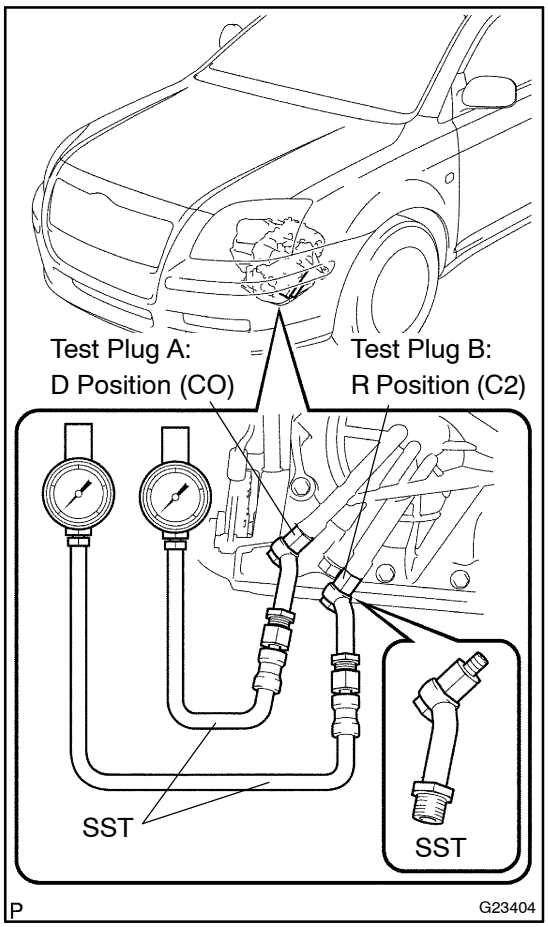

1. PERFORM HYDRAULIC TEST

(a) Measure the line pressure.

NOTICE:

- **Perform the test at the normal operation fluid temperature the 50 to 80°C (122 to 176°F)**
- **The line pressure test should always be carried out in pairs. One technician should observe the conditions of wheels or wheel stoppers outside the vehicle while the other is performing the test.**
- **Be careful to prevent SST hose from interfering with the exhaust pipe.**
- **This check must be conducted after checking and adjusting engine.**
- **Perform under condition that A/C is OFF.**
- **When conducting stall test, do not continue more than 10 seconds.**

(1) Warm up the ATF (Automatic Transmission Fluid).

(2) Lift the vehicle up.

(3) Remove the engine under cover.

(4) Connect hand–held tester to DLC3.

(5) Remove the test plug A on the transaxle case front left side and install the SST.

SST 09992–00095 (09992– 00231, 09992–00271)

NOTICE:

There is a difference in installation point between D position and R position.

(6) Start the engine.

(7) Using hand–held tester, shift to D position and hold 3rd gear by active test, and measure the line pressure in idling.

Specified line pressure:

Condition	D position
Idling	372 to 412 kPa (3.8 to 4.2 kgf/cm^2, 54 to 60 psi)

(8) Turn the ignition switch off.

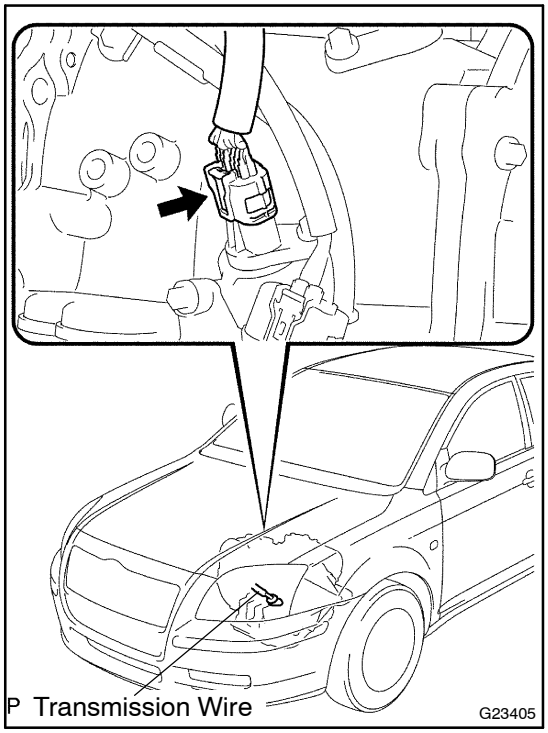

(9) Disconnect the connector of the transmission wire.

HINT:

Disconnect the connector only when performing the D position stall test.

(10) Start the engine.

(11) Firmly depress the brake pedal, shift to the D position, depress the accelerator pedal all the way down and check the line pressure while the stall test is performed.

Specified line pressure:

Condition	D position
Stall test	931 to 1,031 kPa (9.5 to 10.5 kgf/cm^2, 135 to 150 psi)

(12) Turn the ignition switch off.

(13) Remove the SST, install the test plug A.

(14) Remove the test plug B, install the SST and start engine.

SST 09992–00095 (09992– 00231, 09992–00271)

(15) Connect the transmission wire connector, depress the brake pedal firmly, shift to the R position and check that the line pressure while the engine is idling and during the stall test.

Specified line pressure:

Condition	R position
Idling	672 to 742 kPa (6.9 to 7.6 kgf/cm^2, 97 to 108 psi)
Stall test	1,768 to 1,968 kPa (18.0 to 20.1 kgf/cm^2, 256 to 285 psi)

(16) Remove the SST, install the test plug B.

(17) Clear the DTC.

Evaluation:

Problem	Possible cause
If the measured values at all position are higher	• Shift solenoid valve (SLT) defective • Regulator valve defective
If the measured values at all position are lower	• Shift solenoid valve (SLT) defective • Regulator valve defective • Oil pump defective • U/D (Underdrive) direct clutch defective
If pressure is low in the D position only	• D position circuit fluid leak • Forward clutch defective
If pressure is low in the R position only	• R position circuit fluid leak • Reverse clutch defective • 1st and reverse brake defective

MANUAL SHIFTING TEST

05JL7–01

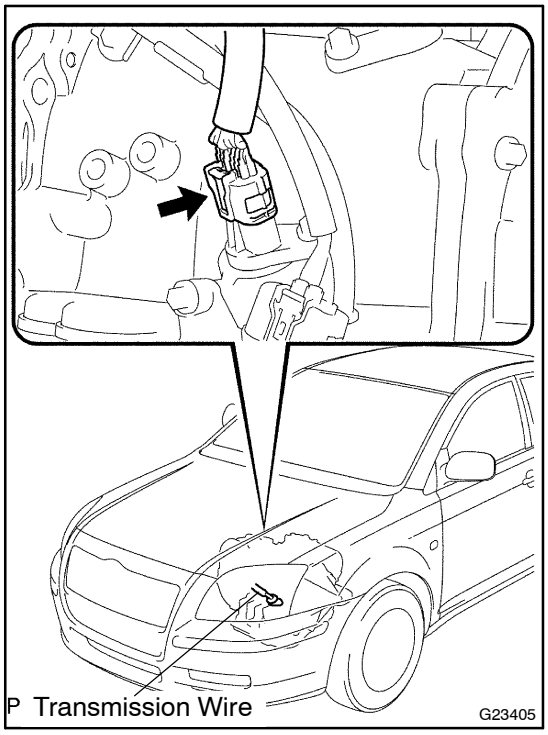

1. PERFORM MANUAL SHIFTING TEST

HINT:

- With this test, it can be determined whether the trouble occurs in the electrical circuit or is a mechanical problem in the transaxle.
- If any abnormalities are found in the following test, the problem is in the transaxle itself.

(a) Disconnect the transmission wire connector.

(b) Drive with the transmission wire disconnected.
Shifting the shift lever to the D position to check whether the shifting condition changes the table below.

Shift Position	Shifting Condition
D	No Shift (Not Change)

HINT:

When driving with the transmission wire disconnected, the gear position will be as follows:

- When the shift lever is in the D position, the gear is held in the 4th position.
- When the shift lever is in the R or the P position, the gear is also in the R or the P position respectively.

(c) Connect the transmission wire connector.

(d) Clear the DTC (see page 05–557).

05JL8–01

INITIALIZATION

1. RESET MEMORY

CAUTION:

Perform the RESET MEMORY (AT initialization) when replacing the automatic transaxle assy, engine assy or ECM.

NOTICE:

Hand–held tester only

HINT:

The ECM memorizes the condition that the ECT controls the automatic transaxle assy and engine assy according to those characteristics. Therefore, when the automatic transaxle assy, engine assy, or ECM has been replaced, it is necessary to reset the memory so that the ECM can memorize the new information.

Reset procedure is as follows.

(a) Turn the ignition switch off.
(b) Connect the hand–held tester to the DLC3.
(c) Turn the ignition switch to the ON position and push the hand–held tester main switch on.
(d) Select the item ”DIAGNOSIS / OBD/MOBD”.
(e) Perform the reset memory procedure from the ENGINE menu.

CAUTION:

After performing the RESET MEMORY, be sure to perform the ROAD TEST (see page 05–534) described earlier.

HINT:

The ECM is learned by performing the ROAD TEST.

Tester menu flow:

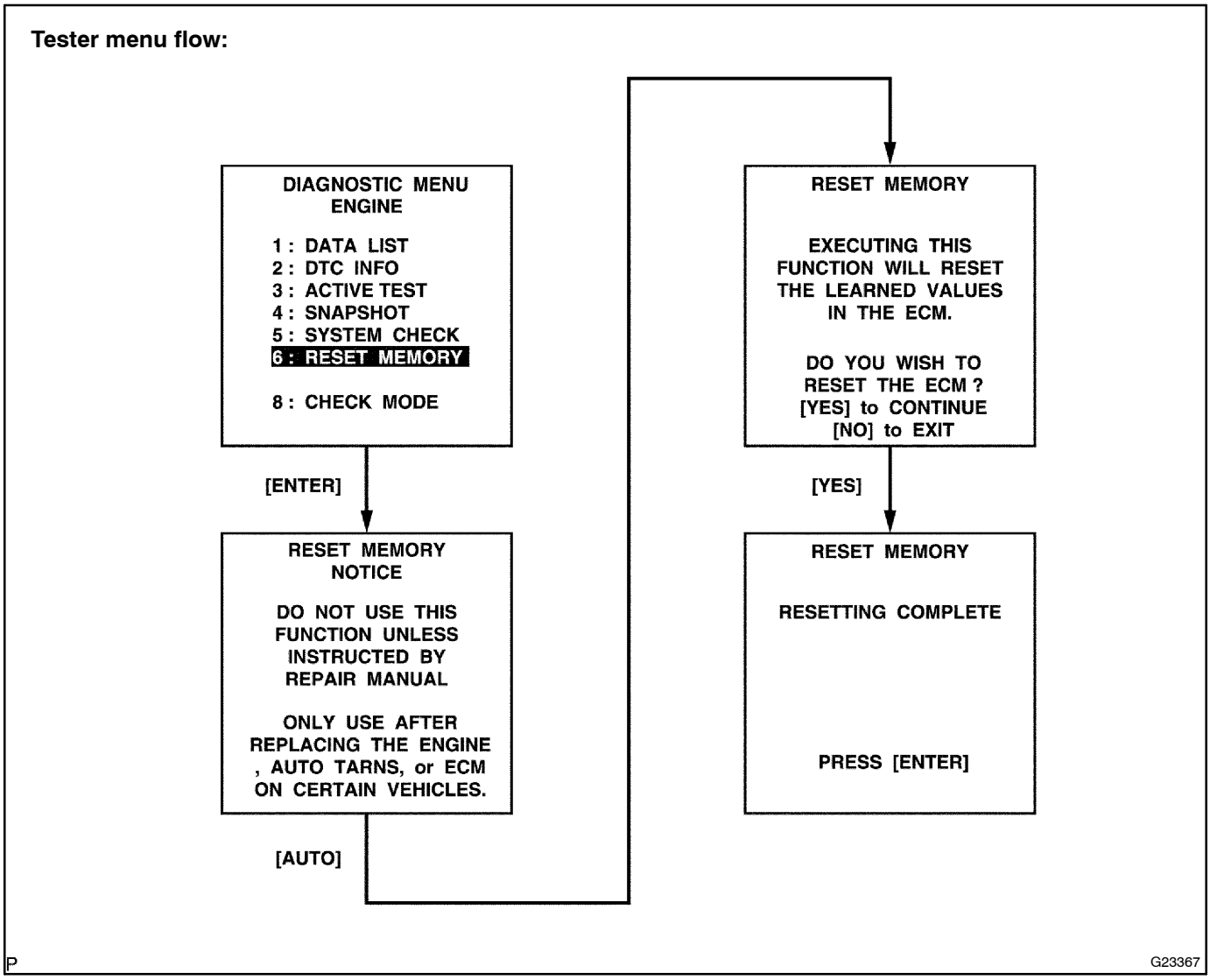

05JL9–01

MONITOR DRIVE PATTERN

1. MONITOR DRIVE PATTERN FOR ECT TEST

(a) Perform this drive pattern as one method to simulate the detection conditions of the ECT malfunctions. (The DTCs may not be detected due the actual driving conditions. And some codes may not be detected through this drive pattern).

HINT:

Preparation for driving

- Warm up the engine sufficiently. (Engine coolant temperature is 60 °C (140 °F) or higher)
- Drive the vehicle when the atmospheric temperature is –10 °C (14 °F) or higher. (Malfunction is not detected when the atmospheric temperature is –10 °C (14 °F) or less)

Driving note

- Drive the vehicle through all gears.
  Stop → 1st → 2nd → 3rd → 4th → 5th → 5th (lock–up ON).
- Perform engine brake test in the S position.
  While driving in the 5(S) position and 5th gear lock–up, shift into the "–" position and down–shift from 5th to 4th, 4th to 3rd, 3rd to 2nd, 2nd to 1st.
  Check that the engine brake performs properly whenever down–shift takes place.
- Repeat the above driving pattern three times or more.

NOTICE:

- **When using the hand–held tester, monitor status can be found in the "DIAGNOSIS / OBD/MOBD / DATA LIST".**
- **In the event that the drive pattern must be interrupted (possibly due to traffic conditions or other factors) the drive pattern can be resumed and, in most cases, the monitor can be completed.**

CAUTION:

Perform this drive pattern on a level road as much as possible and strictly observe the posted speed limits and traffic laws while driving.

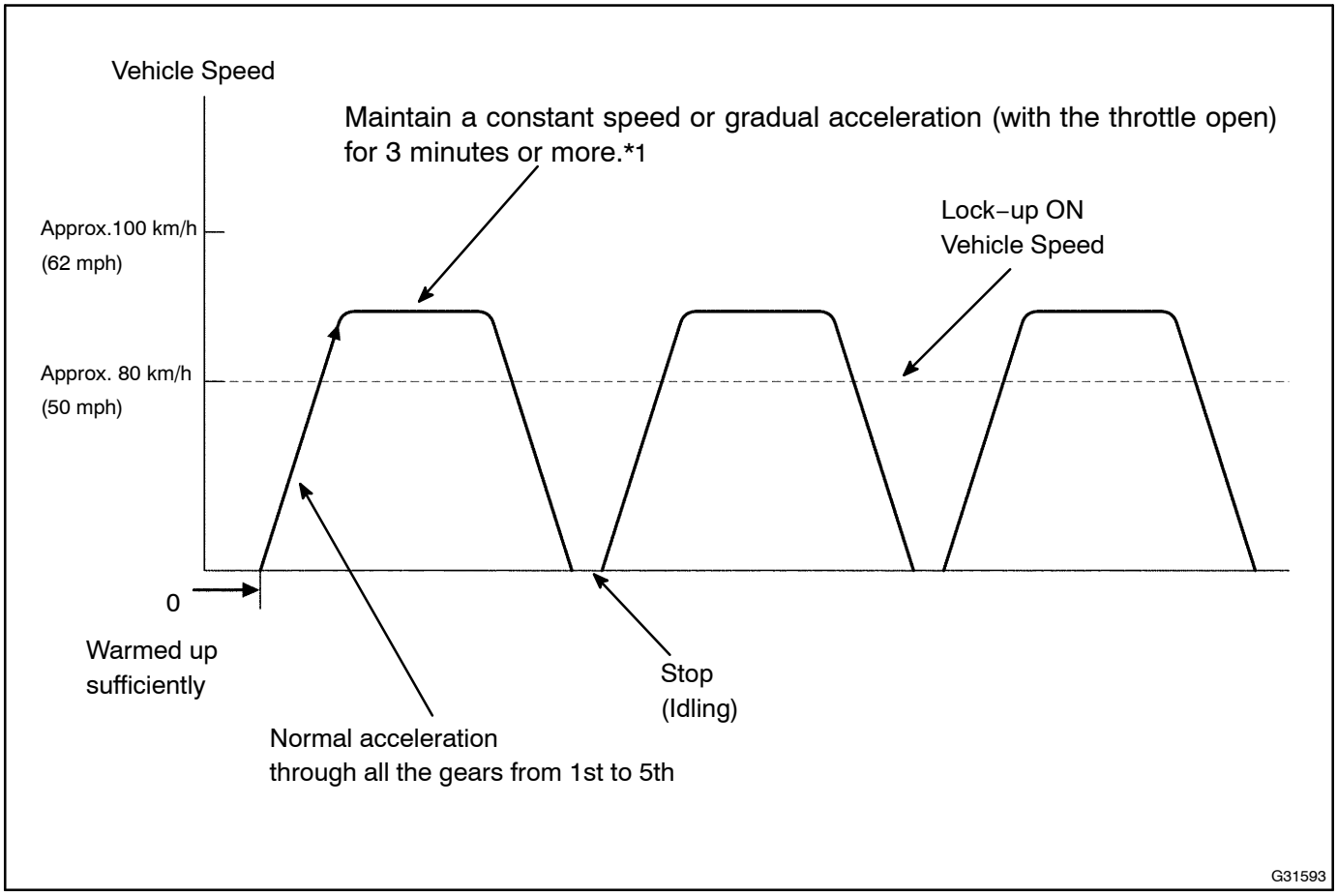

HINT:

*1: Drive at such a speed in the uppermost gear, to engage lock–up. The vehicle can be driven at a speed lower than that in the above diagram under the lock–up condition.

NOTICE:

It is necessary to drive the vehicle for approximately 30 minutes to detect DTC P0711 (ATF temperature sensor malfunction).

056IN–05

PROBLEM SYMPTOMS TABLE

HINT:

If a normal code is displayed during the diagnostic trouble code check although the trouble still occurs, check the electrical circuits for each symptom in the order given in the charts on the following pages and proceed to the page given for troubleshooting.

The Matrix Chart is divided into 2 chapters.

1. **Chapter 1: Electronic Circuit Matrix Chart**

- Refer to the table below when the trouble cause is considered to be electrical.
- If the instruction ”Proceed to next circuit inspection shown on matrix chart” is given in the flow chart of each circuit, proceed to the circuit with the next highest number in the table to continue the check.
- If the trouble still occurs even though there are no abnormalities in any of the other circuits, check and replace the ECM.

HINT:

*1: When the circuit on which mark *1 is attached is a malfunction, DTC could be output (see page 05–564).

*2: LHD

Symptom	Suspect Area	See page
No down–shift (A particular gear, from 1st to 4th gear, is not down–shifted)	1. Shift solenoid valve (SL1) circuit *1 2. Shift solenoid valve (SL2) circuit *1 3. Shift solenoid valve (SL3) circuit *1 4. Shift solenoid valve (SR) circuit *1 5. ECM	05–589 05–601 05–610 05–598 01–32
No down–shift (5th → 4th)	1. Park/neutral position switch circuit *1 2. Shift solenoid valve (S4) circuit *1 3. ECM	05–566 05–595 01–32
No up–shift (A particular gear, from 1st to 4th gear, is not up–shifted)	1. Shift solenoid valve (SL1) circuit *1 2. Shift solenoid valve (SL2) circuit *1 3. ECM	05–589 05–601 01–32
No up–shift (4th → 5th)	1. Park/neutral position switch circuit *1 2. Shift solenoid valve (S4) circuit *1 3. ECM	05–566 05–595 01–32
No lock–up	1. Shift solenoid valve (DSL) circuit *1 2. Stop light switch circuit *1 3. Engine coolant temp. sensor circuit *1 4. ECM	05–582 05–580 05–31 01–32
No lock–up off	1. Shift solenoid valve (DSL) circuit *1 2. ECM	05–582 01–32
Shift point too high or too low	1. Throttle position sensor circuit *1 2. Shift solenoid valve (SLT) circuit *1 3. ECM	05–31 05–622 01–32
Up–shift to 5th from 4th while engine is cold	1. Engine coolant temp. sensor circuit *1 2. ECM	05–31 01–32
No gear change by shifting into ”+” or ”–” while the shift lever is in the S position	1. Transmission control switch circuit 2. ECM	05–625 01–32
Harsh engagement (N → D)	1. Shift solenoid valve (SL1) circuit *1 2. ECM	05–589 01–32
Harsh engagement (Lock–up)	1. Shift solenoid valve (SL2) circuit *1 2. ECM	05–601 01–32
Harsh engagement (Any driving position)	1. Shift solenoid valve (SLT) circuit *1 2. ECM	05–622 01–32
Poor acceleration	1. Shift solenoid valve (SLT) circuit *1 2. ECM	05–622 01–32

No kick–down	1. Kick–down switch circuit *2 2. ECM	05–634 01–32
Engine stalls when starting off or stopping	1. Shift solenoid valve (DSL) circuit *1 2. ECM	05–582 01–32
ECT SNOW (ECTS) does not operate	1. Shift solenoid valve (SLT) circuit *1 2. Pattern select (SNOW/ECTS) switch circuit 3. ECM	05–622 05–630 01–32
Malfunction in shifting	1. Park/neutral position switch circuit *1 2. Transmission control switch circuit 3. ECM	05–566 05–625 01–32

2. Chapter 2: On–Vehicle Repair and Off–Vehicle Repair (★: U151E, U151F AUTOMATIC TRANSAXLE Repair Manual Pub. No. RM1021U) (★1: Refer to Repair Manual RM1018E)

Symptom	Suspect Area	See page
Vehicle does not move in forward position and in reverse positions	1. Valve body assy 2. U/D brake (B_3) 3. Torque converter clutch	40–19 ★ ★1
Vehicle does not move in R position	1. Valve body assy 2. Reverse clutch (C_2) 3. 1st & reverse brake (B_2)	40–19 ★ ★
No up–shift (1st → 2nd)	1. Valve body assy 2. 2nd & O/D brake (B_1)	40–19 ★
No up–shift (2nd → 3rd)	1. Valve body assy 2. Direct and O/D clutch (C_0)	40–19 ★
No up–shift (3rd → 4th)	1. Valve body assy 2. 2nd & O/D brake (B_1)	40–19 ★
No up–shift (4th → 5th)	1. Valve body assy 2. U/D clutch (C_3)	40–19 ★
No down–shift (5th → 4th)	Valve body assy	40–19
No down–shift (4th → 3rd)	Valve body assy	40–19
No down–shift (3rd → 2nd)	Valve body assy	40–19
No down–shift (2nd → 1st)	Valve body assy	40–19
No lock–up or No lock–up off	1. Valve body assy 2. Torque converter clutch	40–19 ★1
Harsh engagement (N → D)	1. Valve body assy 2. C_1 accumulator 3. Forward clutch (C_1) 4. One–way clutch No.1 (F_1) 5. U/D one–way clutch (F_2)	40–19 ★ ★ ★ ★
Harsh engagement (Lock–up)	1. Valve body assy 2. Torque converter clutch	40–19 ★1
Harsh engagement (N → R)	1. Valve body assy 2. C_2 accumulator 3. Reverse clutch (C_2) 4. 1st & reverse brake (B_2)	40–19 ★ ★ ★
Harsh engagement (1st →2nd → 3rd → 4th → 5th)	Valve body assy	40–19
Harsh engagement (1st → 2nd)	1. Valve body assy 2. 2nd & O/D brake (B_1)	40–19 ★
Harsh engagement (2nd → 3rd)	1. Valve body assy 2. C_0 accumulator 3. Direct and O/D clutch (C_0)	40–19 ★ ★
Harsh engagement (3rd → 4th)	1. Valve body assy 2. 2nd & O/D brake (B_1)	40–19 ★
Harsh engagement (4th → 5th)	1. Valve body assy 2. C_3 accumulator 3. U/D clutch (C_3)	40–19 ★ ★
Harsh engagement (5th → 4th)	1. Valve body assy 2. B_3 accumulator	40–19 ★

Slip or shudder (Forward and reverse: After warm–up)	1. Valve body assy 2. Oil strainer 3. Direct and O/D clutch (C_0) 4. Forward clutch (C_1) 5. U/D clutch (C_3) 6. 2nd & O/D brake (B_1) 7. U/D brake (B_3) 8. One–way clutch No.1 (F_1) 9. U/D one–way clutch (F_2) 10.Torque converter clutch	40–19 40–19 ★ ★ ★ ★ ★ ★ ★ ★1
Slip or shudder (Particular position: Just after engine starts)	Torque converter clutch	★1
Slip or shudder (R position)	1. Reverse clutch (C_2) 2. 1st & reverse brake (B_2)	★ ★
Slip or shudder (1st)	1. Forward clutch (C_1) 2. One–way clutch No.1 (F_1) 3. U/D one–way clutch (F_2)	★ ★
Slip or shudder (2nd)	2nd & O/D brake (B_1)	★
Slip or shudder (3rd)	Direct and O/D clutch (C_0)	★
Slip or shudder (4th)	2nd & O/D brake (B_1)	★
Slip or shudder (5th)	U/D clutch (C_3)	★
No engine braking (1st – 4th: D position)	U/D brake (B_3)	★
No engine braking (1st: L (1) position)	1. Valve body assy 2. 1st & reverse brake (B_2)	40–19 ★
No engine braking (2nd: 2 position)	1. Valve body assy 2. 2nd & O/D brake (B_1)	40–19 ★
No engine braking (3rd: 3 position)	U/D brake (B_3)	★
Poor acceleration (All positions)	Torque converter clutch	★1
Poor acceleration (5th)	1. U/D clutch (C_3) 2. U/D planetary gear unit	★ ★
Engine stalls when starting off or stopping	Torque converter clutch	★1
No kick–down	Valve body assy	40–19

05JLA–01

TERMINALS OF ECM

1. ECM

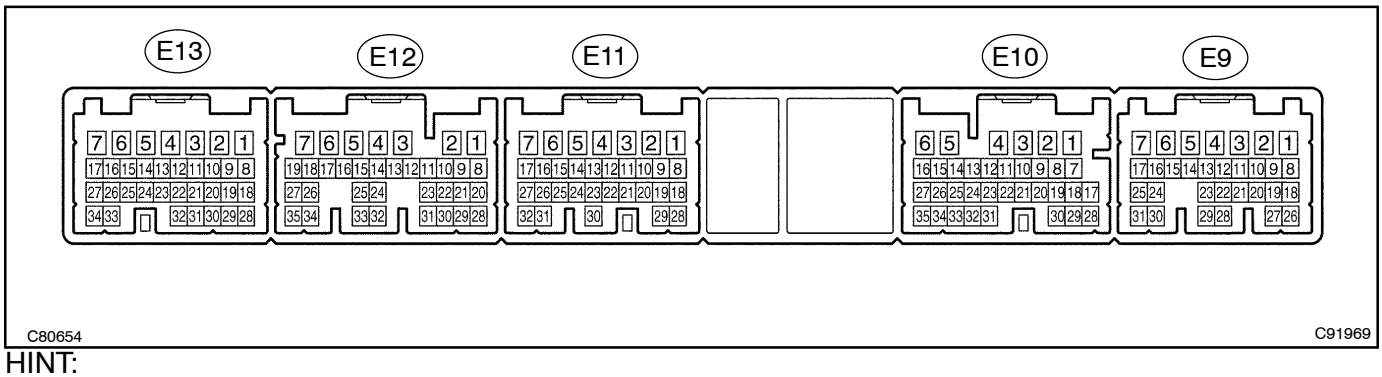

HINT:

Each ECM terminal's standard voltage is shown in the table below.

In the table, first follow the information under "Condition". Look under "Symbols (Terminal No.)" for the terminals to inspected. The standard voltage between the terminals is shown under "Specific Condition".

Use the illustration above as a reference for the ECM terminals.

Symbols (Terminals No.)	Wiring Color	Terminal Description	Condition	Specified Condition
D (E10–10) – E1 (E11–1)	LG–B – BR	D shift position switch signal	IG switch ON and shift lever D and S position	10 to 14 V
↑	↑	↑	IG switch ON and shift lever except D and S position	Below 1 V
R (E10–11) – E1 (E11–1)	R–Y – BR	R shift position switch signal	IG switch ON and shift lever R position	10 to 14 V
↑	↑	↑	IG switch ON and shift lever except R position	Below 1 V
SPD (E10–17) – E1 (E11–1)	V–W – BR	Speed signal	Vehicle speed 20 km/h (12 mph)	Pulse generation (See waveform 8)
STP (E10–19) – E1 (E11–1)	G–W – BR	Stop lamp switch signal	Brake pedal is depressed	7.5 to 14 V
↑	↑	↑	Brake pedal is released	Below 1.5 V
SFTD (E10–21) – E1 (E11–1)	B – BR	Down shift switch signal	IG switch ON and shift lever S position	10 to 14 V
↑	↑	↑	IG switch ON and shift lever "–" position (Down shift)	Below 1 V
SFTU (E10–22) – E1 (E11–1)	R – BR	Up shift switch signal	IG switch ON and shift lever S position	10 to 14 V
↑	↑	↑	IG switch ON and shift lever "+" position (Up shift)	Below 1 V
SPT1 (E10–20) – E1 (E11–1)	L – BR	S shift position switch signal	IG switch ON and shift lever S position	10 to 14 V
↑	↑	↑	IG switch ON and shift lever except S position	Below 1 V
P (E9–6) – E1 (E11–1)	W–L – BR	Park position switch signal	IG switch ON and shift lever P position	10 to 14 V
↑	↑	↑	IG switch ON and shift lever except P position	Below 1 V
N (E7–7) – E1 (E11–1)	R – BR	Neutral position switch signal	IG switch ON and shift lever N position	10 to 14 V
↑	↑	↑	IG switch ON and shift lever except N position	Below 1 V

DSL (E12–11) – E1 (E11–1)	L–B – BR	DSL solenoid signal	Vehicle speed 65 km/h (40 mph), lock–up (ON to OFF)	Pulse generation (See waveform 2)
SR (E12–9) – E1 (E11–1)	BR–W – BR	SR solenoid signal	IG switch ON	Below 1 V
↑	↑	↑	3rd, 4th or 5th gear	10 to 14 V
↑	↑	↑	1st or 2nd gear	Below 1 V
S4 (E12–10) – E1 (E11–1)	L – BR	S4 solenoid signal	IG switch ON	Below 1 V
↑	↑	↑	5th gear	10 to 14 V
↑	↑	↑	Except 5th gear	Below 1 V
SL3+ (E12–15) – SL3– (E12–14)	L–W – L–R	SL3 solenoid signal	Engine idle speed	Pulse generation (See waveform 3)
SL2+ (E12–17) – SL2– (E12–16)	R – R–B	SL2 solenoid signal	Engine idle speed	Pulse generation (See waveform 4)
SL1+ (E12–19) – SL1– (E12–18)	Y – Y–B	SL1 solenoid signal	Engine idle speed	Pulse generation (See waveform 5)
NC+ (E12–26) – NC– (E12–34)	LG – LG–B	Speed sensor (NC) signal	Vehicle speed 30 km/h (19 mph): (3rd gear) Engine speed 1,400 rpm	Pulse generation (See waveform 6)
NT+ (E12–27) – NT– (E12–35)	B–O – B	Speed sensor (NT) signal	Vehicle speed 20 km/h (12 mph)	Pulse generation (See waveform 7)
SLT+ (E12–13) – SLT– (E12–12)	P–L – P	SLT solenoid signal	Engine idle speed	Pulse generation (See waveform 1)
THO (E12–32) – E2 (E13–28)	V – BR	ATF temperature sensor signal	ATF temperature: 115 °C (239 °F) or more	Below 1.5 V
KD *1 (E10–30) – E1 (E11–1)	W – BR	Kick–down switch signal	IG switch ON and Accelerator pedal is depressed	Below 1 V
↑	↑	↑	IG switch ON and Accelerator pedal is released	10 to 14 V

HINT:

*1: LHD

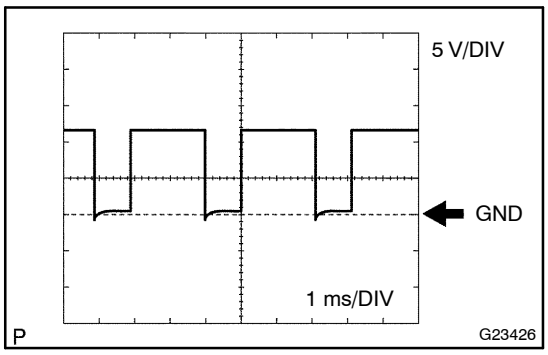

Waveform 1

Reference:

Terminal	SLT+ – SLT–
Tool setting	5V/DIV, 1ms/DIV
Vehicle condition	Engine idle speed

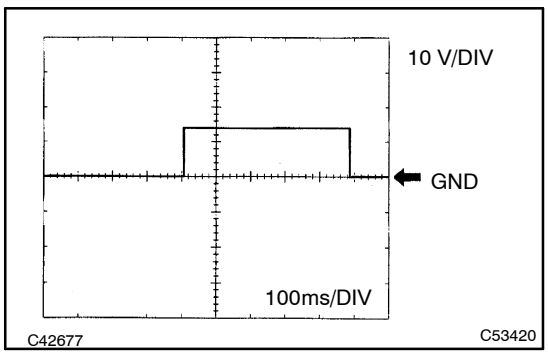

Waveform 2

Reference:

Terminal	DSL – E1
Tool setting	10V/DIV, 100ms/DIV
Vehicle condition	Vehicle speed 65 km/h (40 mph), lock–up (ON to OFF)

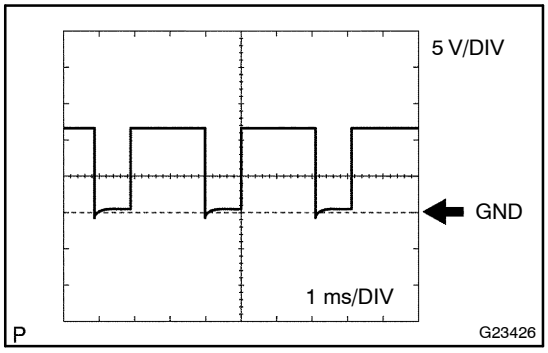

Waveform 3

Reference:

Terminal	SL3+ – SL3–
Tool setting	5V/DIV, 1ms/DIV
Vehicle condition	Engine idle speed

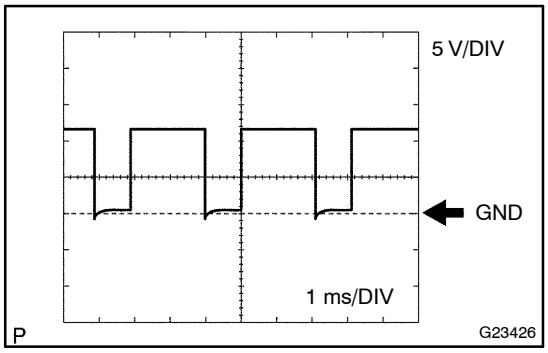

Waveform 4

Reference:

Terminal	SL2+ – SL2–
Tool setting	5V/DIV, 1ms/DIV
Vehicle condition	Engine idle speed

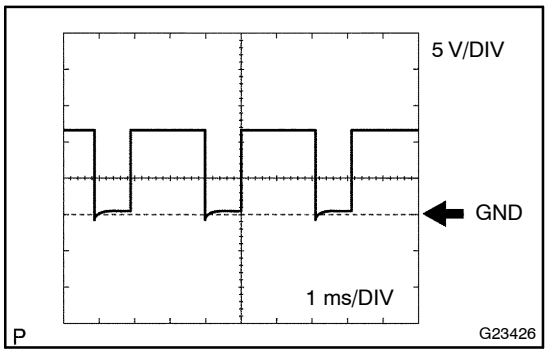

Waveform 5

Reference:

Terminal	SL1+ – SL1–
Tool setting	5V/DIV, 1ms/DIV
Vehicle condition	Engine idle speed

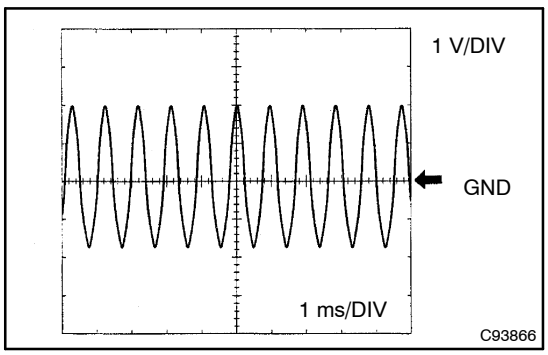

Waveform 6

Reference:

Terminal	NC+ – NC–
Tool setting	1V/DIV, 1ms/DIV
Vehicle condition	Vehicle speed 30 km/h (19 mph): (3rd gear) Engine speed 1,400 rpm

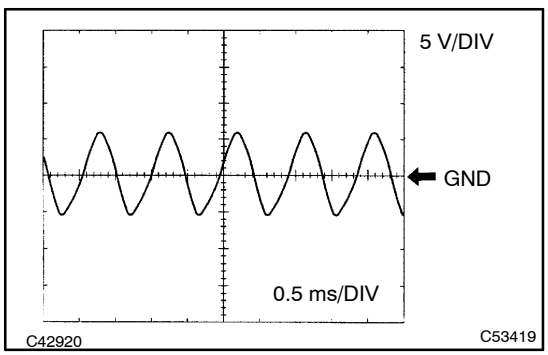

Waveform 7

Reference:

Terminal	NT+ – NT–
Tool setting	5V/DIV, 0.5ms/DIV
Vehicle condition	Vehicle speed 20 km/h (12 mph)

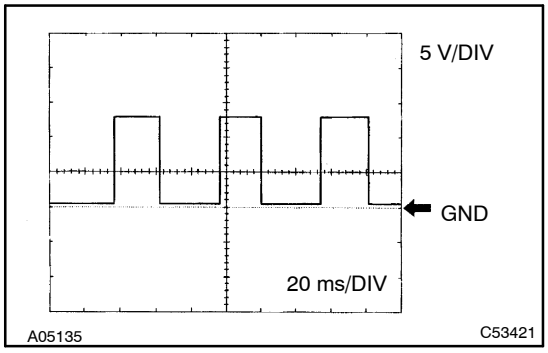

Waveform 8

Reference:

Terminal	SPD – E1
Tool setting	5V/DIV, 20ms/DIV
Vehicle condition	Vehicle speed 20 km/h (12 mph)

05JLB–01

DIAGNOSIS SYSTEM

1. DESCRIPTION for EURO–OBD (European spec.)

- When troubleshooting Euro–OBD vehicles, the only difference from the usual troubleshooting procedure is that you connect an OBD scan tool complying with ISO 15031–4 or a hand–held tester to the vehicle, and read the various data output from the vehicle's ECM.
- Euro–OBD regulations require that the vehicle's on–board computer illuminates the check engine warning light (CHK ENG (MIL)) on the instrument panel when the computer detects a malfunction in: 1) the emission control system / components, or 2) the powertrain control components (which affect vehicle emissions), or 3) the computer. In addition, the applicable Diagnostic Trouble Codes (DTCs) prescribed by ISO 15031–4 are recorded in the ECM memory (see page 05–564).

If the malfunction does not reoccur in 3 consecutive trips, the CHK ENG (MIL) goes off automatically but the DTCs remain recorded in the ECM memory.

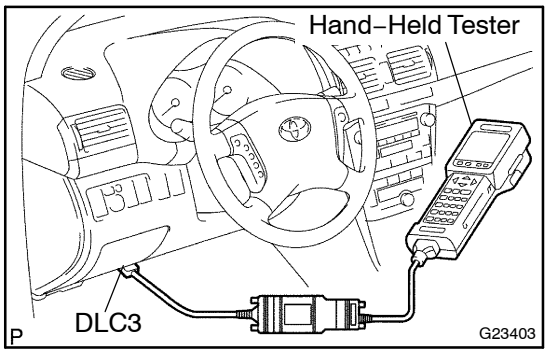

- To check the DTCs, connect the OBD scan tool or hand–held tester to Data Link Connector 3 (DLC3) on the vehicle. The OBD scan tool or hand–held tester also enables you to erase the DTCs and check the freeze frame data and various forms of engine data. (See the instruction manual for the OBD scan tool or the hand–held tester).
- DTCs include ISO controlled codes and manufacturer controlled codes. ISO controlled codes must be set according to the ISO, while manufacturer controlled codes can be set by a manufacturer within certain restrictions (see the DTC chart on page 05–564).
- The diagnosis system operates in normal mode during normal vehicle use. In "normal mode", 2 trip detection logic* is used to ensure accurate detection of malfunctions. A "check mode", is also available to technicians as an option. In "check mode", 1 trip detection logic is used for simulating malfunction symptoms and increasing the system's ability to detect malfunctions, including intermittent malfunctions (hand–held tester only)
  (see page 05–557).
- *2 trip detection logic:
  When a malfunction is first detected, the malfunction is temporarily stored in the ECM memory (1st trip). If the ignition switch is turned OFF and then ON again, and the same malfunction is detected again, the CHK ENG (MIL) will illuminate (2nd trip).

- Freeze frame data:
  The freeze frame data records the engine conditions (fuel system, calculated load, engine coolant temperature, fuel trim, engine speed, vehicle speed, etc.) when a malfunction is detected. When troubleshooting, freeze frame data can help determine if the vehicle was running or stopped, if the engine was warmed up or not, if the air–fuel ratio was lean or rich, and other data from the time the malfunction occurred.

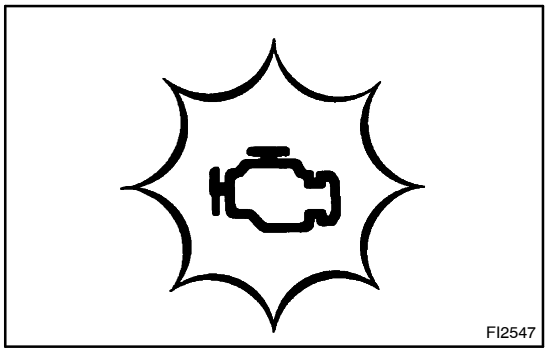

2. DESCRIPTION for M–OBD (Except European spec.)

- When troubleshoot Multiplex OBD (M–OBD) vehicles, the only difference from the usual troubleshooting procedure is that you connect the hand–held tester to the vehicle, and read the various data output from the vehicle's ECM.
- The vehicle's on–board computer illuminates the check engine warning lamp (CHK ENG (MIL)) on the instrument panel when the computer detects a malfunction in the computer itself or in drive system components. In addition, the applicable Diagnostic Trouble Codes (DTCs) are recorded in the ECM memory (see page 05–564).

If the malfunction does not recur, the CHK ENG (MIL) goes off be disappeared by turning the ignition switch to OFF, but the recorded DTCs remain in the ECM memory.

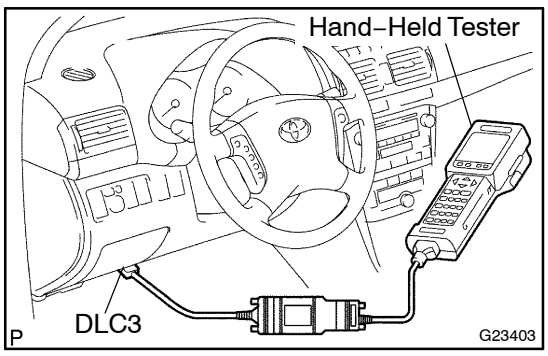

- To check the DTCs, connect the hand–held tester to the Data Link Connector 3 (DLC3) on the vehicle or connect terminals TC and CG on the DLC3(DTCs will be displayd on the multi–information display).
- The diagnosis system operates in normal mode during normal vehicle use. In "normal mode", 2 trip detection logic* is used to ensure accurate detection of malfunctions. A "check mode", is also available to technicians as an option. In "check mode", 1 trip detection logic is used for simulating malfunction symptoms and increasing the system's ability to detect malfunctions, including intermittent malfunctions (hand–held tester only)
  (see page 05–558).
- *2 trip detection logic:
  When a malfunction is first detected, the malfunction is temporarily stored in the ECM memory (1st trip). If the ignition switch is turned OFF and then ON again, and the same malfunction is detected again, the CHK ENG (MIL) will illuminate (2nd trip).

- Freeze frame data:
  The freeze frame data records the engine conditions (fuel system, calculated load, engine coolant temperature, fuel trim, engine speed, vehicle speed, etc.) when a malfunction is detected. When troubleshooting, freeze frame data can help determine if the vehicle was running or stopped, if the engine was warmed up or not, if the air–fuel ratio was lean or rich, and other data from the time the malfunction occurred.

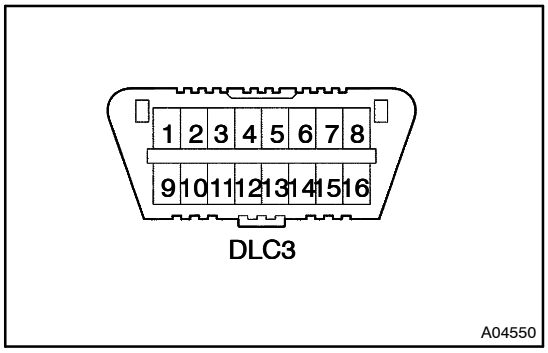

3. CHECK DLC3.

(a) The vehicle's ECM uses the ISO 9141–2 (Euro–OBD)/ ISO 14230(M–OBD) communication protocol. The terminal arrangement of the DLC3 complies with ISO 15031–03 and matches the ISO 9141–2/ ISO 14230 format.

Symbol	Terminal No.	Name	Reference Terminal	Result	Condition
SIL	7	Bus "+" line	5 – Signal ground	Pulse generation	During transmission
CG	4	Chassis ground	Body ground	1 Ω or less	Always
SG	5	Signal ground	Body ground	1 Ω or less	Always
BAT	16	Battery positive	Body ground	9 to 14 V	Always

HINT:

If your display shows "UNABLE TO CONNECT TO VEHICLE" when you have connected the cable of hand–held tester to the DLC3, turned the ignition switch to the ON position and operated the hand–held tester, there is a problem on the vehicle side or tool side.

- If communication is normal when the tool is connected to another vehicle, inspect DLC3 on the original vehicle.
- If communication is still not possible when the tool is connected to another vehicle, the problem is probably in the tool itself, so consult the Service Department listed in the tool's instruction manual.

4. INSPECT BATTERY VOLTAGE

(a) Measure the battery voltage.

Battery Voltage: 11 to 14 V

If the voltage is below 11 V, recharge the battery before proceeding.

5. CHECK CHK ENG (MIL)

(a) The CHK ENG (MIL) comes on when the ignition switch is turned to ON position and the engine is not running.

HINT:

If the CHK ENG (MIL) is not illuminated, troubleshoot the CHK ENG (MIL) circuit (see page 05–251).

(1) When the engine is started, the CHK ENG (MIL) should go off. If the lamp remains on, it means that the diagnosis system has detected a malfunction or abnormality in the system.

05JLC–01

DTC CHECK/CLEAR

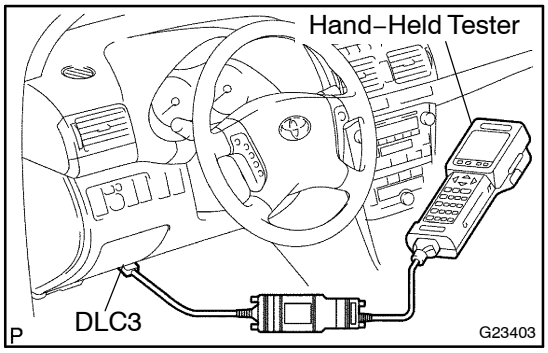

1. DTC CHECK (NORMAL MODE)

NOTICE:

Hand–held tester only:

When the diagnostic system is switched from the normal mode to the check mode, all the DTCs and freeze frame data recorded in the normal mode will be erased. So before switching modes, always check the DTCs and freeze frame data, and note them down.

(a) Checking DTCs using the hand–held tester.

(1) Turn the ignition switch off.

(2) Connect the hand–held tester to DLC3.

(3) Turn the ignition switch to the ON position.

(4) Use the hand–held tester to check the DTCs and freeze frame data and then write them down. For the hand–held tester, select the item: DIAGNOSIS / OBD/MOBD / DTC INFO / CURRENT CODEDS.

HINT:

If you need help with the hand–held tester, refer to its instruction book.

(5) See page 05–564 to confirm the details of the DTCs.

2. DTC CLEAR

(a) When using the hand–held tester:

Clearing the DTCs.

(1) Connect the hand–held tester to the DLC3.

(2) Turn the ignition switch to the ON position. (Do not start the engine start)

(3) Use the hand–held tester to check the DTCs and freeze frame data and then write them down. For the hand–held tester, select the item: DIAGNOSIS / OBD/MOBD / DTC INFO / CLEAR CODES.

HINT:

If you need help with the hand–held tester, refer to its instruction book.

(b) When not using the hand–held tester:

Clearing the DTCs.

(1) Disconnecting the battery terminal or remove the EFI and THROTTLE fuses from the engine room R/B for 60 seconds or more. But if you disconnect the battery terminal, you should do the ”INITIALIZE ” procedure.

05JLD–01

CHECK MODE PROCEDURE

1. DTC CHECK (CHECK MODE)

HINT:

Hand–held tester only:

Compared to the normal mode, the check mode has more sensing ability to detect malfunctions. Furthermore, the same diagnostic items which are detected in the normal mode can also be detected in the check mode.

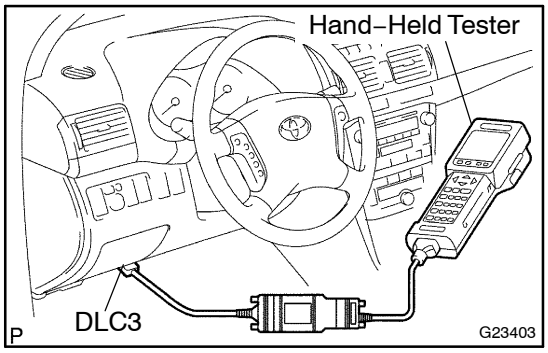

(a) Procedure for Check Mode using the hand–held tester.

(1) Check the initial conditions.
- Battery positive voltage 11 V or more
- Throttle valve fully closed
- Transaxle in the P or N position
- A/C switch is off

(2) Turn the ignition switch off.

(3) Connect the hand–held tester to the DLC3.

(4) Turn the ignition switch to the ON position.

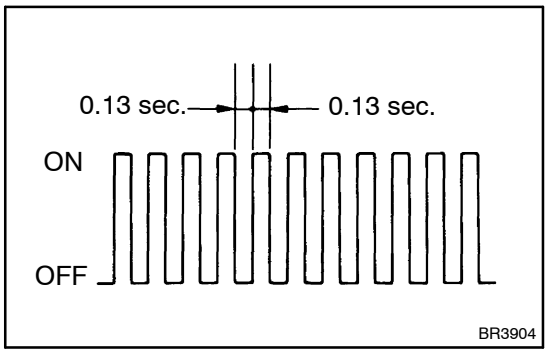

(5) Switch the hand–held tester from the normal mode to the check mode (Check that the MIL flashes).

NOTICE:

If the hand–held tester switches the ECM from the normal mode to the check mode or vice–versa, or if the ignition switch is turned from the ON position to the ACC or LOCK position during the check mode, the DTC and freeze frame data will be erased.

(6) Start the engine (MIL goes off after the engine starts).

(7) Perform ”MONITOR DRIVE PATTERN” for the ECT test (see page 05–543).
(Or, simulate the conditions of the malfunction described by the customer).

NOTICE:

Leave the ignition switch in the ON position until you have checked the DTCs, etc.

(8) After simulating malfunction conditions, use the hand–held tester diagnosis selector to check the DTCs and freeze frame data, etc.

HINT:

Be sure not to turn the ignition switch off, as turning it off switches the diagnosis system from the check mode to the normal mode, which erases all the DTCs, etc.

(9) After checking the DTC, inspect the applicable circuit.

2. DTC CLEAR

(a) When using the hand–held tester:
Clearing the DTCs.
(1) Connect the hand–held tester to the DLC3.
(2) Turn the ignition switch to the ON position. (Do not start the engine start)
(3) Use the hand–held tester to check the DTCs and freeze frame data and then write them down. For the hand–held tester, select the item: DIAGNOSIS / OBD/MOBD / DTC INFO / CLEAR CODES.

HINT:
If you need help with the hand–held tester, refer to its instruction book.

(b) When not using the hand–held tester:
Clearing the DTCs.
(1) Disconnecting the battery terminal or remove the EFI and THROTTLE fuses from the engine room R/B for 60 seconds or more. But if you disconnect the battery terminal, you should do the ”INITIALIZE ” procedure.

05JLE–01

FAIL–SAFE CHART

1. FAIL–SAFE

This function minimizes the loss of the ECT functions when any malfunction occurs in each sensor or solenoid.

(a) ATF (Automatic Transmission Fluid) temperature sensor:
When the ATF temperature sensor has a malfunction, 5th upshift is prohibited.

(b) Counter gear speed sensor NC (Speed sensor NC):
When the counter gear speed sensor has a malfunction, 5th upshift is prohibited.

(c) Shift solenoid valve DSL:
When the solenoid valve DSL has a malfunction, the current to the solenoid valve is stopped. This stops lock–up control, then fuel economy decreases.

(d) Shift solenoid valve SL1, SL2, SL3 and S4:

Fail safe function:

If either of the shift solenoid valve circuits develops an open or short, the ECM turns the other shift solenoid "ON" and "OFF" in order to shift into the gear positions shown in the table below.

Manual shifting as shown in the following table must be done (In case of a short circuit, the ECM stops sending the current to the short circuit solenoid).

Even if starting the engine in the fail–safe mode, the gear position remain in the same position.

○ : ON △ : According to Flex Lock–up × : OFF

→ : Condition in the normal operation is shown on the left of "→".
Condition in the fail–safe mode is shown on the right of "→".

Normal	Solenoid Valve	SL1	○	×	○	×	×
		SL2	○	○	×	△	△
		SL3	×	×	×	○	○
		S4	×	×	×	×	○
	Gear Position		1st	2nd	3rd	4th	5th
SL1 Malfunction (During driving at 1st or 2nd)	Solenoid Valve	SL1	×				
		SL2	○	○	×→○	△→○	△→○
		SL3	×	×	×	○→×	○→×
		S4	×	×	×	×	○→×
	Gear Position		1st → 2nd	2nd	3rd → 2nd	4th → 2nd	5th → 2nd
SL1 Malfunction (During driving at 3rd)	Solenoid Valve	SL1	×				
		SL2	○→△	○→△	×→△	△	△
		SL3	×	×	×	○→×	○→×
		S4	×→○	×→○	×→○	×→○	○
	Gear Position		1st → 4th	2nd→ 4th	3rd → 4th	4th	5th → 4th
SL1 Malfunction (During driving at 4th or 5th)	Solenoid Valve	SL1	×				
		SL2	○→△	○→△	×→△	△	△
		SL3	×→○	×→○	×→○	○	○
		S4	×	×	×	×	○
	Gear Position		1st → 4th	2nd→ 4th	3rd → 4th	4th	5th → 4th
SL2 Malfunction	Solenoid Valve	SL1	○	×→○	○	×→○	×→○
		SL2	×				
		SL3	×	×	×	○→×	○→×
		S4	×→○	×→○	×→○	×→○	○
	Gear Position		1st → 4th	2nd→ 4th	3rd → 4th	4th	5th → 4th
SL3 Malfunction	Solenoid Valve	SL1	○	×	○	×→○	×→○
		SL2	○	○	×	△	△
		SL3	×				
		S4	×	×	×	×→○	○
	Gear Position		1st	2nd	3rd	4th	5th → 4th
S4 Malfunction	Solenoid Valve	SL1	○	×	○	×	×
		SL2	○	○	×	△	△
		SL3	×	×	×	○	○
		S4	×				
	Gear Position		1st	2nd	3rd	4th	5th → 4th
SL1, SL2, SL3, and S4 Malfunction	Solenoid Valve	SL1	×				
		SL2	×				
		SL3	×				
		S4	×				
	Gear Position		1st → 4th	2nd→ 4th	3rd → 4th	4th	5th → 4th

05JLF–01

DATA LIST/ACTIVE TEST

1. DATA LIST

HINT:

According to the DATA LIST displayed by the hand–held tester, you can read the value of the switch, sensor, actuator and so on without parts removal. Reading the DATA LIST as the first step of troubleshooting is one method to shorten labor time.

(a) Warm up the engine.
(b) Turn the ignition switch off.
(c) Connect the hand–held tester to the DLC3.
(d) Turn the ignition switch to the ON position.
(e) Push the ”ON” button of the hand–held tester.
(f) Select the item ”DIAGNOSIS / OBD/MOBD / DATA LIST”.
(g) According to the display on tester, read the ”DATA LIST”.

Item	Measurement Item/ Range (display)	Normal Condition	Diagnostic Note
STOP LIGHT SW	Stop light SW Status/ ON or OFF	• Brake Pedal is depressed: ON • Brake Pedal is released: OFF	–
REVERSE	PNP SW Status/ ON or OFF	Shift lever position is; R: ON Except R: OFF	When the shift lever position displayed on the hand–held tester differs from the actual position, adjustment of the PNP switch or the shift cable may be incorrect. HINT: When the failure still occurs even after adjusting these parts, see page 05–566.
DRIVE	PNP SW Status/ ON or OFF	Shift lever position is; D and S: ON Except D and S: OFF	↑
SHIFT	Actual Gear Position/ 1st, 2nd, 3rd, 4th or 5th	Shift lever position is; • D: 1st, 2nd, 3rd, 4th or 5th • S: 1st, 2nd, 3rd, 4th or 5th	–
LOCK UP SOL	Lock Up Solenoid Status/ ON or OFF	• Lock Up: ON • Except Lock Up: OFF	–
SOLENOID (SLT)	Shift Solenoid SLT Status/ ON or OFF	• Accelerator pedal is depressed: OFF • Accelerator pedal is released: ON	–
AT FLUID TEMP	ATF Temp. Sensor Value/ min.: –40°C (–40°F) max.: 215°C (419°F)	• After Stall Test; Approx. 80°C (176°F) • Equal to ambient temperature when the engine is cold	If the value is ”–40°C (–40°F)” or ”215°C (419°F)”, ATF temp. sensor circuit is opened or shorted.
SPD (NC)	Counter Gear Speed/ display: 50 r/min	[HINT] 3rd when shift lever position is D position (After warming up the engine); • Intermediate shaft speed (NC) becomes close to the engine speed.	–

2. ACTIVE TEST

HINT:

Performing the ACTIVE TEST using the hand–held tester allows the relay, VSV, actuator and so on to operate without parts removal. Performing the ACTIVE TEST as the first step of troubleshooting is one method to shorten labor time.

It is possible to display the DATA LIST during the ACTIVE TEST.

(a) Warm up the engine.
(b) Turn the ignition switch off.
(c) Connect the hand–held tester to the DLC3.
(d) Turn the ignition switch to the ON position.
(e) Push the ”ON” button of the hand–held tester.
(f) Select the item ”DIAGNOSIS / OBD/MOBD / ACTIVE TEST”.
(g) According to the display on tester, perform the ”ACTIVE TEST”.

Item	Test Details	Diagnostic Note
SHIFT	[Test Details] Operate the shift solenoid valve and set the each shift position by yourself. [Vehicle Condition] Less than 50 km/h (31 mph) [Others] • Press ”→” button: Shift up • Press ”←” button: Shift down	Possible to check the operation of the shift solenoid valves.
LOCK UP	[Test Details] Control the shift solenoid DSL to set the automatic transaxle to the lock–up condition. [Vehicle Condition] Vehicle Speed: 60 km/h (37 mph) or more, and 5th gear	Possible to check the DSL operation.
LINE PRESS UP *	[Test Details] Operate the shift solenoid SLT and raise the line pressure. [Vehicle Condition] • Vehicle Stopped. • IDL: ON [HINT] OFF: Line pressure up (When the active test of ”LINE PRESS UP” is performed, the ECM commands the SLT solenoid to turn off). ON: No action (normal operation)	–

*: ”LINE PRESS UP” in the ACTIVE TEST is performed to check the line pressure changes by connecting the SST to the automatic transaxle, which is used in the HYDRAULIC TEST (see page 05–538) as well.

HINT:

The pressure values in ACTIVE TEST and HYDRAULIC TEST are different from each other.

056IK–05

DIAGNOSTIC TROUBLE CODE CHART

If a DTC is displayed during the DTC check, check the parts listed in the table below and proceed to the page given.

HINT:

- *1 : ● ... MIL (Malfunction Indicator Lamp) light up
- *2 : "○" mark means ECM memorizes the malfunction code if the ECM detects the DTC detection condition.
- This DTC may be output when the clutch, brake and gear components etc. inside the automatic transaxle are damaged.

DTC No. (See Page)	Detection Item	Trouble Area	MIL *1	Memory *2
P0500 (05–183)	Vehicle Speed Sensor "A"	• Combination meter • Open or short in vehicle speed sensor circuit • Vehicle speed sensor • ECM	●	○
P0705 (05–566)	Transmission Range Sensor Circuit Malfunction (PRNDL Input)	• Open or short in park/neutral position switch circuit • Park/neutral position switch • ECM	●	○
P0710 (05–571)	Transmission Fluid Temperature Sensor "A" Circuit	• Open or short in ATF temperature sensor circuit • Transmission wire (ATF temperature sensor) • ECM	●	○
P0711 (05–574)	Transmission Fluid Temperature Sensor "A" Performance	• Open or short in ATF temperature sensor circuit • Transmission wire (ATF temperature sensor) • ECM	●	○
P0712 (05–571)	Transmission Fluid Temperature Sensor "A" Circuit Low Input	• Short in ATF temperature sensor circuit • Transmission wire (ATF temperature sensor) • ECM	●	○
P0713 (05–571)	Transmission Fluid Temperature Sensor "A" Circuit High Input	• Open in ATF temperature sensor circuit • Transmission wire (ATF temperature sensor) • ECM	●	○
P0717 (05–577)	Turbine Speed Sensor Circuit No Signal	• Open or short in transmission revolution sensor NT (speed sensor NT) circuit • Transmission revolution sensor NT (speed sensor NT) • ECM • Automatic transaxle assembly	●	○
P0724 (05–580)	Brake Switch "B" Circuit High	• Short in stop light switch circuit • Stop light switch • ECM	●	○
P0741 (05–582)	Torque Converter Clutch Solenoid Performance (Shift Solenoid Valve DSL)	• Shift solenoid valve DSL remains open or closed • Valve body is blocked • Shift solenoid valve DSL • Torque converter clutch • Automatic transaxle (clutch, brake or gear etc.) • Line pressure is too low • ECM	●	○
P0743 (05–586)	Torque Converter Clutch Circuit Electrical (Shift Solenoid Valve DSL)	• Open or short in shift solenoid valve DSL circuit • Shift solenoid valve DSL • ECM	●	○
P0746 (05–589)	Pressure Control Solenoid "A" Performance (Shift Solenoid Valve SL1)	• Shift solenoid valve SL1 remains open or closed • Valve body is blocked • Shift solenoid valve SL1 • Automatic transaxle (clutch, brake or gear etc.) • ECM	●	○

P0748 (05–592)	Pressure Control Solenoid ”A” Electrical (Shift Solenoid Valve SL1)	• Open or short in shift solenoid valve SL1 circuit • Shift solenoid valve SL1 • ECM	●	○
P0766 (05–595)	Shift Solenoid ”D” Performance (Shift Solenoid Valve S4)	• Shift solenoid valve S4 remains open or closed • Valve body is blocked • Shift solenoid valve S4 • Automatic transaxle (clutch, brake or gear etc.) • ECM	●	○
P0771 (05–598)	Shift Solenoid ”E” Performance (Shift Solenoid Valve SR)	• Shift solenoid valve SR remains open or closed • Valve body is blocked • Shift solenoid valve SR • Automatic transaxle (clutch, brake or gear etc.) • ECM	●	○
P0776 (05–601)	Pressure Control Solenoid ”B” Performance (Shift Solenoid Valve SL2)	• Shift solenoid valve SL2 remains open or closed • Valve body is blocked • Shift solenoid valve SL2 • Automatic transaxle (clutch, brake or gear etc.) • ECM	●	○
P0778 (05–604)	Pressure Control Solenoid ”B” Electrical (Shift Solenoid Valve SL2)	• Open or short in shift solenoid valve SL2 circuit • Shift solenoid valve SL2 • ECM	●	○
P0793 (05–607)	Intermediate Shaft Speed Sensor ”A”	• Open or short in transmission revolution sensor NC (speed sensor NC) circuit • Transmission revolution sensor NC (speed sensor NC) • ECM	●	○
P0796 (05–610)	Pressure Control Solenoid ”C” Performance (Shift Solenoid Valve SL3)	• Shift solenoid valve SL3 remains open or closed • Valve body is blocked • Shift solenoid valve SL3 • Automatic transaxle (clutch, brake or gear etc.) • ECM	●	○
P0798 (05–613)	Pressure Control Solenoid ”C” Electrical (Shift Solenoid Valve SL3)	• Open or short in shift solenoid valve SL3 circuit • Shift solenoid valve SL3 • ECM	●	○
P0982 (05–616)	Shift Solenoid ”B” Control Circuit Low (Shift Solenoid Valve S4)	• Short in shift solenoid valve S4 circuit • Shift solenoid valve S4 • ECM	●	○
P0983 (05–616)	Shift Solenoid ”B” Control Circuit High (Shift Solenoid Valve S4)	• Open in shift solenoid valve S4 circuit • Shift solenoid valve S4 • ECM	●	○
P0985 (05–619)	Shift Solenoid ”E” Control Circuit Low (Shift Solenoid Valve SR)	• Short in shift solenoid valve SR circuit • Shift solenoid valve SR • ECM	●	○
P0986 (05–619)	Shift Solenoid ”E” Control Circuit High (Shift Solenoid Valve SR)	• Open in shift solenoid valve SR circuit • Shift solenoid valve SR • ECM	●	○
P2716 (05–622)	Pressure Control Solenoid ”D” Electrical (Shift Solenoid Valve SLT)	• Open or short in shift solenoid valve SLT circuit • Shift solenoid valve SLT • ECM	●	○

DTC	P0705	TRANSMISSION RANGE SENSOR CIRCUIT MALFUNCTION (PRNDL INPUT)

CIRCUIT DESCRIPTION

The park/neutral position switch detects the shift lever position and sends signals to the ECM.

DTC No.	DTC Detection Condition	Trouble Area
P0705	(A) Any 2 or more signals of the following are ON simultaneously (2–trip detection logic) • P input signal is ON. • N input signal is ON. • R input signal is ON. • D input signal is ON. (B) When any of following conditions is met for 2.0 sec. or more in the S position (2–trip detection logic) • P input signal is ON. • N input signal is ON. • R input signal is ON.	• Open or short in park/neutral position switch circuit • Park/neutral position switch • ECM

MONITOR DESCRIPTION

The park/neutral position switch detects the shift lever position and sends a signal to the ECM.
For security, the park/neutral position switch detects the shift lever position so that engine can be started only when the vehicle is in P or N shift position.
When the park/neutral position switch sends more than one signal at a time from switch positions P, R, N or D, the ECM interprets this as a fault in the switch. The ECM will turn on the MIL and store the DTC.

WIRING DIAGRAM

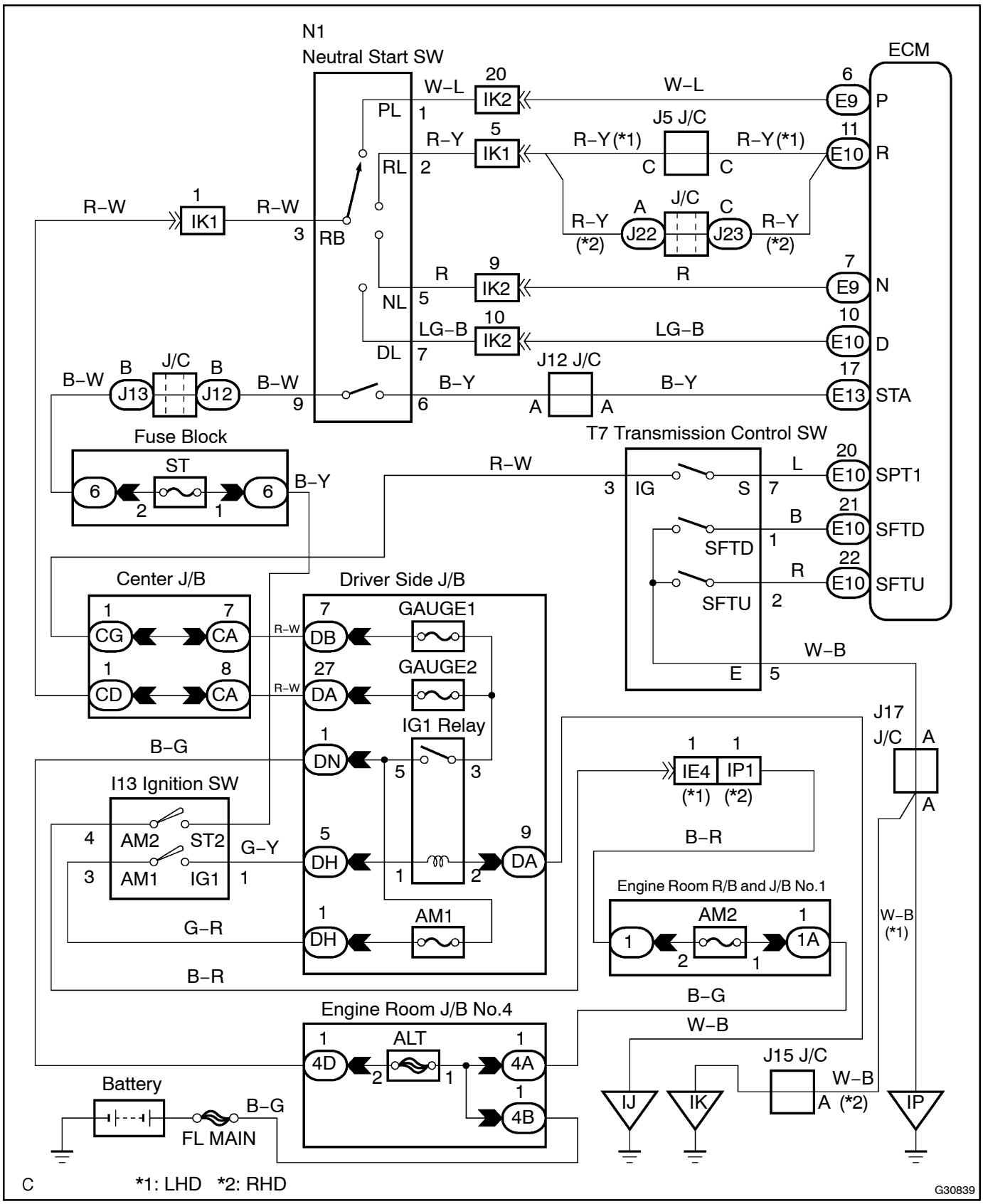

INSPECTION PROCEDURE

HINT:

According to the DATA LIST displayed by the hand–held tester, you can read the value of the switch, sensor, actuator and so on without parts removal. Reading the DATA LIST as the first step of troubleshooting is one method to shorten labor time.

(a) Turn the ignition switch off.
(b) Connect the hand–held tester to the DLC3.
(c) Turn the ignition switch to the ON position.
(d) Push the ”ON” button of the hand–held tester.
(e) Select the item ”DIAGNOSIS / OBD/MOBD / DATA LIST”.
(f) According to the display on tester, read the ”DATA LIST”.

Item	Measurement Item/ Range (display)	Normal Condition	Diagnostic Note
REVERSE	PNP SW Status/ ON or OFF	Shift lever position is; R: ON Except R: OFF	When the shift lever position displayed on the hand–held tester differs from the actual position, adjustment of the PNP switch or the shift cable may be incorrect.
DRIVE	PNP SW Status/ ON or OFF	Shift lever position is; D and S: ON Except D and S: OFF	↑

1 INSPECT PARK/NEUTRAL POSITION SWITCH ASSY

Switch Side:
(Connector Front View):

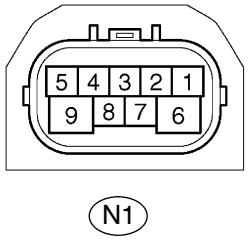

(a) Disconnect the park/neutral position switch connector.
(b) Measure resistance according to the value(s) in the table below when the shift lever is moved to each position.

Standard:

Shift Position	Tester Connection	Specified Condition
P	1 – 3 and 6 – 9	Below 1 Ω
Except P	↑	10 kΩ or higher
R	2 – 3	Below 1 Ω
Except R	↑	10 kΩ or higher
N	3 – 5 and 6 – 9	Below 1 Ω
Except N	↑	10 kΩ or higher
D, S, ”+” and ”–”	3 – 7	Below 1 Ω
Except D, S, ”+” and ”–”	↑	10 kΩ or higher

NG → **REPLACE PARK/NEUTRAL POSITION SWITCH ASSY**

OK

2	INSPECT SHIFT LOCK CONTROL UNIT ASSY(TRANSMISSION CONTROL SWITCH)

Switch Side:
(Connector Front View):

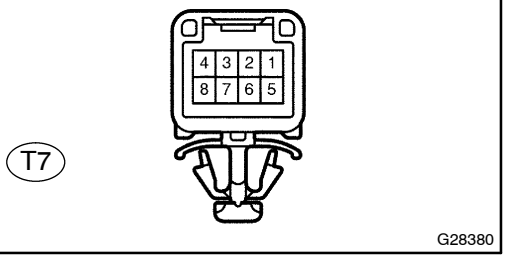

(a) Connect the park/neutral position switch connector.
(b) Disconnect the transmission control switch connector of shift lock control unit assy.
(c) Measure resistance according to the value(s) in the table below when the shift lever is moved to each position.

Standard:

Shift Position	Tester Connection	Specified Condition
S, "+" and "–"	3 – 7	Below 1 Ω
Except S, "+" and "–"	↑	10 kΩ or higher

NG → **REPLACE SHIFT LOCK CONTROL UNIT ASSY**

OK

3	CHECK HARNESS AND CONNECTOR(PARK/NEUTRAL POSITION SWITCH – ECM)

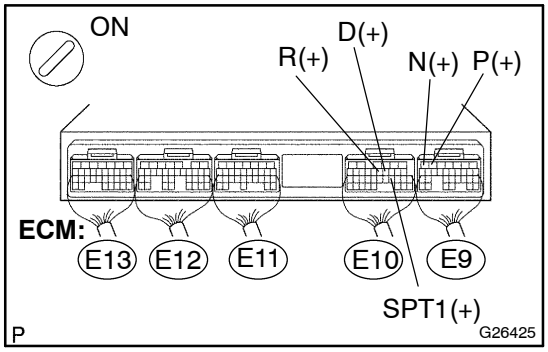

(a) Connect the transmission control switch connector of shift lock control unit assy.

(b) Turn the ignition switch to the ON position, and measure the voltage according to the value(s) in the table below when the shift lever is moved to each position.

Standard:

Shift Position	Tester connection	Specified condition
P	E9 – 6 (P) – Body ground	10 to 14 V
Except P	↑	Below 1 V
N	E9 – 7 (N) – Body ground	10 to 14 V
Except N	↑	Below 1 V
R	E10 – 11 (R) – Body ground	10 to 14 V*
Except R	↑	Below 1 V
D and S	E10 – 10 (D) – Body ground	10 to 14 V
Except D and S	↑	Below 1 V
S, "+" and "–"	E10 – 20 (SPT1) – Body ground	10 to 14 V
Except S, "+" and "–"	↑	Below 1 V

HINT:

*: The voltage will drop slightly due to lighting up of the back up light.

NG → **REPAIR OR REPLACE HARNESS OR CONNECTOR (SEE PAGE 01–32)**

OK →

REPLACE ECM (SEE PAGE 10–29)

DTC	P0710	TRANSMISSION FLUID TEMPERATURE SENSOR ”A” CIRCUIT

DTC	P0712	TRANSMISSION FLUID TEMPERATURE SENSOR ”A” CIRCUIT LOW INPUT

DTC	P0713	TRANSMISSION FLUID TEMPERATURE SENSOR ”A” CIRCUIT HIGH INPUT

CIRCUIT DESCRIPTION

The ATF (Automatic Transmission Fluid) temperature sensor converts the fluid temperature into a resistance value which is input into the ECM.
The ECM applies a voltage to the temperature sensor through ECM terminal THO.
The sensor resistance changes with the transmission fluid temperature. As the temperature becomes higher, the sensor resistance decreases.
One terminal of the sensor is grounded so that the sensor resistance decreases and the voltage goes down as the temperature becomes higher.
The ECM calculates the fluid temperature based on the voltage signal.

DTC No.	DTC Detection Condition	Trouble Area
P0710	(a) and (b) is detected momentary within 0.5 sec. when neither P0712 or P0713 is not detected (1–trip detection logic) (a) ATF temperature sensor resistance is less than 79 Ω. (b) ATF temperature sensor resistance is more than 156 kΩ. HINT: Within 0.5 sec., the malfunction switches from (a) to (b) or from (b) to (a)	• Open or short in ATF temperature sensor circuit • Transmission wire (ATF temperature sensor) • ECM
P0712	ATF temperature sensor resistance is less than 79 Ω for 0.5 sec. or more (1–trip detection logic)	• Short in ATF temperature sensor circuit • Transmission wire (ATF temperature sensor) • ECM
P0713	ATF temperature sensor resistance is more than 156 kΩ when 15 minutes or more after the engine start DTC is detected for 0.5 sec. or more (1–trip detection logic)	• Open in ATF temperature sensor circuit • Transmission wire (ATF temperature sensor) • ECM

MONITOR DESCRIPTION

The automatic transmission fluid (ATF) temperature sensor converts ATF temperature to an electrical resistance value. Based on the resistance, the ECM determines the ATF temperature, and the ECM detects an opens or shorts in the ATF temperature circuit. If the resistance value of the ATF temperature is less than 79 Ω*1 or more than 156 kΩ*2, the ECM interprets this as a fault in the ATF sensor or wiring. The ECM will turn on the MIL and store the DTC.
*1: 150°C (302°F) or more is indicated regardless of the actual ATF temperature.
*2: –40°C (–40°F) is indicated regardless of the actual ATF temperature.
HINT:
The ATF temperature can be checked on the hand–held tester display.

WIRING DIAGRAM

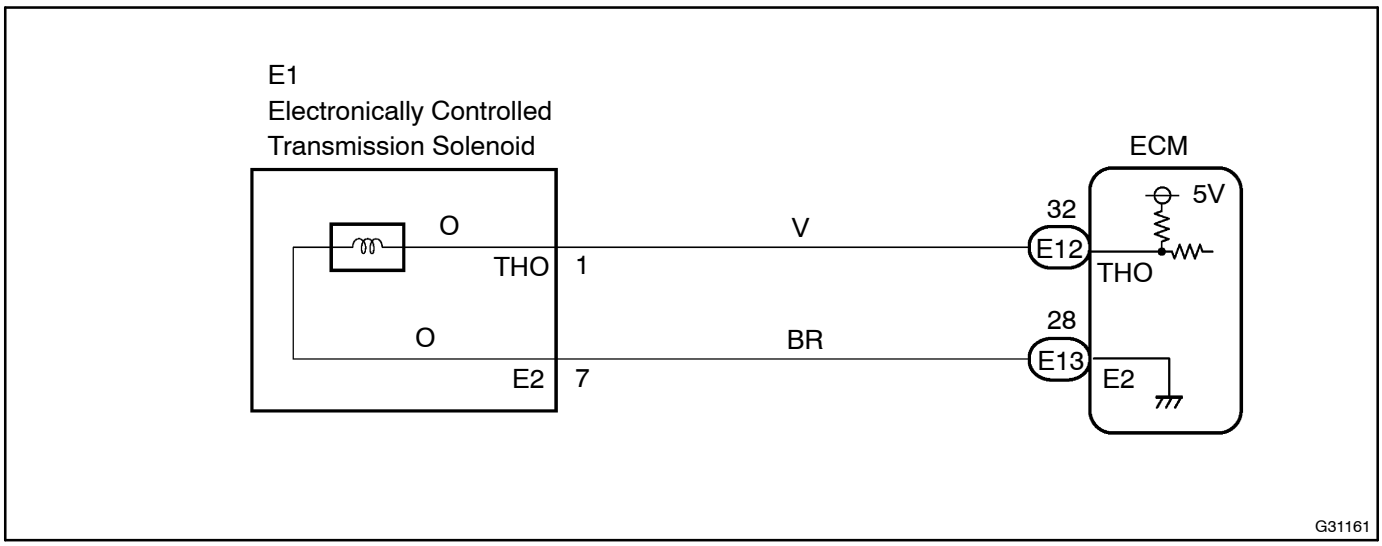

INSPECTION PROCEDURE

HINT:
According to the DATA LIST displayed by the hand–held tester, you can read the value of the switch, sensor, actuator and so on without parts removal. Reading the DATA LIST as the first step of troubleshooting is one method to shorten labor time.

(a) Warm up the engine.
(b) Turn the ignition switch off.
(c) Connect the hand–held tester to the DLC3.
(d) Turn the ignition switch to the ON position.
(e) Push the ”ON” button of the hand–held tester.
(f) Select the item ”DIAGNOSIS / OBD/MOBD / DATA LIST”.
(g) According to the display on tester, read the ”DATA LIST”.

Item	Measurement Item/ Range (display)	Normal Condition
AT FLUID TEMP	ATF Temp. Sensor Value/ min.: –40°C (–40°F) max.: 215°C (419°F)	Approx. 80°C (176°F) (After Stall Test)

HINT:
When DTC P0712 is output and hand–held tester output is 150°C (302°F), there is a short circuit.
When DTC P0713 is output and hand–held tester output is –40°C (–40°F), there is an open circuit.
Measure the resistance between terminal THO1 (THO) and body ground.

Temperature Displayed	Malfunction
–40˚C (–40˚F)	Open circuit
150˚C (302˚F) or more	Short circuit

1 INSPECT TRANSMISSION WIRE(ATF TEMPERATURE SENSOR)

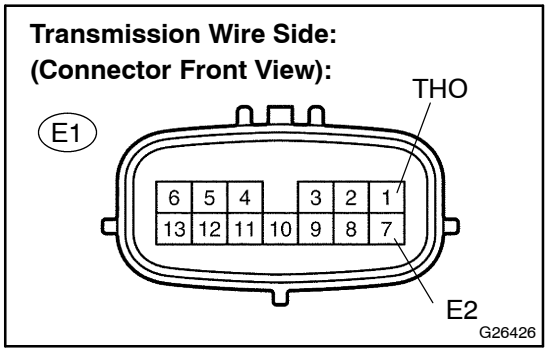

(a) Disconnect the transmission wire connector from the transaxle.

(b) Measure the resistance according to the value(s) in the table below.

Standard:

Tester Connection	Specified Condition
1 (THO) – 7 (E2)	79 Ω to 156 kΩ

(c) Measure the resistance according to the value(s) in the table below.

Standard (Check for short):

Tester Connection	Specified Condition
1 (THO) – Body ground	10 kΩ or higher
7 (E2) – Body ground	↑

NG → **REPAIR OR REPLACE TRANSMISSION WIRE (SEE PAGE 40–16)**

OK

2 CHECK HARNESS AND CONNECTOR(TRANSMISSION WIRE – ECM)

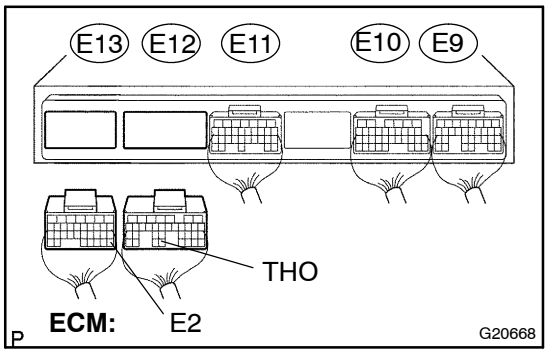

(a) Connect the transmission wire connector to the transaxle.

(b) Disconnect the ECM connectors.

(c) Measure the resistance according to the value(s) in the table below.

Standard:

Tester Connection	Specified Condition
E12 – 32 (THO) – E13 – 28 (E2)	79 Ω to 156 kΩ

(d) Measure the resistance according to the value(s) in the table below.

Standard (Check for short):

Tester Connection	Specified Condition
E12 – 32 (THO) – Body ground	10 kΩ or higher
E13 – 28 (E2) – Body ground	↑

NG → **REPAIR OR REPLACE HARNESS OR CONNECTOR (SEE PAGE 01–32)**

OK

REPLACE ECM (SEE PAGE 10–29)

DTC	P0711	TRANSMISSION FLUID TEMPERATURE SENSOR "A" PERFORMANCE

CIRCUIT DESCRIPTION

The ATF (Automatic Transmission Fluid) temperature sensor converts the fluid temperature into a resistance value which is input into the ECM.

DTC No.	DTC Detection Condition	Trouble Area
P0711	(A) Both (a) and (b) are detected: (2–trip detection logic) (a) Intake air and engine coolant temperatures are more than –10˚C (14°F) at engine start (b) After normal driving for over 19 min. and 8 km (5 mile) or more, ATF temp. is less than 10˚C (50°F) (B) When engine coolant temp. is less than 35˚C (95°F) at engine start, the ATF temp. is 110˚C (230°F) or more after 17 min. of engine start (2–trip detection logic).	• Open or short in ATF temperature sensor circuit • Transmission wire (ATF temperature sensor) • ECM

MONITOR DESCRIPTION

The ATF temperature sensor converts the ATF temperature to an electrical resistance value. Based on the resistance, the ECM determines the ATF temperature and detects an opens or shorts in the ATF temperature circuit or a fault of the ATF temperature sensor.

After running the vehicle for a certain period, the ATF temperature should increase. If the ATF temperature is below 10°C (50°F) after running the vehicle for a certain period, the ECM interprets this as a fault, and turns on the MIL.

When the ATF temperature is 110°C (230°F) or more after 17 minutes of engine cold start, the ECM also determines this as a fault, turns on the MIL, and stores the DTC.

WIRING DIAGRAM

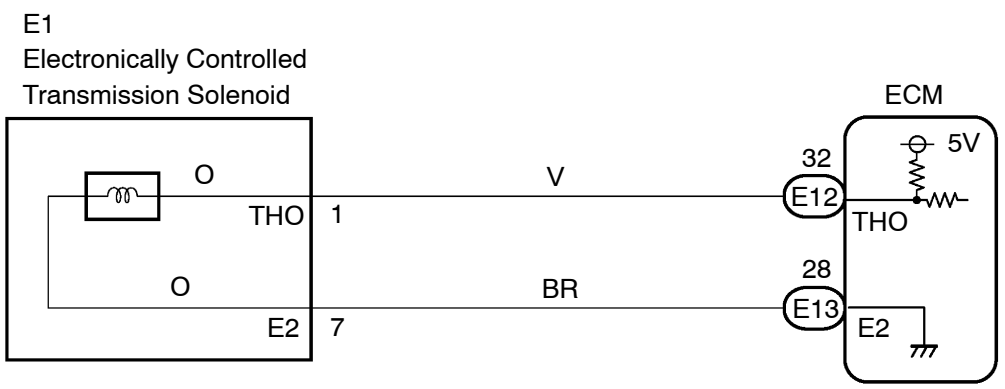

INSPECTION PROCEDURE

HINT:
According to the DATA LIST displayed by the hand–held tester, you can read the value of the switch, sensor, actuator and so on without parts removal. Reading the DATA LIST as the first step of troubleshooting is one method to shorten labor time.

(a) Warm up the engine.
(b) Turn the ignition switch off.
(c) Connect the hand–held tester to the DLC3.
(d) Turn the ignition switch to the ON position.
(e) Push the ”ON” button of the hand–held tester.
(f) Select the item ”DIAGNOSIS / OBD/MOBD / DATA LIST”.
(g) According to the display on tester, read the ”DATA LIST”.

Item	Measurement Item/ Range (display)	Normal Condition
AT FLUID TEMP	ATF Temp. Sensor Value/ min.: –40°C (–40°F) max.: 215°C (419°F)	Approx. 80°C (176°F) (After Stall Test)

HINT:
When DTC P0712 is output and hand–held tester output is 150°C (302°F), there is a short circuit.
When DTC P0713 is output and hand–held tester output is –40°C (–40°F), there is an open circuit.
Measure the resistance between terminal THO1 (THO) and body ground.

Temperature Displayed	Malfunction
–40°C (–40°F)	Open circuit
150°C (302°F) or more	Short circuit

HINT:
If a circuit related to the ATF temperature sensor becomes open, P0713 is immediately set (in 0.5 second).
When P0713 is set, P0711 cannot be detected.
It is not necessary to inspect the circuit when P0711 is set.

1	CHECK OTHER DTCS OUTPUT(IN ADDITION TO DTC P0711)

(a) Connect the hand–held tester to the DLC3.
(b) Turn the ignition switch to the ON position and push the hand–held tester main switch ON.
(c) Select the item ”DIAGNOSIS / OBD/MOBD / DTC INFO / CURRENT CODES”.
(d) Read the DTCs using the hand–held tester.

Result:

Display (DTC output)	Proceed to
Only ”P0711” is output	A
”P0711” and other DTCs	B

HINT:
If any other codes besides ”P0711” is output, perform the troubleshooting for those DTCs first.

B → **GO TO RELEVANT DTC CHART (SEE PAGE 05–564)**

A

2	CHECK TRANSAXLE FLUID LEVEL

OK:

Automatic transaxle fluid level is correct.

NG → **ADD FLUID**

OK

REPLACE TRANSMISSION WIRE (SEE PAGE 40–16)

DTC	P0717	TURBINE SPEED SENSOR CIRCUIT NO SIGNAL

CIRCUIT DESCRIPTION

This sensor detects the rotation speed of the input turbine. By comparing the input turbine speed signal (NT) with the counter gear speed sensor signal (NC), the ECM detects the shift timing of the gears and appropriately controls the engine torque and hydraulic pressure according to various conditions. Thus, providing smooth gear shift.

DTC No.	DTC Detection Condition	Trouble Area
P0717	ECM detects conditions (a), (b) and (c) continuity for 5 sec. or more: (1–trip detection logic) (a) Vehicle speed: 50 km/h (31 mph) or more (b) Park/neutral position switch (NSW and R) is OFF (c) Speed sensor (NT): less than 300 rpm	• Open or short in transmission revolution sensor NT (speed sensor NT) circuit • Transmission revolution sensor NT (speed sensor NT) • ECM

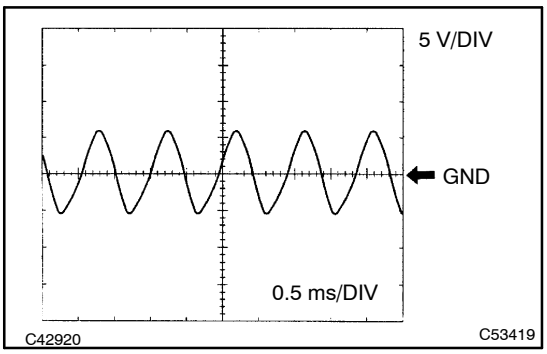

Reference (Using an oscilloscope):

Check the waveform between the terminals NT+ and NT– of the ECM connector.

Standard: Refer to the illustration.

Terminal	NT+ – NT–
Tool setting	5V/DIV, 0.5ms/DIV
Vehicle condition	Vehicle speed 20 km/h (12 mph)

MONITOR DESCRIPTION

The NT terminal of the ECM detects a revolution signal from the speed sensor (NT) (input RPM). The ECM calculates a gearshift comparing the speed sensor (NT) with the speed sensor (NC).

While the vehicle is operating in 2nd, 3rd, 4th or 5th gear in the shift position of D, if the input shaft revolution is less than 300 rpm*1 although the output shaft revolution is more than 1,000 rpm*2, the ECM detects the trouble, illuminates the MIL and stores the DTC.

*1: Pulse is not output or is irregularly output.

*2: The vehicle speed is 50 km/h (31 mph) or more.

WIRING DIAGRAM

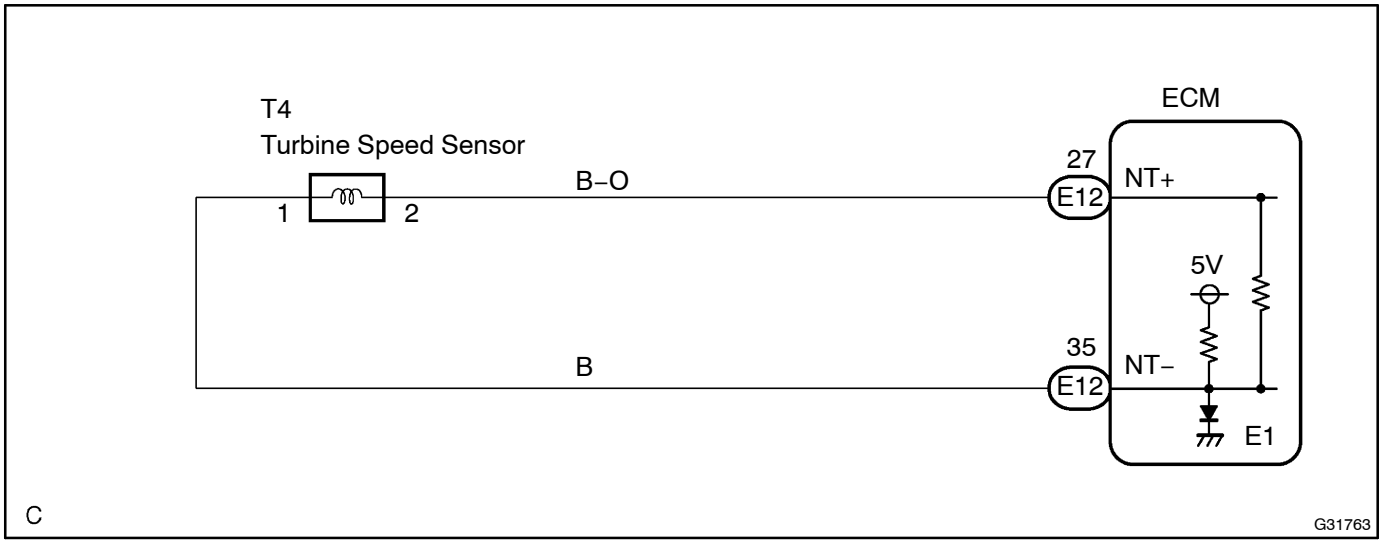

INSPECTION PROCEDURE

1 INSPECT SPEED SENSOR INSTALLATION

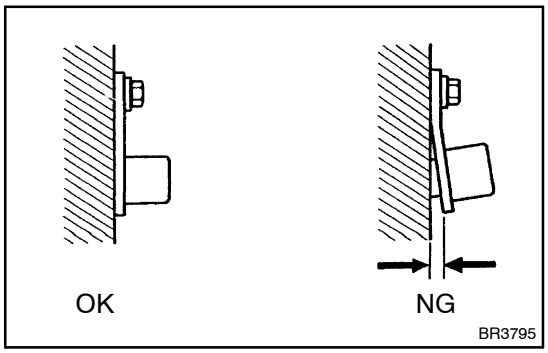

(a) Check the speed sensor installation.
OK:
The installation bolt is tightened properly and there is no clearance between the sensor and transaxle case.

NG → **REPLACE SPEED SENSOR(NT)**

OK

2 INSPECT SPEED SENSOR(NT)

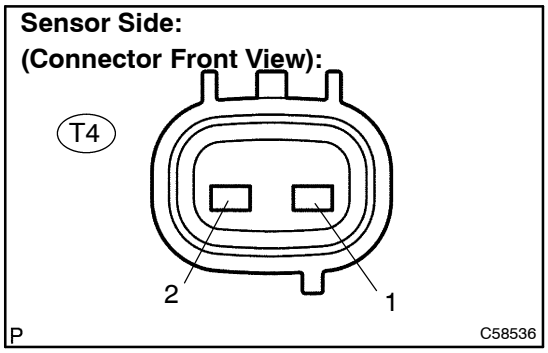

(a) Disconnect the speed sensor connector from the transaxle.
(b) Measure the resistance according to the value(s) in the table below.
Standard:

Tester Connection	Specified Condition 20 °C (68 °F)
1 – 2	560 to 680 Ω

NG → **REPLACE SPEED SENSOR(NT)**

OK

3 CHECK HARNESS AND CONNECTOR(SPEED SENSOR – ECM)

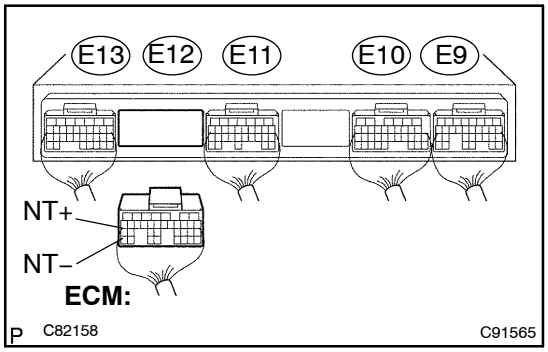

(a) Connect the speed sensor connector.
(b) Disconnect the ECM connector.
(c) Measure the resistance according to the value(s) in the table below.

Standard:

Tester Connection	Specified Condition 20°C (68°F)
E12 – 27 (NT+) – E12 – 35 (NT–)	560 to 680 Ω

(d) Measure the resistance according to the value(s) in the table below.

Standard (Check for short):

Tester Connection	Specified Condition
E12 – 27 (NT+) – Body ground	10 kΩ or higher
E12 – 35 (NT–) – Body ground	↑

NG → **REPAIR OR REPLACE HARNESS OR CONNECTOR (SEE PAGE 01–32)**

OK

REPLACE ECM (SEE PAGE 10–29)

DTC	P0724	BRAKE SWITCH ”B” CIRCUIT HIGH

CIRCUIT DESCRIPTION

The purpose of this circuit is to prevent the engine from stalling while driving in lock–up condition, when brakes are suddenly applied.
When the brake pedal is depressed, this switch sends a signals to the ECM. Then the ECM cancels the operation of the lock–up clutch while braking is in progress.

DTC No.	DTC Detecting Condition	Trouble Area
P0724	The stop light switch remains ON even when the vehicle is driven in a GO (30 km/h) and STOP (3 km/h) fashion 10 times. (2–trip detection logic).	• Short in stop light switch signal circuit • Stop light switch • ECM

MONITOR DESCRIPTION

This DTC indicates that the stop light switch remains on. When the stop light switch remains ON during ”stop and go” driving, the ECM interprets this as a fault in the stop light switch and the MIL comes on and the ECM stores the DTC. The vehicle must stop (less than 3 km/h (2 mph)) and go (30 km/h (19 mph) or more) ten times for two driving cycles in order to detect malfunction.

WIRING DIAGRAM

See page 05–185.

INSPECTION PROCEDURE

HINT:

According to the DATA LIST displayed by the hand–held tester, you can read the value of the switch, sensor, actuator and so on without parts removal. Reading the DATA LIST as the first step of troubleshooting is one method to shorten labor time.

(a) Turn the ignition switch off.
(b) Connect the hand–held tester to the DLC3.
(c) Turn the ignition switch to the ON position.
(d) Push the "ON" button of the hand–held tester.
(e) Select the item "DIAGNOSIS / OBD/MOBD / DATA LIST".
(f) According to the display on tester, read the "DATA LIST".

Item	Measurement Item/ Range (display)	Normal Condition
STOP LIGHT SW	Stop light SW Status/ ON or OFF	• Brake Pedal is depressed: ON • Brake Pedal is released: OFF

1 INSPECT STOP LAMP SWITCH ASSY

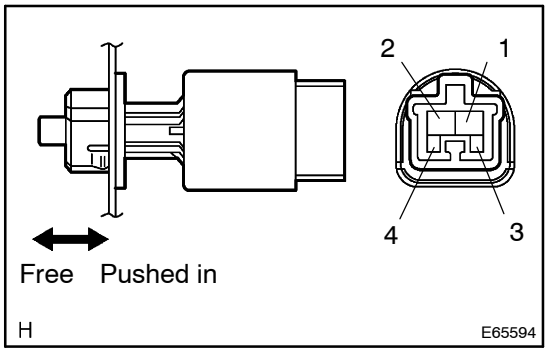

(a) Remove the stop lamp switch assy.
(b) Measure the resistance according to the value(s) in the table below.

Standard:

Switch position	Tester Connection	Specified Condition
Switch pin free	1 – 2	Below 1 Ω
Switch pin pushed in	↑	10 kΩ or higher
Switch pin free	3 – 4	10 kΩ or higher
Switch pin pushed in	↑	Below 1 Ω

NG → **REPLACE STOP LAMP SWITCH ASSY**

OK

2 CHECK HARNESS AND CONNECTOR(STOP LAMP SWITCH ASSY – ECM)

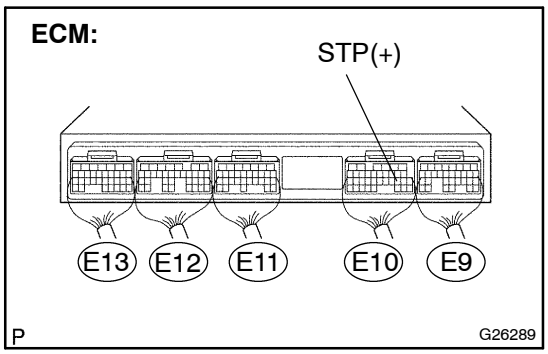

(a) Install the stop lamp switch assy.
(b) Measure the voltage according to the value(s) in the table below when the brake pedal is depressed and released.

Standard:

Condition	Tester Connection	Specified Condition
Brake pedal is depressed	E10 – 19 (STP) – Body ground	10 to 14 V
Brake pedal is released	↑	Below 1 V

NG → **REPAIR OR REPLACE HARNESS OR CONNECTOR (SEE PAGE 01–32)**

OK

REPLACE ECM (SEE PAGE 10–29)

DTC	P0741	TORQUE CONVERTER CLUTCH SOLENOID PERFORMANCE (SHIFT SOLENOID VALVE DSL)

SYSTEM DESCRIPTION

The ECM uses the signals from the throttle position sensor, Air–flow meter, turbine (input) speed sensor, intermediate (counter) shaft speed sensor and crankshaft position sensor to monitor the engagement condition of the lock–up clutch.

Then the ECM compares the engagement condition of the lock–up clutch with the lock–up schedule in the ECM memory to detect a mechanical problems of the shift solenoid valve DSL, valve body and torque converter clutch.

DTC No.	DTC Detection Condition	Trouble Area
P0741	Lock–up does not occur when driving in lock–up range (normal driving at 80 km/h [50 mph]), or lock–up remains ON in lock–up OFF range (2–trip detection logic)	• Shift solenoid valve DSL remains open or closed • Valve body is blocked • Shift solenoid valve DSL • Torque converter clutch • Automatic transaxle (clutch, brake or gear etc.) • Line pressure is too low • ECM

MONITOR DESCRIPTION

Torque converter lock–up is controlled by the ECM based on speed sensor (NT), speed sensor (NC), engine rpm, engine load, engine temperature, vehicle speed, transmission temperature, and gear selection. The ECM determines the lock–up status of the torque converter by comparing the engine rpm (NE) to the input turbine rpm (NT). The ECM calculates the actual transmission gear by comparing input turbine rpm (NT) to counter gear rpm (NC). When conditions are appropriate, the ECM requests ”lock–up” by applying control voltage to shift solenoid DSL. When the DSL is turned on, solenoid DSL applies pressure to the lock–up relay valve and locks the torque converter clutch.

If the ECM detects no lock–up after lock–up has been requested or if it detects lock–up when it is not requested, the ECM interprets this as a fault in the shift solenoid valve DSL or lock–up system performance. The ECM will turn on the MIL and store the DTC.

Example:

When any of the following is met, the system judges it as a malfunction.

(a) There is a difference in rotation between before and after torque converters even when the ECM commands lock–up.
(Engine speed is at least 75 rpm greater than input turbine speed.)

(b) There is no difference in rotation between before and after torque converters even when the ECM commands lock–up off.
(The difference between engine speed and input turbine speed is less than 35 rpm.)

INSPECTION PROCEDURE

HINT:

Performing the ACTIVE TEST using the hand–held tester allows the relay, VSV, actuator and so on to operate without parts removal. Performing the ACTIVE TEST as the first step of troubleshooting is one method to shorten labor time.

It is possible to display the DATA LIST during the ACTIVE TEST.

(a) Warm up the engine.
(b) Turn the ignition switch off.
(c) Connect the hand–held tester to the DLC3.
(d) Turn the ignition switch to the ON position.
(e) Push the ”ON” button of the hand–held tester.
(f) Select the item ”DIAGNOSIS / OBD/MOBD / ACTIVE TEST”.
(g) According to the display on tester, perform the ”ACTIVE TEST”.

Item	Test Details	Diagnostic Note
LOCK UP	[Test Details] Control the shift solenoid DSL to set the automatic transaxle to the lock–up condition. [Vehicle Condition] Vehicle Speed: 60 km/h (37 mph) or more	Possible to check the DSL operation.

HINT:

- This test can be conducted when the vehicle speed is 60 km/h (37 mph) or more.
- This test can be conducted with the 5th gear.

(h) Lightly depress the accelerator pedal and check that the engine speed does not change abruptly.

HINT:

- When changing the accelerator pedal opening angle while driving, if the engine speed does not change, lock–up is on.
- Slowly release, but not fully, the accelerator pedal in order to decelerate. (Fully releasing the pedal will close the throttle valve and lock–up may be turned off.)

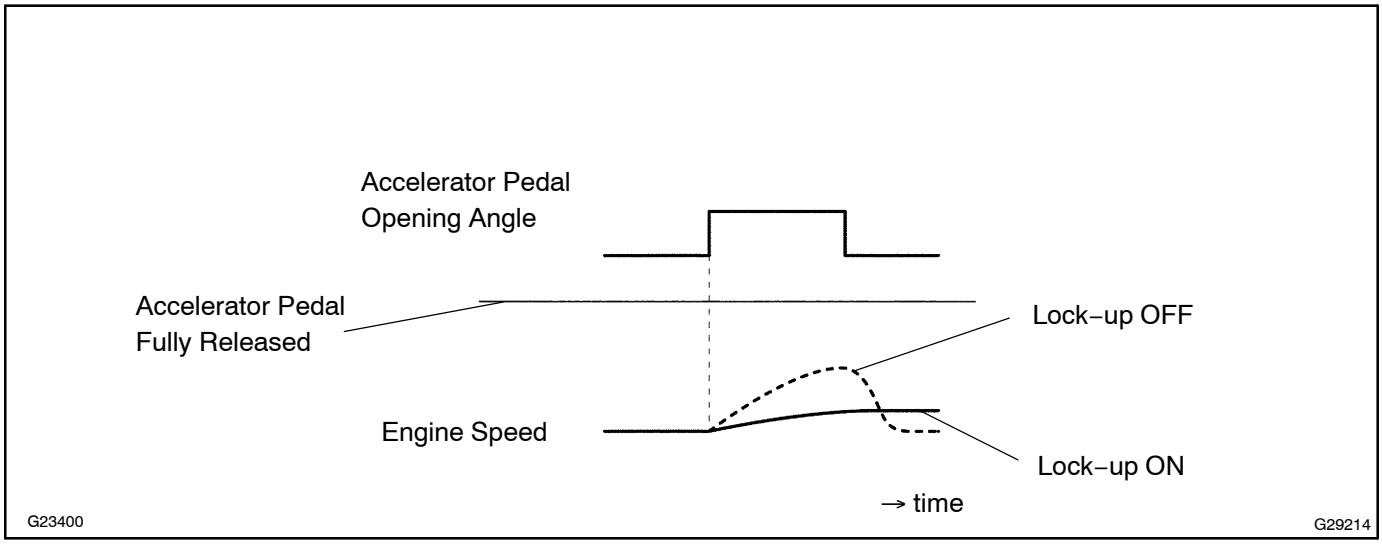

1 CHECK OTHER DTCS OUTPUT(IN ADDITION TO DTC P0741)

(a) Connect the hand–held tester to the DLC3.
(b) Turn the ignition switch to the ON position and push the hand–held tester main switch ON.
(c) Select the item ”DIAGNOSIS / OBD/MOBD / DTC INFO / CURRENT CODES”.
(d) Read the DTCs using the hand–held tester.

Result:

Display (DTC output)	Proceed to
Only ”P0741” is output	A
”P0741” and other DTCs	B

HINT:
If any other codes besides ”P0741” is output, perform the troubleshooting for those DTCs first.

B → **GO TO RELEVANT DTC CHART (SEE PAGE 05–564)**

A

2 INSPECT TRANSMISSION WIRE(DSL)

Transmission Wire Side:
(Connector Front View):

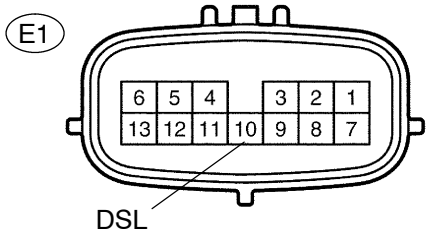

(a) Disconnect the transmission wire connector from the transaxle.
(b) Measure the resistance according to the value(s) in the table below.

Standard:

Tester Connection	Specified Condition 20°C (68°F)
10 – Body ground	11 to 13 Ω

NG → **Go to step 4**

OK

3 CHECK HARNESS AND CONNECTOR(TRANSMISSION WIRE – ECM)

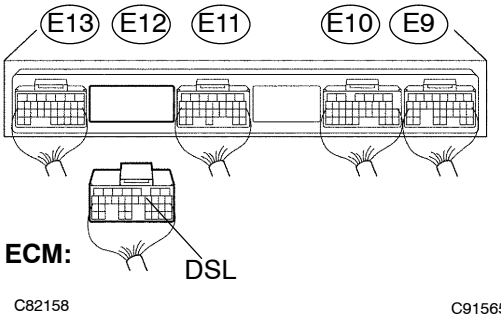

(a) Connect the transmission wire connector.
(b) Disconnect the ECM connector.
(c) Measure the resistance according to the value(s) in the table below.

Standard:

Tester Connection	Specified Condition 20°C (68°F)
E12 – 11 (DSL) – Body ground	11 to 13 Ω

NG → **REPAIR OR REPLACE HARNESS OR CONNECTOR (SEE PAGE 01–32)**

OK

4	INSPECT SHIFT SOLENOID VALVE(DSL)

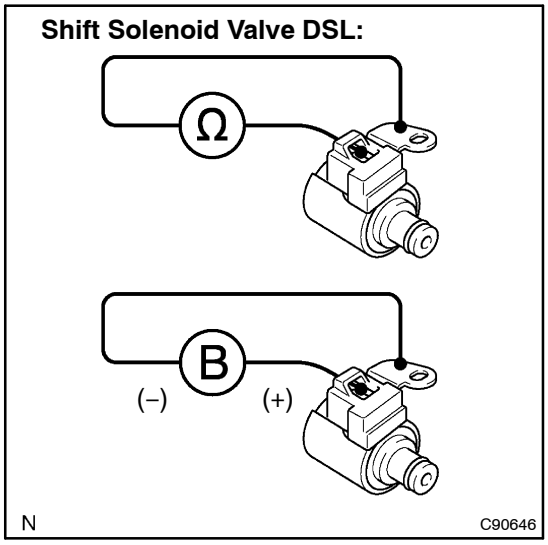

(a) Remove the shift solenoid valve DSL.

(b) Measure the resistance according to the value(s) in the table below.

Standard:

Tester Connection	Specified Condition 20°C (68°F)
Solenoid Connector (DSL) – Solenoid Body (DSL)	11 to 13 Ω

(c) Connect positive (+) lead to the terminal of solenoid connector, negative (–) lead to the solenoid body.

OK:

The solenoid valve makes an operating noise.

NG → **REPLACE SHIFT SOLENOID VALVE(DSL)**

OK

5	CHECK TRANSMISSION WIRE (SEE PAGE 01–32)

OK:

The connectors and pins are securely installed.

There is no open or short on the wire harness.

NG → **REPAIR OR REPLACE TRANSMISSION WIRE (SEE PAGE 40–16)**

OK

6	INSPECT TRANSMISSION VALVE BODY ASSY(See chapter 2 in the problem symptoms table) (SEE PAGE 05–545)

OK:

There are no foreign objects on each valve and they operate smoothly.

NG → **REPAIR OR REPLACE TRANSMISSION VALVE BODY ASSY (SEE PAGE 40–19)**

OK

7	INSPECT TORQUE CONVERTER CLUTCH ASSY (See Pub. No. RM1018E, page 40–37)

OK:

The torque converter clutch operates normally.

NG → **REPLACE TORQUE CONVERTER CLUTCH ASSY**

OK

REPAIR AUTOMATIC TRANSAXLE ASSY (SEE PAGE 40–1)

DTC	P0743	TORQUE CONVERTER CLUTCH CIRCUIT ELECTRICAL (SHIFT SOLENOID VALVE DSL)

CIRCUIT DESCRIPTION

The shift solenoid valve DSL is turned ”ON” and ”OFF” by signals from the ECM in order to control the hydraulic pressure operation, the lock–up relay valve, which then the controls operation of the lock–up clutch.

DTC No.	DTC Detection Condition	Trouble Area
P0743	Either (a) or (b) is detected at 1 time: (2 trip detection logic) (a) Solenoid resistance is 8 Ω or less short circuit when solenoid is energized (b) Solenoid resistance is 100 kΩ or more open circuit when solenoid is not energized	• Open or short in shift solenoid valve DSL circuit • Shift solenoid valve DSL • ECM

MONITOR DESCRIPTION

Torque converter lock–up is controlled by the ECM based on engine rpm, engine load, engine temperature, vehicle speed, transmission temperature, and shift range selection. The ECM determines the lock–up status of the torque converter by comparing the engine rpm (NE) to the input turbine rpm (NT). The ECM calculates the actual transmission gear by comparing input turbine rpm (NT) to counter gear rpm (NC). When conditions are appropriate, the ECM requests ”lock–up” by applying control voltage to shift solenoid DSL. When the DSL is opened, solenoid DSL applies pressure to the lock–up relay valve and locks the torque converter clutch. If the ECM detects an open or short in the DSL solenoid circuit, the ECM interprets this as a fault in the DSL solenoid or circuit. The ECM will turn on the MIL and store the DTC.

WIRING DIAGRAM

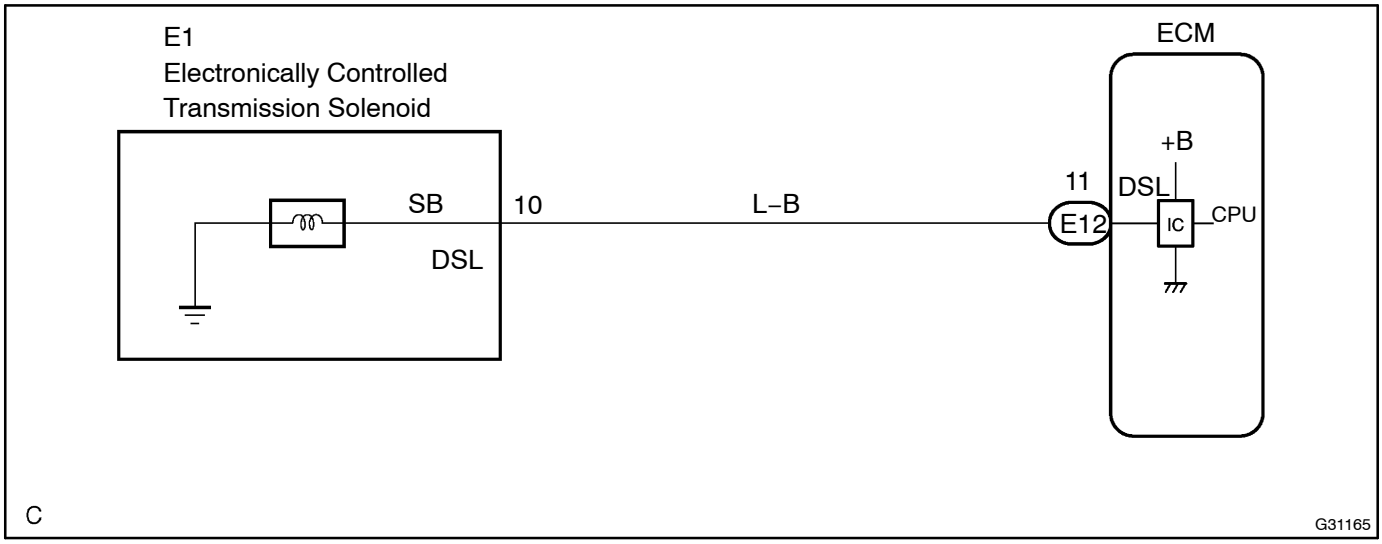

INSPECTION PROCEDURE

1 INSPECT TRANSMISSION WIRE(DSL)

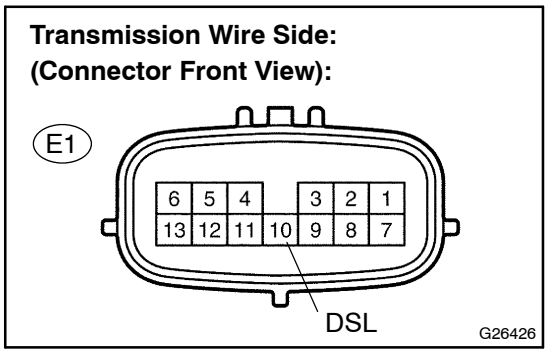

(a) Disconnect the transmission wire connector from the transaxle.

(b) Measure the resistance according to the value(s) in the table below.

Standard:

Tester Connection	Specified Condition 20°C (68°F)
10 – Body ground	11 to 13 Ω

NG → **Go to step 3**

OK

2 CHECK HARNESS AND CONNECTOR(TRANSMISSION WIRE – ECM)

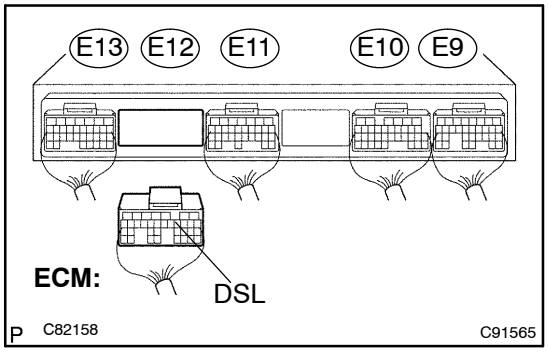

(a) Connect the transmission wire connector.

(b) Disconnect the ECM connector.

(c) Measure the resistance according to the value(s) in the table below.

Standard:

Tester Connection	Specified Condition 20°C (68°F)
E12 – 11 (DSL) – Body ground	11 to 13 Ω

NG → **REPAIR OR REPLACE HARNESS OR CONNECTOR (SEE PAGE 01–32)**

OK

REPLACE ECM (SEE PAGE 10–29)

3	INSPECT SHIFT SOLENOID VALVE(DSL)

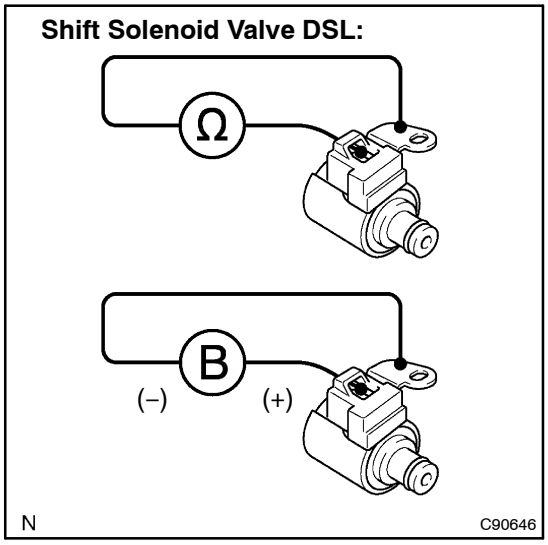

(a) Remove the shift solenoid valve DSL.

(b) Measure the resistance according to the value(s) in the table below.

Standard:

Tester Connection	Specified Condition 20°C (68°F)
Solenoid Connector (DSL) – Solenoid Body (DSL)	11 to 13 Ω

(c) Connect positive (+) lead to the terminal of solenoid connector, negative (–) lead to the solenoid body.

OK:

The solenoid valve makes an operating noise.

NG → **REPLACE SHIFT SOLENOID VALVE(DSL)**

OK

REPAIR OR REPLACE TRANSMISSION WIRE (SEE PAGE 40–16)

DTC	P0746	PRESSURE CONTROL SOLENOID ”A” PERFORMANCE (SHIFT SOLENOID VALVE SL1)

SYSTEM DESCRIPTION

The ECM uses signals from the vehicle speed sensor to detect the actual gear position (1st, 2nd, 3rd, 4th or 5th gear).
Then the ECM compares the actual gear with the shift schedule in the ECM memory to detect mechanical problems of the shift solenoid valves and valve body.

DTC No.	DTC Detecting Condition	Trouble Area
P0746	The gear required by the ECM does not match the actual gear when driving (2–trip detection logic)	• Shift solenoid valve SL1 remains open or closed • Valve body is blocked • Shift solenoid valve SL1 • Automatic transaxle (clutch, brake or gear etc.) • ECM

MONITOR DESCRIPTION

The ECM commands gear shifts by turning the shift solenoid valves ”ON/OFF”. According to the input shaft revolution, intermediate (counter) shaft revolution and output shaft revolution, the ECM detects the actual gear position (1st, 2nd, 3rd, 4th or 5th gear position). When the gear position commanded by the ECM and the actual gear position are not same, the ECM illuminates the MIL.
Example:
When either condition (a) or (b) is met, the ECM detects a malfunction.
(a) The ECM commands the 1st gear, but the actual gear is 2nd.
(b) The ECM commands the 2nd gear, but the actual gear is 1st.

INSPECTION PROCEDURE

HINT:

Performing the ACTIVE TEST using the hand–held tester allows the relay, VSV, actuator and so on to operate without parts removal. Performing the ACTIVE TEST as the first step of troubleshooting is one method to shorten labor time.

It is possible to display the DATA LIST during the ACTIVE TEST.

(a) Turn the ignition switch off.
(b) Connect the hand–held tester to the DLC3.
(c) Turn the ignition switch to the ON position.
(d) Push the ”ON” button of the hand–held tester.
(e) Select the item ”DIAGNOSIS / OBD/MOBD / ACTIVE TEST / SHIFT”.
(f) According to the display on tester, perform the ”ACTIVE TEST”.

HINT:

While driving, the shift position can be forcibly changed with the hand–held tester.

Comparing the shift position commanded by the ACTIVE TEST with the actual shift position enables you to confirm the problem (see page 05–560).

Item	Test Details	Diagnostic Note
SHIFT	[Test Details] Operate the shift solenoid valve and set the each shift position by yourself. [Vehicle Condition] Less than 50 km/h (31 mph) [Others] • Press ”→” button: Shift up • Press ”←” button: Shift down	Possible to check the operation of the shift solenoid valves.

HINT:

- This test can be conducted when the vehicle speed is 50 km/h (31 mph) or less.
- The shift position commanded by the ECM is shown in the DATA LIST/SHIFT display on the hand–held tester.

1	CHECK OTHER DTCS OUTPUT(IN ADDITION TO DTC P0746)

(a) Connect the hand–held tester to the DLC3.
(b) Turn the ignition switch to the ON position and push the hand–held tester main switch ON.
(c) Select the item ”DIAGNOSIS / OBD/MOBD / DTC INFO / CURRENT CODES”.
(d) Read the DTCs using the hand–held tester.

Result:

Display (DTC output)	Proceed to
Only ”P0746” is output	A
”P0746” and other DTCs	B

HINT:

If any other codes besides ”P0746” is output, perform the troubleshooting for those DTCs first.

B → **GO TO RELEVANT DTC CHART (SEE PAGE 05–564)**

A

2	INSPECT SHIFT SOLENOID VALVE(SL1)

Shift Solenoid Valve SL1:

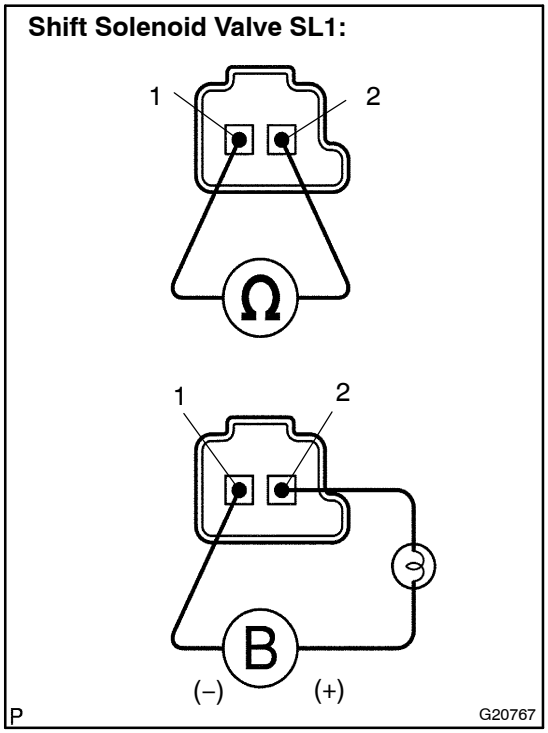

(a) Remove the shift solenoid valve SL1.

(b) Measure the resistance according to the value(s) in the table below.

Standard:

Tester Connection	Specified Condition 20°C (68°F)
1 – 2	5.0 to 5.6 Ω

(c) Connect the positive (+) lead with a 21 W bulb to terminal 2 and the negative (–) lead to terminal 1 of the solenoid valve connector, then check the movement of the valve.

OK:

The solenoid makes an operating noise.

NG → **REPLACE SHIFT SOLENOID VALVE(SL1)**

OK

3	INSPECT TRANSMISSION VALVE BODY ASSY(See chapter 2 in the problem symptoms table) (SEE PAGE 05–545)

OK:

There are no foreign objects on each valve and they operate smoothly.

NG → **REPAIR OR REPLACE TRANSMISSION VALVE BODY ASSY (SEE PAGE 40–19)**

OK

4	INSPECT TORQUE CONVERTER CLUTCH ASSY (See Pub. No. RM1018E, page 40–37)

OK:

The torque converter clutch operates normally.

NG → **REPLACE TORQUE CONVERTER CLUTCH ASSY**

OK

REPAIR OR REPLACE AUTOMATIC TRANSAXLE ASSY (SEE PAGE 40–1)

DTC	P0748	PRESSURE CONTROL SOLENOID ”A” ELECTRICAL (SHIFT SOLENOID VALVE SL1)

CIRCUIT DESCRIPTION

Shifting from 1st to 5th is performed in combination with ”ON” and ”OFF” operation of the shift solenoid valves SL1, SL2, SL3, S4 and SR which is controlled by the ECM. If an open or short circuit occurs in either of the shift solenoid valves, the ECM controls the remaining normal shift solenoid valve to allow the vehicle to be operated smoothly (Fail safe function).

DTC No.	DTC Detection Condition	Trouble Area
P0748	ECM checks for an open or short circuit in shift solenoid valves SL1 (1–trip detection logic) • Output signal duty equals to 100%	• Open or short in shift solenoid valve SL1 circuit • Shift solenoid valve SL1 • ECM

MONITOR DESCRIPTION

The ECM commands gear shifts by turning the shift solenoid valves ”ON/OFF”. When there is an open or short circuit in any shift solenoid valve circuit, the ECM detects the problem and illuminates the MIL and stores the DTC. And the ECM performs the fail–safe function and turns the other shift solenoid valves in good condition ”ON/OFF” (In case of an open or short circuit, the ECM stops sending current to the circuit.) (see page 05–560).

WIRING DIAGRAM

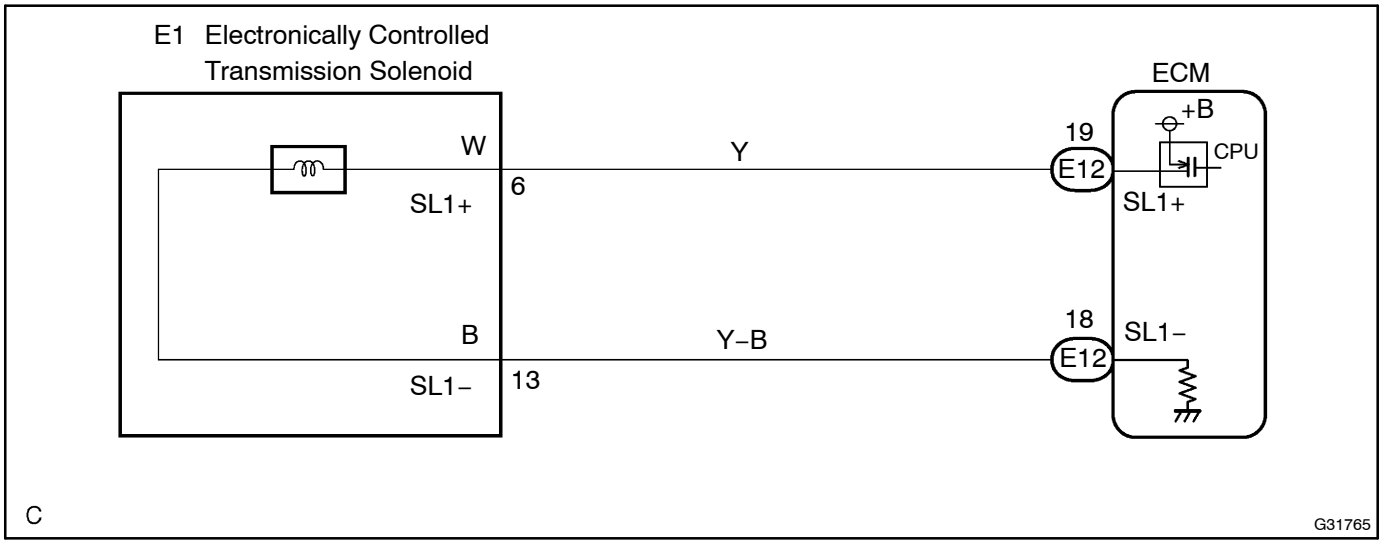

INSPECTION PROCEDURE

1 INSPECT TRANSMISSION WIRE(SL1)

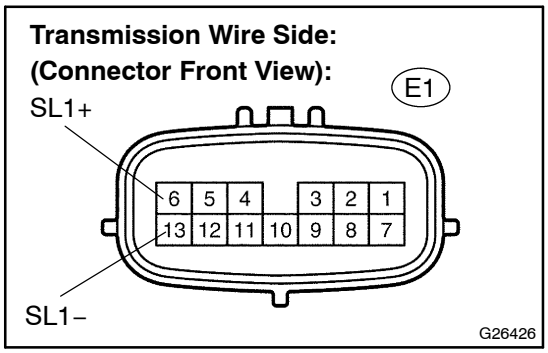

(a) Disconnect the transmission wire connector from the transaxle.

(b) Measure the resistance according to the value(s) in the table below.

Standard:

Tester Connection	Specified Condition 20°C (68°F)
6 (SL1+) – 13 (SL1–)	5.0 to 5.6 Ω

(c) Measure the resistance according to the value(s) in the table below.

Standard (Check for short):

Tester Connection	Specified Condition
SL1+ – Body ground	10 kΩ or higher
SL1– – Body ground	↑

NG → **Go to step 3**

OK

2 CHECK HARNESS AND CONNECTOR(TRANSMISSION WIRE – ECM)

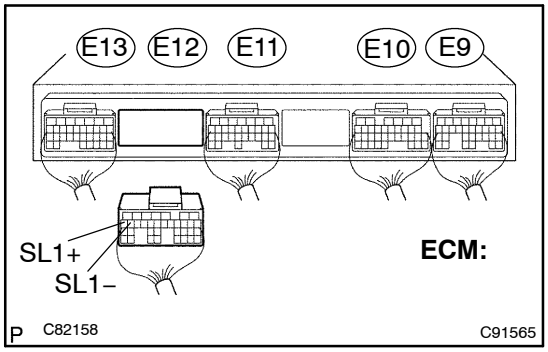

(a) Connect the transmission connector to the transaxle.

(b) Disconnect the connector from the ECM.

(c) Measure the resistance according to the value(s) in the table below.

Standard:

Tester Connection	Specified Condition 20°C (68°F)
E12 – 19 (SL1+) – E12 – 18 (SL1–)	5.0 to 5.6 Ω

(d) Measure the resistance according to the value(s) in the table below.

Standard (Check for short):

Tester Connection	Specified Condition
E12 – 19 (SL1+) – Body ground	10 kΩ or higher
E12 – 18 (SL1–) – Body ground	↑

NG → **REPAIR OR REPLACE HARNESS OR CONNECTOR (SEE PAGE 01–32)**

OK

REPLACE ECM (SEE PAGE 10–29)

3 INSPECT SHIFT SOLENOID VALVE(SL1)

Shift Solenoid Valve SL1:

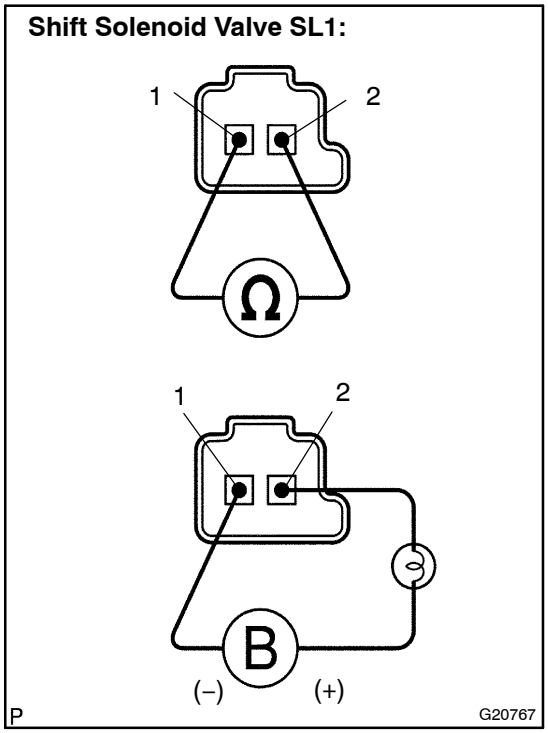

(a) Remove the shift solenoid valve SL1.

(b) Measure the resistance according to the value(s) in the table below.

Standard:

Tester Connection	Specified Condition 20°C (68°F)
1 – 2	5.0 to 5.6 Ω

(c) Connect the positive (+) lead with a 21 W bulb to terminal 2 and the negative (–) lead to terminal 1 of the solenoid valve connector, then check the movement of the valve.

OK:

The solenoid makes an operating noise.

NG → **REPLACE SHIFT SOLENOID VALVE(SL1)**

OK

REPAIR OR REPLACE TRANSMISSION WIRE (SEE PAGE 40–16)

DTC	P0766	SHIFT SOLENOID ”D” PERFORMANCE (SHIFT SOLENOID VALVE S4)

SYSTEM DESCRIPTION

The ECM uses signals from the vehicle speed sensor to detect the actual gear position (1st, 2nd, 3rd, 4th or 5th gear).
Then the ECM compares the actual gear with the shift schedule in the ECM memory to detect mechanical problems of the shift solenoid valves and valve body.

DTC No.	DTC Detecting Condition	Trouble Area
P0766	The gear required by the ECM does not match the actual gear when driving (2–trip detection logic)	• Shift solenoid valve S4 remains open or closed • Valve body is blocked • Shift solenoid valve S4 • Automatic transaxle (clutch, brake or gear etc.) • ECM

MONITOR DESCRIPTION

The ECM commands gear shifts by turning the shift solenoid valves ”ON/OFF”. According to the input shaft revolution, intermediate (counter) shaft revolution and output shaft revolution, the ECM detects the actual gear position (1st, 2nd, 3rd, 4th or 5th gear position). When the gear position commanded by the ECM and the actual gear position are not same, the ECM illuminates the MIL and stores the DTC.

INSPECTION PROCEDURE

HINT:
Performing the ACTIVE TEST using the hand–held tester allows the relay, VSV, actuator and so on to operate without parts removal. Performing the ACTIVE TEST as the first step of troubleshooting is one method to shorten labor time.
It is possible to display the DATA LIST during the ACTIVE TEST.

(a) Turn the ignition switch off.
(b) Connect the hand–held tester to the DLC3.
(c) Turn the ignition switch to the ON position.
(d) Push the ”ON” button of the hand–held tester.
(e) Select the item ”DIAGNOSIS / OBD/MOBD / ACTIVE TEST / SHIFT”.
(f) According to the display on tester, perform the ”ACTIVE TEST”.

HINT:
While driving, the shift position can be forcibly changed with the hand–held tester.
Comparing the shift position commanded by the ACTIVE TEST with the actual shift position enables you to confirm the problem (see page 05–560).

Item	Test Details	Diagnostic Note
SHIFT	[Test Details] Operate the shift solenoid valve and set the each shift position by yourself. [Vehicle Condition] Less than 50 km/h (31 mph) [Others] • Press ”→” button: Shift up • Press ”←” button: Shift down	Possible to check the operation of the shift solenoid valves.

HINT:

- This test can be conducted when the vehicle speed is 50 km/h (31 mph) or less.
- The shift position commanded by the ECM is shown in the DATA LIST/SHIFT display on the hand–held tester.

1 CHECK OTHER DTCS OUTPUT(IN ADDITION TO DTC P0766)

(a) Connect the hand–held tester to the DLC3.
(b) Turn the ignition switch to the ON position and push the hand–held tester main switch ON.
(c) Select the item ”DIAGNOSIS / OBD/MOBD / DTC INFO / CURRENT CODES”.
(d) Read the DTCs using the hand–held tester.

Result:

Display (DTC output)	Proceed to
Only ”P0766” is output	A
”P0766” and other DTCs	B

HINT:
If any other codes besides ”P0766” is output, perform the troubleshooting for those DTCs first.

B → **GO TO RELEVANT DTC CHART (SEE PAGE 05–564)**

A

2 INSPECT SHIFT SOLENOID VALVE(S4)

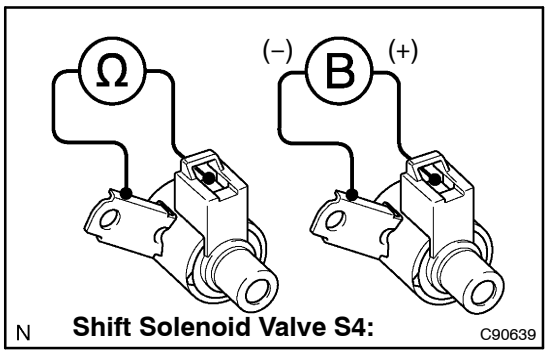

(a) Remove the shift solenoid valve S4.
(b) Measure the resistance according to the value(s) in the table below.

Standard:

Tester Connection	Specified Condition 20°C (68°F)
Solenoid Connector (S4) – Solenoid Body (S4)	11 to 15 Ω

(c) Connect positive (+) lead to the terminal of solenoid connector, negative (–) lead to the solenoid body.

OK:

The solenoid makes an operating noise.

NG → **REPLACE SHIFT SOLENOID VALVE(S4)**

OK

3 INSPECT TRANSMISSION VALVE BODY ASSY(See chapter 2 in the problem symptoms table) (SEE PAGE 05–545)

OK:

There are no foreign objects on each valve and they operate smoothly.

NG → **REPAIR OR REPLACE TRANSMISSION VALVE BODY ASSY (SEE PAGE 40–19)**

OK

4	**INSPECT TORQUE CONVERTER CLUTCH ASSY (See Pub. No. RM1018E, page 40–37)**

OK:

The torque converter clutch operates normally.

NG → **REPLACE TORQUE CONVERTER CLUTCH ASSY**

OK

REPAIR OR REPLACE AUTOMATIC TRANSAXLE ASSY (SEE PAGE 40–1)

DTC	P0771	SHIFT SOLENOID ”E” PERFORMANCE (SHIFT SOLENOID VALVE SR)

SYSTEM DESCRIPTION

The ECM uses signals from the vehicle speed sensor to detect the actual gear position (1st, 2nd, 3rd, 4th or 5th gear).
Then the ECM compares the actual gear with the shift schedule in the ECM memory to detect mechanical problems of the shift solenoid valves and valve body.

DTC No.	DTC Detecting Condition	Trouble Area
P0771	The gear required by the ECM does not match the actual gear when driving (2–trip detection logic)	• Shift solenoid valve SR remains open or closed • Valve body is blocked • Shift solenoid valve SR • Automatic transaxle (clutch, brake or gear etc.) • ECM

MONITOR DESCRIPTION

The ECM commands gear shifts by turning the shift solenoid valves ”ON/OFF”. According to the input shaft revolution, intermediate (counter) shaft revolution and output shaft revolution, the ECM detects the actual gear position (1st, 2nd, 3rd, 4th or 5th gear position). When the gear position commanded by the ECM and the actual gear position are not same, the ECM illuminates the MIL and stores the DTC.

INSPECTION PROCEDURE

HINT:
Performing the ACTIVE TEST using the hand–held tester allows the relay, VSV, actuator and so on to operate without parts removal. Performing the ACTIVE TEST as the first step of troubleshooting is one method to shorten labor time.
It is possible to display the DATA LIST during the ACTIVE TEST.

(a) Turn the ignition switch off.
(b) Connect the hand–held tester to the DLC3.
(c) Turn the ignition switch to the ON position.
(d) Push the ”ON” button of the hand–held tester.
(e) Select the item ”DIAGNOSIS / OBD/MOBD / ACTIVE TEST / SHIFT”.
(f) According to the display on tester, perform the ”ACTIVE TEST”.

HINT:
While driving, the shift position can be forcibly changed with the hand–held tester.
Comparing the shift position commanded by the ACTIVE TEST with the actual shift position enables you to confirm the problem (see page 05–560).

Item	Test Details	Diagnostic Note
SHIFT	[Test Details] Operate the shift solenoid valve and set the each shift position by yourself. [Vehicle Condition] Less than 50 km/h (31 mph) [Others] • Press ”→” button: Shift up • Press ”←” button: Shift down	Possible to check the operation of the shift solenoid valves.

HINT:

- This test can be conducted when the vehicle speed is 50 km/h (31 mph) or less.
- The shift position commanded by the ECM is shown in the DATA LIST/SHIFT display on the hand–held tester.

1 CHECK OTHER DTCS OUTPUT(IN ADDITION TO DTC P0771)

(a) Connect the hand–held tester to the DLC3.
(b) Turn the ignition switch to the ON position and push the hand–held tester main switch ON.
(c) Select the item ”DIAGNOSIS / OBD/MOBD / DTC INFO / CURRENT CODES”.
(d) Read the DTCs using the hand–held tester.

Result:

Display (DTC output)	Proceed to
Only ”P0771” is output	A
”P0771” and other DTCs	B

HINT:
If any other codes besides ”P0771” is output, perform the troubleshooting for those DTCs first.

B → **GO TO RELEVANT DTC CHART (SEE PAGE 05–564)**

A

2 INSPECT SHIFT SOLENOID VALVE(SR)

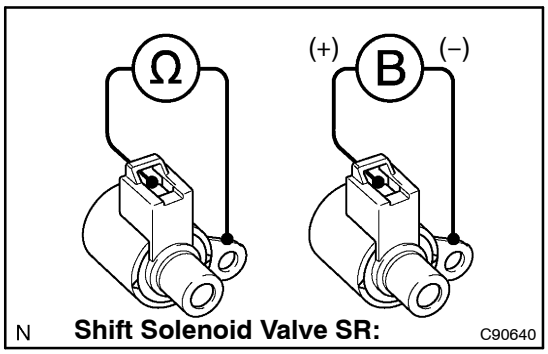

(a) Remove the shift solenoid valve SR.
(b) Measure the resistance according to the value(s) in the table below.

Standard:

Tester Connection	Specified Condition 20°C (68°F)
Solenoid Connector (SR) – Solenoid Body (SR)	11 to 15 Ω

(c) Connect positive (+) lead to the terminal of solenoid connector, negative (–) lead to the solenoid body.

OK:

The solenoid makes an operating noise.

NG → **REPLACE SHIFT SOLENOID VALVE(SR)**

OK

3 INSPECT TRANSMISSION VALVE BODY ASSY(See chapter 2 in the problem symptoms table) (SEE PAGE 05–545)

OK:

There are no foreign objects on each valve and they operate smoothly.

NG → **REPAIR OR REPLACE TRANSMISSION VALVE BODY ASSY (SEE PAGE 40–19)**

OK

4	**INSPECT TORQUE CONVERTER CLUTCH ASSY (See Pub. No. RM1018E, page 40–37)**

OK:

The torque converter clutch operates normally.

NG → **REPLACE TORQUE CONVERTER CLUTCH ASSY**

OK

REPAIR OR REPLACE AUTOMATIC TRANSAXLE ASSY (SEE PAGE 40–1)

DTC	P0776	PRESSURE CONTROL SOLENOID ”B” PERFORMANCE (SHIFT SOLENOID VALVE SL2)

SYSTEM DESCRIPTION

The ECM uses signals from the vehicle speed sensor to detect the actual gear position (1st, 2nd, 3rd, 4th or 5th gear).
Then the ECM compares the actual gear with the shift schedule in the ECM memory to detect mechanical problems of the shift solenoid valves and valve body.

DTC No.	DTC Detecting Condition	Trouble Area
P0776	The gear required by the ECM does not match the actual gear when driving (2–trip detection logic)	• Shift solenoid valve SL2 remains open or closed • Valve body is blocked • Shift solenoid valve SL2 • Automatic transaxle (clutch, brake or gear etc.) • ECM

MONITOR DESCRIPTION

The ECM commands gear shifts by turning the shift solenoid valves ”ON/OFF”. According to the input shaft revolution, intermediate (counter) shaft revolution and output shaft revolution, the ECM detects the actual gear position (1st, 2nd, 3rd, 4th or 5th gear position). When the gear position commanded by the ECM and the actual gear position are not same, the ECM illuminates the MIL and stores the DTC.

INSPECTION PROCEDURE

HINT:
Performing the ACTIVE TEST using the hand–held tester allows the relay, VSV, actuator and so on to operate without parts removal. Performing the ACTIVE TEST as the first step of troubleshooting is one method to shorten labor time.
It is possible to display the DATA LIST during the ACTIVE TEST.

(a) Turn the ignition switch off.
(b) Connect the hand–held tester to the DLC3.
(c) Turn the ignition switch to the ON position.
(d) Push the ”ON” button of the hand–held tester.
(e) Select the item ”DIAGNOSIS / OBD/MOBD / ACTIVE TEST / SHIFT”.
(f) According to the display on tester, perform the ”ACTIVE TEST”.

HINT:
While driving, the shift position can be forcibly changed with the hand–held tester.
Comparing the shift position commanded by the ACTIVE TEST with the actual shift position enables you to confirm the problem (see page 05–560).

Item	Test Details	Diagnostic Note
SHIFT	[Test Details] Operate the shift solenoid valve and set the each shift position by yourself. [Vehicle Condition] Less than 50 km/h (31 mph) [Others] • Press ”→” button: Shift up • Press ”←” button: Shift down	Possible to check the operation of the shift solenoid valves.

HINT:

- This test can be conducted when the vehicle speed is 50 km/h (31 mph) or less.
- The shift position commanded by the ECM is shown in the DATA LIST/SHIFT display on the hand–held tester.

1 CHECK OTHER DTCS OUTPUT(IN ADDITION TO DTC P0776)

(a) Connect the hand–held tester to the DLC3.
(b) Turn the ignition switch to the ON position and push the hand–held tester main switch ON.
(c) Select the item ”DIAGNOSIS / OBD/MOBD / DTC INFO / CURRENT CODES”.
(d) Read the DTCs using the hand–held tester.

Result:

Display (DTC output)	Proceed to
Only ”P0776” is output	A
”P0776” and other DTCs	B

HINT:
If any other codes besides ”P0776” is output, perform the troubleshooting for those DTCs first.

B → **GO TO RELEVANT DTC CHART (SEE PAGE 05–564)**

A

2 INSPECT SHIFT SOLENOID VALVE(SL2)

Shift Solenoid Valve SL2:

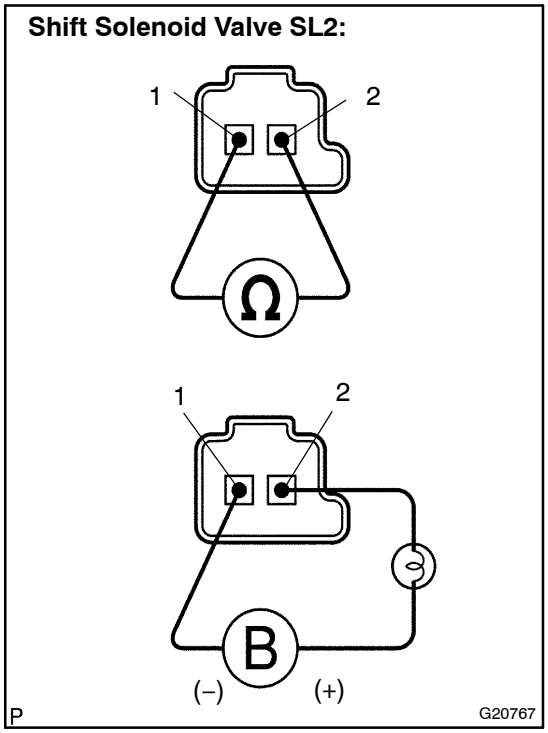

(a) Remove the shift solenoid valve SL2.
(b) Measure the resistance according to the value(s) in the table below.

Standard:

Tester Connection	Specified Condition 20°C (68°F)
1 – 2	5.0 to 5.6 Ω

(c) Connect the positive (+) lead with a 21 W bulb to terminal 2 and the negative (–) lead to terminal 1 of the solenoid valve connector, then check the movement of the valve.

OK:

The solenoid makes an operating noise.

NG → **REPLACE SHIFT SOLENOID VALVE(SL2)**

OK

3	**INSPECT TRANSMISSION VALVE BODY ASSY(See chapter 2 in the problem symptoms table) (SEE PAGE 05–545)**

OK:

There are no foreign objects on each valve and they operate smoothly.

NG → **REPAIR OR REPLACE TRANSMISSION VALVE BODY ASSY (SEE PAGE 40–19)**

OK

4	**INSPECT TORQUE CONVERTER CLUTCH ASSY (See Pub. No. RM1018E, page 40–37)**

OK:

The torque converter clutch operates normally.

NG → **REPLACE TORQUE CONVERTER CLUTCH ASSY**

OK

REPAIR OR REPLACE AUTOMATIC TRANSAXLE ASSY (SEE PAGE 40–1)

DTC	P0778	PRESSURE CONTROL SOLENOID ”B” ELECTRICAL (SHIFT SOLENOID VALVE SL2)

CIRCUIT DESCRIPTION

Shifting from 1st to 5th is performed in combination with ”ON” and ”OFF” operation of the shift solenoid valves SL1, SL2, SL3, S4 and SR which is controlled by the ECM. If an open or short circuit occurs in either of the shift solenoid valves, the ECM controls the remaining normal shift solenoid valve to allow the vehicle to be operated smoothly (Fail safe function).

DTC No.	DTC Detection Condition	Trouble Area
P0778	ECM checks for an open or short circuit in shift solenoid valves SL2 (1–trip detection logic) Hybrid IC for solenoid indicates fail.	• Open or short in shift solenoid valve SL2 circuit • Shift solenoid valve SL2 • ECM

MONITOR DESCRIPTION

The ECM commands gear shifts by turning the shift solenoid valves ”ON/OFF”. When there is an open or short circuit in any shift solenoid valve circuit, the ECM detects the problem and illuminates the MIL and stores the DTC. And the ECM performs the fail–safe function and turns the other shift solenoid valves in good condition ”ON/OFF” (In case of an open or short circuit, the ECM stops sending current to the circuit.) (see page 05–560).

WIRING DIAGRAM

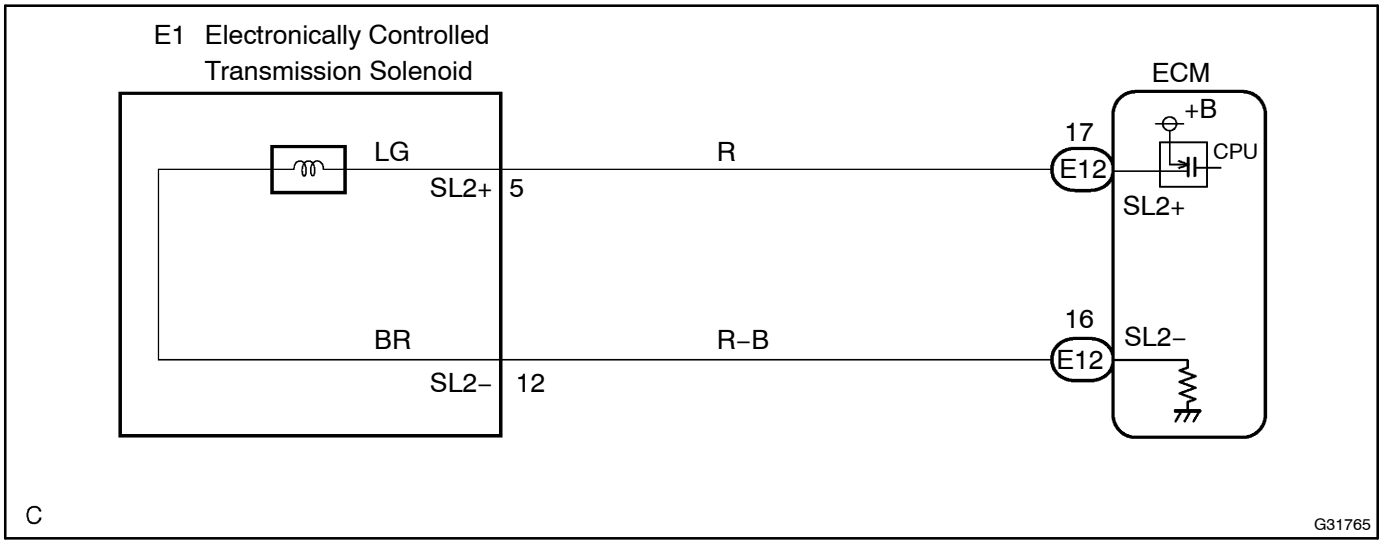

INSPECTION PROCEDURE

1 INSPECT TRANSMISSION WIRE(SL2)

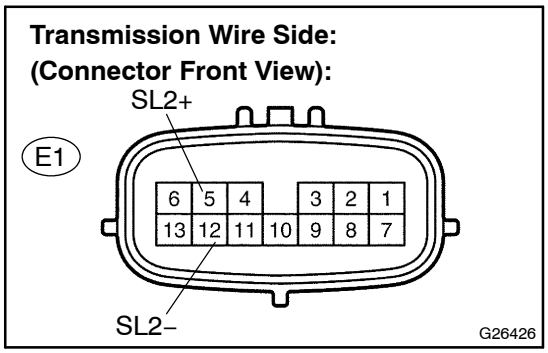

(a) Disconnect the transmission wire connector from the transaxle.

(b) Measure the resistance according to the value(s) in the table below.

Standard:

Tester Connection	Specified Condition 20°C (68°F)
5 (SL2+) – 12 (SL2–)	5.0 to 5.6 Ω

(c) Measure the resistance according to the value(s) in the table below.

OK:

Standard (Check for short):

Tester Connection	Specified Condition
5 (SL2+) – Body ground	10 kΩ or higher
12 (SL2–) – Body ground	↑

NG → **Go to step 3**

OK

2 CHECK HARNESS AND CONNECTOR(TRANSMISSION WIRE – ECM)

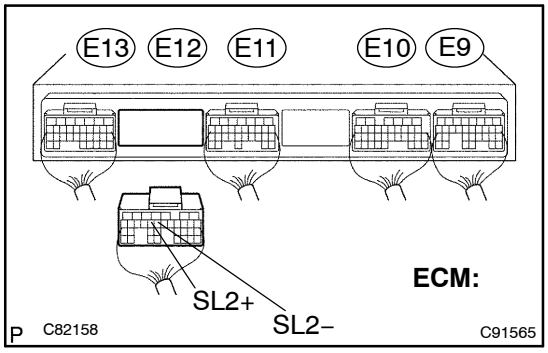

(a) Connect the transmission connector to the transaxle.

(b) Disconnect the connector from the ECM.

(c) Measure the resistance according to the value(s) in the table below.

Standard:

Tester Connection	Specified Condition 20°C (68°F)
E12 – 17 (SL2+) – E12 – 16 (SL2–)	5.0 to 5.6 Ω

(d) Measure the resistance according to the value(s) in the table below.

Standard (Check for short):

Tester Connection	Specified Condition
E12 – 17 (SL2+) – Body ground	10 kΩ or higher
E12 – 16 (SL2–) – Body ground	↑

NG → **REPAIR OR REPLACE HARNESS OR CONNECTOR (SEE PAGE 01–32)**

OK

REPLACE ECM (SEE PAGE 10–29)

3 INSPECT SHIFT SOLENOID VALVE(SL2)

Shift Solenoid Valve SL2:

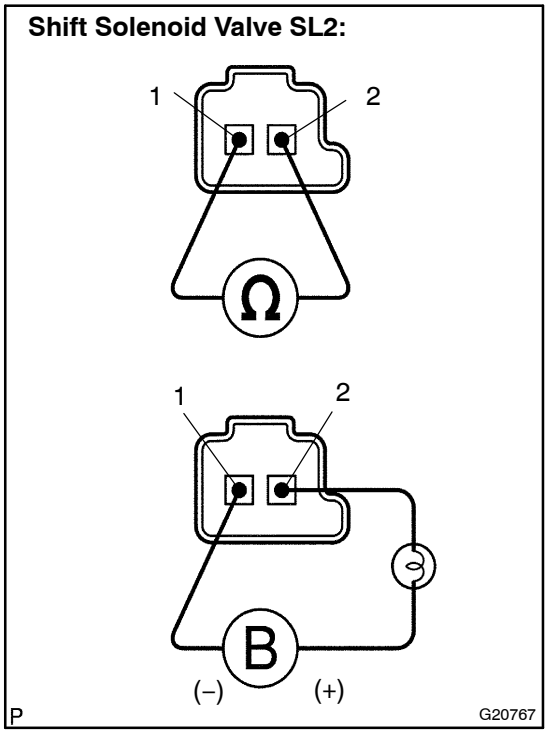

(a) Remove the shift solenoid valve SL2.

(b) Measure the resistance according to the value(s) in the table below.

Standard:

Tester Connection	Specified Condition 20°C (68°F)
1 – 2	5.0 to 5.6 Ω

(c) Connect the positive (+) lead with a 21 W bulb to terminal 2 and the negative (–) lead to terminal 1 of the solenoid valve connector, then check the movement of the valve.

OK:

The solenoid makes an operating noise.

NG → **REPLACE SHIFT SOLENOID VALVE(SL2)**

OK

REPAIR OR REPLACE TRANSMISSION WIRE (SEE PAGE 40–16)

DTC	P0793	INTERMEDIATE SHAFT SPEED SENSOR "A"

CIRCUIT DESCRIPTION

This sensor detects the rotation speed of the counter gear. By comparing the counter gear speed signal (NC) with the direct clutch speed sensor signal (NT), the ECM detects the shift timing of the gears and appropriately controls the engine torque and hydraulic pressure according to various conditions. Thus smooth gear shifting is performed.

DTC No.	DTC Detection Condition	Trouble Area
P0793	ECM detects conditions (a), (b) and (c) continuity for 5 sec. or more: (1–trip detection logic) (a) Vehicle speed: 50 km/h (31 mph) or more (b) Park/neutral position switch (NSW) is OFF (c) Speed sensor (NC): less than 300 rpm	• Open or short in transmission revolution sensor NC (speed sensor NC) circuit • Transmission revolution sensor NC (speed sensor NC) • ECM

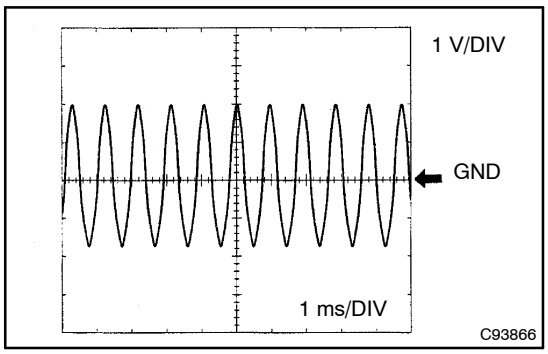

Reference (Using an oscilloscope):

Check the waveform between the terminals NC+ and NC– of the ECM connector.

Standard: Refer to the illustration.

Terminal	NC+ – NC–
Tool setting	1V/DIV, 1ms/DIV
Vehicle condition	Vehicle speed 30 km/h (19 mph): (3rd gear) Engine speed 1,400 rpm

MONITOR DESCRIPTION

The NC terminal of ECM detects a revolution signal from the speed sensor (NC) (counter gear rpm). The ECM calculates a gearshift comparing the speed sensor (NT) with the speed sensor (NC).

While the vehicle is operating in 2nd, 3rd, 4th or 5th gear in the shift position of D, if the counter gear revolution is less than 300 rpm*1 although the output shaft revolution is more than 1,000 rpm*2, the ECM detects the trouble, illuminates the MIL and stores the DTC.

*1: Pulse is not output or is irregularly output.

*2: The vehicle speed is 50 km/h (31 mph) or more.

WIRING DIAGRAM

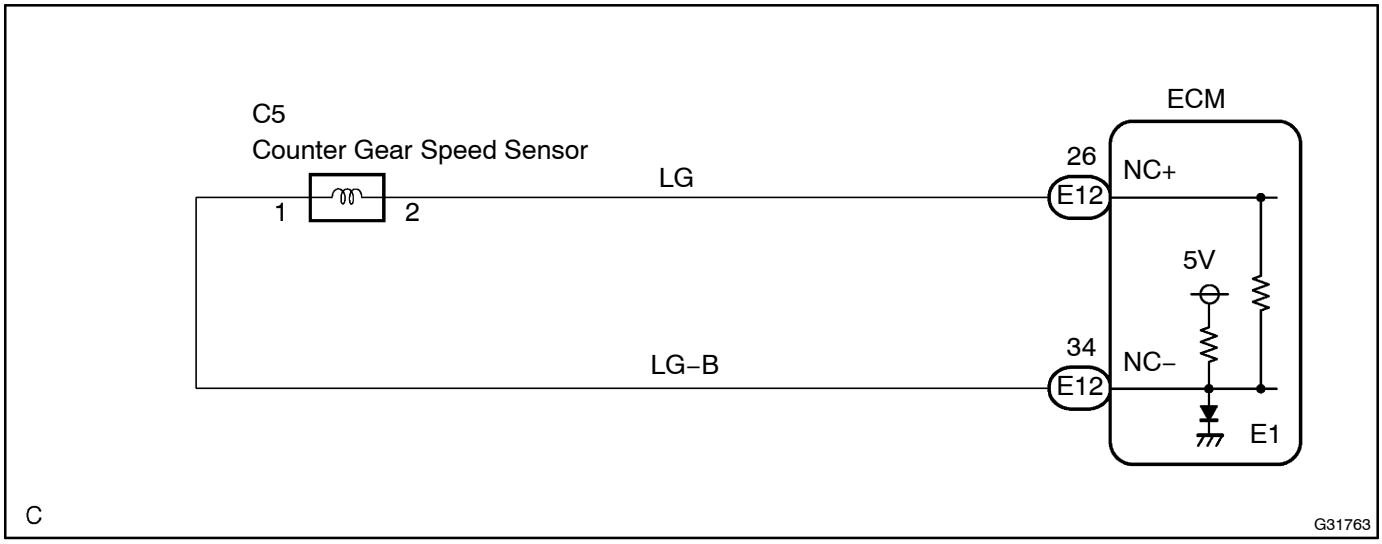

INSPECTION PROCEDURE

HINT:

According to the DATA LIST displayed by the hand–held tester, you can read the value of the switch, sensor, actuator and so on without parts removal. Reading the DATA LIST as the first step of troubleshooting is one method to shorten labor time.

(a) Warm up the engine.
(b) Turn the ignition switch off.
(c) Connect the hand–held tester to the DLC3.
(d) Turn the ignition switch to the ON position.
(e) Push the ”ON” button of the hand–held tester.
(f) Select the item ”DIAGNOSIS / OBD/MOBD / DATA LIST”.
(g) According to the display on tester, read the ”DATA LIST”.

Item	Measurement Item/ Range (display)	Normal Condition
SPD (NC)	Counter Gear Speed/ display: 50 r/min	[HINT] 3rd when shift lever position is D position (After warming up the engine); • Intermediate shaft speed (NC) becomes close to the engine speed.

HINT:

- SPD (NC) is always 0 while driving:
  Open or short in the sensor or circuit.
- SPD (NC) is always more than 0 and less than 300 rpm while driving the vehicle at 50 km/h (31 mph) or more:
  Sensor trouble, improper installation, or intermittent connection trouble of the circuit.

1	INSPECT SPEED SENSOR INSTALLATION

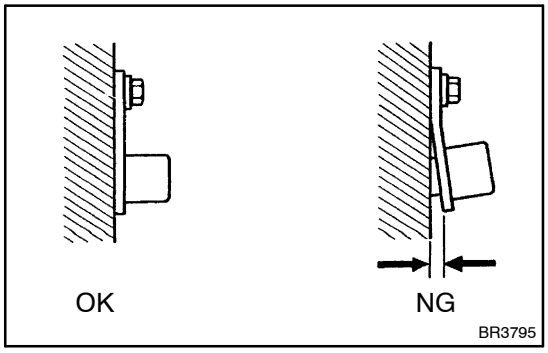

(a) Check the speed sensor installation.
OK:
The installation bolt is tightened properly and there is no clearance between the sensor and transaxle case.

NG → **REPLACE SPEED SENSOR(NC)**

OK

2 INSPECT SPEED SENSOR(NC)

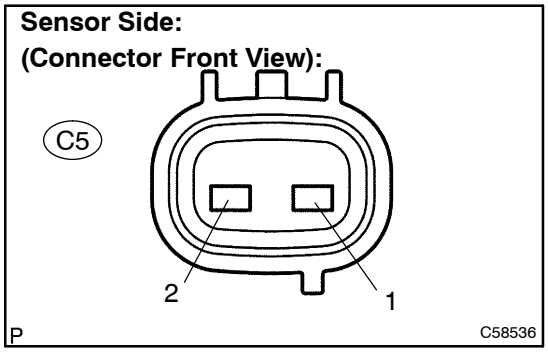

(a) Disconnect the speed sensor connector from the transaxle.

(b) Measure the resistance according to the value(s) in the table below.

Standard:

Tester Connection	Specified Condition 20 °C (68 °F)
1 – 2	560 to 680 Ω

NG → **REPLACE SPEED SENSOR(NC)**

OK

3 CHECK HARNESS AND CONNECTOR(SPEED SENSOR – ECM)

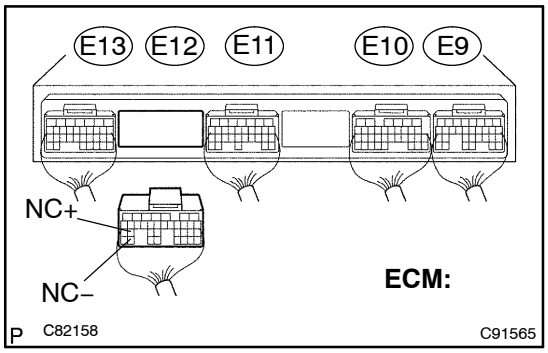

(a) Connect the speed sensor connector.

(b) Disconnect the ECM connector.

(c) Measure the resistance according to the value(s) in the table below.

Standard:

Tester Connection	Specified Condition 20 °C (68 °F)
E12 – 26 (NC+) – E12 – 34 (NC–)	560 to 680 Ω

(d) Measure the resistance according to the value(s) in the table below.

Standard (Check for short):

Tester Connection	Specified Condition
E12 – 26 (NC+) – Body ground	10 kΩ or higher
E12 – 34 (NC–) – Body ground	↑

NG → **REPAIR OR REPLACE HARNESS OR CONNECTOR (SEE PAGE 01–32)**

OK

REPLACE ECM (SEE PAGE 10–29)

DTC	P0796	PRESSURE CONTROL SOLENOID ”C” PERFORMANCE (SHIFT SOLENOID VALVE SL3)

SYSTEM DESCRIPTION

The ECM uses signals from the vehicle speed sensor to detect the actual gear position (1st, 2nd, 3rd, 4th or 5th gear).
Then the ECM compares the actual gear with the shift schedule in the ECM memory to detect mechanical troubles of the shift solenoid valves and valve body.

DTC No.	DTC Detecting Condition	Trouble Area
P0796	The gear required by the ECM does not match the actual gear when driving (2–trip detection logic)	• Shift solenoid valve SL3 remains open or closed • Valve body is blocked • Shift solenoid valve SL3 • Automatic transaxle (clutch, brake or gear etc.) • ECM

MONITOR DESCRIPTION

The ECM commands gear shifts by turning the shift solenoid valves ”ON/OFF”. According to the input shaft revolution, intermediate (counter) shaft revolution and output shaft revolution, the ECM detects the actual gear position (1st, 2nd, 3rd, 4th or 5th gear position). When the gear position commanded by the ECM and the actual gear position are not same, the ECM illuminates the MIL and stores the DTC.

INSPECTION PROCEDURE

HINT:
Performing the ACTIVE TEST using the hand–held tester allows the relay, VSV, actuator and so on to operate without parts removal. Performing the ACTIVE TEST as the first step of troubleshooting is one method to shorten labor time.
It is possible to display the DATA LIST during the ACTIVE TEST.

(a) Turn the ignition switch off.
(b) Connect the hand–held tester to the DLC3.
(c) Turn the ignition switch to the ON position.
(d) Push the ”ON” button of the hand–held tester.
(e) Select the item ”DIAGNOSIS / OBD/MOBD / ACTIVE TEST / SHIFT”.
(f) According to the display on tester, perform the ”ACTIVE TEST”.

HINT:
While driving, the shift position can be forcibly changed with the hand–held tester.
Comparing the shift position commanded by the ACTIVE TEST with the actual shift position enables you to confirm the problem (see page 05–560).

Item	Test Details	Diagnostic Note
SHIFT	[Test Details] Operate the shift solenoid valve and set the each shift position by yourself. [Vehicle Condition] Less than 50 km/h (31 mph) [Others] • Press ”→” button: Shift up • Press ”←” button: Shift down	Possible to check the operation of the shift solenoid valves.

HINT:

- This test can be conducted when the vehicle speed is 50 km/h (31 mph) or less.
- The shift position commanded by the ECM is shown in the DATA LIST/SHIFT display on the hand–held tester.

1 CHECK OTHER DTCS OUTPUT(IN ADDITION TO DTC P0796)

(a) Connect the hand–held tester to the DLC3.
(b) Turn the ignition switch to the ON position and push the hand–held tester main switch ON.
(c) Select the item ”DIAGNOSIS / OBD/MOBD / DTC INFO / CURRENT CODES”.
(d) Read the DTCs using the hand–held tester.

Result:

Display (DTC output)	Proceed to
Only ”P0796” is output	A
”P0796” and other DTCs	B

HINT:
If any other codes besides ”P0796” is output, perform the troubleshooting for those DTCs first.

B → **GO TO RELEVANT DTC CHART (SEE PAGE 05–564)**

A

2 INSPECT SHIFT SOLENOID VALVE(SL3)

Shift Solenoid Valve SL3:

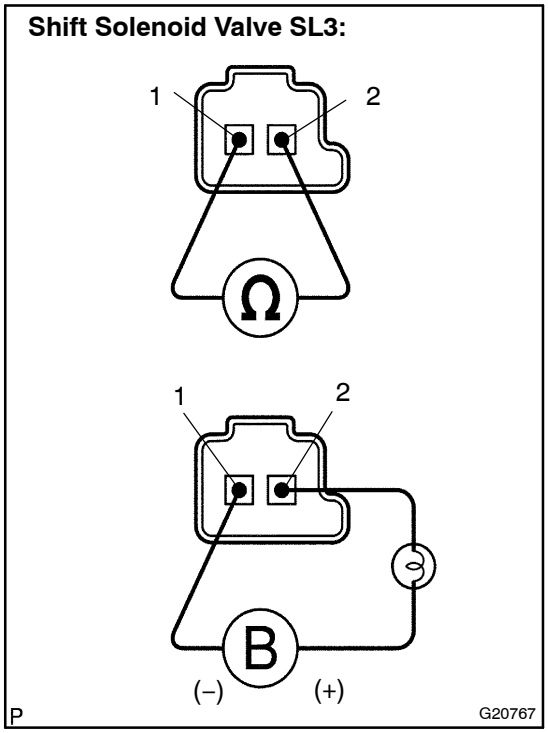

(a) Remove the shift solenoid valve SL3.
(b) Measure the resistance according to the value(s) in the table below.

Standard:

Tester Connection	Specified Condition 20°C (68°F)
1 – 2	5.0 to 5.6 Ω

(c) Connect the positive (+) lead with a 21 W bulb to terminal 2 and the negative (–) lead to terminal 1 of the solenoid valve connector, then check the movement of the valve.

OK:

The solenoid makes an operating noise.

NG → **REPLACE SHIFT SOLENOID VALVE(SL3)**

OK

3	**INSPECT TRANSMISSION VALVE BODY ASSY(See chapter 2 in the problem symptoms table) (SEE PAGE 05–545)**

OK:

There are no foreign objects on each valve and they operate smoothly.

NG → **REPAIR OR REPLACE TRANSMISSION VALVE BODY ASSY (SEE PAGE 40–19)**

OK

4	**INSPECT TORQUE CONVERTER CLUTCH ASSY (See Pub. No. RM1018E, page 40–37)**

OK:

The torque converter clutch operates normally.

NG → **REPLACE TORQUE CONVERTER CLUTCH ASSY**

OK

REPAIR OR REPLACE AUTOMATIC TRANSAXLE ASSY (SEE PAGE 40–1)

DTC	P0798	PRESSURE CONTROL SOLENOID ”C” ELECTRICAL (SHIFT SOLENOID VALVE SL3)

CIRCUIT DESCRIPTION

Shifting from 1st to 5th is performed in combination with ”ON” and ”OFF” operation of the shift solenoid valves SL1, SL2, SL3, S4 and SR which is controlled by the ECM. If an open or short circuit occurs in either of the shift solenoid valves, the ECM controls the remaining normal shift solenoid valve to allow the vehicle to be operated smoothly (Fail safe function).

DTC No.	DTC Detection Condition	Trouble Area
P0798	ECM checks for an open or short circuit in shift solenoid valves SL3 (1–trip detection logic) • Output signal duty equals to 100%	• Open or short in shift solenoid valve SL3 circuit • Shift solenoid valve SL3 • ECM

MONITOR DESCRIPTION

The ECM commands gear shifts by turning the shift solenoid valves ”ON/OFF”. When there is an open or short circuit in any shift solenoid valve circuit, the ECM detects the problem and illuminates the MIL and stores the DTC. And the ECM performs the fail–safe function and turns the other shift solenoid valves in good condition ”ON/OFF” (In case of an open or short circuit, the ECM stops sending current to the circuit.) (see page 05–560).

WIRING DIAGRAM

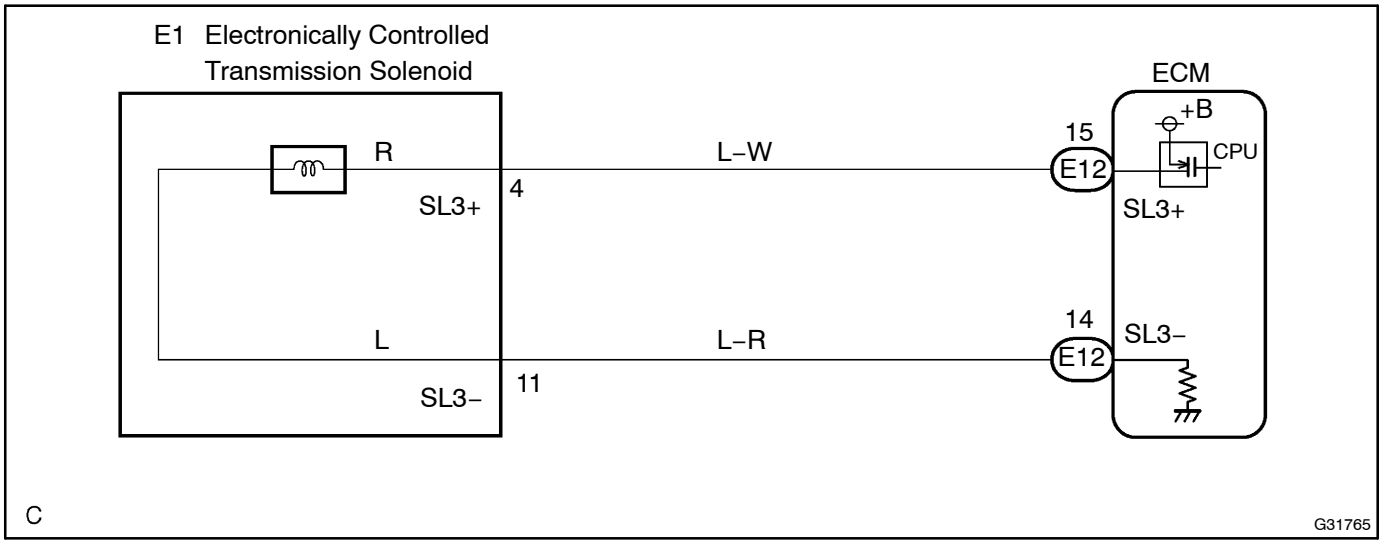

INSPECTION PROCEDURE

1 INSPECT TRANSMISSION WIRE(SL3)

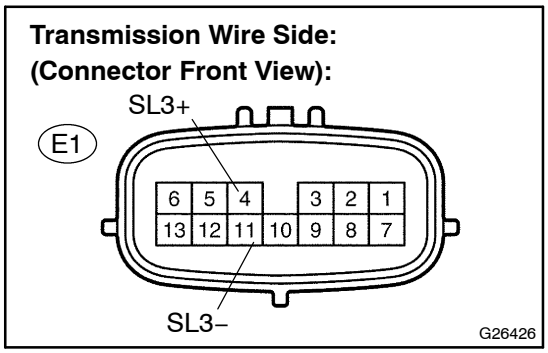

(a) Disconnect the transmission wire connector from the transaxle.

(b) Measure the resistance according to the value(s) in the table below.

Standard:

Tester Connection	Specified Condition 20°C (68°F)
4 (SL3+) – 11 (SL3–)	5.0 to 5.6 Ω

(c) Measure the resistance according to the value(s) in the table below.

Standard (Check for short):

Tester Connection	Specified Condition
4 (SL3+) – Body ground	10 kΩ or higher
11 (SL3–) – Body ground	↑

NG → **Go to step 3**

OK

2 CHECK HARNESS AND CONNECTOR(TRANSMISSION WIRE – ECM)

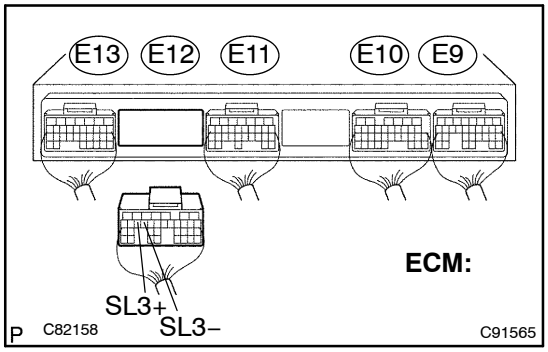

(a) Connect the transmission connector to the transaxle.

(b) Disconnect the connector from the ECM.

(c) Measure the resistance according to the value(s) in the table below.

Standard:

Tester Connection	Specified Condition 20°C (68°F)
E12 – 15 (SL3+) – E12 – 14 (SL3–)	5.0 to 5.6 Ω

(d) Measure the resistance according to the value(s) in the table below.

Standard (Check for short):

Tester Connection	Specified Condition
E12 – 15 (SL3+) – Body ground	10 kΩ or higher
E12 – 14 (SL3–) – Body ground	↑

NG → **REPAIR OR REPLACE HARNESS OR CONNECTOR (SEE PAGE 01–32)**

OK

REPLACE ECM (SEE PAGE 10–29)

3 INSPECT SHIFT SOLENOID VALVE(SL3)

Shift Solenoid Valve SL3:

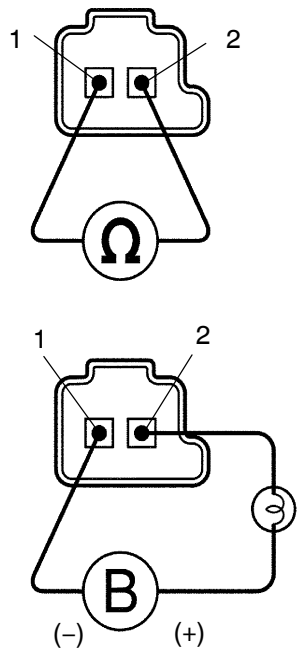

(a) Remove the shift solenoid valve SL3.

(b) Measure the resistance according to the value(s) in the table below.

Standard:

Tester Connection	Specified Condition 20°C (68°F)
1 – 2	5.0 to 5.6 Ω

(c) Connect the positive (+) lead with a 21 W bulb to terminal 2 and the negative (–) lead to terminal 1 of the solenoid valve connector, then check the movement of the valve.

OK:

The solenoid makes an operating noise.

NG → **REPLACE SHIFT SOLENOID VALVE(SL3)**

OK

REPAIR OR REPLACE TRANSMISSION WIRE (SEE PAGE 40–16)

DTC	P0982	SHIFT SOLENOID ”D” CONTROL CIRCUIT LOW (SHIFT SOLENOID VALVE S4)

DTC	P0983	SHIFT SOLENOID ”D” CONTROL CIRCUIT HIGH (SHIFT SOLENOID VALVE S4)

CIRCUIT DESCRIPTION

Shifting from 1st to 5th is performed in combination with ”ON” and ”OFF” operation of the shift solenoid valves SL1, SL2, SL3, S4 and SR which is controlled by the ECM. If an open or short circuit occurs in either of the shift solenoid valves, the ECM controls the remaining normal shift solenoid valve to allow the vehicle to be operated smoothly (Fail safe function).

DTC No.	DTC Detection Condition	Trouble Area
P0982	ECM detects short in solenoid valve S4 circuit 2 times when solenoid valve S4 is operated (1–trip detection logic)	• Short in shift solenoid valve S4 circuit • Shift solenoid valve S4 • ECM
P0983	ECM detects open in solenoid valve S4 circuit 2 times when solenoid valve S4 is not operated (1–trip detection logic)	• Open in shift solenoid valve S4 circuit • Shift solenoid valve S4 • ECM

MONITOR DESCRIPTION

The ECM commands gear shifts by turning the shift solenoid valves ”ON/OFF”. When there is an open or short circuit in any shift solenoid valve circuit, the ECM detects the problem and illuminates the MIL and stores the DTC. And the ECM performs the fail–safe function and turns the other shift solenoid valves in good condition ”ON/OFF” (In case of an open or short circuit, the ECM stops sending current to the circuit.) (see page 05–560).

WIRING DIAGRAM

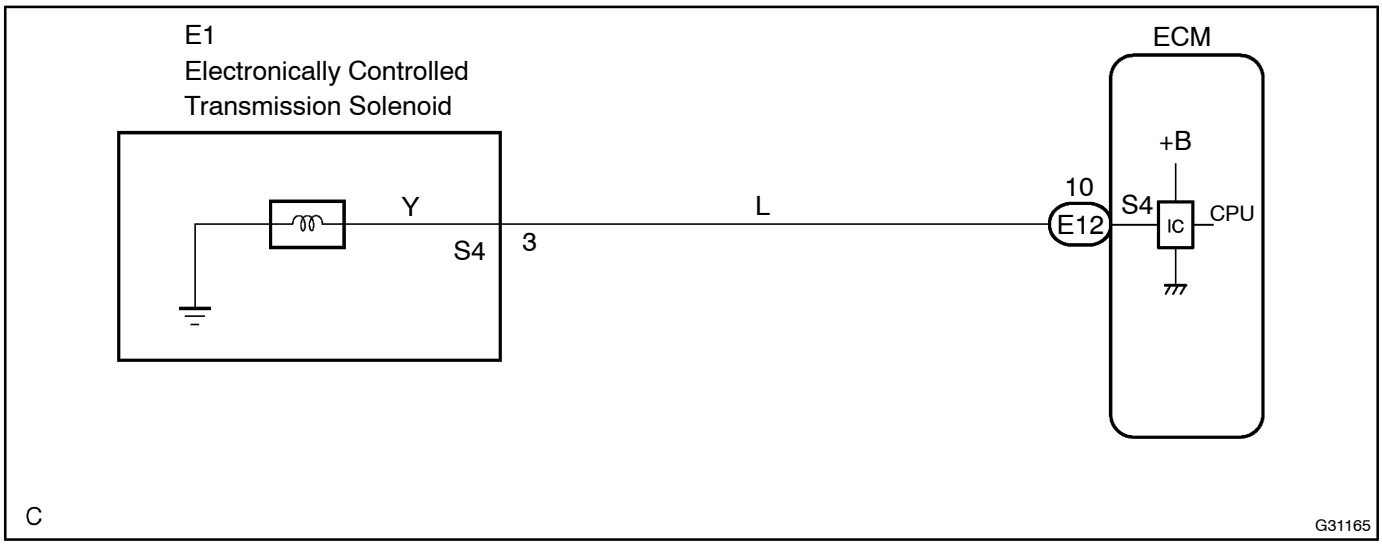

INSPECTION PROCEDURE

1 INSPECT TRANSMISSION WIRE(S4)

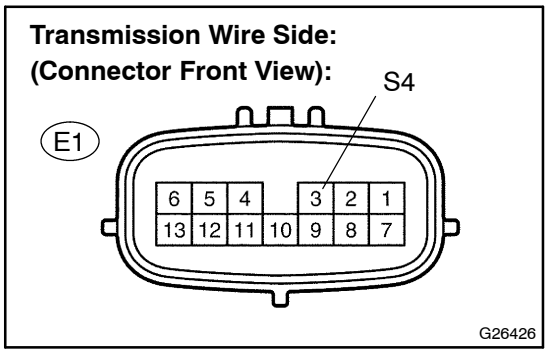

(a) Disconnect the transmission wire connector from the transaxle.

(b) Measure the resistance according to the value(s) in the table below.

Standard:

Tester Connection	Specified Condition 20°C (68°F)
3 – Body ground	11 to 15 Ω

NG → **Go to step 3**

OK

2 CHECK HARNESS AND CONNECTOR(TRANSMISSION WIRE – ECM)

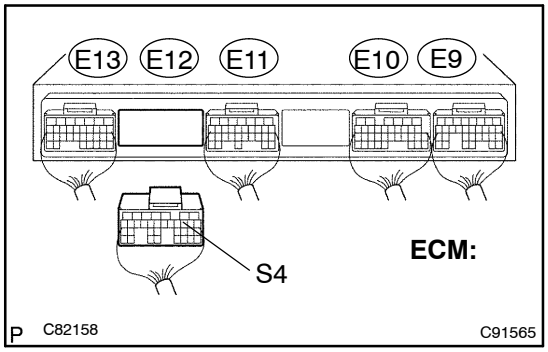

(a) Connect the transmission connector to the transaxle.

(b) Disconnect the connector from the ECM.

(c) Measure the resistance according to the value(s) in the table below.

Standard:

Tester Connection	Specified Condition 20°C (68°F)
E12 – 10 (S4) – Body ground	11 to 15 Ω

NG → **REPAIR OR REPLACE HARNESS OR CONNECTOR (SEE PAGE 01–32)**

OK

REPLACE ECM (SEE PAGE 10–29)

3	INSPECT SHIFT SOLENOID VALVE(S4)

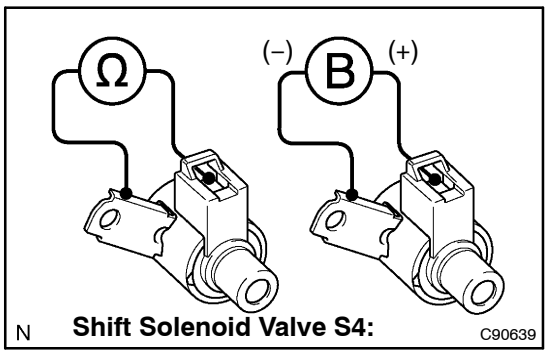

(a) Remove the shift solenoid valve S4.

(b) Measure the resistance according to the value(s) in the table below.

Standard:

Tester Connection	Specified Condition 20°C (68°F)
Solenoid Connector (S4) – Solenoid Body (S4)	11 to 15 Ω

(c) Connect positive (+) lead to the terminal of solenoid connector, negative (–) lead to the solenoid body.

OK:

The solenoid makes an operating noise.

NG → **REPLACE SHIFT SOLENOID VALVE(S4)**

OK

REPAIR OR REPLACE TRANSMISSION WIRE (SEE PAGE 40–16)

DTC	P0985	SHIFT SOLENOID ”E” CONTROL CIRCUIT LOW (SHIFT SOLENOID VALVE SR)

DTC	P0986	SHIFT SOLENOID ”E” CONTROL CIRCUIT HIGH (SHIFT SOLENOID VALVE SR)

CIRCUIT DESCRIPTION

Shifting from 1st to 5th is performed in combination with ”ON” and ”OFF” operation of the shift solenoid valves SL1, SL2, SL3, S4 and SR which is controlled by the ECM. If an open or short circuit occurs in either of the shift solenoid valves, the ECM controls the remaining normal shift solenoid valve to allow the vehicle to be operated smoothly (Fail safe function).

DTC No.	DTC Detection Condition	Trouble Area
P0985	ECM detects short in solenoid valve SR circuit 2 times when solenoid valve SR is operated (1–trip detection logic)	• Short in shift solenoid valve SR circuit • Shift solenoid valve SR • ECM
P0986	ECM detects open in solenoid valve SR circuit 2 times when solenoid valve SR is not operated (1–trip detection logic)	• Open in shift solenoid valve SR circuit • Shift solenoid valve SR • ECM

MONITOR DESCRIPTION

The ECM commands gear shifts by turning the shift solenoid valves ”ON/OFF”. When there is an open or short circuit in any shift solenoid valve circuit, the ECM detects the problem and illuminates the MIL and stores the DTC. And the ECM performs the fail–safe function and turns the other shift solenoid valves in good condition ”ON/OFF” (In case of an open or short circuit, the ECM stops sending current to the circuit.) (see page 05–560).

WIRING DIAGRAM

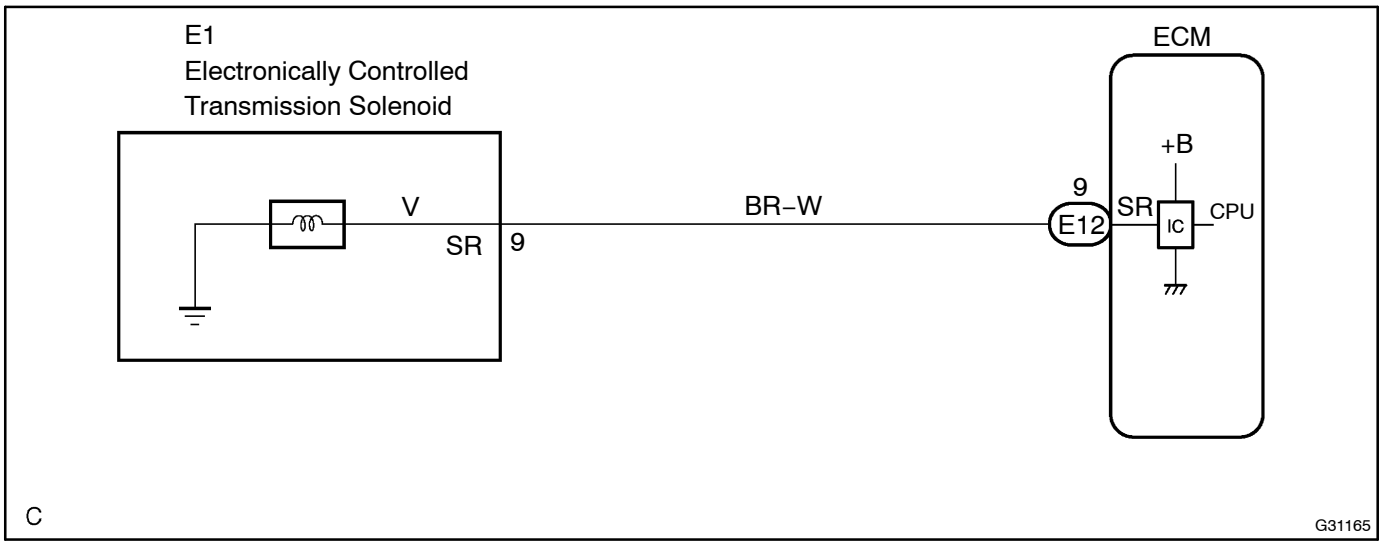

INSPECTION PROCEDURE

1 INSPECT TRANSMISSION WIRE(SR)

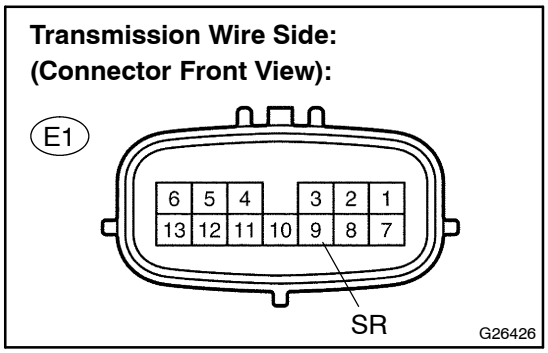

(a) Disconnect the transmission wire connector from the transaxle.

(b) Measure the resistance according to the value(s) in the table below.

Standard:

Tester Connection	Specified Condition 20°C (68°F)
9 – Body ground	11 to 15 Ω

NG → **Go to step 3**

OK

2 CHECK HARNESS AND CONNECTOR(TRANSMISSION WIRE – ECM)

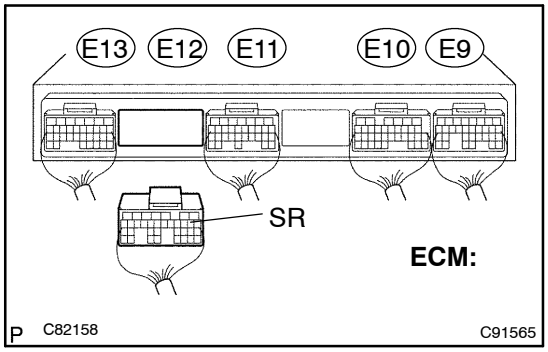

(a) Connect the transmission connector to the transaxle.

(b) Disconnect the connector from the ECM.

(c) Measure the resistance according to the value(s) in the table below.

Standard:

Tester Connection	Specified Condition 20°C (68°F)
E12 – 9 (SR) – Body ground	11 to 15 Ω

NG → **REPAIR OR REPLACE HARNESS OR CONNECTOR (SEE PAGE 01–32)**

OK

REPLACE ECM (SEE PAGE 10–29)

3	INSPECT SHIFT SOLENOID VALVE(SR)

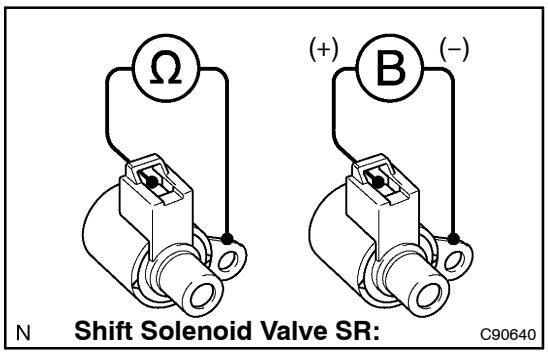

(a) Remove the shift solenoid valve SR.

(b) Measure the resistance according to the value(s) in the table below.

Standard:

Tester Connection	Specified Condition 20°C (68°F)
Solenoid Connector (SR) – Solenoid Body (SR)	11 to 15 Ω

(c) Connect positive (+) lead to the terminal of solenoid connector, negative (–) lead to the solenoid body.

OK:

The solenoid makes an operating noise.

NG → **REPLACE SHIFT SOLENOID VALVE(SR)**

OK

REPAIR OR REPLACE TRANSMISSION WIRE (SEE PAGE 40–16)

DTC	P2716	PRESSURE CONTROL SOLENOID ”D” ELECTRICAL (SHIFT SOLENOID SLT)

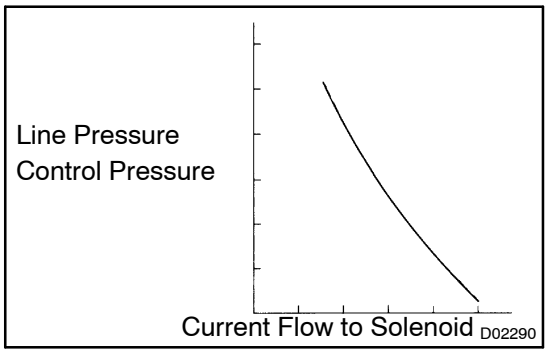

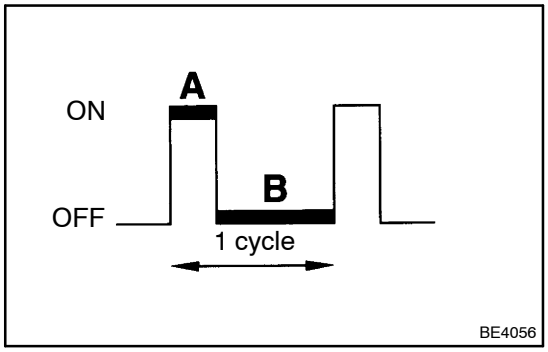

CIRCUIT DESCRIPTION

The linear solenoid valve (SLT) controls the transmission line pressure for smooth transmission operation based on signals from the throttle position sensor and the vehicle speed sensor. The ECM adjusts the duty cycle of the SLT solenoid valve to control hydraulic line pressure coming from the primary regulator valve. Appropriate line pressure assures smooth shifting with varying engine outputs.

(*): Duty Ratio

The duty ratio is the ratio of the period of continuity in one cycle. For example, if A is the period of continuity in one cycle, and B is the period of non–continuity, then

Duty Ratio=A/(A+B) x 100 (%)

DTC No.	DTC Detection Condition	Trouble Area
P2716	Condition (a) or (b) below is detected 1 sec. or more: (1–trip detection logic) (a) SLT– terminal: 0V (b) SLT– terminal: 12V	• Open or short in shift solenoid valve SLT circuit • Shift solenoid valve SLT • ECM

MONITOR DESCRIPTION

When an open or short in the linear solenoid valve (SLT) circuit is detected, the ECM interprets this as a fault. The ECM will turn ON the MIL and store the DTC.

WIRING DIAGRAM

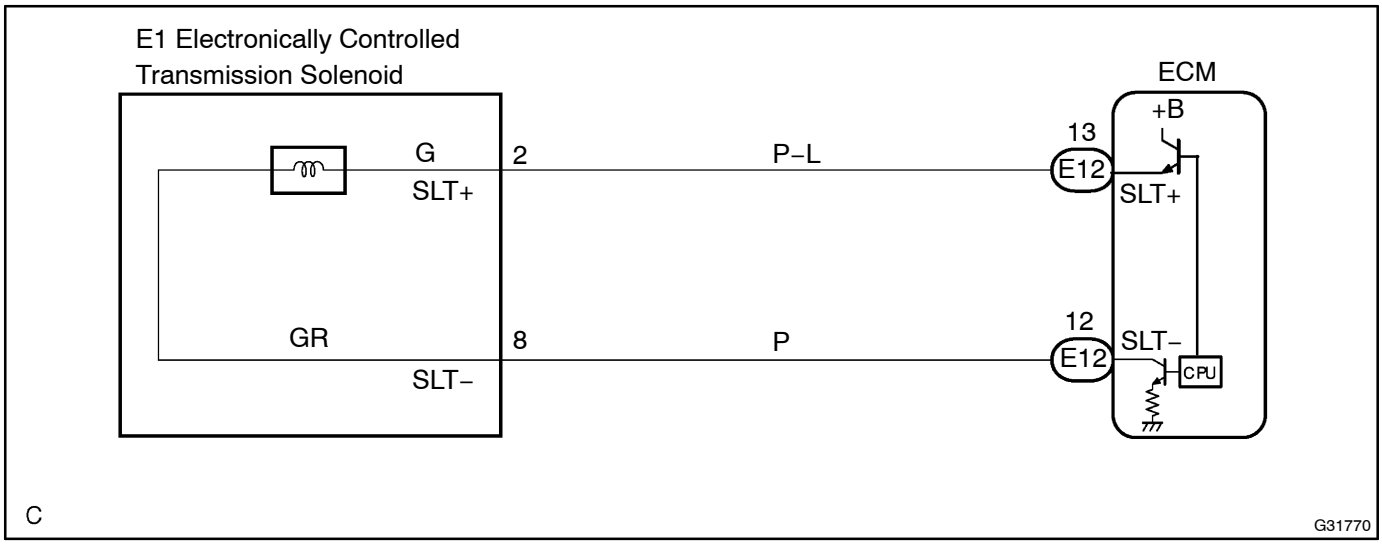

INSPECTION PROCEDURE

1 INSPECT TRANSMISSION WIRE(SLT)

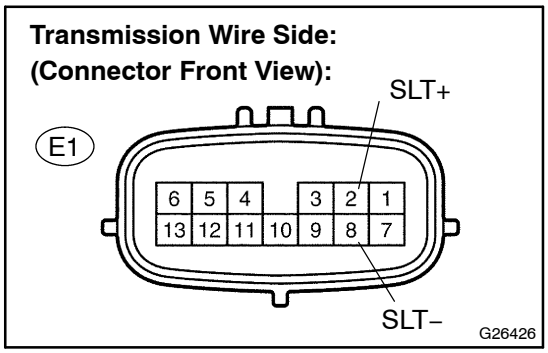

(a) Disconnect the transmission wire connector from the transaxle.

(b) Measure the resistance according to the value(s) in the table below.

Standard:

Tester Connection	Specified Condition 20°C (68°F)
2 (SLT+) – 8 (SLT–)	5.0 to 5.6 kΩ

(c) Measure the resistance according to the value(s) in the table below.

Standard (Check for short):

Tester Connection	Specified Condition
2 (SLT+) – Body ground	10 kΩ or higher
8 (SLT–) – Body ground	↑

NG → **Go to step 3**

OK

2 CHECK HARNESS AND CONNECTOR(TRANSMISSION WIRE – ECM)

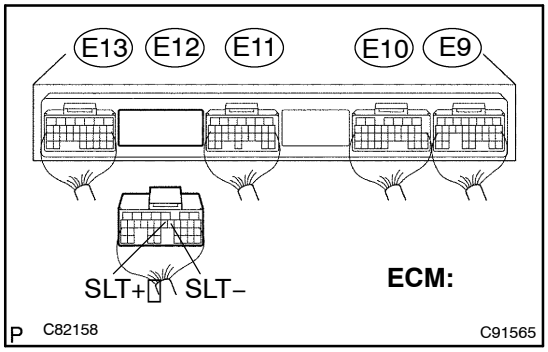

(a) Connect the transmission wire connector to the transaxle.

(b) Disconnect the ECM connector.

(c) Measure the resistance according to the value(s) in the table below.

Standard:

Tester Connection	Specified Condition 20°C (68°F)
E12 – 13 (SLT+) – E12 – 12 (SLT–)	5.0 to 5.6 kΩ

(d) Measure the resistance according to the value(s) in the table below.

Standard (Check for short):

Tester Connection	Specified Condition
E12 – 13 (SLT+) – Body ground	10 kΩ or higher
E12 – 12 (SLT–) – Body ground	↑

NG → **REPAIR OR REPLACE HARNESS OR CONNECTOR (SEE PAGE 01–32)**

OK

REPLACE ECM (SEE PAGE 10–29)

3 INSPECT SHIFT SOLENOID VALVE(SLT)

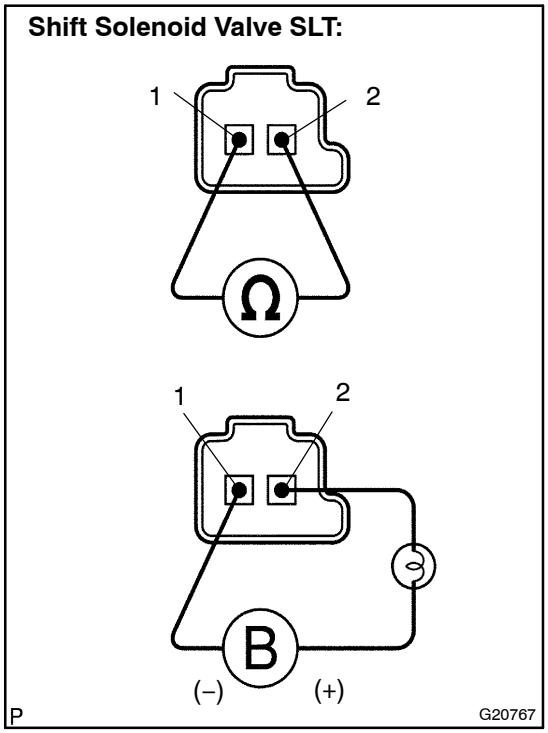

(a) Remove the shift solenoid valve (SLT).

(b) Measure the resistance according to the value(s) in the table below.

Standard:

Tester Connection	Specified Condition 20°C (68°F)
1 – 2	5.0 to 5.6 Ω

(c) Connect the positive (+) lead with a 21 W bulb to terminal 2 and the negative (–) lead to terminal 1 of the solenoid valve connector, then check the movement of the valve.

OK:

The solenoid makes an operating noise.

NG → **REPLACE SHIFT SOLENOID VALVE(SLT)**

OK →

REPAIR OR REPLACE TRANSMISSION WIRE (SEE PAGE 40–16)

TRANSMISSION CONTROL SWITCH CIRCUIT

CIRCUIT DESCRIPTION

When moving the shift lever into the S position using the transmission control switch, it is possible to switch the shift range position between ”1” (first range) and ”5” (fifth range).
Shifting up ”+” once raises one shift range position, and shifting down ”–” lowers one shift range position.

WIRING DIAGRAM

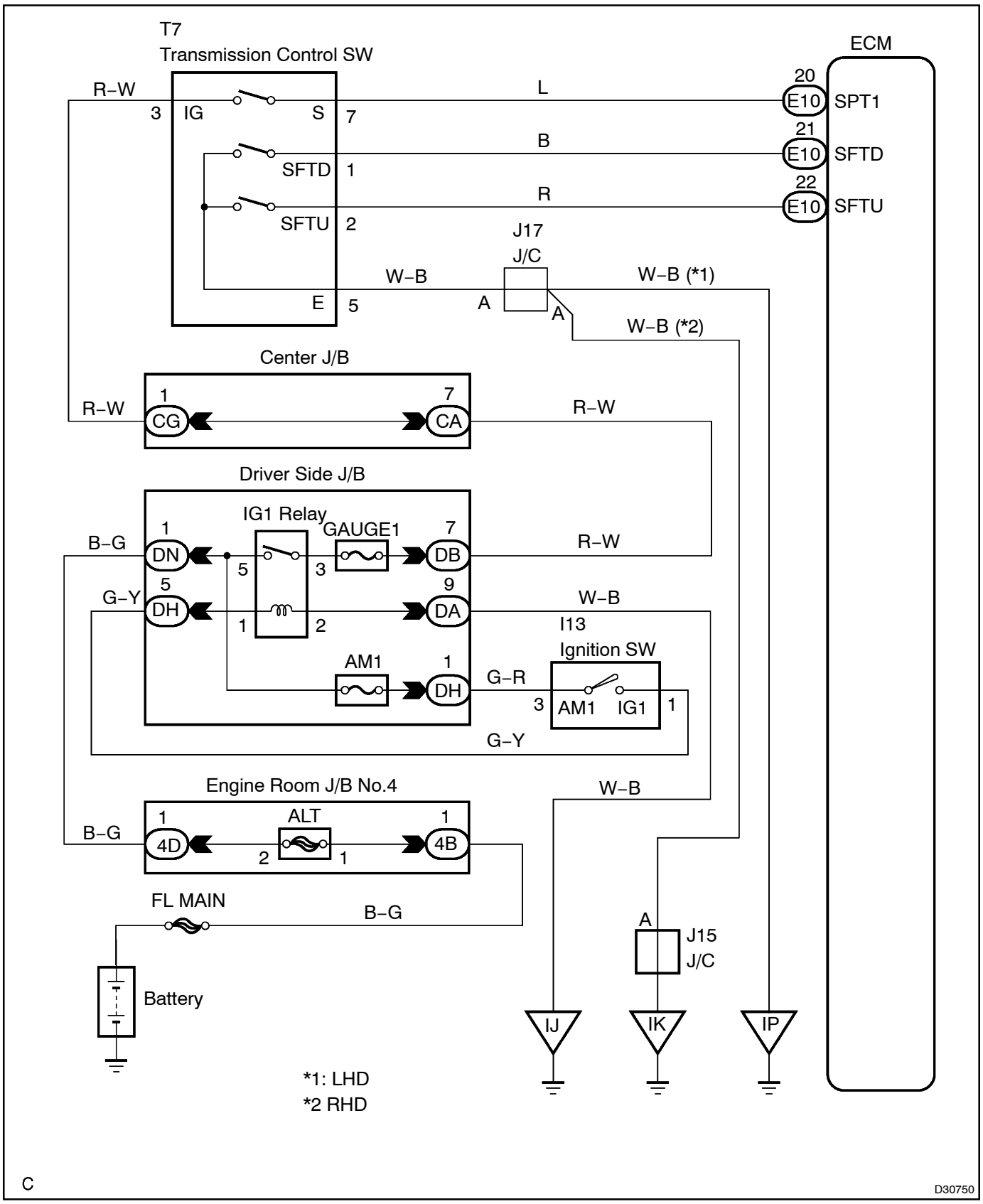

INSPECTION PROCEDURE

1 CHECK HARNESS AND CONNECTOR(BATTERY – TRANSMISSION CONTROL SWITCH)

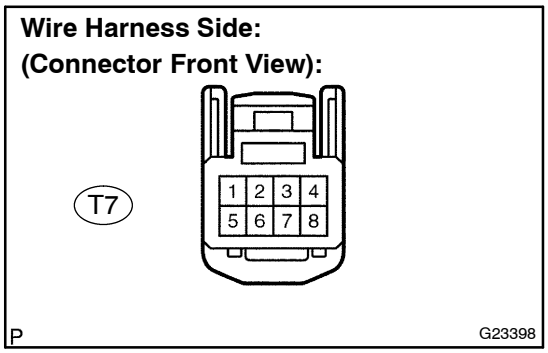

(a) Disconnect the transmission control switch connector of shift lock control unit assy.

(b) Measure the voltage according to the value(s) in the table below.

Standard:

Switch Condition	Tester Connection	Specified Condition
IG switch ON	3 – Body ground	10 to 14 V
IG switch OFF	↑	Below 1 V

NG → **REPAIR OR REPLACE HARNESS OR CONNECTOR (SEE PAGE 01–32)**

OK

2 CHECK HARNESS AND CONNECTOR(TRANSMISSION CONTROL SWITCH – BODY GROUND)

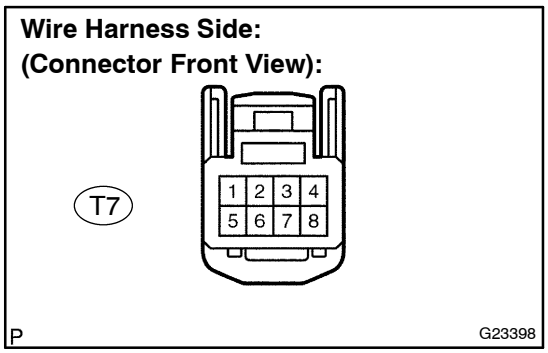

(a) Measure the resistance according to the value(s) in the table below.

Standard:

Tester Connection	Specified Condition
5 – Body ground	Below 1 Ω

NG → **REPAIR OR REPLACE HARNESS OR CONNECTOR (SEE PAGE 01–32)**

OK

3 INSPECT SHIFT LOCK CONTROL UNIT ASSY(TRANSMISSION CONTROL SWITCH)

Switch Side:
(Connector Front View):

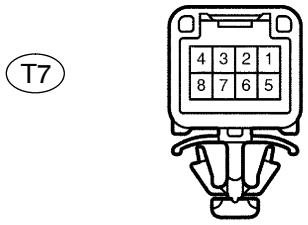

(a) Measure resistance between each terminal of shift lock control unit assy when the shift lever is moved to each position.

Standard:

Shift Position	Tester Connection	Specified Condition
S, "+" and "–"	3 – 7	Below 1 Ω
Except S, "+" and "–"	↑	10 kΩ or higher
Press continuously "+" (Up shift)	2 – 5	Below 1 Ω
S	↑	10 kΩ or higher
Press continuously "–" (Down shift)	1 – 5	Below 1 Ω
S	↑	10 kΩ or higher

NG → **REPLACE SHIFT LOCK CONTROL UNIT ASSY**

OK

4	CHECK HARNESS AND CONNECTOR(TRANSMISSION CONTROL SWITCH – ECM)

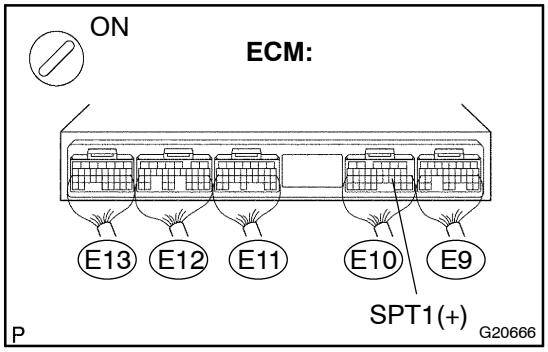

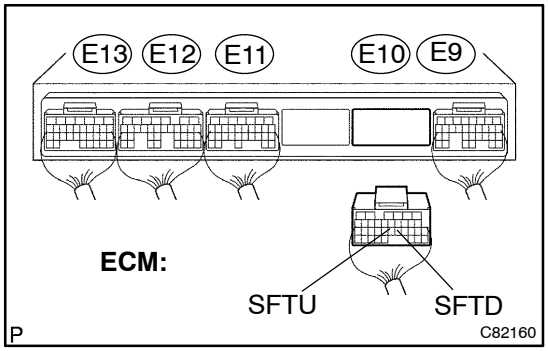

(a) Connect the transmission control switch connector of shift lock control unit assy.

(b) Turn the ignition switch to the ON position, and measure the voltage according to the value(s) in the table below when the shift lever is moved to each position.

Standard:

Shift Position	Tester Connection	Specified Condition
S, "+" and "–"	E10 – 20 (SPT1) – Body ground	10 to 14 V
Except S, "+" and "–"	↑	Below 1 V

(c) Turn the ignition switch to the LOCK position.

(d) Disconnect the ECM connector.

(e) Measure the resistance according to the value(s) in the table below when the shift lever is moved to each position.

Standard:

Shift Position	Tester Connection	Specified Condition
Press continuously "+" (Up shift)	E10 – 22 (SFTU) – Body ground	Below 1 Ω
S	↑	10 kΩ or higher
Press continuously "–" (Down shift)	E10 – 21 (SFTD) – Body ground	Below 1 Ω
S	↑	10 kΩ or higher

NG → **REPAIR OR REPLACE HARNESS OR CONNECTOR (SEE PAGE 01–32)**

OK

PROCEED TO NEXT CIRCUIT INSPECTION SHOWN IN PROBLEM SYMPTOMS TABLE (SEE PAGE 05–545)

PATTERN SELECT SWITCH CIRCUIT

CIRCUIT DESCRIPTION

Integration relay receives pattern select switch information, and sends it through the multiplex communication system to the ECM.

ECT SNOW is the system that operates the throttle motor to control engine output to reduce skidding of the driving wheels, guarantee takeoff acceleration, driving straightness and turning stability.

WIRING DIAGRAM

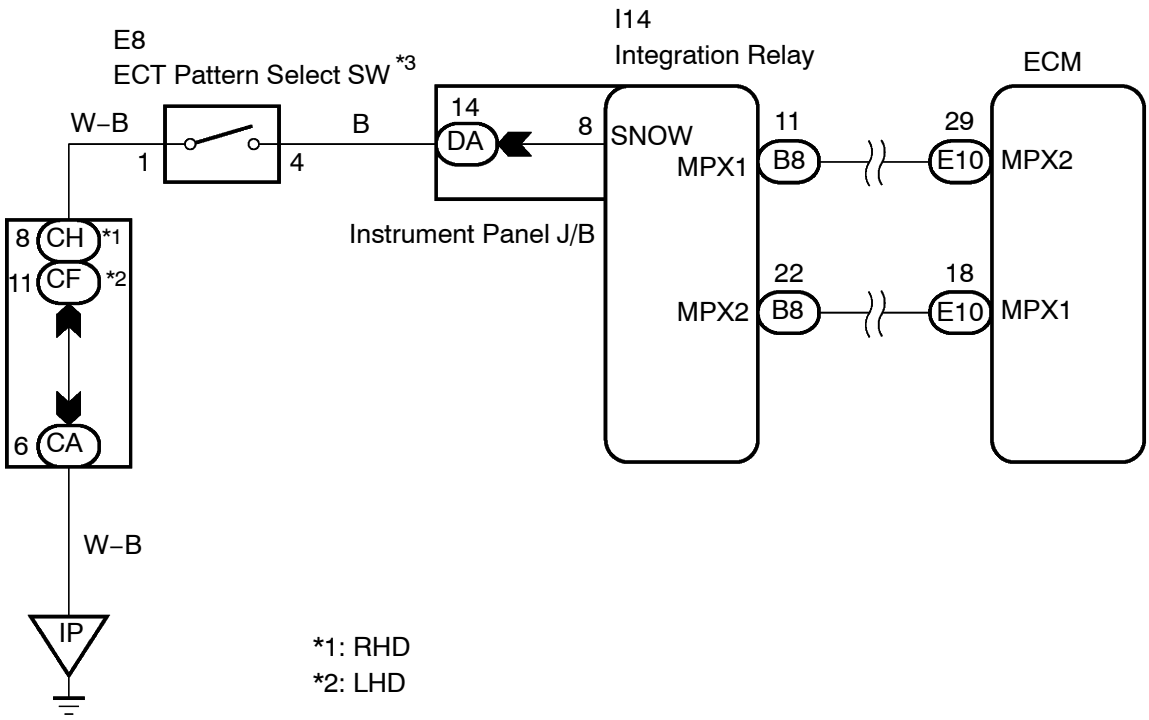

(*3) Pattern Select Switch (ECT SNOW Switch)

When the ECT SNOW switch is pushed, the switch contact is made and the ECT SNOW mode is selected.

To cancel the ECT SNOW mode, push the ECT SNOW switch once again. The ECT SNOW mode is automatically cancelledout when the ignition switch is turned ”OFF”.

C

D30688

INSPECTION PROCEDURE

1	DRIVING TEST

(a) Start the engine.
(b) Turn the ECT SNOW switch ”OFF” (Normal drive mode).
(c) Confirm vehicle response by driving from a parked position to fully depressing the accelerator pedal.
(d) Turn the ECT SNOW switch ”ON” and perform the same check as (c).
Confirm that there is a difference between ECT SNOW switch ”ON” and ”OFF”.

HINT:
- Driving test should be done on a paved road (a nonskid road).
- Make sure not to use the TRAC system when testing a vehicle equipped with one.

OK:

There is a difference in acceleration between ”ON” and ”OFF”.

NG → **Go to step 2**

OK

PROCEED TO NEXT CIRCUIT INSPECTION SHOWN IN PROBLEM SYMPTOMS TABLE (SEE PAGE 05–545)

2	CHECK HARNESS AND CONNECTOR(PATTERN SELECT SWITCH ASSY – BODY GROUND)

Wire Harness Side:
(Connector Front View):

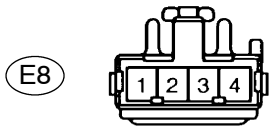

B59192

(a) Disconnect the connector of pattern select switch.
(b) Measure the resistance according to the value(s) in the table below.

Standard:

Tester Connection	Specified Condition
1 – Body ground	Below 1 Ω

NG → **REPAIR OR REPLACE HARNESS OR CONNECTOR (SEE PAGE 01–32)**

OK

3 INSPECT PATTERN SELECT SWITCH ASSY

Switch Side:
(Connector Front View):

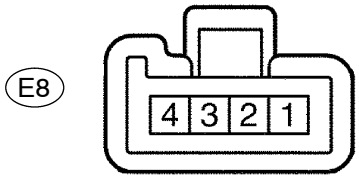

(a) Measure the resistance according to the value(s) in the table below.

Standard:

Switch Condition	Tester Connection	Specified Condition
Press continuously Pattern select switch (SNOW)	1 – 4	Below 1 Ω
Release Pattern select switch (SNOW)	↑	10 kΩ or higher

NG → **REPLACE PATTERN SELECT SWITCH ASSY**

OK

4 CHECK HARNESS AND CONNECTOR(PATTERN SELECT SWITCH ASSY – INTEGRATION RELAY)

Instrument Panel J/B Assy

Vehicle Front Side:

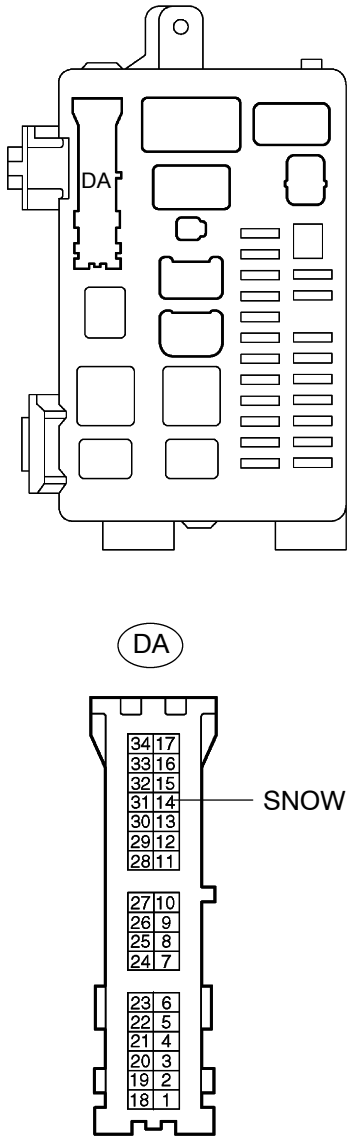

(a) Connect the connector of pattern select switch.

(b) Disconnect the instrument panel J/B assy (integration relay) connector.

(c) Measure the resistance between terminal SNOW of instrument panel J/B assy (integration relay) connector and body ground.

Standard:

Switch Condition	Tester Connection	Specified Condition
Press continuously Pattern select switch (SNOW)	DA – 14 (SNOW) – Body ground	Below 1 Ω
Release Pattern select switch (SNOW)	↑	10 kΩ or higher

NG → **REPAIR OR REPLACE HARNESS OR CONNECTOR (SEE PAGE 01–32)**

OK

PROCEED TO NEXT CIRCUIT INSPECTION SHOWN IN PROBLEM SYMPTOMS TABLE (SEE PAGE 05–545)

KICK DOWN SWITCH CIRCUIT

CIRCUIT DESCRIPTION

The kick–down switch is turned ON when the accelerator pedal is fully depressed and a signal is sent to the ECM.

When the kick–down switch is turned ON, the ECM controls gear shifting according to the programmed shift diagrams.

If a short circuit develops in the kick–down switch, the ECM disregards the kick–down signals and controls shifting at the normal shift points.

WIRING DIAGRAM

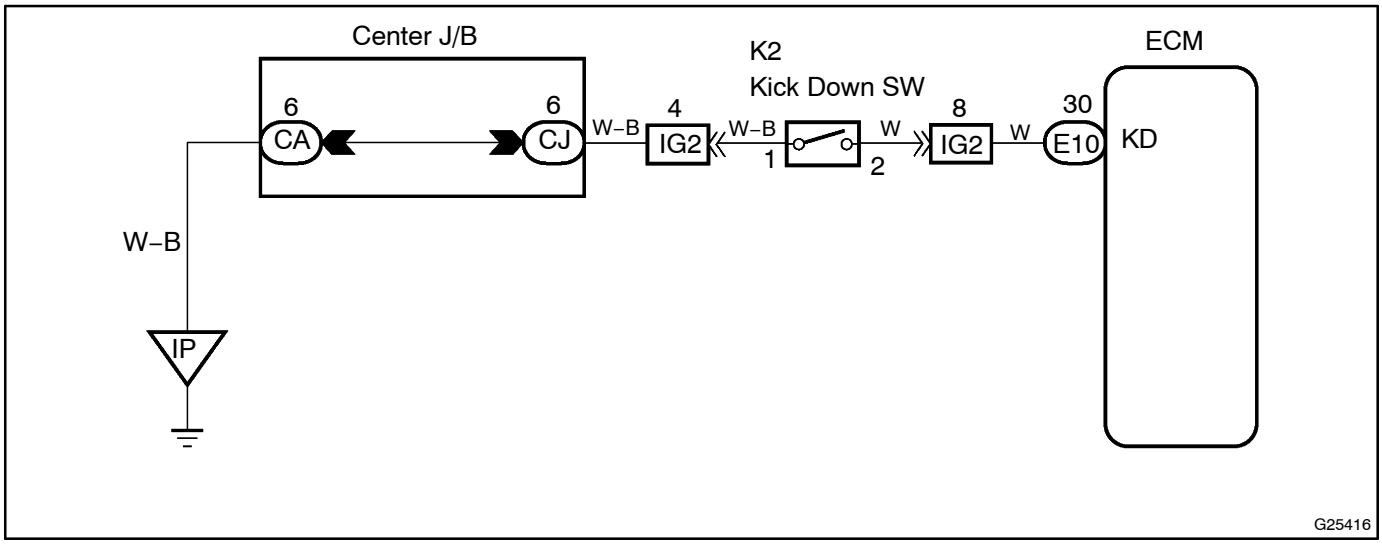

INSPECTION PROCEDURE

1 CHECK HARNESS AND CONNECTOR(KICK DOWN SWITCH – BODY GROUND)

Wire Harness Side:
(Connector Front View):

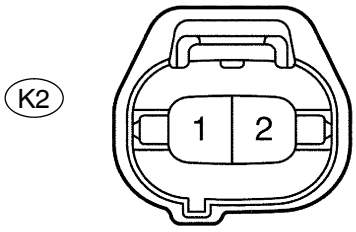

(a) Disconnect the kick–down switch connector.
(b) Measure the voltage according to the value(s) in the table below.

Standard:

Tester Connection	Specified Condition
1 – Body ground	Below 1 Ω

NG → **REPAIR OR REPLACE HARNESS OR CONNECTOR (SEE PAGE 01–32)**

OK

2 INSPECT KICK DOWN SWITCH

Switch Side:
(Connector Front View):

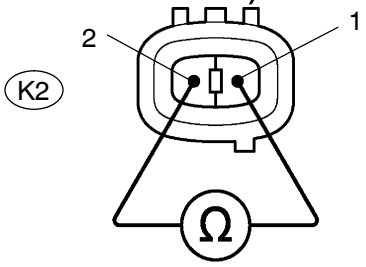

(a) Measure resistance according to the value(s) in the table below when kick–down switch is ON and OFF.
Standard:

Switch Condition	Tester Connection	Specified Condition
Press continuously (Kick–down switch is ON)	1 – 2	Below 1 Ω
Release (Kick–down switch is OFF)	↑	10 kΩ or higher

NG → **REPLACE KICK DOWN SWITCH**

OK

3 CHECK HARNESS AND CONNECTOR(KICK DOWN SWITCH – ECM)

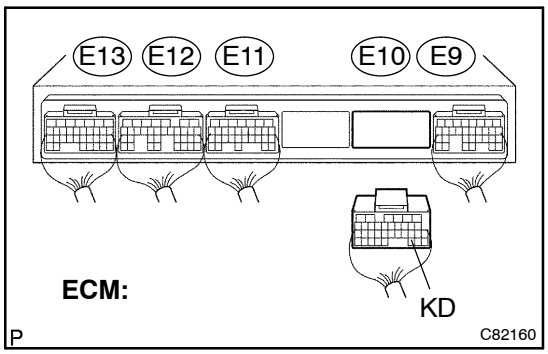

(a) Connect the kick–down switch connector.
(b) Disconnect the ECM connector.
(c) Measure resistance according to the value(s) in the table below when accelerator pedal is fully depressed or not.

Standard:

Switch Condition	Tester Connection	Specified Condition
Fully depressed (Kick–down switch is ON)	E10 –30 (KD) – Body ground	Below 1 Ω
Release (Kick–down switch is OFF)	↑	10 kΩ or higher

NG → **REPAIR OR REPLACE HARNESS OR CONNECTOR (SEE PAGE 01–32)**

OK

PROCEED TO NEXT CIRCUIT INSPECTION SHOWN IN PROBLEM SYMPTOMS TABLE (SEE PAGE 05–545)

SFI SYSTEM (2AZ–FSE)

ON–VEHICLE INSPECTION

100LU–01

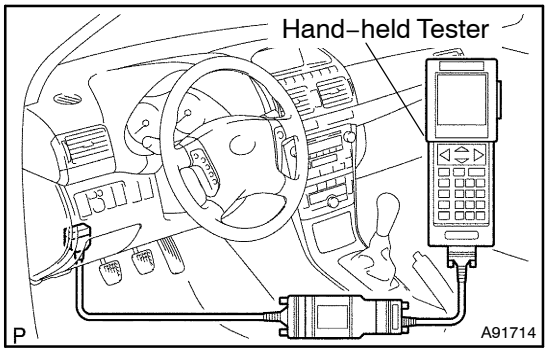

1. INSPECT CAMSHAFT TIMING OIL CONTROL VALVE ASSY

(a) Connect the hand–held tester to the DLC3.
(b) Turn the ignition switch ON.
(c) Start the engine and warm it up.
(d) Select the VVT from the ACTIVE TEST menu.
(e) Inspect the engine speed when the OCV is operated with the hand–held tester.

Standard:

Condition	Specified Condition
VVT system is OFF (OCV is OFF)	Normal engine speed
VVT system is ON (OCV is ON)	Rough idle or engine stalled

If the result is not as specified, replace the camshaft timing oil control valve.

2. INSPECT THROTTLE BODY ASSY

(a) Listen to the throttle control motor operating sounds.
  (1) Turn the ignition switch ON.
  (2) When pressing the accelerator pedal position sensor lever, listen to the running sound of the motor. Make sure no friction noise comes from the motor.

If friction noise exists, replace the throttle body.

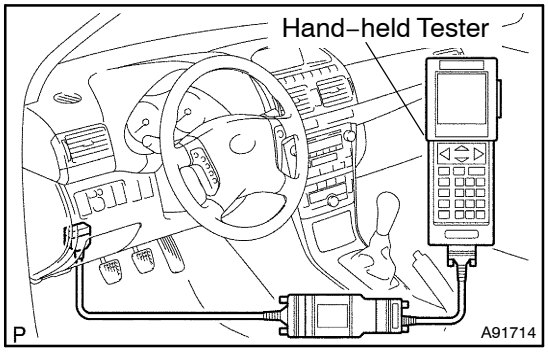

(b) Inspect the throttle position sensor.
  (1) Connect the hand–held tester to the DLC3.
  (2) Turn the ignition switch ON.
  (3) Check that the engine warning light does not light up.
  (4) Under CURRENT DATA, the throttle valve opening percentage (THROTTLE POS) should be within the standard value range below.

Standard throttle valve opening percentage:
60 % or more

NOTICE:
When checking the standard throttle valve opening percentage, the transmission should be in the neutral position.

If the percentage is less than 60 %, replace the throttle body.

3. INSPECT ACCELERATOR PEDAL ROD ASSY

(a) Turn the ignition switch ON. Under CURRENT DATA, the voltage of the throttle position sensor should be within the standard value range below.

Standard: 0.6 to 1.0 V

If the voltage is not as specified, replace the accelerator pedal rod.

100LV–01

INSPECTION

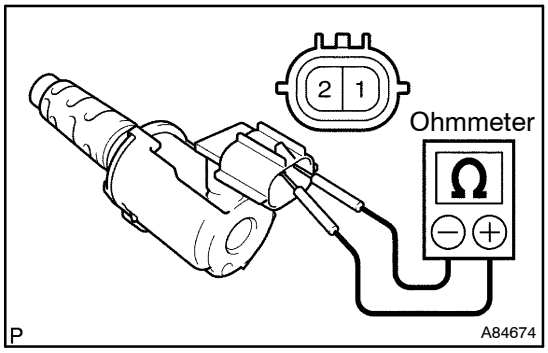

1. INSPECT CAMSHAFT TIMING OIL CONTROL VALVE ASSY

(a) Inspect the resistance.

(1) Using an ohmmeter, measure the resistance between the terminals.

Standard:

Tester Connection	Specified Condition
1 (–) – 2 (+)	6.9 to 7.9 Ω at 20°C (68°F)

If the resistance is not as specified, replace the camshaft timing oil control valve.

(b) Check the operation.

(1) Connect the positive (+) lead from the battery to terminal 2 and negative (–) lead to terminal 1, then check the movement of the spool valve.

NOTICE:

Confirm that the spool valve moves freely and does not stick in any position.

HINT:

Bad returning of the spool valve resulted from catching foreign objects cause subtle leak to the advanced direction. In that case, DTC can be detected.

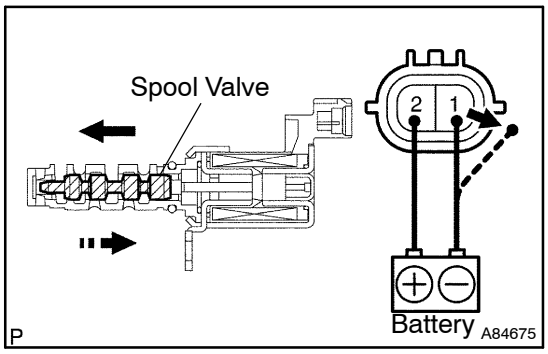

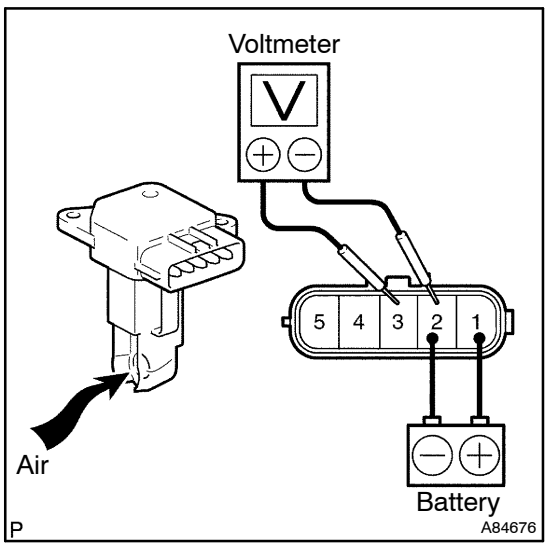

2. INSPECT MASS AIR FLOW METER

(a) Check the operation.

(1) Apply battery voltage across terminals 1 (+B) and 2 (E2G).

(2) Using a voltmeter, connect the positive (+) tester probe to terminal 3(VG), and negative (–) tester probe to terminal 2 (E2G).

(3) Blow air into the mass air flow meter, then check that the voltage fluctuates.

If the operation is not as specified, replace the mass air flow meter.

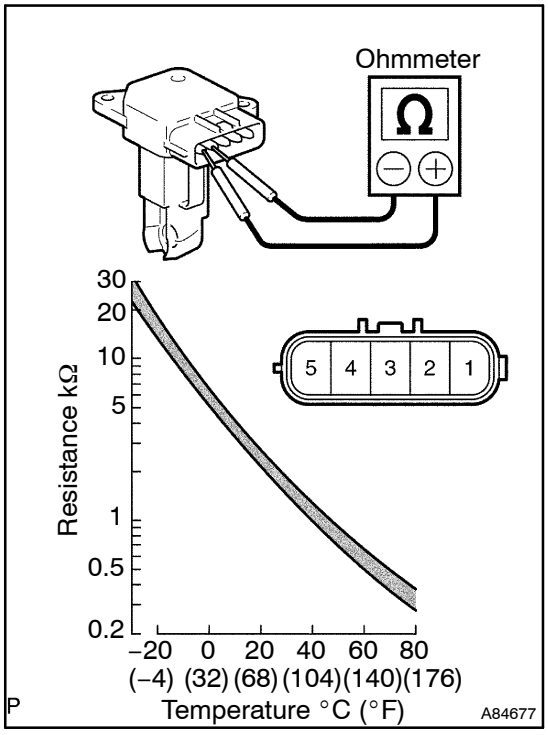

(b) Inspect the resistance.

(1) Using an ohmmeter, measure the resistance between the terminals.

Standard:

Tester connection	Specified Condition
4 (THA) – 5 (E2)	13.6 to 18.4 kΩ at –20°C (–4°F)
4 (THA) – 5 (E2)	2.21 to 2.69 kΩ at 20°C (68°F)
4 (THA) – 5 (E2)	0.493 to 0.667 kΩ at 60°C (140°F)

If the resistance is not as specified, replace the mass air flow meter.

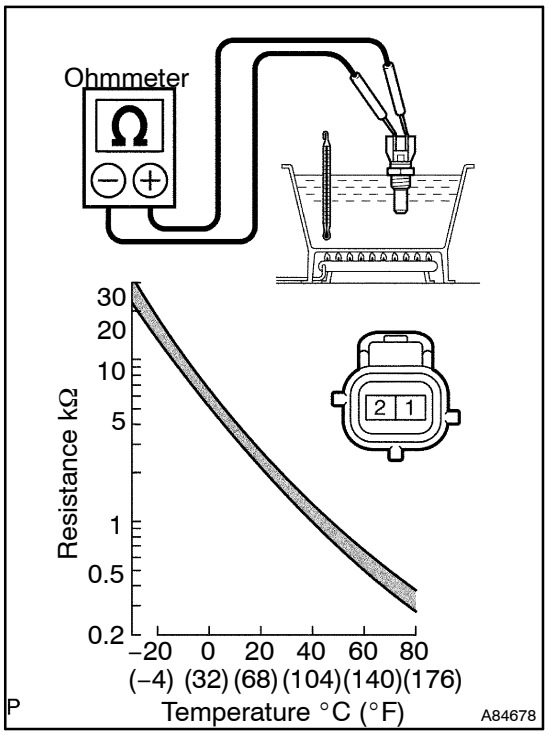

3. INSPECT ENGINE COOLANT TEMPERATURE SENSOR

(a) Inspect the resistance.

(1) Using an ohmmeter, measure the resistance between the terminals.

Standard:

Tester connection	Specified Condition
1 (E2) – 2 (THW)	2.32 to 2.59 kΩ at 20°C (68°F)
1 (E2) – 2 (THW)	0.310 to 0.326 kΩ at 80°C (176°F)

NOTICE:

In case of checking the engine coolant temperature sensor in water, be careful not to allow water to go into the terminals, and after checking, dry the engine coolant temperature sensor.

If the resistance is not as specified, replace the engine coolant temperature sensor.

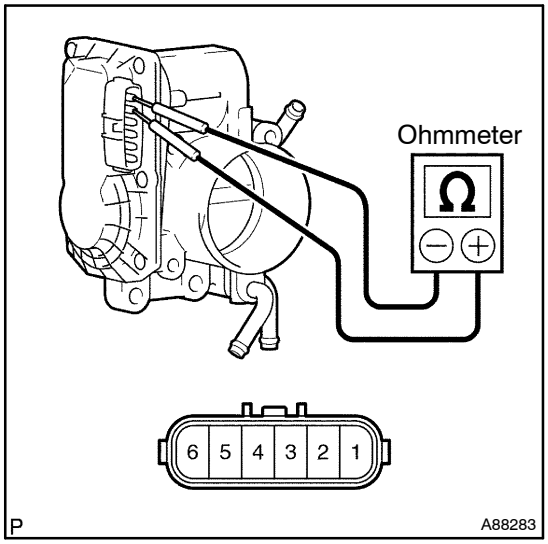

4. INSPECT THROTTLE BODY ASSY

(a) Inspect the resistance.

(1) Using an ohmmeter, measure the resistance between the terminals.

Standard:

Tester Connection	Specified Condition
1 (M–) – 2 (M+)	0.3 to 100 Ω at 20°C (68°F)
3 (E2) – 5 (VC)	1.2 to 3.2 kΩ at 20°C (68°F)

If the resistance is not as specified, replace the throttle body.

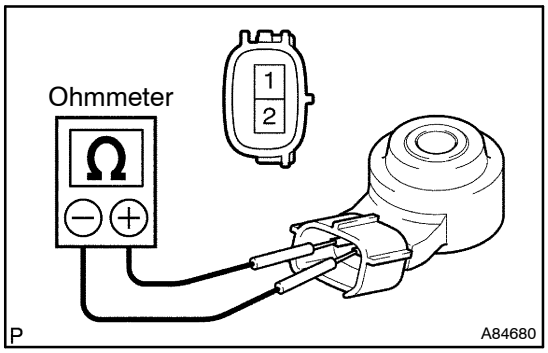

5. INSPECT KNOCK SENSOR

(a) Inspect the resistance.

(1) Using an ohmmeter, measure the resistance between the terminals.

Standard:

Tester Connection	Specified Condition
1 (Ground) – 2 (Output)	120 to 280 kΩ at 20°C (68°F)

If the resistance is not specified, replace the knock sensor.

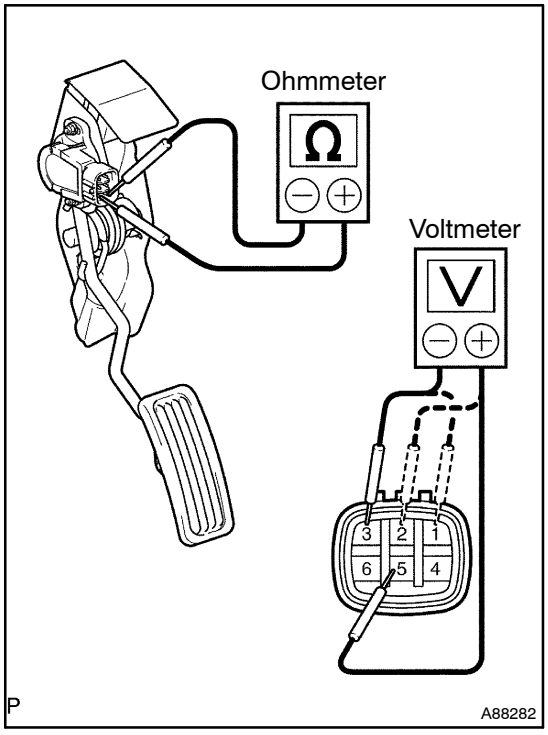

6. INSPECT ACCELERATOR PEDAL ROD ASSY

(a) Inspect the resistance.

(1) Using an ohmmeter, measure the resistance between the terminals.

Standard:

Tester Connection	Specified Condition
3 (EP1) – 6 (VCP1)	2.25 to 4.75 kΩ
1 (EP2) – 4 (VCP2)	2.25 to 4.75 kΩ

If the resistance is not as specified, replace the accelerator pedal rod.

(b) Inspect the voltmeter.

(1) Using a voltmeter, measure the voltage between the terminals.

Standard:

Tester Connection	Specified Condition
3 (EP1) – 5 (VPA1)	0.4 to 4.6 V
1 (EP2) – 2 (VPA2)	0.9 to 4.7 V

If the voltage is not as specified, replace the accelerator pedal rod.

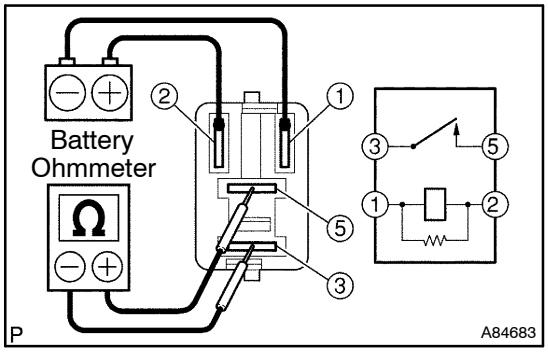

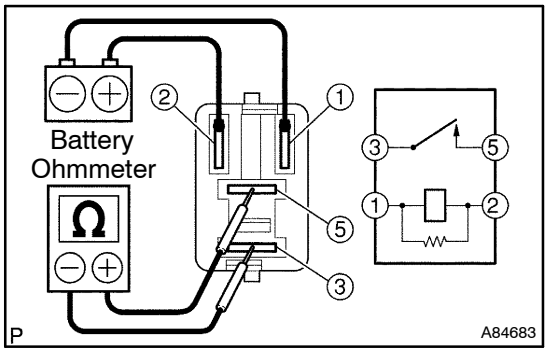

7. INSPECT MAIN RELAY

(a) Inspect the resistance.

(1) Using an ohmmeter, measure the resistance between the terminals.

Standard:

Tester Connection	Specified Condition
3 – 5	10 kΩ or higher
3 – 5	Below 1Ω (Apply battery voltage to terminals 1 and 2)

If the result is not as specified, replace the main relay.

8. INSPECT CIRCUIT OPENING RELAY

(a) Inspect the resistance.

(1) Using an ohmmeter, measure the resistance between the terminals.

Standard:

Tester Connection	Specified Condition
3 – 5	10 kΩ or higher
3 – 5	Below 1Ω (Apply battery voltage to terminals 1 and 2)

If the result is not as specified, replace the circuit opening relay.

THROTTLE BODY ASSY (2AZ–FSE)

COMPONENTS

100LW–01

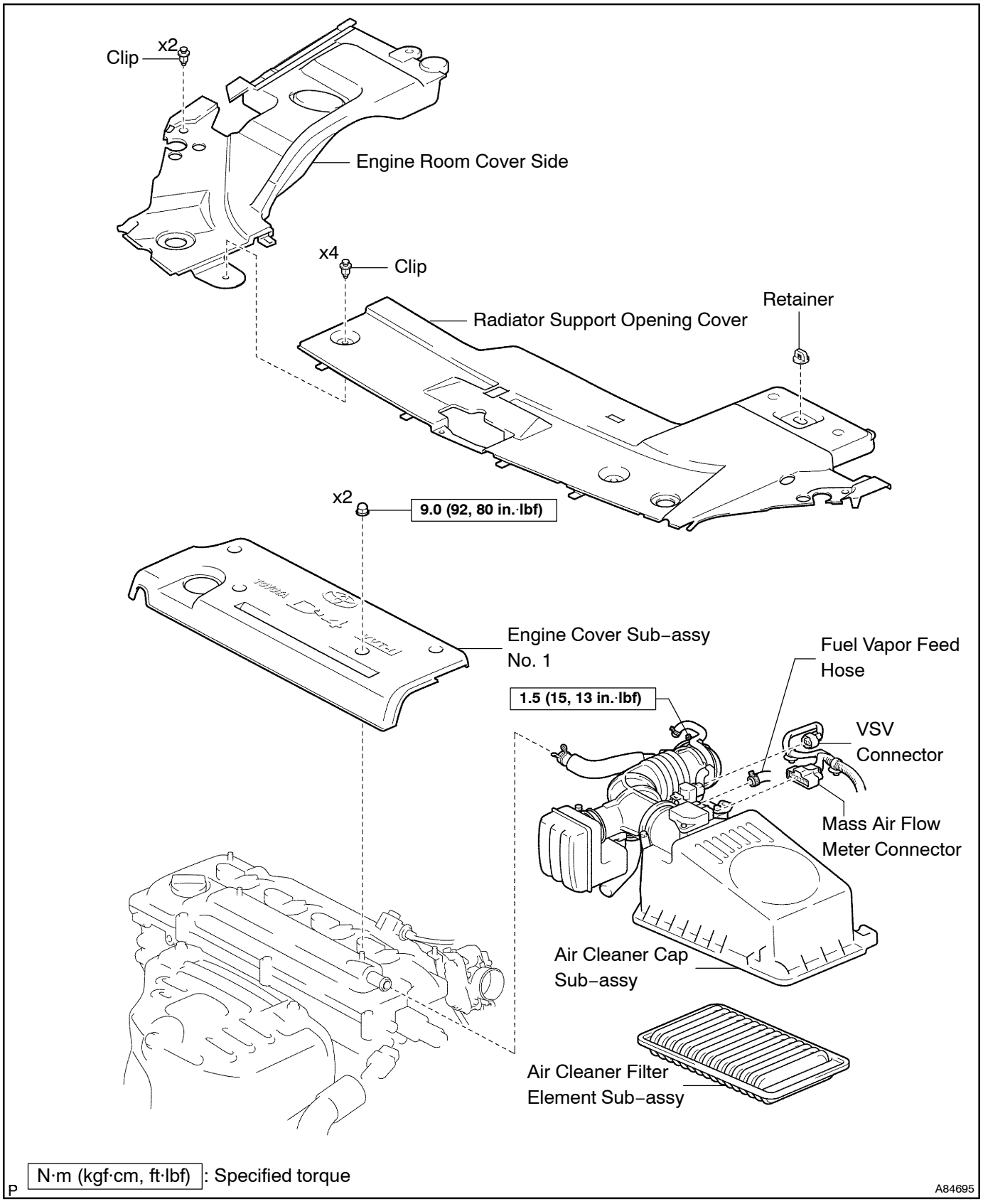

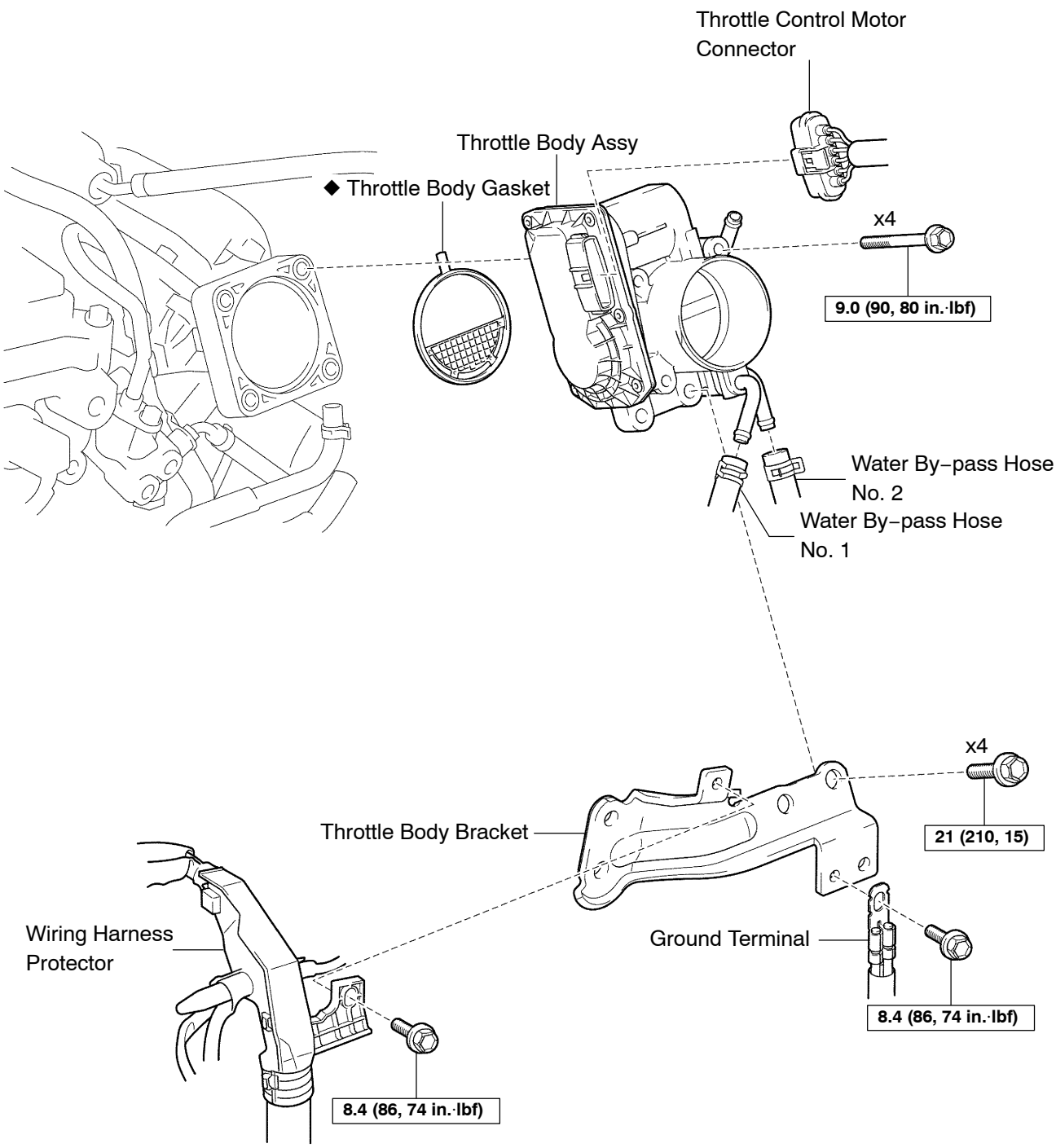

N·m (kgf·cm, ft·lbf) : Specified torque

◆ Non–reusable part

A84696

100LX–01

REPLACEMENT

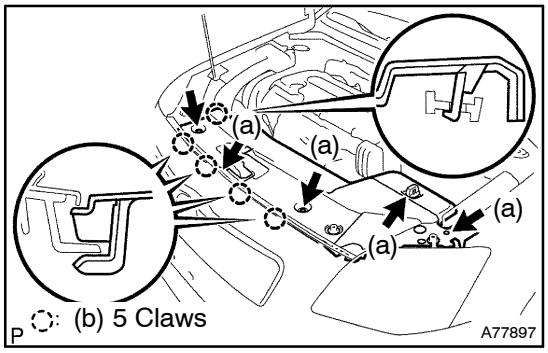

1. REMOVE RADIATOR SUPPORT OPENING COVER

(a) Remove the retainer and 4 clips.

(b) Unfasten the 5 claws, then remove the radiator support opening cover.

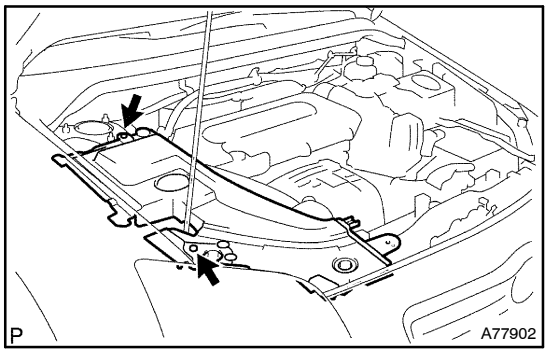

2. REMOVE ENGINE ROOM COVER SIDE

(a) Remove the 2 clips, then remove the engine room cover side.

3. DISCONNECT ENGINE WIRE NO.3 (BATTERY NEGATIVE TERMINAL)

4. DRAIN ENGINE COOLANT (See page 16–7)

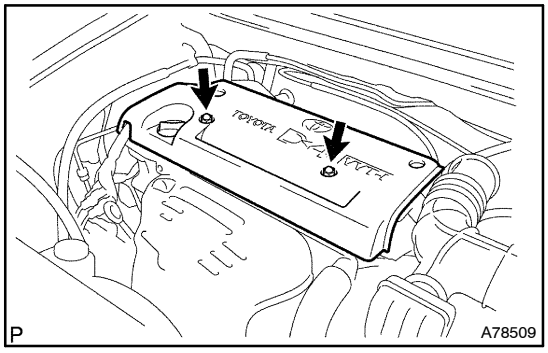

5. REMOVE ENGINE COVER SUB–ASSY NO.1

(a) Remove the 2 nuts, then remove the engine cover No. 1.

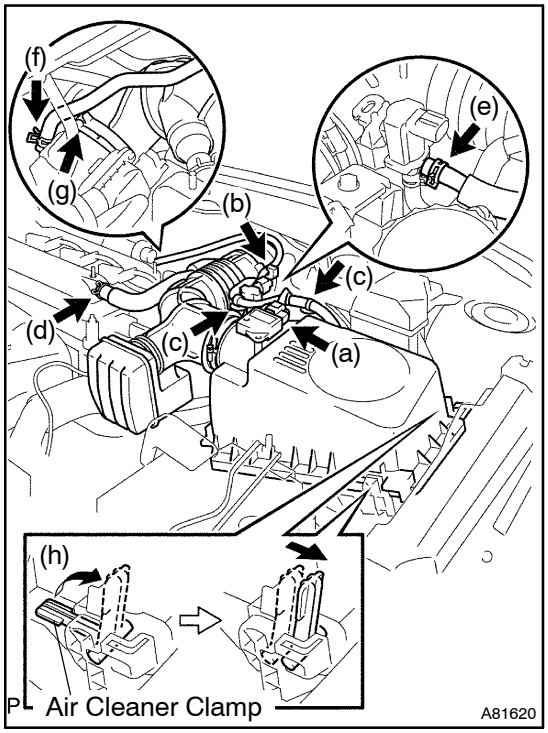

6. REMOVE AIR CLEANER CAP SUB–ASSY

(a) Disconnect the mass air flow meter connector.
(b) Disconnect the VSV connector.
(c) Remove the 2 wiring harness clamps.
(d) Disconnect the ventilation hose.
(e) Disconnect the fuel vapor feed hose No. 1.
(f) Disconnect the fuel vapor feed hose No. 2.
(g) Loosen the hose clamp bolt.
(h) Raise the air cleaner clamp up, then the slide it to the air cleaner cap.
(i) Remove the air cleaner cap together with the air cleaner hose No. 1.
(j) Remove the air cleaner filter element.

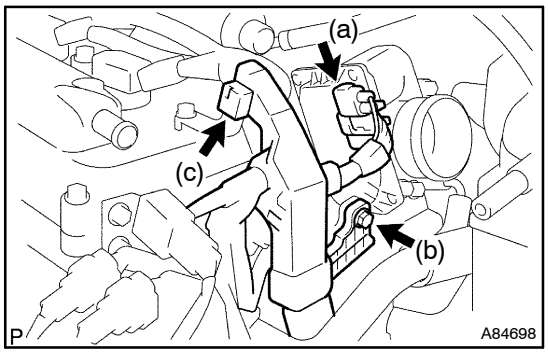

7. REMOVE THROTTLE BODY ASSY

(a) Disconnect the throttle control motor connector.
(b) Remove the bolt.
(c) Unfasten the clip, then remove the wiring harness protector.

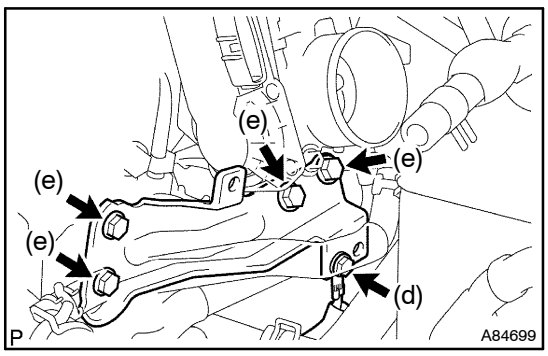

(d) Remove the bolt, then remove the ground terminal.
(e) Remove the 4 bolts, then remove the throttle body bracket.

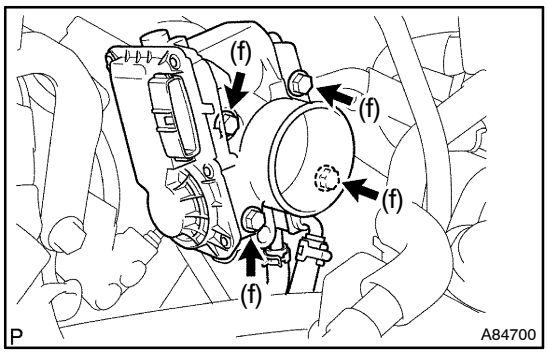

(f) Remove the 4 bolts, then remove the throttle body.
(g) Remove the gasket from the intake manifold.

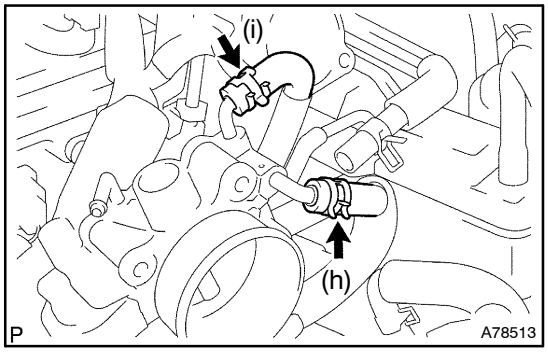

(h) Disconnect the water by–pass hose No. 1.
(i) Disconnect the water by–pass hose No. 2.

8. INSTALL THROTTLE BODY ASSY
(a) Connect the water by–pass hose No. 2.
(b) Connect the water by–pass hose No. 1.
(c) Install a new gasket to the intake manifold.
(d) Install the throttle body with the 4 bolts.
Torque: 9.0 N·m (90 kgf·cm, 80 in.·lbf)
(e) Install the throttle body bracket with the 4 bolts.
Torque: 21 N·m (210 kgf·cm, 15 ft·lbf)
(f) Install the ground terminal with the bolt.
Torque: 8.4 N·m (86 kgf·cm, 74 in.·lbf)
(g) Install the wiring harness protector with the clip.
(h) Tighten the bolt.
Torque: 8.4 N·m (86 kgf·cm, 74 in.·lbf)
(i) Connect the throttle control motor connector.
9. INSTALL AIR CLEANER CAP SUB–ASSY
Torque: 1.5 N·m (15 kgf·cm, 13 in.·lbf)
10. INSTALL ENGINE COVER SUB–ASSY NO.1
Torque: 9.0 N·m (92 kgf·cm, 80 in.·lbf)
11. CONNECT ENGINE WIRE NO.3 (BATTERY NEGATIVE TERMINAL)
Torque: 5.4 N·m (55 kgf·cm, 48 in.·lbf)
12. ADD ENGINE COOLANT (See page 16–7)
13. CHECK FOR ENGINE COOLANT LEAKS (See page 16–1)
14. INSTALL ENGINE ROOM COVER SIDE
15. INSTALL RADIATOR SUPPORT OPENING COVER

KNOCK SENSOR (2AZ–FSE)

COMPONENTS

100LY–01

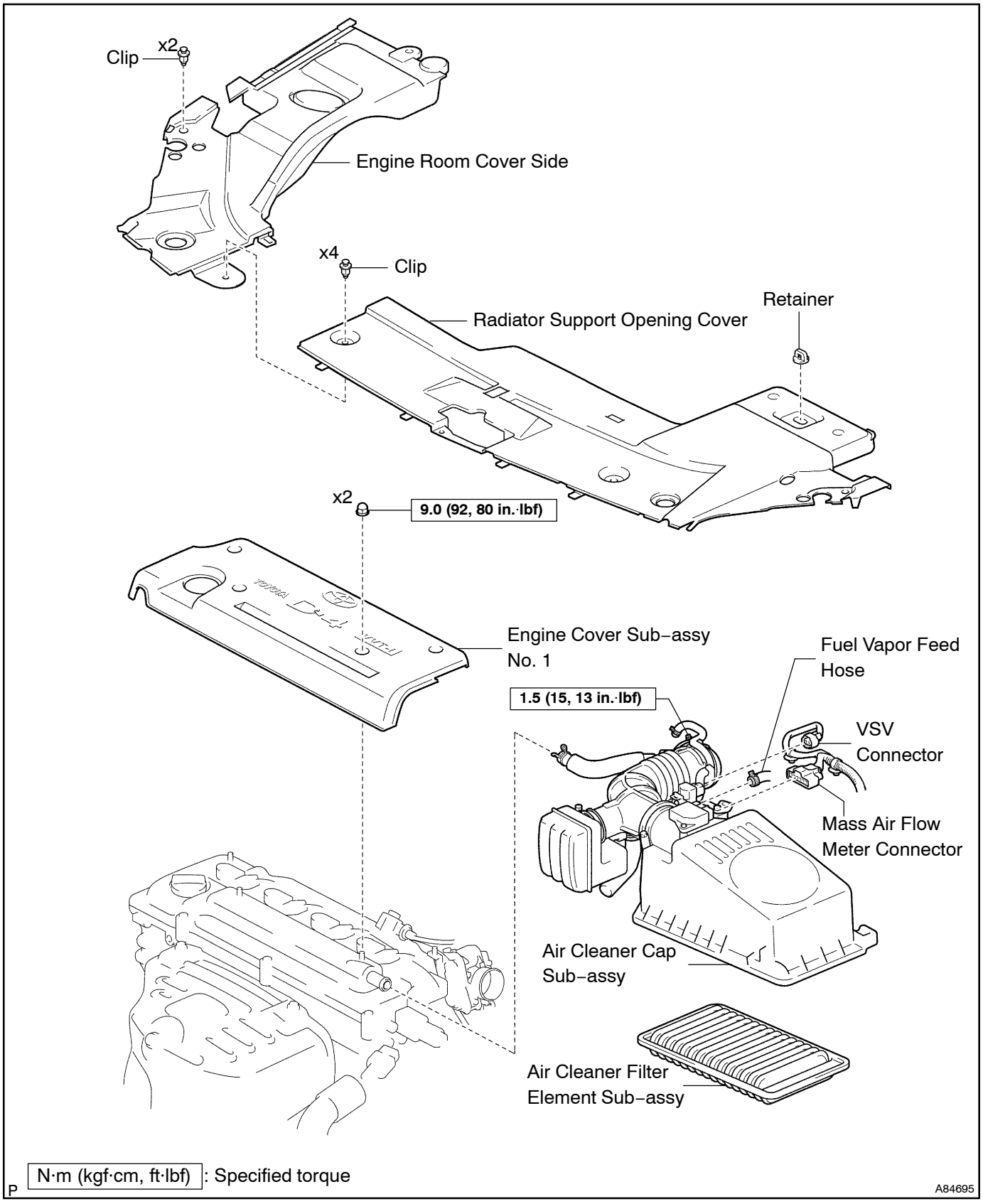

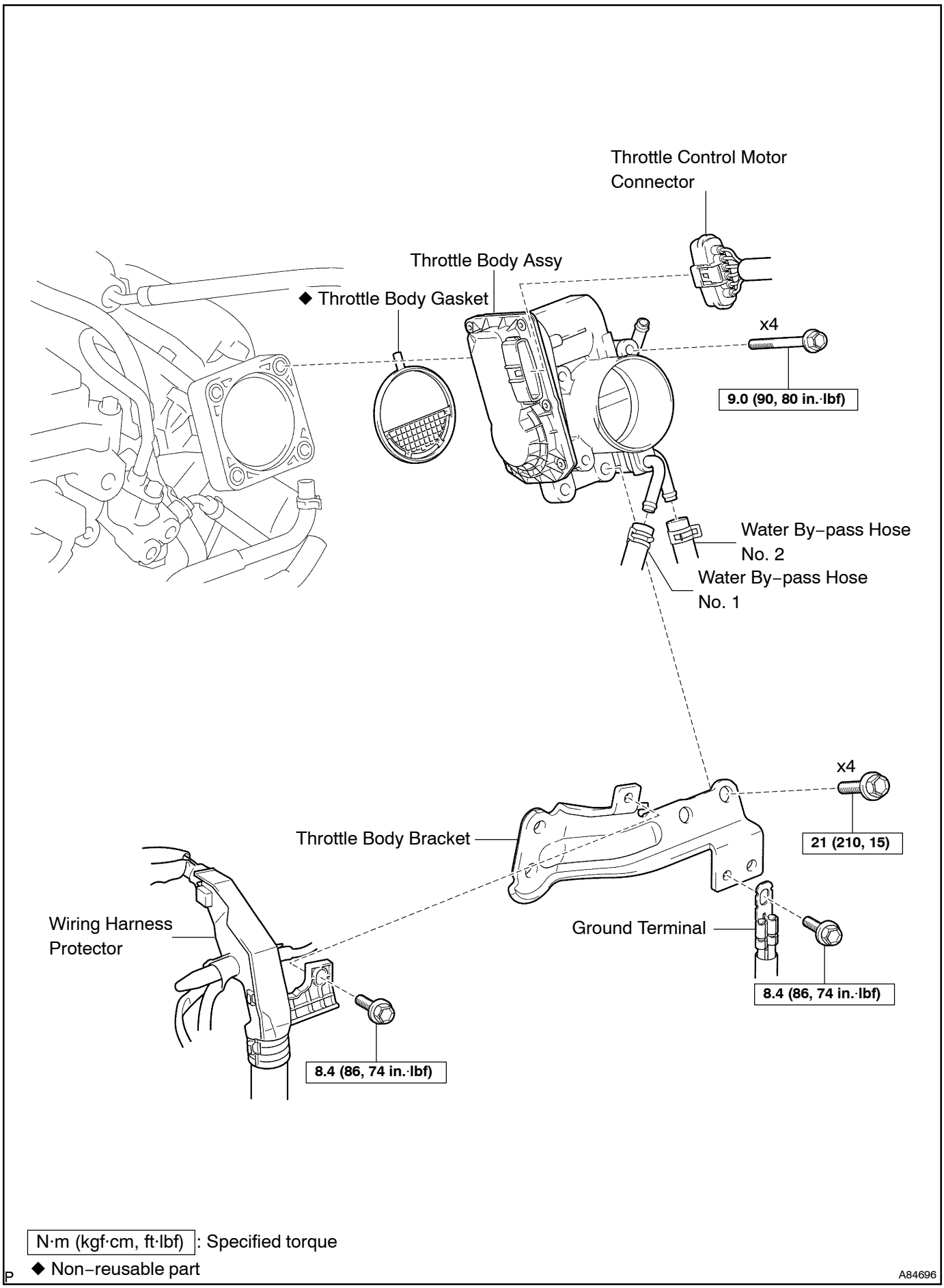

N·m (kgf·cm, ft·lbf) : Specified torque

◆ Non–reusable part

A84696

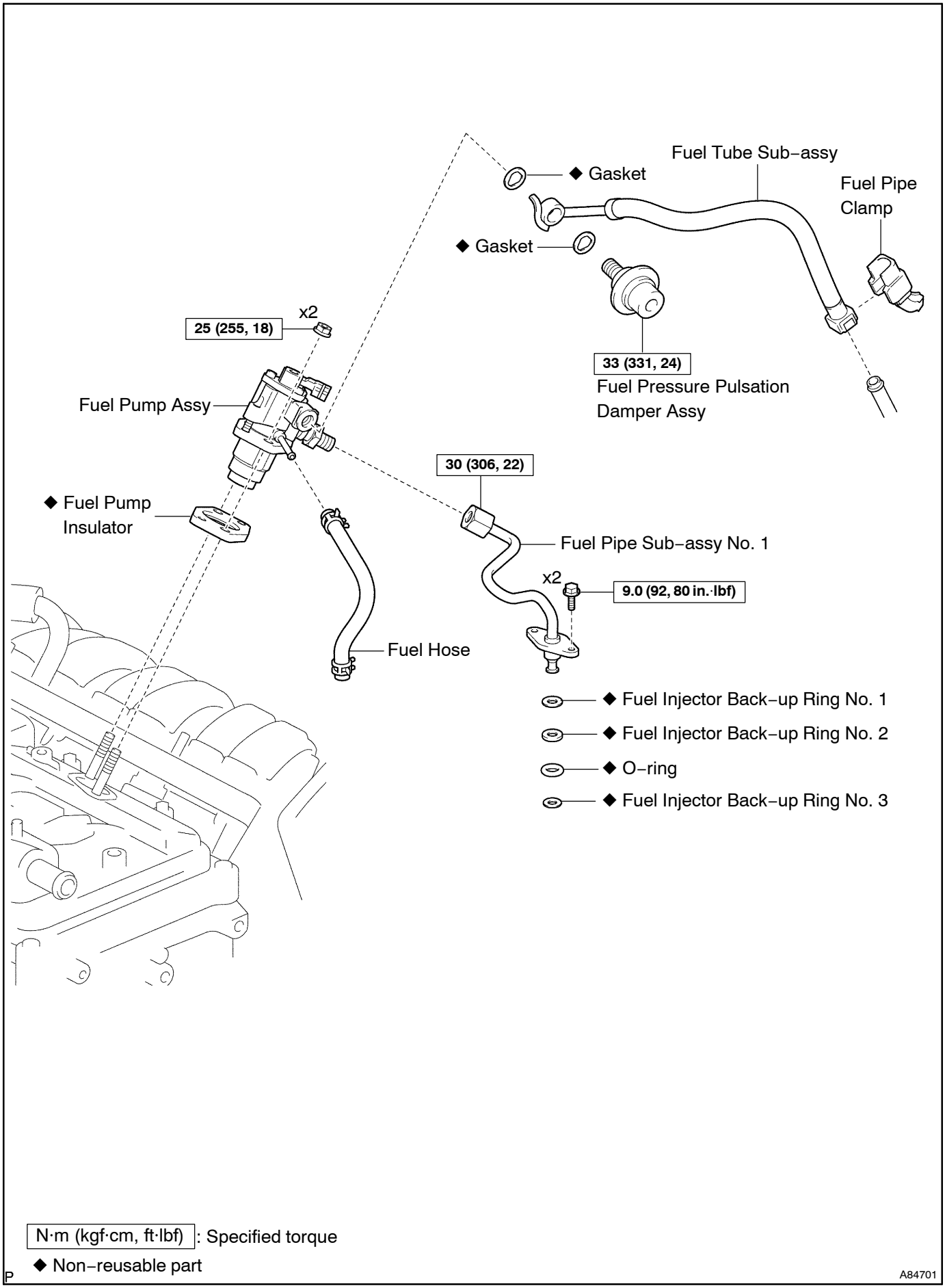

N·m (kgf·cm, ft·lbf) : Specified torque

◆ Non–reusable part

P

A84701

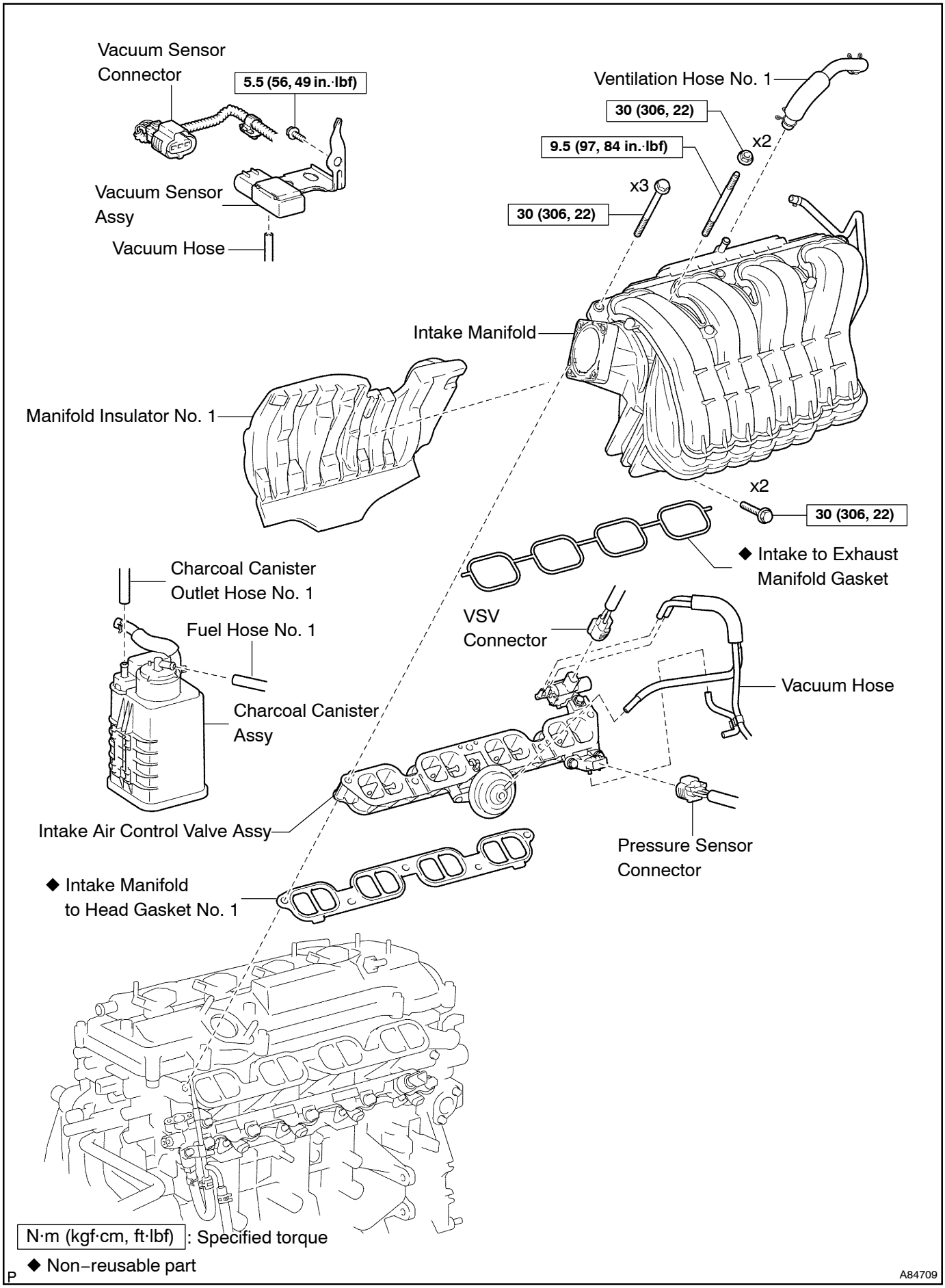
Vacuum Sensor Connector
5.5 (56, 49 in.·lbf)
Vacuum Sensor Assy
Vacuum Hose
Ventilation Hose No. 1
30 (306, 22)
x2
9.5 (97, 84 in.·lbf)
x3
30 (306, 22)
Intake Manifold
Manifold Insulator No. 1
x2
30 (306, 22)
◆ Intake to Exhaust Manifold Gasket
Charcoal Canister Outlet Hose No. 1
Fuel Hose No. 1
Charcoal Canister Assy
VSV Connector
Vacuum Hose
Intake Air Control Valve Assy
Pressure Sensor Connector
◆ Intake Manifold to Head Gasket No. 1
N·m (kgf·cm, ft·lbf) : Specified torque
◆ Non–reusable part
P
A84709

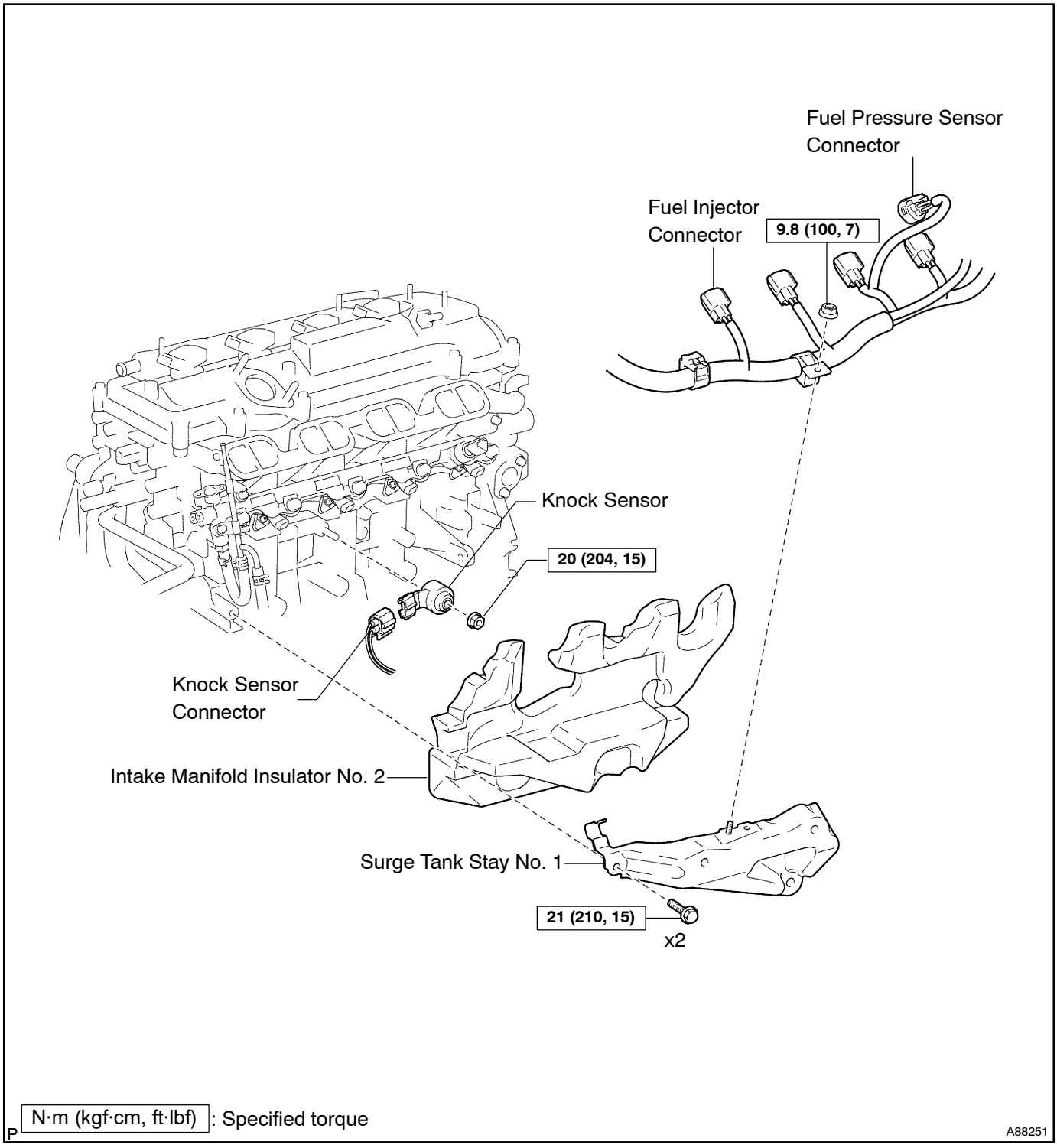
Fuel Pressure Sensor Connector
Fuel Injector Connector
9.8 (100, 7)
Knock Sensor
20 (204, 15)
Knock Sensor Connector
Intake Manifold Insulator No. 2
Surge Tank Stay No. 1
21 (210, 15)
x2
P
N·m (kgf·cm, ft·lbf): Specified torque
A88251

100LZ–01

REPLACEMENT

1. DISCHARGE FUEL SYSTEM PRESSURE (See page 11–1)
2. REMOVE RADIATOR SUPPORT OPENING COVER (See page 10–8)
3. REMOVE ENGINE ROOM COVER SIDE (See page 10–8)
4. DISCONNECT ENGINE WIRE NO.3 (BATTERY NEGATIVE TERMINAL)
5. REMOVE ENGINE COVER SUB–ASSY NO.1 (See page 10–8)
6. DRAIN ENGINE COOLANT (See page 16–7)
7. REMOVE AIR CLEANER CAP SUB–ASSY (See page 10–8)
8. REMOVE THROTTLE BODY ASSY (See page 10–8)
9. REMOVE FUEL TUBE SUB–ASSY (See page 11–24)
   SST 09617–24011
10. REMOVE FUEL HOSE (See page 11–24)
11. REMOVE FUEL PIPE SUB–ASSY NO.1 (See page 11–24)
    SST 09023–12900
12. REMOVE FUEL PUMP ASSY (See page 11–24)
13. REMOVE CHARCOAL CANISTER ASSY (See page 11–13)
14. REMOVE VACUUM SENSOR ASSY (LHD STEERING POSITION TYPE) (See page 11–13)
15. REMOVE INTAKE MANIFOLD (See page 11–4)
16. REMOVE SURGE TANK STAY NO.1 (See page 11–13)
17. REMOVE INTAKE MANIFOLD INSULATOR NO.2 (See page 11–13)

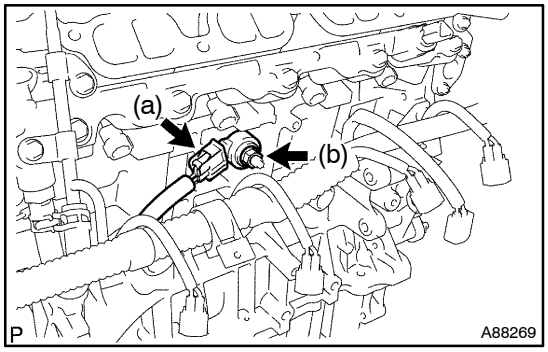

18. REMOVE KNOCK SENSOR
(a) Disconnect the knock sensor connector.
(b) Remove the nut, then remove the knock sensor.

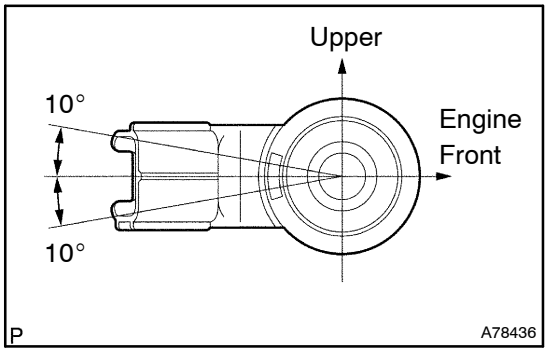

19. INSTALL KNOCK SENSOR
(a) Install the knock sensor with the nut as shown in the illustration.
Torque: 20 N·m (204 kgf·cm, 15 ft·lbf)
(b) Connect the knock sensor connector.

20. INSTALL INTAKE MANIFOLD INSULATOR NO.2
21. INSTALL SURGE TANK STAY NO.1 (See page 11–13)
22. INSTALL INTAKE MANIFOLD (See page 11–13)
23. INSTALL VACUUM SENSOR ASSY (LHD STEERING POSITION TYPE) (See page 11–13)
24. INSTALL CHARCOAL CANISTER ASSY

25. **INSTALL FUEL PUMP ASSY (See page 11–24)**
26. **INSTALL FUEL PIPE SUB–ASSY NO.1 (See page 11–24)**
    SST 09023–12900
27. **INSTALL FUEL HOSE**
28. **INSTALL FUEL TUBE SUB–ASSY (See page 11–24)**
    SST 09617–24011
29. **INSTALL THROTTLE BODY ASSY (See page 10–8)**
30. **INSTALL AIR CLEANER CAP SUB–ASSY (See page 10–8)**
31. **CONNECT ENGINE WIRE NO.3 (BATTERY NEGATIVE TERMINAL)**
    Torque: 5.4 N·m (55 kgf·cm, 48 in.·lbf)
32. **ADD ENGINE COOLANT (See page 16–7)**
33. **CHECK FOR ENGINE COOLANT LEAKS (See page 16–1)**
34. **CHECK FOR FUEL LEAKS (See page 11–4)**
35. **CHECK FOR ENGINE OIL LEAKS**
36. **INSTALL ENGINE COVER SUB–ASSY NO.1 (See page 10–8)**
37. **INSTALL ENGINE ROOM COVER SIDE**
38. **INSTALL RADIATOR SUPPORT OPENING COVER**

ACCELERATOR PEDAL ASSY (2AZ–FSE)

100M0–01

REPLACEMENT

1. DISCONNECT ENGINE WIRE NO.3 (BATTERY NEGATIVE TERMINAL)

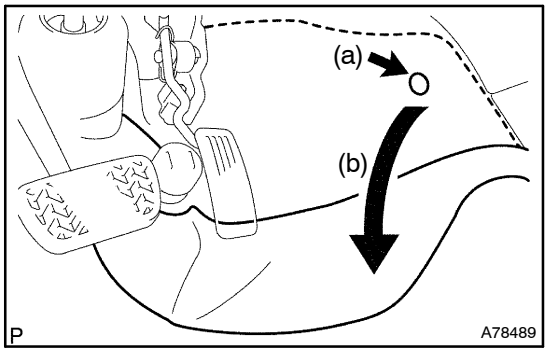

2. REMOVE ACCELERATOR PEDAL ASSY

(a) Using a clip remover, remove the clip.

(b) Open the floor carpet.

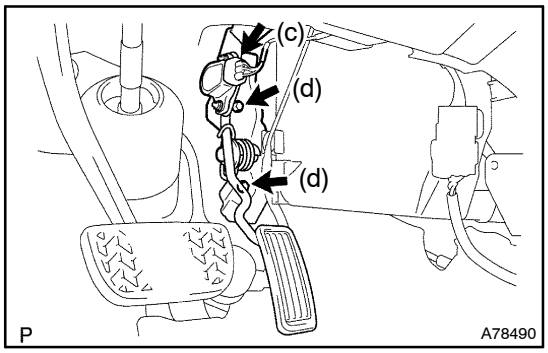

(c) Disconnect the accelerator position sensor connector.

(d) Remove the 2 bolts, then remove the accelerator pedal.

3. INSTALL ACCELERATOR PEDAL ASSY
Torque: 5.4 N·m (55 kgf·cm, 48 in.·lbf)

4. CONNECT ENGINE WIRE NO.3 (BATTERY NEGATIVE TERMINAL)
Torque: 5.4 N·m (55 kgf·cm, 48 in.·lbf)

ECD SYSTEM (1CD–FTV)(From September, 2003)

100M2–01

ON–VEHICLE INSPECTION

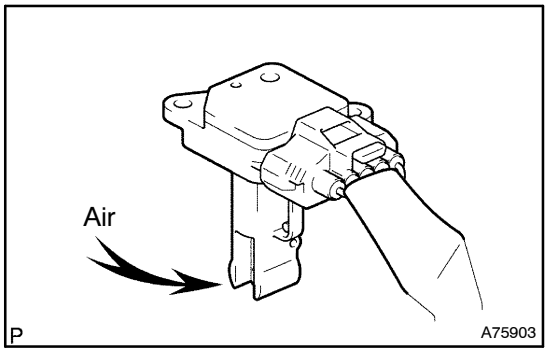

1. INSPECT MASS AIR FLOW METER

(a) If you have the hand–held tester:
Check the operation.
(1) Connect the hand–held tester to the DLC3.
(2) Turn the ignition switch to ON.
(3) Select the item "DIAGNOSIS / OBD / MOBD / DATA LIST" on the hand–held tester.
(4) Blow air into the mass air flow (MAF) meter, then check that the MAF reading in DATA LIST fluctuates.

If the operation is not as specified, check the MAF meter (see page 10–22), wiring and ECM.

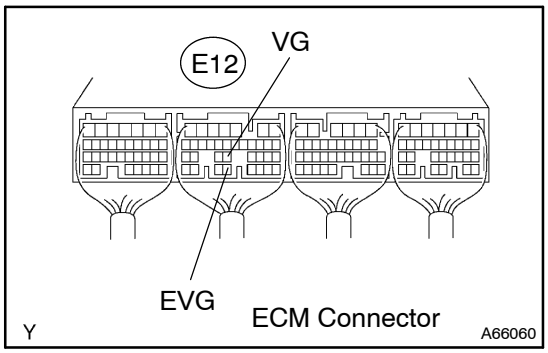

(b) If you have no hand–held tester:
Check the operation.
(1) Turn the ignition switch to ON.
(2) Connect the positive tester probe of a voltmeter to terminal VG of the ECM, and the negative tester probe of the voltmeter to terminal EVG of the ECM.
(3) Blow air into the MAF meter, then check that the voltage fluctuates.

If the operation is not as specified, check the MAF meter (see page 10–22), wiring and ECM.

2. INSPECT INTAKE SHUTTER

(a) Listen to the operating sounds of the throttle control motor.
(1) Turn the ignition switch to ON.
(2) Listen to the operating sounds while turning the accelerator pedal position sensor lever.

If a collision sound is heard, check the throttle control motor.
If no sound is heard, check the wire harness and ECM.

(b) If you have the hand–held tester:
Inspect the throttle position sensor.
(1) Connect the hand–held tester to the DLC3.
(2) Turn the ignition switch to ON.
(3) Select the item "DIAGNOSIS / OBD / MOBD / DATE LIST" on the hand held–tester.

(4) When turning the accelerator pedal position sensor lever to the full–open position, check that the throttle valve opening percentage (THROTTLE POS) of DATA LIST shows the standard value.

Standard throttle valve opening percentage:
60 % or higher

If the operation is not as specified, check the accelerator pedal position sensor (see page 10–22), wiring and ECM.

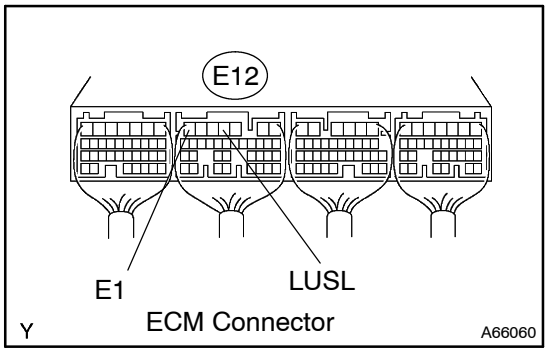

(c) If you have no hand–held tester:

(1) Inspect the throttle position sensor using a oscilloscope.

(2) During idling, check the waveform between the specified terminals of the E12 ECM connectors.

Standard:

Tester Connection	Specified Condition
LUSL (E12–4) – E1 (E12–7)	Correct waveform is as shown on the left

If the operation is not as specified, check the accelerator pedal position sensor (see page 10–22), wiring and ECM.

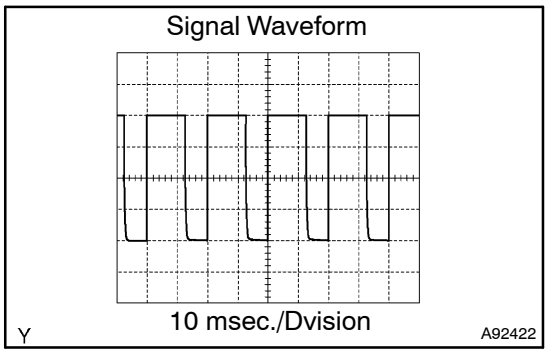

(d) Inspect the air assist system.

(1) Start the engine, then check that the check engine warning light does not light up.

(2) Allow the engine to warm up to the normal operating temperature.

(3) Turn the A/C compressor ON to OFF, then check the idle speed (see page 14–87).

Idle speed (transmission in neutral): 800 ± 50 rpm

If the result is not as specified, check the wiring and ECM.

NOTICE:

Perform the inspection under condition without electrical load.

(e) After taking the above steps (b) to (c), perform the driving test.

(f) Check that there is no sense of incongruity.

3. INSPECT ACCELERATOR PEDAL POSITION SENSOR

(a) If you have the hand–held tester:
Inspect the accelerator pedal position sensor.
(1) Connect the hand–held tester to the DLC3.
(2) Turn the ignition switch to ON.

(b) Select the item "DIAGNOSIS / OBD / MOBD / DATE LIST" on the hand–held tester.
(1) Check that the voltage (ACCEL POS) of DATA LIST shows the standard value.
Accelerator pedal released: 0.5 to 1.1 V
Accelerator pedal depressed: 3.0 to 4.6 V
(2) Check that the voltage (ACCEL POS #2) of DATA LIST shows the standard value.
Accelerator pedal released: 0.9 to 2.3 V
Accelerator pedal depressed: 3.4 to 5.0 V

If the result is not as specified, check the accelerator pedal position sensor (see page 10–22), wiring and ECM.

(c) If you have no hand–held tester:
Inspect the accelerator pedal position sensor.

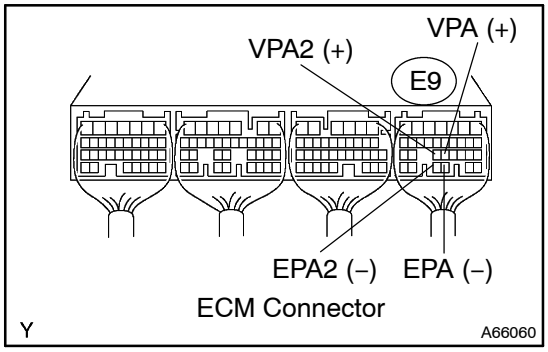

(1) Turn the ignition switch to ON.
(2) Measure the voltage between the specified terminals of the E9 ECM connector.

Accelerator Pedal Position	Tester Connection	Specified Condition	Tester Connection	Specified Condition
Released	VPA (E9–22) –EPA (E9–28)	0.5 to 1.1 V	VPA2 (E9–23) –EPA2 (E9–29)	0.9 to 2.3 V
Depressed	VPA (E9–22) –EPA (E9–28)	3.0 to 4.6 V	VPA2 (E9–23) –EPA2 (E9–29)	3.4 to 5.0 V

If the result is not as specified, check the accelerator pedal position sensor (see page 10–22), wiring and ECM.

100M3–01

INSPECTION

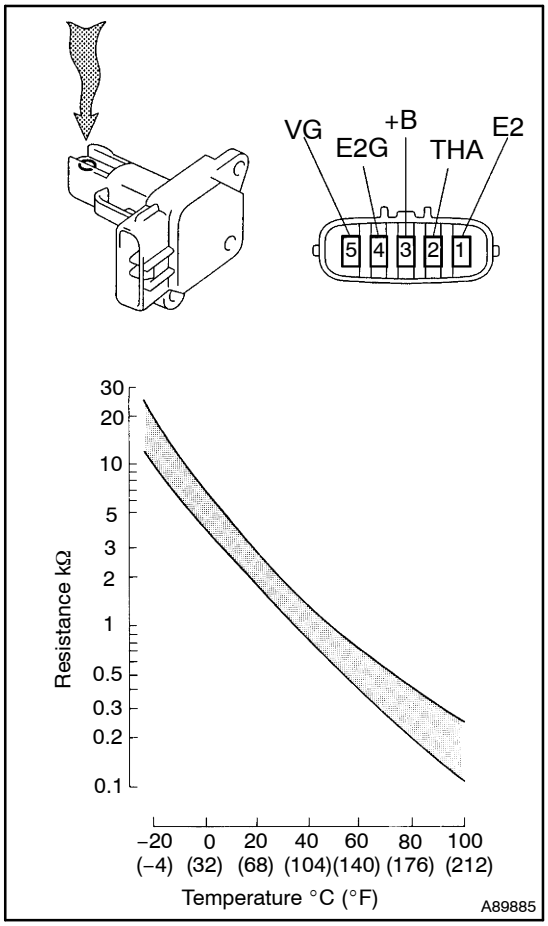

1. INSPECT MASS AIR FLOW METER

(a) Check the operation.

(1) Apply battery voltage across terminals 3 (+B) and 4 (E2G).

(2) Using a voltmeter, connect the positive (+) tester probe to terminal VG, and negative (–) tester probe to terminal E2G.

(3) Blow air into the MAF meter, then check that the voltage fluctuates.

(b) Inspect the resistance.

(1) Using an ohmmeter, measure the resistance between terminals 2 (THA) and 1 (E2).

Resistance:

12.5 to 16.9 kΩ at –20°C (–4°F)

2.19 to 2.67 kΩ at 20°C (68°F)

0.50 to 0.68 kΩ at 60°C (140°F)

If the result is not as specified, replace the MAF meter.

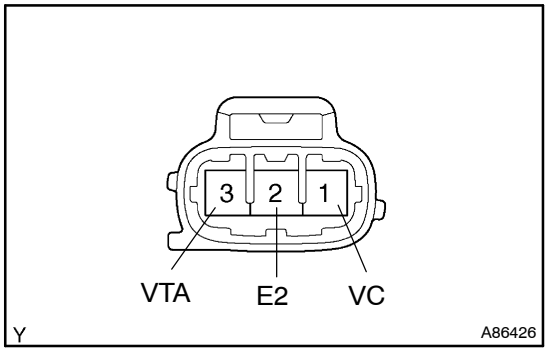

2. INSPECT INTAKE SHUTTER ASSY

(a) Inspect the resistance of the throttle position sensor.

(1) Using an ohmmeter, measure the resistance between terminals 1 (VC) and 2 (E2).

Resistance: 4.0 to 8.0 kΩ

If the result is not as specified, replace the intake shutter.

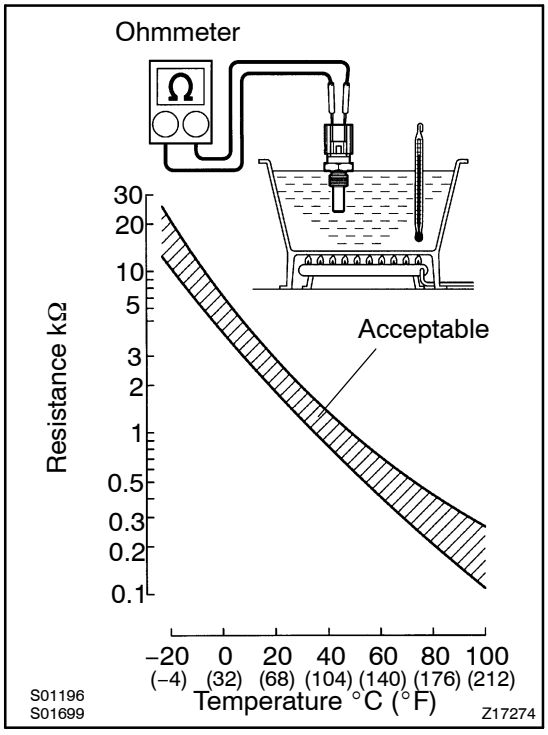

3. INSPECT DIESEL ENGINE ENGINE COOLANT TEMPERATURE SENSOR

(a) Inspect the resistance.

(1) Using an ohmmeter, measure the resistance between the terminals.

Resistance:

2.32 to 2.59 kΩ at 20°C (68°F)

0.310 to 0.326 kΩ at 80°C (176°F)

If the result is not as specified, replace the diesel engine engine coolant temperature sensor.

NOTICE:

In case of checking the water temperature sensor in the water, be careful not to allow water to go into the terminals. After checking, wipe out the sensor.

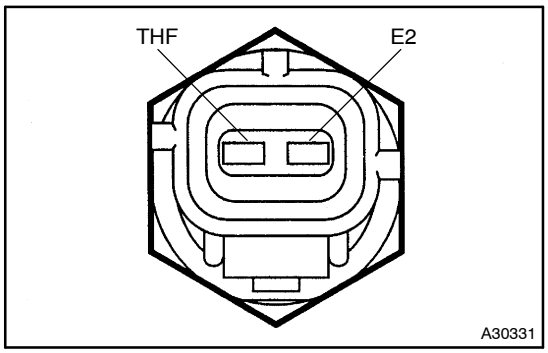

4. INSPECT FUEL TEMPERATURE SENSOR

(a) Inspect the resistance.

(1) Using an ohmmeter, measure the resistance between the terminals.

Resistance:

2.21 to 2.69 kΩ at 20°C (68°F)

0.287 to 0.349 kΩ at 80°C (176°F)

If the result is not as specified, replace the fuel temperature sensor.

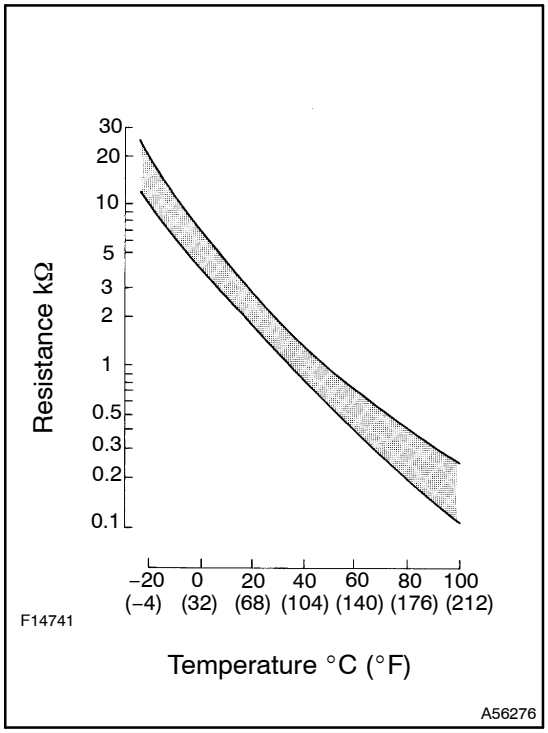

5. INSPECT DIESEL TURBO INLET AIR TENPERATURE SENSOR

(a) Inspect the resistance.

(1) Using an ohmmeter, measure the resistance between the terminals.

Resistance:

2.21 to 2.65 kΩ at 20°C (68°F)

If the result is not as specified, replace the diesel turbo inlet air temperature sensor.

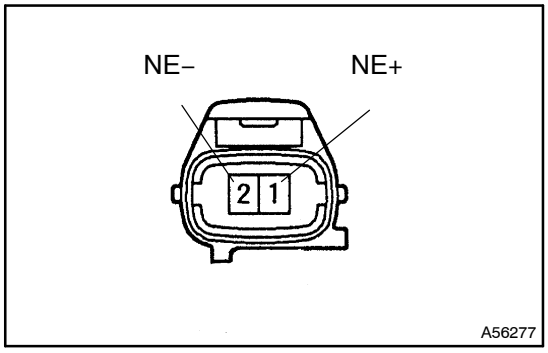

6. INSPECT CRANKSHAFT POSITION SENSOR

(a) Inspect the resistance.

(1) Using an ohmmeter, measure the resistance between the terminals.

Resistance:
1630 to 2740 Ω at cold
2065 to 3225 Ω at hot

If the result is not as specified, replace the crankshaft position sensor.

NOTICE:

"Cold" and "Hot" in the above sentences mean the temperature of the sensor itself. "Cold" is from –10°C (14°F) to 50°C (122°F) and "Hot" is from 50°C (122°F) to 100°C (212°F).

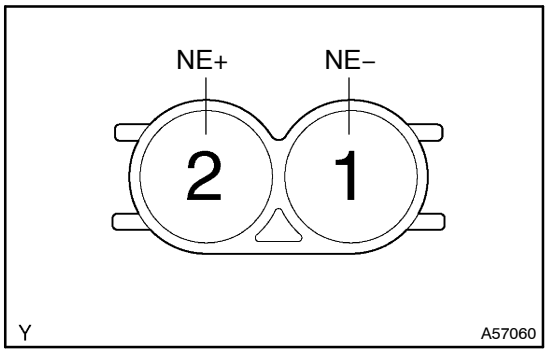

7. INSPECT CAMSHAFT POSITION SENSOR

(a) Inspect the resistance.

(1) Using an ohmmeter, measure the resistance between the terminals.

Resistance:
1630 to 2740 Ω at cold
2065 to 3225 Ω at hot

If the result is not as specified, replace the camshaft position sensor.

NOTICE:

"Cold" and "Hot" in the above sentences mean the temperature of the sensor itself. "Cold" is from –10°C (14°F) to 50°C (122°F) and "Hot" is from 50°C (122°F) to 100°C (212°F).

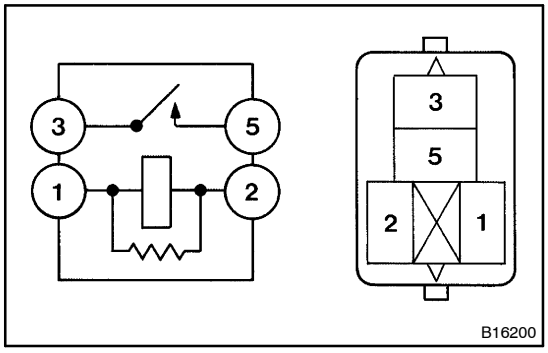

8. INSPECT EDU RELAY

(a) Inspect the resistance.

(1) Using an ohmmeter, measure the resistance between the terminals.

Specified condition:

Tester Connection	Specified Condition
3 – 5	10 kΩ or Higher
3 – 5	Below 1 Ω (When battery voltage is applied to terminals 1 and 2)

If the result is not as specified, replace the EDU relay.

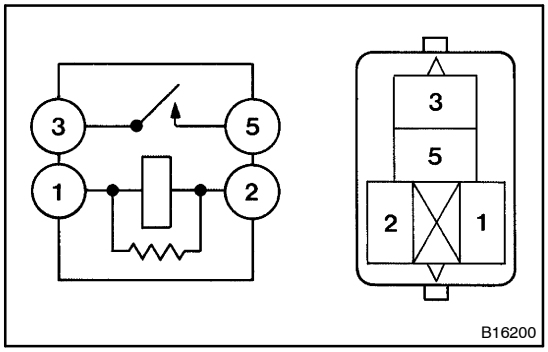

9. INSPECT EFI MAIN RELAY

(a) Inspect the resistance.

(1) Using an ohmmeter, measure the resistance between the terminals.

Specified condition:

Tester Connection	Specified Condition
3 – 5	10 kΩ or Higher
3 – 5	Below 1 Ω (When battery voltage is applied to terminals 1 and 2)

If the result is not as specified, replace the EFI main relay.

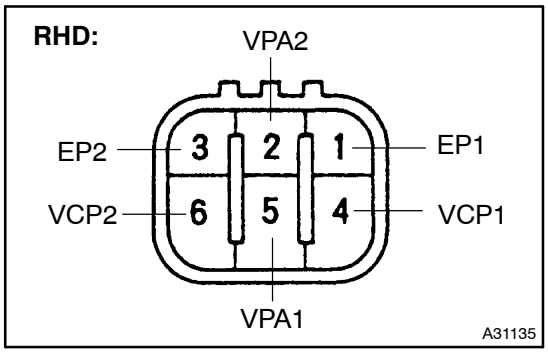

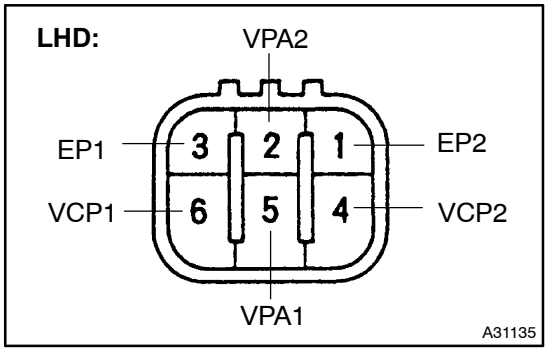

10. INSPECT ACCELERATOR PEDAL ASSY

(a) Inspect the resistance.

(1) Using an ohmmeter, measure the resistance between the terminals.

Resistance:

RHD:

Tester Connection	Specified Condition
5 (VPA1) – 1 (EP1)	5.0 kΩ or less
2 (VPA2) – 3 (EP2)	5.0 kΩ or less
4 (VCP1) – 1 (EP1)	1.5 to 6.0 kΩ
6 (VCP2) – 3 (EP2)	1.5 to 6.0 kΩ

LHD:

Tester Connection	Specified Condition
5 (VPA1) – 3 (EP1)	5.0 kΩ or less
2 (VPA2) – 1 (EP2)	5.0 kΩ or less
6 (VCP1) – 3 (EP1)	1.5 to 6.0 kΩ
4 (VCP2) – 1 (EP2)	1.5 to 6.0 kΩ

If the result is not as specified, replace the accelerator pedal assembly.

INTAKE SHUTTER ASSY (1CD–FTV)(From September, 2003)

100FN–02

COMPONENTS

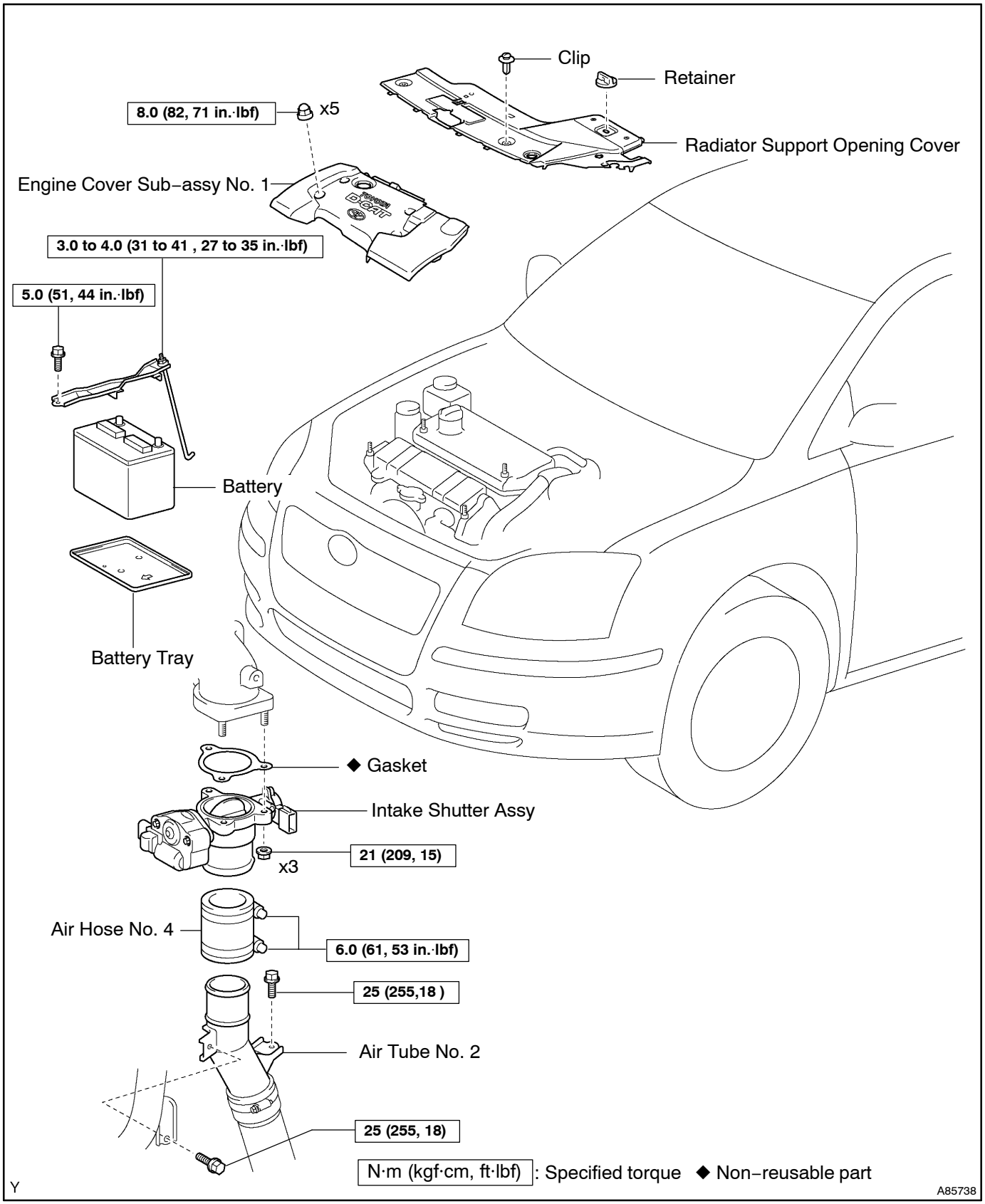

100FO–02

Removal & Installation and Disassembly & Reassembly

1. REMOVE RADIATOR SUPPORT OPENING COVER

2. REMOVE ENGINE COVER SUB–ASSY NO.1

(a) Remove the 5 nuts and engine cover.

3. REMOVE BATTERY

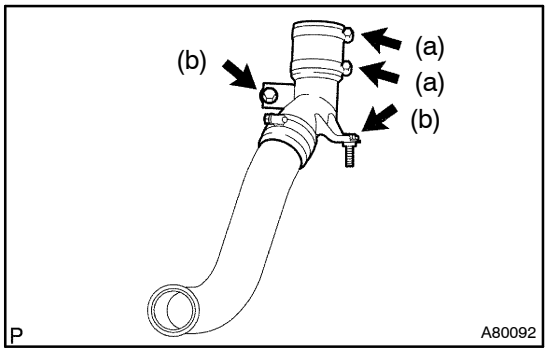

4. REMOVE AIR HOSE NO.4

(a) Loosen the 2 hose clamps.

(b) Remove the 2 bolts, then separate the air tube No. 2.

(c) Remove the air hose No. 4.

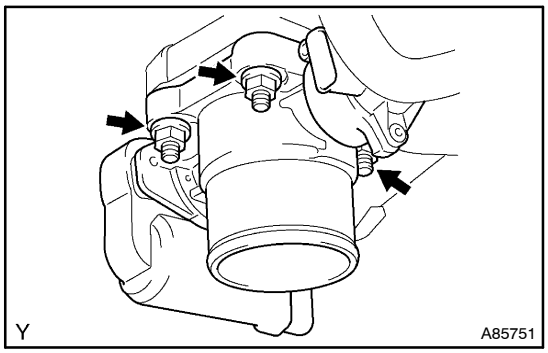

5. REMOVE INTAKE SHUTTER ASSY

(a) Disconnect the 2 connectors.

(b) Remove the 3 nuts, then remove the intake shutter and gasket.

6. INSTALL INTAKE SHUTTER ASSY

(a) Install a new gasket and the intake shutter with the 3 nuts.

Torque: 21 N·m (209 kgf·cm, 15 ft·lbf)

7. INSTALL AIR HOSE NO.4

(a) Install the air hose No. 4 to the air tube No. 2.

(b) Install the air tube No. 2 with the 2 bolts.

Torque: 25 N·m (255 kgf·cm, 18 ft·lbf)

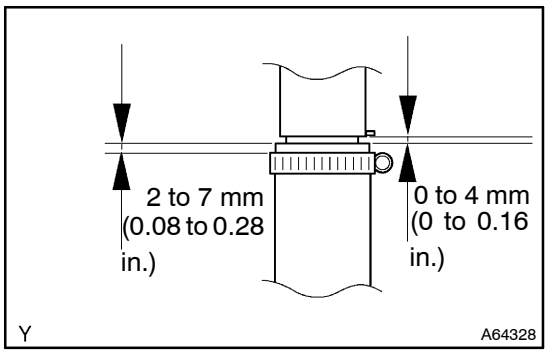

(c) Install the air hose and hose clamps as shown in the illustration.

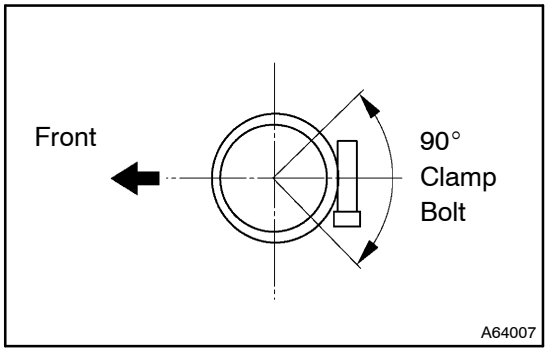

(d) Tighten the hose clamps as shown in the illustration.
Torque: 6.0 N·m (61 kgf·cm, 53 in.·lbf)

8. INSTALL ENGINE COVER SUB–ASSY NO.1

(a) Install the engine cover with the 5 nuts.
Torque: 8.0 N·m (82 kgf·cm, 71 in.·lbf)

9. INSTALL BATTERY
Torque:
5.0 N·m (51 kgf·cm, 44 in.·lbf) for bolt
3.0 to 4.0 N·m (31 to 41 kgf·cm, 27 to 35 in.·lbf) for nut

ECM (From September, 2003)

100LT–01

REPLACEMENT

NOTICE:

1CD–FTV Engine Type:

- **If an incorrect injector compensation code was registered with the ECM, it may rattle the engine assembly or the engine idling may become rough. In addition, it may become a cause of engine failure or shorten the life of the engine.**
- **If you replace the ECM with a new one, register all the injectors' injector compensation codes with the new ECM as follows:**

(a) Prior to replacing the ECM, read all the compensation codes stored in the existing ECM using the hand–held tester, then write them down (see page 05–273).

(b) After replacing the ECM, enter the written compensation codes into the ECM using the hand–held tester (see page 05–277).

(c) Turn the ignition switch to OFF, then wait for 30 seconds or more.

(d) Turn the ignition switch to ON, then clear DTC P1601 using the hand–held tester (see page 05–290).

HINT:

- In order to optimize the injector's fuel injection characteristic, the ECM compensates the injection duration by each cylinder. The ECM stores and uses compensating data in the form of a 30–digit–alphanumeric value that is imprinted on the head portion of each injector as the injector compensation code.
- If you installed a new injector, its own injector compensation code is needed to register with the ECM. Also, if you replaced the ECM, the compensation codes of all the injectors are needed to register because the new ECM does not have the codes until they are registered.
- Once the ECM is replaced, DTC P1601 will be present when turning the ignition switch to ON. This is to inform you that the injector compensation codes are required to register with the ECM. In order to clear the DTC, register the compensation codes first, then turn the ignition switch to OFF and wait for 30 seconds or longer.

1. REMOVE GLOVE COMPARTMENT DOOR ASSY (See Pub. No. RM1018E on page 71–11)

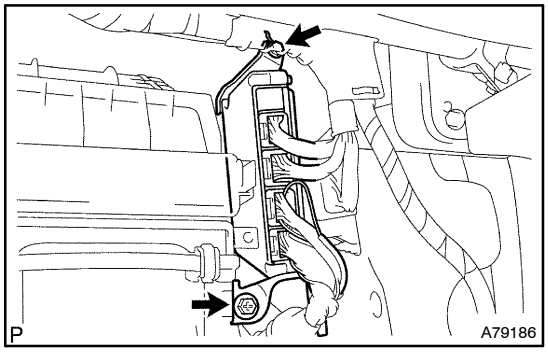

2. REMOVE ECM

(a) Disconnect the 4 ECM connectors (1ZZ–FE, 3ZZ–FE, 1AZ–FE, 1CD–FTV).

(b) Disconnect the 5 ECM connectors (1AZ–FSE, 2AZ–FSE).

(c) Disconnect the wire harness clamp.

(d) Remove the bolt and screw, then remove the ECM.

(e) Remove the 2 screws and ECM bracket No. 1 from the ECM.

(f) Remove the 2 screws and ECM bracket No. 2 from the ECM.

3. INSTALL ECM

Torque: 5.5 N·m (56 kgf·cm, 49 in.·lbf)

4. INSTALL GLOVE COMPARTMENT DOOR ASSY (See Pub. No. RM1018E on page 71–11)

5. REGISTRATION OF INJECTOR COMPENSATION CODE (1CD–FTV ENGINE TYPE) (See page 05–277)

6. CLEAR DTC (1CD–FTV ENGINE TYPE)

(a) Turn the ignition switch to OFF, then wait for 30 seconds or longer.

(b) Turn the ignition switch to ON, then clear DTC P1601 using the hand–held tester (see page 05–290).

FUEL SYSTEM (2AZ–FSE)

11110–01

PRECAUTION

1. PRECAUTION

(a) Before working on the fuel system, disconnect the engine wire No. 3 (battery negative terminal).
(b) Do not smoke or work near fire when handling the fuel system.
(c) Keep gasoline away from any rubber or leather parts.

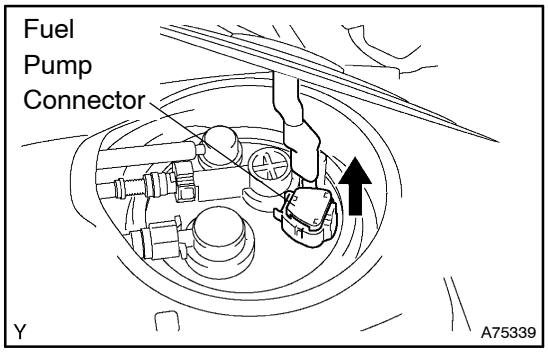

2. DISCHARGE FUEL SYSTEM PRESSURE

CAUTION:

- **Do not disconnect any part of the fuel system until you have discharged the fuel system pressure.**
- **Even after discharging the fuel pressure, place a shop rag over fittings as you separate them to reduce risk of fuel spray on yourself or in the engine compartment.**

(a) Disconnect the fuel pump connector.
(b) Start the engine. After the engine stopped, turn the ignition switch OFF.
(c) Disconnect the engine wire No. 3 (battery negative terminal).
(d) Connect the fuel pump connector.

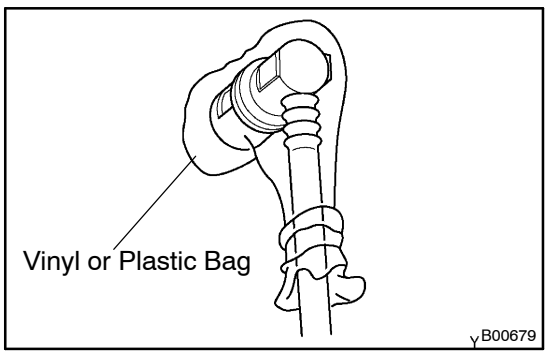

3. FUEL SYSTEM

(a) When disconnecting the high fuel pressure line, a large amount of gasoline will spill out, so observe the following procedure:
  (1) Discharge fuel system pressure (see step 2).
  (2) Disconnect the fuel pump tube (see page 11–29).
  (3) Drain the remaining fuel inside the fuel pump tube.
  (4) Cover the disconnected fuel pump tubes with a vinyl or a plastic bag to prevent any damage and dirt.
  (5) Place a tray under the vehicle or point of disconnection to catch any fuel that may spill.
(b) Take the following precautions when removing and installing the fuel injectors.

NOTICE:

Never reuse the O–ring.

  (1) When installing a new O–ring to the injector, be careful not to damage the injector.
  (2) Coat the new O–ring with grease or gasoline before installing. Never use engine oil, gear oil or brake oil.

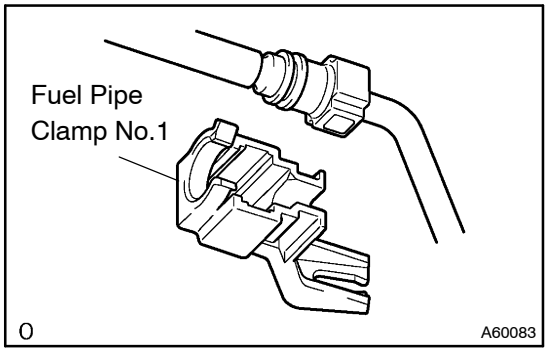

(c) Take the following precautions when disconnecting the fuel tube connector (quick type).
(1) Remove the fuel pipe clamp No.1.
(2) Check the pipe and around the connector for dirt or mud before disconnecting them. Clean them if necessary.

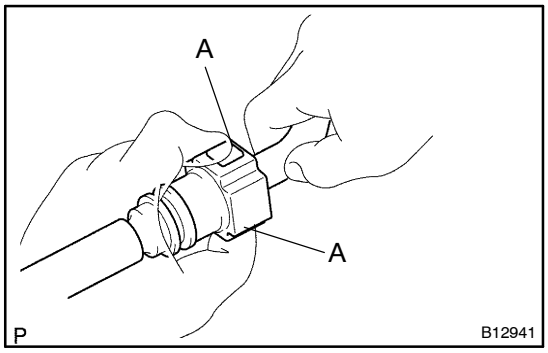

(3) Disconnect the connector from the hose while pinching portion A with fingers as shown in the illustration.

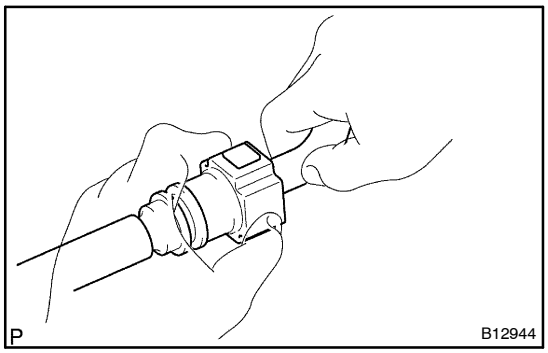

(4) When the connector and the pipe are stuck, push and pull the connector to release and pull the connector out from the pipe carefully.
(5) Check the sealing surface of the disconnected pipe for dirt or mud. Clean it away if necessary.

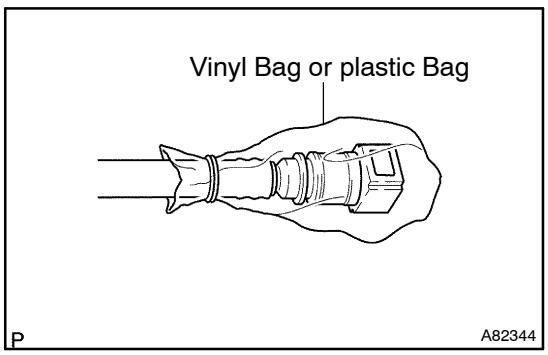

(6) To prevent the disconnected pipe and connector from being damaged and foreign objects from being introduced, cover them with a vinyl or plastic bag.

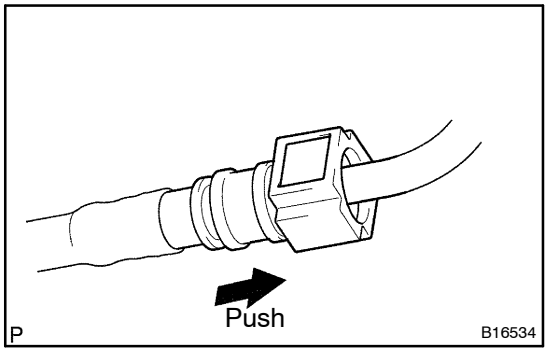

(d) Take the precautions when connecting the fuel tube connectors (Quick Type):
(1) Check the connected part of the pipe for any damage or foreign objects.
(2) Align the axis of the connector with the axis of the pipe, then push into the connector until the connector makes a ”click” sound. If the connection is tight, apply a little amount of fresh engine oil on the tip of the pipe.

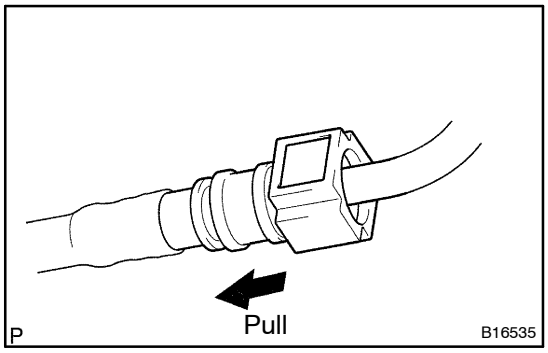

(3) After finishing the connection, check if the pipe and the connector are securely connected by pulling on them.
(4) Check for fuel leaks.

4. CHECK FOR FUEL LEAKS

(a) Check that there are no fuel leaks after doing maintenance anywhere on the fuel system (see page 11–4).

11111–01

ON–VEHICLE INSPECTION

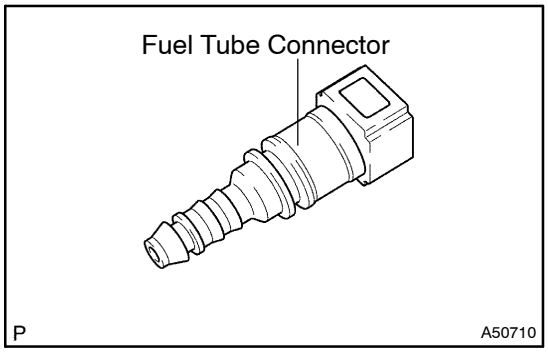

1. CHECK FUEL PRESSURE

(a) Discharge the pressure in the fuel system and take precautions for possible fuel spillage (see page 11–1).

(b) Check that the battery voltage is above 12 V.

(c) Disconnect the negative (–) battery cable.

(d) Pull out the connecter from a new fuel tube.

HINT:

Part No. 23901–28160

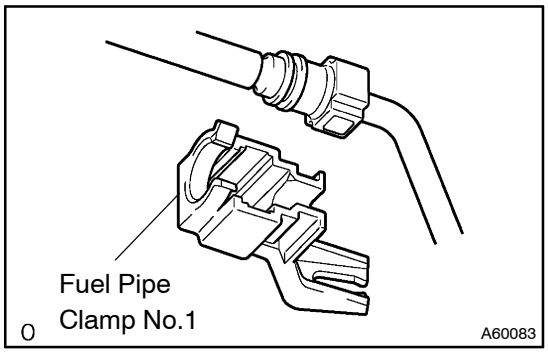

(e) Detach the fuel tube clamp from the fuel tube connector.

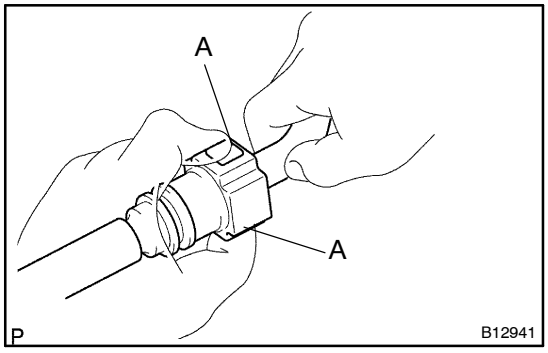

(f) Disconnect the fuel tube connector from the fuel pipe while pinching portion A with your fingers as shown in the illustration.

CAUTION:

- **Do not disconnect the fuel tube connector (quick type) until you have discharged the fuel system pressure and taken appropriate steps to prevent fuel spillage.**
- **There may be some pressure remained in the fuel lines after discharging the pressure.**
  Take precautions to prevent fuel from spraying on you, your clothing or inside the engine compartment.

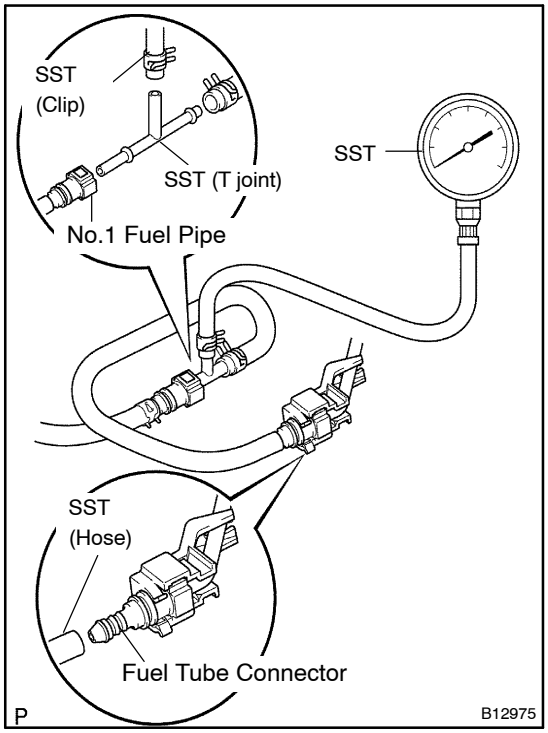

(g) Install SST (pressure gauge) and the fuel tube connector using SST as shown in the illustration.
SST 09268–41047(95336–08070),09268–45014 (09268–41250, 09268–41200, 09268–41220)
(h) Wipe up any gasoline.
(i) Reconnect the negative (–) battery cable.
(j) Connect the hand–held tester to the DLC3.
(k) Measure the fuel pressure.
Fuel pressure:
196 to 588 kPa (2 to 6 kgf/cm^2, 28 to 85 psi)

If pressure is high, replace the fuel pressure regulator.
If pressure is low, check the fuel hose connections, fuel pump, fuel filter and fuel pressure regulator.

(l) Disconnect the hand–held tester from the DLC3.
(m) Start the engine.
(n) Measure the fuel pressure at idle.
Fuel pressure:
196 to 588 kPa (2 to 6 kgf/cm^2, 28 to 85 psi)
(o) Stop the engine.
(p) Check that the fuel pressure remains as specified for 5 minutes after the engine has stopped.
Fuel pressure:147 kPa (1.5 kgf/cm^2, 21 psi) or more

If pressure is not as specified, check the fuel pump, pressure regulator and/or fuel injectors.

(q) After checking the fuel pressure, disconnect the negative (–) battery cable and carefully remove SST and the fuel tube connector to prevent gasoline splash.
(r) Reconnect the No. 1 fuel pipe (fuel tube connector).

CAUTION:
After taking the precautions, connect the fuel tube connecter (quick type).

2. CHECK FUEL PUMP OPERATION AND CHECK FOR FUEL LEAKS

(a) When using the hand–held tester.
(1) Connect the hand–held tester to the DLC3.
(2) Turn the ignition switch ON and the hand–held tester main switch ON.

NOTICE:
Do not start the engine.

(3) Select the ACTIVE TEST mode on the hand–held tester.
(4) Perform the active test. Check that the fuel pump operates and check for fuel leaks.

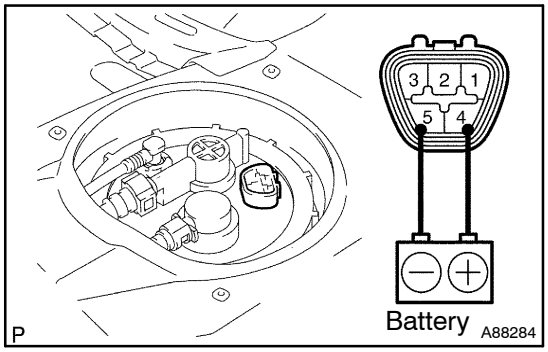

(b) When not using the hand–held tester.
(1) Connect the positive (+) lead form the battery to terminal 4 of the connector, and connect the negative (–) lead to terminal 5.
(2) Check that the pump operates.

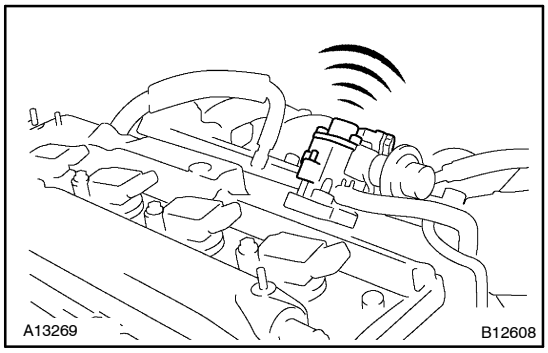

3. CHECK FUEL PUMP OPERATION (HIGH PRESSURE)

(a) Remove the engine cover No. 1 (see page 10–8).
(b) Start the engine.
(c) Using a sound scope, hear the operating sound of the pump.

If there is no sound, replace the fuel pump.

(d) Stop the engine.
(e) Reinstall the engine cover No. 1 (see page 10–8).

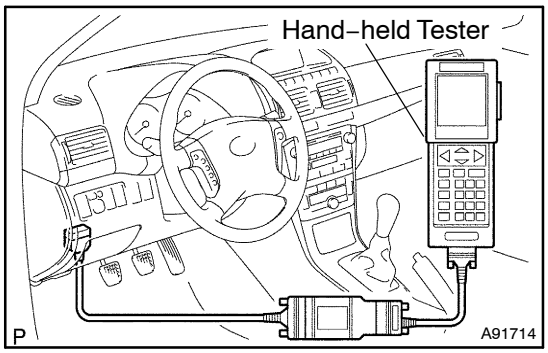

4. CHECK FUEL HIGH PRESSURE

(a) Connect the hand–held tester to the DLC3.
(b) Start the engine.
(c) Select the ACTIVE TEST mode on the hand–held tester.
(d) Perform the ACTIVE TEST check the fuel high pressure at idle to 3,000 rpm.

Fuel high pressure:

9.5 to 10.5 Mpa (97 to 107 kgf/cm^2, 1,380 to 1,520 psi)

If the pressure is not as specified, check the fuel pump, high pressure fuel pump, fuel pressure sensor, wiring and fuel leakage.

(e) Stop the engine.
(f) Disconnect the hand–held tester.

11112–01

INSPECTION

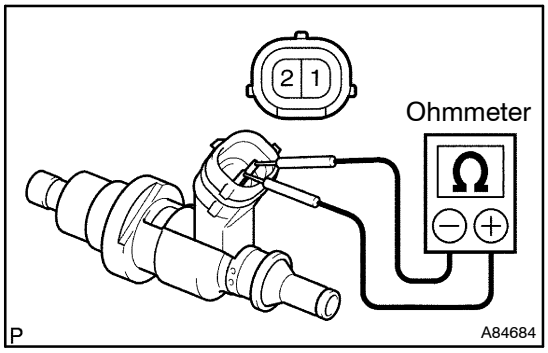

1. INSPECT FUEL INJECTOR ASSY

NOTICE:

This inspection aims at inspecting the fuel injectors for open or short, because the fuel injectors of this vehicle are high–pressure type and do not allow to inspect fuel injection volume.

(a) Inspect the resistance.

(1) Using an ohmmeter, measure the resistance between the terminals.

Standard:

Tester Connection	Specified Condition
1 – 2	2.55 to 2.85 Ω at 20°C (68°F)

If the resistance is not as specified, replace the fuel injector.

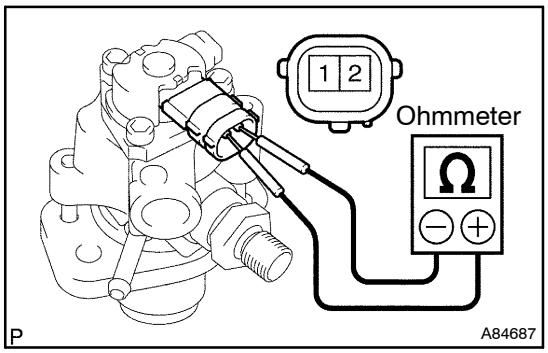

2. INSPECT FUEL PUMP ASSY

(a) Inspect the resistance.

(1) Using an ohmmeter, measure the resistance between the terminals.

Standard:

Tester Connection	Specified Condition
1 – 2	1.19 to 1.39 Ω at 20°C (68°F)

If the resistance is not as specified, replace the fuel pump.

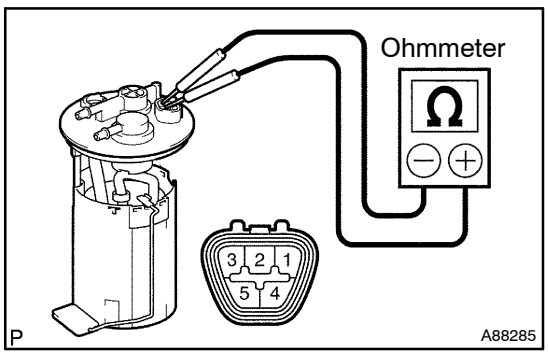

3. INSPECT FUEL PUMP ASSY

(a) Inspect the resistance.

(1) Using an ohmmeter, measure the resistance between the terminals.

Standard:

Tester Connection	Specified Condition
4 – 5	0.2 to 3.0 Ω at 20°C (68°F)

If the resistance is not as specified, replace the fuel pump.

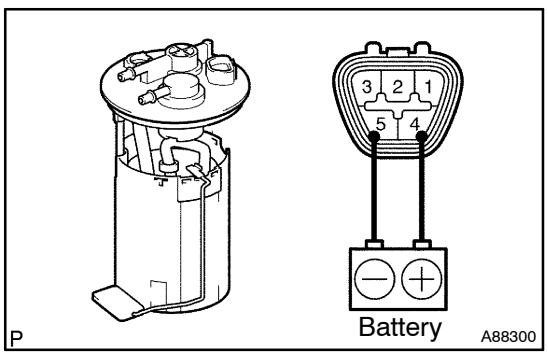

(b) Check the operation.

(1) Apply battery voltage across the terminals. Check that the fuel pump operates.

NOTICE:

- **These tests must be performed quickly (within 10 seconds) to prevent burnout of the coil.**
- **Keep fuel pump as far away from the battery as possible.**
- **Always do the switching at the battery side.**

If the operate is not as specified, replace the fuel pump.

FUEL INJECTOR ASSY (2AZ–FSE)

11113–01

COMPONENTS

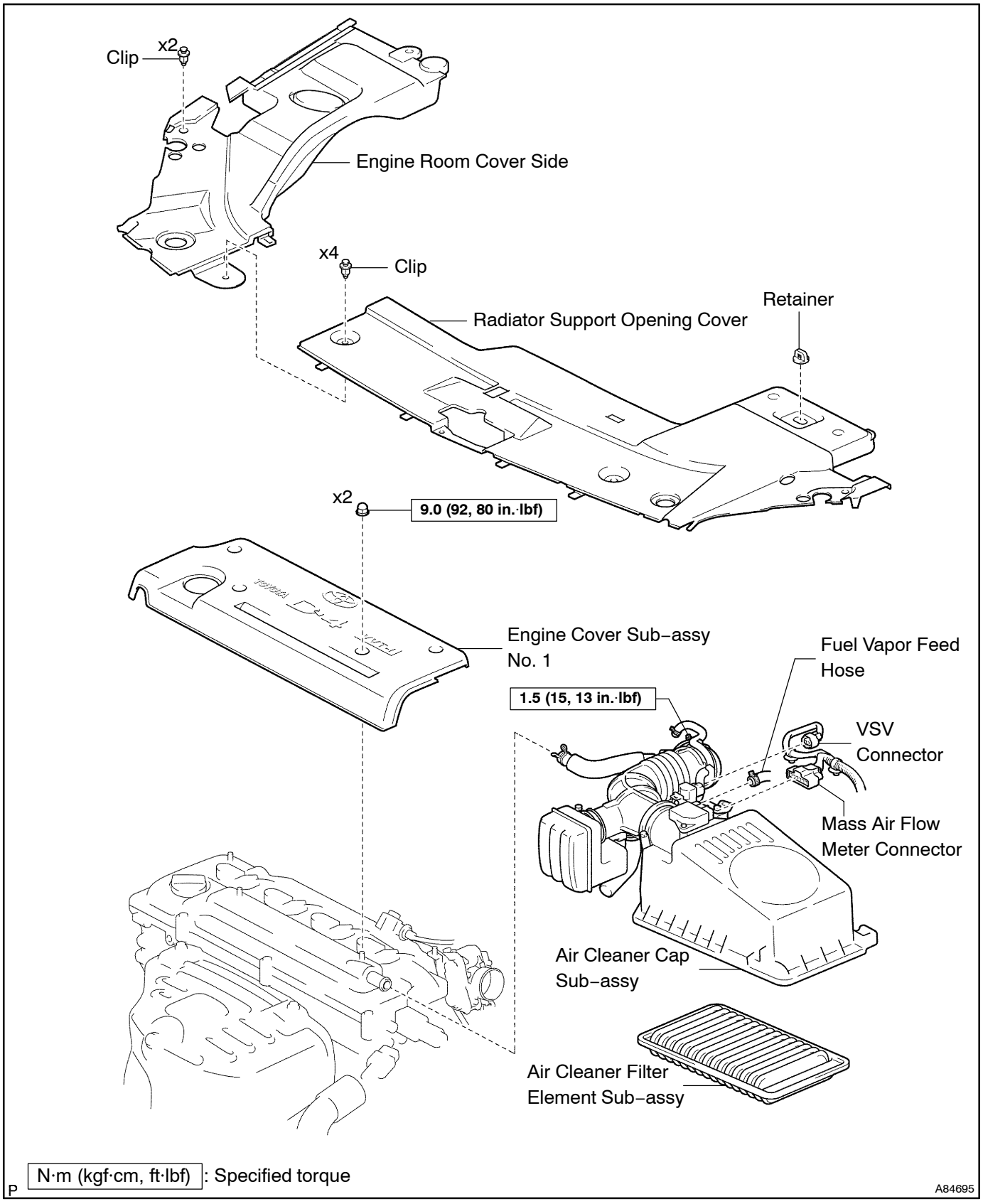

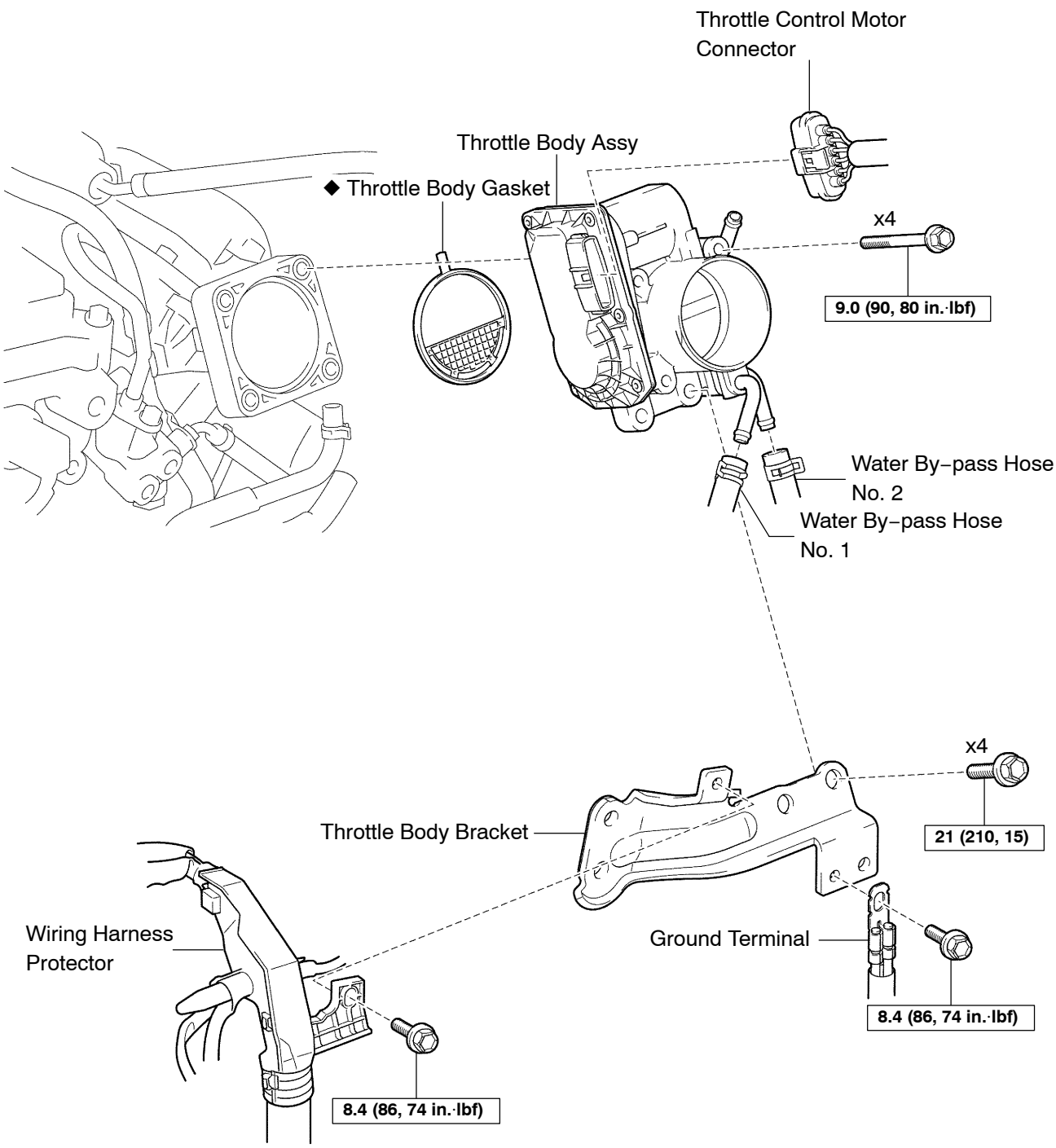

N·m (kgf·cm, ft·lbf) : Specified torque

◆ Non–reusable part

A84696

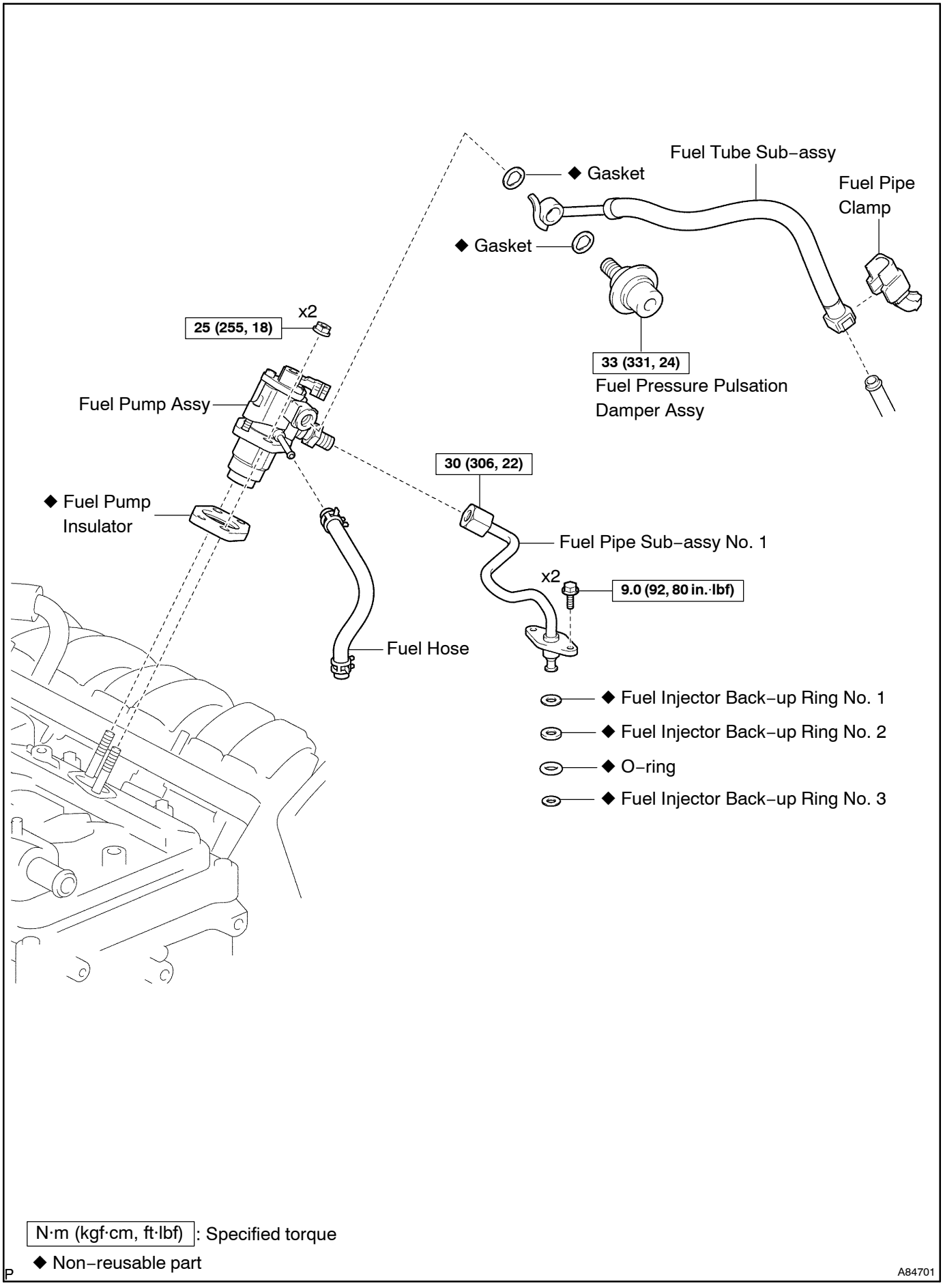
Fuel Tube Sub–assy
◆ Gasket
Fuel Pipe Clamp
◆ Gasket
x2
25 (255, 18)
33 (331, 24)
Fuel Pressure Pulsation Damper Assy
Fuel Pump Assy
30 (306, 22)
◆ Fuel Pump Insulator
Fuel Pipe Sub–assy No. 1
x2
9.0 (92, 80 in.·lbf)
Fuel Hose
◆ Fuel Injector Back–up Ring No. 1
◆ Fuel Injector Back–up Ring No. 2
◆ O–ring
◆ Fuel Injector Back–up Ring No. 3
N·m (kgf·cm, ft·lbf) : Specified torque
◆ Non–reusable part
A84701

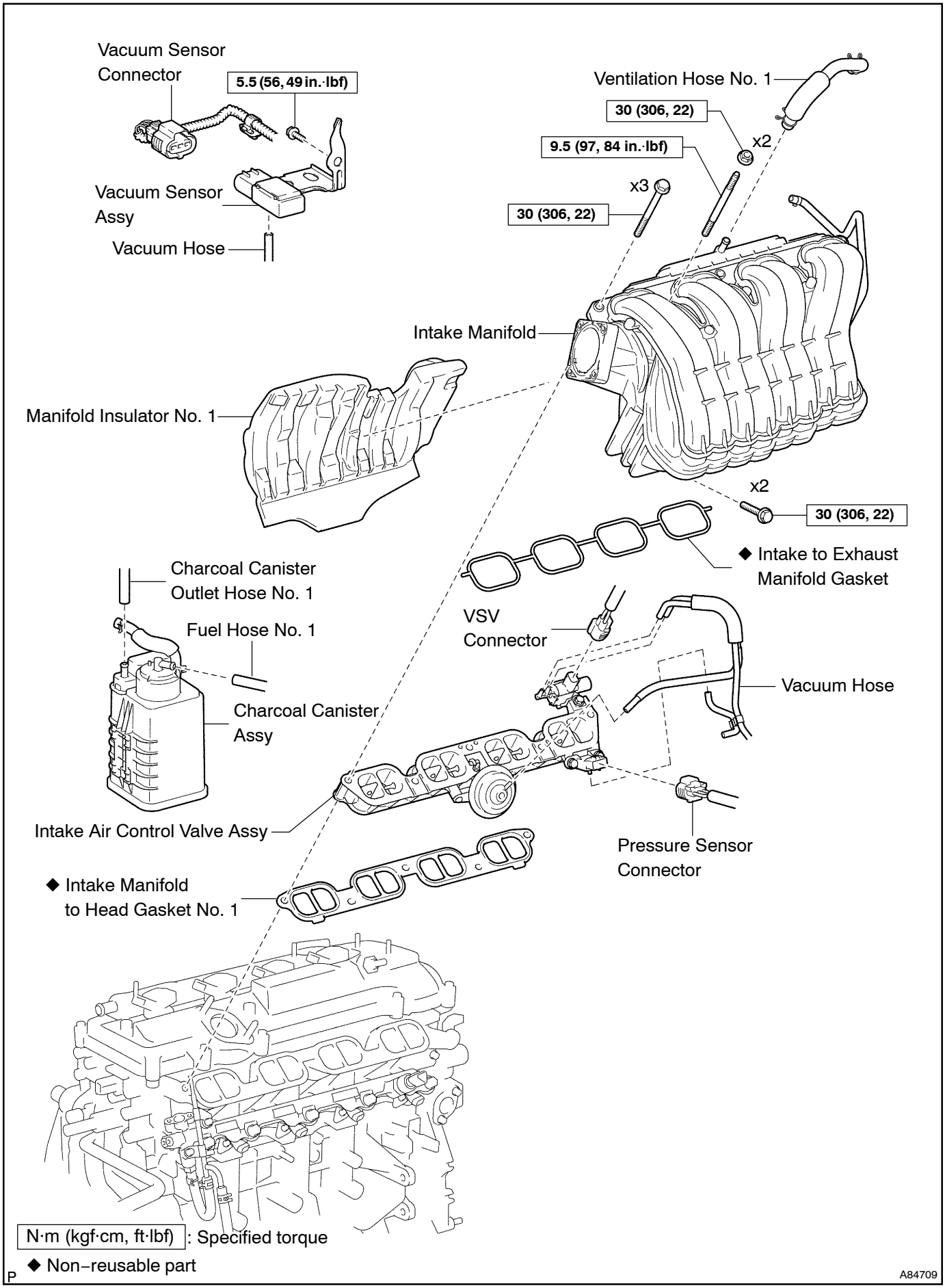
Vacuum Sensor Connector
5.5 (56, 49 in.·lbf)
Vacuum Sensor Assy
Vacuum Hose
Ventilation Hose No. 1
30 (306, 22)
x2
9.5 (97, 84 in.·lbf)
x3
30 (306, 22)
Intake Manifold
Manifold Insulator No. 1
x2
30 (306, 22)
◆ Intake to Exhaust Manifold Gasket
Charcoal Canister Outlet Hose No. 1
Fuel Hose No. 1
Charcoal Canister Assy
VSV Connector
Vacuum Hose
Intake Air Control Valve Assy
Pressure Sensor Connector
◆ Intake Manifold to Head Gasket No. 1
N·m (kgf·cm, ft·lbf) : Specified torque
◆ Non–reusable part
P
A84709

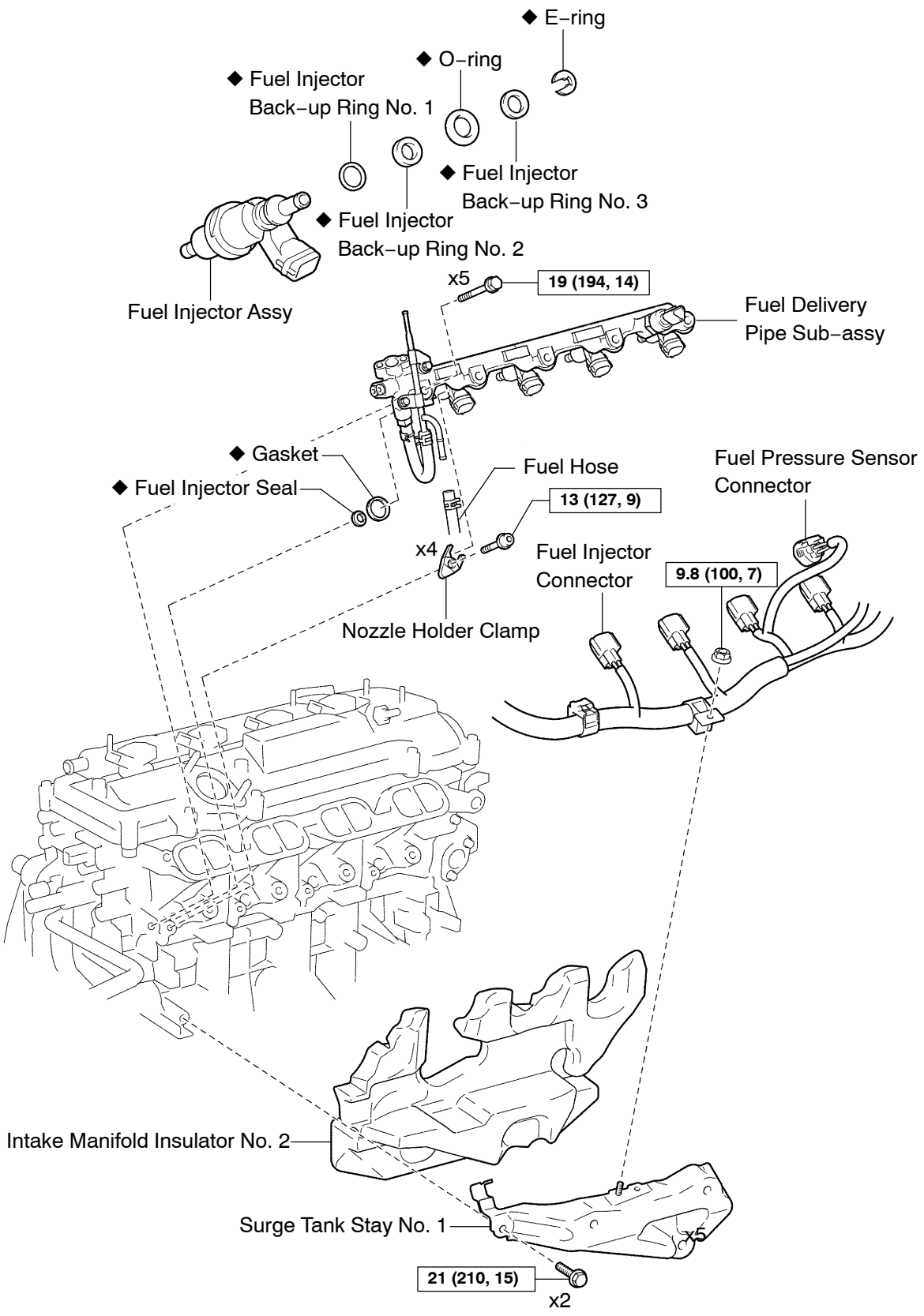

N·m (kgf·cm, ft·lbf) : Specified torque

◆ Non–reusable part

P

A88250

11114–01

REPLACEMENT

1. **DISCHARGE FUEL SYSTEM PRESSURE (See page 11–1)**
2. **REMOVE RADIATOR SUPPORT OPENING COVER (See page 10–8)**
3. **REMOVE ENGINE ROOM COVER SIDE (See page 10–8)**
4. **DISCONNECT ENGINE WIRE NO.3 (BATTERY NEGATIVE TERMINAL)**
5. **DRAIN ENGINE COOLANT (See page 16–7)**
6. **REMOVE ENGINE COVER SUB–ASSY NO.1 (See page 10–8)**
7. **REMOVE AIR CLEANER CAP SUB–ASSY (See page 10–8)**
8. **REMOVE THROTTLE BODY ASSY (See page 10–8)**
9. **REMOVE FUEL TUBE SUB–ASSY (See page 11–24)**
   SST 09617–24011
10. **REMOVE FUEL HOSE (See page 11–24)**
11. **REMOVE FUEL PIPE SUB–ASSY NO.1 (See page 11–24)**
    SST 09023–12900
12. **REMOVE FUEL PUMP ASSY (See page 11–24)**

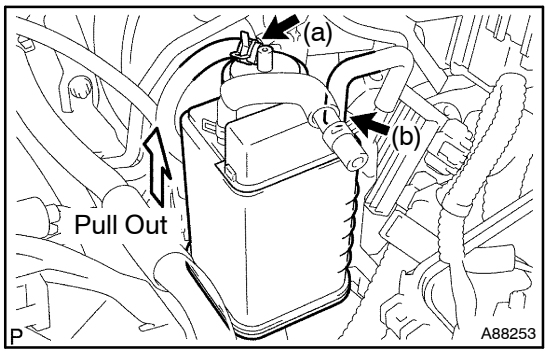

13. REMOVE CHARCOAL CANISTER ASSY

(a) Disconnect the fuel hose from the charcoal canister hose.
(b) Disconnect the charcoal canister outlet hose No. 1 from the charcoal canister.
(c) Pull out the charcoal canister from the charcoal canister base bracket.

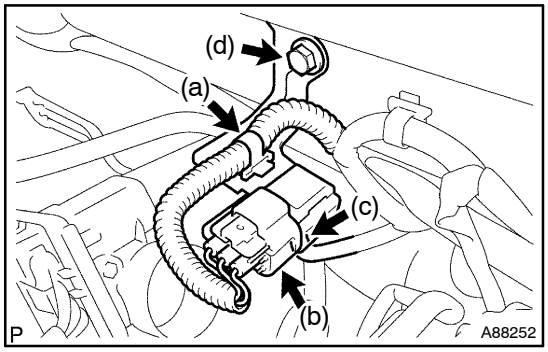

14. REMOVE VACUUM SENSOR ASSY (LHD STEERING POSITION TYPE)

(a) Remove the wiring harness clamp.
(b) Disconnect the vacuum sensor connector.
(c) Disconnect the vacuum hose from the vacuum sensor.
(d) Remove the bolt, then remove the vacuum sensor.

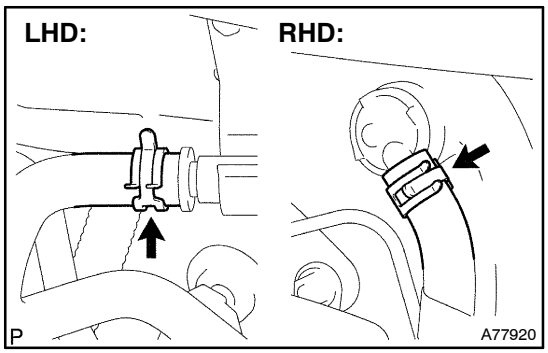

15. REMOVE INTAKE MANIFOLD

(a) Disconnect the union to connector tube hose from the brake booster.

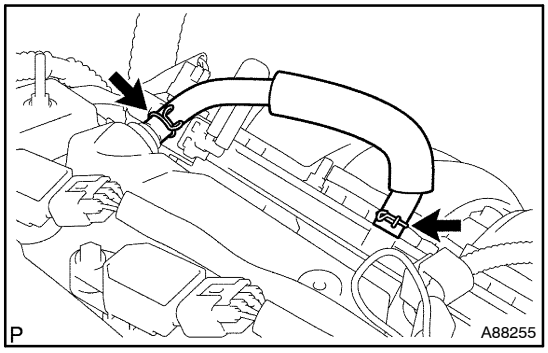

(b) Remove the ventilation hose No. 1 from the ventilation valve and intake manifold.

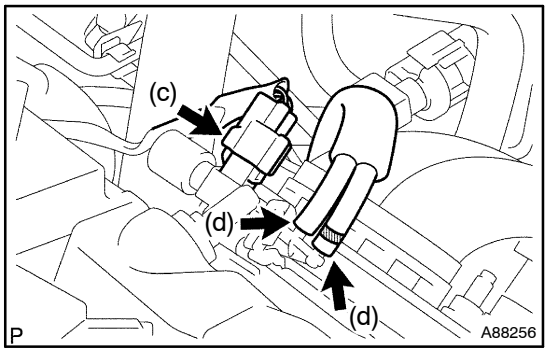

(c) Disconnect the VSV connector.
(d) Disconnect the 2 vacuum hoses from the VSV.

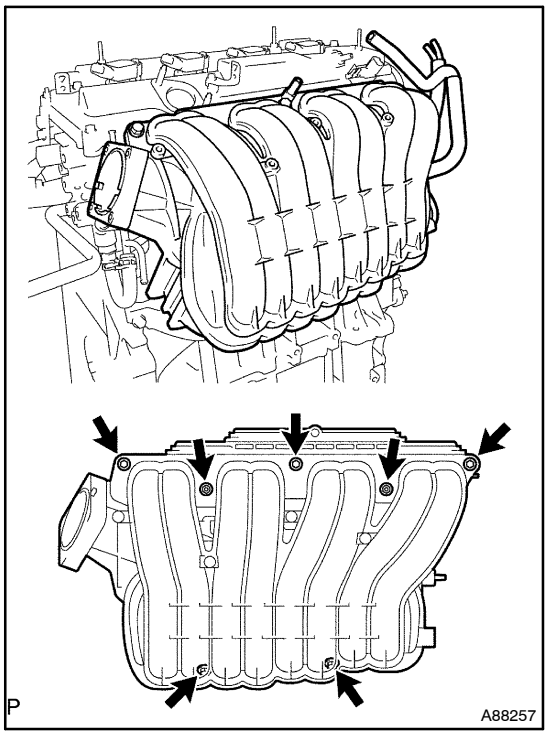

(e) Remove the 5 bolts and 2 nuts.

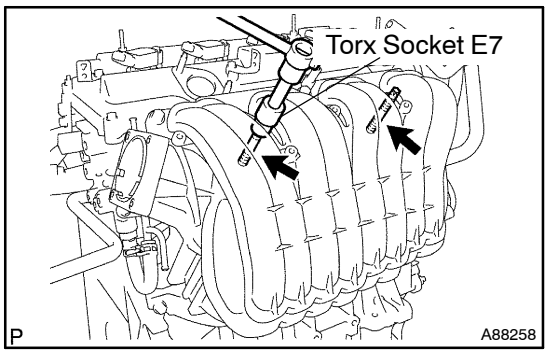

(f) Using a Torx socket E7, remove the 2 stud bolts.

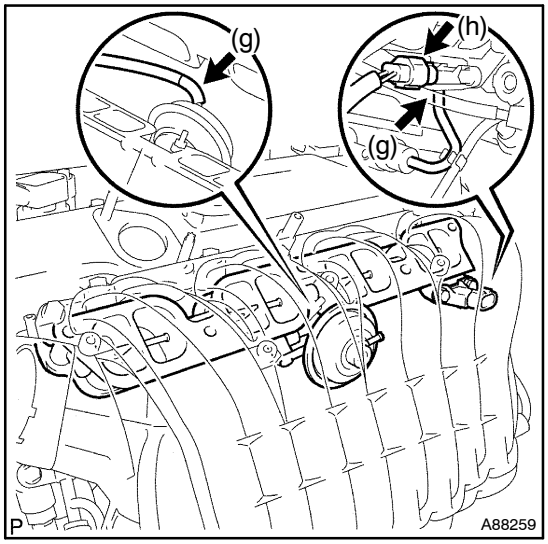

(g) Disconnect the 2 vacuum hoses from the intake air control valve and pressure sensor.
(h) Disconnect the pressure sensor connector.
(i) Remove the intake air control valve and gasket from the cylinder head.

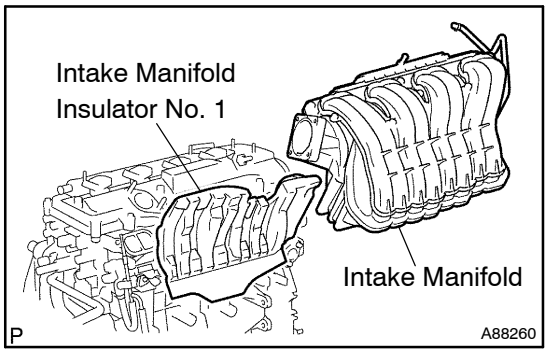

(j) Remove the intake manifold insulator No. 1 from the intake manifold.
(k) Remove the intake manifold from the vehicle.

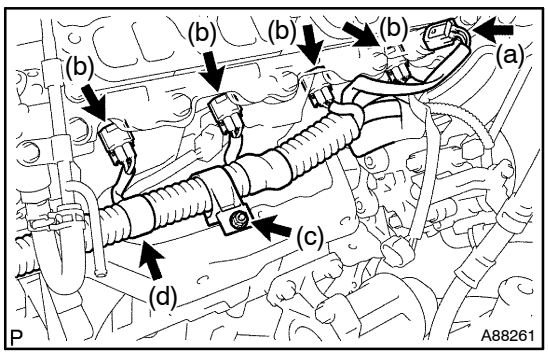

16. REMOVE SURGE TANK STAY NO.1

(a) Disconnect the fuel pressure sensor connector.
(b) Disconnect the 4 fuel injector connectors.
(c) Remove the nut.
(d) Remove the wiring harness clamp, then remove the engine wire.

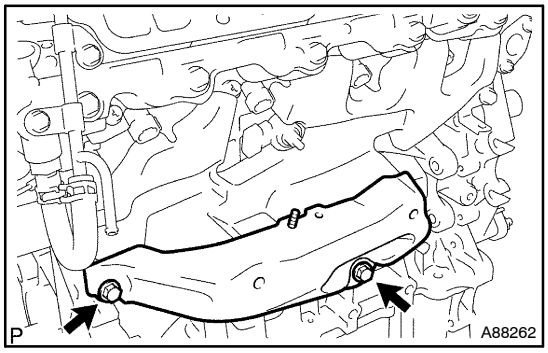

(e) Remove the 2 bolts, then remove the surge tank stay No. 1.

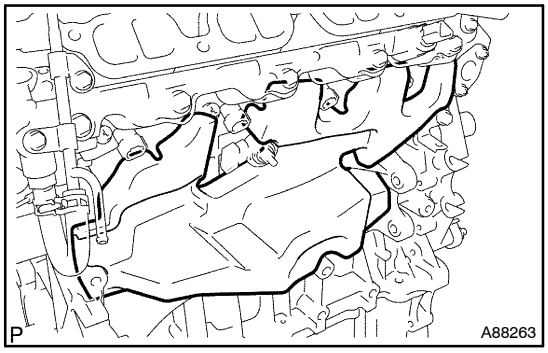

17. REMOVE INTAKE MANIFOLD INSULATOR NO.2

(a) Remove the intake manifold insulator No. 2 from the cylinder block.

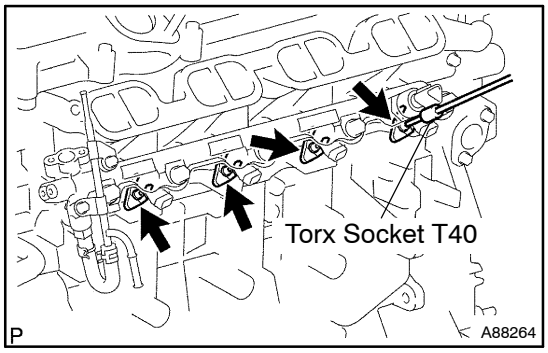

18. REMOVE NOZZLE HOLDER CLAMP

(a) Using a Torx socket T40, remove the 4 bolts, then remove the 4 nozzle holder clamps.

HINT:

The nozzle holder clamp is installed with a bolt.

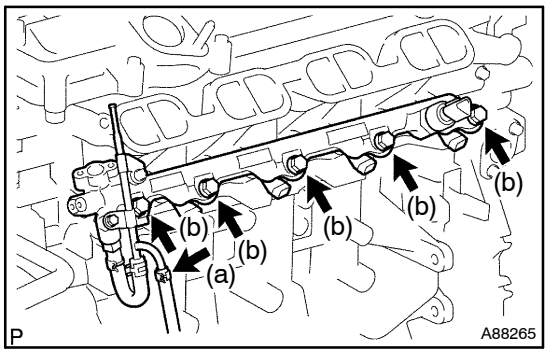

19. REMOVE FUEL DELIVERY PIPE SUB–ASSY

(a) Disconnect the fuel hose from the fuel pipe No. 2.

(b) Remove the 5 bolts, then remove the fuel delivery pipe together with the 4 fuel injectors.

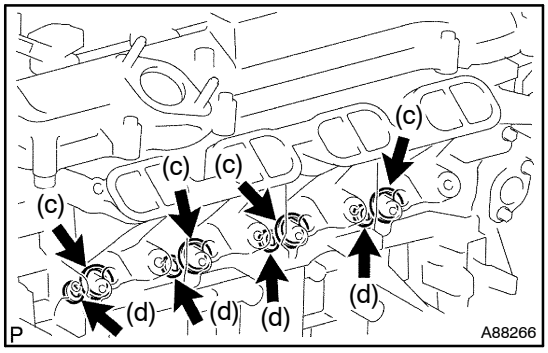

(c) Remove the 4 gaskets from the cylinder head.

(d) Remove the 4 seals from the cylinder head.

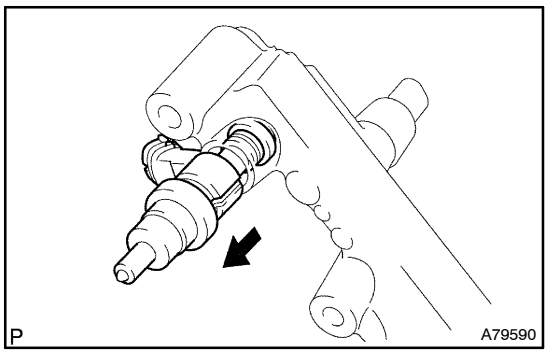

20. REMOVE FUEL INJECTOR ASSY

(a) Pull out the 4 fuel injectors from the fuel delivery pipe.

NOTICE:

Be careful not to damage the sealing surface of the fuel delivery pipe when removing the fuel injector.

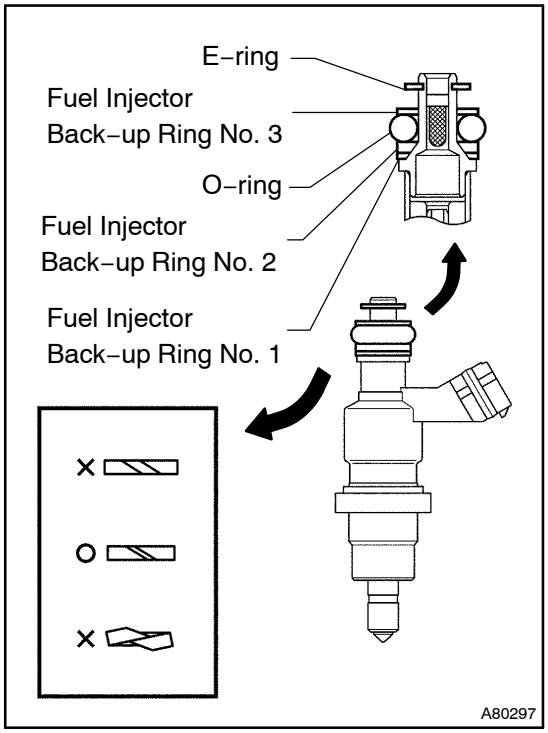

21. INSTALL FUEL INJECTOR ASSY

(a) Install new fuel injector back–up ring No. 1, No. 2, No. 3, a new O–ring and a new E–ring to each fuel injector.

NOTICE:

- **There is a draft angle inside the back–up ring No. 1 and No. 2. Put the draft angle downward when installing those rings to the fuel injector.**
- **The back–up ring No. 1 and No. 2 have a diagonal slit. Pay attention to the splice of the slits after installing them.**
- **After Installation of these 5 rings to the fuel injector, check that there are no damages and foreign objects on them.**

(b) Apply a light coat of spindle oil or gasoline to the O–ring on the fuel injector and the mounting hole on the fuel delivery pipe.

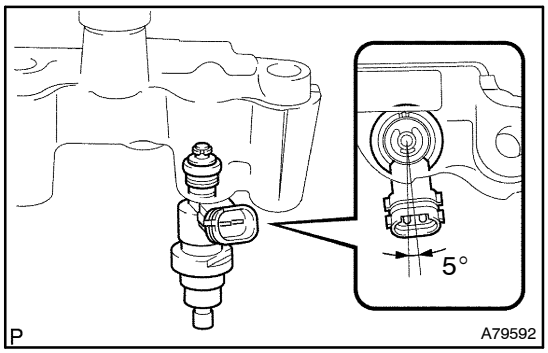

(c) Install the fuel injector to the fuel delivery pipe as shown in the illustration.

NOTICE:

- **Be careful not to damage the sealing surface of the fuel delivery pipe when installing the injector.**
- **Check that there are no damages and foreign objects in the fuel injector mounting hole of the fuel delivery pipe sub–assy.**
- **In order to avoid any damage, be sure to apply fuel to both the O–ring and the mounting hole before installing the fuel injector to the fuel delivery pipe.**

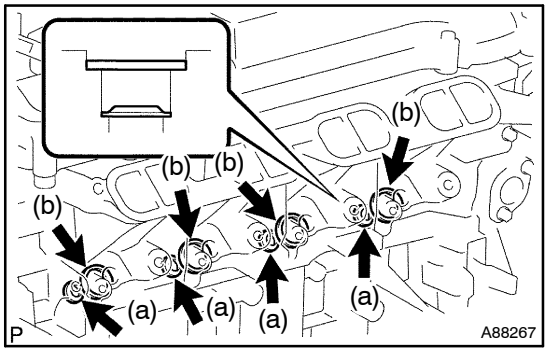

22. INSTALL FUEL DELIVERY PIPE SUB–ASSY

(a) Install the 4 new seals to the cylinder head.

NOTICE:

Pay attention the mounting orientation of the seal.

(b) Install the 4 new gaskets to the cylinder head.

(c) Install the fuel delivery pipe together with the 4 fuel injectors to the cylinder head.

NOTICE:

- **Remove any carbon from the tip of the fuel injector if necessary.**
- **Do not give any physical impact on the tip because the fuel injector tip is sensitive.**
- **If you drop the fuel injector by mistake, replace it with a new one.**
- **Check that there are no damages and foreign objects on the fuel injector mounting area of the cylinder head.**

(d) Temporarily install the fuel delivery pipe with the 5 bolts.

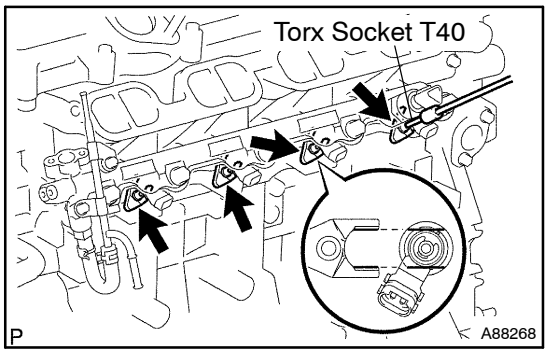

23. INSTALL NOZZLE HOLDER CLAMP

(a) Align the keyway of the fuel injector with the nozzle holder clamp, then fit them.

(b) Using a Torx socket T40, install the 4 nozzle holder clamps with the 4 bolts.

Torque: 13 N·m (127 kgf·cm, 9 ft·lbf)

(c) Tighten the 5 bolts until they reach the specified torque to secure the fuel delivery pipe.

Torque: 19 N·m (194 kgf·cm, 14 ft·lbf)

(d) Connect the fuel hose to the fuel pipe No. 2.

24. INSTALL INTAKE MANIFOLD INSULATOR NO.2

25. INSTALL SURGE TANK STAY NO.1

Torque:

21 N·m (210 kgf·cm, 15 ft·lbf) for surge tank stay No. 1 x cylinder block

9.8 N·m (100 kgf·cm, 7 ft·lbf) for surge tank stay No. 1 x engine wire

26. INSTALL INTAKE MANIFOLD

(a) Install a new gasket to the intake manifold.

(b) Temporarily install the intake manifold to the cylinder head.

(c) Install the intake manifold insulator No. 1 to the intake manifold.

(d) Temporarily install the intake air control valve and a new gasket between the intake manifold and cylinder head, then check that the stud bolt holes are aligned.

(e) Connect the 2 vacuum hoses to the intake air control valve and pressure sensor.

(f) Connect the pressure sensor connector.

(g) Using a Torx socket E7, install and tighten the 2 stud bolts to secure the intake manifold, intake air control valve and gasket.
Torque: 9.5 N·m (97 kgf·cm, 84 in.·lbf)

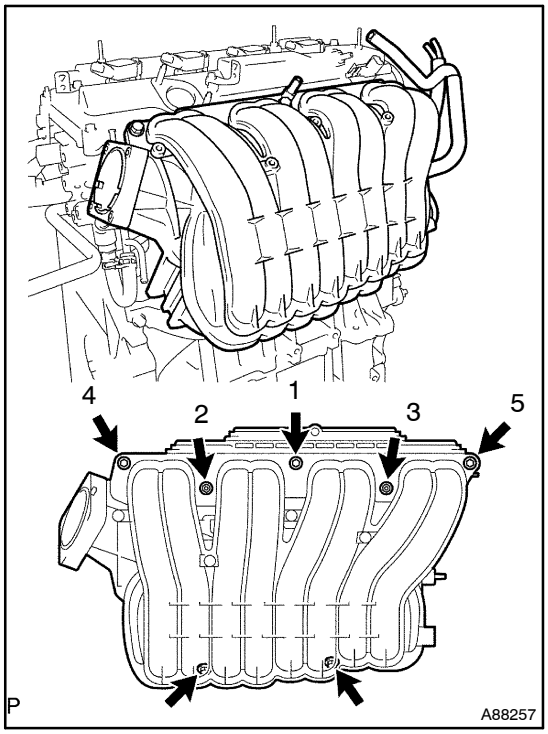

(h) In order to install the intake manifold to the cylinder head, tighten the 3 bolts and 2 nuts in the sequence shown in the illustration.
Torque: 30 N·m (306 kgf·cm, 22 ft·lbf)

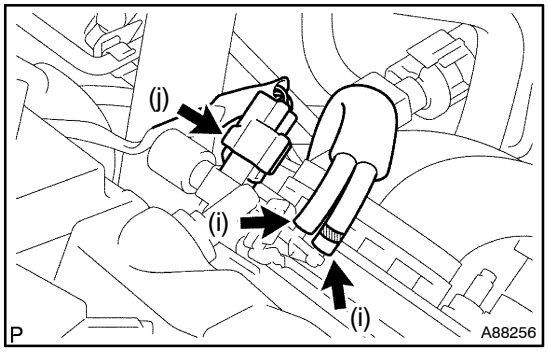

(i) Connect the 2 vacuum hoses to the VSV as shown in the illustration.
(j) Connect the VSV connector.
(k) Install the ventilation hose No. 1 to the ventilation valve and intake manifold.
(l) Connect the union to connector tube hose to the brake booster.

27. **INSTALL VACUUM SENSOR ASSY (LHD STEERING POSITION TYPE)**
Torque: 5.5 N·m (56 kgf·cm, 49 in.·lbf)
28. **INSTALL CHARCOAL CANISTER ASSY**
29. **INSTALL FUEL PUMP ASSY (See page 11–24)**
30. **INSTALL FUEL PIPE SUB–ASSY NO.1 (See page 11–24)**
SST 09023–12900
31. **INSTALL FUEL HOSE**
32. **INSTALL FUEL TUBE SUB–ASSY (See page 11–24)**
SST 09617–24011
33. **INSTALL THROTTLE BODY ASSY (See page 10–8)**
34. **INSTALL AIR CLEANER CAP SUB–ASSY (See page 10–8)**
35. **CONNECT ENGINE WIRE NO.3 (BATTERY NEGATIVE TERMINAL)**
Torque: 5.4 N·m (55 kgf·cm, 48 in.·lbf)

36. ADD ENGINE COOLANT (see page 16–7)
37. CHECK FOR ENGINE COOLANT LEAKS (See page 16–1)
38. CHECK FOR FUEL LEAKS (See page 11–4)
39. CHECK FOR ENGINE OIL LEAKS
40. INSTALL ENGINE COVER SUB–ASSY NO.1 (See page 10–8)
41. INSTALL ENGINE ROOM COVER SIDE
42. INSTALL RADIATOR SUPPORT OPENING COVER

FUEL PUMP ASSY (2AZ–FSE)

COMPONENTS

11115–01

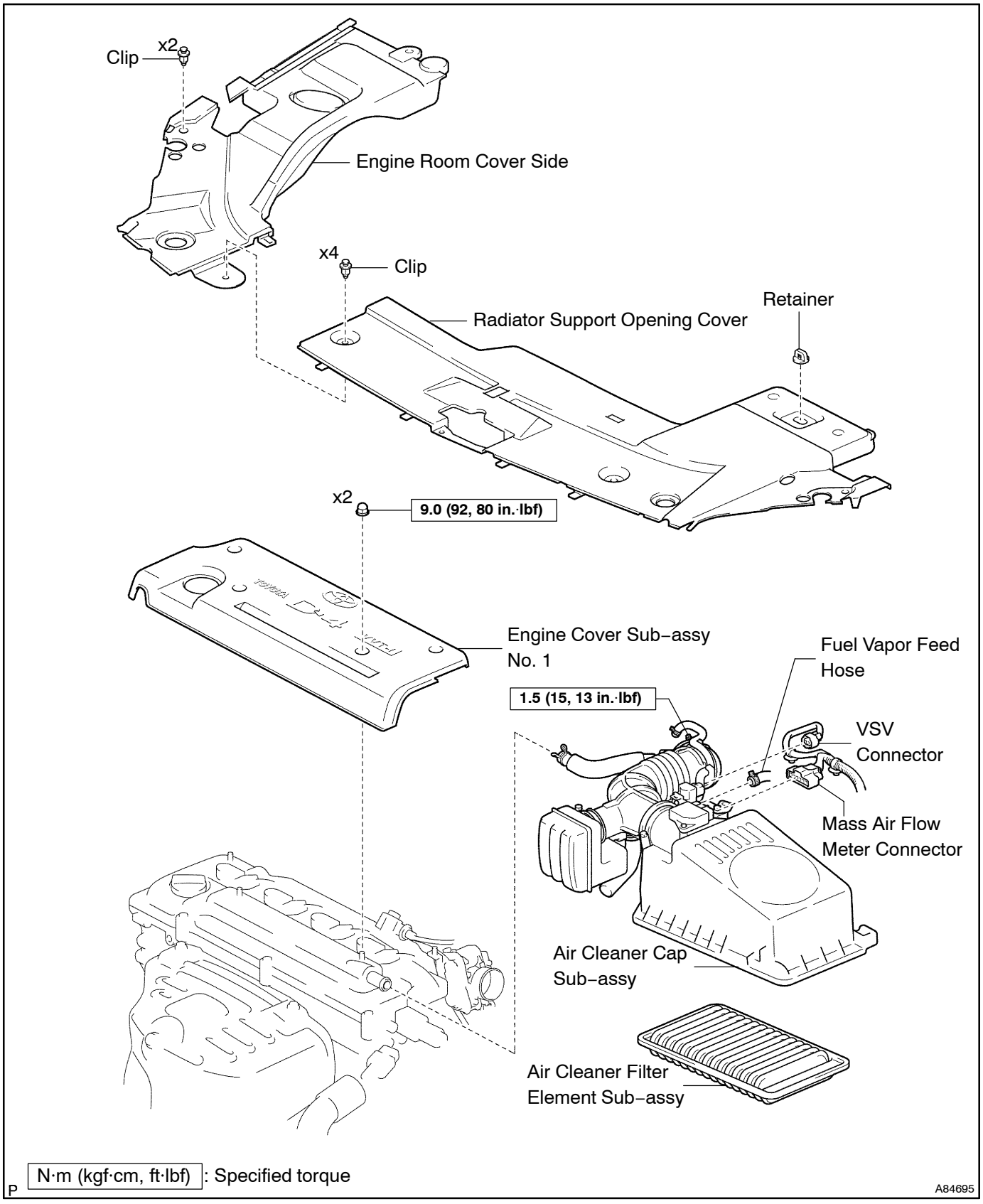

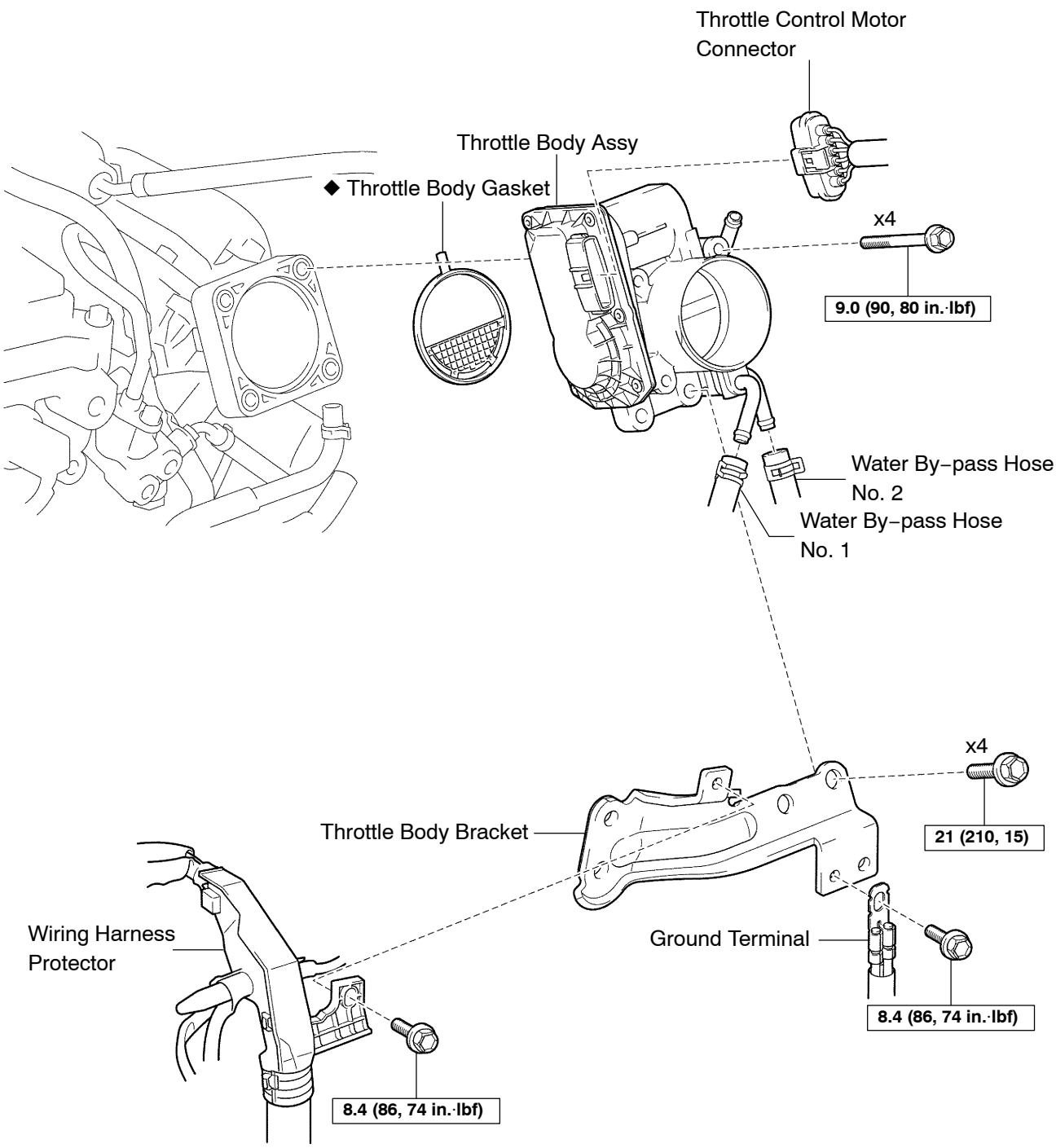

N·m (kgf·cm, ft·lbf) : Specified torque

◆ Non–reusable part

A84696

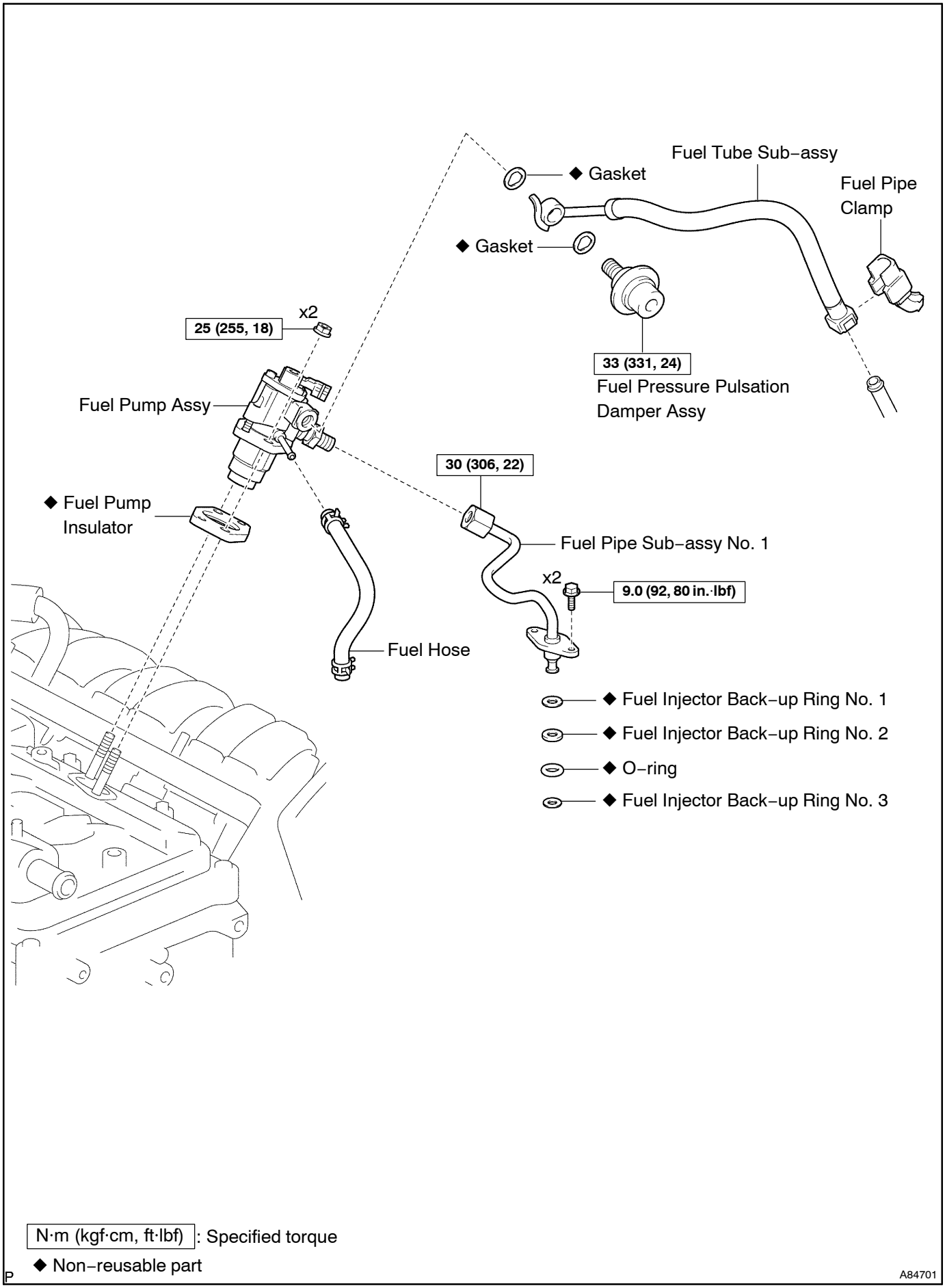
Fuel Tube Sub–assy
◆ Gasket
Fuel Pipe Clamp
◆ Gasket
x2
25 (255, 18)
33 (331, 24)
Fuel Pressure Pulsation Damper Assy
Fuel Pump Assy
30 (306, 22)
◆ Fuel Pump Insulator
Fuel Pipe Sub–assy No. 1
x2
9.0 (92, 80 in.·lbf)
Fuel Hose
◆ Fuel Injector Back–up Ring No. 1
◆ Fuel Injector Back–up Ring No. 2
◆ O–ring
◆ Fuel Injector Back–up Ring No. 3
N·m (kgf·cm, ft·lbf) : Specified torque
◆ Non–reusable part
A84701

11116–01

REPLACEMENT

1. DISCHARGE FUEL SYSTEM PRESSURE (See page 11–1)
2. REMOVE RADIATOR SUPPORT OPENING COVER (See page 10–8)
3. DISCONNECT ENGINE WIRE NO.3 (BATTERY NEGATIVE TERMINAL)
4. REMOVE ENGINE COVER SUB–ASSY NO.1 (See page 10–8)
5. REMOVE AIR CLEANER CAP SUB–ASSY (See page 10–8)
6. REMOVE THROTTLE BODY ASSY (See page 10–8)

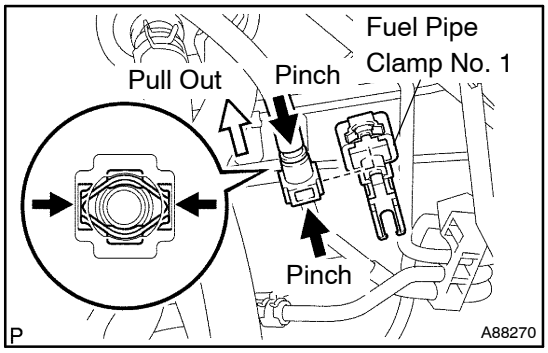

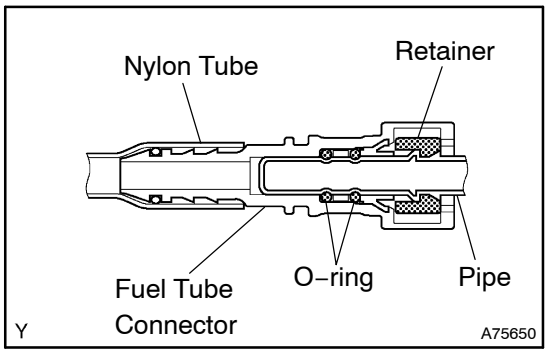

7. REMOVE FUEL TUBE SUB–ASSY

(a) Remove the fuel pipe clamp No. 1.

(b) Pinch the retainer, then pull out the fuel tube connector.

NOTICE:

- **Check around the fuel tube connector for any dirt or mud before this operation, and remove it if necessary.**
- **Be careful of mud because the fuel tube connector has an O–ring which seals the fuel tube connector and pipe that can be contaminated.**
- **Do not use any tool in this operation.**
- **Do not bend or twist the nylon tube. Protect the fuel tube connector by covering it with a vinyl or plastic bag.**
- **When the fuel tube connector and pipe are stuck, push and pull the fuel tube connector to release, then pull the fuel tube connector out carefully.**

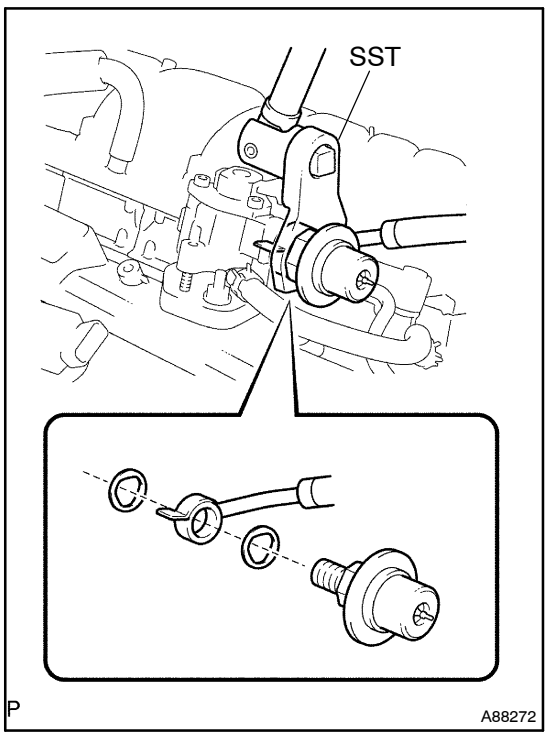

(c) Using SST, remove the fuel pressure pulsation damper, fuel tube and 2 gaskets.
SST 09617–24011

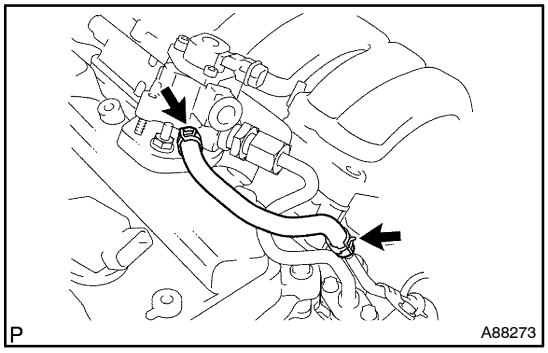

8. REMOVE FUEL HOSE

(a) Remove the fuel hose from the fuel pump and fuel pipe No. 2.

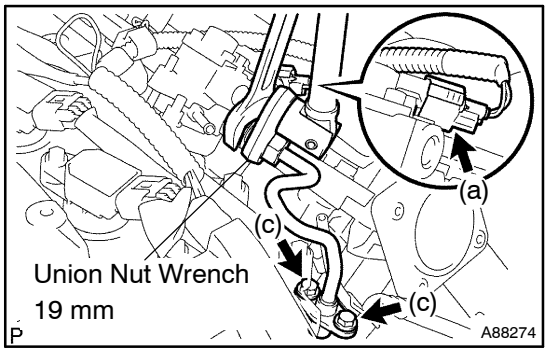

9. REMOVE FUEL PIPE SUB–ASSY NO.1

(a) Disconnect the fuel pump connector.

(b) Clamp the union bolt on the fuel pump with a 21 mm wrench, then remove the fuel pipe No. 1 from the fuel pump using a union nut wrench 19mm.

NOTICE:

Do not loosen the union bolt on the fuel pump. If it becomes loose, replace the fuel pump with a new fuel pump.

(c) Remove the 2 bolts, then remove the fuel pipe No. 1.

NOTICE:

Be careful not to damage both the sealing surfaces of the fuel delivery pipe and fuel pump when removing the fuel pipe No. 1.

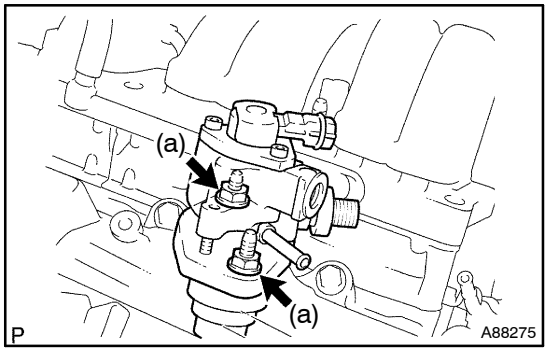

10. REMOVE FUEL PUMP ASSY

(a) Remove the 2 nuts, then remove the fuel pump.

(b) Remove the insulator from the cylinder head.

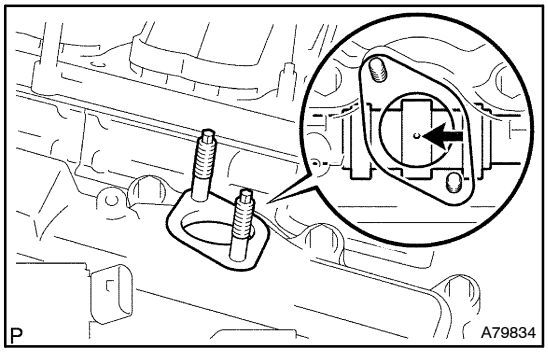

11. INSTALL FUEL PUMP ASSY

(a) Turn the crankshaft, then set the camshaft to the position where the oil port of the camshaft can be seen from the fuel pump mounting hole.

(b) From the fuel pump mounting hole of the cylinder head, pour 35 to 45cc (2.14 to 2.75 cu in) engine oil into the cylinder head.

(c) For more smooth rotation, apply engine oil on the cam lobe which can be seen from the fuel pump mounting hole using fingers.

(d) Install a new insulator and the fuel pump with the 2 nuts.
Torque: 25 N·m (255 kgf·cm, 18 ft·lbf)

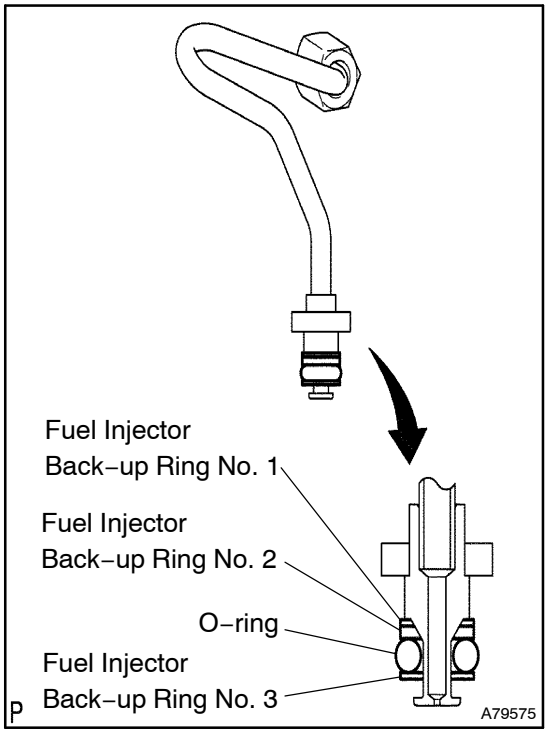

12. INSTALL FUEL PIPE SUB–ASSY NO.1

(a) Attach a new O–ring, fuel injector back–up ring No. 1, No. 2 and No. 3 to the fuel pipe No.1.

(b) Apply a small amount of fuel on the O–ring, then install the fuel pipe No. 1 to the fuel pump and fuel delivery pipe.

NOTICE:

Be careful not to damage both the sealing surfaces of the fuel delivery pipe and the fuel pump when installing the fuel pipe No.1.

(c) Tighten the nut by hand to attach the fuel pipe No. 1 to the fuel pump.

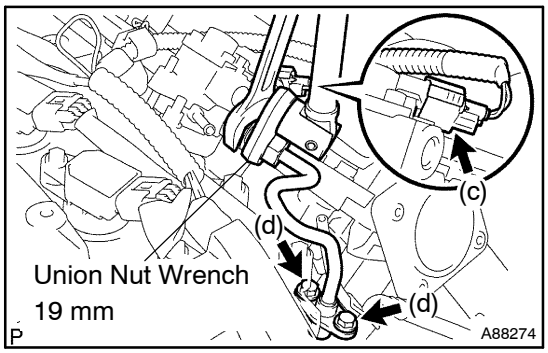

(d) In order to secure the fuel pipe No. 1, tighten the 2 bolts to the specified torque.

Torque: 9.0 N·m (92 kgf·cm, 80 in.·lbf)

(e) Clamp the union bolt on the fuel pump with a 21 mm wrench, then tighten the nut with the specified torque to secure the fuel pipe No. 1 to the fuel pump using a union nut wrench 19 mm.

Torque: 30 N·m (306 kgf·cm, 22 ft·lbf)

(f) Connect the fuel pump connector.

13. INSTALL FUEL HOSE

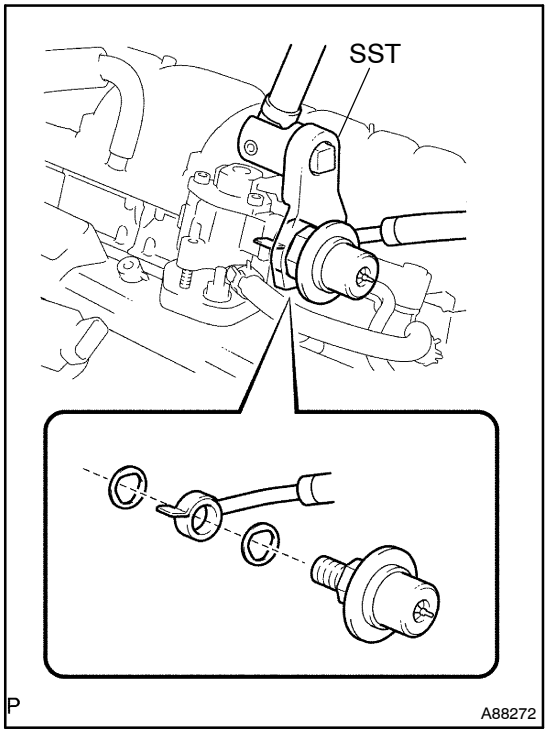

14. INSTALL FUEL TUBE SUB–ASSY

(a) Install the fuel pulsation damper to the fuel pump after fitting the 2 new gaskets and fuel tube between those assys.

(b) Using SST, install the fuel pressure pulsation damper to the fuel pump.

SST 09617–24011

Torque: 33 N·m (331 kgf·cm, 24 ft·lbf)

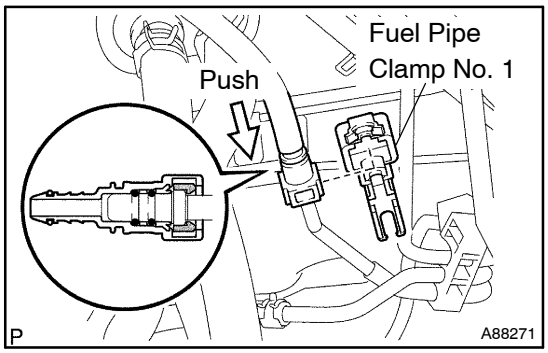

(c) Push in the fuel tube connector to the pipe until fuel tube connector makes ”click” sound.

NOTICE:

- **Check the connected part for any damage or foreign objects.**
- **After connecting, check if the fuel tube connector and pipe are securely connected by pulling on them.**

15. INSTALL THROTTLE BODY ASSY (See page 10–8)
16. INSTALL AIR CLEANER CAP SUB–ASSY (See page 10–8)
17. CONNECT ENGINE WIRE NO.3 (BATTERY NEGATIVE TERMINAL)
Torque: 5.4 N·m (55 kgf·cm, 48 in.·lbf)
18. CHECK FOR FUEL LEAKS (See page 11–4)
19. CHECK FOR ENGINE OIL LEAKS
20. INSTALL ENGINE COVER SUB–ASSY NO.1 (See page 10–8)
21. INSTALL RADIATOR SUPPORT OPENING COVER

FUEL SUCTION W/ PUMP & GAUGE TUBE ASSY (2AZ–FSE)

11117–01

COMPONENTS

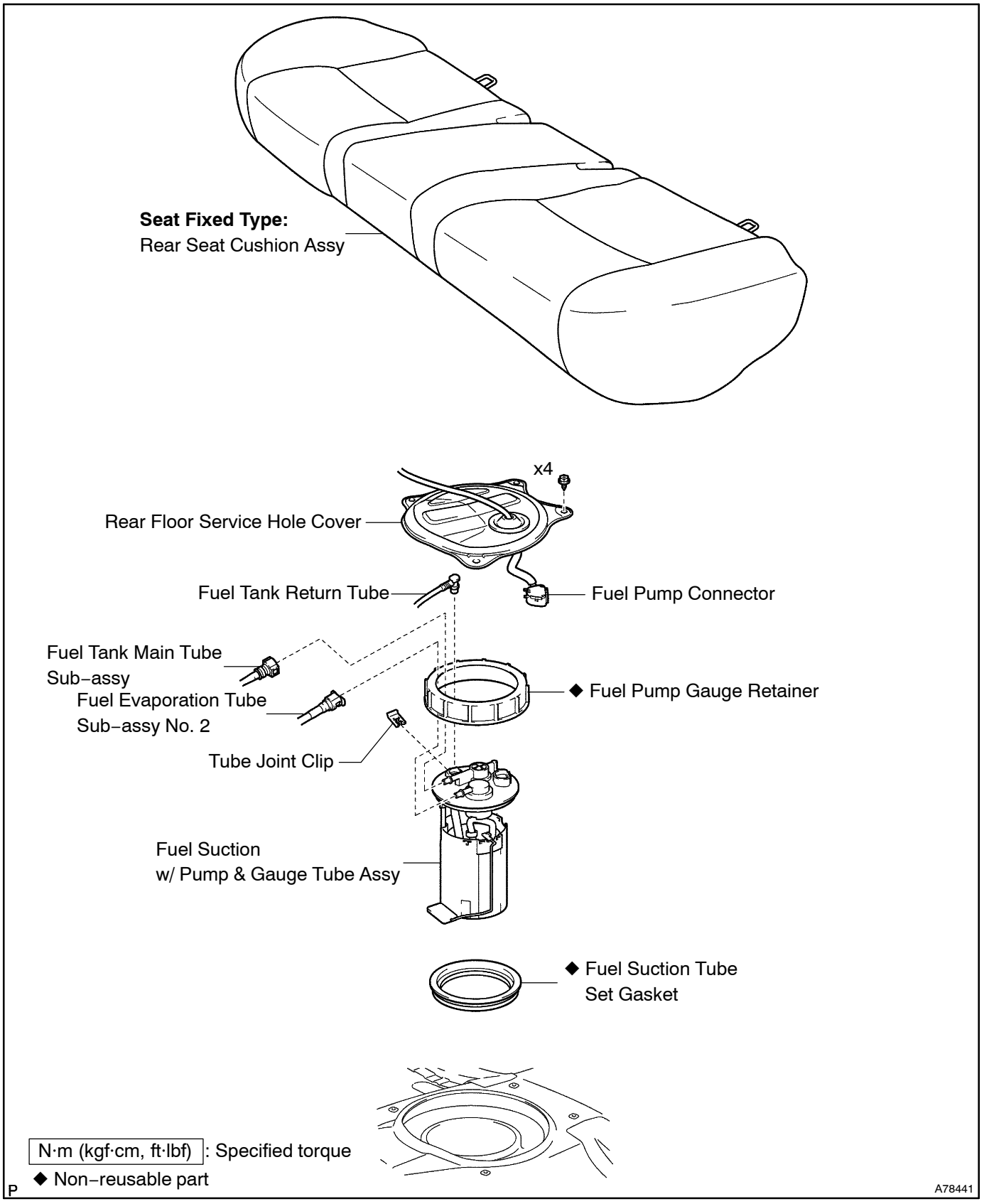

11118–01

REPLACEMENT

1. **DISCHARGE FUEL SYSTEM PRESSURE (See page 11–1)**
2. **DISCONNECT ENGINE WIRE NO.3 (BATTERY NEGATIVE TERMINAL)**
3. **REMOVE REAR SEAT CUSHION ASSY (SEAT FIXED TYPE) (See Pub. No. RM1018E, page 72–32)**

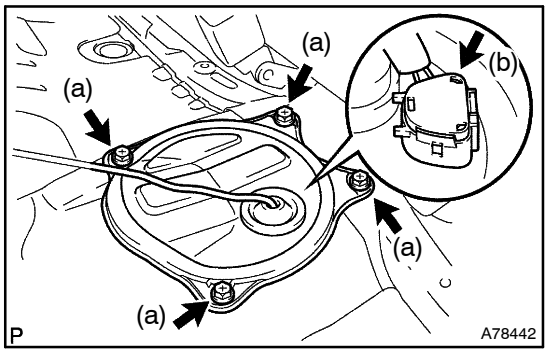

4. REMOVE REAR FLOOR SERVICE HOLE COVER

(a) Remove the 4 screws, then remove the rear floor service hole cover.

(b) Disconnect the fuel pump connector.

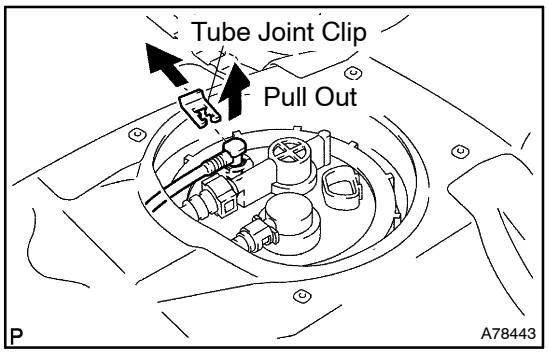

5. REMOVE FUEL SUCTION W/ PUMP & GAUGE TUBE ASSY

(a) Disconnect the fuel tank return tube.

(1) Remove the tube joint clip, then pull out the fuel tank return tube.

NOTICE:

- **Check around the fuel tube joint for any dirt or mud before this operation, then remove it if necessary.**
- **Be careful of mud because the fuel tube joint has an O–ring which seals the fuel tube joint and pipe that can be contaminated.**
- **Do not use any tool in this operation.**
- **Do not bend or twist the nylon tube. Protect the fuel tube joint by covering it with a vinyl or plastic bag.**
- **When the fuel tube joint and pipe are stuck, push and pull the fuel tube joint to release, then pull the fuel tube joint out carefully.**

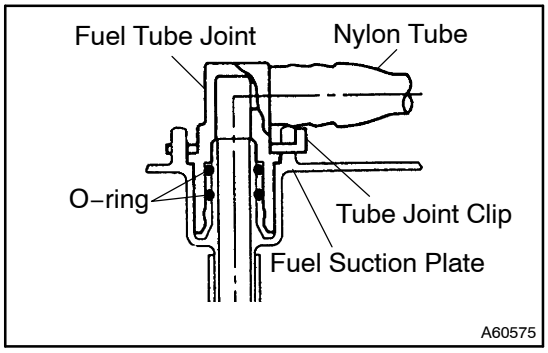

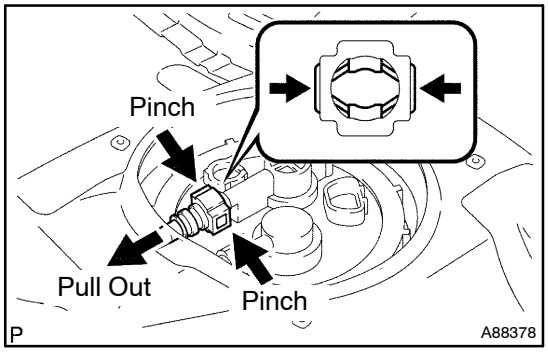

(b) Disconnect the fuel tank main tube.

(1) Pinch the retainer, then pull out the fuel tank main tube.

NOTICE:

- **Check around the fuel tube connector for any dirt or mud before this operation, then remove it if necessary.**
- **Be careful of mud because the fuel tube connector has an O–ring which seals the fuel tube connector and pipe that can be contaminated.**
- **Do not use any tool in this operation.**
- **Do not bend or twist the nylon tube. Protect the fuel tube connector by covering it with a vinyl or plastic bag.**
- **When the fuel tube connector and pipe are stuck, push and pull the fuel tube connector to release, then pull the fuel tube connector out carefully.**

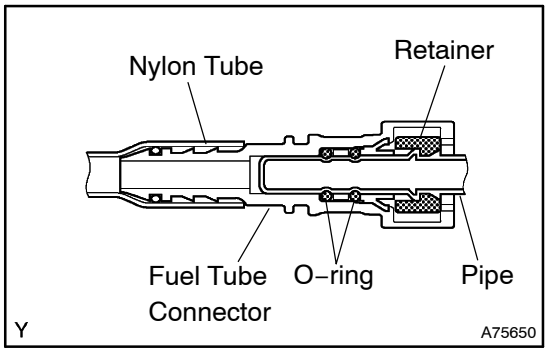

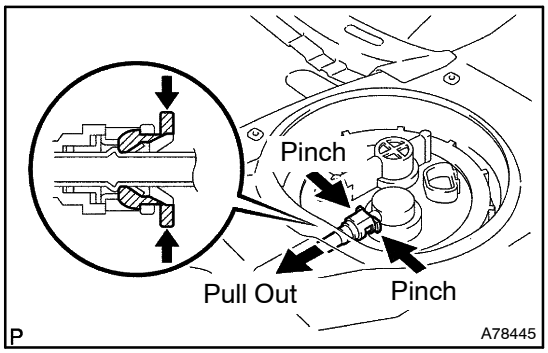

(c) Disconnect the fuel evaporation tube No. 2.

(1) Pinch the retainer, then pull out the fuel evaporation tube No. 2.

NOTICE:

- **Check around the fuel tube connector for any dirt or mud before this operation, then remove it if necessary.**
- **Be careful of mud because the fuel tube connector has an O–ring which seals the fuel tube connector and pipe that can be contaminated.**
- **Do not use any tool in this operation.**
- **Do not bend or twist the nylon tube. Protect the fuel tube connector by covering it with a vinyl or plastic bag.**
- **When the fuel tube connector and pipe are stuck, push and pull the fuel tube connector to release, then pull the fuel tube connector out carefully.**

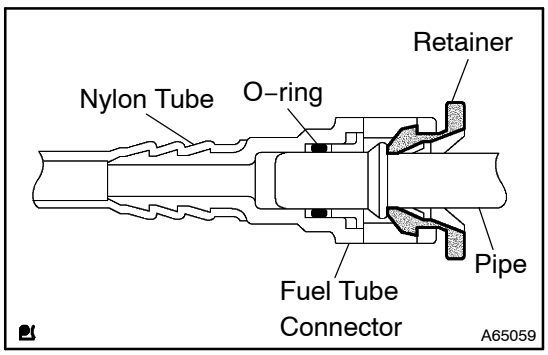

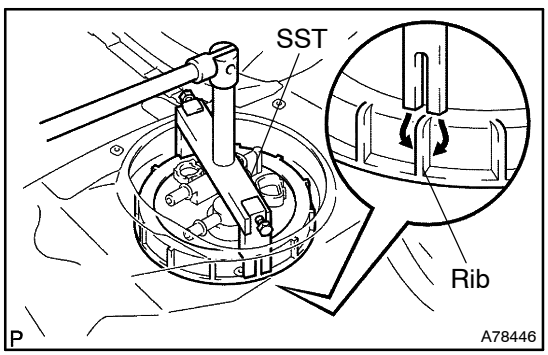

(d) Using SST, loosen the fuel pump gauge retainer.

SST 09808–14010

NOTICE:

Do not use other tools in this operation. Damage to the fuel pump gauge retainer and the fuel tank may result.

HINT:

A rib on the fuel pump gauge retainer can be fitted into a tip of the SST.

(e) Remove the fuel pump gauge retainer.

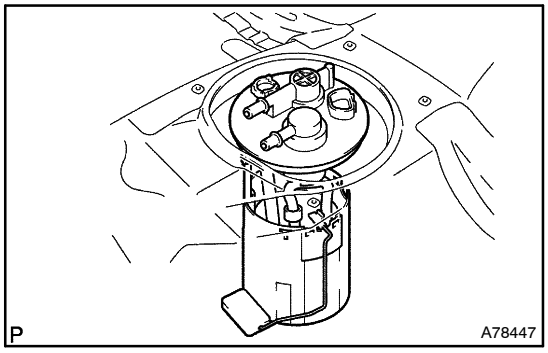

(f) Remove the fuel suction w/ pump & gauge tube.

NOTICE:

Be careful that the arm of the fuel sender gauge should not be bent.

(g) Remove the gasket from the fuel tank.

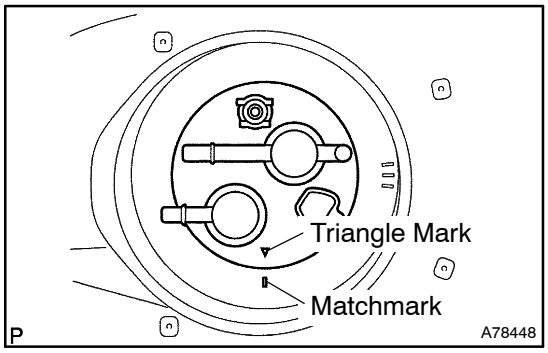

6. INSTALL FUEL SUCTION W/ PUMP & GAUGE TUBE ASSY

(a) Install a new gasket to the fuel tank.

(b) Install the fuel suction w/ pump & gauge tube.

NOTICE:

Be careful that the arm of the fuel sender gauge should not be bent.

(c) Align the triangle mark of the fuel suction w/ pump & gauge tube with the matchmark location of the fuel tank.

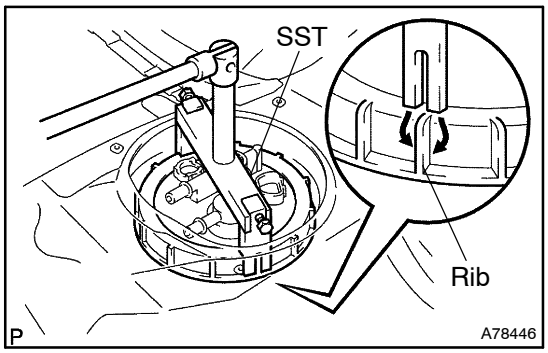

(d) Temporarily install the fuel pump gauge retainer.

(e) Using SST, tighten the fuel pump gauge retainer until the arrow mark is aligned with the center mark on the fuel tank.

SST 09808–14010

NOTICE:

Do not use other tools in this operation. Damage to the fuel pump gauge retainer and the fuel tank may result.

HINT:

A rib on the fuel pump gauge retainer can be fitted into a tip of the SST.

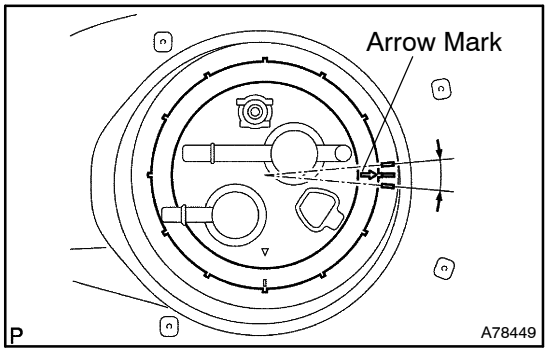

(f) Check that the arrow mark and center mark are aligned as shown in the illustration.

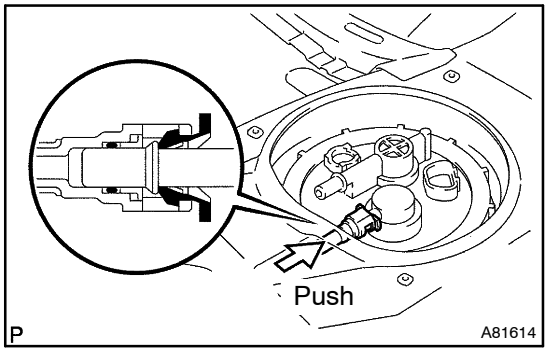

(g) Connect the fuel tank evaporation tube No. 2.
(1) Push in the fuel tube connector to the pipe until fuel tube connector makes ”click” sound.

NOTICE:
- **Check the connected part for any damage or foreign objects.**
- **After connecting, check if the fuel tube connector and pipe are securely connected by pulling on them.**

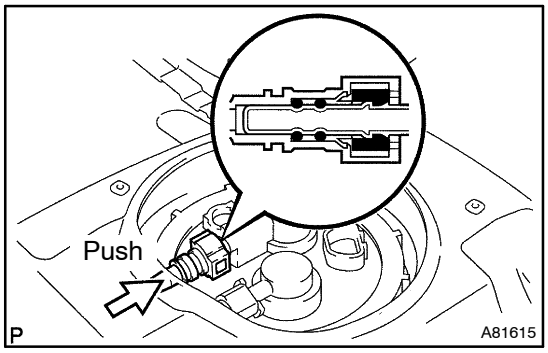

(h) Connect the fuel tank main tube.
(1) Push in the fuel tube connector to the pipe until fuel tube connector makes ”click” sound.

NOTICE:
- **Check the connected part for any damage or foreign objects.**
- **After connecting, check if the fuel tube connector and pipe are securely connected by pulling on them.**

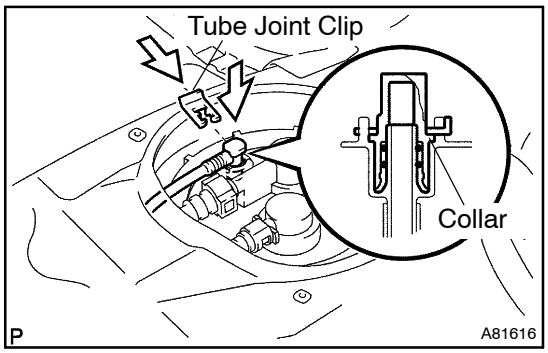

(i) Connect the fuel tank return tube.
(1) Install the fuel tube joint to the plug with the tube joint clip.

NOTICE:
- **Check the connecting part for scratch or foreign objects.**
- **Check that the fuel tube joint is inserted securely.**
- **Check that the tube joint clip is on the collar of the fuel tube joint.**
- **After installing the tube joint clip, check that the fuel tube joint has not been pulled off.**

7. CONNECT ENGINE WIRE NO.3 (BATTERY NEGATIVE TERMINAL)
Torque: 5.4 N·m (55 kgf·cm, 48 in.·lbf)
8. CHECK FOR FUEL LEAKS (See page 11–4)
9. INSTALL REAR FLOOR SERVICE HOLE COVER
10. INSTALL REAR SEAT CUSHION ASSY (SEAT FIXED TYPE) (See Pub. No. RM1018E, page 72–32)

FUEL TANK ASSY (2AZ–FSE)

COMPONENTS

11119–01

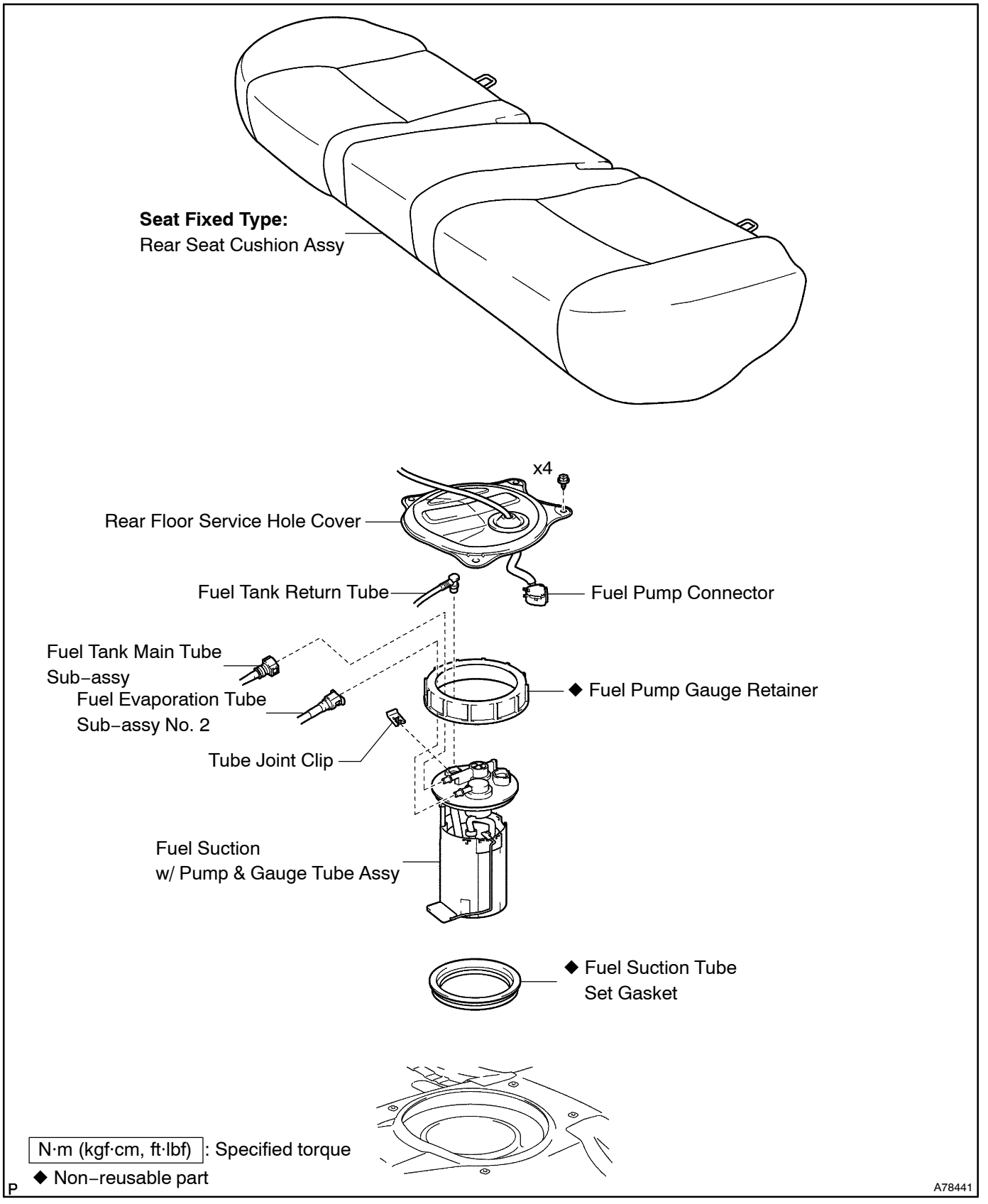

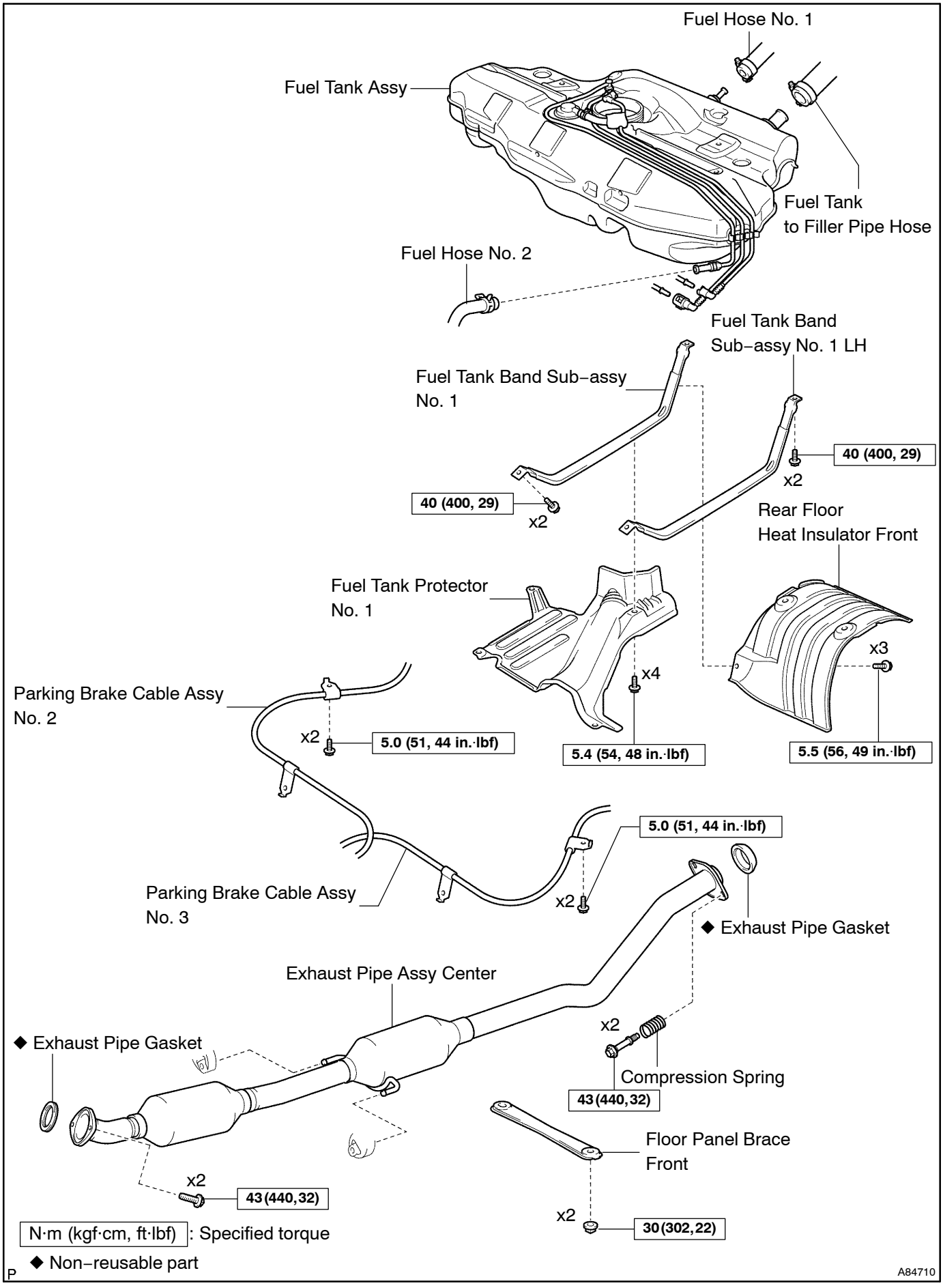
Fuel Hose No. 1
Fuel Tank Assy
Fuel Tank
to Filler Pipe Hose
Fuel Hose No. 2
Fuel Tank Band
Sub–assy No. 1 LH
Fuel Tank Band Sub–assy
No. 1
40 (400, 29)
x2
40 (400, 29)
x2
Rear Floor
Heat Insulator Front
Fuel Tank Protector
No. 1
x3
x4
Parking Brake Cable Assy
No. 2
x2
5.0 (51, 44 in.·lbf)
5.4 (54, 48 in.·lbf)
5.5 (56, 49 in.·lbf)
5.0 (51, 44 in.·lbf)
Parking Brake Cable Assy
No. 3
x2
◆ Exhaust Pipe Gasket
Exhaust Pipe Assy Center
x2
◆ Exhaust Pipe Gasket
Compression Spring
43 (440, 32)
Floor Panel Brace
Front
x2
43 (440, 32)
x2
30 (302, 22)
N·m (kgf·cm, ft·lbf) : Specified torque
◆ Non–reusable part
P
A84710

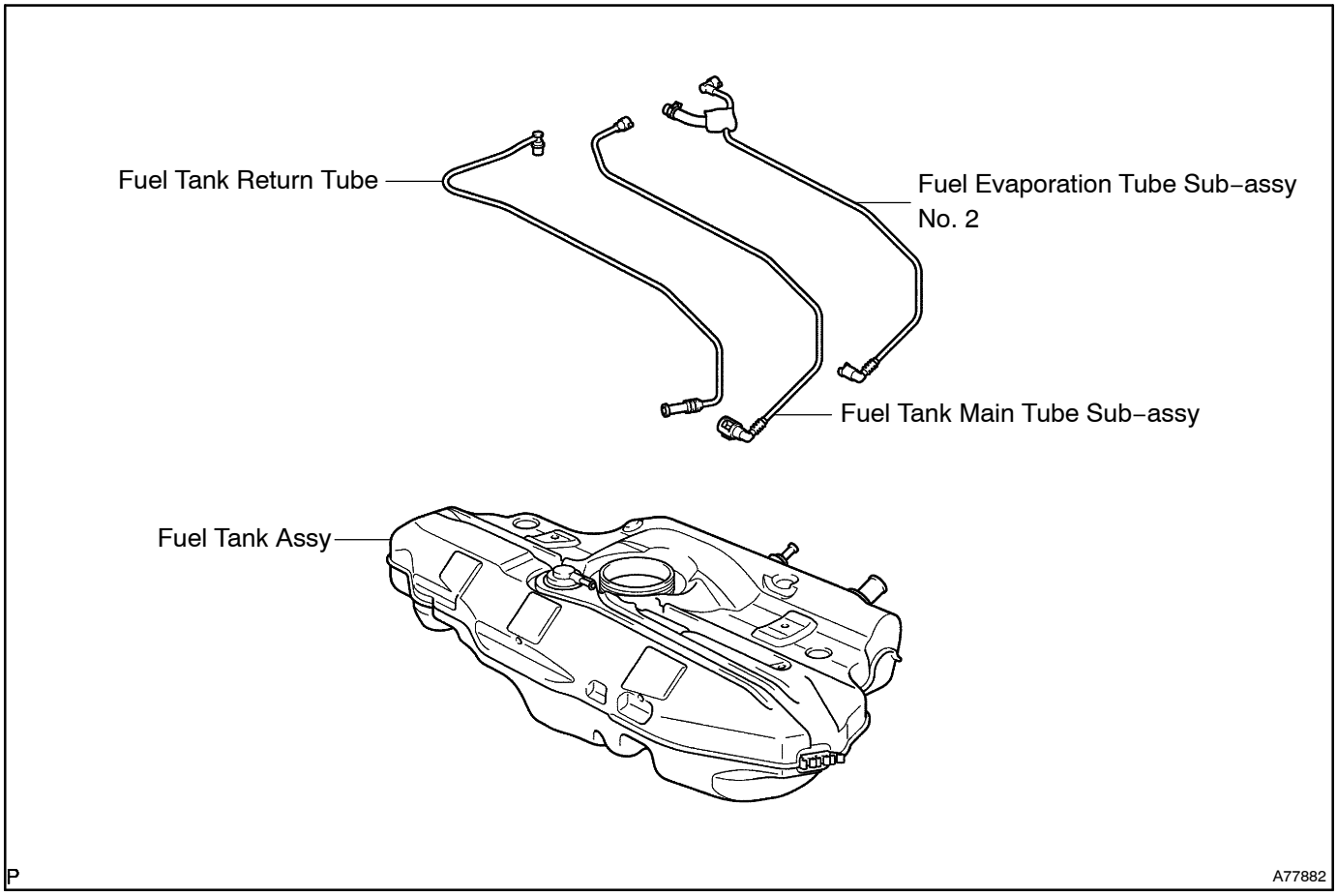
Fuel Tank Return Tube
Fuel Evaporation Tube Sub–assy No. 2
Fuel Tank Main Tube Sub–assy
Fuel Tank Assy
P
A77882

1111A–01

Removal & Installation and Disassembly & Reassembly

1. **DISCHARGE FUEL SYSTEM PRESSURE (See page 11–1)**
2. **DISCONNECT ENGINE WIRE NO.3 (BATTERY NEGATIVE TERMINAL)**
3. **REMOVE REAR SEAT CUSHION ASSY (SEAT FIXED TYPE)**
   (See Pub. No. RM1018E, page 72–32)
4. **REMOVE REAR FLOOR SERVICE HOLE COVER (See page 11–29)**
5. **REMOVE FUEL SUCTION W/ PUMP & GAUGE TUBE ASSY (See page 11–29)**
   SST 09808–14010
6. **DRAIN FUEL**
7. **REMOVE FLOOR PANEL BRACE FRONT (See page 15–2)**

8. **REMOVE EXHAUST PIPE ASSY CENTER**

(a) Remove the 4 bolts and 2 compression springs.

(b) Remove the exhaust pipe center and gasket from the 2 exhaust pipe supports.

(c) Remove the gasket from the exhaust pipe center.

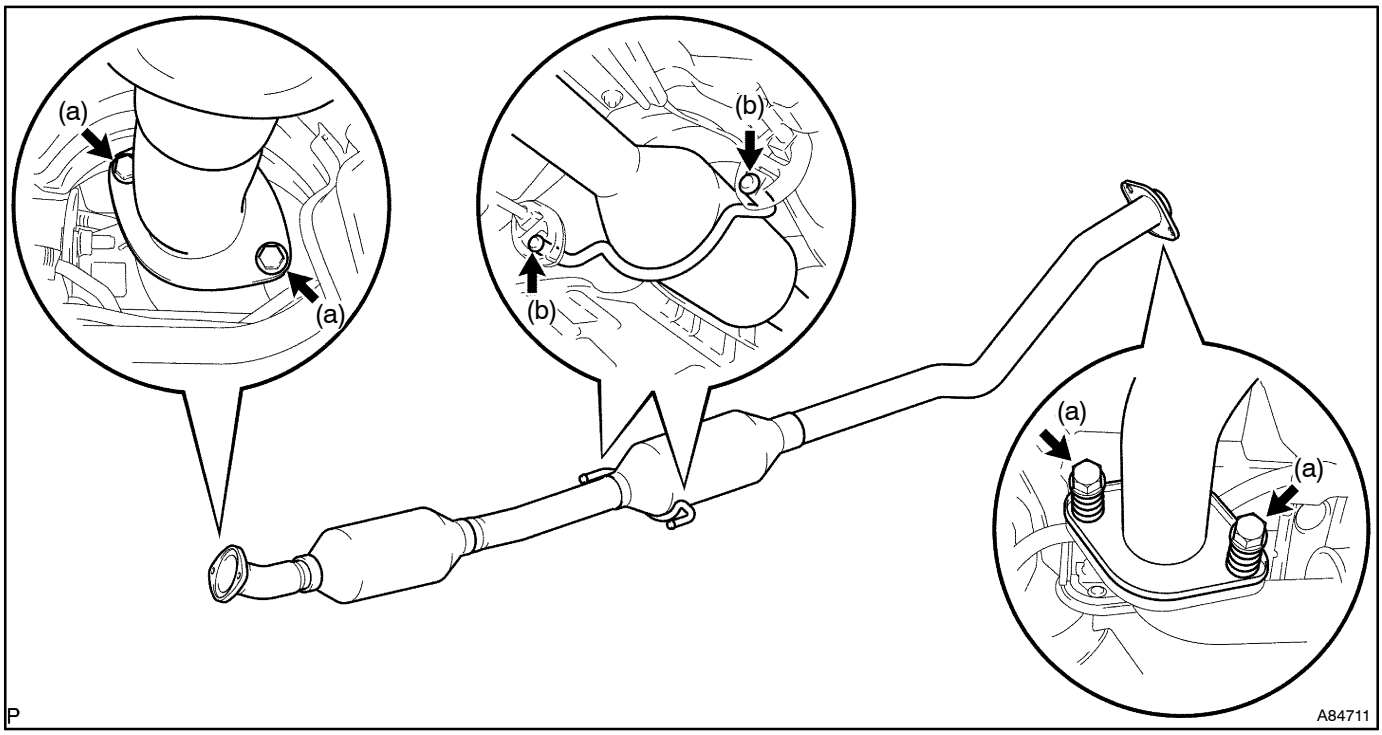

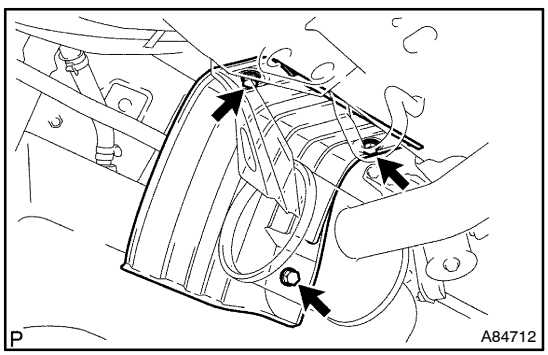

9. **REMOVE REAR FLOOR HEAT INSULATOR FRONT**

(a) Remove the 3 bolts, then remove the rear floor heat insulator front.

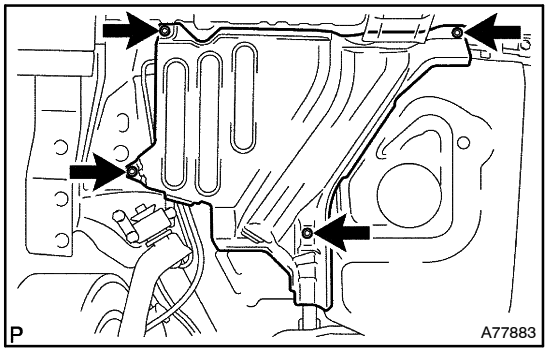

10. REMOVE FUEL TANK PROTECTOR NO.1

(a) Remove the 4 bolts, then remove the fuel tank protector.

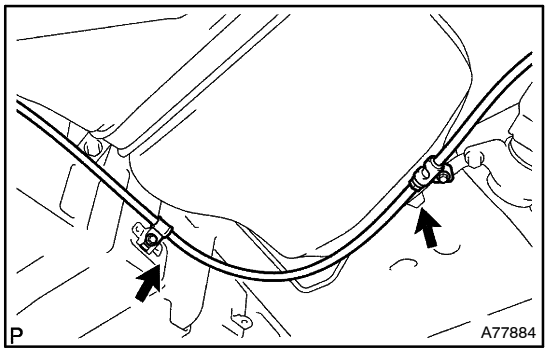

11. DISCONNECT PARKING BRAKE CABLE ASSY NO.2

(a) Remove the 2 bolts, then disconnect the parking brake cable No. 2.

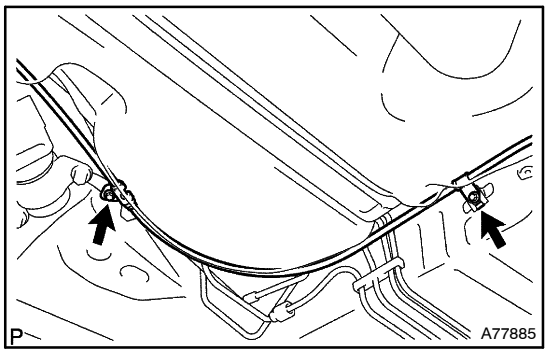

12. DISCONNECT PARKING BRAKE CABLE ASSY NO.3

(a) Remove the 2 bolts, then disconnect the parking brake cable No. 3.

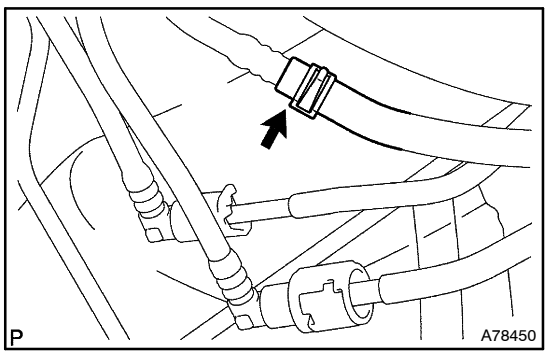

13. REMOVE FUEL TANK ASSY

(a) Disconnect the fuel hose No. 2 from the fuel tank return tube.

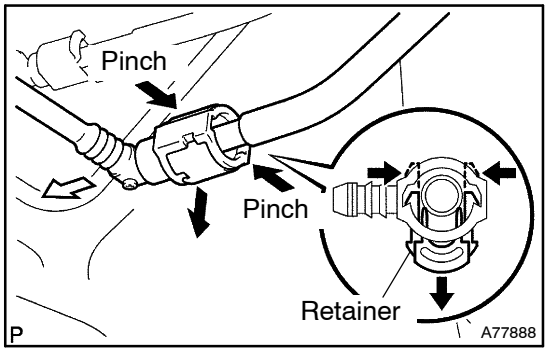

(b) Disconnect the fuel tank main tube.
(1) Pinch the tab of the retainer of the fuel tube connector to remove the lock claws and pull down it as shown in the illustration.
(2) Pull out the fuel tank main tube.

NOTICE:

- **Check around the fuel tube connector for any dirt or mud before this operation, then remove it if necessary.**
- **Be careful of mud because the fuel tube connector has an O–ring which seals the fuel tube connector and pipe that can be contaminated.**
- **Do not use any tool in this operation.**
- **Do not bend or twist the nylon tube. Protect the fuel tube connector by covering it with a vinyl or plastic bag.**
- **When the fuel tube connector and pipe are stuck, push and pull the fuel tube connector to release, then pull out the fuel tube connector from the pipe.**

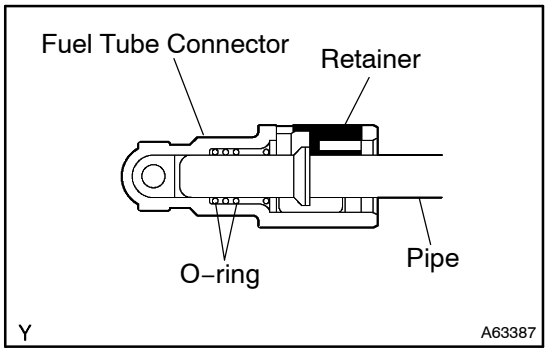

(c) Disconnect the fuel evaporation tube No. 2
(1) Pinch the retainer of the fuel tube connector, then pull out the fuel evaporation tube No. 2.

NOTICE:

- **Check around the fuel tube connector for any dirt or mud before this operation, then remove it if necessary.**
- **Be careful of mud because the fuel tube connector has an O–ring which seals the fuel tube connector and pipe that can be contaminated.**
- **Do not use any tool in this operation.**
- **Do not bend or twist the nylon tube. Protect the fuel tube connector by covering it with a vinyl or plastic bag.**
- **When the fuel tube connector and pipe are stuck, push and pull the fuel tube connector to release, then pull out the fuel tube connector from the pipe.**

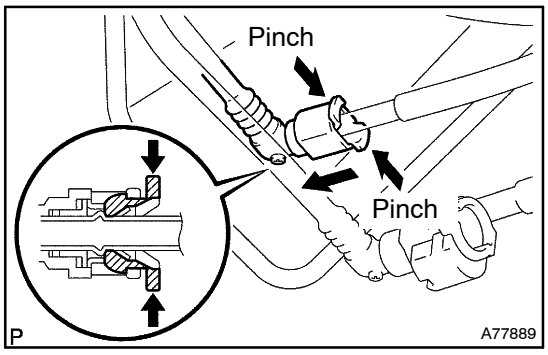

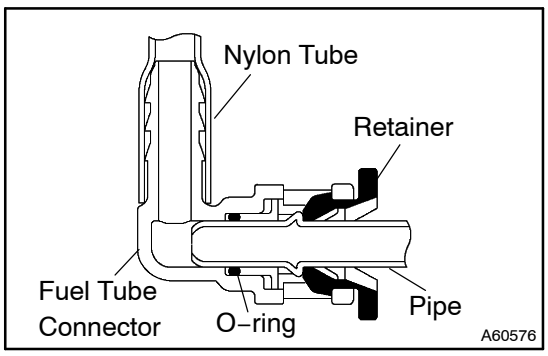

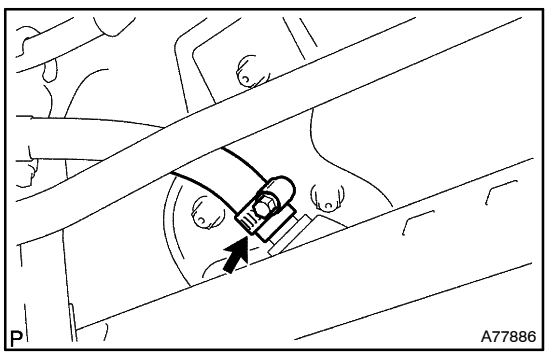

(d) Loosen the hose clamp, then disconnect the breather tube fuel hose.

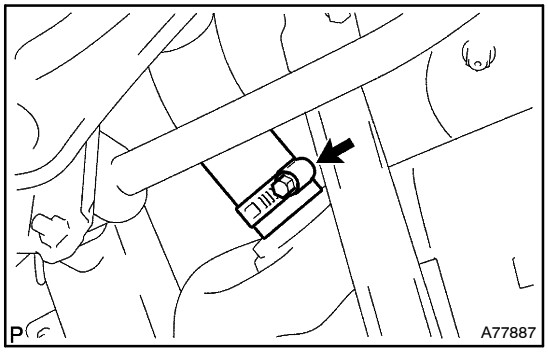

(e) Loosen the hose clamp, then disconnect the fuel tank to filler pipe hose.

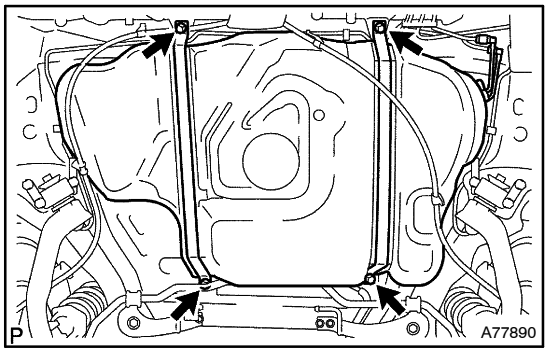

(f) Set a transmission jack to the fuel tank.
(g) Remove the 4 bolts, then remove the 2 fuel tank bands.
(h) Operate the transmission jack, then remove the fuel tank.

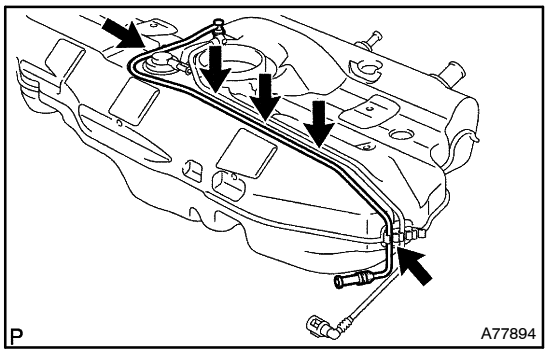

14. REMOVE FUEL TANK RETURN TUBE

(a) Unfasten the 5 claws, then remove the fuel tank return tube.

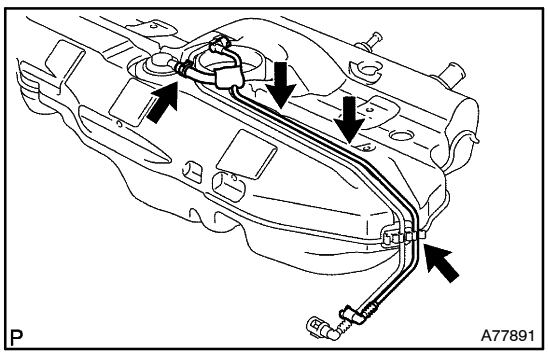

15. REMOVE FUEL EVAPORATION TUBE SUB–ASSY NO.2

(a) Unfasten the 3 claws and disconnect the fuel hose, then remove the fuel evaporation tube.

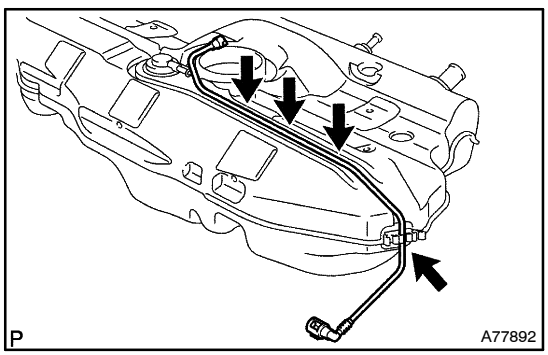

16. REMOVE FUEL TANK MAIN TUBE SUB–ASSY

(a) Unfasten the 4 claws, then remove the fuel tank main tube from the fuel tank.

17. INSTALL FUEL TANK MAIN TUBE SUB–ASSY

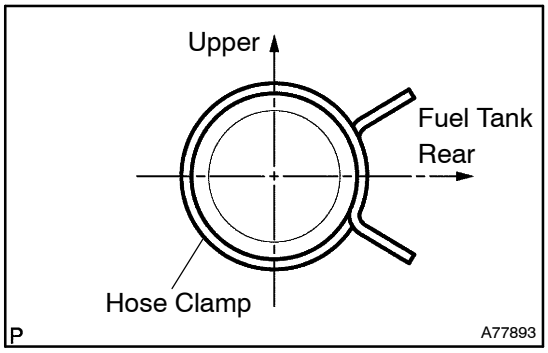

18. INSTALL FUEL EVAPORATION TUBE SUB–ASSY NO.2

(a) Install the hose clamp as shown in the illustration.

19. INSTALL FUEL TANK RETURN TUBE

20. INSTALL FUEL TANK ASSY

(a) Set the fuel tank to a transmission jack.

(b) Operate the transmission jack, then install the fuel tank.

(c) Install the 2 fuel tank bands with the 4 bolts.
Torque: 40 N·m (400 kgf·cm, 29 ft·lbf)

(d) Connect the fuel tank to filler pipe hose to the fuel tank.

(e) Connect the breather tube fuel hose to the fuel tank.

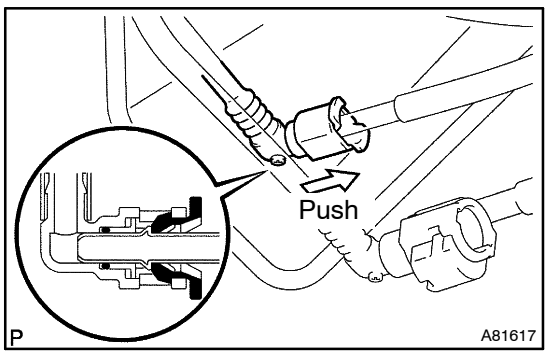

(f) Connect the fuel evaporation tube No. 2.
(1) Push in the fuel tube connector to the pipe until fuel tube connector makes ”click” sound.

NOTICE:
- **Check the connected part for any damage or foreign objects.**
- **After connecting, check that the fuel tube connector and pipe are securely connected by pulling on them.**

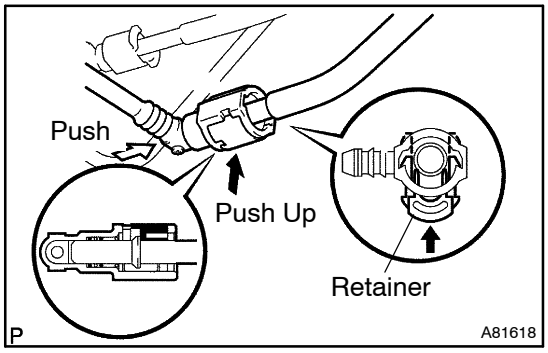

(g) Connect the fuel tank main tube.
(1) Push in the fuel tube connector to the pipe until fuel tube connector makes ”click” sound, then push up the retainer to the claws lock.

NOTICE:
- **Check the connected part for any damage or foreign objects.**
- **After connecting, check that the fuel tube connector and pipe are securely connected by pulling on them.**

(h) Connect the fuel hose No. 2 to the fuel tank return tube.

21. CONNECT PARKING BRAKE CABLE ASSY NO.3
Torque: 5.0 N·m (51 kgf·cm, 44 in.·lbf)

22. CONNECT PARKING BRAKE CABLE ASSY NO.2
Torque: 5.0 N·m (51 kgf·cm, 44 in.·lbf)

23. INSTALL FUEL TANK PROTECTOR NO.1
Torque: 5.4 N·m (55 kgf·cm, 48 in.·lbf)

24. INSTALL REAR FLOOR HEAT INSULATOR FRONT
Torque: 5.5 N·m (56 kgf·cm, 49 in.·lbf)

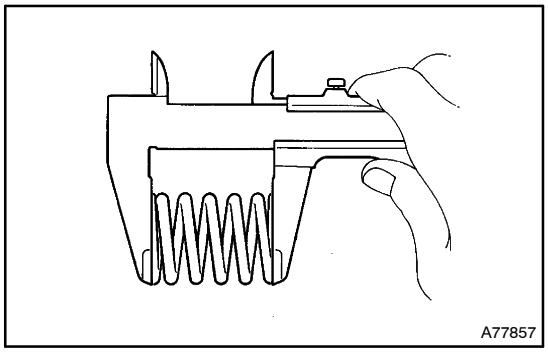

25. INSTALL EXHAUST PIPE ASSY CENTER

(a) Inspect the free length.

(1) Using vernier calipers, measure the free length of the compression spring.

Minimum length: 38.5 mm (1.516 in.)

If the free length is less than minimum, replace the compression spring.

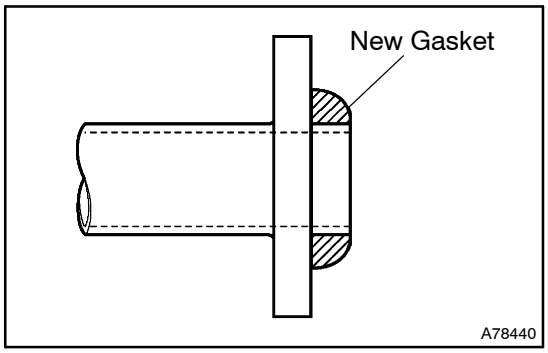

(b) Install a new gasket to the exhaust pipe center (exhaust pipe tail side) as shown in the illustration.

(c) Install a new gasket (exhaust pipe front side) and the exhaust pipe center to the 2 exhaust pipe supports.

(d) Tighten the 2 compression springs and 4 bolts.
Torque: 43 N·m (440 kgf·cm, 32 ft·lbf)

26. ADD FUEL

27. INSTALL FUEL SUCTION W/ PUMP & GAUGE TUBE ASSY (See page 11–29)
SST 09808–14010

28. CONNECT ENGINE WIRE NO.3 (BATTERY NEGATIVE TERMINAL)
Torque: 5.4 N·m (55 kgf·cm, 48 in.·lbf)

29. CHECK FOR FUEL LEAKS (See page 11–4)

30. CHECK FOR EXHAUST GAS LEAKS

31. INSTALL FLOOR PANEL BRACE FRONT (See page 15–2)

32. INSTALL REAR FLOOR SERVICE HOLE COVER (See page 11–29)

33. INSTALL REAR SEAT CUSHION ASSY (SEAT FIXED TYPE) (See Pub. No. RM1018E, page 72–32)

FUEL SYSTEM (1CD–FTV)(From September, 2003)

1111C–01

INSPECTION

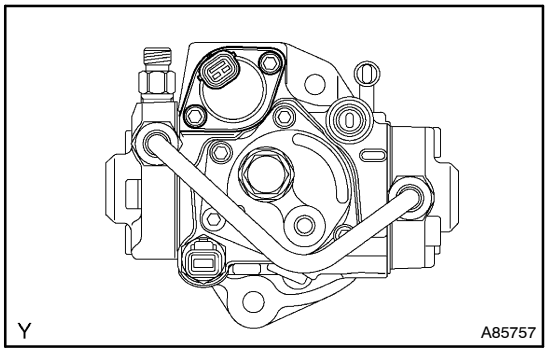

1. INSPECT INJECTION OR SUPPLY PUMP ASSY

(a) Inspect the resistance.

(1) Using an ohmmeter, measure the resistance between the terminals.

Resistance: 1.6 to 2.6 Ω at 20°C (68°F)

If the result is not as specified, replace the supply pump assembly.

2. INSPECT INJECTOR ASSY

(a) Inspect the resistance.

(1) Using an ohmmeter, measure the resistance between the terminals.

Resistance: 0.45 to 1.45 Ω at 20°C (68°F)

If the result is not as specified, replace the injector assembly.

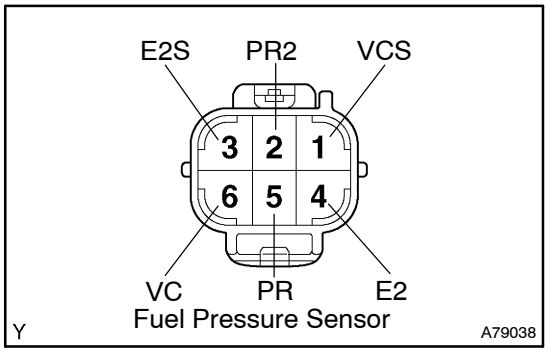

3. INSPECT COMMON RAIL ASSY

(a) Inspect the resistance of the fuel pressure sensor.

(1) Using an ohmmeter, measure the resistance between the terminals.

Resistance:

Tester Connection	Specified Condition
5 (PR) – 4 (E2)	16.4 kΩ or less
2 (PR2) – 3 (E2S)	16.4 kΩ or less
6 (VC) – 5 (PR)	3 kΩ or less
1 (VCS) – 2 (PR2)	3 kΩ or less

If the result is not as specified, replace the common rail assembly.

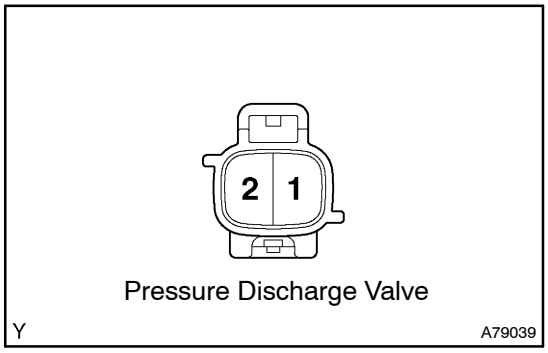

(b) Inspect the resistance of the pressure discharge valve.

(1) Using an ohmmeter, measure the resistance between the terminals.

Resistance: 0.45 to 1.45 Ω at 20°C (68°F)

If the result is not as specified, replace the common rail assembly.

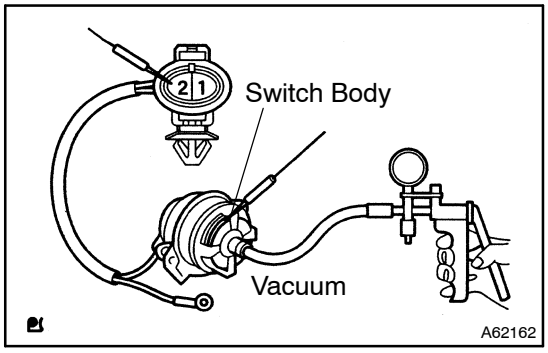

4. INSPECT FUEL HEATER ASSY

(a) Inspect the resistance.

(1) Apply vacuum of 34.7 ± 5.3 kPa (260 ± 40 mmHg, 10.24 ± 1.57 in Hg) to the vacuum switch port.

(2) Using an ohmmeter, measure the resistance between terminal 2 and the switch body.

Resistance: 0.5 to 20 Ω at 20°C (68°F)

If the result is not as specified, replace the fuel heater assembly.

5. INSPECT LEVEL WARNING SWITCH

(a) Inspect the resistance.

(1) Using an ohmmeter, measure the resistance between the terminals.

Specified condition:

When raising the float: Below 1 Ω

When letting the float down: 10 kΩ or higher

If the result is not as specified, replace the level warning switch.

6. INSPECT FUEL TEMPERATURE SENSOR

(a) Inspect the resistance.

(1) Using an ohmmeter, measure the resistance between the terminals.

Resistance:

2.21 to 2.69 Ω at 20°C (68°F)

0.287 to 0.349 Ω at 80°C (176°F)

If the result is not as specified, replace the fuel temperature sensor.

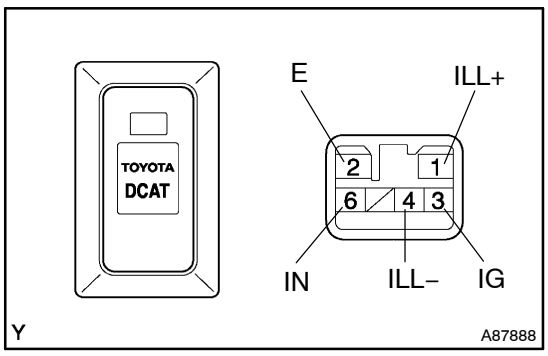

7. INSPECT FUEL CONTROL SWITCH

(a) Inspect the resistance.

Switch Position	Tester Connection	Specified Condition
Switch OFF	2 – 6	Below 1 Ω
Switch ON	2 – 3 – 6	Below 1 Ω
Illumination circuit	1 – 4	Below 1 Ω

If the result is not as specified, replace the fuel control switch.

INJECTOR ASSY (1CD–FTV)(From September, 2003)

COMPONENTS

110U7–02

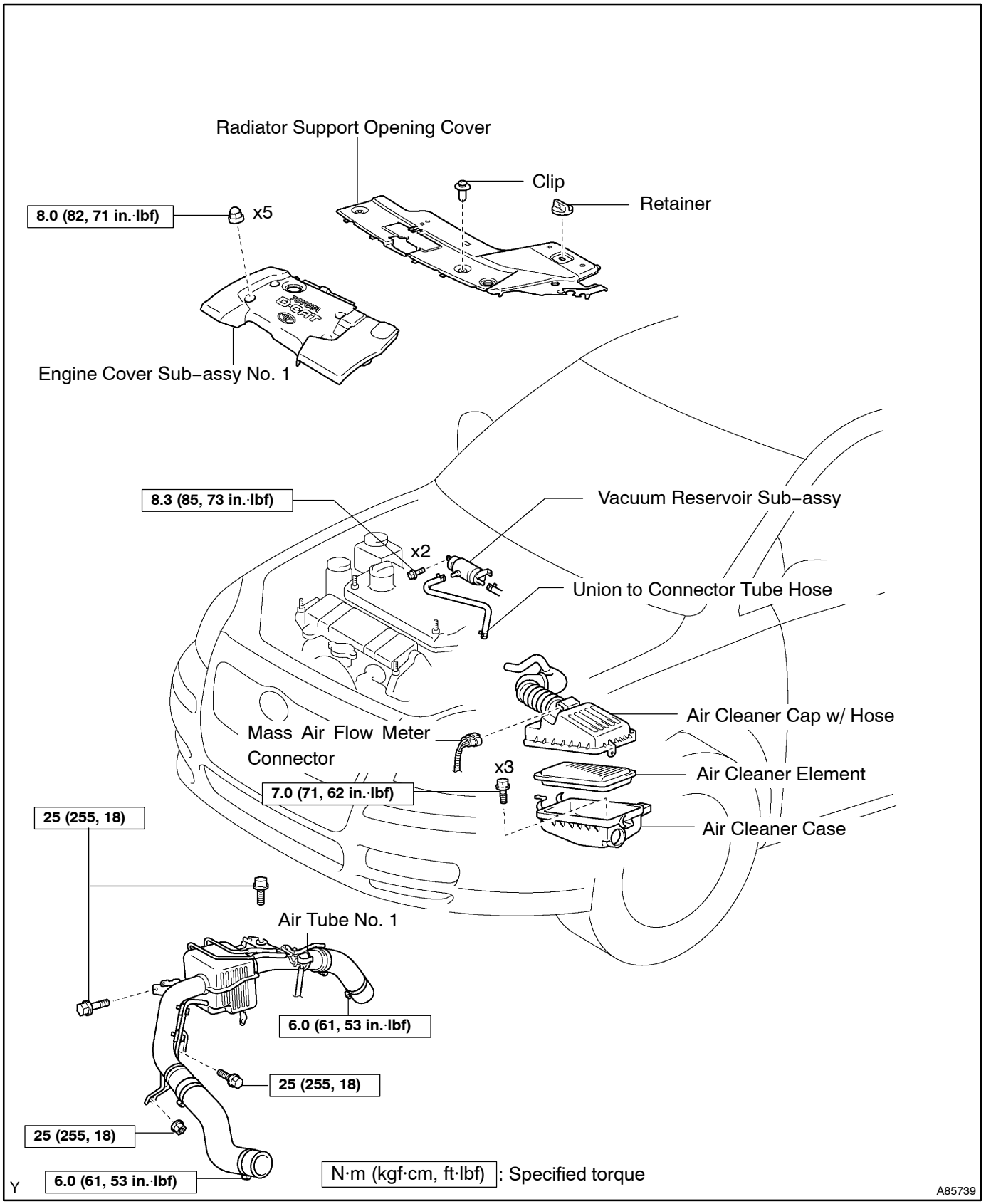

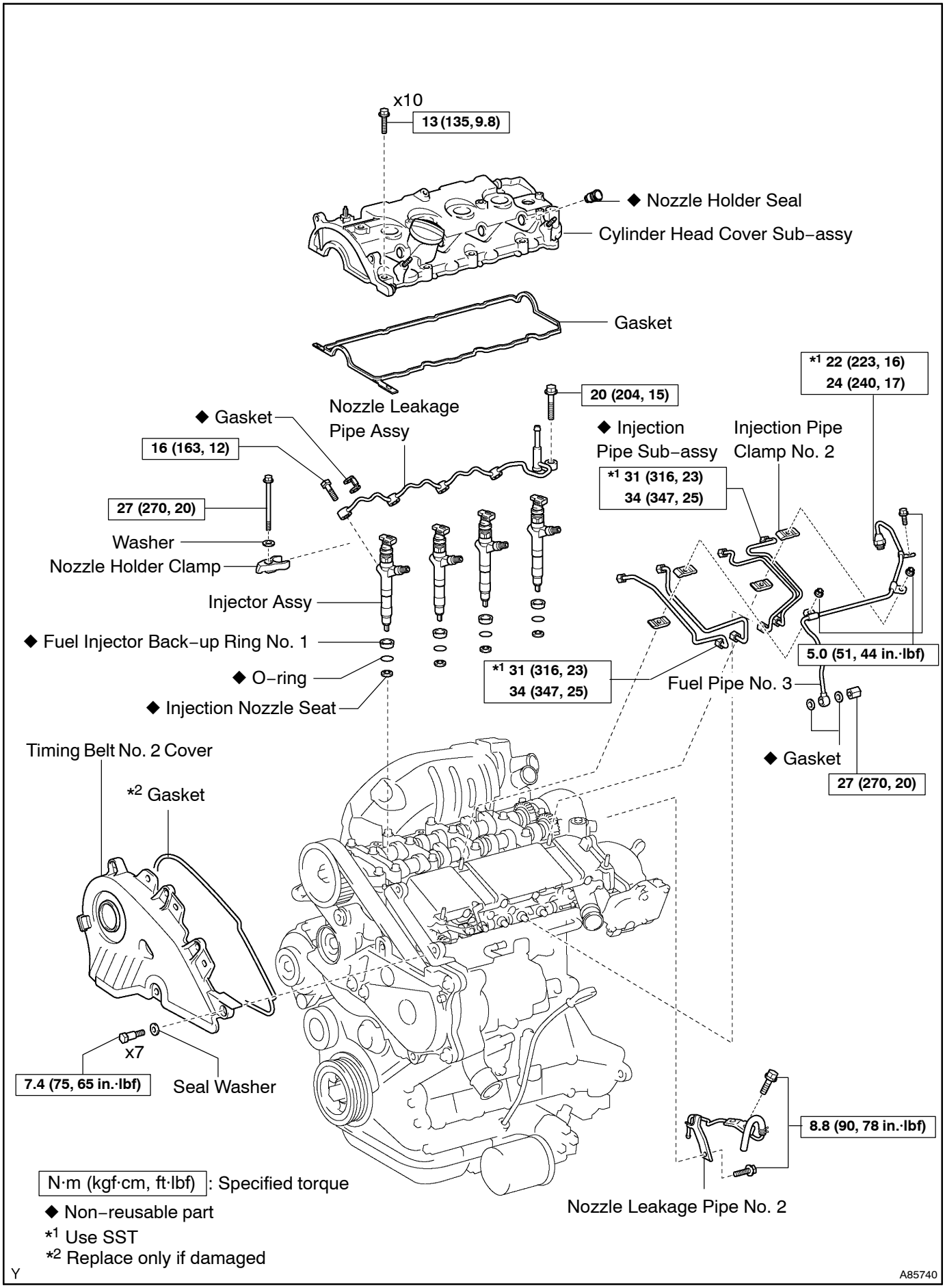
x10
13 (135, 9.8)
◆ Nozzle Holder Seal
Cylinder Head Cover Sub–assy
Gasket
*1 22 (223, 16)
24 (240, 17)
20 (204, 15)
Nozzle Leakage
Pipe Assy
◆ Gasket
16 (163, 12)
◆ Injection
Pipe Sub–assy
Injection Pipe
Clamp No. 2
*1 31 (316, 23)
34 (347, 25)
27 (270, 20)
Washer
Nozzle Holder Clamp
Injector Assy
◆ Fuel Injector Back–up Ring No. 1
◆ O–ring
◆ Injection Nozzle Seat
*1 31 (316, 23)
34 (347, 25)
5.0 (51, 44 in.·lbf)
Fuel Pipe No. 3
◆ Gasket
27 (270, 20)
Timing Belt No. 2 Cover
*2 Gasket
x7
7.4 (75, 65 in.·lbf)
Seal Washer
8.8 (90, 78 in.·lbf)
Nozzle Leakage Pipe No. 2
N·m (kgf·cm, ft·lbf) : Specified torque
◆ Non–reusable part
*1 Use SST
*2 Replace only if damaged
Y
A85740

1111D–01

REPLACEMENT

NOTICE:

If an incorrect injector compensation code was registered with the ECM, it may rattle the engine assembly or the engine idling may become rough. In addition, it may become a cause of engine failure or shorten the life of the engine.

HINT:

- In order to optimize the injector's fuel injection characteristic, the ECM compensates the injection duration by each cylinder. The ECM stores and uses compensating data in the form of a 30–digit–alphanumeric value that is imprinted on the head portion of each injector as the injector compensation code.
- If you installed a new injector, its own injector compensation code is needed to register with the ECM. Also, if you replaced the ECM, the compensation codes of all the injectors are needed to register because the new ECM does not have the codes until they are registered.
- Once the ECM is replaced, DTC P1601 will be present when turning the ignition switch to ON. This is to inform you that the injector compensation codes are required to register with the ECM. In order to clear the DTC, register the compensation codes first, then turn the ignition switch to OFF and wait for 30 seconds or longer.

1. REMOVE VACUUM RESERVOIR SUB–ASSY

(a) Disconnect the 2 vacuum hoses and connector.

(b) Remove the 2 bolts and vacuum reservoir.

2. REMOVE RADIATOR SUPPORT OPENING COVER

3. REMOVE ENGINE COVER SUB–ASSY NO.1

(a) Remove the 5 nuts and engine cover.

4. REMOVE AIR CLEANER ASSY

(a) Disconnect the connector.

(b) Remove the air cleaner cap together with the air cleaner hose.

(c) Remove the air cleaner filter element.

(d) Remove the 3 bolts and air cleaner case.

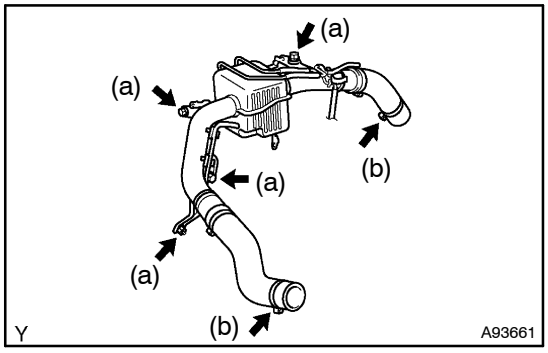

5. REMOVE AIR TUBE NO.1

(a) Remove the 3 bolts and nut, then separate the air tube No. 1.

(b) Loosen the hose clamp bolts.

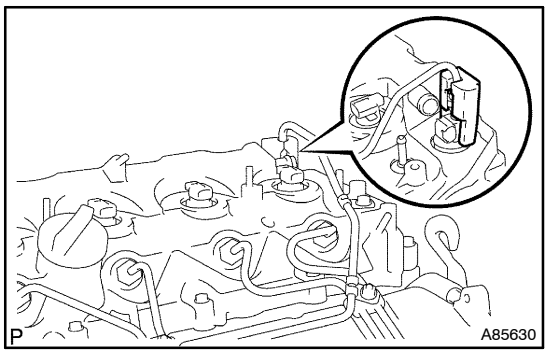

6. REMOVE FUEL PIPE NO.3

(a) Remove the fuel pipe insulator.

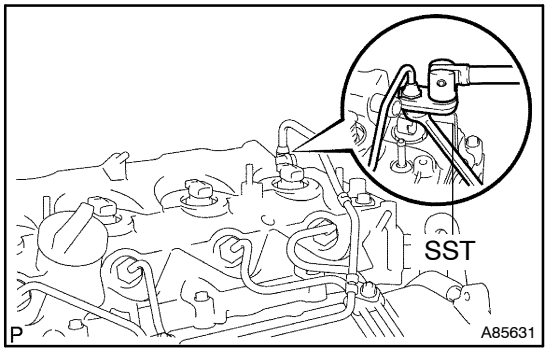

(b) Hold the hexagonal lobe of the exhaust fuel addition injector assembly first. Using SST, remove the fuel pipe No. 3 from the injector side.
SST 09023–12700

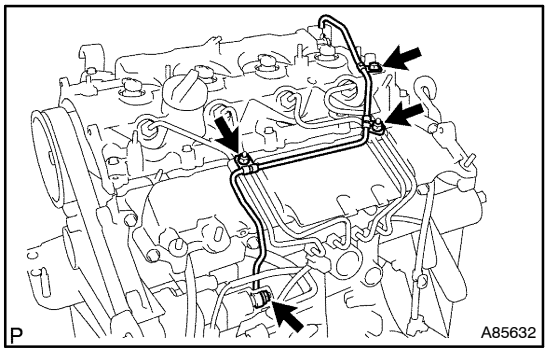

(c) Remove the bolt and 3 nuts, then remove the fuel pipe No. 3 and 2 gaskets.

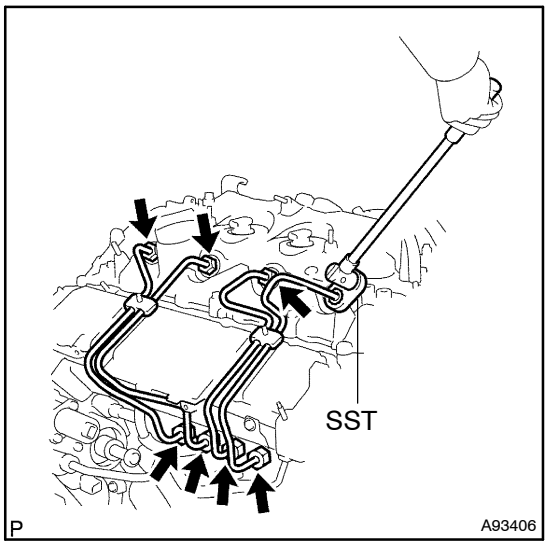

7. REMOVE INJECTION PIPE SUB–ASSY NO.1

(a) Remove the 2 nuts and 2 upper infection pipe clamps from the intake manifold.

(b) Using SST, remove the injection pipe from the common rail side.
SST 09023–12700

(c) Using SST, remove the injection pipe from the injector side.
SST 09023–12700

(d) After removing the fuel pipe, to prevent dust or foreign objects from being introduced, cover the common rail with vinyl tape and protect the injector inlet with a vinyl or plastic bag.

8. REMOVE INJECTION PIPE SUB–ASSY NO.2
SST 09023–12700

HINT:
Perform the same procedures as the injection pipe No. 1.

9. REMOVE INJECTION PIPE SUB–ASSY NO.3
SST 09023–12700

HINT:
Perform the same procedures as the injection pipe No. 1.

10. REMOVE INJECTION PIPE SUB–ASSY NO.4
SST 09023–12700

HINT:
Perform the same procedures as the injection pipe No. 1.

11. REMOVE TIMING BELT NO.2 COVER

(a) Remove the 7 bolts and 7 seal washers, then remove the timing belt cover.

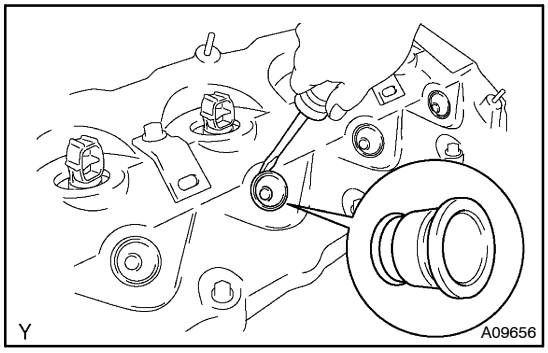

12. REMOVE NOZZLE HOLDER SEAL

(a) Using a screwdriver, pry out the 4 nozzle holder seals.

13. REMOVE NOZZLE LEAKAGE PIPE NO.2

(a) Disconnect the 2 fuel hoses from the nozzle leakage pipe No. 2.

(b) Remove the 2 bolts and nozzle leakage pipe No. 2.

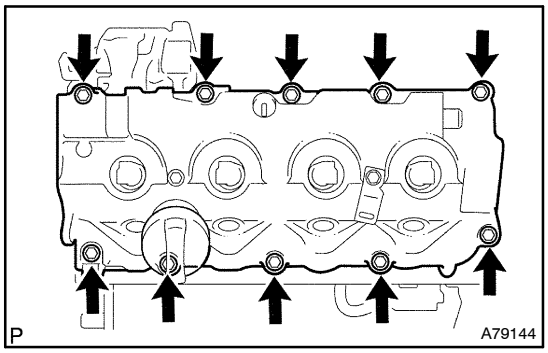

14. REMOVE CYLINDER HEAD COVER SUB–ASSY

(a) Remove the 10 bolts and cylinder head cover.

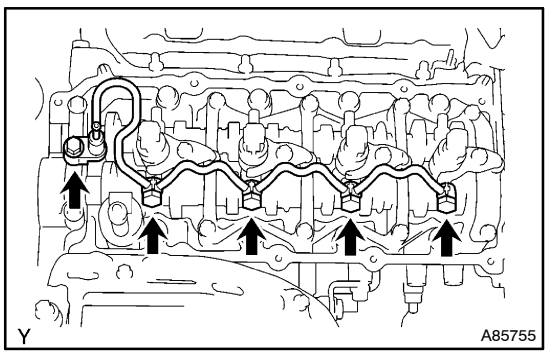

15. REMOVE NOZZLE LEAKAGE PIPE ASSY

(a) Remove the bolt and 4 hollow screws, then remove the nozzle leakage pipe and 4 gaskets.

NOTICE:

When removing the nozzle leakage pipe, place a shop rag under the pipe to protect the cylinder head from the fuel remaining inside the pipe.

16. REMOVE NOZZLE HOLDER CLAMP

(a) Remove the 4 bolts, 4 washers and 4 nozzle holder clamps.

17. REMOVE INJECTOR ASSY

HINT:

Each injector assembly has its own fuel injection characteristic. When replacing the injector assembly, store them in the correct order so that they can be returned to the original locations when reassembling.

(a) Remove the 4 injectors from the cylinder head.

(b) Remove the O–rings and back–up rings from each injector.

(c) Remove the 4 nozzle seats from the cylinder head.

18. REGISTRATION OF INJECTOR COMPENSATION CODE (REPLACEMENT OF THE NEW INJECTORS) (See page 05–277)

HINT:

Each injector assembly has characteristic fuel injecting behavior. When replacing the injector assembly, store them in the correct order so that they can be returned to the original locations when reassembling.

19. INSTALL INJECTOR ASSY

(a) Install the 4 new nozzle seats to the cylinder head.

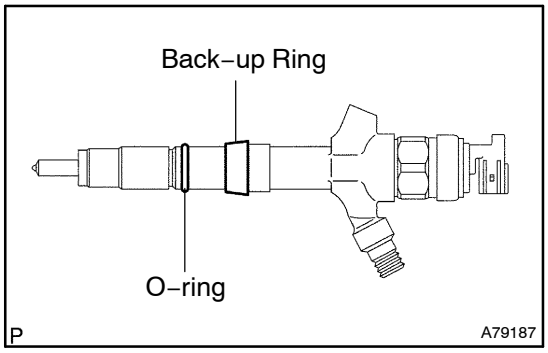

(b) Install new back–up rings and O–rings to each injector.
(c) Apply a light coat of engine oil to the O–rings on each injector.
(d) Install the injector to the cylinder head.

NOTICE:

Fit the injectors to the nozzle seat.

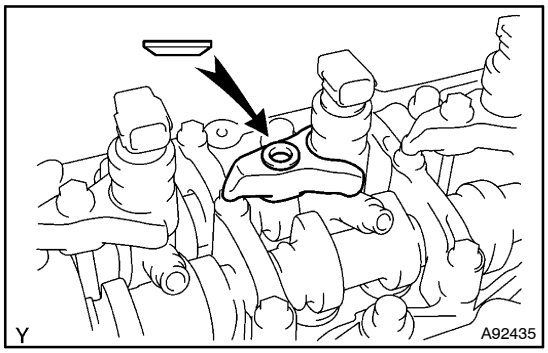

(e) Install the nozzle holder clamp as shown in the illustration. Tighten the camshaft bearing cap bolt by hand to fix the nozzle holder clamp.

NOTICE:

- **Pay attention to the mounting orientation of the washer.**
- **When temporarily attaching the nozzle holder clamp and mounting bolt, be careful not to orient them at an angle.**

HINT:

Apply a light coat of engine oil to the threads of the nozzle holder clamp bolts.

(f) Install the injection pipe No. 1, No. 2, No. 3 and No. 4, then tighten the nuts by hand.
(g) Install new 4 gaskets and the leakage pipe No. 1. Tighten the 4 hollow screws by hand.
(h) Tighten the 4 nozzle holder clamp bolts.
Torque: 27 N·m (270 kgf·cm, 20 ft·lbf)
(i) Remove the 4 injection pipes.

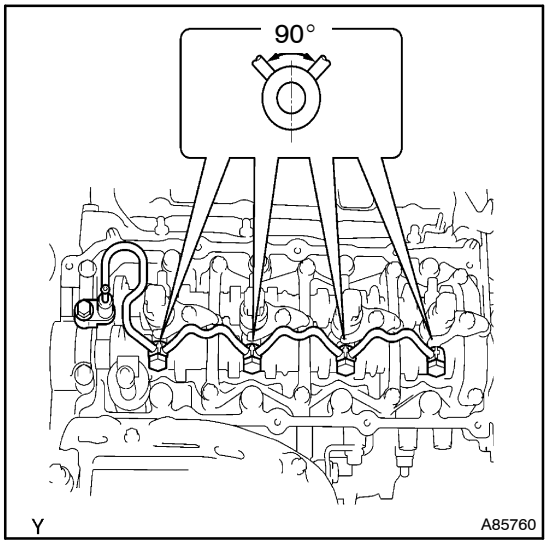

20. INSTALL NOZZLE LEAKAGE PIPE ASSY

(a) Install the nozzle leakage pipe and 4 new gaskets.

NOTICE:

When installing the gaskets, pay attention to the mounting orientation. Install the gasket so that the joint of the gasket comes within the range shown in the illustration.

(b) Apply a light coat of engine oil to the 4 hollow screws and the bolt.

(c) Tighten the 4 hollow screws and bolt by hand.
(d) Tighten the 4 hollow screws and bolt.
Torque:
16 N·m (163 kgf·cm, 12 ft·lbf) for hollow screw
20 N·m (204 kgf·cm, 15 ft·lbf) for flange bolt

NOTICE:
In any case, when the torque exceeds the upper limit, replace the leakage pipe hollow screw and gaskets with new ones.

(e) Check that there are no leaks from the nozzle leakage pipe connection.
(1) Apply a light coat of soapy water (any fluid to detect fuel leaks) to the nozzle leakage pipe connection.

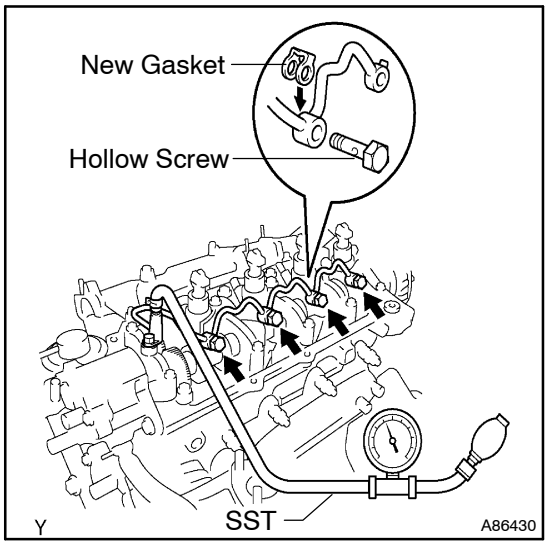

(2) Using SST (a turbocharger pressure gauge), attach SST to the fuel return side of the nozzle leakage pipe, then maintain 100 kPa (1.0 kgf/cm^2, 14.5 psi) of pressure for 60 seconds to check that there are no bubbles from the pipe connection.
SST 09992–00242
(3) After checking fuel leaks, wipe off soapy water from the pipe connection.

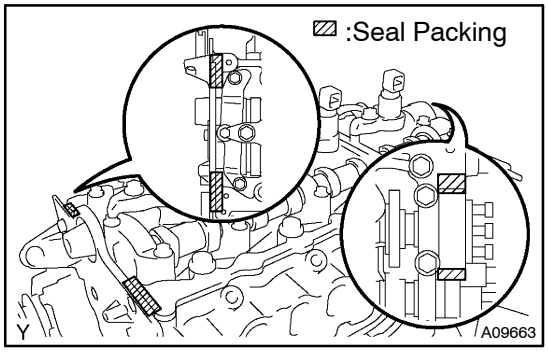

21. INSTALL CYLINDER HEAD COVER SUB–ASSY
(a) Remove any old packing (FIPG) material.
(b) Apply seal packing to the cylinder head.
Seal packing: Part No. 08826–00080 or equivalent
(c) Install the gasket to the cylinder head cover.
(d) Install the cylinder head cover with the 10 bolts.
Torque: 13 N·m (135 kgf·cm, 9.8 ft·lbf)

22. INSTALL NOZZLE LEAKAGE PIPE NO.2
(a) Install the nozzle leakage pipe No. 2 with the 2 bolts.
Torque: 8.8 N·m (90 kgf·cm, 78 in.·lbf)
(b) Connect the 2 fuel hoses.

23. INSTALL NOZZLE HOLDER SEAL
(a) Install new 4 nozzle holder seals.

24. INSTALL TIMING BELT NO.2 COVER (See page 14–138)

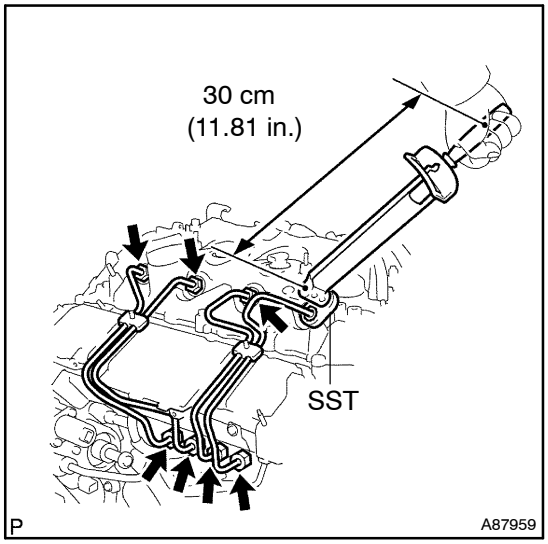

25. INSTALL INJECTION PIPE SUB–ASSY NO.1

NOTICE:

- **In case of replacing the injectors, the injection pipes must be replaced, too.**
- **When assembling the pipes, perform the operation with the engine cold under room temperature.**

(a) Remove the vinyl or plastic bag from the injector and vinyl tape from the common rail.

(b) Temporarily install the injection pipe.

(c) Using SST, tighten the nut of the injection pipe to the common rail.

SST 09023–12700

Torque:

31 N·m (316 kgf·cm, 23 ft·lbf) with SST

34 N·m (347 kgf·cm, 25 ft·lbf) without SST

HINT:

- Use a torque wrench with the fulcrum length of 30 cm (11.81 in.).
- After the injection pipe is reassembled, check that the used pipe has no deflection and is installed properly. If it has deflection or could not be installed properly, replace the used pipe with a new pipe.

(d) Using SST, tighten the nut of the injection pipe to the injector.

SST 09023–12700

Torque:

For used pipe:

36 N·m (372 kgf·cm, 27 ft·lbf) with SST

40 N·m (408 kgf·cm, 30 ft·lbf) without SST

For new pipe:

31 N·m (316 kgf·cm, 23 ft·lbf) with SST

34 N·m (347 kgf·cm, 25 ft·lbf) without SST

HINT:

- Use a torque wrench with the fulcrum length of 30 cm (11.81 in.).
- After the injection pipe is reassembled, check that the used pipe has no deflection and is installed properly. If it has deflection or could not be installed properly, replace the used pipe with a new pipe.

26. INSTALL INJECTION PIPE SUB–ASSY NO.2

SST 09023–12700

HINT:

Perform the same procedures as the injection pipe No. 1.

27. INSTALL INJECTION PIPE SUB–ASSY NO.3

SST 09023–12700

HINT:

Perform the same procedures as the injection pipe No. 1.

28. INSTALL INJECTION PIPE SUB–ASSY NO.4

SST 09023–12700

HINT:

Perform the same procedures as the injection pipe No. 1.

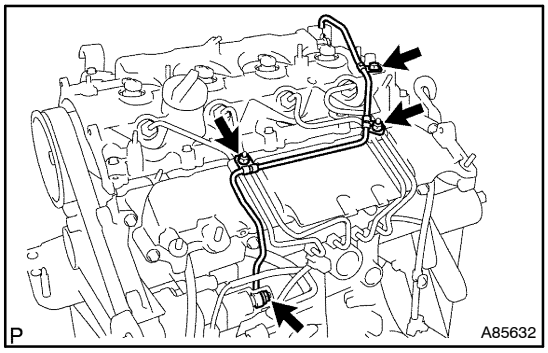

29. INSTALL FUEL PIPE NO.3

(a) Install 2 new gaskets, then temporarily install the bolt, 3 nuts and fuel pipe No. 3.

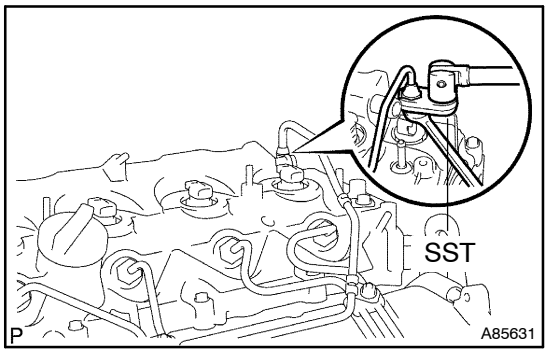

(b) Hold the hexagonal lobe of the exhaust fuel addition injector assembly first. Using SST, tighten the nut of the fuel pipe No. 3 to the injector side.

SST 09023–12700

Torque:

22 N·m (223 kgf·cm, 16 ft·lbf) with SST

24 N·m (240 kgf·cm, 17 ft·lbf) without SST

HINT:

- Use a torque wrench with the fulcrum length of 30 cm (11.81 in.).
- After the injection pipe is reassembled, check that the used pipe has no deflection and is installed properly. If it has deflection or could not be installed properly, replace the used pipe with a new pipe.

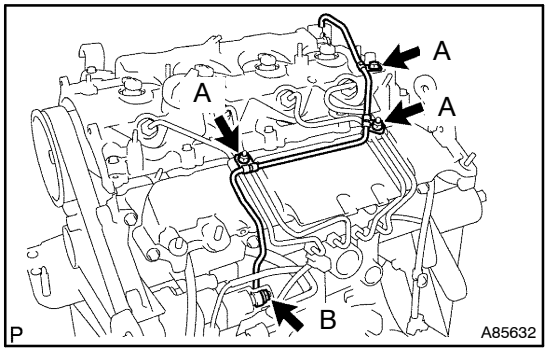

(c) Tighten the bolt and 3 nuts.

Torque:

5.0 N·m (51 kgf·cm, 44 in.·lbf) for bolt and nut A

27 N·m (275 kgf·cm, 20 ft·lbf) for nut B

(d) Install the fuel pipe insulator.

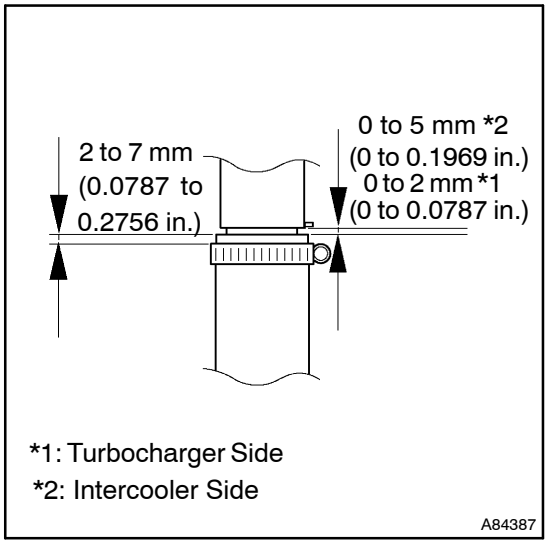

30. INSTALL AIR TUBE NO.1

(a) Install the air hose and hose clamps as shown in the illustration.

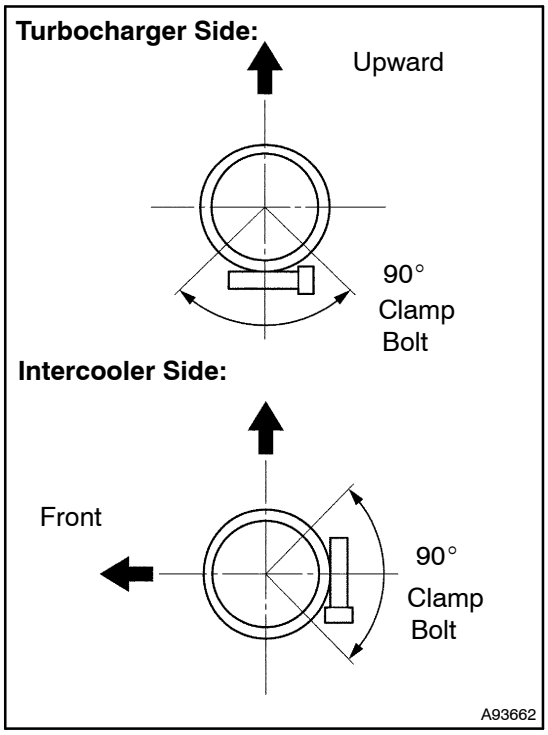

(b) Tighten the hose clamps as shown in the illustration.
Torque: 6.0 N·m (61 kgf·cm, 53 in.·lbf)

(c) Install the air tube No. 1 with the 3 bolts and nut.
Torque: 25 N·m (255 kgf·cm, 18 ft·lbf)

31. INSTALL AIR CLEANER ASSY
Torque: 7.0 N·m (71 kgf·cm, 62 in.·lbf)

32. INSTALL ENGINE COVER SUB–ASSY NO.1
Torque: 8.0 N·m (82 kgf·cm, 71 in.·lbf)

33. INSTALL VACUUM RESERVOIR SUB–ASSY
Torque: 8.3 N·m (85 kgf·cm, 73 in.·lbf)

34. CHECK FOR FUEL LEAKS

NOTICE:

Under the ACTIVE TEST mode, the fuel pressure increases. Take precautions to prevent fuel from spraying on you or inside the engine compartment.

HINT:

During the ACTIVE TEST mode, engine speed goes high and combustion noise becomes loud.

(a) Check that there are no fuel leaks from any parts of the fuel system when the engine is not running.

HINT:

If fuel leakage could be found on specific parts, replace them with new parts.

(b) While cranking or when starting the engine, check that there is no leaks from any parts of the fuel system.

HINT:

If fuel leakage could be found on specific parts, replace them with new parts.

(c) Disconnect the fuel hose from the common rail.

(d) While cranking the engine, check fuel leaks from the return pipe.

HINT:

If there is fuel leakage, replace the common rail.

(e) Connect the hand–held tester to the DLC3.

(f) Start the engine, then turn the hand–held tester ON.

(g) Select the FUEL LEAK test of the ACTIVE TEST mode on the hand–held tester.

(h) If you do not have the hand–held tester, depress the accelerator pedal quickly and fully to increase the engine speed to its maximum, then keep it for 2 seconds. Repeat this operation several times.

(i) Check that there are no leaks from any parts of the fuel system.

NOTICE:

If the leakage from the return pipe is less than 10 cc (0.6 cu in.) in a minute, it is acceptable.

HINT:

If fuel leakage could be found on specific parts, replace them with new parts.

(j) Reconnect the fuel hose to the common rail.

INJECTION OR SUPPLY PUMP ASSY (1CD–FTV)(From September, 2003)

COMPONENTS

110U9–02

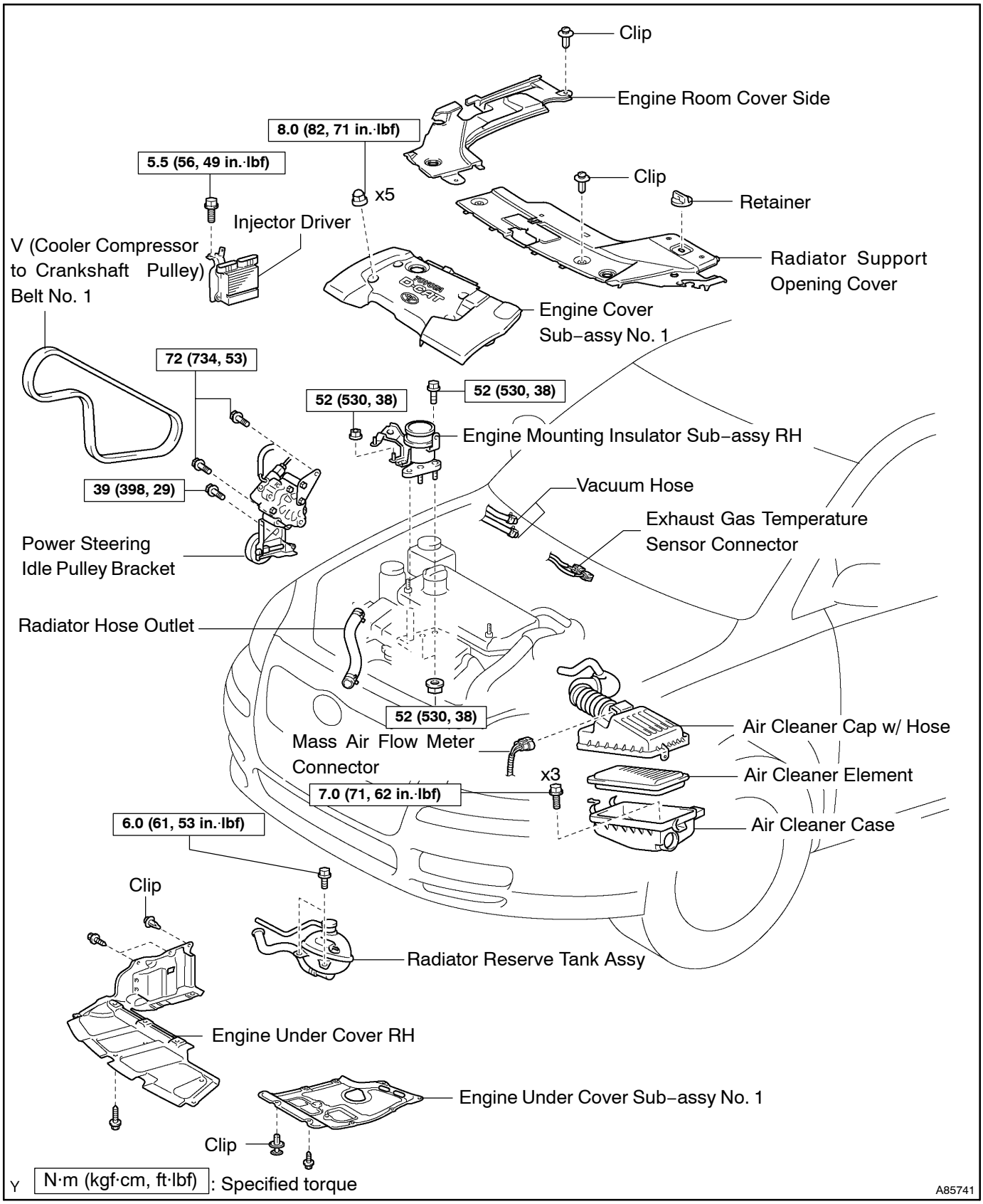

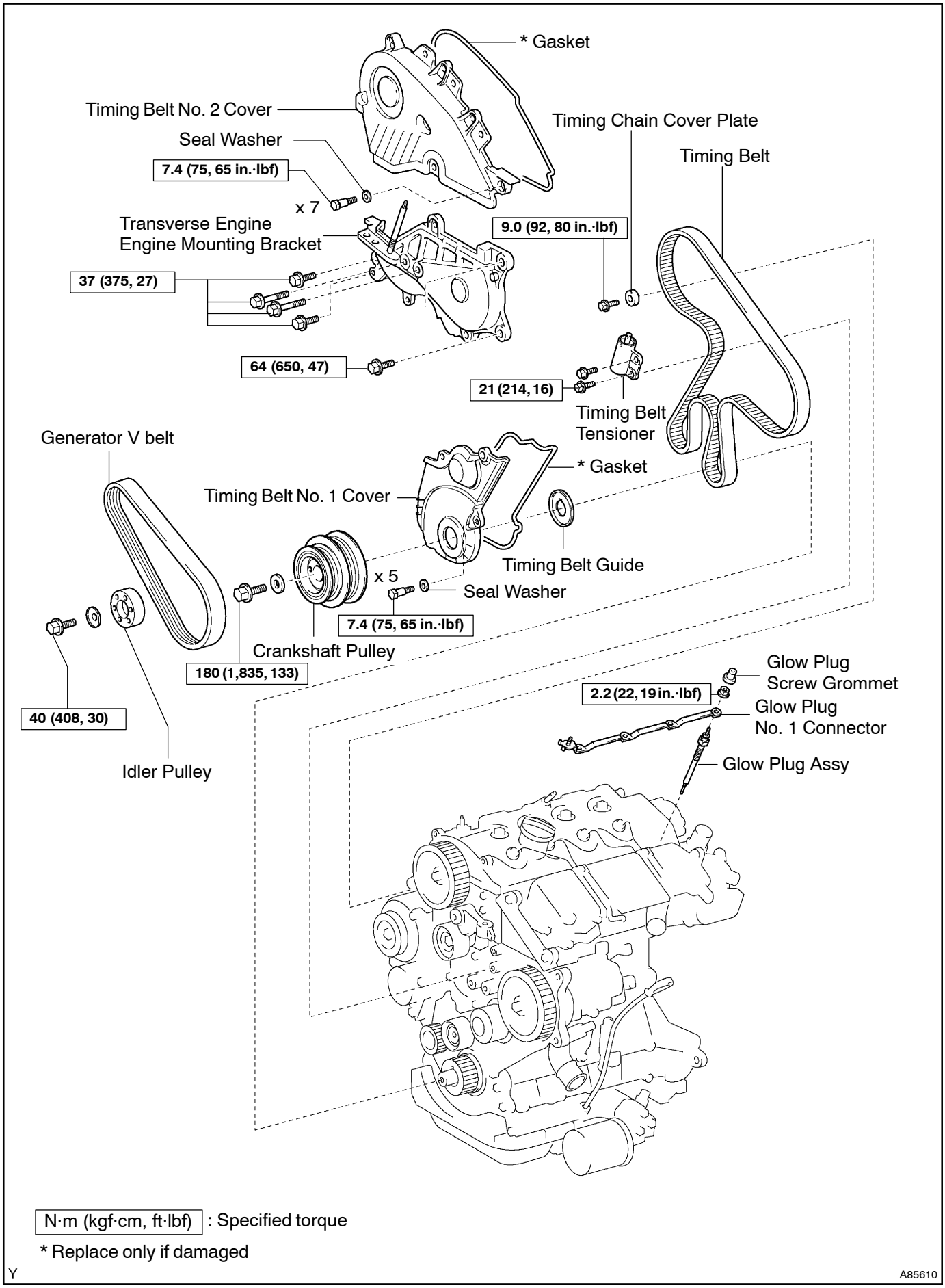

N·m (kgf·cm, ft·lbf) : Specified torque

* Replace only if damaged

Y

A85610

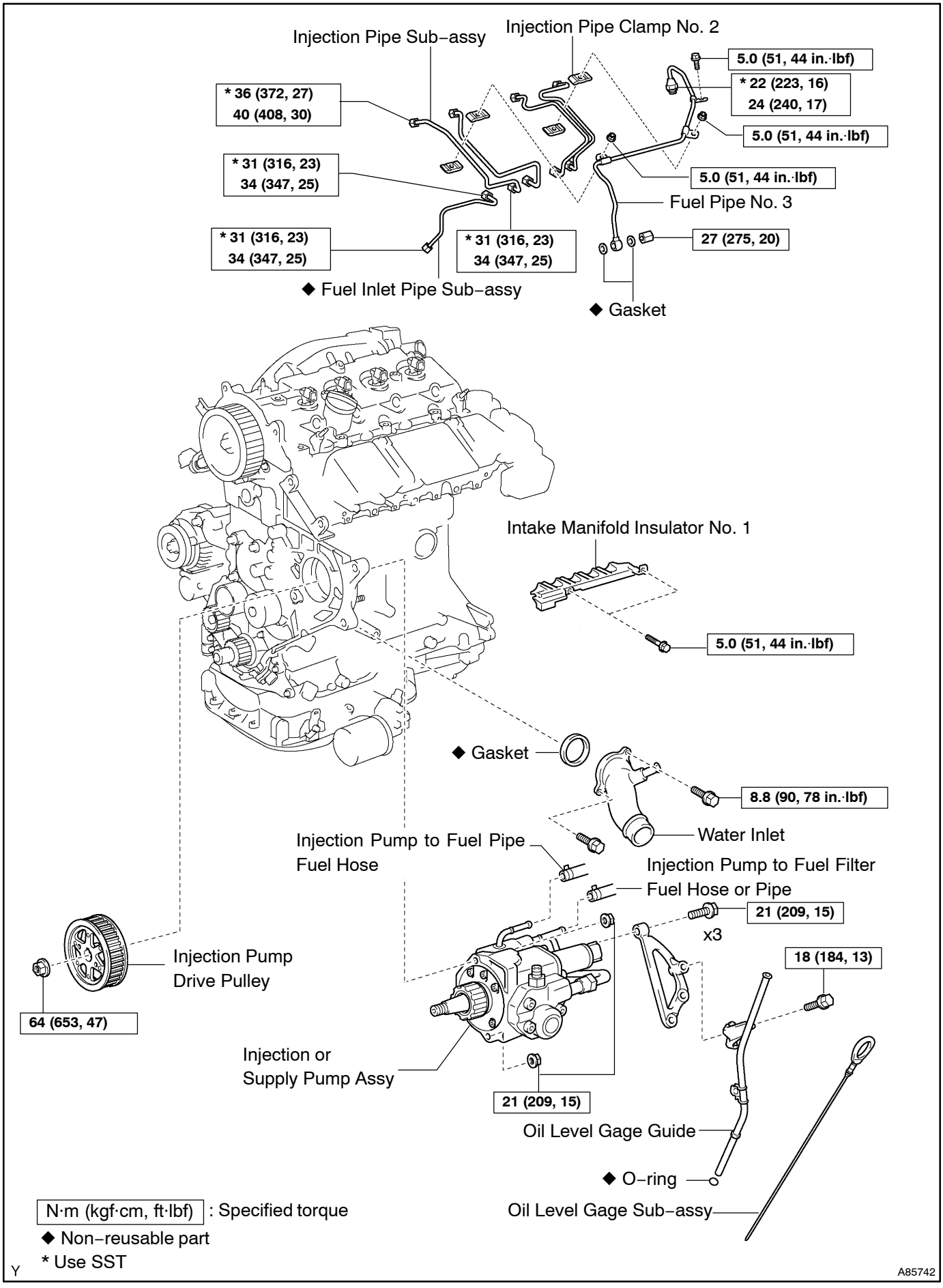
Injection Pipe Sub–assy
Injection Pipe Clamp No. 2
5.0 (51, 44 in.·lbf)
* 36 (372, 27)
40 (408, 30)
* 22 (223, 16)
24 (240, 17)
5.0 (51, 44 in.·lbf)
* 31 (316, 23)
34 (347, 25)
5.0 (51, 44 in.·lbf)
Fuel Pipe No. 3
* 31 (316, 23)
34 (347, 25)
* 31 (316, 23)
34 (347, 25)
27 (275, 20)
◆ Fuel Inlet Pipe Sub–assy
◆ Gasket
Intake Manifold Insulator No. 1
5.0 (51, 44 in.·lbf)
◆ Gasket
8.8 (90, 78 in.·lbf)
Water Inlet
Injection Pump to Fuel Pipe
Fuel Hose
Injection Pump to Fuel Filter
Fuel Hose or Pipe
21 (209, 15)
x3
18 (184, 13)
Injection Pump
Drive Pulley
64 (653, 47)
Injection or
Supply Pump Assy
21 (209, 15)
Oil Level Gage Guide
◆ O–ring
Oil Level Gage Sub–assy
N·m (kgf·cm, ft·lbf) : Specified torque
◆ Non–reusable part
* Use SST
Y
A85742

110UA–02

REPLACEMENT

1. **REMOVE FRONT WHEEL RH**
2. **DRAIN ENGINE COOLANT (See page 16–19)**
3. **REMOVE ENGINE UNDER COVER SUB–ASSY NO.1**
4. **REMOVE ENGINE UNDER COVER RH**
5. **REMOVE RADIATOR SUPPORT OPENING COVER**
6. **REMOVE ENGINE ROOM COVER SIDE**
7. **REMOVE AIR CLEANER ASSY (See page 11–46)**
8. **REMOVE ENGINE COVER SUB–ASSY NO.1**

(a) Remove the 5 nuts and engine cover.

9. **REMOVE RADIATOR RESERVE TANK SUB–ASSY (See Pub. No. RM1018E on page 16–50)**
10. **DISCONNECT RADIATOR HOSE OUTLET**

(a) Disconnect the radiator hose outlet from the water inlet.

11. **REMOVE V (COOLER COMPRESSOR TO CRANKSHAFT PULLEY) BELT NO.1 (See Pub. No. RM1018E on page 14–269)**
12. **REMOVE GENERATOR V BELT (See Pub. No. RM1018E on page 14–269)**
13. **REMOVE INJECTOR DRIVER**

(a) Remove the 2 nuts which are used to secure the injector driver.
(b) Disconnect the injector driver connector and harness clamp.
(c) Remove the injector driver.

14. **SEPARATE POWER STEERING IDLE PULLEY BRACKET (See page 14–138)**
15. **DISCONNECT ENGINE WIRE (See page 14–138)**
16. **DISCONNECT VACUUM HOSE (See page 14–108)**
17. **REMOVE ENGINE MOUNTING INSULATOR SUB–ASSY RH (See page 14–138)**
18. **REMOVE CRANKSHAFT PULLEY (See page 14–138)**

SST 09213–54015 (90105–08076), 09330–00021, 09950–50013 (09951–05010, 09952–05010, 09953–05020, 09954–05031)

19. **REMOVE IDLER PULLEY SUB–ASSY (See page 14–138)**
20. **REMOVE TIMING BELT NO.2 COVER (See page 14–138)**
21. **REMOVE TIMING BELT NO.1 COVER (See page 14–138)**
22. **REMOVE TIMING BELT GUIDE**
23. **REMOVE TRANSVERSE ENGINE ENGINE MOUNTING BRACKET (See page 14–138)**
24. **SET NO. 1 CYLINDER TO TDC/COMPRESSION (See page 14–138)**
25. **REMOVE TIMING CHAIN COVER PLATE (See page 14–138)**
26. **REMOVE TIMING BELT (See page 14–138)**

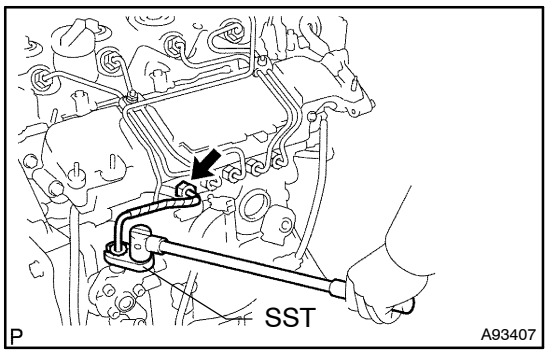

27. **REMOVE FUEL INLET PIPE SUB–ASSY**

NOTICE:

After removing the fuel inlet pipe, cover the common rail and injection pump with vinyl tape to prevent dust from being introduced.

(a) Remove the wire bracket, then slide the engine wire.
(b) Using SST, remove the fuel inlet pipe from the common rail.

SST 09023–12700

(c) Using SST, remove the fuel inlet pipe from the injection pump.
SST 09023–12700

28. REMOVE FUEL PIPE NO.3 (See page 11–46)
SST 09023–12700

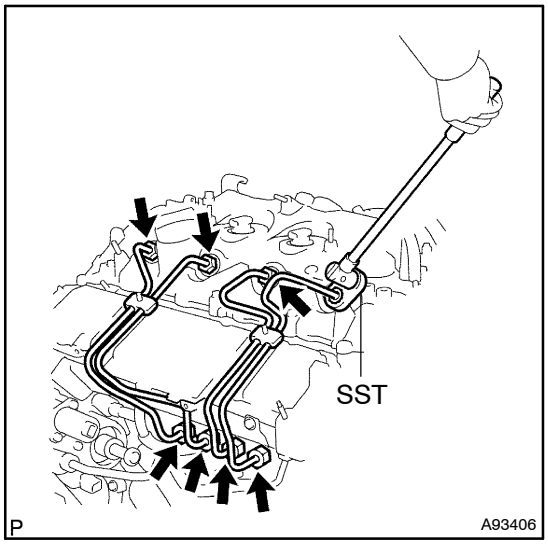

29. REMOVE INJECTION PIPE SUB–ASSY NO.1
(a) Remove the 2 nuts, then remove the 2 upper injection pipe clamps from the intake manifold.
(b) Using SST, remove the injection pipe from the common rail side.
SST 09023–12700
(c) Using SST, remove the injection pipe from the injector side.
SST 09023–12700
(d) After removing the fuel pipe, to prevent dust or foreign objects from being introduced, cover the common rail with vinyl tape and protect the injector inlet with a vinyl or plastic bag.

30. REMOVE INJECTION PIPE SUB–ASSY NO.2
SST 09023–12700
HINT:
Perform the same procedures as the injection pipe No. 1.

31. REMOVE INJECTION PIPE SUB–ASSY NO.3
SST 09023–12700
HINT:
Perform the same procedures as the injection pipe No. 1.

32. REMOVE INJECTION PIPE SUB–ASSY NO.4
SST 09023–12700
HINT:
Perform the same procedures as the injection pipe No. 1.

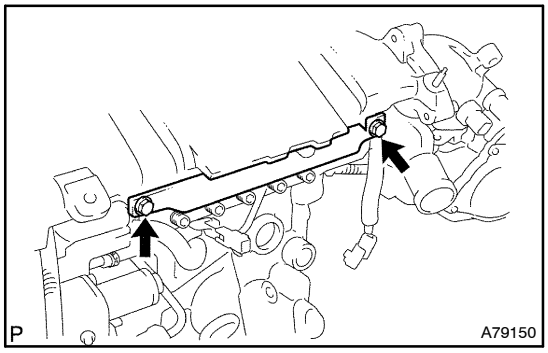

33. REMOVE INTAKE MANIFOLD INSULATOR NO.1
(a) Remove the 2 bolts and intake manifold insulator.

34. REMOVE OIL LEVEL GAGE SUB–ASSY

35. REMOVE OIL LEVEL GAGE GUIDE (See page 17–11)

36. REMOVE WATER INLET (See Pub. No. RM1018E on page 16–50)

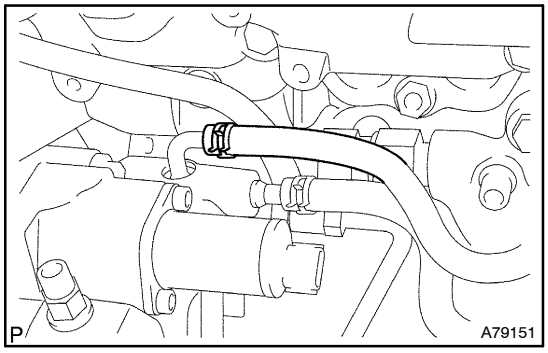

37. DISCONNECT INJECTION PUMP TO FUEL PIPE FUEL HOSE

(a) Disconnect the injection pump to fuel pipe fuel hose from the supply pump.

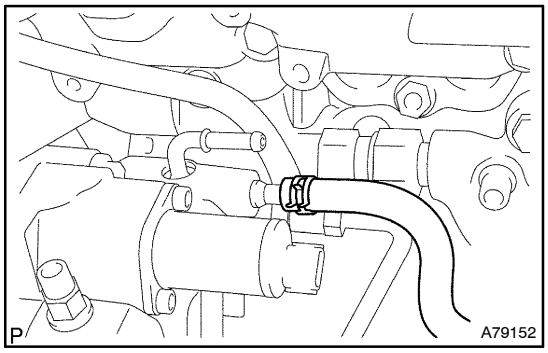

38. DISCONNECT INJECTION PUMP TO FUEL FILTER FUEL HOSE OR PIPE

(a) Disconnect the injection pump to fuel filter fuel hose or pipe from the supply pump.

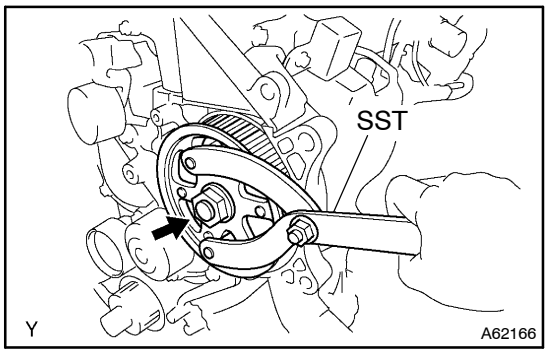

39. REMOVE INJECTION PUMP DRIVE PULLEY

(a) Using SST, remove the pulley nut.
SST 09960–10010 (09962–01000, 09963–01000)

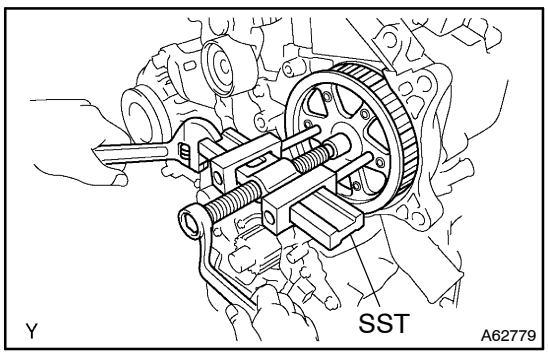

(b) Using SST, remove the injection pump drive pulley.
SST 09950–50013 (09951–05010, 09952–05010, 09953–05020, 09954–05021)

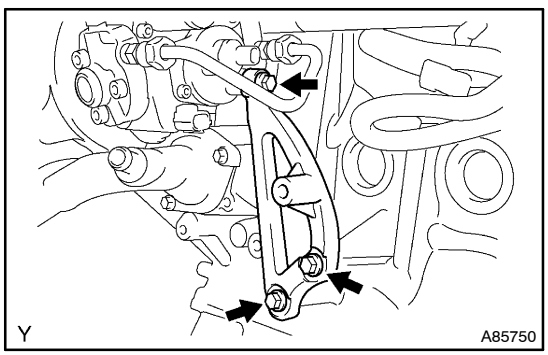

40. REMOVE INJECTION PUMP STAY NO.1

(a) Remove the 3 bolts and injection pump stay No. 1.

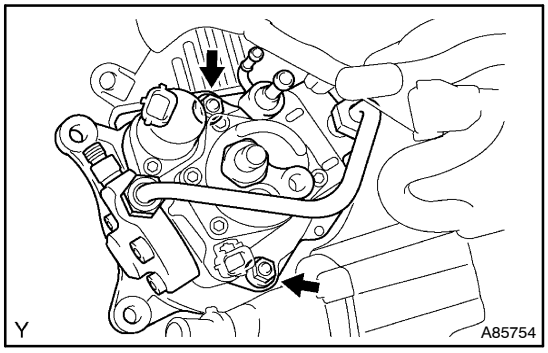

41. REMOVE INJECTION OR SUPPLY PUMP ASSY

(a) Remove the 2 nuts and injection pump.

42. INSTALL INJECTION OR SUPPLY PUMP ASSY

Torque: 21 N·m (209 kgf·cm, 15 ft·lbf)

43. INSTALL INJECTION PUMP STAY NO.1

(a) Install the injection pump stay No. 1 with the 3 bolts.

Torque: 21 N·m (209 kgf·cm, 15 ft·lbf)

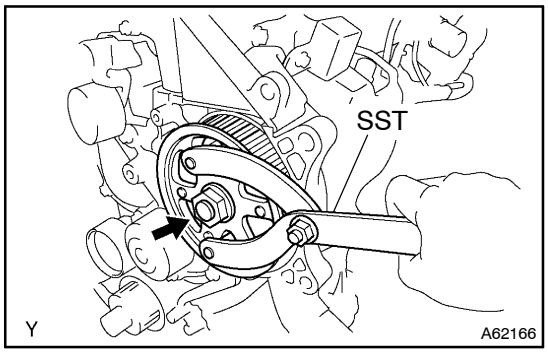

44. INSTALL INJECTION PUMP DRIVE PULLEY

(a) Using SST, install the pulley nut.

SST 09960–10010 (09962–01000, 09963–01000)

Torque: 64 N·m (653 kgf·cm, 47 ft·lbf)

45. INSTALL WATER INLET (See Pub. No. RM1018E on page 16–50)

46. INSTALL OIL LEVEL GAGE GUIDE (See page 17–11)

47. INSTALL INTAKE MANIFOLD INSULATOR NO.1

Torque: 5.0 N·m (51 kgf·cm, 44 in.·lbf)

48. INSTALL INJECTION PIPE SUB–ASSY NO.1

NOTICE:

When assembling the pipes, perform the operation with the engine cold under room temperature.

(a) Remove the vinyl or the plastic bag from the injector and the vinyl tape from the common rail.

(b) Temporarily install the injection pipe.

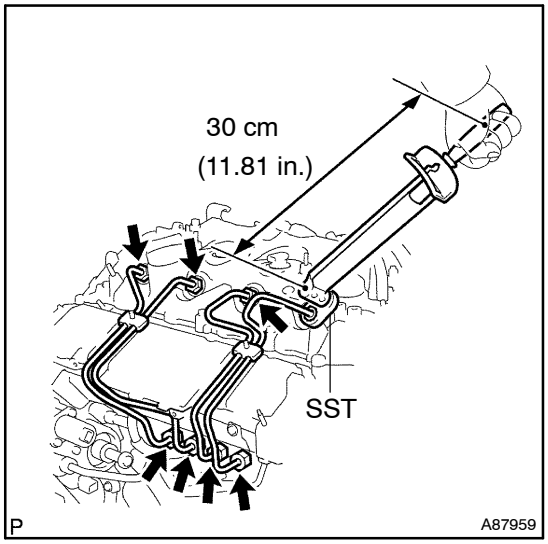

(c) Using SST, tighten the nut of the injection pipe to the common rail side.
SST 09023–12700
Torque:
31 N·m (316 kgf·cm, 23 ft·lbf) with SST
34 N·m (347 kgf·cm, 25 ft·lbf) without SST

HINT:
- Use a torque wrench with the fulcrum length of 30 cm (11.81 in.).
- After the injection pipe is reassembled, check that the used pipe has no deflection and is installed properly. If it has deflection or could not be installed properly, replace the used pipe with a new pipe.

(d) Using SST, tighten the nut of the injection pipe to the injector side.
SST 09023–12700
Torque:
For used pipe:
36 N·m (372 kgf·cm, 27 ft·lbf) with SST
40 N·m (408 kgf·cm, 30 ft·lbf) without SST
For new pipe:
31 N·m (316 kgf·cm, 23 ft·lbf) with SST
34 N·m (347 kgf·cm, 25 ft·lbf) without SST

HINT:
- Use a torque wrench with the fulcrum length of 30 cm (11.81 in.).
- After the injection pipe is reassembled, check that the used pipe has no deflection and is installed properly. If it has deflection or could not be installed properly, replace the used pipe with a new pipe.

49. INSTALL INJECTION PIPE SUB–ASSY NO.2
SST 09023–12700

HINT:
Perform the same procedures as the injection pipe No. 1.

50. INSTALL INJECTION PIPE SUB–ASSY NO.3
SST 09023–12700

HINT:
Perform the same procedures as the injection pipe No. 1.

51. INSTALL INJECTION PIPE SUB–ASSY NO.4
SST 09023–12700

HINT:
Perform the same procedures as the injection pipe No. 1.

52. INSTALL FUEL PIPE NO.3 (See page 11–46)
SST 09023–12700

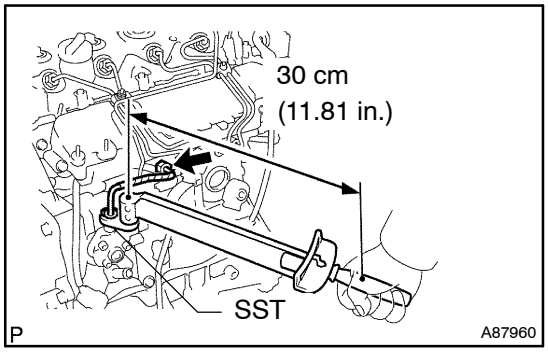

53. INSTALL FUEL INLET PIPE SUB–ASSY

NOTICE:

- **In case of replacing the injection pump, the fuel inlet pipe must be replaced, too.**
- **When assembling the pipe, perform the operation with the engine cold under room temperature.**

(a) Temporarily install the fuel inlet pipe.

(b) Using SST, tighten the nut of the fuel inlet pipe to the common rail side.

SST 09023–12700

Torque:

31 N·m (316 kgf·cm, 23 ft·lbf) with SST

34 N·m (347 kgf·cm, 25 ft·lbf) without SST

HINT:

- Use a torque wrench with the fulcrum length of 30 cm (11.81 in.).
- After the inlet pipe is reassembled, check that the used pipe has no deflection and is installed properly. If it has deflection or could not be installed properly, replace the used pipe with a new pipe.

(c) Using SST, tighten the nut of the fuel inlet pipe to the injection pump side.

SST 09023–12700

Torque:

31 N·m (316 kgf·cm, 23 ft·lbf) with SST

34 N·m (347 kgf·cm, 25 ft·lbf) without SST

HINT:

- Use a torque wrench with the fulcrum length of 30 cm (11.81 in.).
- After the inlet pipe is reassembled, check that the used pipe has no deflection and is installed properly. If it has deflection or could not be installed properly, replace the used pipe with a new pipe.

54. SET NO. 1 CYLINDER TO TDC/COMPRESSION (See page 14–138)

SST 09960–10010 (09962–01000, 09963–01000)

55. INSTALL TIMING BELT (See page 14–138)

56. CHECK VALVE TIMING (See page 14–138)

57. INSTALL TIMING CHAIN COVER PLATE (See page 14–138)

58. INSTALL TRANSVERSE ENGINE ENGINE MOUNTING BRACKET (See page 14–138)

59. INSTALL TIMING BELT GUIDE (See page 14–138)

60. INSTALL TIMING BELT NO.1 COVER (See page 14–138)

61. INSTALL TIMING BELT NO.2 COVER (See page 14–138)

62. INSTALL IDLER PULLEY SUB–ASSY (See page 14–138)

63. INSTALL CRANKSHAFT PULLEY (See page 14–138)
SST 09213–54015 (90105–08076), 09330–00021
64. INSTALL ENGINE MOUNTING INSULATOR SUB–ASSY RH (See page 14–138)
65. INSTALL POWER STEERING IDLE PULLEY BRACKET (See page 14–108)
66. INSTALL INJECTOR DRIVER
Torque: 5.5 N·m (56 kgf·cm, 49 in.·lbf)
67. ADJUST V (COOLER COMPRESSOR TO CRANKSHAFT PULLEY) BELT NO.1
(See Pub. No. RM1018E on page 14–269)
68. INSTALL RADIATOR RESERVE TANK SUB–ASSY (See Pub. No. RM1018E on page 16–50)
69. INSTALL ENGINE COVER SUB–ASSY NO.1
Torque: 8.0 N·m (82 kgf·cm, 71 in.·lbf)
70. INSTALL AIR CLEANER ASSY (See page 11–46)
71. INSTALL FRONT WHEEL RH
Torque: 103 N·m (1,050 kgf·cm, 76 ft·lbf)
72. ADD ENGINE COOLANT (See page 16–19)
73. CHECK FOR ENGINE COOLANT LEAKS (See page 16–15)
74. CHECK FOR FUEL LEAKS (See page 11–46)

COMMON RAIL ASSY (1CD–FTV)(From September, 2003)

110UB–02

COMPONENTS

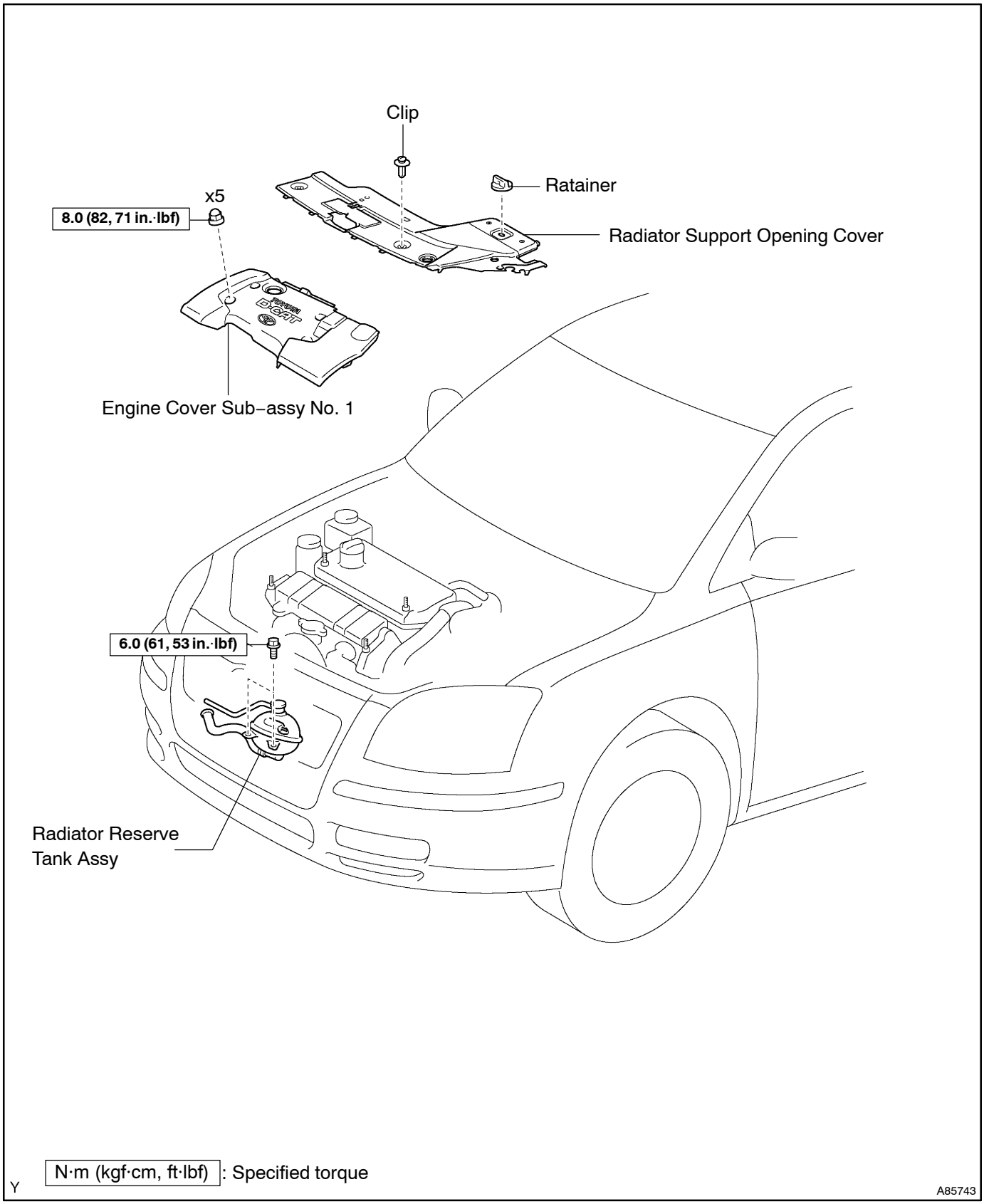

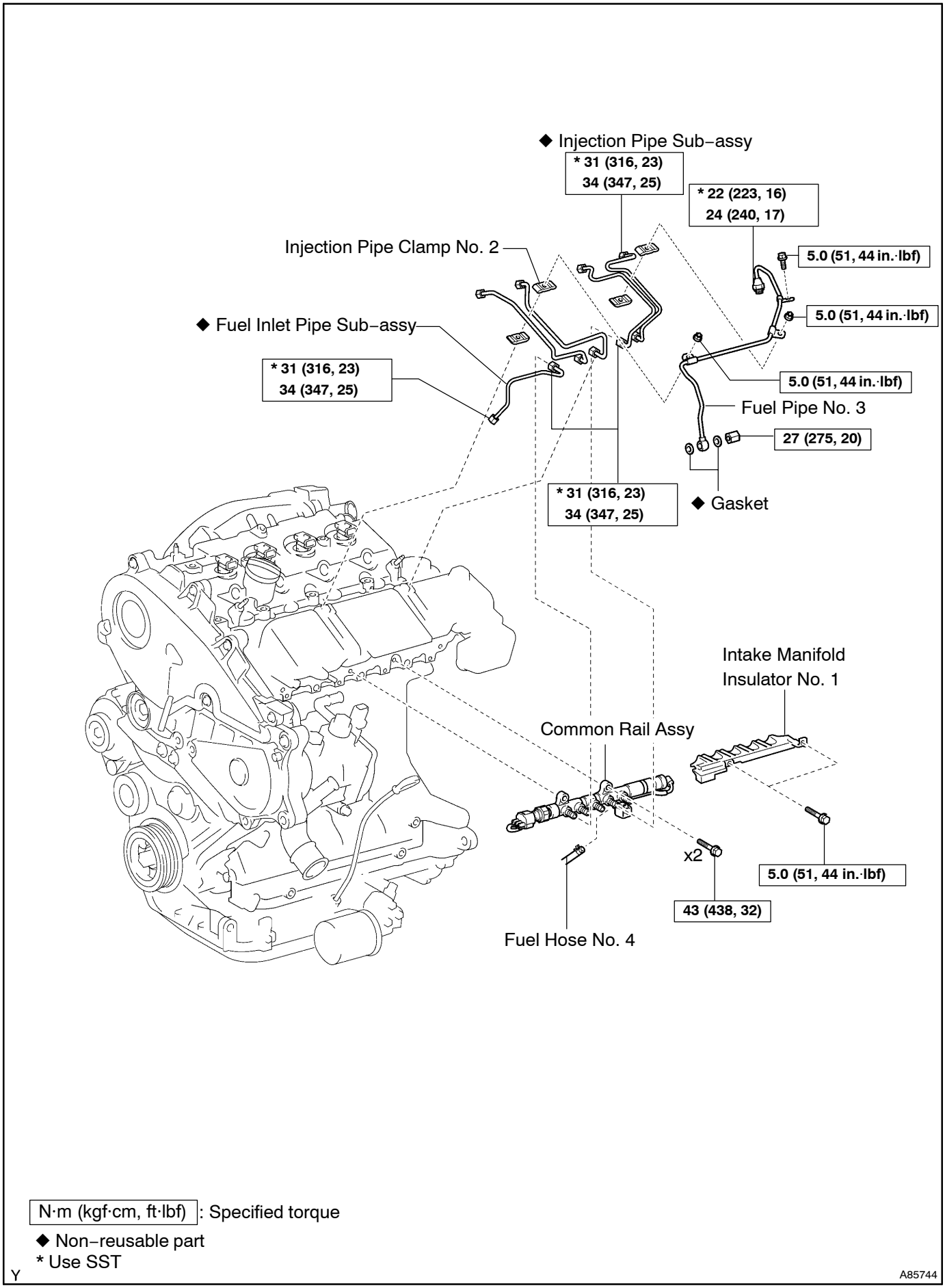
◆ Injection Pipe Sub–assy
* 31 (316, 23)
34 (347, 25)
* 22 (223, 16)
24 (240, 17)
Injection Pipe Clamp No. 2
5.0 (51, 44 in.·lbf)
5.0 (51, 44 in.·lbf)
◆ Fuel Inlet Pipe Sub–assy
* 31 (316, 23)
34 (347, 25)
5.0 (51, 44 in.·lbf)
Fuel Pipe No. 3
27 (275, 20)
* 31 (316, 23)
34 (347, 25)
◆ Gasket
Intake Manifold
Insulator No. 1
Common Rail Assy
x2
5.0 (51, 44 in.·lbf)
43 (438, 32)
Fuel Hose No. 4
N·m (kgf·cm, ft·lbf) : Specified torque
◆ Non–reusable part
* Use SST
Y
A85744

110UC–02

REPLACEMENT

1. **DRAIN ENGINE COOLANT (See page 16–19)**
2. **REMOVE RADIATOR SUPPORT OPENING COVER**
3. **REMOVE ENGINE COVER SUB–ASSY NO.1**

(a) Remove the 5 nuts and engine cover.

4. **REMOVE RADIATOR RESERVE TANK SUB–ASSY (See Pub.No. RM1018E on page 16–50)**

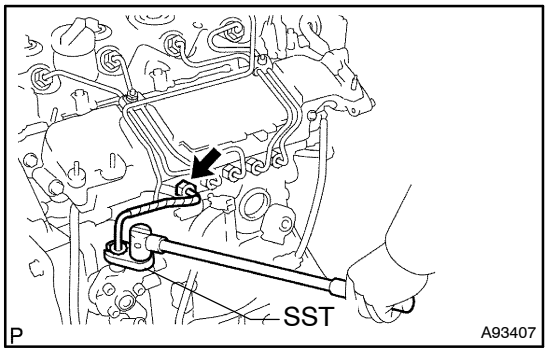

5. **REMOVE FUEL INLET PIPE SUB–ASSY**

NOTICE:

After removing the fuel inlet pipe, cover the common rail and injection pump with vinyl tape to prevent dust from being introduced.

(a) Using SST, remove the fuel inlet pipe from the common rail.
SST 09023–12700

(b) Using SST, remove the fuel inlet pipe from the injection pump.
SST 09023–12700

6. **REMOVE FUEL PIPE NO.3 (See page 11–46)**
SST 09023–12700

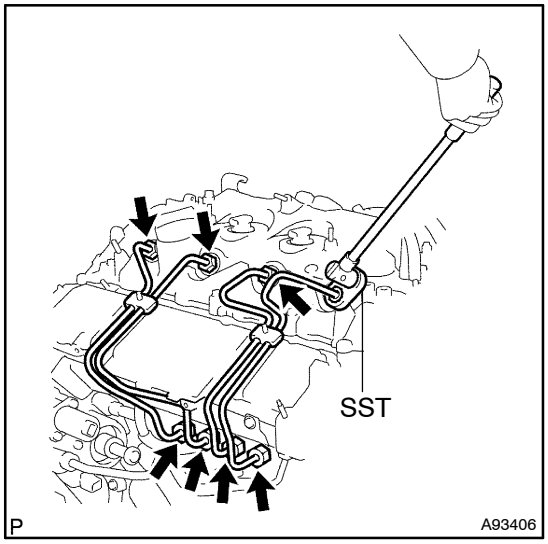

7. **REMOVE INJECTION PIPE SUB–ASSY NO.1**

(a) Remove the 2 nuts and 2 upper injection pipe clamps from the intake manifold.

(b) Using SST, remove the injection pipe from the common rail side.
SST 09023–12700

(c) Using SST, remove the injection pipe from the injector side.
SST 09023–12700

(d) After removing the fuel pipe, to prevent dust or foreign objects from being introduced, cover the common rail with vinyl tape and protect the injector inlet with a vinyl or plastic bag.

8. **REMOVE INJECTION PIPE SUB–ASSY NO.2**
SST 09023–12700

HINT:

Perform the same procedures as the injection pipe No. 1.

9. **REMOVE INJECTION PIPE SUB–ASSY NO.3**
SST 09023–12700

HINT:

Perform the same procedures as the injection pipe No. 1.

10. REMOVE INJECTION PIPE SUB–ASSY NO.4

SST 09023–12700

HINT:

Perform the same procedures as the injection pipe No. 1.

11. DISCONNECT FUEL HOSE NO.4

(a) Disconnect the fuel hose from the common rail.

12. REMOVE INTAKE MANIFOLD INSULATOR NO.1 (See page 11–58)

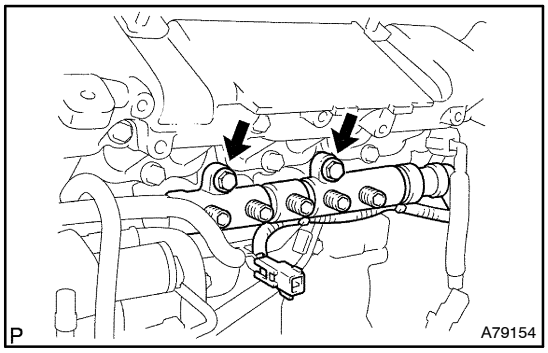

13. REMOVE COMMON RAIL ASSY

(a) Disconnect the engine wire connector from the bracket.

(b) Remove the 2 bolts and common rail.

14. INSTALL COMMON RAIL ASSY

Torque: 43 N·m (438 kgf·cm, 32 ft·lbf)

15. INSTALL INTAKE MANIFOLD INSULATOR NO.1 (See page 11–58)

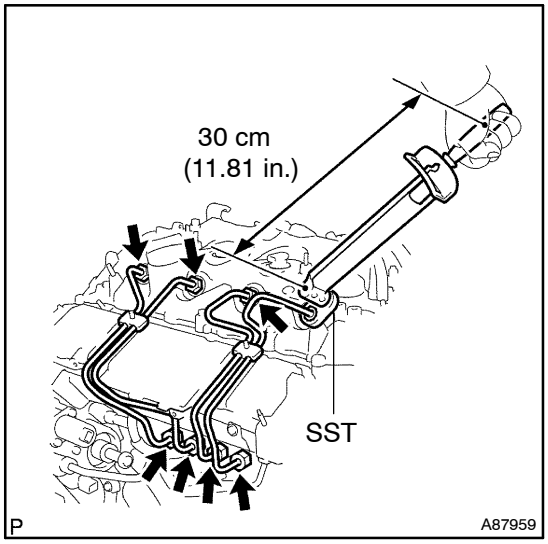

16. INSTALL INJECTION PIPE SUB–ASSY NO.1

NOTICE:

- **In case of replacing the common rail, the injector pipes must be replaced, too.**
- **When assembling the pipes, perform the operation with the engine cold under room temperature.**

(a) Remove the vinyl or the plastic bag from the injector and the vinyl tape from the common rail.

(b) Temporarily install the injection pipe.

(c) Using SST, tighten the nut of the injection pipe to the common rail side.
SST 09023–12700
Torque:
31 N·m (316 kgf·cm, 23 ft·lbf) with SST
34 N·m (347 kgf·cm, 25 ft·lbf) without SST

HINT:
- Use a torque wrench with the fulcrum length of 30 cm (11.81 in.).
- After the injection pipe is reassembled, check that the used pipe has no deflection and is installed properly. If it has deflection or could not be installed properly, replace the used pipe with a new pipe.

(d) Using SST, tighten the nut of the injection pipe to the injector side.
SST 09023–12700
Torque:
For used pipe:
36 N·m (372 kgf·cm, 27 ft·lbf) with SST
40 N·m (408 kgf·cm, 30 ft·lbf) without SST
For new pipe:
31 N·m (316 kgf·cm, 23 ft·lbf) with SST
34 N·m (347 kgf·cm, 25 ft·lbf) without SST

HINT:
- Use a torque wrench with the fulcrum length of 30 cm (11.81 in.).
- After the injection pipe is reassembled, check that the used pipe has no deflection and is installed properly. If it has deflection or could not be installed properly, replace the used pipe with a new pipe.

17. INSTALL INJECTION PIPE SUB–ASSY NO.2
SST 09023–12700

HINT:
Perform the same procedures as the injection pipe No. 1.

18. INSTALL INJECTION PIPE SUB–ASSY NO.3
SST 09023–12700

HINT:
Perform the same procedures as the injection pipe No. 1.

19. INSTALL INJECTION PIPE SUB–ASSY NO.4
SST 09023–12700

HINT:
Perform the same procedures as the injection pipe No. 1.

20. INSTALL FUEL PIPE NO.3 (See page 11–46)
SST 09023–12700

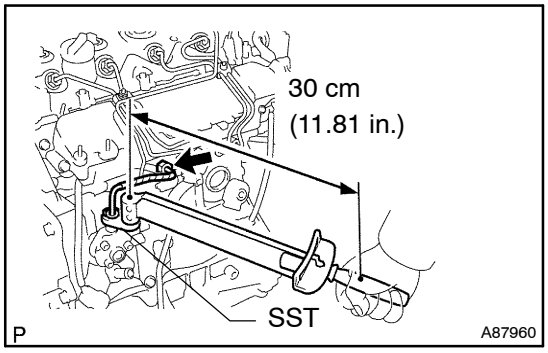

21. INSTALL FUEL INLET PIPE SUB–ASSY

NOTICE:

- **In case of replacing the common rail, the fuel inlet pipe must be replaced, too.**
- **When assembling the pipe, perform the operation with the engine cold under room temperature.**

(a) Temporarily install the fuel inlet pipe.

(b) Using SST, tighten the nut of the fuel inlet pipe to the common rail side.

SST 09023–12700

Torque:

31 N·m (316 kgf·cm, 23 ft·lbf) with SST

34 N·m (347 kgf·cm, 25 ft·lbf) without SST

HINT:

- Use a torque wrench with the fulcrum length of 30 cm (11.81 in.).
- After the inlet pipe is reassembled, check that the used pipe has no deflection and is installed properly. If it has deflection or could not be installed properly, replace the used pipe with a new pipe.

(c) Using SST, tighten the nut of the fuel inlet pipe to the injection pump side.

SST 09023–12700

Torque:

31 N·m (316 kgf·cm, 23 ft·lbf) with SST

34 N·m (347 kgf·cm, 25 ft·lbf) without SST

HINT:

- Use a torque wrench with the fulcrum length of 30 cm (11.81 in.).
- After the inlet pipe is reassembled, check that the used pipe has no deflection and is installed properly. If it has deflection or could not be installed properly, replace the used pipe with a new pipe.

22. INSTALL RADIATOR RESERVE TANK SUB–ASSY (See Pub. No. RM1018E on page 16–50)

23. INSTALL ENGINE COVER SUB–ASSY NO.1
Torque: 8.0 N·m (82 kgf·cm, 71 in.·lbf)

24. ADD ENGINE COOLANT (See page 16–19)

25. CHECK FOR ENGINE COOLANT LEAKS (See page 16–15)

26. CHECK FOR FUEL LEAKS (See page 11–46)

FUEL CONTROL SWITCH (1CD–FTV)(From September, 2003)

LOCATION

1111E–01

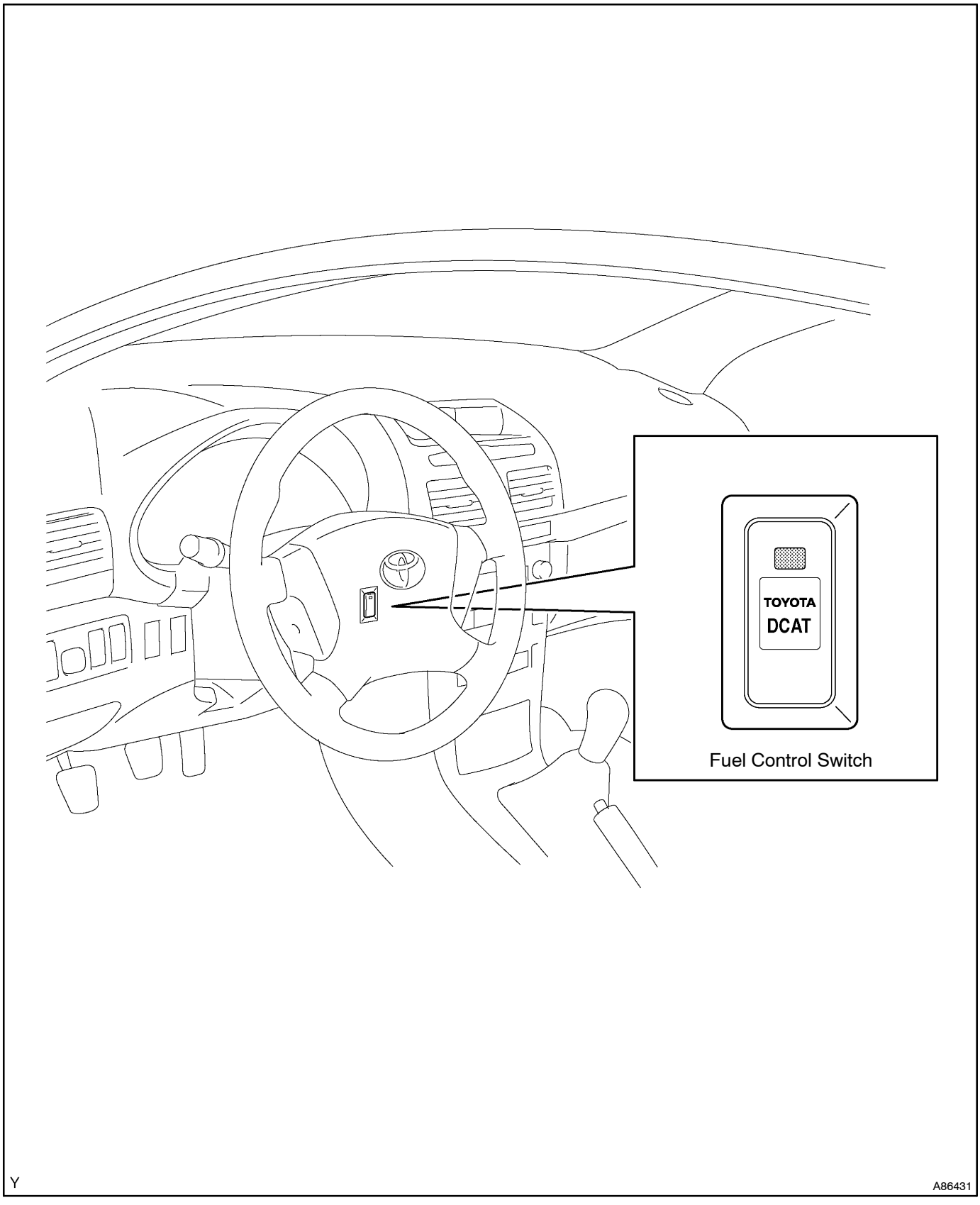

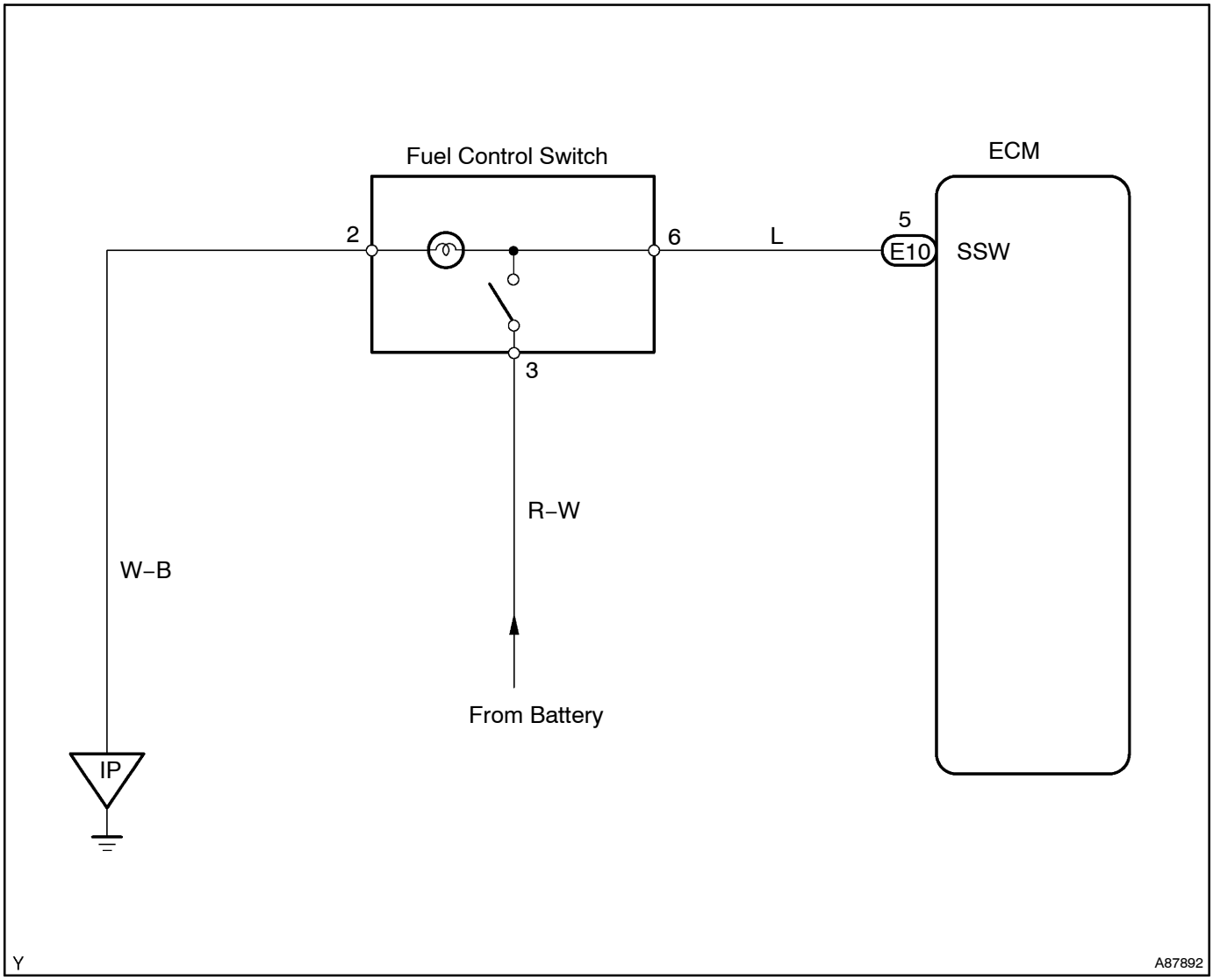
Fuel Control Switch
ECM
2
6
L
5
E10
SSW
3
R–W
W–B
From Battery
IP
Y
A87892

1111F–01

REPLACEMENT

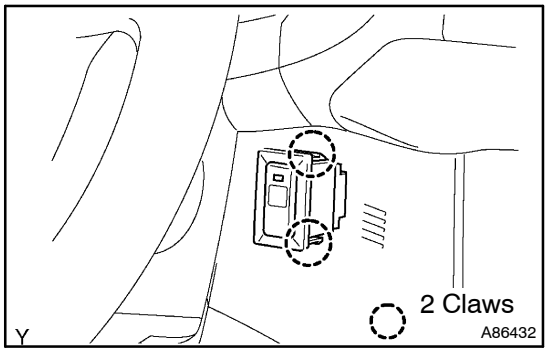

1. REMOVE FUEL CONTROL SWITCH

(a) Separate the 2 claw fittings, then remove the fuel control switch.

(b) Disconnect the fuel control switch connector.

2. INSTALL FUEL CONTROL SWITCH

HINT:

The installation is in the reverse order of the removal.

EMISSION CONTROL SYSTEM (2AZ–FSE)

120D8–01

ON–VEHICLE INSPECTION

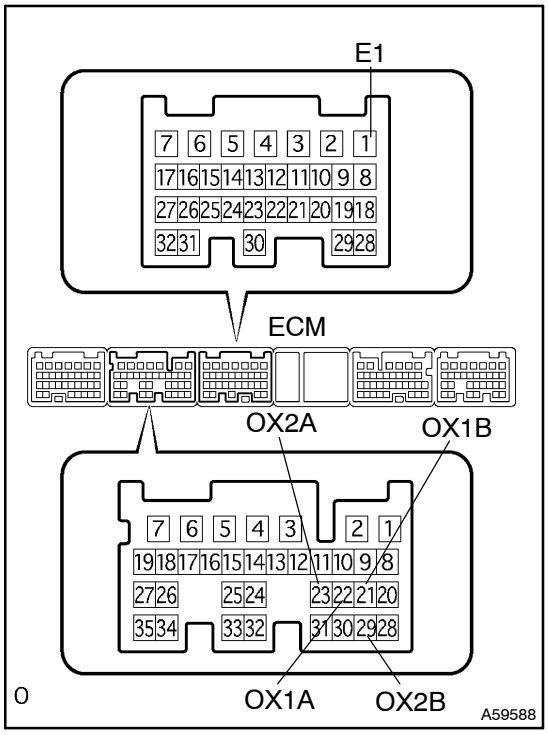

1. INSPECT AIR–FUEL RATIO COMPENSATION SYSTEM

HINT:

Check the system by choosing "DATA MONITOR/ O_2 SENSOR OUTPUT VOLTAGE" on the monitor of the hand–held tester.

(a) Connect the hand–held tester to the following each pair of the ECM terminals:
  (1) Terminals 21 (OX1B) and 1 (E1)
  (2) Terminals 22 (OX1A) and 1 (E1)
  (3) Terminals 23 (OX2A) and 1 (E1)
  (4) Terminals 29 (OX2B) and 1 (E1)

CAUTION:

Connect test leads from the back side of the connector with the ECM connected.

(b) Warm up the heated oxygen sensor with the engine speed at 2,500 rpm for approximately 2 minutes.

(c) Confirm that the voltage output varies between 0 V and 1 V with the engine speed at 2,500 rpm.

OK:

The voltage output varies more than 8 times in 10 seconds.

CAUTION:

- **Perform the check immediately after the warming up.**
- **If the voltage variation could not be verified, warm up the heated oxygen sensor again.**

2. INSPECT FUEL CUT OFF RPM

(a) Check the operation.
  (1) Increase the engine speed to at least 3,500 rpm.
  (2) Use a sound scope to check the fuel injector operating noise.
  (3) Check that when the accelerator pedal is released, the fuel injector operation noise stops momentarily at 2,500 rpm and then resumes at 1,200 rpm.

2,500 rpm: Fuel cut off rpm

1,200 rpm: Fuel return rpm

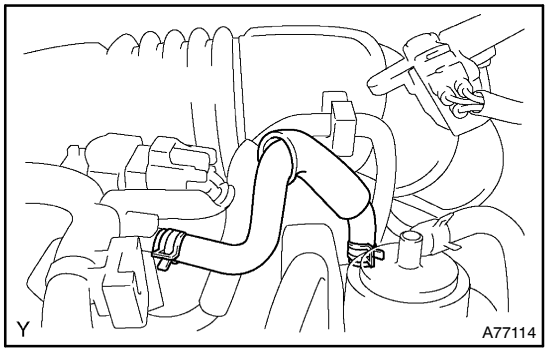

3. INSPECT EVAPORATIVE EMISSION CONTROL SYSTEM

(a) After starting the engine, disconnect the vacuum hose shown in the illustration.

(b) Check if vacuum occurs at the VSV port when choosing ”ACTIVE TEST” and ”PURGE VSV” according to the display on hand–held tester.

(c) Finish ”ACTIVE TEST”, then reconnect the vacuum hose.

(d) After entering to ”ECU DATA MONITOR” on the hand–held tester, choose ”PURGE VSV” to check the operation of the purge VSV.

(e) After driving the vehicle with a warm engine, confirm that the VSV turns from OFF to ON.

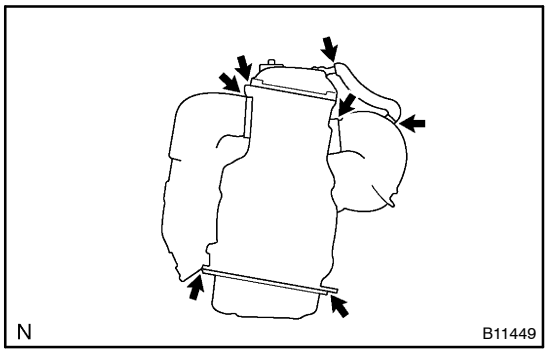

4. VISUALLY INSPECT HOSES, CONNECTIONS AND GASKETS

(a) Check the appearance.

(1) Check the engine assembly if the portions indicated with the arrows are cracked, leaked or damaged.

HINT:

Separation of the engine oil level gauge, oil filler cap, PCV hose, etc. may cause the engine to run improperly. Disconnection, looseness or cracks in the parts of the air induction system between the throttle body and cylinder head will allow air suction and cause the engine to run improperly.

If necessary, repair the engine assembly.

120D9–01

INSPECTION

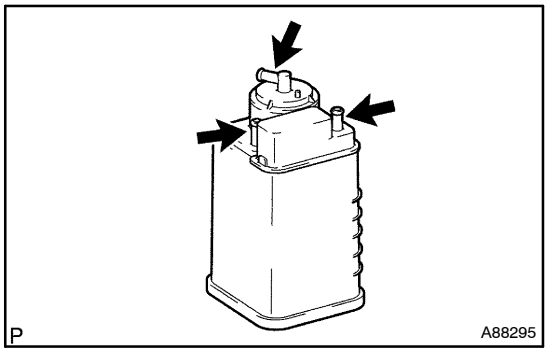

1. INSPECT CHARCOAL CANISTER ASSY

(a) Check the appearance.

(1) Visually check the charcoal canister if the portions indicated with the arrows are cracked or damaged.

If necessary, replace the charcoal canister.

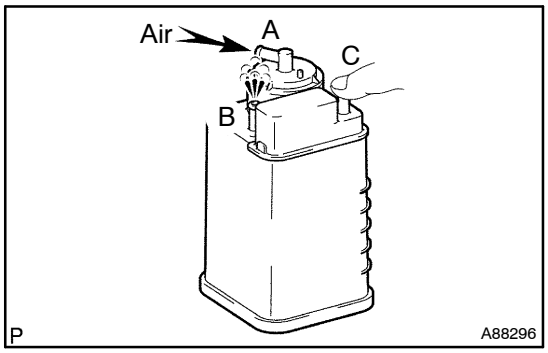

(b) Check the ventilation.

(1) Blow air (4.7 kPa (48 gf/cm^2, 0.68 psi)) into the port A, then check that the air flows from the B while holding the port C closed.

If the ventilation is not as specified, replace the charcoal canister.

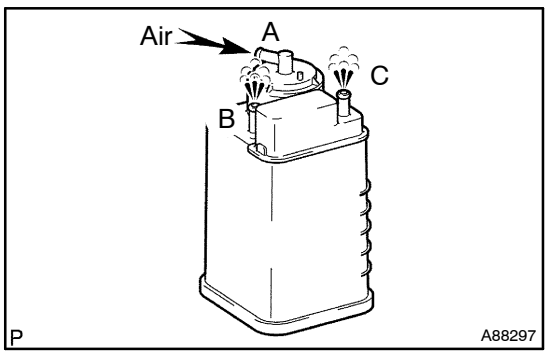

(2) Blow air (4.7 kPa (48 gf/cm^2, 0.68 psi)) into the port A, then check that the air flows from the port B and C.

If the ventilation is not as specified, replace the charcoal canister.

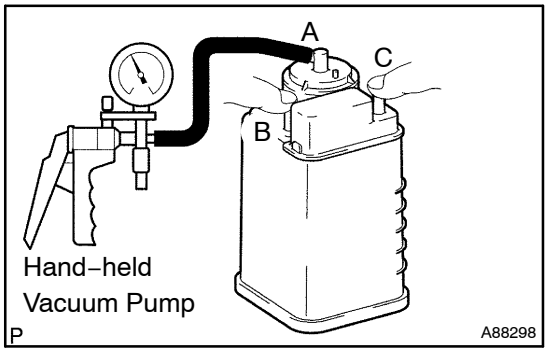

(3) Apply vacuum (2.0 kPa (15 mmHg, 0.59 in.Hg)) to the port A, then check that the vacuum does not decrease when port B and port C are closed, and check that the vacuum decrease when the port B is released.

If the ventilation is not as specified, replace the charcoal canister.

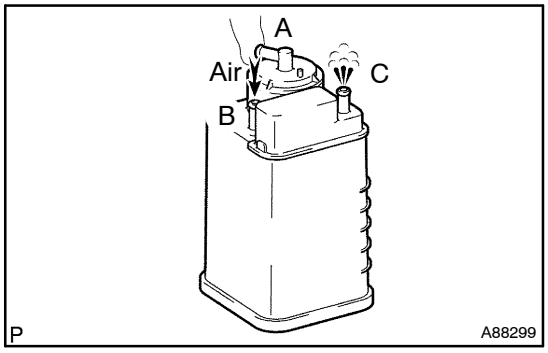

(c) Clean the filter in canister.
(1) Clean the filter by blowing (19.6 kPa (0.2 kgf/cm^2, 2.8 psi)) compressed air into port B while holding the port A closed.

NOTICE:
- **Do not attempt to wash the charcoal canister.**
- **No activated carbon should come out.**

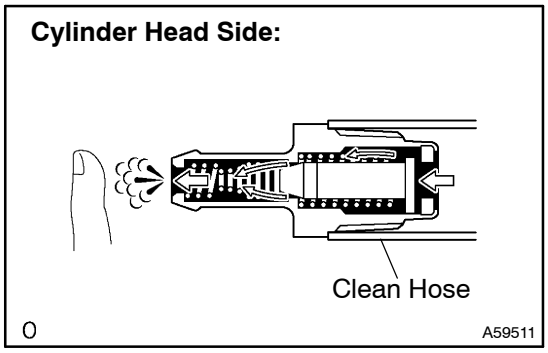

2. INSPECT VENTILATION VALVE SUB–ASSY

(a) Check the operation.
(1) Install a clean hose as shown in the illustration.
(2) Blow air into the cylinder head side, then check that air passes through easily.

CAUTION:
Do not suck air through the ventilation valve. Petroleum substances inside the ventilation valve are harmful.

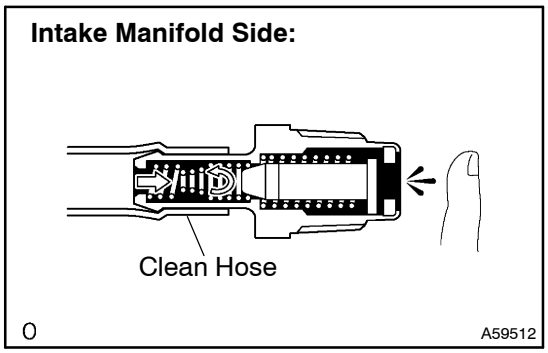

(3) Blow air into intake manifold side, then check that air passes through with difficulty.

If the operation is not as specified, replace the ventilation valve.

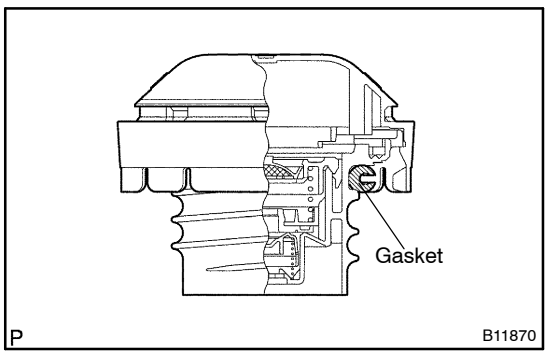

3. INSPECT FUEL TANK CAP ASSY

(a) Check the appearance.
(1) Visually check if the fuel tank cap and gasket are deformed or damaged.

If necessary, replace the fuel tank cap.

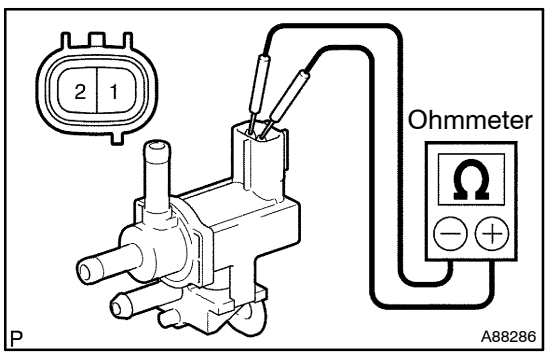

4. INSPECT VACUUM SWITCHING VALVE ASSY NO.1

(a) Inspect the resistance.
(1) Using an ohmmeter, measure resistance between the terminals.

Standard:

Tester Connection	Specified Condition
1 – 2	26 to 30 Ω at 20°C (68°F)

If the resistance is not as specified, replace the vacuum switching valve No. 1.

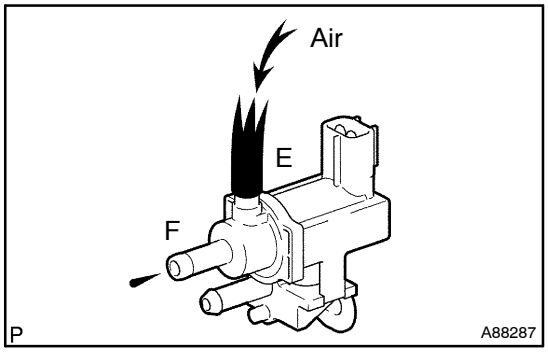

(b) Check the operation.

(1) Check that air does not flow from port E to F.

If the operation is not as specified, replace the vacuum switching valve No. 1.

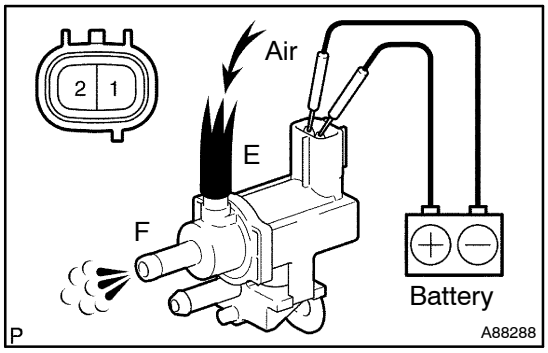

(2) Apply battery voltage across the terminals.

(3) Check that air flows from port E to F.

If the operation is not as specified, replace the vacuum switching valve No. 1.

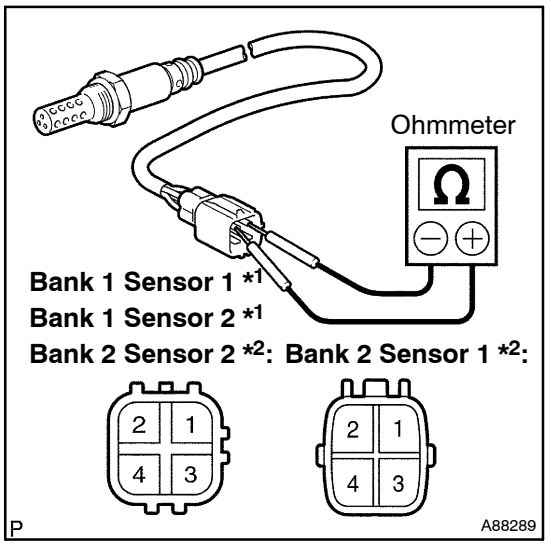

5. INSPECT HEATED OXYGEN SENSOR

(a) Inspect the resistance.

(1) Using an ohmmeter, measure the resistance between the terminals.

Standard:

Tester Connection	Specified Condition
1 (HT) – 2 (+B)	11 to 16 Ω at 20°C (68°F)
1 (HT) – 4 (E1)	10 kΩ or higher

HINT:

- *1: Bank 1 refers to the No. 1 and No. 4 cylinders
- *2: Bank 2 refers to the No. 2 and No. 3 cylinders

If the result is not as specified, replace the heated oxygen sensor.

EMISSION CONTROL SYSTEM (1CD–FTV)(From September, 2003)

ON–VEHICLE INSPECTION

120DB–01

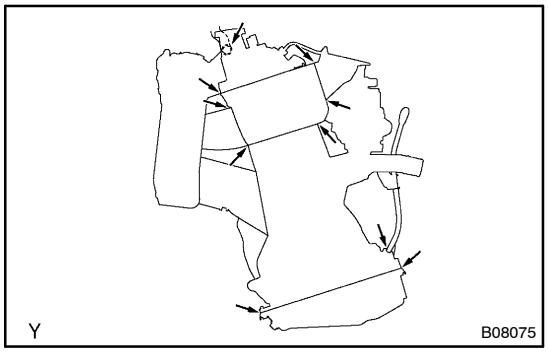

1. VISUALLY INSPECT HOSES, CONNECTIONS AND GASKETS

(a) Check for cracks, leaks or damage.

(1) Check the engine assembly to see if the indicated portions by the arrows have cracks, leaks or damage.

HINT:

Separation of the engine oil dipstick, oil filler cap, PCV hose, etc. may cause the engine to run improperly. Disconnection, looseness or cracks in the parts of the air induction system between the throttle body and cylinder head will allow air suction and cause the engine to run improperly.

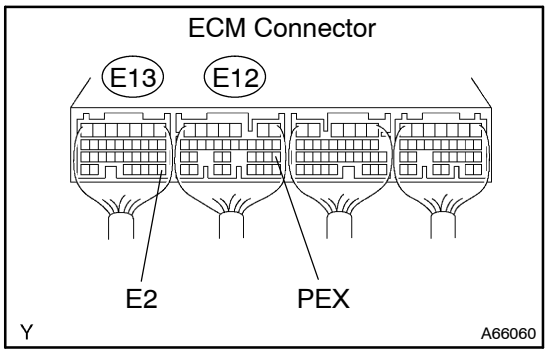

2. INSPECT DIFFERENTIAL PRESSURE SENSOR ASSY

(a) Turn the ignition switch to ON.

(b) Measure the voltage between the specified terminals of the E12 and E13 ECM connector.

Standard:

Tester Connection	Specified Condition
PEX (E12–20) – E2 (E13–28)	0.4 to 4.8 V

If the result is not as specified, check the wiring and ECM.

120DC–01

INSPECTION

1. INSPECT EXHAUST FUEL ADDITION INJECTOR ASSY

(a) Inspect the resistance.

(1) Using an ohmmeter, measure the resistance between the terminals.

Resistance: 11.6 to 12.4 Ω at 20°C (68°F)

If the result is not as specified, replace the exhaust fuel addition injector assembly (see page 14–166).

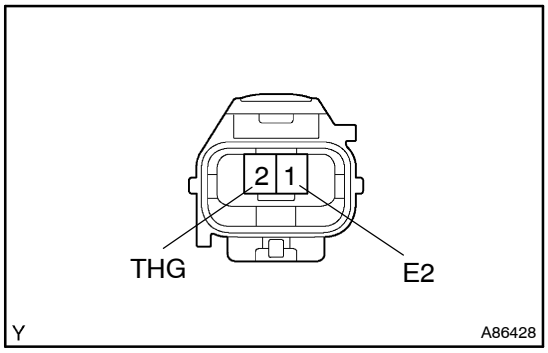

2. INSPECT EXHAUST GAS TEMPERATURE SENSOR

(a) Inspect the resistance.

(1) Using an ohmmeter, measure the resistance between the terminals.

Resistance: 242 kΩ at 20°C (68°F)

If the result is not as specified, replace the exhaust gas temperature sensor (see page 14–108).

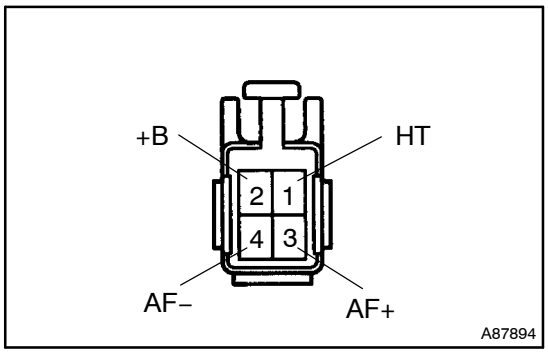

3. INSPECT AIR–FUEL RATIO SENSOR

(a) Inspect the resistance.

(1) Using an ohmmeter, measure the resistance between the terminals.

Resistance:

Tester Connection	Resistance
1 (HT) – 2 (+B)	0.8 to 1.4 Ω at 20°C (68°F)
1 (HT) – 4 (AF–)	10 kΩ or higher

If the result is not as specified, replace the air–fuel ratio sensor (see page 15–6).

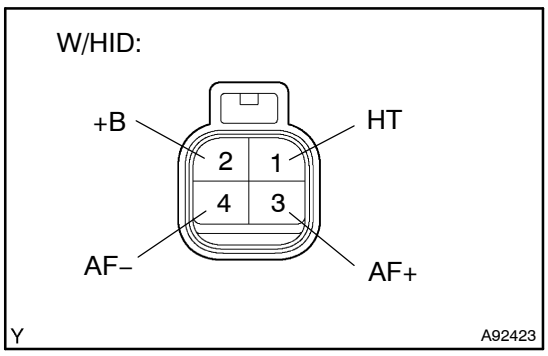

EGR SYSTEM (1CD–FTV)(From September, 2003)

1209I–03

ON–VEHICLE INSPECTION

HINT:

In a malfunction that the EGR system is always operating, black smoke or white smoke may be emitted from the exhaust pipe. If this occurs, inspect the EGR system as well.

1. INSPECT SEATING OF EGR VALVE

(a) Start the engine, then check that it starts and runs at idle.

2. INSPECT HOT ENGINE CONDITION (WHEN USING HAND–HELD TESTER)

(a) Warm up the engine.
(b) Turn the ignition switch to OFF.
(c) Connect the hand–held tester to the DLC3.
(d) Start the engine, then run it at idle.
(e) Turn the hand–held tester ON.
(f) To confirm the following information in DATA LIST, select ”DIAGNOSIS / OBD / MOBD / ACTIVE TEST / EGR STEP POS / ALL” on the hand–held tester.
(g) Warm up the engine. The coolant temperature should be between 75°C (167°F) and 90°C (194°F).
(h) Check the MAF reading with the engine idling.
Standard: MAF reading is between 4 g/s and 16 g/s
(i) Operate the EGR valve with the hand–held tester. Regulate the valve opening angle to 0°, then check the MAF reading.
Standard: MAF reading is between 10 g/s and 16 g/s

If the MAF reading is out of range in either step (h) or (i), replace the EGR valve.

If the MAF reading is out of range in both step (h) and (i), check the air flow sensor (see page 10–22).

If it has no defects, check the operation of the EGR valve.

If any defects are found, replace the air flow meter, then check the operation of the EGR valve.

3. INSPECT HOT ENGINE CONDITION (WHEN NOT USING HAND–HELD TESTER)

(a) Install the vacuum gauge.
(1) Using a 3–way connector, connect a vacuum gauge to the hose between the intake manifold and turbo pressure sensor.
(b) Warm up the engine. The coolant temperature should be between 75°C (167°F) and 90°C (194°F).
(c) Check that the vacuum gauge indicates 2.5 kPa (19 mmHg 0.7 in Hg) or higher.
(d) Stop the engine with the ignition switch OFF, then remove the EGR valve connector.
(e) Restart the engine, then check that the load under idling is 2.5 kPa (19 mmHg 0.7 in Hg) or lower.

If the load pressure exceeds the above value, replace the EGR valve.

120DD–01

INSPECTION

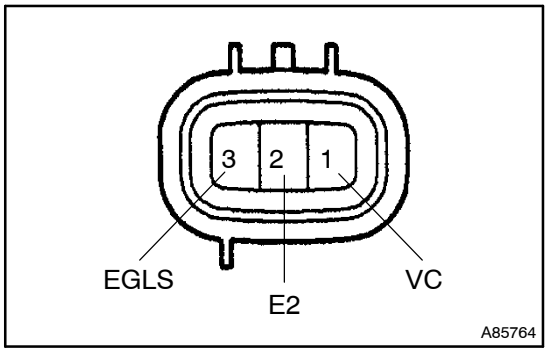

1. INSPECT EGR VALVE POSITION SENSOR

(a) Inspect the resistance.

(1) Using an ohmmeter, measure the resistance between terminals 1 (VC) and 2 (E2).

Resistance: 4.0 to 6.0 kΩ at 20°C (68°F)

If the result is not as specified, replace the EGR valve position sensor.

2. INSPECT EGR VALVE ASSY

(a) Inspect the resistance.

(1) Using an ohmmeter, measure the resistance between the terminals.

Resistance: 6.5 to 7.5 Ω at 20°C (68°F)

If the result is not as specified, replace the EGR valve assembly.

INTAKE AIR CONTROL SYSTEM (2AZ–FSE)

1308J–01

ON–VEHICLE INSPECTION

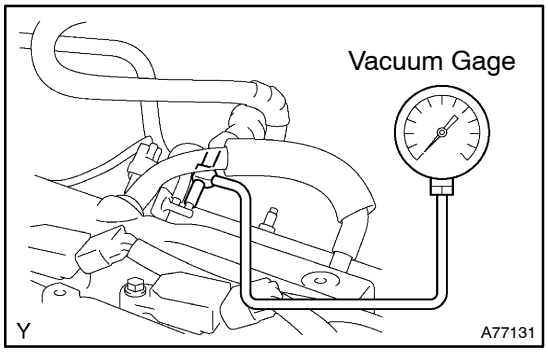

1. INSPECT INTAKE AIR CONTROL SYSTEM

(a) Using a 3–way connector, connect the vacuum gauge to the actuator hose as shown in the illustration.

(b) Connect the hand–held tester to the DLC 3.

(c) Start the engine.

(d) Turn the hand–held tester ON.

(e) Select the item "DIAGNOSIS/ENHANCED OBD II/ACTIVE TEST/INTAKE CTL VSV 1", then operate the VSV for AICS.

Vacuum:

Tester Operation	Specified Condition
VSV is ON	approximately 27.6 kpa (207 mmHg, 8.1 in.Hg)
VSV is OFF	0 kPa (0 mm Hg, 0 in. Hg.)

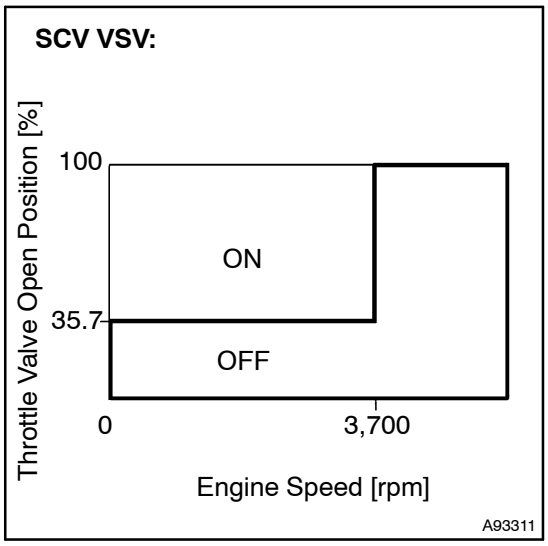

(f) Shift the transmission into the P range, then control the accelerator pedal.

(g) Using the hand–held tester, check the VSV operation.

HINT:

The value in the illustration is only for reference; the throttle valve may operate diversely depending on the engine running condition.

1308K–01

INSPECTION

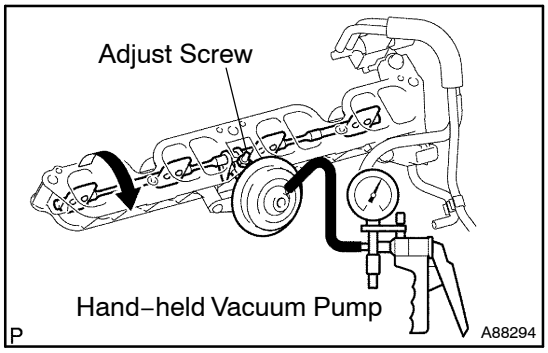

1. INSPECT INTAKE AIR CONTROL VALVE ASSY

(a) Check the operation.

(1) With 34.7 kPa (260 mmHg, 10.2 in.Hg) of vacuum applied to the actuator, check that the actuator rod moves.

(2) 1 minute after applying the vacuum, check that the actuator rod does not return.

NOTICE:

Do not adjust the adjust screw.

If the operation is not as specified, replace the intake air control valve.

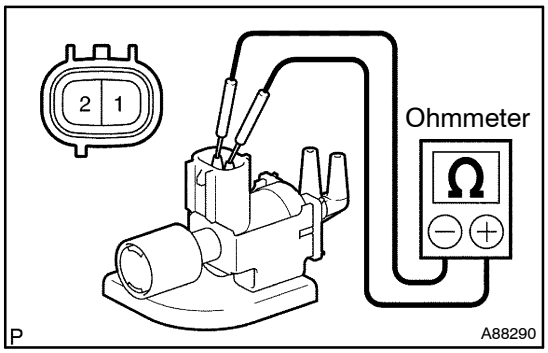

2. INSPECT VACUUM SWITCHING VALVE ASSY NO.1

(a) Inspect the resistance.

(1) Using an ohmmeter, measure the resistance between the terminals.

Standard:

Tester Connection	Specified Condition
1 – 2	33 to 39 Ω at 20°C (68°F)
1 – Body	10 kΩ or higher
2 – Body	10 kΩ or higher

If the result is not as specified, replace the vacuum switching valve No. 1.

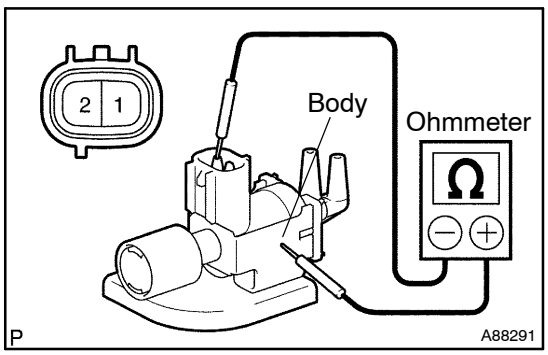

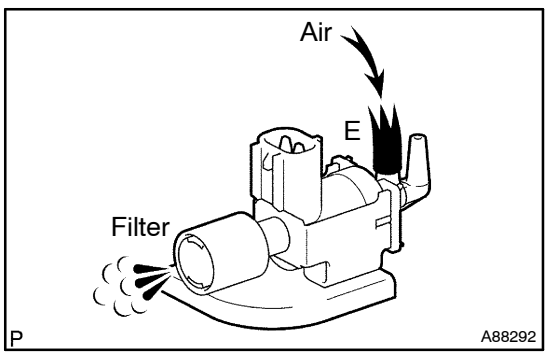

(b) Check the ventilation.

(1) Check that air flows from port E to filter.

If the operation is not as specified, replace the vacuum switching valve No. 1.

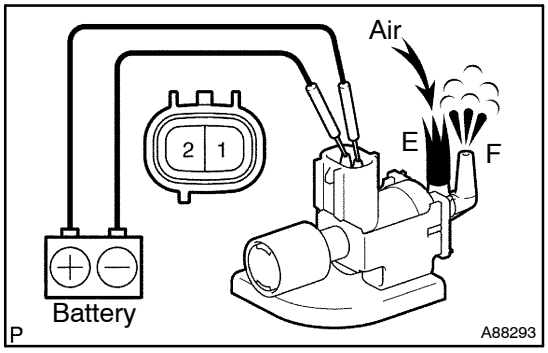

(2) Apply battery voltage across the terminals.
(3) Check that air flows from ports E to F.

If the operation is not as specified, replace the vacuum switching valve No. 1.

TURBO CHARGER SYSTEM (1CD–FTV)(From September, 2003)

PRECAUTION

1302Y–04

1. MAINTENANCE PRECAUTION

(a) Do not stop the engine immediately after pulling a trailer, or after high speed or uphill driving. Let the engine idle for 20 to 120 seconds before turning the ignition switch to OFF (according as the driving condition, the idling time varies).

(b) Avoid quickly accelerating the pedal or increasing the engine speed immediately after starting a cold engine.

(c) If the turbocharger is found defective, it must be replaced. Also, inspect the source of the trouble including conditions of the turbocharger that having been used. Repair or replace the followings if necessary:
  (1) Engine oil (level and quality)
  (2) Oil lines leading to the turbocharger

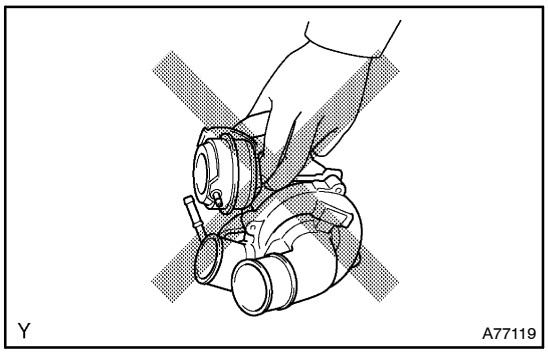

(d) Pay due attention when removing and reinstalling the turbocharger assembly. Do not drop, grasp, or give shock to the easily–deformed assembly parts such as the actuator or push rod when removing or reinstalling.

(e) Before removing, cover both the intake and exhaust ports and the oil inlet to prevent dirt or foreign objects from being introduced.

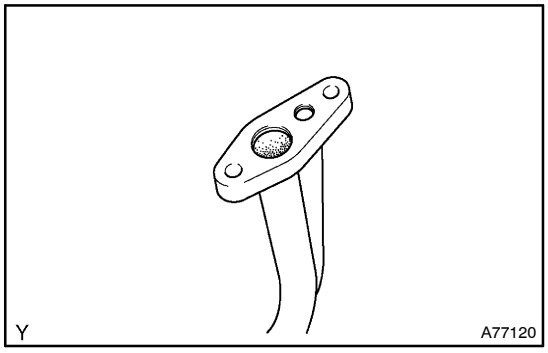

(f) If replacing the turbocharger, check the oil pipe for deposits. If necessary, replace the oil pipe, too.

(g) Thoroughly remove old gasket sticking to the lubrication oil pipe flange and turbocharger oil flange.

(h) If replacing the bolt(s) or nut(s), Toyota genuine parts must be used to prevent breakage or deformation.

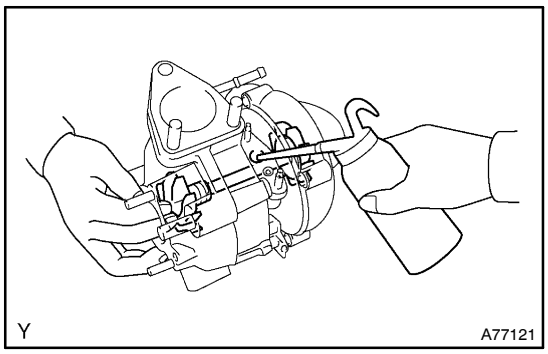

(i) If replacing the turbocharger, put 20 cm^3 (1.2 cu in.) of fresh oil into the turbocharger oil inlet hole, then turn the turbine wheel by hand to spread oil to the bearing.

(j) If overhauling or replacing the engine, cut the fuel supply after reassembling and crank the engine for 30 seconds to feed oil throughout the engine. Run the engine at idle for 60 seconds.

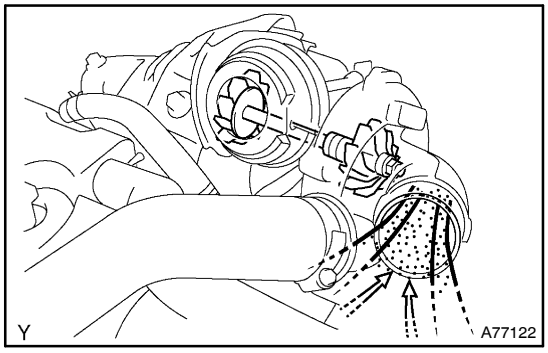

(k) Since the turbine wheels run at extremely high speed, if the engine is running without the air cleaner, case cover and hose, the turbine wheel will be damaged by introduced foreign particles.

1302Z–04

ON–VEHICLE INSPECTION

1. INSPECT INTAKE AIR SYSTEM

(a) Check for leakage or clogging between the air cleaner housing and turbocharger inlet and between the turbocharger outlet and cylinder head.

Condition	Operation
Clogged air cleaner	Clean or replace the element
Collapsed or deformed hoses	Repair or replace
Leakage from connections	Check each connection and repair
Cracks in components	Check and replace

2. INSPECT EXHAUST SYSTEM

(a) Check for leakage or clogging between the cylinder head and turbocharger inlet and between the turbocharger outlet and exhaust pipe.

Condition	Operation
Deformed components	Repair or replace
Foreign material in passages	Remove
Leakage from components	Repair or replace
Cracks in components	Check and replace

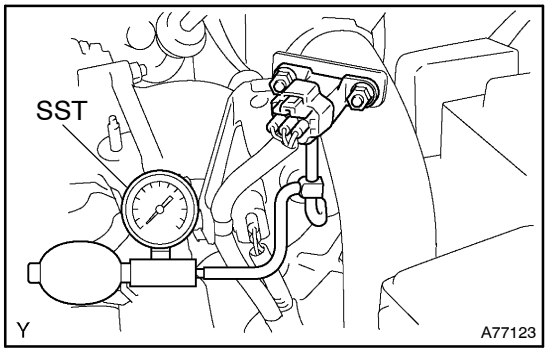

3. CHECK TURBOCHARGING PRESSURE

(a) Warm up the engine.

(b) Using a 3–way connector, connect SST (turbocharger pressure gauge) to the hose leading to the intake air connector.

SST 09992 – 00242

(c) While depressing the clutch pedal, press the accelerator pedal down fully. Measure the turbocharging pressure at the maximum speed (5,100 to 5,250 rpm).

Standard pressure:

15 to 45 kPa (0.15 to 0.46 kgf/cm^2, 2.2 to 6.5 psi)

If the pressure is less than specification, check both the intake air and exhaust systems for leakage.

If there is no leakage, check if the actuator hose has disconnected. If not, check the turbocharger.

If the pressure is greater than the specification, check if the actuator hose has disconnected or cracked. If not, check the turbocharger.

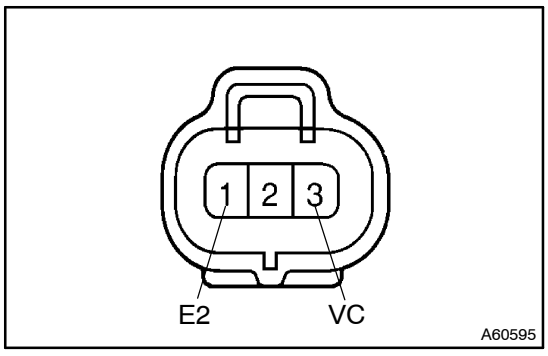

4. INSPECT TURBO PRESSURE SENSOR

(a) Inspect the power source voltage.

(1) Disconnect the turbo pressure sensor connector.

(2) Turn the ignition switch to ON.

(3) Using a voltmeter, measure the voltage between connector terminals 3 (VC) and 1 (E2) of the wire harness side.

Voltage: 4.5 to 5.5 V

If the result is not as specified, check the wiring and ECM.

(4) Turn the ignition switch to OFF.
(5) Reconnect the turbo pressure sensor connector.

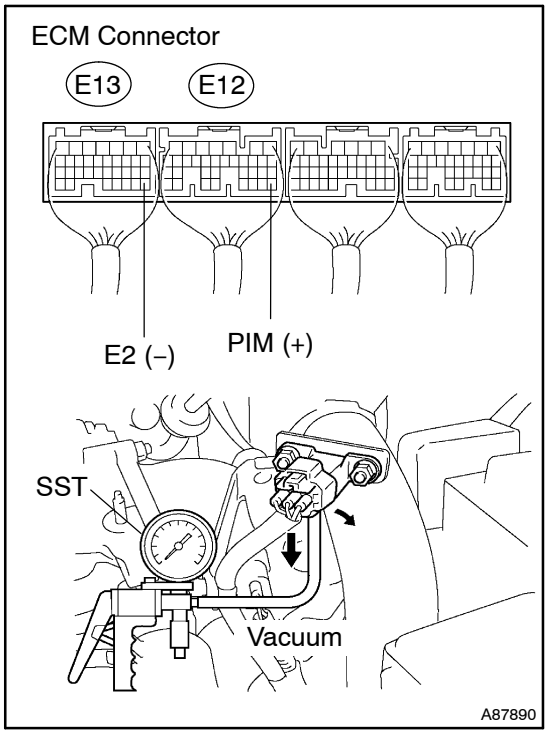

(b) Inspect the supply power.
(1) Turn the ignition switch to ON.
(2) Disconnect the vacuum hose from the turbo pressure sensor.
(3) Connect a voltmeter to terminals E12–28 (PIM) and E13–28 (E2) of the ECM, then measure the output voltage under atmospheric pressure.
(4) Apply vacuum to the turbo pressure sensor in 13.3 kPa (100 mmHg, 3.94 in.Hg) to 66.7 kPa (500 mmHg, 19.69 in.Hg).
(5) Measure the voltage decrease from step (3).

Voltage drop:

Apply Vacuum [kPa (mmHg, in.Hg)]	Voltage Decrease [V]
13.3 (100, 3.94)	0.1 to 0.3
26.7 (200, 7.87)	0.3 to 0.5
40.0 (300, 11.81)	0.5 to 0.7
57.3 (400, 15.75)	0.7 to 0.9
66.7 (500, 19.69)	0.9 to 1.0

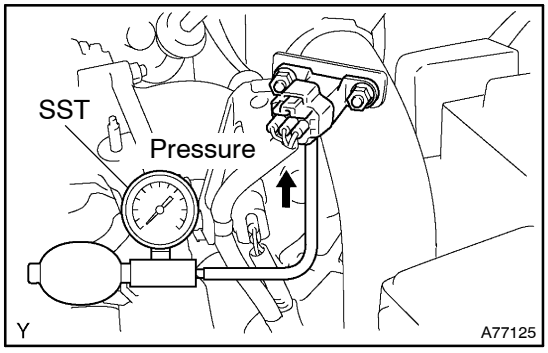

(6) Using SST (a turbocharger pressure gauge), apply pressure to the turbo pressure sensor in 19.6 kPa (0.20 kgf/cm^2, 2.84 psi) to 98.0 kPa (1.00 kgf/cm^2, 14.2 psi).

SST 09992–00242

(7) Measure the voltage increase from step (3).

Voltage up:

Applied Pressure [kPa (kgf/cm^2, psi)]	Voltage Increase [V]
19.6 (0.20, 2.84)	0.1 to 0.4
39.2 (0.40, 5.69)	0.4 to 0.7
58.8 (0.60, 8.53)	0.7 to 1.0
78.5 (0.80, 11.4)	1.0 to 1.3
98.0 (1.00, 14.2)	1.3 to 1.6

If the result is not as specified, check the wiring and ECM.

1308M–01

INSPECTION

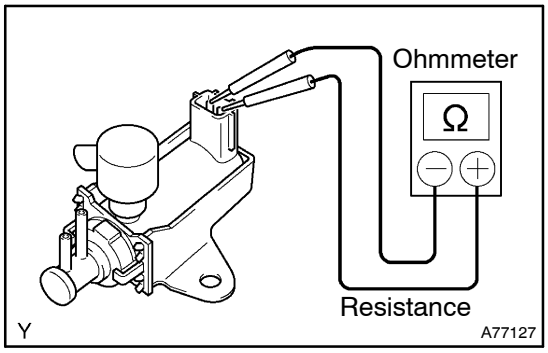

1. INSPECT VACUUM REGULATING VALVE ASSY

(a) Inspect the resistance.

(1) Using an ohmmeter, measure the resistance between the terminals.

Resistance:
10 to 14 Ω at 20°C (68°F)

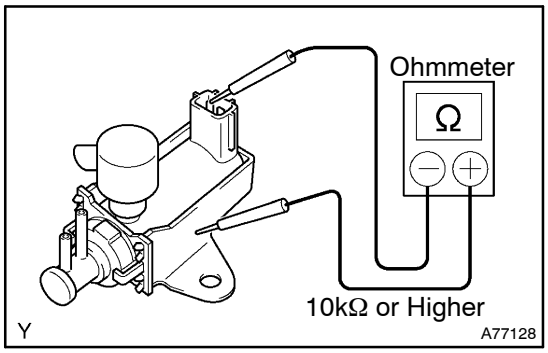

(2) Using an ohmmeter, measure the resistance between each terminal and the body.

Standard: 10 kΩ or higher

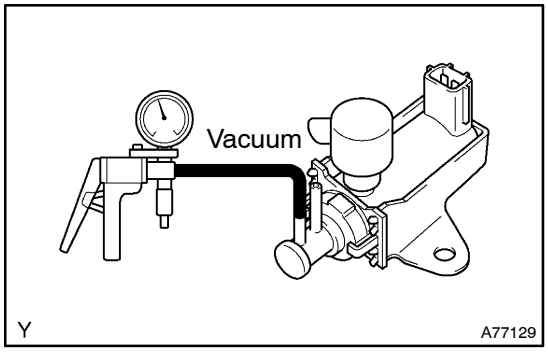

(b) Check the air tightness.

(1) Apply vacuum to the vacuum output port. Check that the needle of the vacuum pump indicates increase of 66.7 kPa (500 mmHg, 19.7 in.Hg) or more.

If the air tightness is not as specified, replace the vacuum regulating valve.

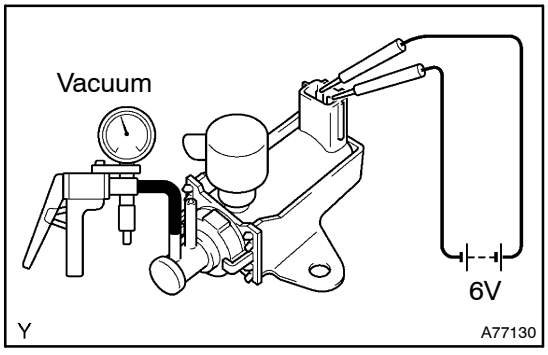

(c) Check the operation.

(1) Apply about 4 dry batteries of 1.5V in series.

(2) Check that the needle does not move when vacuum is applied to the vacuum outlet port.

If the operation is not as specified, replace the vacuum regulating valve.

TURBOCHARGER SUB–ASSY (1CD–FTV)(From September, 2003)

COMPONENTS

1306Y–02

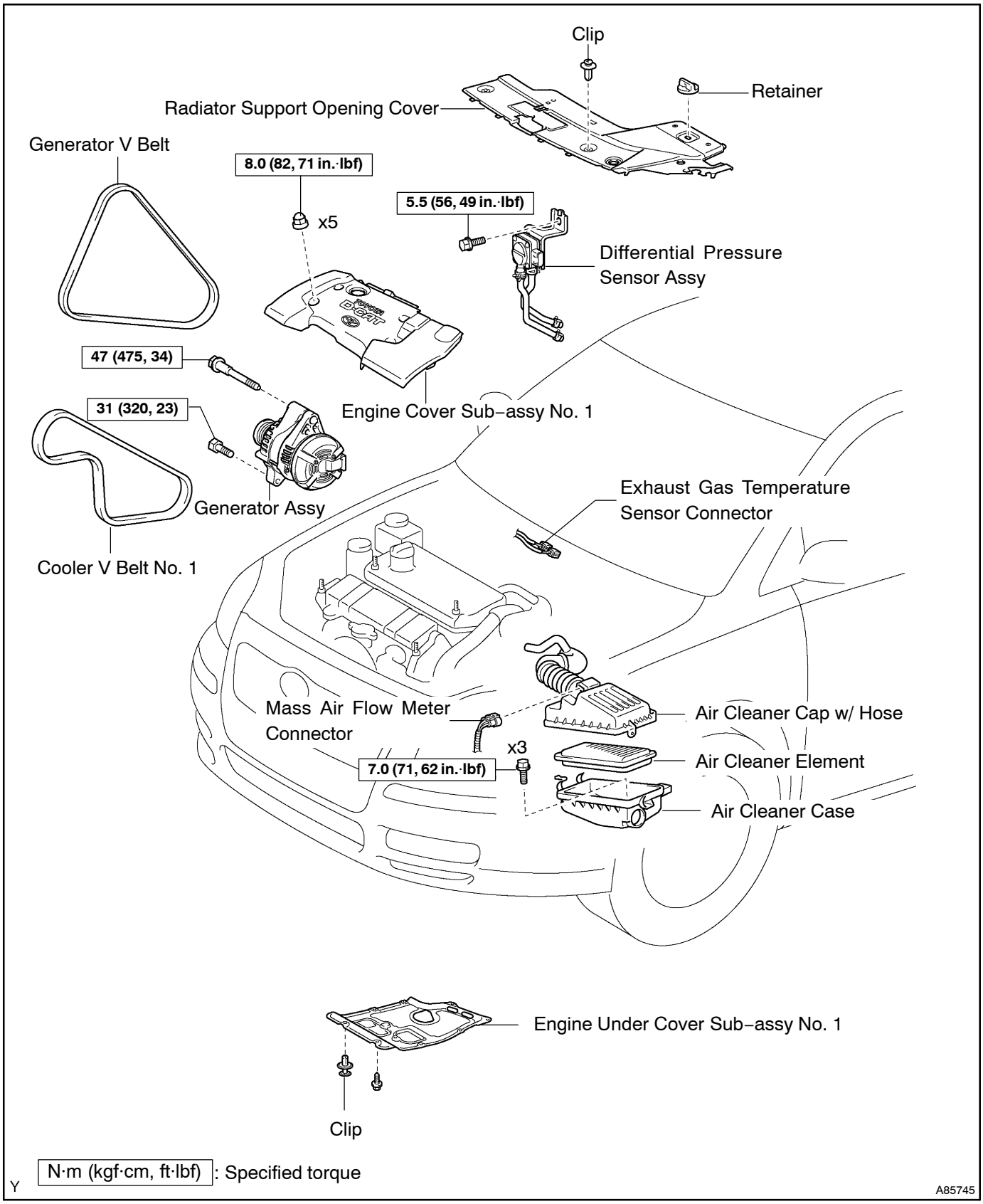

N·m (kgf·cm, ft·lbf) : Specified torque

Y

A85745

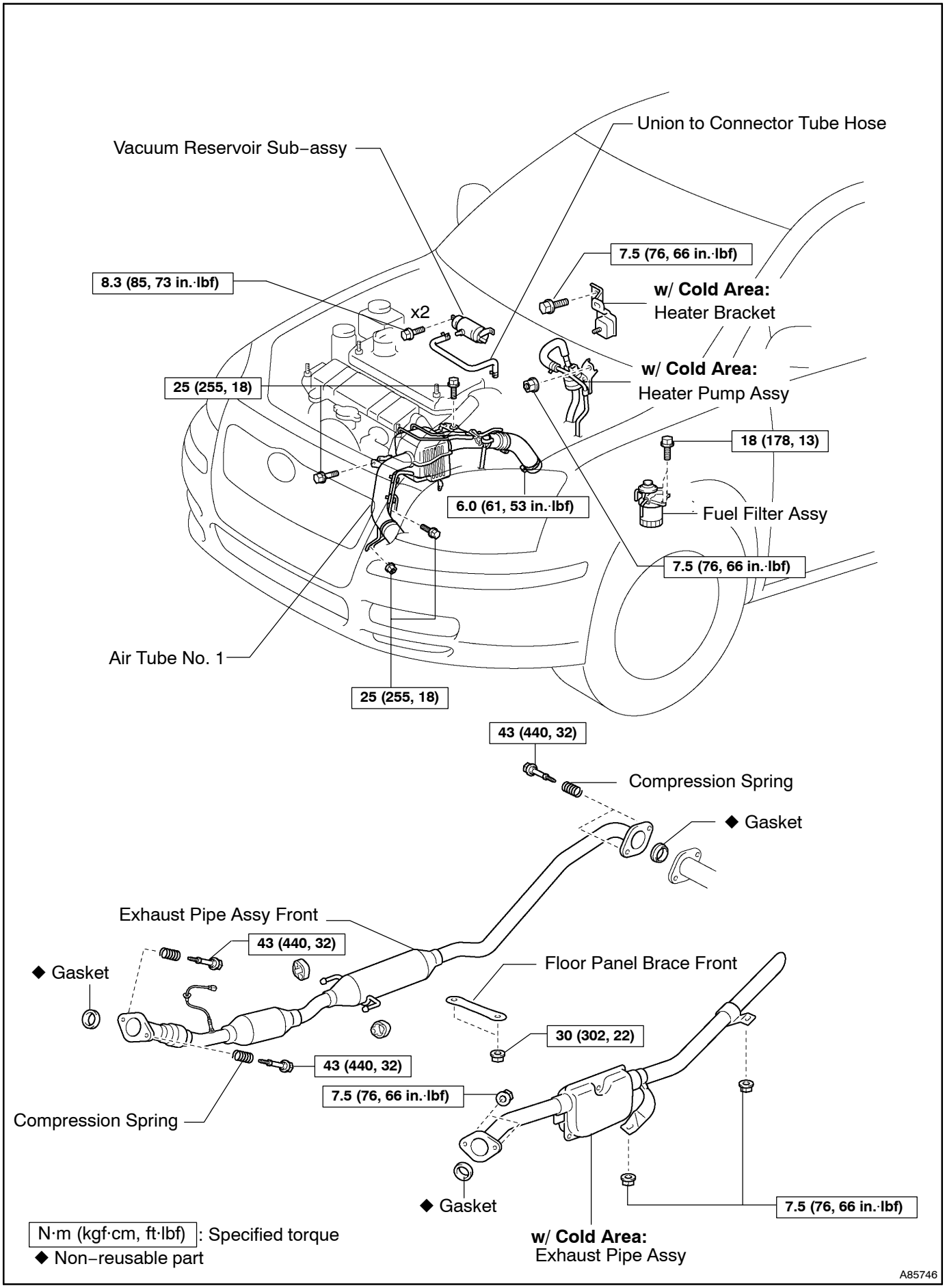
Union to Connector Tube Hose
Vacuum Reservoir Sub–assy
7.5 (76, 66 in.·lbf)
8.3 (85, 73 in.·lbf)
w/ Cold Area:
Heater Bracket
x2
w/ Cold Area:
Heater Pump Assy
25 (255, 18)
18 (178, 13)
6.0 (61, 53 in.·lbf)
Fuel Filter Assy
7.5 (76, 66 in.·lbf)
Air Tube No. 1
25 (255, 18)
43 (440, 32)
Compression Spring
◆ Gasket
Exhaust Pipe Assy Front
43 (440, 32)
◆ Gasket
Floor Panel Brace Front
30 (302, 22)
43 (440, 32)
7.5 (76, 66 in.·lbf)
Compression Spring
◆ Gasket
7.5 (76, 66 in.·lbf)
w/ Cold Area:
Exhaust Pipe Assy
N·m (kgf·cm, ft·lbf) : Specified torque
◆ Non–reusable part
A85746

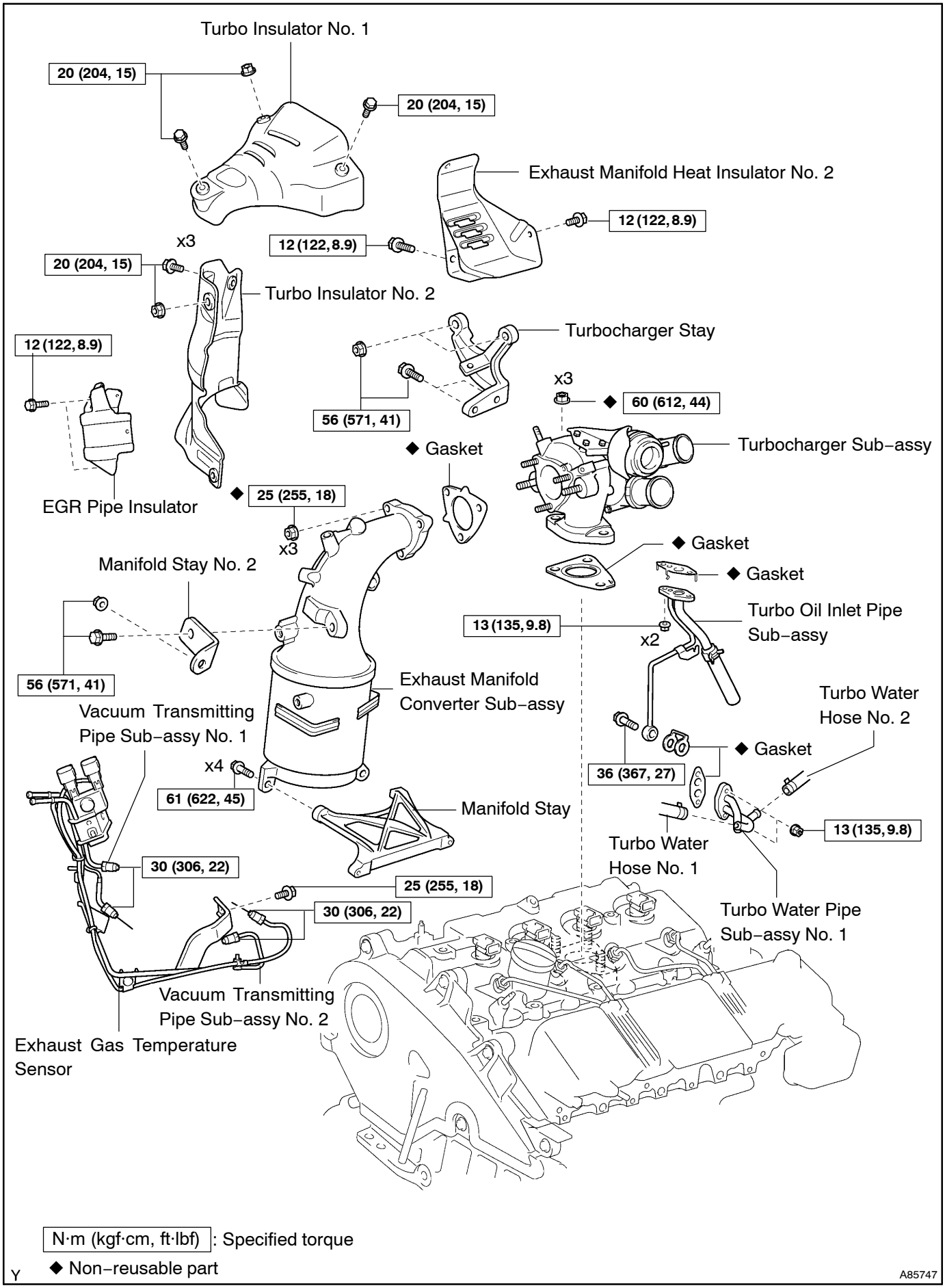

N·m (kgf·cm, ft·lbf) : Specified torque

◆ Non–reusable part

Y

A85747

1308N–01

REPLACEMENT

1. **REMOVE ENGINE UNDER COVER SUB–ASSY NO.1**
2. **DRAIN ENGINE COOLANT (See page 16–19)**
3. **REMOVE RADIATOR SUPPORT OPENING COVER**
4. **REMOVE ENGINE COVER SUB–ASSY NO.1**

(a) Remove the 5 nuts and engine cover.

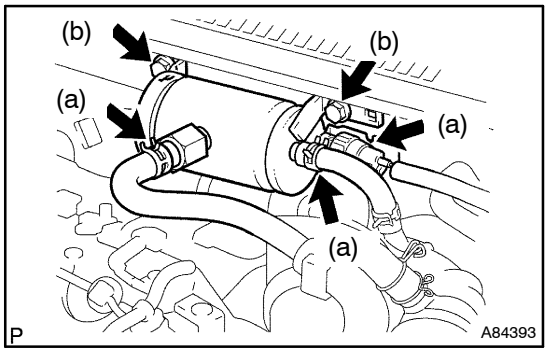

5. **REMOVE VACUUM RESERVOIR SUB–ASSY**

(a) Disconnect the 2 vacuum hoses and connector.
(b) Remove the 2 bolts and vacuum reservoir.

6. **REMOVE DIFFERENTIAL PRESSURE SENSOR ASSY (See page 14–108)**
7. **DISCONNECT ENGINE WIRE (See page 14–138)**
8. **REMOVE AIR CLEANER ASSY**

(a) Disconnect the PCV hose and connector.
(b) Remove the air cleaner cap with the air cleaner hose.
(c) Remove the air cleaner filter element.
(d) Remove the 3 bolts and air cleaner case.

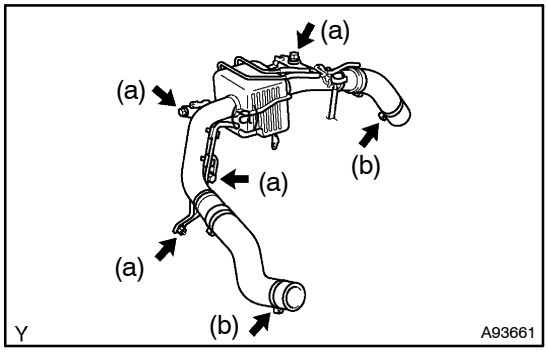

9. **REMOVE AIR TUBE NO.1**

(a) Remove the 3 bolts and nut, then separate the air tube No. 1.
(b) Loosen the hose clamp bolts.

10. **REMOVE FUEL FILTER ASSY (See Pub. No. RM1018E on page 11–82)**

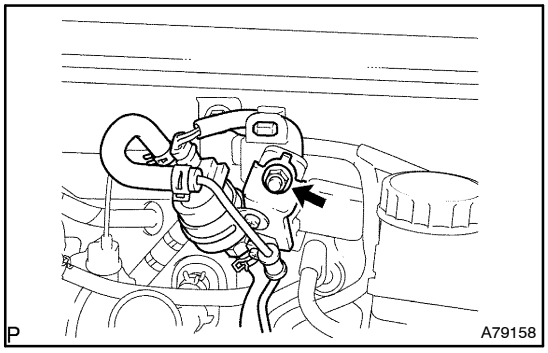

11. SEPARATE HEATER PUMP ASSY (W/ COLD AREA)

(a) Remove the nut, then disconnect the connector.

(b) Separate the heater pump.

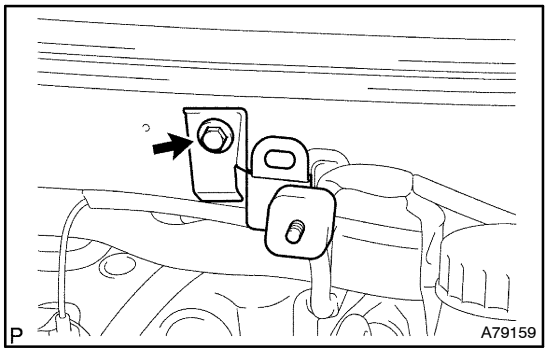

12. REMOVE HEATER BRACKET (W/ COLD AREA)

(a) Remove the bolt and heater bracket.

13. REMOVE FLOOR PANEL BRACE FRONT (See page 15–6)

14. REMOVE EXHAUST PIPE ASSY FRONT (See page 15–6)

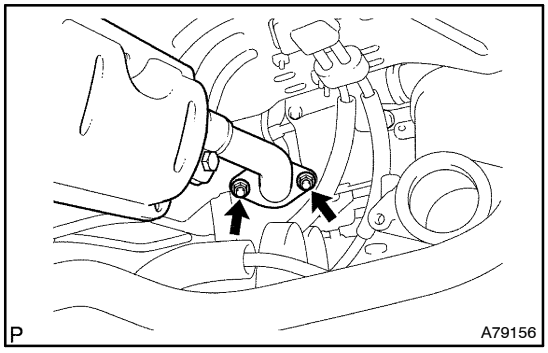

15. REMOVE EXHAUST PIPE ASSY (W/ COLD AREA)

(a) Remove the 2 nuts.

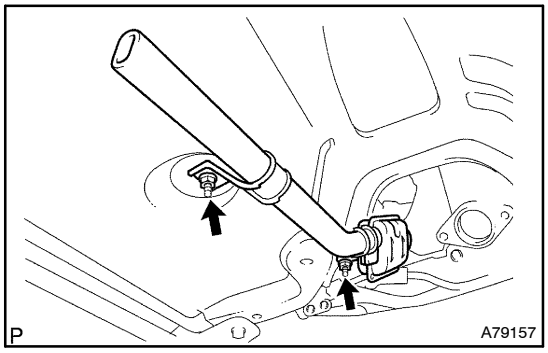

(b) Remove the 2 nuts and exhaust pipe sub–assembly.

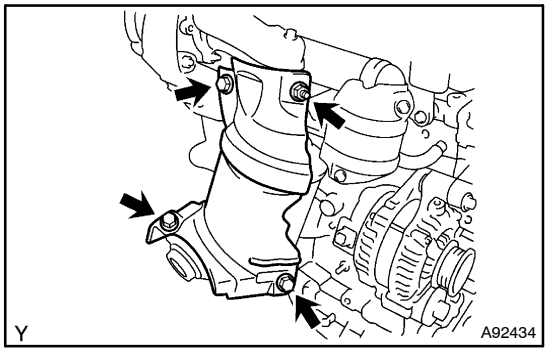

16. REMOVE TURBO INSULATOR NO.2

(a) Remove the 3 bolts and nut, then remove the turbo insulator.

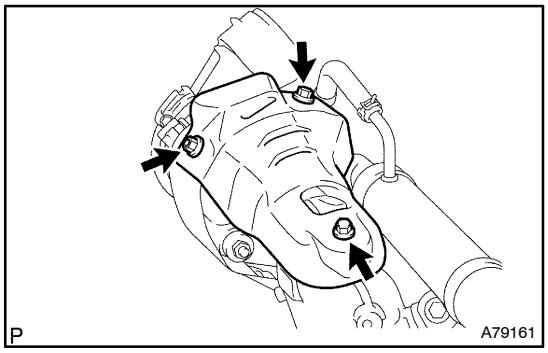

17. REMOVE TURBO INSULATOR NO.1

(a) Remove the 2 bolts and nut, then remove the turbo insulator.

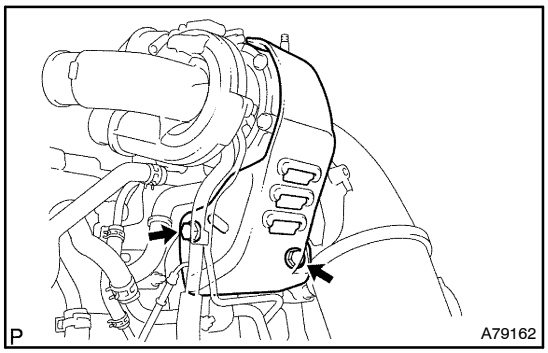

18. REMOVE EXHAUST MANIFOLD HEAT INSULATOR NO.2

(a) Remove the 2 bolts and exhaust manifold heat insulator.

19. REMOVE GENERATOR ASSY (See Pub. No. RM1018E on page 19–29)

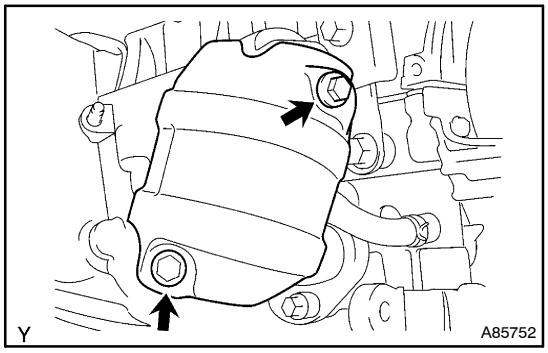

20. REMOVE EGR PIPE INSULATOR

(a) Remove the 2 bolts and EGR pipe insulator.

21. REMOVE EXHAUST GAS TEMPERATURE SENSOR (See page 14–108)
SST 09023–38400

22. REMOVE VACUUM TRANSMITTING PIPE SUB–ASSY NO.1 (See page 14–108)
SST 09023–38200

23. REMOVE VACUUM TRANSMITTING PIPE SUB–ASSY NO.2 (See page 14–108)
SST 09023–38200

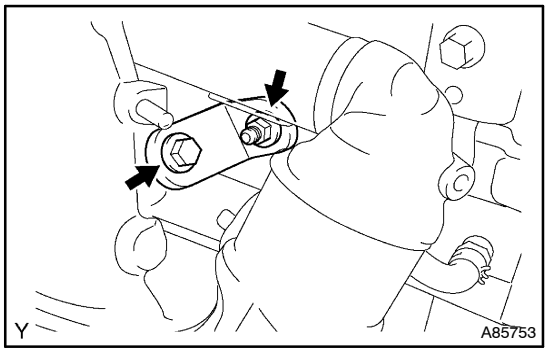

24. REMOVE MANIFOLD STAY NO.2
(a) Remove the bolt and nut, then remove the manifold stay No. 2.

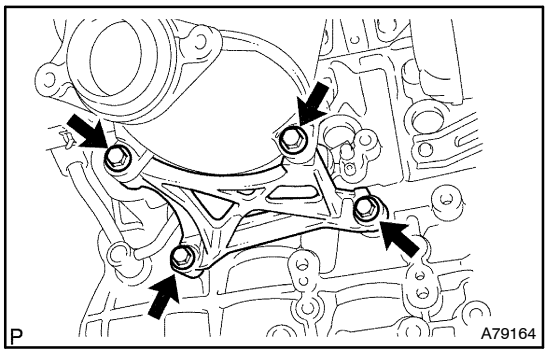

25. REMOVE MANIFOLD STAY
(a) Remove the 4 bolts and manifold stay.

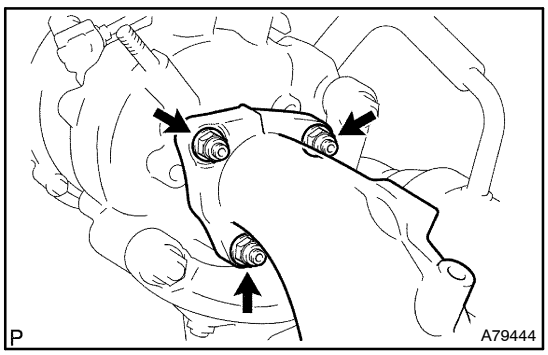

26. REMOVE EXHAUST MANIFOLD CONVERTER SUB–ASSY
(a) Remove the 3 nuts, manifold converter and gasket.

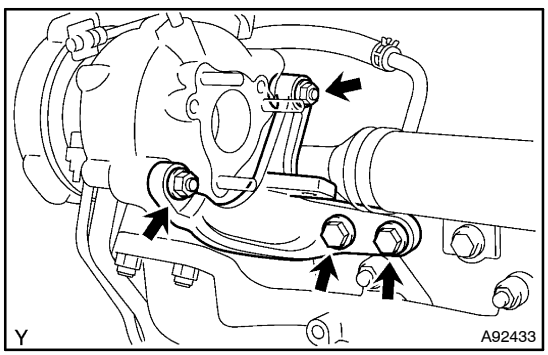

27. REMOVE TURBOCHARGER STAY
(a) Remove the 2 bolts and 2 nuts, then remove the turbocharger stay.

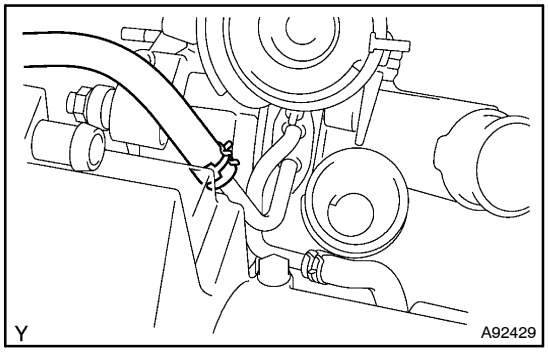

28. DISCONNECT TURBO WATER HOSE NO.1

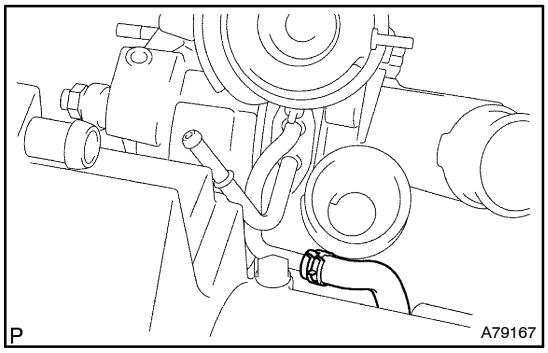

29. DISCONNECT TURBO WATER HOSE NO.2

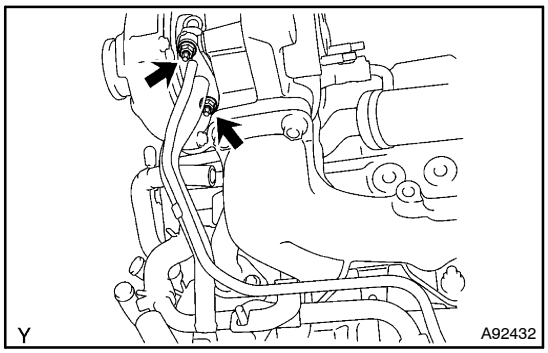

30. SEPARATE TURBO OIL INLET PIPE SUB–ASSY

(a) Remove the 2 nuts, turbo oil pipe and gasket.

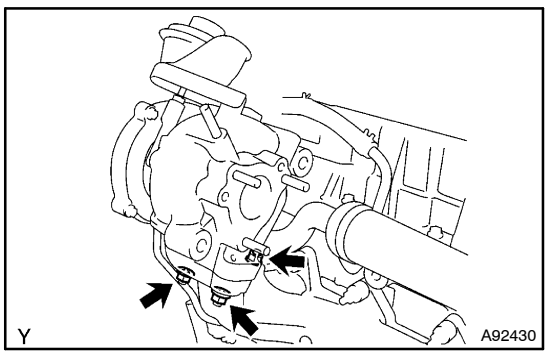

31. REMOVE TURBOCHARGER SUB–ASSY

(a) Remove the 3 nuts, turbocharger and gasket.

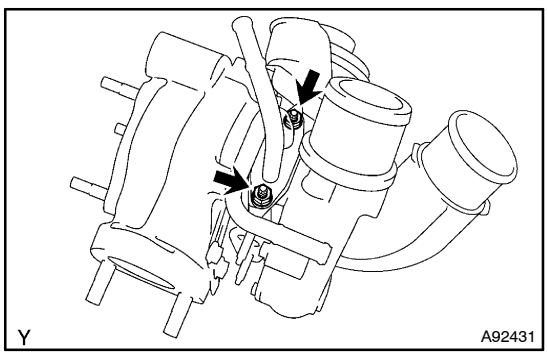

32. REMOVE TURBO WATER PIPE SUB–ASSY NO.1

(a) Remove the 2 nuts, turbo water pipe and gasket.

33. INSTALL TURBO WATER PIPE SUB–ASSY NO.1

(a) Install a new gasket and the turbo water pipe with the 2 nuts.
Torque: 13 N·m (135 kgf·cm, 9.8 ft·lbf)

34. INSTALL TURBOCHARGER SUB–ASSY

(a) Install a new gasket and the turbocharger with the 3 nuts.
Torque: 60 N·m (612 kgf·cm, 44 ft·lbf)

35. INSTALL TURBO OIL INLET PIPE SUB–ASSY

(a) Install a new gasket and the oil pipe with the 2 nuts.
Torque: 13 N·m (135 kgf·cm, 9.8 ft·lbf)

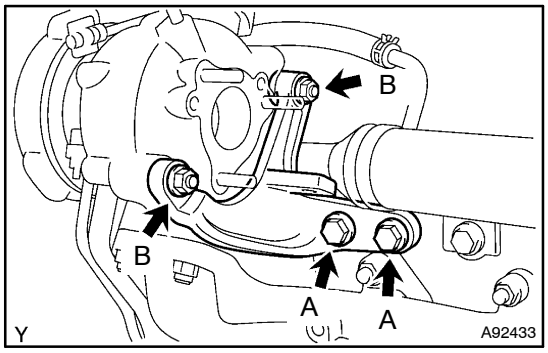

36. INSTALL TURBOCHARGER STAY

(a) Install the turbocharger stay, then temporarily tighten bolts A.

(b) Temporarily tighten nuts B while pushing the cylinder head toward the turbocharger stay.
Torque: 8.0 N·m (82 kgf·cm, 71 in.·lbf)

(c) Tighten bolts A.
Torque: 56 N·m (571 kgf·cm, 41 ft·lbf)

(d) Tighten nuts B.
Torque: 56 N·m (571 kgf·cm, 41 ft·lbf)

37. INSTALL EXHAUST MANIFOLD CONVERTER SUB–ASSY

(a) Install the manifold stay, then temporarily tighten the cylinder block side of the manifold stay.

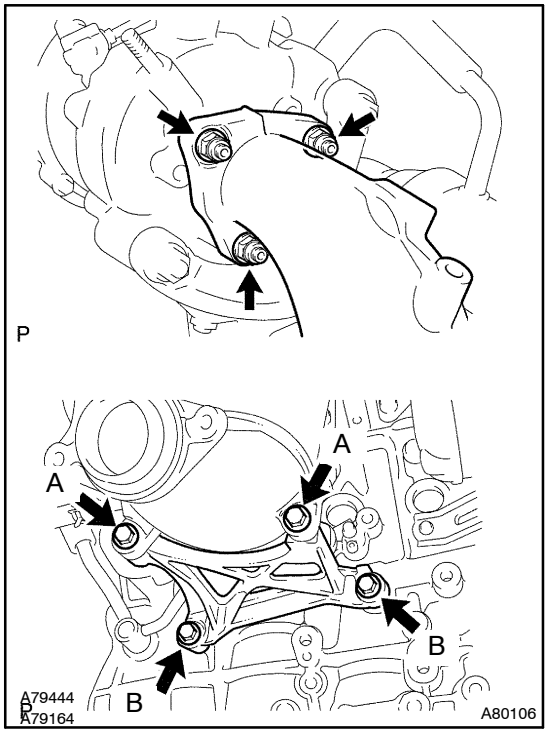

(b) Install a new gasket and the manifold converter, then temporarily tighten bolts A and bolts B while pushing the upper portion of the converter toward the turbocharger.
Torque: 8.0 N·m (82 kgf·cm, 71 in.·lbf)

(c) Tighten the 3 nuts.
Torque: 25 N·m (255 kgf·cm, 18 ft·lbf)

(d) Tighten bolts A.
Torque: 61 N·m (622 kgf·cm, 45 ft·lbf)

(e) Tighten bolts B.
Torque: 61 N·m (622 kgf·cm, 45 ft·lbf)

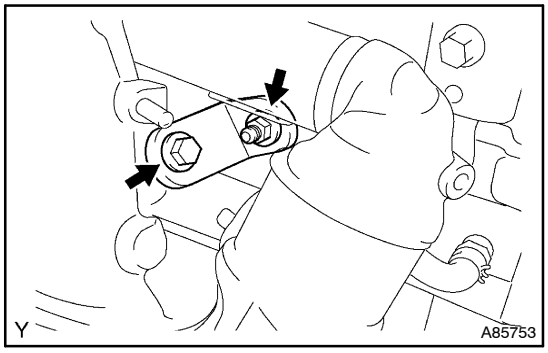

38. INSTALL MANIFOLD STAY NO.2

(a) Install the manifold stay No. 2, then temporarily tighten the bolt.

(b) Temporarily tighten the nut while pushing the manifold stay No. 2 toward the cylinder head.

Torque: 8.0 N·m (82 kgf·cm, 71 in.·lbf)

HINT:

No clearance between the stay and cylinder head should be confirmed.

(c) Tighten the bolt.

Torque: 56 N·m (571 kgf·cm, 41 ft·lbf)

(d) Tighten the nut.

Torque: 56 N·m (571 kgf·cm, 41 ft·lbf)

39. INSTALL VACUUM TRANSMITTING PIPE SUB–ASSY NO.2 (See page 14–108)

SST 09023–38200

40. INSTALL VACUUM TRANSMITTING PIPE SUB–ASSY NO.1 (See page 14–108)

SST 09023–38200

41. INSTALL EXHAUST GAS TEMPERATURE SENSOR (See page 14–108)

SST 09023–38400

42. INSTALL EGR PIPE INSULATOR

Torque: 12 N·m (122 kgf·cm, 8.9 ft·lbf)

43. INSTALL GENERATOR ASSY (See Pub. No. RM1018E on page 19–29)

44. INSTALL EXHAUST MANIFOLD HEAT INSULATOR NO.2

Torque: 12 N·m (122 kgf·cm, 8.9 ft·lbf)

45. INSTALL TURBO INSULATOR NO.1

Torque: 20 N·m (204 kgf·cm, 15 ft·lbf)

46. INSTALL TURBO INSULATOR NO.2

Torque: 20 N·m (204 kgf·cm, 15 ft·lbf)

47. INSTALL EXHAUST PIPE ASSY (W/ COLD AREA)

Torque: 7.5 N·m (76 kgf·cm, 66 in.·lbf)

48. INSTALL EXHAUST PIPE ASSY FRONT (See page 15–6)

49. INSTALL FLOOR PANEL BRACE FRONT (See page 15–6)

50. INSTALL HEATER BRACKET (W/ COLD AREA)

Torque: 7.5 N·m (76 kgf·cm, 66 in.·lbf)

51. INSTALL HEATER PUMP ASSY (W/ COLD AREA)

Torque: 7.5 N·m (76 kgf·cm, 66 in.·lbf)

52. INSTALL FUEL FILTER ASSY (See Pub. No. RM1018E on page 11–82)

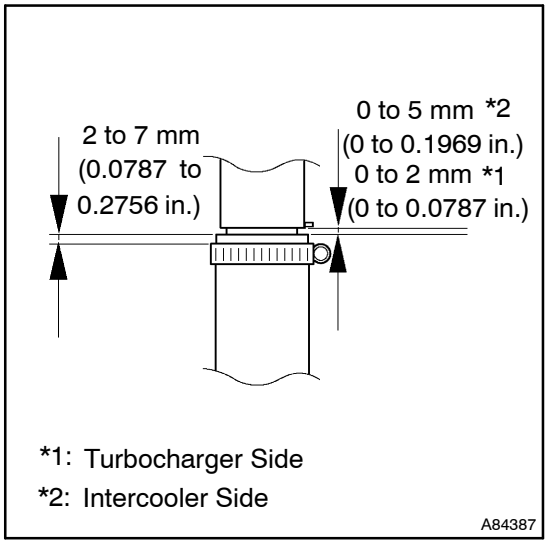

53. INSTALL AIR TUBE NO.1

(a) Install the air hose and hose clamps as shown in the illustration.

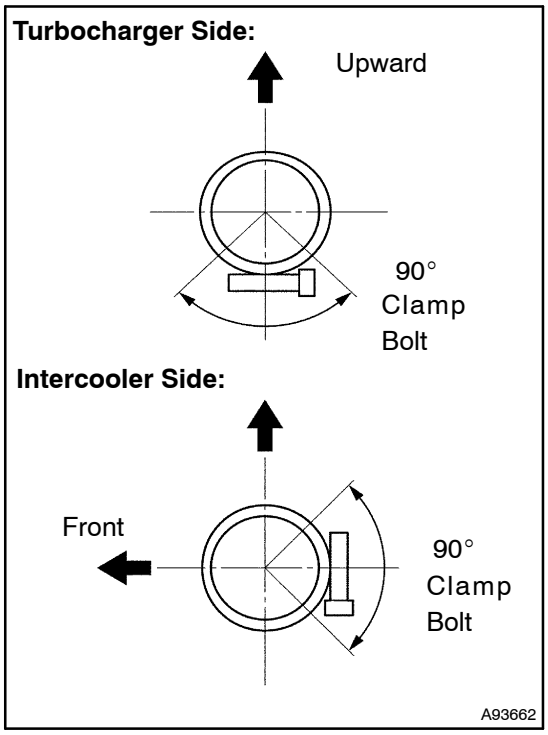

(b) Tighten the hose clamps as shown in the illustration.
Torque: 6.0 N·m (61 kgf·cm, 53 in.·lbf)

(c) Install the air tube No. 1 with the 3 bolts and nut.
Torque: 25 N·m (255 kgf·cm, 18 ft·lbf)

54. INSTALL DIFFERENTIAL PRESSURE SENSOR ASSY (See page 14–108)
55. INSTALL AIR CLEANER ASSY
Torque: 7.0 N·m (71 kgf·cm, 62 in.·lbf)
56. INSTALL VACUUM RESERVOIR SUB–ASSY
Torque: 8.3 N·m (85 kgf·cm, 73 in.·lbf)
57. INSTALL ENGINE COVER SUB–ASSY NO.1
Torque: 8.0 N·m (82 kgf·cm, 71 in.·lbf)
58. ADD ENGINE COOLANT (See page 16–19)
59. CHECK ENGINE OIL LEVEL
60. CHECK FOR ENGINE COOLANT LEAKS (See page 16–15)
61. CHECK FOR ENGINE OIL LEAKS
62. CHECK FOR FUEL LEAKS (See page 11–46)
63. CHECK FOR EXHAUST GAS LEAKS

ENGINE (2AZ–FSE)

141N2–01

INSPECTION

1. **INSPECT COOLANT (See page 16–7)**
2. **INSPECT ENGINE OIL (See page 17–1)**
3. **INSPECT BATTERY (See page 19–6)**
4. **INSPECT AIR CLEANER FILTER ELEMENT SUB–ASSY**
5. **INSPECT SPARK PLUG (See page 18–3)**
6. **INSPECT V–RIBBED BELT**
7. **INSPECT IGNITION TIMING**

(a) Warm up the engine.

(b) Remove the DLC3 cover from the DLC3 connector.

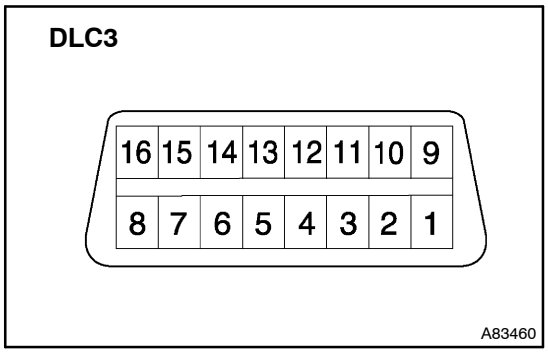

(c) When using the hand–held tester.

(1) Connect the hand–held tester to the DLC3.

(2) Enter DATA LIST MODE on the hand–held tester.

Ignition timing: 8 to 12° BTDC

HINT:

Please refer to the hand–held tester operator's manual if you need help to select DATA LIST.

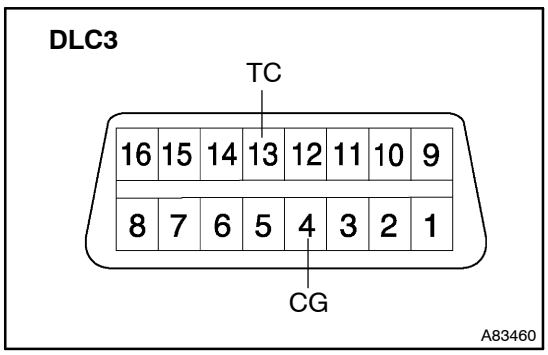

(d) When not using the hand–held tester.

(1) Using SST, connect terminals 13 (TC) and 4 (CG) of DLC3.

SST 09843–18040

NOTICE:

- **Be careful to connect correctly. It causes breakage of the engine.**
- **Turn all electrical systems OFF before connecting the terminals.**
- **Operate the inspection after the cooling fan motor is turned OFF**

(2) Remove the cylinder head cover No.2 (see page 14–45).

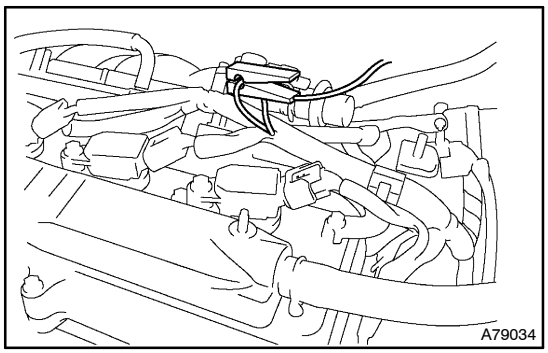

(3) Pull out the wire harness as shown in the illustration. Connect the clip of the timing light to the engine.

NOTICE:

- **Use a timing light which detects the first signal.**
- **After checking, be sure to wrap the wire harness with tape.**

(4) Inspect the ignition timing at idle.

Ignition timing: 8 to 12° BTDC

NOTICE:

When checking the ignition timing, shift the transmission to the neutral position.

HINT:

Run the engine speed at 1,000 to 1,300 rpm for 5 seconds, check that the engine speed returns to the idle speed.

(5) Disconnect terminals 13 (TC) and 4 (CG) of the DLC3.

(6) Inspect the ignition timing at idle.

Ignition timing: 5 to 23° BTDC

(7) Confirm that ignition timing moves to advanced angle when the engine speed is increased.

(8) Remove the timing light.

8. INSPECT ENGINE IDLE SPEED

(a) Warm up the engine.

(b) Remove the DLC3 cover from the DLC3 connector.

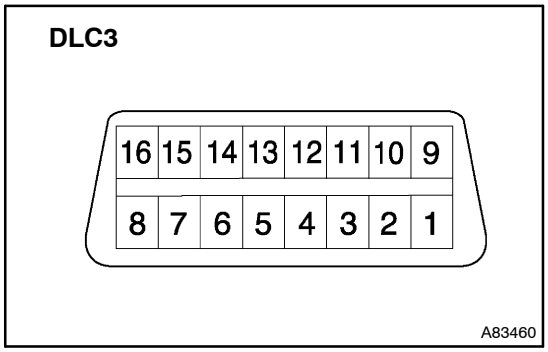

(c) When using the hand–held tester:

(1) Connect the hand–held tester to the DLC3.

Idle speed: 625 to 725 rpm

NOTICE:

- **Check idle speed with the cooling fan OFF.**
- **Switch off all accessories and air conditioning.**

HINT:

Please refer to the hand–held tester operator's manual if you need help to select DATA LIST.

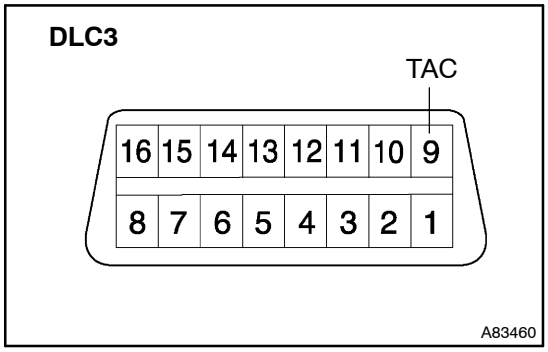

(d) When not using hand–held tester:

(1) Using SST, connect the tachometer test prove to terminal 9 (TAC) of DLC3.

SST 09843–18030

(2) Check the idle speed.

Idle speed: 625 to 725 rpm

NOTICE:

- **Check the idle speed with the cooling fan OFF.**
- **Switch OFF all accessories and air conditioning.**

9. INSPECT COMPRESSION

(a) Stop a warm engine.

(b) Disconnect the injector connectors.

(c) Remove all ignition coils.

(d) Remove all spark plugs.

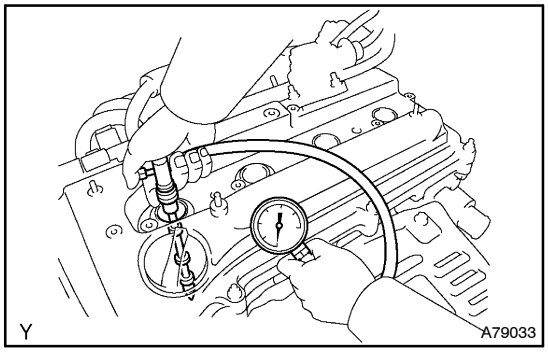

(e) Inspect the cylinder compression pressure.
SST 09992–00500
(1) Insert a compression gauge into the spark plug hole.
(2) Fully open the throttle with hand.
(3) While cranking the engine, measure the compression pressure.

Compression pressure:
1.3 MPa (13.3 kgf/cm^2, 189 psi)
Minimum pressure:
1.0 MPa (10.2 kgf/cm^2, 145 psi)
Difference between each cylinder:
0.1 MPa (1.0 kgf/cm^2, 14 psi)

NOTICE:
- **Always use a fully–charged battery to obtain engine speed of 250 rpm or more.**
- **Check the other cylinder's compression pressure in the same way.**
- **This measurement must be done quickly as possible.**

(4) If the cylinder compression is low, pour a small amount of engine oil into the cylinder through the spark plug hole and inspect again.

HINT:
- If adding oil increases the compression, it is likely that the piston rings and/or cylinder bore may be worn or damaged.
- If pressure stays low, the valve may be sticking or seating improperly, or there may be leakage past the gasket.

10. INSPECT CO/HC

(a) Start the engine.
(b) Race the engine at 2,500 rpm for approximately 180 seconds.
(c) Insert the CO/HC meter testing probe at least 40 cm (1.3 ft) into the tailpipe during idling.
(d) Check the CO/HC concentration at idle and/or 2,500 rpm.

HINT:
When performing the 2 modes test (2,500 rpm and idle), follow the measurement order prescribed by the applicable local regulations.
If the CO/HC concentration does not comply with regulations, troubleshoot in the order given below.
(1) Check the A/F sensor and heated oxygen sensor operation.
(2) See the table below for possible causes, then inspect and repair the applicable causes if necessary.

CO	HC	Problems	Causes
Normal	High	Rough idle	1. Faulty ignitions: • Incorrect timing • Fouled, shorted or improperly gapped plugs 2. Incorrect valve clearance 3. Leaky in intake and exhaust valves 4. Leaky in cylinders
Low	High	Rough idle (Fluctuating HC reading)	1. Vacuum leaks: • PCV hoses • Intake manifold • Throttle body • Brake booster line 2. Lean mixture causing misfire
High	High	Rough idle (Black smoke from exhaust)	1. Restricted air filter 2. Plugged PCV valve 3. Faulty SFI systems: • Faulty pressure regulator • Defective water temperature sensor • Faulty ECM • Faulty injectors • Faulty throttle position sensor • Faulty MAF sensor

FAN AND GENERATOR V BELT (2AZ–FSE)

141N3–01

REPLACEMENT

1. **REMOVE RADIATOR SUPPORT OPENING COVER (See page 14–23)**
2. **REMOVE ENGINE ROOM COVER SIDE (See page 14–23)**
3. **REMOVE ENGINE UNDER COVER LH (See page 14–23)**
4. **REMOVE ENGINE UNDER COVER NO.4 RH (See page 14–23)**
5. **REMOVE ENGINE UNDER COVER RH (See page 14–23)**

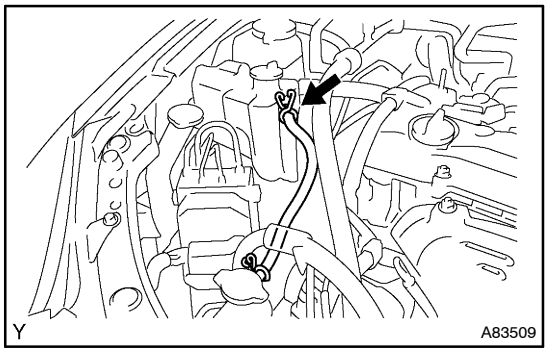

6. **REMOVE FAN AND GENERATOR V BELT**

(a) Disconnect the radiator reserve tank hose as shown in the illustration.

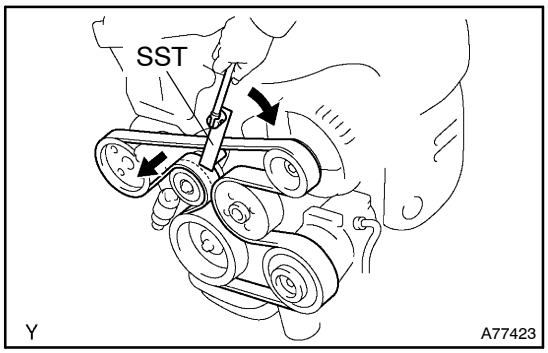

(b) Using SST, loosen the V belt tensioner arm clockwise, then remove the fan and generator V belt.
SST 09249–63010

7. **INSTALL FAN AND GENERATOR V BELT**

(a) Using SST, loosen the V belt tensioner arm clockwise, then install the fan and generator V belt.
SST 09249–63010

8. **INSTALL ENGINE UNDER COVER RH**
9. **INSTALL ENGINE UNDER COVER NO.4 RH**
10. **INSTALL ENGINE UNDER COVER LH**
11. **INSTALL ENGINE ROOM COVER SIDE**
12. **INSTALL RADIATOR SUPPORT OPENING COVER**

VALVE CLEARANCE (2AZ–FSE)

141N4–01

ADJUSTMENT

1. DISCHARGE FUEL SYSTEM PRESSURE (See page 11–4)
2. REMOVE RADIATOR SUPPORT OPENING COVER (See page 14–23)
3. REMOVE ENGINE ROOM COVER SIDE (See page 14–23)
4. REMOVE ENGINE UNDER COVER LH (See page 14–23)
5. REMOVE ENGINE UNDER COVER NO.4 RH (See page 14–23)
6. REMOVE ENGINE UNDER COVER RH (See page 14–23)
7. REMOVE ENGINE COVER SUB–ASSY NO.1 (See page 14–45)
8. REMOVE FUEL PRESSURE PULSATION DAMPER ASSY
9. REMOVE FUEL TUBE SUB–ASSY (See page 11–4)
10. REMOVE FUEL PIPE SUB–ASSY NO.1 (See page 11–24)
    SST 09023–12900
11. REMOVE IGNITION COIL ASSY (See page 14–45)
12. REMOVE CYLINDER HEAD COVER SUB–ASSY (See page 14–45)
13. SET NO.1 CYLINDER TO TDC/COMPRESSION (See page 14–45)

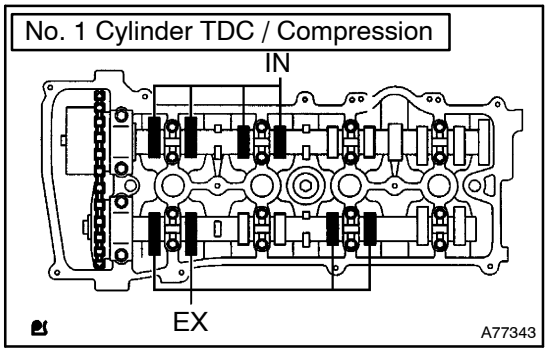

14. INSPECT VALVE CLEARANCE

HINT:

Inspect and adjust the valve clearance when the engine is cold.

(a) Check the valves indicated in the illustration.

(1) Using a feeler gauge, measure the clearance between the valve lifter and camshaft.

Valve clearance (Cold):
Intake 0.19 to 0.29 mm (0.0075 to 0.0114 in.)
Exhaust 0.30 to 0.40 mm (0.0118 to 0.0157 in.)

(2) Record the out–of specification valve clearance measurements. They will be used later to determine the required replacement adjusting shim.

(b) Turn the crankshaft clockwise 1 revolution (360°), then set No. 4 cylinder to TDC/compression.

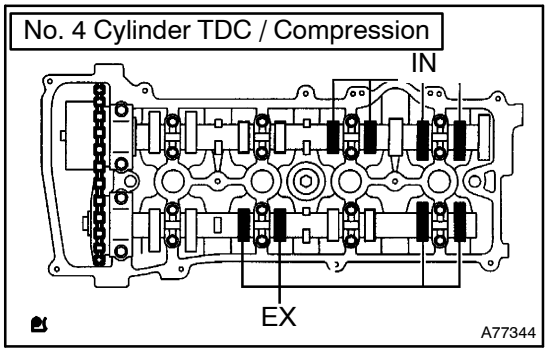

(c) Check the valves indicated in the illustration.

(1) Using a feeler gauge, measure the clearance between the valve lifter and the camshaft.

Valve clearance (Cold):
Intake 0.19 to 0.29 mm (0.0075 to 0.0114 in.)
Exhaust 0.30 to 0.40 mm (0.0118 to 0.0157 in.)

(2) Record the out–of specification valve clearance measurements. They will be used later to determine the required replacement adjusting shim.

15. ADJUST VALVE CLEARANCE

NOTICE:

Be sure not to turn the crankshaft without the chain tensioner.

(a) Set the No. 1 cylinder to TDC/compression (see page 14–45).
(b) Remove the chain tensioner (see page 14–45).

NOTICE:
Be careful not to drop anything inside the timing chain cover.

(c) Remove the camshafts (see page 14–64).
(d) Tie the timing chain with a string.
(e) Remove the valve lifters.

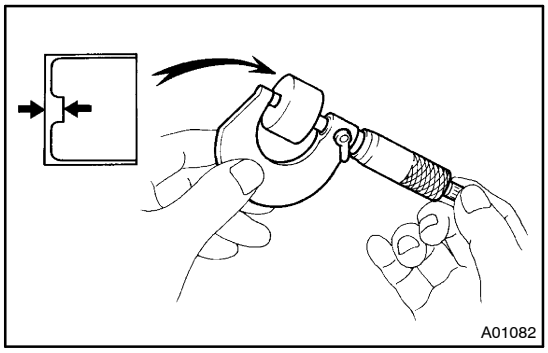

(f) Determine the replacement valve lifter size according to these Formula or Charts:
(1) Using a micrometer, measure the thickness of the removed lifter.
(2) Calculate the thickness of a new lifter so that the valve clearance comes within the specified valve.

A	Thickness of new lifter
B	Thickness of used lifter
C	Measured valve clearance

Valve clearance:
Intake: A = B + (C – 0.24 mm (0.0094 in.))
Exhaust: A = B + (C – 0.35 mm (0.0138 in.))

EXAMPLE: (Intake)
Measure valve clearance = 0.44 mm (0.0173 in.)
0.44 mm (0.0173 in.) – 0.24 mm (0.0094 in.) = 0.20 mm (0.0079 in.)
(Measured – Specification = Excess clearance)
Used shim measurement = 5.30 mm (0.2087 in.)
0.20 mm (0.0079 in.) + 5.30 mm (0.2087 in.) = 5.50 mm (0.2165 in.)
(Excess clearance + Used shim = Ideal new shim)
Closest new shim = 5.50 mm (0.2165 in.) = Shim No. "50"

(3) Select a new lifter with a thickness which is as close to the calculated valves as possible.

HINT:

- The lifter are available in 35 sizes in increments of 0.020 mm (0.0008 in.), from 5.060 mm (0.1992 in.) to 5.740 mm (0.2260 in.).

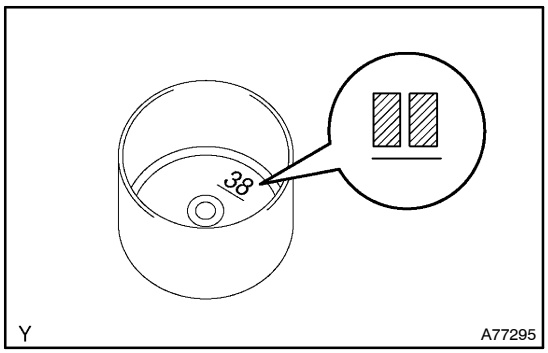

- Identification number inside the valve lifter shows the value of the 2 decimal places. (The illustration shows 5.380 mm (0.2118 in.))
- Refer to the New Lifter Thickness Table on the next 2 pages.

A77296

Valve Lifter Selection Chart (Intake)

Measured Clearance mm (in.) \ Installed Lifter Thickness mm (in.)	5.060 (0.1992)	5.080 (0.2000)	5.100 (0.2008)	5.120 (0.2016)	5.140 (0.2024)	5.160 (0.2031)	5.180 (0.2039)	5.200 (0.2047)	5.210 (0.2051)	5.220 (0.2055)	5.230 (0.2059)	5.240 (0.2063)	5.250 (0.2067)	5.260 (0.2071)	5.270 (0.2075)	5.280 (0.2079)	5.290 (0.2083)	5.300 (0.2087)	5.310 (0.2091)	5.320 (0.2094)	5.330 (0.2098)	5.340 (0.2102)	5.350 (0.2106)	5.360 (0.2110)	5.370 (0.2114)	5.380 (0.2118)	5.390 (0.2122)	5.400 (0.2126)	5.410 (0.2130)	5.420 (0.2134)	5.430 (0.2138)	5.440 (0.2142)	5.450 (0.2146)	5.460 (0.2150)	5.470 (0.2154)	5.480 (0.2157)	5.490 (0.2161)	5.500 (0.2165)	5.510 (0.2169)	5.520 (0.2173)	5.530 (0.2177)	5.540 (0.2181)	5.550 (0.2185)	5.560 (0.2189)	5.570 (0.2193)	5.580 (0.2197)	5.590 (0.2201)	5.600 (0.2205)	5.620 (0.2213)	5.640 (0.2220)	5.660 (0.2228)	5.680 (0.2236)	5.700 (0.2244)	5.720 (0.2252)	5.740 (0.2260)
0.000 – 0.030 (0.0000 – 0.0012)									06	06	06		06	08	08	08	10	10	10	10	12	12	12	14	14	14	16	16	16	18	18	18	20	20	20	22	22	22	24	24	24	26	26	26	28	28	28	30	30	30	32	32	32	34	34	34	36	36	36	38	38	38	40	40	40	42	42	42	44	44	46	46	48	50	52	54
0.031 – 0.050 (0.0012 – 0.0020)										06	06	06	08	08	08	10	10	10	12	12	12	14	14	14	16	16	16	18	18	18	20	20	20	22	22	22	24	24	24	26	26	26	28	28	28	30	30	30	32	32	32	34	34	34	36	36	36	38	38	38	40	40	40	42	42	42	44	44	46	46	48	50	52	54	56
0.051 – 0.070 (0.0020 – 0.0028)											06	08	08	08	10	10	10	12	12	12	14	14	14	16	16	16	18	18	18	20	20	20	22	22	22	24	24	24	26	26	26	28	28	28	30	30	30	32	32	32	34	34	34	36	36	36	38	38	38	40	40	40	42	42	42	44	44	46	46	48	50	52	54	56	58
0.071 – 0.090 (0.0028 – 0.0035)												06	08	10	10	10	12	12	12	14	14	14	16	16	16	18	18	18	20	20	20	22	22	22	24	24	24	26	26	26	28	28	28	30	30	30	32	32	32	34	34	34	36	36	36	38	38	38	40	40	40	42	42	42	44	44	46	46	48	50	52	54	56	58	60
0.091 – 0.110 (0.0036 – 0.0043)													06	08	10	10	12	12	12	14	14	14	16	16	16	18	18	18	20	20	20	22	22	22	24	24	24	26	26	26	28	28	28	30	30	30	32	32	32	34	34	34	36	36	36	38	38	38	40	40	40	42	42	42	44	44	46	46	48	50	52	54	56	58	60	62
0.111 – 0.130 (0.0044 – 0.0051)														06	08	10	10	12	12	12	14	14	14	16	16	16	18	18	18	20	20	20	22	22	22	24	24	24	26	26	26	28	28	28	30	30	30	32	32	32	34	34	34	36	36	36	38	38	38	40	40	40	42	42	42	44	44	46	46	48	50	52	54	56	58	60	62	64
0.131 – 0.150 (0.0052 – 0.0059)															06	08	10	10	12	12	12	14	14	14	16	16	16	18	18	18	20	20	20	22	22	22	24	24	24	26	26	26	28	28	28	30	30	30	32	32	32	34	34	34	36	36	36	38	38	38	40	40	40	42	42	42	44	44	46	46	48	50	52	54	56	58	60	62	64	66
0.151 – 0.170 (0.0059 – 0.0067)																06	08	10	10	12	12	12	14	14	14	16	16	16	18	18	18	20	20	20	22	22	22	24	24	24	26	26	26	28	28	28	30	30	30	32	32	32	34	34	34	36	36	36	38	38	38	40	40	40	42	42	42	44	44	46	46	48	50	52	54	56	58	60	62	64	66	68
0.171 – 0.189 (0.0067 – 0.0074)																	06	08	10	12	14	16	16	18	18	20	20	20	22	22	22	24	24	24	26	26	26	28	28	28	30	30	30	32	32	32	34	34	34	36	36	36	38	38	38	40	40	40	42	42	42	44	44	46	46	48	50	52	54	56	58	60	62	64	66	68	70	72
0.190 – 0.290 (0.0075 – 0.0114)																

A77297

Valve Lifter Selection Chart (Exhaust)

Measured Clearance mm (in.) \ Installed Lifter Thickness mm (in.)	5.060 (0.1992)	5.080 (0.2000)	5.100 (0.2008)	5.120 (0.2016)	5.140 (0.2024)	5.160 (0.2031)	5.180 (0.2039)	5.200 (0.2047)	5.210 (0.2051)	5.220 (0.2055)	5.230 (0.2059)	5.240 (0.2063)	5.250 (0.2067)	5.260 (0.2071)	5.270 (0.2075)	5.280 (0.2079)	5.290 (0.2083)	5.300 (0.2087)	5.310 (0.2091)	5.320 (0.2094)	5.330 (0.2098)	5.340 (0.2102)	5.350 (0.2106)	5.360 (0.2110)	5.370 (0.2114)	5.380 (0.2118)	5.390 (0.2122)	5.400 (0.2126)	5.410 (0.2130)	5.420 (0.2134)	5.430 (0.2138)	5.440 (0.2142)	5.450 (0.2146)	5.460 (0.2150)	5.470 (0.2154)	5.480 (0.2157)	5.490 (0.2161)	5.500 (0.2165)	5.510 (0.2169)	5.520 (0.2173)	5.530 (0.2177)	5.540 (0.2181)	5.550 (0.2185)	5.560 (0.2189)	5.570 (0.2193)	5.580 (0.2197)	5.590 (0.2201)	5.600 (0.2205)	5.620 (0.2213)	5.640 (0.2220)	5.660 (0.2228)	5.680 (0.2236)	5.700 (0.2244)	5.720 (0.2252)	5.740 (0.2260)
0.000–0.030 (0.0000–0.0012)																						06	06	08	08	10	10	12	12	14	14	16	16	18	18	20	20	22	22	24	24	26	26	28	28	30	30	32	34	36	38	40	42	44
0.031–0.050 (0.0012–0.0020)																					06	06	08	08	10	10	12	12	14	14	16	16	18	18	20	20	22	22	24	24	26	26	28	28	30	30	32	32	34	36	38	40	42	44	46
0.051–0.070 (0.0020–0.0028)																			06	06	08	08	10	10	12	12	14	14	16	16	18	18	20	20	22	22	24	24	26	26	28	28	30	30	32	32	34	34	36	38	40	42	44	46	48
0.071–0.090 (0.0028–0.0035)																06	06	08	08	10	10	12	12	14	14	16	16	18	18	20	20	22	22	24	24	26	26	28	28	30	30	32	32	34	34	36	36	38	40	42	44	46	48	50
0.091–0.110 (0.0036–0.0043)														06	06	08	08	10	10	12	12	14	14	16	16	18	18	20	20	22	22	24	24	26	26	28	28	30	30	32	32	34	34	36	36	38	38	40	42	44	46	48	50	52
0.111–0.130 (0.0044–0.0051)												06	06	08	08	10	10	12	12	14	14	16	16	18	18	20	20	22	22	24	24	26	26	28	28	30	30	32	32	34	34	36	36	38	38	40	40	42	44	46	48	50	52	54
0.131–0.150 (0.0052–0.0059)											06	06	08	08	10	10	12	12	14	14	16	16	18	18	20	20	22	22	24	24	26	26	28	28	30	30	32	32	34	34	36	36	38	38	40	40	42	42	44	46	48	50	52	54	56
0.151–0.170 (0.0059–0.0067)									06	06	08	08	10	10	12	12	14	14	16	16	18	18	20	20	22	22	24	24	26	26	28	28	30	30	32	32	34	34	36	36	38	38	40	40	42	42	44	44	46	48	50	52	54	56	58
0.171–0.190 (0.0067–0.0075)								06	08	08	10	10	12	12	14	14	16	16	18	18	20	20	22	22	24	24	26	26	28	28	30	30	32	32	34	34	36	36	38	38	40	40	42	42	44	44	46	46	48	50	52	54	56	58	60
0.191–0.210 (0.0075–0.0083)							06	08	10	10	12	12	14	14	16	16	18	18	20	20	22	22	24	24	26	26	28	28	30	30	32	32	34	34	36	36	38	38	40	40	42	42	44	44	46	46	48	48	50	52	54	56	58	60	62
0.211–0.230 (0.0083–0.0091)						06	08	10	12	12	14	14	16	16	18	18	20	20	22	22	24	24	26	26	28	28	30	30	32	32	34	34	36	36	38	38	40	40	42	42	44	44	46	46	48	48	50	50	52	54	56	58	60	62	64
0.231–0.250 (0.0091–0.0098)				06	08	10	12	14	14	16	16	18	18	20	20	22	22	24	24	26	26	28	28	30	30	32	32	34	34	36	36	38	38	40	40	42	42	44	44	46	46	48	48	50	50	52	52	54	56	58	60	62	64	66
0.251–0.270 (0.0099–0.0106)				06	08	10	12	14	16	16	18	18	20	20	22	22	24	24	26	26	28	28	30	30	32	32	34	34	36	36	38	38	40	40	42	42	44	44	46	46	48	48	50	50	52	52	54	54	56	58	60	62	64	66	68
0.271–0.290 (0.0107–0.0114)			06	08	10	12	14	16	18	18	20	20	22	22	24	24	26	26	28	28	30	30	32	32	34	34	36	36	38	38	40	40	42	42	44	44	46	46	48	48	50	50	52	52	54	54	56	56	58	60	62	64	66	68	70
0.291–0.299 (0.0115–0.0118)		06	08	10	12	14	16	18	20	20	22	22	24	24	26	26	28	28	30	30	32	32	34	34	36	36	38	38	40	40	42	42	44	44	46	46	48	48	50	50	52	52	54	54	56	56	58	58	60	62	64	66	68	70	72
0.300–0.400 (0.0118–0.0157)																																																									
0.401–0.420 (0.0158–0.0165)	12	14	16	18	20	22	24	26	26	28	28	30	30	32	32	34	34	36	36	38	38	40	40	42	42	44	44	46	46	48	48	50	50	52	52	54	54	56	56	58	58	60	60	62	62	64	64	66	68	70	72	74	74	74
0.421–0.440 (0.0166–0.0173)	14	16	18	20	22	24	26	28	28	30	30	32	32	34	34	36	36	38	38	40	40	42	42	44	44	46	46	48	48	50	50	52	52	54	54	56	56	58	58	60	60	62	62	64	64	66	66	68	70	72	74	74	74	
0.441–0.460 (0.0174–0.0181)	16	18	20	22	24	26	28	30	30	32	32	34	34	36	36	38	38	40	40	42	42	44	44	46	46	48	48	50	50	52	52	54	54	56	56	58	58	60	60	62	62	64	64	66	66	68	68	70	72	74	74	74		
0.461–0.480 (0.0181–0.0189)	18	20	22	24	26	28	30	32	32	34	34	36	36	38	38	40	40	42	42	44	44	46	46	48	48	50	50	52	52	54	54	56	56	58	58	60	60	62	62	64	64	66	66	68	68	70	70	72	74	74	74			
0.481–0.500 (0.0189–0.0197)	20	22	24	26	28	30	32	34	34	36	36	38	38	40	40	42	42	44	44	46	46	48	48	50	50	52	52	54	54	56	56	58	58	60	60	62	62	64	64	66	66	68	68	70	70	72	72	74	74	74				
0.501–0.520 (0.0197–0.0205)	22	24	26	28	30	32	34	36	36	38	38	40	40	42	42	44	44	46	46	48	48	50	50	52	52	54	54	56	56	58	58	60	60	62	62	64	64	66	66	68	68	70	70	72	72	74	74	74						
0.521–0.540 (0.0205–0.0213)	24	26	28	30	32	34	36	38	38	40	40	42	42	44	44	46	46	48	48	50	50	52	52	54	54	56	56	58	58	60	60	62	62	64	64	66	66	68	68	70	70	72	72	74	74	76	76	74						
0.541–0.560 (0.0213–0.0220)	26	28	30	32	34	36	38	40	40	42	42	44	44	46	46	48	48	50	50	52	52	54	54	56	56	58	58	60	60	62	62	64	64	66	66	68	68	70	70	72	72	74	74	74	74	74								
0.561–0.580 (0.0221–0.0228)	28	30	32	34	36	38	40	42	42	44	44	46	46	48	48	50	50	52	52	54	54	56	56	58	58	60	60	62	62	64	64	66	66	68	68	70	70	72	72	74	74	74	74	74	74									
0.581–0.600 (0.0229–0.0236)	30	32	34	36	38	40	42	44	44	46	46	48	48	50	50	52	52	54	54	56	56	58	58	60	60	62	62	64	64	66	66	68	68	70	70	72	72	74	74	74	74	74	74											
0.601–0.620 (0.0237–0.0244)	32	34	36	38	40	42	44	46	46	48	48	50	50	52	52	54	54	56	56	58	58	60	60	62	62	64	64	66	66	68	68	70	70	72	72	74	74	74	74	74	74													
0.621–0.640 (0.0244–0.0252)	34	36	38	40	42	44	46	48	48	50	50	52	52	54	54	56	56	58	58	60	60	62	62	64	64	66	66	68	68	70	70	72	72	74	74	74	74	74	74															
0.641–0.660 (0.0252–0.0260)	36	38	40	42	44	46	48	50	50	52	52	54	54	56	56	58	58	60	60	62	62	64	64	66	66	68	68	70	70	72	72	74	74	74	74	74	74																	
0.661–0.680 (0.0260–0.0268)	38	40	42	44	46	48	50	52	52	54	54	56	56	58	58	60	60	62	62	64	64	66	66	68	68	70	70	72	72	74	74	74	74	74	74																		
0.681–0.700 (0.0268–0.0276)	40	42	44	46	48	50	52	54	54	56	56	58	58	60	60	62	62	64	64	66	66	68	68	70	70	72	72	74	74	74	74	74	74																			
0.701–0.720 (0.0276–0.0283)	42	44	46	48	50	52	54	56	56	58	58	60	60	62	62	64	64	66	66	68	68	70	70	72	72	74	74	74	74	74	74																				
0.721–0.740 (0.0284–0.0291)	44	46	48	50	52	54	56	58	58	60	60	62	62	64	64	66	66	68	68	70	70	72	72	74	74	74	74	74	74																					
0.741–0.760 (0.0292–0.0299)	46	48	50	52	54	56	58	60	60	62	62	64	64	66	66	68	68	70	70	72	72	74	74	74	74	74	74																					
0.761–0.780 (0.0300–0.0307)	48	50	52	54	56	58	60	62	62	64	64	66	66	68	68	70	70	72	72	74	74	74	74	74	74																					
0.781–0.800 (0.0307–0.0315)	50	52	54	56	58	60	62	64	64	66	66	68	68	70	70	72	72	74	74	74	74	74	74																					
0.801–0.820 (0.0315–0.0323)	52	54	56	58	60	62	64	66	66	68	68	70	70	72	72	74	74	74	74	74	74																					
0.821–0.840 (0.0323–0.0331)	54	56	58	60	62	64	66	68	68	70	70	72	72	74	74	74	74	74	74																					
0.841–0.860 (0.0331–0.0339)	56	58	60	62	64	66	68	70	70	72	72	74	74	74	74	74	74																					
0.861–0.880 (0.0339–0.0346)	58	60	62	64	66	68	70	72	72	74	74	74	74	74	74																							
0.881–0.900 (0.0347–0.0354)	60	62	64	66	68	70	72	74	74	74	74	74	74																									
0.901–0.920 (0.0355–0.0362)	62	64	66	68	70	72	74	74	74	74	74																											
0.921–0.940 (0.0363–0.0370)	64	66	68	70	72	74	74	74	74																													
0.941–0.960 (0.0370–0.0378)	66	68	70	72	74	74	74																															
0.961–0.980 (0.0378–0.0386)	68	70	72	74	74	74																																
0.981–1.000 (0.0386–0.0394)	70	72	74	74	74																																	
1.001–1.020 (0.0394–0.0402)	72	74	74	74																																		
1.021–1.040 (0.0402–0.0409)	74	74	74																																			
1.041–1.060 (0.0410–0.0417)	74	74																																				
1.061–1.080 (0.0418–0.0425)	74																																					

New lifter thickness mm (in.)

Lifter No.	Thickness	Lifter No.	Thickness	Lifter No.	Thickness
06	5.060 (0.1992)	30	5.300 (0.2087)	54	5.540 (0.2181)
08	5.080 (0.2000)	32	5.320 (0.2094)	56	5.560 (0.2189)
10	5.100 (0.2008)	34	5.340 (0.2102)	58	5.580 (0.2197)
12	5.120 (0.2016)	36	5.360 (0.2110)	60	5.600 (0.2205)
14	5.140 (0.2024)	38	5.380 (0.2118)	62	5.620 (0.2213)
16	5.160 (0.2031)	40	5.400 (0.2126)	64	5.640 (0.2220)
18	5.180 (0.2039)	42	5.420 (0.2134)	66	5.660 (0.2228)
20	5.200 (0.2047)	44	5.440 (0.2142)	68	5.680 (0.2236)
22	5.220 (0.2055)	46	5.460 (0.2150)	70	5.700 (0.2244)
24	5.240 (0.2063)	48	5.480 (0.2157)	72	5.720 (0.2252)
26	5.260 (0.2071)	50	5.500 (0.2165)	74	5.740 (0.2260)
28	5.280 (0.2079)	52	5.520 (0.2173)		

Exhaust valve clearance (Cold):
0.30 to 0.40 mm (0.0118 to 0.0157 in.)

EXAMPLE:

The 5.340 mm (0.2102 in.) lifter is installed, and
the measured clearance is 0.440 mm (0.0173 in.).

Replace the 5.340 mm (0.2102 in.) lifter with a new No. 44 lifter.

A93870

(g) Install the camshafts (see page 14–64).
(h) Install the chain tensioner (see page 14–45).

16. **INSTALL CYLINDER HEAD COVER SUB–ASSY (See page 14–45)**
17. **INSTALL IGNITION COIL ASSY**
    Torque: 9.0 N·m (92 kgf·cm, 80 in.·lbf)
18. **INSTALL FUEL PIPE SUB–ASSY NO.1 (See page 11–24)**
    SST 09023–12900
19. **INSTALL FUEL TUBE SUB–ASSY (See page 11–4)**
20. **INSTALL FUEL PRESSURE PULSATION DAMPER ASSY (See page 11–24)**
21. **CHECK FOR ENGINE OIL LEAKS**
22. **CHECK FOR FUEL LEAKS (See page 11–4)**
23. **INSTALL ENGINE COVER SUB–ASSY NO.1**
    Torque: 9.0 N·m (92 kgf·cm, 80 in.·lbf)

PARTIAL ENGINE ASSY (2AZ–FSE)

141BE–02

COMPONENTS

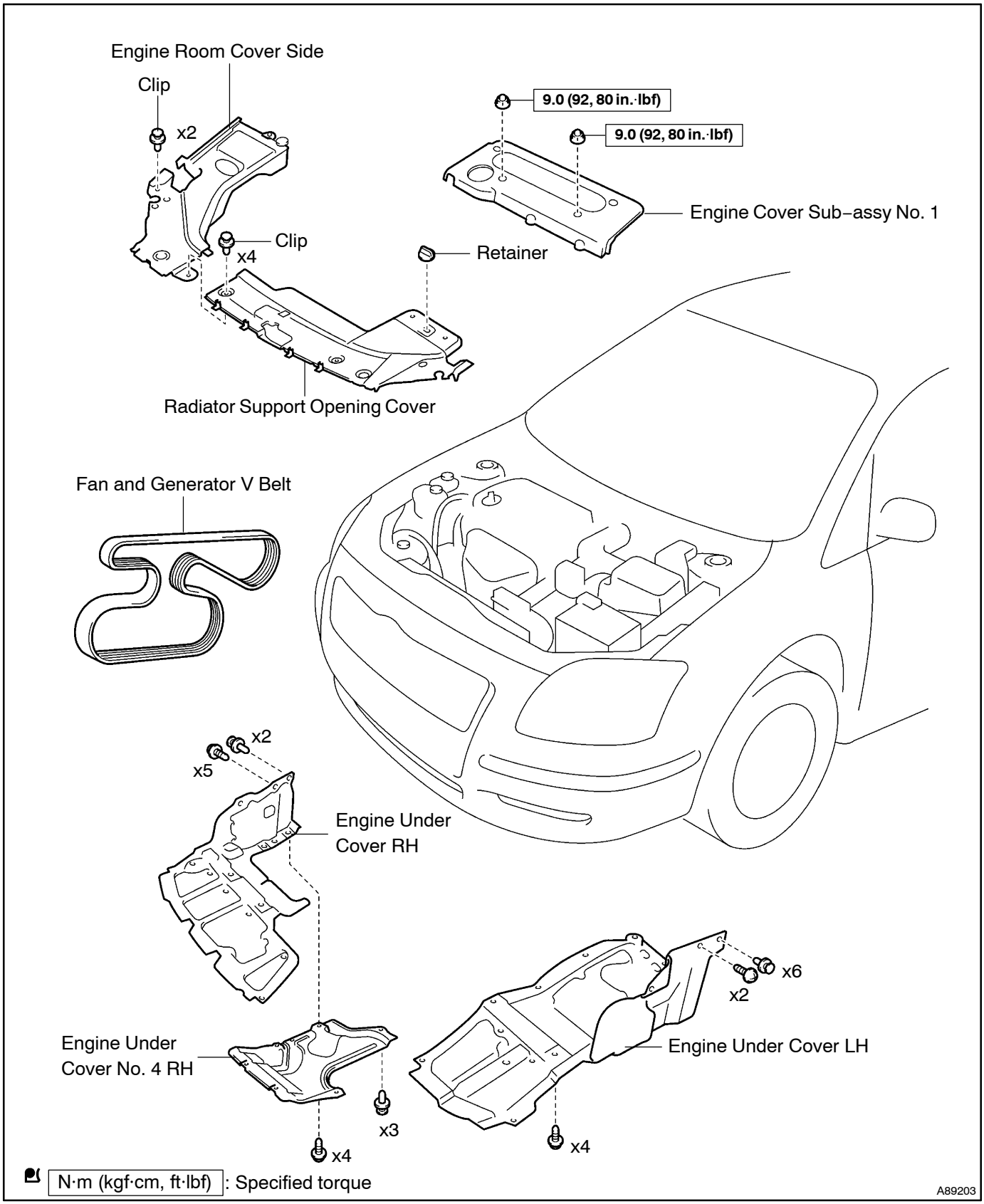

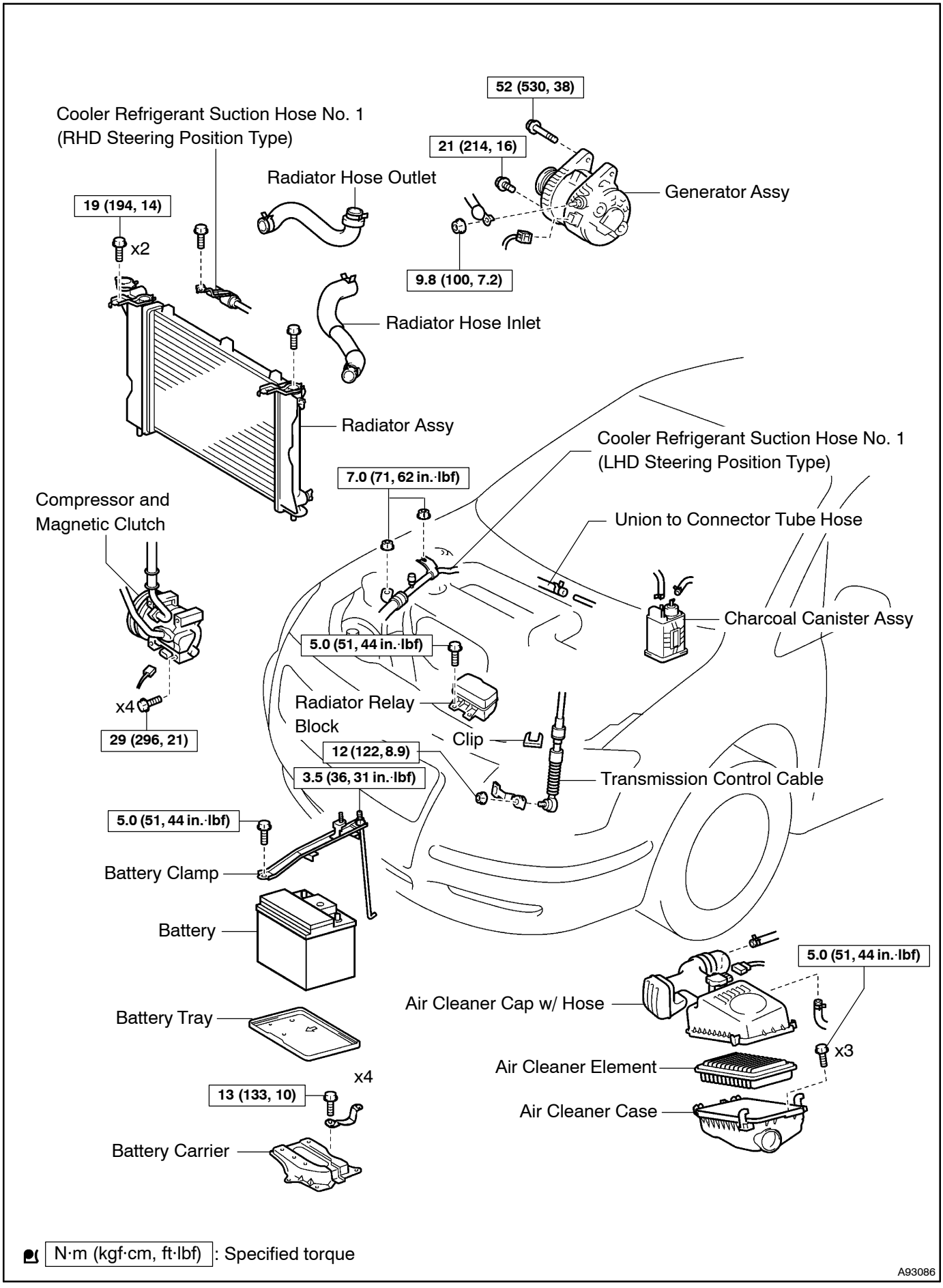
52 (530, 38)
21 (214, 16)
Generator Assy
9.8 (100, 7.2)
Cooler Refrigerant Suction Hose No. 1
(RHD Steering Position Type)
Radiator Hose Outlet
19 (194, 14)
x2
Radiator Hose Inlet
Radiator Assy
Cooler Refrigerant Suction Hose No. 1
(LHD Steering Position Type)
7.0 (71, 62 in.·lbf)
Compressor and
Magnetic Clutch
Union to Connector Tube Hose
Charcoal Canister Assy
5.0 (51, 44 in.·lbf)
Radiator Relay
Block
Clip
12 (122, 8.9)
3.5 (36, 31 in.·lbf)
Transmission Control Cable
x4
29 (296, 21)
5.0 (51, 44 in.·lbf)
Battery Clamp
Battery
Battery Tray
Air Cleaner Cap w/ Hose
5.0 (51, 44 in.·lbf)
x3
Air Cleaner Element
Air Cleaner Case
x4
13 (133, 10)
Battery Carrier
N·m (kgf·cm, ft·lbf) : Specified torque
A93086

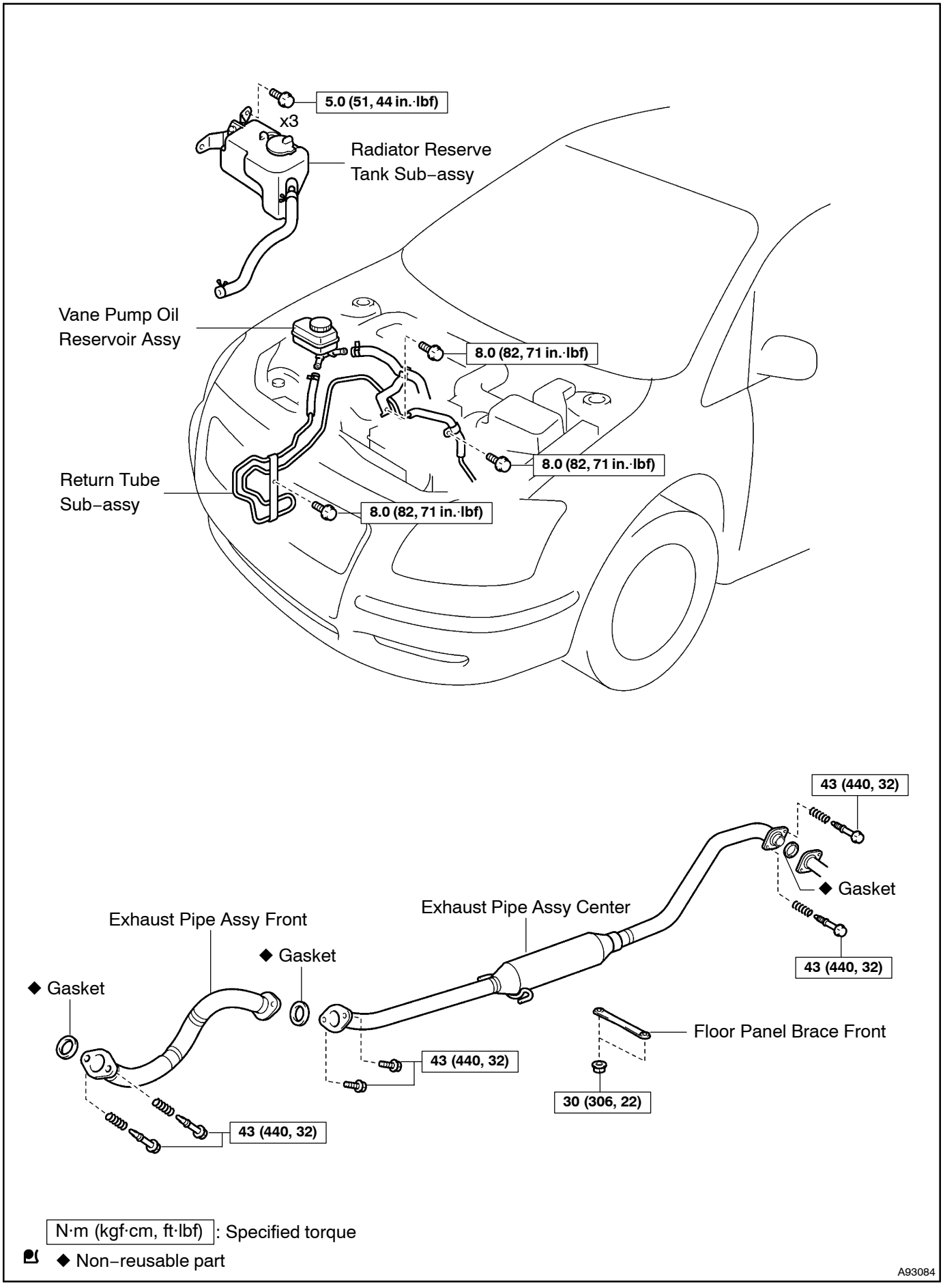
5.0 (51, 44 in.·lbf)
x3
Radiator Reserve Tank Sub–assy
Vane Pump Oil Reservoir Assy
8.0 (82, 71 in.·lbf)
8.0 (82, 71 in.·lbf)
Return Tube Sub–assy
8.0 (82, 71 in.·lbf)
43 (440, 32)
◆ Gasket
Exhaust Pipe Assy Center
Exhaust Pipe Assy Front
◆ Gasket
◆ Gasket
43 (440, 32)
Floor Panel Brace Front
43 (440, 32)
30 (306, 22)
43 (440, 32)
N·m (kgf·cm, ft·lbf) : Specified torque
◆ Non–reusable part
A93084

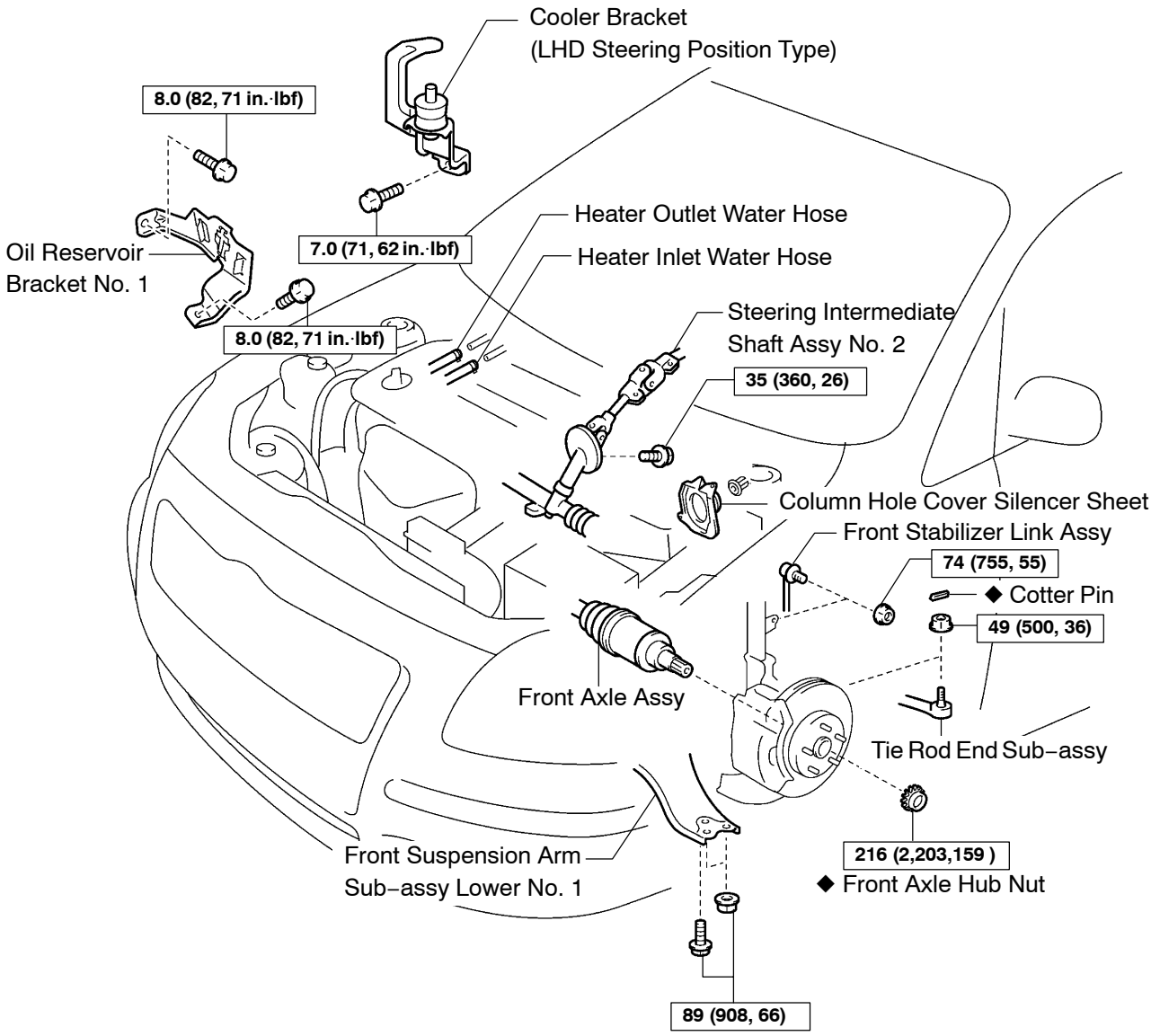

N·m (kgf·cm, ft·lbf) : Specified torque

◆ Non–reusable part

A93083

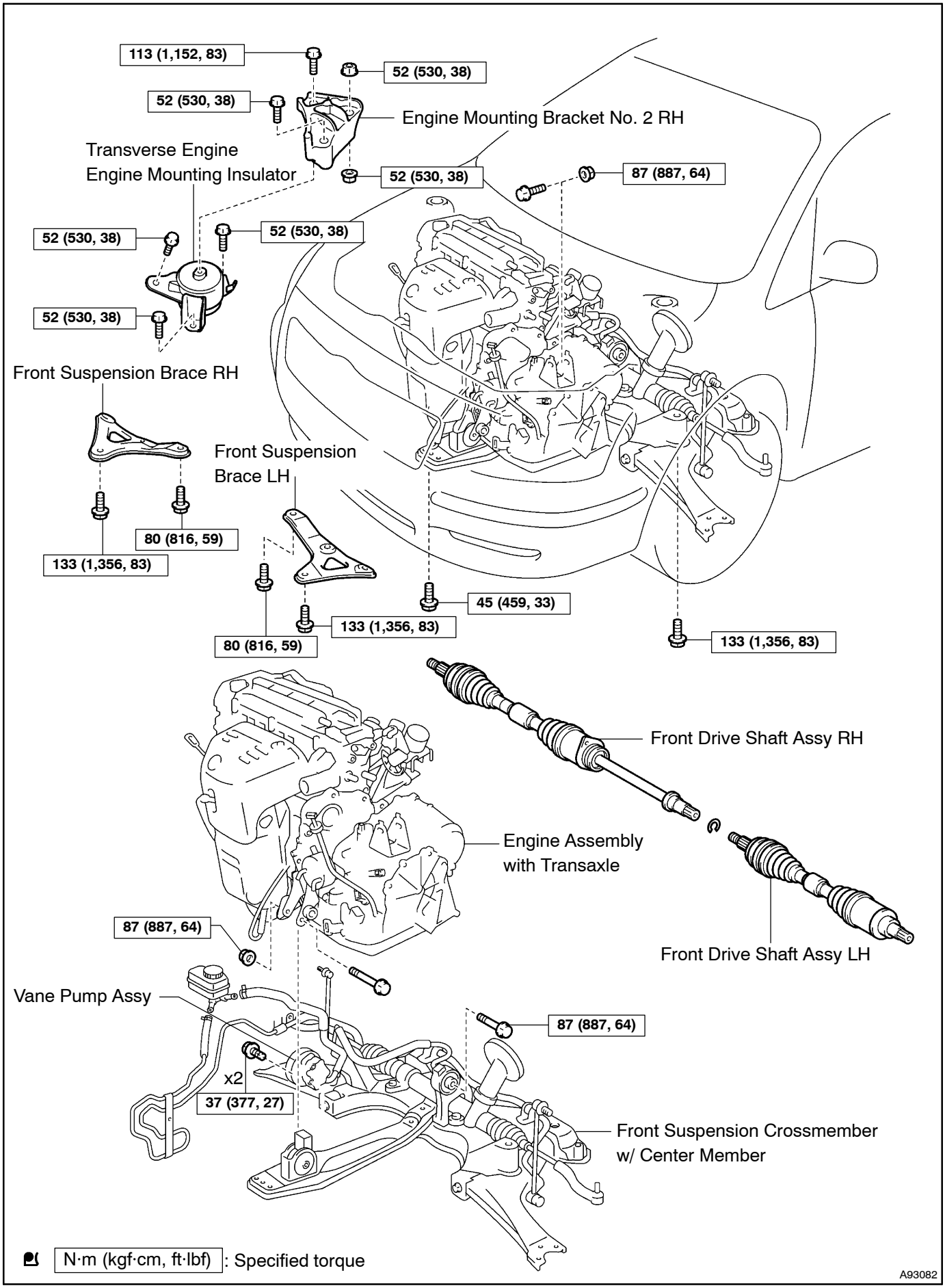
113 (1,152, 83)
52 (530, 38)
52 (530, 38)
Engine Mounting Bracket No. 2 RH
Transverse Engine
Engine Mounting Insulator
52 (530, 38)
87 (887, 64)
52 (530, 38)
52 (530, 38)
52 (530, 38)
Front Suspension Brace RH
Front Suspension
Brace LH
80 (816, 59)
133 (1,356, 83)
45 (459, 33)
133 (1,356, 83)
80 (816, 59)
133 (1,356, 83)
Front Drive Shaft Assy RH
Engine Assembly
with Transaxle
Front Drive Shaft Assy LH
87 (887, 64)
Vane Pump Assy
87 (887, 64)
x2
37 (377, 27)
Front Suspension Crossmember
w/ Center Member
N·m (kgf·cm, ft·lbf) : Specified torque
A93082

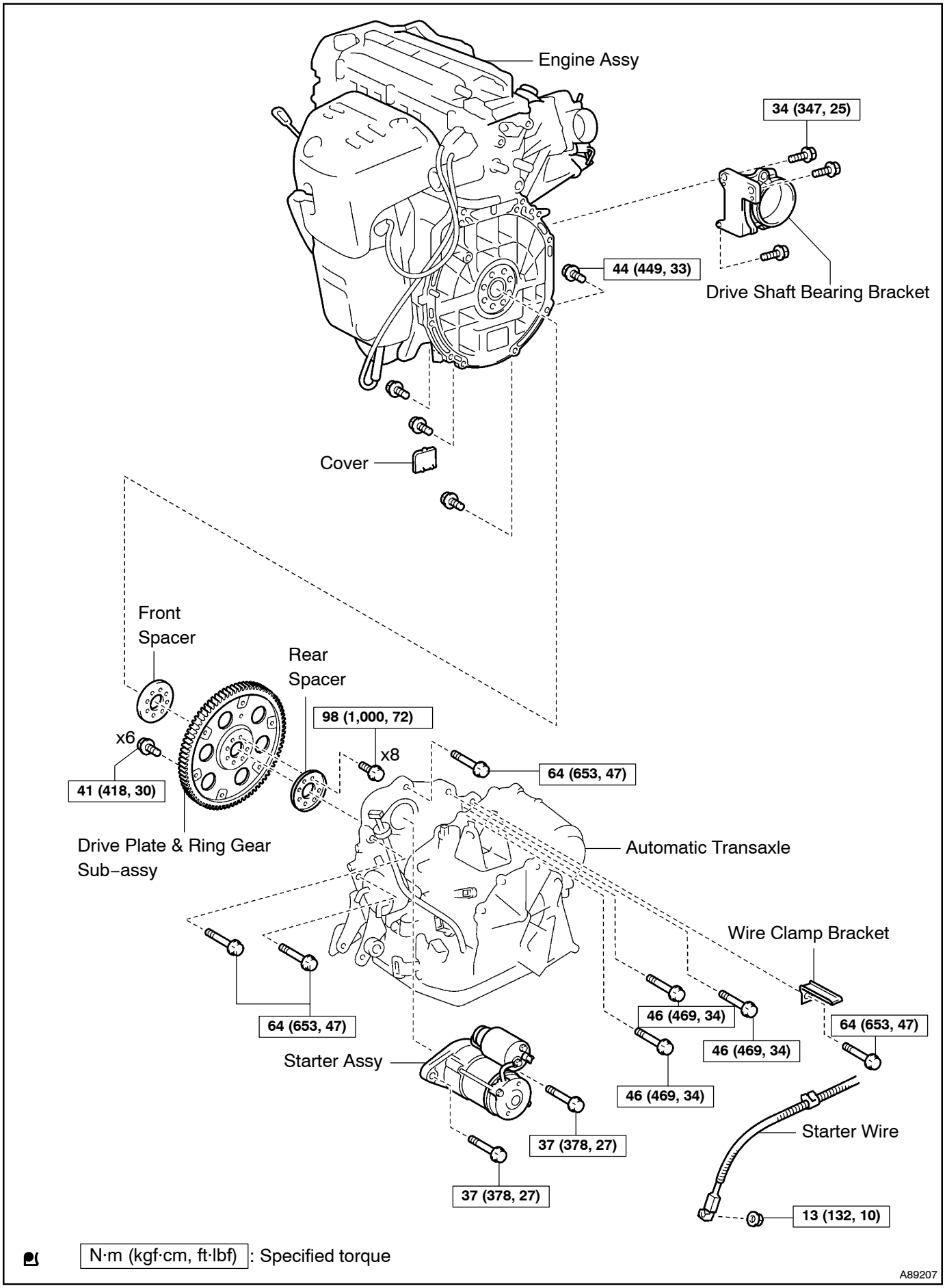
Engine Assy
34 (347, 25)
44 (449, 33)
Drive Shaft Bearing Bracket
Cover
Front
Spacer
Rear
Spacer
98 (1,000, 72)
x6
x8
41 (418, 30)
64 (653, 47)
Drive Plate & Ring Gear
Sub–assy
Automatic Transaxle
Wire Clamp Bracket
64 (653, 47)
46 (469, 34)
46 (469, 34)
64 (653, 47)
Starter Assy
46 (469, 34)
37 (378, 27)
Starter Wire
37 (378, 27)
13 (132, 10)
N·m (kgf·cm, ft·lbf) : Specified torque
A89207

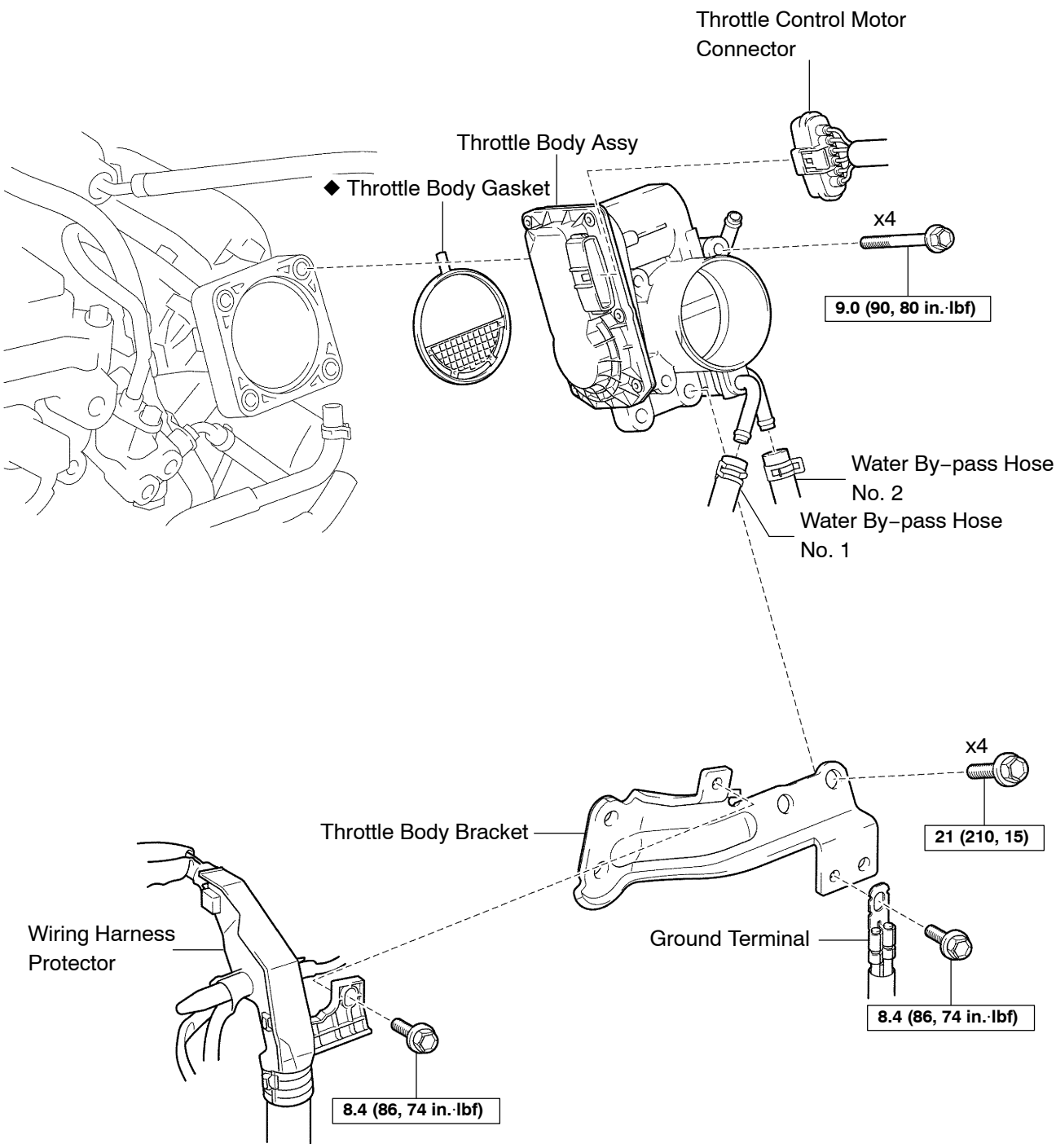

N·m (kgf·cm, ft·lbf) : Specified torque

◆ Non–reusable part

A84696

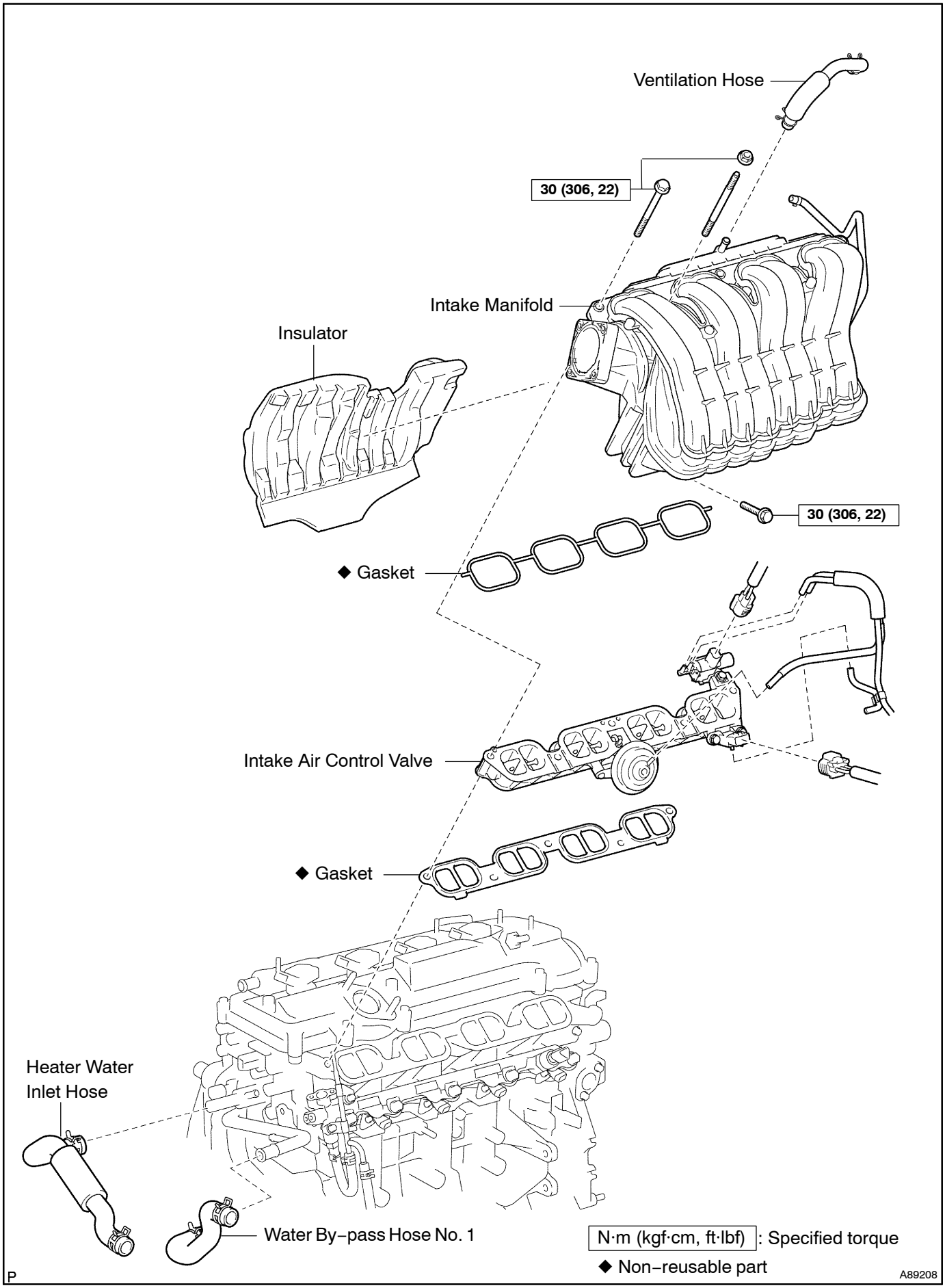
Ventilation Hose
30 (306, 22)
Intake Manifold
Insulator
30 (306, 22)
◆ Gasket
Intake Air Control Valve
◆ Gasket
Heater Water
Inlet Hose
Water By–pass Hose No. 1
N·m (kgf·cm, ft·lbf) : Specified torque
◆ Non–reusable part
P
A89208

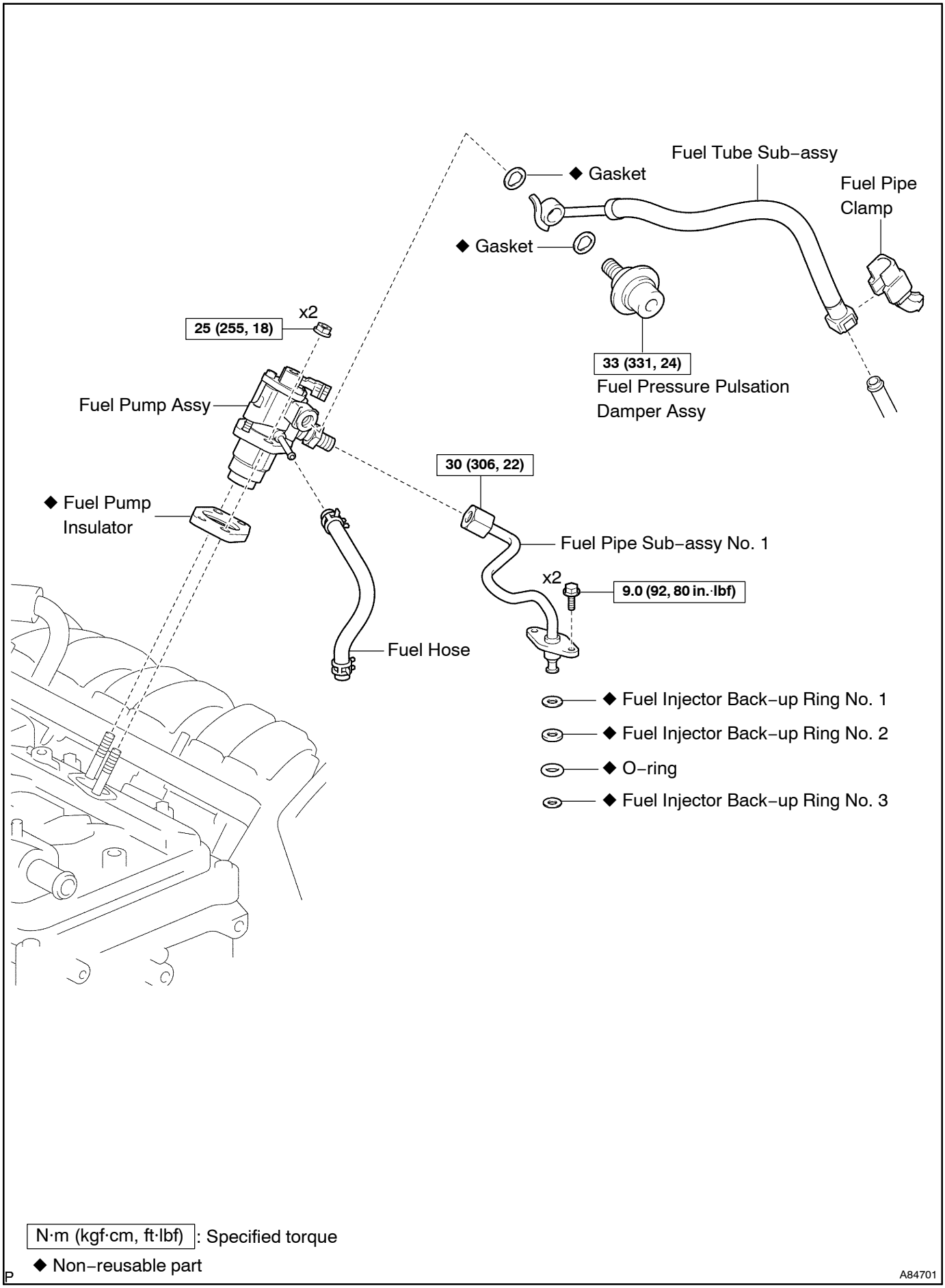
Fuel Tube Sub–assy
◆ Gasket
Fuel Pipe Clamp
◆ Gasket
x2
25 (255, 18)
33 (331, 24)
Fuel Pressure Pulsation Damper Assy
Fuel Pump Assy
30 (306, 22)
◆ Fuel Pump Insulator
Fuel Pipe Sub–assy No. 1
x2
9.0 (92, 80 in.·lbf)
Fuel Hose
◆ Fuel Injector Back–up Ring No. 1
◆ Fuel Injector Back–up Ring No. 2
◆ O–ring
◆ Fuel Injector Back–up Ring No. 3
N·m (kgf·cm, ft·lbf) : Specified torque
◆ Non–reusable part
P
A84701

A93078

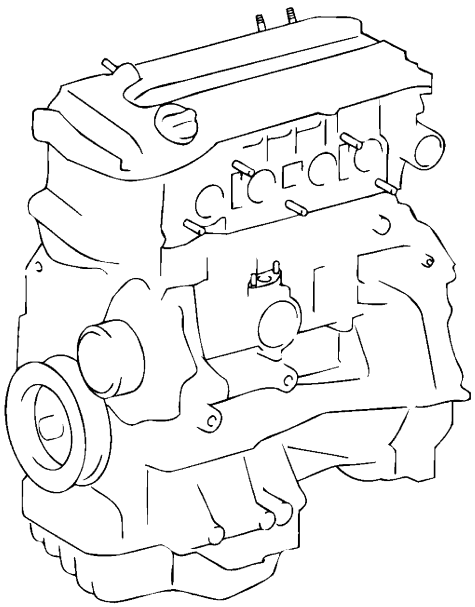

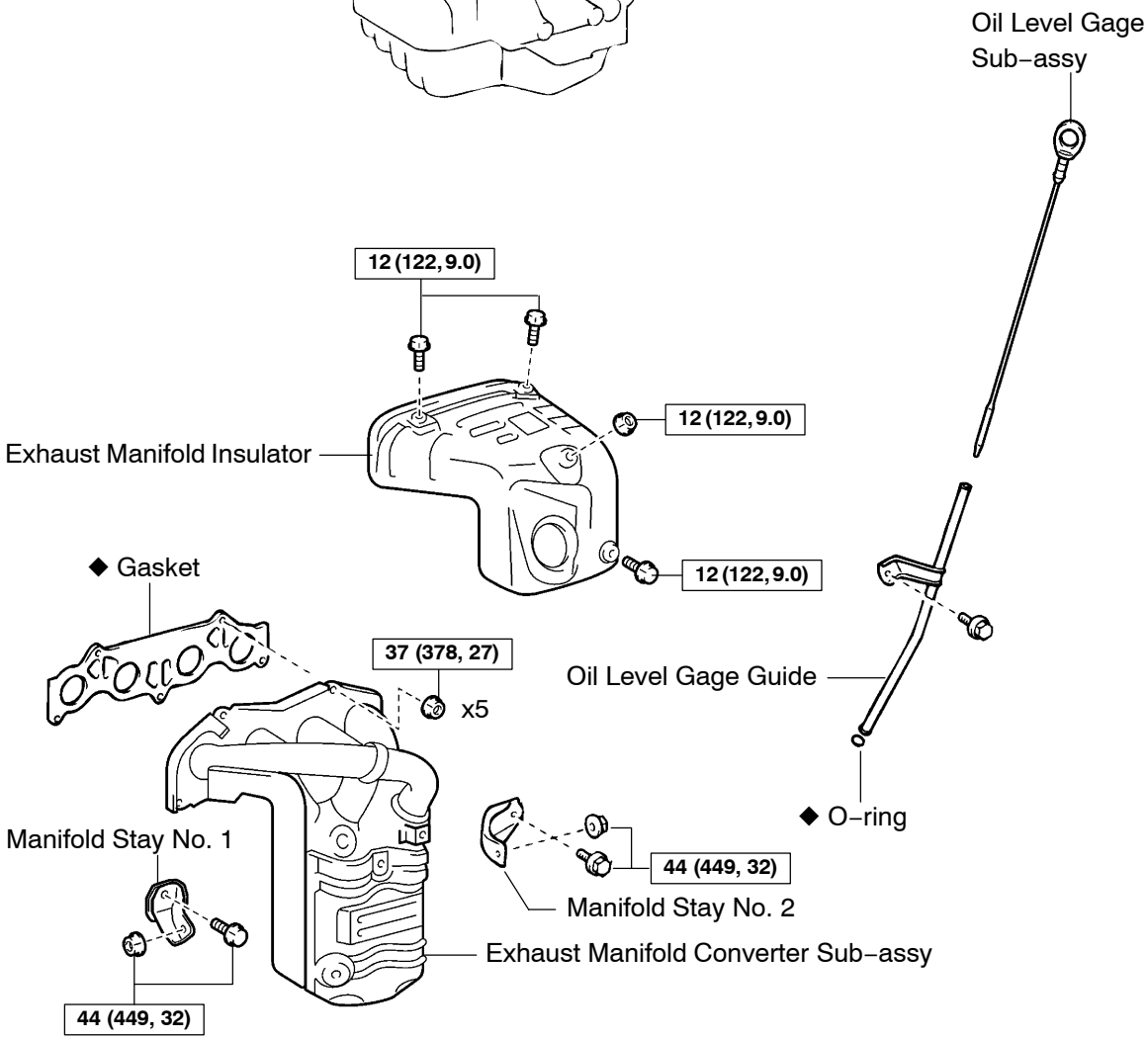

N·m (kgf·cm, ft·lbf) : Specified torque

◆ Non–reusable part

A93080

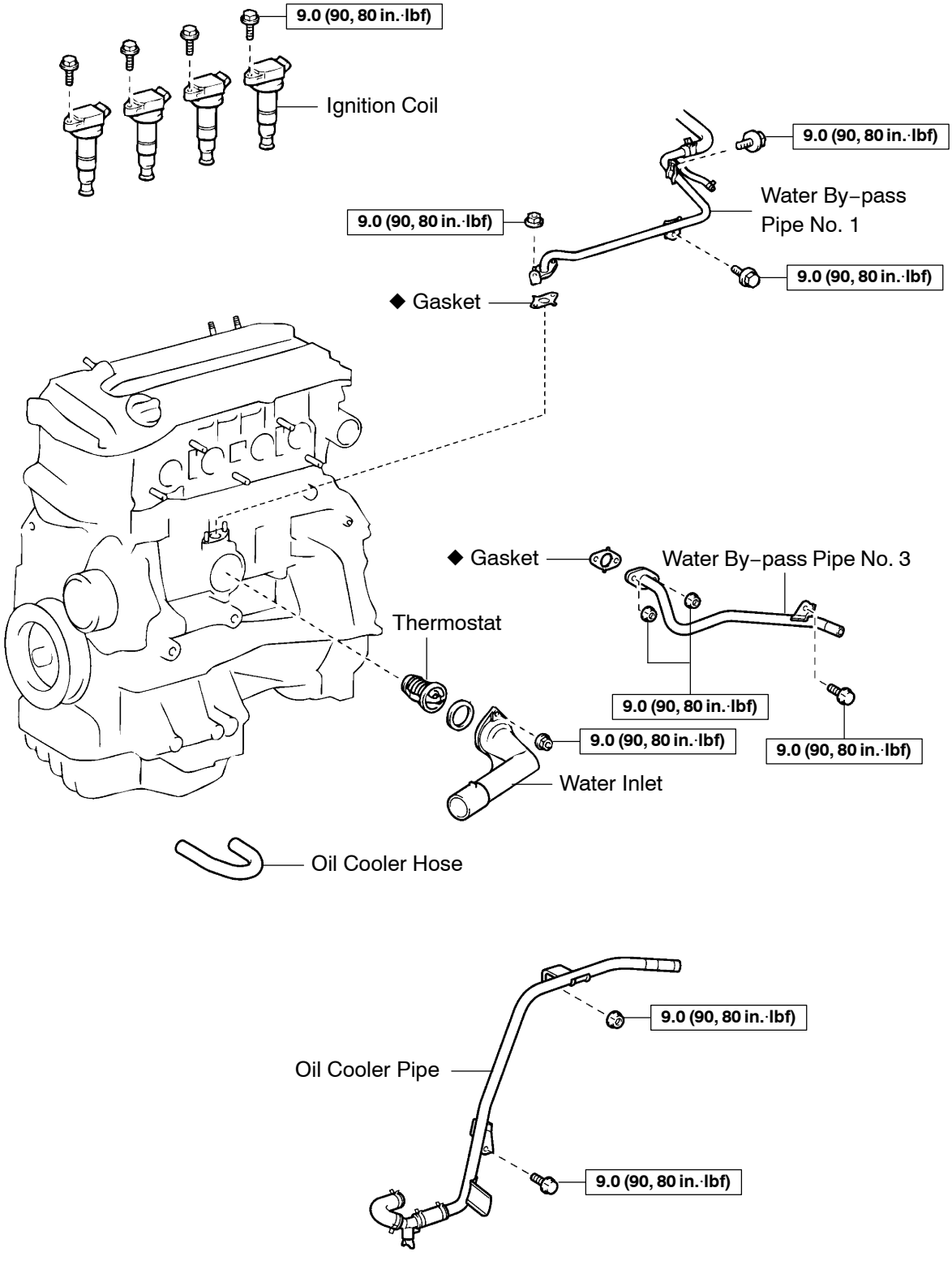

N·m (kgf·cm, ft·lbf) : Specified torque

◆ Non–reusable part

A93085

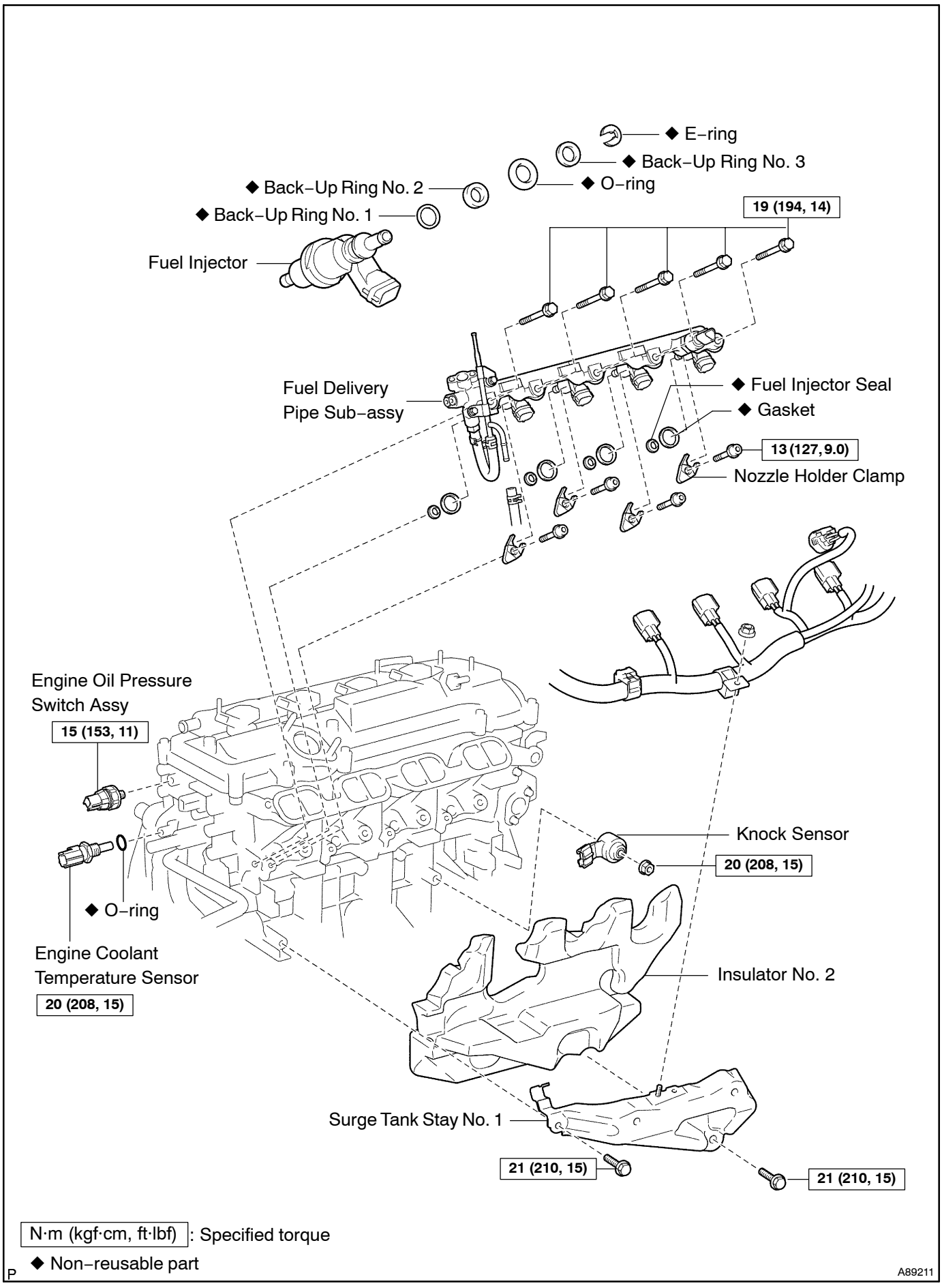
◆ E–ring
◆ Back–Up Ring No. 3
◆ O–ring
◆ Back–Up Ring No. 2
◆ Back–Up Ring No. 1
19 (194, 14)
Fuel Injector
Fuel Delivery Pipe Sub–assy
◆ Fuel Injector Seal
◆ Gasket
13 (127, 9.0)
Nozzle Holder Clamp
Engine Oil Pressure Switch Assy
15 (153, 11)
Knock Sensor
20 (208, 15)
◆ O–ring
Engine Coolant Temperature Sensor
20 (208, 15)
Insulator No. 2
Surge Tank Stay No. 1
21 (210, 15)
21 (210, 15)
N·m (kgf·cm, ft·lbf): Specified torque
◆ Non–reusable part
P
A89211

141N5–01

REPLACEMENT

1. **DISCHARGE FUEL SYSTEM PRESSURE (See page 11–4)**
2. **REMOVE FRONT WHEELS**

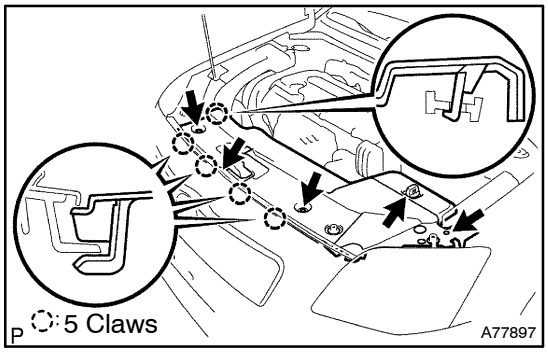

3. **REMOVE RADIATOR SUPPORT OPENING COVER**

(a) Remove the retainer and 4 clips.

(b) Unfasten the 5 claws, then remove the radiator support opening cover.

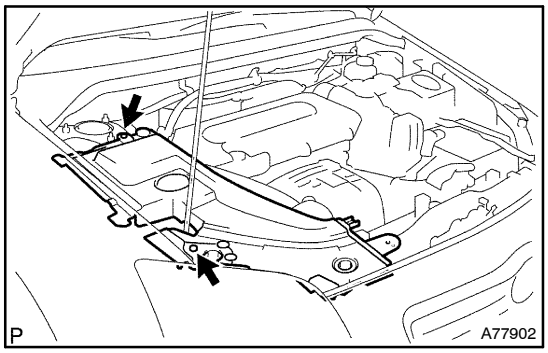

4. **REMOVE ENGINE ROOM COVER SIDE**

(a) Remove the 2 clips, then remove the engine room cover side.

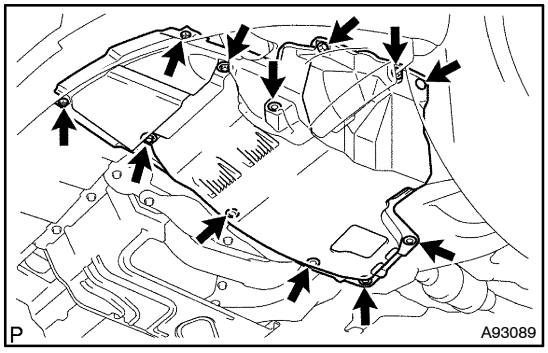

5. **REMOVE ENGINE UNDER COVER LH**

(a) Remove the 6 screws and 6 clips, and then remove the engine under cover LH.

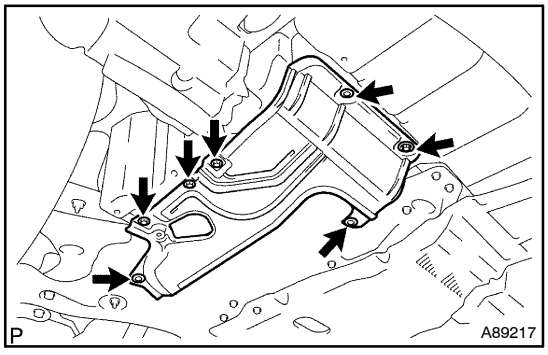

6. **REMOVE ENGINE UNDER COVER NO.4 RH**

(a) Remove the 4 screws and 3 clips, then remove the engine under cover No. 4 RH.

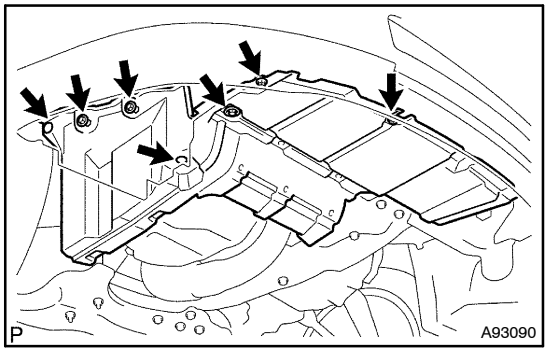

7. REMOVE ENGINE UNDER COVER RH

(a) Remove the 5 screws and 2 clips, then remove the engine under cover RH.

8. DRAIN COOLANT (See page 16–7)

9. DRAIN ENGINE OIL (See page 17–6)

10. DRAIN AUTOMATIC TRANSAXLE FLUID (See Pub. No. RM1018E on page 40–2)

11. REMOVE ENGINE COVER SUB–ASSY NO.1 (See page 14–45)

12. DISCONNECT RADIATOR HOSE INLET (See page 16–9)

13. DISCONNECT RADIATOR HOSE OUTLET (See page 16–9)

14. SEPARATE RADIATOR RELAY BLOCK (See page 16–9)

15. SEPARATE COOLER REFRIGERANT SUCTION HOSE NO.1 (RHD STEERING POSITION TYPE) (See page 55–1)

16. REMOVE RADIATOR ASSY (See page 16–9)

17. REMOVE FAN AND GENERATOR V BELT (See page 14–5)

18. REMOVE GENERATOR ASSY (See page 19–8)

19. REMOVE W/PULLEY COMPRESSOR ASSY (See page 55–4)

HINT:

Secure the hoses off to the side instead of detaching.

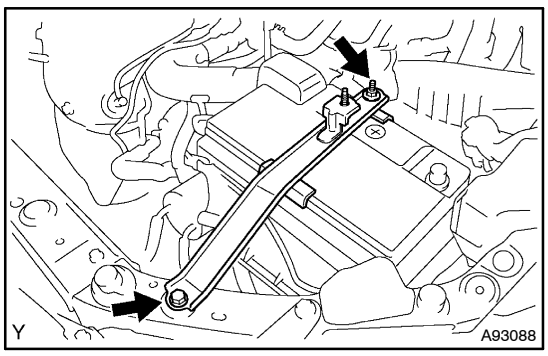

20. REMOVE BATTERY

(a) Disconnect the battery positive terminal.

(b) Remove the bolt and a nut, then remove the battery clamp.

(c) Remove the battery from the vehicle.

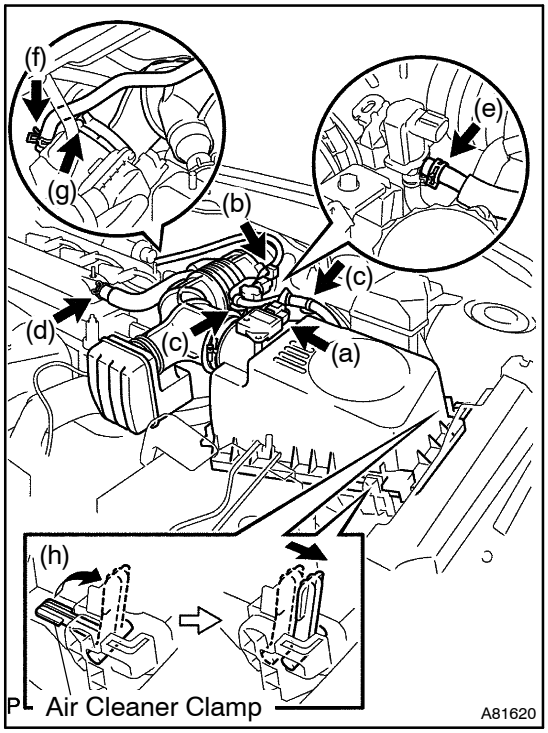

21. REMOVE AIR CLEANER ASSEMBLY WITH HOSE

(a) Disconnect the mass air flow meter connector.
(b) Disconnect the VSV connector.
(c) Remove the 2 wire harness clamps.
(d) Disconnect the ventilation hose.
(e) Disconnect the fuel vapor feed hose No. 1.
(f) Disconnect the fuel vapor feed hose No. 2.
(g) Loosen the hose clamp bolt.
(h) Raise the air cleaner clamp up, then slide it to the air cleaner cap.
(i) Remove the air cleaner cap together with the air cleaner hose.

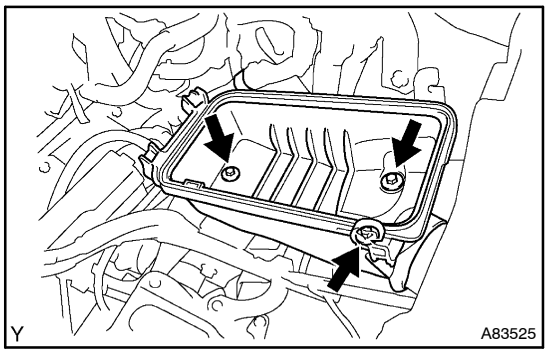

(j) Remove the 3 bolts and air cleaner case.

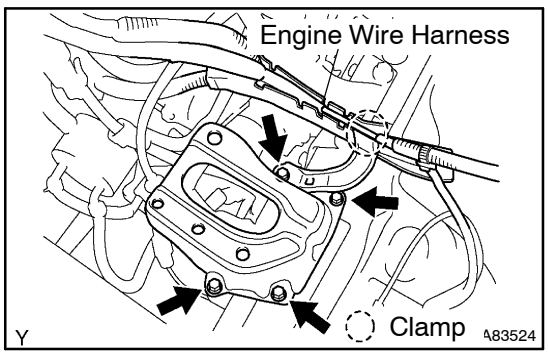

22. REMOVE BATTERY CARRIER

(a) Separate the engine wire harness from the clamp.
(b) Remove the 4 bolts and the battery carrier.

23. REMOVE RADIATOR RESERVE TANK ASSY

(a) Remove the 3 bolts, then remove the radiator reserve tank together with bracket.

24. SEPARATE RETURN TUBE SUB–ASSY (See page 14–45)

25. REMOVE VANE PUMP OIL RESERVOIR ASSY (See page 14–45)

26. REMOVE OIL RESERVOIR BRACKET NO.1 (See page 14–45)

27. SEPARATE COOLER REFRIGERANT SUCTION HOSE NO.1 (LHD STEERING POSITION TYPE) (See page 14–45)

28. REMOVE COOLER BRACKET (LHD STEERING POSITION TYPE) (See page 14–45)

29. REMOVE ENGINE SERVICE COVER BRACKET RH (RHD STEERING POSITION TYPE) (See page 14–45)

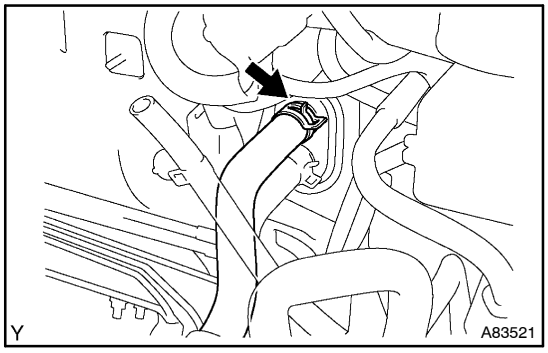

30. DISCONNECT HEATER INLET WATER HOSE

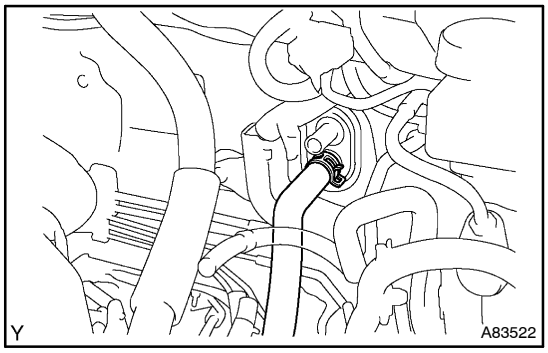

31. DISCONNECT HEATER OUTLET WATER HOSE

32. REMOVE CHARCOAL CANISTER ASSY

33. DISCONNECT FUEL TUBE SUB–ASSY (See page 11–4)

34. DISCONNECT UNION TO CONNECTOR TUBE HOSE

(a) Disconnect the union to connector tube hose from the brake booster.

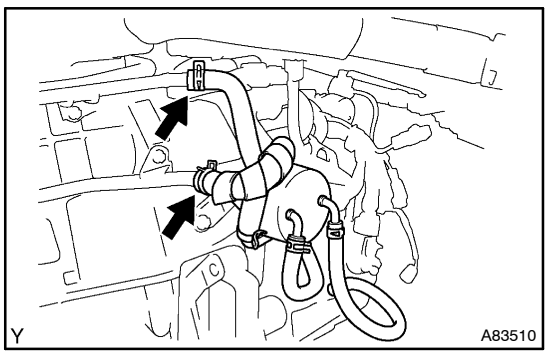

35. DISCONNECT TRANSMISSION OIL COOLER

(a) Disconnect the transmission oil cooler.

36. REMOVE FLOOR PANEL BRACE FRONT (See page 15–2)

37. REMOVE EXHAUST PIPE ASSY CENTER (See page 15–2)

38. REMOVE EXHAUST PIPE ASSY FRONT (See page 15–2)

39. REMOVE FRONT AXLE HUB LH NUT (See page 30–4)

SST 09330–00030

40. REMOVE FRONT AXLE HUB RH NUT

SST 09330–00030

HINT:

Perform the same procedure as above on the opposite side.

41. SEPARATE TIE ROD END SUB–ASSY LH (See page 30–4)

42. SEPARATE TIE ROD END SUB–ASSY RH

HINT:

Perform the same procedure as above on the opposite side.

43. SEPARATE FRONT STABILIZER LINK ASSY LH (See page 30–4)

44. SEPARATE FRONT STABILIZER LINK ASSY RH

HINT:

Perform the same procedure as above on the opposite side.

45. SEPARATE FRONT SUSPENSION ARM SUB–ASSY LOWER NO.1 LH
(See Pub. No. RM1018E on page 26–16)

46. SEPARATE FRONT SUSPENSION ARM SUB–ASSY LOWER NO.1 RH

HINT:

Perform the same procedure as above on the opposite side.

47. SEPARATE FRONT AXLE ASSY LH (See page 30–4)

48. SEPARATE FRONT AXLE ASSY RH

HINT:

Perform the same procedure as above on the opposite side.

49. SEPARATE TRANSMISSION CONTROL CABLE ASSY (See page 40–3)

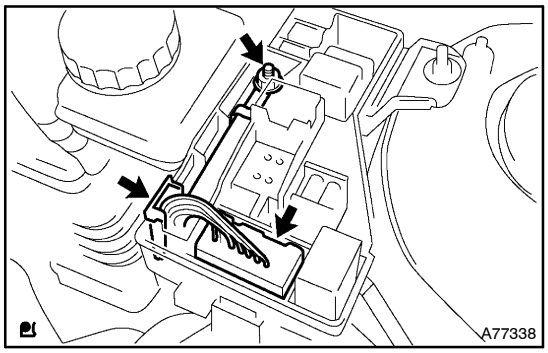

50. SEPARATE ENGINE ROOM RELAY BLOCK NO.2

(a) Remove the nut, then disconnect the connector shown in the illustration.

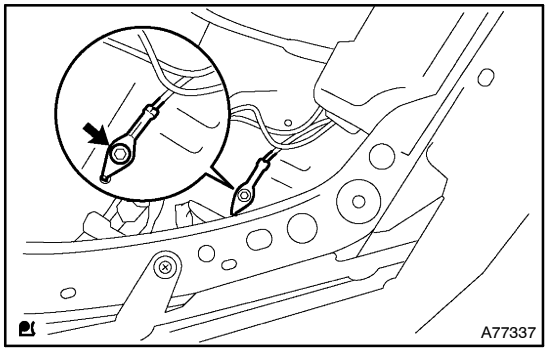

51. SEPARATE ENGINE WIRE

(a) Remove the bolt, then separate the grand terminal.

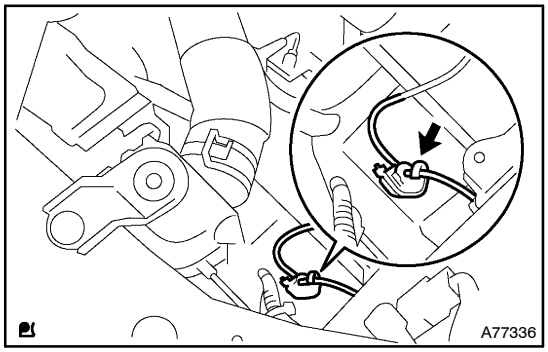

(b) Separate the ground terminal connector.

(c) Remove the glove compartment door panel (see Pub. No. RM1018E on page 71–11).

(d) Separate the engine wire.

52. SEPARATE STEERING INTERMEDIATE SHAFT ASSY NO.2
(See Pub. No. RM1018E on page 51–36)

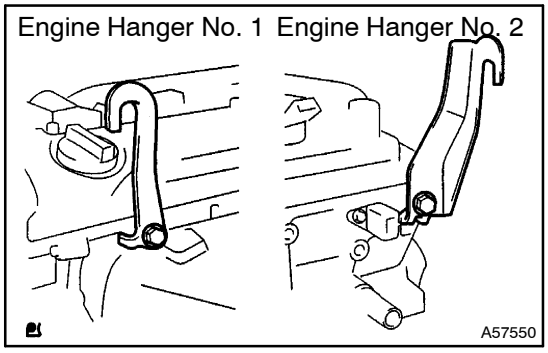

53. INSTALL ENGINE HANGERS

(a) Install the engine hanger No. 1 (12281–28010, 28020, 28030) with the bolt (91512–61020).
Torque: 38 N·m (387 kgf·cm, 28 ft·lbf)

(b) Install the engine hanger No. 2 (12282–28010, 28020, 28030) with the bolt (91512–61020).
Torque: 38 N·m (387 kgf·cm, 28 ft·lbf)

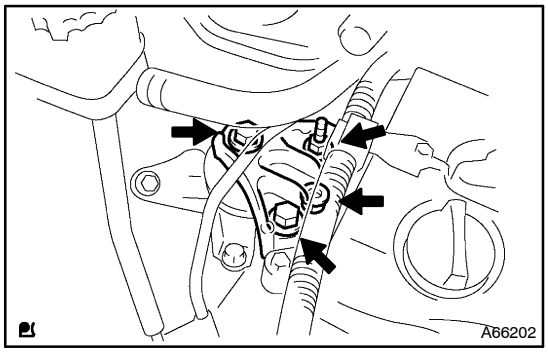

54. REMOVE ENGINE MOUNTING BRACKET NO.2 RH

(a) Set the engine lifter.

(b) Remove the 2 bolts and 2 nuts, then detach the mounting bracket No. 2.

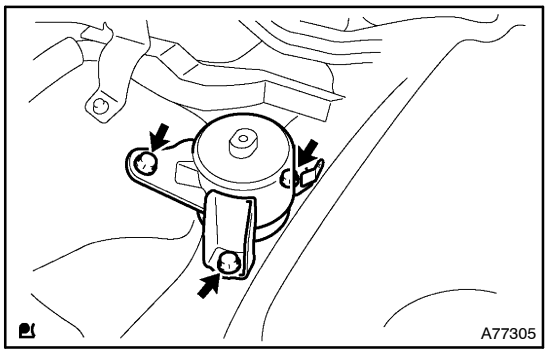

55. REMOVE TRANSVERSE ENGINE ENGINE MOUNTING INSULATOR

(a) Remove the 3 bolts and engine mounting insulator.

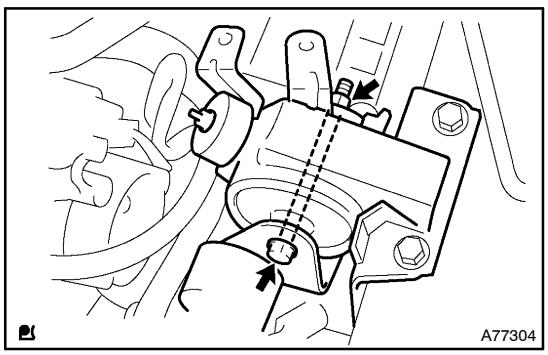

56. REMOVE TRANSVERSE ENGINE ENGINE MOUNTING INSULATOR

(a) Remove the through bolt and nut, then detach the engine mounting insulator.

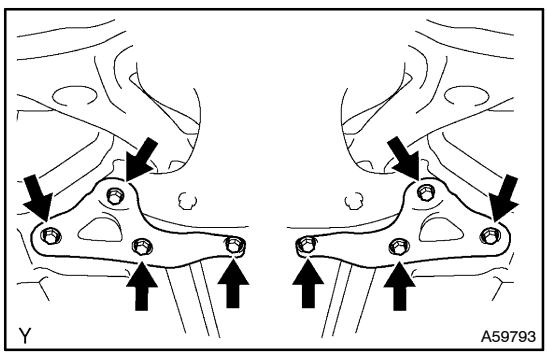

57. REMOVE ENGINE ASSEMBLY WITH TRANSAXLE

(a) Remove the 8 bolts and front suspension member braces.

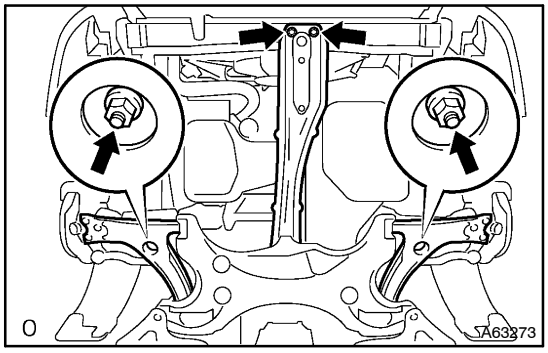

(b) Remove the 2 bolts and 2 nuts shown in the illustration.
(c) Carefully remove the engine assembly with transaxle from the vehicle.

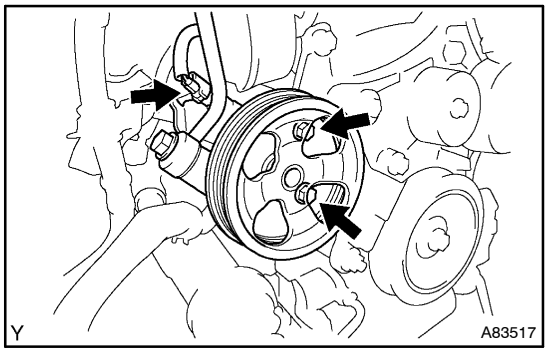

58. SEPARATE VANE PUMP ASSY

(a) Disconnect the PS oil pressure switch connector.
(b) Remove the 2 bolts, then separate the vane pump from the engine.

59. REMOVE STARTER ASSY (See page 19–3)

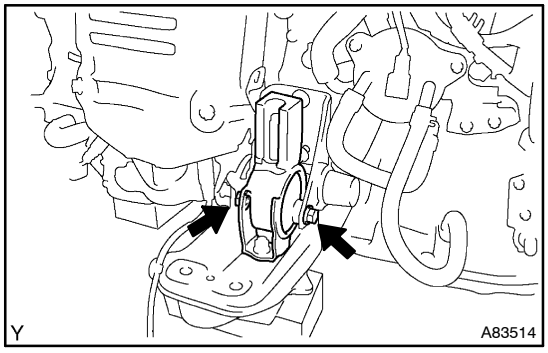

60. REMOVE FRONT SUSPENSION CROSSMEMBER W/CENTER MEMBER

(a) Remove the through bolt and a nut from the engine mounting insulator FR.

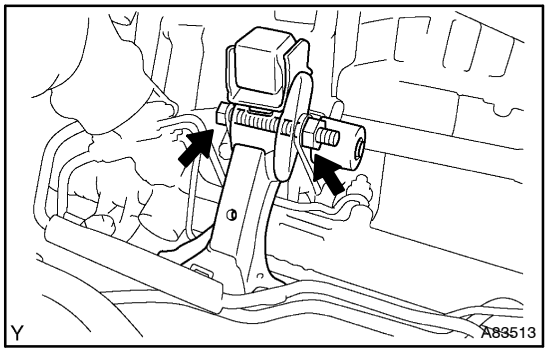

(b) Remove the through bolt and a nut from the engine mounting insulator RR.

61. REMOVE FRONT DRIVE SHAFT ASSY LH (See page 30–4)
62. REMOVE FRONT DRIVE SHAFT ASSY RH (See page 30–4)

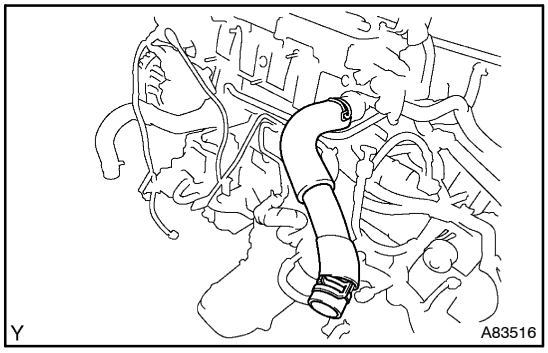

63. REMOVE RADIATOR HOSE INLET

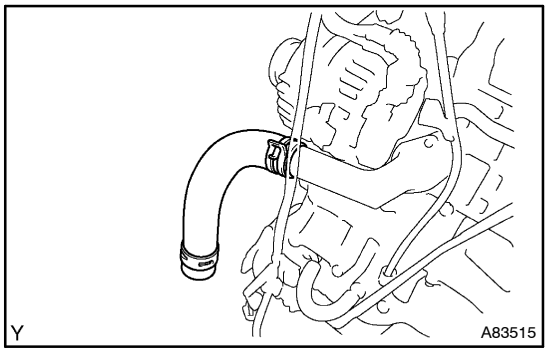

64. REMOVE RADIATOR HOSE OUTLET

65. REMOVE AUTOMATIC TRANSAXLE ASSY (See page 40–3)

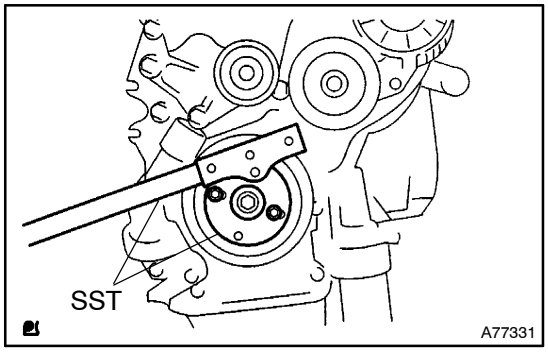

66. REMOVE DRIVE PLATE & RING GEAR SUB–ASSY

(a) Using SST, hold the crankshaft pulley.
SST 09213–54015 (91651–60855), 09330–00021

(b) Remove the 8 bolts and drive plate and ring gear.

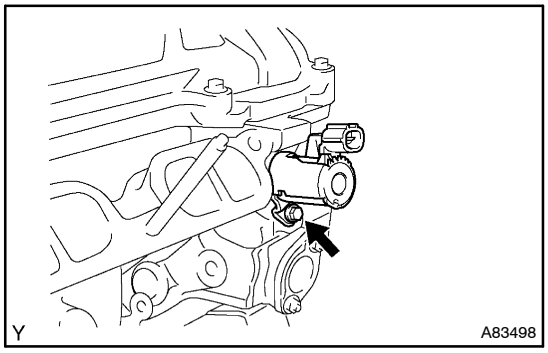

67. REMOVE CAMSHAFT TIMING OIL CONTROL VALVE ASSY

(a) Remove the bolt, O–ring and the camshaft timing oil control valve.

68. REMOVE THROTTLE BODY BRACKET (See page 10–8)
69. REMOVE THROTTLE BODY ASSY (See page 10–8)
70. REMOVE FUEL PRESSURE PULSATION DAMPER ASSY
71. DISCONNECT FUEL TUBE SUB–ASSY (See page 11–1)
72. REMOVE FUEL PIPE SUB–ASSY NO.1 (See page 11–24)

73. REMOVE FUEL PUMP ASSY (See page 11–24)
74. REMOVE INTAKE MANIFOLD (See page 11–13)
75. REMOVE SURGE TANK STAY NO.1 (See page 11–13)
76. REMOVE INTAKE MANIFOLD INSULATOR NO.2 (See page 11–13)
77. REMOVE NOZZLE HOLDER CLAMP (See page 11–13)
78. REMOVE FUEL DELIVERY PIPE SUB–ASSY (See page 11–13)
79. REMOVE FUEL INJECTOR ASSY (See page 11–13)
80. REMOVE V–RIBBED BELT TENSIONER ASSY (See page 14–45)
81. REMOVE IGNITION COIL ASSY (See page 14–45)
82. REMOVE EXHAUST MANIFOLD HEAT INSULATOR NO.1
(a) Remove the 3 bolts and nut, then remove the exhaust manifold heat insulator.

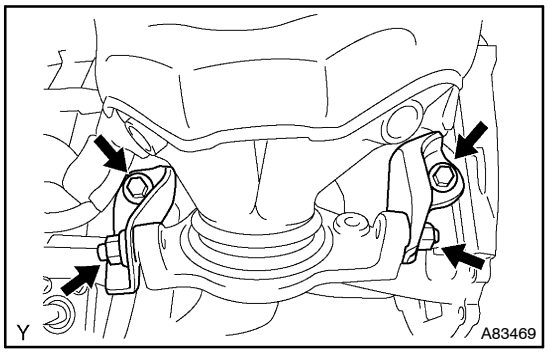

83. REMOVE EXHAUST MANIFOLD CONVERTER SUB–ASSY
(a) Remove the 2 bolts and 2 nuts, then detach the No. 1 and No. 2 exhaust manifold stay.

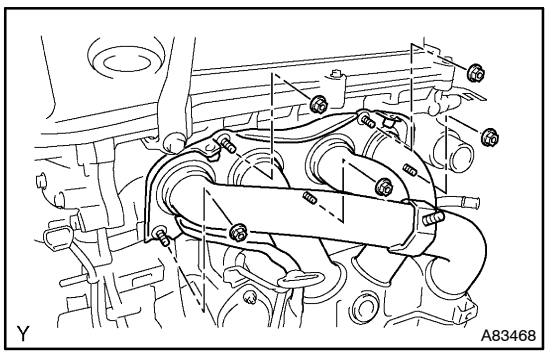

(b) Remove the 5 nuts, the exhaust manifold converter and gasket.

84. REMOVE OIL LEVEL GAGE SUB–ASSY

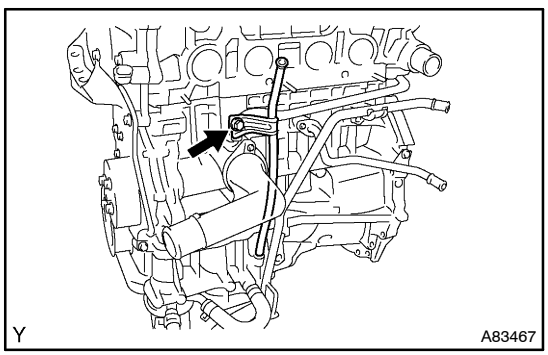

85. REMOVE OIL LEVEL GAGE GUIDE
(a) Remove the bolt, then detach the oil level gage guide.

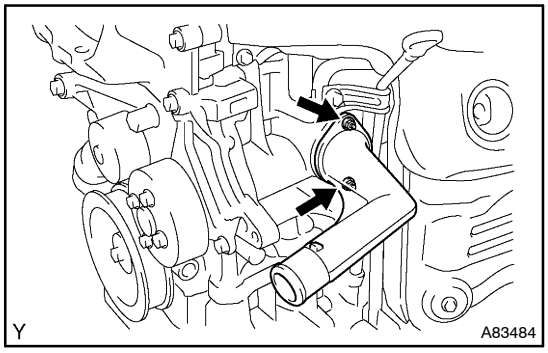

86. REMOVE WATER INLET

(a) Remove the 2 nuts and the water inlet.

87. REMOVE THERMOSTAT

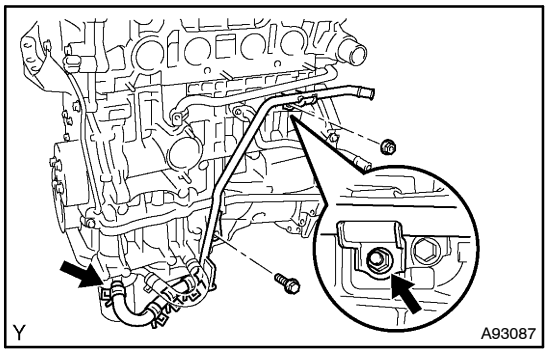

88. REMOVE OIL COOLER PIPE

(a) Remove the bolt and nut shown in the illustration, then disconnect the oil cooler pipe from the cylinder block.

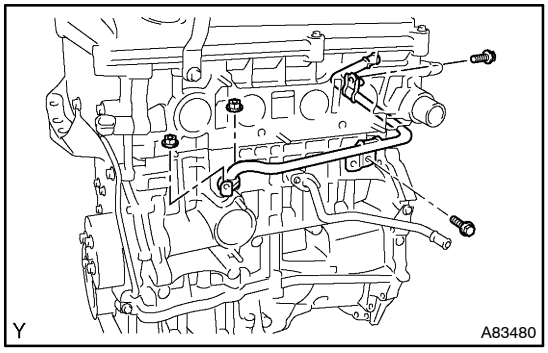

89. REMOVE WATER BY–PASS PIPE NO.1

(a) Remove the 2 bolts and 2 nuts.

(b) Remove the water by–pass pipe No. 1 and a gasket.

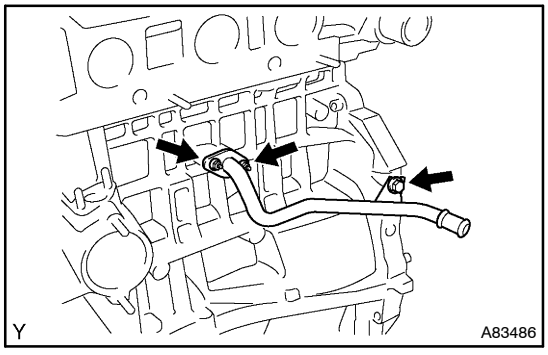

90. REMOVE WATER BY–PASS PIPE NO.3

(a) Remove the bolt and 2 nuts.

(b) Remove the water by–pass pipe No.3 and gasket.

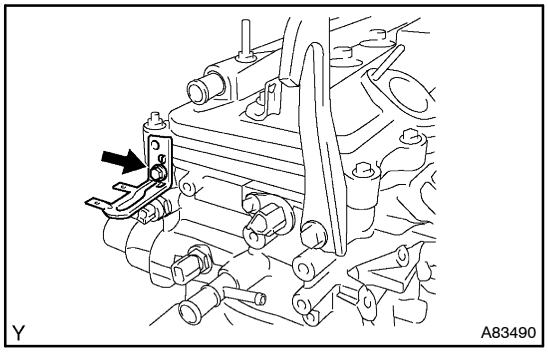

91. REMOVE ENGINE OIL PRESSURE SWITCH ASSY

(a) Remove the bolt and oxygen sensor bracket.

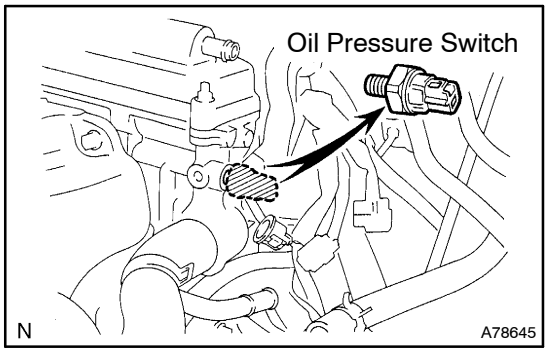

(b) Using SST, remove the engine oil pressure switch.
SST 09268–46021

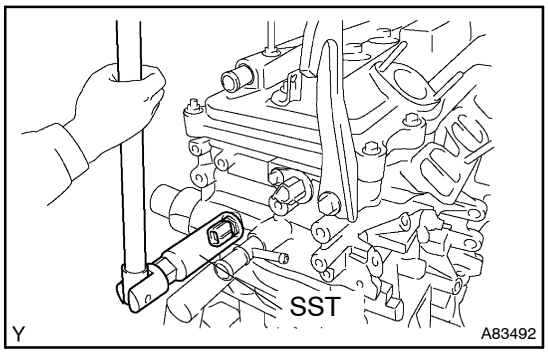

92. REMOVE E.F.I. ENGINE COOLANT TEMPERATURE SENSOR

(a) Using SST, remove the coolant temperature sensor
SST 09817–33190

(b) Remove the gasket.

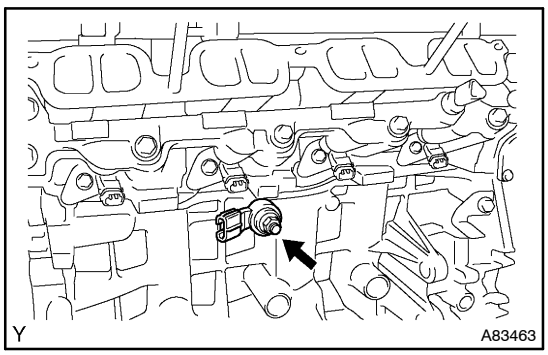

93. REMOVE KNOCK SENSOR

(a) Remove the nut and knock sensor.

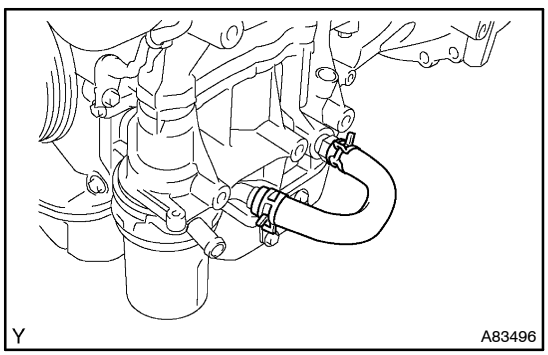

94. REMOVE OIL COOLER HOSE

95. REPLACE PARTIAL ENGINE ASSY

96. INSTALL KNOCK SENSOR

Torque: 20 N·m (208 kgf·cm, 15 ft·lbf)

97. INSTALL E.F.I. ENGINE COOLANT TEMPERATURE SENSOR

(a) Install a new gasket to the engine coolant temperature sensor.

(b) Using SST, install the engine coolant temperature sensor.

SST 09817–33190

Torque: 20 N·m (208 kgf·cm, 15 ft·lbf)

98. INSTALL ENGINE OIL PRESSURE SWITCH ASSY

(a) Clean the threads of the oil pressure switch, apply adhesive there.

Adhesive: Part No. 08833 – 00080 THREE BOND 1344 or equivalent.

(b) Install the oil pressure switch.

Torque: 15 N·m (153 kgf·cm, 11 ft·lbf)

SST 09268–46021

99. INSTALL WATER BY–PASS PIPE NO.3

(a) Install the water by–pass No.2 in the cylinder block with a new gasket.

(b) Fasten the water by–pass pipe No.3 with the bolt and 2 nuts.

Torque: 9.0 N·m (92 kgf·cm, 80 in.·lbf)

100. INSTALL WATER BY–PASS PIPE NO.1

(a) Install the water by–pass pipe No. 1 and a new gasket.

(b) Install the 2 bolts and 2 nuts.

Torque: 9.0 N·m (92 kgf·cm, 80 in.·lbf)

101. INSTALL OIL COOLER PIPE

(a) Install the oil cooler pipe with the 2 bolts.

Torque: 9.0 N·m (92 kgf·cm, 80 in.·lbf)

102. INSTALL THERMOSTAT (See page 16–14)

103. INSTALL WATER INLET

Torque: 9.0 N·m (92 kgf·cm, 80 in.·lbf)

104. INSTALL OIL LEVEL GAGE GUIDE

(a) Apply a light coat of engine oil to the O–ring, then install it to the oil level gage guide.

(b) Install the oil level gage and guide with the bolt.

Torque: 9.0 N·m (92 kgf·cm, 80 in.·lbf)

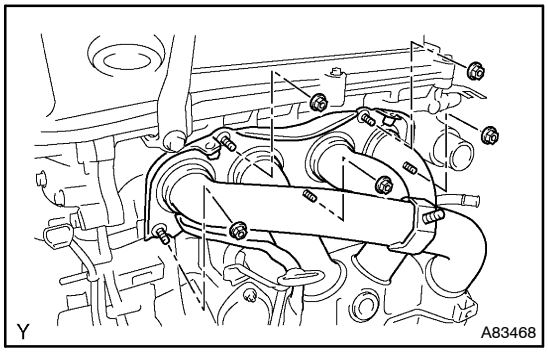

105. INSTALL EXHAUST MANIFOLD CONVERTER SUB–ASSY

(a) Install a new gasket and the exhaust manifold converter with the 5 nuts.

Torque: 37 N·m (378 kgf·cm, 27 ft·lbf)

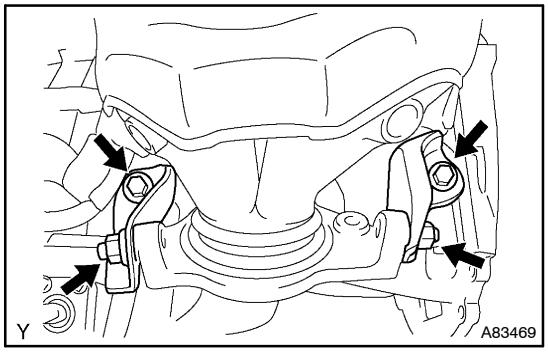

(b) Install the No. 1 and No. 2 exhaust manifold stays with the 2 bolts and 2 nuts.
Torque: 44 N·m (449 kgf·cm, 32 ft·lbf)

106. INSTALL EXHAUST MANIFOLD HEAT INSULATOR NO.1
Torque: 12 N·m (122 kgf·cm, 9.0 ft·lbf)
107. INSTALL V–RIBBED BELT TENSIONER ASSY
Torque: 60 N·m (607 kgf·cm, 44 ft·lbf)
108. INSTALL IGNITION COIL ASSY
Torque: 9.0 N·m (92 kgf·cm, 80 in.·lbf)
109. INSTALL FUEL INJECTOR ASSY (See page 11–13)
110. INSTALL FUEL DELIVERY PIPE SUB–ASSY (See page 11–13)
111. INSTALL NOZZLE HOLDER CLAMP (See page 11–13)
112. INSTALL SURGE TANK STAY NO.1 (See page 11–13)
113. INSTALL INTAKE MANIFOLD (See page 11–13)
114. INSTALL FUEL PUMP ASSY (See page 11–24)
115. INSTALL FUEL PIPE SUB–ASSY NO.1 (See page 11–24)
SST 09023–12900
116. INSTALL FUEL PRESSURE PULSATION DAMPER ASSY (See page 11–24)
117. INSTALL THROTTLE BODY ASSY (See page 10–8)
118. INSTALL THROTTLE BODY BRACKET (See page 10–8)
119. INSTALL CAMSHAFT TIMING OIL CONTROL VALVE ASSY
(a) Apply a light coat of engine oil to the new O–ring, then install it to the camshaft timing oil control valve.
(b) Install the camshaft oil control valve with the bolt.
Torque: 9.0 N·m (92 kgf·cm, 79 in.·lbf)

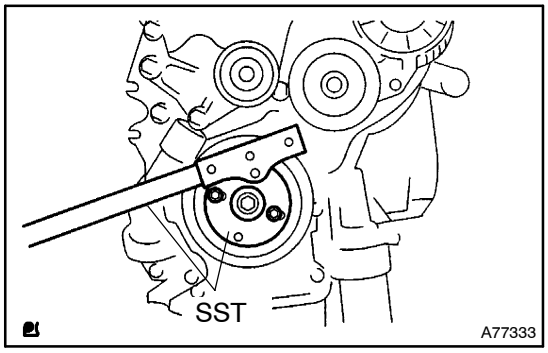

120. INSTALL DRIVE PLATE & RING GEAR SUB–ASSY
(a) Hold the crankshaft with SST.
SST 09213–54015 (91651–60855), 09330–00021
Adhesive:
Part No. 08833–00070, THREE BOND or equivalent

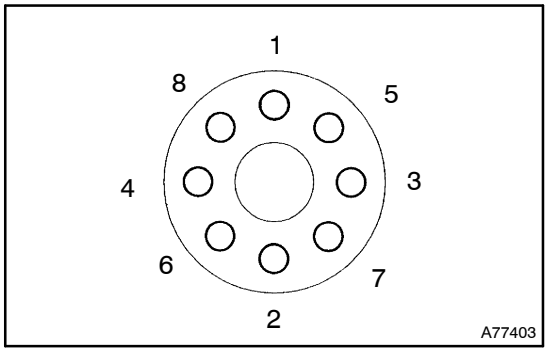

(b) Install the drive plate.
(1) Clean the bolt and bolt hole.
(2) Apply adhesive to the bolts.
(3) Using several steps, install and tighten the 8 bolts uniformly in the sequence shown in the illustration.
Torque: 98 N·m (1,000 kgf·cm, 72 ft·lbf)

121. INSTALL AUTOMATIC TRANSAXLE ASSY (See page 40–3)
122. INSTALL FRONT DRIVE SHAFT ASSY LH (See page 30–4)
123. INSTALL FRONT DRIVE SHAFT ASSY RH (See page 30–4)
124. INSTALL FRONT SUSPENSION CROSSMEMBER W/CENTER MEMBER
(a) Install the engine mounting insulator FR with the through bolt and nut.
Torque: 87 N·m (887 kgf·cm, 64 ft·lbf)
(b) Install the engine mounting insulator RR with the through bolt and nut.
Torque: 87 N·m (887 kgf·cm, 64 ft·lbf)
125. INSTALL STARTER ASSY (See page 19–3)
126. INSTALL VANE PUMP ASSY
Torque: 37 N·m (370 kgf·cm, 27 ft·lbf)

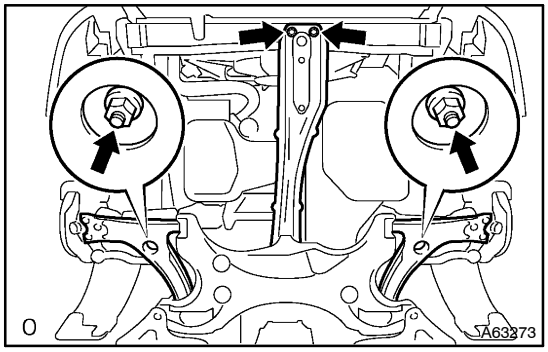

127. INSTALL ENGINE ASSEMBLY WITH TRANSAXLE
(a) Install the 2 bolts and 2 nuts as shown in the illustration.
Torque:
45 N·m (459 kgf·cm, 33 ft·lbf) for Bolt
133 N·m (1,356 kgf·cm, 98 ft·lbf) for Nut

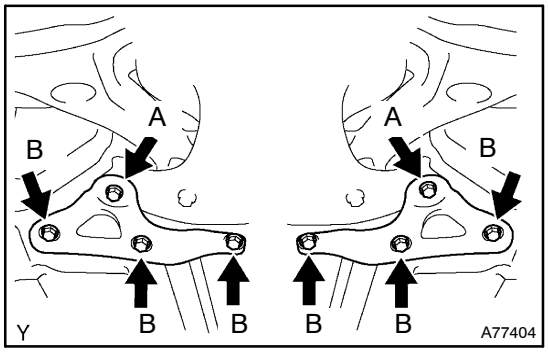

(b) Install the front suspension member braces with the 8 bolts.
Torque:
133 N·m (1,356 kgf·cm, 98 ft·lbf) for Bolt A
80 N·m (816 kgf·cm, 59 ft·lbf) for Bolt B

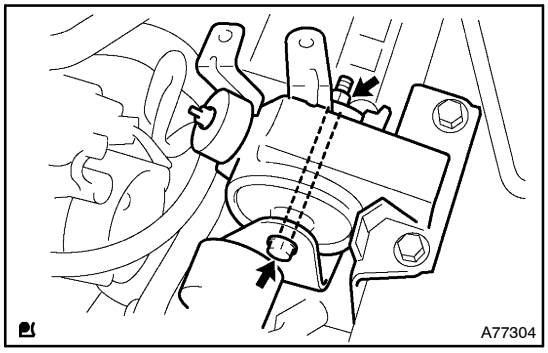

128. INSTALL TRANSVERSE ENGINE ENGINE MOUNTING INSULATOR

(a) Install the bolt, nut and transverse engine engine mounting insulator.
Torque: 87 N·m (887 kgf·cm, 64 ft·lbf)

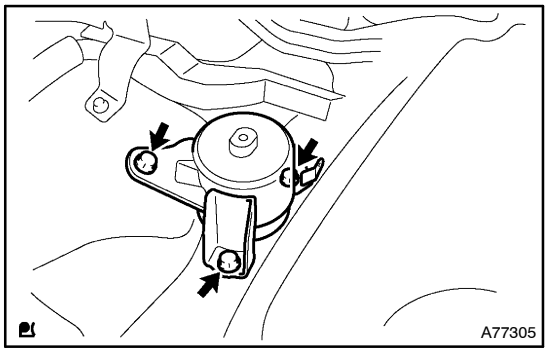

129. INSTALL TRANSVERSE ENGINE ENGINE MOUNTING INSULATOR

(a) Install the 3 bolts and transverse engine engine mounting insulator.
Torque: 52 N·m (530 kgf·cm, 38 ft·lbf)

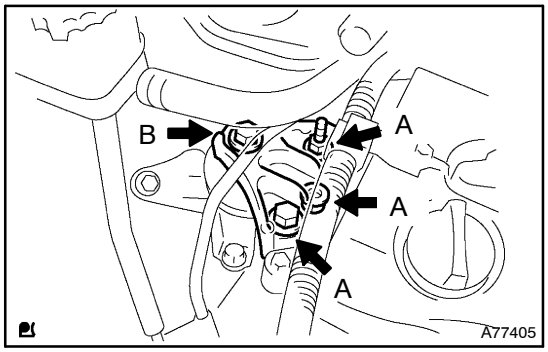

130. INSTALL ENGINE MOUNTING BRACKET NO.2 RH

(a) Install the 2 bolts, 2 nuts and engine mounting bracket No. 2 RH.
Torque:
52 N·m (530 kgf·cm, 38 ft·lbf) for A
113 N·m (1,152 kgf·cm, 83 ft·lbf) for B

131. REMOVE ENGINE HANGERS
132. INSTALL STEERING INTERMEDIATE SHAFT ASSY NO.2 (See Pub. No. RM1018E on page 51–36)
133. INSTALL TRANSMISSION CONTROL CABLE ASSY (See page 40–3)
134. INSTALL FRONT AXLE ASSY LH (See page 30–4)
135. INSTALL FRONT AXLE ASSY RH

HINT:
Perform the same procedure as above on the opposite side.

136. INSTALL FRONT SUSPENSION ARM SUB–ASSY LOWER NO.1 LH (See Pub. No. RM1018E on page 26–16)
137. INSTALL FRONT SUSPENSION ARM SUB–ASSY LOWER NO.1 RH

HINT:
Perform the same procedure as above on the opposite side.

138. INSTALL FRONT STABILIZER LINK ASSY LH
Torque: 74 N·m (755 kgf·cm, 55 ft·lbf)
139. INSTALL FRONT STABILIZER LINK ASSY RH
Torque: 74 N·m (755 kgf·cm, 55 ft·lbf)
140. INSTALL TIE ROD END SUB–ASSY LH (See page 30–4)
141. INSTALL TIE ROD END SUB–ASSY RH

HINT:
Perform the same procedure as above on the opposite side.

142. INSTALL FRONT AXLE HUB LH NUT (See page 30–4)
143. INSTALL FRONT AXLE HUB RH NUT

HINT:

Perform the same procedure as above on the opposite side.

144. INSTALL EXHAUST PIPE ASSY FRONT (See page 15–2)
145. INSTALL EXHAUST PIPE ASSY CENTER (See page 15–2)
146. INSTALL FLOOR PANEL BRACE FRONT
Torque: 30 N·m (306 kgf·cm, 22 ft·lbf)
147. CONNECT FUEL TUBE SUB–ASSY (See page 11–1)
148. INSTALL COOLER BRACKET (LHD STEERING POSITION TYPE)
Torque: 9.0 N·m (92 kgf·cm, 80 in.·lbf)
149. INSTALL ENGINE SERVICE COVER BRACKET RH (RHD STEERING POSITION TYPE)
Torque: 9.0 N·m (92 kgf·cm, 80 in.·lbf)
150. INSTALL COOLER REFRIGERANT SUCTION HOSE NO.1 (LHD STEERING POSITION TYPE)
Torque: 9.0 N·m (92 kgf·cm, 80 in.·lbf)
151. INSTALL OIL RESERVOIR BRACKET NO.1
Torque: 8.0 N·m (82 kgf·cm, 71 in.·lbf)
152. INSTALL RETURN TUBE SUB–ASSY
Torque: 8.0 N·m (82 kgf·cm, 71 in.·lbf)
153. INSTALL VANE PUMP OIL RESERVOIR ASSY
154. INSTALL RADIATOR RESERVE TANK ASSY
Torque: 5.0 N·m (51 kgf·cm, 44 in.·lbf)
155. INSTALL BATTERY CARRIER
Torque: 13 N·m (131 kgf·cm, 9.5 ft·lbf)
156. INSTALL AIR CLEANER ASSEMBLY WITH HOSE
Torque: 5.0 N·m (51 kgf·cm, 44 in.·lbf)
157. INSTALL BATTERY
Torque:
5.0 N·m (51 kgf·cm, 44 in.·lbf) for Bolt
3.5 N·m (36 kgf·cm, 31 in.·lbf) for Nut
158. INSTALL W/PULLEY COMPRESSOR ASSY(See page 55–4)
159. INSTALL GENERATOR ASSY (See page 19–8)
160. INSTALL FAN AND GENERATOR V BELT (See page 14–5)
161. INSTALL RADIATOR ASSY (See page 16–9)
162. CONNECT COOLER REFRIGERANT SUCTION HOSE NO.1 (RHD STEERING POSITION TYPE) (See page 55–1)
163. INSTALL RADIATOR RELAY BLOCK
Torque: 5.0 N·m (51 kgf·cm, 44 in.·lbf)
164. INSTALL ENGINE COVER SUB–ASSY NO.1
Torque: 9.0 N·m (92 kgf·cm, 80 in.·lbf)
165. ADD AUTOMATIC TRANSAXLE FLUID (See Pub. No. RM1018E on page 40–2)
166. ADD ENGINE OIL (See page 17–6)
167. ADD COOLANT (See page 16–7)
168. ADD POWER STEERING FLUID (See Pub. No. RM1018E on page 51–4)
169. BLEED POWER STEERING FLUID (See Pub. No. RM1018E on page 51–4)
170. CHECK FOR ENGINE OIL LEAKS
171. CHECK FOR ENGINE COOLANT LEAKS (See page 16–1)
172. CHECK FOR FUEL LEAKS (See page 11–4)
173. INSTALL FRONT WHEELS
Torque: 103 N·m (1,050 kgf·cm, 76 ft·lbf)

174. CHECK POWER STEERING FULUID LEVEL IN RESERVOIR
(See Pub. No. RM1018E on page 51–4)
175. ADJUST FRONT WHEEL ALIGNMENT (See Pub. No. RM1018E on page 26–6)
176. INSPECT CHECK IDLE SPEED AND IGNITION TIMING (See page 14–1)
177. INSPECT CO/HC (See page 14–1)
178. CHECK ABS SPEED SENSOR SIGNAL

CHAIN SUB–ASSY (2AZ–FSE)

COMPONENTS

141N6–01

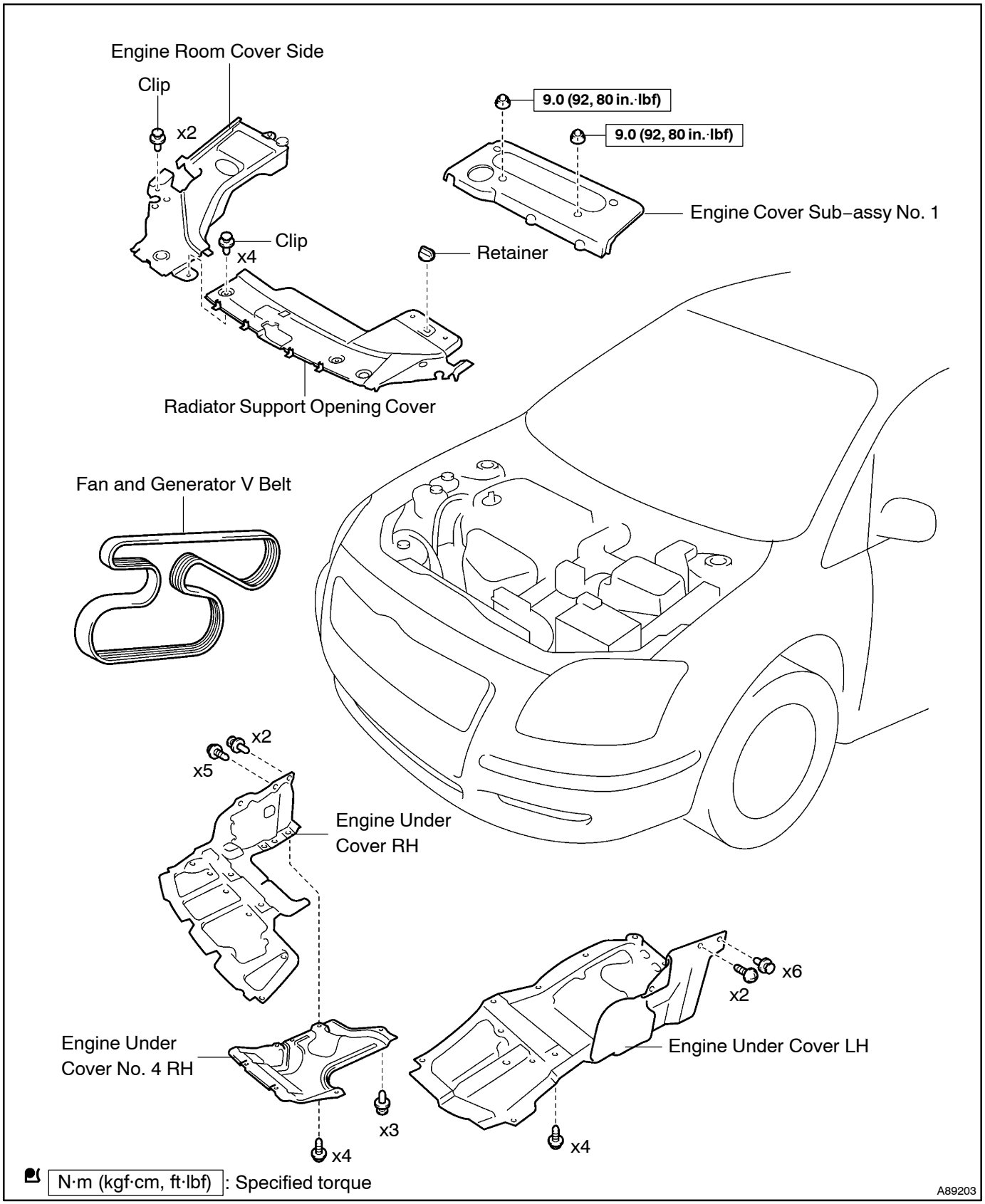

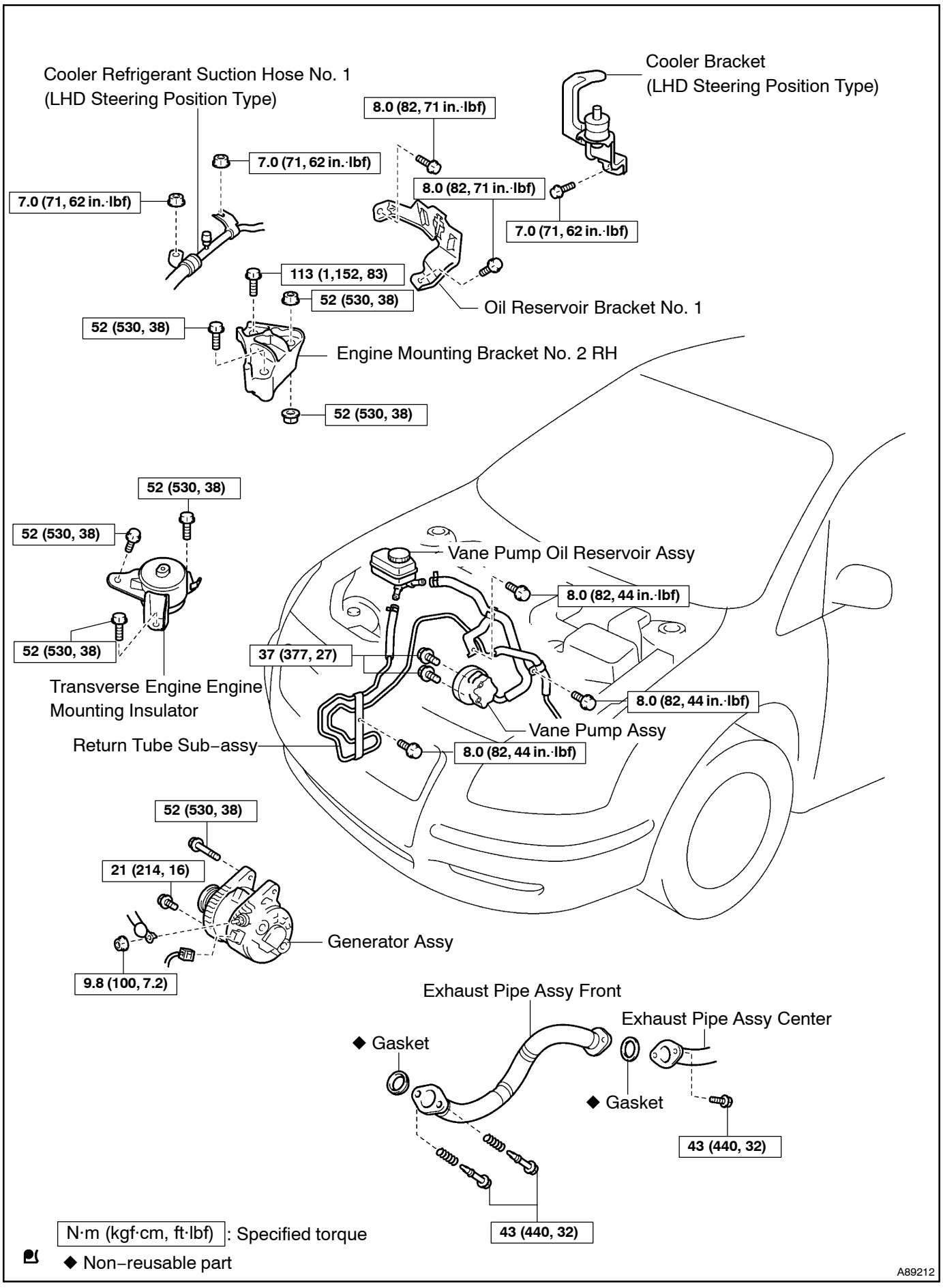
Cooler Refrigerant Suction Hose No. 1
(LHD Steering Position Type)
Cooler Bracket
(LHD Steering Position Type)
8.0 (82, 71 in.·lbf)
7.0 (71, 62 in.·lbf)
8.0 (82, 71 in.·lbf)
7.0 (71, 62 in.·lbf)
7.0 (71, 62 in.·lbf)
113 (1,152, 83)
52 (530, 38)
Oil Reservoir Bracket No. 1
52 (530, 38)
Engine Mounting Bracket No. 2 RH
52 (530, 38)
52 (530, 38)
52 (530, 38)
52 (530, 38)
Vane Pump Oil Reservoir Assy
8.0 (82, 44 in.·lbf)
37 (377, 27)
8.0 (82, 44 in.·lbf)
Transverse Engine Engine
Mounting Insulator
Vane Pump Assy
Return Tube Sub–assy
8.0 (82, 44 in.·lbf)
52 (530, 38)
21 (214, 16)
Generator Assy
9.8 (100, 7.2)
Exhaust Pipe Assy Front
Exhaust Pipe Assy Center
◆ Gasket
◆ Gasket
43 (440, 32)
43 (440, 32)
N·m (kgf·cm, ft·lbf) : Specified torque
◆ Non–reusable part
A89212

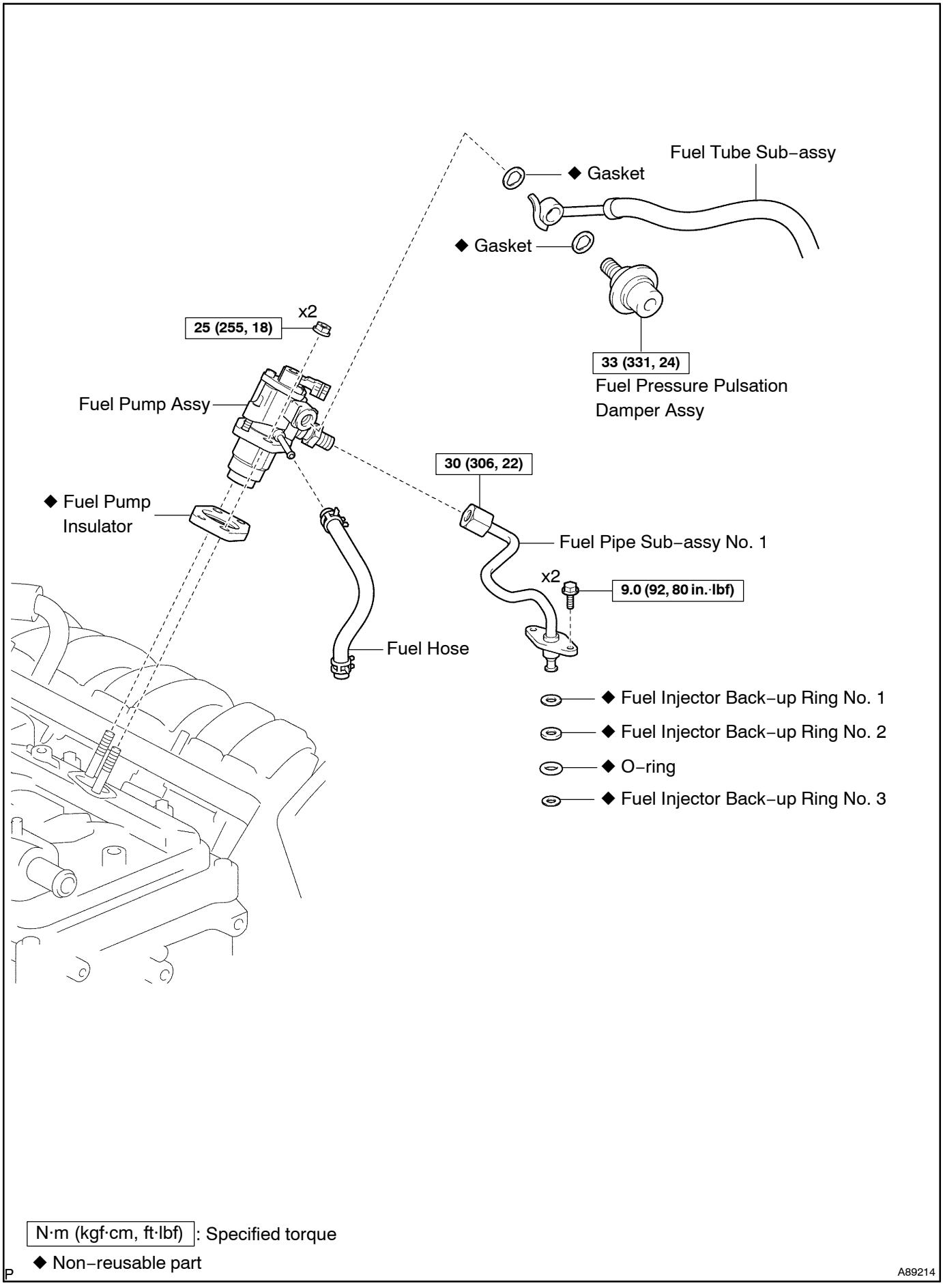
Fuel Tube Sub–assy
◆ Gasket
◆ Gasket
x2
25 (255, 18)
33 (331, 24)
Fuel Pressure Pulsation Damper Assy
Fuel Pump Assy
30 (306, 22)
◆ Fuel Pump Insulator
Fuel Pipe Sub–assy No. 1
x2
9.0 (92, 80 in.·lbf)
Fuel Hose
◆ Fuel Injector Back–up Ring No. 1
◆ Fuel Injector Back–up Ring No. 2
◆ O–ring
◆ Fuel Injector Back–up Ring No. 3
N·m (kgf·cm, ft·lbf) : Specified torque
◆ Non–reusable part
P
A89214

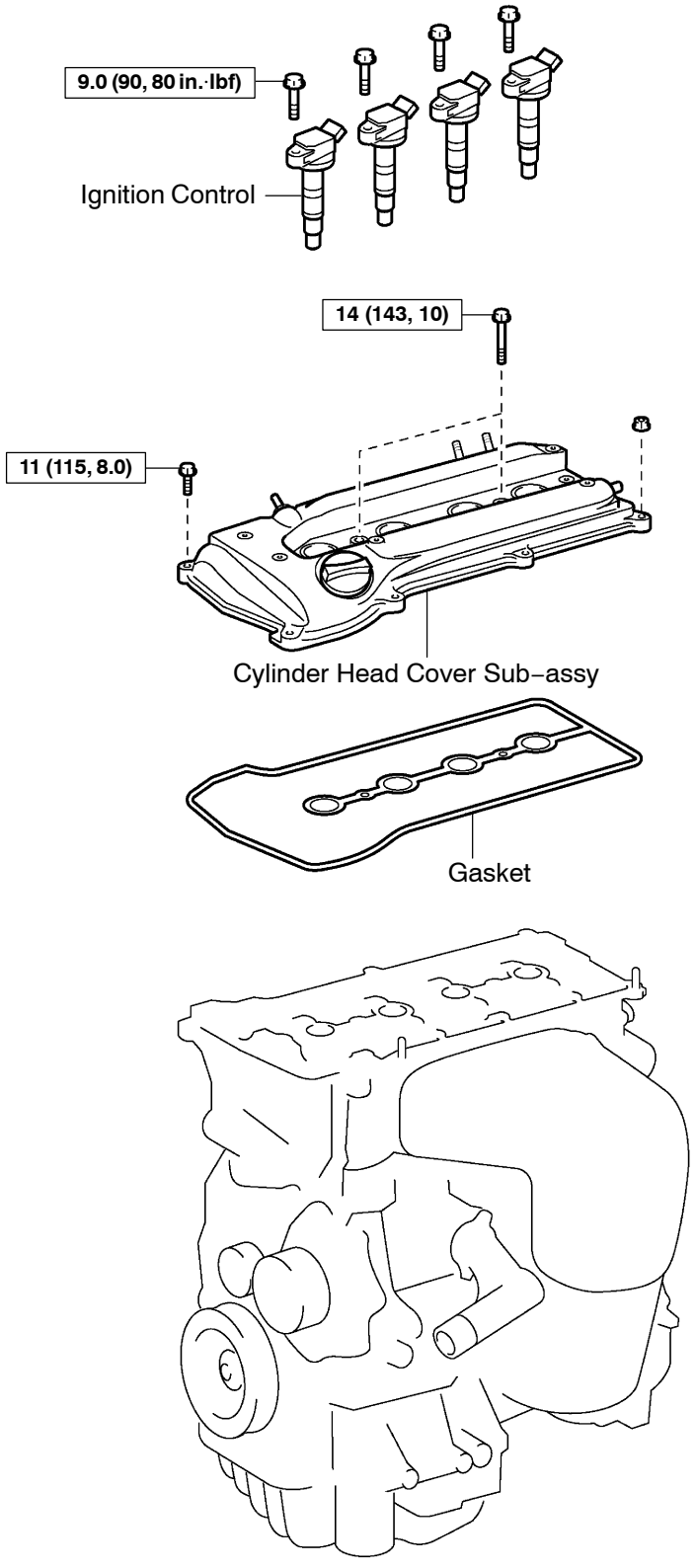

N·m (kgf·cm, ft·lbf) : Specified torque

A89213

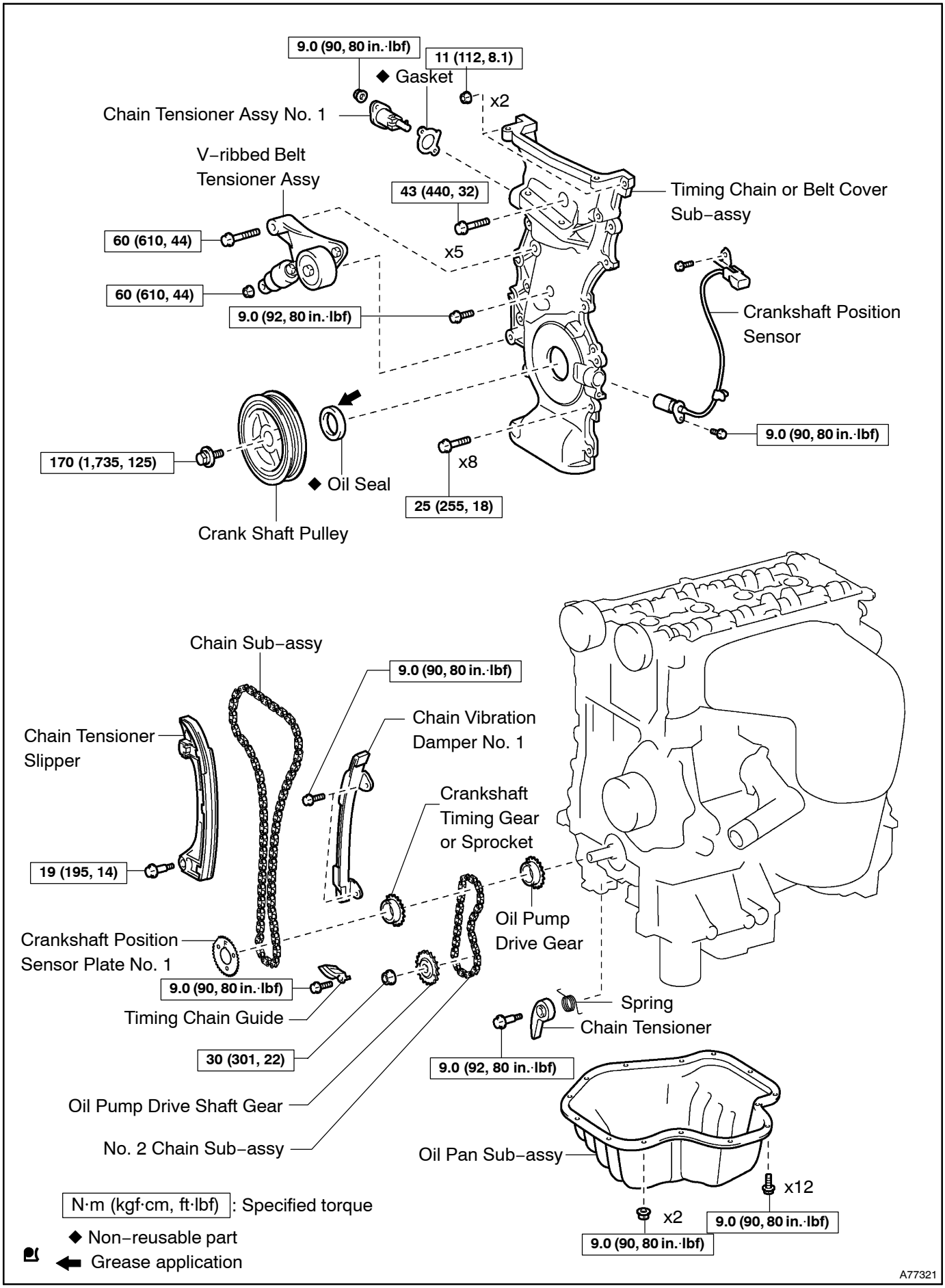
9.0 (90, 80 in.·lbf)
11 (112, 8.1)
◆ Gasket
x2
Chain Tensioner Assy No. 1
V–ribbed Belt Tensioner Assy
43 (440, 32)
Timing Chain or Belt Cover Sub–assy
60 (610, 44)
x5
60 (610, 44)
9.0 (92, 80 in.·lbf)
Crankshaft Position Sensor
9.0 (90, 80 in.·lbf)
170 (1,735, 125)
x8
◆ Oil Seal
25 (255, 18)
Crank Shaft Pulley
Chain Sub–assy
9.0 (90, 80 in.·lbf)
Chain Vibration Damper No. 1
Chain Tensioner Slipper
Crankshaft Timing Gear or Sprocket
19 (195, 14)
Oil Pump Drive Gear
Crankshaft Position Sensor Plate No. 1
9.0 (90, 80 in.·lbf)
Spring
Timing Chain Guide
Chain Tensioner
30 (301, 22)
9.0 (92, 80 in.·lbf)
Oil Pump Drive Shaft Gear
No. 2 Chain Sub–assy
Oil Pan Sub–assy
x12
x2
9.0 (90, 80 in.·lbf)
9.0 (90, 80 in.·lbf)
N·m (kgf·cm, ft·lbf) : Specified torque
◆ Non–reusable part
Grease application
A77321

141N7–01

REPLACEMENT

1. DISCHARGE FUEL SYSTEM PRESSURE (See page 11–4)
2. REMOVE FRONT WHEEL RH
3. REMOVE RADIATOR SUPPORT OPENING COVER (See page 14–23)
4. REMOVE ENGINE ROOM COVER SIDE (See page 14–23)
5. REMOVE ENGINE UNDER COVER LH (See page 14–23)
6. REMOVE ENGINE UNDER COVER NO.4 RH (See page 14–23)
7. REMOVE ENGINE UNDER COVER RH (See page 14–23)
8. DRAIN ENGINE OIL (See page 17–6)

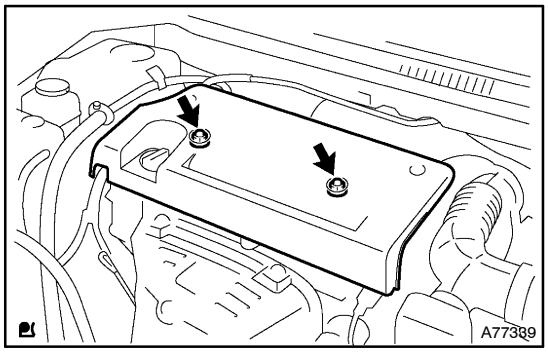

9. REMOVE ENGINE COVER SUB–ASSY NO.1

(a) Remove the 2 nuts and engine cover No. 1.

10. REMOVE FUEL PRESSURE PULSATION DAMPER ASSY
11. DISCONNECT FUEL TUBE SUB–ASSY (See page 11–4)
12. SEPARATE FUEL PIPE SUB–ASSY NO.1 (See page 11–24)
    SST 09023–12900
13. REMOVE FUEL PUMP ASSY (See page 11–24)
14. REMOVE FAN AND GENERATOR V BELT (See page 14–5)
    SST 09249–63010
15. REMOVE GENERATOR ASSY (See page 19–8)
16. REMOVE EXHAUST PIPE ASSY FRONT (See page 15–2)

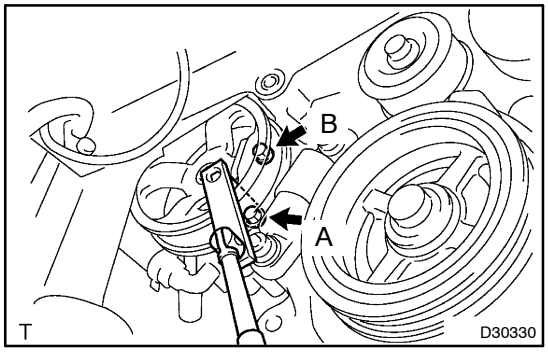

17. SEPARATE VANE PUMP ASSY

(a) Disconnect the connector from oil pressure switch.
(b) Using SST and a deep socket (14mm), loosen the bolt A.
    SST 09249–63010
(c) Remove the bolt B, then detach the vane pump assembly.

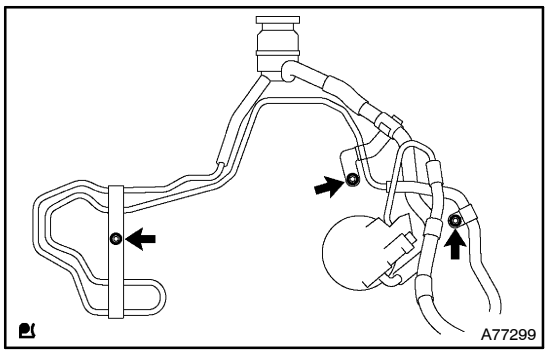

18. SEPARATE RETURN TUBE SUB–ASSY

(a) Remove the 3 bolts, then separate the return tube as shown in the illustration.

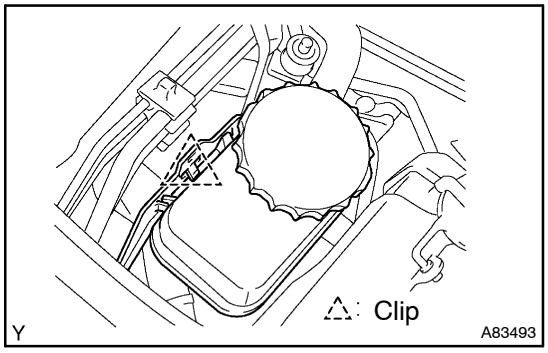

19. REMOVE VANE PUMP OIL RESERVOIR ASSY

(a) Disconnect the 2 hoses.

(b) Remove the clip fitting shown in the illustration, then remove the vane pump oil reservoir assembly.

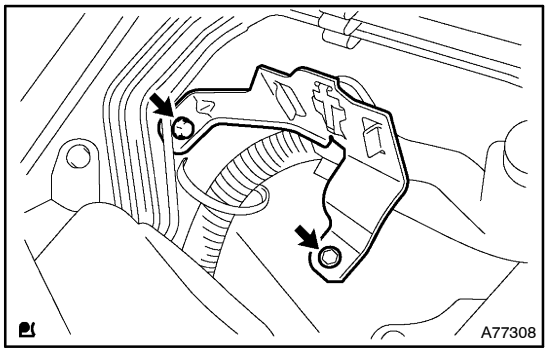

20. REMOVE OIL RESERVOIR BRACKET NO.1

(a) Remove the 2 bolts, then the oil pump reservoir bracket No. 1.

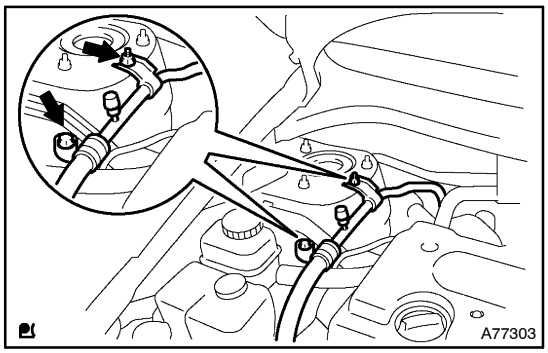

21. SEPARATE COOLER REFRIGERANT SUCTION HOSE NO.1 (LHD STEERING POSITION TYPE)

(a) Remove the 2 nuts, then separate the Cooler refrigerant Suction hose No. 1.

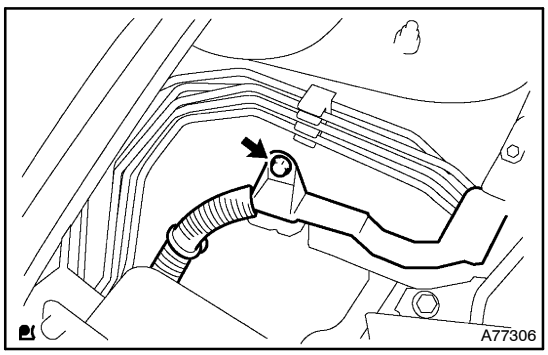

22. SEPARATE ENGINE WIRE

(a) Remove the bolt, then separate the clamp and engine wire.

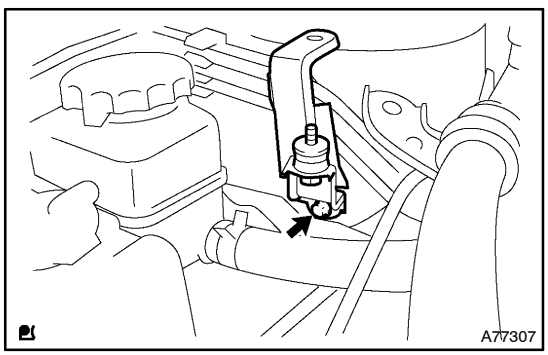

23. REMOVE COOLER BRACKET (LHD STEERING POSITION TYPE)

(a) Remove the bolt and cooler bracket.

24. REMOVE ENGINE SERVICE COVER BRACKET RH (RHD STEERING POSITION TYPE)

(a) Remove the bolt and the engine service cover bracket RH.

25. REMOVE IGNITION COIL ASSY

(a) Remove the 4 bolts and 4 ignition coils.

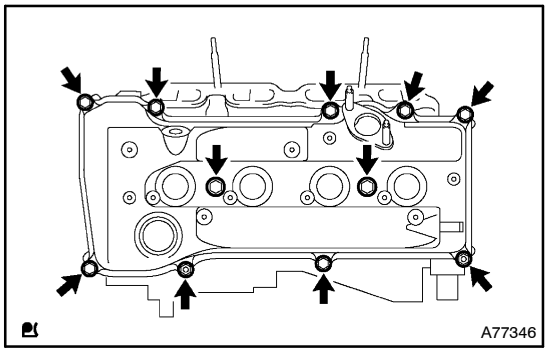

26. REMOVE CYLINDER HEAD COVER SUB–ASSY

(a) Disconnect the 2 PCV hoses from the cylinder head cover.

(b) Remove the 9 bolts and 2 nuts, then remove the cylinder head cover and gasket.

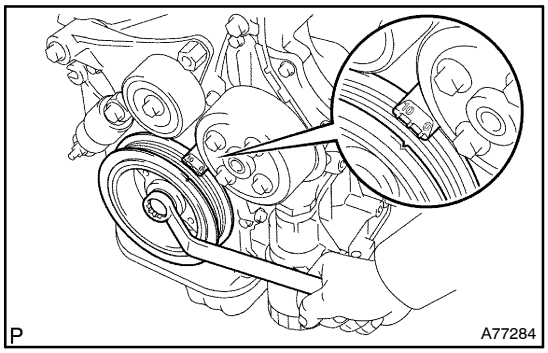

27. SET NO. 1 CYLINDER TO TDC/COMPRESSION

(a) Turn the crankshaft pulley, then align its groove with timing mark 0 of the timing chain cover.

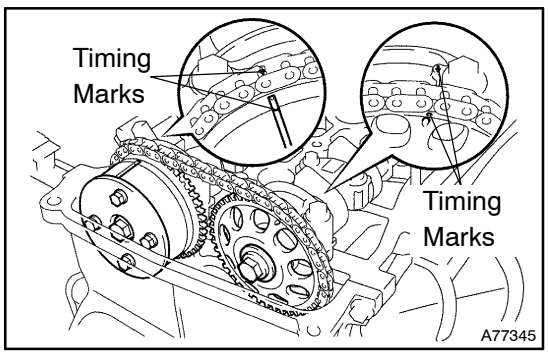

(b) Check that each timing mark of the camshaft timing gears is aligned with the timing marks of the No. 1 and No. 2 bearing caps as shown in the illustration.

If not, turn the crankshaft 1 revolution (360°), then align the marks as above.

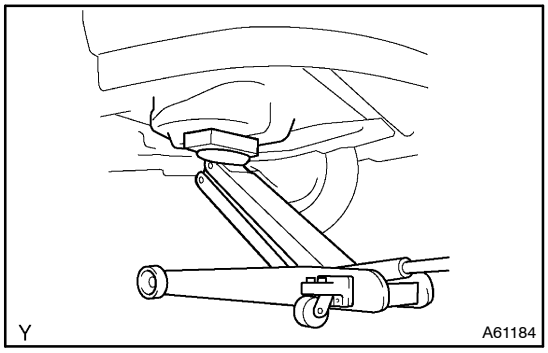

28. REMOVE ENGINE MOUNTING BRACKET NO.2 RH

(a) Set the jack underneath the engine, then place a wooden block on the jack.

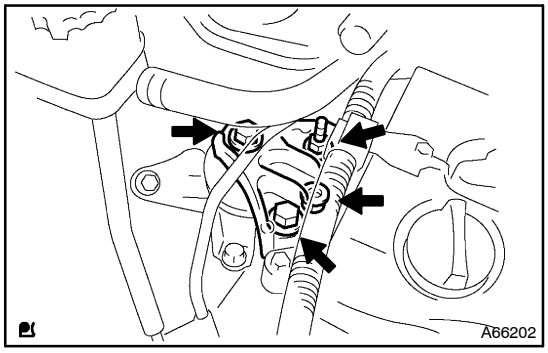

(b) Remove the 2 bolts and 2 nuts, then detach the mounting bracket No. 2 RH.

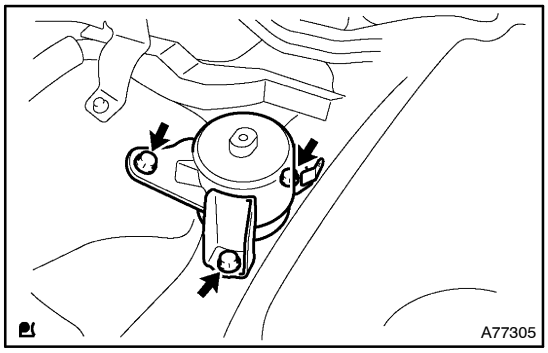

29. REMOVE TRANSVERSE ENGINE ENGINE MOUNTING INSULATOR

(a) Remove the 3 bolts and the engine mounting insulator.

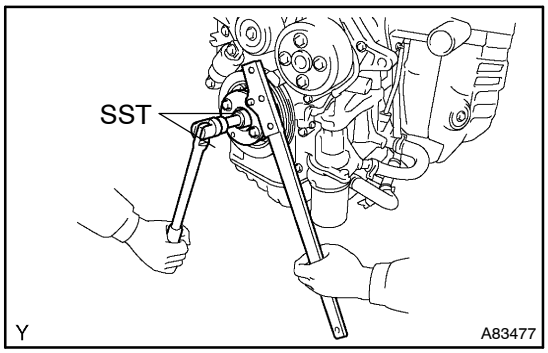

30. REMOVE CRANKSHAFT PULLEY

(a) Using SST, hold the crankshaft pulley, then loosen a crankshaft pulley bolt.

SST 09213–54015 (91651–60855), 09330–00021

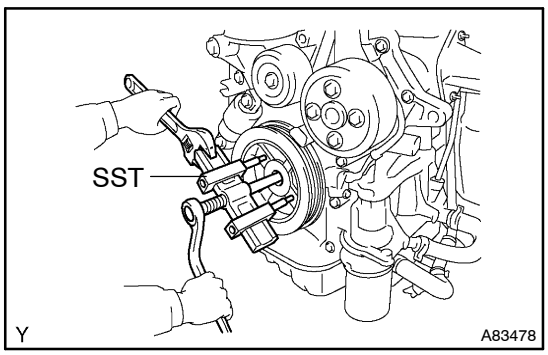

(b) Using a crankshaft pulley bolt and SST, then remove the crankshaft pulley.

SST 09950–50013 (09951–05010, 09952–05010, 09953–05020, 09954–05021)

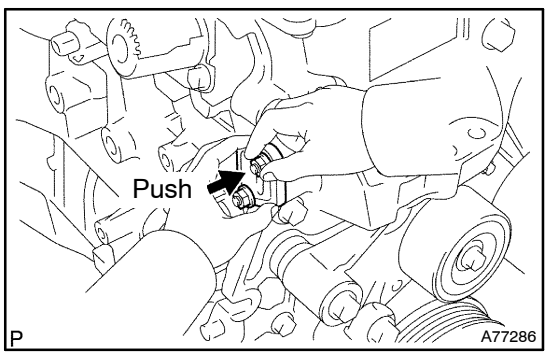

31. REMOVE CHAIN TENSIONER ASSY NO.1

(a) Remove the 2 nuts, the chain tensioner No. 1 and gasket.

NOTICE:

Do not turn the crankshaft.

32. REMOVE CRANKSHAFT POSITION SENSOR (See page 18–6)

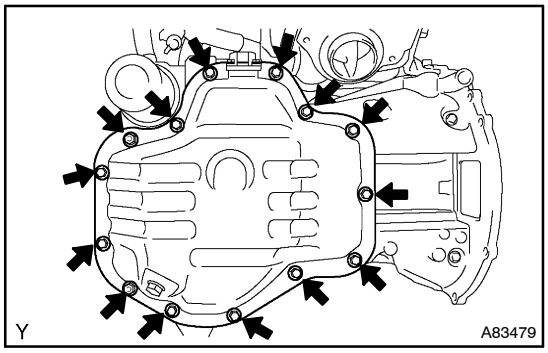

33. REMOVE OIL PAN SUB–ASSY

(a) Remove the 12 bolts and 2 nuts.

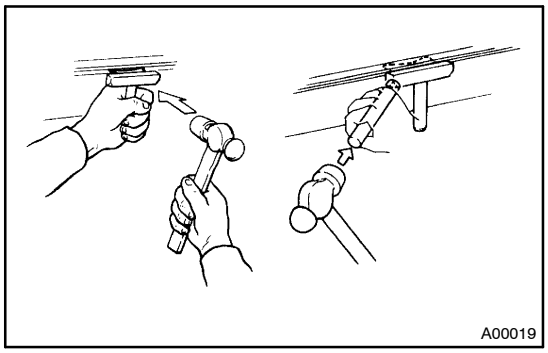

(b) Insert the blade of SST among the crank case, timing chain cover and oil pan, then cut off applied sealer and remove the oil pan.

SST 09032–00100

NOTICE:

Be careful not to damage the contact surface of the timing chain cover, crank case and oil pan.

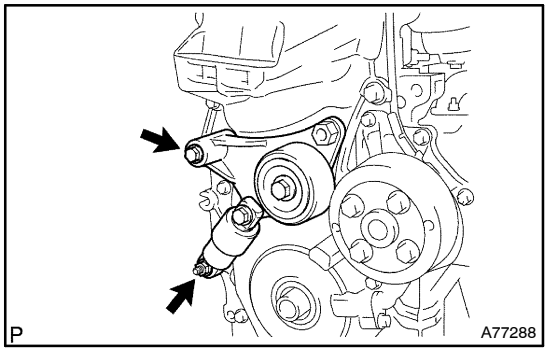

34. REMOVE V–RIBBED BELT TENSIONER ASSY

(a) Remove the bolt and nut, then remove the V–ribbed belt tensioner.

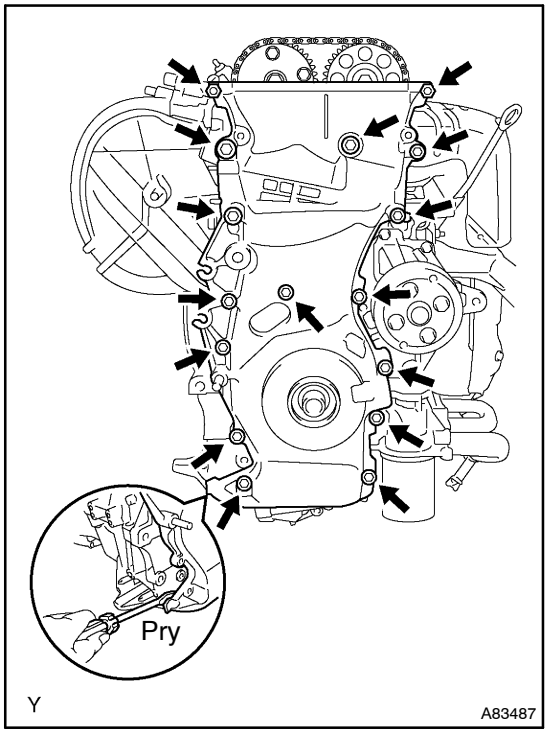

35. REMOVE TIMING CHAIN OR BELT COVER SUB–ASSY

(a) Remove the 14 bolts and 2 nuts.

(b) Using a screwdriver, pry between the timing chain cover and cylinder head or cylinder block.

(c) Remove the timing chain cover.

NOTICE:

Be careful not to damage the contact surface of the timing chain cover, cylinder head and cylinder block.

36. REMOVE CRANKSHAFT POSITION SENSOR PLATE NO.1

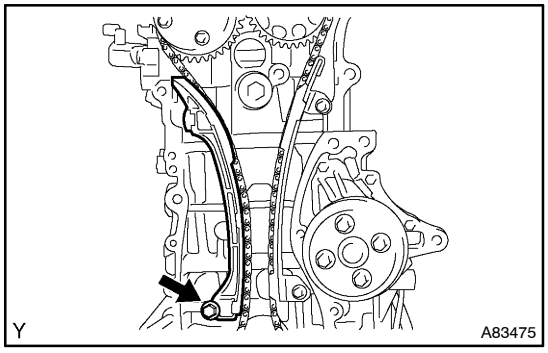

37. REMOVE CHAIN VIBRATION DAMPER NO.1

(a) Remove the bolt and chain vibration damper No. 1

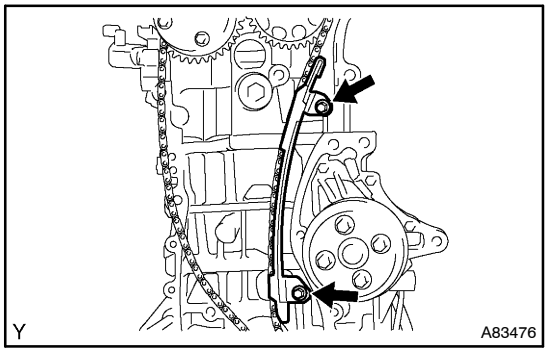

38. REMOVE CHAIN TENSIONER SLIPPER

(a) Remove the 2 bolts and chain tensioner slipper.

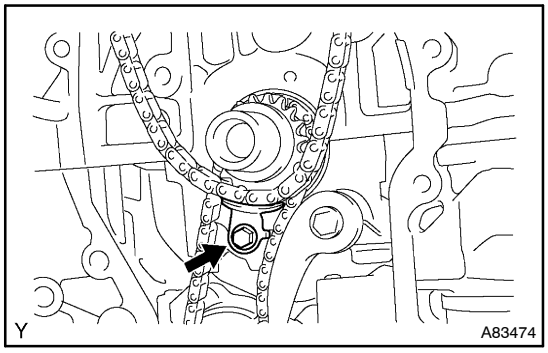

39. REMOVE TIMING CHAIN GUIDE

(a) Remove the bolt and timing chain guide.

40. REMOVE CHAIN SUB–ASSY

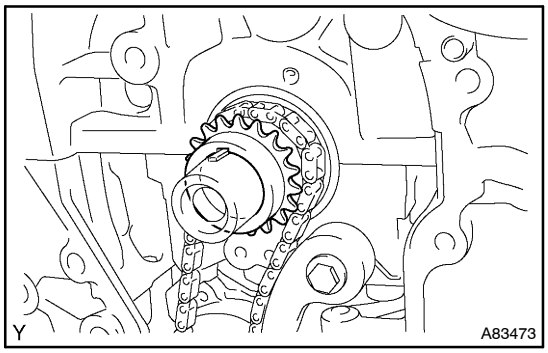

41. REMOVE CRANKSHAFT TIMING GEAR OR SPROCKET

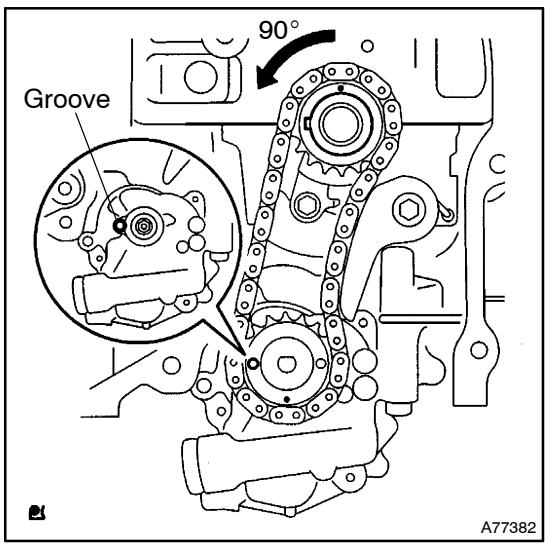

42. REMOVE NO.2 CHAIN SUB–ASSY

(a) Turn the crankshaft counterclockwise 90°, then align an adjusting hole of the oil pump drive shaft gear with the groove of the oil pump.

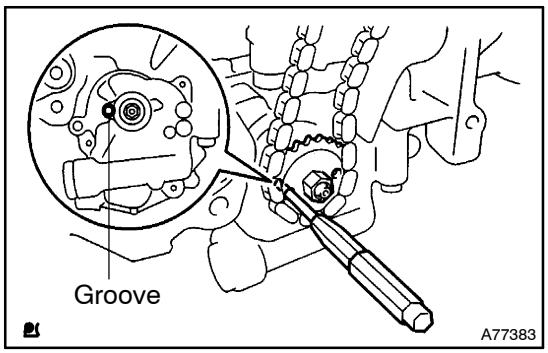

(b) Put a 4 mm diameter bar in the adjusting hole of the oil pump drive shaft gear to lock in position, then remove the nut.

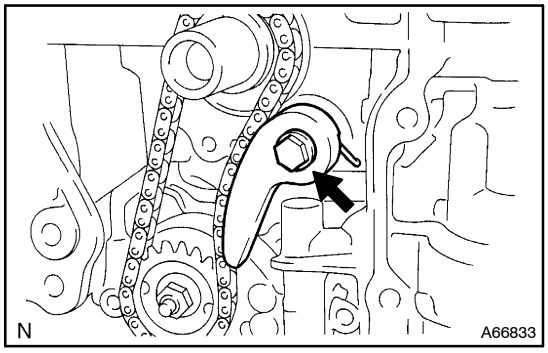

(c) Remove the bolt, then remove the chain tensioner and spring.
(d) Remove the oil pump drive shaft gear and chain No. 2.

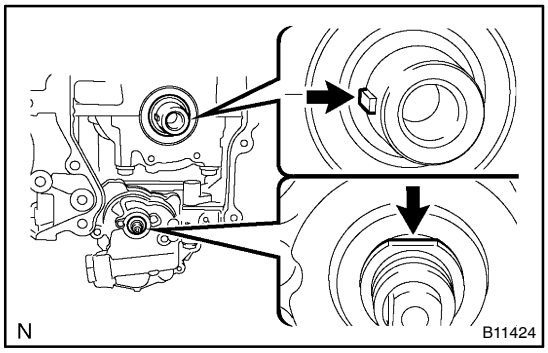

43. INSTALL NO.2 CHAIN SUB–ASSY

(a) Set the crankshaft key to the left side position.
(b) Position the flat portion of the drive shaft upward.

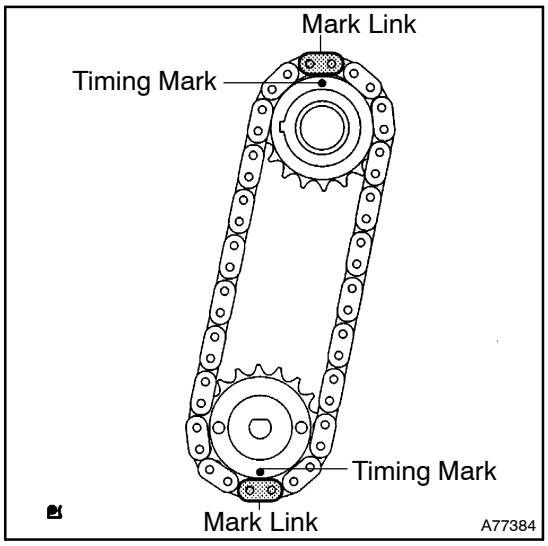

(c) Align the mark links (yellow colored links) with the timing marks of each gear as shown in the illustration.
(d) Install the gears to the crankshaft and oil pump shaft wrapped with the chain.
(e) Temporarily tighten the oil pump drive shaft gear with the nut.

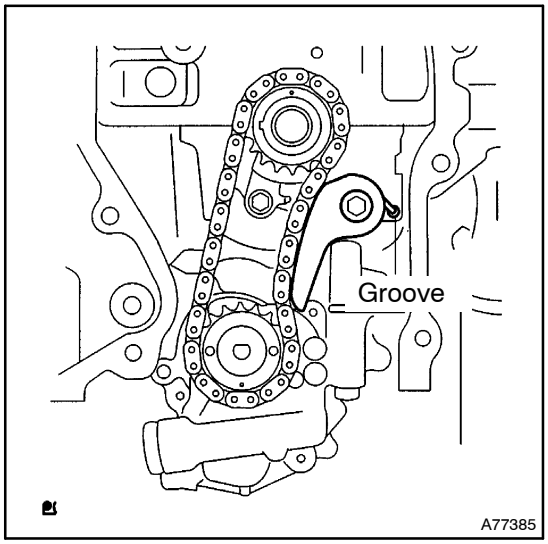

(f) Insert the damper spring into the adjusting hole, then install the chain tensioner plate with the bolt.
Torque: 9.0 N·m (92 kgf·cm, 80 in.·lbf)

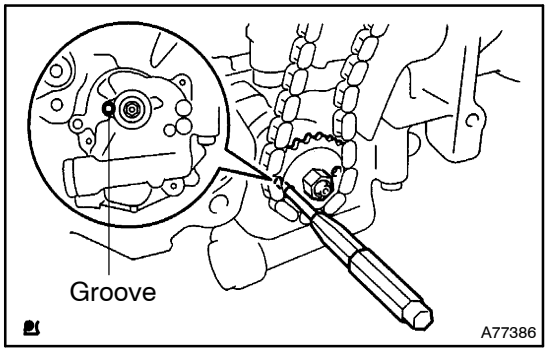

(g) Align an adjusting hole of the sprocket with the groove of the oil pump.

(h) Insert a 4 mm diameter bar into the adjusting hole of the sprocket to lock in position, then tighten the nut.
Torque: 30 N·m (301 kgf·cm, 22 ft·lbf)

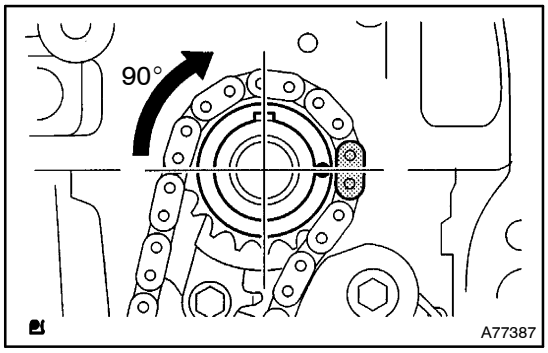

(i) Rotate the crankshaft clockwise 90°, then position the crankshaft key upward.

44. INSTALL CRANKSHAFT TIMING GEAR OR SPROCKET

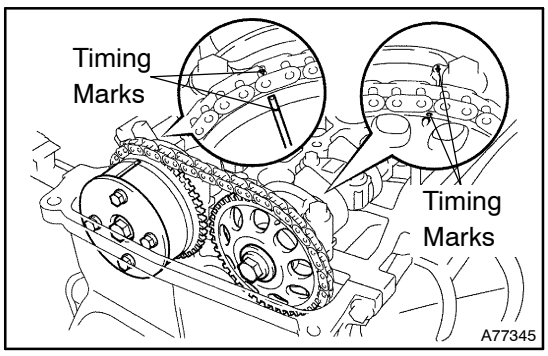

45. SET NO. 1 CYLINDER TO TDC/COMPRESSION

(a) Turn the camshafts with a wrench on the hexagonal lobe, then align the timing marks of the camshaft timing gear with each timing mark located on the No. 1 and No. 2 bearing caps as shown in the illustration.

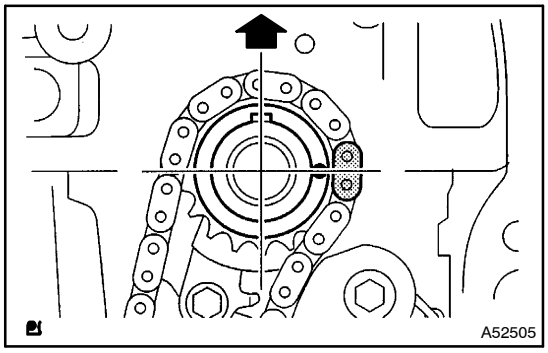

(b) Using the crankshaft pulley bolt, turn the crankshaft and position the key on the crankshaft upward.

46. INSTALL CHAIN VIBRATION DAMPER NO.1
Torque: 9.0 N·m (92 kgf·cm, 80 in.·lbf)

47. INSTALL CHAIN SUB–ASSY

(a) Install the chain to the crankshaft timing gear or sprocket.

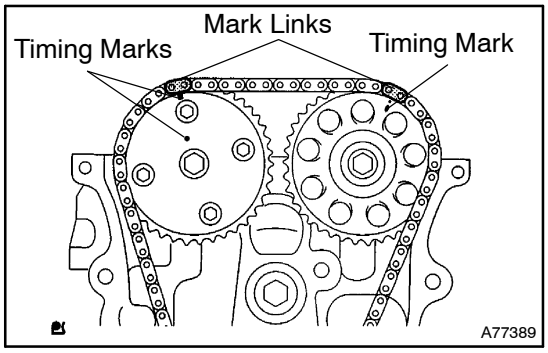

(b) Align the mark links (gold or yellow colored links) with each timing mark located on the camshaft timing gears, then install the chain.

48. INSTALL TIMING CHAIN GUIDE
Torque: 9.0 N·m (92 kgf·cm, 80 in.·lbf)

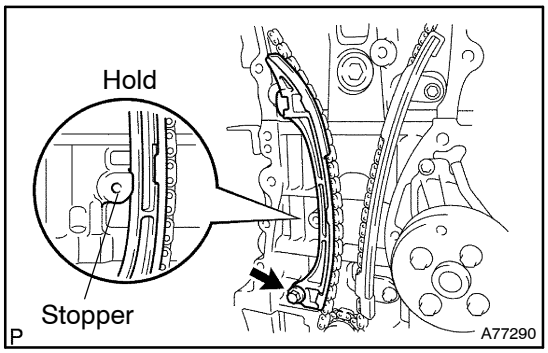

49. INSTALL CHAIN TENSIONER SLIPPER

(a) Install the chain tensioner slipper with bolt.
Torque: 19 N·m (195 kgf·cm, 14 ft·lbf)

(b) Check that the chain tensioner slipper is held on the cylinder block stopper.

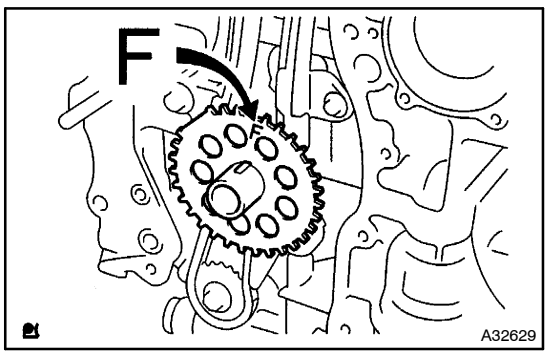

50. INSTALL CRANKSHAFT POSITION SENSOR PLATE NO.1

(a) Install the plate with the ”F” mark facing forward.

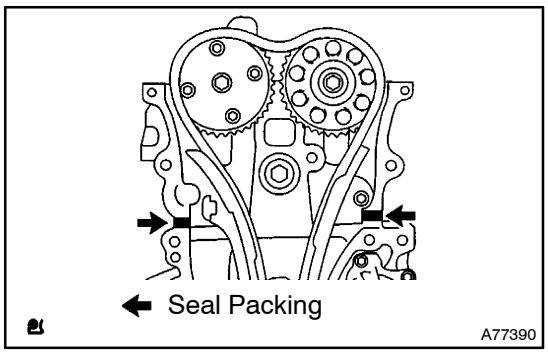

51. INSTALL TIMING CHAIN OR BELT COVER SUB–ASSY
NOTICE:

- **Remove any oil from the contact surface.**
- **Install the chain cover within 3 minutes after applying seal packing.**
- **Do not start the engine within 2 hours of installation.**

(a) Remove any old packing (FIPG) material and be careful not to drop any oil on the contact surfaces of the timing chain cover.

(b) Apply a continuous bead (Diameter 2 mm (0.09 in.)) of seal packing as shown in the illustration.
Seal packing: Part No. 08826 – 00080 or equivalent.

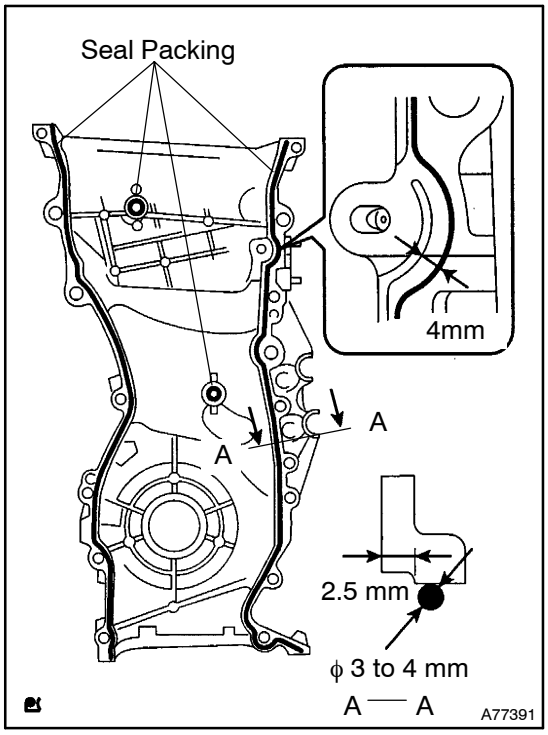

(c) Apply a continuous bead (Diameter 3 to 4 mm (0.118 to 0.157 in.)) of seal packing as shown in the illustration.
Seal packing: Part No. 08826 – 00080 or equivalent

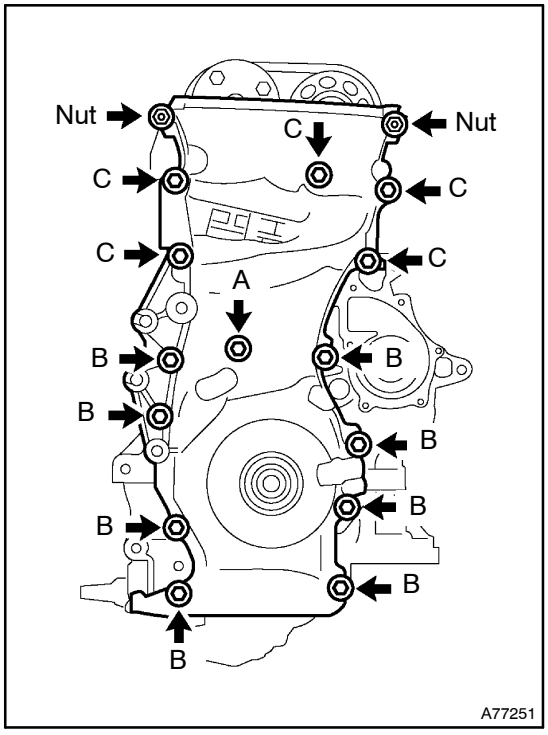

(d) Install the timing chain cover with the 14 bolts and 2 nuts.
Torque:
9.0 N·m (92 kgf·cm, 80 in.·lbf) for Bolt A
25 N·m (255 kgf·cm, 18 ft·lbf) for Bolt B
43 N·m (438 kgf·cm, 32 ft·lbf) for Bolt C
11 N·m (112 kgf·cm, 8.1 ft·lbf) for Nut

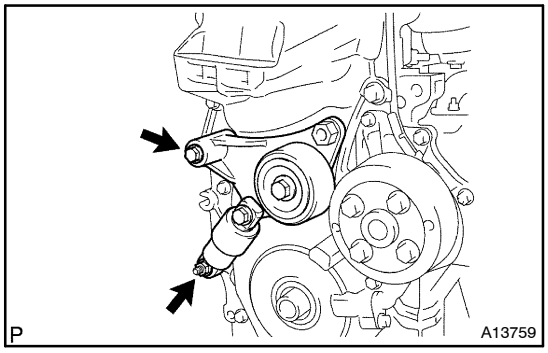

52. INSTALL V–RIBBED BELT TENSIONER ASSY

(a) Install the V–ribbed belt tensioner with the bolt and nut.
Torque: 60 N·m (610 kgf·cm, 44 ft·lbf)

NOTICE:
The drive tensioner should be fastened together with the timing chain cover, so be sure install it within 15 minutes after the timing chain cover is installed.

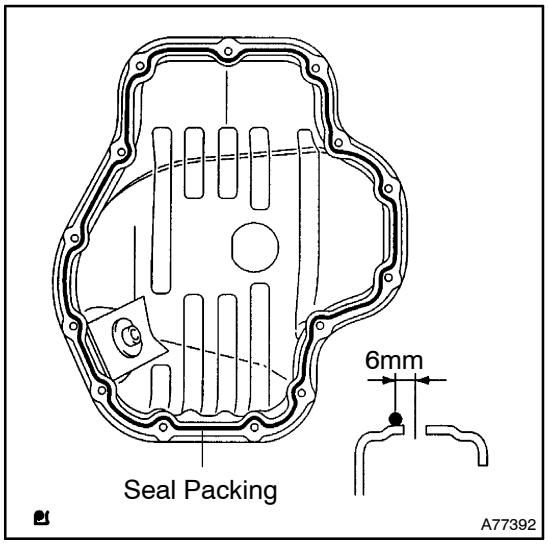

53. INSTALL OIL PAN SUB–ASSY

NOTICE:
- **Remove any oil from the contact surface.**
- **Install the oil pan within 3 minutes after applying seal packing.**
- **Do not start the engine within 2 hours of installation.**

(a) Remove any old packing (FIPG) material and be careful not to drop any oil on the contact surface of the cylinder block and oil pan.

(b) Apply a continuous bead (Diameter 3 to 4 mm (0.118 to 0.157 in.)) of seal packing as shown in the illustration, then install the oil pan.
Seal packing: part No. 08826 – 00080 or equivalent

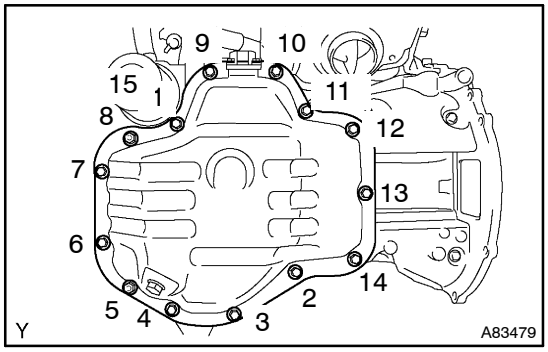

(c) Install the oil pan with the 12 bolts and 2 nuts sequence shown in the illustration.
Torque: 9.0 N·m (92 kgf·cm, 80 in.·lbf)

54. INSTALL CRANKSHAFT POSITION SENSOR (See page 18–6)

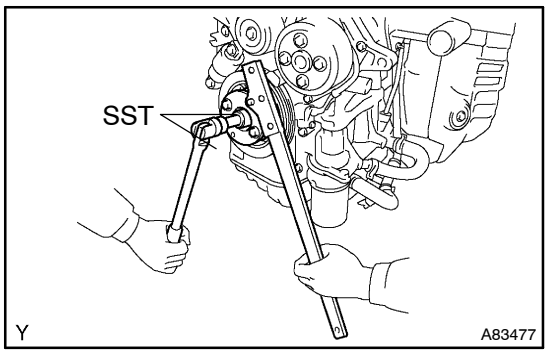

55. INSTALL CRANKSHAFT PULLEY

(a) Using SST, tighten the set bolt.
SST 09213–54015 (91651–60855), 09330–00021
Torque: 170 N·m (1,733 kgf·cm, 125 ft·lbf)

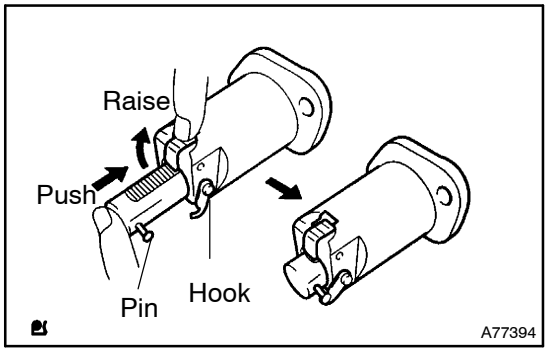

56. INSTALL CHAIN TENSIONER ASSY NO.1

(a) Release the ratchet pawl, fully push in the plunger and apply the hook to the pin so that the plunger is located in position.

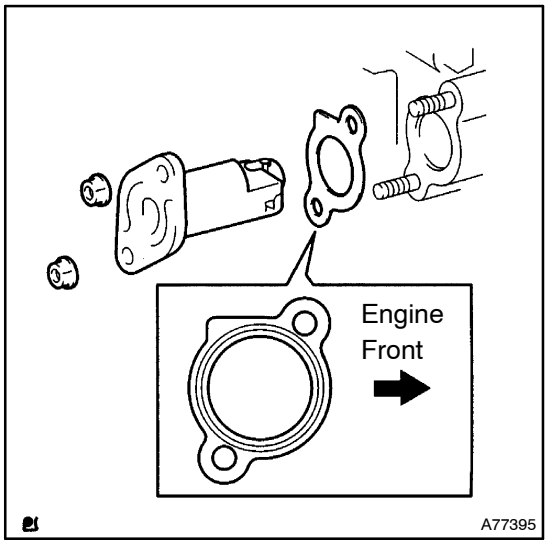

(b) Install a new gasket chain tensioner with the 2 nuts.
Torque: 9.0 N·m (92 kgf·cm, 80 in.·lbf)

NOTICE:
If the hook is released while inserting, apply the hook again and insert the chain tensioner.

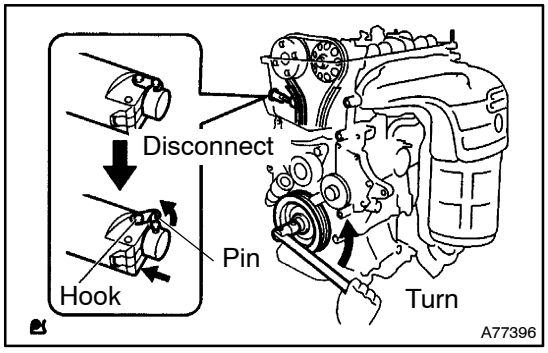

(c) Turn the crankshaft counterclockwise, then check that the hook is disengaged from the plunger knock pin.

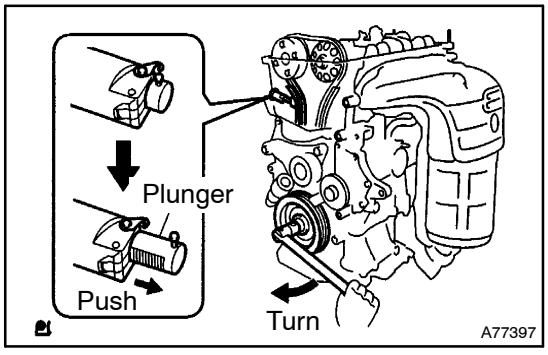

(d) Turn the crankshaft clockwise, then check that the plunger is extended.

57. INSTALL TRANSVERSE ENGINE ENGINE MOUNTING INSULATOR
Torque: 52 N·m (530 kgf·cm, 38 ft·lbf)

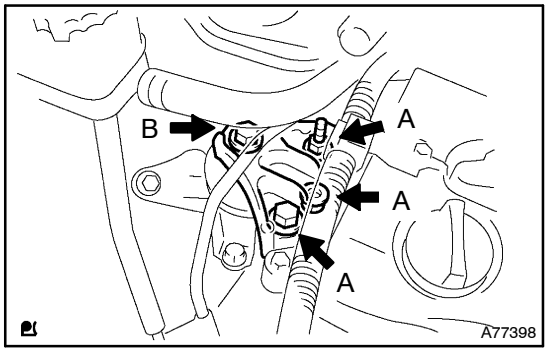

58. INSTALL ENGINE MOUNTING BRACKET NO.2 RH
Torque:
52 N·m (530 kgf·cm, 38 ft·lbf) for A
113 N·m (1,152 kgf·cm, 83 ft·lbf) for B

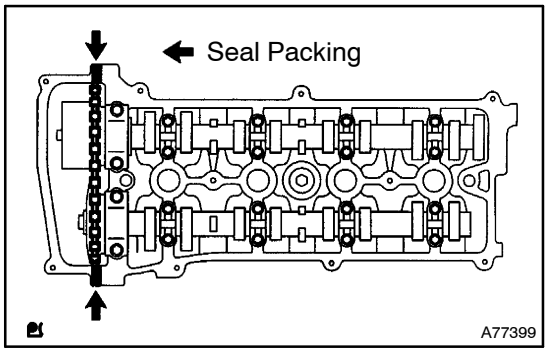

59. INSTALL CYLINDER HEAD COVER SUB–ASSY
(a) Remove any old seal packing (FIPG) material.
(b) Apply seal packing to the 2 locations as shown in the illustration.
Seal Packing: Part No. 08826–00080 or equivalent

NOTICE:
- **Remove any oil from the contact surface.**
- **Install the cylinder head cover within 5 minutes after applying seal packing.**
- **Do not expose the seal to engine oil 2 hours after installing.**

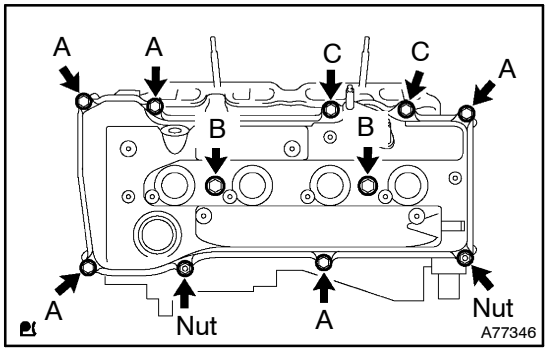

(c) install the cylinder head cover with the 9 bolts and 2 nuts.
Torque:
11 N·m (112 kgf·cm, 8 ft·lbf) for Nnt
11 N·m (112 kgf·cm, 8 ft·lbf) for Bolt A
14 N·m (143 kgf·cm, 10 ft·lbf) for Bolt B
21 N·m (214 kgf·cm, 16 ft·lbf) for Bolt C

60. INSTALL COOLER BRACKET (LHD STEERING POSITION TYPE)
Torque: 9.0 N·m (92 kgf·cm, 80 in.·lbf)
61. INSTALL ENGINE SERVICE COVER BRACKET RH (RHD STEERING POSITION TYPE)
Torque: 9.0 N·m (92 kgf·cm, 80 in.·lbf)
62. INSTALL ENGINE WIRE
Torque: 7.0 N·m (71 kgf·cm, 62 in.·lbf)
63. INSTALL OIL RESERVOIR BRACKET NO.1
Torque: 8.0 N·m (82 kgf·cm, 71 in.·lbf)
64. INSTALL COOLER REFRIGERANT SUCTION HOSE NO.1 (LHD STEERING POSITION TYPE)
65. INSTALL RETURN TUBE SUB–ASSY
Torque: 8.0 N·m (82 kgf·cm, 71 in.·lbf)
66. INSTALL IGNITION COIL ASSY
Torque: 9.0 N·m (92 kgf·cm, 80 in.·lbf)

67. INSTALL VANE PUMP ASSY
Torque: 37 N·m (377 kgf·cm, 27 ft·lbf)
SST 09249–63010
68. INSTALL EXHAUST PIPE ASSY FRONT (See page 15–2)
69. INSTALL GENERATOR ASSY (See page 19–8)
70. INSTALL FAN AND GENERATOR V BELT (See page 14–5)
SST 09249–63010
71. INSTALL FUEL PUMP ASSY (See page 11–24)
72. INSTALL FUEL PIPE SUB–ASSY NO.1 (See page 11–24)
SST 09023–12900
73. INSTALL FUEL TUBE SUB–ASSY (See page 11–4)
74. INSTALL FUEL PRESSURE PULSATION DAMPER ASSY (See page 11–24)
75. ADD ENGINE OIL (See page 17–6)
76. CHECK FOR ENGINE OIL LEAKS
77. CHECK FOR FUEL LEAKS
78. INSTALL ENGINE COVER SUB–ASSY NO.1
Torque: 9.0 N·m (92 kgf·cm, 80 in.·lbf)
79. INSTALL FRONT WHEEL RH
Torque: 103 N·m (1,050 kgf·cm, 76 ft·lbf)
80. ADD POWER STEERING FLUID (See Pub. No. RM1018E on page 51–4)
81. BLEED POWER STEERING FLUID (See Pub. No. RM1018E on page 51–4)
82. CHECK POWER STEERING FULUID LEVEL IN RESERVER (See Pub. No. RM1018E on page 51–4)

CAMSHAFT (2AZ–FSE)

COMPONENTS

141N8–01

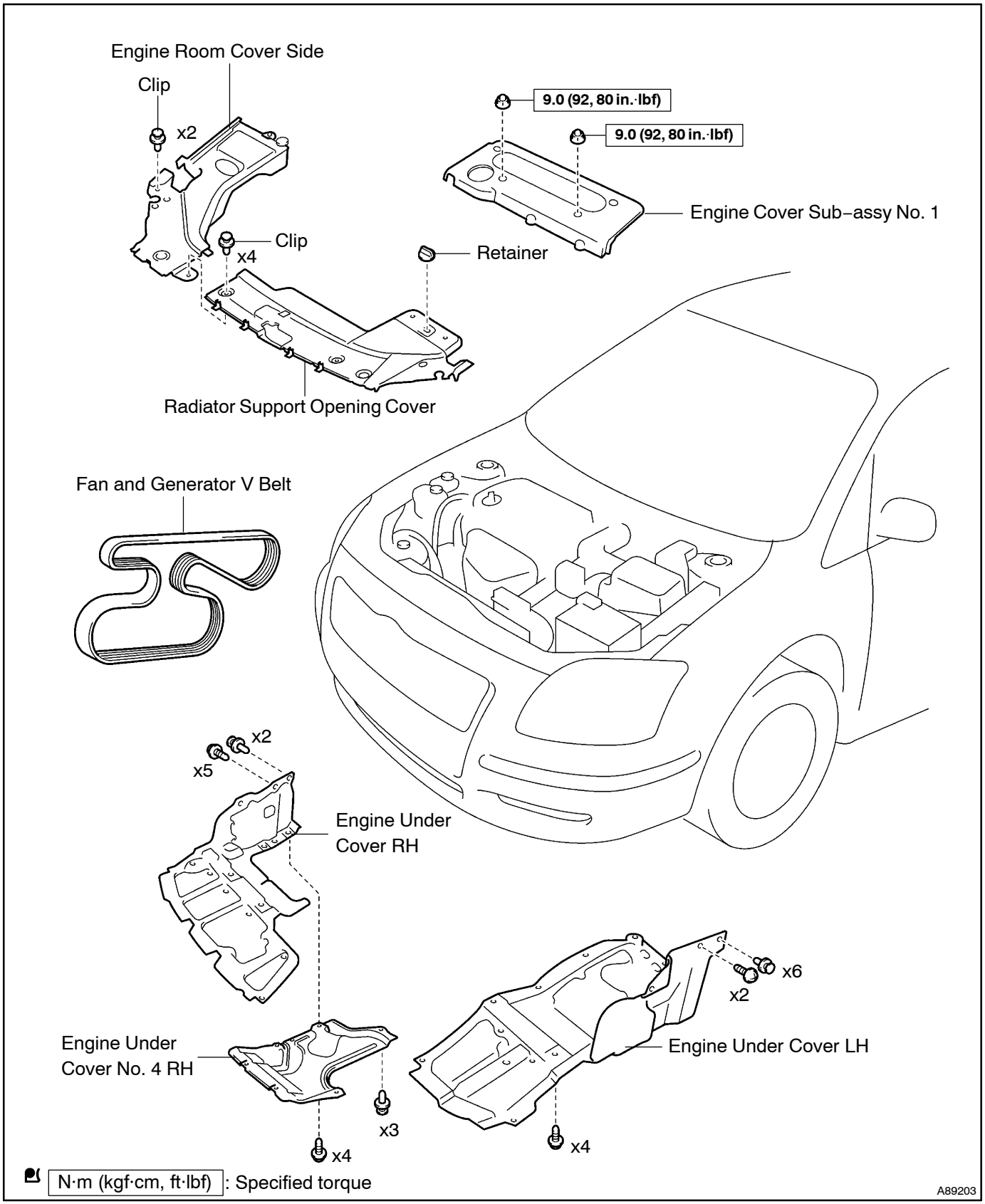

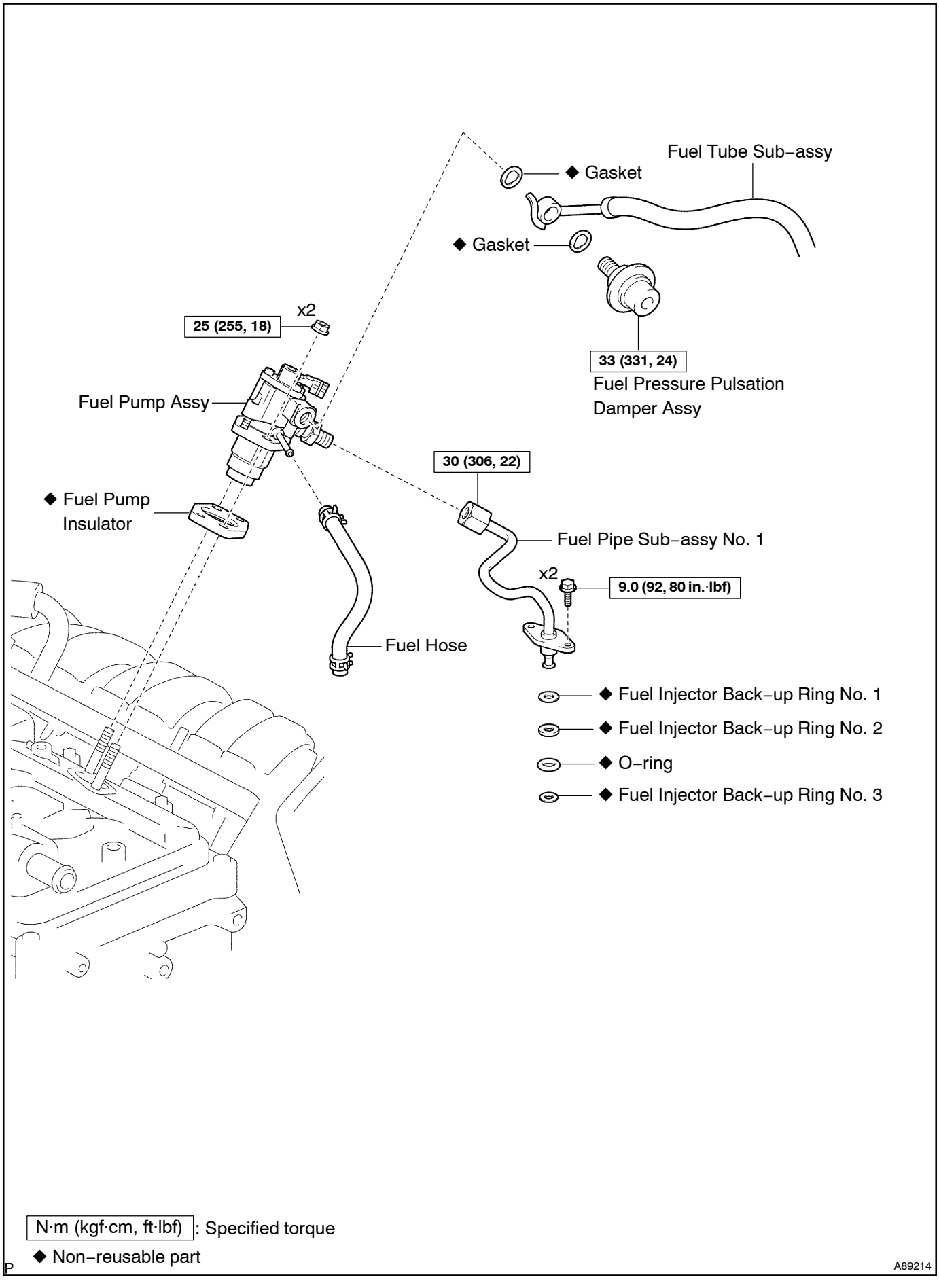
Fuel Tube Sub–assy
◆ Gasket
◆ Gasket
x2
25 (255, 18)
33 (331, 24)
Fuel Pressure Pulsation Damper Assy
Fuel Pump Assy
30 (306, 22)
◆ Fuel Pump Insulator
Fuel Pipe Sub–assy No. 1
x2
9.0 (92, 80 in.·lbf)
Fuel Hose
◆ Fuel Injector Back–up Ring No. 1
◆ Fuel Injector Back–up Ring No. 2
◆ O–ring
◆ Fuel Injector Back–up Ring No. 3
N·m (kgf·cm, ft·lbf) : Specified torque
◆ Non–reusable part
P
A89214

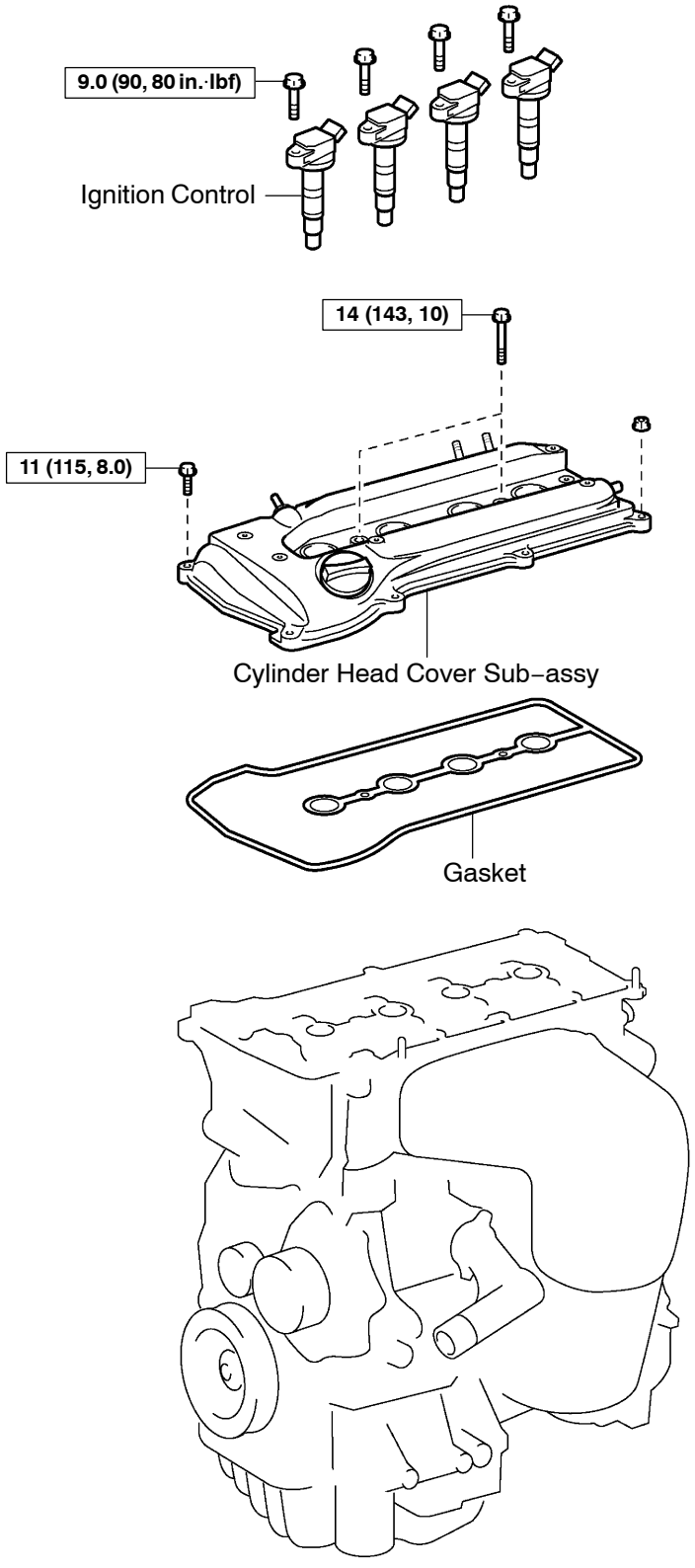

N·m (kgf·cm, ft·lbf) : Specified torque

A89213

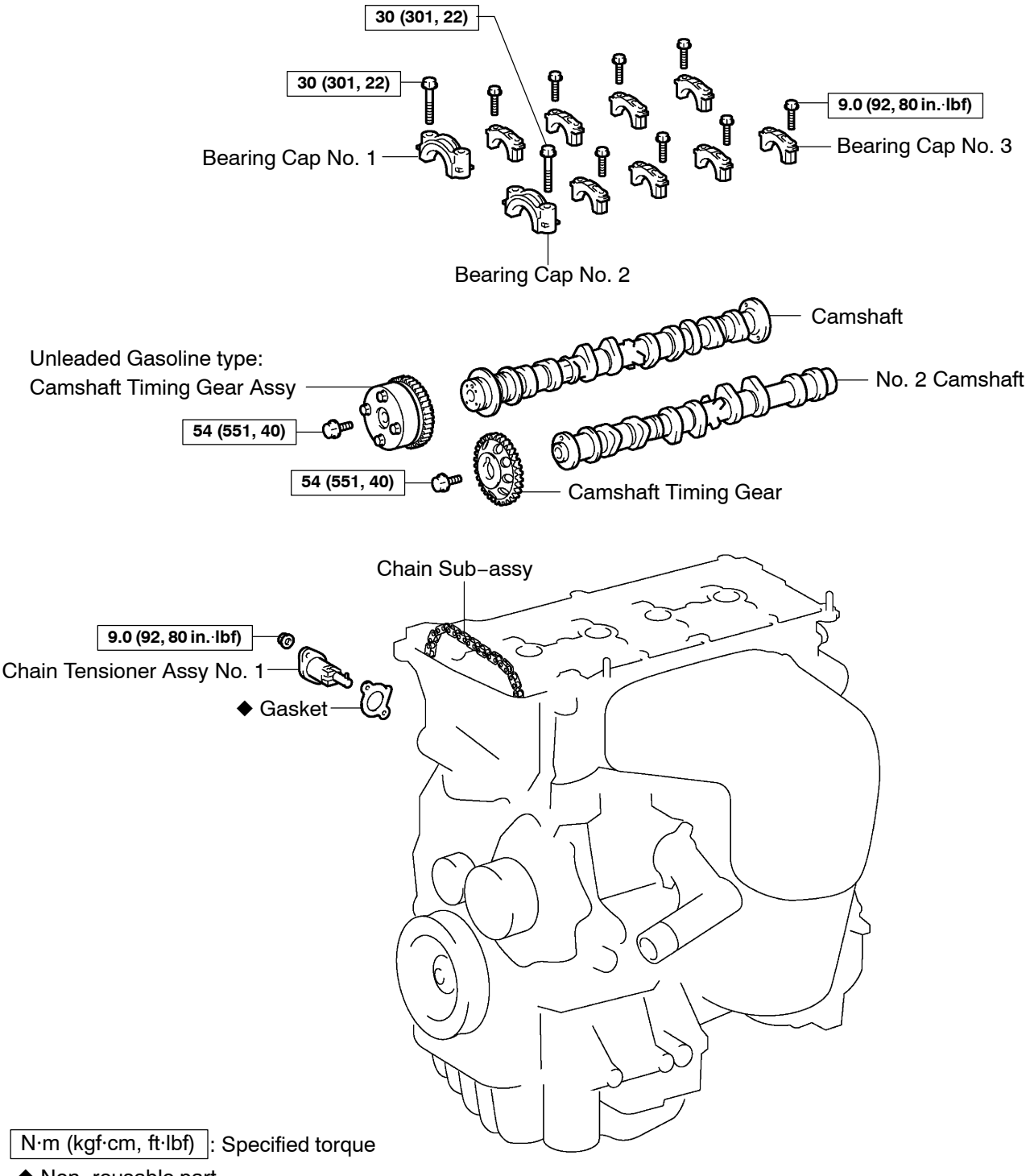
30 (301, 22)
30 (301, 22)
9.0 (92, 80 in.·lbf)
Bearing Cap No. 1
Bearing Cap No. 3
Bearing Cap No. 2
Camshaft
Unleaded Gasoline type:
Camshaft Timing Gear Assy
No. 2 Camshaft
54 (551, 40)
54 (551, 40)
Camshaft Timing Gear
Chain Sub–assy
9.0 (92, 80 in.·lbf)
Chain Tensioner Assy No. 1
◆ Gasket
N·m (kgf·cm, ft·lbf): Specified torque
◆ Non–reusable part
A79802

141N9–01

REPLACEMENT

1. DISCHARGE FUEL SYSTEM PRESSURE (See page 11–4)
2. REMOVE RADIATOR SUPPORT OPENING COVER (See page 14–23)
3. REMOVE ENGINE ROOM COVER SIDE (See page 14–23)
4. REMOVE ENGINE UNDER COVER LH (See page 14–23)
5. REMOVE COVER, ENGINE UNDER, NO.4 RH (See page 14–23)
6. REMOVE ENGINE UNDER COVER RH (See page 14–23)
7. REMOVE ENGINE COVER SUB–ASSY NO.1 (See page 14–45)
8. REMOVE IGNITION COIL ASSY (See page 14–45)
9. REMOVE FUEL PRESSURE PULSATION DAMPER ASSY
10. REMOVE FUEL TUBE SUB–ASSY (See page 11–4)
11. REMOVE FUEL PIPE SUB–ASSY NO.1 (See page 11–4)
    SST 09023–12900
12. REMOVE FUEL PUMP ASSY (See page 11–24)
13. REMOVE CYLINDER HEAD COVER SUB–ASSY (See page 14–45)
14. SET NO. 1 CYLINDER TO TDC/COMPRESSION (See page 14–45)
15. REMOVE CHAIN TENSIONER ASSY NO.1 (See page 14–45)

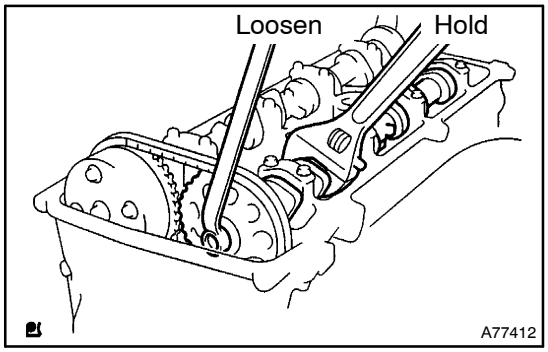

16. REMOVE NO.2 CAMSHAFT

(a) Hold the No. 2 camshaft with a wrench on the hexagonal lobe, then loosen the camshaft timing gear set bolt.

NOTICE:

Be careful not to damage the cylinder head and valve lifter with the wrench.

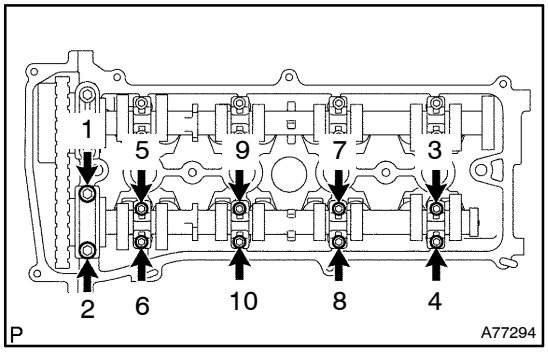

(b) Using several steps, loosen and remove the 10 camshaft bearing cap bolts uniformly in the sequence shown in the illustration.

(c) Remove the 5 camshaft bearing caps.

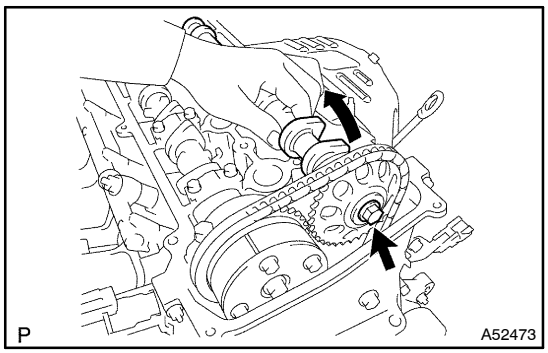

(d) Raising the No. 2 camshaft, remove the set bolt.

(e) Remove the camshaft timing gear from the No. 2 camshaft with with the timing chain wrapped.

(f) Remove the camshaft timing gear from the timing chain.

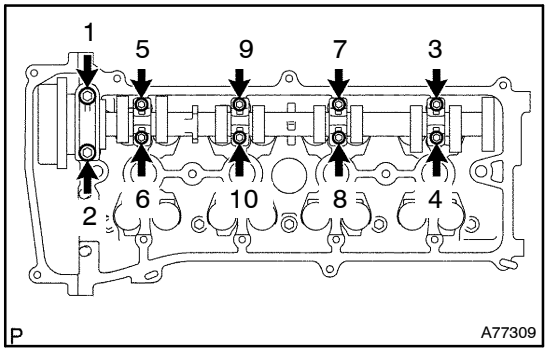

17. REMOVE CAMSHAFT

(a) Using several steps, loosen and remove the 10 camshaft bearing cap bolts uniformly in the sequence shown in the illustration.

(b) Remove 5 camshaft bearings.

(c) Remove the camshaft.

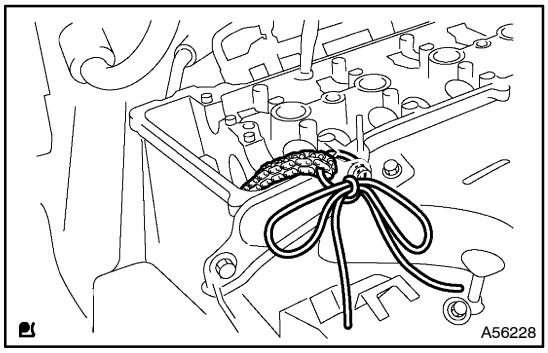

(d) Tie the timing chain as shown in the illustration.

NOTICE:

- **Be careful not to drop anything inside the timing chain cover.**
- **Do not expose the chain to water and dust.**

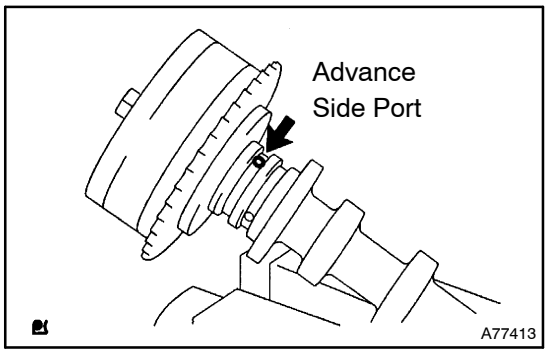

18. REMOVE CAMSHAFT TIMING GEAR ASSY

(a) Clamp the camshaft in a vise, then make sure the camshaft timing gear does not rotate.

(b) Cover all the oil ports with vinyl tape except an advance side port shown in the illustration.

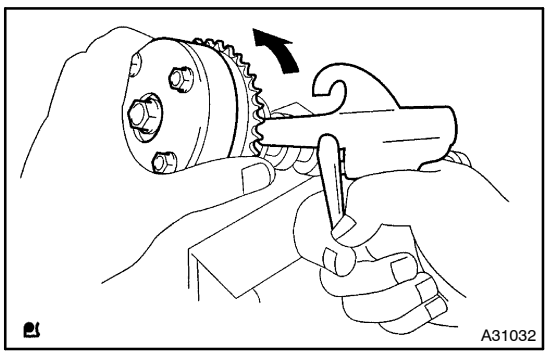

(c) Put air pressure into the oil port with 150 kpa (1.5 kgf/cm^2 21 psi), then turn the camshaft timing gear to the advance direction (counterclockwise) with hand.

CAUTION:

Cover the ports with shop rag to avoid oil splashing.

HINT:

Depending on the air pressure, the camshaft timing gear will turn to the advance angle side without applying force with hand. Also, under the condition that the pressure can be hardly applied because of the air leakage from the port, there may be the case that the lock pin could be hardly released.

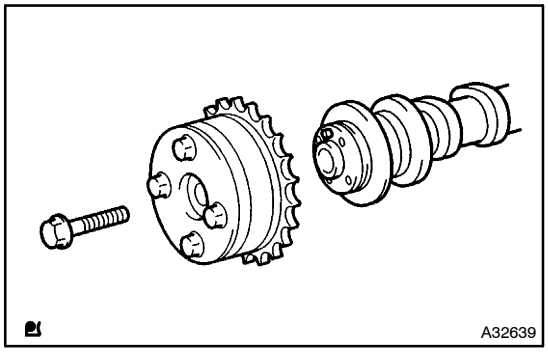

(d) Remove a fringe bolt of camshaft timing gear.

NOTICE:

- **Be sure not to remove the other 4 bolts.**
- **When reusing the camshaft timing gear, release the straight pin lock first, and then install the gear.**

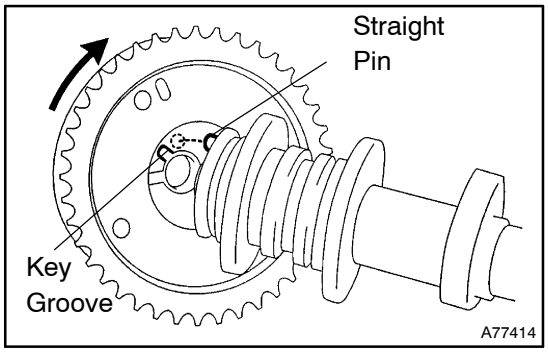

19. INSTALL CAMSHAFT TIMING GEAR ASSY

(a) Put the camshaft timing gear and the camshaft together with the straight pin off the key groove.

(b) Turn the camshaft timing gear assembly to the left direction (as shown in the illustration) while lightly pushing it toward the camshaft. Push further at the position where the pin gets into the groove.

NOTICE:

Be sure not to turn the camshaft timing gear to the retard angle side (to the right direction).

(c) Check that there is no clearance between the gear's fringe and the camshaft.

(d) Tighten the fringe bolt with the camshaft timing gear fixed.
Torque: 54 N·m (551 kgf·cm, 40 ft·lbf)

(e) Check that the camshaft timing gear can move to the retard angle side (to the right direction) and is locked at the most retarded position.

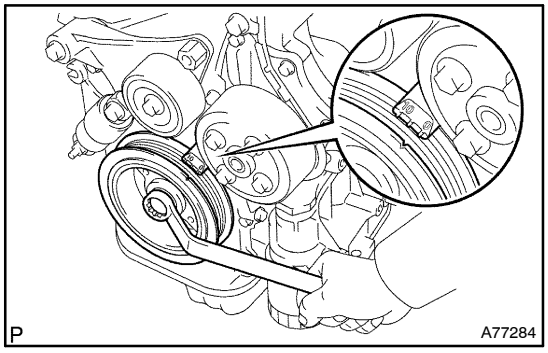

20. INSTALL CAMSHAFT

(a) Turn the crankshaft pulley, then align its groove with the timing mark 0 of the timing chain cover.

(b) Install the timing chain on the camshaft timing gear, with the painted links aligned with the timing marks on the camshaft timing gear.

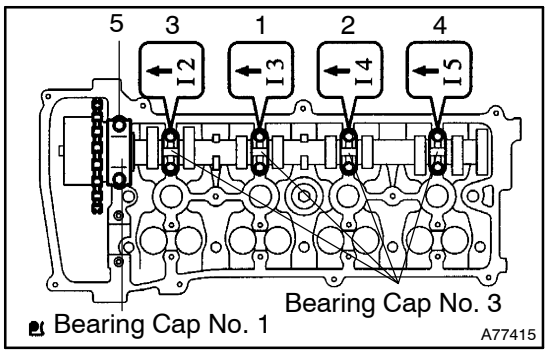

(c) Examine the front marks and numbers, then tighten the bolts in the sequence shown in the illustration.
Torque:
30 N·m (301 kgf·cm, 22 ft·lbf) for Bearing cap No. 1
9.0 N·m (92 kgf·cm, 80 in.·lbf) for Bearing cap No. 3

21. INSTALL NO.2 CAMSHAFT

(a) Put the No. 2 camshaft on the cylinder head with the painted links of chain aligned with the timing mark on the camshaft timing gear.

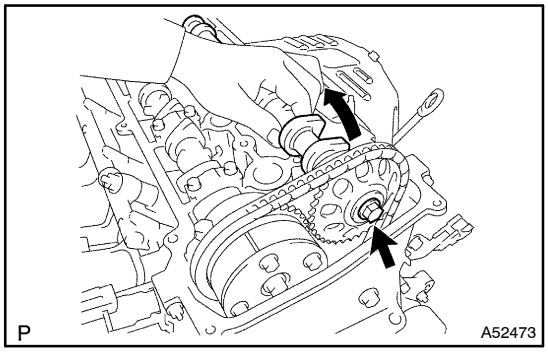

(b) Raising the No. 2 camshaft, tighten the set bolt temporarily.

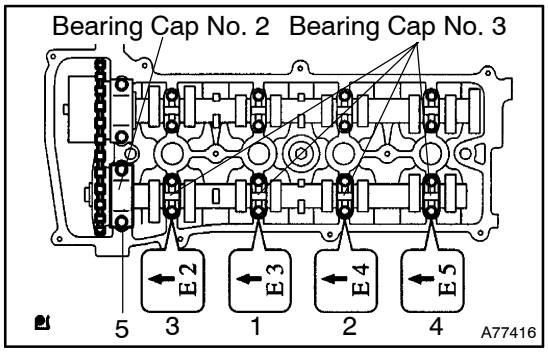

(c) Examine the from marks and numbers, then tighten the bolts in the sequence shown in the illustration.
Torque:
30 N·m (301 kgf·cm, 22 ft·lbf) for Bearing cap No. 2
9.0 N·m (92 kgf·cm, 80 in.·lbf) for Bearing cap No. 3

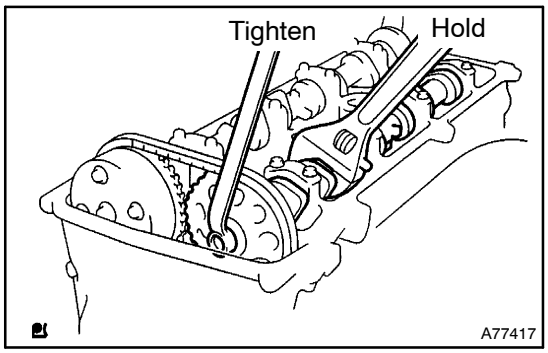

(d) Hold the camshaft with a wrench on the hexagonal lobe, then tighten the camshaft timing gear set bolt.
Torque: 54 N·m (551 kgf·cm, 40 ft·lbf)

NOTICE:
Be careful not to damage the cylinder head and valve lifter.

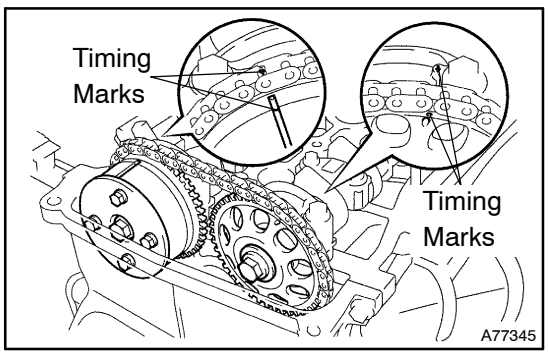

(e) Check that the match marks on the timing chain and camshaft timing gears are positioned as shown in the illustration

22. **INSTALL CHAIN TENSIONER ASSY NO.1 (See page 14–45)**
23. **INSTALL CYLINDER HEAD COVER SUB–ASSY (See page 14–45)**
24. **INSTALL FUEL PUMP ASSY (See page 11–24)**
25. **INSTALL FUEL PIPE SUB–ASSY NO.1 (See page 11–24)**
    SST 09023–12900
26. **INSTALL FUEL TUBE SUB–ASSY (See page 11–4)**
27. **INSTALL FUEL PRESSURE PULSATION DAMPER ASSY (See page 11–24)**
28. **INSTALL IGNITION COIL ASSY**
    Torque: 9.0 N·m (92 kgf·cm, 80 in.·lbf)

29. CHECK FOR ENGINE OIL LEAKS

30. INSTALL ENGINE COVER SUB–ASSY NO.1
Torque: 9.0 N·m (92 kgf·cm, 80 in.·lbf)

CYLINDER HEAD GASKET (2AZ–FSE)

141NA–01

COMPONENTS

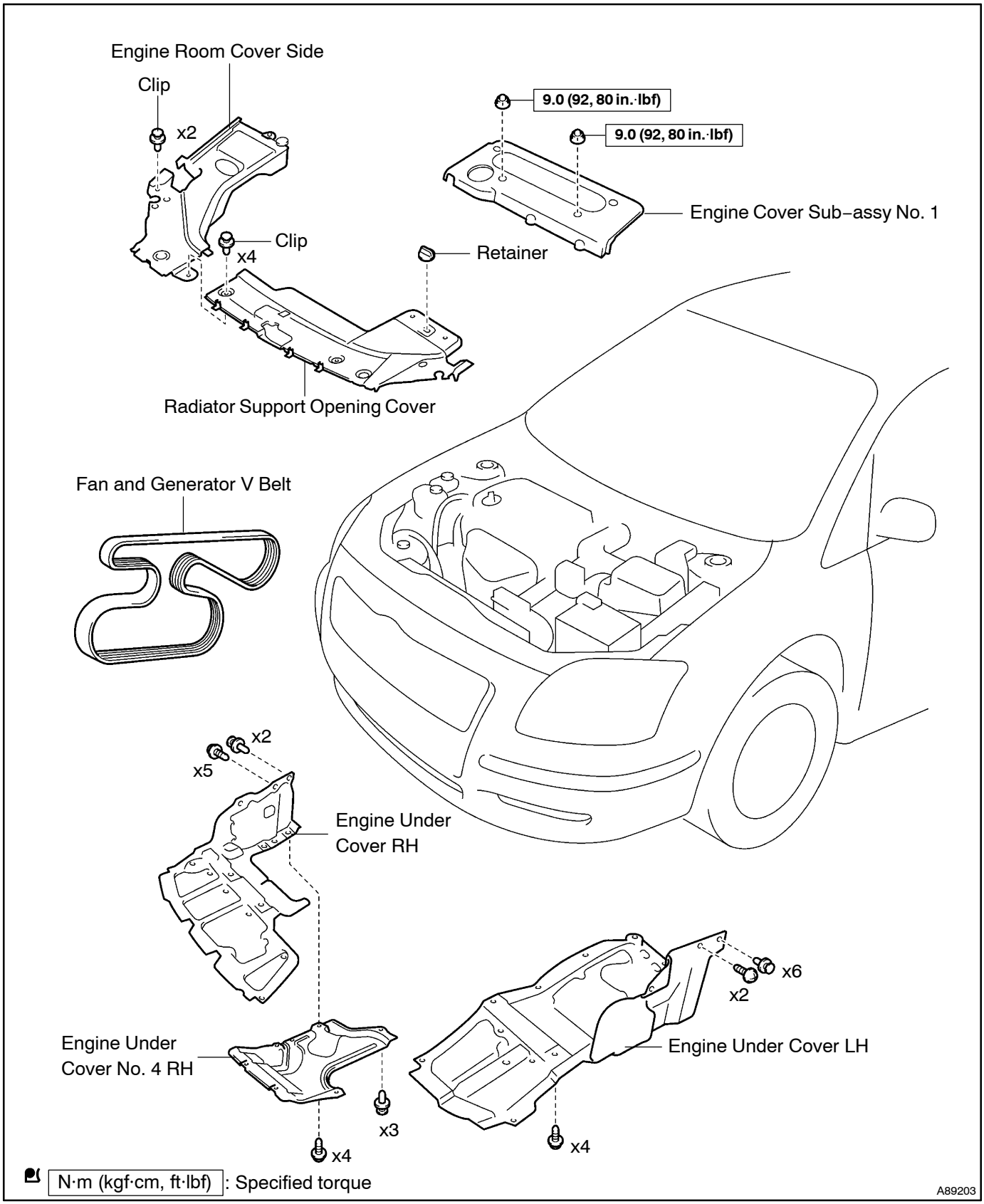

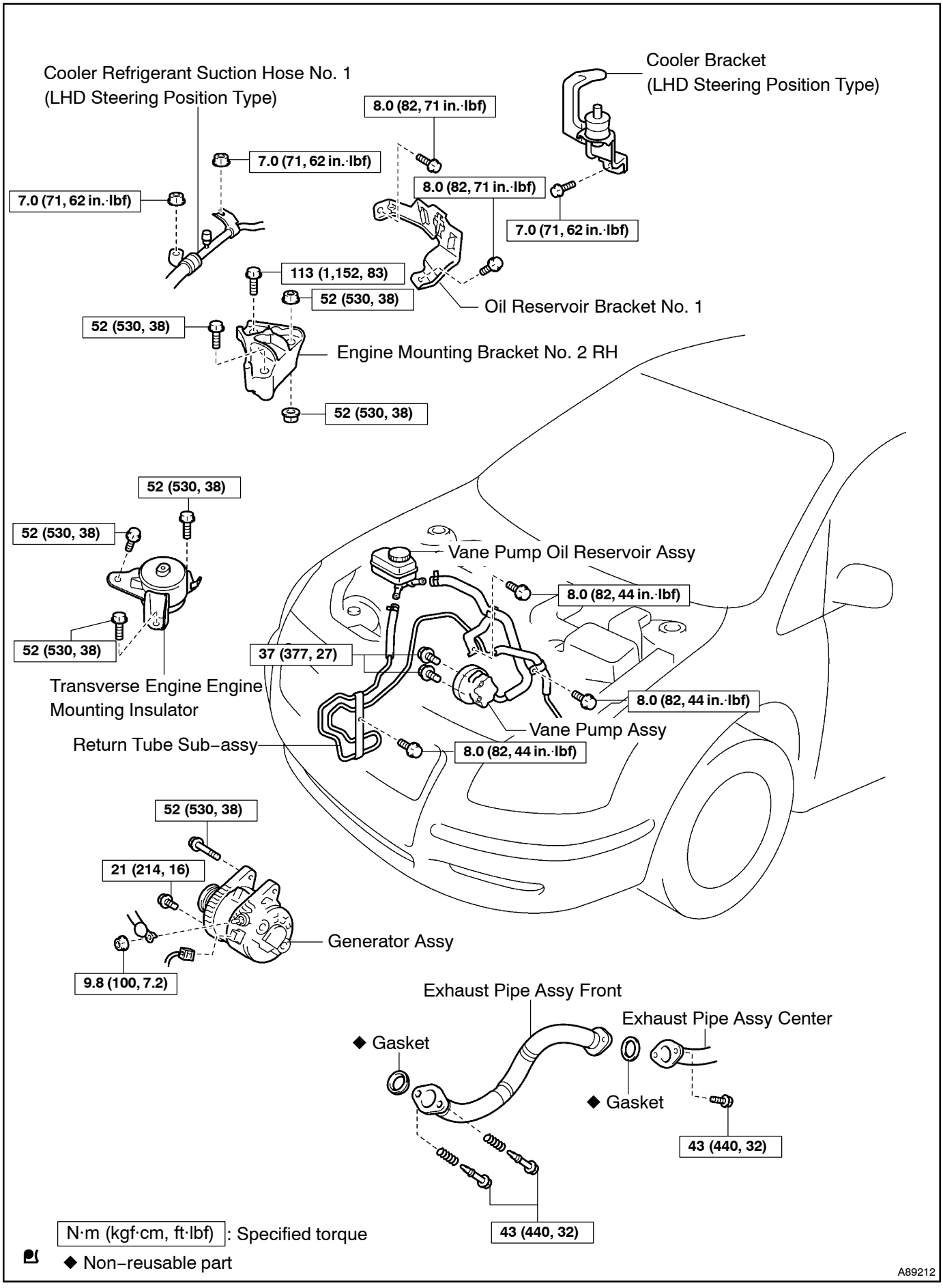
Cooler Refrigerant Suction Hose No. 1
(LHD Steering Position Type)
Cooler Bracket
(LHD Steering Position Type)
8.0 (82, 71 in.·lbf)
7.0 (71, 62 in.·lbf)
8.0 (82, 71 in.·lbf)
7.0 (71, 62 in.·lbf)
7.0 (71, 62 in.·lbf)
113 (1,152, 83)
52 (530, 38)
Oil Reservoir Bracket No. 1
52 (530, 38)
Engine Mounting Bracket No. 2 RH
52 (530, 38)
52 (530, 38)
52 (530, 38)
52 (530, 38)
Vane Pump Oil Reservoir Assy
8.0 (82, 44 in.·lbf)
37 (377, 27)
8.0 (82, 44 in.·lbf)
Transverse Engine Engine
Mounting Insulator
Vane Pump Assy
Return Tube Sub–assy
8.0 (82, 44 in.·lbf)
52 (530, 38)
21 (214, 16)
Generator Assy
9.8 (100, 7.2)
Exhaust Pipe Assy Front
Exhaust Pipe Assy Center
◆ Gasket
◆ Gasket
43 (440, 32)
43 (440, 32)
N·m (kgf·cm, ft·lbf) : Specified torque
◆ Non–reusable part
A89212

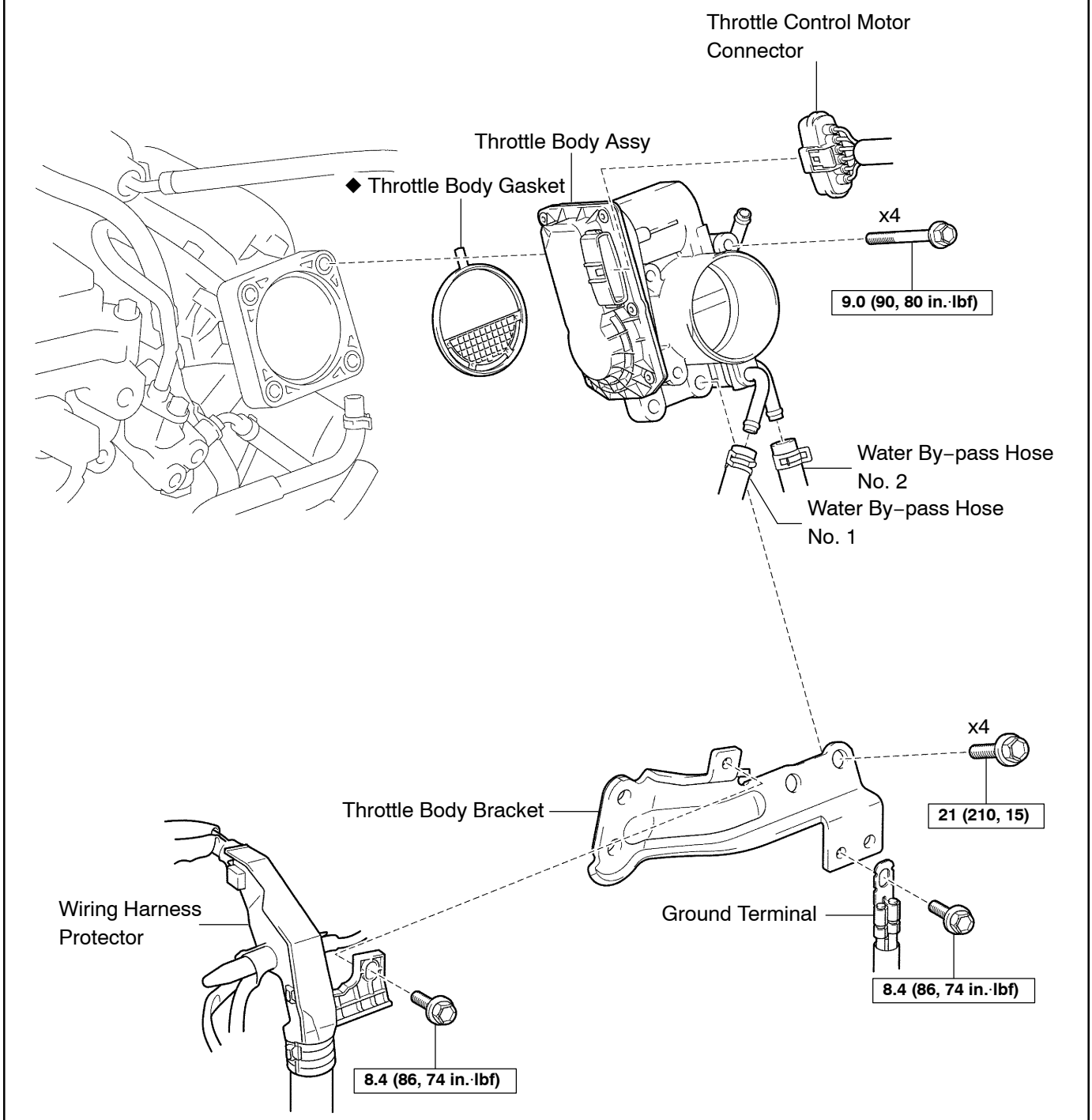

N·m (kgf·cm, ft·lbf) : Specified torque

◆ Non–reusable part

A84696

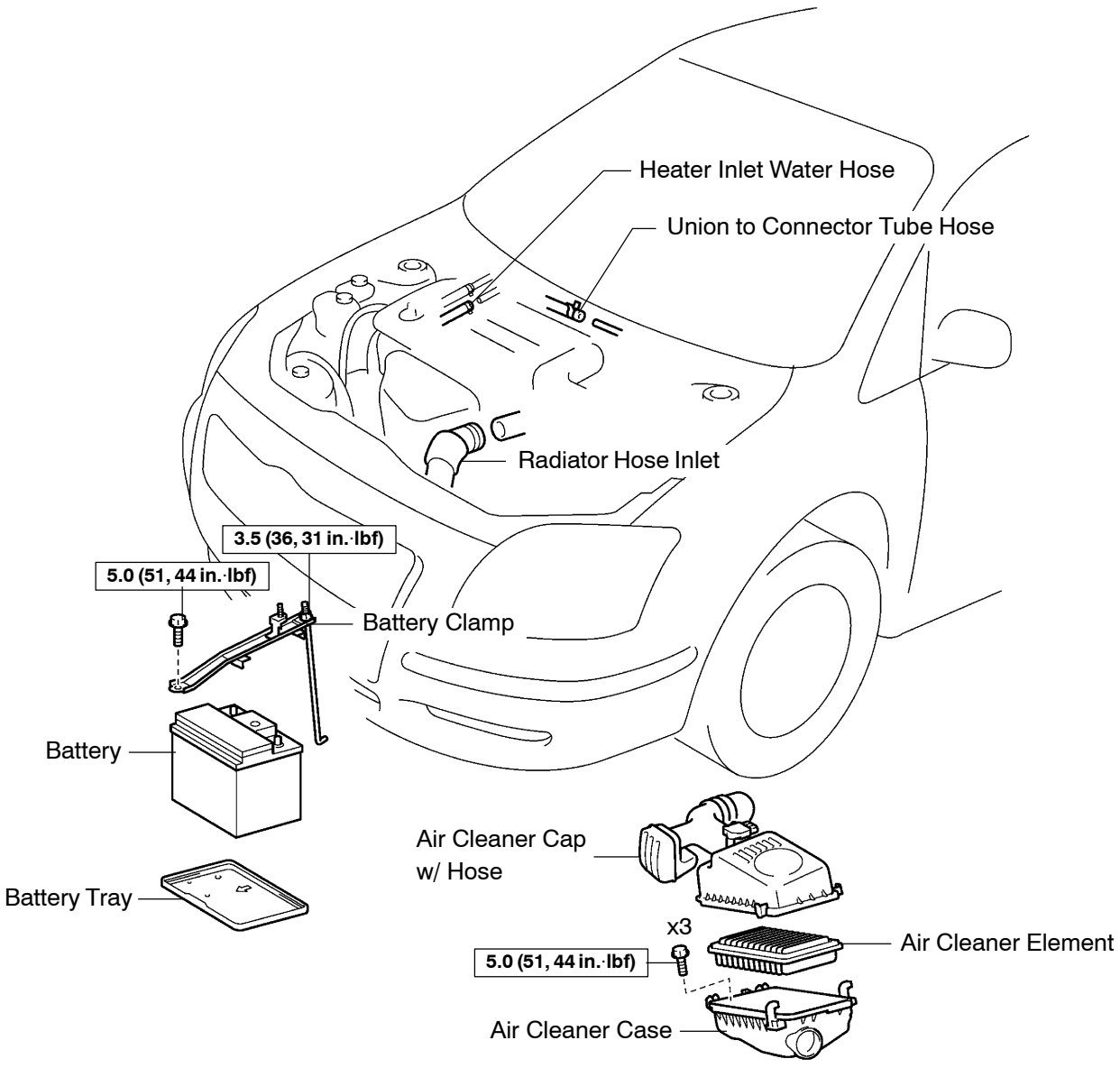

N·m (kgf·cm, ft·lbf) : Specified torque

A93079

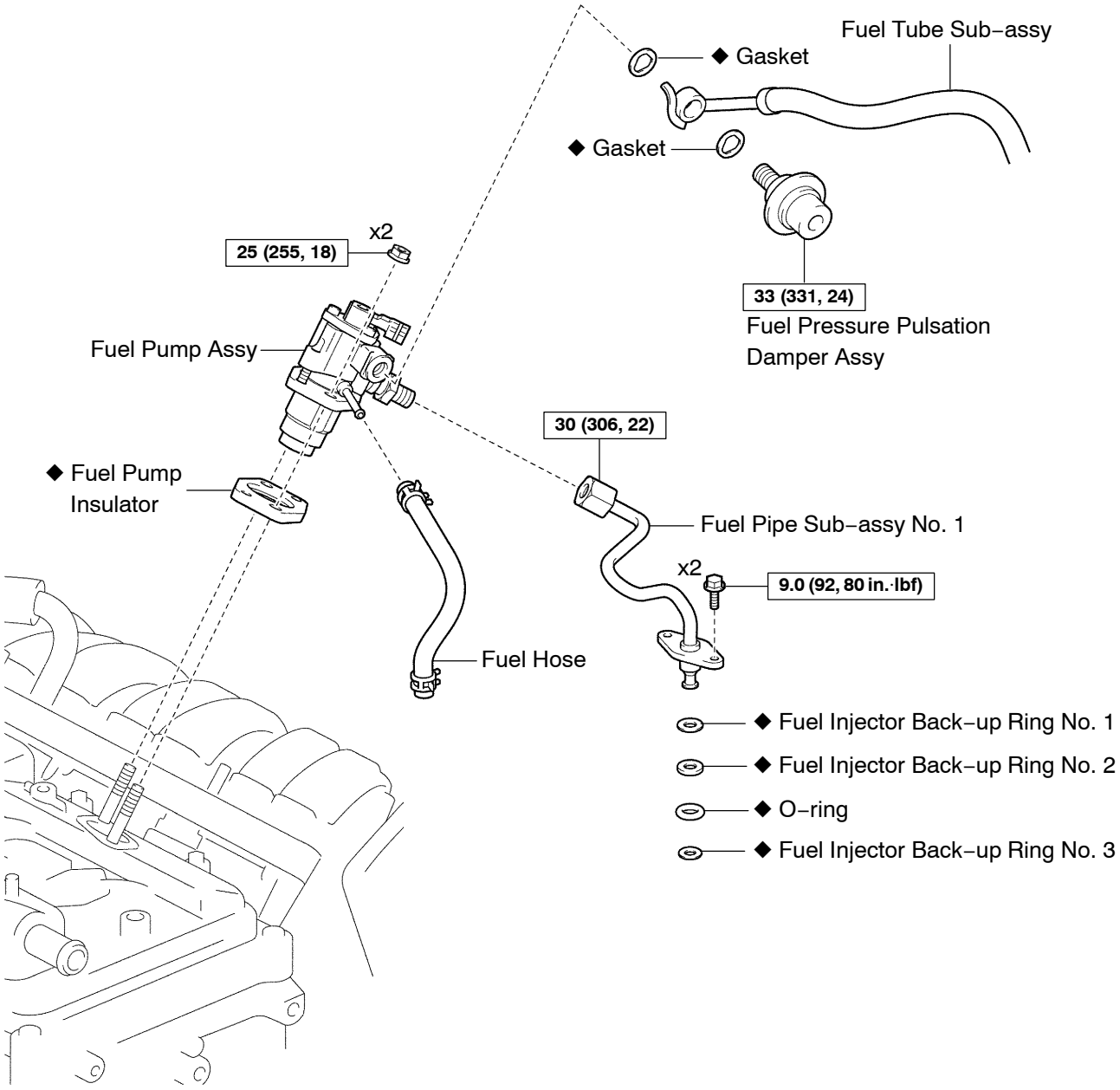

N·m (kgf·cm, ft·lbf) : Specified torque

◆ Non–reusable part

P

A89214

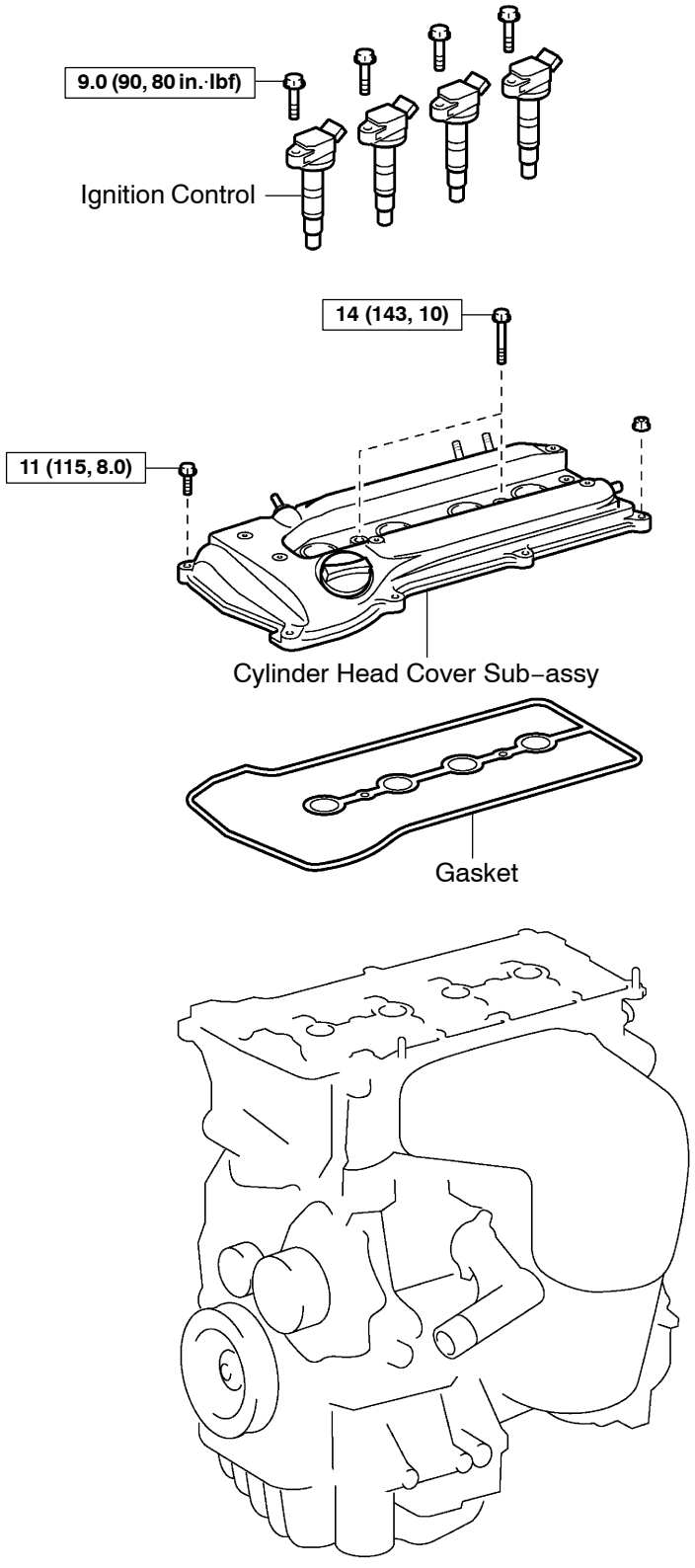

N·m (kgf·cm, ft·lbf) : Specified torque

A89213

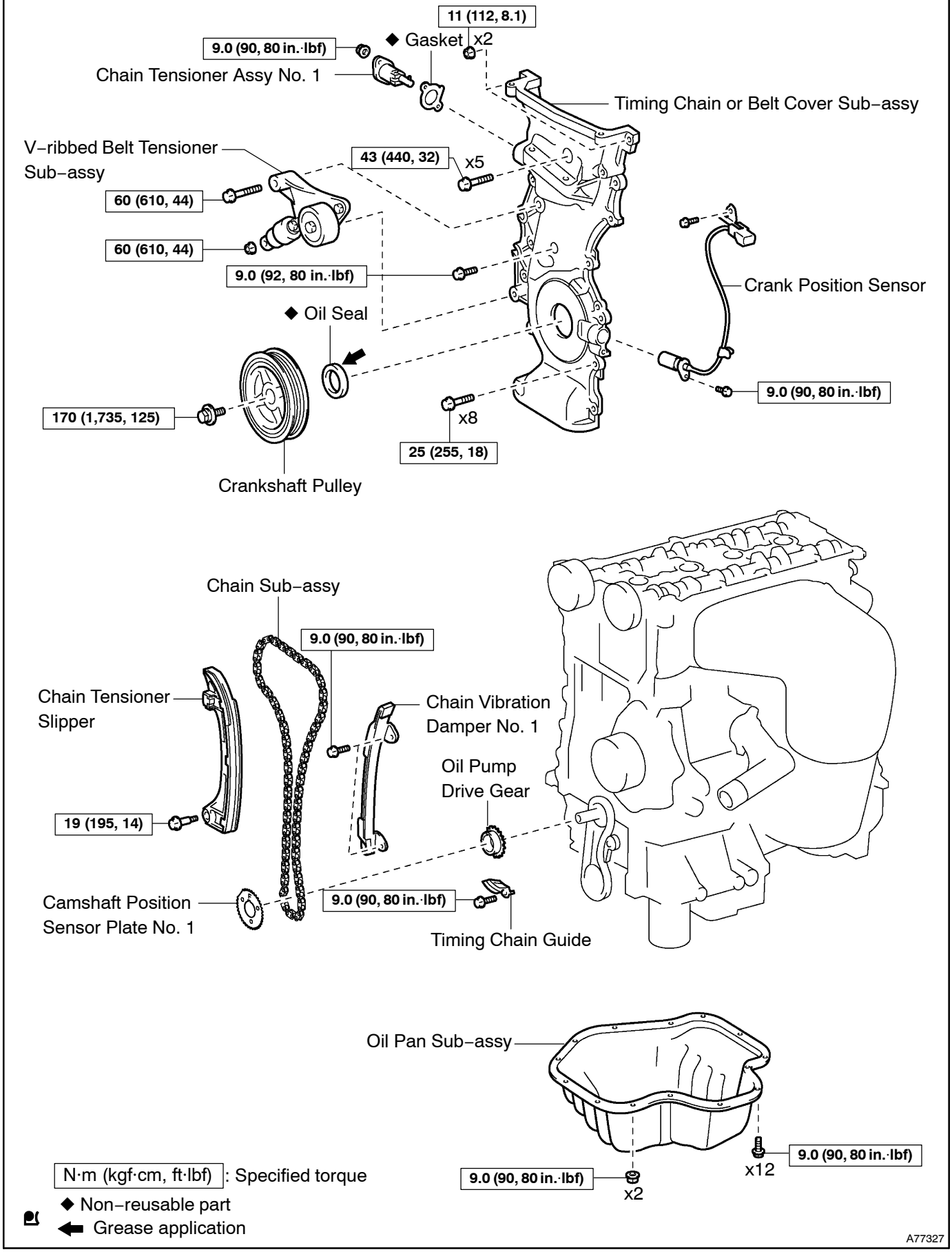
11 (112, 8.1)
◆ Gasket x2
9.0 (90, 80 in.·lbf)
Chain Tensioner Assy No. 1
Timing Chain or Belt Cover Sub–assy
V–ribbed Belt Tensioner Sub–assy
43 (440, 32)
x5
60 (610, 44)
60 (610, 44)
9.0 (92, 80 in.·lbf)
Crank Position Sensor
◆ Oil Seal
9.0 (90, 80 in.·lbf)
170 (1,735, 125)
x8
25 (255, 18)
Crankshaft Pulley
Chain Sub–assy
9.0 (90, 80 in.·lbf)
Chain Tensioner Slipper
Chain Vibration Damper No. 1
Oil Pump Drive Gear
19 (195, 14)
Camshaft Position Sensor Plate No. 1
9.0 (90, 80 in.·lbf)
Timing Chain Guide
Oil Pan Sub–assy
9.0 (90, 80 in.·lbf)
x12
9.0 (90, 80 in.·lbf)
x2
N·m (kgf·cm, ft·lbf) : Specified torque
◆ Non–reusable part
Grease application
A77327

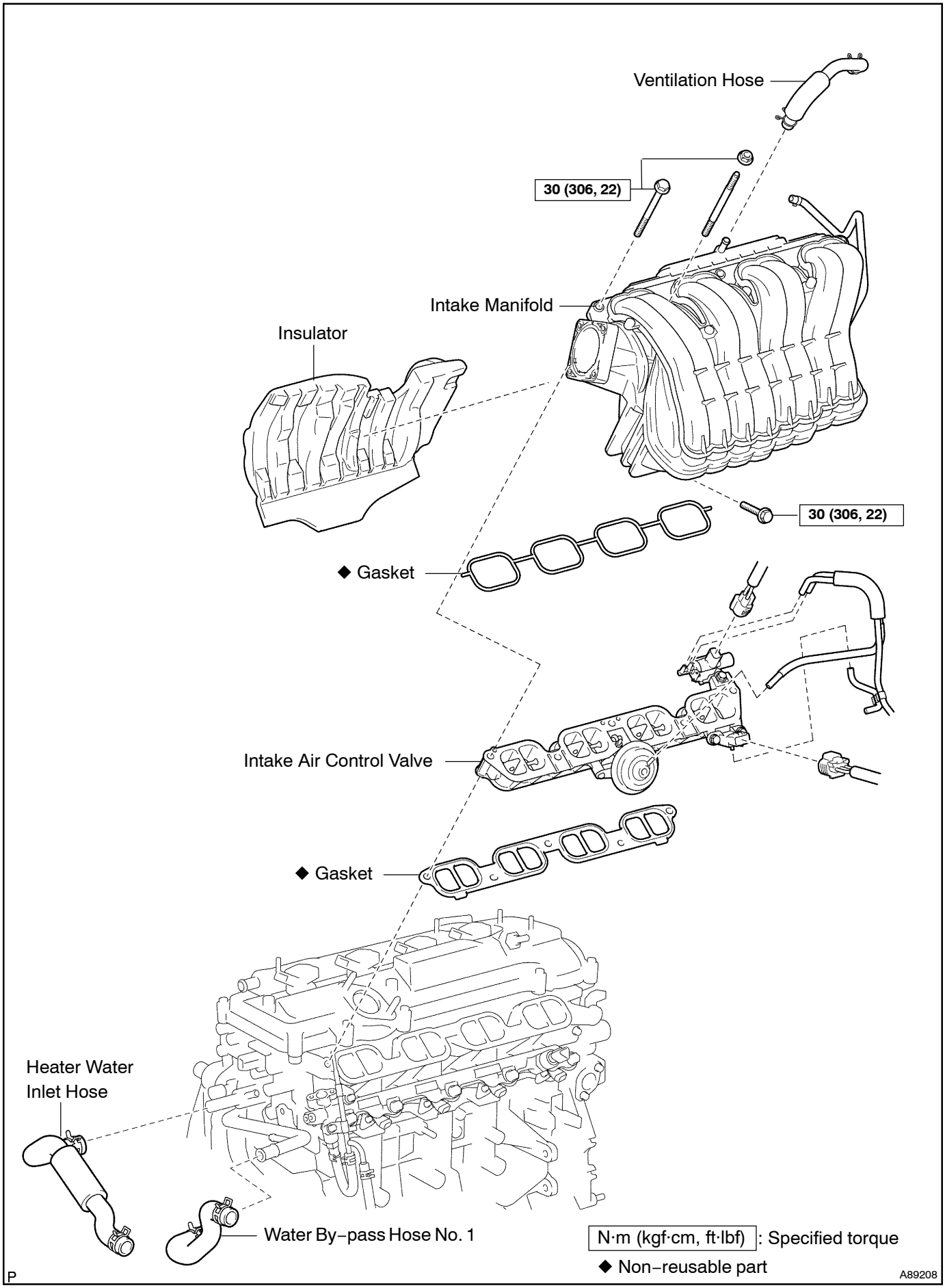
Ventilation Hose
30 (306, 22)
Intake Manifold
Insulator
30 (306, 22)
◆ Gasket
Intake Air Control Valve
◆ Gasket
Heater Water
Inlet Hose
Water By–pass Hose No. 1
N·m (kgf·cm, ft·lbf) : Specified torque
◆ Non–reusable part
P
A89208

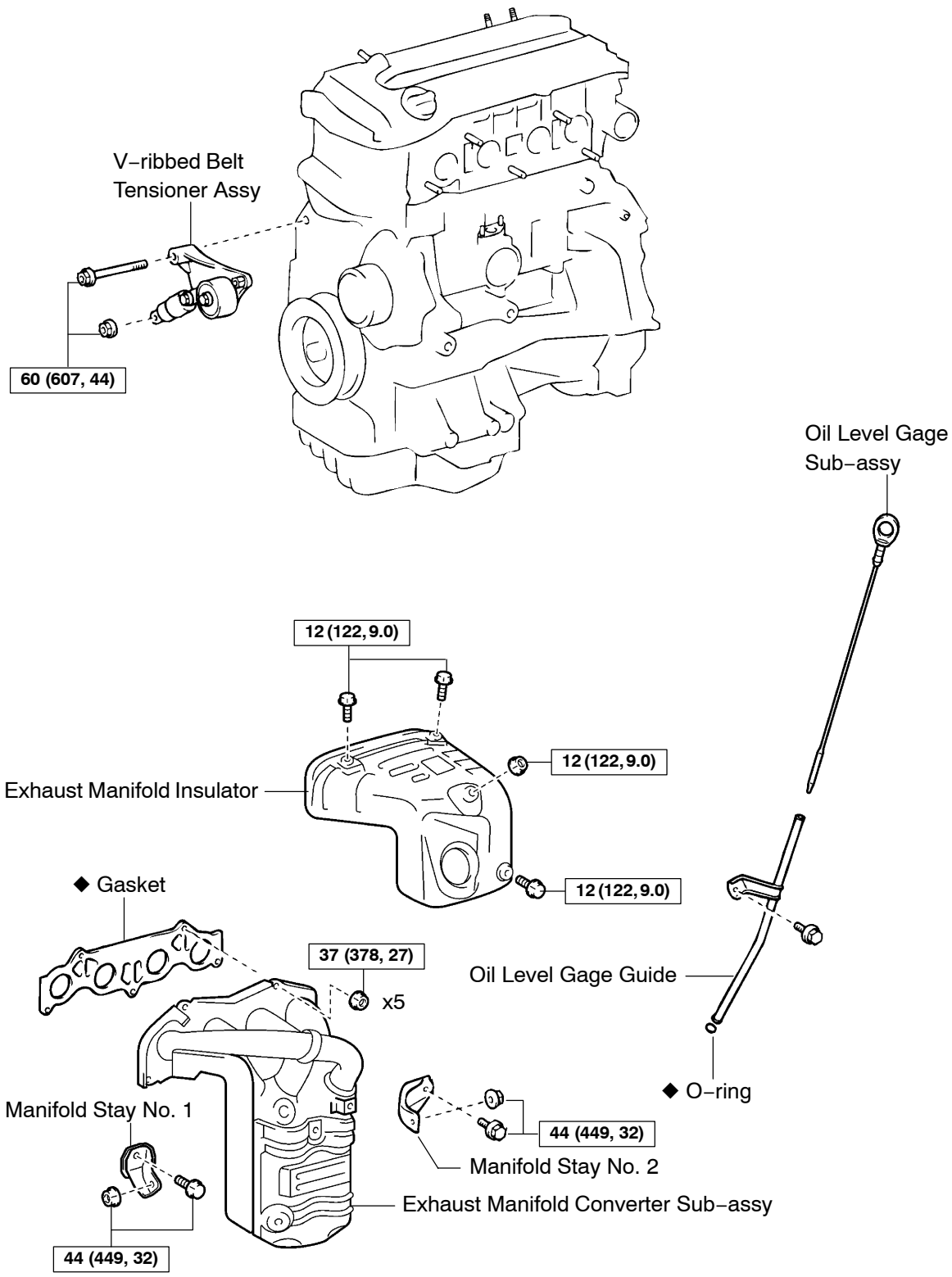

N·m (kgf·cm, ft·lbf) : Specified torque

◆ Non–reusable part

A93078

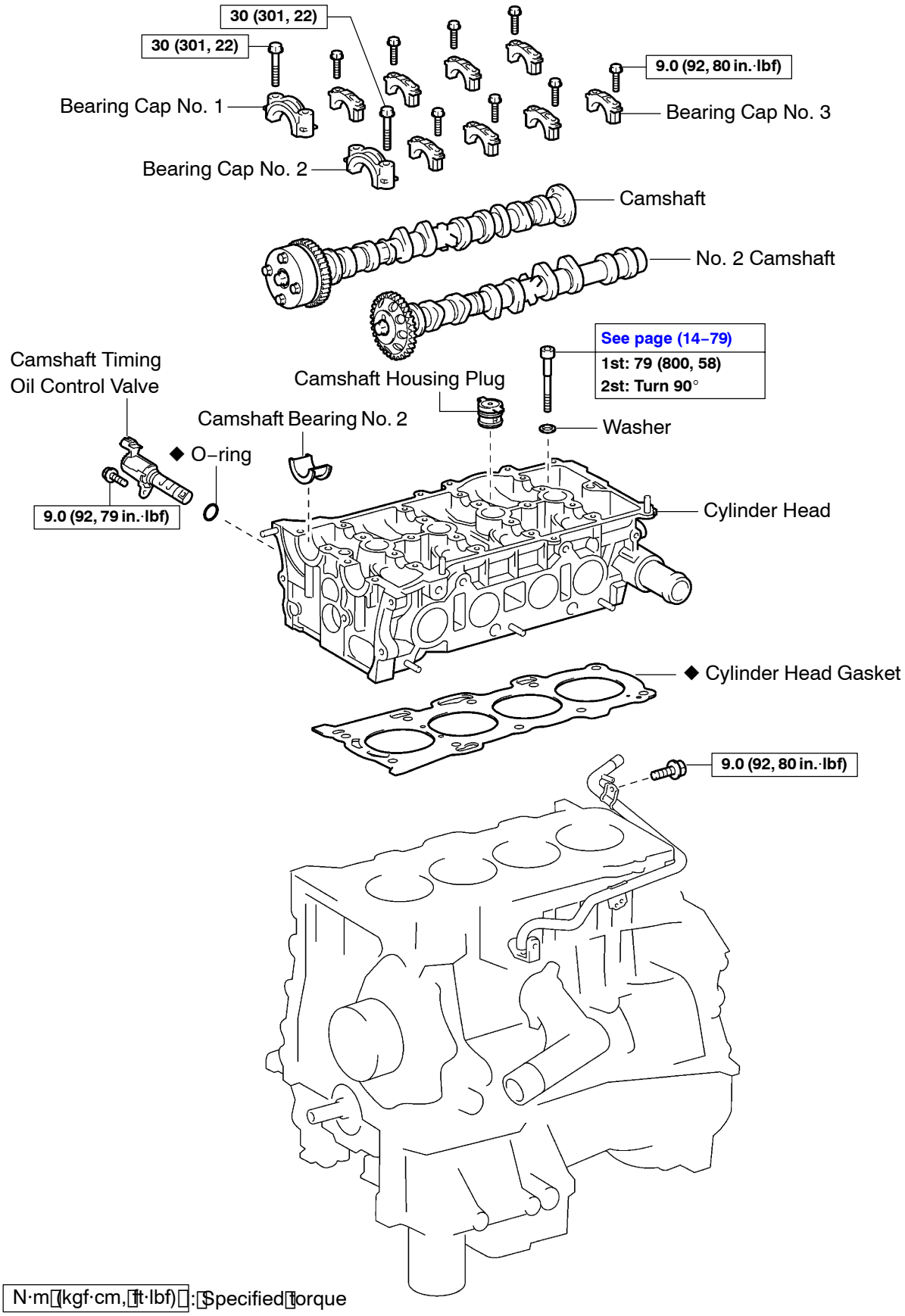
30 (301, 22)
30 (301, 22)
9.0 (92, 80 in.·lbf)
Bearing Cap No. 1
Bearing Cap No. 3
Bearing Cap No. 2
Camshaft
No. 2 Camshaft
See page (14–79)
1st: 79 (800, 58)
2st: Turn 90°
Camshaft Timing Oil Control Valve
Camshaft Housing Plug
Camshaft Bearing No. 2
Washer
◆ O–ring
9.0 (92, 79 in.·lbf)
Cylinder Head
◆ Cylinder Head Gasket
9.0 (92, 80 in.·lbf)
N·m (kgf·cm, ft·lbf): Specified torque
◆ Non–reusable part
A90928

141NB–01

REPLACEMENT

1. DISCHARGE FUEL SYSTEM PRESSURE (See page 11–4)
2. REMOVE FRONT WHEEL RH
3. REMOVE RADIATOR SUPPORT OPENING COVER (See page 14–23)
4. REMOVE ENGINE ROOM COVER SIDE (See page 14–23)
5. REMOVE ENGINE UNDER COVER LH (See page 14–23)
6. REMOVE ENGINE UNDER COVER NO.4 RH (See page 14–23)
7. REMOVE ENGINE UNDER COVER RH (See page 14–23)
8. DRAIN COOLANT (See page 16–7)
9. DRAIN ENGINE OIL (See page 17–6)
10. REMOVE ENGINE COVER SUB–ASSY NO.1 (See page 14–45)
11. REMOVE FUEL PRESSURE PULSATION DAMPER ASSY
12. SEPARATE FUEL TUBE SUB–ASSY (See page 11–4)
13. REMOVE FUEL PIPE SUB–ASSY NO.1 (See page 11–24)
    SST 09023–12900
14. REMOVE FUEL PUMP ASSY (See page 11–24)
15. REMOVE FAN AND GENERATOR V BELT (See page 14–5)
    SST 09249–63010
16. REMOVE GENERATOR ASSY (See page 19–8)
17. REMOVE EXHAUST PIPE ASSY FRONT (See page 15–2)
18. SEPARATE VANE PUMP ASSY (See page 14–45)
19. REMOVE IGNITION COIL ASSY (See page 14–45)
20. SEPARATE RETURN TUBE SUB–ASSY (See page 14–45)
21. SEPARATE COOLER REFRIGERANT SUCTION HOSE NO.1 (LHD STEERING POSITION TYPE) (See page 14–45)
22. REMOVE VANE PUMP OIL RESERVOIR ASSY (See page 14–45)
23. REMOVE OIL RESERVOIR BRACKET NO.1 (See page 14–45)
24. SEPARATE ENGINE WIRE (See page 14–23)
25. REMOVE COOLER BRACKET (LHD STEERING POSITION TYPE) (See page 14–45)
26. REMOVE ENGINE SERVICE COVER BRACKET RH (RHD STEERING POSITION TYPE) (See page 14–45)
27. REMOVE CYLINDER HEAD COVER SUB–ASSY (See page 14–45)
28. SET NO. 1 CYLINDER TO TDC/COMPRESSION (See page 14–45)
29. REMOVE ENGINE MOUNTING BRACKET NO.2 RH (See page 14–45)
30. REMOVE TRANSVERSE ENGINE ENGINE MOUNTING INSULATOR (See page 14–45)
31. REMOVE CRANKSHAFT PULLEY (See page 14–45)
    SST 09213–54015 (91651–60855), 09330–00021, 09950–50013 (09951–05010, 09952–05010, 09953–05020, 09954–05021)
32. REMOVE CHAIN TENSIONER ASSY NO.1 (See page 14–45)
33. REMOVE CRANKSHAFT POSITION SENSOR (See page 14–45)
34. REMOVE OIL PAN SUB–ASSY (See page 14–45)
    SST 09032–00100
35. REMOVE V–RIBBED BELT TENSIONER ASSY (See page 14–45)
36. REMOVE TIMING CHAIN OR BELT COVER SUB–ASSY (See page 14–45)
37. REMOVE CRANKSHAFT POSITION SENSOR PLATE NO.1 (See page 14–45)
38. REMOVE CHAIN TENSIONER SLIPPER (See page 14–45)
39. REMOVE CHAIN VIBRATION DAMPER NO.1 (See page 14–45)
40. REMOVE TIMING CHAIN GUIDE (See page 14–45)
41. REMOVE CHAIN SUB–ASSY (See page 14–45)

42. REMOVE BATTERY (See page 14–45)
43. REMOVE AIR CLEANER ASSEMBLY WITH HOSE (See page 14–23)
44. DISCONNECT RADIATOR HOSE INLET (See page 14–23)
45. DISCONNECT UNION TO CONNECTOR TUBE HOSE (See page 14–23)
46. DISCONNECT HEATER INLET WATER HOSE (See page 14–23)
47. SEPARATE FUEL TUBE SUB–ASSY (See page 11–1)
48. SEPARATE ENGINE WIRE
49. REMOVE THROTTLE BODY ASSY (See page 10–8)
50. REMOVE CHARCOAL CANISTER ASSY
51. REMOVE INTAKE MANIFOLD (See page 11–13)
52. REMOVE MANIFOLD CONVERTER INSULATOR NO.1 (See page 14–23)
53. REMOVE EXHAUST MANIFOLD CONVERTER SUB–ASSY (See page 14–23)
54. REMOVE NO.2 CAMSHAFT (See page 14–64)
55. REMOVE CAMSHAFT (See page 14–64)
56. REMOVE CAMSHAFT TIMING OIL CONTROL VALVE ASSY (See page 14–23)

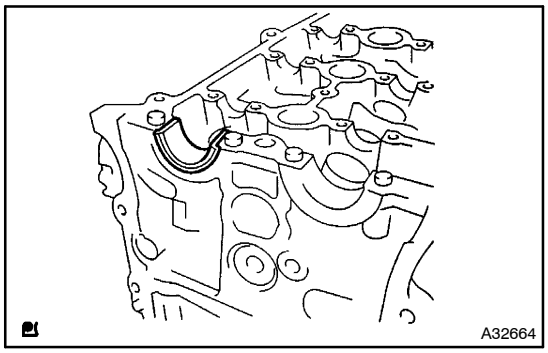

57. REMOVE CAMSHAFT BEARING NO.2

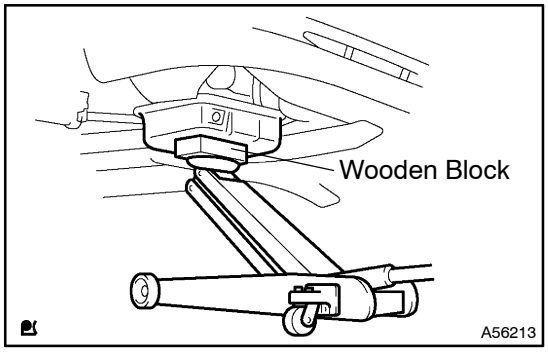

58. SUPPORT ENGINE ASSEMBLY WITH TRANSAXLE
(a) Install the oil pan sub–assy.
(b) Set the jack under the engine assembly with transaxle, then place a wooden block on the jack.
(c) Remove the chain block and sling devise.

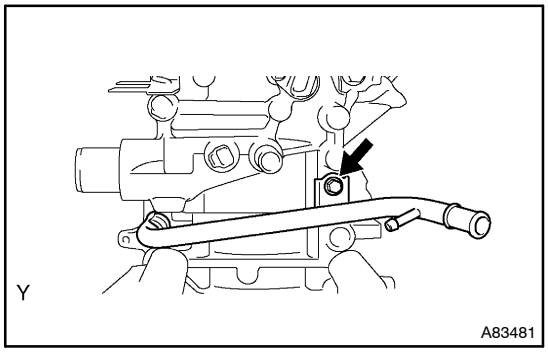

59. REMOVE CYLINDER HEAD SUB–ASSY
(a) Remove the bolt, then separate the water by–pass pipe.
(b) Remove the camshaft housing plug.

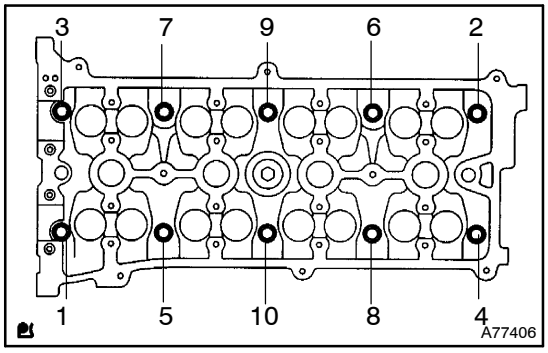

(c) Using several steps, loosen the 10 cylinder head bolts with 10 mm bi–hexagon wrench uniformly in the sequence shown in the illustration.

(d) Remove the 10 cylinder head bolts and plate washers.

NOTICE:

- **Be careful not to drop washers into the cylinder head.**
- **Head warpage or cranking could result from removing bolts and installing incorrect order.**

60. REMOVE CYLINDER HEAD GASKET

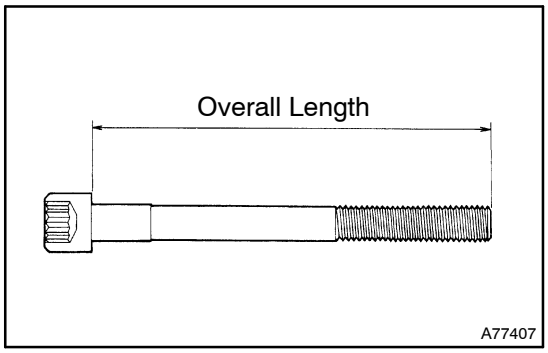

61. INSPECT CYLINDER HEAD SET BOLT

(a) Using a vernier calipers, measure the length of the cylinder head set bolts from the seat to the end.

Standard bolt length:
161.3 to 162.3 mm (6.350 to 6.390 in.)
Maximum bolt length: 164.2 mm (6.465 in.)

If the length is greater than maximum, replace the cylinder head set bolts.

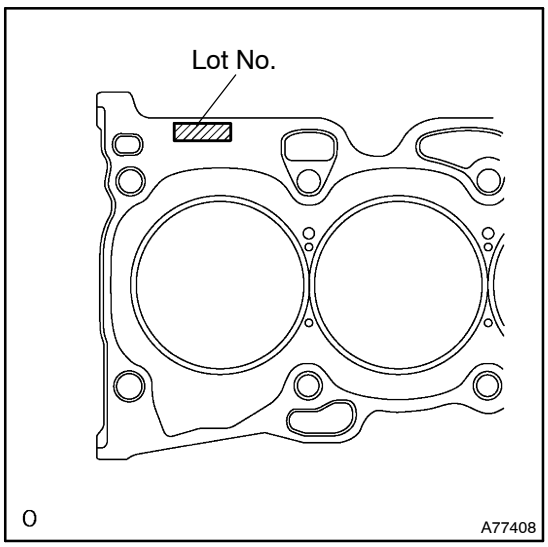

62. INSTALL CYLINDER HEAD GASKET

(a) Place a new cylinder head gasket on the cylinder block surface with the Lot No. stamp upward.

NOTICE:

- **Remove any oil from contact surface.**
- **Be careful of the installation direction.**
- **Place the cylinder head gently in order not to damage the gasket with the bottom part of the head.**

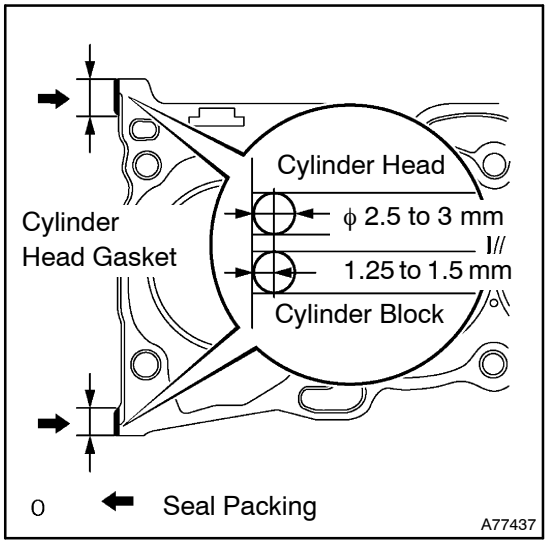

63. INSTALL CYLINDER HEAD SUB–ASSY

HINT:

The cylinder head set bolts are tightened in the 2 successive steps.

(a) Apply a continuous bead (Diameter 2.5 to 3 mm (0.098 to 0.118 in.)) of seal packing as shown in the illustration.

Seal packing: Part No. 08826–00080 or equivalent

NOTICE:

- **Remove any oil from contact surface.**
- **Install the cylinder head within 3 minutes after applying seal packing.**
- **After installing the cylinder head, cylinder head bolts must be tightened within 15 minutes.**
- **Do not start the engine within 2 hours of installation.**

(b) Apply a light coat of engine oil on the threads of the cylinder head bolts.

(c) Install bolts and plate washers to the cylinder head.

NOTICE:

Do not drop the washers into the cylinder head.

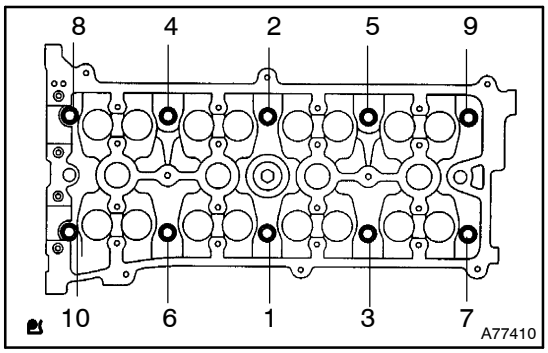

(d) Using several steps, install and tighten the 10 cylinder head bolts and plate washers with a 10 mm bi–hexagon wrench uniformly in the sequence shown in the illustration.

Torque: 79 N·m (806 kgf·cm, 58 ft·lbf)

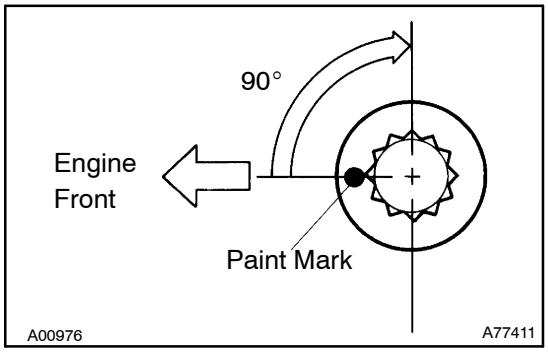

(e) Mark the front side of the cylinder head set bolts with paint.

(f) Retighten the cylinder head set bolts by 90° in the same sequence as a step (d).

(g) Check that each paint mark is now at a 90° angle to the front.

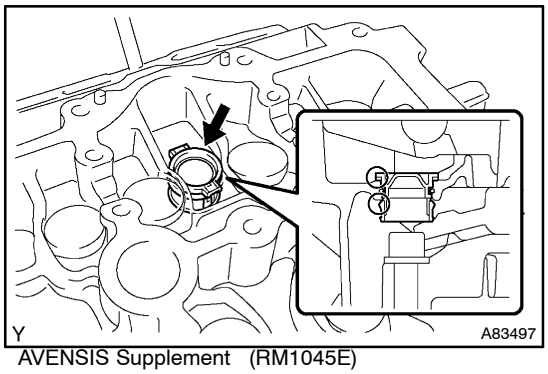

(h) Install the camshaft housing plug as shown in the illustration.

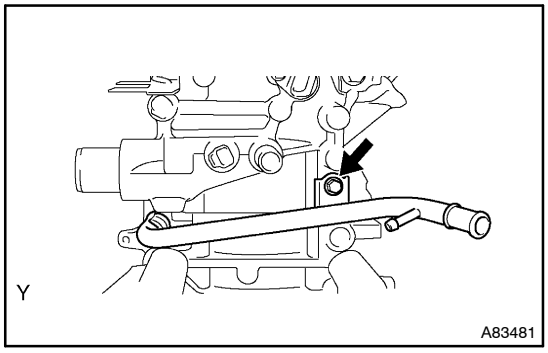

(i) Install the water by–pass pipe with a bolt.
Torque: 9.0 N·m (92 kgf·cm, 80 in.·lbf)

64. **INSTALL CAMSHAFT TIMING OIL CONTROL VALVE ASSY**
65. **INSTALL CAMSHAFT (See page 14–64)**
66. **INSTALL NO.2 CAMSHAFT (See page 14–64)**
67. **INSTALL EXHAUST MANIFOLD CONVERTER SUB–ASSY (See page 14–23)**
68. **INSTALL EXHAUST MANIFOLD HEAT INSULATOR NO.1 (See page 14–23)**
69. **INSTALL INTAKE MANIFOLD (See page 11–13)**
70. **INSTALL THROTTLE BODY ASSY (See page 10–8)**
71. **INSTALL AIR CLEANER ASSEMBLY WITH HOSE (See page 14–23)**
72. **INSTALL BATTERY**
    Torque:
    5.0 N·m (51 kgf·cm, 44 in.·lbf) for Bolt
    3.5 N·m (36 kgf·cm, 31 in.·lbf) for Nut
73. **INSTALL CHAIN VIBRATION DAMPER NO.1 (See page 14–45)**
74. **INSTALL CHAIN SUB–ASSY (See page 14–45)**
75. **INSTALL TIMING CHAIN GUIDE (See page 14–45)**
76. **INSTALL CHAIN TENSIONER SLIPPER (See page 14–45)**
77. **INSTALL CRANKSHAFT POSITION SENSOR PLATE NO.1 (See page 14–45)**
78. **INSTALL TIMING CHAIN OR BELT COVER SUB–ASSY (See page 14–45)**
79. **INSTALL V–RIBBED BELT TENSIONER ASSY (See page 14–45)**
80. **INSTALL OIL PAN SUB–ASSY (See page 14–45)**
81. **INSTALL CRANKSHAFT POSITION SENSOR (See page 14–45)**
82. **INSTALL CRANKSHAFT PULLEY (See page 14–45)**
    SST 09213–54015 (91651–60855), 09330–00021
83. **INSTALL CHAIN TENSIONER ASSY NO.1 (See page 14–45)**
84. **INSTALL TRANSVERSE ENGINE ENGINE MOUNTING INSULATOR**
    Torque: 52 N·m (530 kgf·cm, 38 ft·lbf)
85. **INSTALL ENGINE MOUNTING BRACKET NO.2 RH (See page 14–45)**
86. **INSTALL CYLINDER HEAD COVER SUB–ASSY (See page 14–45)**
87. **INSTALL COOLER BRACKET (LHD STEERING POSITION TYPE)**
    Torque: 9.0 N·m (92 kgf·cm, 80 in.·lbf)
88. **INSTALL ENGINE SERVICE COVER BRACKET RH (RHD STEERING POSITION TYPE)**
    Torque: 9.0 N·m (92 kgf·cm, 80 in.·lbf)
89. **INSTALL OIL RESERVOIR BRACKET NO.1**
    Torque: 8.0 N·m (82 kgf·cm, 71 in.·lbf)
90. **INSTALL COOLER REFRIGERANT SUCTION HOSE NO.1 (LHD STEERING POSITION TYPE)**
91. **INSTALL RETURN TUBE SUB–ASSY**
    Torque: 8.0 N·m (82 kgf·cm, 71 in.·lbf)
92. **INSTALL IGNITION COIL ASSY**
    Torque: 9.0 N·m (92 kgf·cm, 80 in.·lbf)
93. **INSTALL FUEL PUMP ASSY (See page 11–24)**

94. INSTALL FUEL PIPE SUB–ASSY NO.1 (See page 11–24)
SST 09023–12900
95. INSTALL FUEL TUBE SUB–ASSY (See page 11–24)
96. INSTALL FUEL PRESSURE PULSATION DAMPER ASSY (See page 11–24)
97. INSTALL ENGINE COVER SUB–ASSY NO.1
Torque: 7.0 N·m (71 kgf·cm, 62 in.·lbf)
98. INSTALL VANE PUMP ASSY
Torque: 37 N·m (377 kgf·cm, 27 ft·lbf)
99. INSTALL EXHAUST PIPE ASSY FRONT (See page 15–2)
100. INSTALL GENERATOR ASSY (See page 19–8)
101. INSTALL FAN AND GENERATOR V BELT (See page 14–5)
SST 09249–63010
102. ADD COOLANT (See page 16–7)
103. ADD ENGINE OIL (See page 17–6)
104. CHECK FOR ENGINE COOLANT LEAKS (See page 16–1)
105. CHECK FOR ENGINE OIL LEAKS
106. CHECK FOR FUEL LEAKS (See page 11–4)
107. INSTALL FRONT WHEEL RH
Torque: 103 N·m (1,050 kgf·cm, 76 ft·lbf)
108. ADD POWER STEERING FLUID (See Pub. No. RM1018E on page 51–4)
109. BLEED POWER STEERING FLUID (See Pub. No. RM1018E on page 51–4)
110. CHECK POWER STEERING FULUID LEVEL IN RESERVOIR
(See Pub. No. RM1018E on page 51–4)
111. CHECK FUNCTION OF THROTTLE BODY

TIMING GEAR CASE OR TIMING CHAIN CASE OIL SEAL (2AZ–FSE)

141NC–01

REPLACEMENT

1. **REMOVE FRONT WHEEL RH**
2. **REMOVE RADIATOR SUPPORT OPENING COVER (See page 14–23)**
3. **REMOVE ENGINE ROOM COVER SIDE (See page 14–23)**
4. **REMOVE ENGINE UNDER COVER LH (See page 14–23)**
5. **REMOVE ENGINE UNDER COVER NO.4 RH (See page 14–23)**
6. **REMOVE ENGINE UNDER COVER RH (See page 14–23)**
7. **REMOVE ENGINE COVER SUB–ASSY NO.1 (See page 14–45)**
8. **REMOVE FAN AND GENERATOR V BELT (See page 14–5)**
   SST 09249–63010
9. **REMOVE CRANKSHAFT PULLEY (See page 14–45)**
   SST 09213–54015 (91651–60855), 09330–00021, 09950–50013 (09951–05010, 09952–05010, 09953–05020, 09954–05021)

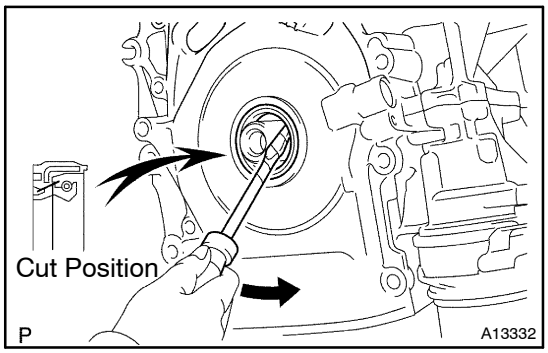

10. **REMOVE TIMING GEAR CASE OR TIMING CHAIN CASE OIL SEAL**
    (a) Using a screwdriver with tip wrapped in the tape, pry out the oil seal.

HINT:
After removal, check that the crankshaft is not damaged.
If damaged, smooth the surface with 400–grit sandpaper.

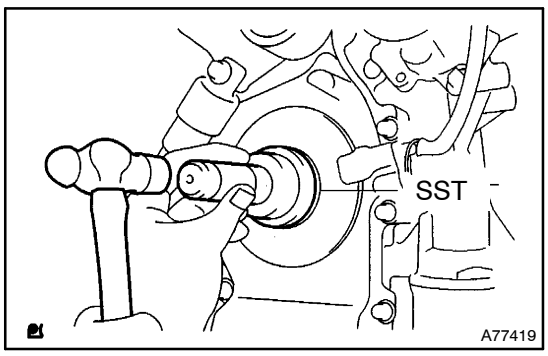

11. **INSTALL TIMING GEAR CASE OR TIMING CHAIN CASE OIL SEAL**
    (a) Apply MP grease to a new oil seal lip.

NOTICE:
Keep the lip off foreign materials.

    (b) Using SST and a hammer, tap in the oil seal until its surface is flush with the rear oil seal retainer edge.
    SST 09223–22010

NOTICE:
Wipe off extra grease on the crankshaft.

12. **INSTALL CRANKSHAFT PULLEY (See page 14–45)**
    SST 09213–54015 (91651–60855), 09330–00021
13. **INSTALL FAN AND GENERATOR V BELT (See page 14–5)**
    SST 09249–63010
14. **INSTALL ENGINE COVER SUB–ASSY NO.1**
    Torque: 7.0 N·m (71 kgf·cm, 62 in.·lbf)
15. **INSTALL FRONT WHEEL RH**
    Torque: 103 N·m (1,050 kgf·cm, 76 ft·lbf)
16. **CHECK FOR ENGINE OIL LEAKS**

ENGINE REAR OIL SEAL (2AZ–FSE)

141BS–02

REPLACEMENT

1. **REMOVE AUTOMATIC TRANSAXLE ASSY (See page 40–3)**
2. **REMOVE DRIVE PLATE & RING GEAR SUB–ASSY (See page 14–23)**
   SST 09213–54015 (91651–60855), 09330–00021

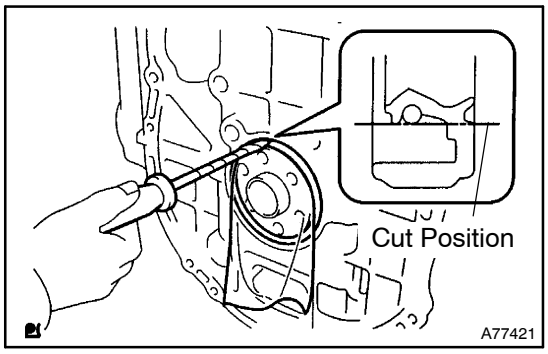

3. **REMOVE ENGINE REAR OIL SEAL**
(a) Using a knife, cut off the engine rear oil seal lip.
(b) Using a screwdriver with the tip wrapped in tape, pry out the engine rear oil seal.

HINT:
After the removal, check that the crankshaft is not damaged. If damaged, smooth the surface with 400–grit sandpaper.

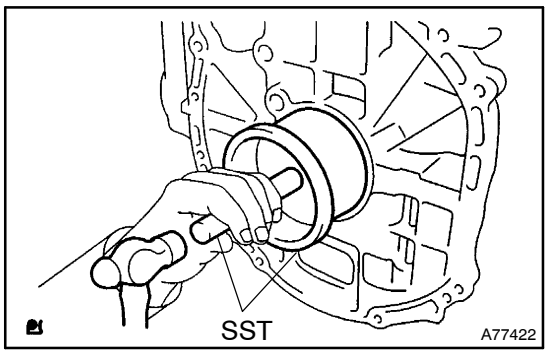

4. **INSTALL ENGINE REAR OIL SEAL**
(a) Apply MP grease to a new engine rear oil seal lip.

NOTICE:
Keep the lip off foreign materials.

(b) Using SST and a hammer, tap in the engine rear oil seal until its surface is flush with the engine rear oil seal retainer edge.
   SST 09223–15030, 09950–70010 (09951–07100)

NOTICE:
Wipe off extra grease on the crankshaft.

5. **INSTALL DRIVE PLATE & RING GEAR SUB–ASSY (See page 14–23)**
   SST 09213–54015 (91651–60855), 09330–00021
6. **INSTALL AUTOMATIC TRANSAXLE ASSY (See page 40–3)**

ENGINE (1CD–FTV)(From September, 2003)

141ND–01

INSPECTION

1. **INSPECT ENGINE COOLANT (See page 16–15)**
2. **INSPECT ENGINE OIL (See page 17–9)**
3. **INSPECT BATTERY (See Pub. No. RM1018E on page 19–26)**
4. **INSPECT AIR CLEANER FILTER ELEMENT SUB–ASSY**

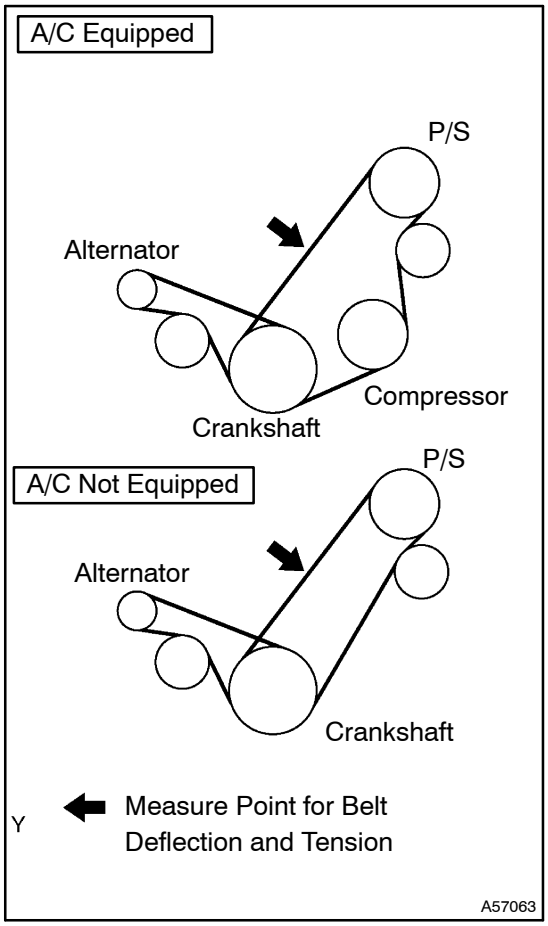

5. INSPECT DRIVE BELT

(a) Inspect the vane pump V–ribbed belt.

(1) Measure the belt deflection.

Pressing force: 98 N (10 kgf, 22 lbf)

	New Belt mm (in.)	Used Belt mm (in.)
A/C Equipped	8.0 to 10.5 (0.31 to 0.41)	10.5 to 12.5 (0.41 to 0.49)
A/C Not Equipped	10 to 12 (0.39 to 0.47)	14 to 17 (0.55 to 0.67)

(2) Measure the belt tension.

	New Belt N (kgf, lbf)	Used Belt N (kgf, lbf)
A/C Equipped	647 to 843 (66 to 86, 145 to 189)	441 to 637 (45 to 65, 99 to 143)
A/C Not Equipped	686 to 784 (70 to 80, 154 to 176)	294 to 441 (30 to 45, 66 to 99)

NOTICE:

- **Check the drive belt deflection at the specified point.**
- **When installing a new belt, set its tension value as specified.**
- **When inspecting the belt which has been used for over 5 minutes, apply the specifications of "Used Belt."**
- **When reinstalling the belt which has been used for over 5 minutes, adjust its deflection and tension to the intermediate value of each specification of "Used Belt."**
- **The V–ribbed belt tension and deflection should be checked after 2 revolutions of engine cranking.**
- **When using a belt tension gauge, confirm the accuracy by using a master gauge first.**

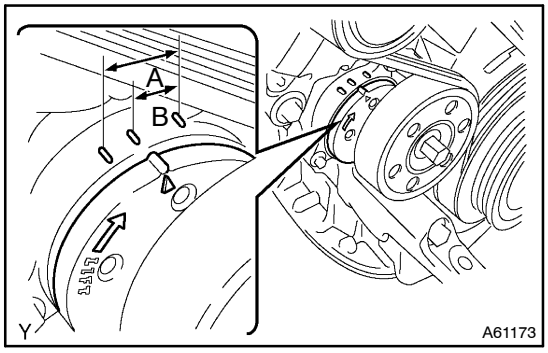

(b) Inspect the generator V–ribbed belt.
(1) Check that the tension indicator is within range A on the auto tensioner scale.

If the tension indicator is not within range A, replace the belt with a new one.

HINT:

When replacing the drive belt with a new one, the tension indicator should be within range B.

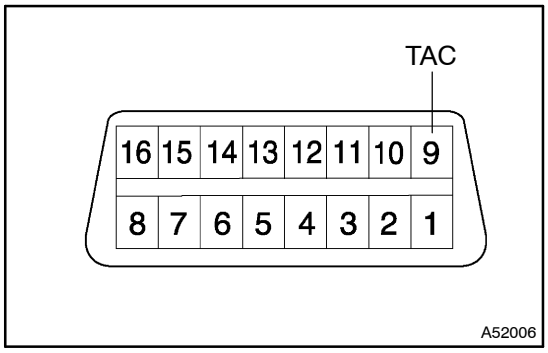

6. INSPECT ENGINE IDLE SPEED

(a) Using SST, connect a tachometer test probe to terminal 9 (TAC) of the DLC3.
SST 09843–18040

(b) Check the idle speed.
Idle speed: 750 to 850 rpm

NOTICE:

- **Check the idle speed with the cooling fan OFF.**
- **Switch OFF all accessories and air conditioning before connecting the test probe to the terminal.**

7. INSPECT MAXIMUM SPEED

(a) Start the engine.
(b) Fully depress the accelerator pedal.
(c) Check the maximum speed.
Maximum speed: 5,100 to 5,250 rpm

8. INSPECT COMPRESSION

(a) Warm up the engine to the normal operating temperature, then stop the engine.
(b) Remove the 4 glow plugs
(see Pub. No. RM1018E on page 19–33).
(c) Disconnect the 4 injector connectors.

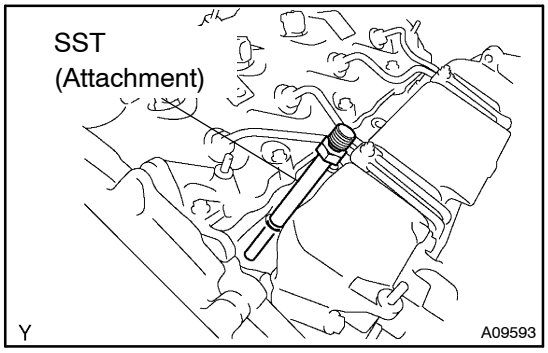

(d) Inspect the cylinder compression pressure.
(1) Install SST (an attachment) to the glow plug hole.
SST 09992–00025 (09992–00121, 09992–00211)
Torque: 12 N·m (125 kgf·cm, 95 ft·lbf)

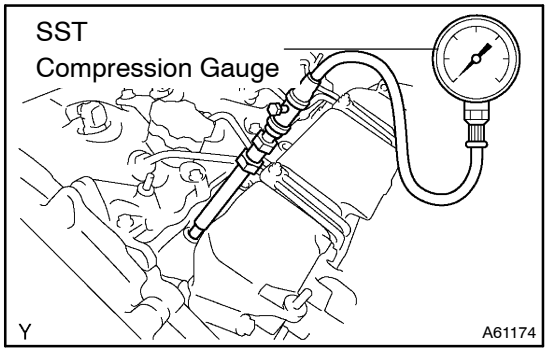

(2) Connect SST (a compression gauge) to SST (the attachment).

SST 09992–00025 (09992–00121, 09992–00211)

(3) Fully open the throttle valve, then start the engine.

(4) While cranking the engine, measure the compression pressure.

NOTICE:

- **Always use a fully–charged battery to obtain engine speed of 250 rpm or more.**
- **Check the other cylinder compression pressure in the same way.**
- **This measurement must be done as quickly as possible.**

Compression pressure:
2,628 kPa (26.8 kgf/cm^2, 381 psi) or more
Minimum pressure:
2,157 kPa (22.0 kgf/cm^2, 312 psi) or more
Difference between each cylinder:
490 kPa (5.0 kgf/cm^2, 71 psi) or less

(5) If the cylinder compression is low, pour a small amount of engine oil into the cylinder through the glow plug hole, then measure the compression pressure again.

HINT:

- If adding oil raises the compression pressure, the piston rings and/or cylinder bore may be worn or damaged.
- If the compression pressure stays low, the valve may be sticking or seating improperly, or there may be leakage past the gasket.

VALVE CLEARANCE (1CD–FTV)(From September, 2003)

141NE–01

ADJUSTMENT

NOTICE:

- **Before removing the injection pipes, clean them up with a soft brush and compressed air.**
- **After removing the injection pipes, cover the supply pump, common rail and injector mounting area of the cylinder head cover with vinyl tape to prevent dust from being introduced.**
- **After removing the cylinder head cover, protect the injector inlet with a vinyl or plastic bag to prevent foreign objects from being introduced.**

HINT:

Inspect and adjust the valve clearance after the engine becomes cold.

1. **REMOVE RADIATOR SUPPORT OPENING COVER**
2. **REMOVE FRONT WHEEL RH**
3. **REMOVE ENGINE UNDER COVER LH**
4. **REMOVE ENGINE UNDER COVER SUB–ASSY NO.1**
5. **REMOVE ENGINE UNDER COVER RH**
6. **REMOVE ENGINE COVER SUB–ASSY NO.1**

(a) Remove the 5 nuts, then remove the engine cover.

7. **REMOVE BATTERY**

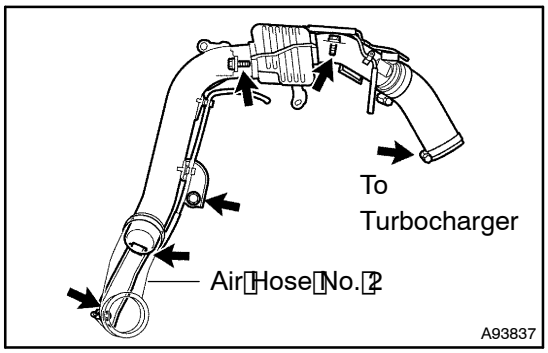

8. **REMOVE AIR TUBE NO.1**

(a) Disconnect the vacuum hoses and connectors.
(b) Loosen the 2 hose clamps.
(c) Remove the 3 bolts and nut, then detach the air tube No. 1.

9. **REMOVE TIMING BELT NO.2 COVER (See page 14–138)**
10. **REMOVE FUEL PIPE NO.3 (See page 14–108)**

SST 09023–12700

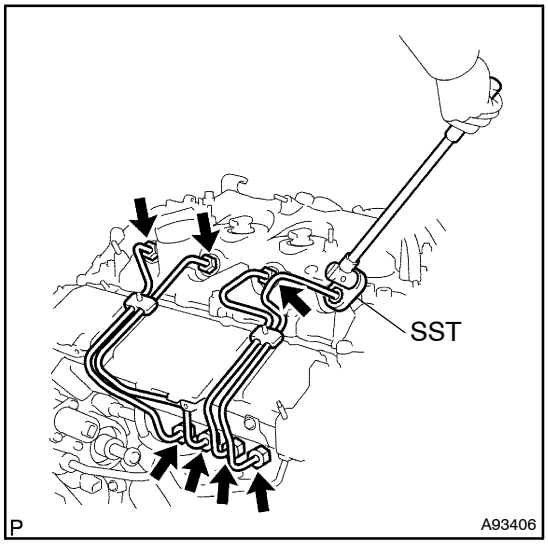

11. **REMOVE INJECTION PIPE SUB–ASSY NO.1**

(a) Remove the 2 upper injection pipe clamps from the intake manifold.
(b) Using SST, remove the injection pipe from the common rail side.
SST 09023–12700
(c) Using SST, remove the injection pipe from the injector side.
SST 09023–12700
(d) After removing the fuel pipe, in order to prevent dust or foreign objects from being introduced, cover the common rail with vinyl tape and protect the injector inlet with a vinyl or plastic bag.

12. REMOVE INJECTION PIPE SUB–ASSY NO.2

SST 09023–12700

HINT:

Perform the same procedures as the injection pipe No.1.

13. REMOVE INJECTION PIPE SUB–ASSY NO.3

SST 09023–12700

HINT:

Perform the same procedures as the injection pipe No.1.

14. REMOVE INJECTION PIPE SUB–ASSY NO.4

SST 09023–12700

HINT:

Perform the same procedures as the injection pipe No.1.

15. REMOVE NOZZLE LEAKAGE PIPE NO.2 (See page 14–108)

16. REMOVE CYLINDER HEAD COVER SUB–ASSY (See page 14–151)

17. REMOVE NOZZLE LEAKAGE PIPE ASSY (See page 11–46)

18. REMOVE INJECTOR ASSY (See page 11–46)

HINT:

Since each injector assembly has characteristic fuel injecting behavior, keep them in the correct order so that they can be returned to the original locations when reassembling.

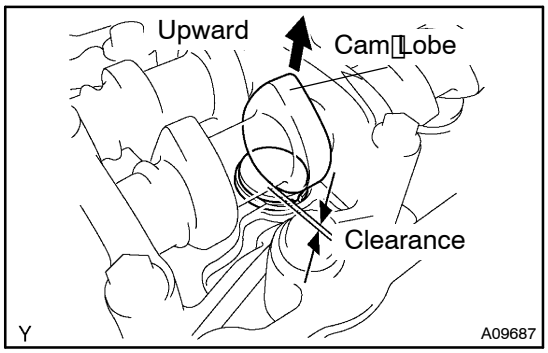

19. INSPECT VALVE CLEARANCE

(a) Turn the crankshaft so that the cam lobe located over the inspecting valve faces upward.

(b) Using a feeler gauge, measure the clearance between the valve lifter and camshaft.

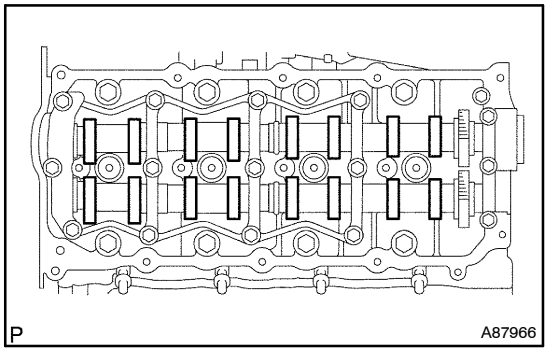

(c) Measure the clearance at 16 places.

(d) Record the out–of–specification valve clearance measurements. They will be used later to select an adjusting shim to replace.

Valve clearance (Cold):

Intake	0.20 to 0.30 mm (0.008 to 0.012 in.)
Exhaust	0.35 to 0.45 mm (0.014 to 0.018 in.)

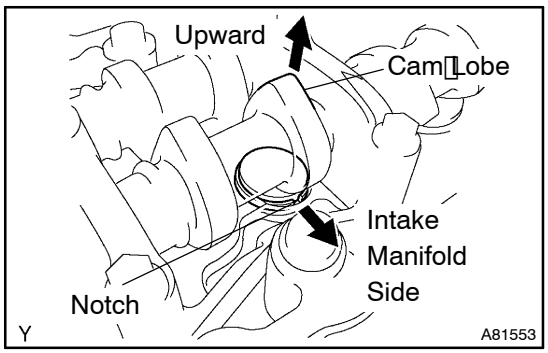

20. ADJUST VALVE CLEARANCE

(a) Remove the adjusting shim.

(1) Turn the crankshaft so that the cam lobe located over the adjusting valve faces upward.

(2) Position the notch of the valve lifter toward the intake manifold side.

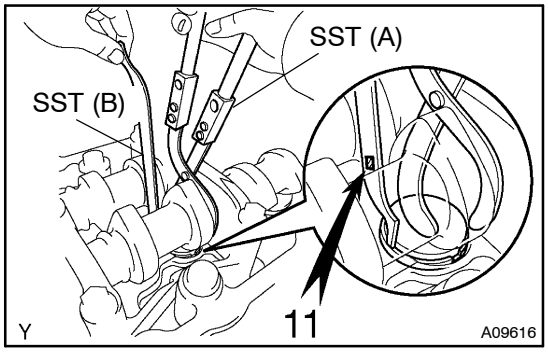

(3) Using SST (A), press down the valve lifter, then place SST (B) between the camshaft and valve lifter. Remove SST (A).

SST 09248–55050 (09248–05510, 09248–05520)

HINT:
Use SST (B) marked with "11".

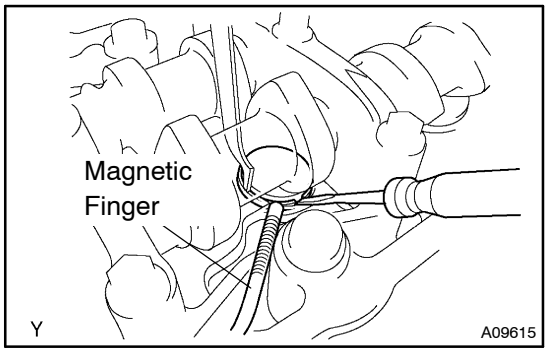

(4) Remove the adjusting shim using a small screwdriver and magnetic finger.

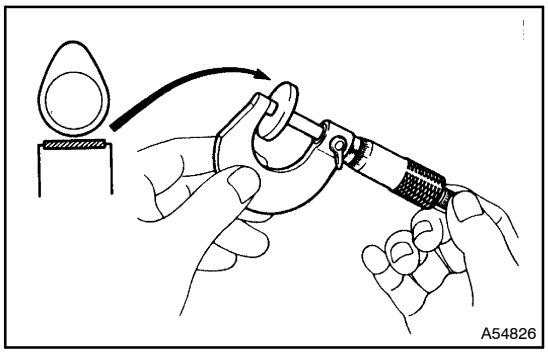

(b) Select the size of an adjusting shim to replace by following the formula or the charts attached to the end of this section.

(1) Using a micrometer, measure the thickness of the removed shim.

(2) Calculate the thickness of a new shim so that the valve clearance comes within the specified value.

HINT:
T ..... Thickness of the removed adjusting shim
A ..... Measured valve clearance
N ..... Thickness of a new adjusting shim
Intake: N = T + (A – 0.25 mm (0.010 in.))
Exhaust: N = T + (A – 0.40 mm (0.016 in.))

(3) Select a new shim with a thickness which is as close to the calculated value as possible.

EXAMPLE (Intake):
Measured valve clearance = 0.45 mm (0.0177 in.)
0.45 mm (0.0177 in.) – 0.25 mm (0.0098 in.) = 0.20 mm (0.0078 in.)
(Measured – Specification = Excess clearance)
Used shim measurement = 2.80 mm (0.1102 in.)
0.20 mm (0.0078 in.) + 2.80 mm (0.1102 in.) = 3.00 mm (0.1181 in.)
(Excess clearance + Used shim = Ideal new shim)
Closest new shim = 3.00 mm (0.1181 in.)
Select No. 21 shim

HINT:
The shims are available in 17 sizes in increments of 0.05 mm (0.0020 in.), from 2.50 mm (0.0984 in.) to 3.30 mm (0.1299 in.).

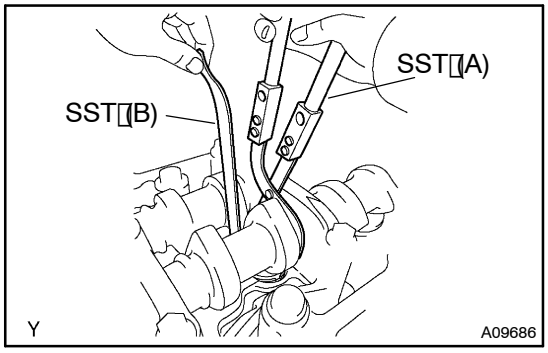

(c) Install the new adjusting shim.
(1) Place the new adjusting shim on the valve lifter.
(2) Using SST (A), press down the valve lifter, then remove SST (B).
SST 09248–55050 (09248–05510, 09248–05520)
(d) Recheck the valve clearance.

21. INSTALL INJECTOR ASSY (See page 11–46)

22. INSTALL NOZZLE LEAKAGE PIPE ASSY (See page 11–46)
SST 09992–00242

23. INSTALL CYLINDER HEAD COVER SUB–ASSY (See page 14–151)

24. INSTALL NOZZLE LEAKAGE PIPE NO.2 (See page 14–108)

25. INSTALL INJECTION PIPE SUB–ASSY NO.1

NOTICE:
When assembling the pipes, perform the operation with the engine cold at room temperature.

(a) Remove the vinyl or plastic bag from the injector and the vinyl tape from the common rail.
(b) Temporarily install the injection pipe.

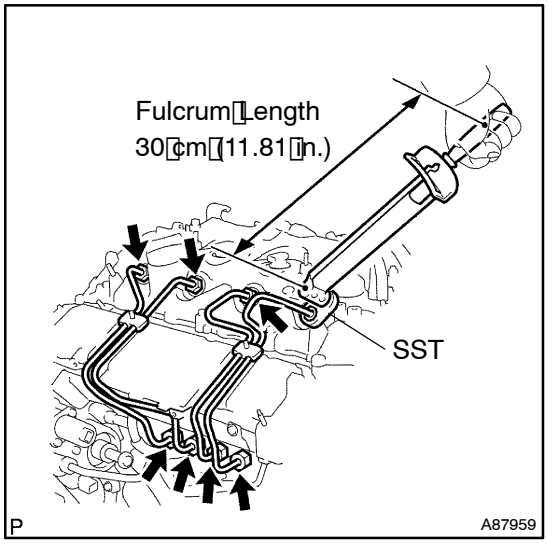

(c) Using SST, tighten the nut of the injection pipe on the common rail side.
SST 09023–12700
Torque:
31 N·m (316 kgf·cm, 23 ft·lbf) with SST
34 N·m (347 kgf·cm, 25 ft·lbf) without SST

HINT:
- Use a torque wrench with the fulcrum length of 30 cm (11.81 in.).
- After the injection pipe is reassembled, check that the used pipe has no deflection and is installed properly. If it has deflection or could not be installed properly, replace the used pipe with a new pipe.

(d) Using SST, tighten the nut of the injection pipe on the injector side.
SST 09023–12700
Torque:
For used pipe:
36 N·m (372 kgf·cm, 27 ft·lbf) with SST
40 N·m (408 kgf·cm, 30 ft·lbf) without SST
For new pipe:
31 N·m (316 kgf·cm, 23 ft·lbf) with SST
34 N·m (347 kgf·cm, 25 ft·lbf) without SST

HINT:
- Use a torque wrench with the fulcrum length of 30 cm (11.81 in.).
- After the injection pipe is reassembled, check that the used pipe has no deflection and is installed properly. If it has deflection or could not be installed properly, replace the used pipe with a new pipe.

(e) Install the 2 upper injection pipe clamps.

26. INSTALL INJECTION PIPE SUB–ASSY NO.2
SST 09023–12700

HINT:
Perform the same procedures as the injection pipe No. 1.

27. INSTALL INJECTION PIPE SUB–ASSY NO.3
SST 09023–12700

HINT:
Perform the same procedures as the injection pipe No. 1.

28. INSTALL INJECTION PIPE SUB–ASSY NO.4
SST 09023–12700

HINT:
Perform the same procedures as the injection pipe No. 1.

29. INSTALL FUEL PIPE NO.3 (See page 14–108)

30. INSTALL TIMING BELT NO.2 COVER (See page 14–138)

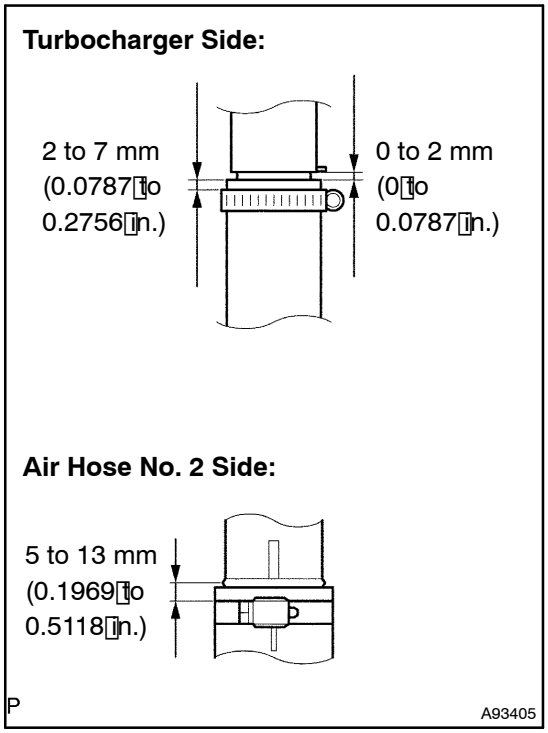

31. INSTALL AIR TUBE NO.1

(a) Install a new air hose No. 2 and new 2 hose clamps as shown in the illustration.

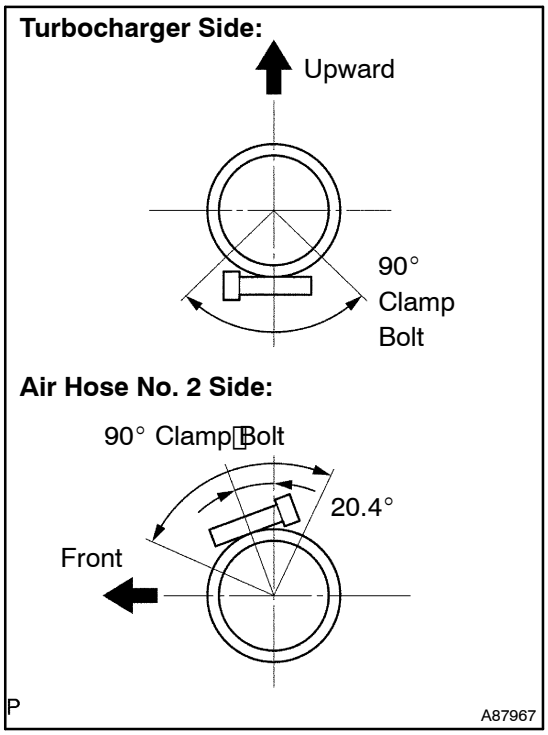

(b) Tighten the 2 hose clamps as shown in the illustration.
Torque: 6.0 N·m (61 kgf·cm, 53 in.·lbf)

(c) Install the air tube No. 1 with the 3 bolts and nut.
Torque: 25 N·m (255 kgf·cm, 18 ft·lbf)

32. INSTALL BATTERY (See page 14–108)

33. INSTALL ENGINE COVER SUB–ASSY NO.1
Torque: 8.0 N·m (82 kgf·cm, 71 in.·lbf)

34. INSTALL FRONT WHEEL RH
Torque: 103 N·m (1,050 kgf·cm, 76 ft·lbf)

35. CHECK FOR FUEL LEAKS (See page 11–46)

Adjusting Shim Selection Chart (Intake)

	2.500 (0.0984)	2.525 (0.0994)	2.550 (0.1004)	2.575 (0.1014)	2.600 (0.1024)	2.625 (0.1033)	2.650 (0.1043)	2.675 (0.1053)	2.700 (0.1063)	2.725 (0.1073)	2.750 (0.1083)	2.775 (0.1093)	2.800 (0.1102)	2.825 (0.1112)	2.850 (0.1122)	2.875 (0.1132)	2.900 (0.1142)	2.925 (0.1152)	2.950 (0.1161)	2.975 (0.1171)	3.000 (0.1181)	3.025 (0.1191)	3.050 (0.1201)	3.075 (0.1211)	3.100 (0.1220)	3.125 (0.1230)	3.150 (0.1240)	3.175 (0.1250)	3.200 (0.1260)	3.225 (0.1270)	3.250 (0.1280)	3.275 (0.1289)	3.300 (0.1299)
0.000 ~ 0.020 (0.0000 ~ 0.0008)									01	01	01	03	03	05	05	07	07	09	09	11	11	13	13	15	15	17	17	19	19	21	21	23	23
0.021 ~ 0.040 (0.0008 ~ 0.0016)									01	01	03	03	05	05	07	07	09	09	11	11	13	13	15	15	17	17	19	19	21	21	23	23	25
0.041 ~ 0.060 (0.0016 ~ 0.0024)								01	01	03	03	05	05	07	07	09	09	11	11	13	13	15	15	17	17	19	19	21	21	23	23	25	25
0.061 ~ 0.080 (0.0024 ~ 0.0031)							01	01	01	03	03	05	05	07	07	09	09	11	11	13	13	15	15	17	17	19	19	21	21	23	23	25	25
0.081 ~ 0.100 (0.0032 ~ 0.0039)						01	01	01	03	03	05	05	07	07	09	09	11	11	13	13	15	15	17	17	19	19	21	21	23	23	25	25	27
0.101 ~ 0.120 (0.0040 ~ 0.0047)					01	01	01	03	03	05	05	07	07	09	09	11	11	13	13	15	15	17	17	19	19	21	21	23	23	25	25	27	27
0.121 ~ 0.140 (0.0048 ~ 0.0055)					01	01	03	03	05	05	07	07	09	09	11	11	13	13	15	15	17	17	19	19	21	21	23	23	25	25	27	27	29
0.141 ~ 0.160 (0.0056 ~ 0.0063)				01	01	03	03	05	05	07	07	09	09	11	11	13	13	15	15	17	17	19	19	21	21	23	23	25	25	27	27	29	29
0.161 ~ 0.180 (0.0063 ~ 0.0071)			01	01	01	03	03	05	05	07	07	09	09	11	11	13	13	15	15	17	17	19	19	21	21	23	23	25	25	27	27	29	29
0.181 ~ 0.199 (0.0071 ~ 0.0078)		01	01	01	03	03	05	05	07	07	09	09	11	11	13	13	15	15	17	17	19	19	21	21	23	23	25	25	27	27	29	29	31
0.200 ~ 0.300 (0.0079 ~ 0.0118)																																	
0.301 ~ 0.320 (0.0119 ~ 0.0126)	03	05	05	07	07	09	09	11	11	13	13	15	15	17	17	19	19	21	21	23	23	25	25	27	27	29	29	31	31	33	33	33	
0.321 ~ 0.340 (0.0126 ~ 0.0134)	05	05	07	07	09	09	11	11	13	13	15	15	17	17	19	19	21	21	23	23	25	25	27	27	29	29	31	31	33	33	33		
0.341 ~ 0.360 (0.0134 ~ 0.0142)	05	07	07	09	09	11	11	13	13	15	15	17	17	19	19	21	21	23	23	25	25	27	27	29	29	31	31	33	33	33			
0.361 ~ 0.380 (0.0142 ~ 0.0150)	05	07	07	09	09	11	11	13	13	15	15	17	17	19	19	21	21	23	23	25	25	27	27	29	29	31	31	33	33				
0.381 ~ 0.400 (0.0150 ~ 0.0157)	07	07	09	09	11	11	13	13	15	15	17	17	19	19	21	21	23	23	25	25	27	27	29	29	31	31	33	33	33				
0.401 ~ 0.420 (0.0158 ~ 0.0165)	07	09	09	11	11	13	13	15	15	17	17	19	19	21	21	23	23	25	25	27	27	29	29	31	31	33	33	33					
0.421 ~ 0.440 (0.0166 ~ 0.0173)	09	09	11	11	13	13	15	15	17	17	19	19	21	21	23	23	25	25	27	27	29	29	31	31	33	33	33						
0.441 ~ 0.460 (0.0174 ~ 0.0181)	09	11	11	13	13	15	15	17	17	19	19	21	21	23	23	25	25	27	27	29	29	31	31	33	33	33							
0.461 ~ 0.480 (0.0181 ~ 0.0189)	09	11	11	13	13	15	15	17	17	19	19	21	21	23	23	25	25	27	27	29	29	31	31	33	33								
0.481 ~ 0.500 (0.0189 ~ 0.0197)	11	11	13	13	15	15	17	17	19	19	21	21	23	23	25	25	27	27	29	29	31	31	33	33	33								
0.501 ~ 0.520 (0.0197 ~ 0.0205)	11	13	13	15	15	17	17	19	19	21	21	23	23	25	25	27	27	29	29	31	31	33	33	33									
0.521 ~ 0.540 (0.0205 ~ 0.0213)	13	13	15	15	17	17	19	19	21	21	23	23	25	25	27	27	29	29	31	31	33	33	33										
0.541 ~ 0.560 (0.0213 ~ 0.0220)	13	15	15	17	17	19	19	21	21	23	23	25	25	27	27	29	29	31	31	33	33	33											
0.561 ~ 0.580 (0.0221 ~ 0.0228)	13	15	15	17	17	19	19	21	21	23	23	25	25	27	27	29	29	31	31	33	33												
0.581 ~ 0.600 (0.0229 ~ 0.0236)	15	15	17	17	19	19	21	21	23	23	25	25	27	27	29	29	31	31	33	33	33												
0.601 ~ 0.620 (0.0237 ~ 0.0244)	15	17	17	19	19	21	21	23	23	25	25	27	27	29	29	31	31	33	33	33													
0.621 ~ 0.640 (0.0244 ~ 0.0252)	17	17	19	19	21	21	23	23	25	25	27	27	29	29	31	31	33	33	33														
0.641 ~ 0.660 (0.0252 ~ 0.0260)	17	19	19	21	21	23	23	25	25	27	27	29	29	31	31	33	33	33															
0.661 ~ 0.680 (0.0260 ~ 0.0268)	17	19	19	21	21	23	23	25	25	27	27	29	29	31	31	33	33																
0.681 ~ 0.700 (0.0268 ~ 0.0276)	19	19	21	21	23	23	25	25	27	27	29	29	31	31	33	33	33																
0.701 ~ 0.720 (0.0276 ~ 0.0283)	19	21	21	23	23	25	25	27	27	29	29	31	31	33	33	33																	
0.721 ~ 0.740 (0.0284 ~ 0.0291)	21	21	23	23	25	25	27	27	29	29	31	31	33	33	33																		
0.741 ~ 0.760 (0.0292 ~ 0.0299)	21	23	23	25	25	27	27	29	29	31	31	33	33	33																			
0.761 ~ 0.780 (0.0300 ~ 0.0307)	21	23	23	25	25	27	27	29	29	31	31	33	33																				
0.781 ~ 0.800 (0.0307 ~ 0.0315)	23	23	25	25	27	27	29	29	31	31	33	33	33																				
0.801 ~ 0.820 (0.0315 ~ 0.0323)	23	25	25	27	27	29	29	31	31	33	33	33																					
0.821 ~ 0.840 (0.0323 ~ 0.0331)	25	25	27	27	29	29	31	31	33	33	33																						
0.841 ~ 0.860 (0.0331 ~ 0.0339)	25	27	27	29	29	31	31	33	33	33																							
0.861 ~ 0.880 (0.0339 ~ 0.0346)	25	27	27	29	29	31	31	33	33																								
0.881 ~ 0.900 (0.0347 ~ 0.0354)	27	27	29	29	31	31	33	33	33																								
0.901 ~ 0.920 (0.0355 ~ 0.0362)	27	29	29	31	31	33	33	33																									
0.921 ~ 0.940 (0.0363 ~ 0.0370)	29	29	31	31	33	33	33																										
0.941 ~ 0.960 (0.0370 ~ 0.0378)	29	31	31	33	33	33																											
0.961 ~ 0.980 (0.0378 ~ 0.0386)	29	31	31	33	33																												
0.981 ~ 1.000 (0.0386 ~ 0.0394)	31	31	33	33	33																												
1.001 ~ 1.020 (0.0394 ~ 0.0402)	31	33	33	33																													
1.121 ~ 1.040 (0.0402 ~ 0.0409)	33	33	33																														
1.041 ~ 1.060 (0.0410 ~ 0.0417)	33	33																															
1.161 ~ 1.080 (0.0418 ~ 0.0425)	33																																
1.081 ~ 1.100 (0.0426 ~ 0.0433)	33																																

New Shim Thickness mm (in.)

Shim No.	Thickness	Shim No.	Thickness
01	2.500 (0.0984)	19	2.950 (0.1161)
03	2.550 (0.1004)	21	3.000 (0.1181)
05	2.600 (0.1024)	23	3.050 (0.1201)
07	2.650 (0.1043)	25	3.100 (0.1220)
09	2.700 (0.1063)	27	3.150 (0.1240)
11	2.750 (0.1083)	29	3.200 (0.1260)
13	2.800 (0.1102)	31	3.250 (0.1280)
15	2.850 (0.1122)	33	3.300 (0.1299)
17	2.900 (0.1142)		

Intake valve clearance (Cold):

0.20 to 0.30 mm (0.008 to 0.012 in.)

EXAMPLE: The 2.800 mm (0.1102 in.) shim is installed, and the measured clearance is 0.450 mm (0.0177 in.). Replace the 2.800 mm (0.1102 in.) shim with a new No. 21 shim.

Y

A57526

Adjusting Shim Selection Chart (Exhaust)

	2.500 (0.0984)	2.525 (0.0994)	2.550 (0.1004)	2.575 (0.1014)	2.600 (0.1024)	2.625 (0.1033)	2.650 (0.1043)	2.675 (0.1053)	2.700 (0.1063)	2.725 (0.1073)	2.750 (0.1073)	2.775 (0.1093)	2.800 (0.1102)	2.825 (0.1112)	2.850 (0.1122)	2.875 (0.1132)	2.900 (0.1142)	2.925 (0.1152)	2.950 (0.1161)	2.975 (0.1171)	3.000 (0.1181)	3.025 (0.1191)	3.050 (0.1201)	3.075 (0.1211)	3.100 (0.1220)	3.125 (0.1230)	3.150 (0.1240)	3.175 (0.1250)	3.200 (0.1260)	3.225 (0.1270)	3.250 (0.1280)	3.275 (0.1289)	3.300 (0.1299)
0.000 ~ 0.020 (0.0000 ~ 0.0008)															01	01	01	03	03	05	05	07	07	09	09	11	11	13	13	15	15	17	17
0.021 ~ 0.040 (0.0008 ~ 0.0016)															01	01	03	03	05	05	07	07	09	09	11	11	13	13	15	15	17	17	19
0.041 ~ 0.060 (0.0016 ~ 0.0024)														01	01	03	03	05	05	07	07	09	09	11	11	13	13	15	15	17	17	19	19
0.061 ~ 0.080 (0.0024 ~ 0.0031)													01	01	01	03	03	05	05	07	07	09	09	11	11	13	13	15	15	17	17	19	19
0.081 ~ 0.100 (0.0032 ~ 0.0039)												01	01	01	03	03	05	05	07	07	09	09	11	11	13	13	15	15	17	17	19	19	21
0.101 ~ 0.120 (0.0040 ~ 0.0047)											01	01	01	03	03	05	05	07	07	09	09	11	11	13	13	15	15	17	17	19	19	21	21
0.121 ~ 0.140 (0.0048 ~ 0.0055)											01	01	03	03	05	05	07	07	09	09	11	11	13	13	15	15	17	17	19	19	21	21	23
0.141 ~ 0.160 (0.0056 ~ 0.0063)										01	01	03	03	05	05	07	07	09	09	11	11	13	13	15	15	17	17	19	19	21	21	23	23
0.161 ~ 0.180 (0.0063 ~ 0.0071)									01	01	01	03	03	05	05	07	07	09	09	11	11	13	13	15	15	17	17	19	19	21	21	23	23
0.181 ~ 0.200 (0.0071 ~ 0.0079)								01	01	01	03	03	05	05	07	07	09	09	11	11	13	13	15	15	17	17	19	19	21	21	23	23	25
0.201 ~ 0.220 (0.0079 ~ 0.0087)							01	01	01	03	03	05	05	07	07	09	09	11	11	13	13	15	15	17	17	19	19	21	21	23	23	25	25
0.221 ~ 0.240 (0.0087 ~ 0.0094)							01	01	01	03	03	05	05	07	07	09	09	11	11	13	13	15	15	17	17	19	19	21	21	23	23	25	25
0.241 ~ 0.260 (0.0095 ~ 0.0102)						01	01	01	03	03	05	05	07	07	09	09	11	11	13	13	15	15	17	17	19	19	21	21	23	23	25	25	27
0.261 ~ 0.280 (0.0103 ~ 0.0110)					01	01	01	03	03	05	05	07	07	09	09	11	11	13	13	15	15	17	17	19	19	21	21	23	23	25	25	27	27
0.281 ~ 0.300 (0.0111 ~ 0.0118)				01	01	01	03	03	05	05	07	07	09	09	11	11	13	13	15	15	17	17	19	19	21	21	23	23	25	25	27	27	29
0.301 ~ 0.320 (0.0119 ~ 0.0126)			01	01	01	03	03	05	05	07	07	09	09	11	11	13	13	15	15	17	17	19	19	21	21	23	23	25	25	27	27	29	29
0.321 ~ 0.340 (0.0126 ~ 0.0134)			01	01	01	03	03	05	05	07	07	09	09	11	11	13	13	15	15	17	17	19	19	21	21	23	23	25	25	27	27	29	29
0.341 ~ 0.349 (0.0134 ~ 0.0137)		01	01	01	03	03	05	05	07	07	09	09	11	11	13	13	15	15	17	17	19	19	21	21	23	23	25	25	27	27	29	29	31
0.350 ~ 0.450 (0.0138 ~ 0.0177)																																	
0.451 ~ 0.460 (0.0178 ~ 0.0181)	03	05	05	07	07	09	09	11	11	13	13	15	15	17	17	19	19	21	21	23	23	25	25	27	27	29	29	31	31	33	33	33	
0.461 ~ 0.480 (0.0181 ~ 0.0189)	05	05	07	07	09	09	11	11	13	13	15	15	17	17	19	19	21	21	23	23	25	25	27	27	29	29	31	31	33	33	33		
0.481 ~ 0.500 (0.0189 ~ 0.0197)	05	07	07	09	09	11	11	13	13	15	15	17	17	19	19	21	21	23	23	25	25	27	27	29	29	31	31	33	33	33			
0.501 ~ 0.520 (0.0197 ~ 0.0205)	05	07	07	09	09	11	11	13	13	15	15	17	17	19	19	21	21	23	23	25	25	27	27	29	29	31	31	33	33	33			
0.521 ~ 0.540 (0.0205 ~ 0.0213)	07	07	09	09	11	11	13	13	15	15	17	17	19	19	21	21	23	23	25	25	27	27	29	29	31	31	33	33	33				
0.541 ~ 0.560 (0.0213 ~ 0.0220)	07	09	09	11	11	13	13	15	15	17	17	19	19	21	21	23	23	25	25	27	27	29	29	31	31	33	33	33					
0.561 ~ 0.580 (0.0221 ~ 0.0228)	09	09	11	11	13	13	15	15	17	17	19	19	21	21	23	23	25	25	27	27	29	29	31	31	33	33	33						
0.581 ~ 0.600 (0.0229 ~ 0.0236)	09	11	11	13	13	15	15	17	17	19	19	21	21	23	23	25	25	27	27	29	29	31	31	33	33	33							
0.601 ~ 0.620 (0.0237 ~ 0.0244)	09	11	11	13	13	15	15	17	17	19	19	21	21	23	23	25	25	27	27	29	29	31	31	33	33	33							
0.621 ~ 0.640 (0.0244 ~ 0.0252)	11	11	13	13	15	15	17	17	19	19	21	21	23	23	25	25	27	27	29	29	31	31	33	33	33								
0.641 ~ 0.660 (0.0252 ~ 0.0260)	11	13	13	15	15	17	17	19	19	21	21	23	23	25	25	27	27	29	29	31	31	33	33	33									
0.661 ~ 0.680 (0.0260 ~ 0.0268)	13	13	15	15	17	17	19	19	21	21	23	23	25	25	27	27	29	29	31	31	33	33	33										
0.681 ~ 0.700 (0.0268 ~ 0.0276)	13	15	15	17	17	19	19	21	21	23	23	25	25	27	27	29	29	31	31	33	33	33	33										
0.701 ~ 0.720 (0.0276 ~ 0.0283)	13	15	15	17	17	19	19	21	21	23	23	25	25	27	27	29	29	31	31	33	33	33											
0.721 ~ 0.740 (0.0284 ~ 0.0291)	15	15	17	17	19	19	21	21	23	23	25	25	27	27	29	29	31	31	33	33	33												
0.741 ~ 0.760 (0.0292 ~ 0.0299)	15	17	17	19	19	21	21	23	23	25	25	27	27	29	29	31	31	33	33	33													
0.761 ~ 0.780 (0.0300 ~ 0.0307)	17	17	19	19	21	21	23	23	25	25	27	27	29	29	31	31	33	33	33	33													
0.781 ~ 0.800 (0.0307 ~ 0.0315)	17	19	19	21	21	23	23	25	25	27	27	29	29	31	31	33	33	33	33														
0.801 ~ 0.820 (0.0315 ~ 0.0323)	17	19	19	21	21	23	23	25	25	27	27	29	29	31	31	33	33	33															
0.821 ~ 0.840 (0.0323 ~ 0.0331)	19	19	21	21	23	23	25	25	27	27	29	29	31	31	33	33	33																
0.841 ~ 0.860 (0.0331 ~ 0.0339)	19	21	21	23	23	25	25	27	27	29	29	31	31	33	33	33																	
0.861 ~ 0.880 (0.0339 ~ 0.0346)	21	21	23	23	25	25	27	27	29	29	31	31	33	33	33																		
0.881 ~ 0.900 (0.0347 ~ 0.0354)	21	23	23	25	25	27	27	29	29	31	31	33	33	33	33																		
0.901 ~ 0.920 (0.0355 ~ 0.0362)	21	23	23	25	25	27	27	29	29	31	31	33	33	33																			
0.921 ~ 0.940 (0.0363 ~ 0.0370)	23	23	25	25	27	27	29	29	31	31	33	33	33																				
0.941 ~ 0.960 (0.0370 ~ 0.0378)	23	25	25	27	27	29	29	31	31	33	33	33																					
0.961 ~ 0.980 (0.0378 ~ 0.0386)	25	25	27	27	29	29	31	31	33	33	33																						
0.981 ~ 1.000 (0.0386 ~ 0.0394)	25	27	27	29	29	31	31	33	33	33	33																						
1.001 ~ 1.020 (0.0394 ~ 0.0402)	25	27	27	29	29	31	31	33	33	33																							
1.021 ~ 1.040 (0.0402 ~ 0.0409)	27	27	29	29	31	31	33	33	33																								
1.041 ~ 1.060 (0.0410 ~ 0.0417)	27	29	29	31	31	33	33	33																									
1.061 ~ 1.080 (0.0418 ~ 0.0425)	29	29	31	31	33	33	33																										
1.081 ~ 1.100 (0.0426 ~ 0.0433)	29	31	31	33	33	33	33																										
1.101 ~ 1.120 (0.0433 ~ 0.0441)	29	31	31	33	33	33																											
1.121 ~ 1.140 (0.0441 ~ 0.0449)	31	31	33	33	33																												
1.141 ~ 1.160 (0.0449 ~ 0.0457)	31	33	33	33																													
1.161 ~ 1.180 (0.0457 ~ 0.0465)	33	33	33																														
1.181 ~ 1.200 (0.0465 ~ 0.0472)	33	33	33																														
1.201 ~ 1.220 (0.0473 ~ 0.0480)	33	33																															
1.221 ~ 1.240 (0.0481 ~ 0.0488)	33																																

New Shim Thickness mm (in.)

Shim No.	Thickness	Shim No.	Thickness
01	2.500 (0.0984)	19	2.950 (0.1161)
03	2.550 (0.1004)	21	3.000 (0.1181)
05	2.600 (0.1024)	23	3.050 (0.1201)
07	2.650 (0.1043)	25	3.100 (0.1220)
09	2.700 (0.1063)	27	3.150 (0.1240)
11	2.750 (0.1083)	29	3.200 (0.1260)
13	2.800 (0.1102)	31	3.250 (0.1280)
15	2.850 (0.1122)	33	3.300 (0.1299)
17	2.900 (0.1142)		

Exhaust valve clearance (Cold):
0.35 to 0.45 mm (0.014 to 0.018 in.)

EXAMPLE: The 2.800 mm (0.1102 in.) shim is installed, and the measured clearance is 0.590 mm (0.0232 in.). Replace the 2.800 mm (0.1102 in.) shim with a new No. 21 shim.

Y

A57527

PARTIAL ENGINE ASSY (1CD–FTV)(From September, 2003)

141NF–01

COMPONENTS

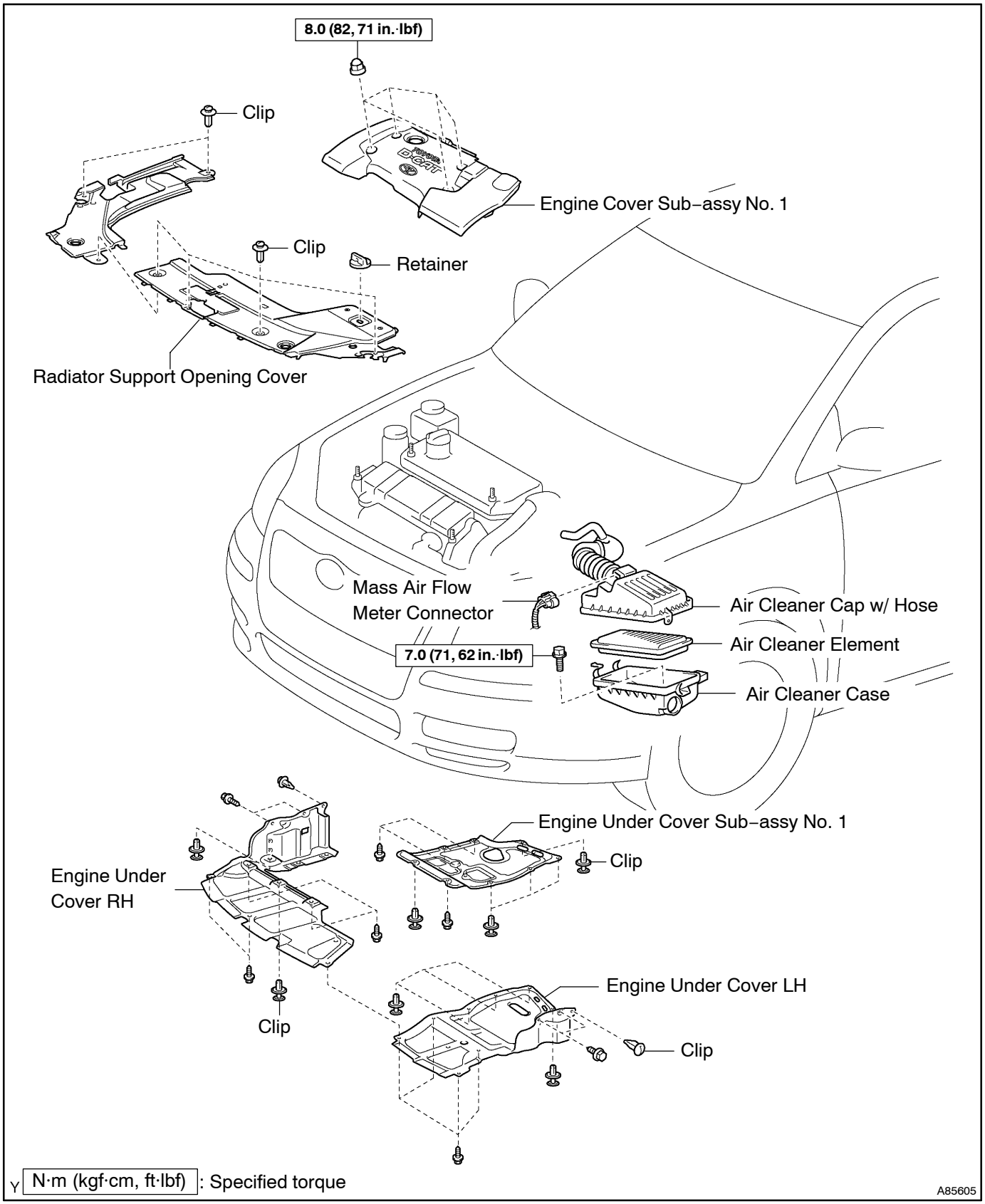

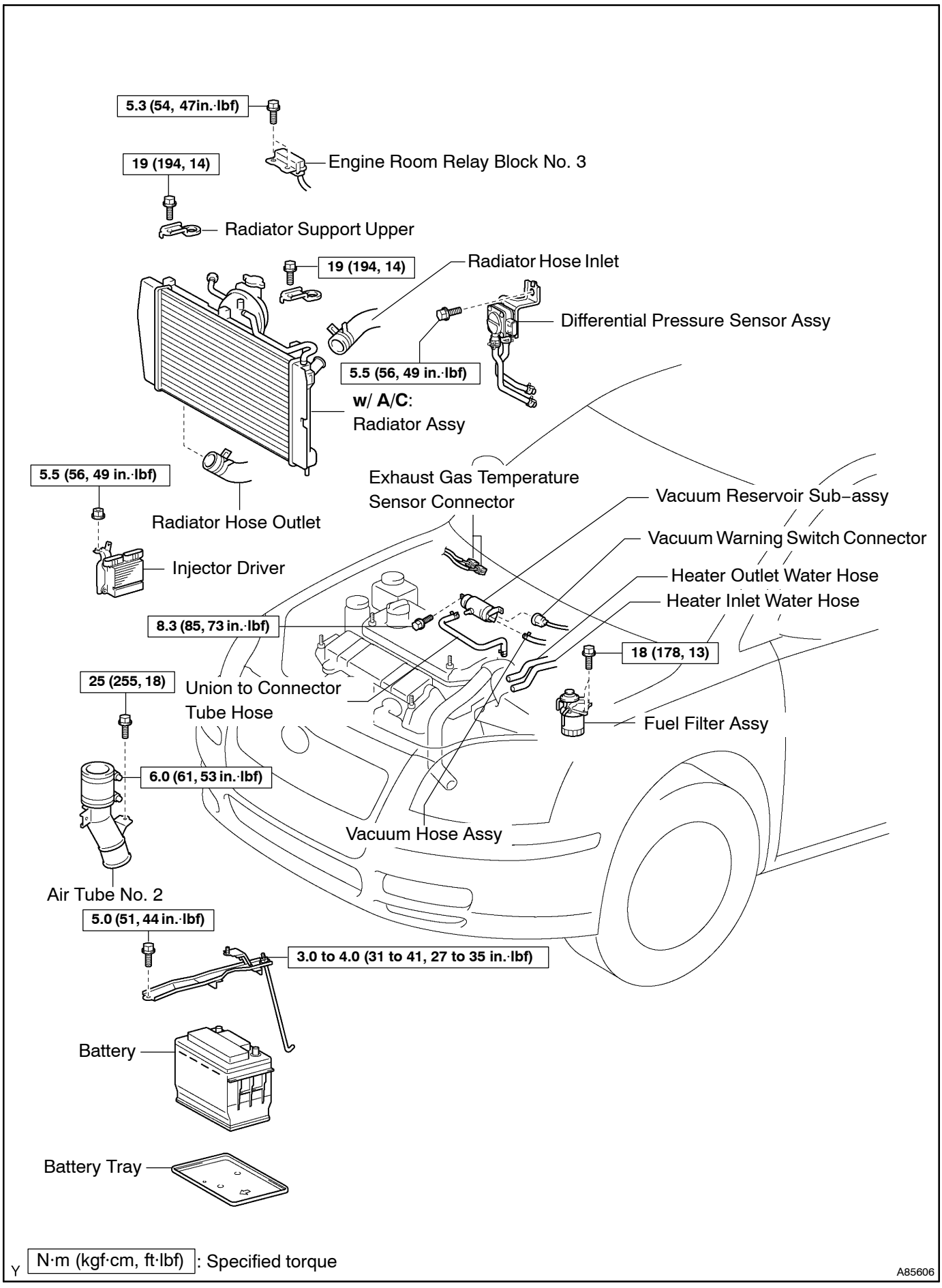
5.3 (54, 47in.·lbf)
Engine Room Relay Block No. 3
19 (194, 14)
Radiator Support Upper
19 (194, 14)
Radiator Hose Inlet
Differential Pressure Sensor Assy
5.5 (56, 49 in.·lbf)
w/ A/C:
Radiator Assy
5.5 (56, 49 in.·lbf)
Radiator Hose Outlet
Exhaust Gas Temperature Sensor Connector
Vacuum Reservoir Sub–assy
Vacuum Warning Switch Connector
Injector Driver
Heater Outlet Water Hose
Heater Inlet Water Hose
8.3 (85, 73 in.·lbf)
18 (178, 13)
25 (255, 18)
Union to Connector Tube Hose
Fuel Filter Assy
6.0 (61, 53 in.·lbf)
Vacuum Hose Assy
Air Tube No. 2
5.0 (51, 44 in.·lbf)
3.0 to 4.0 (31 to 41, 27 to 35 in.·lbf)
Battery
Battery Tray
Y N·m (kgf·cm, ft·lbf) : Specified torque
A85606

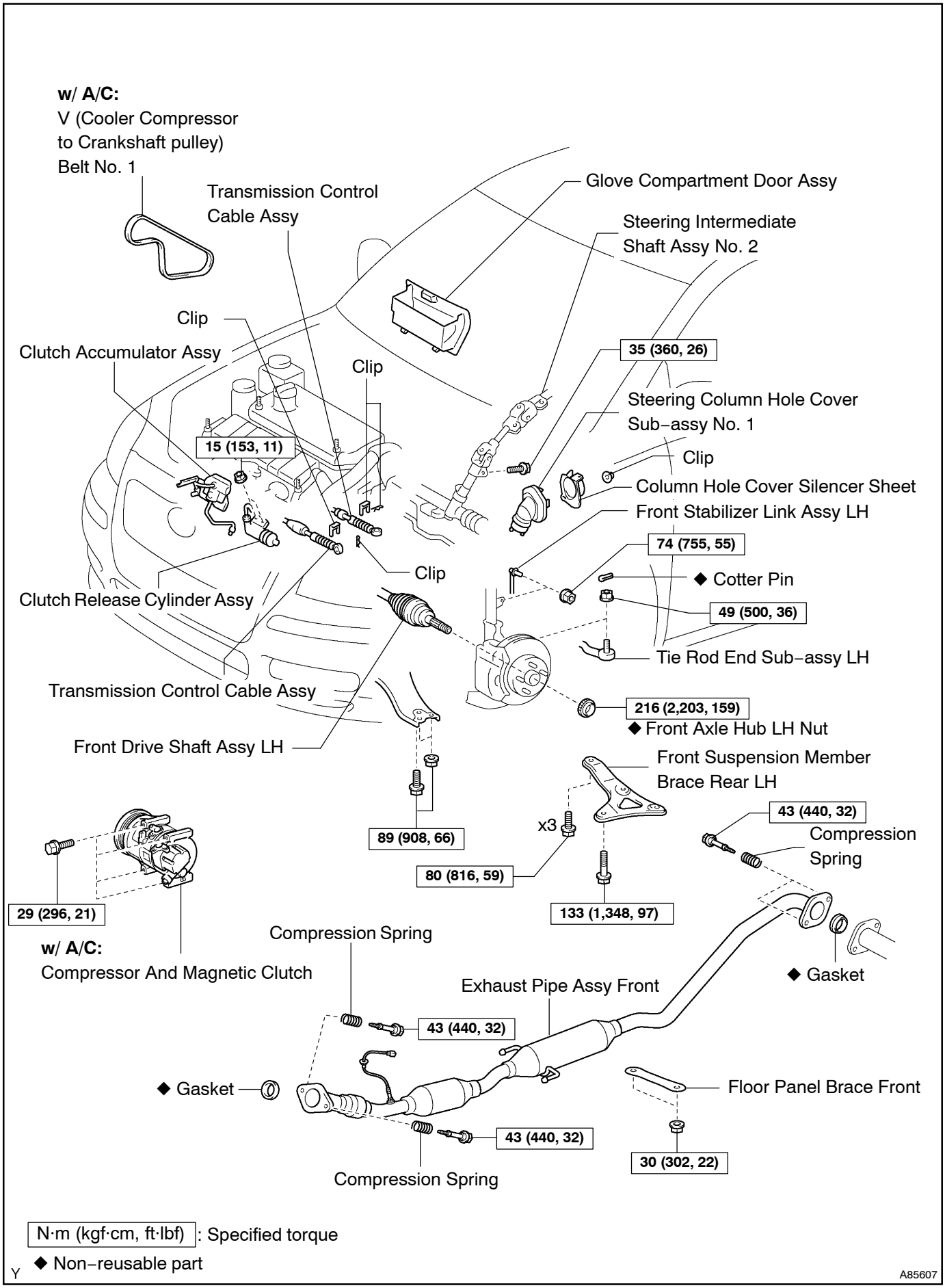
w/ A/C:
V (Cooler Compressor to Crankshaft pulley) Belt No. 1
Transmission Control Cable Assy
Glove Compartment Door Assy
Steering Intermediate Shaft Assy No. 2
Clip
Clutch Accumulator Assy
Clip
35 (360, 26)
Steering Column Hole Cover Sub–assy No. 1
15 (153, 11)
Clip
Column Hole Cover Silencer Sheet
Front Stabilizer Link Assy LH
74 (755, 55)
◆ Cotter Pin
Clip
Clutch Release Cylinder Assy
49 (500, 36)
Tie Rod End Sub–assy LH
Transmission Control Cable Assy
216 (2,203, 159)
◆ Front Axle Hub LH Nut
Front Drive Shaft Assy LH
Front Suspension Member Brace Rear LH
43 (440, 32)
Compression Spring
x3
89 (908, 66)
80 (816, 59)
133 (1,348, 97)
29 (296, 21)
w/ A/C:
Compressor And Magnetic Clutch
Compression Spring
Exhaust Pipe Assy Front
◆ Gasket
43 (440, 32)
◆ Gasket
Floor Panel Brace Front
43 (440, 32)
30 (302, 22)
Compression Spring
N·m (kgf·cm, ft·lbf) : Specified torque
◆ Non–reusable part
Y
A85607

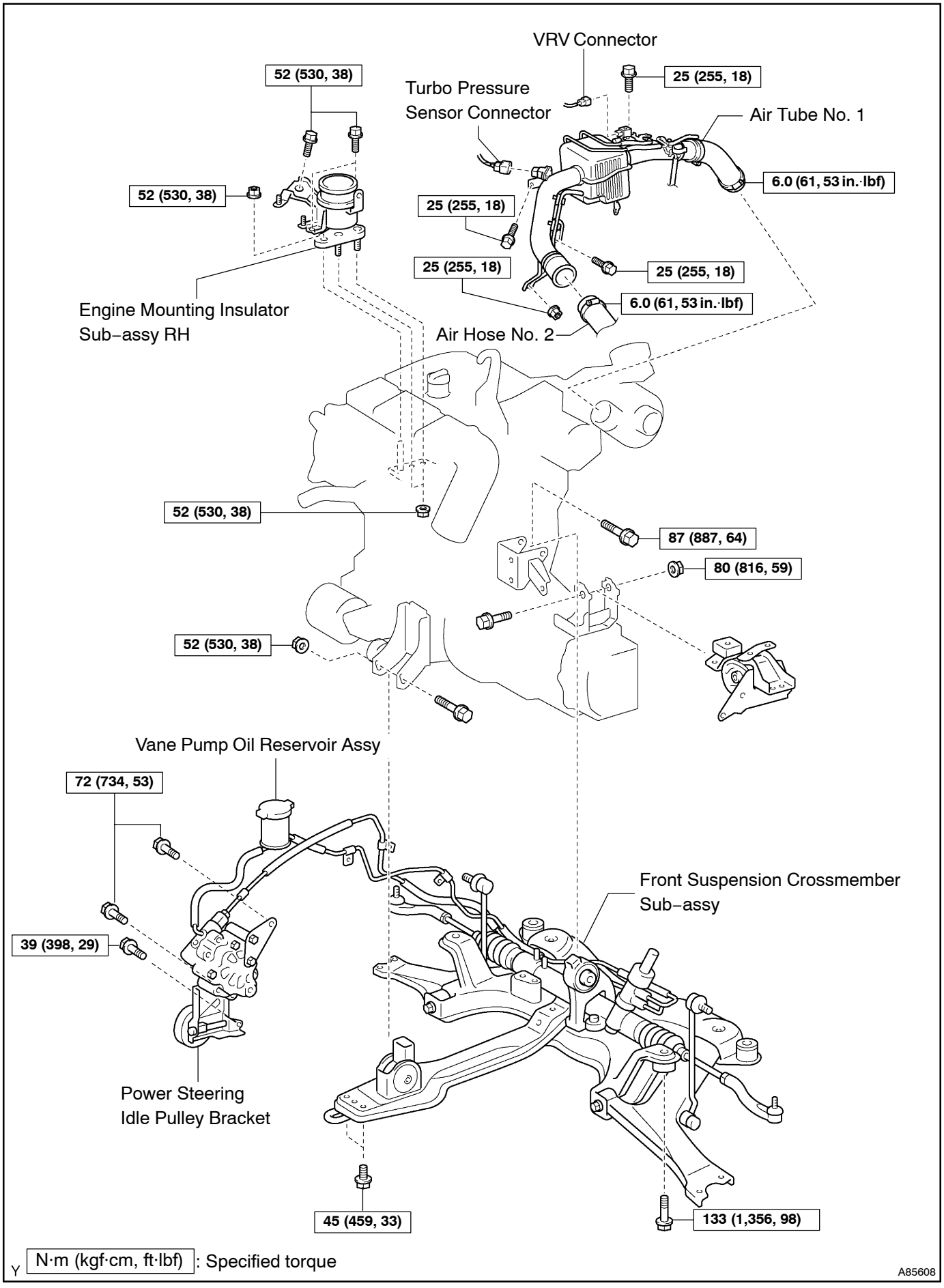
VRV Connector
52 (530, 38)
Turbo Pressure Sensor Connector
25 (255, 18)
Air Tube No. 1
52 (530, 38)
6.0 (61, 53 in.·lbf)
25 (255, 18)
25 (255, 18)
25 (255, 18)
6.0 (61, 53 in.·lbf)
Engine Mounting Insulator Sub–assy RH
Air Hose No. 2
52 (530, 38)
87 (887, 64)
80 (816, 59)
52 (530, 38)
Vane Pump Oil Reservoir Assy
72 (734, 53)
Front Suspension Crossmember Sub–assy
39 (398, 29)
Power Steering Idle Pulley Bracket
45 (459, 33)
133 (1,356, 98)
Y N·m (kgf·cm, ft·lbf) : Specified torque
A85608

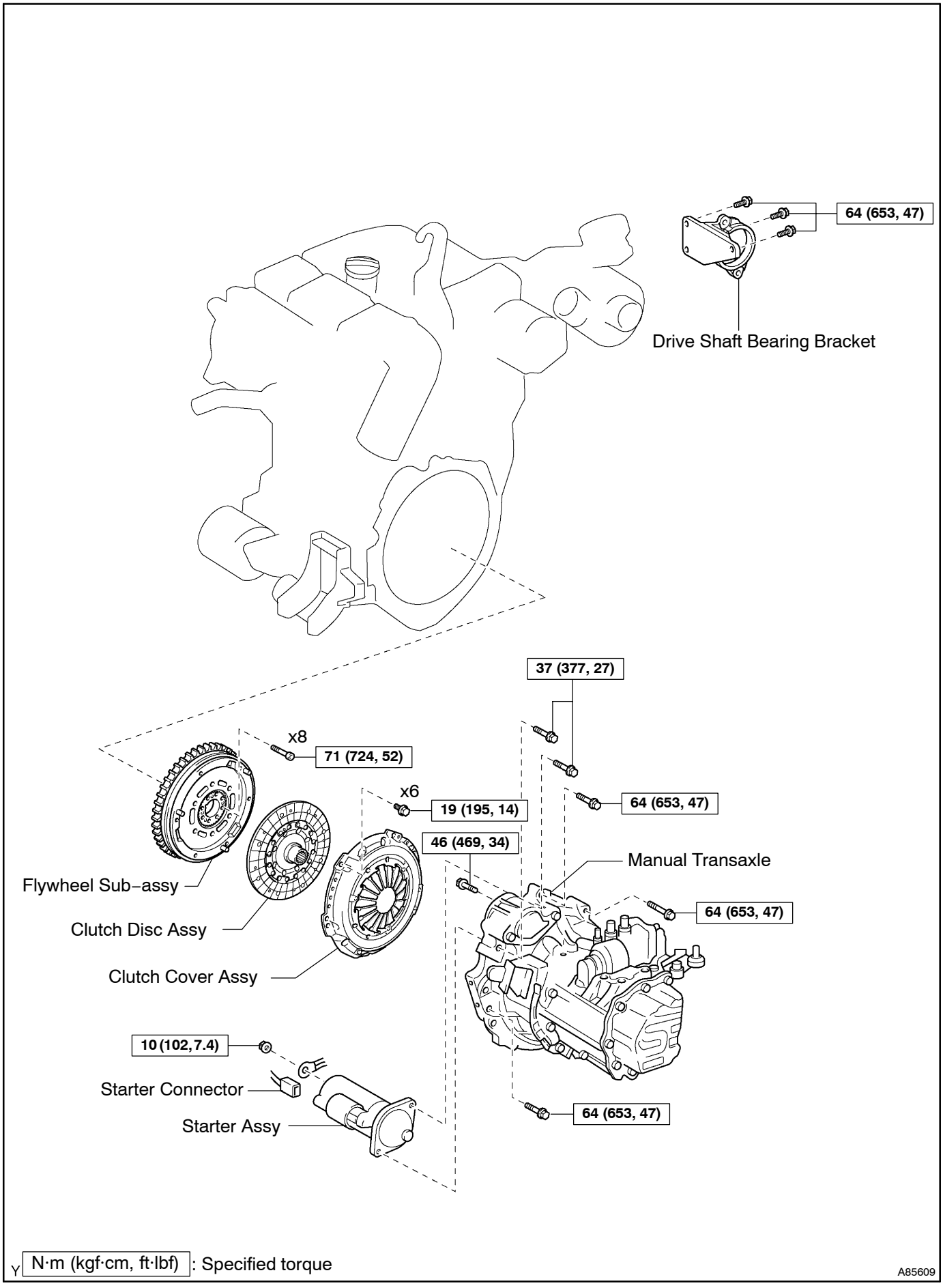
64 (653, 47)
Drive Shaft Bearing Bracket
37 (377, 27)
x8
71 (724, 52)
x6
19 (195, 14)
64 (653, 47)
46 (469, 34)
Manual Transaxle
Flywheel Sub–assy
Clutch Disc Assy
Clutch Cover Assy
64 (653, 47)
10 (102, 7.4)
Starter Connector
Starter Assy
64 (653, 47)
Y N·m (kgf·cm, ft·lbf): Specified torque
A85609

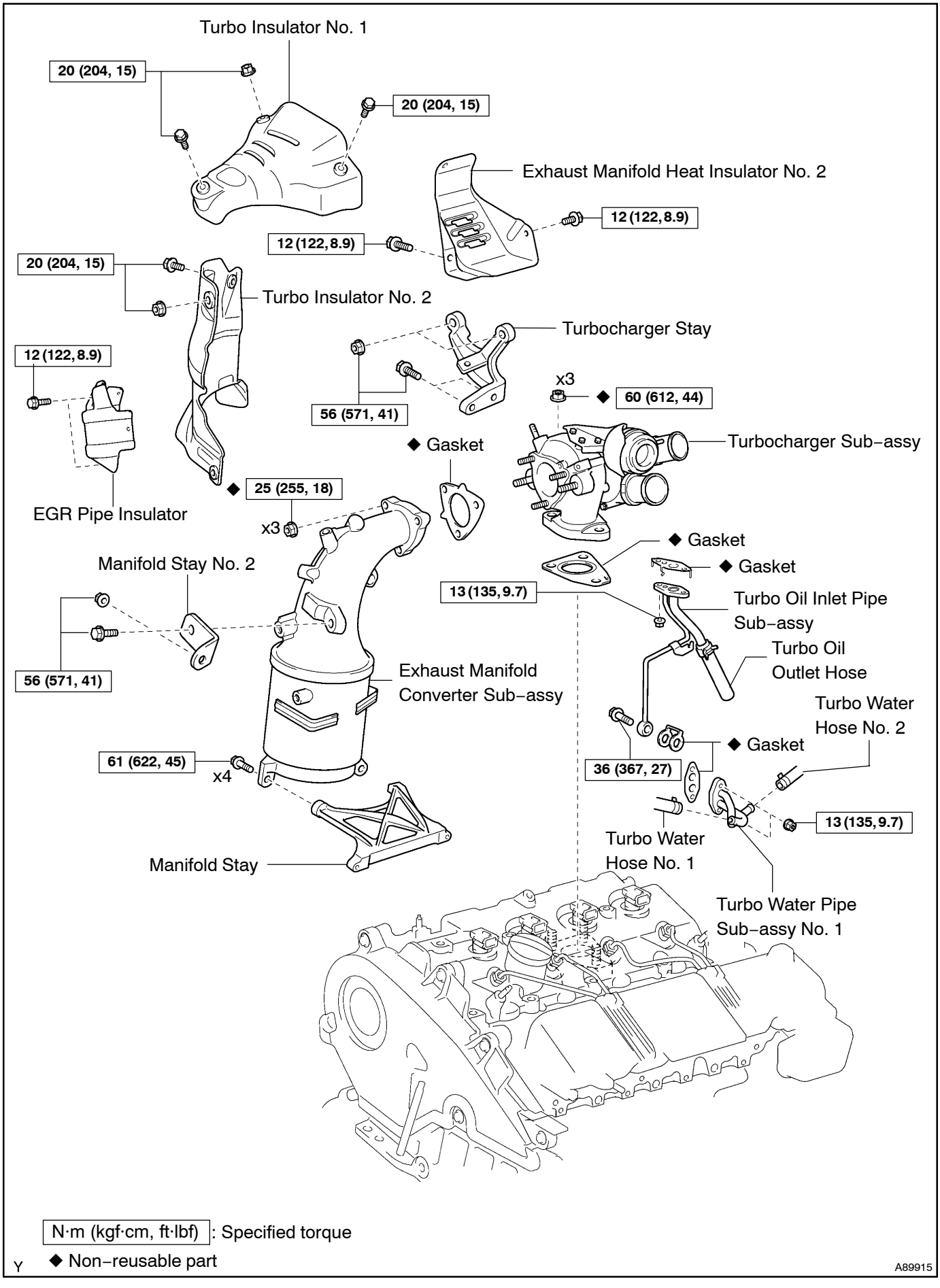
Turbo Insulator No. 1
20 (204, 15)
20 (204, 15)
Exhaust Manifold Heat Insulator No. 2
12 (122, 8.9)
12 (122, 8.9)
20 (204, 15)
Turbo Insulator No. 2
Turbocharger Stay
12 (122, 8.9)
x3
◆ 60 (612, 44)
56 (571, 41)
◆ Gasket
Turbocharger Sub–assy
◆ 25 (255, 18)
EGR Pipe Insulator
x3
◆ Gasket
Manifold Stay No. 2
◆ Gasket
13 (135, 9.7)
Turbo Oil Inlet Pipe Sub–assy
Turbo Oil Outlet Hose
56 (571, 41)
Exhaust Manifold Converter Sub–assy
Turbo Water Hose No. 2
◆ Gasket
61 (622, 45)
x4
36 (367, 27)
13 (135, 9.7)
Turbo Water Hose No. 1
Manifold Stay
Turbo Water Pipe Sub–assy No. 1
N·m (kgf·cm, ft·lbf) : Specified torque
◆ Non–reusable part
A89915

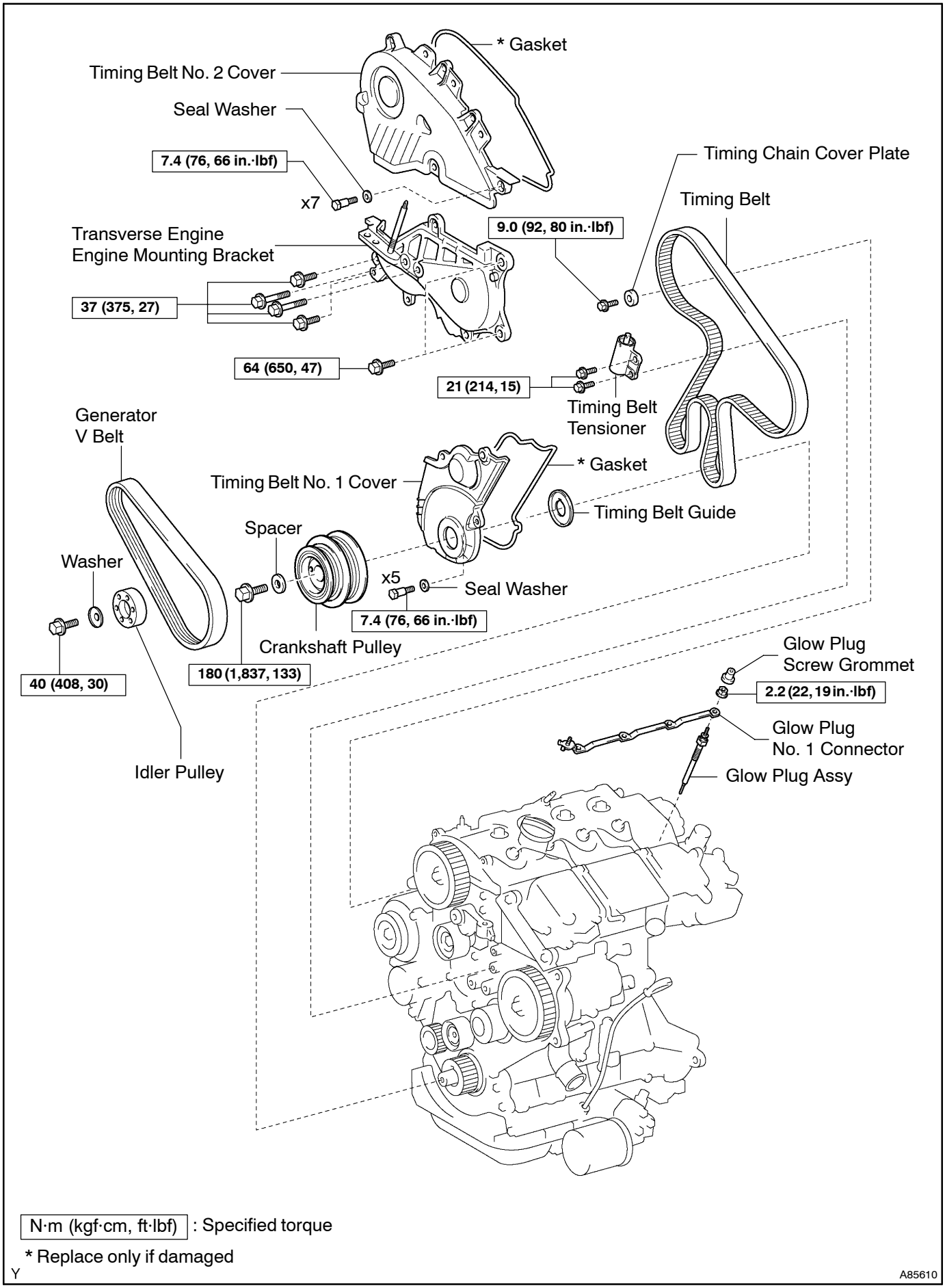
* Gasket
Timing Belt No. 2 Cover
Seal Washer
7.4 (76, 66 in.·lbf)
x7
Timing Chain Cover Plate
Timing Belt
Transverse Engine
Engine Mounting Bracket
9.0 (92, 80 in.·lbf)
37 (375, 27)
64 (650, 47)
21 (214, 15)
Timing Belt
Tensioner
Generator
V Belt
Timing Belt No. 1 Cover
* Gasket
Timing Belt Guide
Spacer
Washer
x5
Seal Washer
7.4 (76, 66 in.·lbf)
Crankshaft Pulley
40 (408, 30)
180 (1,837, 133)
Glow Plug
Screw Grommet
2.2 (22, 19 in.·lbf)
Glow Plug
No. 1 Connector
Glow Plug Assy
Idler Pulley
N·m (kgf·cm, ft·lbf) : Specified torque
* Replace only if damaged
Y
A85610

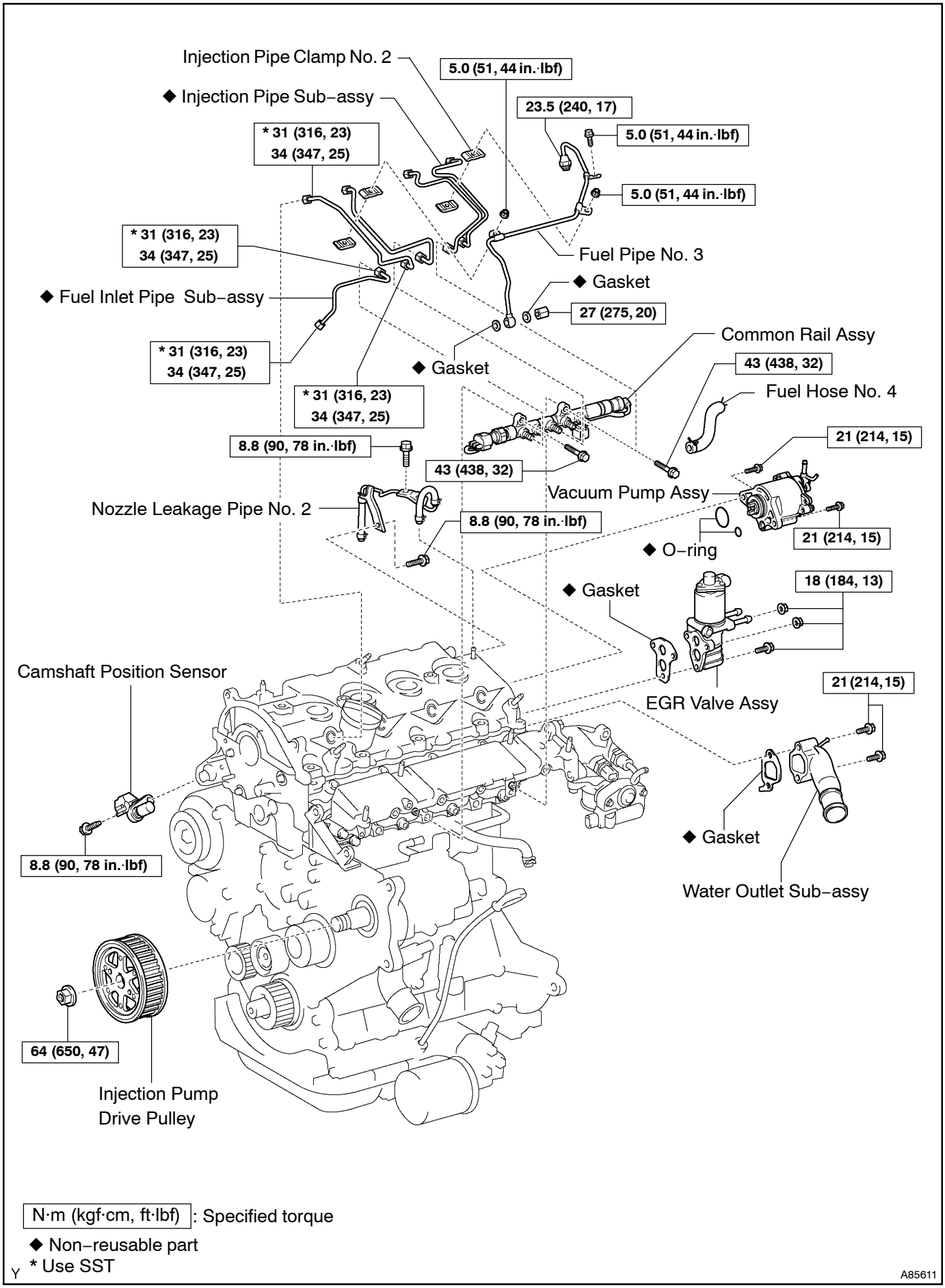

N·m (kgf·cm, ft·lbf) : Specified torque

◆ Non–reusable part

Y * Use SST

A85611

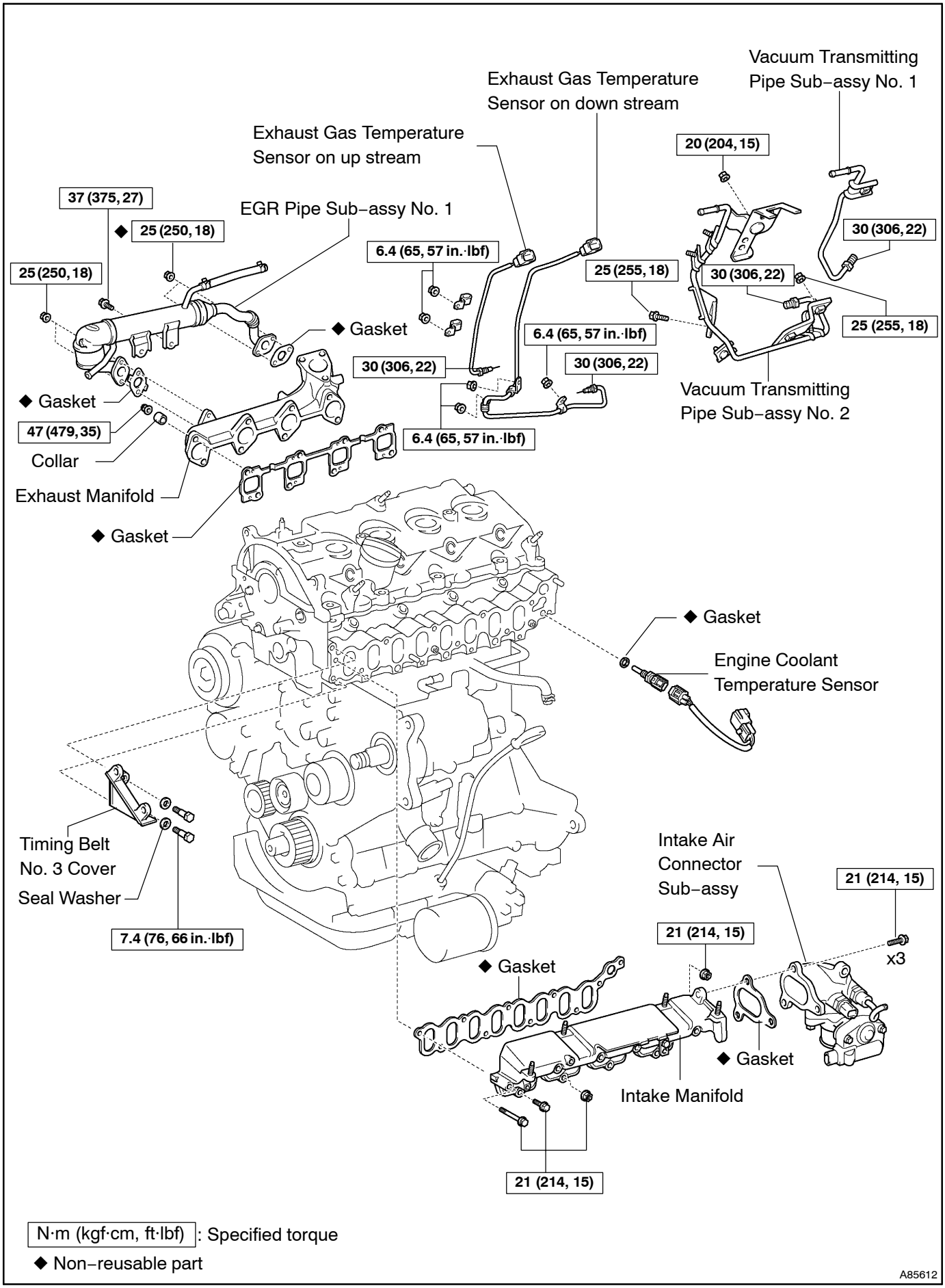
Vacuum Transmitting Pipe Sub–assy No. 1
Exhaust Gas Temperature Sensor on down stream
Exhaust Gas Temperature Sensor on up stream
20 (204, 15)
37 (375, 27)
EGR Pipe Sub–assy No. 1
◆ 25 (250, 18)
30 (306, 22)
6.4 (65, 57 in.·lbf)
25 (250, 18)
25 (255, 18)
30 (306, 22)
◆ Gasket
6.4 (65, 57 in.·lbf)
25 (255, 18)
30 (306, 22)
30 (306, 22)
Vacuum Transmitting Pipe Sub–assy No. 2
◆ Gasket
47 (479, 35)
6.4 (65, 57 in.·lbf)
Collar
Exhaust Manifold
◆ Gasket
◆ Gasket
Engine Coolant Temperature Sensor
Timing Belt No. 3 Cover
Seal Washer
7.4 (76, 66 in.·lbf)
Intake Air Connector Sub–assy
21 (214, 15)
21 (214, 15)
x3
◆ Gasket
◆ Gasket
Intake Manifold
21 (214, 15)
N·m (kgf·cm, ft·lbf) : Specified torque
◆ Non–reusable part
A85612

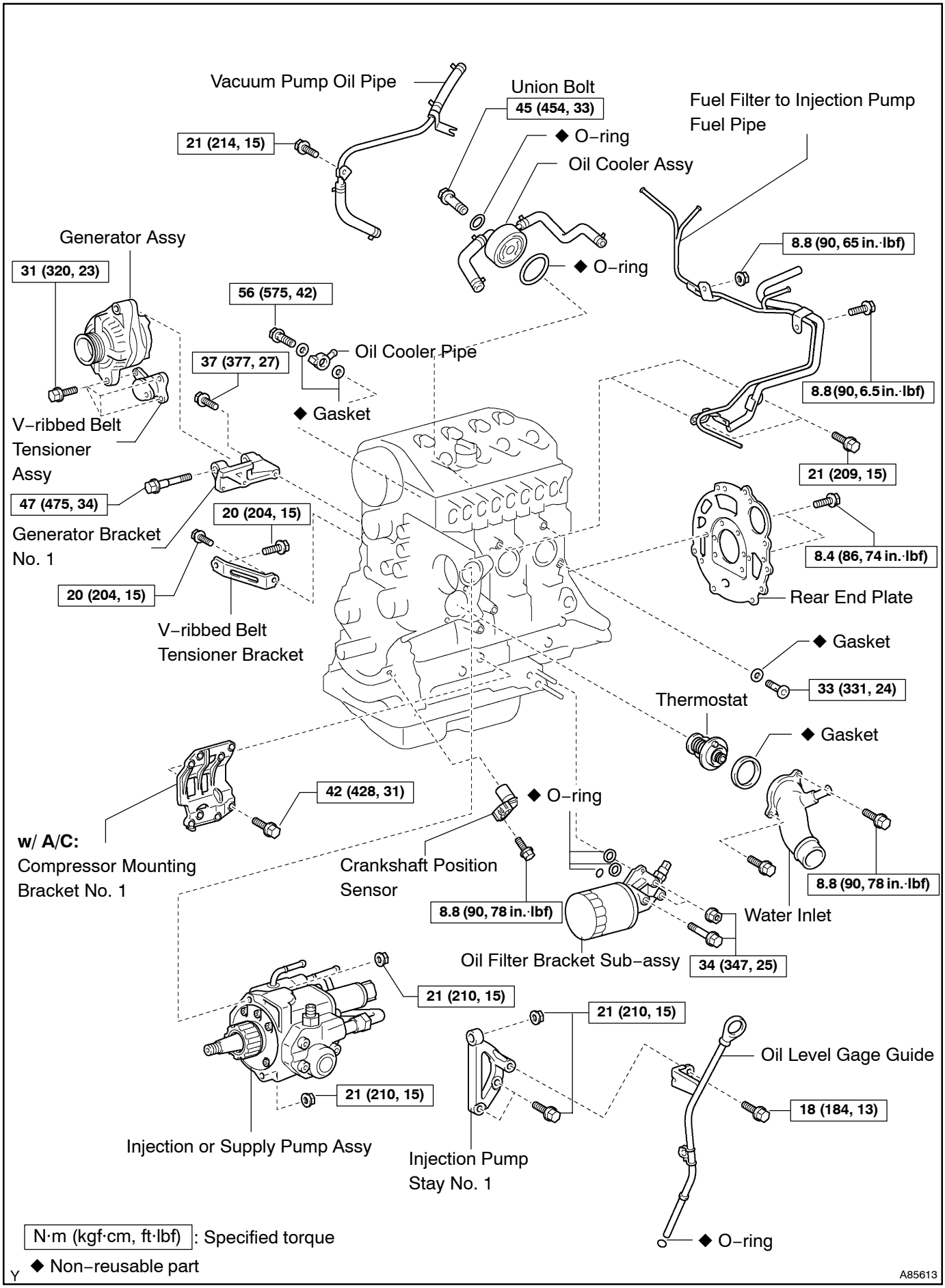
Vacuum Pump Oil Pipe
21 (214, 15)
Union Bolt
45 (454, 33)
◆ O–ring
Oil Cooler Assy
Fuel Filter to Injection Pump Fuel Pipe
Generator Assy
31 (320, 23)
56 (575, 42)
Oil Cooler Pipe
37 (377, 27)
◆ Gasket
◆ O–ring
8.8 (90, 65 in.·lbf)
8.8 (90, 6.5 in.·lbf)
V–ribbed Belt Tensioner Assy
47 (475, 34)
Generator Bracket No. 1
20 (204, 15)
20 (204, 15)
V–ribbed Belt Tensioner Bracket
21 (209, 15)
8.4 (86, 74 in.·lbf)
Rear End Plate
◆ Gasket
33 (331, 24)
Thermostat
◆ Gasket
42 (428, 31)
◆ O–ring
w/ A/C:
Compressor Mounting Bracket No. 1
Crankshaft Position Sensor
8.8 (90, 78 in.·lbf)
8.8 (90, 78 in.·lbf)
Water Inlet
Oil Filter Bracket Sub–assy
34 (347, 25)
21 (210, 15)
21 (210, 15)
Oil Level Gage Guide
21 (210, 15)
18 (184, 13)
Injection or Supply Pump Assy
Injection Pump Stay No. 1
◆ O–ring
N·m (kgf·cm, ft·lbf) : Specified torque
◆ Non–reusable part
A85613

141NG–01

REPLACEMENT

1. REMOVE FRONT WHEELS
2. REMOVE ENGINE UNDER COVER LH
3. REMOVE ENGINE UNDER COVER SUB–ASSY NO.1
4. REMOVE ENGINE UNDER COVER RH
5. REMOVE RADIATOR SUPPORT OPENING COVER
6. REMOVE ENGINE ROOM COVER SIDE
7. DRAIN ENGINE COOLANT (See page 16–19)
8. DRAIN ENGINE OIL (See Pub No. RM1018E on page 17–30)
9. DRAIN MANUAL TRANSAXLE OIL
Torque: 49 N·m (500 kgf·cm, 36 ft·lbf)
10. REMOVE ENGINE COVER SUB–ASSY NO.1
(a) Remove the 5 nuts, then remove the engine cover.
11. REMOVE BATTERY
12. REMOVE AIR CLEANER ASSY
(a) Disconnect the mass air flow meter connector.
(b) Remove the air cleaner cap together with the air cleaner hose.
(c) Remove the air cleaner filter element.
(d) Remove the 3 bolts and air cleaner case.

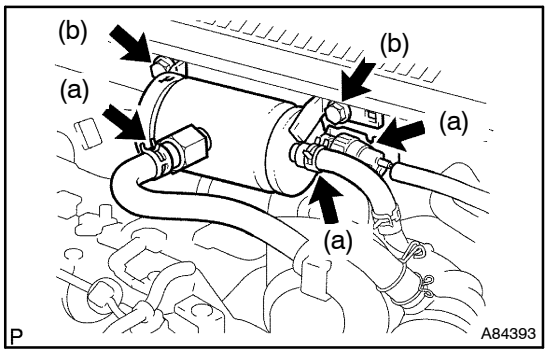

13. REMOVE VACUUM RESERVOIR SUB–ASSY
(a) Disconnect the 2 vacuum hoses and connector.
(b) Remove the 2 bolts and vacuum reservoir.

14. REMOVE FUEL FILTER ASSY (See Pub. No. RM1018E on page 11–82)
15. REMOVE RADIATOR HOSE INLET
16. REMOVE RADIATOR HOSE OUTLET

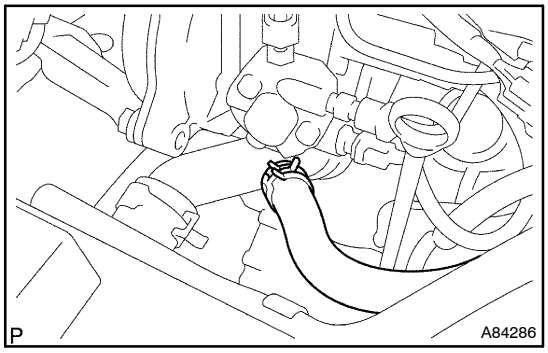

17. DISCONNECT WATER BY–PASS HOSE NO.2

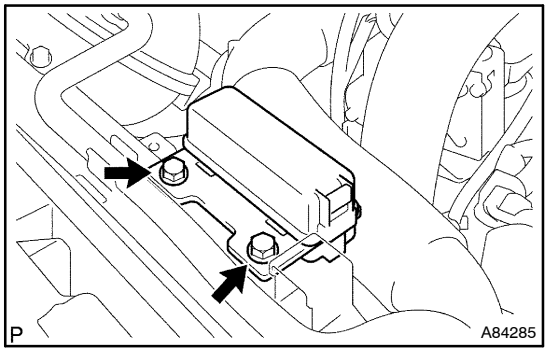

18. REMOVE ENGINE ROOM RELAY BLOCK NO.3

(a) Remove the 2 bolts, then remove the engine room relay block.

19. REMOVE RADIATOR ASSY (W/ AIR CONDITIONING)
(See Pub. No. RM1018E on page 16–51)

20. DISCONNECT HEATER INLET WATER HOSE

21. DISCONNECT HEATER OUTLET WATER HOSE

22. DISCONNECT FUEL HOSE NO.2

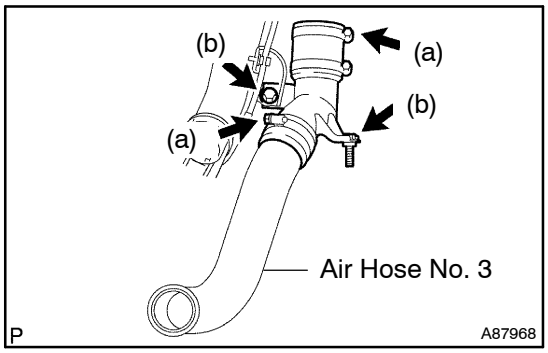

23. REMOVE AIR TUBE NO.2

(a) Loosen the 2 hose clamps, then disconnect the air hose No. 3.

(b) Remove the 2 bolts and air tube No. 2.

24. SEPARATE TRANSMISSION CONTROL CABLE ASSY

(a) Remove the 2 clips, then separate the control cable assembly.

25. REMOVE INJECTOR DRIVER

(a) Remove the 2 nuts which secure the injector driver.

(b) Disconnect the injector driver connector and harness clamp.

(c) Remove the injector driver.

26. DISCONNECT ENGINE WIRE

(a) Remove the glove compartment door.

(b) Disconnect the engine wire from the ECM and junction block.

(c) Pull out the engine wire.

(d) Disconnect the engine wire from the engine room junction block.

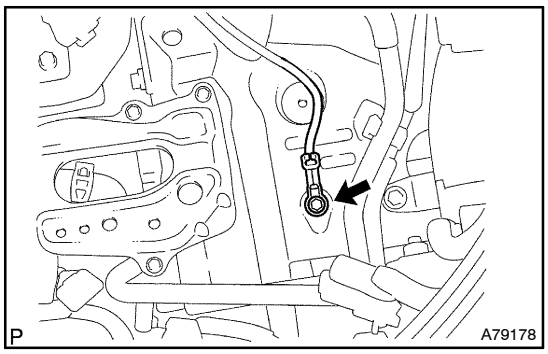

(e) Remove the bolt, then disconnect the wire harness from the body.

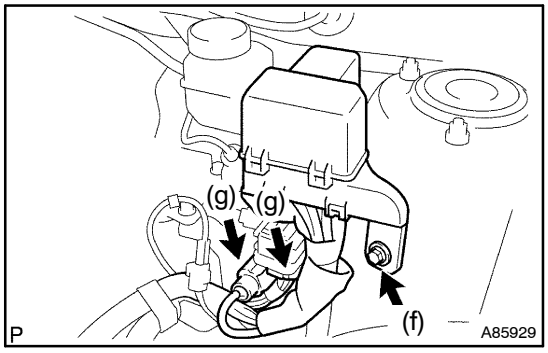

(f) Remove the bolt and engine room relay block No. 3.
(g) Disconnect the 2 connectors.
(h) Disconnect the wire harness from the fuel filter support.

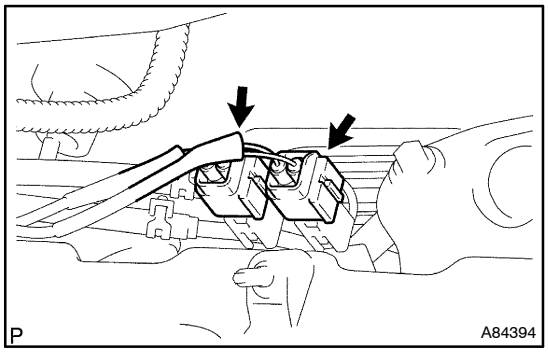

(i) Disconnect the 2 exhaust gas temperature sensor connectors.

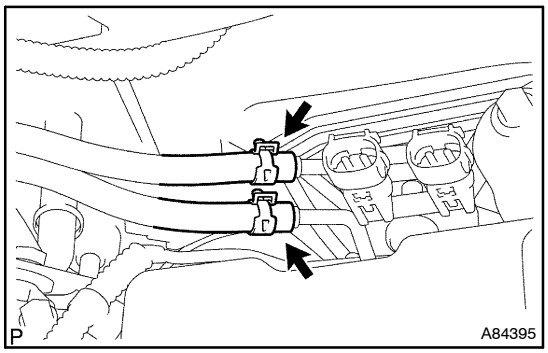

27. DISCONNECT VACUUM HOSE

(a) Disconnect the 2 vacuum hoses.

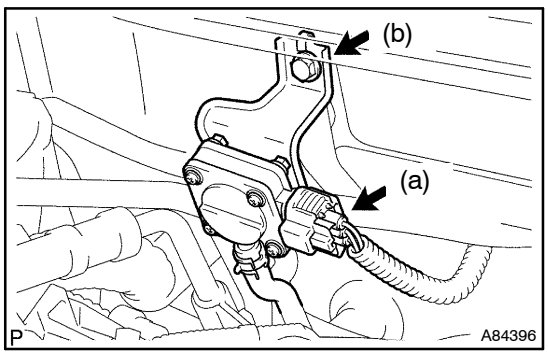

28. REMOVE DIFFERENTIAL PRESSURE SENSOR ASSY

(a) Disconnect the connector.
(b) Remove the bolt and differential pressure sensor.

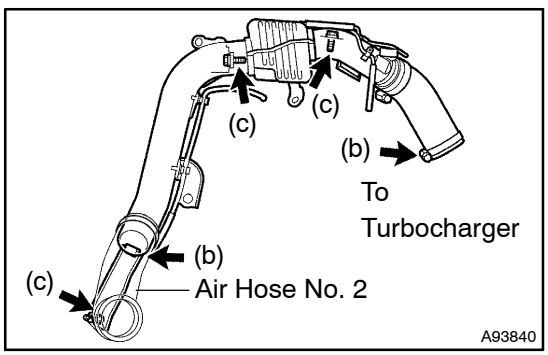

29. REMOVE AIR TUBE NO.1

(a) Disconnect the vacuum hoses and connectors.
(b) Loosen the 2 hose clamps.
(c) Remove the 2 bolts and nut, then detach the air tube No. 1.

30. REMOVE CLUTCH ACCUMULATOR ASSY (See Pub. No. RM1018E on page 42–22)
SST 09023–00100

31. REMOVE CLUTCH RELEASE CYLINDER ASSY (See Pub. No. RM1018E on page 42–17)

32. REMOVE V (COOLER COMPRESSOR TO CRANKSHAFT PULLEY) BELT NO.1 (See Pub. No. RM1018E on page 14–269)

33. SEPARATE COMPRESSOR AND MAGNETIC CLUTCH (W/ AIR CONDITIONING) (See Pub. No. RM1018E on page 55–86)

HINT:
Secure the hoses off to the side instead of detaching.

34. REMOVE FLOOR PANEL BRACE FRONT (See page 15–6)

35. REMOVE EXHAUST PIPE ASSY FRONT (See page 15–6)

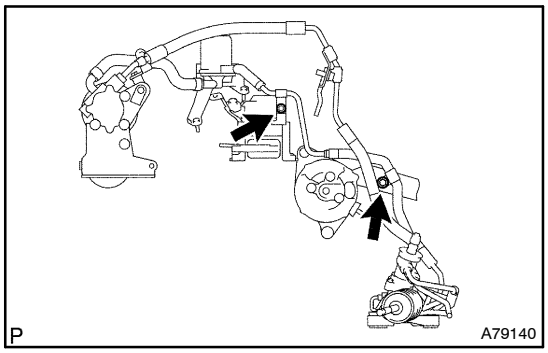

36. SEPARATE RETURN TUBE SUB–ASSY
(a) Remove the 2 clamp bolts, then separate the return tube sub–assembly.

37. SEPARATE VANE PUMP OIL RESERVOIR ASSY

38. REMOVE FRONT AXLE HUB LH NUT (See Pub. No. RM1018E on page 30–6)
SST 09930–00010

HINT:
Perform the same procedure as above on the opposite side.

39. SEPARATE TIE ROD END SUB–ASSY LH (See Pub. No. RM1018E on page 30–6)
SST 09628–62011

HINT:
Perform the same procedure as above on the opposite side.

40. SEPARATE FRONT STABILIZER LINK ASSY LH (See Pub. No. RM1018E on page 30–6)

HINT:
Perform the same procedure as above on the opposite side.

41. REMOVE COLUMN HOLE COVER SILENCER SHEET
(a) Remove the 2 clips and column hole cover silencer sheet.

42. REMOVE STEERING COLUMN HOLE COVER SUB–ASSY NO.1

43. REMOVE STEERING INTERMEDIATE SHAFT ASSY NO.2 (See Pub. No. RM1018E on page 51–36)

44. SEPARATE FRONT SUSPENSION ARM SUB–ASSY LOWER NO.1 LH (See Pub. No. RM1018E on page 30–6)

HINT:
Perform the same procedure as above on the opposite side.

45. SEPARATE FRONT AXLE ASSY LH (See Pub. No. RM1018E on page 30–6)

HINT:
Perform the same procedure as above on the opposite side.

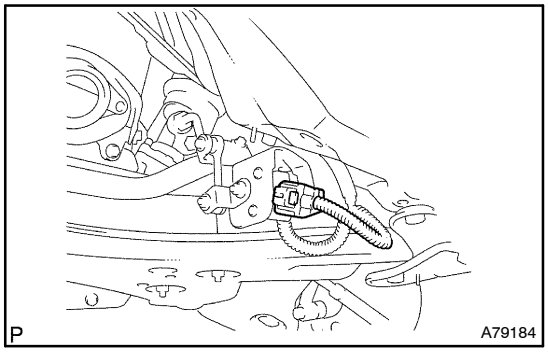

46. REMOVE ENGINE ASSEMBLY WITH TRANSAXLE

(a) Disconnect the height control sensor connector (with discharge head lamp).

(b) Set the engine lifter.

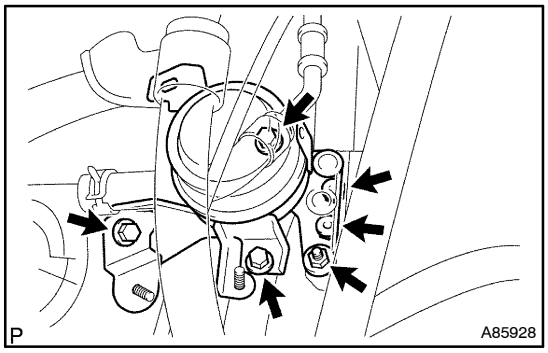

(c) Remove the 3 bolts, 3 nuts and engine mounting insulator sub–assembly RH.

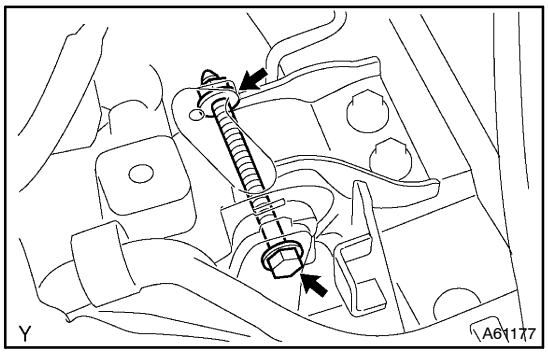

(d) Remove the through bolt and nut, then detach the engine mounting insulator LH from the vehicle.

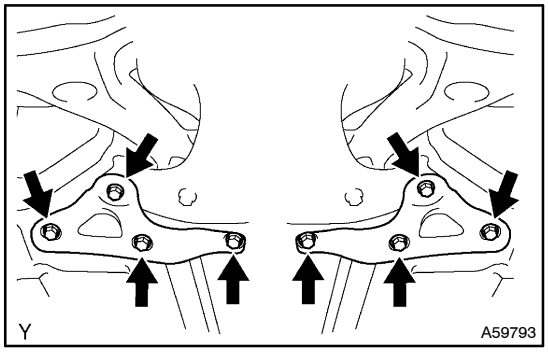

(e) Remove the 8 bolts and front suspension member brace rear RH and LH.

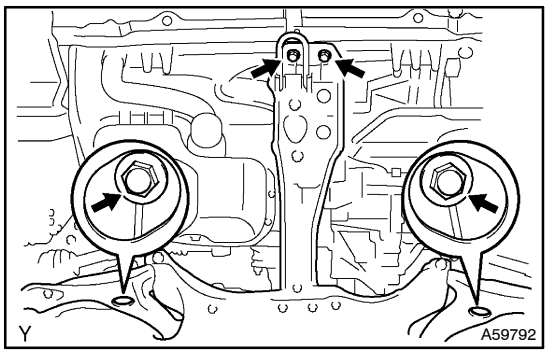

(f) Remove the 2 bolts and 2 nuts.

(g) Carefully remove the engine together with the transaxle from the vehicle.

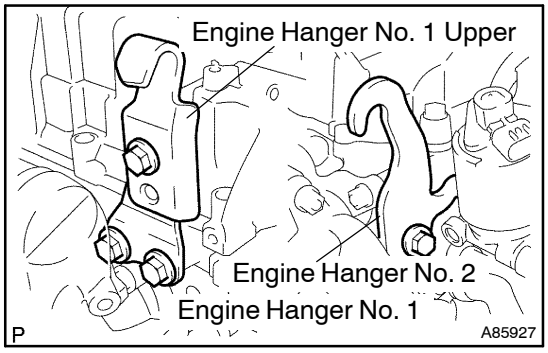

(h) Install the 2 engine hangers with the 2 bolts.
Part No.:
No. 1 engine hanger upper (yellow) 12284–27020
No. 1 engine hanger upper (black) 12284–27030
No. 1 engine hanger 12281–27050
No. 2 engine hanger 12282–27060
Bolt 91642–81025
Torque: 37 N·m (377 kgf·cm, 27 ft·lbf)

(i) Attach the engine sling, then hang the engine with the chain block.

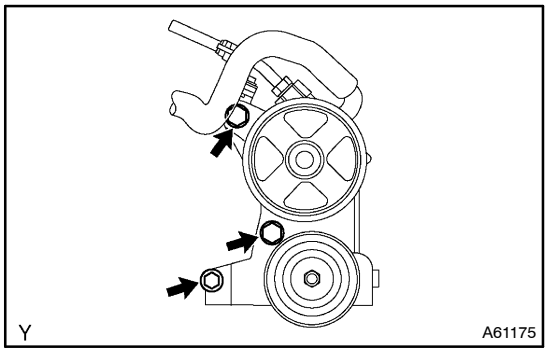

47. REMOVE POWER STEERING IDLE PULLEY BRACKET

(a) Remove the 3 bolts and power steering idle pulley bracket.

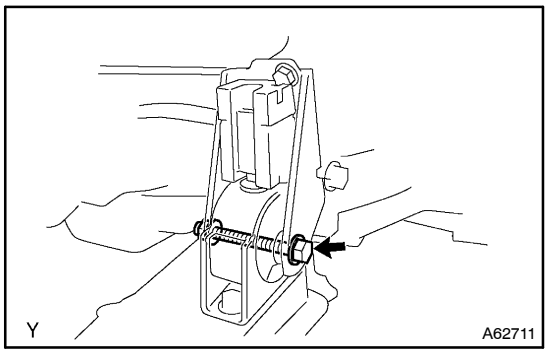

48. REMOVE FRONT SUSPENSION CROSSMEMBER SUB–ASSY

(a) Remove the through bolt and nut, then detach the engine mounting insulator front from the engine mounting bracket.

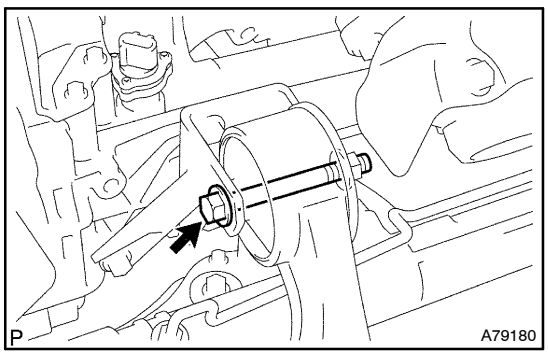

(b) Remove the through bolt, then detach the engine mounting insulator rear from the suspension crossmember.

(c) Separate the engine together with the transaxle from the suspension crossmember and engine mounting member.

49. REMOVE STARTER ASSY (See Pub. No. RM1018E on page 19–24)
50. REMOVE MANUAL TRANSAXLE (See Pub. No. RM1018E on page 41–33)
51. REMOVE CLUTCH COVER ASSY (See Pub. No. RM1018E on page 42–26)
52. REMOVE CLUTCH DISC ASSY (See Pub. No. RM1018E on page 42–26)

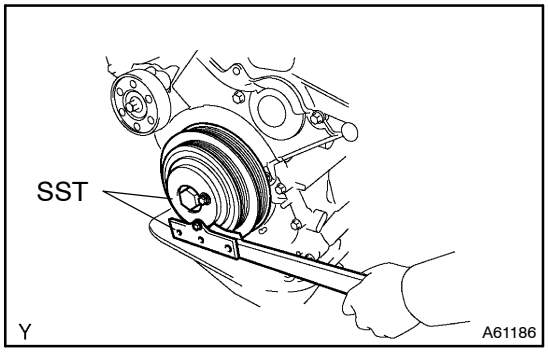

53. REMOVE FLYWHEEL SUB–ASSY

(a) Hold the crankshaft with SST.
SST 09213–54015 (09213–70020), 09330–00021

(b) Using a Torx socket wrench (T55), remove the 8 Torx screws and flywheel.

54. REMOVE REAR END PLATE

(a) Remove the 2 bolts and rear end plate.

55. REMOVE DRIVE SHAFT BEARING BRACKET

56. REMOVE ENGINE MOUNTING BRACKET FR

57. REMOVE ENGINE MOUNTING BRACKET RR

58. REMOVE GLOW PLUG ASSY (See Pub. No. RM1018E on page 19–33)

59. REMOVE GENERATOR V BELT (See Pub. No. RM1018E on page 14–269)

60. REMOVE CRANKSHAFT PULLEY (See page 14–138)
SST 09213–54015 (09213–70020), 09330–00021, 09950–50013 (09951–05010, 09952–05010, 09953–05020, 09954–05031)

61. REMOVE IDLER PULLEY SUB–ASSY (See page 14–138)

62. REMOVE TIMING BELT NO.2 COVER (See page 14–138)

63. REMOVE TIMING BELT NO.1 COVER (See page 14–138)

64. REMOVE TIMING BELT GUIDE

65. REMOVE TRANSVERSE ENGINE ENGINE MOUNTING BRACKET (See page 14–138)

66. SET NO. 1 CYLINDER TO TDC/COMPRESSION (See page 14–138)

67. REMOVE TIMING BELT (See page 14–138)

HINT:
If reusing the timing belt, draw an arrow on the belt which indicates the engine revolution direction and put match marks on the pulleys and belt before removing. This operation will be very helpful when reinstalling the timing belt.

68. REMOVE GENERATOR ASSY (See Pub. No. RM1018E on page 19–29)

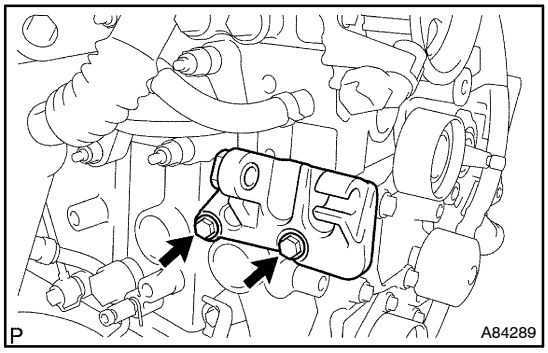

69. REMOVE GENERATOR BRACKET NO.1

(a) Remove the 2 bolts and generator bracket.

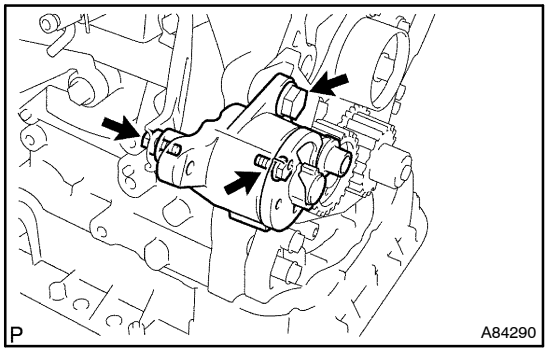

70. REMOVE V–RIBBED BELT TENSIONER ASSY

(a) Remove the 3 bolts and V–ribbed belt tensioner.

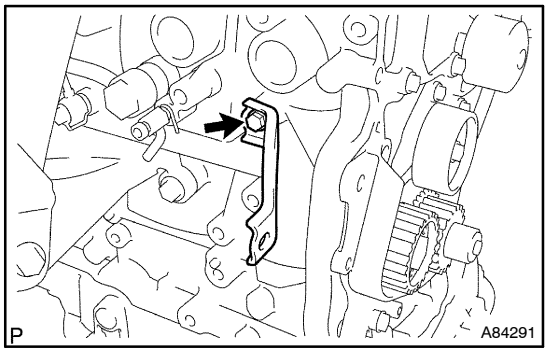

71. REMOVE V–RIBBED BELT TENSIONER BRACKET

(a) Remove the bolt and V–ribbed belt tensioner bracket.

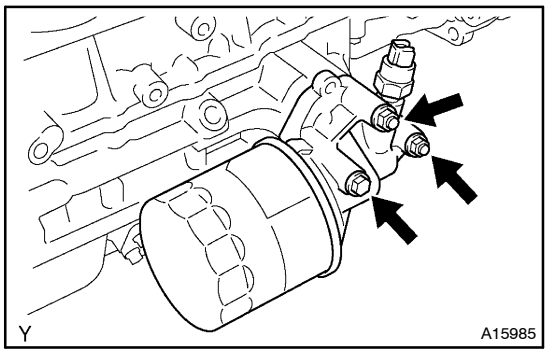

72. REMOVE OIL FILTER BRACKET SUB–ASSY

(a) Remove the bolt and 2 nuts, then remove the oil filter bracket and gasket.

73. REMOVE TURBO INSULATOR NO.2 (See page 13–12)

74. REMOVE TURBO INSULATOR NO.1 (See page 13–12)

75. REMOVE EXHAUST MANIFOLD HEAT INSULATOR NO.2 (See page 13–12)

76. REMOVE EGR PIPE INSULATOR (See page 13–12)

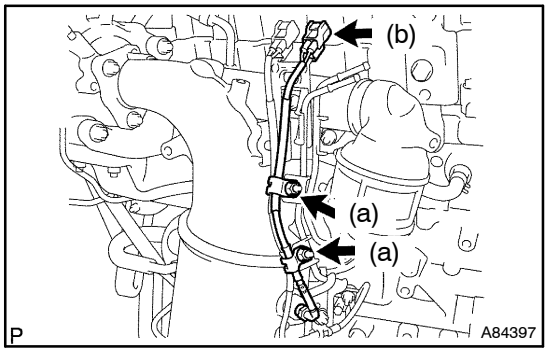

77. REMOVE EXHAUST GAS TEMPERATURE SENSOR

(a) Remove the 2 nuts, then detach the wire harness from the clamp.

(b) Disconnect the connector.

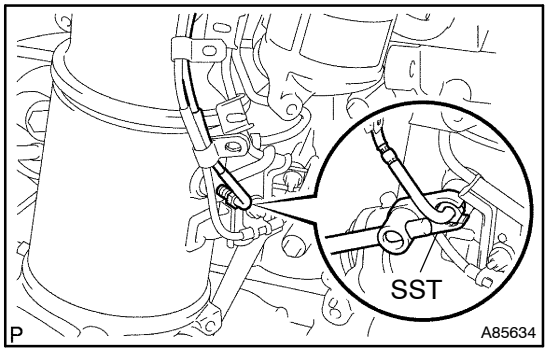

(c) Using SST, remove the exhaust gas temperature sensor on up stream.
SST 09023–38400

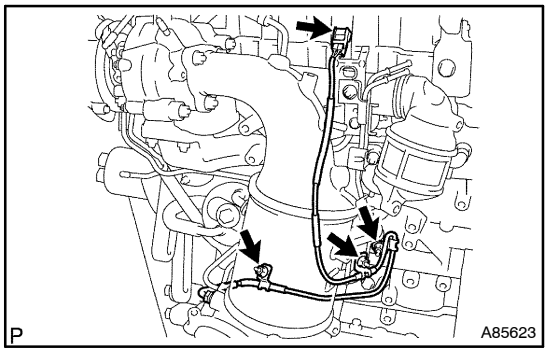

(d) Remove the 3 nuts, then detach the wire harness from the clamp.
(e) Disconnect the connector.

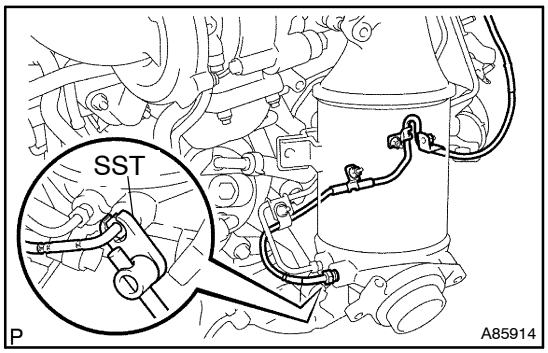

(f) Using SST, remove the exhaust gas temperature sensor on down stream.
SST 09023–38400

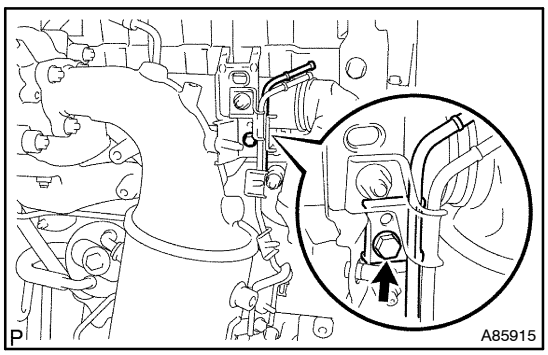

78. REMOVE VACUUM TRANSMITTING PIPE SUB–ASSY NO.1

(a) Remove the bolt.

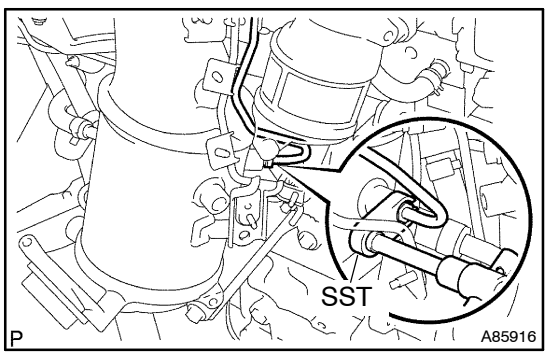

(b) Using SST, remove the vacuum pipe.
SST 09023–38200

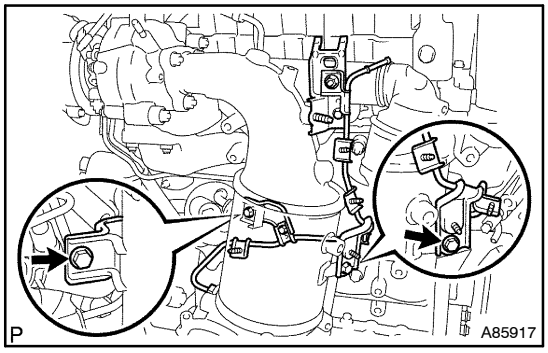

79. REMOVE VACUUM TRANSMITTING PIPE SUB–ASSY NO.2

(a) Remove the 2 bolts.

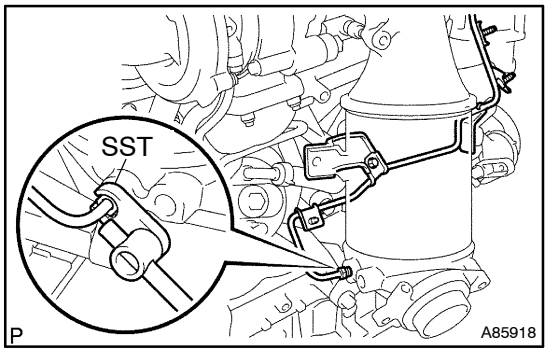

(b) Using SST, remove the vacuum pipe.
SST 09023–38200

80. REMOVE MANIFOLD STAY NO.2 (See page 13–12)
81. REMOVE MANIFOLD STAY (See page 13–12)
82. REMOVE MANIFOLD CONVERTER SUB–ASSY (See page 13–12)
83. REMOVE TURBOCHARGER STAY (See page 13–12)
84. DISCONNECT TURBO WATER HOSE NO.1 (See page 13–12)
85. DISCONNECT TURBO WATER HOSE NO.2 (See page 13–12)
86. REMOVE TURBO OIL INLET PIPE SUB–ASSY (See page 13–12)
87. REMOVE TURBOCHARGER SUB–ASSY (See page 13–12)

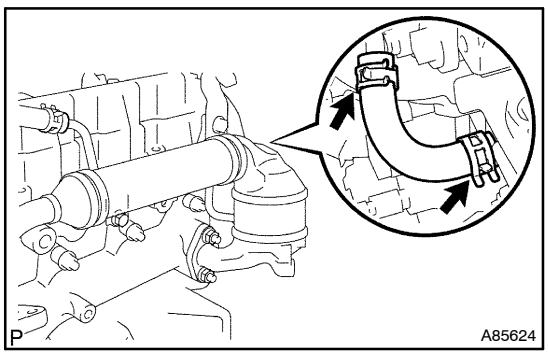

88. DISCONNECT WATER BY–PASS HOSE NO.3

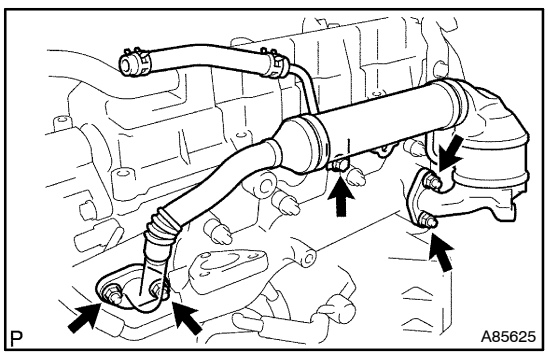

89. REMOVE EGR PIPE SUB–ASSY NO.1

(a) Remove the bolt and 4 nut, then detach the EGR pipe and 2 gaskets.

90. REMOVE OIL COOLER ASSY (See Pub. No. RM1018E on page 17–32)

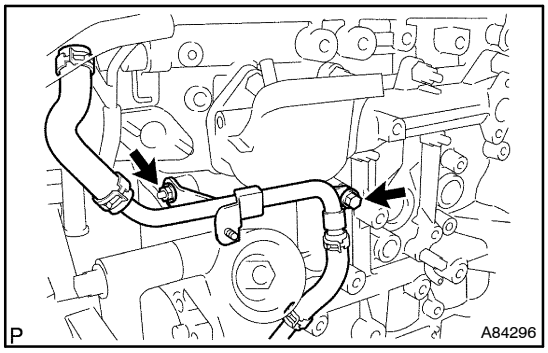

91. REMOVE VACUUM PUMP OIL PIPE

(a) Disconnect the 2 hoses.

(b) Remove the bolt and nut, then remove the vacuum pump oil pipe.

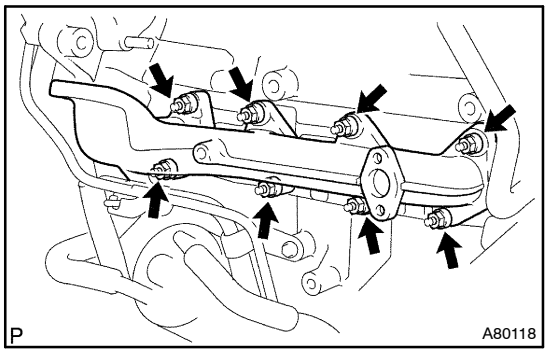

92. REMOVE EXHAUST MANIFOLD

(a) Remove the 8 nuts, exhaust manifold and gasket.

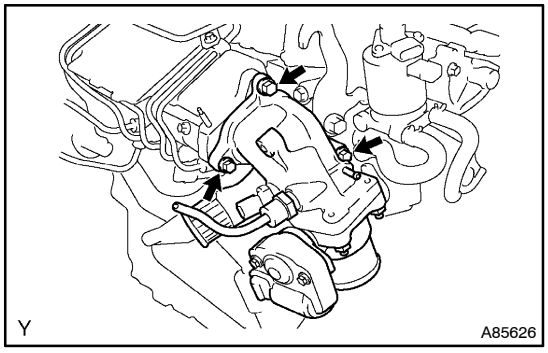

93. REMOVE INTAKE AIR CONNECTOR

(a) Remove the 3 bolts, intake air connector together with the diesel throttle body and gasket.

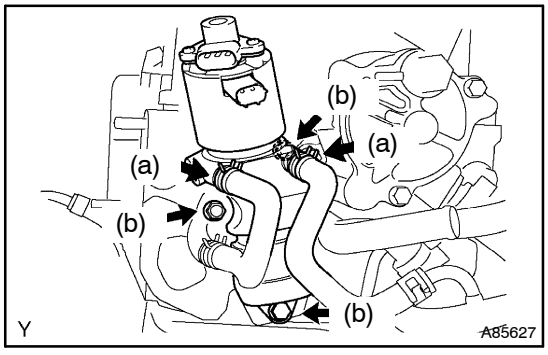

94. REMOVE EGR VALVE ASSY

(a) Disconnect the 2 hoses.

(b) Remove the bolt and 2 nuts, then remove the EGR valve and gasket.

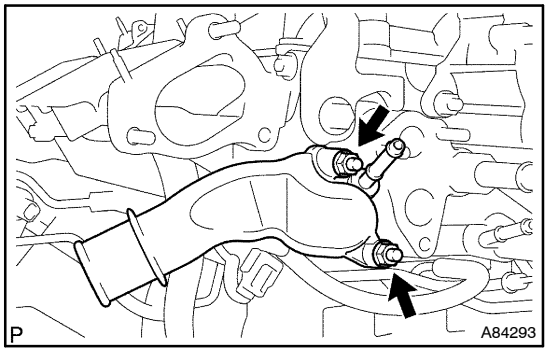

95. REMOVE WATER OUTLET SUB–ASSY

(a) Remove the 2 bolts, water outlet and gasket.

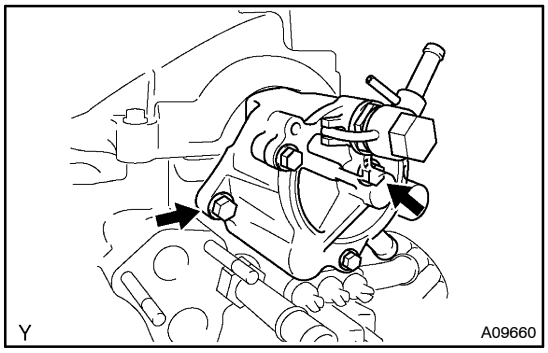

96. REMOVE VACUUM PUMP ASSY

(a) Remove the 2 bolts, vacuum pump and 2 O–rings.

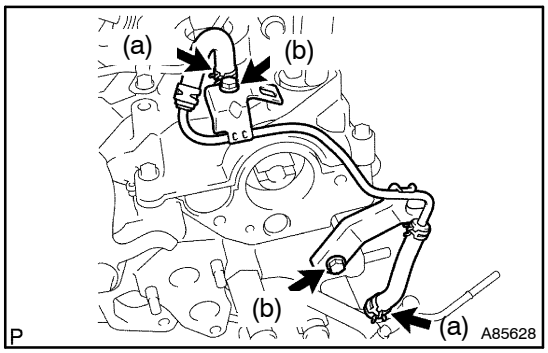

97. REMOVE NOZZLE LEAKAGE PIPE NO.2

(a) Disconnect the 2 hoses.

(b) Remove the 2 bolts, nozzle leakage pipe No. 2.

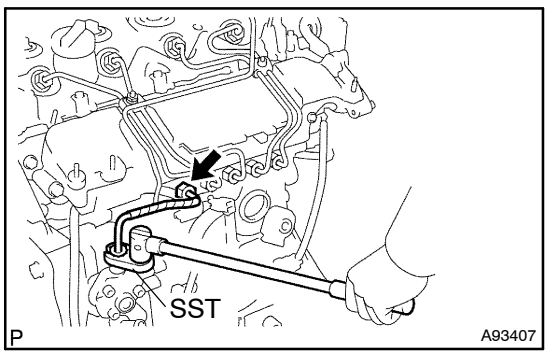

98. REMOVE FUEL INLET PIPE SUB–ASSY

(a) Using SST, remove the fuel inlet pipe from the common rail side.

SST 09023–12700

(b) Using SST, remove the fuel inlet pipe from the pump side.

SST 09023–12700

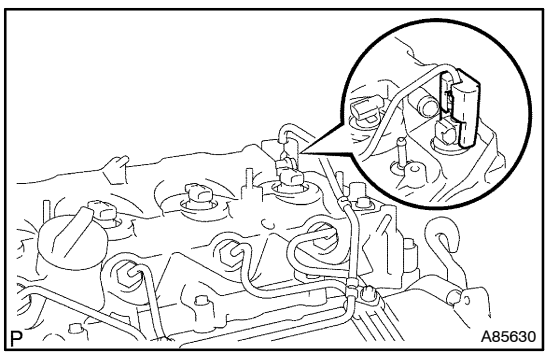

99. REMOVE FUEL PIPE NO.3

(a) Remove the fuel pipe insulator.

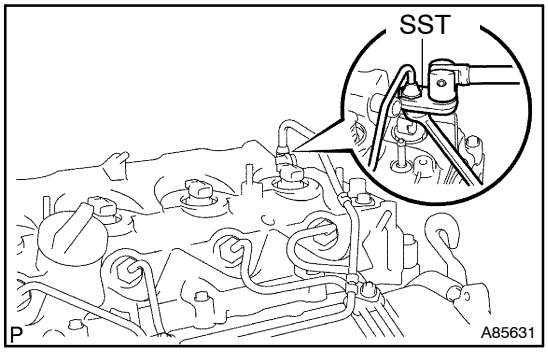

(b) Hold the hexagonal lobe of the exhaust fuel addition injector assembly first. Using SST, remove the fuel pipe No. 3 from the injector side.
SST 09023–12700

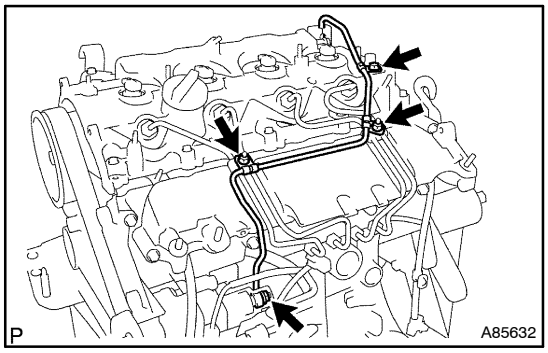

(c) Remove the bolt and 3 nuts, then remove the fuel pipe No. 3 and 2 gaskets.

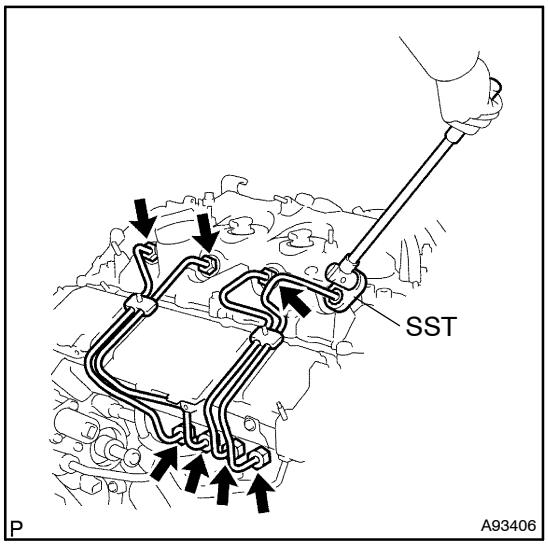

100. REMOVE INJECTION PIPE SUB–ASSY NO.1

(a) Remove the 2 upper injection pipe clamps from the intake manifold.

(b) Using SST, remove the injection pipe from the common rail side.
SST 09023–12700

(c) Using SST, remove the injection pipe from the injector side.
SST 09023–12700

(d) After removing the fuel pipe, in order to prevent dust or foreign objects from being introduced, cover the common rail with vinyl tape and protect the injector inlet with a vinyl or plastic bag.

(e) Remove the 2 lower injection pipe clamps from the intake manifold.

101. REMOVE INJECTION PIPE SUB–ASSY NO.2

SST 09023–12700

HINT:

Perform the same procedures as the injection pipe No. 1.

102. REMOVE INJECTION PIPE SUB–ASSY NO.3

SST 09023–12700

HINT:

Perform the same procedures as the injection pipe No. 1.

103. REMOVE INJECTION PIPE SUB–ASSY NO.4

SST 09023–12700

HINT:

Perform the same procedures as the injection pipe No. 1.

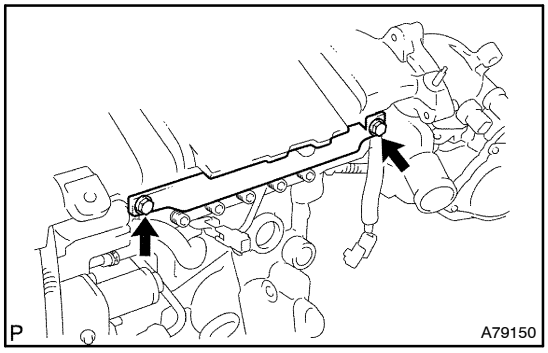

104. REMOVE INTAKE MANIFOLD INSULATOR NO.1

(a) Remove the 2 bolts and intake manifold insulator.

105. REMOVE COMMON RAIL ASSY (See page 11–67)

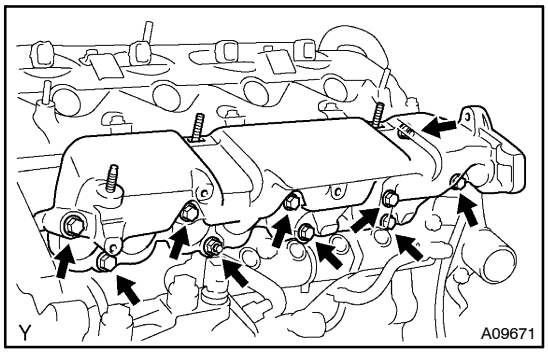

106. REMOVE INTAKE MANIFOLD

(a) Remove the 8 bolts and 2 nuts, then remove the intake manifold and gasket.

107. REMOVE INJECTION PUMP DRIVE PULLEY (See page 11–58)

SST 09960–10010 (09962–01000, 09963–01000)

108. REMOVE TIMING BELT NO.3 COVER

(a) Remove the 2 bolts and 2 seal washers, then remove the timing belt cover.

109. REMOVE OIL LEVEL GAGE GUIDE (See page 17–11)

110. REMOVE INJECTION PUMP STAY NO.1 (See page 11–58)

111. REMOVE INJECTION OR SUPPLY PUMP ASSY (See page 11–58)

112. REMOVE COMPRESSOR MOUNTING BRACKET NO.1 (W/ AIR CONDITIONING)

(a) Remove the 4 bolts and compressor mounting bracket.

113. REMOVE WATER INLET (See Pub. No. RM1018E on page 16–50)

114. REMOVE THERMOSTAT

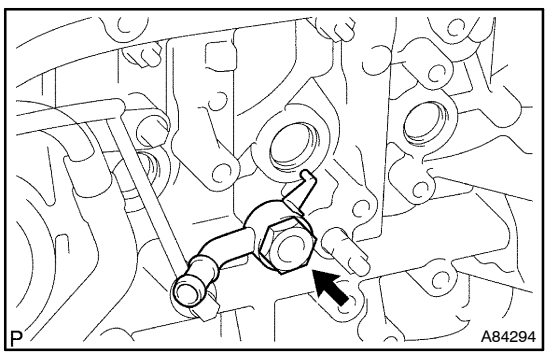

115. REMOVE OIL COOLER PIPE

(a) Using a socket wrench for 27 mm, remove the union bolt, oil cooler pipe and gasket.

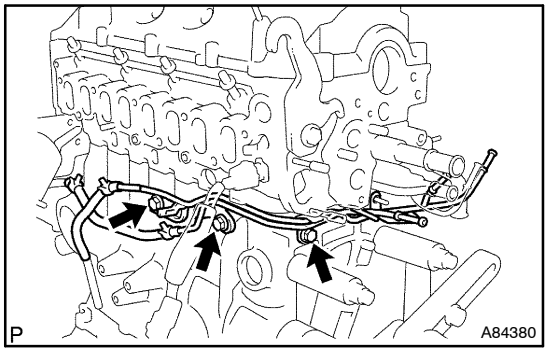

116. REMOVE FUEL FILTER TO INJECTION PUMP FUEL PIPE

(a) Remove the 3 bolts and fuel pipe.

117. REMOVE CRANKSHAFT POSITION SENSOR

(a) Remove the bolt and crankshaft position sensor.

118. REMOVE CAMSHAFT POSITION SENSOR

(a) Remove the bolt and camshaft position sensor.

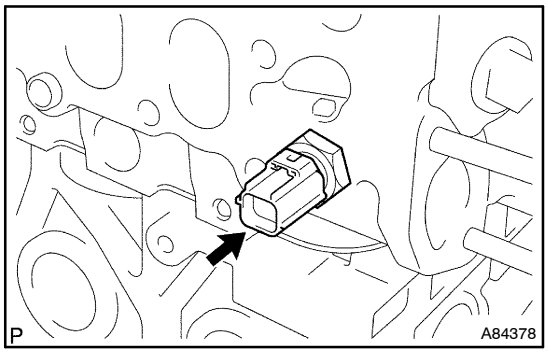

119. REMOVE ENGINE COOLANT TEMPERATURE SENSOR

120. REPLACE PARTIAL ENGINE ASSY

121. INSTALL ENGINE COOLANT TEMPERATURE SENSOR
Torque: 20 N·m (200 kgf·cm, 14 ft·lbf)

122. INSTALL CAMSHAFT POSITION SENSOR
Torque: 8.8 N·m (90 kgf·cm, 78 in.·lbf)

123. INSTALL CRANKSHAFT POSITION SENSOR
Torque: 8.8 N·m (90 kgf·cm, 78 in.·lbf)

124. INSTALL FUEL FILTER TO INJECTION PUMP FUEL PIPE
Torque:
8.8 N·m (90 kgf·cm, 78 in.·lbf) for M6
21 N·m (209 kgf·cm, 15 ft·lbf) for M8

125. INSTALL OIL COOLER PIPE

(a) Using a socket wrench for 27 mm, install 2 new gaskets and the oil cooler pipe with the union bolt.
Torque: 56 N·m (575 kgf·cm, 42 ft·lbf)

126. INSTALL THERMOSTAT (See Pub. No. RM1018E on page 16–50)

127. INSTALL WATER INLET (See Pub. No. RM1018E on page 16–50)

128. INSTALL COMPRESSOR MOUNTING BRACKET NO.1 (W/ AIR CONDITIONING)
Torque: 42 N·m (428 kgf·cm, 31 ft·lbf)

129. INSTALL INJECTION OR SUPPLY PUMP ASSY (See page 11–58)

130. INSTALL INJECTION PUMP STAY NO.1 (See page 11–58)

131. INSTALL OIL LEVEL GAGE GUIDE (See page 17–11)

132. INSTALL TIMING BELT NO.3 COVER
Torque: 7.4 N·m (75 kgf·cm, 65 in.·lbf)

133. INSTALL INJECTION PUMP DRIVE PULLEY (See page 11–58)

SST 09960–10010 (09962–01000, 09963–01000)

134. INSTALL INTAKE MANIFOLD

(a) Install a new gasket and the intake manifold with the 8 bolts and 2 nuts.

Torque: 21 N·m (209 kgf·cm, 15 ft·lbf)

135. INSTALL COMMON RAIL ASSY (See page 11–67)

136. INSTALL INTAKE MANIFOLD INSULATOR NO.1

Torque: 5.0 N·m (51 kgf·cm, 44 in.·lbf)

137. INSTALL INJECTION PIPE SUB–ASSY NO.1

NOTICE:

- **In case of replacing the injectors, the injection pipes must be replaced, too.**
- **When assembling the pipes, perform the operation with the engine cold at room temperature.**

(a) Install the 2 lower injection pipe clamps to the intake manifold.

(b) Temporarily install a new injection pipe.

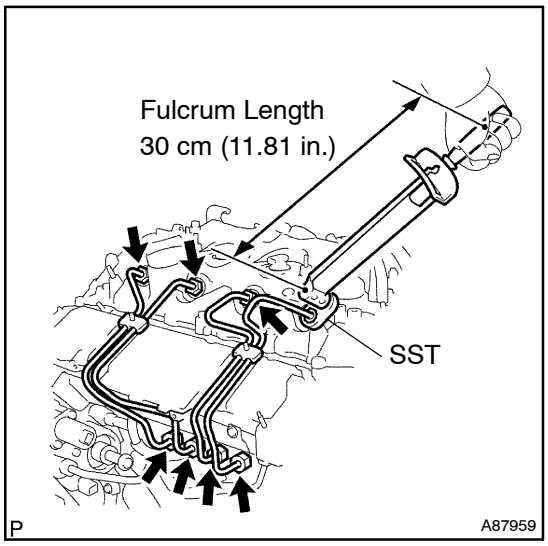

(c) Using SST, tighten the nut of the injection pipe on the common rail side.

SST 09023–12700

Torque:

31 N·m (316 kgf·cm, 23 ft·lbf) with SST

34 N·m (347 kgf·cm, 25 ft·lbf) without SST

HINT:

- Use a torque wrench with the fulcrum length of 30 cm (11.81 in.).
- After the injection pipe is reassembled, check that the used pipe has no deflection and is installed properly. If it has deflection or could not be installed properly, replace the used pipe with a new pipe.

(d) Using SST, tighten the nut of the injection pipe on the injector side.
SST 09023–12700
Torque:
For used pipe:
36 N·m (372 kgf·cm, 27 ft·lbf) with SST
40 N·m (408 kgf·cm, 30 ft·lbf) without SST
For new pipe:
31 N·m (316 kgf·cm, 23 ft·lbf) with SST
34 N·m (347 kgf·cm, 25 ft·lbf) without SST

HINT:
- Use a torque wrench with the fulcrum length of 30 cm (11.81 in.).
- After the injection pipe is reassembled, check that the used pipe has no deflection and is installed properly. If it has deflection or could not be installed properly, replace the used pipe with a new pipe.

(e) Install the 2 upper injection pipe clamps.

138. INSTALL INJECTION PIPE SUB–ASSY NO.2
SST 09023–12700

HINT:
Perform the same procedures as the injection pipe No. 1.

139. INSTALL INJECTION PIPE SUB–ASSY NO.3
SST 09023–12700

HINT:
Perform the same procedures as the injection pipe No. 1.

140. INSTALL INJECTION PIPE SUB–ASSY NO.4
SST 09023–12700

HINT:
Perform the same procedures as the injection pipe No. 1.

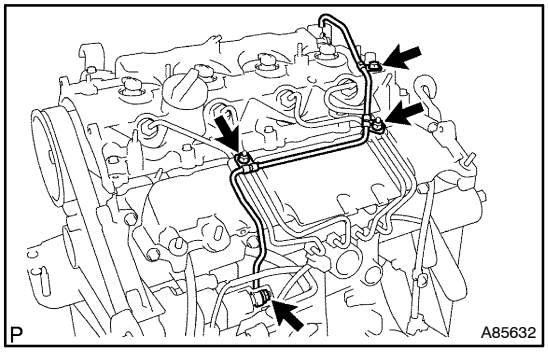

141. INSTALL FUEL PIPE NO.3
(a) Install 2 new gaskets, then temporarily install the bolt, 3 nuts and fuel pipe No. 3.

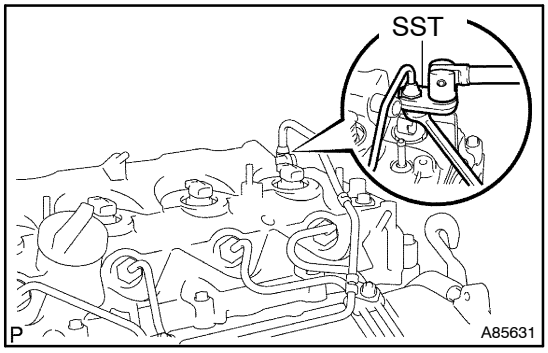

(b) Hold the hexagonal lobe of the exhaust fuel addition injector assembly first. Using SST, tighten the nut of the fuel pipe No. 3 on the injector side.
SST 09023–12700
Torque:
22 N·m (223 kgf·cm, 16 ft·lbf) with SST
23.5 N·m (240 kgf·cm, 17 ft·lbf) without SST

HINT:

- Use a torque wrench with the fulcrum length of 30 cm (11.81 in.).
- After the injection pipe is reassembled, check that the used pipe has no deflection and is installed properly. If it has deflection or could not be installed properly, replace the used pipe with a new pipe.

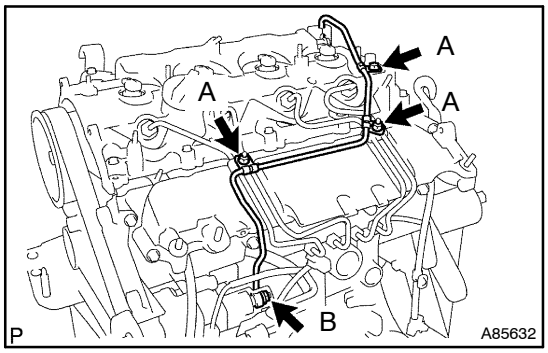

(c) Tighten the bolt and 3 nuts.
Torque:
5.0 N·m (51 kgf·cm, 44 in.·lbf) for bolt and nut A
27 N·m (275 kgf·cm, 20 ft·lbf) for nut B

(d) Install the fuel pipe insulator.

142. INSTALL FUEL INLET PIPE SUB–ASSY

NOTICE:

- **In case of replacing the cylinder head, the fuel inlet pipe must be replaced, too.**
- **When assembling the pipe, perform the operation with the engine cold at room temperature.**

(a) Temporarily install a new fuel inlet pipe.

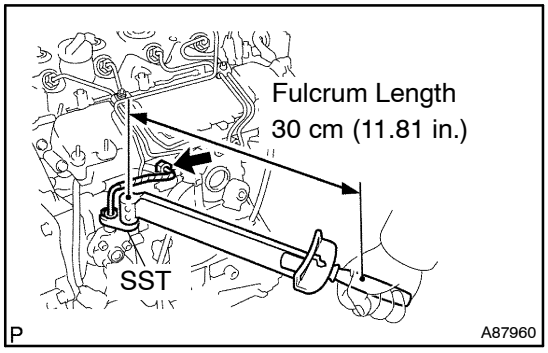

(b) Using SST, tighten the nut of the fuel inlet pipe on the common rail side.
SST 09023–12700
Torque:
31 N·m (316 kgf·cm, 23 ft·lbf) with SST
34 N·m (347 kgf·cm, 25 ft·lbf) without SST

HINT:

- Use a torque wrench with the fulcrum length of 30 cm (11.81 in.).
- After the inlet pipe is reassembled, check that the used pipe has no deflection and is installed properly. If it has deflection or could not be installed properly, replace the used pipe with a new pipe.

(c) Using SST, tighten the nut of the fuel inlet pipe on the pump side.
SST 09023–12700
Torque:
31 N·m (316 kgf·cm, 23 ft·lbf) with SST
34 N·m (347 kgf·cm, 25 ft·lbf) without SST

HINT:

- Use a torque wrench with the fulcrum length of 30 cm (11.81 in.).
- After the inlet pipe is reassembled, check that the used pipe has no deflection and is installed properly. If it has deflection or could not be installed properly, replace the used pipe with a new pipe.

143. INSTALL NOZZLE LEAKAGE PIPE NO.2
Torque: 8.8 N·m (90 kgf·cm, 78 in.·lbf)

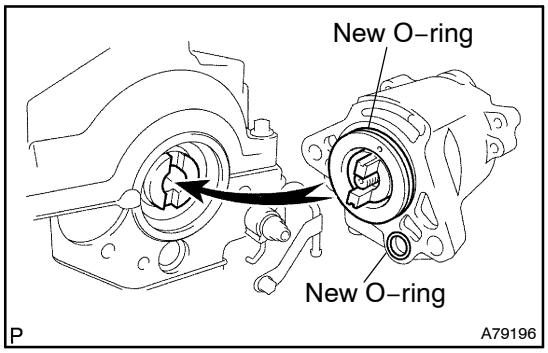

144. INSTALL VACUUM PUMP ASSY
(a) Install 2 new O–rings to the vacuum pump.
(b) Align the key of the vacuum pump with the keyway of the exhaust camshaft, then insert the vacuum pump into place. Secure the pump with the 2 bolts.
Torque: 21 N·m (214 kgf·cm, 15 ft·lbf)

145. INSTALL WATER OUTLET SUB–ASSY
(a) Install a new gasket and the water outlet with the 2 bolts.
Torque: 21 N·m (209 kgf·cm, 15 ft·lbf)

146. INSTALL EGR VALVE ASSY
(a) Install a new gasket and the EGR valve with the bolt and 2 nuts.
Torque: 18 N·m (184 kgf·cm, 13 ft·lbf)

147. INSTALL INTAKE AIR CONNECTOR
(a) Install a new gasket and the intake air connector together with the diesel throttle body with the 3 bolts.
Torque: 21 N·m (209 kgf·cm, 15 ft·lbf)

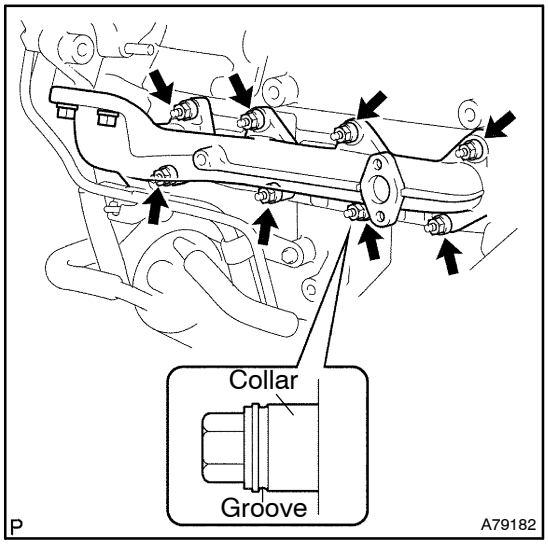

148. INSTALL EXHAUST MANIFOLD
(a) Install a new gasket, the exhaust manifold and 8 collars with new 8 nuts.
Torque: 47 N·m (474 kgf·cm, 34 ft·lbf)

HINT:
When installing the collars, pay attention to the mounting orientation. The ring groove of the collar should be outward. Refer to the illustration on the left.

149. INSTALL VACUUM PUMP OIL PIPE
Torque:
21 N·m (214 kgf·cm, 15 ft·lbf) for bolt
8.8 N·m (90 kgf·cm, 78 in.·lbf) for nut

150. INSTALL OIL COOLER ASSY (See Pub. No. RM1018E on page 17–32)

151. INSTALL EGR PIPE SUB–ASSY NO.1

(a) Install 2 new gaskets and the EGR pipe with the bolt and 4 new nuts.
Torque:
37 N·m (375 kgf·cm, 27 ft·lbf) for bolt
25 N·m (250 kgf·cm, 18 ft·lbf) for nut

152. INSTALL TURBOCHARGER SUB–ASSY (See page 13–12)

153. INSTALL TURBO OIL INLET PIPE SUB–ASSY (See page 13–12)

154. INSTALL TURBOCHARGER STAY (See page 13–12)

155. INSTALL MANIFOLD CONVERTER SUB–ASSY (See page 13–12)

156. INSTALL MANIFOLD STAY NO.2 (See page 13–12)

157. INSTALL VACUUM TRANSMITTING PIPE SUB–ASSY NO.2

(a) Temporarily install the vacuum pipe.

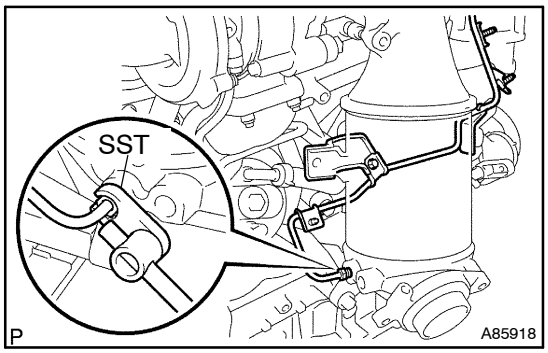

(b) Using SST, tighten the nut of the vacuum pipe on the manifold converter side.
SST 09023–38200
Torque:
27 N·m (275 kgf·cm, 20 ft·lbf) with SST
30 N·m (306 kgf·cm, 22 ft·lbf) without SST

HINT:
Use a torque wrench with the fulcrum length of 30 cm (11.81 in.).

(c) Install the 2 bolts.
Torque: 25 N·m (255 kgf·cm, 18 ft·lbf)

158. INSTALL VACUUM TRANSMITTING PIPE SUB–ASSY NO.1

(a) Temporarily install the vacuum pipe.

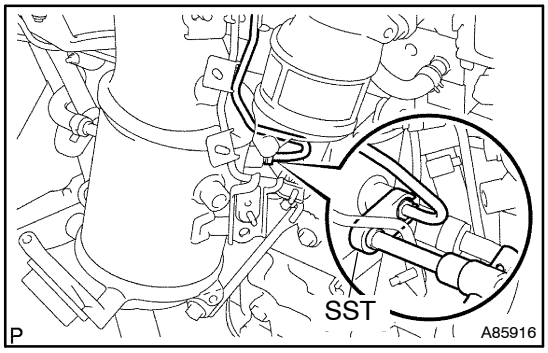

(b) Using SST, tighten the nut of the vacuum pipe on the manifold converter side.
SST 09023–38200
Torque:
27 N·m (275 kgf·cm, 20 ft·lbf) with SST
30 N·m (306 kgf·cm, 22 ft·lbf) without SST

HINT:
Use a torque wrench with the fulcrum length of 30 cm (11.81 in.).

(c) Install the bolt.
Torque: 25 N·m (255 kgf·cm, 18 ft·lbf)

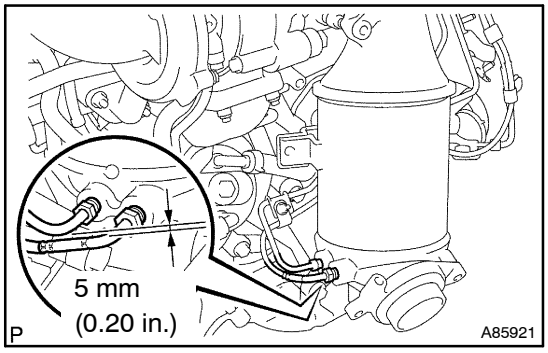

159. INSTALL EXHAUST GAS TEMPERATURE SENSOR

(a) Temporarily install the 3 nuts and exhaust gas temperature sensor on down stream as shown in the illustration.

NOTICE:

Keep 5 mm (0.20 in.) of the clearance between the exhaust gas temperature sensor and vacuum transmitting pipe.

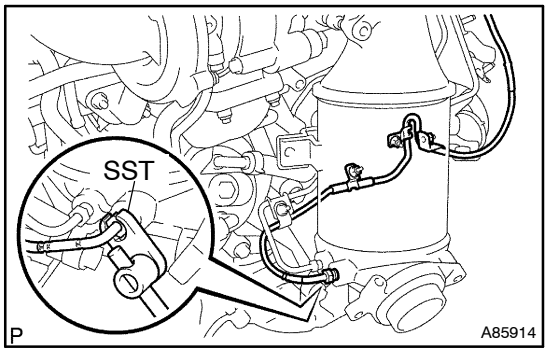

(b) Using SST, tighten the sensor on the manifold converter side.

SST 09023–38400

Torque:

27 N·m (275 kgf·cm, 20 ft·lbf) with SST

30 N·m (306 kgf·cm, 22 ft·lbf) without SST

HINT:

Use a torque wrench with the fulcrum length of 30 cm (11.81 in.).

(c) Tighten the 3 nuts.

Torque: 6.4 N·m (65 kgf·cm, 57 in.·lbf)

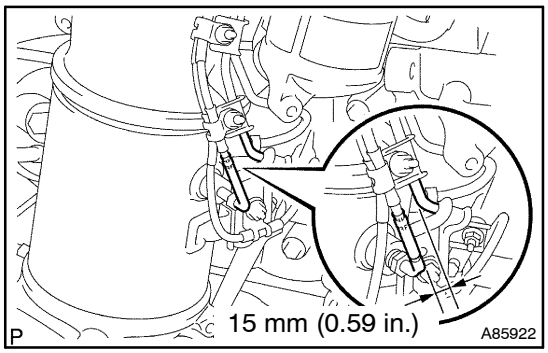

(d) Temporarily install the 2 nuts and exhaust gas temperature sensor on up stream as shown in the illustration.

NOTICE:

Keep 15 mm (0.59 in.) of the clearance between the exhaust gas temperature sensor and vacuum transmitting pipe.

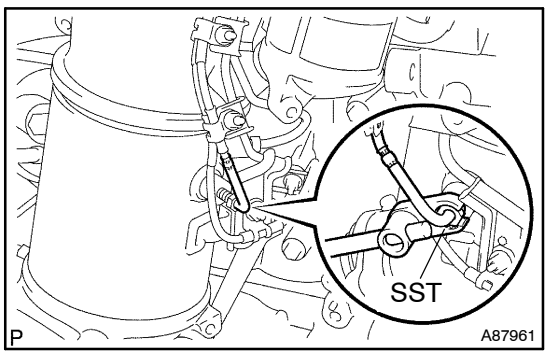

(e) Using SST, tighten the sensor on the manifold converter side.

SST 09023–38400

Torque:

27 N·m (275 kgf·cm, 20 ft·lbf) with SST

30 N·m (306 kgf·cm, 22 ft·lbf) without SST

HINT:

Use a torque wrench with the fulcrum length of 30 cm (11.81 in.).

(f) Tighten the 2 nuts.

Torque: 6.4 N·m (65 kgf·cm, 57 in.·lbf)

160. INSTALL EGR PIPE INSULATOR (See page 13–12)

161. INSTALL EXHAUST MANIFOLD HEAT INSULATOR NO.2 (See page 13–12)

162. INSTALL TURBO INSULATOR NO.1 (See page 13–12)

163. INSTALL TURBO INSULATOR NO.2 (See page 13–12)

164. INSTALL OIL FILTER BRACKET SUB–ASSY

(a) Install a new gasket and the oil filter bracket with the bolt and 2 nuts.

Torque: 34 N·m (347 kgf·cm, 25 ft·lbf)

165. INSTALL V–RIBBED BELT TENSIONER BRACKET

Torque: 20 N·m (204 kgf·cm, 15 ft·lbf)

166. INSTALL V–RIBBED BELT TENSIONER ASSY
Torque: 31 N·m (316 kgf·cm, 23 ft·lbf)
167. INSTALL GENERATOR BRACKET NO.1
Torque: 37 N·m (377 kgf·cm, 27 ft·lbf)
168. INSTALL GENERATOR ASSY (See Pub. No. RM1018E on page 19–29)
169. SET NO. 1 CYLINDER TO TDC/COMPRESSION (See page 14–138)
SST 09960–10010 (09962–01000, 09963–01000)
170. INSTALL TIMING BELT (See page 14–138)
171. CHECK VALVE TIMING (See page 14–138)
172. INSTALL TRANSVERSE ENGINE ENGINE MOUNTING BRACKET (See page 14–138)
173. INSTALL TIMING BELT GUIDE (See page 14–138)
174. INSTALL TIMING BELT NO.1 COVER (See page 14–138)
175. INSTALL TIMING BELT NO.2 COVER (See page 14–138)
176. INSTALL IDLER PULLEY SUB–ASSY
Torque: 40 N·m (408 kgf·cm, 30 ft·lbf)
177. INSTALL CRANKSHAFT PULLEY (See page 14–138)
SST 09213–54015 (09213–70020), 09330–00021
178. INSTALL GLOW PLUG ASSY (See Pub. No. RM1018E on page 19–33)
179. INSTALL ENGINE MOUNTING BRACKET RR
Torque: 64 N·m (653 kgf·cm, 47 ft·lbf)
180. INSTALL ENGINE MOUNTING BRACKET FR
Torque: 64 N·m (653 kgf·cm, 47 ft·lbf)
181. INSTALL DRIVE SHAFT BEARING BRACKET
Torque: 64 N·m (653 kgf·cm, 47 ft·lbf)
182. INSTALL REAR END PLATE
Torque: 8.4 N·m (86 kgf·cm, 74 in.·lbf)

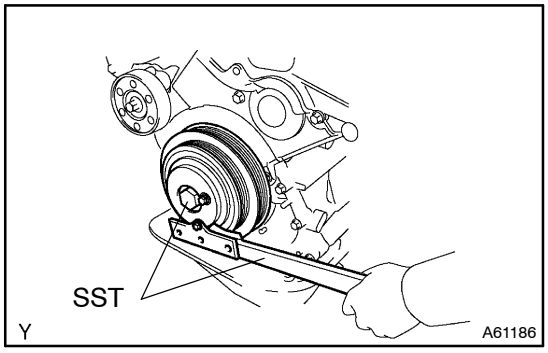

183. INSTALL FLYWHEEL SUB–ASSY
(a) Using SST, hold the crankshaft.
SST 09213–54015 (09213–70020), 09330–00021
(b) Clean the bolts and their bolt holes.

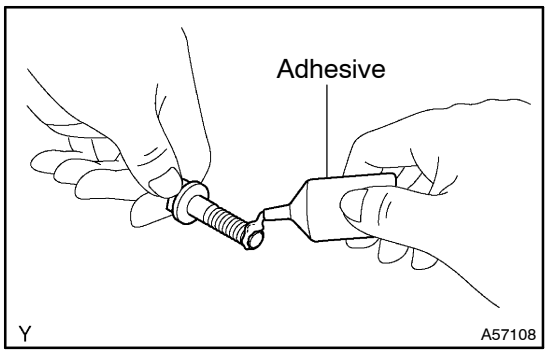

(c) Apply adhesive to the 2 or 3 threads of the bolt end.
Adhesive: Part No. 08833–00070, THREE BOND 1324 or equivalent

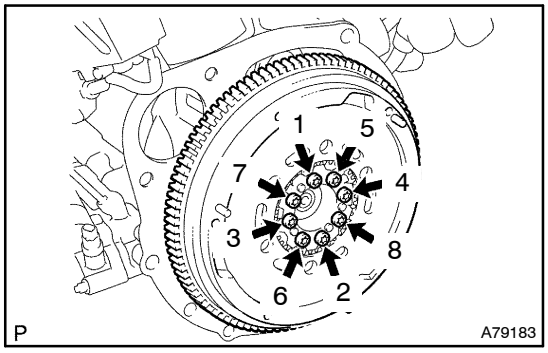

(d) Using a Torx socket wrench (T55), uniformly install and tighten the 8 Torx screws in several steps in the sequence shown in the illustration.
Torque: 71 N·m (720 kgf·cm, 52 ft·lbf)

184. INSTALL CLUTCH DISC ASSY (See Pub. No. RM1018E on page 42–26)
SST 09301–00210
185. INSTALL CLUTCH COVER ASSY (See Pub. No. RM1018E on page 42–26)
186. INSTALL MANUAL TRANSAXLE (See Pub. No. RM1018E on page 41–33)
187. INSTALL STARTER ASSY (See Pub. No. RM1018E on page 19–24)

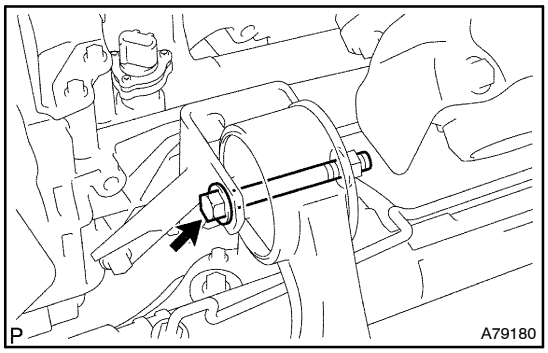

188. INSTALL FRONT SUSPENSION CROSSMEMBER SUB–ASSY
(a) Attach the engine together with the transaxle to the suspension crossmember and engine mounting member.
(b) Install the bolt which secures the rear engine mounting bracket to the mounting insulator.
Torque: 87 N·m (887 kgf·cm, 64 ft·lbf)

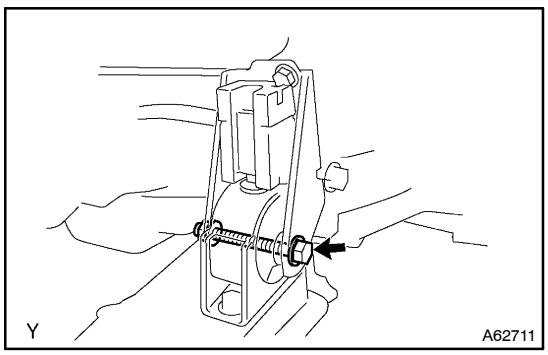

(c) Install the bolt which secures the front engine mounting bracket to the mounting insulator.
Torque: 52 N·m (530 kgf·cm, 38 ft·lbf)

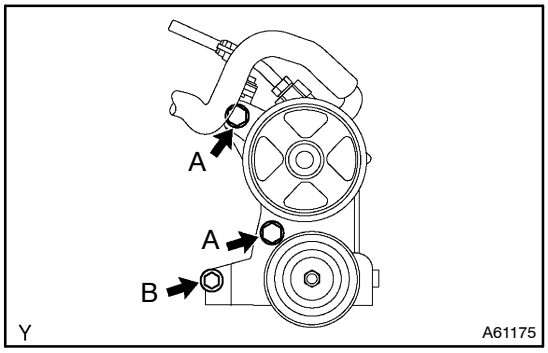

189. INSTALL POWER STEERING IDLE PULLEY BRACKET
(a) Install the power steering idle pulley bracket with the 3 bolts.
Torque:
72 N·m (734 kgf·cm, 53 ft·lbf) for bolt A
39 N·m (398 kgf·cm, 29 ft·lbf) for bolt B
190. INSTALL ENGINE ASSEMBLY WITH TRANSAXLE
(a) Set the engine together with the transaxle on the engine lifter.

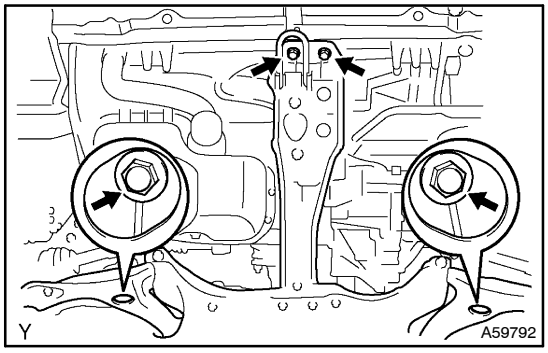

(b) Temporarily install the suspension crossmember with the 2 bolts and 2 nuts.

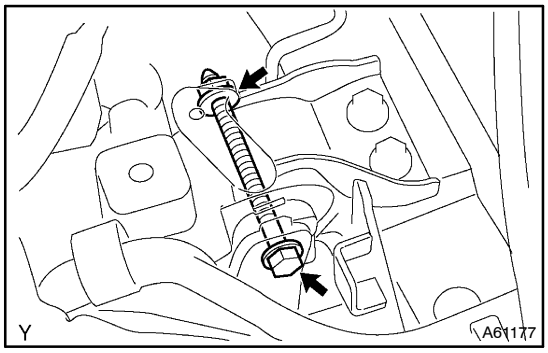

(c) Install the engine mounting insulator LH.
Torque: 80 N·m (816 kgf·cm, 59 ft·lbf)

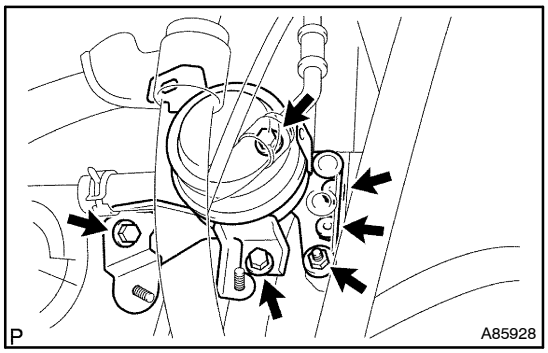

(d) Install the engine mounting insulator RH.
Torque: 52 N·m (530 kgf·cm, 38 ft·lbf)

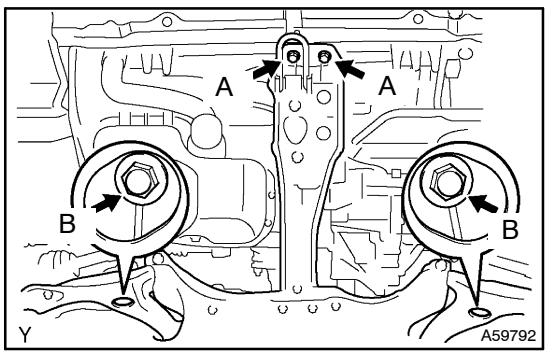

(e) Install the front suspension crossmember with the 2 bolts and 2 nuts.
Torque:
45 N·m (459 kgf·cm, 33 ft·lbf) for bolt A
133 N·m (1,356 kgf·cm, 98 ft·lbf) for nut B

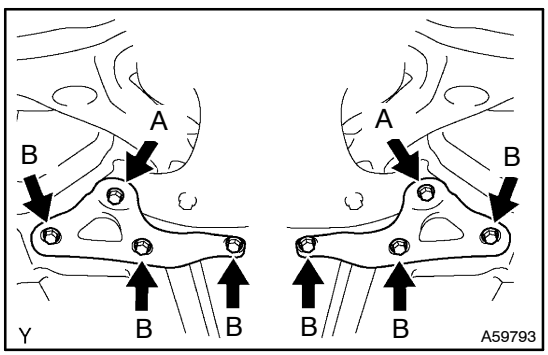

(f) Install the front suspension member brace LH and RH with the 8 bolts.
Torque:
133 N·m (1,356 kgf·cm, 98 ft·lbf) for bolt A
80 N·m (816 kgf·cm, 59 ft·lbf) for bolt B

NOTICE:
After installing the crossmember, check that the positioning holes on the crossmember and vehicle are aligned.

191. INSTALL FRONT AXLE ASSY LH (See Pub. No. RM1018E on page 30–6)

HINT:

Perform the same procedure as above on the opposite side.

192. INSTALL FRONT SUSPENSION ARM SUB–ASSY LOWER NO.1 LH (See Pub. No. RM1018E on page 30–6)

HINT:

Perform the same procedure as above on the opposite side.

193. INSTALL STEERING INTERMEDIATE SHAFT ASSY NO.2 (See Pub. No. RM1018E on page 51–36)

194. INSTALL FRONT STABILIZER LINK ASSY LH (See Pub. No. RM1018E on page 30–6)

HINT:

Perform the same procedure as above on the opposite side.

195. INSTALL TIE ROD END SUB–ASSY LH (See Pub. No. RM1018E on page 30–6)

HINT:

Perform the same procedure as above on the opposite side.

196. INSTALL FRONT AXLE HUB LH NUT (See Pub. No. RM1018E on page 30–6)

HINT:

Perform the same procedure as above on the opposite side.

197. INSTALL RETURN TUBE SUB–ASSY

Torque: 8.0 N·m (82 kgf·cm, 71 in.·lbf)

198. INSTALL EXHAUST PIPE ASSY FRONT (See page 15–6)

199. INSTALL FLOOR PANEL BRACE FRONT (See page 15–6)

200. INSTALL COMPRESSOR AND MAGNETIC CLUTCH (W/ AIR CONDITIONING) (See Pub. No. RM1018E on page 55–86)

201. ADJUST V (COOLER COMPRESSOR TO CRANKSHAFT PULLEY) BELT NO.1 (See Pub. No. RM1018E on page 14–269)

202. INSTALL CLUTCH RELEASE CYLINDER ASSY (See Pub. No. RM1018E on page 42–17)

203. INSTALL CLUTCH ACCUMULATOR ASSY (See Pub. No. RM1018E on page 42–22)

SST 09023–00100

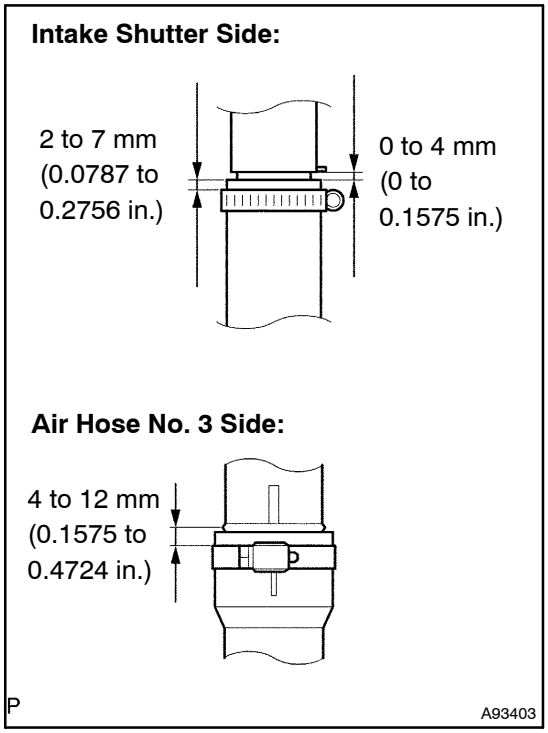

204. INSTALL AIR TUBE NO.2

(a) Install the air hose and 2 hose clamps as shown in the illustration.

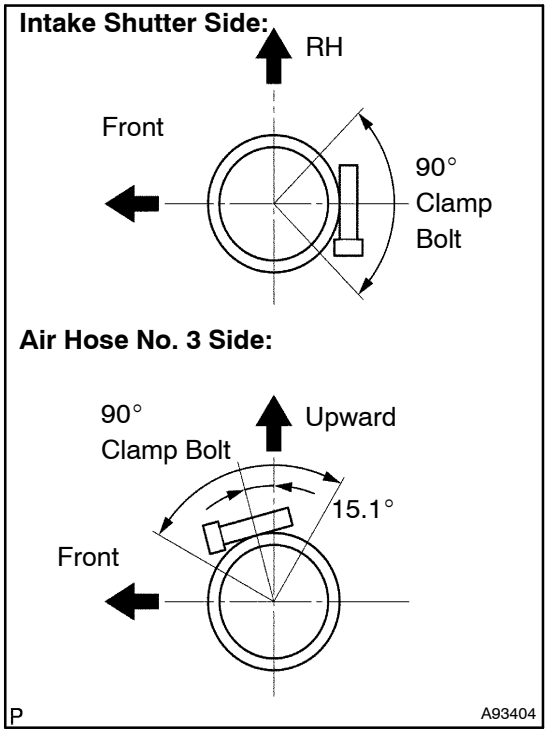

(b) Tighten the 2 hose clamps as shown in the illustration.
Torque:
6.0 N·m (61 kgf·cm, 53 in.·lbf) for intake shutter side
5.3 N·m (54 kgf·cm, 47 in.·lbf) for air hose No. 3 side

(c) Install the bolt and air tube No. 2 assembly to the transaxle.
Torque: 25 N·m (255 kgf·cm, 18 ft·lbf)

205. CONNECT ENGINE WIRE
Torque:
8.4 N·m (85 kgf·cm, 74 in.·lbf) for wire harness
5.3 N·m (54 kgf·cm, 47 in.·lbf) for engine room relay block No. 2

206. INSTALL INJECTOR DRIVER
Torque: 5.5 N·m (56 kgf·cm, 49 in.·lbf)

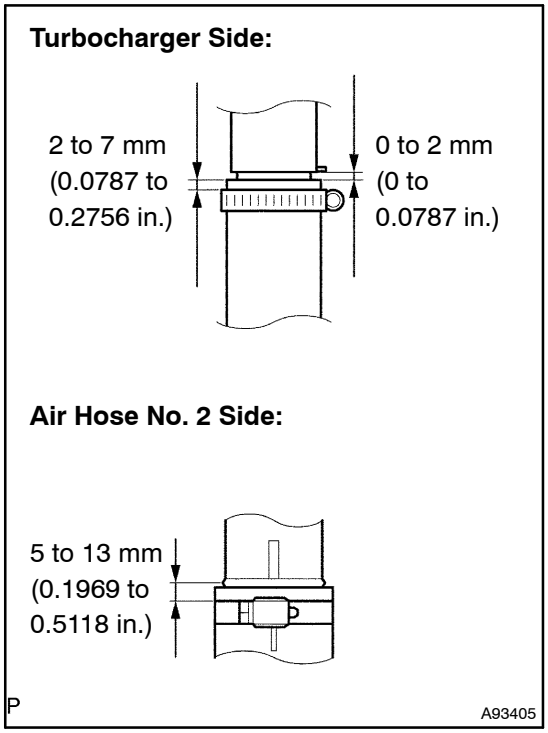

207. INSTALL AIR TUBE NO.1

(a) Install a new air hose No. 2 and new 2 hose clamps as shown in the illustration.

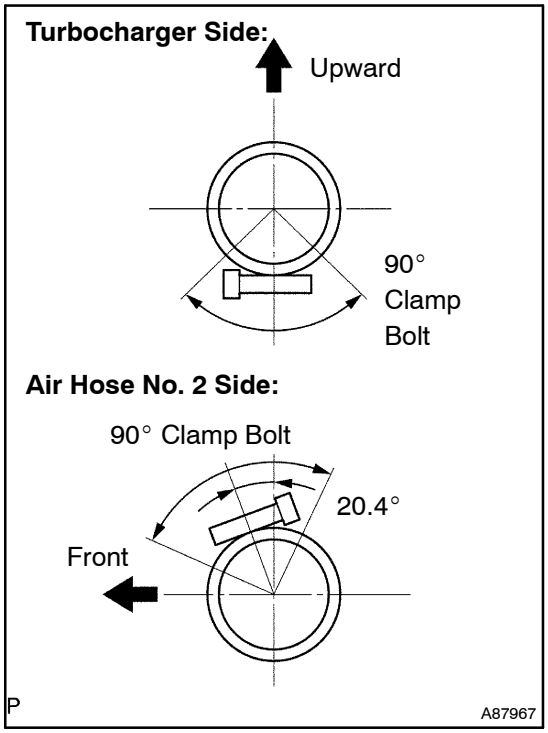

(b) Tighten the 2 hose clamps as shown in the illustration.
Torque: 6.0 N·m (61 kgf·cm, 53 in.·lbf)

(c) Install the air tube No. 1 with the 3 bolts and nut.
Torque: 25 N·m (255 kgf·cm, 18 ft·lbf)

208. INSTALL DIFFERENTIAL PRESSURE SENSOR ASSY
Torque: 5.5 N·m (56 kgf·cm, 49 in.·lbf)
209. INSTALL RADIATOR ASSY (W/ AIR CONDITIONING) (See Pub. No. RM1018E on page 16–51)
210. INSTALL ENGINE ROOM RELAY BLOCK NO.3
Torque: 5.3 N·m (54 kgf·cm, 47 in.·lbf)
211. INSTALL FUEL FILTER ASSY (See Pub. No. RM1018E on page 11–82)
212. INSTALL AIR CLEANER ASSY
Torque: 7.0 N·m (71 kgf·cm, 62 in.·lbf)
213. INSTALL BATTERY
Torque:
5.0 N·m (51 kgf·cm, 44 in.·lbf) for bolt
3.0 to 4.0 N·m (31 to 41 kgf·cm, 27 to 35 in.·lbf) for nut
5.4 N·m (55 kgf·cm, 48 in.·lbf) for terminal
214. INSTALL ENGINE COVER SUB–ASSY NO.1
Torque: 8.0 N·m (82 kgf·cm, 71 in.·lbf)
215. BLEED CLUTCH PIPE LINE (See Pub. No. RM1018E on page 42–12)
216. INSTALL FRONT WHEELS
Torque: 103 N·m (1,050 kgf·cm, 76 ft·lbf)
217. ADD MANUAL TRANSAXLE OIL (See Pub. No. RM1018E on page 41–5)
218. ADD ENGINE OIL (See Pub. No. RM1018E on page 17–30)
219. ADD ENGINE COOLANT (See page 16–19)
220. CHECK CLUTCH FLUID LEAKAGE
221. CHECK FLUID LEVEL IN RESERVOIR
222. CHECK BRAKE FLUID LEAKAGE
223. CHECK FOR ENGINE OIL LEAKS
224. CHECK FOR FUEL LEAKS (See page 11–46)
225. CHECK FOR ENGINE COOLANT LEAKS (See page 16–15)
226. CHECK FOR EXHAUST GAS LEAKS
227. INSPECT AND ADJUST FRONT WHEEL ALIGNMENT (See Pub. No. RM1018E on page 26–6)

228. INSPECT ENGINE IDLE SPEED (See page 14–87)

229. CHECK ABS SPEED SENSOR SIGNAL (See Pub. No. RM1018E on page 05–756)

TIMING BELT (1CD–FTV)(From September, 2003)

141NH–01

COMPONENTS

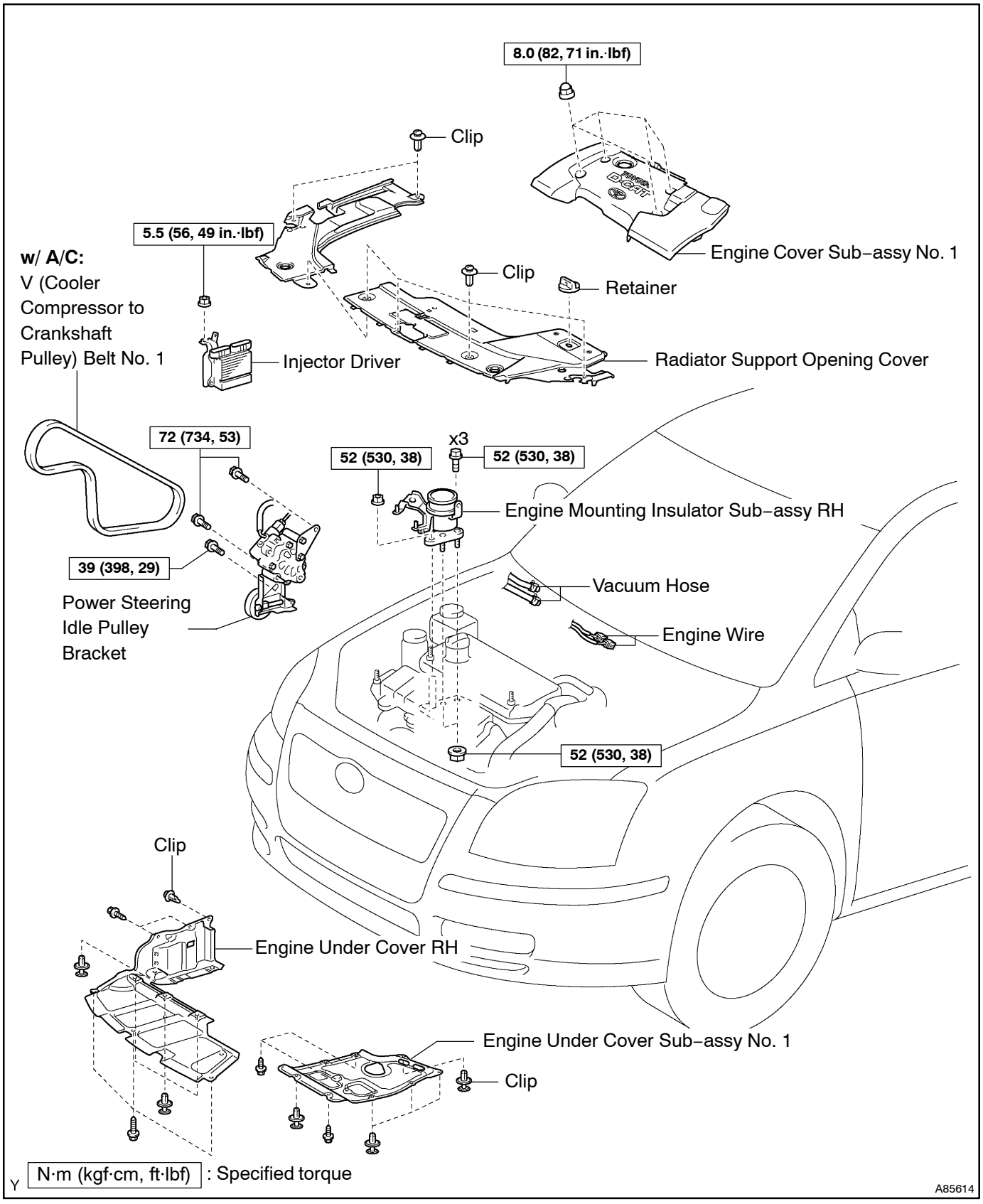

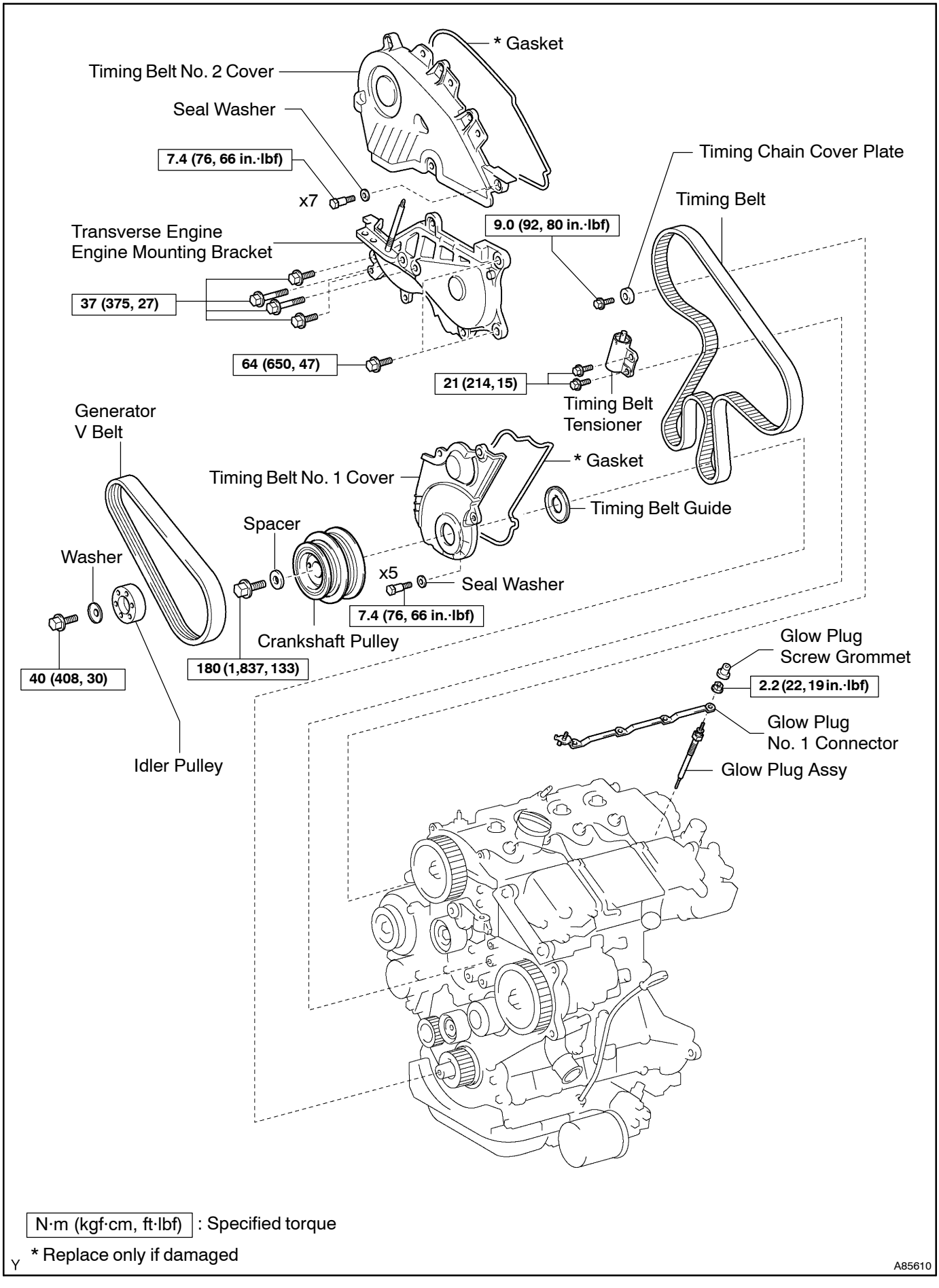

N·m (kgf·cm, ft·lbf) : Specified torque

Y * Replace only if damaged

A85610

141NI–01

REPLACEMENT

1. REMOVE FRONT WHEEL RH
2. REMOVE ENGINE UNDER COVER SUB–ASSY NO.1
3. REMOVE ENGINE UNDER COVER RH
4. REMOVE RADIATOR SUPPORT OPENING COVER
5. REMOVE ENGINE ROOM COVER SIDE
6. REMOVE ENGINE COVER SUB–ASSY NO.1 (See page 14–90)
7. REMOVE INJECTOR DRIVER (See page 14–108)
8. REMOVE V (COOLER COMPRESSOR TO CRANKSHAFT PULLEY) BELT NO.1 (See Pub. No. RM1018E on page 14–269)
9. REMOVE GENERATOR V BELT (See Pub. No. RM1018E on page 14–269)

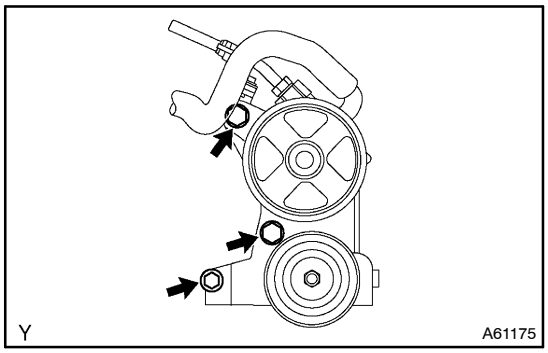

10. SEPARATE POWER STEERING IDLE PULLEY BRACKET
(a) Remove the 3 bolts and power steering idle pulley bracket.

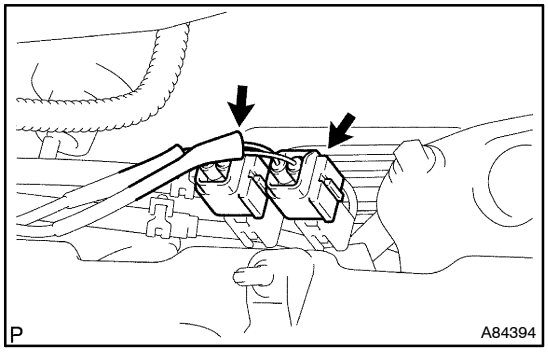

11. DISCONNECT ENGINE WIRE
(a) Disconnect the 2 exhaust gas temperature sensor connectors.

12. DISCONNECT VACUUM HOSE (See page 14–108)

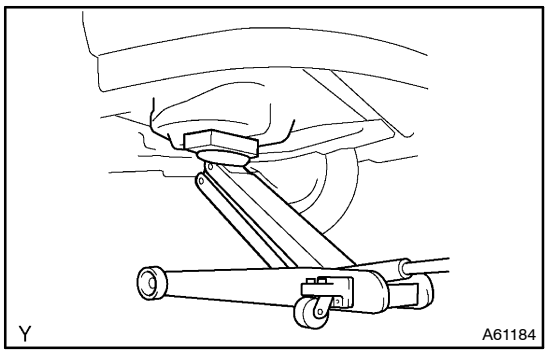

13. REMOVE ENGINE MOUNTING INSULATOR SUB–ASSY RH
(a) Place a wooden block on a jack underneath the engine.

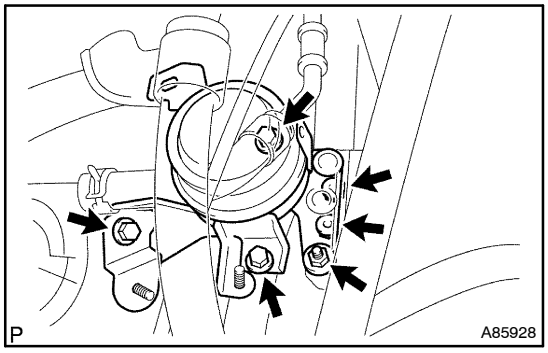

(b) Remove the 3 bolts and 3 nuts, then detach the engine mounting insulator sub–assembly RH.

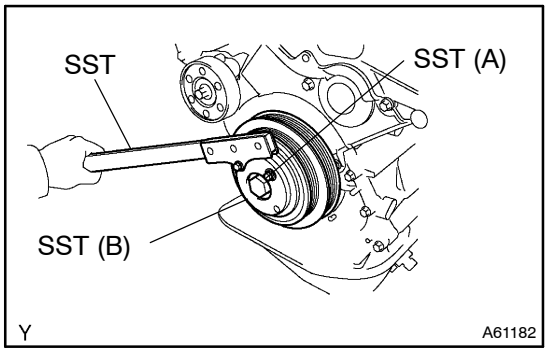

14. REMOVE CRANKSHAFT PULLEY

(a) Using SST, remove the pulley bolt.
SST 09213–54015 (09213–70020), 09330–00021

HINT:
When using SST (A) (09213–70020), a plate washer (5 mm (0.20 in.)) must be inserted between SST (A) and SST (B).

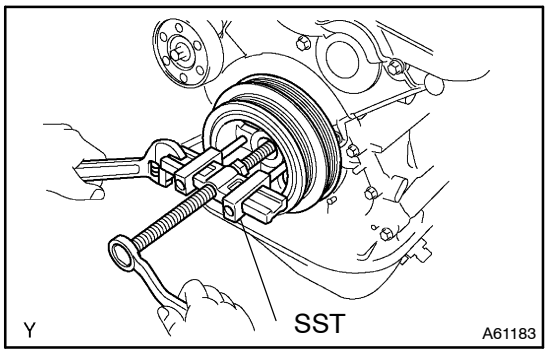

(b) Using SST, remove the pulley.
SST 09950–50013 (09951–05010, 09952–05010, 09953–05020, 09954–05031)

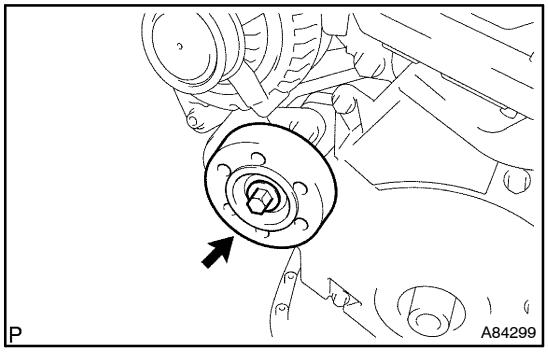

15. REMOVE IDLER PULLEY SUB–ASSY

(a) Remove the bolt and washer, then remove the pulley.

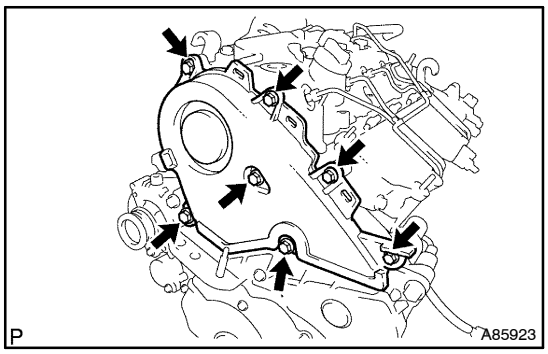

16. REMOVE TIMING BELT NO.2 COVER

(a) Remove the 7 bolts and 7 seal washers, then remove the timing belt cover.

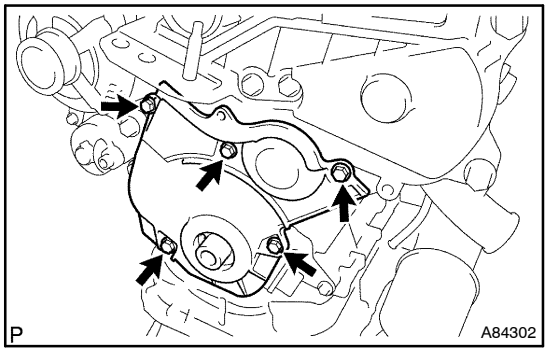

17. REMOVE TIMING BELT NO.1 COVER

(a) Remove the 5 bolts and 5 seal washers, then remove the timing belt cover.

18. REMOVE TIMING BELT GUIDE

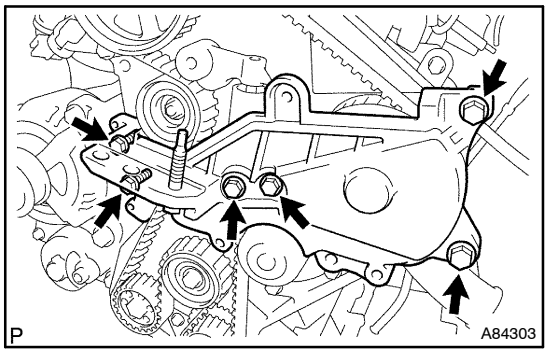

19. REMOVE TRANSVERSE ENGINE ENGINE MOUNTING BRACKET

(a) Remove the 6 bolts and engine mounting bracket.

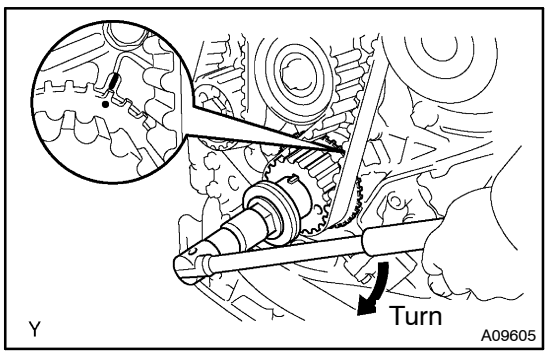

20. SET NO. 1 CYLINDER TO TDC/COMPRESSION

(a) Using the crankshaft pulley bolt, align the dot mark of the crankshaft timing gear with the TDC mark of the oil pump by turning the crankshaft.

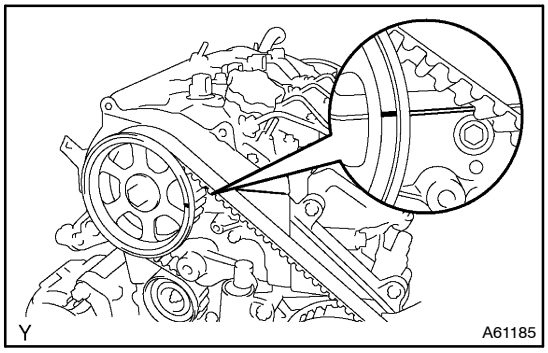

(b) Check that the timing mark of the camshaft timing pulley is aligned with the joint of the cylinder head and cylinder head cover.

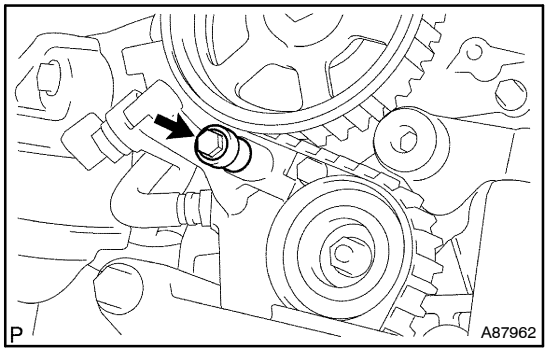

21. REMOVE TIMING CHAIN COVER PLATE

(a) Remove the bolt and timing chain cover plate.

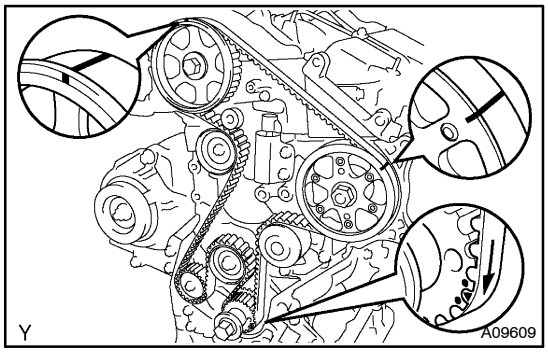

22. REMOVE TIMING BELT

HINT:

If reusing the timing belt, draw an arrow on the belt which indicates the engine revolution direction and put match marks on the pulleys and belt before removing. This operation will be very helpful when reinstalling the timing belt.

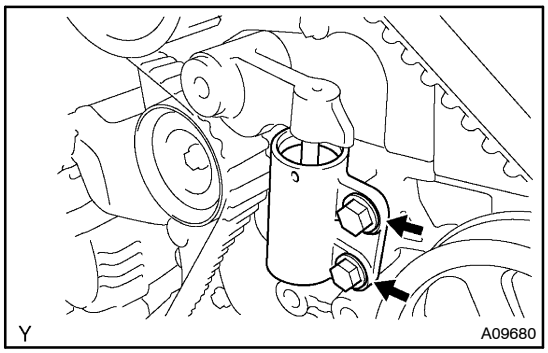

(a) Alternately loosen the 2 bolts to remove the timing belt tensioner.

(b) Remove the timing belt.

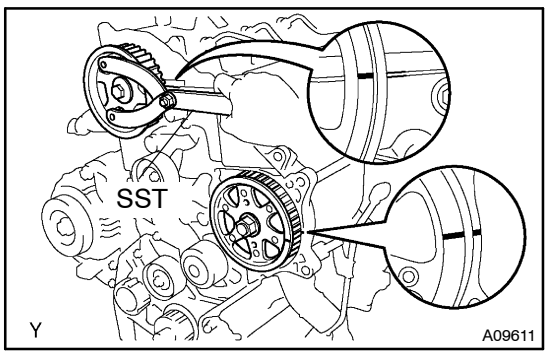

23. SET NO. 1 CYLINDER TO TDC/COMPRESSION

(a) Using SST, set the pulleys of the camshaft and injection pump so that each timing mark of the pulleys is aligned with its timing mark on the cylinder head assembly and water pump assembly.

SST 09960–10010 (09962–01000, 09963–01000)

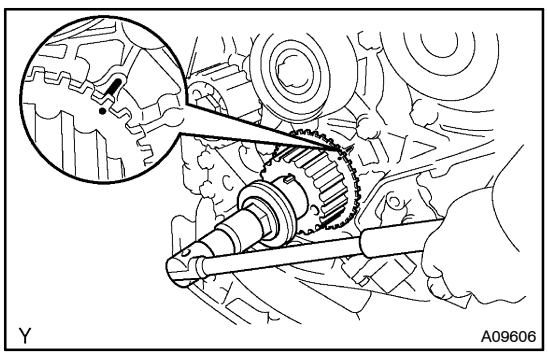

(b) Using the crankshaft pulley bolt, align the dot mark of the crankshaft timing gear with the TDC mark of the oil pump by turning the crankshaft.

NOTICE:

Be very careful in turning the camshaft and crankshaft. Since the valve head and piston head are sensitive, contact of the piston head with the valve heads may damage them.

24. INSTALL TIMING BELT

NOTICE:

The engine should be cold.

(a) Remove any oil or water on each pulley, then keep them clean.

NOTICE:

Do not use any cleaning agent.

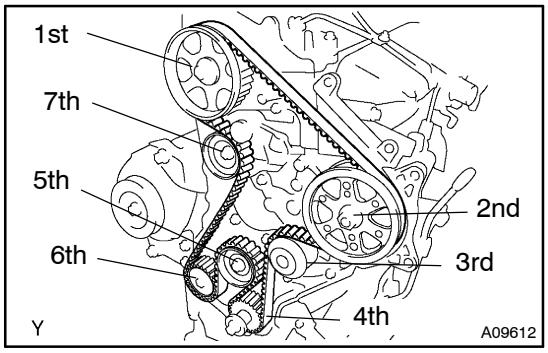

(b) Install the timing belt in the following order:
1. Camshaft timing pulley
2. Supply pump drive pulley
3. Water pump pulley
4. Crankshaft timing pulley
5. No. 2 idler pulley
6. Oil pump pulley
7. No. 1 idler pulley

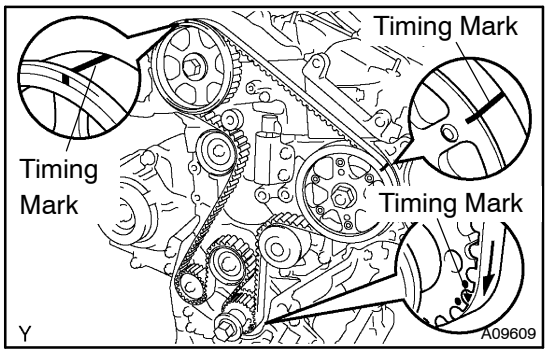

(c) Check that the timing marks are aligned as shown in the illustration.

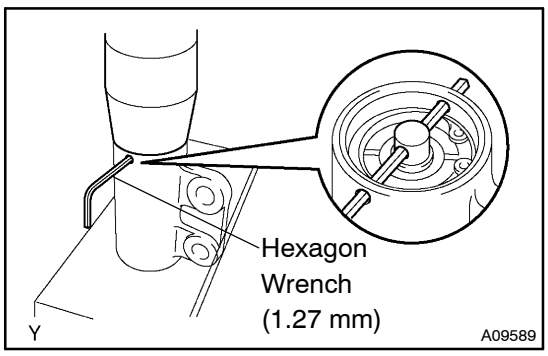

(d) Install the timing belt tensioner.
(1) Using a press, slowly press in the push rod with pressure of 981 to 9,807 N (100 to 1,000 kgf, 200 to 2,205 lbf).
(2) Align the holes of the push rod and housing, then insert hexagon wrench (1.27 mm) through the holes to keep the setting position of the push rod.
(3) Release the press.

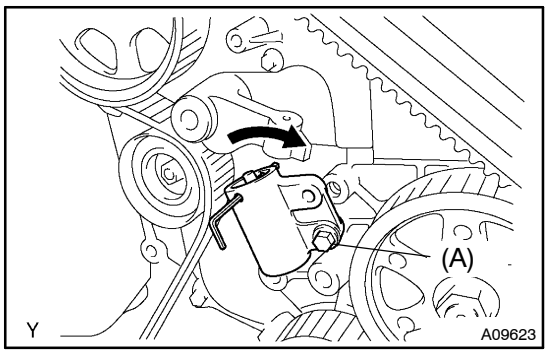

(4) Temporarily install the tensioner with bolt (A).
(5) Turn the tensioner clockwise, then temporarily install the other bolt.

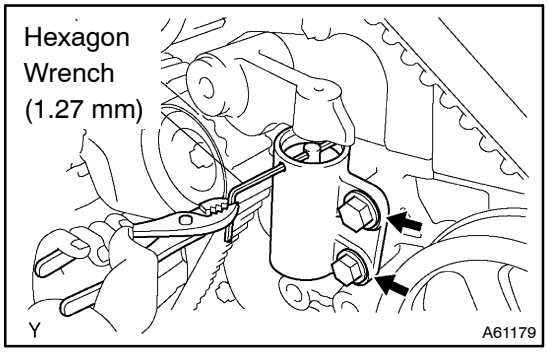

(6) Alternately tighten the 2 bolts.
Torque: 21 N·m (214 kgf·cm, 15 ft·lbf)
(7) Remove the hexagon wrench from the tensioner.

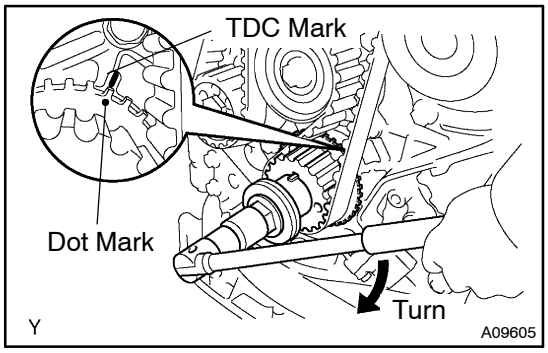

25. CHECK VALVE TIMING
(a) Slowly turn the crankshaft by 2 complete revolutions (720°) from the TDC to TDC.
NOTICE:
Always turn the crankshaft clockwise.
HINT:
Align the TDC mark with the dot mark.

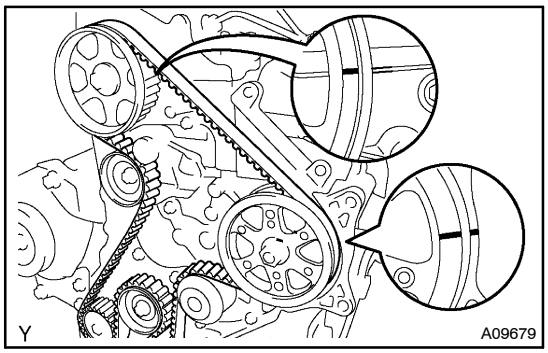

(b) Check that each timing mark of the pulleys is aligned with the timing marks of the engine assembly as shown in the illustration.
If the timing marks are not aligned, remove the timing belt, then reinstall it.
(c) Remove the crankshaft pulley bolt.

26. INSTALL TIMING CHAIN COVER PLATE
Torque: 9.0 N·m (92 kgf·cm, 80 in.·lbf)

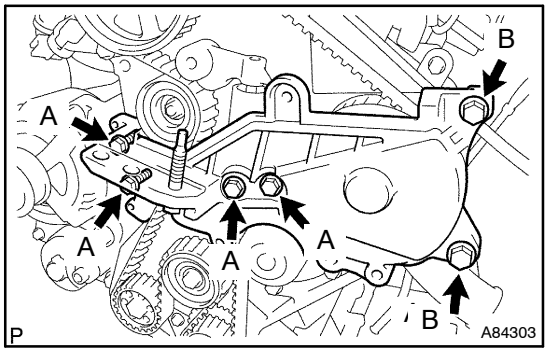

27. INSTALL TRANSVERSE ENGINE ENGINE MOUNTING BRACKET
Torque:
37 N·m (375 kgf·cm, 27 ft·lbf) for bolt A
64 N·m (650 kgf·cm, 47 ft·lbf) for bolt B

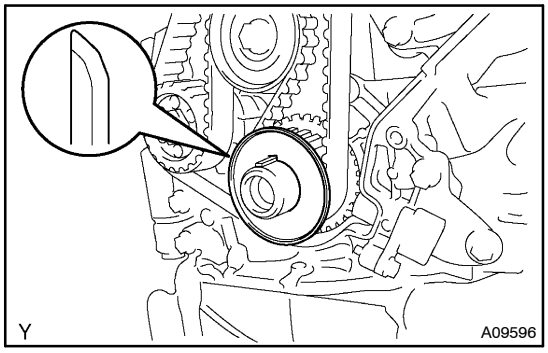

28. INSTALL TIMING BELT GUIDE

(a) Install the belt guide with the cap side facing outward.

29. INSTALL TIMING BELT NO.1 COVER

(a) Check the timing belt cover gasket for cracks or deteriorations, etc.

If the gasket has cracked or deteriorated, replace it by the following steps:

(1) Using a screwdriver and gasket scraper, remove all the old gaskets.

(2) Thoroughly clean all components to remove all the loose material.

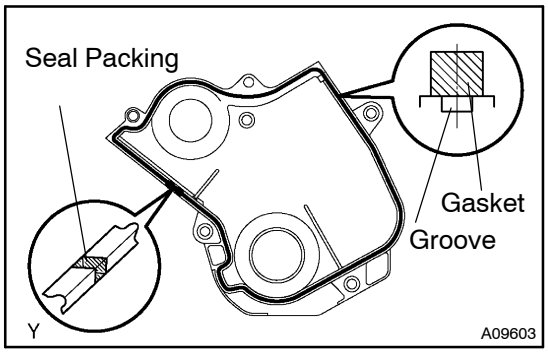

(3) Remove the backing paper from a new gasket, then affix the gasket to the timing belt cover as shown in the illustration.

NOTICE:

- **Affix the gasket at the center of the groove.**
- **At the corners, try to keep the gasket thickness uniform.**

(4) After installing the gasket, press it down so that the adhesive firmly sticks to the timing belt cover.

(5) If there is a gap between the ends of the gasket, use seal packing to close the gap.

Seal packing: Part No. 08826–00080 or equivalent

(b) Install the No. 1 timing belt cover and gasket with the 5 bolts and 5 seal washers.

Torque: 7.4 N·m (75 kgf·cm, 65 in.·lbf)

(c) After installing the belt cover, check that there is no peelings of the gasket.

30. INSTALL TIMING BELT NO.2 COVER

(a) Check the timing belt cover gasket for cracks or deteriorations, etc.

If the gasket has cracked or deteriorated, replace it by the following steps:

(1) Using a screwdriver and gasket scraper, remove all the old gasket.

(2) Thoroughly clean all components to remove all the loose material.

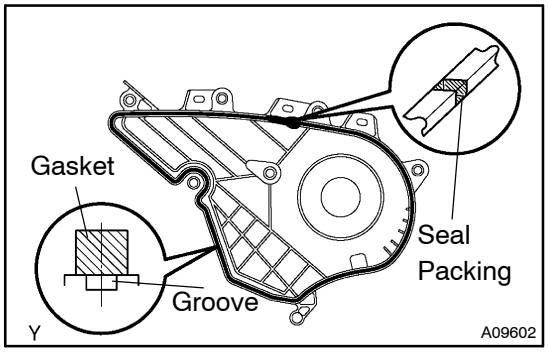

(3) Remove the backing paper from a new gasket, then affix the gasket to the timing belt cover as shown in the illustration.

NOTICE:

- **Affix the gasket at the center of the groove.**
- **At the corners, try to keep the gasket thickness uniform.**

(4) After installing the gasket, press it down so that the adhesive firmly sticks to the timing belt cover.

(5) If there is a gap between the ends of the gasket, use seal packing to close the gap.

Seal packing: Part No. 08826–00080 or equivalent

(b) Install the No. 2 timing belt cover and gasket with the 7 bolts and 7 seal washers.

Torque: 7.4 N·m (75 kgf·cm, 65 in.·lbf)

31. INSTALL IDLER PULLEY SUB–ASSY
Torque: 40 N·m (408 kgf·cm, 30 ft·lbf)

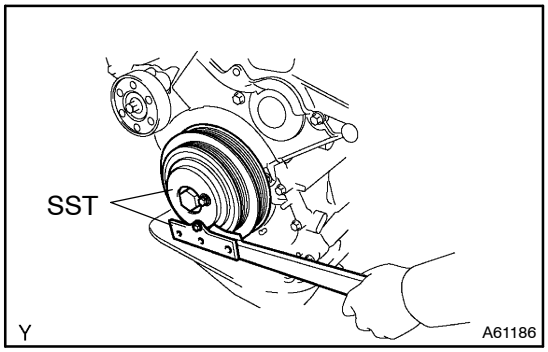

32. INSTALL CRANKSHAFT PULLEY

(a) Align the keyway of the pulley with the key located on the crankshaft, then slide the pulley into place.

(b) Using SST, install the pulley bolt.
SST 09213–54015 (09213–70020), 09330–00021
Torque: 180 N·m (1,835 kgf·cm, 133 ft·lbf)

HINT:
When using the bolt (91651–60855), a plate washer (5 mm (0.20 in.)) must be inserted between the pulley bolt and SST.

33. INSTALL ENGINE MOUNTING INSULATOR SUB–ASSY RH
Torque: 52 N·m (530 kgf·cm, 38 ft·lbf)

34. INSTALL POWER STEERING IDLE PULLEY BRACKET (See page 14–108)

35. ADJUST V (COOLER COMPRESSOR TO CRANKSHAFT PULLEY) BELT NO.1
(See Pub. No. RM1018E on page 14–269)

36. INSTALL INJECTOR DRIVER (See page 14–108)

37. INSTALL ENGINE COVER SUB–ASSY NO.1 (See page 14–90)

38. INSTALL FRONT WHEELS
Torque: 103 N·m (1,050 kgf·cm, 76 ft·lbf)

CAMSHAFT (1CD–FTV)(From September, 2003)

COMPONENTS

141NJ–01

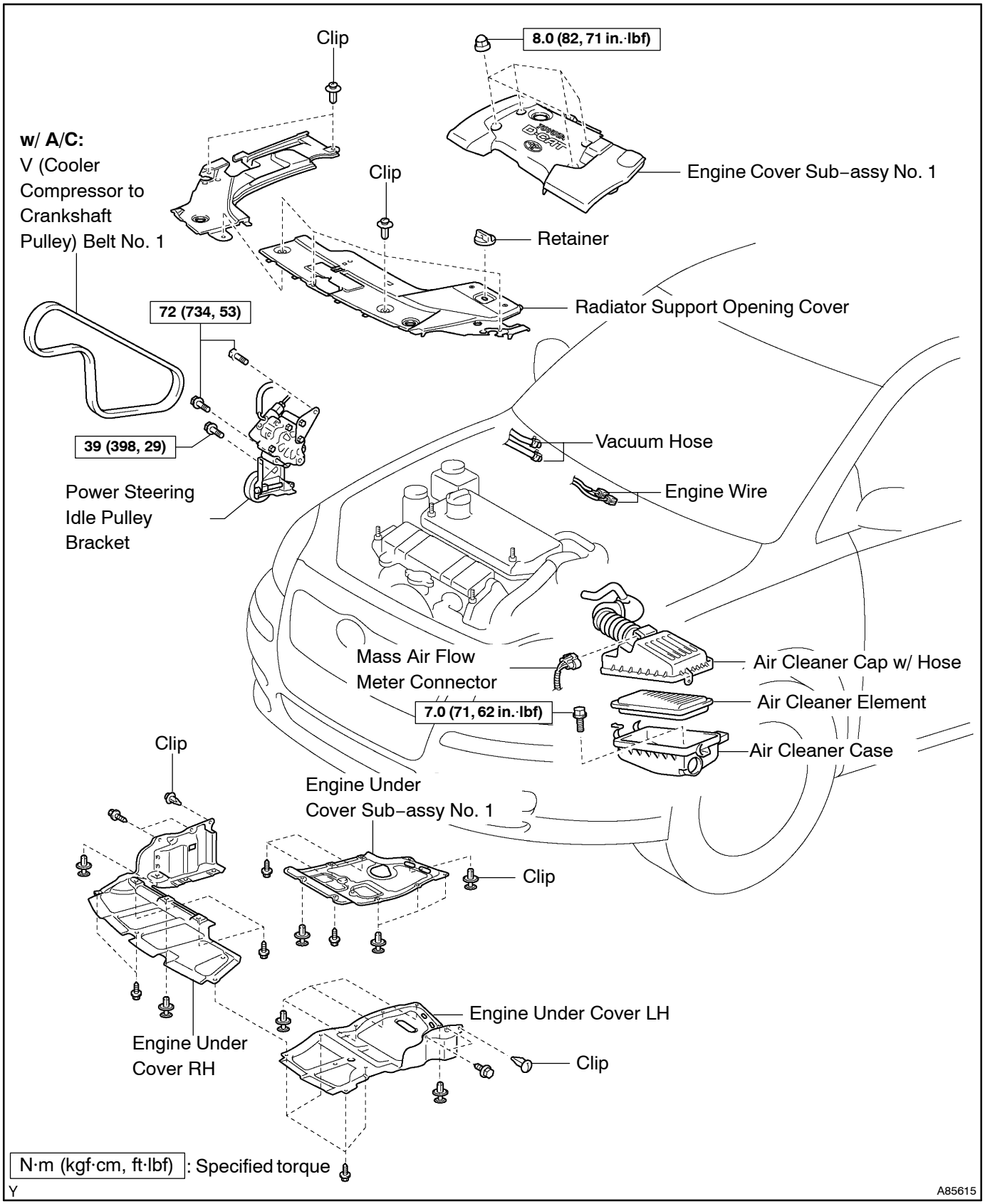

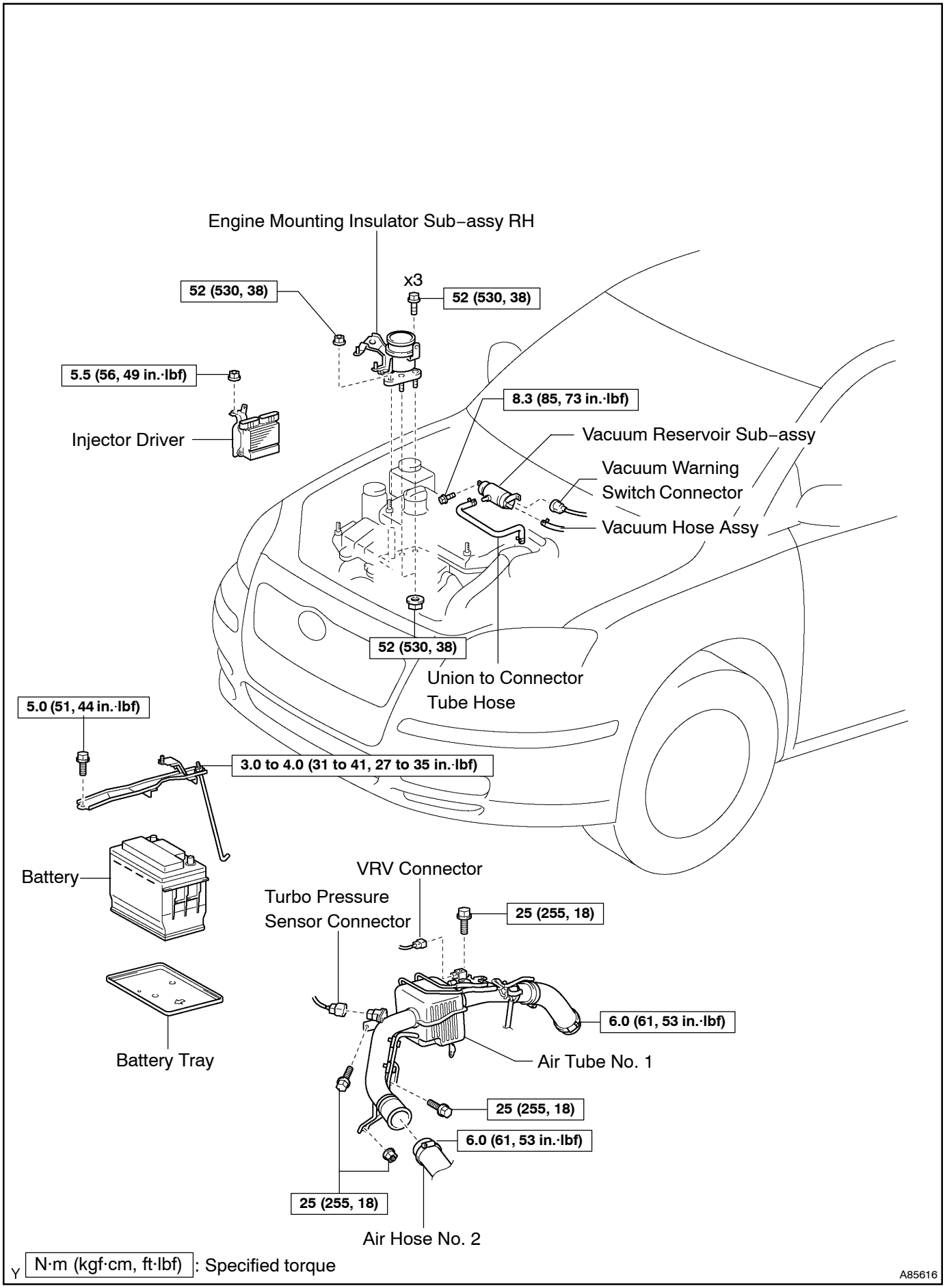
Engine Mounting Insulator Sub–assy RH
x3
52 (530, 38)
52 (530, 38)
5.5 (56, 49 in.·lbf)
Injector Driver
8.3 (85, 73 in.·lbf)
Vacuum Reservoir Sub–assy
Vacuum Warning Switch Connector
Vacuum Hose Assy
52 (530, 38)
Union to Connector Tube Hose
5.0 (51, 44 in.·lbf)
3.0 to 4.0 (31 to 41, 27 to 35 in.·lbf)
Battery
Battery Tray
VRV Connector
Turbo Pressure Sensor Connector
25 (255, 18)
6.0 (61, 53 in.·lbf)
Air Tube No. 1
25 (255, 18)
6.0 (61, 53 in.·lbf)
25 (255, 18)
Air Hose No. 2
Y N·m (kgf·cm, ft·lbf) : Specified torque
A85616

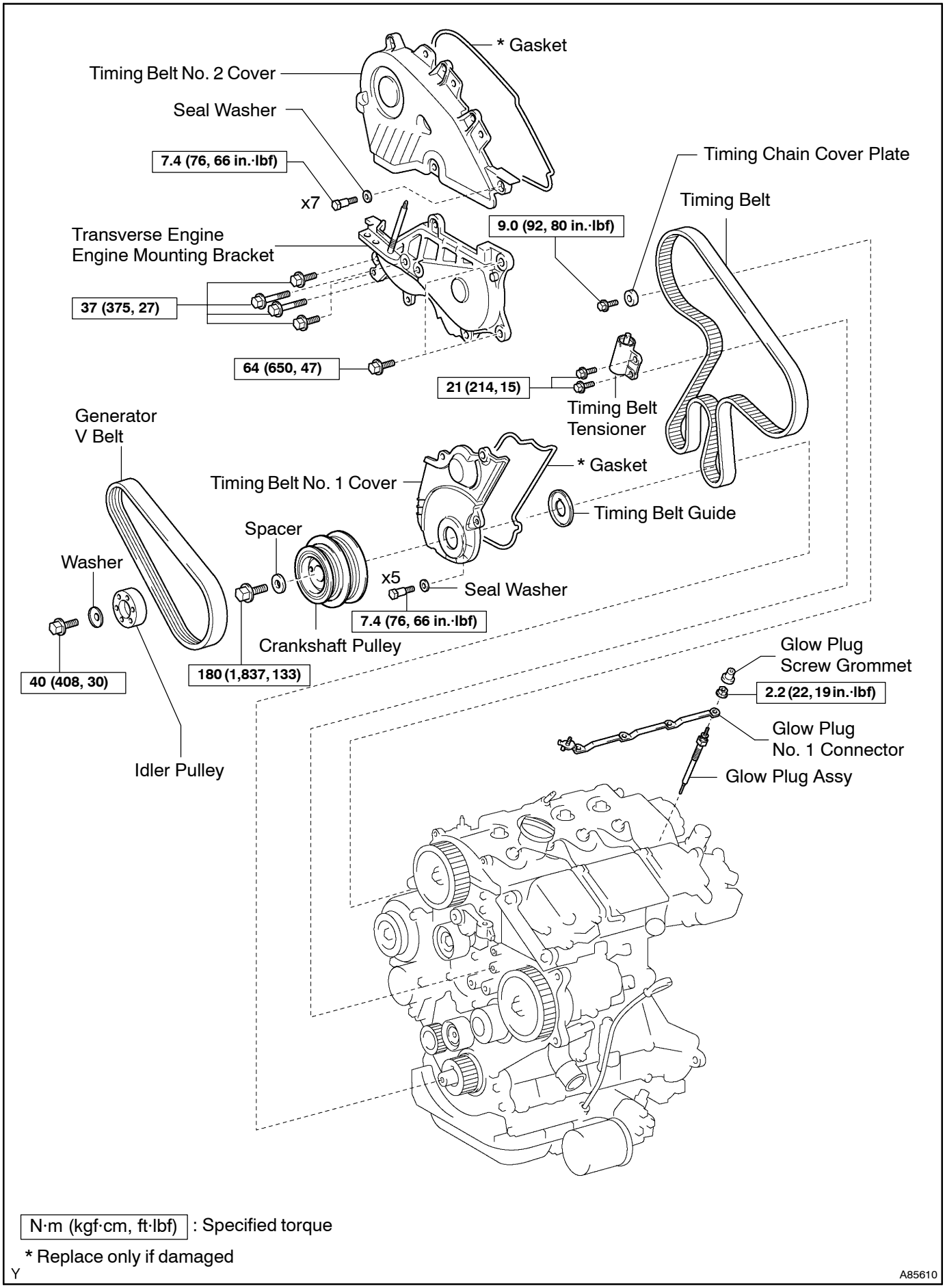

N·m (kgf·cm, ft·lbf) : Specified torque

* Replace only if damaged

Y

A85610

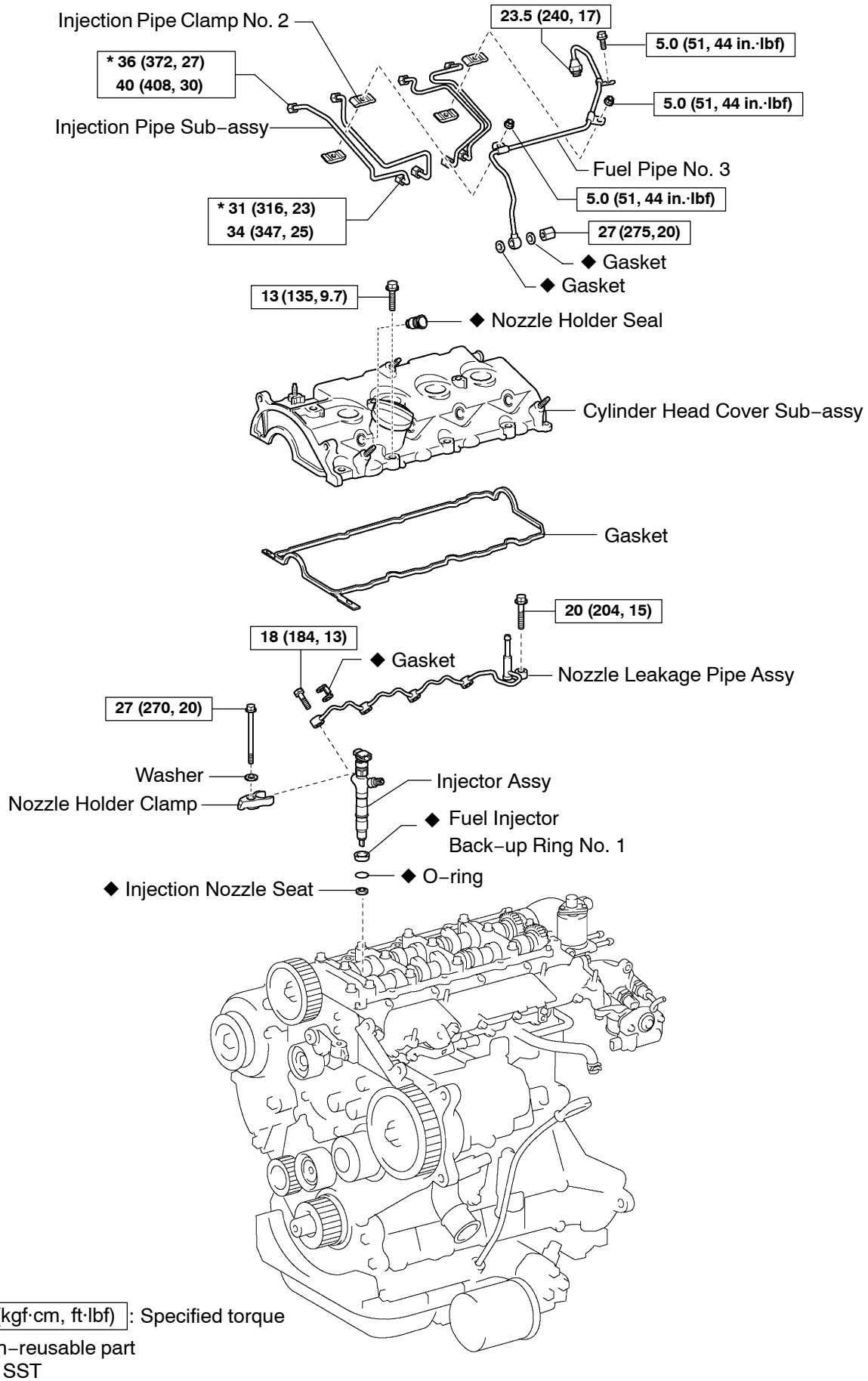
Injection Pipe Clamp No. 2
23.5 (240, 17)
5.0 (51, 44 in.·lbf)
* 36 (372, 27)
40 (408, 30)
5.0 (51, 44 in.·lbf)
Injection Pipe Sub–assy
Fuel Pipe No. 3
5.0 (51, 44 in.·lbf)
* 31 (316, 23)
34 (347, 25)
27 (275, 20)
◆ Gasket
◆ Gasket
13 (135, 9.7)
◆ Nozzle Holder Seal
Cylinder Head Cover Sub–assy
Gasket
20 (204, 15)
18 (184, 13)
◆ Gasket
Nozzle Leakage Pipe Assy
27 (270, 20)
Washer
Nozzle Holder Clamp
Injector Assy
◆ Fuel Injector
Back–up Ring No. 1
◆ O–ring
◆ Injection Nozzle Seat
N·m (kgf·cm, ft·lbf) : Specified torque
◆ Non–reusable part
* Use SST
A85617

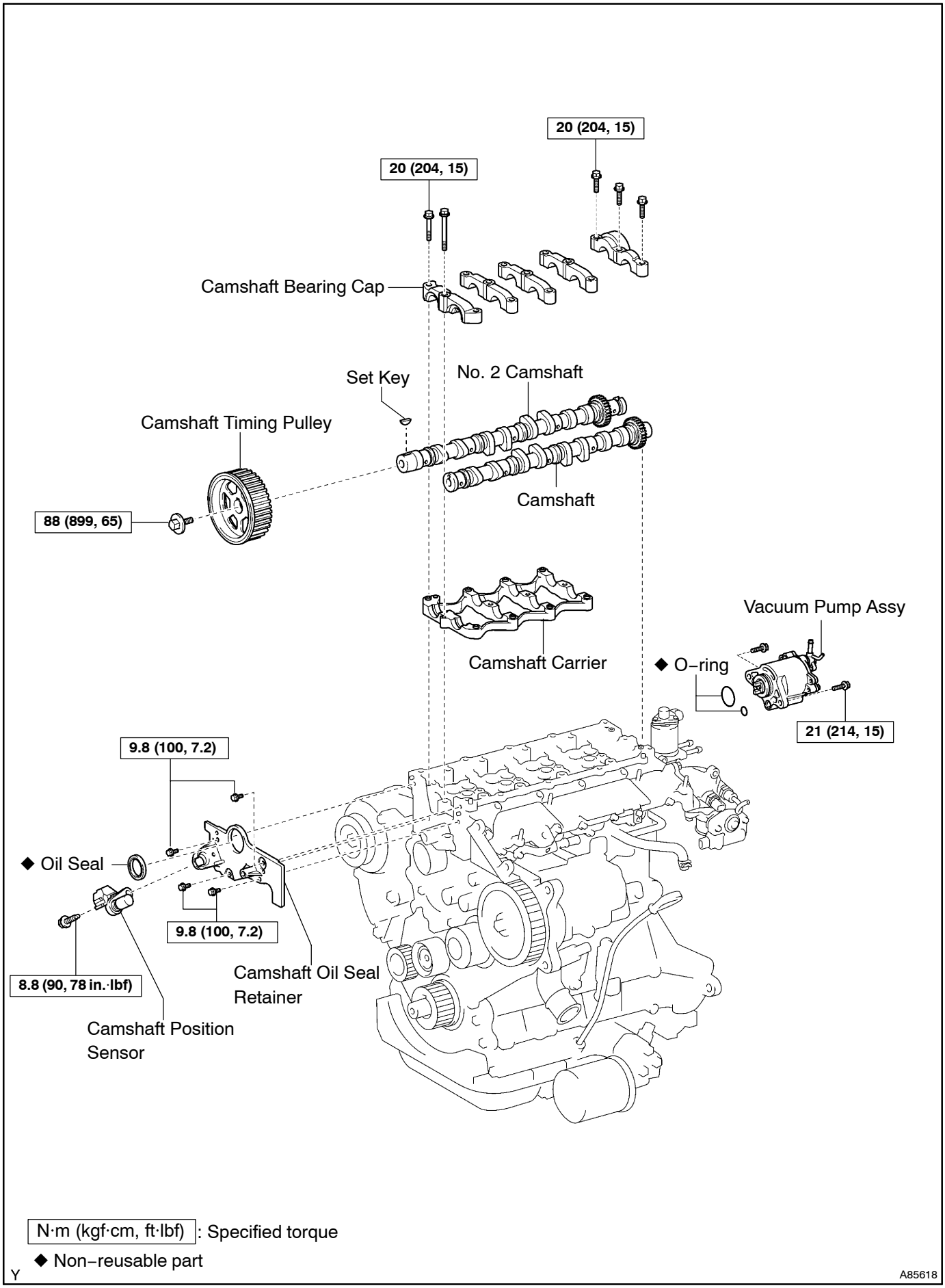
20 (204, 15)
20 (204, 15)
Camshaft Bearing Cap
Set Key
No. 2 Camshaft
Camshaft Timing Pulley
Camshaft
88 (899, 65)
Camshaft Carrier
Vacuum Pump Assy
◆ O–ring
21 (214, 15)
9.8 (100, 7.2)
◆ Oil Seal
9.8 (100, 7.2)
8.8 (90, 78 in.·lbf)
Camshaft Oil Seal Retainer
Camshaft Position Sensor
N·m (kgf·cm, ft·lbf) : Specified torque
◆ Non–reusable part
Y
A85618

141NK–01

REPLACEMENT

1. REMOVE FRONT WHEEL RH
2. REMOVE ENGINE UNDER COVER LH
3. REMOVE ENGINE UNDER COVER SUB–ASSY NO.1
4. REMOVE ENGINE UNDER COVER RH
5. REMOVE RADIATOR SUPPORT OPENING COVER
6. REMOVE ENGINE ROOM COVER SIDE
7. REMOVE ENGINE COVER SUB–ASSY NO.1 (See page 14–90)
8. REMOVE AIR CLEANER ASSY (See page 14–108)
9. REMOVE BATTERY
10. REMOVE VACUUM RESERVOIR SUB–ASSY (See page 14–108)
11. REMOVE AIR TUBE NO.1 (See page 14–108)
12. REMOVE INJECTOR DRIVER (See page 14–108)
13. REMOVE V (COOLER COMPRESSOR TO CRANKSHAFT PULLEY) BELT NO.1 (See Pub. No. RM1018E on page 14–269)
14. REMOVE GENERATOR V BELT (See Pub. No. RM1018E on page 14–269)
15. SEPARATE POWER STEERING IDLE PULLEY BRACKET (See page 14–138)
16. DISCONNECT ENGINE WIRE (See page 14–138)
17. DISCONNECT VACUUM HOSE (See page 14–108)
18. REMOVE ENGINE MOUNTING INSULATOR SUB–ASSY RH (See page 14–138)
19. REMOVE CRANKSHAFT PULLEY (See page 14–138)
    SST 09213–54015 (09213–70020), 09330–00021, 09950–50013 (09951–05010, 09952–05010, 09953–05020, 09954–05031)
20. REMOVE IDLER PULLEY SUB–ASSY (See page 14–138)
21. REMOVE TIMING BELT NO.2 COVER (See page 14–138)
22. REMOVE TIMING BELT NO.1 COVER (See page 14–138)
23. REMOVE TIMING BELT GUIDE
24. REMOVE TRANSVERSE ENGINE ENGINE MOUNTING BRACKET (See page 14–138)
25. SET NO. 1 CYLINDER TO TDC/COMPRESSION (See page 14–138)
26. REMOVE TIMING CHAIN COVER PLATE (See page 14–138)
27. REMOVE TIMING BELT (See page 14–138)
28. REMOVE CAMSHAFT POSITION SENSOR (See page 14–108)

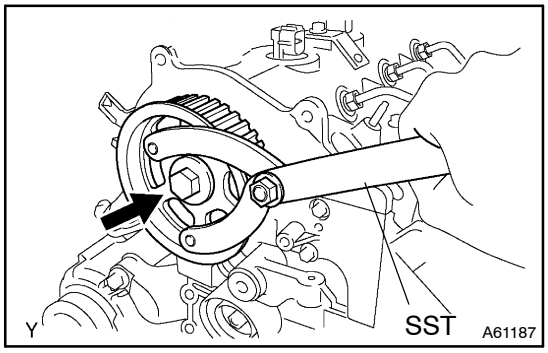

29. REMOVE CAMSHAFT TIMING PULLEY
(a) Using SST, remove the pulley bolt.
SST 09960–10010 (09962–01000, 09963–01000)
(b) Remove the timing pulley.
HINT:
Using a plastic–faced hammer, tap out the pulley.
(c) Remove the set key.

30. REMOVE FUEL PIPE NO.3 (See page 14–108)
SST 09023–12700

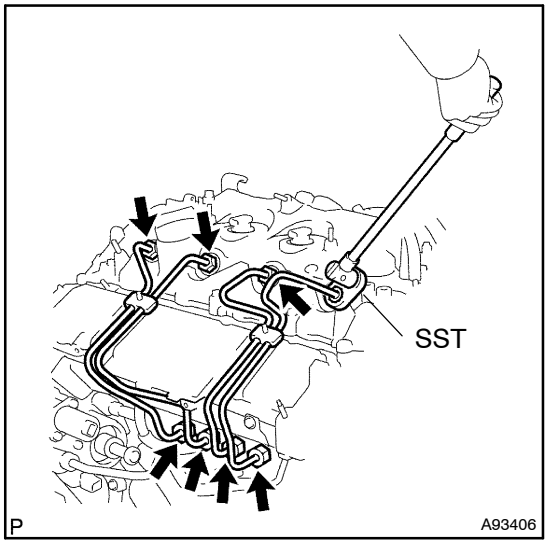

31. REMOVE INJECTION PIPE SUB–ASSY NO.1

(a) Remove the 2 upper injection pipe clamps from the intake manifold.

(b) Using SST, remove the injection pipe from the common rail side.
SST 09023–12700

(c) Using SST, remove the injection pipe from the injector side.
SST 09023–12700

(d) After removing the fuel pipe, in order to prevent dust or foreign objects from being introduced, cover the common rail with vinyl tape and protect the injector inlet with a vinyl or plastic bag.

32. REMOVE INJECTION PIPE SUB–ASSY NO.2
SST 09023–12700

HINT:
Perform the same procedures as the injection pipe No. 1.

33. REMOVE INJECTION PIPE SUB–ASSY NO.3
SST 09023–12700

HINT:
Perform the same procedures as the injection pipe No. 1.

34. REMOVE INJECTION PIPE SUB–ASSY NO.4
SST 09023–12700

HINT:
Perform the same procedures as the injection pipe No. 1.

35. REMOVE VACUUM PUMP ASSY (See page 14–108)

36. REMOVE NOZZLE LEAKAGE PIPE NO.2 (See page 14–108)

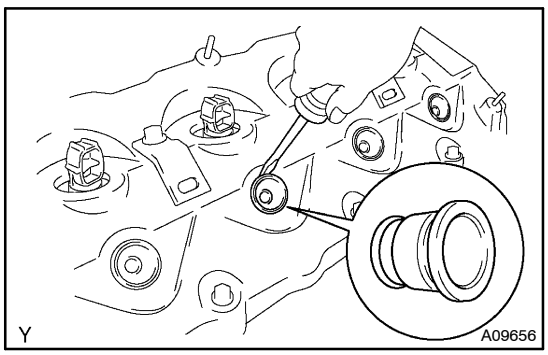

37. REMOVE NOZZLE HOLDER SEAL

(a) Using a screwdriver, pry out the 4 nozzle holder seals.

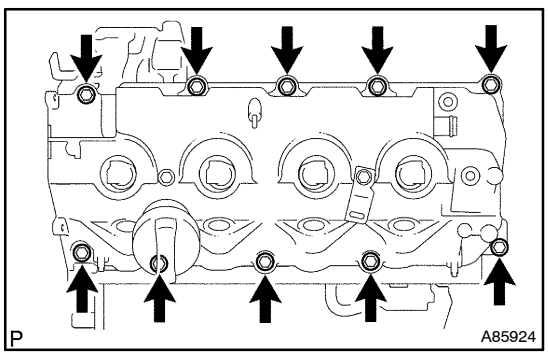

38. REMOVE CYLINDER HEAD COVER SUB–ASSY

(a) Remove the 10 bolts, cylinder head cover and gasket.

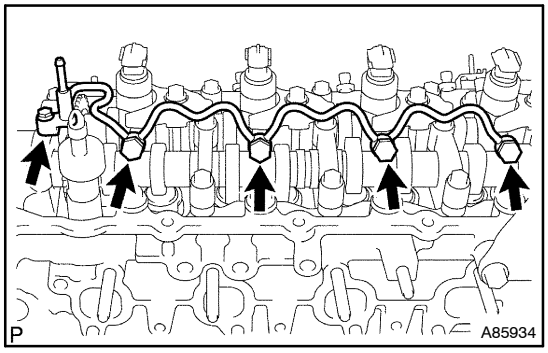

39. REMOVE NOZZLE LEAKAGE PIPE ASSY

(a) Remove the 4 hollow screws and bolt.

(b) Remove the nozzle leakage pipe and 4 gaskets from the cylinder head and injector.

40. REMOVE INJECTOR ASSY (See page 11–46)

HINT:

Since each injector assembly has characteristic fuel injecting behavior, keep them in the correct order so that they can be returned to the original locations when reassembling.

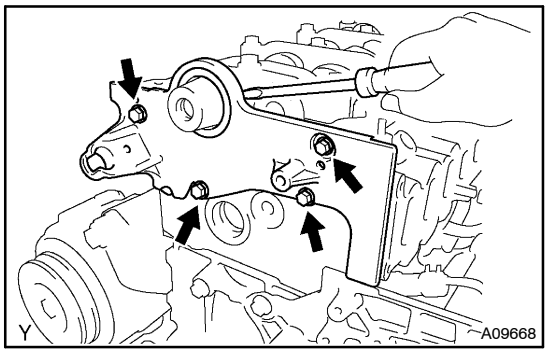

41. REMOVE CAMSHAFT OIL SEAL RETAINER

(a) Remove the 4 bolts.

(b) Using a screwdriver, remove the oil seal retainer by prying between the oil seal retainer and camshaft bearing cap.

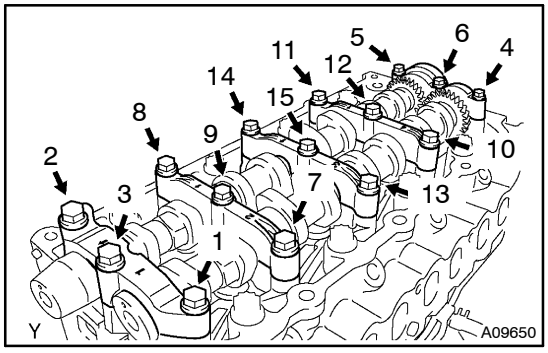

42. REMOVE CAMSHAFT

(a) Using several steps, loosen and remove the 14 bearing cap bolts uniformly in the sequence shown in the illustration.

(b) Remove the 5 bearing caps and camshaft sub–assembly.

43. REMOVE NO.2 CAMSHAFT

(a) Remove the camshaft sub–assembly and camshaft carrier.

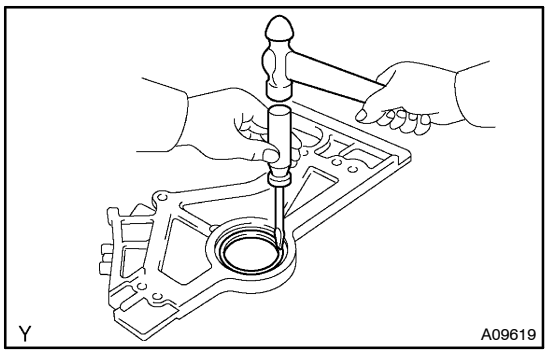

44. REMOVE CAMSHAFT OIL SEAL

(a) Using a screwdriver and hammer, tap out the oil seal.

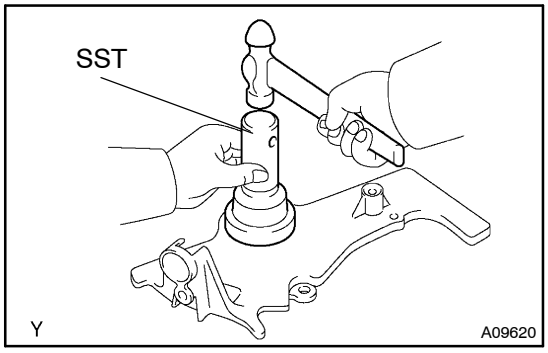

45. INSTALL CAMSHAFT OIL SEAL

(a) Using SST and a hammer, tap in a new oil seal until its surface is flush with the camshaft oil seal retainer edge.
SST 09223–46011

(b) Apply multipurpose grease to a new oil seal lip.

NOTICE:

Keep the lip free of foreign object.

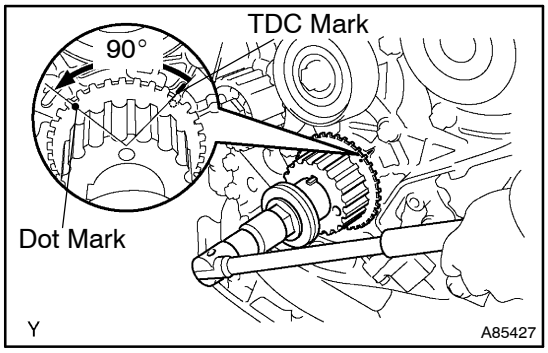

46. SET NO. 1 CYLINDER TO TDC/COMPRESSION

(a) Using the crankshaft pulley bolt, turn the crankshaft to set the dot mark of the crankshaft timing gear at the position of 90° BTDC.

NOTICE:

If the timing belt is disengaged, the crankshaft timing gear placed at wrong angle can cause contact of the piston head with the valve head.

47. INSTALL CAMSHAFT

NOTICE:

Since the thrust clearance of the camshaft is small, the camshaft must be kept level while being installed. If the camshaft is not kept level, the cylinder head or camshaft may be damaged. To avoid this, the following procedures should be carried out.

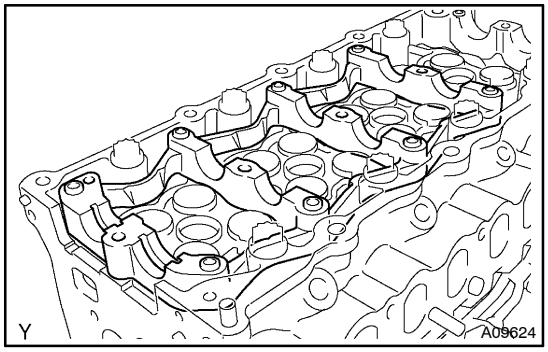

(a) Place the camshaft carrier on the cylinder head.

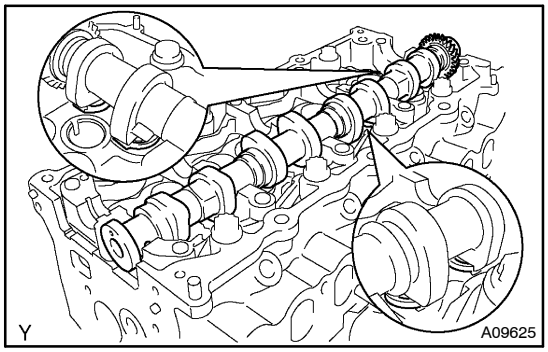

(b) Install the camshaft.

(c) Apply engine oil to the cam and gear of the camshaft, and the journal of the camshaft carrier.

(d) Place the intake camshaft on the camshaft carrier so that the No. 3 and No. 4 of the cylinder cam lobes face downward as shown in the illustration.

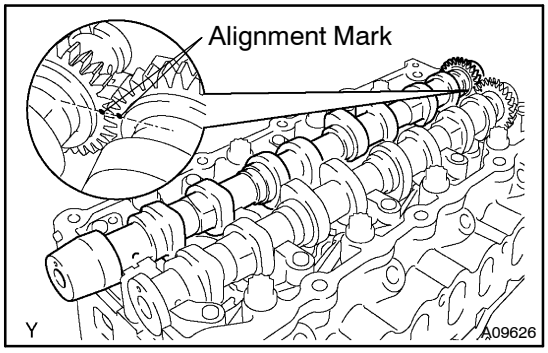

48. INSTALL NO.2 CAMSHAFT

(a) Install the No. 2 camshaft.

(b) Apply engine oil to the cam and gear of the camshaft, and the journal of the camshaft carrier.

(c) Engage the exhaust camshaft gear and intake camshaft gear by aligning the alignment marks on each gear.

(d) Roll down the exhaust camshaft onto the bearing journals while engaging the gears with each other.

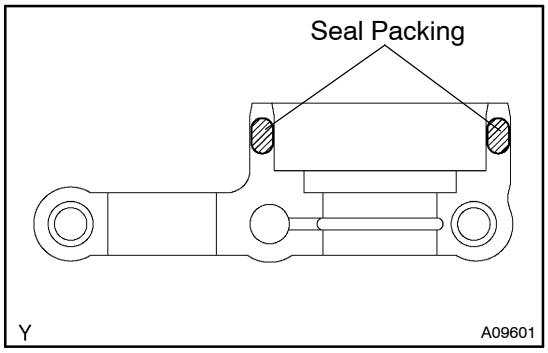

(e) Install the camshaft bearing caps.

(1) Remove any old packing (FIPG) material from the No. 5 camshaft bearing cap.

(2) Apply seal packing to the No. 5 camshaft bearing cap as shown in the illustration.

Seal packing: Part No. 08826–00080 or equivalent

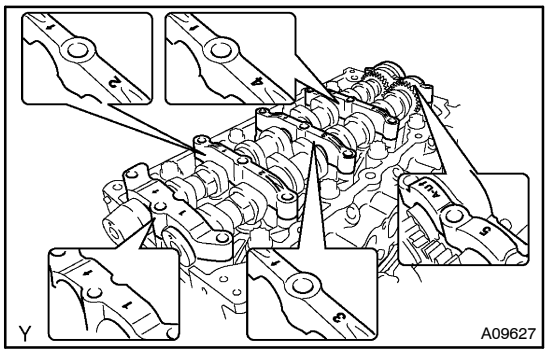

(3) Place the 5 bearing caps in their proper locations.

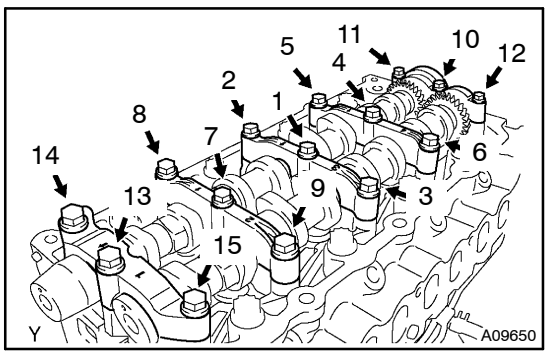

(4) Using several steps, install and tighten the 15 bearing cap bolts uniformly in the sequence shown in the illustration.

Torque: 20 N·m (204 kgf·cm, 15 ft·lbf)

49. INSPECT VALVE CLEARANCE (See page 14–90)

50. ADJUST VALVE CLEARANCE (See page 14–90)

51. INSTALL CAMSHAFT OIL SEAL RETAINER

(a) Remove any old packing (FIPG) material. Be careful not to drop any oil on the contact surfaces of the oil seal retainer and cylinder block.

(1) Thoroughly clean all components to remove all the loose material.

(2) Using non–residue solvent, clean both the sealing surfaces.

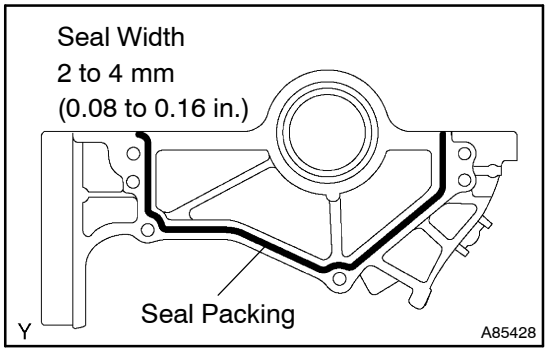

(b) Apply seal packing to the oil seal retainer as shown in the illustration.
Seal packing: Part No. 08826–00080 or equivalent
(1) Install a nozzle of which opening is cut to 2 to 4 mm (0.08 to 0.16 in.).
(2) The parts must be set within 3 minutes and must be assembled within 15 minutes after applying seal packing.
(3) Immediately remove the nozzle from the tube, then reinstall the cap.
(c) Install the oil seal retainer with the 4 bolts. Tighten the 4 bolts uniformly in several steps.
Torque: 9.8 N·m (100 kgf·cm, 7.2 ft·lbf)

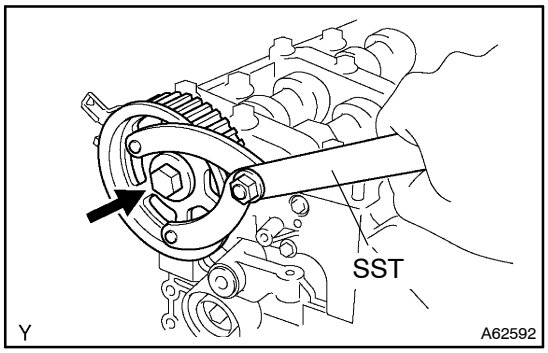

52. INSTALL CAMSHAFT TIMING PULLEY
(a) Install the pulley set key to the groove of the camshaft.
(b) Align the keyway of the timing pulley with the key located on the camshaft, then slide the pulley into place.
(c) Using SST, install the pulley bolt.
SST 09960–10010 (09962–01000, 09963–01000)
Torque: 88 N·m (899 kgf·cm, 65 ft·lbf)

53. INSTALL CAMSHAFT POSITION SENSOR (See page 14–108)

54. INSTALL INJECTOR ASSY

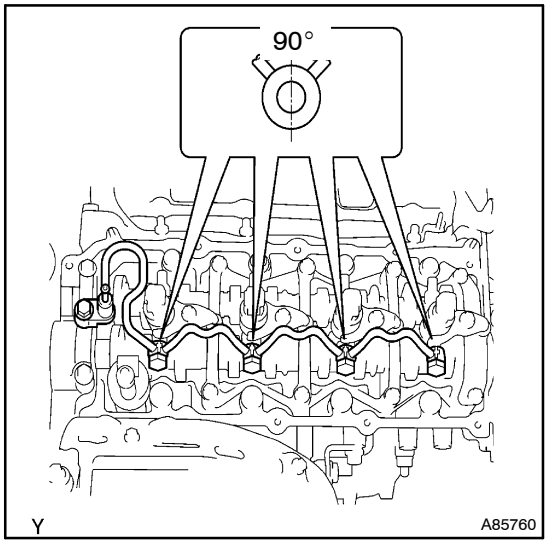

55. INSTALL NOZZLE LEAKAGE PIPE ASSY
(a) Remove the bolt which is tightened at the center of the camshaft bearing cap No. 4.
(b) Install the nozzle leakage pipe and 4 new gaskets.
NOTICE:
When installing the gaskets, pay attention to the mounting orientation. Install the gasket so that the joint of the gasket comes within the ranges shown in the illustration.
(c) Apply a light coat of engine oil to the 4 hollow screws and bolt.
(d) Tighten the 4 hollow screws and bolt by hand.
(e) Tighten the 4 hollow screws and bolt.
Torque:
16 N·m (163 kgf·cm, 12 ft·lbf) for hollow screw
20 N·m (204 kgf·cm, 15 ft·lbf) for flange bolt
NOTICE:
In any case, when the torque exceeds the upper limit, replace the leakage pipe hollow screw and gaskets with new ones.
(f) Check that there are no leaks from the nozzle leakage pipe connection.

(1) Apply a light coat of soapy water (any fluid to detect fuel leakage) to the nozzle leakage pipe connection.

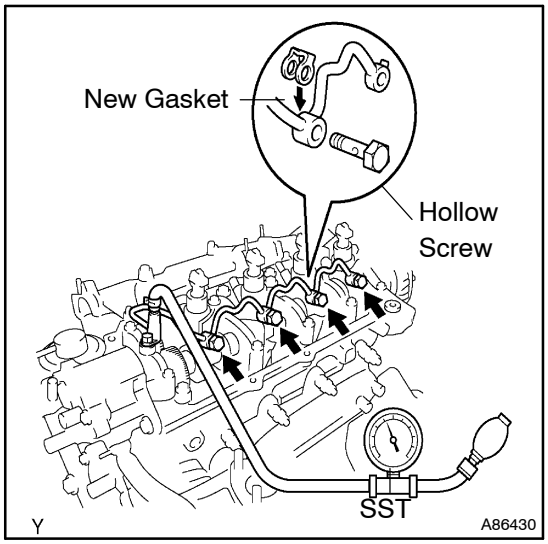

(2) Using SST (a turbocharger pressure gauge), attach SST to the fuel return side of the nozzle leakage pipe, then maintain 100 kPa (1.0 kgf/cm^2, 14.5 psi) of pressure for 60 seconds to check that there are no bubbles from the pipe connection.

SST 09992–00242

(3) After checking fuel leaks, wipe off soapy water from the pipe connection.

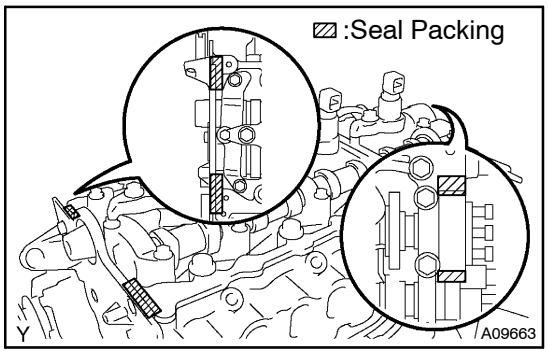

56. INSTALL CYLINDER HEAD COVER SUB–ASSY

(a) Remove any old packing (FIPG) material.

(b) Apply seal packing to the cylinder head as illustrated.
Seal packing: Part No. 08826–00080 or equivalent

(c) Install the gasket to the cylinder head cover.

(d) Install the cylinder head cover with the 10 bolts.
Torque: 13 N·m (135 kgf·cm, 9.7 ft·lbf)

57. INSTALL NOZZLE HOLDER SEAL

(a) Install 4 new nozzle holder seals.

58. INSTALL NOZZLE LEAKAGE PIPE NO.2 (See page 14–108)

59. INSTALL VACUUM PUMP ASSY (See page 14–108)

60. INSTALL INJECTION PIPE SUB–ASSY NO.1

NOTICE:

When assembling the pipes, perform the operation with the engine cold at room temperature.

(a) Install the 2 lower injection pipe clamps to the intake manifold.

(b) Remove the vinyl or plastic bag from the injector and the vinyl tape from the common rail.

(c) Temporarily install the injection pipe.

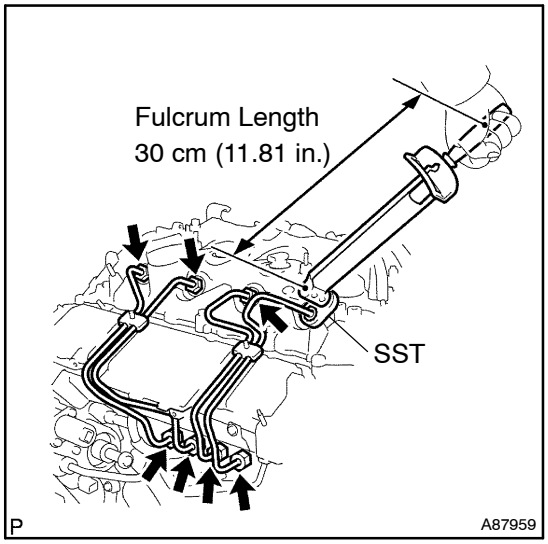

(d) Using SST, tighten the nut of the injection pipe on the common rail side.
SST 09023–12700
Torque:
31 N·m (316 kgf·cm, 23 ft·lbf) with SST
34 N·m (347 kgf·cm, 25 ft·lbf) without SST

HINT:
- Use a torque wrench with the fulcrum length of 30 cm (11.81 in.).
- After the injection pipe is reassembled, check that the used pipe has no deflection and is installed properly. If it has deflection or could not be installed properly, replace the used pipe with a new pipe.

(e) Using SST, tighten the nut of the injection pipe on the injector side.
SST 09023–12700
Torque:
For used pipe:
36 N·m (372 kgf·cm, 27 ft·lbf) with SST
40 N·m (408 kgf·cm, 30 ft·lbf) without SST
For new pipe:
31 N·m (316 kgf·cm, 23 ft·lbf) with SST
34 N·m (347 kgf·cm, 25 ft·lbf) without SST

HINT:
- Use a torque wrench with the fulcrum length of 30 cm (11.81 in.).
- After the injection pipe is reassembled, check that the used pipe has no deflection and is installed properly. If it has deflection or could not be installed properly, replace the used pipe with a new pipe.

(f) Install the 2 upper injection pipe clamps.

61. INSTALL INJECTION PIPE SUB–ASSY NO.2
SST 09023–12700

HINT:
Perform the same procedures as the injection pipe No. 1.

62. INSTALL INJECTION PIPE SUB–ASSY NO.3
SST 09023–12700

HINT:
Perform the same procedures as the injection pipe No. 1.

63. INSTALL INJECTION PIPE SUB–ASSY NO.4
SST 09023–12700

HINT:
Perform the same procedures as the injection pipe No. 1.

64. INSTALL FUEL PIPE NO.3 (See page 14–108)
SST 09023–12700

65. INSTALL TIMING BELT (See page 14–138)

66. CHECK VALVE TIMING (See page 14–138)

67. INSTALL TIMING CHAIN COVER PLATE (See page 14–138)

68. INSTALL TRANSVERSE ENGINE ENGINE MOUNTING BRACKET (See page 14–138)

69. INSTALL TIMING BELT GUIDE (See page 14–138)

70. **INSTALL TIMING BELT NO.1 COVER (See page 14–138)**
71. **INSTALL TIMING BELT NO.2 COVER (See page 14–138)**
72. **INSTALL IDLER PULLEY SUB–ASSY (See page 14–138)**
73. **INSTALL CRANKSHAFT PULLEY (See page 14–138)**
    SST 09213–54015 (09213–70020), 09330–00021
74. **INSTALL ENGINE MOUNTING INSULATOR SUB–ASSY RH (See page 14–138)**
75. **INSTALL POWER STEERING IDLE PULLEY BRACKET (See page 14–108)**
76. **ADJUST V (COOLER COMPRESSOR TO CRANKSHAFT PULLEY) BELT NO.1 (See Pub. No. RM1018E on page 14–269)**
77. **INSTALL INJECTOR DRIVER (See page 14–108)**
78. **INSTALL AIR TUBE NO.1 (See page 14–108)**
79. **INSTALL VACUUM RESERVOIR SUB–ASSY (See page 14–108)**
80. **INSTALL BATTERY (See page 14–108)**
81. **INSTALL AIR CLEANER ASSY (See page 14–108)**
82. **INSTALL ENGINE COVER SUB–ASSY NO.1 (See page 14–90)**
83. **INSTALL FRONT WHEEL RH**
    Torque: 103 N·m (1,050 kgf·cm, 76 ft·lbf)
84. **CHECK FOR FUEL LEAKS (See page 11–46)**

CYLINDER HEAD GASKET (1CD–FTV)(From September, 2003)

COMPONENTS

141NL–01

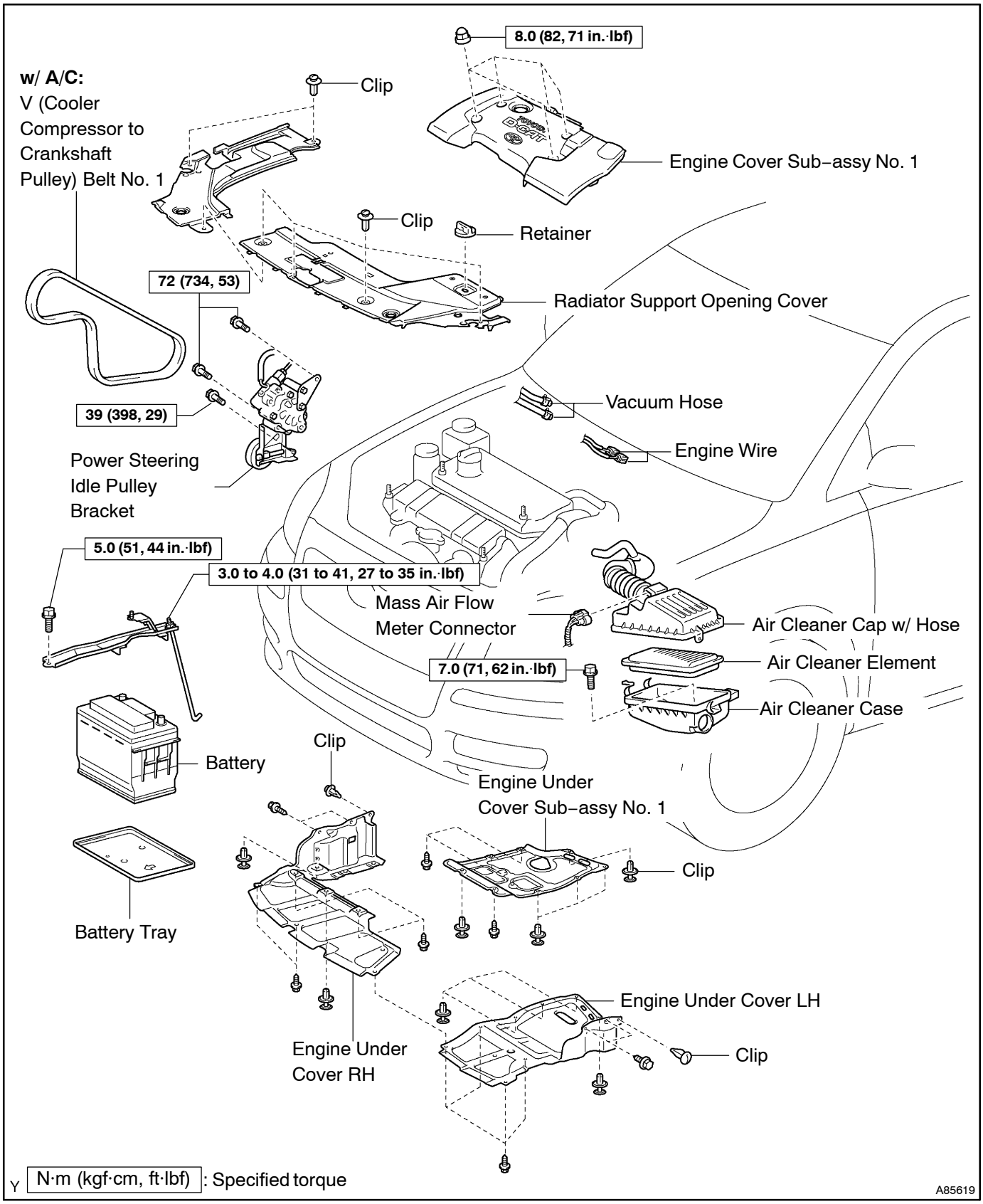

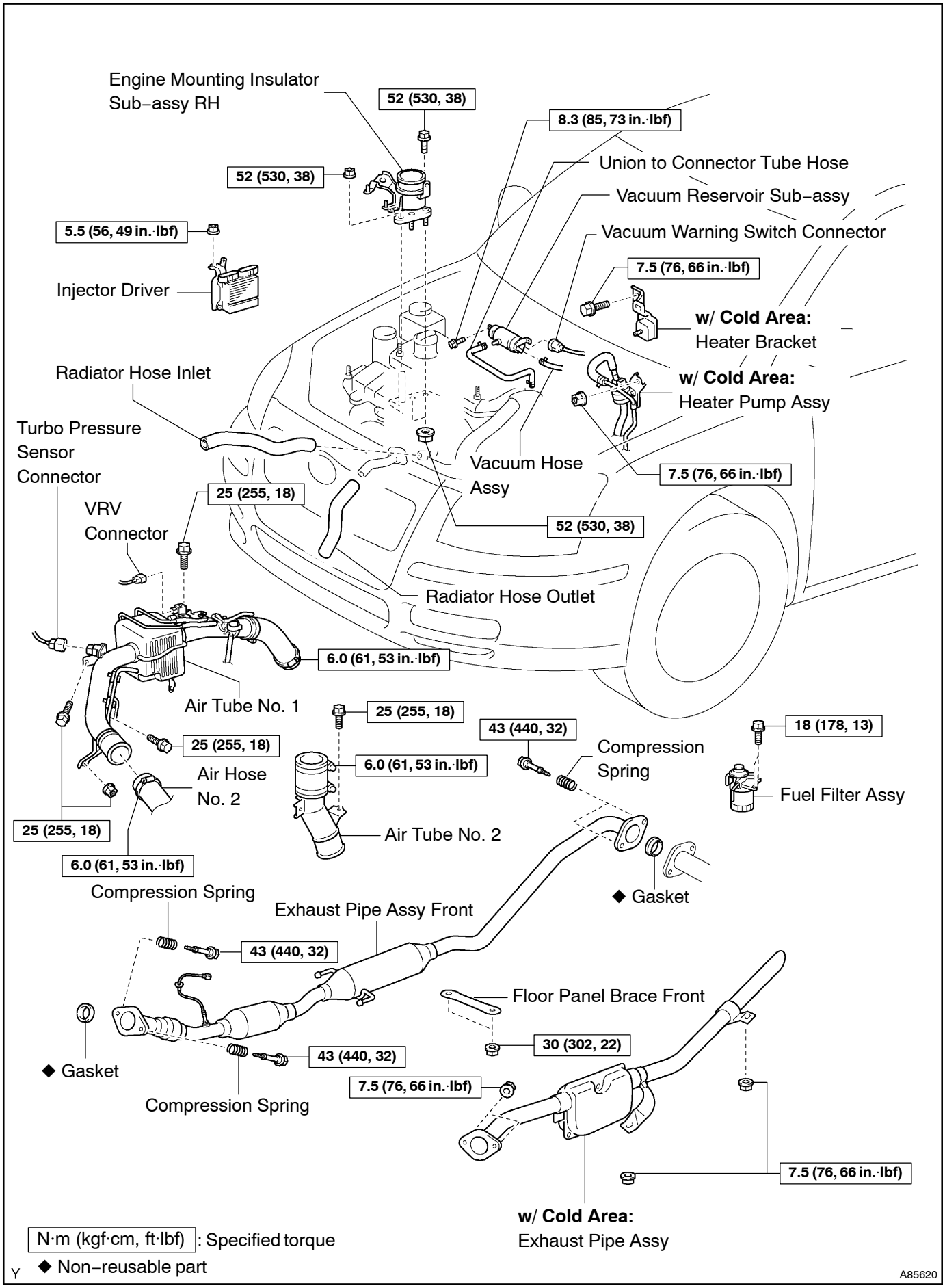
Engine Mounting Insulator Sub–assy RH
52 (530, 38)
8.3 (85, 73 in.·lbf)
Union to Connector Tube Hose
52 (530, 38)
Vacuum Reservoir Sub–assy
5.5 (56, 49 in.·lbf)
Vacuum Warning Switch Connector
Injector Driver
7.5 (76, 66 in.·lbf)
w/ Cold Area:
Heater Bracket
Radiator Hose Inlet
w/ Cold Area:
Heater Pump Assy
Turbo Pressure Sensor Connector
Vacuum Hose Assy
7.5 (76, 66 in.·lbf)
25 (255, 18)
VRV Connector
52 (530, 38)
Radiator Hose Outlet
6.0 (61, 53 in.·lbf)
Air Tube No. 1
25 (255, 18)
43 (440, 32)
18 (178, 13)
25 (255, 18)
6.0 (61, 53 in.·lbf)
Compression Spring
Air Hose No. 2
Fuel Filter Assy
Air Tube No. 2
25 (255, 18)
6.0 (61, 53 in.·lbf)
Compression Spring
◆ Gasket
Exhaust Pipe Assy Front
43 (440, 32)
Floor Panel Brace Front
30 (302, 22)
◆ Gasket
43 (440, 32)
7.5 (76, 66 in.·lbf)
Compression Spring
7.5 (76, 66 in.·lbf)
w/ Cold Area:
Exhaust Pipe Assy
N·m (kgf·cm, ft·lbf) : Specified torque
◆ Non–reusable part
Y
A85620

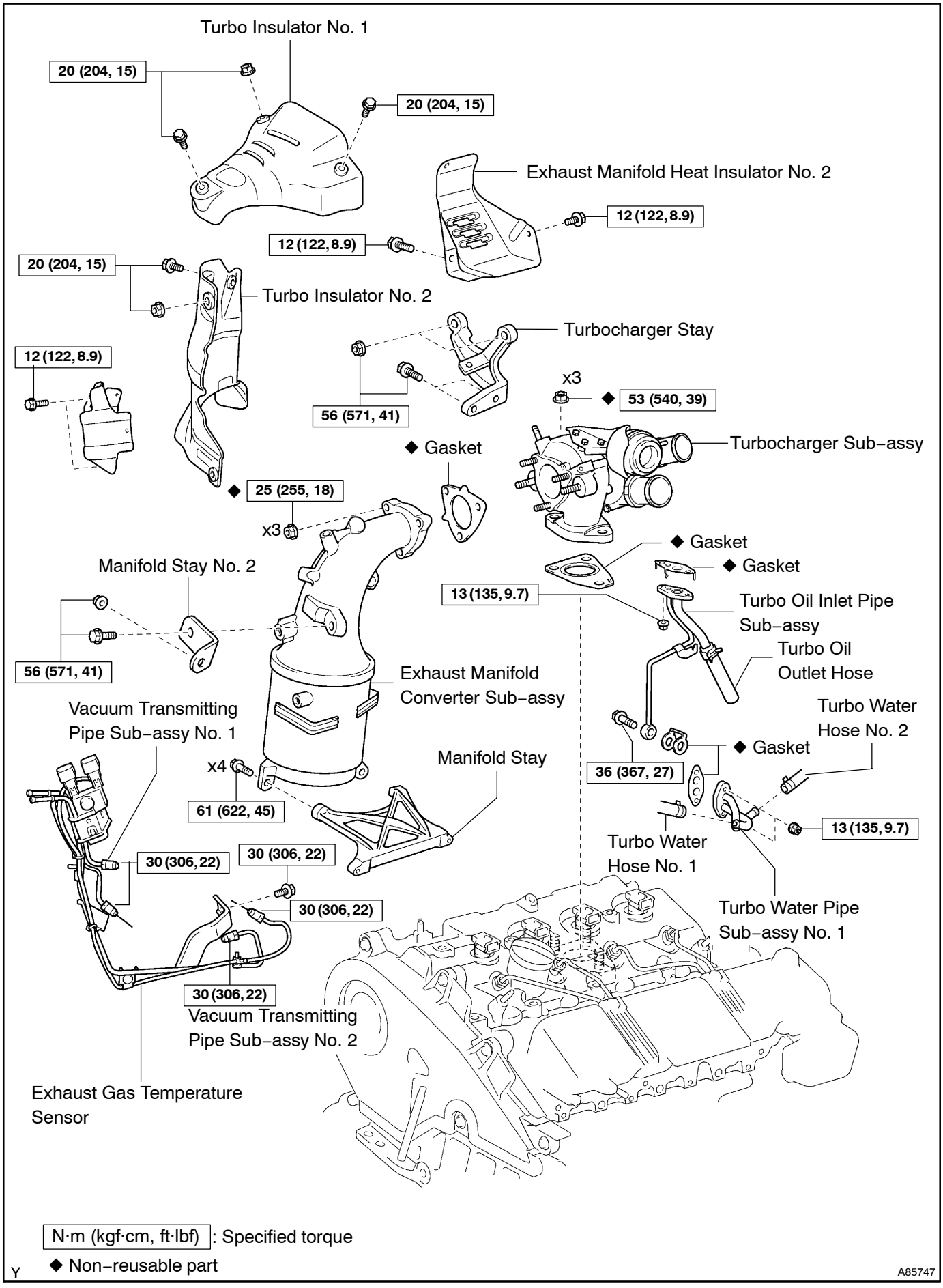
Turbo Insulator No. 1
20 (204, 15)
20 (204, 15)
Exhaust Manifold Heat Insulator No. 2
12 (122, 8.9)
12 (122, 8.9)
20 (204, 15)
Turbo Insulator No. 2
Turbocharger Stay
12 (122, 8.9)
x3
◆ 53 (540, 39)
56 (571, 41)
Turbocharger Sub–assy
◆ Gasket
◆ 25 (255, 18)
x3
◆ Gasket
◆ Gasket
Manifold Stay No. 2
13 (135, 9.7)
Turbo Oil Inlet Pipe Sub–assy
Turbo Oil Outlet Hose
56 (571, 41)
Exhaust Manifold Converter Sub–assy
Vacuum Transmitting Pipe Sub–assy No. 1
Turbo Water Hose No. 2
◆ Gasket
x4
Manifold Stay
36 (367, 27)
61 (622, 45)
13 (135, 9.7)
Turbo Water Hose No. 1
30 (306, 22)
30 (306, 22)
30 (306, 22)
Turbo Water Pipe Sub–assy No. 1
30 (306, 22)
Vacuum Transmitting Pipe Sub–assy No. 2
Exhaust Gas Temperature Sensor
N·m (kgf·cm, ft·lbf) : Specified torque
◆ Non–reusable part
Y
A85747

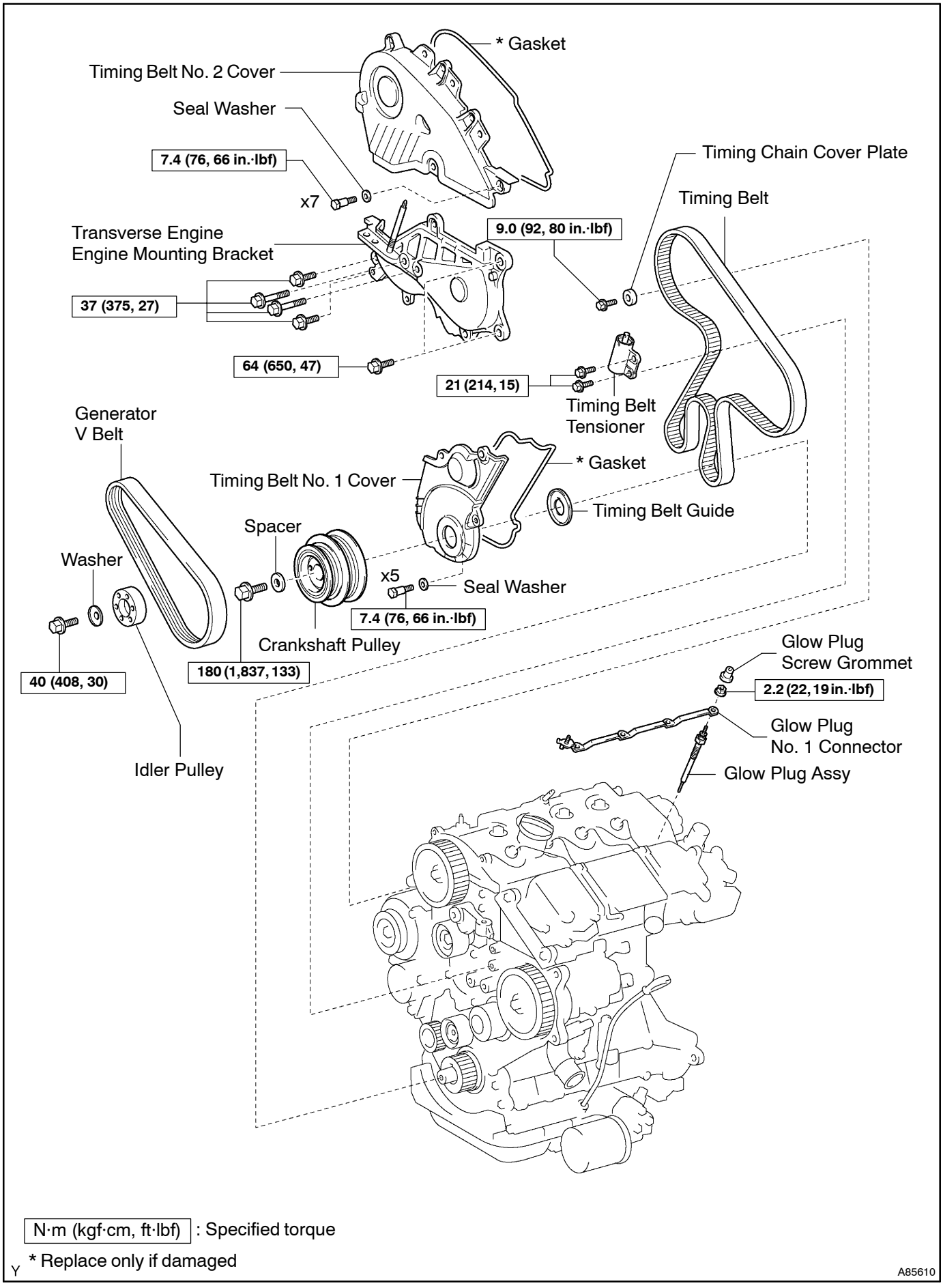

N·m (kgf·cm, ft·lbf) : Specified torque

Y * Replace only if damaged

A85610

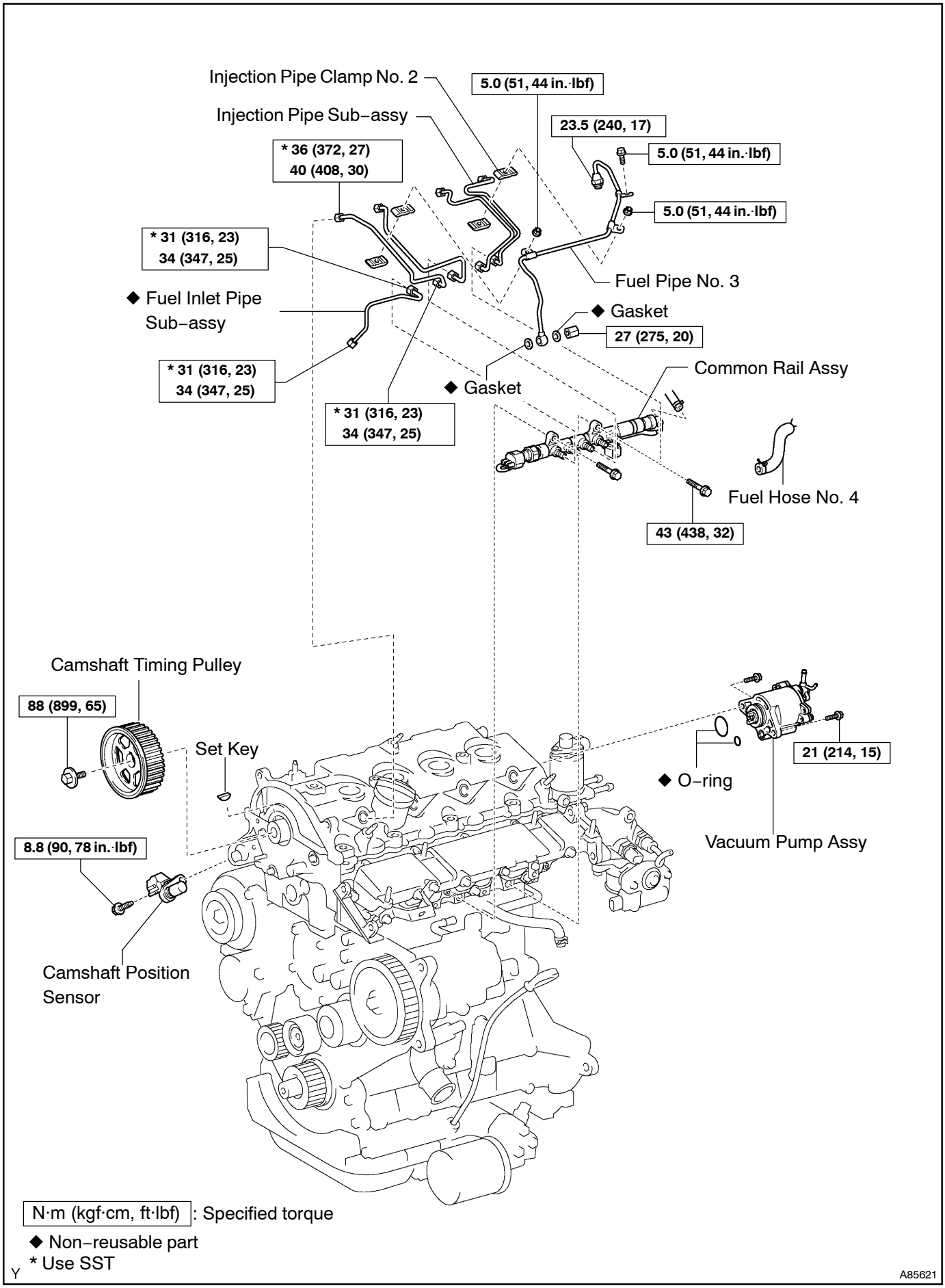
Injection Pipe Clamp No. 2
5.0 (51, 44 in.·lbf)
Injection Pipe Sub–assy
23.5 (240, 17)
* 36 (372, 27)
40 (408, 30)
5.0 (51, 44 in.·lbf)
5.0 (51, 44 in.·lbf)
* 31 (316, 23)
34 (347, 25)
Fuel Pipe No. 3
◆ Fuel Inlet Pipe Sub–assy
◆ Gasket
27 (275, 20)
* 31 (316, 23)
34 (347, 25)
◆ Gasket
Common Rail Assy
* 31 (316, 23)
34 (347, 25)
Fuel Hose No. 4
43 (438, 32)
Camshaft Timing Pulley
88 (899, 65)
Set Key
21 (214, 15)
◆ O–ring
Vacuum Pump Assy
8.8 (90, 78 in.·lbf)
Camshaft Position Sensor
N·m (kgf·cm, ft·lbf): Specified torque
◆ Non–reusable part
* Use SST
Y
A85621

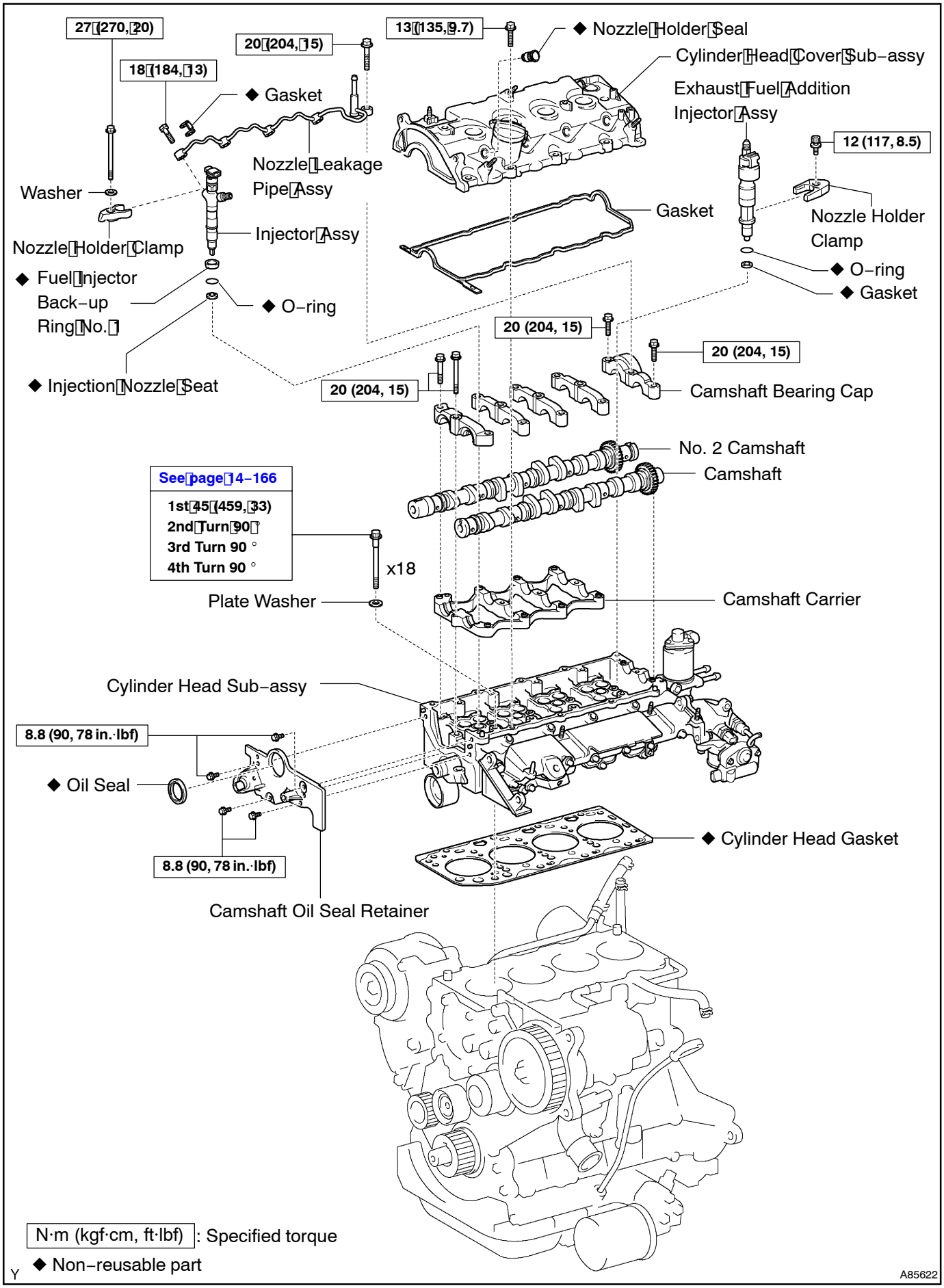
27 (270, 20)
20 (204, 15)
13 (135, 9.7)
◆ Nozzle Holder Seal
Cylinder Head Cover Sub–assy
18 (184, 13)
◆ Gasket
Exhaust Fuel Addition Injector Assy
12 (117, 8.5)
Nozzle Leakage Pipe Assy
Washer
Gasket
Nozzle Holder Clamp
Injector Assy
Nozzle Holder Clamp
◆ O–ring
◆ Fuel Injector Back–up Ring No. 1
◆ O–ring
◆ Gasket
20 (204, 15)
20 (204, 15)
◆ Injection Nozzle Seat
20 (204, 15)
Camshaft Bearing Cap
No. 2 Camshaft
Camshaft
See page 14–166
1st 45 (459, 33)
2nd Turn 90 °
3rd Turn 90 °
4th Turn 90 °
x18
Plate Washer
Camshaft Carrier
Cylinder Head Sub–assy
8.8 (90, 78 in.·lbf)
◆ Oil Seal
◆ Cylinder Head Gasket
8.8 (90, 78 in.·lbf)
Camshaft Oil Seal Retainer
N·m (kgf·cm, ft·lbf) : Specified torque
◆ Non–reusable part
Y
A85622

141NM–01

REPLACEMENT

1. **REMOVE FRONT WHEEL RH**
2. **REMOVE ENGINE UNDER COVER LH**
3. **REMOVE ENGINE UNDER COVER SUB–ASSY NO.1**
4. **REMOVE ENGINE UNDER COVER RH**
5. **REMOVE RADIATOR SUPPORT OPENING COVER**
6. **REMOVE ENGINE ROOM COVER SIDE**
7. **DRAIN ENGINE COOLANT (See page 16–19)**
8. **DRAIN ENGINE OIL (See Pub. No. RM1018E on page 17–30)**
9. **REMOVE ENGINE COVER SUB–ASSY NO.1 (See page 14–90)**
10. **REMOVE VACUUM RESERVOIR SUB–ASSY (See page 14–108)**
11. **REMOVE AIR CLEANER ASSY (See page 14–108)**
12. **REMOVE BATTERY**
13. **REMOVE AIR TUBE NO.2 (See page 14–108)**
14. **REMOVE AIR TUBE NO.1 (See page 14–108)**
15. **REMOVE INJECTOR DRIVER (See page 14–108)**
16. **REMOVE V (COOLER COMPRESSOR TO CRANKSHAFT PULLEY) BELT NO.1 (See Pub. No. RM1018E on page 14–269)**
17. **REMOVE GENERATOR V BELT (See Pub. No. RM1018E on page 14–269)**
18. **SEPARATE POWER STEERING IDLE PULLEY BRACKET (See page 14–138)**
19. **DISCONNECT ENGINE WIRE (See page 14–138)**
20. **DISCONNECT VACUUM HOSE (See page 14–108)**
21. **REMOVE DIFFERENTIAL PRESSURE SENSOR ASSY(See page 14–108)**
22. **REMOVE ENGINE MOUNTING INSULATOR SUB–ASSY RH (See page 14–138)**
23. **REMOVE CRANKSHAFT PULLEY (See page 14–138)**
    SST 09213–54015 (09213–70020), 09330–00021, 09950–50013 (09951–05010, 09952–05010, 09953–05020, 09954–05031)
24. **REMOVE IDLER PULLEY SUB–ASSY (See page 14–138)**
25. **REMOVE TIMING BELT NO.2 COVER (See page 14–138)**
26. **REMOVE TIMING BELT NO.1 COVER (See page 14–138)**
27. **REMOVE TIMING BELT GUIDE**
28. **REMOVE TRANSVERSE ENGINE ENGINE MOUNTING BRACKET (See page 14–138)**
29. **SET NO. 1 CYLINDER TO TDC/COMPRESSION (See page 14–138)**
30. **REMOVE TIMING CHAIN COVER PLATE (See page 14–138)**
31. **REMOVE TIMING BELT (See page 14–138)**

HINT:

If reusing the timing belt, draw an arrow on the timing belt which indicates the engine revolution direction and put match marks on the pulleys and timing belt.

32. **REMOVE FUEL FILTER ASSY (See Pub. No. RM1018E on page 11–82)**
33. **REMOVE HEATER PUMP ASSY (W/ COLD AREA) (See page 13–12)**
34. **REMOVE HEATER BRACKET (W/ COLD AREA) (See page 13–12)**
35. **REMOVE FLOOR PANEL BRACE FRONT (See page 15–6)**
36. **REMOVE EXHAUST PIPE ASSY FRONT (See page 15–6)**
37. **REMOVE EXHAUST PIPE ASSY (W/ COLD AREA) (See page 13–12)**
38. **DISCONNECT RADIATOR HOSE INLET**
39. **DISCONNECT HEATER INLET WATER HOSE**
40. **DISCONNECT HEATER OUTLET WATER HOSE**
41. **DISCONNECT FUEL PIPE TO FUEL TUBE FUEL HOSE**
42. **DISCONNECT OIL COOLER HOSE**

43. REMOVE TURBO INSULATOR NO.2 (See page 13–12)
44. REMOVE TURBO INSULATOR NO.1 (See page 13–12)
45. REMOVE EXHAUST MANIFOLD HEAT INSULATOR NO.2 (See page 13–12)
46. REMOVE EGR PIPE INSULATOR (See page 13–12)
47. REMOVE GENERATOR ASSY (See Pub. No. RM1018E on page 19–29)
48. REMOVE EXHAUST GAS TEMPERATURE SENSOR (See page 14–108)
SST 09023–38400
49. REMOVE VACUUM TRANSMITTING PIPE SUB–ASSY NO.1 (See page 14–108)
SST 09023–38200
50. REMOVE VACUUM TRANSMITTING PIPE SUB–ASSY NO.2 (See page 14–108)
SST 09023–38200
51. REMOVE MANIFOLD STAY NO.2 (See page 13–12)
52. REMOVE MANIFOLD STAY (See page 13–12)
53. REMOVE MANIFOLD CONVERTER SUB–ASSY (See page 13–12)
54. REMOVE TURBOCHARGER STAY (See page 13–12)
55. REMOVE TURBO WATER HOSE NO.1 (See page 13–12)
56. REMOVE TURBO WATER HOSE NO.2 (See page 13–12)
57. SEPARATE TURBO OIL INLET PIPE SUB–ASSY (See page 13–12)
58. REMOVE TURBOCHARGER SUB–ASSY (See page 13–12)
59. REMOVE CAMSHAFT POSITION SENSOR (See page 14–108)
60. REMOVE CAMSHAFT TIMING PULLEY (See page 14–151)
SST 09960–10010 (09962–01000, 09963–01000)

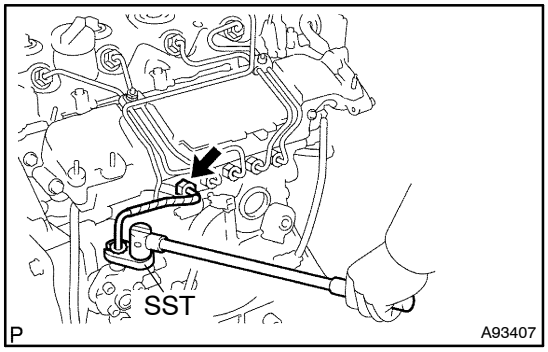

61. REMOVE FUEL INLET PIPE SUB–ASSY
(a) Using SST, remove the fuel inlet pipe from the common rail side.
SST 09023–12700
(b) Using SST, remove the fuel inlet pipe from the pump side.
SST 09023–12700

NOTICE:
After removing the fuel pipe, cover the common rail and injector mounting holes with vinyl tape to prevent dust from being introduced.

62. REMOVE FUEL PIPE NO.3 (See page 14–108)
SST 09023–12700

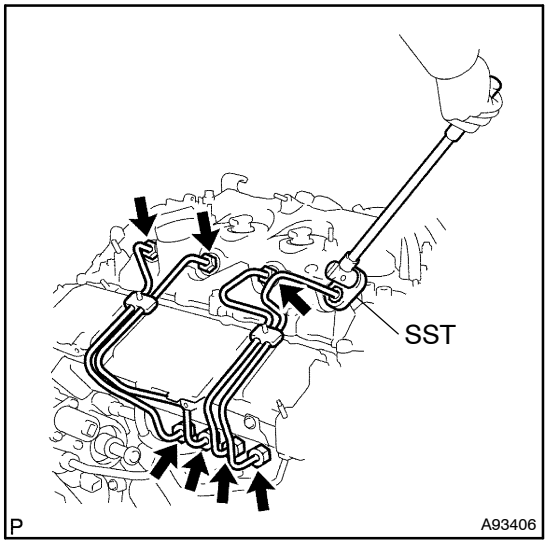

63. REMOVE INJECTION PIPE SUB–ASSY NO.1

(a) Remove the 2 upper injection pipe clamps from the intake manifold.

(b) Using SST, remove the injection pipe from the common rail side.
SST 09023–12700

(c) Using SST, remove the injection pipe from the injector side.
SST 09023–12700

(d) After removing the fuel pipe, in order to prevent dust or foreign objects from being introduced, cover the common rail with vinyl tape and protect the injector inlet with a vinyl or plastic bag.

(e) Remove the 2 lower injection pipe clamps from the intake manifold.

64. REMOVE INJECTION PIPE SUB–ASSY NO.2
SST 09023–12700

HINT:
Perform the same procedures as the injection pipe No. 1.

65. REMOVE INJECTION PIPE SUB–ASSY NO.3
SST 09023–12700

HINT:
Perform the same procedures as the injection pipe No. 1.

66. REMOVE INJECTION PIPE SUB–ASSY NO.4
SST 09023–12700

HINT:
Perform the same procedures as the injection pipe No. 1.

67. REMOVE VACUUM PUMP ASSY (See page 14–108)

68. REMOVE NOZZLE LEAKAGE PIPE NO.2 (See page 14–108)

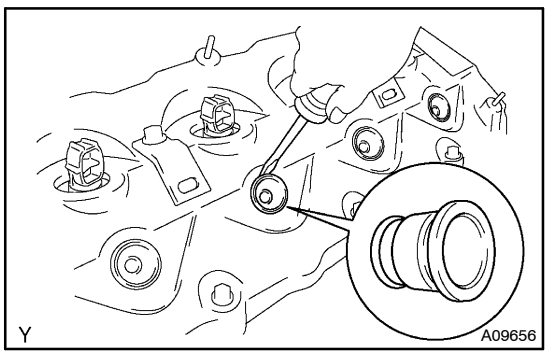

69. REMOVE NOZZLE HOLDER SEAL

(a) Using a screwdriver, pry out the 4 nozzle holder seals.

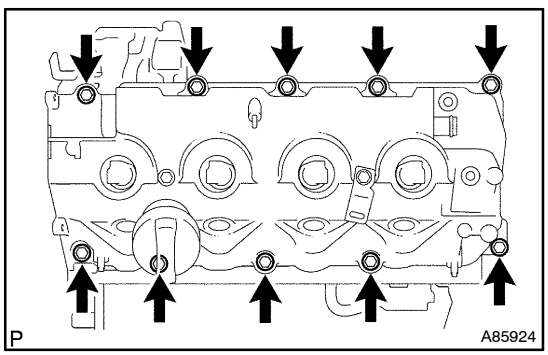

70. REMOVE CYLINDER HEAD COVER SUB–ASSY

(a) Remove the 10 bolts, cylinder head cover and gasket.

71. REMOVE NOZZLE LEAKAGE PIPE ASSY (See page 14–151)

72. REMOVE INJECTOR ASSY (See page 11–46)

HINT:

Since each injector assembly has characteristic fuel injecting behavior, keep them in the correct order so that they can be returned to the original locations when reassembling.

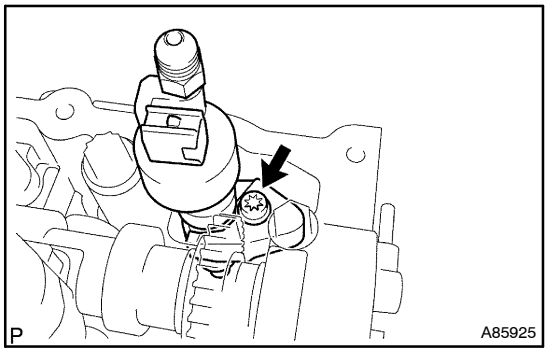

73. REMOVE EXHAUST FUEL ADDITION INJECTOR ASSY

(a) Using a Torx socket wrench (T40), remove the Torx screw.

NOTICE:

Be careful that the tools do not interfere with the resin part when removing.

(b) Remove the nozzle holder clamp, addition injector and gasket.

74. REMOVE CAMSHAFT OIL SEAL RETAINER (See page 14–151)

75. REMOVE CAMSHAFT (See page 14–151)

76. REMOVE NO.2 CAMSHAFT (See page 14–151)

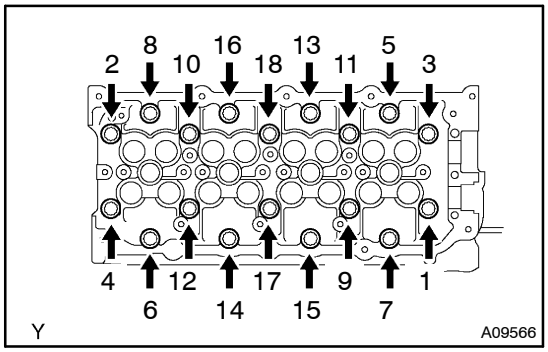

77. REMOVE CYLINDER HEAD SUB–ASSY

(a) Using several steps, loosen the 18 cylinder head bolts uniformly in the sequence shown in the illustration. Remove the 18 cylinder head bolts and plate washers.

NOTICE:

Removing the bolts in a wrong order could cause warpage or cracks of the cylinder head.

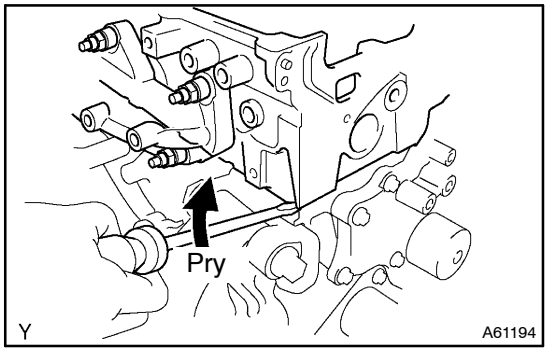

(b) Lift the cylinder head from the dowels on the cylinder block, then place the cylinder head on wooden blocks on a work bench.

NOTICE:

Be careful not to damage the contact surfaces of the cylinder head and cylinder block.

HINT:

To lift the cylinder head, pry between the cylinder head and cylinder block using a screwdriver.

78. REMOVE CYLINDER HEAD GASKET

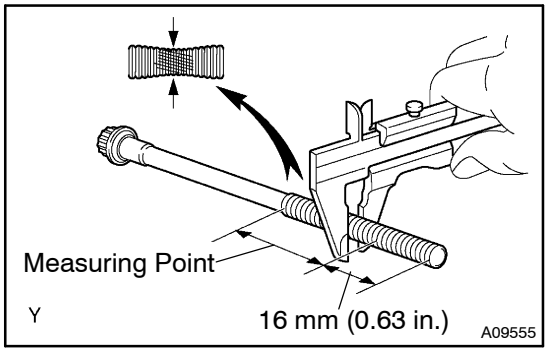

79. INSPECT CYLINDER HEAD SET BOLT

(a) Using vernier calipers, measure the tension portion diameter of the bolts.

Standard outside diameter:
10.40 to 11.00 mm (0.4094 to 0.4331 in.)

If the diameter is less than minimum, replace the bolt.

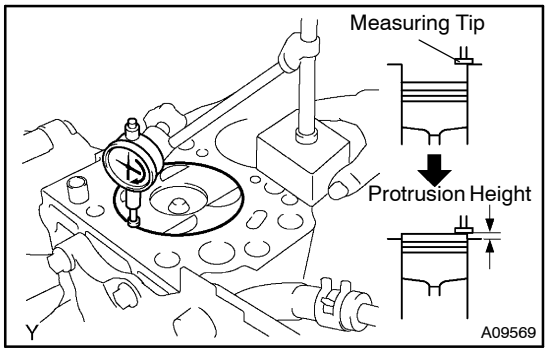

80. INSTALL CYLINDER HEAD GASKET

(a) Measure the protrusion height of the piston heads.
  (1) Clean the cylinder block with solvent.
  (2) Set the piston to measure to slightly before the TDC.
  (3) Place a dial indicator on the cylinder block, then calibrate the dial indicator at 0 mm (0 in.).

HINT:

- Place the measuring tip of the dial indicator as shown in the illustration.
- Make sure that the measuring tip is square to the cylinder block gasket and piston head when measuring.

  (4) Find the most overhung position of the piston head by slowly turning the crankshaft clockwise and counterclockwise.
  (5) Measure the protrusion height of the piston head for each cylinder at 2 places as shown in the illustration. (Total of 8 measurements.)
  (6) Record the higher protrusion height of the 2 measurements at each cylinder.

(b) Select a new cylinder head gasket.

HINT:

There are 5 sizes of new cylinder head gaskets, marked ”A”, ”B”, ”C”, ”D”, and ”E”.

New cylinder head gasket thickness:

A	0.85 to 0.95 mm (0.0335 to 0.0374 in.)
B	0.90 to 1.00 mm (0.0354 to 0.0394 in.)
C	0.95 to 1.05 mm (0.0374 to 0.0413 in.)
D	1.00 to 1.10 mm (0.0394 to 0.0433 in.)
E	1.05 to 1.15 mm (0.0413 to 0.0453 in.)

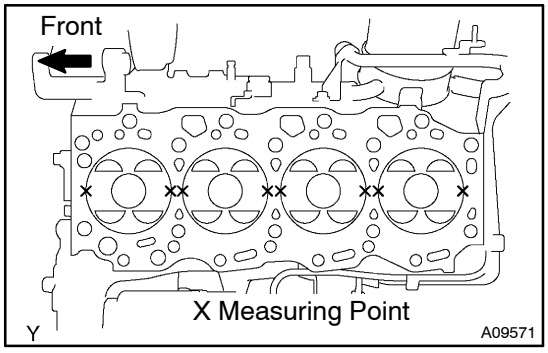

  (1) Find the highest protrusion height among the 4 measurement records. It is used to select a new cylinder head gasket.

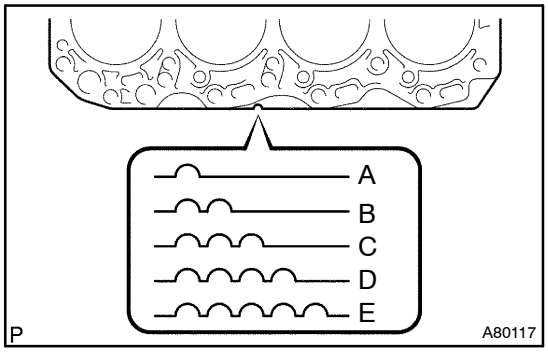

(2) Select a new gasket among A to E using the matrix below.

New gasket matrix:

Piston Protrusion mm (in.)	Gasket Size
0.165 to 0.220 (0.0065 to 0.0087)	A
0.220 to 0.270 (0.0087 to 0.0106)	B
0.270 to 0.320 (0.0106 to 0.0126)	C
0.320 to 0.370 (0.0126 to 0.0146)	D
0.370 to 0.425 (0.0146 to 0.0167)	E

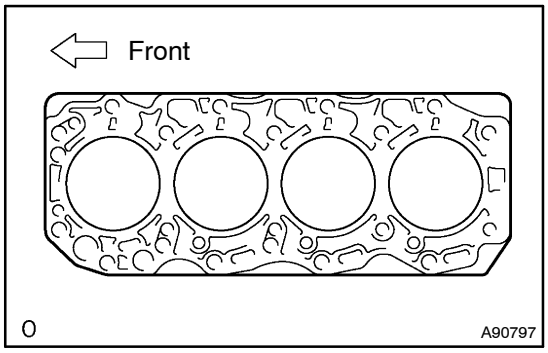

(c) Place the selected new cylinder head gasket on the cylinder block.

NOTICE:

Pay attention to the mounting orientation.

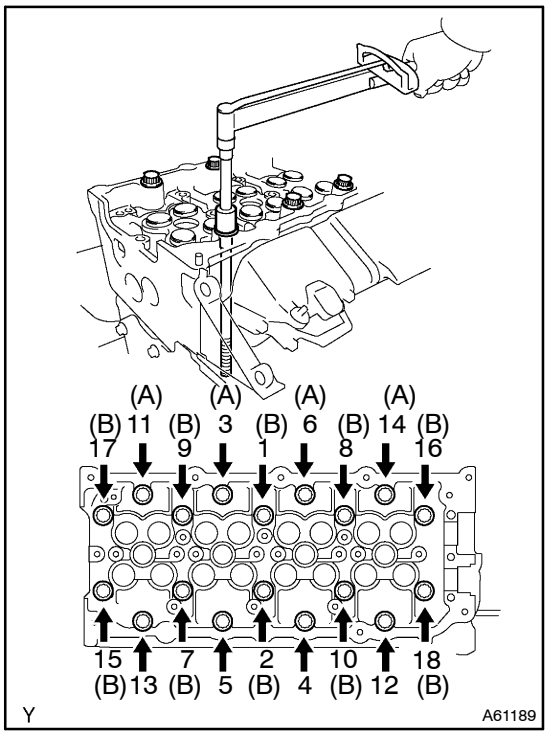

81. INSTALL CYLINDER HEAD SUB–ASSY

HINT:

- The cylinder head bolts are tightened in 4 successive steps (steps (c), (e), (f) and (g)).
- If the cylinder head bolt is broken or deformed, replace it with a new bolt.

(a) Apply a light coat of engine oil to the threads of the cylinder head bolts and plate washers.

(b) Install the plate washer to the cylinder head bolt.

(c) Using several steps, install and tighten the 18 cylinder head bolts uniformly in the sequence shown in the illustration.

Torque: 45 N·m (459 kgf·cm, 33 ft·lbf)

HINT:

See the table below for the bolt length.

Bolt Type	Bolt Length
(A)	160mm (6.30 in.)
(B)	104mm (4.09 in.)

If the cylinder head bolt does not meet the specified torque, replace the cylinder head bolt with a new bolt.

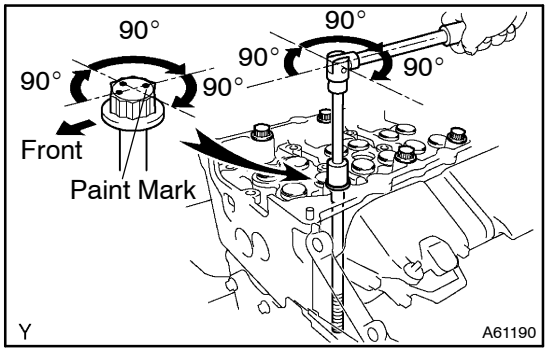

(d) Mark the front of the cylinder head bolt with paint.
(e) Retighten the cylinder head bolts by 90° in the same sequence as step (c).
(f) Retighten the cylinder head bolts by an additional 90° in the same sequence as step (c).
(g) Retighten the cylinder head bolts by one more additional 90° in the same sequence as step (c).
(h) Check that each painted mark is now at the intake manifold side.

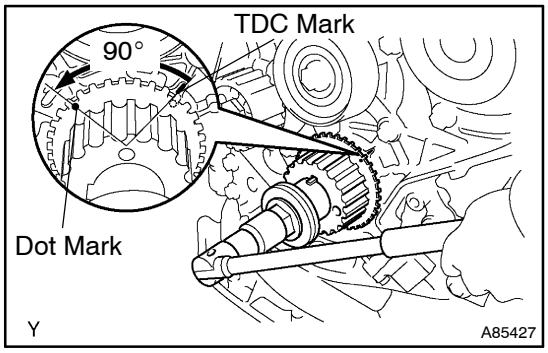

82. SET NO. 1 CYLINDER TO TDC/COMPRESSION

(a) Using the crankshaft pulley bolt, turn the crankshaft to set the dot mark of the crankshaft timing gear at the position of 90° BTDC.

NOTICE:

If the timing belt is disengaged, the crankshaft timing gear placed at wrong angle can cause contact of the piston head with the valve head.

83. INSTALL CAMSHAFT (See page 14–151)
84. INSTALL NO.2 CAMSHAFT (See page 14–151)
85. REMOVE CAMSHAFT OIL SEAL (See page 14–151)
86. INSTALL CAMSHAFT OIL SEAL (See page 14–151)
SST 09223–46011
87. INSTALL CAMSHAFT OIL SEAL RETAINER (See page 14–151)

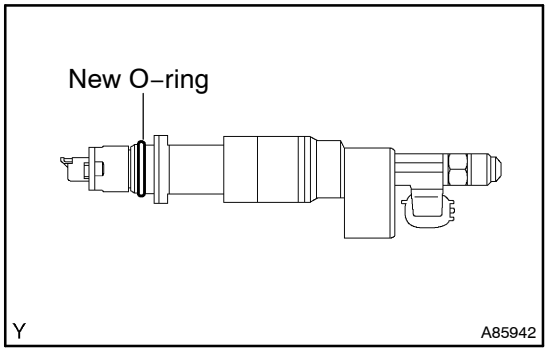

88. INSTALL EXHAUST FUEL ADDITION INJECTOR ASSY

(a) Install a new gasket to the cylinder head.
(b) Install a new O–ring to the injector.
(c) Apply a light coat of engine oil to the O–ring on the injector.
(d) Install the addition injector and nozzle holder clamp.
(e) Using a Torx socket wrench (T40), install the Torx screw.
Torque: 12 N·m (117 kgf·cm, 8.5 ft·lbf)

NOTICE:

Be careful that the tools do not interfere with the resin part when installing.

89. INSTALL CAMSHAFT TIMING PULLEY (See page 14–151)
SST 09960–10010 (09962–01000, 09963–01000)
90. INSTALL CAMSHAFT POSITION SENSOR (See page 14–108)
91. INSTALL INJECTOR ASSY (See page 11–46)
92. INSTALL NOZZLE LEAKAGE PIPE ASSY (See page 14–151)
SST 09992–00242

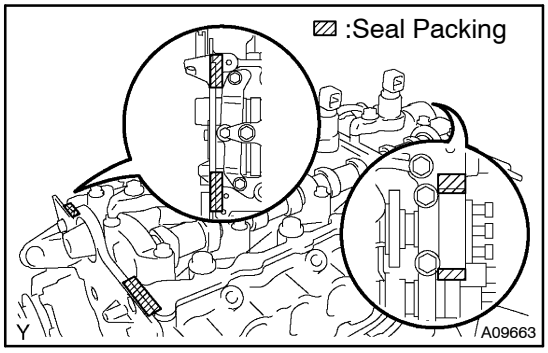

93. INSTALL CYLINDER HEAD COVER SUB–ASSY

(a) Remove any old packing (FIPG) material.

(b) Apply seal packing to the cylinder head as illustrated.
Seal packing: Part No. 08826–00080 or equivalent

(c) Install the gasket to the head cover.

(d) Install the cylinder head cover with the 10 bolts.
Torque: 13 N·m (135 kgf·cm, 9.7 ft·lbf)

94. INSTALL NOZZLE HOLDER SEAL

(a) Install 4 new nozzle holder seals.

95. INSTALL NOZZLE LEAKAGE PIPE NO.2 (See page 14–108)

96. INSTALL VACUUM PUMP ASSY (See page 14–108)

97. INSTALL INJECTION PIPE SUB–ASSY NO.1

NOTICE:

When assembling the pipes, perform the operation with the engine cold at room temperature.

(a) Remove the vinyl or plastic bag from the injector and the vinyl tape from the common rail.

(b) Install the 2 lower injection pipe clamps to the intake manifold.

(c) Temporarily install the injection pipe.

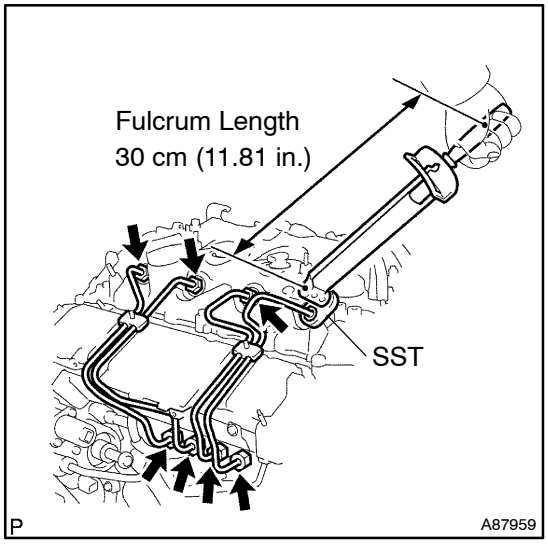

(d) Using SST, tighten the nut of the injection pipe on the common rail side.
SST 09023–12700
Torque:
31 N·m (316 kgf·cm, 23 ft·lbf) with SST
34 N·m (347 kgf·cm, 25 ft·lbf) without SST

HINT:

- Use a torque wrench with the fulcrum length of 30 cm (11.81 in.).
- After the injection pipe is reassembled, check that the used pipe has no deflection and is installed properly. If it has deflection or could not be installed properly, replace the used pipe with a new pipe.

(e) Using SST, tighten the nut of the injection pipe on the injector side.
SST 09023–12700
Torque:
For used pipe:
36 N·m (372 kgf·cm, 27 ft·lbf) with SST
40 N·m (408 kgf·cm, 30 ft·lbf) without SST
For new pipe:
31 N·m (316 kgf·cm, 23 ft·lbf) with SST
34 N·m (347 kgf·cm, 25 ft·lbf) without SST

HINT:
- Use a torque wrench with the fulcrum length of 30 cm (11.81 in.).
- After the injection pipe is reassembled, check that the used pipe has no deflection and is installed properly. If it has deflection or could not be installed properly, replace the used pipe with a new pipe.

(f) Install the 2 upper injection pipe clamps.

98. INSTALL INJECTION PIPE SUB–ASSY NO.2
SST 09023–12700

HINT:
Perform the same procedures as the injection pipe No. 1.

99. INSTALL INJECTION PIPE SUB–ASSY NO.3
SST 09023–12700

HINT:
Perform the same procedures as the injection pipe No. 1.

100. INSTALL INJECTION PIPE SUB–ASSY NO.4
SST 09023–12700

HINT:
Perform the same procedures as the injection pipe No. 1.

101. INSTALL FUEL PIPE NO.3 (See page 14–108)
SST 09023–12700

102. INSTALL FUEL INLET PIPE SUB–ASSY

NOTICE:
- **In case of replacing the cylinder head gasket, the fuel inlet pipe must be replaced, too.**
- **When assembling the pipe, perform the operation with the engine cold at room temperature.**

(a) Temporarily install a new fuel inlet pipe.

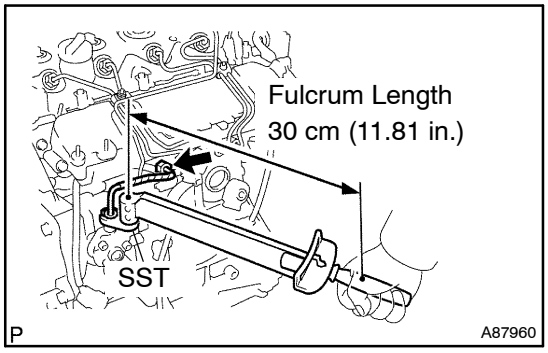

(b) Using SST, tighten the nut of the fuel inlet pipe on the common rail side.
SST 09023–12700
Torque:
31 N·m (316 kgf·cm, 23 ft·lbf) with SST
34 N·m (347 kgf·cm, 25 ft·lbf) without SST

HINT:

- Use a torque wrench with the fulcrum length of 30 cm (11.81 in.).
- After the inlet pipe is reassembled, check that the used pipe has no deflection and is installed properly. If it has deflection or could not be installed properly, replace the used pipe with a new pipe.

(c) Using SST, tighten the nut of the fuel inlet pipe on the pump side.
SST 09023–12700
Torque:
31 N·m (316 kgf·cm, 23 ft·lbf) with SST
34 N·m (347 kgf·cm, 25 ft·lbf) without SST

HINT:

- Use a torque wrench with the fulcrum length of 30 cm (11.81 in.).
- After the inlet pipe is reassembled, check that the used pipe has no deflection and is installed properly. If it has deflection or could not be installed properly, replace the used pipe with a new pipe.

103. INSTALL TURBOCHARGER SUB–ASSY (See page 13–12)
104. INSTALL TURBO OIL INLET PIPE SUB–ASSY (See page 13–12)
105. INSTALL TURBOCHARGER STAY (See page 13–12)
106. INSTALL MANIFOLD CONVERTER SUB–ASSY (See page 13–12)
107. INSTALL MANIFOLD STAY NO.2 (See page 13–12)
108. INSTALL VACUUM TRANSMITTING PIPE SUB–ASSY NO.2 (See page 14–108)
SST 09023–38200
109. INSTALL VACUUM TRANSMITTING PIPE SUB–ASSY NO.1 (See page 14–108)
SST 09023–38200
110. INSTALL EXHAUST GAS TEMPERATURE SENSOR (See page 14–108)
SST 09023–38400
111. INSTALL GENERATOR ASSY (See Pub. No. RM1018E on page 19–29)
112. INSTALL EGR PIPE INSULATOR (See page 13–12)
113. INSTALL EXHAUST MANIFOLD HEAT INSULATOR NO.2 (See page 13–12)
114. INSTALL TURBO INSULATOR NO.1 (See page 13–12)
115. INSTALL TURBO INSULATOR NO.2 (See page 13–12)
116. INSTALL EXHAUST PIPE ASSY (W/ COLD AREA) (See page 13–12)
117. INSTALL EXHAUST PIPE ASSY FRONT (See page 15–6)
118. INSTALL FLOOR PANEL BRACE FRONT (See page 15–6)
119. INSTALL HEATER BRACKET (W/ COLD AREA) (See page 13–12)
120. INSTALL HEATER PUMP ASSY (W/ COLD AREA) (See page 13–12)
121. INSTALL FUEL FILTER ASSY (See Pub. No. RM1018E on page 11–82)

122. **SET NO. 1 CYLINDER TO TDC/COMPRESSION (See page 14–138)**
SST 09960–10010 (09962–01000, 09963–01000)
123. **INSTALL TIMING BELT (See page 14–138)**
124. **CHECK VALVE TIMING (See page 14–138)**
125. **INSTALL TIMING CHAIN COVER PLATE (See page 14–138)**
126. **INSTALL TRANSVERSE ENGINE ENGINE MOUNTING BRACKET (See page 14–138)**
127. **INSTALL TIMING BELT GUIDE (See page 14–138)**
128. **INSTALL TIMING BELT NO.1 COVER (See page 14–138)**
129. **INSTALL TIMING BELT NO.2 COVER (See page 14–138)**
130. **INSTALL IDLER PULLEY SUB–ASSY (See page 14–138)**
131. **INSTALL CRANKSHAFT PULLEY (See page 14–138)**
SST 09213–54015 (09213–70020), 09330–00021
132. **INSTALL ENGINE MOUNTING INSULATOR SUB–ASSY RH (See page 14–138)**
133. **INSTALL POWER STEERING IDLE PULLEY BRACKET (See page 14–108)**
134. **ADJUST V (COOLER COMPRESSOR TO CRANKSHAFT PULLEY) BELT NO.1 (See Pub. No. RM1018E on page 14–269)**
135. **INSTALL INJECTOR DRIVER (See page 14–108)**
136. **INSTALL AIR TUBE NO.1 (See page 14–108)**
137. **INSTALL AIR TUBE NO.2 (See page 14–108)**
138. **INSTALL DIFFERENTIAL PRESSURE SENSOR ASSY (See page 14–108)**
139. **INSTALL BATTERY (See page 14–108)**
140. **INSTALL AIR CLEANER ASSY (See page 14–108)**
141. **INSTALL VACUUM RESERVOIR SUB–ASSY (See page 14–108)**
142. **INSTALL ENGINE COVER SUB–ASSY NO.1 (See page 14–90)**
143. **INSTALL FRONT WHEEL RH**
Torque: 103 N·m (1,050 kgf·cm, 76 ft·lbf)
144. **ADD ENGINE OIL (See Pub. No. RM1018E on page 17–30)**
145. **ADD ENGINE COOLANT (See page 16–19)**
146. **CHECK FOR FUEL LEAKS (See page 11–46)**
147. **CHECK FOR ENGINE OIL LEAKS**
148. **CHECK FOR ENGINE COOLANT LEAKS (See page 16–15)**
149. **CHECK FOR EXHAUST GAS LEAKS**

CRANKSHAFT SEAL (1CD–FTV)(From September, 2003)

141NN–01

REPLACEMENT

1. **DRAIN ENGINE OIL**

(a) Install a new gasket and the drain plug after draining engine oil.
Torque: 34 N·m (350 kgf·cm, 25 ft·lbf)

2. **REMOVE FRONT WHEEL RH**
3. **REMOVE ENGINE UNDER COVER SUB–ASSY NO.1**
4. **REMOVE ENGINE UNDER COVER RH**
5. **REMOVE RADIATOR SUPPORT OPENING COVER**
6. **REMOVE ENGINE ROOM COVER SIDE**
7. **REMOVE ENGINE COVER NO.1 (See page 14–90)**
8. **REMOVE INJECTOR DRIVER (See page 14–108)**
9. **REMOVE V (COOLER COMPRESSOR TO CRANKSHAFT PULLEY) BELT NO.1 (See Pub. No. RM1018E on page 14–269)**
10. **REMOVE GENERATOR V BELT (See Pub. No. RM1018E on page 14–269)**
11. **SEPARATE POWER STEERING IDLE PULLEY BRACKET (See page 14–138)**
12. **DISCONNECT ENGINE WIRE (See page 14–138)**
13. **DISCONNECT VACUUM HOSE (See page 14–108)**

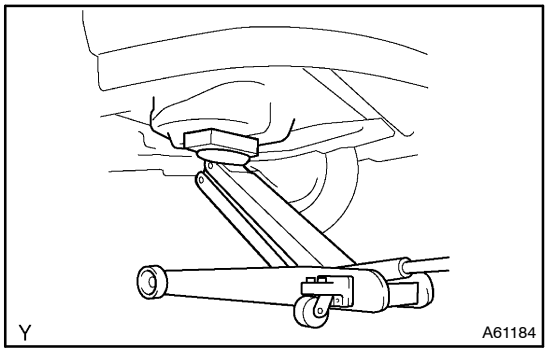

14. **REMOVE ENGINE MOUNTING INSULATOR SUB–ASSY RH**

(a) Place a wooden block on a jack underneath the engine.

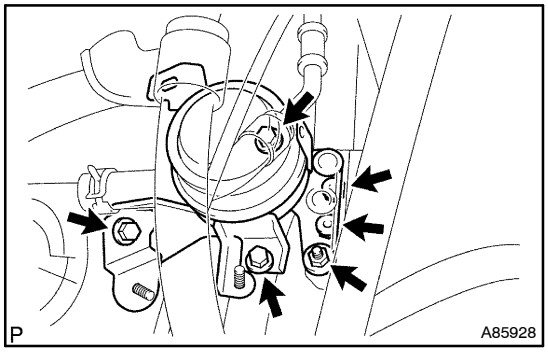

(b) Remove the 3 bolts and 3 nuts, then detach the engine mounting insulator sub–assembly.

15. **REMOVE CRANKSHAFT PULLEY (See page 14–138)**
SST 09213–54015 (09213–70020), 09330–00021, 09950–50013 (09951–05010, 09952–05010, 09953–05020, 09954–05031)
16. **REMOVE IDLER PULLEY SUB–ASSY (See page 14–138)**
17. **REMOVE TIMING BELT NO.2 COVER (See page 14–138)**
18. **REMOVE TIMING BELT NO.1 COVER (See page 14–138)**
19. **REMOVE TIMING BELT GUIDE**
20. **REMOVE TRANSVERSE ENGINE ENGINE MOUNTING BRACKET (See page 14–138)**

21. SET NO. 1 CYLINDER TO TDC/COMPRESSION (See page 14–138)

22. REMOVE TIMING CHAIN COVER PLATE (See page 14–138)

23. REMOVE TIMING BELT (See page 14–138)

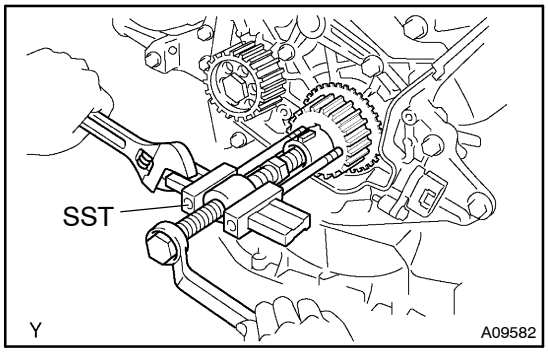

24. REMOVE CRANKSHAFT TIMING PULLEY

(a) If the timing pulley cannot be removed by hand, use SST to remove the pulley.

SST 09950–50013 (09951–05010, 09952–05010, 09953–05010, 09953–05020, 09954–05021)

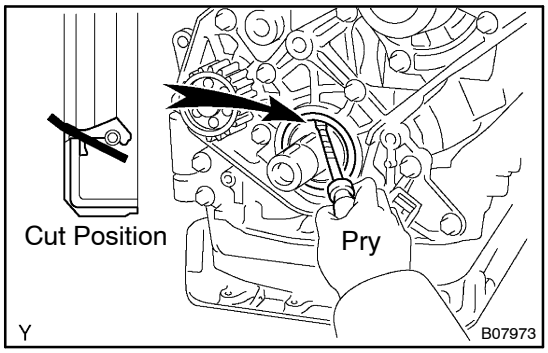

25. REMOVE CRANKSHAFT SEAL

(a) Using a knife, cut off the oil seal lip.

(b) Using a screwdriver, pry out the oil seal.

NOTICE:

Be careful not to damage the crankshaft. Wrap the tip of the screwdriver with tape.

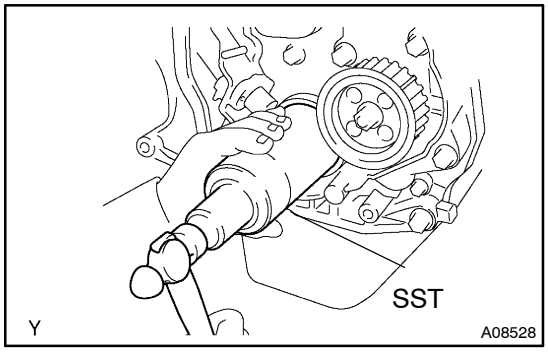

26. INSTALL CRANKSHAFT SEAL

(a) Apply multipurpose grease to a new oil seal lip.

NOTICE:

Keep the lip free of foreign objects.

(b) Using SST and a hammer, tap in the oil seal until its surface is flush with the oil pump edge.

SST 09316–60011 (09316–00011)

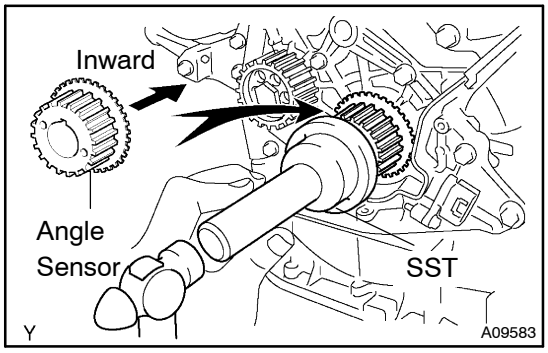

27. INSTALL CRANKSHAFT TIMING PULLEY

(a) Align the keyway of the timing pulley with the key located on the crankshaft, then slide the pulley into place.

(b) Using SST and a hammer, tap in the timing pulley with the angle sensor facing inward.

SST 09223–46011

28. SET NO. 1 CYLINDER TO TDC/COMPRESSION (See page 14–138)

SST 09960–10010 (09962–01000, 09963–01000)

29. INSTALL TIMING BELT (See page 14–138)

30. CHECK VALVE TIMING (See page 14–138)

31. **INSTALL TIMING CHAIN COVER PLATE (See page 14–138)**
32. **INSTALL TRANSVERSE ENGINE ENGINE MOUNTING BRACKET (See page 14–138)**
33. **INSTALL TIMING BELT GUIDE (See page 14–138)**
34. **INSTALL TIMING BELT NO.1 COVER (See page 14–138)**
35. **INSTALL TIMING BELT NO.2 COVER (See page 14–138)**
36. **INSTALL IDLER PULLEY SUB–ASSY (See page 14–138)**
37. **INSTALL CRANKSHAFT PULLEY (See page 14–138)**
    SST 09213–54015 (09213–70020), 09330–00021
38. **INSTALL ENGINE MOUNTING INSULATOR SUB–ASSY RH (See page 14–138)**
39. **INSTALL POWER STEERING IDLE PULLEY BRACKET (See page 14–108)**
40. **ADJUST V (COOLER COMPRESSOR TO CRANKSHAFT PULLEY) BELT NO.1 (See Pub. No. RM1018E on page 14–269)**
41. **INSTALL INJECTOR DRIVER (See page 14–108)**
42. **INSTALL ENGINE COVER NO.1 (See page 14–90)**
43. **INSTALL FRONT WHEEL RH**
    Torque: 103 N·m (1,050 kgf·cm, 76 ft·lbf)
44. **ADD ENGINE OIL**
45. **CHECK FOR ENGINE OIL LEAKS**

ENGINE REAR OIL SEAL (1CD–FTV)(From September, 2003)

141NO–01

REPLACEMENT

1. **REMOVE MANUAL TRANSAXLE ASSY (See Pub. No. RM1018E on page 41–33)**
   SST 09930–00010, 09628–62011, 09520–01010, 09520–24010 (09520–32040)
2. **REMOVE CLUTCH COVER ASSY (See Pub. No. RM1018E on page 42–26)**
3. **REMOVE CLUTCH DISC ASSY (See Pub. No. RM1018E on page 42–26)**

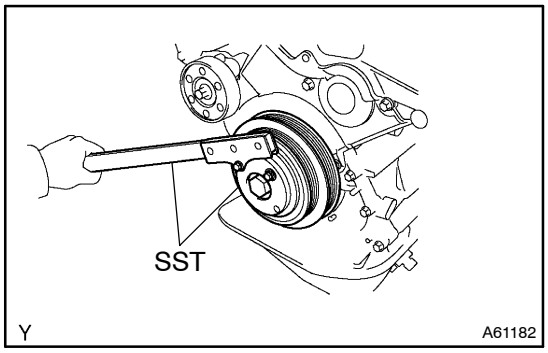

4. **REMOVE FLYWHEEL SUB–ASSY**
(a) Hold the crankshaft with SST.
SST 09213–54015 (09213–70020), 09330–00021
(b) Using a Torx socket wrench (T55), remove the 8 Torx screws and flywheel.

5. **REMOVE REAR END PLATE**
(a) Remove the 2 bolts and rear end plate.

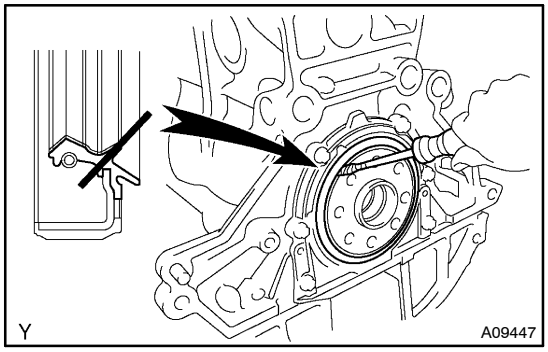

6. **REMOVE ENGINE REAR OIL SEAL**
(a) Using a knife, cut off the oil seal lip.
(b) Using a screwdriver, pry out the oil seal.

NOTICE:

After removing, check that the crankshaft is not damaged. If damaged, smooth the surface with 400–grit sandpaper.

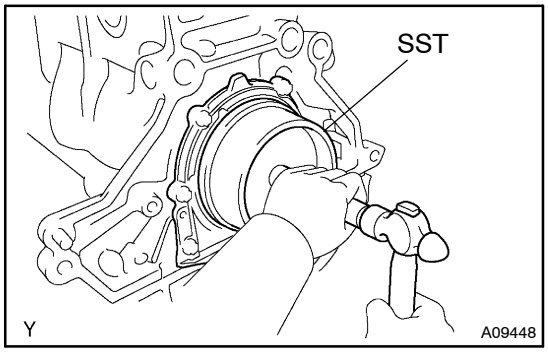

7. **INSTALL ENGINE REAR OIL SEAL**
(a) Apply multipurpose grease to a new oil seal lip.

NOTICE:

Keep the lip free of foreign objects.

(b) Using SST and a hammer, tap in the oil seal until its surface is flush with the rear oil seal retainer edge.
SST 09223–15030, 09950–70010 (09951–07100)

NOTICE:

Wipe off extra grease on the crankshaft.

8. **INSTALL REAR END PLATE**
Torque: 8.4 N·m (86 kgf·cm, 74 in.·lbf)

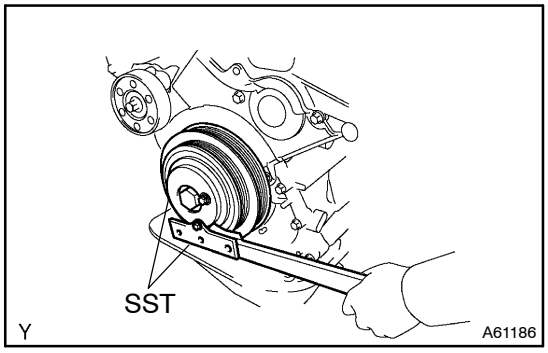

9. INSTALL FLYWHEEL SUB–ASSY

(a) Hold the crankshaft with SST.
SST 09213–54015 (09213–70020), 09330–00021

(b) Clean the bolts and bolt holes.

(c) Apply adhesive to the 2 or 3 threads of the bolt end.
Adhesive: Part No. 08833–00070, THREE BOND 1324 or equivalent

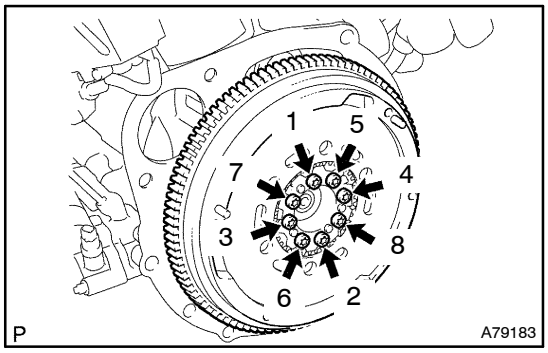

(d) Using a Torx socket wrench (T55), uniformly install and tighten the 8 Torx screws in several steps in the sequence shown in the illustration.
Torque: 71 N·m (720 kgf·cm, 52 ft·lbf)

10. INSTALL CLUTCH DISC ASSY (See Pub. No. RM1018E on page 42–26)
SST 09301–00220

11. INSTALL CLUTCH COVER ASSY (See Pub. No. RM1018E on page 42–26)

12. INSTALL MANUAL TRANSAXLE ASSY (See Pub. No. RM1018E on page 41–33)
SST 09670–00010

EXHAUST PIPE ASSY (2AZ–FSE)

COMPONENTS

150C8–01

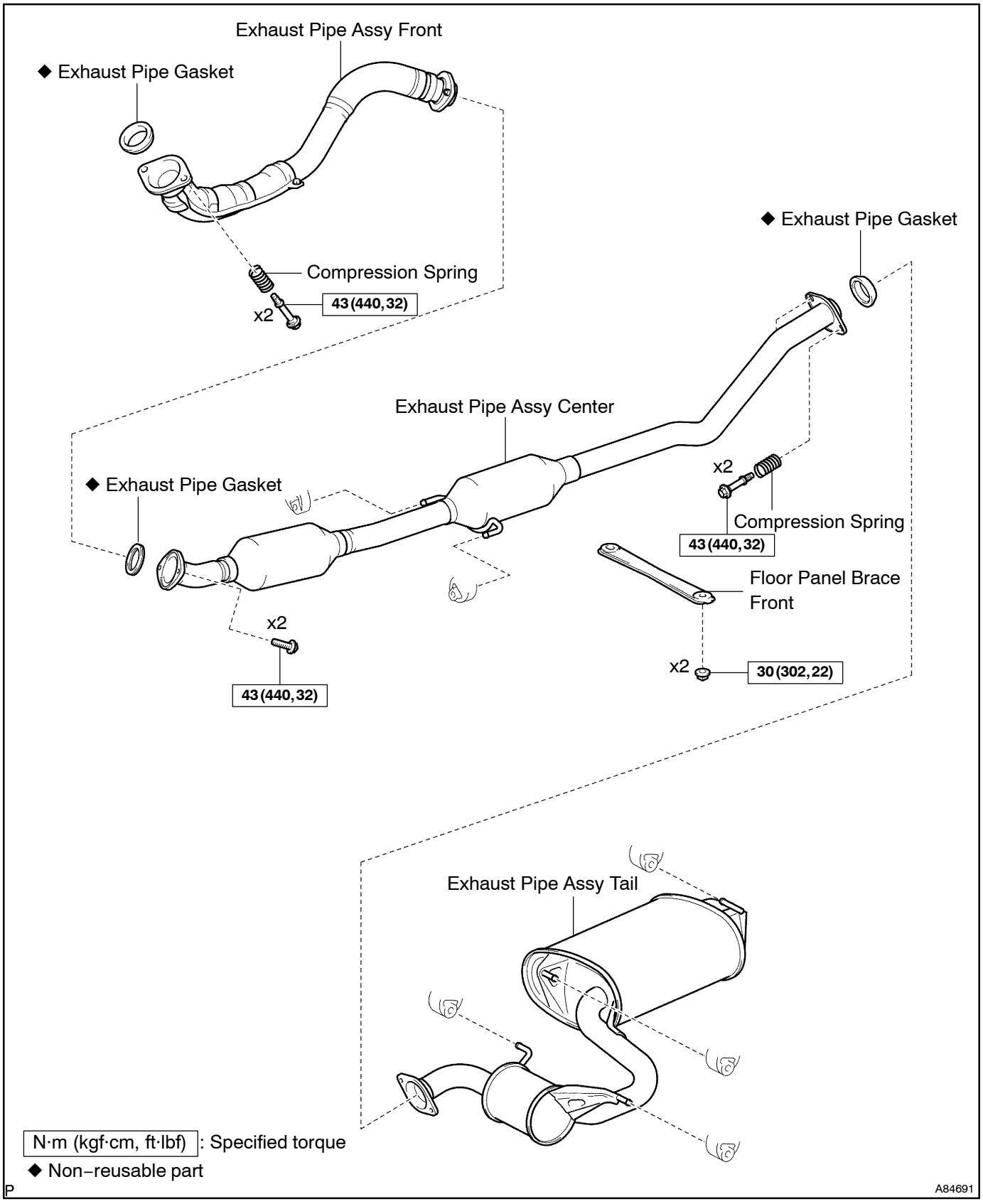

150C9–01

Removal & Installation and Disassembly & Reassembly

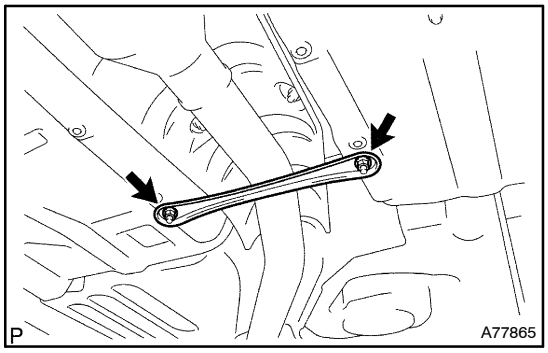

1. REMOVE FLOOR PANEL BRACE FRONT

(a) Remove the 2 nuts, then remove the floor panel brace front.

2. REMOVE EXHAUST PIPE ASSY TAIL

(a) Remove the 2 bolts and 2 compression springs.

(b) Remove the exhaust pipe from the 4 exhaust pipe supports.

(c) Remove the gasket from the exhaust pipe center.

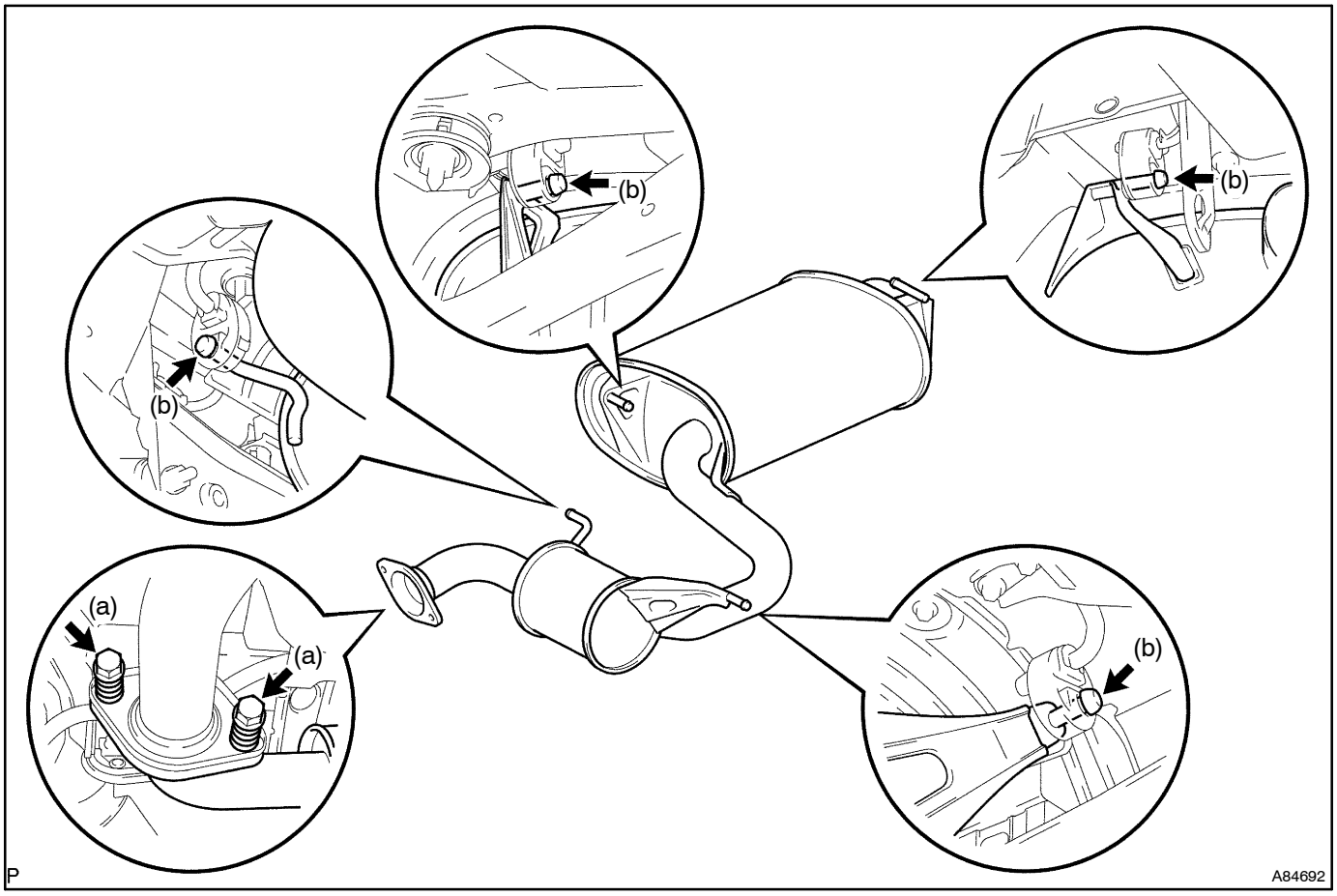

3. REMOVE EXHAUST PIPE ASSY CENTER

(a) Remove the 2 bolts.

(b) Remove the exhaust pipe center and the gasket from the 2 exhaust pipe supports.

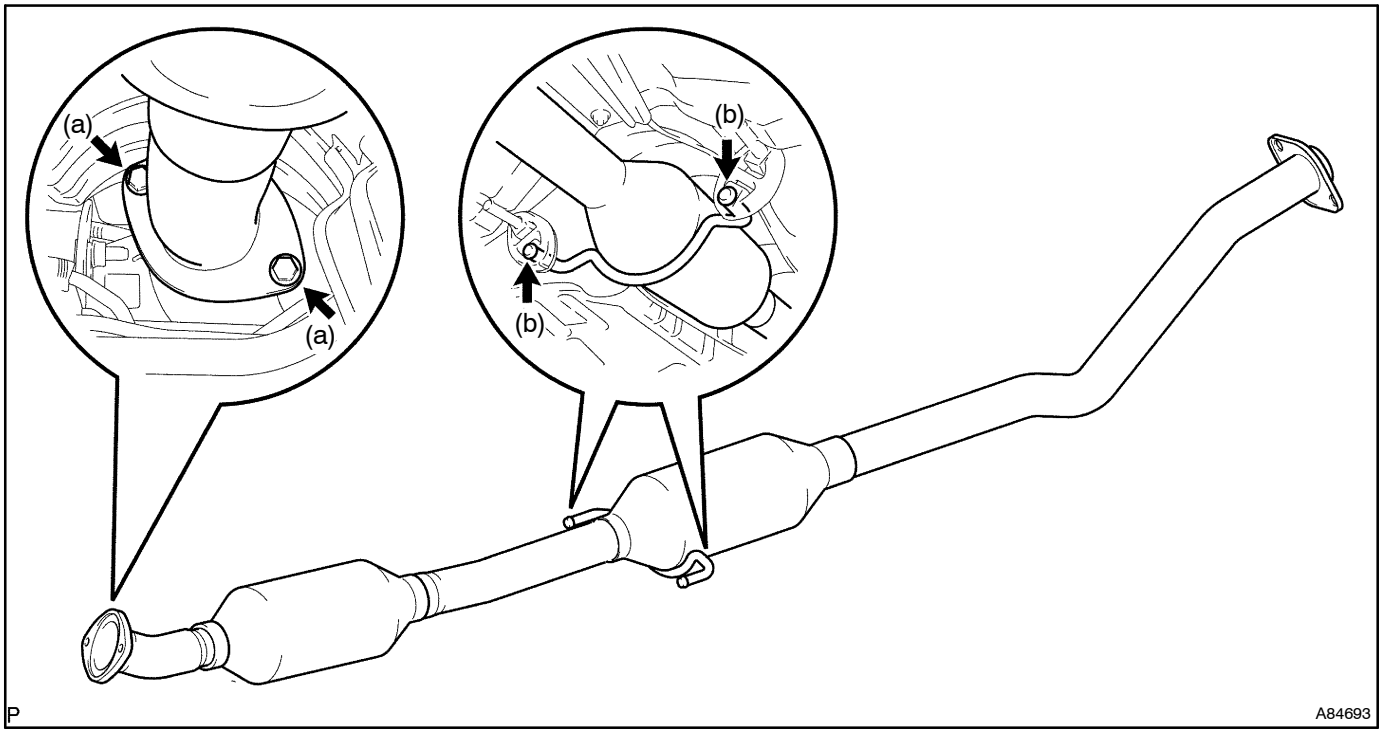

4. REMOVE EXHAUST PIPE ASSY FRONT

(a) Remove the 2 bolts and 2 compression springs, then remove the exhaust pipe front.

(b) Remove the gasket from the exhaust manifold.

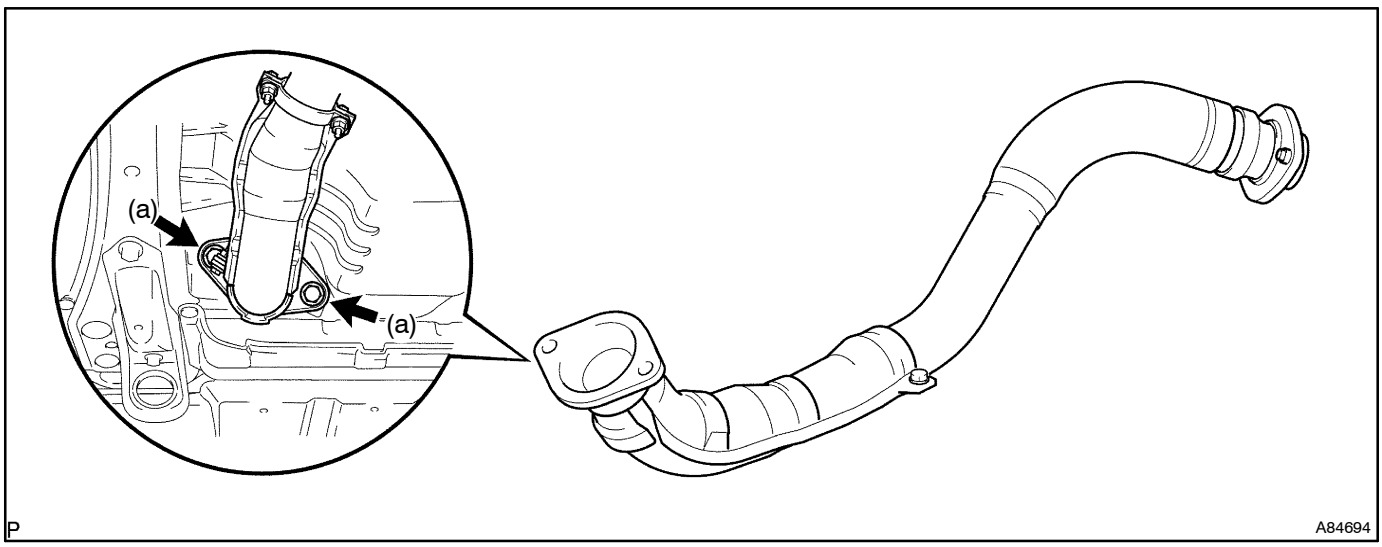

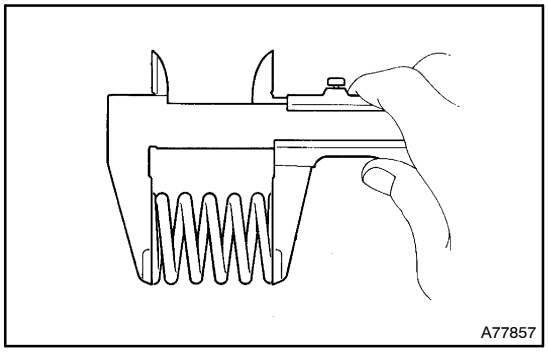

5. INSTALL EXHAUST PIPE ASSY FRONT

(a) Inspect the free length.

(1) Using vernier calipers, measure the free length of the compression spring.

Minimum length: 41.5 mm (1.634 in.)

If the free length is less than minimum, replace the compression spring.

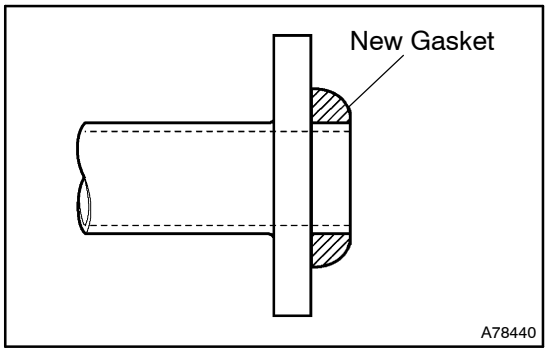

(b) Install a new gasket to the exhaust manifold as shown in the illustration.

(c) Install the exhaust pipe front with the 2 compression springs and 2 bolts.

Torque: 43 N·m (440 kgf·cm, 32 ft·lbf)

6. INSTALL EXHAUST PIPE ASSY CENTER

(a) Install a new gasket and the exhaust pipe center to the 2 exhaust pipe supports.

(b) Tighten the 2 bolts.

Torque: 43 N·m (440 kgf·cm, 32 ft·lbf)

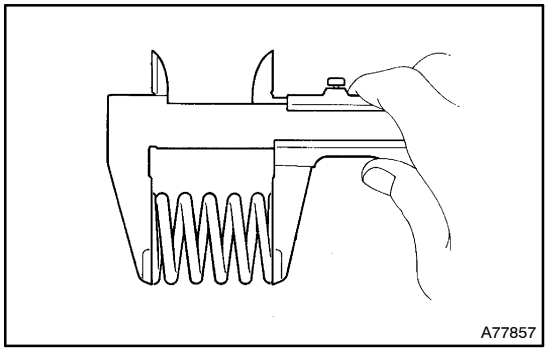

7. INSTALL EXHAUST PIPE ASSY TAIL

(a) Inspect the free length.

(1) Using vernier calipers, measure the free length of the compression spring.

Minimum length: 38.5 mm (1.516 in.)

If the free length is less than minimum, replace the compression spring.

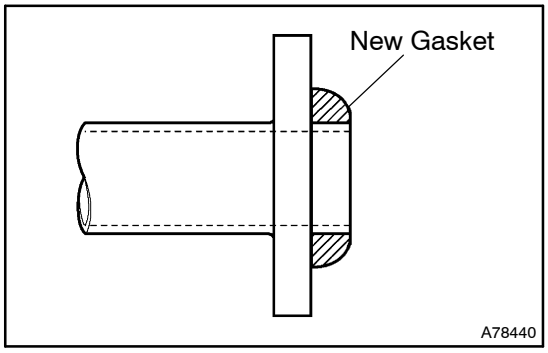

(b) Install a new gasket to the exhaust pipe center as shown in the illustration.

(c) Install the exhaust pipe tail to the 4 exhaust pipe supports.

(d) Tighten the compression springs and 2 bolts.

Torque: 43 N·m (440 kgf·cm, 32 ft·lbf)

8. CHECK FOR EXHAUST GAS LEAKS

9. INSTALL FLOOR PANEL BRACE FRONT

Torque: 30 N·m (302 kgf·cm, 22 ft·lbf)

EXHAUST PIPE ASSY (1CD–FTV)(From September, 2003)

1509W–02

COMPONENTS

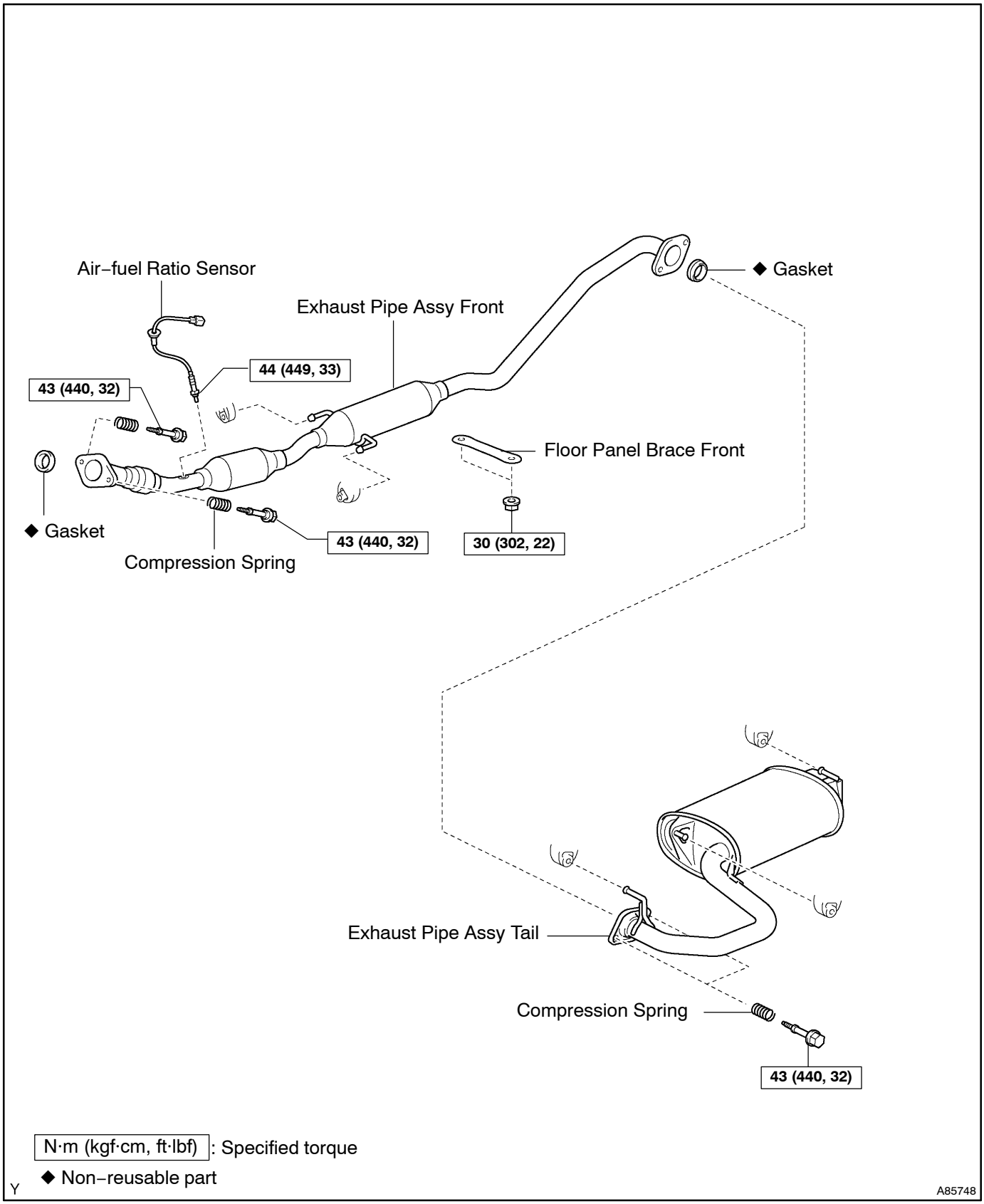

N·m (kgf·cm, ft·lbf) : Specified torque

◆ Non–reusable part

A85748

150CB–01

Removal & Installation and Disassembly & Reassembly

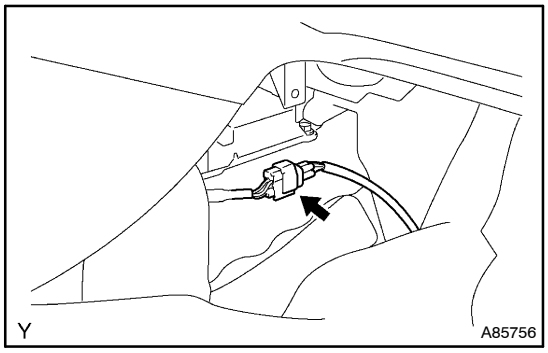

1. REMOVE AIR–FUEL RATIO SENSOR

(a) Using a clip remover, remove the clip.

(b) Open the floor carpet.

(c) Disconnect the air–fuel ratio sensor connector.

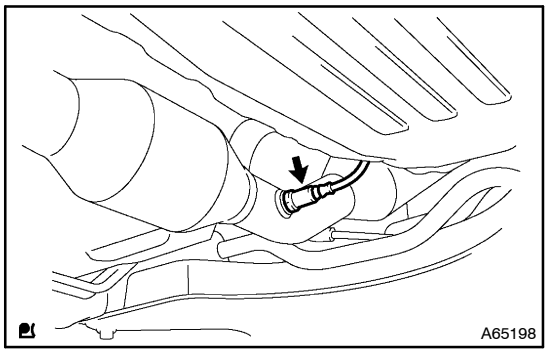

(d) Remove the air–fuel ratio sensor.

2. REMOVE FLOOR PANEL BRACE FRONT

(a) Remove the 2 nuts and floor panel brace front.

3. REMOVE EXHAUST PIPE ASSY TAIL

(a) Remove the 2 bolts and 2 compression springs.
(b) Disconnect the 3 exhaust pipe supports, then remove the exhaust pipe tail.
(c) Remove the gasket from the exhaust pipe tail.

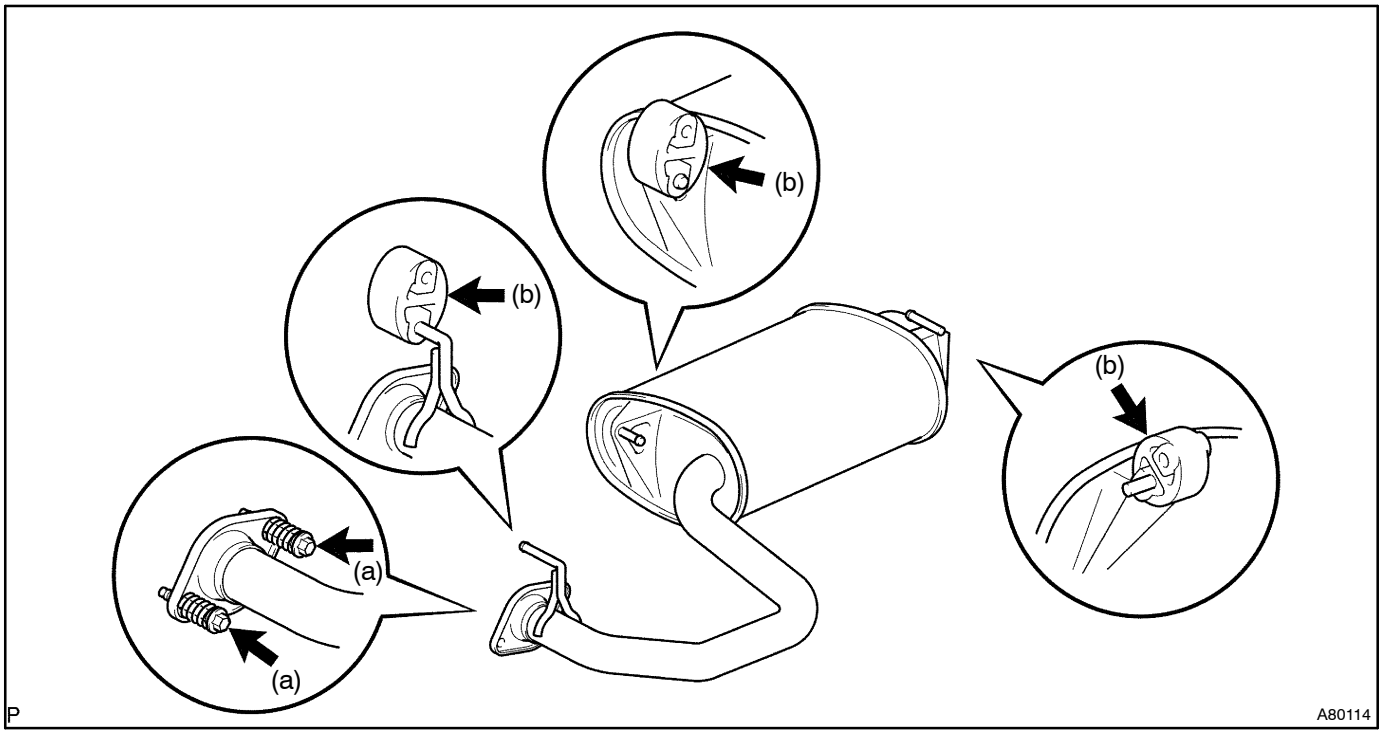

4. REMOVE EXHAUST PIPE ASSY FRONT

(a) Remove the 2 bolts and 2 compression springs.
(b) Disconnect the 2 exhaust pipe supports, then remove the exhaust pipe front.
(c) Remove the gasket from the manifold converter.

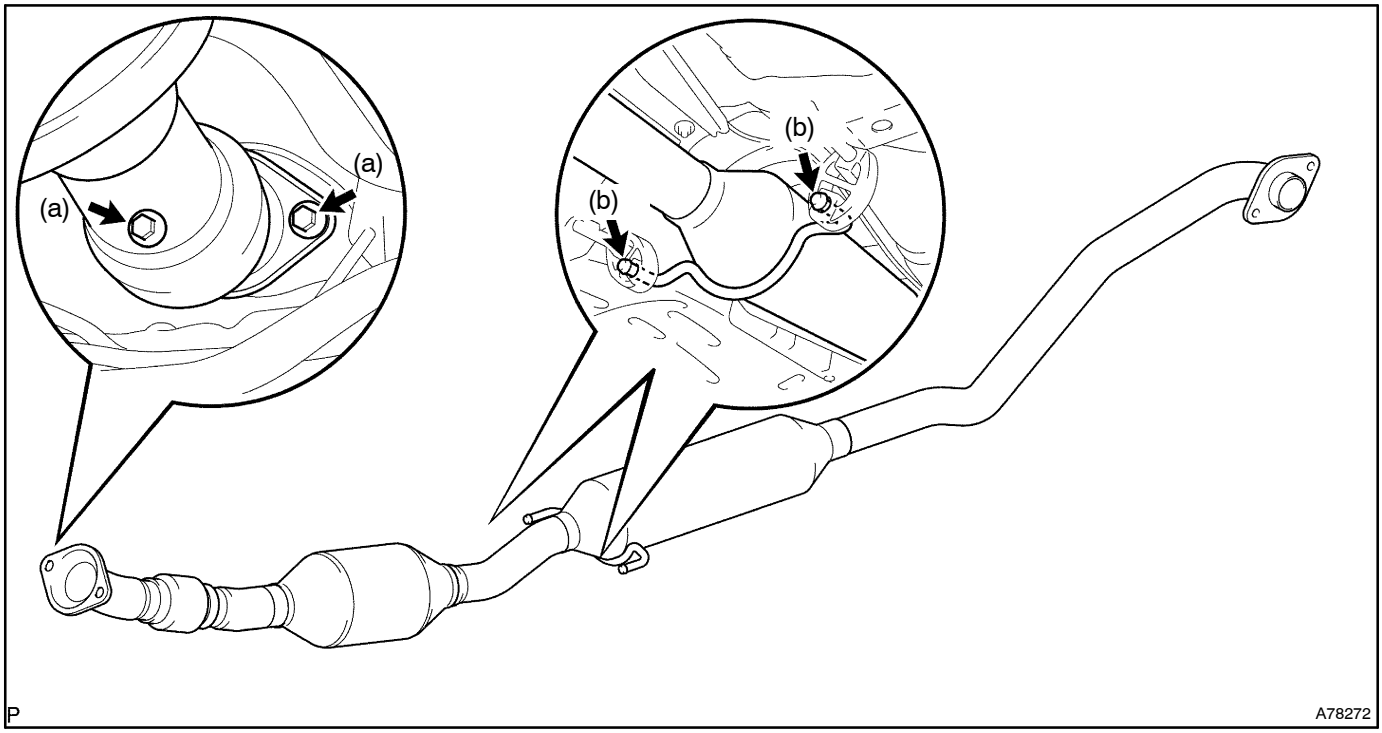

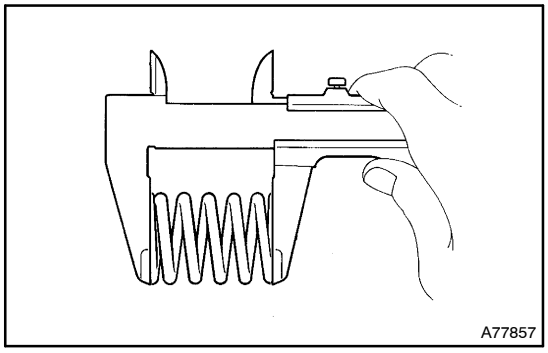

5. INSTALL EXHAUST PIPE ASSY FRONT

(a) Using vernier calipers, measure the free length of the compression spring.

Minimum length: 41.5 mm (1.634 in.)

If the free length is less than minimum, replace the compression spring.

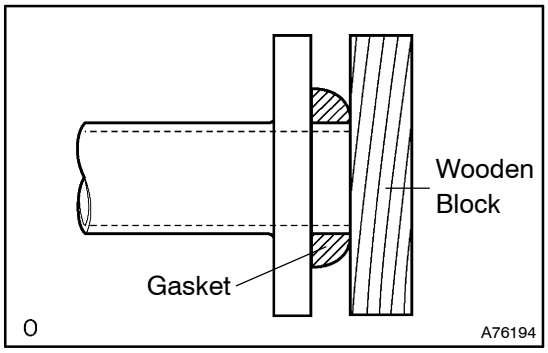

(b) Using a plastic hammer and wooden block, tap in a new gasket until its surface is flush with the exhaust manifold.

NOTICE:

- **Tap in the gasket in the correct direction.**
- **Do not reuse the removed gasket.**
- **Be sure not to push in the gasket when installing the exhaust pipe.**

(c) Connect the 2 exhaust pipe supports, then install the exhaust pipe front with the 2 compression springs and 2 bolts.

Torque: 43 N·m (440 kgf·cm, 32 ft·lbf)

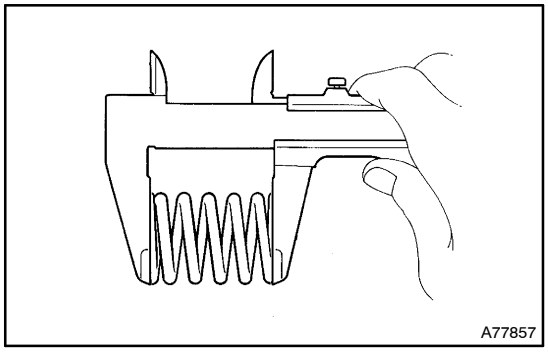

6. INSTALL EXHAUST PIPE ASSY TAIL

(a) Using vernier calipers, measure the free length of the compression spring.

Minimum length: 38.5 mm (1.515 in.)

If the free length is less than minimum, replace the compression spring.

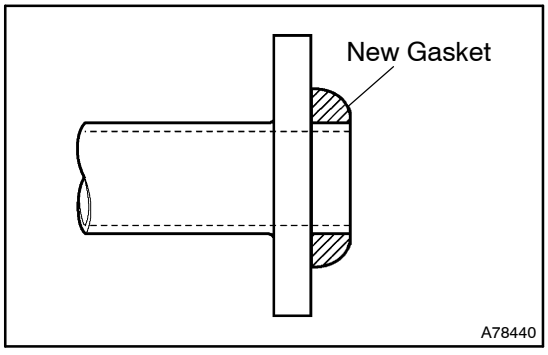

(b) Install a new gasket to the pipe front converter as shown in the illustration.

(c) Connect the 3 exhaust pipe supports, then install the exhaust pipe tail with the 2 compression springs and 2 bolts.

Torque: 43 N·m (440 kgf·cm, 32 ft·lbf)

7. INSTALL AIR–FUEL RATIO SENSOR

Torque: 44 N·m (449 kgf·cm, 33 ft·lbf)

8. CHECK FOR EXHAUST GAS LEAKS

9. INSTALL FLOOR PANEL BRACE FRONT

Torque: 30 N·m (302 kgf·cm, 22 ft·lbf)

COOLING SYSTEM (2AZ–FSE)

160MY–02

ON–VEHICLE INSPECTION

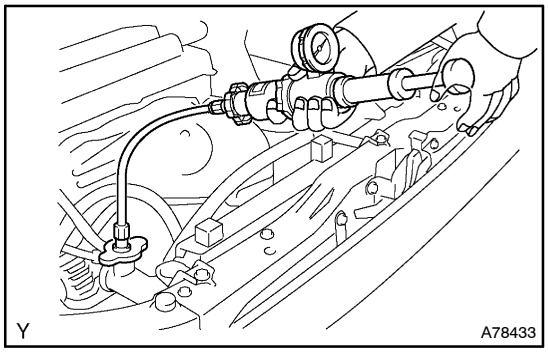

1. INSPECT COOLING SYSTEM FOR LEAKS

(a) Remove the radiator cap.

CAUTION:

To avoid the danger of being burned, radiator cap is required while the engine and radiator are still hot. Thermal expansion will cause hot engine coolant and steam to blow out from the radiator.

(b) Remove the radiator support opening cover (see page 14–23).

(c) Remove the engine room cover side (see page 14–23).

(d) Fill the radiator with coolant, then attach a radiator cap tester.

(e) Warm up the engine.

(f) Pump it to 118 kPa (1.2 kgf/cm^2, 17.1 psi), then check that the pressure does not drop.

If the pressure drops, check the hoses, radiator and water pump for leaks. If there are no signs or traces of external coolant leaks, check the heater core, cylinder block and head.

(g) Reinstall the engine room cover side.

(h) Reinstall the radiator support opening cover.

(i) Reinstall the radiator cap.

2. CHECK ENGINE COOLANT LEVEL AT RESERVOIR

(a) Check that the coolant level in the reservoir tank is between ”F” and ”L” lines when the engine is cold. If low, check for leaks and add ”Toyota Super Long Life Coolant” or similar high quality ethylene glycol based non–silicate, non–amine, non–nitrite, and non–borate coolant with long–life hybrid organic acid technology up to the ”FULL” line.

3. CHECK ENGINE COOLANT QUALITY

(a) Remove the radiator cap.

CAUTION:

To avoid the danger of being burned, radiator cap are required while the engine and radiator are still hot. Thermal expansion will cause hot engine coolant and steam to blow out from the radiator.

(b) Check if there are any excessive deposits of rust or scale around the water outlet cap and water outlet filler hole; the coolant should be free of oil.

If excessively dirty, replace the coolant.

(c) Reinstall the radiator cap.

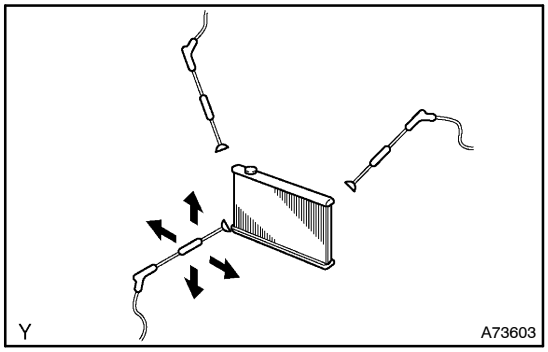

4. INSPECT FIN BLOCKAGE

(a) If the fins are clogged, wash them with water or a steam cleaner, then dry them with compressed air.

NOTICE:

- **If the distance between the steam cleaner and core is too close, there is a possibility of damaging the fins, so keep the following injection distance.**

Injection Pressure kPa (kgf/cm^2, psi)	Injection Distance mm (in.)
2,942 to 4,903 (30 to 50, 427 to 711)	300 (11.811)
4,903 to 7,845 (50 to 80, 711 to 1,138)	500 (19.685)

- **If the fins are bent, straighten them with a screwdriver or pliers.**
- **Be careful not to expose electronic components to water.**

160MZ–02

INSPECTION

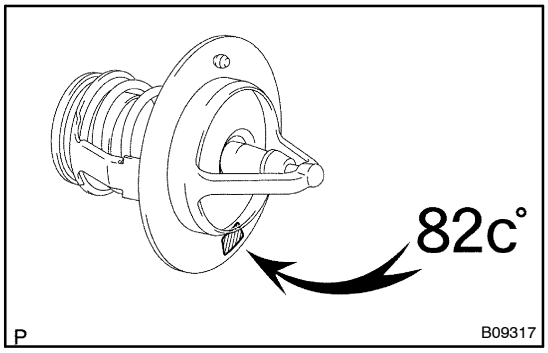

1. INSPECT THERMOSTAT

HINT:

The thermostat is numbered with the valve opening temperature.

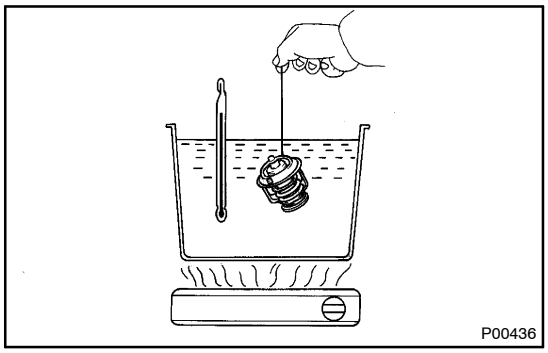

(a) Immerse the thermostat in water, then gradually heat the water.

(b) Check the valve opening temperature of the thermostat.

Valve opening temperature:
80 to 84°C (176 to 183°F)

If the valve opening temperature is not as specified, replace the thermostat.

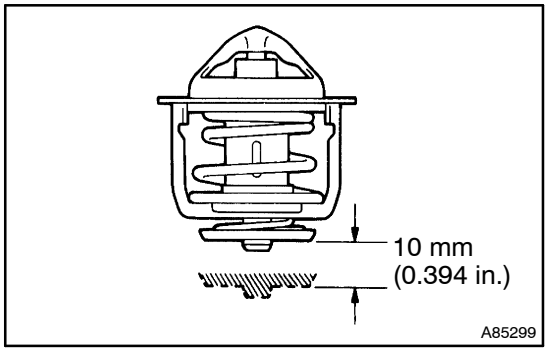

(c) Inspect the valve lift.

Valve lift: 10 mm (0.394 in.) or more at 95°C (203°F)

If the valve lift is not as specified, replace the thermostat.

(d) Camshaft that the valve of the thermostat is closed when the water temperature (b) cools down below 77 °C (170 °F).

If not fully closed, replace the thermostat.

2. INSPECT RADIATOR CAP SUB–ASSY

NOTICE:

- **If the radiator cap is contaminated, rinse it with water.**
- **Before using a radiator cap tester, wet the relief valve and pressure valve with engine coolant or water.**
- **When performing the following steps (a) and (b), keep the tester at an angle of over 30° above horizontal.**

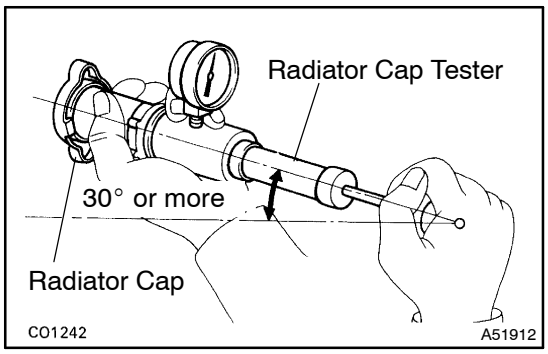

(a) Using a radiator cap tester, slowly pump the tester, then check that air is coming from the vacuum valve.

Pump speed: 1 push / 3 seconds or more

NOTICE:

Push the pump at a constant speed.

If air is not coming from the vacuum valve, replace the radiator cap.

(b) Pump the tester, then measure the relief valve opening pressure.

NOTICE:

The following pump speed is for the first pump only (in order to close the vacuum valve). After the first pump, the pump speed can be reduced.

Pump speed: 1 push within 1 second

Standard opening pressure:

74 to 103 kPa (0.75 to 1.05 kgf/cm^2, 10.7 to 14.9 psi)

If the opening pressure is less than specified, replace the radiator cap.

HINT:

Use the tester's maximum reading as the opening pressure.

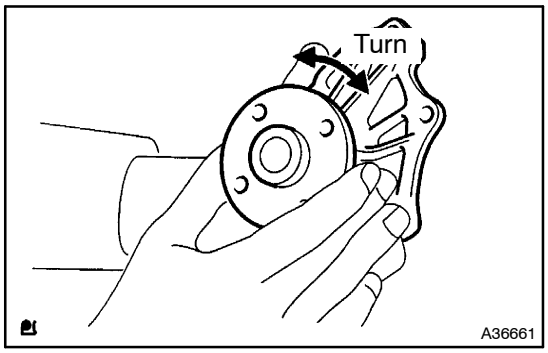

3. INSPECT WATER PUMP ASSY

(a) Visually check the drain hole for coolant leakage.

If leakage is found, replace the water pump.

(b) Turn the pulley, then check that the water pump bearing moves smoothly and does not make noise.

If necessary, replace the water pump.

COOLING FAN SYSTEM (2AZ–FSE)

160SZ–01

ON–VEHICLE INSPECTION

HINT:

It is normal that the cooling fan sometime rotates when the ignition switch is turned from ACC to ON.

1. CHECK COOLING FAN OPERATION WITH LOW TEMPERATURE (Below 83°C (181°F))

(a) Turn the ignition switch ON.

(b) Check that the cooling fan stops.

If not, check the cooling fan relay and engine coolant temperature sensor, then check for disconnection of connectors or wire break between the cooling fan relay and engine coolant temperature sensor.

(c) Disconnect the engine coolant temperature sensor connector.

(d) Check that the cooling fan rotates.

If not, check the fuses, cooling fan relay, ECM and cooling fan, then check for a short circuit between the cooling fan relay and engine coolant temperature sensor.

(e) Reconnect the engine coolant temperature sensor connector.

2. CHECK COOLING FAN OPERATION WITH HIGH TEMPERATURE (Above 100°C (212°F))

(a) Start the engine, then raise coolant temperature to above 100°C (212°F).

HINT:

Coolant temperature is the value detected by the engine coolant temperature sensor on the water outlet.

(b) Check that the cooling fan rotates.

If not, replace the engine coolant temperature sensor.

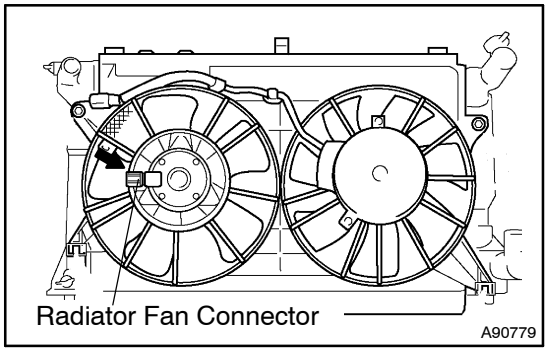

3. INSPECT RADIATOR FAN MOTOR

(a) Disconnect the radiator fan connector.

(b) Connect battery and ammeter to the radiator fan connector.

(c) Check that the radiator fan rotates smoothly, then check the reading on the ammeter.

Standard amperage: 8.5 to 11.5 A at 20°C (68°F)

(d) Reconnect the cooling fan connector.

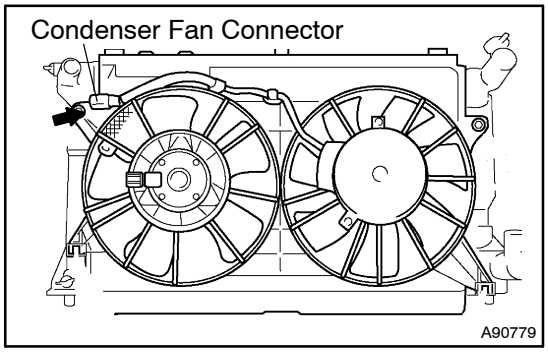

4. INSPECT CONDENSER FAN MOTOR

(a) Disconnect the condenser fan connector.

(b) Connect battery and ammeter to the condenser fan connector.

(c) Check that the condenser fan rotates smoothly, then check the reading on the ammeter.

Standard amperage: 5.2 to 8.2 A at 20°C (68°F)

(d) Reconnect the condenser fan connector.

160N0–02

INSPECTION

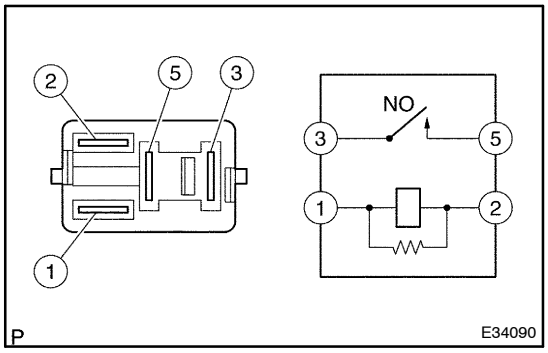

1. INSPECT COOLING FAN RELAY

(a) Inspect the resistance

(1) Using an ohmmeter, measure the resistance between each terminal.

Specified condition:

Tester Connection	Specified Condition
3 – 5	10 kΩ or Higher
3 – 5	Below 1 Ω (Apply battery voltage to terminals 1 and 2)

If the specified condition is not as specified, replace the cooling fan relay.

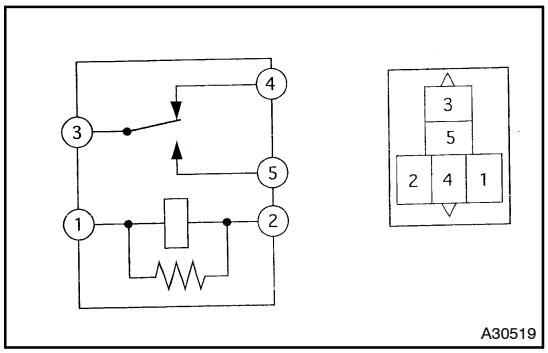

2. INSPECT COOLING FAN RELAY NO.2

(a) Inspect the resistance

(1) Using an ohmmeter, measure the resistance between each terminal.

Specified condition:

Tester Connection	Specified Condition
3 – 4	Below 1 Ω
3 – 4	10 kΩ or Higher (Apply battery voltage to terminals 1 and 2)
3 – 5	10 kΩ or Higher
3 – 5	Below 1 Ω (Apply battery voltage to terminals 1 and 2)

If the specified condition is not as specified, replace the cooling fan relay No. 2.

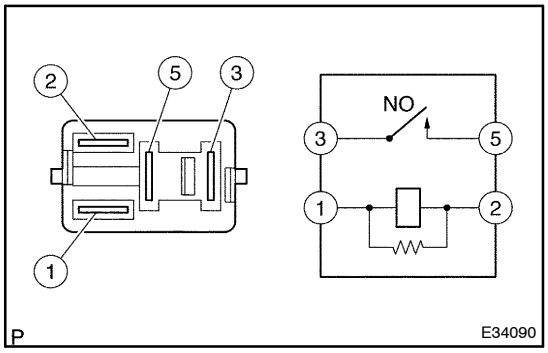

3. INSPECT COOLING FAN RELAY NO.3

(a) Inspect the resistance

(1) Using an ohmmeter, measure the resistance between each terminal.

Specified condition:

Tester Connection	Specified Condition
3 – 5	10 kΩ or Higher
3 – 5	Below 1 Ω (Apply battery voltage to terminals 1 and 2)

If the specified condition is not as specified, replace the cooling fan relay No. 3.

ENGINE COOLANT (2AZ–FSE)

160MU–02

REPLACEMENT

1. DRAIN ENGINE COOLANT

CAUTION:
To avoid the danger of being burned, do not remove the radiator cap while the engine and radiator are still hot, as fluid and steam can be blown out under pressure.

(a) Remove the radiator cap.
(b) Loosen the radiator drain plug, then drain the engine coolant.
(c) Remove the engine under cover No. 4 RH (see page 17–6).
(d) Loosen the drain cock, then drain the engine coolant.
(e) Loosen the air drain cock.

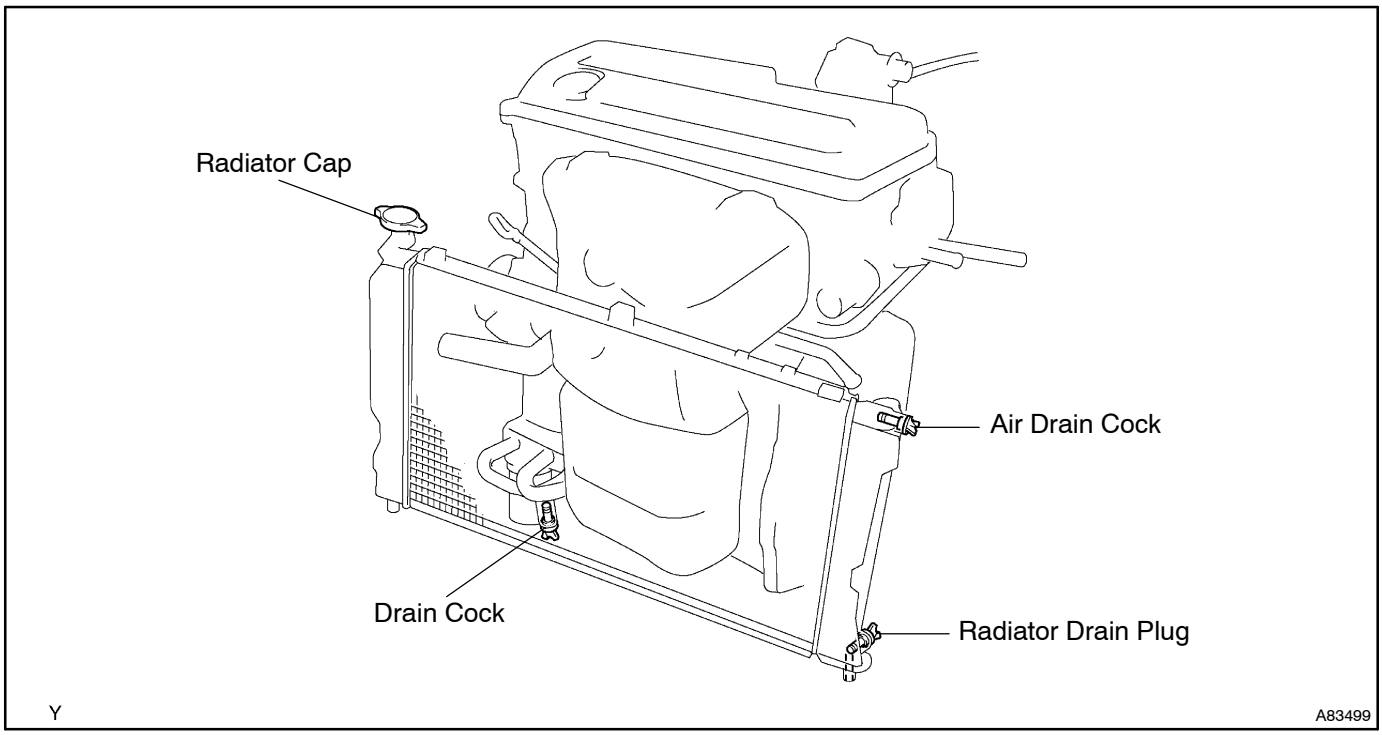

(f) Tighten the drain plug and 2 drain cocks.

2. ADD ENGINE COOLANT

(a) Pour coolant into the radiator until it overflows.

Capacity:

Steering	Coolant Capacity [liters (US gts, Imp. gts)]
LHD	6.3 (6.7, 5.5)
RHD	6.4 (6.8, 5.6)

HINT:

- Use of improper coolants may damage the engine cooling system.
- Only use ”Toyota Super Long Life Coolant” or similar high quality ethylene glycol based non–silicate, non–amine, non–nitrite, and non–borate coolant with long–life hybrid organic acid technology.
- New Toyota vehicles are filled with Toyota Super Long Life Coolant. When replacing the coolant. Toyota Super Long Life Coolant is recommended.
- Observe the coolant level inside the radiator by pressing the inlet and outlet radiator hoses several times by hand. If the coolant level goes down, add the coolant.

CAUTION:

Do not use plain water alone.

(b) Loosen the drain cock, then fasten the drain cock if the engine coolant overflowed.

(c) Reinstall the radiator cap.

(d) Pour engine coolant into the reservoir tank until it reaches full line.

(e) Warm up the engine until the thermostat valve begins to open.

HINT:

Press the radiator inlet and outlet hose several times with hard during the warming up.

(f) Stop the engine, then wait until the coolant temperature drops. Gets cold. Then remove the radiator cap to check the coolant level.

HINT:

- If the level gets lower, perform the procedures above again.
- If the level does not gets lower, adjust the reservoir tank coolant level.

3. CHECK FOR ENGINE COOLANT LEAKS (See page 16–1)

RADIATOR ASSY (2AZ–FSE)

160T0–01

REPLACEMENT

1. DRAIN COOLANT (See page 16–7)
2. REMOVE RADIATOR SUPPORT OPENING COVER (See page 14–23)
3. REMOVE ENGINE ROOM COVER SIDE (See page 14–23)
4. REMOVE ENGINE UNDER COVER LH (See page 14–23)
5. REMOVE ENGINE UNDER COVER NO.4 RH (See page 14–23)
6. REMOVE ENGINE UNDER COVER RH (See page 14–23)
7. DISCONNECT RADIATOR HOSE INLET (See page 14–23)
8. DISCONNECT RADIATOR HOSE OUTLET (See page 14–23)
9. SEPARATE RADIATOR RELAY BLOCK (See page 14–23)

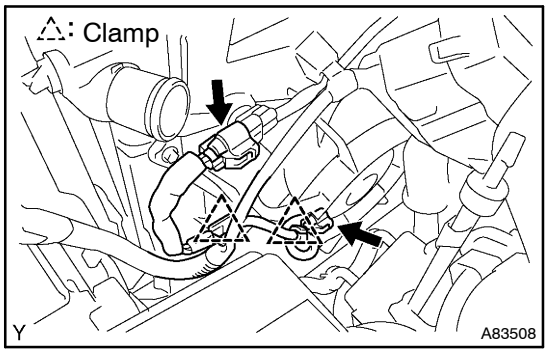

10. REMOVE RADIATOR ASSY

(a) Disconnect the 2 connectors from the 2 fan motors.

(b) Separate the 2 clamps from the fan shroud.

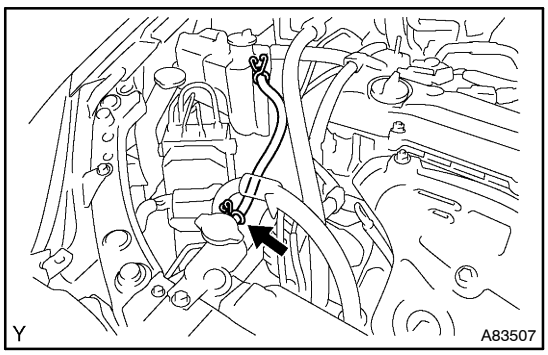

(c) Disconnect the radiator reservoir tank hose as shown in the illustration.

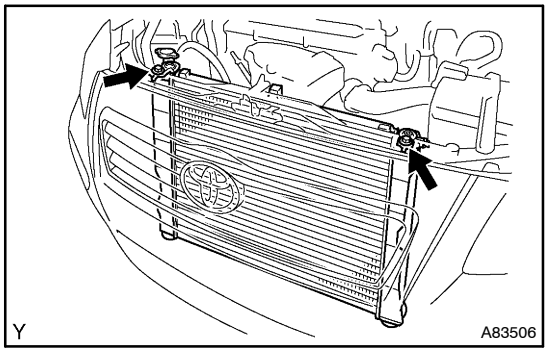

(d) Remove the 2 bolts, then remove the radiator assembly.

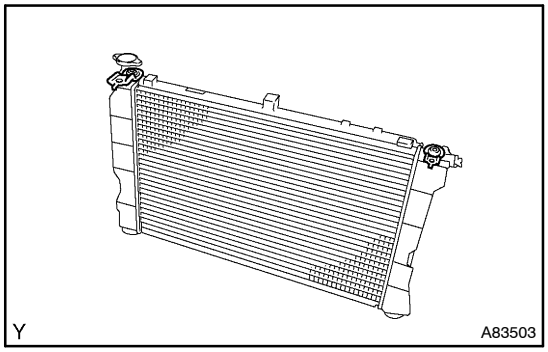

11. REMOVE RADIATOR SUPPORT NO.1

(a) Remove the 2 radiator supports from the radiator assembly.

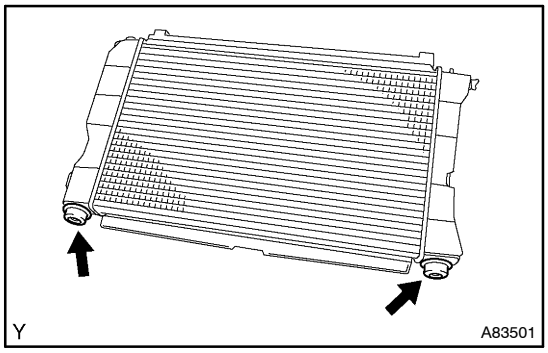

12. REMOVE RADIATOR SUPPORT LOWER

(a) Remove the 2 radiator support lowers from the radiator assembly.

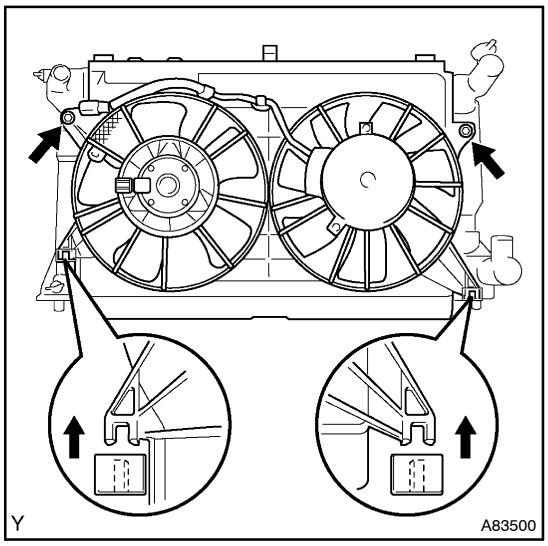

13. REMOVE FAN ASSY W/MOTOR

(a) Remove the 2 bolts.

(b) Remove the 2 pawl fittings, then remove the fan assembly with motor.

14. INSTALL FAN ASSY W/MOTOR

(a) Insert tabs in the slot, then attach the fan assembly with motor with the 2 bolts.
Torque: 6.0 N·m (61 kgf·cm, 53 in.·lbf)

15. INSTALL RADIATOR SUPPORT LOWER

(a) Be sure to insert the 2 radiator support lowers to the radiator lower plane.

16. INSTALL RADIATOR SUPPORT NO.1

17. INSTALL RADIATOR ASSY
Torque: 19 N·m (194 kgf·cm, 14 ft·lbf)

18. INSTALL RADIATOR RELAY BLOCK
Torque: 5.0 N·m (54 kgf·cm, 46 in.·lbf)

19. CONNECT RADIATOR HOSE OUTLET

20. CONNECT RADIATOR HOSE INLET

21. ADD COOLANT (See page 16–7)

22. CHECK FOR ENGINE COOLANT LEAKS (See page 16–1)

23. INSTALL ENGINE UNDER COVER RH
24. INSTALL ENGINE UNDER COVER NO.4 RH
25. INSTALL ENGINE UNDER COVER LH
26. INSTALL ENGINE ROOM COVER SIDE
27. INSTALL RADIATOR SUPPORT OPENING COVER

WATER PUMP ASSY (2AZ–FSE)

160MR–02

REPLACEMENT

1. **DRAIN COOLANT (See page 16–7)**
2. **REMOVE RADIATOR SUPPORT OPENING COVER (See page 14–23)**
3. **REMOVE ENGINE ROOM COVER SIDE (See page 14–23)**
4. **REMOVE ENGINE UNDER COVER LH (See page 14–23)**
5. **REMOVE ENGINE UNDER COVER NO.4 RH (See page 14–23)**
6. **REMOVE ENGINE UNDER COVER RH (See page 14–23)**
7. **REMOVE FAN AND GENERATOR V BELT (See page 14–5)**
   SST 09249–63010
8. **REMOVE GENERATOR ASSY (See page 19–8)**

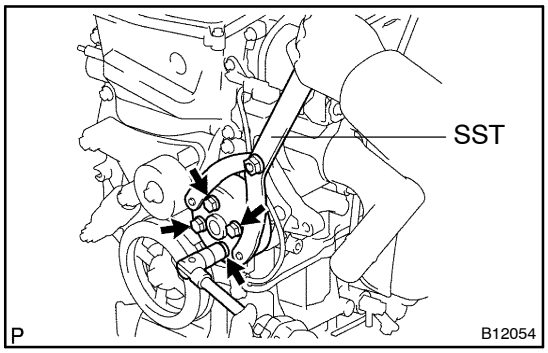

9. REMOVE WATER PUMP PULLEY

(a) Using SST, remove the 4 bolts and pump pulley.
SST 09960–10010 (09962–01000, 09963–00700)

(b) Disconnect the crankshaft position sensor wire clamp from the water pump.

(c) Disconnect the crankshaft position sensor wire from the clamp on the water pump.

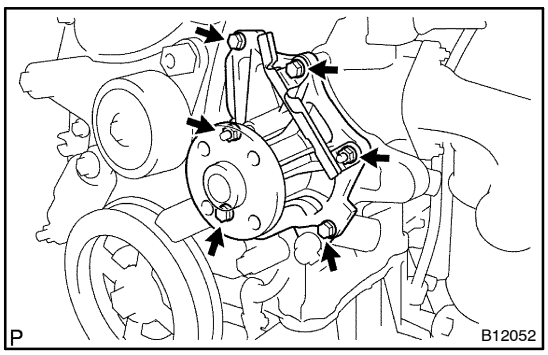

10. REMOVE WATER PUMP ASSY

(a) Remove the 4 bolts, 2 nuts, wire clamp and water pump.

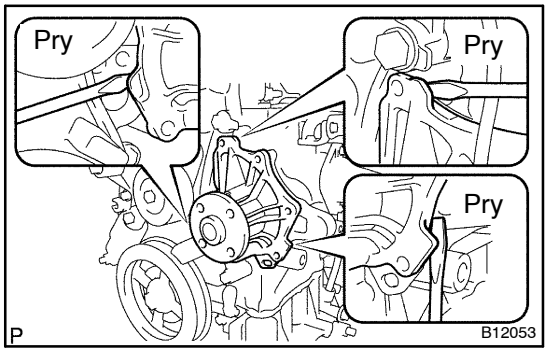

(b) Using a screwdriver, pry out between the water pump and cylinder block, and remove the water pump.

NOTICE:

Be careful not to damage the contact surface of the water pump and cylinder block.

11. INSTALL WATER PUMP ASSY

(a) Remove any old packing (FIPG) material and be careful not to drop any oil on the contact surfaces of the water pump assy.

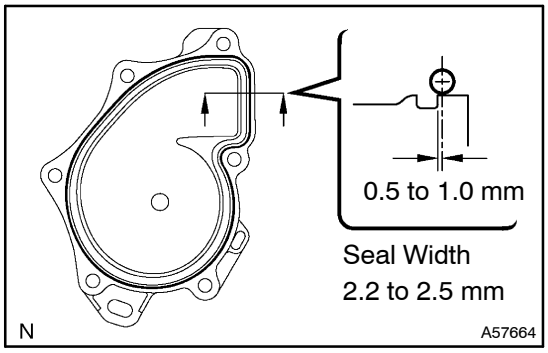

(b) Apply a continuous bead of the seal packing (diameter 2.2 to 2.5 mm (0.09 to 0.10 in.)) as shown in the illustration.

Seal packing: Part No. 08826 – 00100 or equivalent

NOTICE:

Install the water pump assy within 5 minutes after applying seal packing. Otherwise the material must be removed and reapplied.

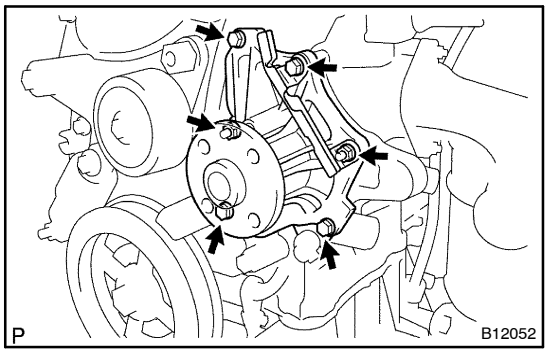

(c) Install the water pump and wire clamp with 4 bolts and 2 nuts.

Torque: 9.0 N·m (90 kgf·cm, 80 in.·lbf)

(d) Install the crankshaft position sensor wire harness clamp to the water pump.

(e) Install the crankshaft position sensor wire to the wire clamp on the water pump.

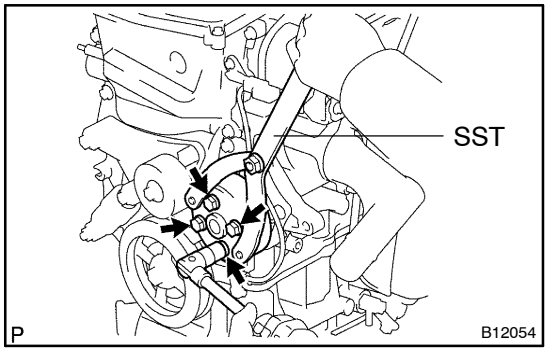

12. INSTALL WATER PUMP PULLEY

(a) Using SST, install the pump pulley with 4 bolts.

SST 09960–10010 (09962–01000, 09963–00700)

Torque: 26 N·m (265 kgf·cm, 19 ft·lbf)

13. INSTALL GENERATOR ASSY (See page 19–8)

14. INSTALL FAN AND GENERATOR V BELT (See page 14–5)

SST 09249–63010

15. ADD COOLANT (See page 16–7)

16. CHECK FOR ENGINE COOLANT LEAKS (See page 16–1)

THERMOSTAT (2AZ–FSE)

160MQ–02

REPLACEMENT

1. **DRAIN COOLANT (See page 16–7)**
2. **REMOVE RADIATOR SUPPORT OPENING COVER (See page 14–23)**
3. **REMOVE ENGINE ROOM COVER SIDE (See page 14–23)**
4. **REMOVE ENGINE UNDER COVER LH (See page 14–23)**
5. **REMOVE ENGINE UNDER COVER NO.4 RH (See page 14–23)**
6. **REMOVE ENGINE UNDER COVER RH (See page 14–23)**
7. **REMOVE FAN AND GENERATOR V BELT (See page 14–5)**
   SST 09249–63010
8. **REMOVE GENERATOR ASSY (See page 19–8)**

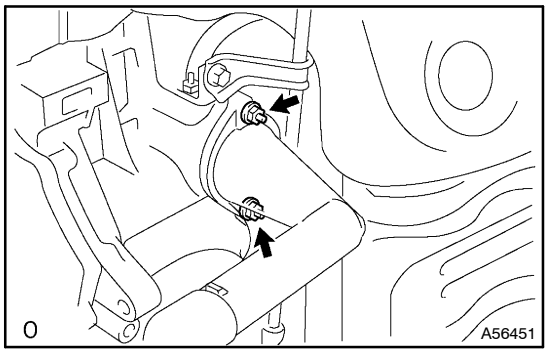

9. **REMOVE WATER INLET**
   (a) Remove the 2 nuts and water inlet.

10. **REMOVE THERMOSTAT**

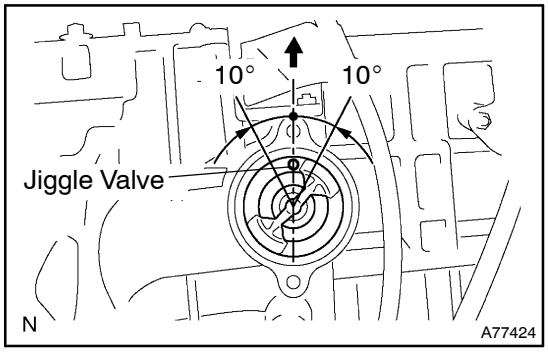

11. **INSTALL THERMOSTAT**
   (a) Install a new gasket to the thermostat.
   (b) Install the thermostat while aligning the jiggle valve with its right position described in the illustration.

HINT:
The jiggle valve may be set within 10° of either side of the prescribed position.

12. **INSTALL WATER INLET**
    Torque: 9.0 N·m (92 kgf·cm, 7 in.·lbf)
13. **INSTALL GENERATOR ASSY (See page 19–8)**
14. **INSTALL FAN AND GENERATOR V BELT (See page 14–5)**
    SST 09249–63010
15. **ADD COOLANT (See page 16–7)**
16. **CHECK FOR ENGINE COOLANT LEAKS (See page 16–1)**

COOLING SYSTEM (1CD–FTV)(From September, 2003)

160T1–01

ON–VEHICLE INSPECTION

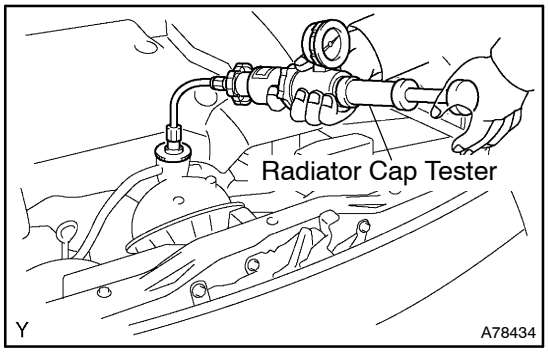

1. INSPECT COOLING SYSTEM FOR LEAKS

CAUTION:

To avoid the danger of being burned, do not remove the radiator cap while the engine and radiator are still hot. Thermal expansion will cause hot engine coolant and steam to blow out from the radiator.

(a) Remove the radiator support opening cover.
(b) Remove the engine room cover side.
(c) Fill the radiator with coolant, then attach a radiator cap tester.
(d) Warm up the engine.
(e) Pump it to 137 kPa (1.4 kgf/cm^2, 19.9 psi), then check that the pressure does not drop.

If the pressure drops, check the hoses, radiator and water pump for leaks. If there are no signs or traces of external coolant leaks, check the heater core, cylinder block and head.

(f) Reinstall the engine room cover side.
(g) Reinstall the radiator support opening cover.

2. CHECK ENGINE COOLANT LEVEL AT RESERVOIR

(a) The engine coolant should be between the ”LOW” and ”FULL” lines when the engine is cold.

If low, check for leaks and add ”Toyota Super Long Life Coolant” or similar high quality ethylene glycol based non–silicate, non–amine, non–nitrite, and non–borate coolant with long–life hybrid organic acid technology up to the ”FULL” line.

3. CHECK ENGINE COOLANT QUALITY

(a) Remove the radiator cap.

CAUTION:

To avoid the danger of being burned, do not remove the radiator cap while the engine and radiator are still hot. Thermal expansion will cause hot engine coolant and steam to blow out from the radiator.

(b) Check the radiator cap and radiator filler hole for rust or scale; the coolant should be free from oil.

If excessively dirty, replace the coolant.

(c) Reinstall the radiator cap.

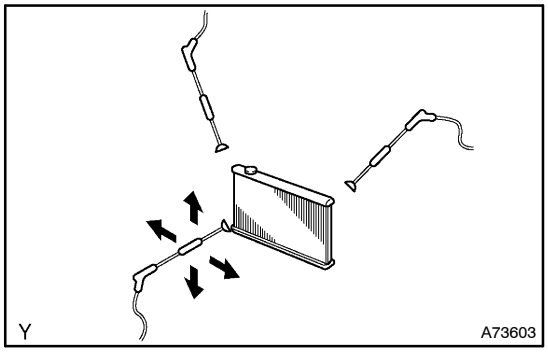

4. INSPECT FIN BLOCKAGE

(a) If the fins are clogged, wash them with water or a steam cleaner and dry them with compressed air.

NOTICE:

- **If the distance between the steam cleaner and core is too close, there is a possibility of damaging the fins, so keep the following injection distance.**

Injection Pressures kPa (kgf/cm^2, psi)	Injection Distance mm (in.)
2,942 to 4,903 (30 to 50, 427 to 711)	300 (11.811)
4,903 to 7,845 (50 to 80, 711 to 1,138)	500 (19.685)

- **If the fins are bent, straighten them with a screwdriver or pliers.**
- **Be careful not to pour water directly onto the electronic components.**

INSPECTION

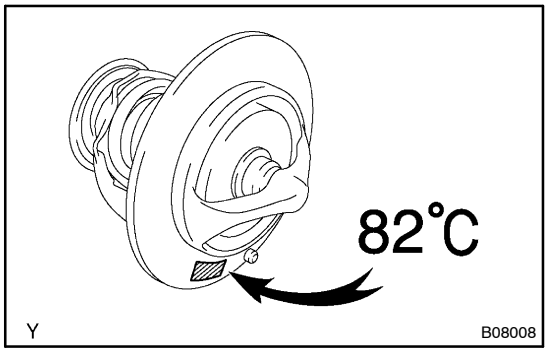

1. INSPECT THERMOSTAT

HINT:

The thermostat is imprinted with the valve opening temperature.

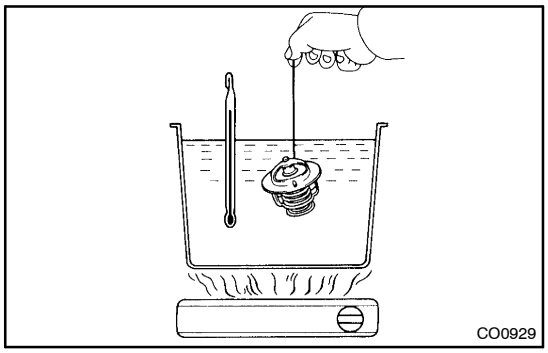

(a) Immerse the thermostat in the water, then gradually heat the water.

(b) Check the valve opening temperature of the thermostat.

Valve opening temperature:
80 to 84°C (176 to 183°F)

If the valve opening temperature is not as specified, replace the thermostat.

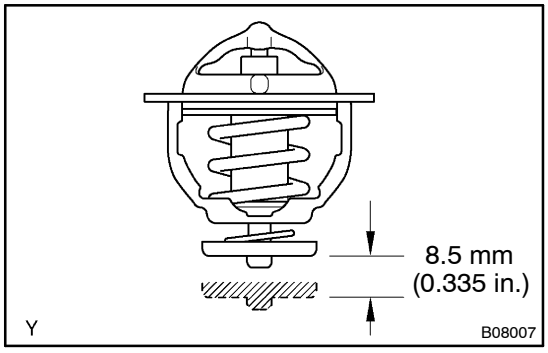

(c) Check the valve lift.

Valve lift: 8.5 mm (0.335 in.) or more at 95°C (203°F)

If the valve lift is not as specified, replace the thermostat.

(d) Check that the valve is fully closed when the thermostat is at low temperatures (below 77°C (171°F)).

If not fully closed, replace the thermostat.

2. INSPECT RESERVE TANK CAP SUB–ASSY

NOTICE:

- **If the radiator cap is contaminated, rinse it with water.**
- **Before using a radiator cap tester, wet the relief valve and pressure valve with engine coolant or water.**
- **When performing following steps (a) and (b), keep the tester at an angle of over 30° above horizontal.**

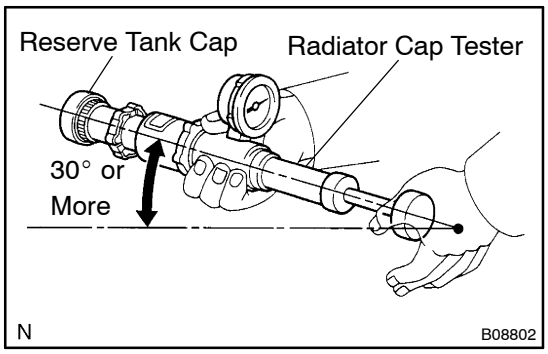

(a) Using a radiator cap tester, slowly pump the tester and check that air is coming from the vacuum valve.

Pumping speed: 1 push / 3 seconds or more

NOTICE:

Push the pump at a constant speed.

If air is not coming from the vacuum valve, replace the reserve tank cap.

(b) Pump the tester, then measure the relief valve opening pressure.

NOTICE:

The following pumping speed is for the first pump only (in order to close the vacuum valve). After the first pumping, the pumping speed can be reduced.

Pumping speed: 1 push within 1 second

Standard opening pressure:

93 to 122 kPa (0.95 to 1.25 kgf/cm^2, 13.4 to 17.6 psi)

Minimum opening pressure:

78 kPa (0.8 kgf/cm^2, 11.4 psi)

If the opening pressure is less than minimum, replace the reserve tank cap.

HINT:

Use the tester's maximum reading as the opening pressure.

ENGINE COOLANT (1CD–FTV)(From September, 2003)

160T3–01

REPLACEMENT

1. DRAIN ENGINE COOLANT

(a) Remove the radiator cap.

CAUTION:

To avoid the danger of being burned, do not remove the radiator cap while the engine and radiator are still hot. Thermal expansion will cause hot engine coolant and steam to blow out from the radiator.

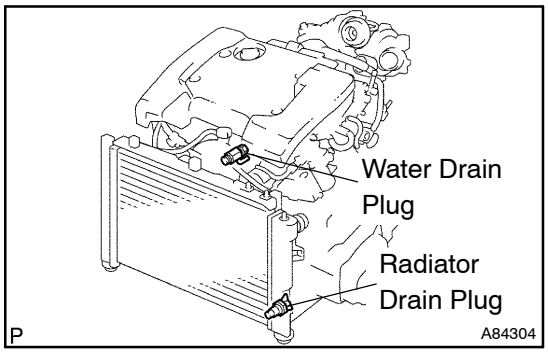

(b) Loosen the radiator and engine drain plugs, then drain the coolant.

(c) Put in the drain plugs.

Torque: 13 N·m (133 kgf·cm, 10 ft·lbf) for engine

2. ADD ENGINE COOLANT

(a) Loosen air bleed valve A.

(b) Fill the cooling system with coolant up to line B.

Capacity:

7.6 liters (8.0 US qts, 6.7 Imp. qts) : with power heater

7.4 liters (7.8 US qts, 6.5 Imp. qts) : without power heater

HINT:

- Use of improper coolants may damage the engine cooling system.
- Only use "Toyota Super Long Life Coolant" or similar high quality ethylene glycol based non–silicate, non–amine, non–nitrite, and non–borate coolant with long–life hybrid organic acid technology.
- New Toyota vehicles are filled with Toyota Super Long Life Coolant. When replacing the coolant, Toyota Super Long Life Coolant is recommended.
- Observe the coolant level inside the radiator by pressing the inlet and outlet radiator hoses several times by hand. If the coolant level goes down, add the coolant.

NOTICE:

Do not use plain water alone.

(c) Tighten air bleed valve A securely.

(d) Install the radiator cap securely.

(e) Warm up the engine.

HINT:

Warm up the engine with the engine speed of 2,000 rpm or more. Keep warming it up until the thermostat is open and the radiator reservoir becomes hot.

(f) Run the engine intermittently at 3,000 rpm for 5 seconds and at idle for 45 seconds.

(g) Do the above operation for 7 minutes or more.

(h) After the engine gets cold, check that the coolant level is between the ”LOW” and ”FULL” lines.

3. CHECK FOR ENGINE COOLANT LEAKS

(a) Fill the radiator with coolant, then attach a radiator cap tester.

(b) Pump it to 137 kPa (1.4 kgf/cm^2, 19.9 psi), then check that the pressure does not drop.

WATER PUMP ASSY (1CD–FTV)(From September, 2003)

160T4–01

REPLACEMENT

1. **REMOVE RADIATOR SUPPORT OPENING COVER**
2. **REMOVE ENGINE ROOM COVER SIDE**
3. **DRAIN ENGINE COOLANT (See page 16–19)**
4. **REMOVE FRONT WHEEL RH**
5. **REMOVE ENGINE UNDER COVER SUB–ASSY NO.1**
6. **REMOVE ENGINE UNDER COVER RH**
7. **REMOVE ENGINE COVER SUB–ASSY NO.1 (See page 14–90)**
8. **REMOVE INJECTOR DRIVER (See page 14–108)**
9. **REMOVE V (COOLER COMPRESSOR TO CRANKSHAFT PULLEY) BELT NO.1 (See Pub. No. RM1018E on page 14–269)**
10. **REMOVE GENERATOR V BELT (See Pub. No. RM1018E on page 14–269)**
11. **SEPARATE POWER STEERING IDLE PULLEY BRACKET (See page 14–138)**
12. **DISCONNECT ENGINE WIRE (See page 14–138)**
13. **DISCONNECT VACUUM HOSE (See page 14–108)**
14. **REMOVE ENGINE MOUNTING INSULATOR SUB–ASSY RH (See page 14–138)**
15. **REMOVE CRANKSHAFT PULLEY (See page 14–138)**
    SST 09213–54015 (09213–70020), 09330–00021, 09950–50013 (09951–05010, 09952–05010, 09953–05020, 09954–05031)
16. **REMOVE IDLER PULLEY SUB–ASSY (See page 14–138)**
17. **REMOVE TIMING BELT NO.2 COVER (See page 14–138)**
18. **REMOVE TIMING BELT NO.1 COVER (See page 14–138)**
19. **REMOVE TIMING BELT GUIDE**
20. **REMOVE TRANSVERSE ENGINE ENGINE MOUNTING BRACKET (See page 14–138)**
21. **SET NO. 1 CYLINDER TO TDC/COMPRESSION (See page 14–138)**
22. **REMOVE TIMING CHAIN COVER PLATE (See page 14–138)**
23. **REMOVE TIMING BELT (See page 14–138)**

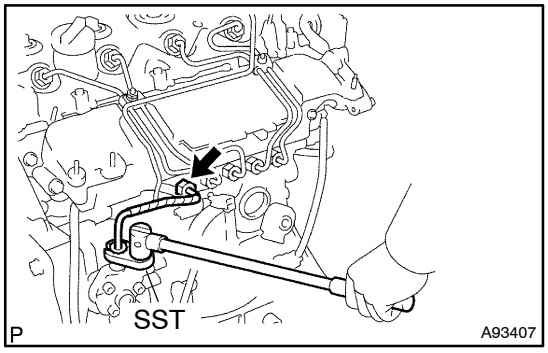

24. **REMOVE FUEL INLET PIPE SUB–ASSY**

NOTICE:

After removing the fuel inlet pipe, cover the common rail and injection pump with vinyl tape to prevent dust from being introduced.

(a) Remove the wire bracket, then slide the engine wire.
(b) Using SST, remove the fuel inlet pipe from the common rail.
    SST 09023–12700
(c) Using SST, remove the fuel inlet pipe from the injection pump.
    SST 09023–12700

25. **REMOVE FUEL PIPE NO.3 (See page 14–108)**
    SST 09023–12700

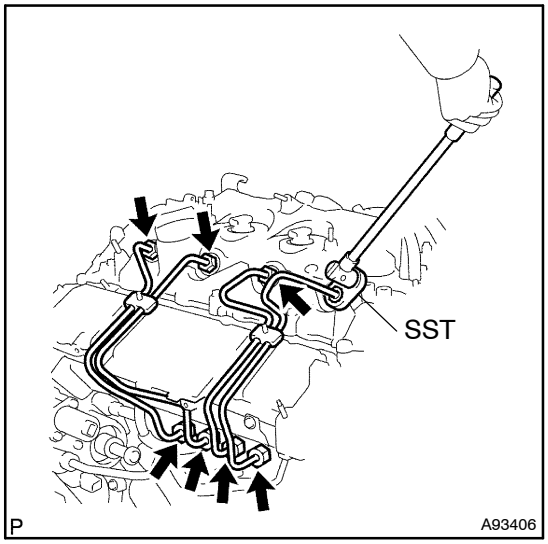

26. REMOVE INJECTION PIPE SUB–ASSY NO.1

(a) Remove the 2 upper injection pipe clamps from the intake manifold.

(b) Using SST, remove the injection pipe from the common rail side.
SST 09023–12700

(c) Using SST, remove the injection pipe from the injector side.
SST 09023–12700

(d) After removing the fuel pipe, in order to prevent dust or foreign objects from being introduced, cover the common rail with vinyl tape and protect the injector inlet with a vinyl or plastic bag.

(e) Remove the 2 lower injection pipe clamps from the intake manifold.

27. REMOVE INJECTION PIPE SUB–ASSY NO.2
SST 09023–12700

HINT:
Perform the same procedures as the injection pipe No. 1.

28. REMOVE INJECTION PIPE SUB–ASSY NO.3
SST 09023–12700

HINT:
Perform the same procedures as the injection pipe No. 1.

29. REMOVE INJECTION PIPE SUB–ASSY NO.4
SST 09023–12700

HINT:
Perform the same procedures as the injection pipe No. 1.

30. REMOVE INTAKE MANIFOLD INSULATOR NO.1 (See page 14–108)

31. REMOVE OIL LEVEL GAGE SUB–ASSY

32. REMOVE OIL LEVEL GAGE GUIDE (See page 17–11)

33. REMOVE WATER INLET (See Pub. No. RM1018E on page 16–50)

34. DISCONNECT INJECTION PUMP TO FUEL PIPE FUEL HOSE (See page 11–58)

35. DISCONNECT INJECTION PUMP TO FUEL FILTER FUEL HOSE OR PIPE (See page 11–58)

36. REMOVE INJECTION PUMP DRIVE PULLEY (See page 11–58)
SST 09960–10010 (09962–01000, 09963–01000), 09950–50013 (09951–05010, 09952–05010, 09953–05020, 09954–05021)

37. REMOVE INJECTION PUMP STAY NO.1 (See page 11–58)

38. REMOVE INJECTION OR SUPPLY PUMP ASSY (See page 11–58)

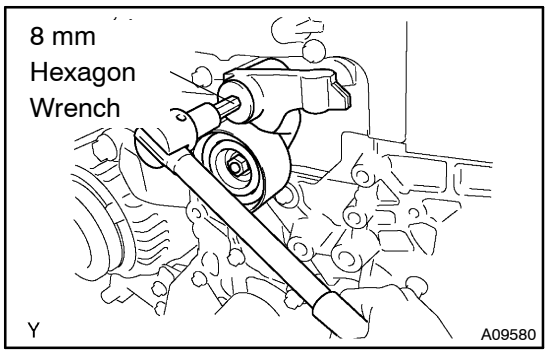

39. REMOVE TIMING BELT IDLER SUB–ASSY NO.1

(a) Using an 8 mm hexagon wrench, remove the idler pulley shaft, idler pulley and plate washer.

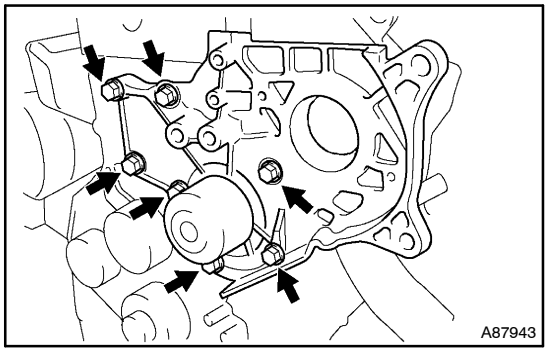

40. REMOVE WATER PUMP ASSY

(a) Remove the 7 bolts, then remove the water pump and gasket.

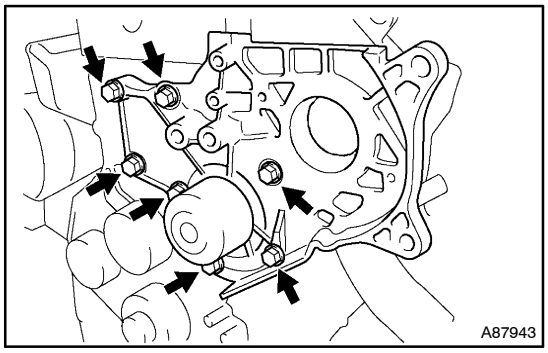

41. INSTALL WATER PUMP ASSY

(a) Install a new gasket and the water pump with the 7 bolts.
Torque: 31 N·m (320 kgf·cm, 23 ft·lbf)

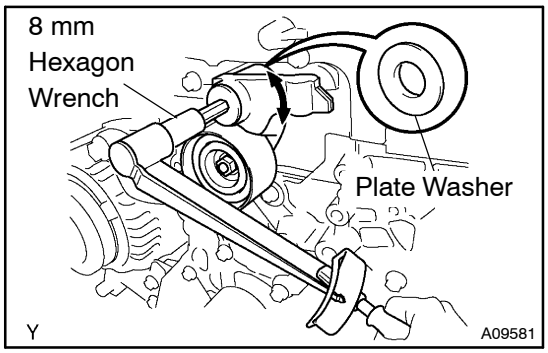

42. INSTALL TIMING BELT IDLER SUB–ASSY NO.1

(a) Using an 8 mm hexagon wrench, install the plate washer and idler pulley with the idler pulley shaft.
Torque: 35 N·m (357 kgf·cm, 26 ft·lbf)

(b) Check that the pulley bracket moves smoothly.

43. INSTALL INJECTION OR SUPPLY PUMP ASSY (See page 11–58)

44. INSTALL INJECTION PUMP STAY NO.1 (See page 11–58)

45. INSTALL INJECTION PUMP DRIVE PULLEY (See page 11–58)

SST 09960–10010 (09962–01000, 09963–01000)

46. INSTALL WATER INLET (See Pub. No. RM1018E on page 16–50)

47. INSTALL OIL LEVEL GAGE GUIDE (See page 17–11)

48. INSTALL INTAKE MANIFOLD INSULATOR NO.1 (See page 14–108)

49. INSTALL INJECTION PIPE SUB–ASSY NO.1

NOTICE:

When assembling the pipes, perform the operation with the engine cold at room temperature.

(a) Remove the vinyl or plastic bag from the injector and the vinyl tape from the common rail.

(b) Install the 2 lower injection pipe clamps to the intake manifold.

(c) Temporarily install the injection pipe.

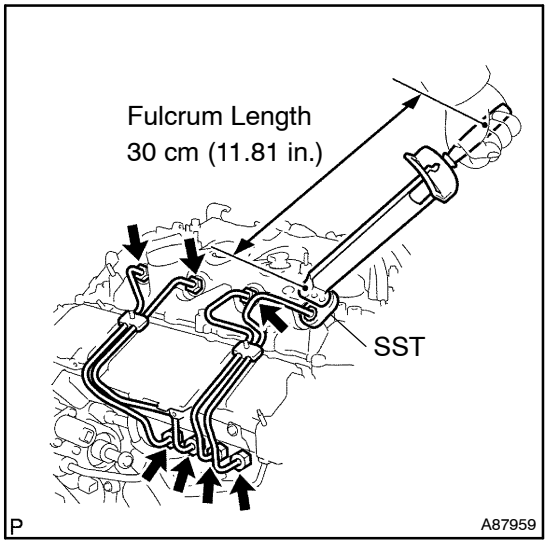

(d) Using SST, tighten the nut of the injection pipe on the common rail side.
SST 09023–12700
Torque:
31 N·m (316 kgf·cm, 23 ft·lbf) with SST
34 N·m (347 kgf·cm, 25 ft·lbf) without SST

HINT:
- Use a torque wrench with the fulcrum length of 30 cm (11.81 in.).
- After the injection pipe is reassembled, check that the used pipe has no deflection and is installed properly. If it has deflection or could not be installed properly, replace the used pipe with a new pipe.

(e) Using SST, tighten the nut of the injection pipe on the injector side.
SST 09023–12700
Torque:
For used pipe:
36 N·m (372 kgf·cm, 27 ft·lbf) with SST
40 N·m (408 kgf·cm, 30 ft·lbf) without SST
For new pipe:
31 N·m (316 kgf·cm, 23 ft·lbf) with SST
34 N·m (347 kgf·cm, 25 ft·lbf) without SST

HINT:
- Use a torque wrench with the fulcrum length of 30 cm (11.81 in.).
- After the injection pipe is reassembled, check that the used pipe has no deflection and is installed properly. If it has deflection or could not be installed properly, replace the used pipe with a new pipe.

(f) Install the 2 upper injection pipe clamps.

50. INSTALL INJECTION PIPE SUB–ASSY NO.2
SST 09023–12700

HINT:
Perform the same procedures as the injection pipe No. 1.

51. INSTALL INJECTION PIPE SUB–ASSY NO.3
SST 09023–12700

HINT:
Perform the same procedures as the injection pipe No. 1.

52. INSTALL INJECTION PIPE SUB–ASSY NO.4
SST 09023–12700

HINT:
Perform the same procedures as the injection pipe No. 1.

53. INSTALL FUEL PIPE NO.3 (See page 14–108)
SST 09023–12700

54. INSTALL FUEL INLET PIPE SUB–ASSY

NOTICE:

- **In case of replacing the water pump, the fuel inlet pipe must be replaced, too.**
- **When assembling the pipe, perform the operation with the engine cold at room temperature.**

(a) Temporarily install a new fuel inlet pipe.

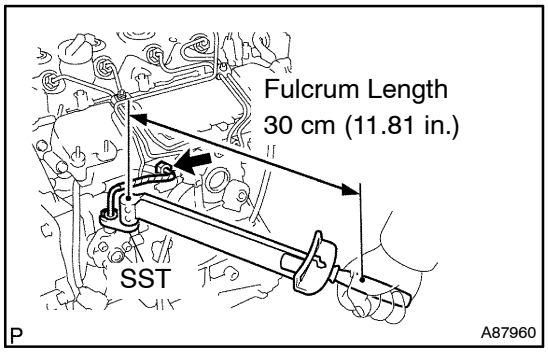

(b) Using SST, tighten the nut of the fuel inlet pipe on the common rail side.

SST 09023–12700

Torque:

31 N·m (316 kgf·cm, 23 ft·lbf) with SST

34 N·m (347 kgf·cm, 25 ft·lbf) without SST

HINT:

- Use a torque wrench with the fulcrum length of 30 cm (11.81 in.).
- After the inlet pipe is reassembled, check that the used pipe has no deflection and is installed properly. If it has deflection or could not be installed properly, replace the used pipe with a new pipe.

(c) Using SST, tighten the nut of the fuel inlet pipe on the injection pump side.

SST 09023–12700

Torque:

31 N·m (316 kgf·cm, 23 ft·lbf) with SST

34 N·m (347 kgf·cm, 25 ft·lbf) without SST

HINT:

- Use a torque wrench with the fulcrum length of 30 cm (11.81 in.).
- After the inlet pipe is reassembled, check that the used pipe has no deflection and is installed properly. If it has deflection or could not be installed properly, replace the used pipe with a new pipe.

55. SET NO. 1 CYLINDER TO TDC/COMPRESSION (See page 14–138)

SST 09960–10010 (09962–01000, 09963–01000)

56. INSTALL TIMING BELT (See page 14–138)

57. CHECK VALVE TIMING (See page 14–138)

58. INSTALL TIMING CHAIN COVER PLATE (See page 14–138)

59. INSTALL TRANSVERSE ENGINE ENGINE MOUNTING BRACKET (See page 14–138)

60. INSTALL TIMING BELT GUIDE (See page 14–138)

61. INSTALL TIMING BELT NO.1 COVER (See page 14–138)

62. INSTALL TIMING BELT NO.2 COVER (See page 14–138)

63. INSTALL IDLER PULLEY SUB–ASSY (See page 14–138)

64. INSTALL CRANKSHAFT PULLEY (See page 14–138)

SST 09213–54015 (09213–70020), 09330–00021

65. INSTALL ENGINE MOUNTING INSULATOR SUB–ASSY RH (See page 14–138)

66. **INSTALL POWER STEERING IDLE PULLEY BRACKET (See page 14–108)**
67. **ADJUST V (COOLER COMPRESSOR TO CRANKSHAFT PULLEY) BELT NO.1 (See Pub. No. RM1018E on page 14–269)**
68. **INSTALL INJECTOR DRIVER (See page 14–108)**
69. **INSTALL FRONT WHEEL RH**
    Torque: 103 N·m (1,050 kgf·cm, 76 ft·lbf)
70. **INSTALL ENGINE COVER SUB–ASSY NO.1 (See page 14–90)**
71. **ADD ENGINE COOLANT (See page 16–19)**
72. **CHECK FOR ENGINE COOLANT LEAKS (See page 16–15)**
73. **CHECK FOR FUEL LEAKS (See page 11–46)**

LUBRICATION SYSTEM (2AZ–FSE)

1700E–10

ON–VEHICLE INSPECTION

1. CHECK ENGINE OIL LEVEL

(a) After warm up the engine, then stop the engine and wait for 5 minutes,

(b) Check that the engine oil level is between the ”L” and ”F” marks on the oil level gage.

If low, check for leakage and add oil up to the full level mark.

NOTICE:

Do not fill with engine oil above the full level mark.

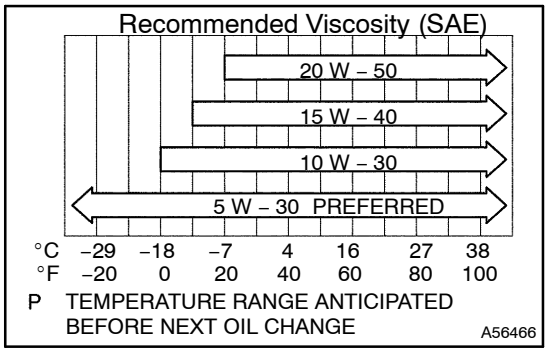

2. CHECK ENGINE OIL QUALITY

(a) Check the oil for deterioration, water intrusion.

If the quality is visibly poor, replace the engine oil.

Oil grade:

API grade ”SL” Energy–Conserving or ILSAC multi grade engine oil. Recommended viscosity is as shown in the illustration.

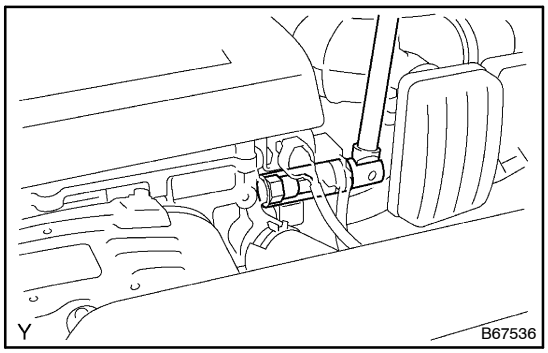

3. INSPECT OIL PRESSURE

(a) Disconnect the oil pressure switch connector.

(b) Using a deep socket wrench 24mm, remove the oil pressure switch.

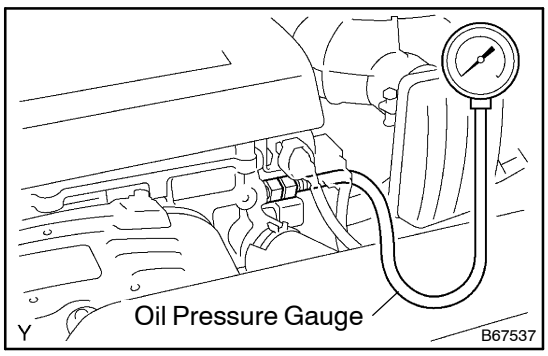

(c) Install the oil pressure gauge.

(d) Warm up the engine.

(e) Check the oil pressure.

Oil pressure:

Engine Condition	Oil Pressure
At idle	29 kPa (0.3 kgf/cm^2, 4.3 psi) or more
At 3,000 rpm	245 to 539 kPa (2.5 to 5.5 kgf/cm^2, 36 to 78 psi) or more

(f) Remove the oil pressure gauge.

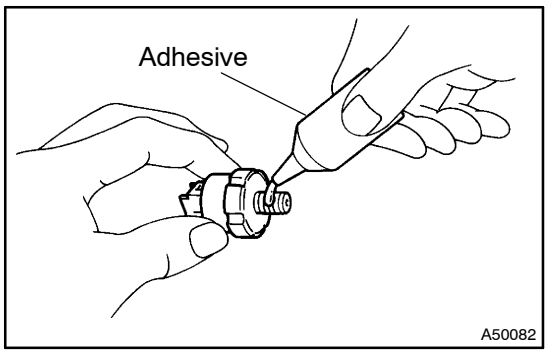

(g) Apply adhesive to 2 or 3 threads of the oil pressure switch.

Adhesive:

Part No. 08833–00080, THREE BOND 1344, LOCTITE 242 or equivalent

(h) Using a 24 mm deep socket wrench, install the oil pressure switch.

Torque: 15 N·m (153 kgf·cm, 11 ft·lbf)

NOTICE:

Do not start the engine within 1 hour of installation.

(i) Connect the oil pressure switch connector.
(j) Start the engine.
(k) Check for the engine oil leaks.

OIL PUMP ASSY (2AZ–FSE)

170IV–01

REPLACEMENT

1. DISCHARGE FUEL SYSTEM PRESSURE (See page 11–4)
2. REMOVE FRONT WHEEL RH
3. REMOVE RADIATOR SUPPORT OPENING COVER (See page 14–23)
4. REMOVE ENGINE ROOM COVER SIDE (See page 14–23)
5. REMOVE ENGINE UNDER COVER LH (See page 14–23)
6. REMOVE ENGINE UNDER COVER NO.4 RH (See page 14–23)
7. REMOVE ENGINE UNDER COVER RH (See page 14–23)
8. DRAIN ENGINE OIL (See page 17–6)
9. REMOVE ENGINE COVER SUB–ASSY NO.1 (See page 14–45)
10. REMOVE FUEL PRESSURE PULSATION DAMPER ASSY
11. DISCONNECT FUEL TUBE SUB–ASSY (See page 11–4)
12. SEPARATE FUEL PIPE SUB–ASSY NO.1 (See page 11–24)
    SST 09023–12900
13. REMOVE FUEL PUMP ASSY (See page 11–24)
14. REMOVE FAN AND GENERATOR V BELT (See page 14–5)
    SST 09249–63010
15. REMOVE GENERATOR ASSY (See page 19–8)
16. REMOVE EXHAUST PIPE ASSY FRONT (See page 15–2)
17. SEPARATE VANE PUMP ASSY (See page 14–45)
18. SEPARATE RETURN TUBE SUB–ASSY (See page 14–45)
19. SEPARATE COOLER REFRIGERANT SUCTION HOSE NO.1 (LHD STEERING POSITION TYPE) (See page 14–45)
20. REMOVE VANE PUMP OIL RESERVOIR ASSY (See page 14–45)
21. REMOVE OIL RESERVOIR BRACKET NO.1 (See page 14–45)
22. SEPARATE ENGINE WIRE (See page 14–45)
23. REMOVE COOLER BRACKET (LHD STEERING POSITION TYPE) (See page 14–45)
24. REMOVE ENGINE SERVICE COVER BRACKET RH (RHD STEERING POSITION TYPE) (See page 14–45)
25. REMOVE IGNITION COIL ASSY (See page 14–45)
26. REMOVE CYLINDER HEAD COVER SUB–ASSY (See page 14–45)
27. SET NO. 1 CYLINDER TO TDC/COMPRESSION (See page 14–45)
28. REMOVE ENGINE MOUNTING BRACKET NO.2 RH (See page 14–45)
29. REMOVE TRANSVERSE ENGINE ENGINE MOUNTING INSULATOR (See page 14–45)
30. REMOVE CRANKSHAFT PULLEY (See page 14–45)
    SST 09213–54015 (91651–60855), 09330–00021, 09950–50013 (09951–05010, 09952–05010, 09953–05020, 09954–05021)
31. REMOVE CHAIN TENSIONER ASSY NO.1 (See page 14–45)
32. REMOVE CRANKSHAFT POSITION SENSOR (See page 18–6)
33. REMOVE OIL PAN SUB–ASSY (See page 14–45)
    SST 09032–00100
34. REMOVE V–RIBBED BELT TENSIONER ASSY (See page 14–45)
35. REMOVE TIMING CHAIN OR BELT COVER SUB–ASSY (See page 14–45)
36. REMOVE CRANKSHAFT POSITION SENSOR PLATE NO.1
37. REMOVE CHAIN TENSIONER SLIPPER
38. REMOVE CHAIN VIBRATION DAMPER NO.1
39. REMOVE TIMING CHAIN GUIDE (See page 14–45)

40. REMOVE CHAIN SUB–ASSY
41. REMOVE CRANKSHAFT TIMING GEAR OR SPROCKET
42. REMOVE NO.2 CHAIN SUB–ASSY (See page 14–45)

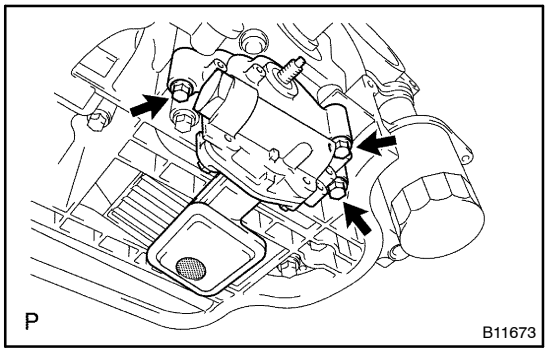

43. REMOVE OIL PUMP ASSY
(a) Remove the 3 bolts, oil pump and gasket.

44. INSTALL OIL PUMP ASSY
(a) Install a new gasket and oil pump with 3 bolts.
Torque: 19 N·m (195 kgf·cm, 15 ft·lbf)
45. INSTALL NO.2 CHAIN SUB–ASSY (See page 14–45)
46. INSTALL CRANKSHAFT TIMING GEAR OR SPROCKET
47. SET NO. 1 CYLINDER TO TDC/COMPRESSION (See page 14–45)
48. INSTALL CHAIN VIBRATION DAMPER NO.1
Torque: 9.0 N·m (92 kgf·cm, 80 in.·lbf)
49. INSTALL CHAIN SUB–ASSY (See page 14–45)
50. INSTALL TIMING CHAIN GUIDE
Torque: 9.0 N·m (92 kgf·cm, 80 in.·lbf)
51. INSTALL CHAIN TENSIONER SLIPPER (See page 14–45)
52. INSTALL CRANKSHAFT POSITION SENSOR PLATE NO.1 (See page 14–45)
53. INSTALL TIMING CHAIN OR BELT COVER SUB–ASSY (See page 14–45)
54. INSTALL V–RIBBED BELT TENSIONER ASSY (See page 14–45)
55. INSTALL OIL PAN SUB–ASSY (See page 14–45)
56. INSTALL CRANKSHAFT POSITION SENSOR (See page 18–6)
57. INSTALL CRANKSHAFT PULLEY (See page 14–45)
SST 09213–54015 (91651–60855), 09330–00021
58. INSTALL CHAIN TENSIONER ASSY NO.1
59. INSTALL TRANSVERSE ENGINE ENGINE MOUNTING INSULATOR
Torque: 52 N·m (530 kgf·cm, 38 ft·lbf)
60. INSTALL ENGINE MOUNTING BRACKET NO.2 RH (See page 14–45)
61. INSTALL CYLINDER HEAD COVER SUB–ASSY (See page 14–45)
62. INSTALL COOLER BRACKET (LHD STEERING POSITION TYPE)
Torque: 9.0 N·m (92 kgf·cm, 80 in.·lbf)
63. INSTALL ENGINE SERVICE COVER BRACKET RH (RHD STEERING POSITION TYPE)
Torque: 9.0 N·m (92 kgf·cm, 80 in.·lbf)
64. INSTALL ENGINE WIRE
Torque: 7.0 N·m (71 kgf·cm, 62 in.·lbf)
65. INSTALL OIL RESERVOIR BRACKET NO.1
Torque: 8.0 N·m (82 kgf·cm, 71 in.·lbf)
66. INSTALL COOLER REFRIGERANT SUCTION HOSE NO.1 (LHD STEERING POSITION TYPE)
Torque: 9.0 N·m (92 kgf·cm, 80 in.·lbf)

67. INSTALL RETURN TUBE SUB–ASSY
Torque: 8.0 N·m (82 kgf·cm, 71 in.·lbf)
68. INSTALL IGNITION COIL ASSY
Torque: 9.0 N·m (92 kgf·cm, 80 in.·lbf)
69. INSTALL VANE PUMP ASSY
Torque: 37 N·m (377 kgf·cm, 27 ft·lbf)
70. INSTALL EXHAUST PIPE ASSY FRONT (See page 15–2)
71. INSTALL GENERATOR ASSY (See page 19–8)
72. INSTALL FAN AND GENERATOR V BELT (See page 14–5)
SST 09249–63010
73. INSTALL FUEL PUMP ASSY (See page 11–24)
74. INSTALL FUEL PIPE SUB–ASSY NO.1 (See page 11–24)
SST 09023–12900
75. INSTALL FUEL TUBE SUB–ASSY (See page 11–4)
76. INSTALL FUEL PRESSURE PULSATION DAMPER ASSY (See page 11–24)
77. ADD ENGINE OIL (See page 17–6)
78. CHECK FOR ENGINE OIL LEAKS
79. CHECK FUEL LEAK
80. INSTALL ENGINE COVER SUB–ASSY NO.1
Torque: 9.0 N·m (92 kgf·cm, 80 in.·lbf)
81. INSTALL FRONT WHEEL RH
Torque: 103 N·m (1,050 kgf·cm, 76 ft·lbf)
82. ADD POWER STEERING FLUID (See Pub. No. RM1018E on page 51–4)
83. BLEED POWER STEERING FLUID (See Pub. No. RM1018E on page 51–4)
84. CHECK POWER STEERING FULUID LEVEL IN RESERVER (See Pub. No. RM1018E on page 51–4)

OIL FILTER SUB–ASSY (2AZ–FSE)

170IW–01

REPLACEMENT

CAUTION:

- **Prolonged and repeated contact with mineral oil will result in the removal of natural fats from the skin, leading to dryness, irritation and dermatitis. In addition, used engine oil contains potentially harmful contaminants which may cause skin cancer.**
- **Exercise caution in order to minimize the length and frequency of contact of your skin to used oil. Wear protective clothing and gloves. Wash your skin thoroughly with soap and water, or use water–less hand cleaner to remove any used engine oil. Do not use gasoline, thinners or solvents.**
- **In order to preserve the environment, used oil and used oil filter must be disposed of only at designated disposal sites.**

1. DRAIN ENGINE OIL

(a) Remove the oil filler cap

(b) Remove the drain plug from the oil pan.

(c) Install a new gasket and drain plug after draining engine oil.
Torque: 25 N·m (250 kgf·cm, 18 ft·lbf)

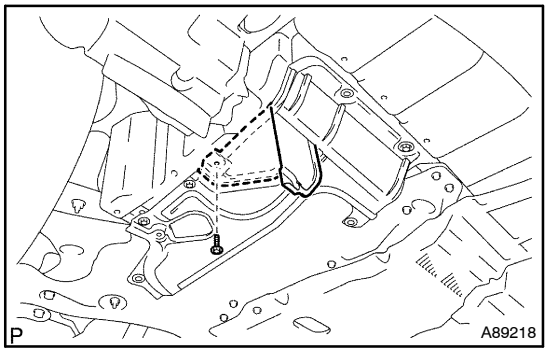

2. REMOVE OIL FILTER SUB–ASSY

(a) Remove the bolt, then pull out the engine under cover No.4.

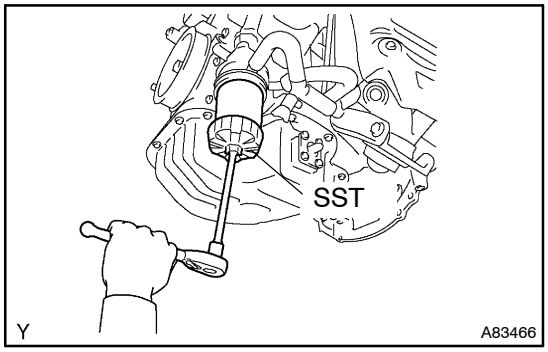

(b) Using SST, remove the oil filter.
SST 09228–06501

3. INSTALL OIL FILTER SUB–ASSY

(a) Check and clean the oil filter installation surface.

(b) Apply clean engine oil to the gasket of a new oil filter.

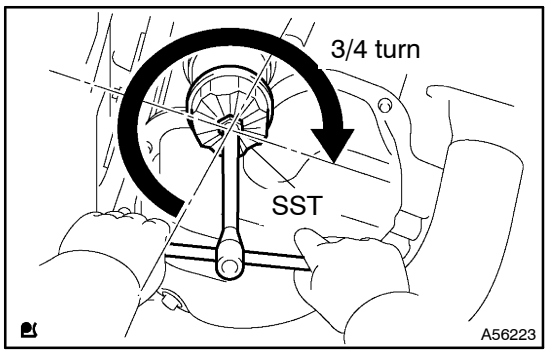

(c) Lightly screw the oil filter into place, then tighten it until the gasket contacts the seat.

(d) Using SST, tighten it by an additional 3/4 turn.
SST 09228–06501
Torque: 17.5 N·m (178 kgf·cm, 13 ft·lbf)

4. ADD ENGINE OIL

(a) Fill with fresh engine oil.

Capacity:

Condition	Capacity	Quality
Drain and refill w/ oil filter change	3.8 liters (4.0 US qts, 3.3 lmp.qts)	See Page 17–1
Drain and refill w/o oil filter change	3.6 liters (3.8 US qts, 3.2 lmp.qts)	
Dry fill	4.5 liters (4.8 US qts, 4.0 lmp.qts)	

(b) Install the oil filler cap.

5. CHECK FOR ENGINE OIL LEAKS

OIL COOLER ASSY (2AZ–FSE)

170IX–01

REPLACEMENT

1. **REMOVE ENGINE UNDER COVER NO.4 RH (See page 14–23)**
2. **REMOVE ENGINE UNDER COVER RH (See page 14–23)**
3. **DRAIN ENGINE OIL (See page 17–6)**
4. **DRAIN COOLANT (See page 16–7)**
5. **REMOVE OIL FILTER SUB–ASSY (See page 17–6)**
   SST 09228–06501

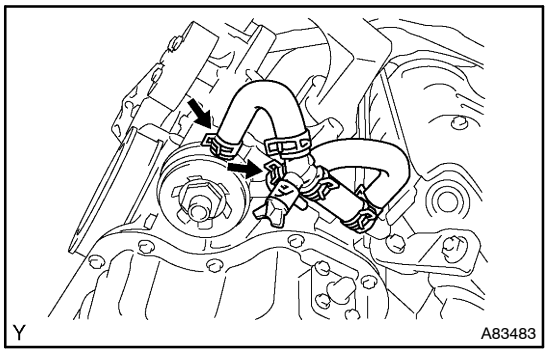

6. **REMOVE OIL COOLER ASSY**
(a) Disconnect the 2 oil cooler hoses from the oil cooler.

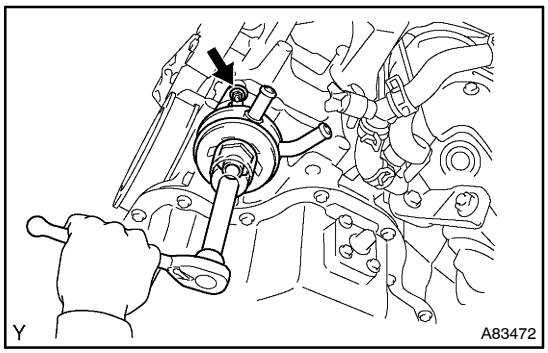

(b) Using the 30 mm socket wrench, remove the oil cooler union bolt.
(c) Remove the nut, then remove the oil cooler.
(d) Remove the O–ring from the oil cooler.

7. **INSTALL OIL COOLER ASSY**
(a) Install a new O–ring to the oil cooler.
(b) Install the oil cooler with a nut.
Torque: 9.0 N·m (92 kgf·cm, 80 in.·lbf)
(c) Using the 30 mm socket wrench, install the oil cooler union bolt to the oil cooler.
Torque: 79 N·m (800 kgf·cm, 58 ft·lbf)
(d) Connect the 2 oil cooler hoses.
8. **INSTALL OIL FILTER SUB–ASSY (See page 17–6)**
   SST 09228–06501
9. **ADD ENGINE OIL (See page 17–6)**
10. **ADD COOLANT (See page 16–7)**
11. **CHECK FOR ENGINE OIL LEAKS**
12. **CHECK FOR ENGINE COOLANT LEAKS (See page 16–1)**

LUBRICATION SYSTEM (1CD–FTV)(From September, 2003)

170IY–01

ON–VEHICLE INSPECTION

1. CHECK ENGINE OIL LEVEL

(a) Warm up the engine. Stop the engine, then wait for 5 minutes.

(b) Check that the engine oil level is between the 2 marks on the oil level gage.

If low, check for leakage and add oil up to the upper mark.

NOTICE:

Do not fill with engine oil above the upper mark.

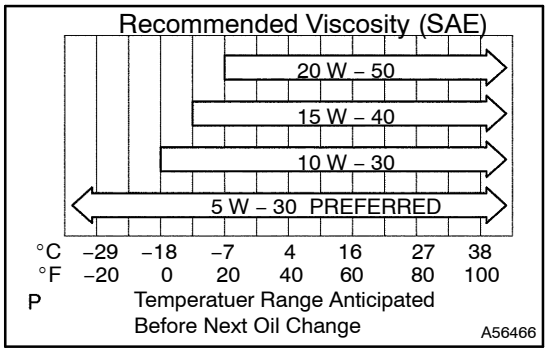

2. CHECK ENGINE OIL QUALITY

(a) Check the oil for deterioration, water intrusion, discoloring or thinning.

If the quality is visibly poor, replace the oil.

Oil grade:

Use ACEA B1, API grade CF – 4, CF or G–DLD–1. (You may also use API CE or CD.)

SAE 5W – 30 is the best choice for your vehicle in terms of good fuel economy and good starting in cold weather.

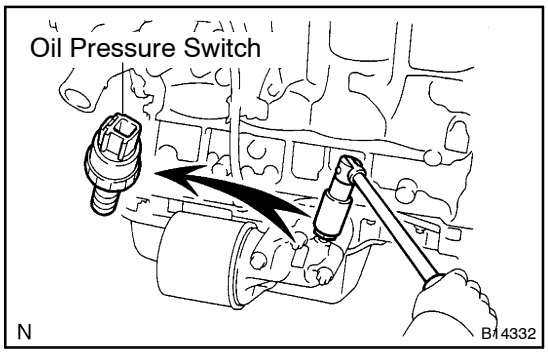

3. REMOVE OIL PRESSURE SWITCH ASSY

(a) Disconnect the oil pressure switch connector.

(b) Using a deep socket wrench 24mm, remove the oil pressure switch.

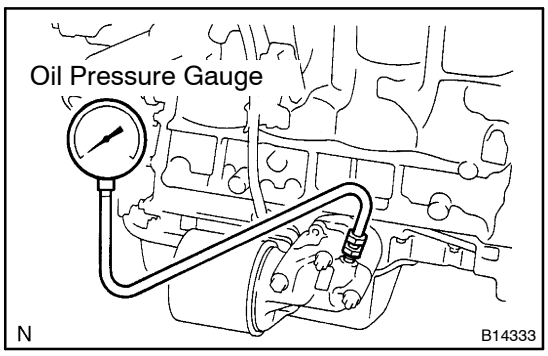

4. INSTALL OIL PRESSURE GAUGE

(a) Install the oil pressure gauge.

5. WARM UP ENGINE

6. CHECK OIL PRESSURE

Oil pressure:

At idle	29 kPa (0.3 kgf/cm^2, 4.3 psi) or more
At 4,500 rpm	245 to 588 kPa (2.5 to 6.0 kgf/cm^2, 36 to 85 psi) or more

7. REMOVE OIL PRESSURE GAUGE

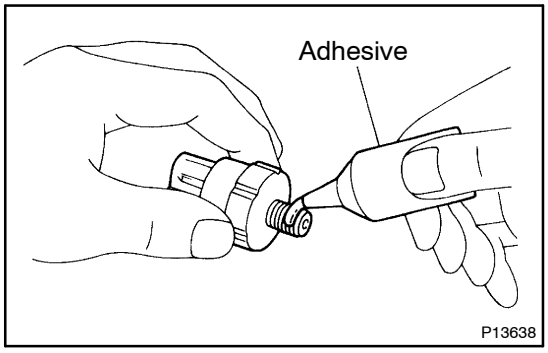

8. INSTALL OIL PRESSURE SWITCH ASSY

(a) Apply adhesive to the 2 or 3 threads of the oil pressure switch.

Adhesive:
Part No. 08833 – 00080, THREE BOND 1344, LOCTITE 242 or equivalent

(b) Using a deep socket wrench 24mm, install the oil pressure switch.

Torque: 15 N·m (153 kgf·cm, 11 ft·lbf)

NOTICE:

Do not start the engine within 1 hour after the installation.

(c) Connect the oil pressure switch connector.

9. START ENGINE AND CHECK FOR LEAKS

OIL PUMP ASSY (1CD–FTV)(From September, 2003)

170IZ–01

REPLACEMENT

1. DRAIN ENGINE OIL (See Pub. No. RM1018E on page 17–30)
2. REMOVE RADIATOR SUPPORT OPENING COVER
3. REMOVE ENGINE ROOM COVER SIDE
4. REMOVE FRONT WHEEL RH
5. REMOVE ENGINE UNDER COVER SUB–ASSY NO.1
6. REMOVE ENGINE UNDER COVER RH
7. REMOVE ENGINE COVER SUB–ASSY NO.1 (See page 14–90)
8. REMOVE INJECTOR DRIVER (See page 14–108)
9. REMOVE V (COOLER COMPRESSOR TO CRANKSHAFT PULLEY) BELT NO.1 (See Pub. No. RM1018E on page 14–269)
10. REMOVE GENERATOR V BELT (See Pub. No. RM1018E on page 14–269)
11. SEPARATE POWER STEERING IDLE PULLEY BRACKET (See page 14–138)
12. DISCONNECT ENGINE WIRE (See page 14–138)
13. DISCONNECT VACUUM HOSE (See page 14–108)
14. REMOVE ENGINE MOUNTING INSULATOR SUB–ASSY RH (See page 14–138)
15. REMOVE CRANKSHAFT PULLEY (See page 14–138)
    SST 09213–54015 (09213–70020), 09330–00021, 09950–50013 (09951–05010, 09952–05010, 09953–05020, 09954–05031)
16. REMOVE IDLER PULLEY SUB–ASSY (See page 14–138)
17. REMOVE TIMING BELT NO.2 COVER (See page 14–138)
18. REMOVE TIMING BELT NO.1 COVER (See page 14–138)
19. REMOVE TIMING BELT GUIDE
20. REMOVE TRANSVERSE ENGINE ENGINE MOUNTING BRACKET (See page 14–138)
21. SET NO. 1 CYLINDER TO TDC/COMPRESSION (See page 14–138)
22. REMOVE TIMING CHAIN COVER PLATE (See page 14–138)
23. REMOVE TIMING BELT (See page 14–138)

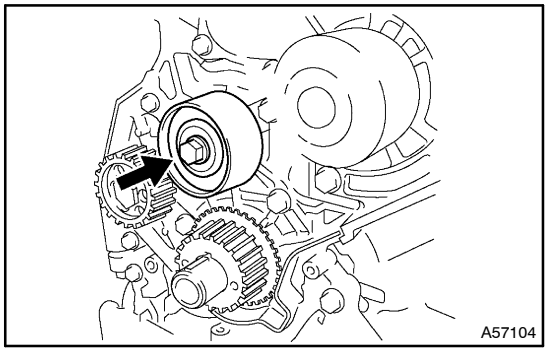

24. REMOVE TIMING BELT IDLER SUB–ASSY NO.2

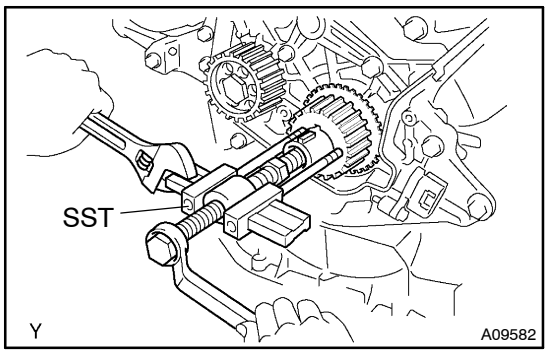

25. REMOVE CRANKSHAFT TIMING PULLEY

(a) If the timing pulley cannot be removed by hand, use SST to remove the pulley.
    SST 09950–50013 (09951–05010, 09952–05010, 09953–05010, 09953–05020, 09954–05021)

26. REMOVE FLOOR PANEL BRACE FRONT (See page 15–6)
27. REMOVE EXHAUST PIPE ASSY FRONT (See page 15–6)
28. REMOVE GENERATOR ASSY (See Pub. No. RM1018E on page 19–29)
29. REMOVE TIMING BELT IDLER SUB–ASSY NO.1 (See page 16–21)
30. REMOVE V–RIBBED BELT TENSIONER ASSY (See page 14–108)

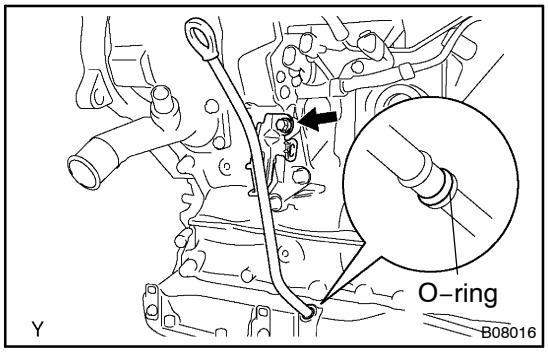

31. REMOVE OIL LEVEL GAGE GUIDE
(a) Remove the bolt which secures the oil level gage guide to the cylinder block.
(b) Pull out the oil level gage guide together with the oil level gage from the No. 1 oil pan.
(c) Remove the O–ring from the oil level gage guide.

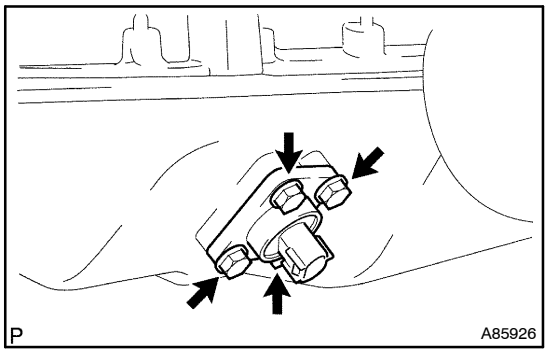

32. REMOVE ENGINE OIL LEVEL SENSOR
(a) Remove the 4 bolts and level sensor.
NOTICE:
Be careful not to drop the oil level sensor when removing.

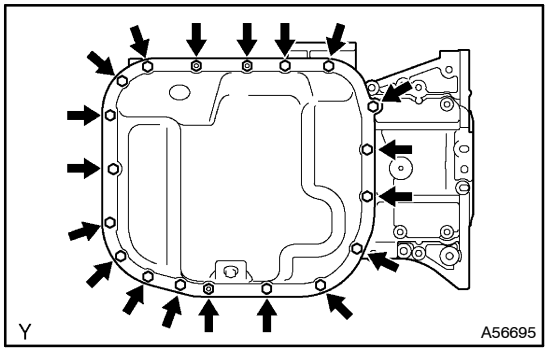

33. REMOVE OIL PAN SUB–ASSY NO.2
(a) Remove the 16 bolts and 3 nuts.

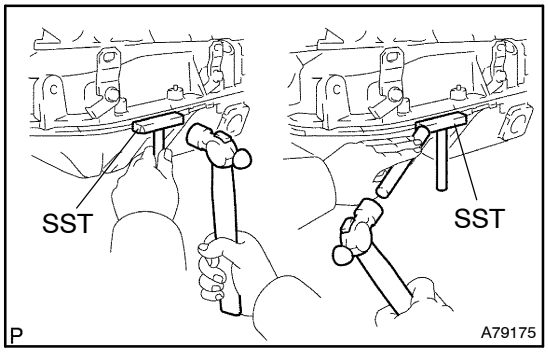

(b) Insert the blade of SST between the No. 1 and No. 2 oil pans, then cut off the applied sealer and remove the No. 2 oil pan.
SST 09032–00100
NOTICE:
Be careful not to damage the No. 1 and No. 2 oil pans.

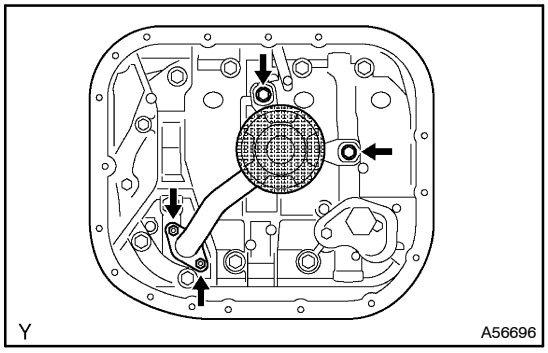

34. REMOVE OIL STRAINER SUB–ASSY

(a) Remove the 2 bolts and 2 nuts, then remove the oil strainer and gasket.

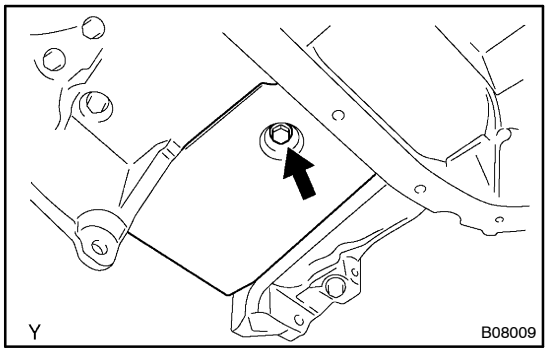

35. REMOVE OIL PAN INSULATOR

(a) Remove the bolt and oil pan insulator.

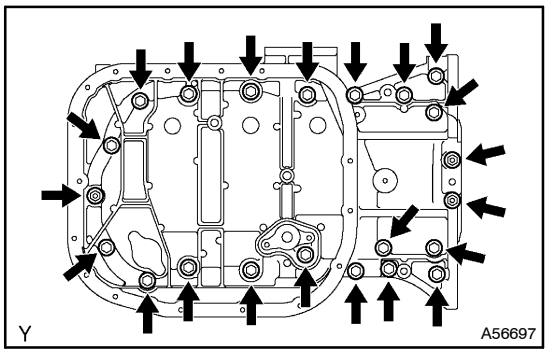

36. REMOVE OIL PAN SUB–ASSY

(a) Remove the 19 bolts and 3 nuts.

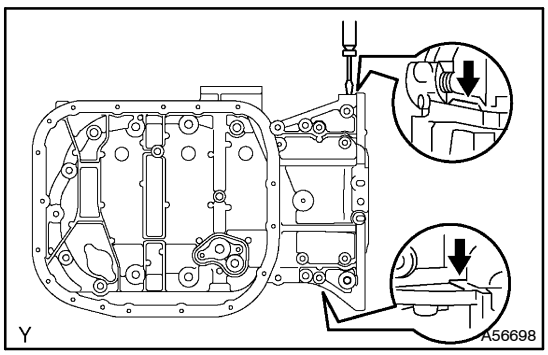

(b) Using a screwdriver, remove the oil pan by prying between the cylinder block and No. 1 oil pan.

NOTICE:

Be careful not to damage the cylinder block and No. 1 oil pan.

37. REMOVE CRANKSHAFT POSITION SENSOR (See page 14–138)

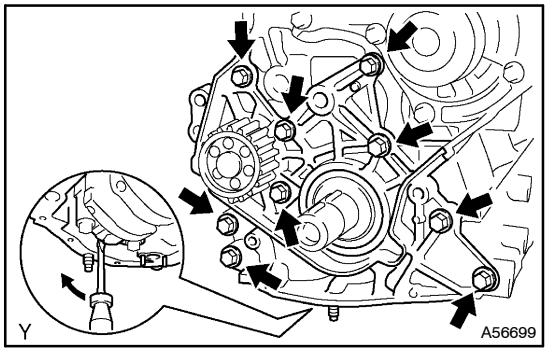

38. REMOVE OIL PUMP ASSY

(a) Remove the 9 bolts.

(b) Remove the oil pump by prying between the oil pump and main bearing cap using a screwdriver.

(c) Remove the gasket.

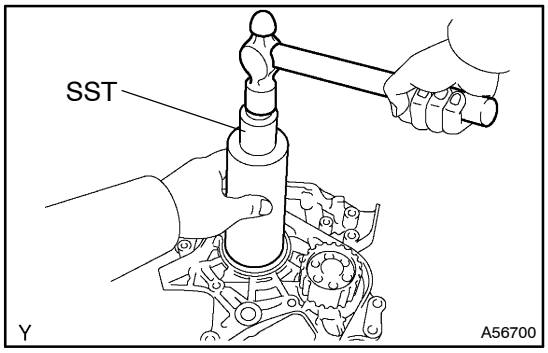

39. INSTALL CRANKSHAFT SEAL

(a) Using SST and a hammer, tap in a new oil seal until its surface is flush with the oil pump edge.

SST 09316–60011 (09316–00011, 09316–00021)

40. INSTALL OIL PUMP ASSY

(a) Remove any old packing (FIPG). Be careful not to drop any oil on the contact surfaces of the oil pump and cylinder block.

(1) Using a razor blade and gasket scraper, remove all the old packing from the gasket surfaces and sealing groove.

(2) Thoroughly clean all components to remove all the loose material.

(3) Using a non–residue solvent, clean both the sealing surfaces.

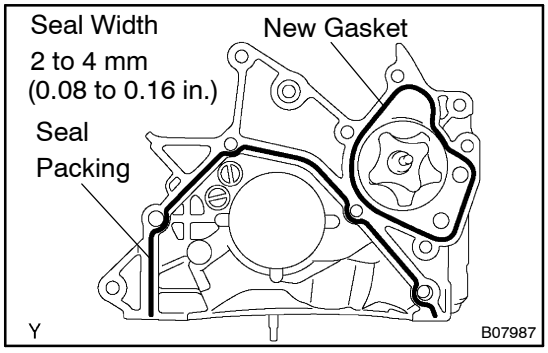

(b) Apply seal packing to the oil pump as shown in the illustration.

Seal packing: Part No. 08826–00080 or equivalent

NOTICE:

Avoid applying an excessive amount to the surface.

(1) Install a nozzle of which opening is cut to 2 to 4 mm (0.08 to 0.16 in.).

(2) The parts must be set within 3 minutes and must be assembled within 15 minutes after applying seal packing. Otherwise the material must be removed and reapplied.

(3) Immediately remove the nozzle from the tube, then reinstall the cap.

(c) Install a new gasket to the oil pump.

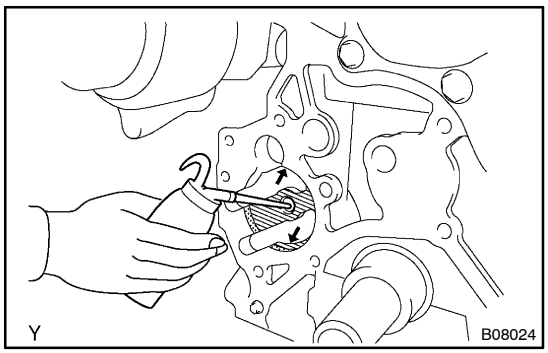

(d) Pour 0.5 cm^3 (0.03 cu in.) or more of engine oil into the bushing of the cylinder block.

(e) Apply engine oil to the cylinder block side which contacts the oil pump driven rotor.

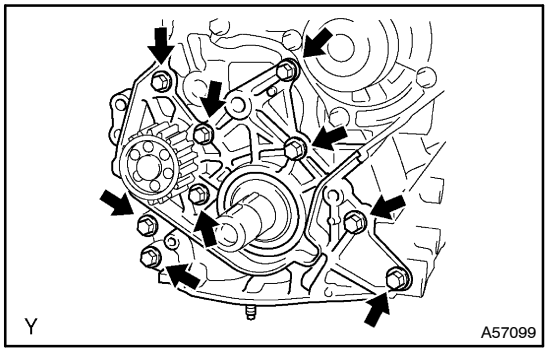

(f) Install the oil pump with the 9 bolts.
Torque: 31 N·m (320 kgf·cm, 23 ft·lbf)

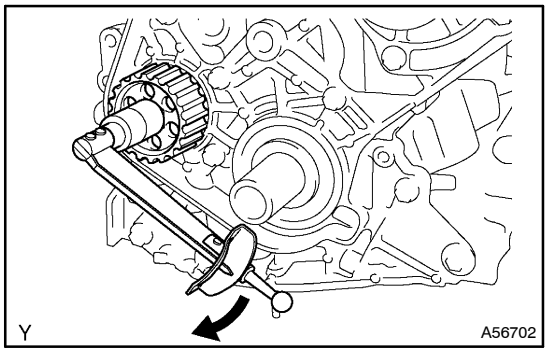

(g) Measure the oil pump rotating torque.
(1) Check that the pump rotates smoothly without making a noise.
(2) Using a torque wrench, check the pump rotating torque.
Rotating torque: 3.0 N·m (31 kgf·cm, 27 in.·lbf) or less

41. INSTALL CRANKSHAFT POSITION SENSOR (See page 14–138)

42. INSTALL OIL PAN SUB–ASSY

(a) Remove any old packing (FIPG). Be careful not to drop any oil on the contact surfaces of the No. 1 oil pan, cylinder block, oil pump and rear oil seal retainer.
(1) Using a razor blade and gasket scraper, remove all the old packing from the gasket surfaces.
(2) Thoroughly clean all components to remove all the loose material.
(3) Using a non–residue solvent, clean both the sealing surfaces.

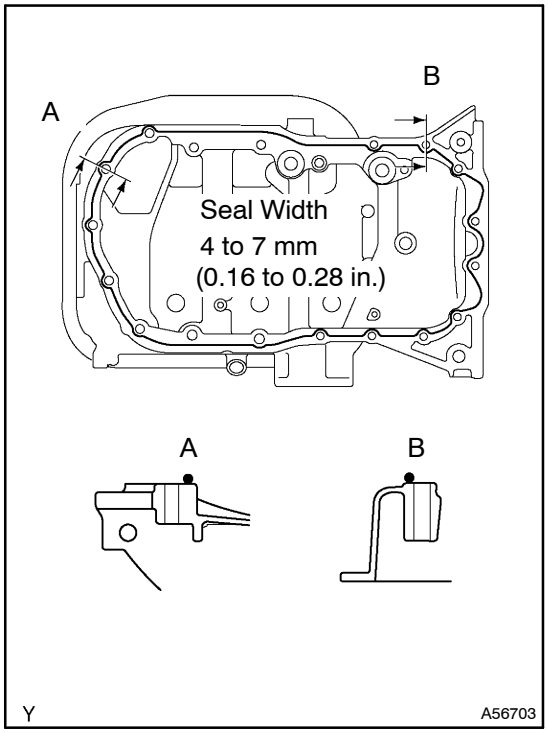

(b) Apply seal packing to the No. 1 oil pan as shown in the illustration.

Seal packing: Part No. 08826–00080 or equivalent

(1) Install a nozzle of which opening is cut to 4 to 7 mm (0.16 to 0.28 in.).

(2) The parts must be set within 3 minutes and must be assembled within 15 minutes after applying seal packing. Otherwise the material must be removed and reapplied.

(3) Immediately remove the nozzle from the tube, then reinstall the cap.

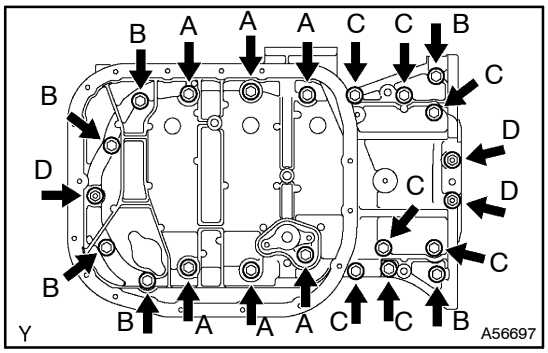

(c) Install the oil pan with the 19 bolts and 3 nuts.

Torque:
42 N·m (428 kgf·cm, 31 ft·lbf) for bolt A
21 N·m (209 kgf·cm, 15 ft·lbf) for bolt B
11 N·m (112 kgf·cm, 8 ft·lbf) for bolt C
11 N·m (112 kgf·cm, 8 ft·lbf) for nut D

43. INSTALL OIL PAN INSULATOR

(a) Install the oil pan insulator with the bolt.
Torque: 7.5 N·m (76 kgf·cm, 66 in.·lbf)

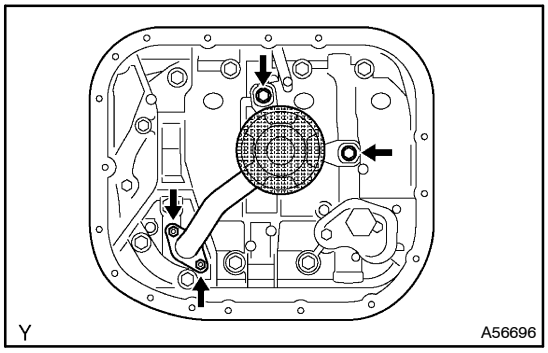

44. INSTALL OIL STRAINER SUB–ASSY

(a) Install a new gasket and the oil strainer with the 2 bolts and 2 nuts.

Torque:
21 N·m (209 kgf·cm, 15 ft·lbf) for bolt
13 N·m (135 kgf·cm, 10 ft·lbf) for nut

45. INSTALL OIL PAN SUB–ASSY NO.2

(a) Remove any old packing (FIPG). Be careful not to drop any oil on the contact surfaces of the No. 1 and No. 2 oil pans.

(1) Using a razor blade and gasket scraper, remove all the old packing from the gasket surfaces.

(2) Thoroughly clean all components to remove all the loose material.

(3) Using a non–residue solvent, clean both the sealing surfaces.

NOTICE:
Do not use a solvent. It will affect the painted surfaces.

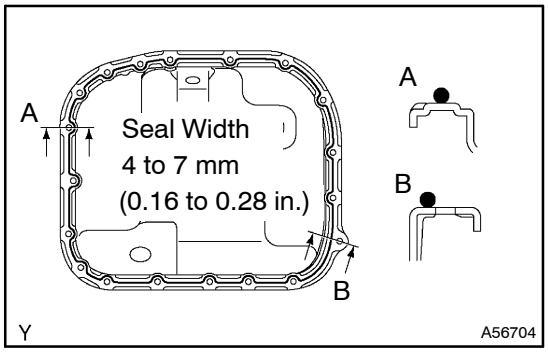

(b) Apply seal packing to the oil pan as shown in the illustration.
Seal packing: Part No. 08826–00080 or equivalent
(1) Install a nozzle of which opening is cut to 4 to 7 mm (0.16 to 0.28 in.).
(2) The parts must be set within 3 minutes and must be assembled within 15 minutes after applying seal packing. Otherwise the material must be removed and reapplied.
(3) Immediately remove the nozzle from the tube, then reinstall the cap.

(c) Install the oil pan with the 17 bolts and 2 nuts. Tighten the bolts and nuts uniformly in several steps.
Torque: 12 N·m (119 kgf·cm, 9 ft·lbf)

46. INSTALL ENGINE OIL LEVEL SENSOR
Torque: 7.0 N·m (71 kgf·cm, 62 in.·lbf)

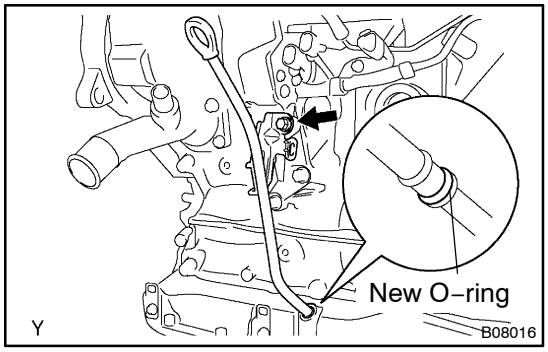

47. INSTALL OIL LEVEL GAGE GUIDE
(a) Install a new O–ring to the oil level gage guide.
(b) Apply engine oil to the O–ring.
(c) Push the oil level gage guide end into the guide hole of the No. 1 oil pan.
(d) Install the oil level gage guide with the bolt.
Torque: 18 N·m (184 kgf·cm, 13 ft·lbf)
(e) Apply engine oil to the O–ring on the oil level gage.
(f) Install the oil level gage.

48. INSTALL V–RIBBED BELT TENSIONER ASSY (See page 14–138)
49. INSTALL TIMING BELT IDLER SUB–ASSY NO.1 (See page 16–21)
50. INSTALL GENERATOR ASSY (See Pub. No. RM1018E on page 19–29)
51. INSTALL EXHAUST PIPE ASSY FRONT (See page 15–6)
52. INSTALL FLOOR PANEL BRACE FRONT (See page 15–6)

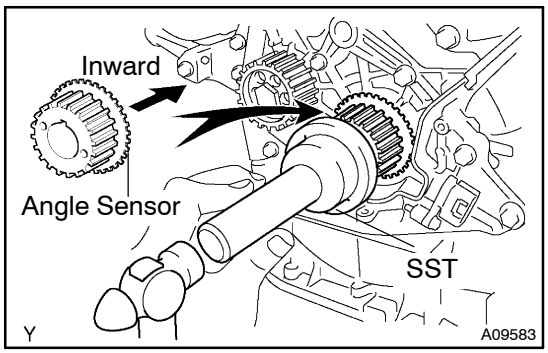

53. INSTALL CRANKSHAFT TIMING PULLEY
(a) Align the keyway of the timing pulley with the key located on the camshaft, then slide the pulley into place.
(b) Using SST and a hammer, tap in the timing pulley with the angle sensor facing inward.
SST 09223–46011

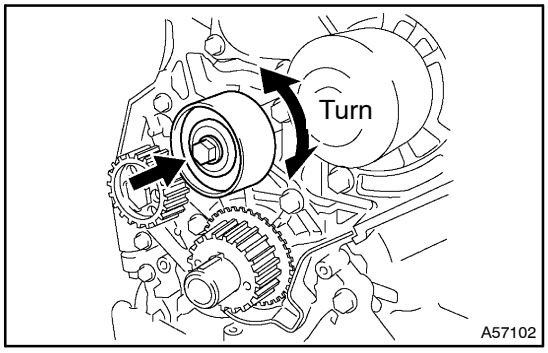

54. INSTALL TIMING BELT IDLER SUB–ASSY NO.2

(a) Install the idler pulley with bolt.
Torque: 47 N·m (475 kgf·cm, 34 ft·lbf)

(b) Check that the idler pulley moves smoothly.

55. SET NO. 1 CYLINDER TO TDC/COMPRESSION (See page 14–138)
SST 09960–10010 (09962–01000, 09963–01000)

56. INSTALL TIMING BELT (See page 14–138)

57. CHECK VALVE TIMING (See page 14–138)

58. INSTALL TIMING CHAIN COVER PLATE (See page 14–138)

59. INSTALL TRANSVERSE ENGINE ENGINE MOUNTING BRACKET (See page 14–138)

60. INSTALL TIMING BELT GUIDE (See page 14–138)

61. INSTALL TIMING BELT NO.1 COVER (See page 14–138)

62. INSTALL TIMING BELT NO.2 COVER (See page 14–138)

63. INSTALL IDLER PULLEY SUB–ASSY (See page 14–138)

64. INSTALL CRANKSHAFT PULLEY (See page 14–138)
SST 09213–54015 (09213–70020), 09330–00021

65. INSTALL ENGINE MOUNTING INSULATOR SUB–ASSY RH (See page 14–138)

66. INSTALL POWER STEERING IDLE PULLEY BRACKET (See page 14–108)

67. ADJUST V (COOLER COMPRESSOR TO CRANKSHAFT PULLEY) BELT NO.1 (See Pub. No. RM1018E on page 14–269)

68. INSTALL INJECTOR DRIVER (See page 14–108)

69. INSTALL ENGINE COVER SUB–ASSY NO.1 (See page 14–90)

70. INSTALL FRONT WHEEL RH
Torque: 103 N·m (1,050 kgf·cm, 76 ft·lbf)

71. ADD ENGINE OIL (See Pub. No. RM1018E on page 17–30)

72. CHECK FOR ENGINE OIL LEAKS

IGNITION SYSTEM (2AZ–FSE)

180AY–01

ON–VEHICLE INSPECTION

NOTICE:

"Cold" and "Hot" in this section mean temperature of the coils themselves. "Cold" is from –10°C (14°F) to 50°C (122°F) and "Hot" is from 50°C (122°F) to 100°C (212°F).

1. INSPECT IGNITION COIL AND SPARK TEST

(a) Check for DTCs (see page 05–19).

NOTICE:

If a DTC is present, perform troubleshooting in accordance with a procedure for that DTC.

(b) Check that spark occurs.

(1) Remove the engine cover No. 1 (see page 10–8).

(2) Remove the ignition coils.

Torque: 9.0 N·m (92 kgf·cm, 80 in.·lbf)

(3) Using a 16mm (0.63 in.) plug wrench, remove the spark plugs.

Torque: 19 N·m (194 kgf·cm, 14 ft·lbf)

(4) Install the spark plugs to each ignition coil, then connect the ignition coil connectors.

(5) Disconnect the 4 fuel injector connectors.

(6) Ground the spark plugs.

(7) Check that spark occurs at each spark plug while engine is being cranked.

NOTICE:

- **Be sure to ground the spark plug when checking.**
- **Replace the ignition coil if any physical impact is felt.**
- **Do not crank the engine for more than 2 seconds.**

If the sparks do not occur, do the following test.

1	SPARK TEST

NG

2	CHECK CONNECTION OF IGNITION COIL CONNECTOR

OK → CONNECT SECURELY

NG

3	REPLACE IGNITION COIL ASSY

(a) Replace the normal ignition coil, then perform spark test.

OK → REPLACE IGNITION COIL ASSY

NG

4	INSPECT IGNITION COIL ASSY (POWER SUPPLY)

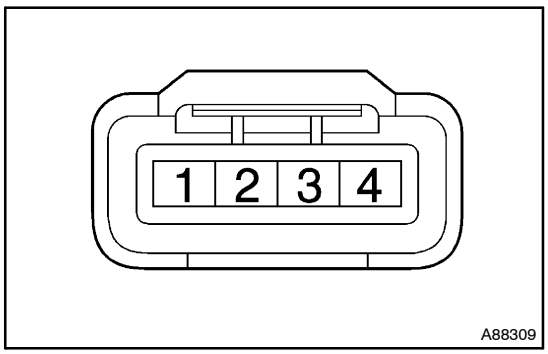

(a) Disconnect the ignition coil connector.
(b) Turn the ignition switch to ON.
(c) Using a voltmeter, measure the voltage between the terminals of the wire harness side and the body ground.

Standard:

Tester Connection	Specified Condition
1 (+B) – 4 (GND)	9.0 to 14 V

NG → **CHECK HARNESS AND CONNECTOR (IGNITION COIL ASSY – IGNITION OR START SWITCH ASSY)**

OK

5	INSPECT CAMSHAFT POSITION SENSOR (See page 18–3)

NG → **REPLACE CAMSHAFT POSITION (See page 18–5)**

OK

6	INSPECT CRANKSHAFT POSITION SENSOR (See page 18–3)

NG → **REPLACE CRANKSHAFT POSITION SENSOR (See page 18–6)**

OK

7	INSPECT ECM (IGT SIGNAL) (See page 05–12)

NG → **REPLACE ECM (See 10–29)**

OK

REPAIR OR REPLACE HARNESS AND CONNECTOR (IGNITION COIL ASSY – ECM)

INSPECTION

1. INSPECT SPARK PLUG

NOTICE:

- **Do not use a wire brush for cleaning.**
- **Do not try to adjust the electrode gap of a used spark plug.**

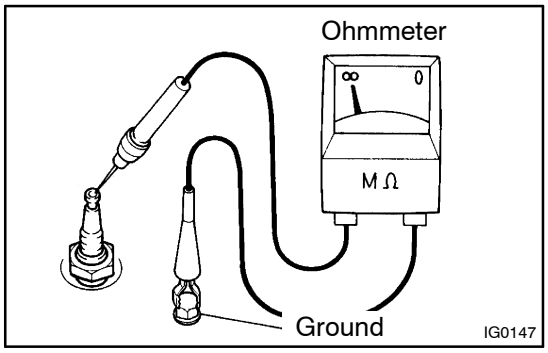

(a) Inspect the electrode.

(1) Using an ohmmeter, measure the insulation resistance.

Standard: 10 MΩ or more

If the resistance is less than the specified value, check the spark plug electrode gap.

HINT:

If the ohmmeter is not available, do the following simple inspection instead.

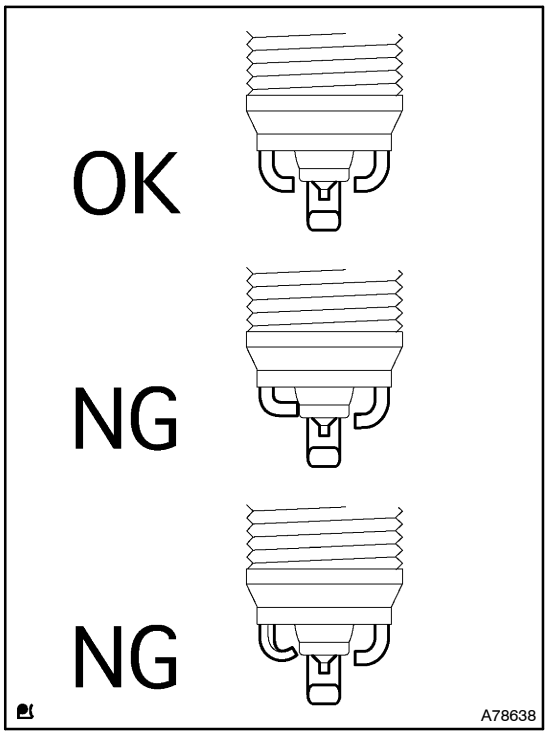

(b) Alternative inspection method:

(1) Quickly accelerate the engine speed up to 4,000 rpm 5 times.

(2) Remove the spark plug.

(3) Visually check the spark plug.

If a kink or twist as shown in the illustration on the left is found on the spark plug, replace it with a new one.

(4) If the electrode is dry...OK.

(5) If the electrode is wet...Check the spark plug for any damage on its thread and insulator.

(6) Reinstall the spark plug.

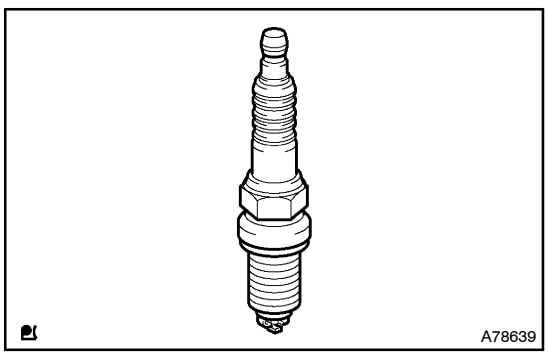

(c) Check the spark plug for any damage on its thread and insulator.

If there is damage, replace the spark plug.

Recommended spark plug:

Made	Type
DENSO	SK20BR11

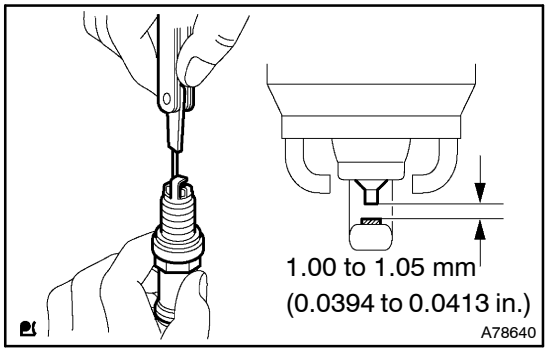

(d) Check the spark plug electrode gap.

Maximum electrode gap for used spark plug:
1.3 mm (0.051 in.)

If the gap is greater than maximum, replace the spark plug.

Standard electrode gap for new spark plug:
1.00 to 1.10 mm (0.0394 to 0.0433 in.)

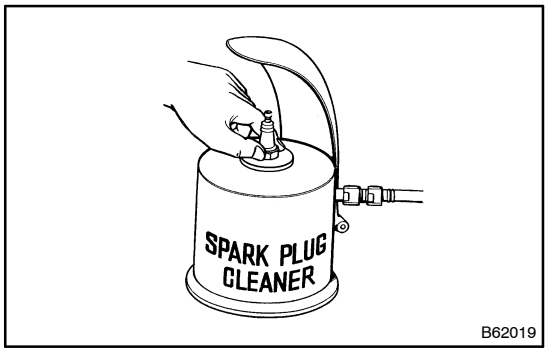

(e) Clean the spark plugs.

If the electrode has traces of wet carbon, clean the electrode with a spark plug cleaner, then dry it.

Air pressure: Blow 588 kPa (6 kgf/cm^2, 85 psi)
Duration: 20 seconds or less

HINT:

If there are traces of oil, remove them with gasoline before using the spark plug cleaner.

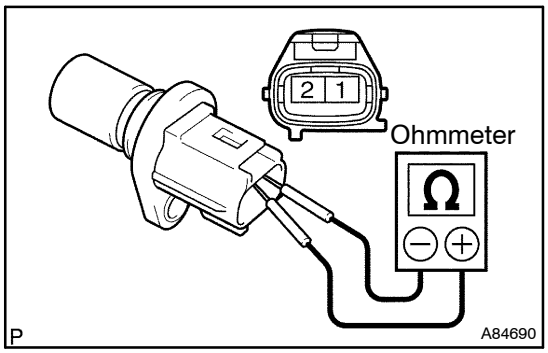

2. INSPECT CAMSHAFT POSITION SENSOR

(a) Inspect the resistance.

(1) Using an ohmmeter, measure the resistance between the terminals.

Standard:

Tester Connection	Specified Condition
1 (G+) – 2 (G–)	835 to 1,400 Ω at cold
1 (G+) – 2 (G–)	1,060 to 1,645 Ω at hot

NOTICE:

"Cold" and "Hot" mean temperature of the coils themselves. "Cold" is from –10°C (14°F) to 50 °C (122°F) and "Hot" is from 50°C (122°F) to 100°C (212°F).

If the resistance is not as specified, replace the camshaft position sensor.

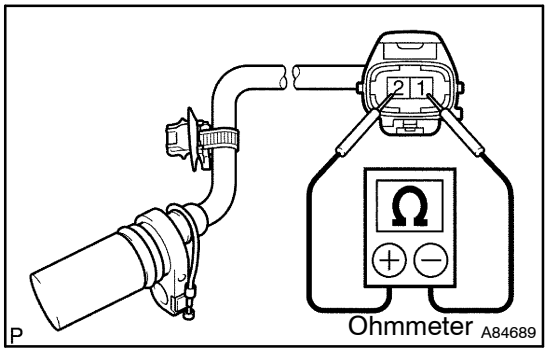

3. INSPECT CRANKSHAFT POSITION SENSOR

(a) Inspect the resistance.

(1) Using an ohmmeter, measure the resistance between the terminals.

Standard:

Tester Connection	Specified Condition
1 (NE+) – 2 (NE–)	985 to 1,600 Ω at cold
1 (NE+) – 2 (NE–)	1,265 to 1,890 Ω at hot

NOTICE:

"Cold" and "Hot" mean temperature of the coils themselves. "Cold" is from –10°C (14°F) to 50°C (122°F) and "Hot" is from 50°C (122°F) to 100°C (212°F).

If the resistance is not as specified, replace the crankshaft position sensor.

CAMSHAFT POSITION SENSOR (2AZ–FSE)

180B0–01

REPLACEMENT

1. **REMOVE RADIATOR SUPPORT OPENING COVER (See page 10–8)**
2. **DISCONNECT ENGINE WIRE NO.3 (BATTERY NEGATIVE TERMINAL)**
3. **REMOVE ENGINE COVER SUB–ASSY NO.1 (See page 10–8)**
4. **REMOVE AIR CLEANER CAP SUB–ASSY (See page 10–8)**

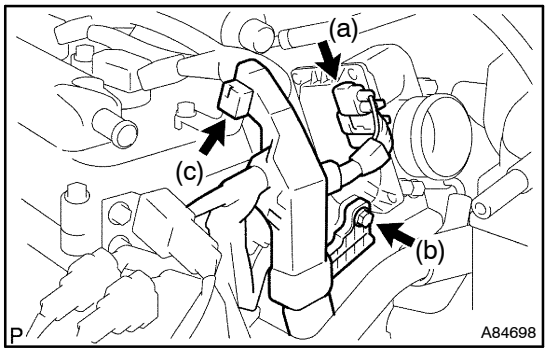

5. **REMOVE CAMSHAFT POSITION SENSOR**

(a) Disconnect the throttle control motor connector.
(b) Remove the bolt.
(c) Unfasten the clip, then remove the wiring harness protector.

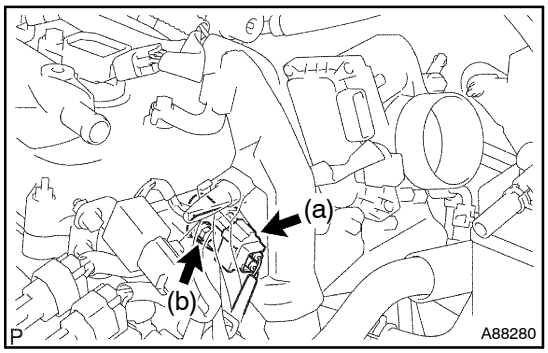

(d) Disconnect the camshaft position sensor connector.
(e) Remove the bolt, then remove the camshaft position sensor.

6. **INSTALL CAMSHAFT POSITION SENSOR**

(a) Apply a light coat of engine oil to the O–ring on the camshaft position sensor.
(b) Install the camshaft position sensor with the bolt.
Torque: 9.0 N·m (92 kgf·cm, 79 in.·lbf)

NOTICE:
Be careful not to twist the O–ring.

(c) Connect the camshaft position sensor connector.
(d) Install the wiring harness protector with the clip.
(e) Tighten the bolt.
Torque: 8.4 N·m (86 kgf·cm, 74 in.·lbf)
(f) Connect the throttle control motor connector.

7. **INSTALL AIR CLEANER CAP SUB–ASSY (See page 10–8)**
8. **CONNECT ENGINE WIRE NO.3 (BATTERY NEGATIVE TERMINAL)**
Torque: 5.4 N·m (55 kgf·cm, 48 in.·lbf)
9. **CHECK FOR ENGINE OIL LEAKS**
10. **INSTALL ENGINE COVER SUB–ASSY NO.1 (See page 10–8)**
11. **INSTALL RADIATOR SUPPORT OPENING COVER**

CRANKSHAFT POSITION SENSOR (2AZ–FSE)

180B1–01

REPLACEMENT

1. **REMOVE ENGINE UNDER COVER LH(See page 19–8)**
2. **REMOVE ENGINE UNDER COVER RH(See page 19–8)**
3. **REMOVE RADIATOR SUPPORT OPENING COVER(See page 10–8)**
4. **REMOVE ENGINE ROOM COVER SIDE (See page 10–8)**
5. **DISCONNECT ENGINE WIRE NO.3 (BATTERY NEGATIVE TERMINAL)**
6. **REMOVE FAN AND GENERATOR V BELT(See page 14–5)**
   SST 09249–63010
7. **REMOVE GENERATOR ASSY(See page 19–8)**

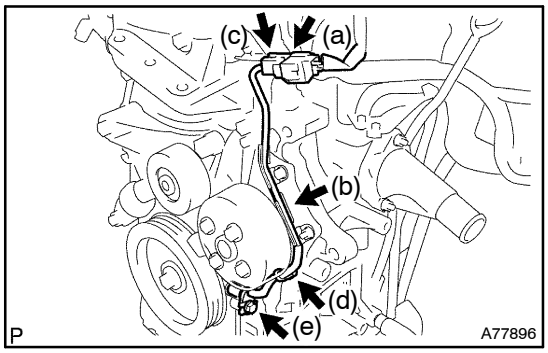

8. **REMOVE CRANKSHAFT POSITION SENSOR**
(a) Disconnect the crankshaft position sensor connector.
(b) Remove the wiring harness of the crankshaft position sensor from the wiring harness clamp bracket.
(c) Remove the connector clamp.
(d) Remove the wiring harness clamp.
(e) Remove the bolt, then remove the crankshaft position sensor.

9. **INSTALL CRANKSHAFT POSITION SENSOR**
(a) Apply a light coat of engine oil to the O–ring on the crankshaft position sensor.
(b) Install the crankshaft position sensor with the bolt.
Torque: 9.0 N·m (92 kgf·cm, 79 in.·lbf)

NOTICE:
Be careful not to twist the O–ring.

(c) Install the wiring harness clamp.
(d) Install the connector clamp.
(e) Install the wiring harness of the crankshaft position sensor to the wire harness clamp bracket.
(f) Connect the crankshaft position sensor connector.

10. **INSTALL GENERATOR ASSY(See page 19–8)**
11. **INSTALL FAN AND GENERATOR V BELT(See page 14–5)**
    SST 09249–63010
12. **CONNECT ENGINE WIRE NO.3 (BATTERY NEGATIVE TERMINAL)**
    Torque: 5.4 N·m (55 kgf·cm, 48 in.·lbf)
13. **CHECK FOR ENGINE OIL LEAKS**
14. **INSTALL ENGINE ROOM COVER SIDE**
15. **INSTALL RADIATOR SUPPORT OPENING COVER**
16. **INSTALL ENGINE UNDER COVER RH**
17. **INSTALL ENGINE UNDER COVER LH**

STARTING SYSTEM (2AZ–FSE)

INSPECTION

190V3–01

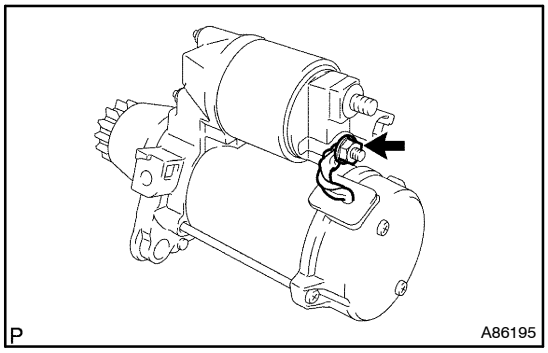

1. INSPECT STARTER ASSY

NOTICE:

These tests must be performed within 3 to 5 seconds to prevent burnout of the coil.

(a) Perform the pull–in test.

(1) Remove the nut, then disconnect the lead wire from terminal C.

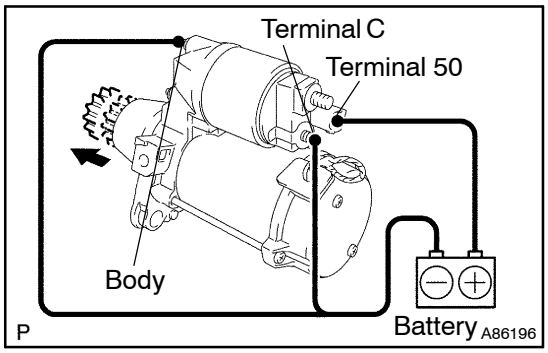

(2) Connect the battery to the repair service starter kit as shown in the illustration. Check that the clutch pinion gear is extended.

If the clutch pinion gear does not move, replace the starter magnetic switch.

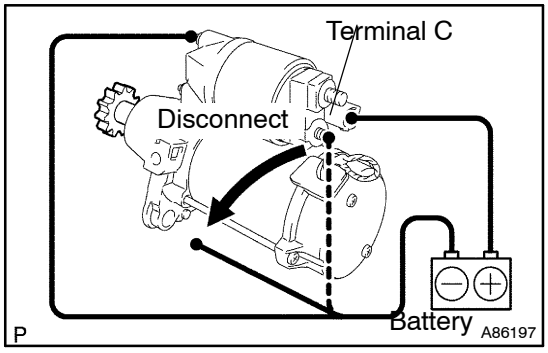

(b) Perform the hold–in test.

(1) Disconnect the negative (–) lead from terminal C with the lead wire disconnected from terminal C. Check that the clutch pinion gear remains extended.

If the clutch pinion gear returns inward, replace the starter magnetic switch.

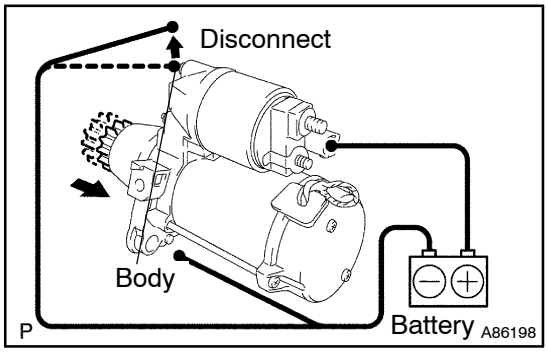

(c) Check the clutch pinion gear return.

(1) Disconnect the negative (–) lead from the switch body. Check that the clutch pinion gear returns.

If the clutch pinion gear does not return inward, replace the magnetic switch.

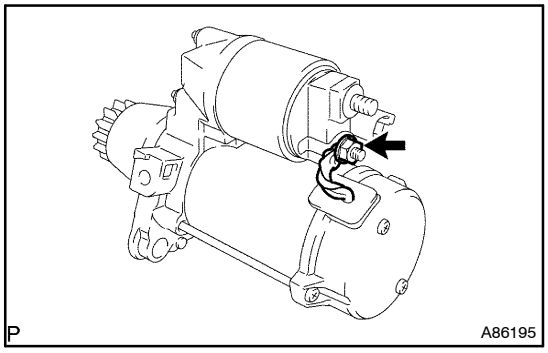

(d) Perform the no–load performance test.

(1) Connect the lead wire to terminal C. Make sure that the lead is not grounded.

Torque: 5.9 N·m (60 kgf·cm, 52 in.·lbf)

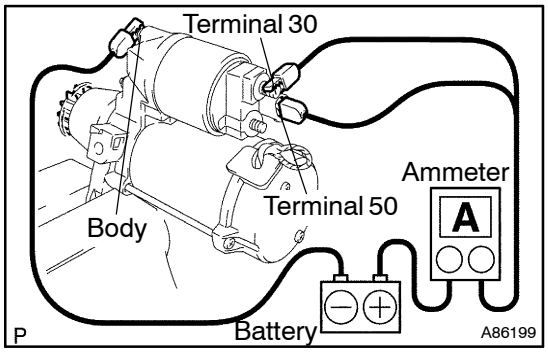

(2) Clamp the starter in a vise.

(3) Connect the battery and an ammeter to the starter as shown in the illustration.

(4) Check that the starter rotates smoothly and steadily with the clutch pinion gear extended. Check that the ammeter reads the specified current.

Standard: 75 A or less at 11.5 V

If the current is not as specified, replace the starter.

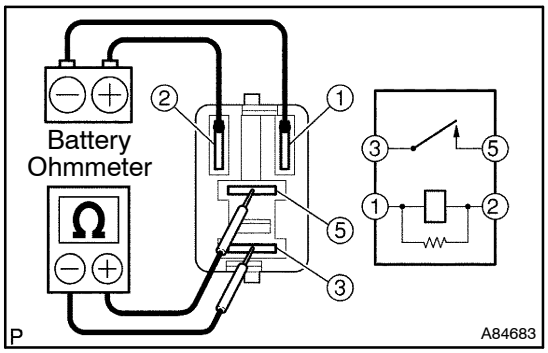

2. INSPECT STARTER RELAY ASSY

(a) Inspect the resistance.

(1) Using an ohmmeter, measure the resistance between the terminals.

Standard:

Tester Connection	Specified Condition
3 – 5	10 kΩ or higher
3 – 5	Below 1Ω (Apply battery voltage to terminals 1 and 2)

If the result is not as specified, replace the starter relay.

STARTER ASSY (2AZ–FSE)

190V4–01

REPLACEMENT

1. REMOVE RADIATOR SUPPORT OPENING COVER (See page 10–8)
2. REMOVE BATTERY CLAMP SUB–ASSY
3. REMOVE BATTERY
4. REMOVE BATTERY TRAY

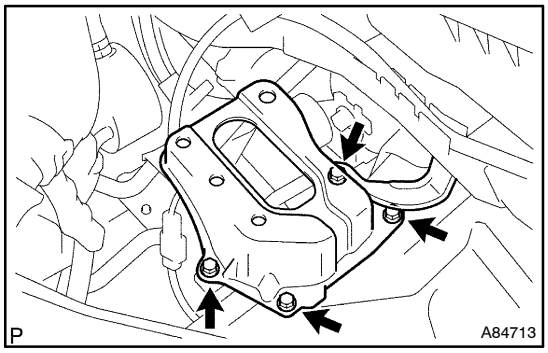

5. REMOVE BATTERY CARRIER

(a) Remove the 4 bolts, then remove the battery carrier.

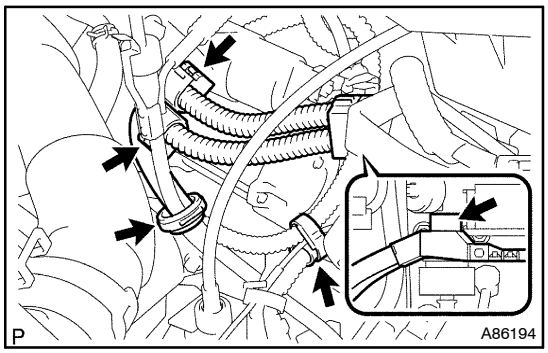

6. REMOVE STARTER ASSY

(a) Remove the 5 wire harness clamps.

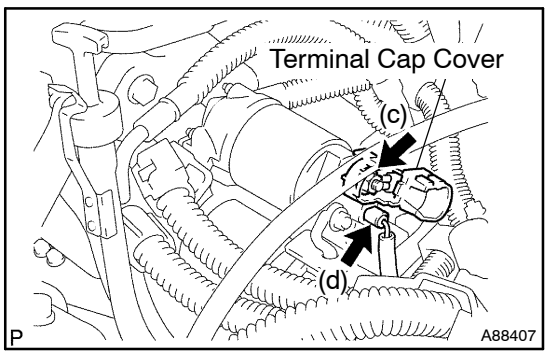

(b) Open the terminal cap cover.
(c) Remove the nut, then disconnect the starter wire.
(d) Disconnect the starter connector.

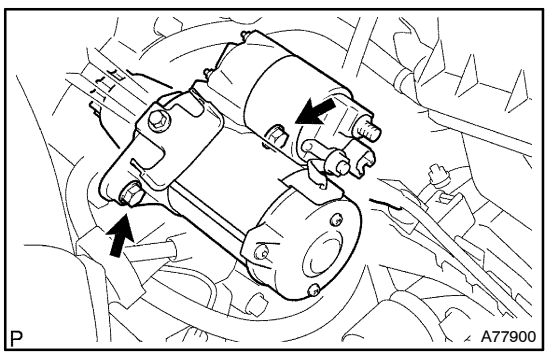

(e) Remove the 2 bolts, then remove the starter.

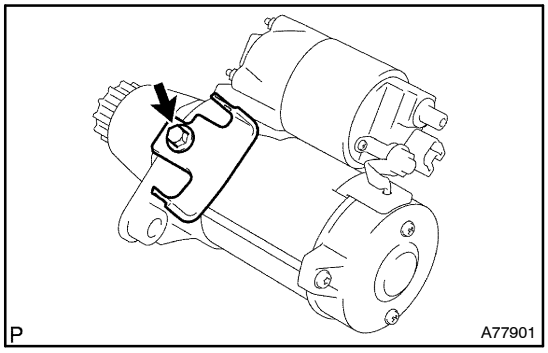

(f) Remove the bolt, then remove the wire harness clamp bracket.

7. INSTALL STARTER ASSY

(a) Install the wire harness clamp bracket with the bolt.
Torque: 8.4 N·m (86 kgf·cm, 74 in.·lbf)

(b) Install the starter with the 2 bolts.
Torque: 37 N·m (380 kgf·cm, 28 ft·lbf)

(c) Connect the starter connector.

(d) Connect the starter wire with the nut.
Torque: 13 N·m (130 kgf·cm, 9 ft·lbf)

(e) Close the terminal cap cover.

(f) Install the 5 wiring harness clamps.

8. INSTALL BATTERY CARRIER
Torque: 13 N·m (131 kgf·cm, 9 ft·lbf)

9. INSTALL BATTERY TRAY

10. INSTALL BATTERY

11. INSTALL BATTERY CLAMP SUB–ASSY
Torque:
5.0 N·m (51 kgf·cm, 44 in.·lbf) for bolt
3.5 N·m (36 kgf·cm, 31 in.·lbf) for nut
5.4 N·m (55 kgf·cm, 48 in.·lbf) for terminal

12. INSTALL RADIATOR SUPPORT OPENING COVER

CHARGING SYSTEM (2AZ–FSE)

190V5–01

PRECAUTION

1. **Check that the battery cables are connected to the correct terminals.**
2. **Disconnect the battery cables If a quick change is given to the battery.**
3. **Do not perform tests with a high voltage insulation resistance tester.**
4. **Never disconnect the battery while the engine is running.**
5. **Check that the charging cable is tightened on terminal B of the generator and the fuse box.**
6. **Do not check whether the alternator generates or not with connecting terminal F to the other terminal.**

190V6–01

ON–VEHICLE INSPECTION

1. INSPECT BATTERY (EXCEPT MAINTENANCE–FREE BATTERY)

(a) Check the battery electrolyte level.

(1) Check the electrolyte quantity of each cell.

If the electrolyte quantity is below the recommended amount, add distilled water.

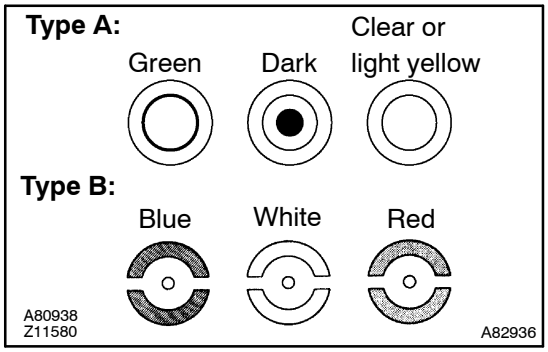

(b) Check the indicator as shown in the illustration.

HINT:

Indicator color		Condition
Type A	Type B	
Green	Blue	OK
Dark	White	Charging necessary
Clear or light yellow	Red	Replace

2. INSPECT BATTERY TERMINALS, FUSIBLE LINK AND FUSES

(a) Visually check the battery terminals.

(1) Check that the battery terminals are not loosened or corroded.

(b) Visually check the fusible link and fuses.

(1) Check that there is continuity of the fusible links, high–current fuses and regular fuses.

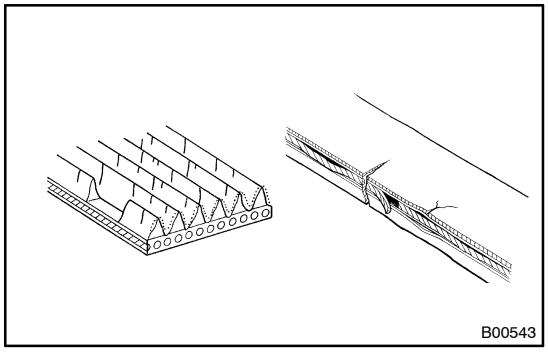

3. INSPECT V–RIBBED BELT

(a) Visually check the belt for excessive wear, frayed cords etc.

- If any defects are found, replace the v–ribbed belt.
- Cracks on the rib side of the belt are considered acceptable.

  If the belt has chunks missing from the ribs, it should be replaced.

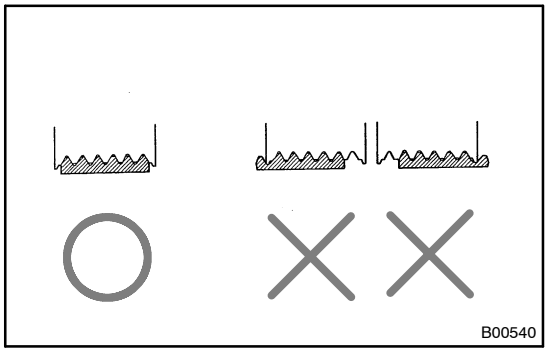

(b) Check that the belt fits properly in the ribbed grooves.

Confirm that the belt has not slipped out of the groove on the bottom of the pulley by hand.

4. VISUALLY CHECK GENERATOR WIRING

(a) Check that the wiring is in good condition.

5. LISTEN FOR ABNORMAL NOISES FROM GENERATOR

(a) Check that no abnormal noise is heard from the generator while the engine is running.

6. INSPECT CHARGE WARNING LIGHT CIRCUIT

(a) Turn the ignition switch ON. Check that the charge warning light comes on.
(b) Start the engine, then check that the light goes off.

HINT:

If the light does not operate as specified, troubleshoot the charge warning light circuit.

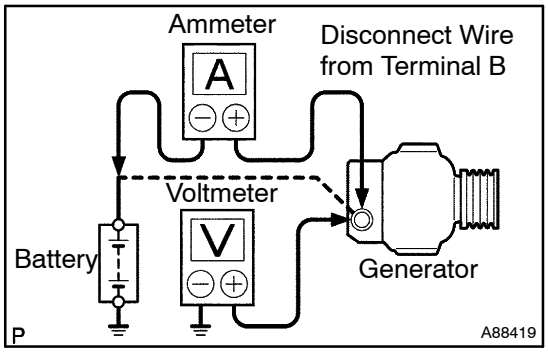

7. INSPECT CHARGING CIRCUIT WITHOUT LOAD

(a) If a tester is not available, connect a voltmeter to the charging circuit as follows:
  (1) Disconnect the wire from terminal B of the generator, then connect it to the negative (–) lead of the ammeter.
  (2) Connect the positive (+) lead of the ammeter to terminal B of the generator.
  (3) Connect the positive (+) lead of the voltmeter to terminal B of the generator.
  (4) Ground the negative (–) lead of the voltmeter.
(b) Check the charging circuit.
  (1) Keep the engine speed at 2,000 rpm, then check the reading on the ammeter and voltmeter.

  Standard amperage: 10 A or less
  Standard voltage: 12.9 to 14.9 V

8. INSPECT CHARGING CIRCUIT WITH LOAD

(a) With the engine running at 2,000 rpm, turn the high beam headlights ON and turn the heater blower switch to the ”HI” position.
(b) Check the reading on the ammeter.

  Standard amperage: 30 A or more

- If the ammeter reading is less than the standard amperage, repair the generator.
- If the battery is fully charged, the indication will sometimes be less than the standard amperage.

GENERATOR ASSY (2AZ–FSE)

REPLACEMENT

190V7–01

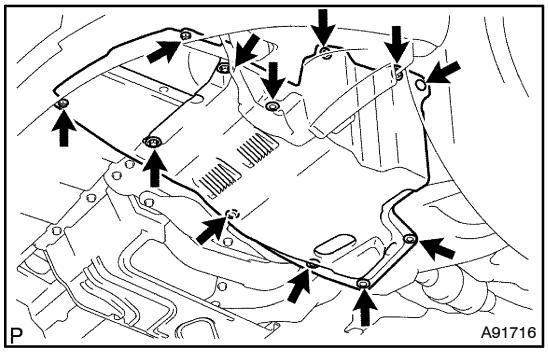

1. REMOVE ENGINE UNDER COVER LH

(a) Remove the 6 screws and 6 clips, then remove the engine under cover.

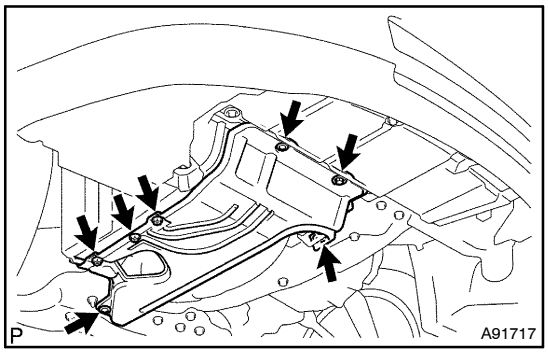

2. REMOVE ENGINE UNDER COVER SUB–ASSY NO.1

(a) Remove the bolt, 3 screws and 3 clips, then remove the engine under cover No. 1.

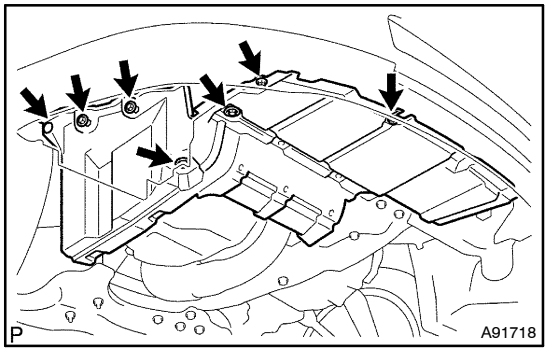

3. REMOVE ENGINE UNDER COVER RH

(a) Remove the 5 screws and 2 clips, then remove the engine under cover.

4. REMOVE RADIATOR SUPPORT OPENING COVER (See page 10–8)

5. REMOVE ENGINE ROOM COVER SIDE (See page 10–8)

6. DISCONNECT ENGIEN WIRE NO. 3 (BATTERY NEGATIVE TERMINAL)

7. REMOVE FAN AND GENERATOR V BELT (See page 14–5)

SST 09249–63010

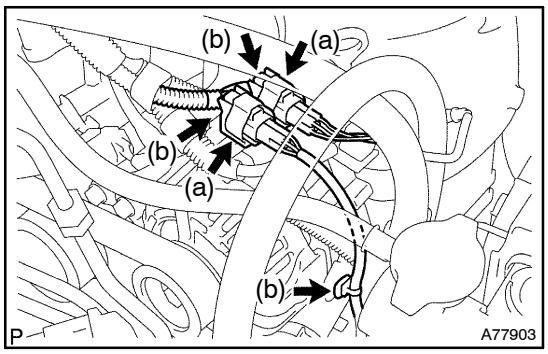

8. REMOVE GENERATOR ASSY

(a) Disconnect the 2 heated oxygen sensor connectors.

(b) Remove the 2 connector clamps of the heated oxygen sensor and the wiring harness clamp.

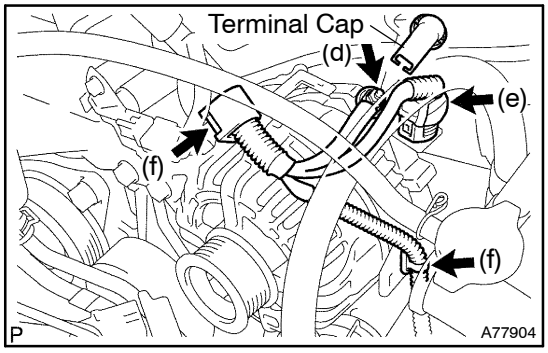

(c) Remove the terminal cap.
(d) Remove the nut, then disconnect the generator wire.
(e) Disconnect the generator connector.
(f) Remove the 2 wiring harness clamps.

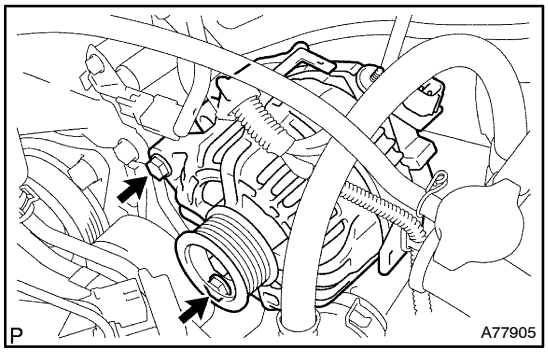

(g) Remove the 2 bolts, then remove the generator.

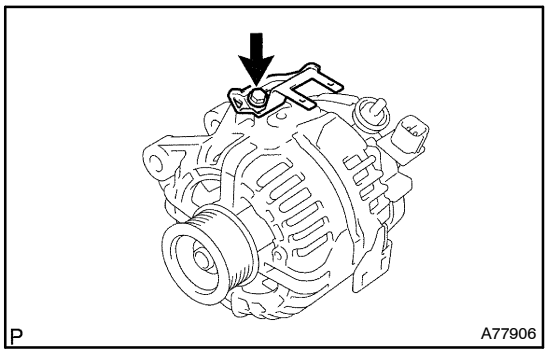

(h) Remove the bolt, then remove the wire harness clamp bracket.

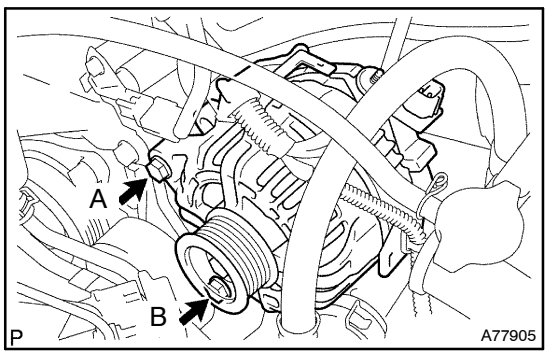

9. INSTALL GENERATOR ASSY

(a) Install the wire harness clamp bracket wire the bolt.
Torque: 8.4 N·m (86 kgf·cm, 74 in.·lbf)
(b) Install the generator with the 2 bolts.
Torque:
52 N·m (530 kgf·cm, 38 ft·lbf) for bolt A
21 N·m (214 kgf·cm, 16 ft·lbf) for bolt B
(c) Install the 2 wiring harness clamps.
(d) Connect the generator connector.
(e) Install the generator wire with the nut.
Torque: 9.8 N·m (100 kgf·cm, 7 ft·lbf)
(f) Install the terminal cap.
(g) Install the 2 connector clamps of the heated oxygen sensor and the wiring harness clamp.
(h) Connect the 2 heated oxygen sensor connectors.

10. INSTALL FAN AND GENERATOR V BELT (See page 14–5)
SST 09249–63010

11. CONNECT ENGIEN WIRE NO. 3 (BATTERY NEGATIVE TERMINAL)
Torque: 5.4 N·m (55 kgf·cm, 48 in.·lbf)

12. INSTALL ENGINE ROOM COVER SIDE

13. INSTALL RADIATOR SUPPORT OPENING COVER
14. INSTALL ENGINE UNDER COVER RH
15. INSTALL ENGINE UNDER COVER SUB–ASSY NO.1
16. INSTALL ENGINE UNDER COVER LH

PRE–HEATING SYSTEM (1CD–FTV)(From September, 2003)

190V9–01

ON–VEHICLE INSPECTION

NOTICE:

Turn the ignition switch to OFF for 60 seconds before performing the following inspections.

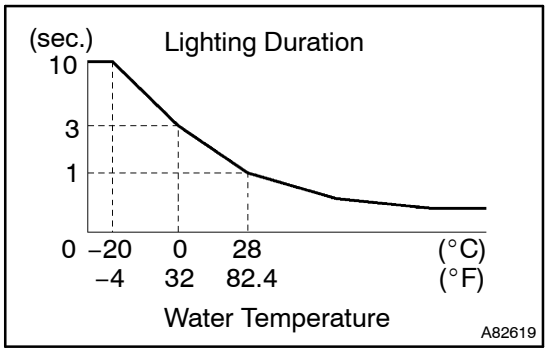

1. INSPECT LIGHTING DURATION OF GLOW INDICATOR LIGHT

(a) Turn the ignition switch to ON, then measure the lighting duration.

Lighting duration: Refer to the graph

If the result is not as specified, inspect the ECM, engine coolant temperature sensor, glow plug and glow plug relay.

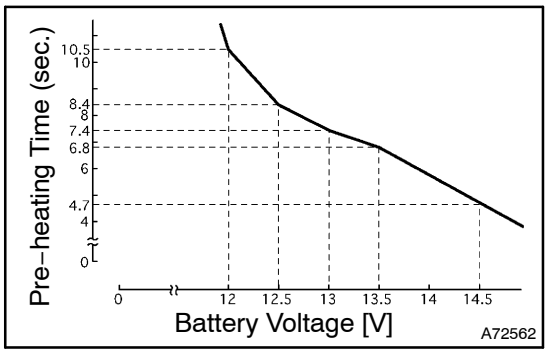

2. INSPECT PRE–HEATING

(a) Turn the ignition switch to ON, then measure how long it takes for the battery voltage to be applied to the glow plugs.

SST 09082–00030, 09083–00150

Pre–Heating time:

Engine Coolant Temperature	Pre–Heating Time
40 °C or higher	1 second
Below 40 °C	Refer to the graph (15 seconds at the longest)

If the result is not as specified, inspect the ECM, engine coolant temperature sensor, glow plug and glow plug relay.

(b) Turn the ignition switch to STA, check that the battery voltage applied to the glow plugs.

SST 09082–00030, 09083–00150

(c) While cranking the engine, measure how long it takes for the battery voltage to be applied to the glow plugs.

SST 09082–00030, 09083–00150

Pre–Heating time:

Engine Coolant Temperature	Pre–Heating Time
40 °C or higher	1 second
Blow 40 °C	Refer to the graph (15 seconds at the longest)

If the result is not as specified, inspect the ECM, engine coolant temperature sensor, glow plug and glow plug relay.

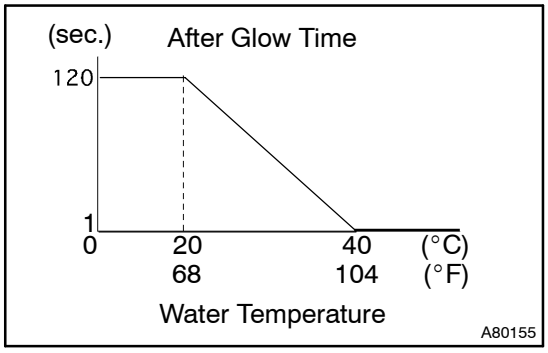

3. INSPECT AFTER GLOW TIME

(a) After starting the engine, measure how long it takes for the battery voltage to be applied to terminal E9–15 (GREL) of the ECM.

After glow time: Refer to the graph

If the result is not as specified, inspect the ECM, engine coolant temperature sensor, glow plug and glow plug relay.

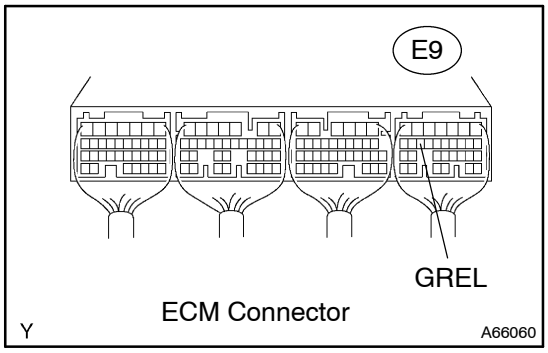

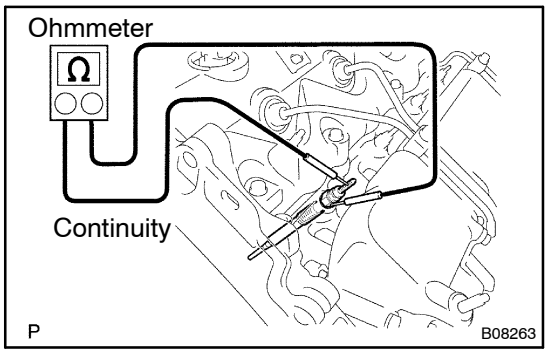

4. INSPECT GLOW PLUGS

(a) Using an ohmmeter, measure the resistance between the glow plug terminal and ground.

Standard resistance: Approximately 1.1 Ω at 20°C (68°F)

If the resistance is not as specified, replace the glow plug.

NOTICE:

- **Be careful not to damage the glow plug pipes as it could cause an open circuit or shorten life of the glow plugs.**
- **Avoid contact of the glow plug with oil or gasoline when cleaning.**
- **Wipe up any oil on the terminal and Bakelite washer using a dry cloth if they are stained with oil during the inspection.**

190JF–03

INSPECTION

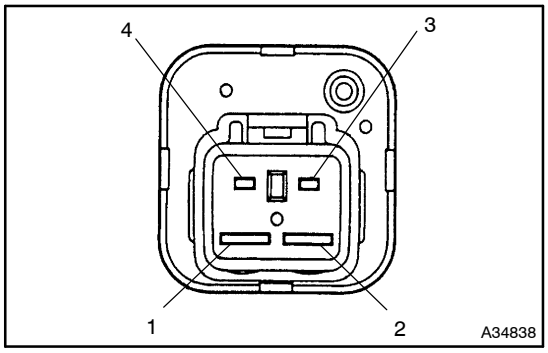

1. INSPECT GLOW PLUG RELAY ASSY

(a) Using an ohmmeter, measure the resistance between the terminals.

Specified condition:

Tester Connection	Specified Condition
1 – 2	10 kΩ or Higher
1 – 2	Below 1 Ω (When battery voltage is applied to terminals 3 and 4)

If the result is not as specified, replace the glow plug relay.

FRONT SUSPENSION ARM SUB–ASSY LOWER NO.1 LH (2AZ–FSE)

REPLACEMENT

260DQ–02

1. REMOVE FRONT WHEELS

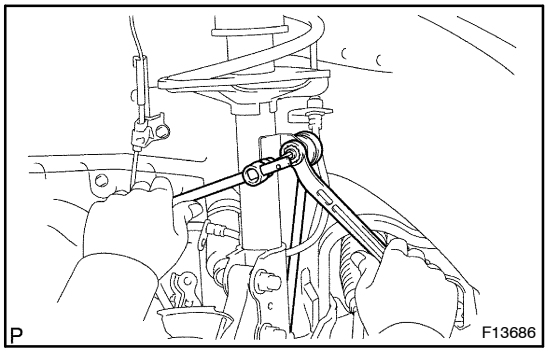

2. SEPARATE FRONT STABILIZER LINK ASSY LH

(a) Remove the nut and disconnect the stabilizer bar link from the shock absorber.

HINT:

If the ball joint turns together with the nut, use a hexagon (6 mm) wrench to hold the stud.

3. SEPARATE FRONT STABILIZER LINK ASSY RH

HINT:

Separate the RH side by the same procedures as the LH side.

4. SEPARATE TIE ROD END SUB–ASSY LH

SST 09628–62011

5. SEPARATE TIE ROD END SUB–ASSY RH

SST 09628–62011

HINT:

Separate the RH side by the same procedures as the LH side.

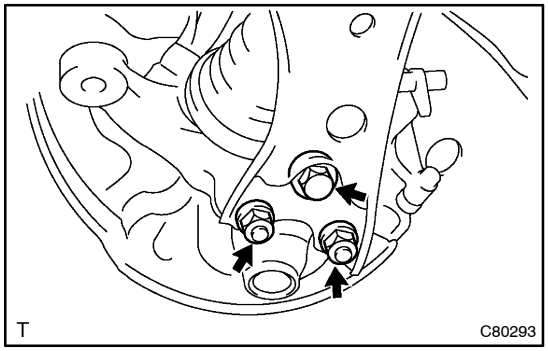

6. SEPARATE FRONT SUSPENSION ARM SUB–ASSY LOWER NO.1 LH

(a) Remove the bolt and 2 nuts, and separate the front suspension arm sub–assy lower No.1 from the lower ball joint.

7. SEPARATE FRONT SUSPENSION ARM SUB–ASSY LOWER NO.1 RH

HINT:

Separate the RH side by the same procedures as the LH side.

8. SEPARATE RACK & PINION POWER STEERING GEAR ASSY

9. SUSPEND ENGINE ASSY (See page 40–3)

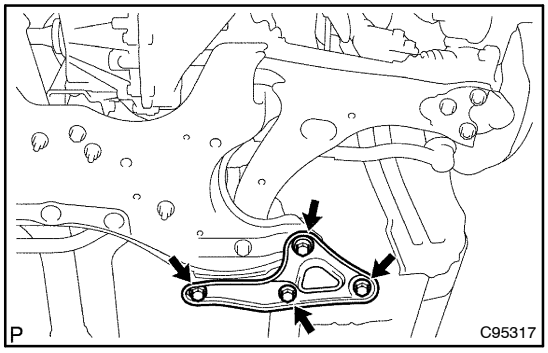

10. REMOVE FRONT SUSPENSION MEMBER BRACE REAR LH

(a) Support the front suspension crossmember sub–assy with a transmission jack.

(b) Remove the 4 bolts and front suspension member brace rear LH.

(c) Remove the front suspension member body mounting stopper rear from the front suspension member brace rear LH.

11. REMOVE FRONT SUSPENSION MEMBER BRACE REAR RH

HINT:

Remove the RH side by the same procedures as the LH side.

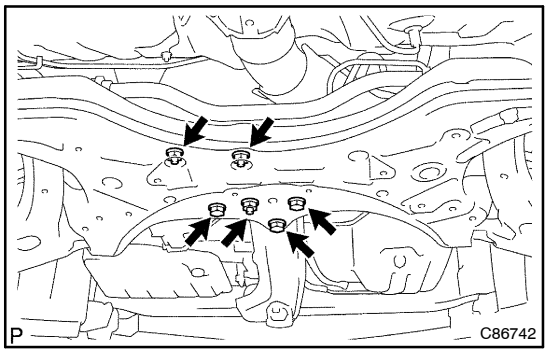

12. SEPARATE FRONT SUSPENSION CROSSMEMBER SUB–ASSY

(a) w/ HID:
Disconnect the height control sensor (Front) connector.

(b) Remove the 3 bolts and 3 nuts, disconnect the transverse engine engine mounting insulator and engine mounting member sub–assy center from the front suspension crossmember sub–assy.

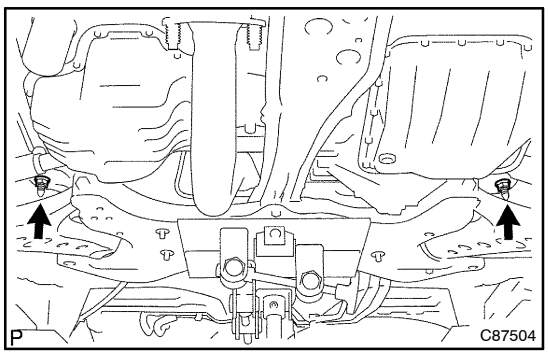

(c) Remove the 2 nuts and 2 front suspension member body mounting stoppers front.

(d) Lower the transmission jack, remove the front suspension crossmember sub–assy.

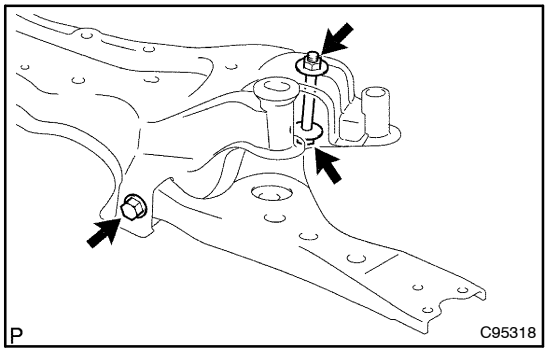

13. REMOVE FRONT SUSPENSION ARM SUB–ASSY LOWER NO.1 LH

(a) Remove the 2 bolts, nut and lower suspension arm sub–assy lower No.1 LH from the front suspension crossmember sub–assy.

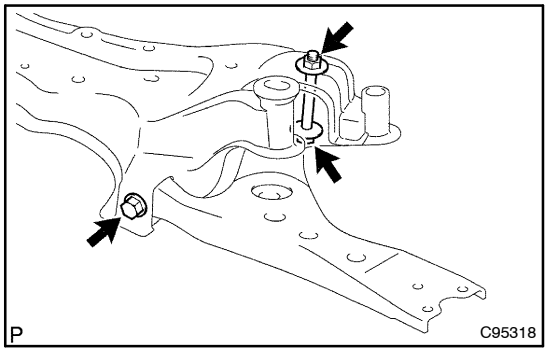

14. TEMPORARILY TIGHTEN FRONT SUSPENSION ARM SUB–ASSY LOWER NO.1 LH

(a) Install the lower suspension arm sub–assy lower No.1 LH, and temporarily tighten the 2 bolts and nut.

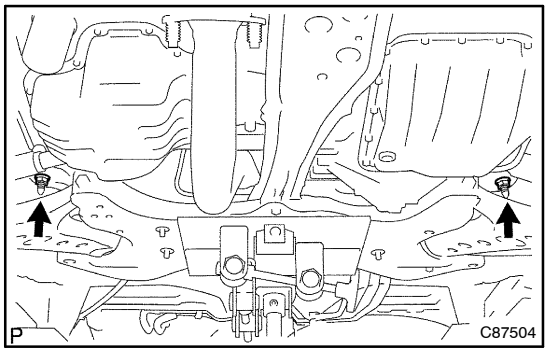

15. INSTALL FRONT SUSPENSION CROSSMEMBER SUB–ASSY

(a) Support the front suspension crossmember sub–assy with a transmission jack.

(b) Install the 2 front suspension member body mounting stoppers front and 2 nuts.

Torque: 133 N·m (1,360 kgf·cm, 98 ft·lbf)

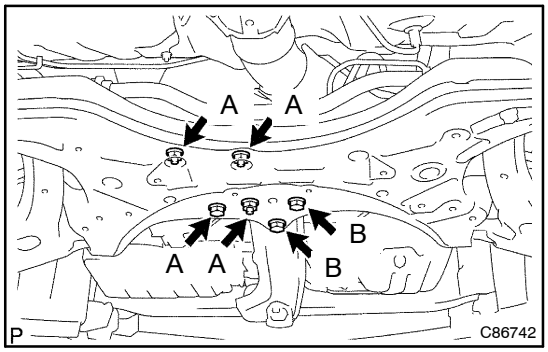

(c) Connect the transverse engine engine mounting insulator and engine mounting member sub–assy center to the front suspension crossmember sub–assy.

(d) Install the 3 bolts and 3 nuts.

Torque:
Bolt, Nut A: 52 N·m (530 kgf·cm, 38 ft·lbf)
Bolt B: 96 N·m (979 kgf·cm, 71 ft·lbf)

(e) w/ HID:
Connect the height control sensor (Front) connector.

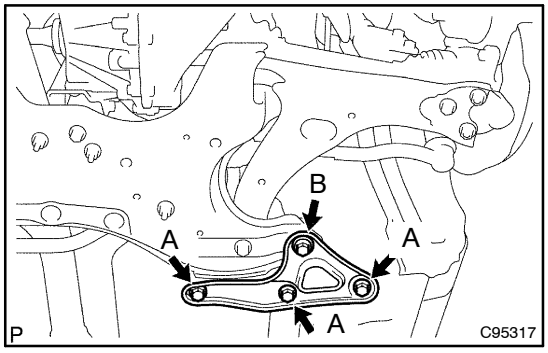

16. INSTALL FRONT SUSPENSION MEMBER BRACE REAR LH

(a) Install the front suspension member body mounting stopper rear to the front suspension member brace rear LH.

(b) Install the 4 bolts and front suspension member brace rear LH.

Torque:
Bolt A: 80 N·m (816 kgf·cm, 59 ft·lbf)
Bolt B: 133 N·m (1,360 kgf·cm, 98 ft·lbf)

17. INSTALL FRONT SUSPENSION MEMBER BRACE REAR RH

HINT:
Install the RH side by the same procedures as the LH side.

18. CONNECT RACK & PINION POWER STEERING GEAR ASSY

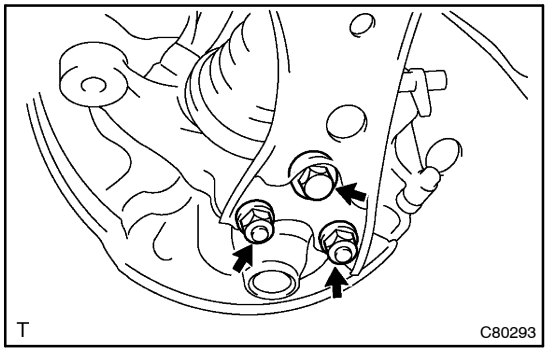

19. CONNECT FRONT SUSPENSION ARM SUB–ASSY LOWER NO.1 LH

(a) Connect the lower suspension arm to the lower ball joint with the 2 nuts and bolt.
Torque: 89 N·m (908 kgf·cm, 66 ft·lbf)

20. CONNECT FRONT SUSPENSION ARM SUB–ASSY LOWER NO.1 RH

HINT:
Connect the RH side by the same procedures as the LH side.

21. INSTALL TIE ROD END SUB–ASSY LH

22. INSTALL TIE ROD END SUB–ASSY RH

HINT:
Connect the RH side by the same procedures as the LH side.

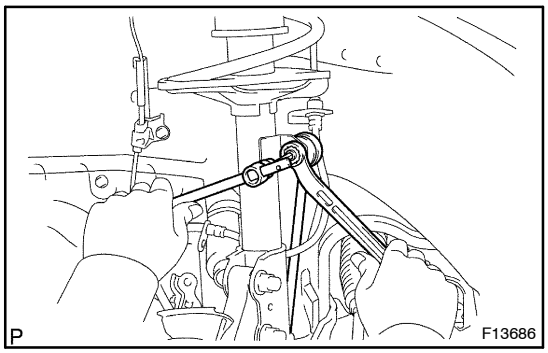

23. CONNECT FRONT STABILIZER LINK ASSY LH

(a) Install the stabilizer bar link with the nut.
Torque: 74 N·m (755 kgf·cm, 55 ft·lbf)

HINT:
If the ball joint turns together with the nut, use a hexagon (6 mm) wrench to hold the stud.

24. CONNECT FRONT STABILIZER LINK ASSY RH

HINT:
Install the RH side by the same procedures as the LH side.

25. STABILIZE SUSPENSION

(a) Install the front wheel and jack down the vehicle.
Torque: 103 N·m (1,050 kgf·cm, 76 ft·lbf)

(b) Bounce the vehicle up and down several times to stabilize the suspension.

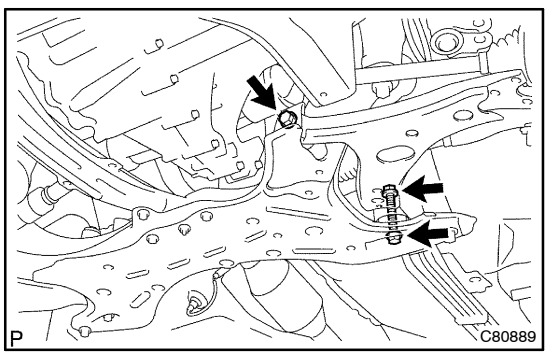

26. FULLY TIGHTEN FRONT SUSPENSION ARM SUB–ASSY LOWER NO.1 LH

(a) Fully tighten the 2 bolts and nut.
Torque: 137 N·m (1,400 kgf·cm, 101 ft·lbf)

27. INSPECT AND ADJUST FRONT WHEEL ALIGNMENT

WHEEL AND TIRE SYSTEM (2AZ–FSE)

2801F–03

INSPECTION

1. INSPECT TIRE

(a) Check the tires for wear and proper inflation pressure.

Cold tire inflation pressure:

Tire size	Front kPa (kgf·cm^2, psi)	Rear kPa (kgf·cm^2, psi)
205/55R16 91V:		
4 passengers or less	220 (2.2, 32) *1 250 (2.5, 36) *2	220 (2.2, 32) *1 250 (2.5, 36) *2
5 passengers	220 (2.2, 32) *1 270 (2.7, 39) *2	220 (2.2, 32) *1 280 (2.8, 41)*2
215/45R17 87W:		
4 passengers or less	240 (2.4, 35) *1 290 (2.9, 42) *2	240 (2.4, 35) *1 290 (2.9, 42) *2
5 passengers	240 (2.4, 35) *1 310 (3.1, 45) *2	240 (2.4, 35) *1 330 (3.3, 48) *2

***1: For driving under 160 km/h (100 mph)**

***2: For driving at 160 km/h (100 mph) or over**

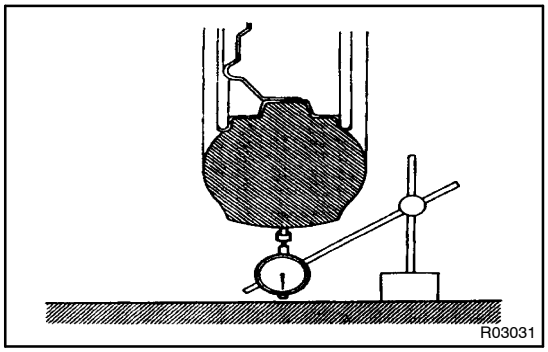

(b) Using a dial indicator, check the runout of tires.
Tire runout: 1.4 mm (0.055 in.) or less

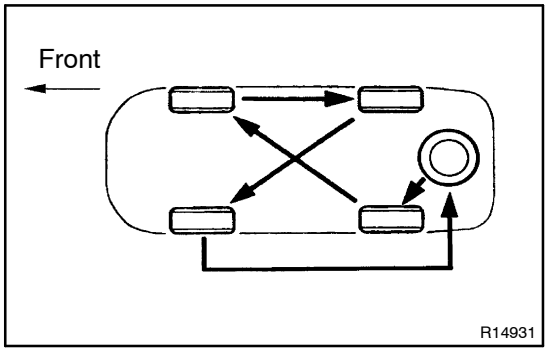

2. ROTATE TIRE

HINT:

Rotate tires as shown in the illustration.

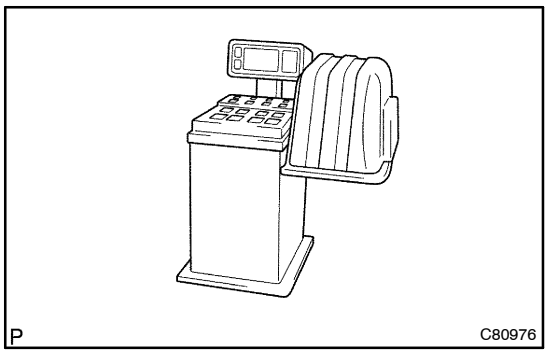

3. INSPECT WHEEL BALANCE

(a) Check and adjust the Off–the–car balance.

(b) If required, check and adjust the On–the–car balance.
Imbalance after adjustment: 8.0 g (0.018 lb) or less

4. INSPECT BEARING BACKLASH
5. INSPECT AXLE HUB DEVIATION
6. INSPECT BEARING BACKLASH
7. INSPECT AXLE HUB DEVIATION

FRONT DRIVE SHAFT (2AZ–FSE)

COMPONENTS

300N5–01

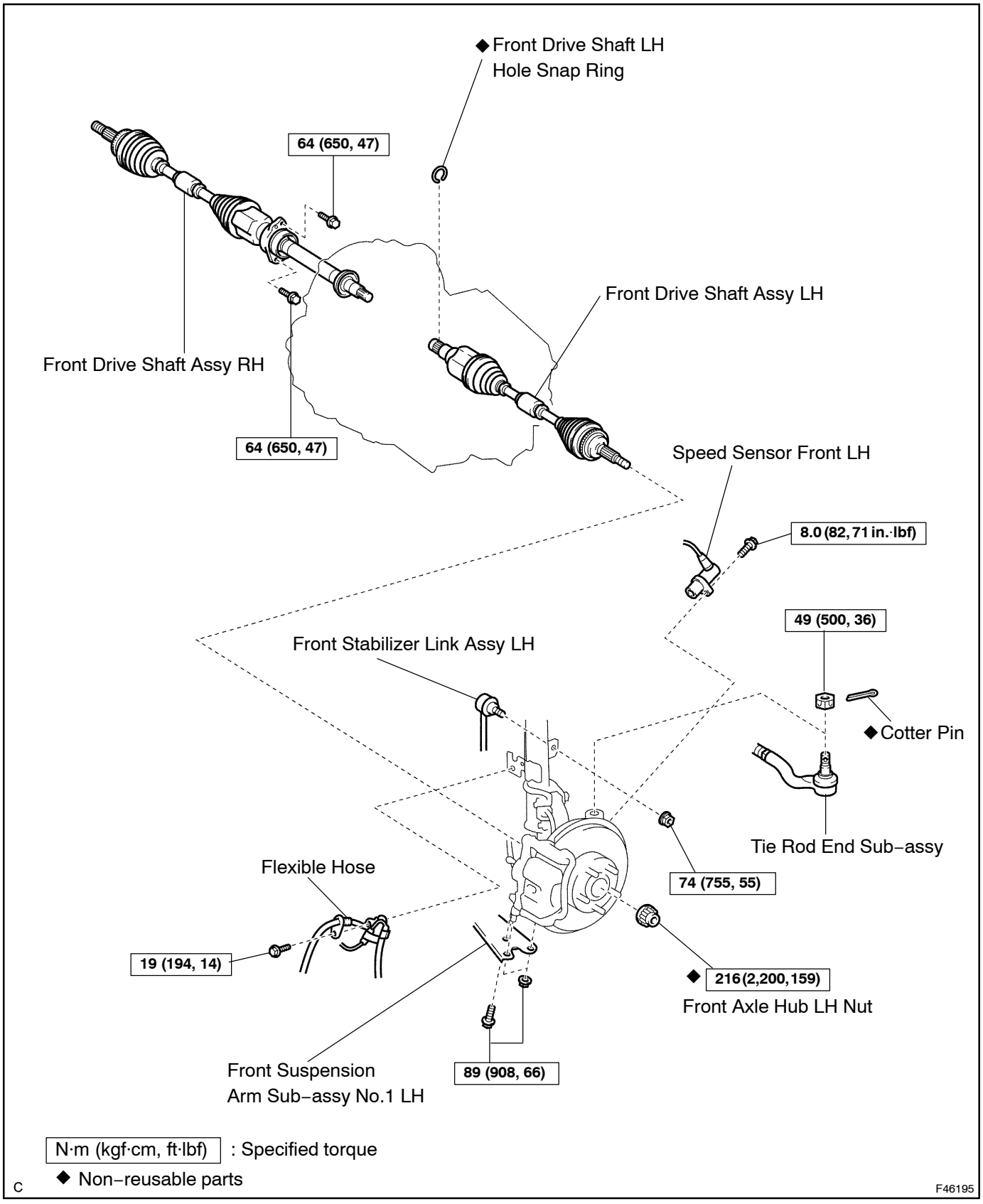

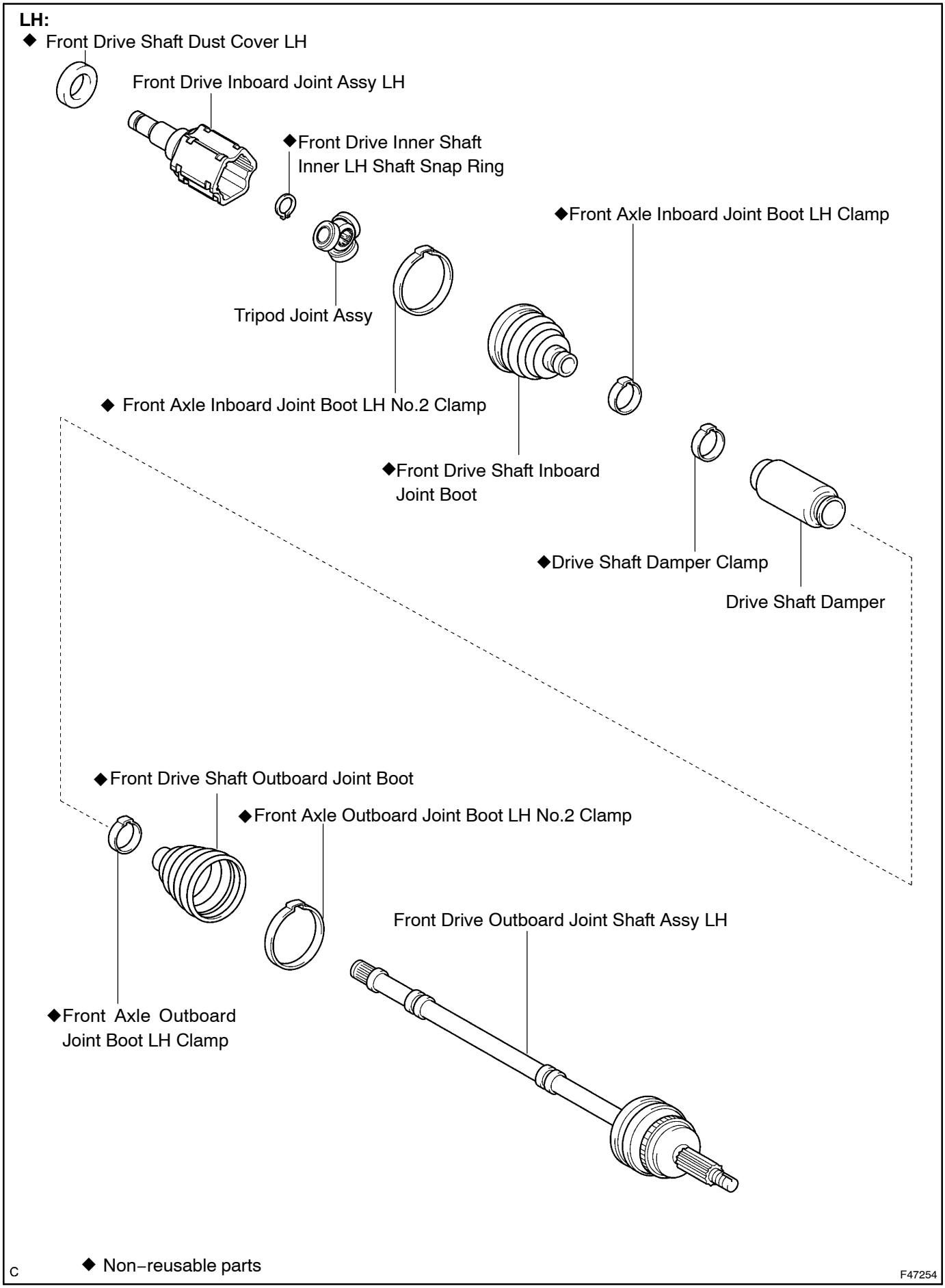
LH:
◆ Front Drive Shaft Dust Cover LH
Front Drive Inboard Joint Assy LH
◆Front Drive Inner Shaft
Inner LH Shaft Snap Ring
◆Front Axle Inboard Joint Boot LH Clamp
Tripod Joint Assy
◆ Front Axle Inboard Joint Boot LH No.2 Clamp
◆Front Drive Shaft Inboard
Joint Boot
◆Drive Shaft Damper Clamp
Drive Shaft Damper
◆Front Drive Shaft Outboard Joint Boot
◆Front Axle Outboard Joint Boot LH No.2 Clamp
Front Drive Outboard Joint Shaft Assy LH
◆Front Axle Outboard
Joint Boot LH Clamp
◆ Non–reusable parts
C
F47254

RH:

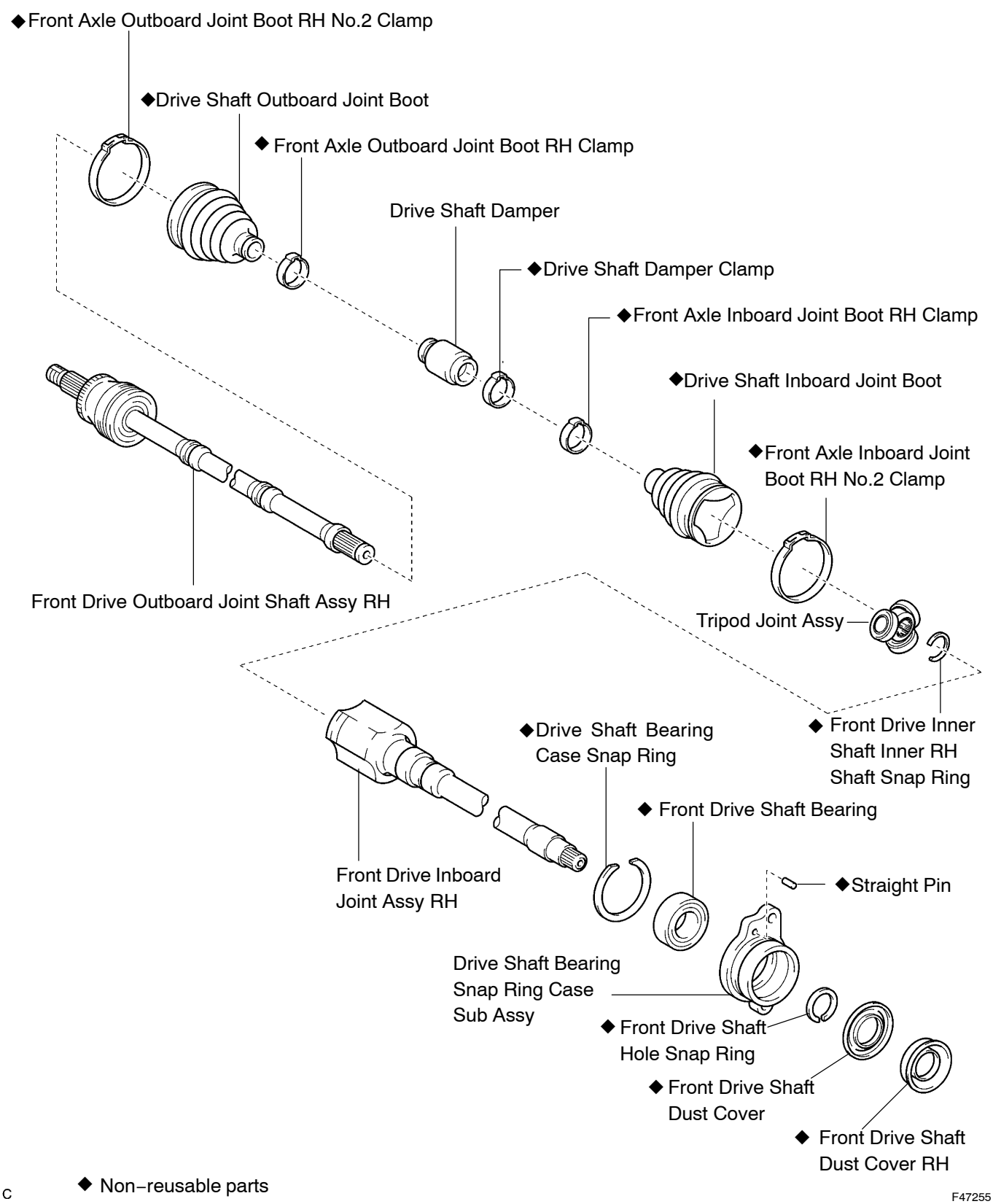
◆Front Axle Outboard Joint Boot RH No.2 Clamp
◆Drive Shaft Outboard Joint Boot
◆ Front Axle Outboard Joint Boot RH Clamp
Drive Shaft Damper
◆Drive Shaft Damper Clamp
◆Front Axle Inboard Joint Boot RH Clamp
◆Drive Shaft Inboard Joint Boot
◆Front Axle Inboard Joint Boot RH No.2 Clamp
Front Drive Outboard Joint Shaft Assy RH
Tripod Joint Assy
◆ Front Drive Inner Shaft Inner RH Shaft Snap Ring
◆Drive Shaft Bearing Case Snap Ring
◆ Front Drive Shaft Bearing
Front Drive Inboard Joint Assy RH
◆Straight Pin
Drive Shaft Bearing Snap Ring Case Sub Assy
◆ Front Drive Shaft Hole Snap Ring
◆ Front Drive Shaft Dust Cover
◆ Front Drive Shaft Dust Cover RH
◆ Non–reusable parts
C
F47255

300N6–01

OVERHAUL

HINT:

Overhaul the RH side following the same procedure as for the LH side.

1. DRAIN AUTOMATIC TRANSAXLE FLUID (A/T TRANSAXLE)

(a) Remove the drain plug and gasket, and then drain the ATF.

(b) Install a new gasket and drain plug.

Torque: 49 N·m (500 kgf·cm, 36 ft·lbf)

2. REMOVE FRONT WHEEL

3. REMOVE ENGINE UNDER COVER LH

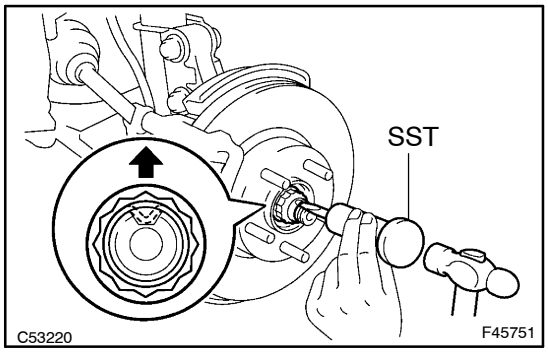

4. SEPARATE FRONT AXLE HUB LH NUT

(a) Using SST and a hammer, unstake the staked part of the nut.

SST 09930–00010

(b) While applying the brake, remove the axle hub LH nut.

NOTICE:

Loosen the staked part of the lock nut completely, otherwise the screw of the drive shaft may become damaged.

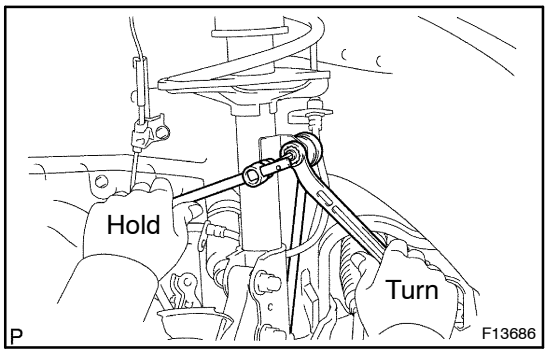

5. SEPARATE FRONT STABILIZER LINK ASSY LH

(a) Remove the nut and separate the front stabilizer link assy LH from the shock absorber assy LH.

HINT:

If the ball joint turns together with the nut, use a hexagon wrench (6 mm) to hold the stud.

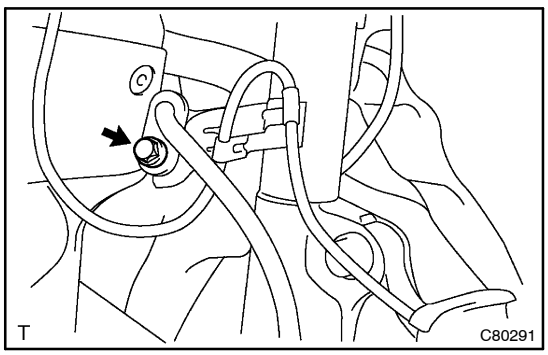

6. DISCONNECT SPEED SENSOR FRONT LH

(a) Remove the bolt, and disconnect the speed sensor wire and flexible hose from the shock absorber.

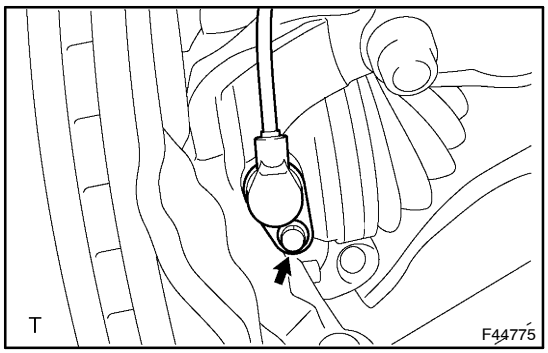

(b) Remove the bolt, and disconnect the speed sensor from the steering knuckle.

NOTICE:

- **Be careful not to damage the speed sensor.**
- **Prevent foreign matter from adhering to the speed sensor.**

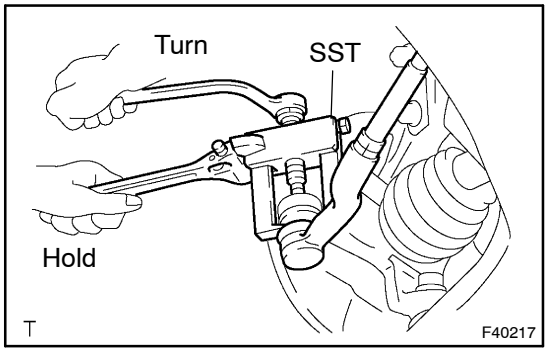

7. SEPARATE TIE ROD END SUB–ASSY LH

(a) Remove the cotter pin and nut.

(b) Using SST, separate the tie rod end sub–assy LH from the steering knuckle.
SST 09628–62011

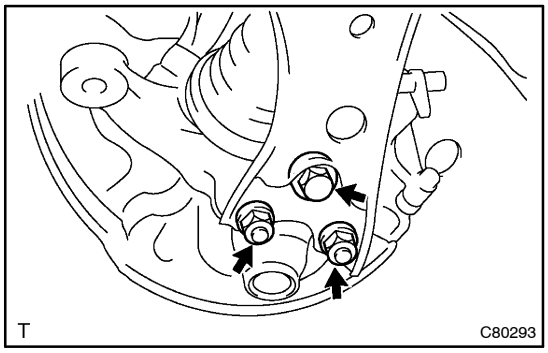

8. SEPARATE FRONT SUSPENSION ARM SUB–ASSY LOWER NO.1 LH

(a) Remove the bolt and 2 nuts, and separate the front suspension arm sub–assy lower No.1 LH from the lower ball joint.

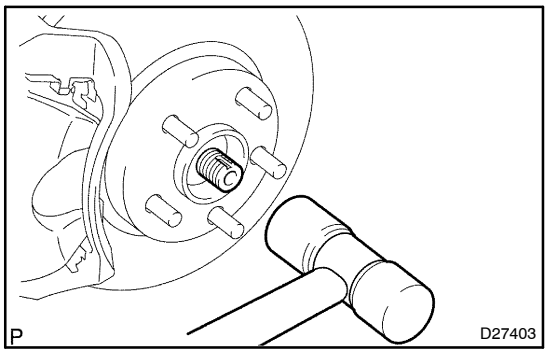

9. SEPARATE FRONT AXLE ASSY LH

(a) Using a plastic hammer, separate the front drive shaft assy LH from the axle hub.

NOTICE:

Be careful not to damage the boot and speed sensor rotor.

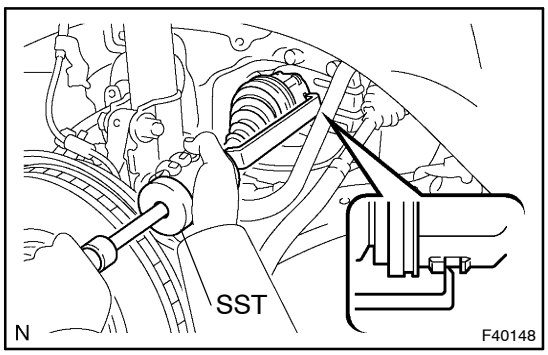

10. REMOVE FRONT DRIVE SHAFT ASSY LH

(a) Using SST, remove the front drive shaft assy LH.
SST 09520–01010, 09520–24010 (09520–32040)

NOTICE:

- **Be careful not to damage the oil seal, boot and dust cover.**
- **Be careful not to drop the drive shaft assy.**

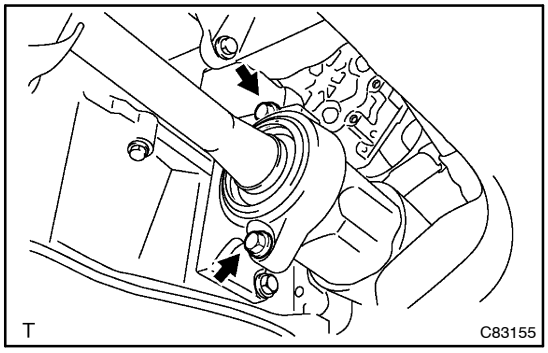

11. REMOVE FRONT DRIVE SHAFT ASSY RH (RH DRIVE SHAFT)

(a) Remove the 2 bolts and pull out the drive shaft together with the center bearing bracket.

(b) Remove the drive shaft from the transaxle.

NOTICE:

- **Be careful not to damage the oil seal, boot and dust cover.**
- **Be careful not to drop the drive shaft assy.**

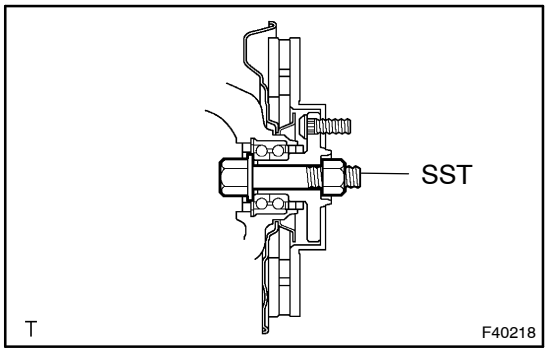

12. FIX FRONT AXLE HUB LH BEARING

NOTICE:

The hub bearing may become damaged if subjected to the vehicle weight. For example, moving the vehicle with the drive shaft removed.

Therefore, if it is absolutely necessary to place the vehicle weight on the hub bearing, first support it with SST.

SST 09608–16042 (09608–02021, 09608–02041)

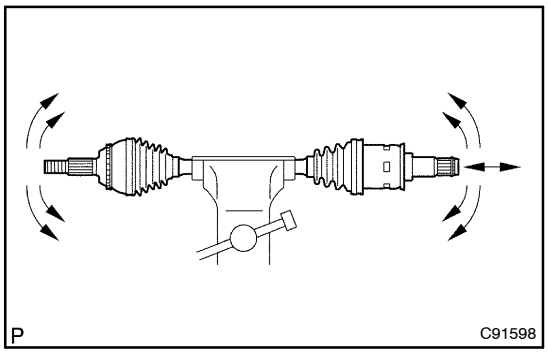

13. INSPECT FRONT DRIVE SHAFT ASSY LH

(a) Check that there is no excessive play in the radial direction of the outboard joint.

(b) Check that the inboard joint slides smoothly in the thrust direction.

(c) Check that there is no excessive play in the radial direction of the inboard joint.

(d) Check the boots for damage.

NOTICE:

Keep the drive shaft assy level during inspection.

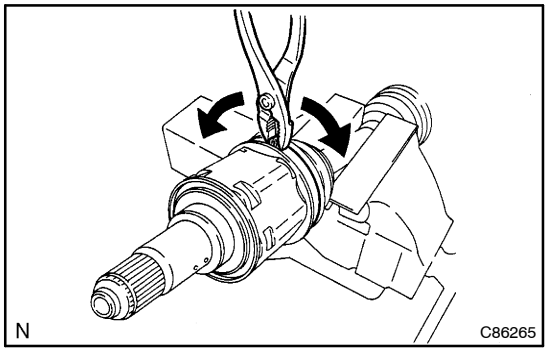

14. REMOVE FRONT AXLE INBOARD JOINT BOOT CLAMP

(a) Using pliers, remove the inboard joint boot LH No.2 clamp as shown in the illustration.

(b) Remove the inboard joint boot LH clamp ifollwng the same procedure as for the inboard joint boot LH No.2 clamp.

15. REMOVE FR AXLE INBOARD JOINT BOOT

(a) Remove the inboard joint boot from the inboard joint assy LH.

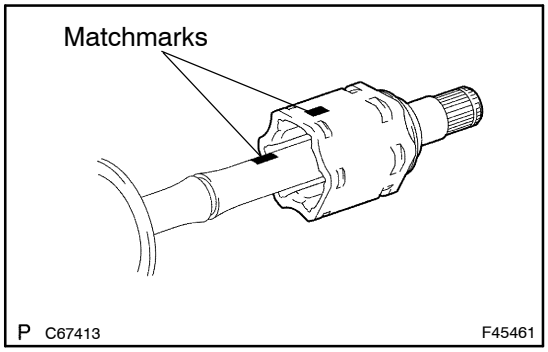

16. REMOVE FRONT DRIVE INBOARD JOINT ASSY LH

(a) Remove the old grease from the inboard joint.

(b) Place matchmarks on the inboard joint assy LH and outboard joint shaft assy LH.

NOTICE:

Do not use a punch for the marks.

(c) Remove the inboard joint assy LH from the outboard joint shaft assy LH.

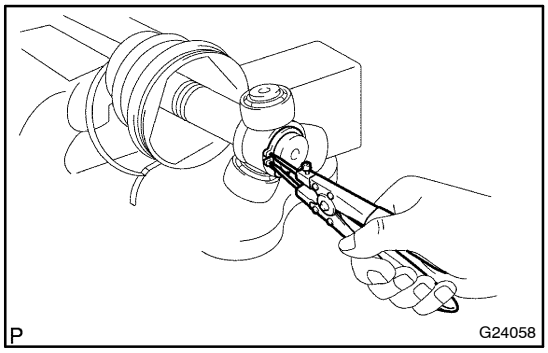

(d) Using a snap ring expander, remove the shaft snap ring.

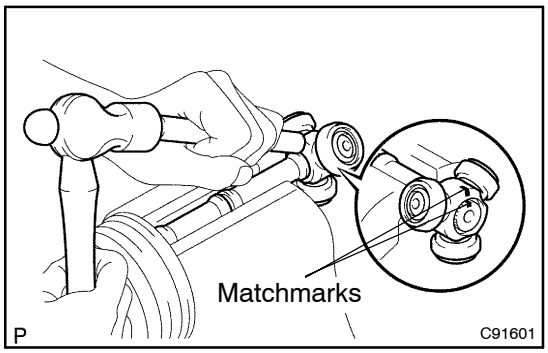

(e) Place matchmarks on the outboard joint shaft assy LH and tripod joint assy.

NOTICE:

Do not punch the marks.

(f) Using a brass bar and hammer, remove the tripod joint assy from the outboard joint shaft assy LH.

NOTICE:

Do not tap the roller.

(g) Remove the inboard joint boot and 2 clamps.

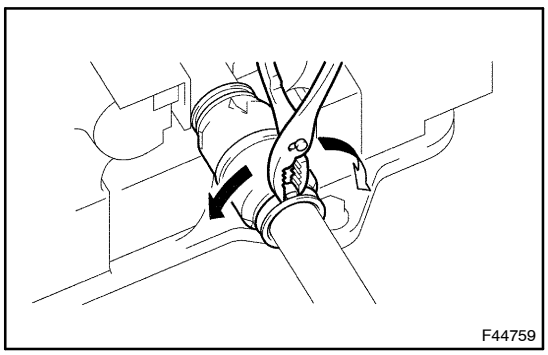

17. REMOVE FRONT DRIVE SHAFT DAMPER LH

(a) Using pliers, remove the damper clamp as shown in the illustration.

(b) Remove the drive shaft damper.

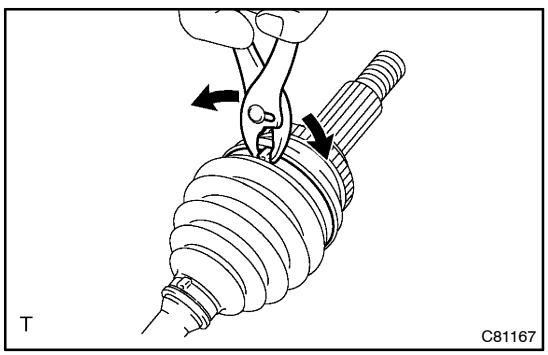

18. REMOVE FRONT AXLE OUTBOARD JOINT BOOT CLAMP

(a) Using pliers, remove the outboard joint boot LH No.2 clamp as shown in the illustration.

(b) Remove the outboard joint boot LH clamp following the same procedure as for the outboard joint boot LH No.2 clamp.

19. REMOVE OUTBOARD JOINT BOOT

(a) Remove the outboard joint boot from the outboard joint shaft assy LH.

(b) Remove the old grease from the outboard joint.

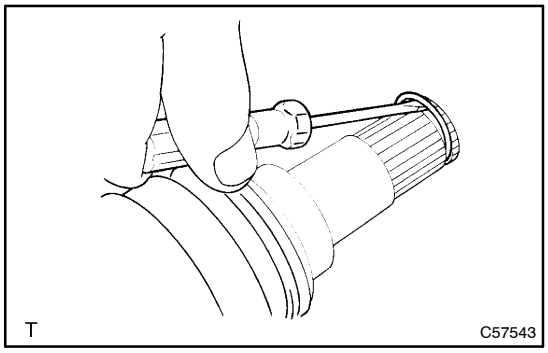

20. REMOVE FRONT DRIVE SHAFT LH HOLE SNAP RING

(a) Using a screwdriver, remove the hole snap ring.

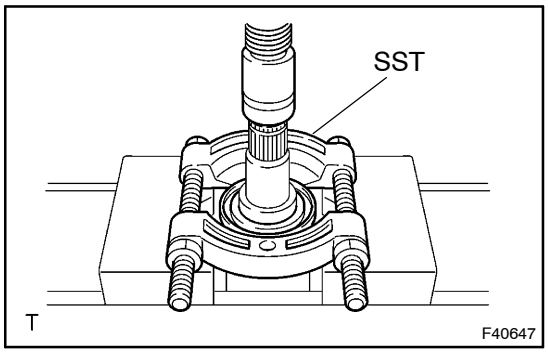

21. REMOVE FRONT DRIVE SHAFT DUST COVER LH

(a) Using SST and a press, remove the front drive shaft dust cover LH.

SST 09950–00020

NOTICE:

Be careful not to drop the inboard joint assy.

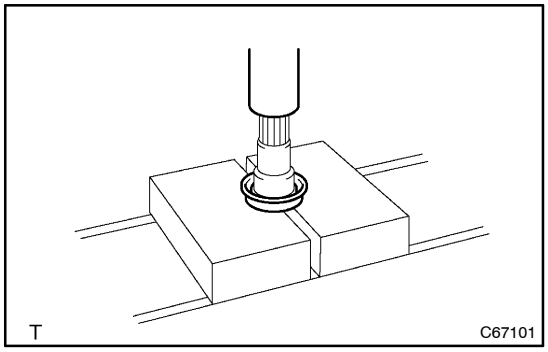

22. REMOVE FRONT DRIVE SHAFT DUST COVER RH (RH DRIVE SHAFT)

(a) Using a press, remove the drive shaft dust cover RH.

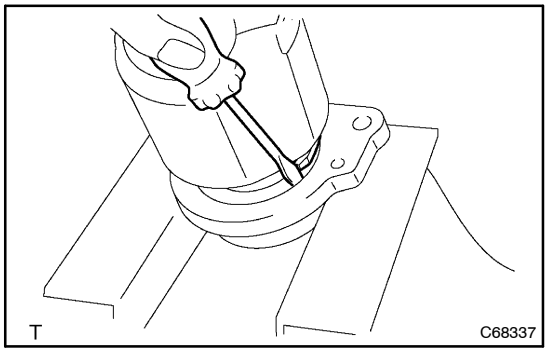

23. REMOVE CASE SUB ASSY, DRIVE SHAFT BEARING SNAP RING (RH DRIVE SHAFT)

(a) Using a screwdriver, remove the bearing case snap ring.

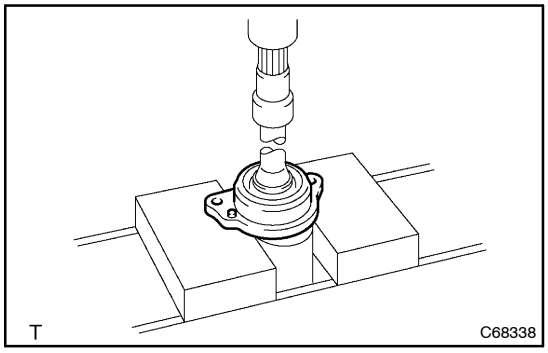

24. REMOVE DRIVE SHAFT BEARING CASE SUB ASSY (RH DRIVE SHAFT)

(a) Using a press, remove the drive shaft bearing case.

NOTICE:

Be careful not to drop the inboard joint assy.

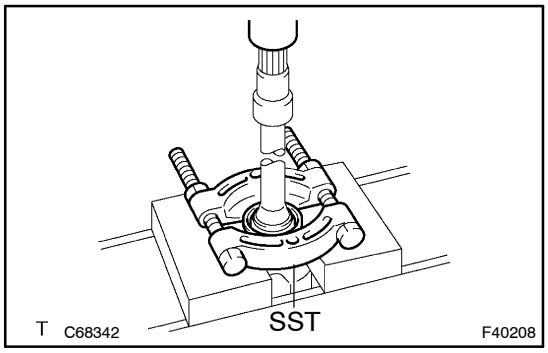

25. REMOVE FRONT DRIVE SHAFT DUST COVER (RH DRIVE SHAFT)

(a) Using SST and a press, remove the drive shaft dust cover.
SST 09950–00020

NOTICE:

Be careful not to drop the inboard joint assy.

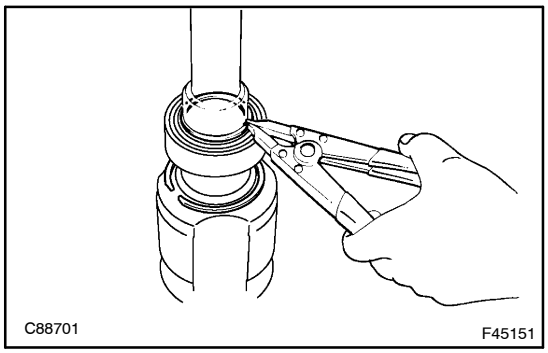

26. REMOVE FRONT DRIVE SHAFT BEARING (RH DRIVE SHAFT)

(a) Using a snap ring expander, remove the drive shaft hole snap ring.

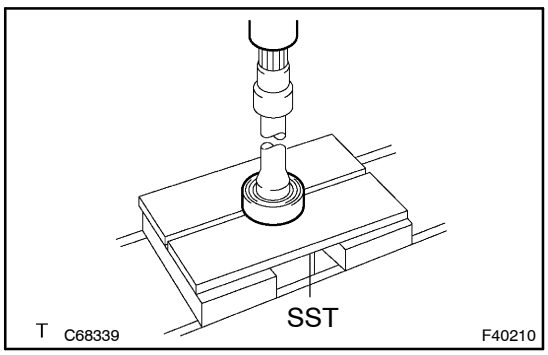

(b) Using SST and a press, remove the drive shaft bearing.
SST 09527–10011

(c) Remove the snap ring.

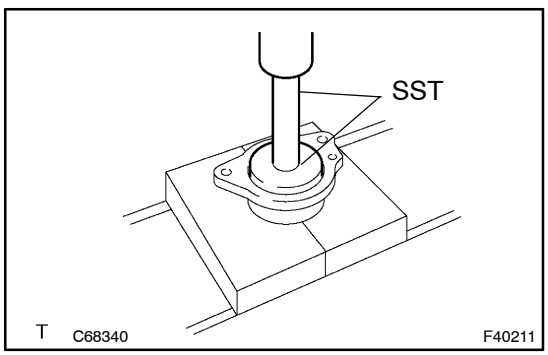

27. INSTALL FRONT DRIVE SHAFT BEARING (RH DRIVE SHAFT)

(a) Using SST and a press, install a new drive shaft bearing.
SST 09950–60020 (09951–00710), 09950–70010 (09951–07100)

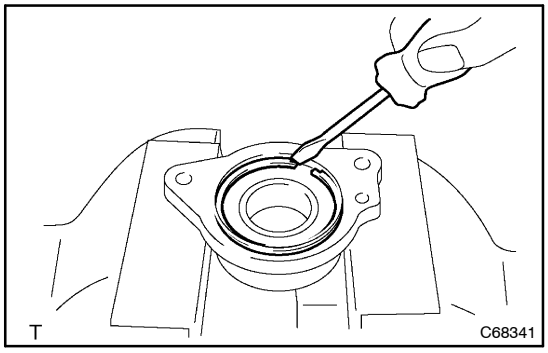

28. INSTALL CASE SUB ASSY, DRIVE SHAFT BEARING SNAP RING (RH DRIVE SHAFT)

(a) Using a screwdriver, install a new bearing case snap ring.

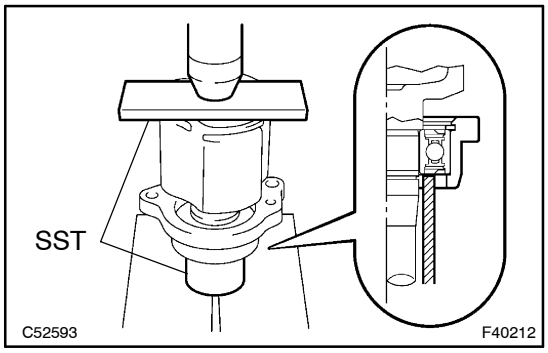

29. INSTALL DRIVE SHAFT BEARING CASE SUB ASSY (RH DRIVE SHAFT)

(a) Using SST and a press, install the drive shaft bearing case to the inboard joint assy RH.

SST 09527–10011, 09710–04081

NOTICE:

Bearing should be installed completely.

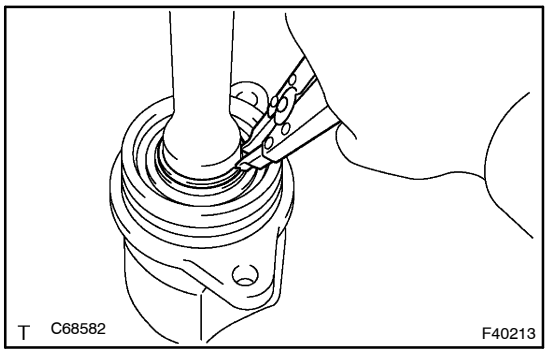

(b) Using a snap ring expander, install a new drive shaft hole snap ring.

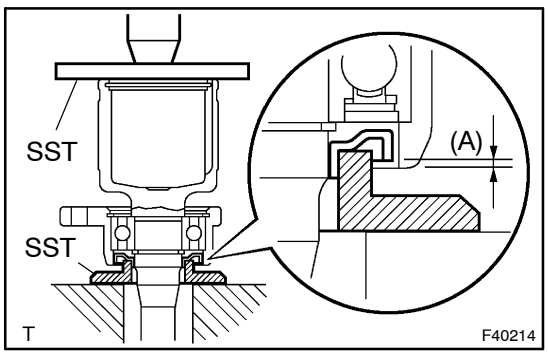

30. INSTALL FRONT DRIVE SHAFT DUST COVER (RH DRIVE SHAFT)

(a) Using SST and a press, install a new drive shaft dust cover.

SST 09726–40010, 09527–10011

Distance (A): 0.5 ± 0.5 mm (0.020 ± 0.020 in.)

NOTICE:

Be careful not to damage the dust cover.

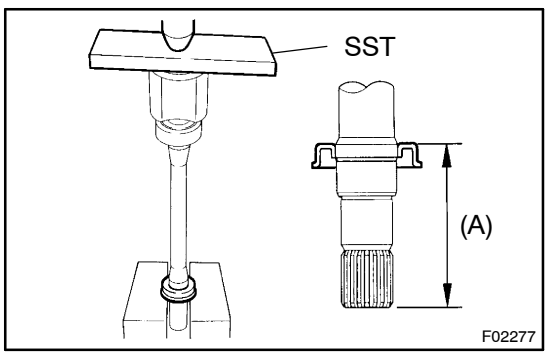

31. INSTALL FRONT DRIVE SHAFT DUST COVER RH (RH DRIVE SHAFT)

(a) Using SST and a press, install a new drive shaft dust cover RH until the distance from the tip of the center drive shaft to the drive shaft dust cover RH reaches the specification, as shown in the illustration.

SST 09527–10011

Distance (A): 110.5 ± 0.5 mm (4.350 ± 0.020 in.)

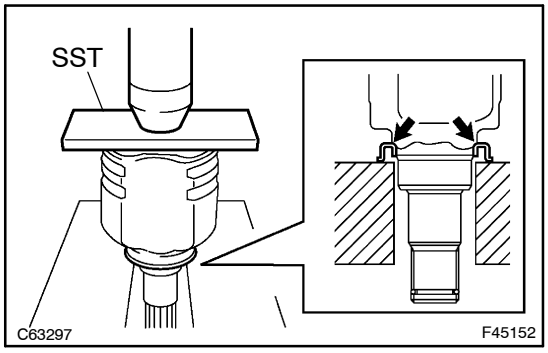

(b) Using SST and a press, install a new drive shaft dust cover RH.
SST 09527–10011

NOTICE:
- **Dust cover should be installed completely.**
- **Be careful not to damage the dust cover.**

32. INSTALL FRONT DRIVE SHAFT DUST COVER LH

(a) Using SST and a press, install a new drive shaft dust cover LH.
SST 09527–10011

NOTICE:
- **Dust cover should be installed completely.**
- **Be careful not to damage the dust cover.**

33. INSTALL FRONT DRIVE SHAFT LH HOLE SNAP RING

(a) Install a new hole snap ring.

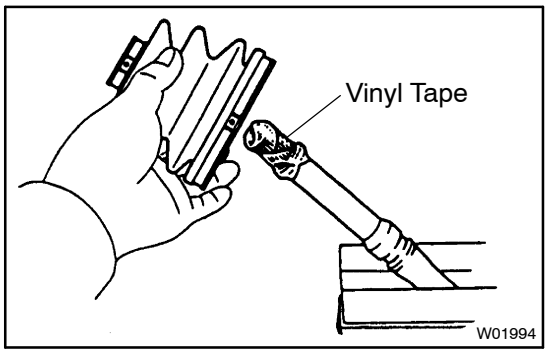

34. INSTALL OUTBOARD JOINT BOOT

HINT:
Before installing the boots, wrap the drive shaft spline with vinyl tape to prevent the boots from being damaged.

(a) Install new parts to the outboard joint shaft assy in the following order.
(1) Outboard joint boot LH No.2 clamp
(2) Outboard joint boot
(3) Outboard joint boot LH clamp

(b) Pack the outboard joint shaft and boot with grease in the boot kit.

Grease capacity: 152 to 162 g (5.4 to 5.7 oz.)

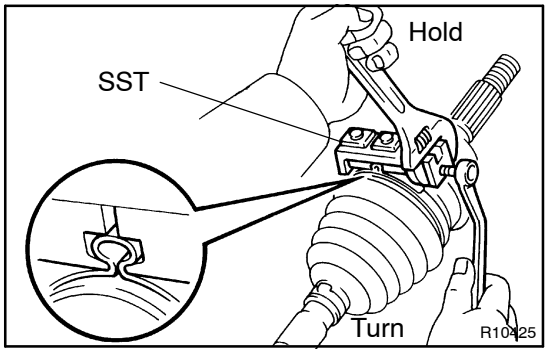

35. INSTALL FRONT AXLE OUTBOARD JOINT BOOT CLAMP

(a) Hold the front drive shaft in a soft vise.
(b) Secure the 2 outboard joint boot clamps onto the boot.
(c) Place SST onto the outboard joint large boot clamp.
SST 09521–24010
(d) Tighten the SST so that the large clamp is pinched.

NOTICE:
Do not overtighten the SST.

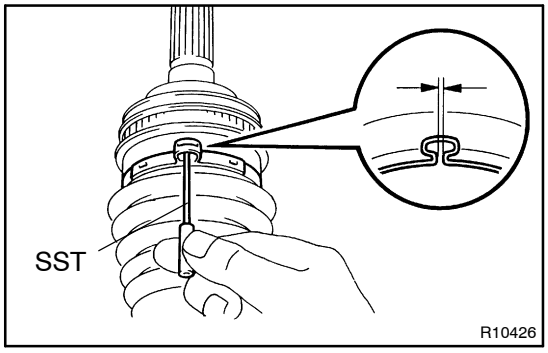

(e) Using SST, adjust the clearance of the large clamp.
SST 09240–00020
Clearance: 0.8 mm (0.031 in.) or less

(f) Install the outboard joint boot LH clamp following the same procedure as for the outboard joint boot LH No.2 clamp.

NOTICE:
When the measured value exceeds the specified value, re-tighten the clamp.

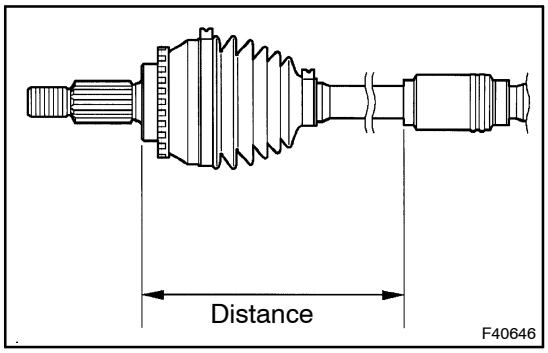

36. INSTALL FRONT DRIVE SHAFT DAMPER LH

HINT:
Perform the above procedure only when reassembling the RH side.

(a) Temporarily install a new damper clamp.

(b) Set the distance as described below.

Drive shaft type	Distance mm (in.)
RH	212.0 ± 2.0 (8.35 ± 0.08)
LH	168.0 ± 2.0 (6.61 ± 0.08)

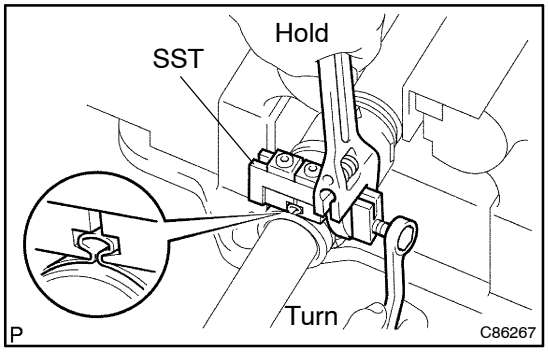

(c) Install the damper clamp.

HINT:
Install the damper clamp to inboard joint side.

(1) Hold the front drive shaft in a soft vise.
(2) Secure the damper clamp onto the damper.
(3) Place SST onto the damper clamp.
SST 09521–24010
(4) Tighten the SST so that the damper clamp is pinched.

NOTICE:
Do not overtighten the SST.

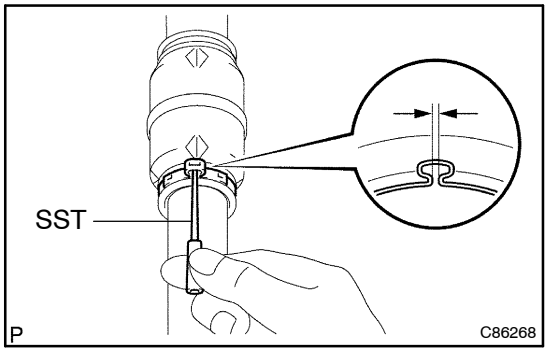

(5) Using SST, adjust the clearance of the damper clamp.

SST 09240–00020

Clearance: 0.8 mm (0.031 in.) or less

NOTICE:

When the measured value exceeds the specified value, re-tighten the clamp.

HINT:

- Install the damper clamp to inboard joint side.
- Perform the above procedure only when reassembling the RH side.

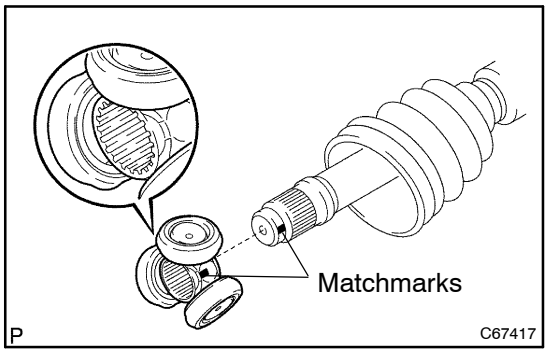

37. INSTALL FRONT DRIVE INBOARD JOINT ASSY LH

(a) Wrap the outboard joint shaft assy LH spline with vinyl tape to prevent it from being damaged.

(b) Install new parts to the outboard joint shaft assy LH in the following order.

(1) Inboard joint boot LH clamp

(2) Inboard joint boot

(3) Inboard joint boot LH No.2 clamp

(c) Place the beveled side of the tripod axial spline toward the outboard joint.

(d) Align the match marks.

(e) Using a brass bar and hammer, tap in the tripod joint assy to the drive shaft assy LH.

NOTICE:

- **Do not tap the roller.**
- **Be sure to install the tripod joint assy in the correct direction.**

(f) Pack the inboard joint shaft and boot with grease in the boot kit.

Grease capacity: 170 to 190 g (6.0 to 6.7 oz.)

(g) Using a snap ring expander, install a new shaft snap ring.

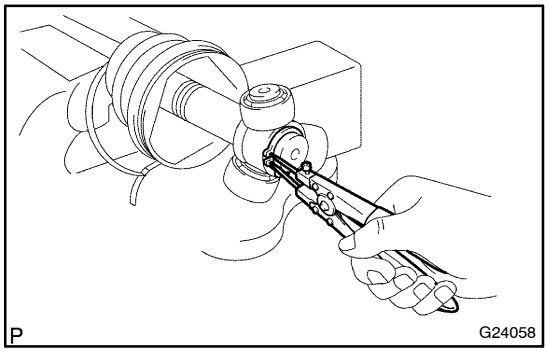

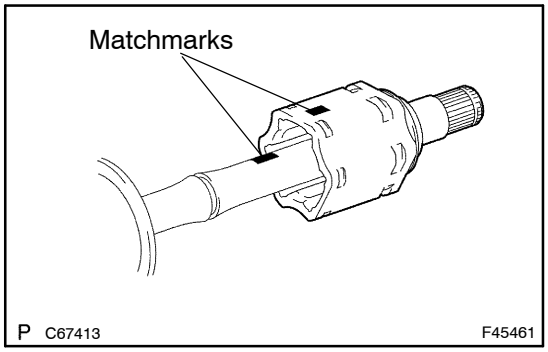

(h) Aligning the matchmarks, install the inboard joint assy LH to the outboard joint shaft assy LH.

38. INSTALL FR AXLE INBOARD JOINT BOOT

(a) Install the inboard joint boot to the inboard joint assy LH and outboard joint shaft assy LH.

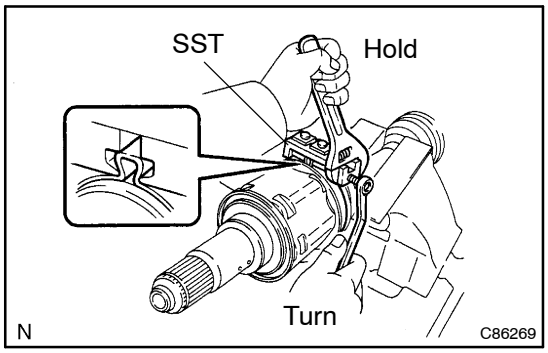

39. INSTALL FRONT AXLE INBOARD JOINT BOOT CLAMP

(a) Install the inboard joint boot clamp.
  (1) Hold the drive shaft in a soft vise.
  (2) Secure the 2 inboard joint boot clamps onto the boot.
  (3) Place SST onto the inboard joint large boot clamp.
  SST 09521–24010
  (4) Tighten the SST so that the large clamp is pinched.

NOTICE:

Do not overtighten the SST.

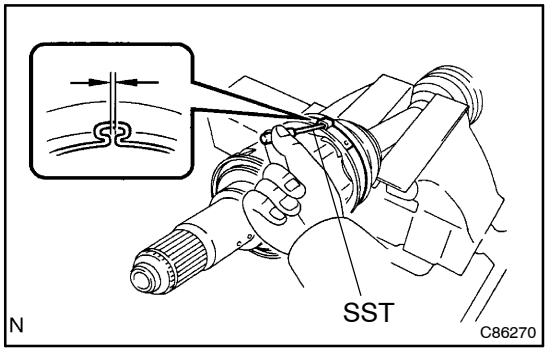

  (5) Using SST, adjust the clearance of the large clamp.
  SST 09240–00020
  Clearance: 0.8 mm (0.031 in.) or less

NOTICE:

When the measured value exceeds the specified value, re-tighten the clamp.

(b) Install the inboard joint boot LH clamp following the same procedure as for the inboard joint boot LH No.2 clamp.

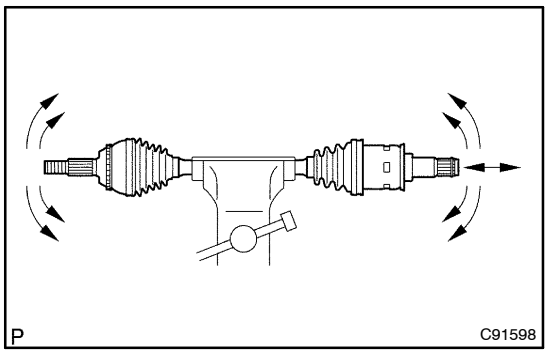

40. INSPECT FRONT DRIVE SHAFT

(a) Check that there is no excessive play in the radial direction of the outboard joint.
(b) Check that the inboard joint slides smoothly in the thrust direction.
(c) Check that there is no excessive play in the radial direction of the inboard joint.
(d) Check the boots for damage.

NOTICE:

Keep the drive shaft assy level during inspection.

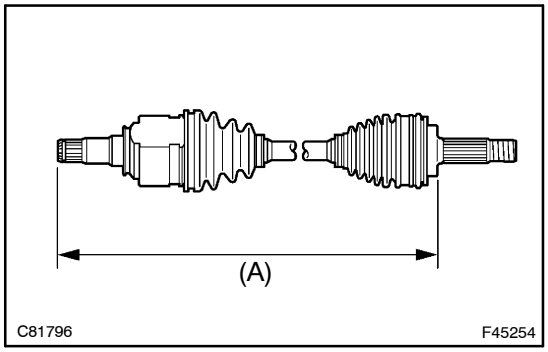

HINT:

For dimension (A), refer to the following table.

Drive shaft type	Dimension (A) mm (in.)
LH	546.1 (21.50) ± 5.0 (0.20)
RH	884.0 (34.80) ± 5.0 (0.20)

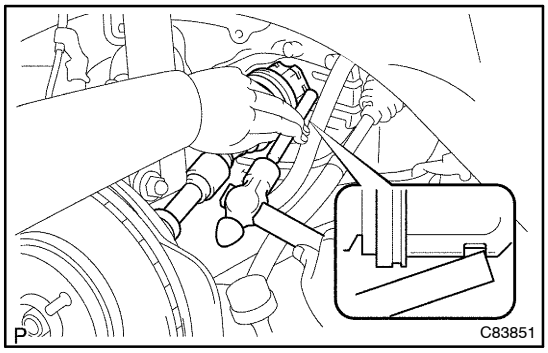

41. INSTALL FRONT DRIVE SHAFT ASSY LH

(a) Coat the inboard joint shaft assy LH spline with gear oil.

(b) Align the shaft splines and install the drive shaft assy LH with a brass bar and hammer.

NOTICE:

- **Set the snap ring with the opening side facing downwards.**
- **Be careful not to damage the oil seal, boot and dust cover.**

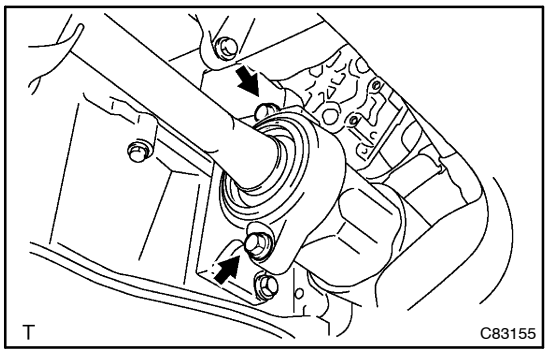

42. INSTALL FRONT DRIVE SHAFT ASSY RH (RH DRIVE SHAFT)

(a) Coat the inboard joint shaft assy RH spline with gear oil.

(b) Align the shaft splines and install the drive shaft assy RH with the 2 bolts.

Torque: 64 N·m (650 kgf·cm, 47 ft·lbf)

NOTICE:

Do not damage the oil seal, boot and dust cover.

43. INSTALL FRONT AXLE ASSY LH

(a) Install the drive shaft assy LH to the front axle assy LH.

NOTICE:

- **Be careful not to damage the outboard joint boot.**
- **Be careful not to damage the speed sensor rotor.**

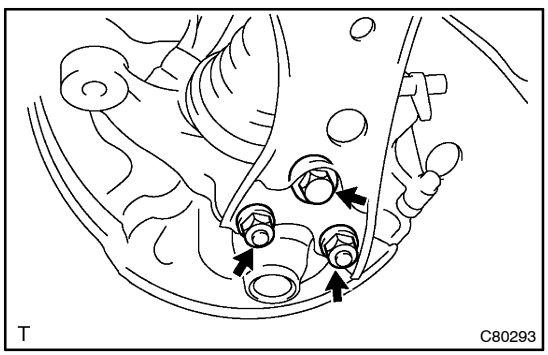

44. INSTALL FRONT SUSPENSION ARM SUB–ASSY LOWER NO.1 LH

(a) Install the lower ball joint to the front suspension arm sub–assy lower No.1 LH with the bolt and 2 nuts.

Torque: 89 N·m (908 kgf·cm, 66 ft·lbf)

45. INSTALL TIE ROD END SUB–ASSY LH

(a) Install the tie rod end sub–assy LH to the steering knuckle with the nut.
Torque: 49 N·m (500 kgf·cm, 36 ft·lbf)

(b) Install a new cotter pin.

NOTICE:

If the holes for the cotter pin are not aligned, tighten the nut up to 60° further.

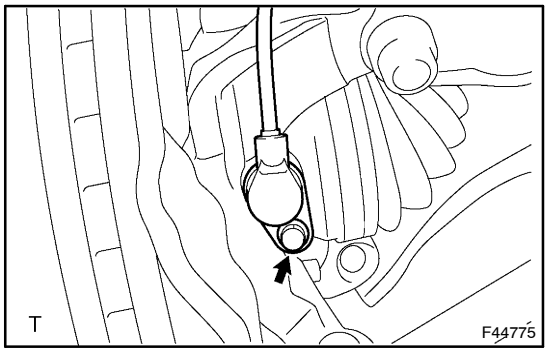

46. CONNECT SPEED SENSOR FRONT LH

(a) Install the speed sensor front LH to the steering knuckle with the bolt.
Torque: 8.0 N·m (82 kgf·cm, 71 in.·lbf)

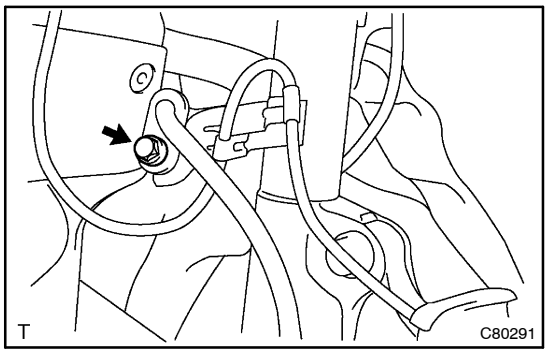

(b) Connect the speed sensor wire and flexible hose to the shock absorber with the bolt.
Torque: 19 N·m (194 kgf·cm, 14 ft·lbf)

NOTICE:

- **Be careful not to damage the speed sensor.**
- **Keep the speed sensor clean.**
- **Do not twist the sensor wire when installing the sensor.**

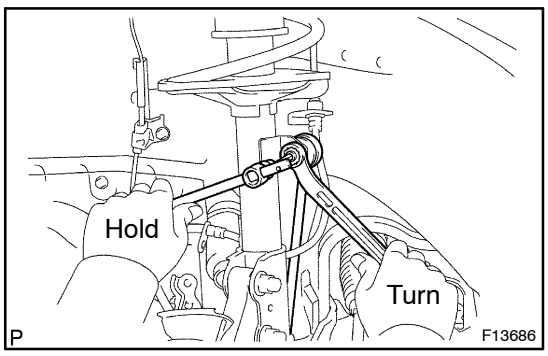

47. INSTALL FRONT STABILIZER LINK ASSY LH

(a) Install the front stabilizer link assy LH with the nut.
Torque: 74 N·m (755 kgf·cm, 55 ft·lbf)

HINT:

If the ball joint turns together with the nut, use a hexagon wrench (6 mm) to hold the stud.

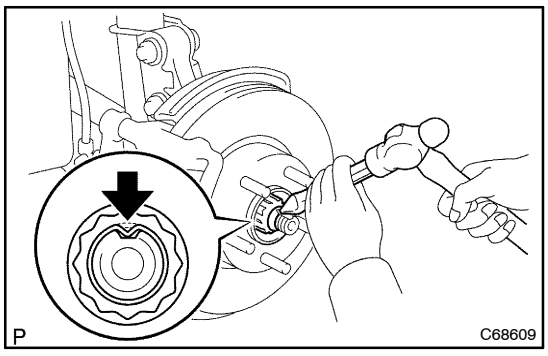

48. INSTALL FRONT AXLE HUB LH NUT

(a) Install a new axle hub LH nut.
Torque: 216 N·m (2,200 kgf·cm, 159 ft·lbf)

(b) Using a chisel and hammer, stake the axle hub LH nut.

49. INSTALL ENGINE UNDER COVER LH

50. INSTALL FRONT WHEEL
Torque: 103 N·m (1,050 kgf·cm, 76 ft·lbf)

51. ADD AUTOMATIC TRANSAXLE FLUID (A/T TRANSAXLE)
(SEE PUB. NO. RM1018E ON PAGE 40–2)

52. INSPECT AND ADJUST AUTOMATIC TRANSAXLE FLUID (A/T TRANSAXLE)
(SEE PUB. NO. RM1018E ON PAGE 40–2)

53. INSPECT AND ADJUST FRONT WHEEL ALIGNMENT (SEE PUB. NO. RM1018E ON PAGE 26–6)

54. CHECK ABS SPEED SENSOR SIGNAL

(a) ABD WITH EBD & BA & TRAC & VSC SYSTEM (SEE PUB. NO. RM1018E ON PAGE 5–756)

BRAKE BOOSTER ASSY (RHD) (2AZ–FSE)

3211D–01

ON–VEHICLE INSPECTION

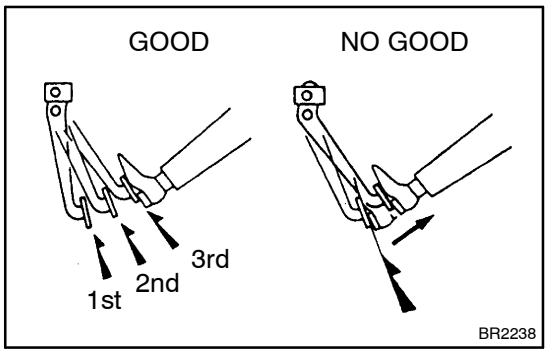

1. INSPECT BRAKE BOOSTER

(a) Airtightness check.

(1) Start the engine and stop it after 1 or 2 minutes. Depress the brake pedal several times slowly.

HINT:

If the pedal can be depressed to the floor the first time, but on the 2nd or 3rd time cannot be depreesed as far, the booster is airtight.

(2) Depress the brake pedal while the engine is running, and stop the engine with the pedal depressed.

HINT:

If there is no change in the pedal reserve distance after holding the pedal for 30 seconds, the booster is airtight.

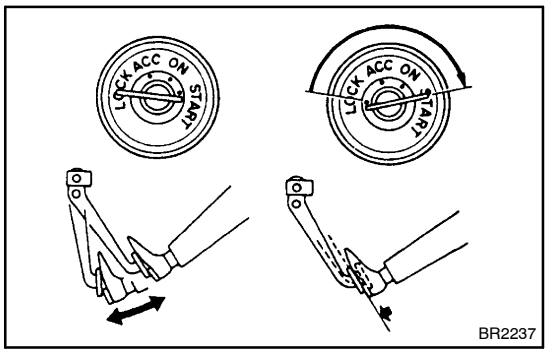

(b) Operating check.

(1) Depress the brake pedal several times with the ignition switch off and check that there is no change in the pedal reserve distance.

(2) Depress the brake pedal and start the engine.

HINT:

If the pedal goes down slightly, operation is normal.

2. INSPECT VACUUM CHECK VALVE

(a) Inspect vacuum check valve.

(1) Slide the clip and disconnect the vacuum hose.

(2) Remove the vacuum check valve.

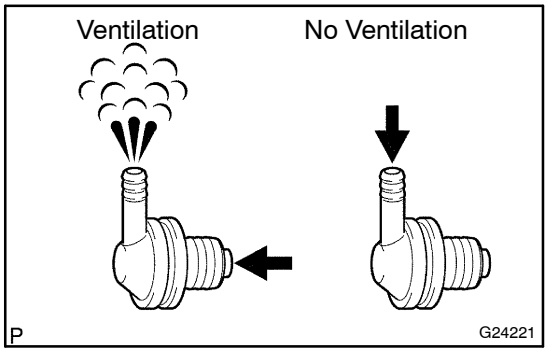

(3) Check that there is ventilation from the booster to the engine, and no ventilation from the engine to the booster.

(4) If any fault is found, replace the vacuum check valve.

3211E–01

COMPONENTS

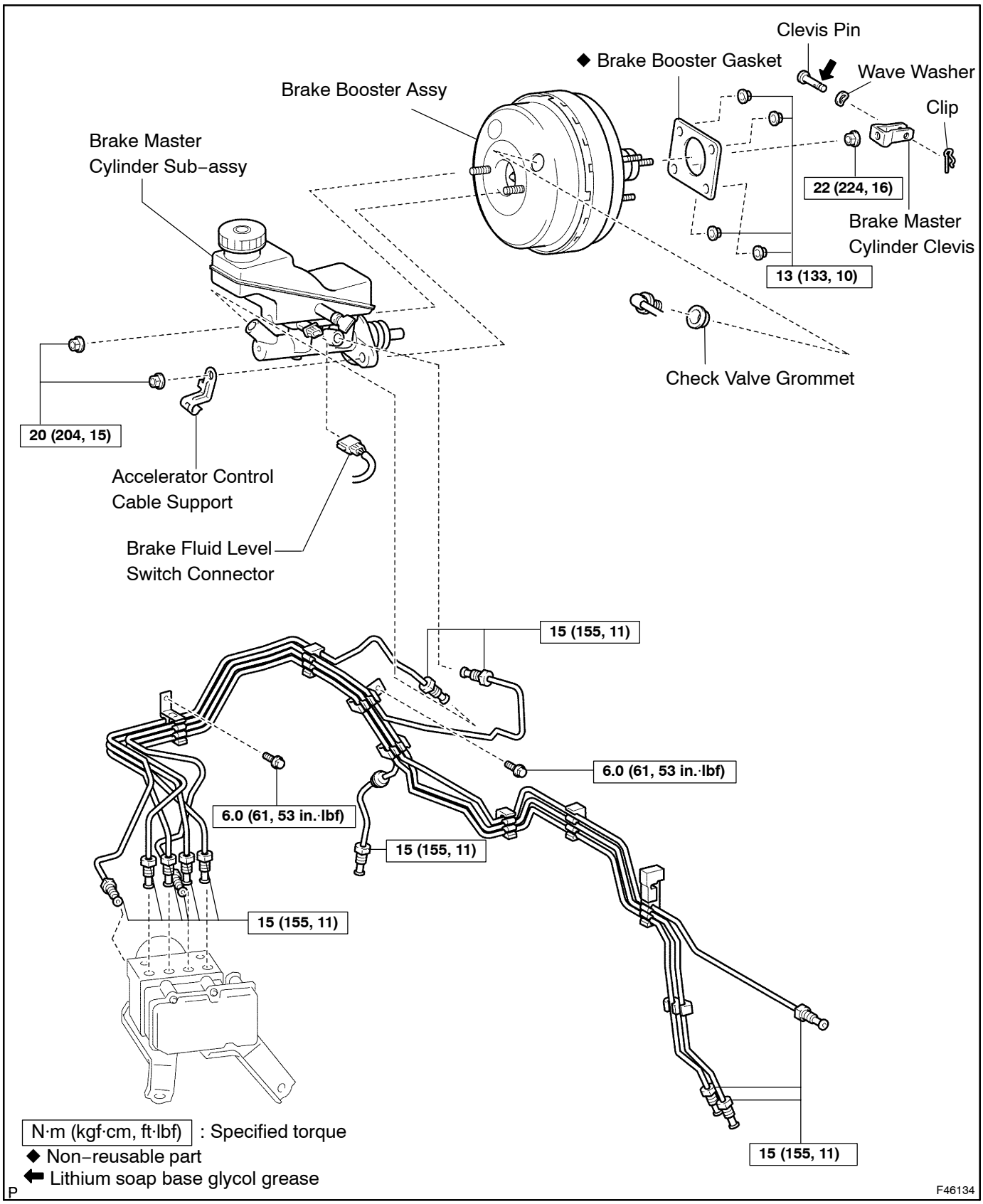

3211F–01

REPLACEMENT

NOTICE:

Do not adjust the brake booster push rod.

1. DRAIN BRAKE FLUID

NOTICE:

Wash the brake fluid off immediately if it adheres to any painted surface.

2. REMOVE FRONT WHEEL RH

3. REMOVE ENGINE COVER NO.1

4. REMOVE CYLINDER HEAD COVER SUB–ASSY (SEE PAGE 14–79)

5. REMOVE IGNITION COIL ASSY (SEE PAGE 14–79)

6. REMOVE ENGINE ASSEMBLY WITH TRANSAXLE (SEE PAGE 14–23)

7. REMOVE BRAKE MASTER CYLINDER SUB–ASSY

SST 09023–00100

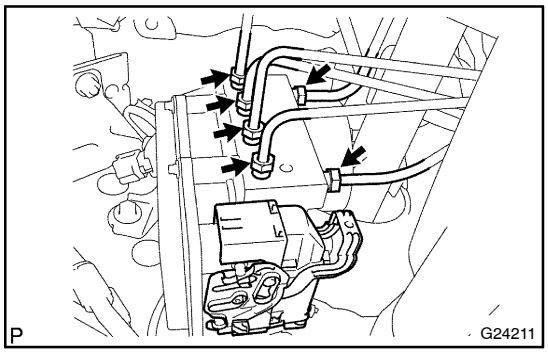

8. REMOVE BRAKE TUBE

(a) Using SST, disconnect the 6 brake tubes from the brake actuator.

SST 09023–00100

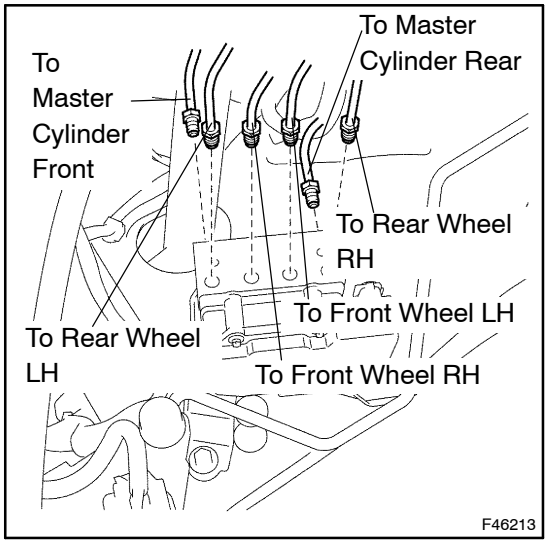

(b) Use tags or make a memo to identify the place to reconnect.

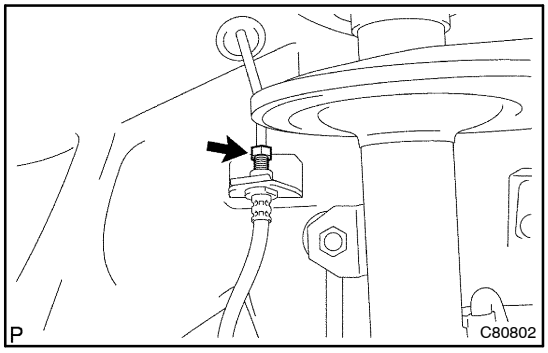

(c) Using SST and a spanner, disconnect the brake tube from the flexible hose of the front brake RH.
SST 09023–00100

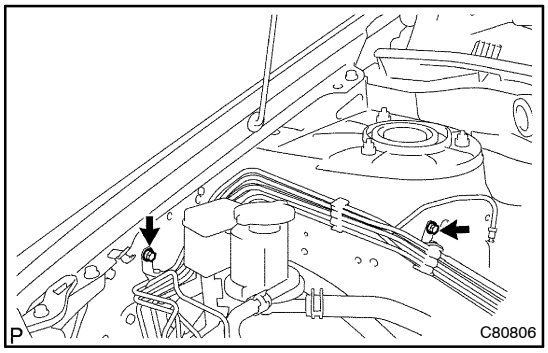

(d) Remove the 2 bolts and disconnect the 2 brake tube clamps.

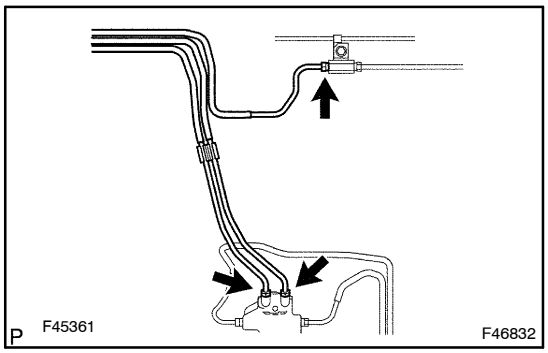

(e) Using SST, disconnect the 3 brake tubes from the ways.
SST 09023–00100

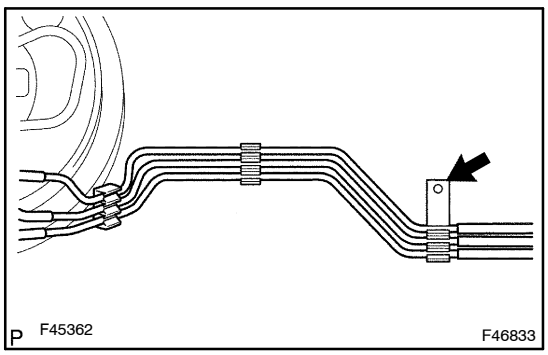

(f) Disconnect the clamp from the stud bolt and remove the brake tubes.

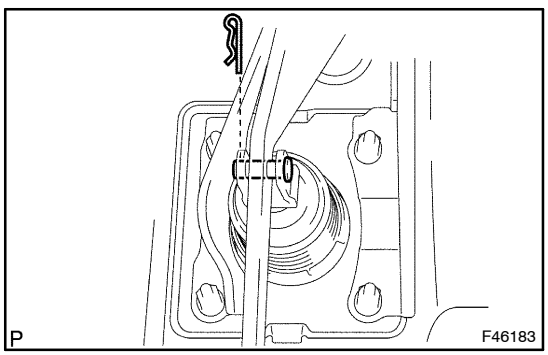

9. REMOVE BRAKE BOOSTER ASSY

(a) Disconnect the vacuum hose from the brake booster assy.

(b) Remove the clip, the clevis pin and the wave washer.

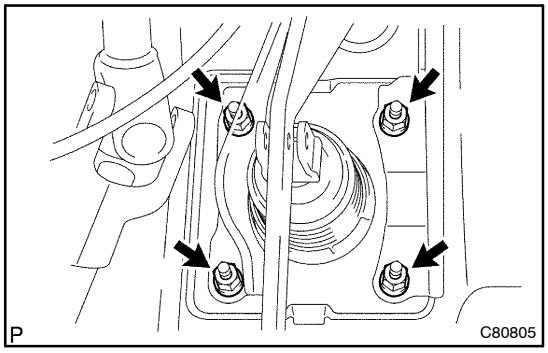

(c) Remove the 4 nuts.
(d) Pull out the brake booster assy.
(e) Remove the brake master cylinder clevis from the brake booster assy.

10. REMOVE BRAKE BOOSTER GASKET

(a) Pull out the brake booster gasket.

11. REMOVE CHECK VALVE

(a) Remove the check valve and grommet from the brake booster assy.

12. INSTALL CHECK VALVE

(a) Install the check valve and grommet to the brake booster assy.

13. INSTALL BRAKE BOOSTER GASKET

(a) Install a new brake booster gasket to the brake booster assy.

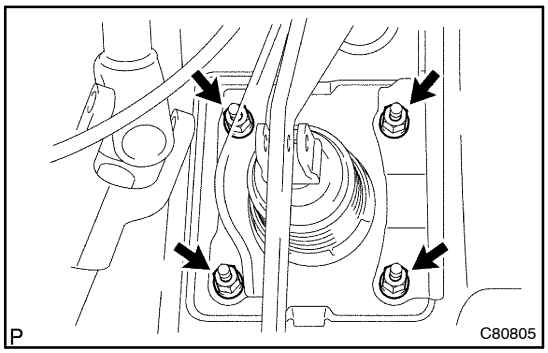

14. INSTALL BRAKE BOOSTER ASSY

(a) Install the brake master cylinder clevis to the brake booster assy.
Torque: 22 N·m (224 kgf·cm, 16 ft·lbf)
(b) Install the brake booster assy with the 4 nuts.
Torque: 13 N·m (133 kgf·cm, 10 ft·lbf)

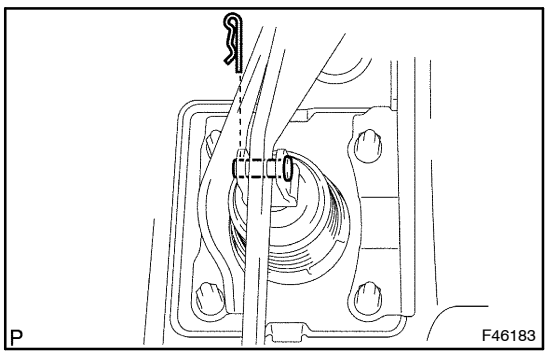

(c) Install the clevis pin, the clip and the wave washer.
(d) Connect the vacuum hose to the check valve.

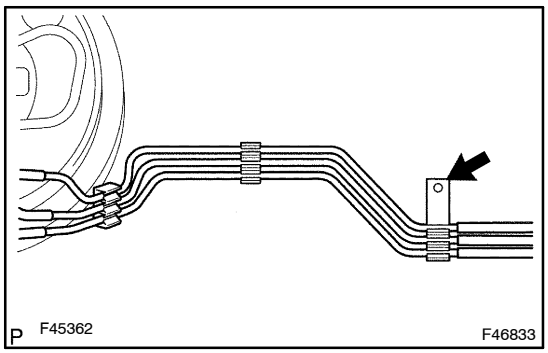

15. INSTALL BRAKE TUBE

(a) Connect the clamp to the stud bolt.

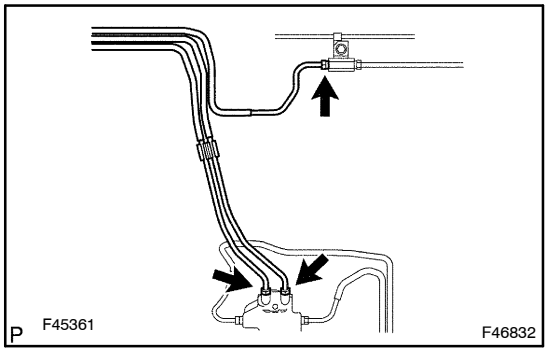

(b) Using SST, connect the 3 brake tubes to the ways.
SST 09023–00100
Torque: 15 N·m (155 kgf·cm, 11 ft·lbf)

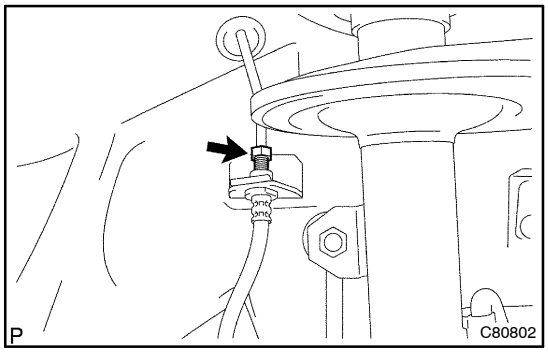

(c) Using SST and a spanner, connect the brake tube to the flexible hose of front brake RH.
SST 09023–00100
Torque: 15 N·m (155 kgf·cm, 11 ft·lbf)

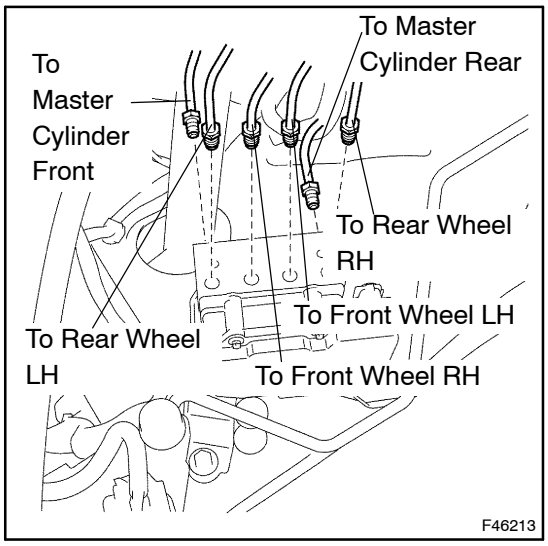

(d) Using SST, connect the 6 brake tubes to the brake actuator, as shown in the illustration.
SST 09023–00100
Torque: 15 N·m (155 kgf·cm, 11 ft·lbf)

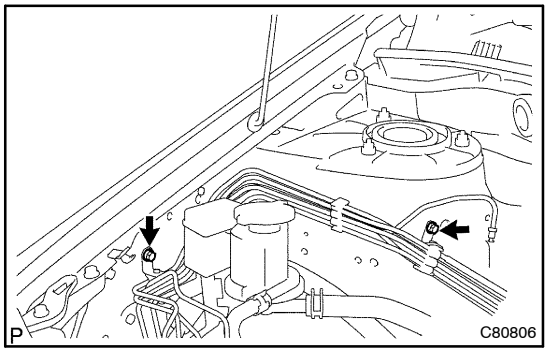

(e) Install the brake tube clamps with the 2 bolts.
Torque: 6.0 N·m (61 kgf·cm, 53 in.·lbf)

16. INSTALL BRAKE MASTER CYLINDER SUB–ASSY
SST 09023–00100

17. INSTALL ENGINE ASSEMBLY WITH TRANSAXLE (SEE PAGE 14–23)

18. INSTALL IGNITION COIL ASSY (SEE PAGE 14–79)

19. INSTALL CYLINDER HEAD COVER SUB–ASSY (SEE PAGE 14–79)

20. INSTALL ENGINE COVER NO.1
21. INSTALL FRONT WHEEL RH
Torque: 103 N·m (1,050 kgf·cm, 76 ft·lbf)
22. FILL RESERVOIR WITH BRAKE FLUID
23. BLEED MASTER CYLINDER
SST 09023–00100
24. BLEED BRAKE LINE
25. CHECK AND ADJUST BRAKE PEDAL HEIGHT
26. CHECK PEDAL FREE PLAY
27. CHECK PEDAL RESERVE DISTANCE
28. CHECK FLUID LEVEL IN RESERVOIR
29. CHECK BRAKE FLUID LEAKAGE

AUTOMATIC TRANSAXLE ASSY (U151E)

COMPONENTS

40184–01

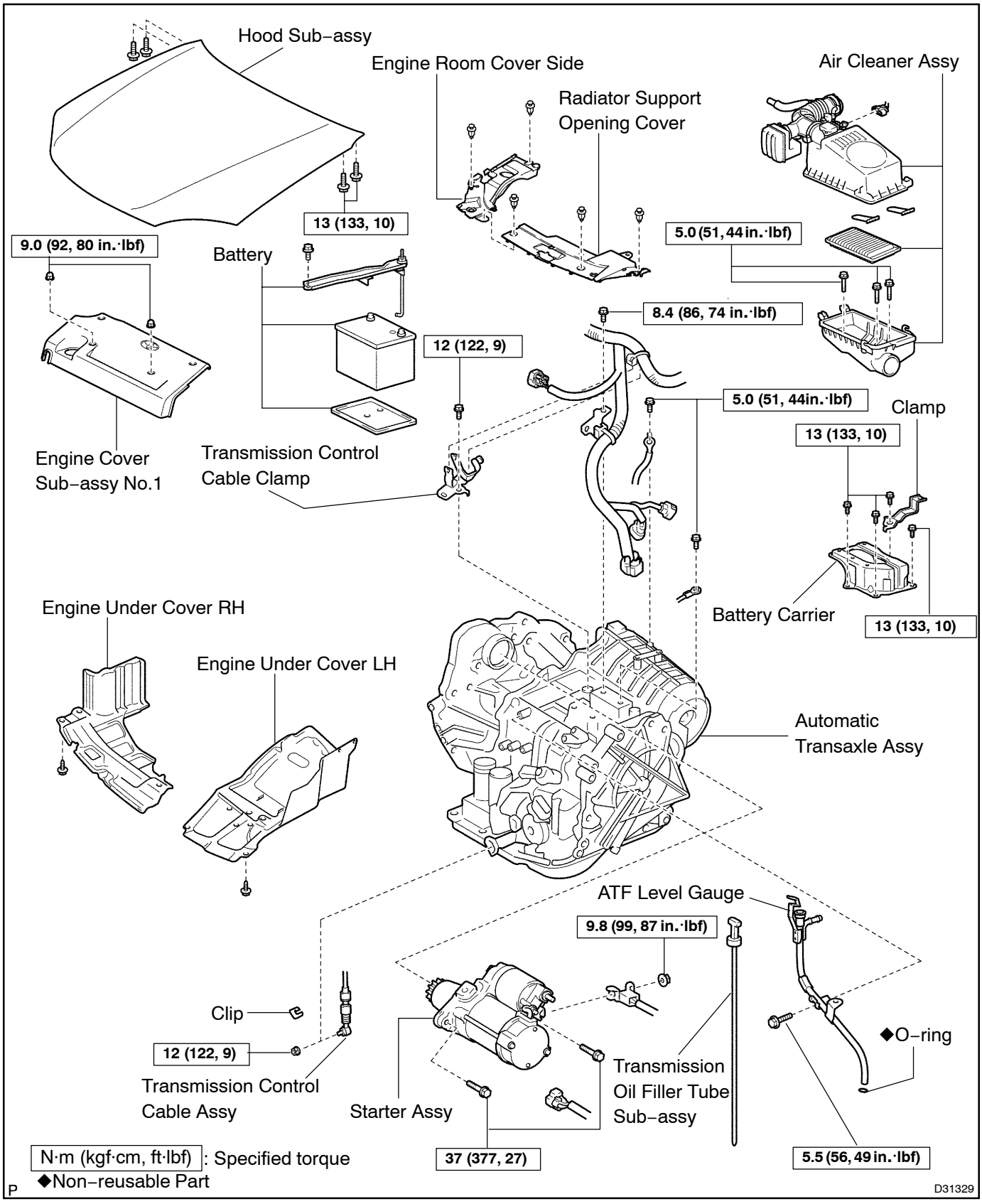

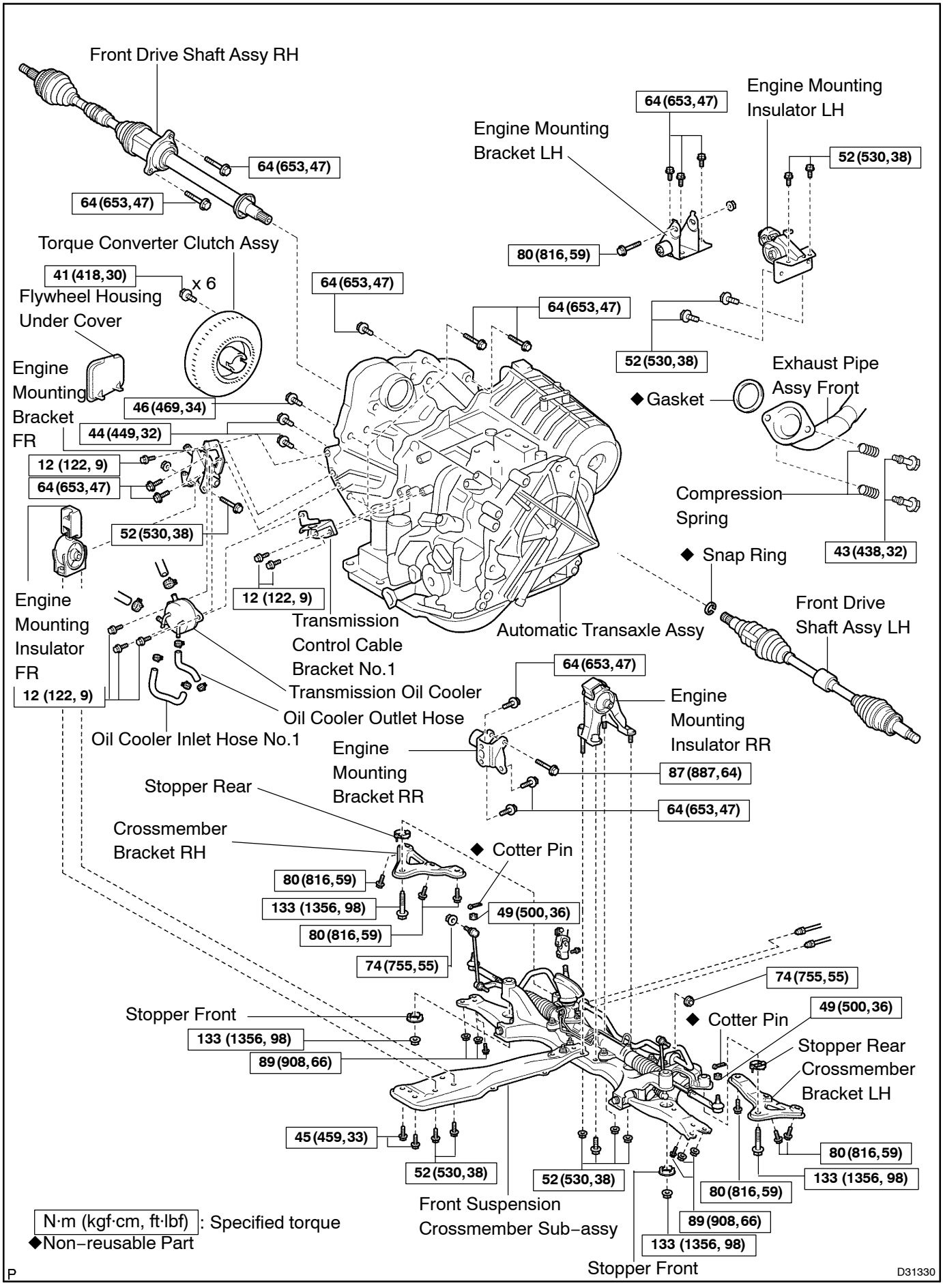
Front Drive Shaft Assy RH
64 (653, 47)
64 (653, 47)
Engine Mounting Insulator LH
64 (653, 47)
Engine Mounting Bracket LH
52 (530, 38)
80 (816, 59)
Torque Converter Clutch Assy
41 (418, 30)
x 6
Flywheel Housing Under Cover
64 (653, 47)
64 (653, 47)
52 (530, 38)
Exhaust Pipe Assy Front
◆ Gasket
Engine Mounting Bracket FR
46 (469, 34)
44 (449, 32)
12 (122, 9)
64 (653, 47)
52 (530, 38)
Compression Spring
43 (438, 32)
◆ Snap Ring
Engine Mounting Insulator FR
12 (122, 9)
12 (122, 9)
Transmission Control Cable Bracket No.1
Automatic Transaxle Assy
Front Drive Shaft Assy LH
Transmission Oil Cooler
Oil Cooler Outlet Hose
Oil Cooler Inlet Hose No.1
64 (653, 47)
Engine Mounting Insulator RR
Engine Mounting Bracket RR
87 (887, 64)
64 (653, 47)
Stopper Rear
Crossmember Bracket RH
◆ Cotter Pin
80 (816, 59)
133 (1356, 98)
49 (500, 36)
80 (816, 59)
74 (755, 55)
74 (755, 55)
Stopper Front
◆ Cotter Pin
49 (500, 36)
133 (1356, 98)
89 (908, 66)
Stopper Rear Crossmember Bracket LH
45 (459, 33)
80 (816, 59)
133 (1356, 98)
52 (530, 38)
52 (530, 38)
80 (816, 59)
89 (908, 66)
133 (1356, 98)
Front Suspension Crossmember Sub–assy
Stopper Front
N·m (kgf·cm, ft·lbf) : Specified torque
◆Non–reusable Part
P
D31330

40185–01

REPLACEMENT

1. REMOVE HOOD SUB–ASSY

2. REMOVE ENGINE COVER SUB–ASSY NO.1

(a) Remove the 2 nuts and engine cover.

3. REMOVE RADIATOR SUPPORT OPENING COVER

4. REMOVE ENGINE ROOM COVER SIDE

5. REMOVE BATTERY

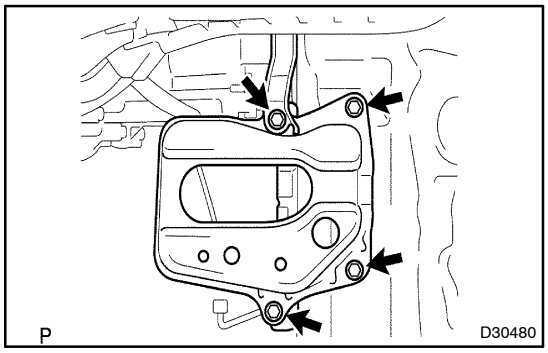

6. REMOVE BATTERY CARRIER

(a) Remove the 4 bolts and battery carrier.

7. REMOVE AIR CLEANER ASSY

8. SEPARATE TRANSMISSION CONTROL CABLE ASSY

(a) Remove the nut from the control shaft lever.

(b) Separate the control cable from the control shaft lever.

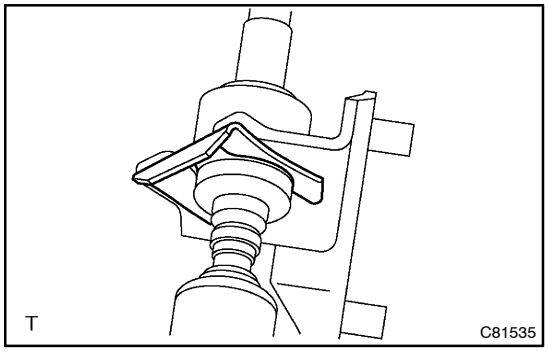

(c) Remove the clip and separate the control cable from the control cable bracket.

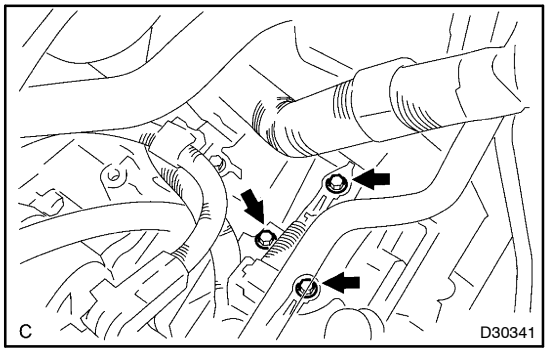

9. SEPARATE WIRE HARNESS

(a) Remove the 3 bolts and separete the 2 wire harnesses with the wire harness bracket.

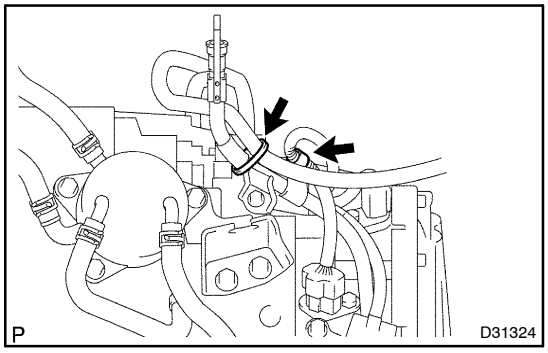

10. DISCONNECT CONNECTOR

(a) Separate the 2 wire harness clamps from the oil filler tube.
(b) Disconnect the transmission wire connector.
(c) Disconnect the park/neutral position switch connector.
(d) Disconnect the 2 speed sensor connectors.

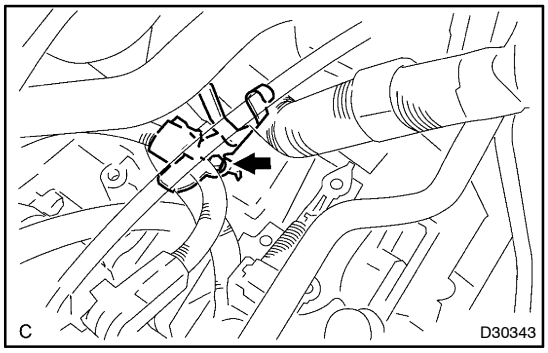

11. REMOVE TRANSMISSION CONTROL CABLE CLAMP

(a) Remove the bolt and transmission control cable clamp from the automatic transaxle.

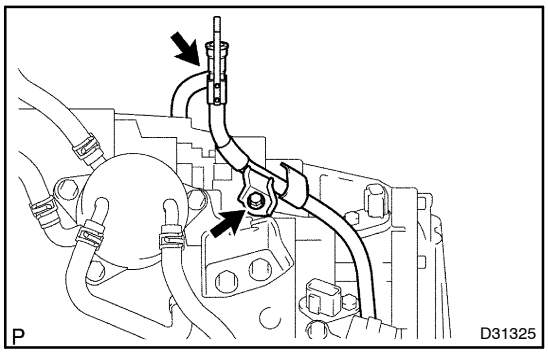

12. REMOVE TRANSMISSION OIL FILLER TUBE SUB–ASSY

(a) Remove the ATF level gauge.
(b) Remove the breather hose.
(c) Remove the bolt and oil filler tube.
(d) Remove the O–ring from the oil filler tube.

13. REMOVE FRONT WHEELS
14. REMOVE ENGINE UNDER COVER RH
15. REMOVE ENGINE UNDER COVER LH
16. DRAIN AUTOMATIC TRANSAXLE FLUID

(a) Remove the drain plug and drain ATF.
(b) Remove the gasket from the drain plug.
(c) Install a new gasket and the drain plug.
Torque: 47 N·m (479 kgf·cm, 35 ft·lbf)

17. DRAIN COOLANT (SEE PAGE 16–7)
18. REMOVE TRANSMISSION OIL COOLER (SEE PAGE 40–26)
19. SEPARATE OIL COOLER INLET HOSE NO.1

(a) Loosen the clip and separate the oil cooler inlet hose No.1 from the automatic transaxle assy.

20. SEPARATE OIL COOLER OUTLET HOSE

(a) Loosen the clip and separate the oil cooler outlet hose from the automatic transaxle assy.

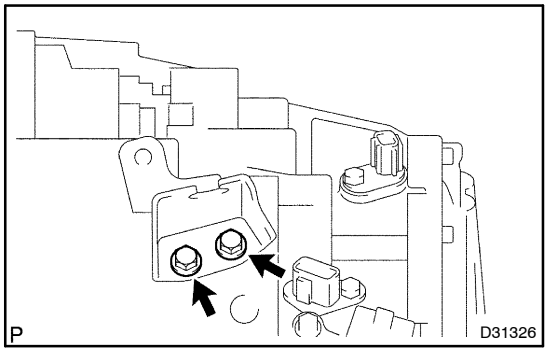

21. REMOVE TRANSMISSION CONTROL CABLE BRACKET NO.1

(a) Remove the 2 bolts and control cable bracket No.1.

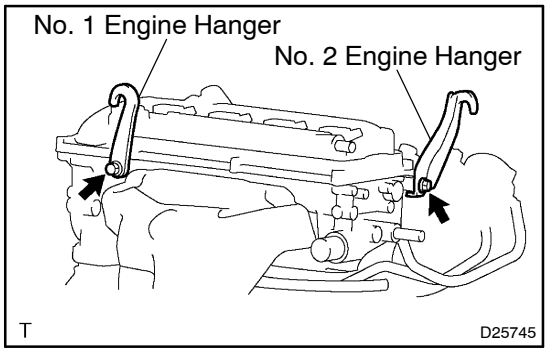

22. SUSPEND ENGINE ASSY

(a) Install the No.1 and No.2 engine hangers in the correct direction.

Parts No.:
No. 1 engine hanger: 12281–28010
No. 2 engine hanger: 12282–28010
Bolt: 91512–61020
Torque: 38 N·m (387 kgf·cm, 28 ft·lbf)

(b) Attach the engine chain hoist to the engine hanger.

CAUTION:
Do not attempt to hang the engine by hooking the chain to any other part.

23. REMOVE EXHAUST PIPE ASSY FRONT (SEE PAGE 15–2)

24. REMOVE FRONT DRIVE SHAFT ASSY RH (SEE PAGE 30–4)

SST 09520–01010, 09520–24010 (09520–32040)

25. REMOVE FRONT DRIVE SHAFT ASSY LH (SEE PAGE 30–4)

SST 09520–01010, 09520–24010 (09520–32040)

26. REMOVE STARTER ASSY

(a) Remove the nut and disconnect the starter wire.
(b) Disconnect the connector.
(c) Remove the 2 bolts and starter.

27. SUPPORT AUTOMATIC TRANSAXLE ASSY

(a) Support the automatic transaxle with a transmission jack.

28. REMOVE FRONT SUSPENSION CROSSMEMBER SUB–ASSY (SEE PAGE 14–23)

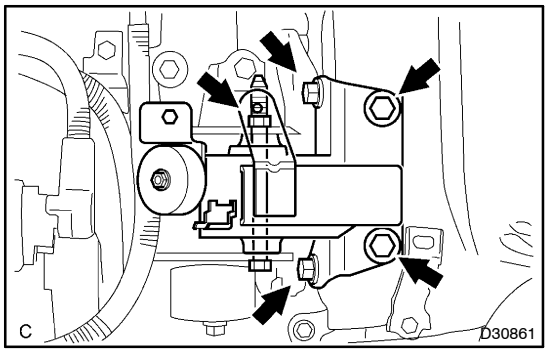

29. REMOVE ENGINE MOUNTING INSULATOR LH

(a) Remove the 5 bolts, nut and engine mounting insulator LH.

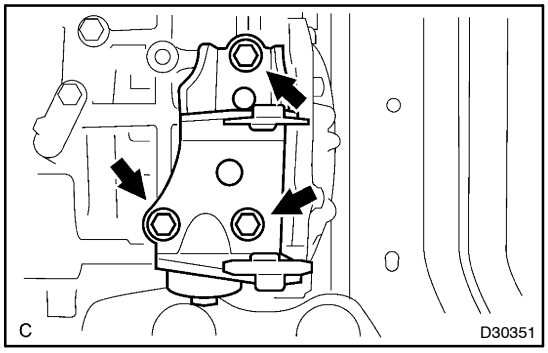

30. REMOVE ENGINE MOUNTING BRACKET LH

(a) Remove the 3 bolts and engine mounting bracket LH from the automatic transaxle.

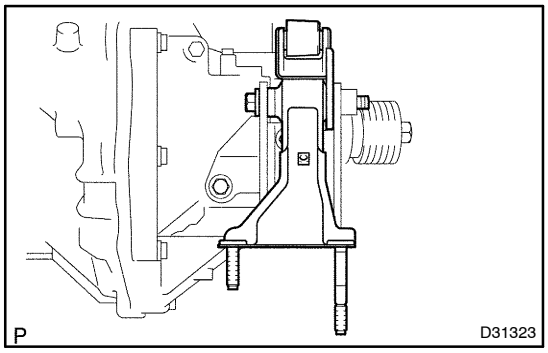

31. REMOVE ENGINE MOUNTING INSULATOR RR

(a) Remove the bolt and engine mounting insulator RR from the engine mounting bracket RR.

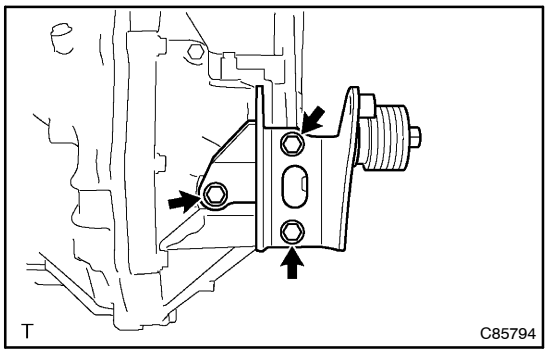

32. REMOVE ENGINE MOUNTING BRACKET RR

(a) Remove the 3 bolts and engine mounting bracket RR from the automatic transaxle.

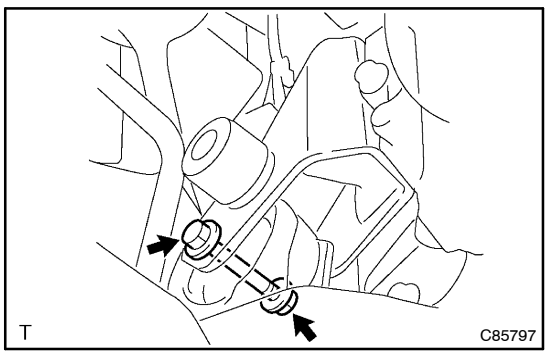

33. REMOVE ENGINE MOUNTING INSULATOR FR

(a) Remove the bolt and nut from the engine mounting bracket FR.

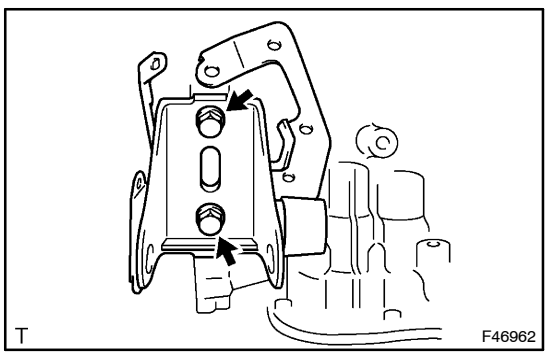

34. REMOVE ENGINE MOUNTING BRACKET FR

(a) Remove the 2 bolts and engine mounting bracket FR from the automatic transaxle.

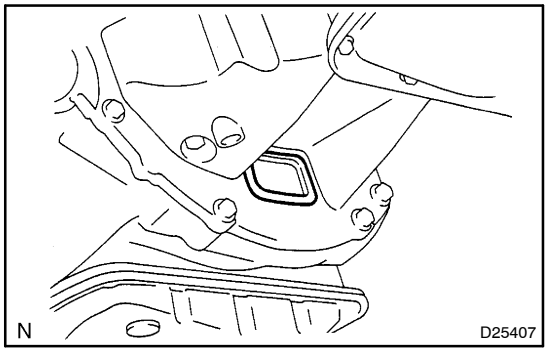

35. REMOVE FLYWHEEL HOUSING UNDER COVER

(a) Remove the flywheel housing under cover from the automatic transaxle.

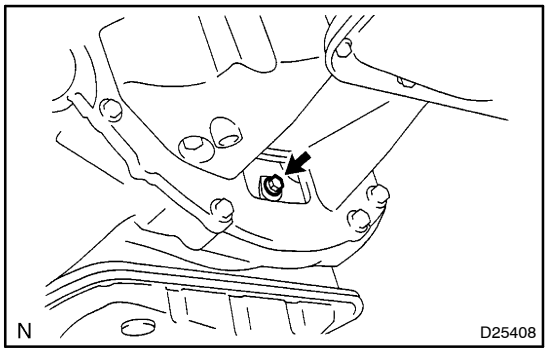

36. REMOVE AUTOMATIC TRANSAXLE ASSY

(a) Turn the crankshaft to remove the 6 bolts while holding the crankshaft pulley bolt with a wrench.

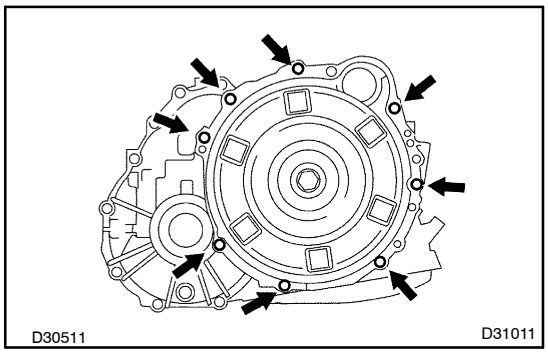

(b) Remove the 8 bolts.

(c) Separate and remove the automatic transaxle.

37. REMOVE TORQUE CONVERTER CLUTCH ASSY

38. INSPECT TORQUE CONVERTER CLUTCH ASSY (SEE PUB. NO. RM1018E, PAGE 40–37)

SST 09350–32014 (09351–32010, 09351–32020)

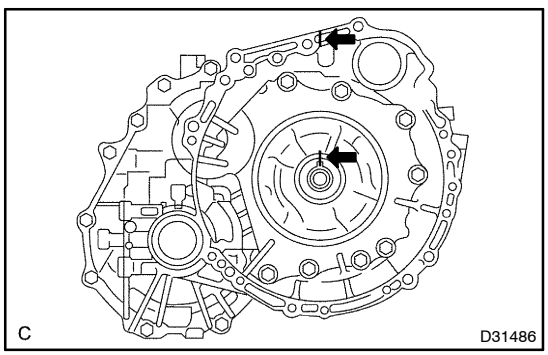

39. INSTALL TORQUE CONVERTER CLUTCH ASSY

(a) Set the key of the front oil pump drive gear at the top and put a mark on the transaxle case.

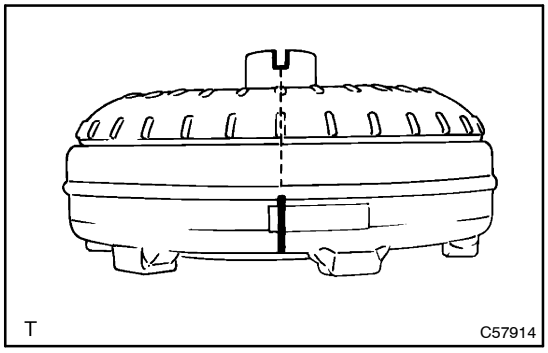

(b) Put a mark on the torque converter clutch so that its groove can be clearly indicated.

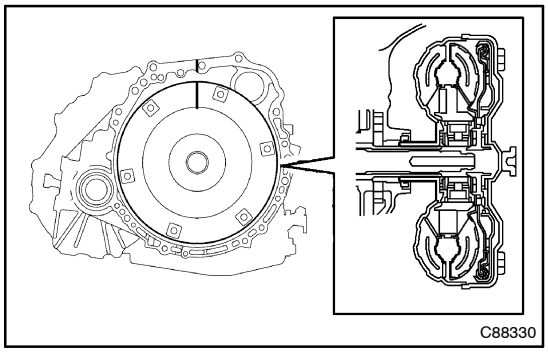

(c) Match the 2 marks on the transaxle case and the torque converter clutch and fit the spline part of the input shaft with the one of the turbine runner.

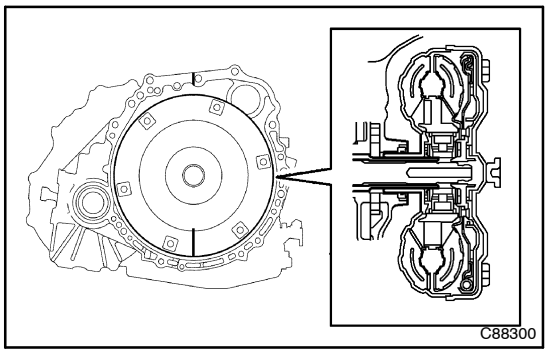

(d) Rotating the torque converter clutch, fit the spline part of the stator shaft with the one of the stator.

HINT:
Rotate it about 180 degrees.

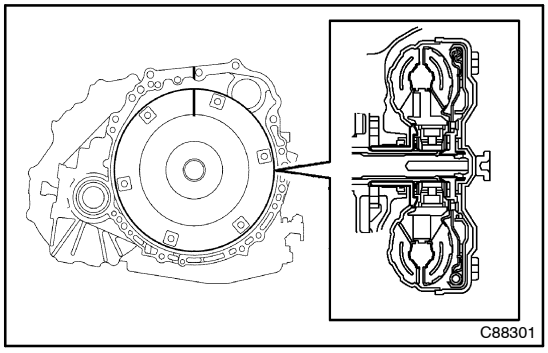

(e) Rotating the torque converter clutch, match the 2 marks on the case and the torque converter clutch again and fit the key of the oil pump drive gear into the key way of the torque converter clutch.

NOTICE:
When rotating the torque converter clutch, do not use excessive force to push it.

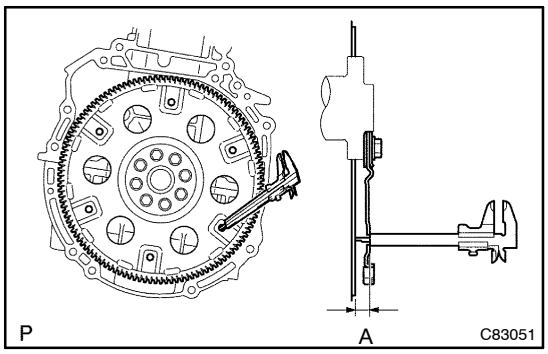

(f) Using vernier calipers, measure the dimension A between the transaxle and the end surface of the drive plate.

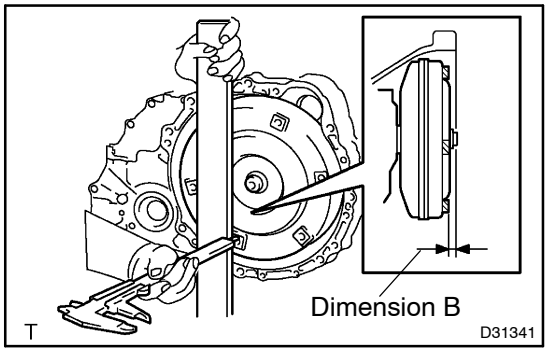

(g) Using calipers and a straight edge, measure the dimension B shown in the illustration and check that B is greater than A measured in step (f).
Standard: A + 1 mm or more

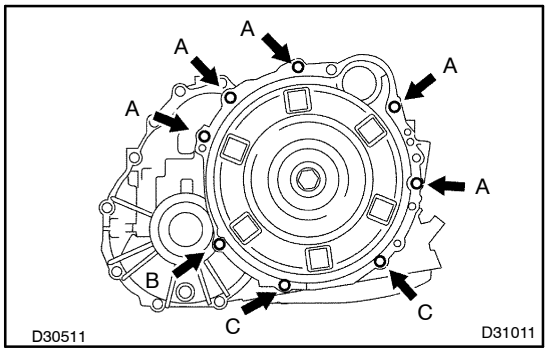

40. INSTALL AUTOMATIC TRANSAXLE ASSY

(a) Install the automatic transaxle and 8 bolts to the engine.
Torque:
Bolt A: 64 N·m (653 kgf·cm, 47 ft·lbf)
Bolt B: 46 N·m (469 kgf·cm, 34 ft·lbf)
Bolt C: 44 N·m (449 kgf·cm, 32 ft·lbf)

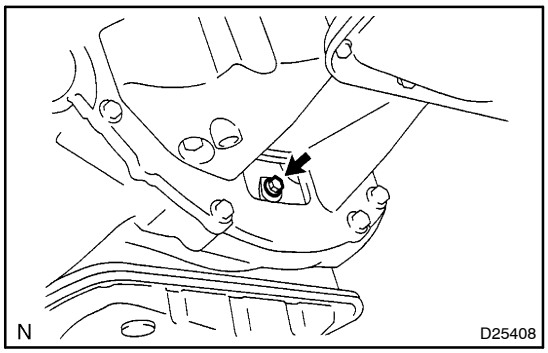

(b) Install the 6 torque converter clutch mounting bolts.
Torque: 41 N·m (418 kgf·cm, 30 ft·lbf)

HINT:
First install the green colored bolt, and then the remaining 5 bolts.

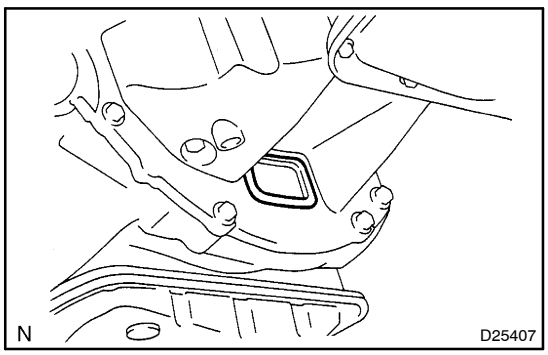

41. INSTALL FLYWHEEL HOUSING UNDER COVER

(a) Install the flywheel housing under cover to the automatic transaxle.

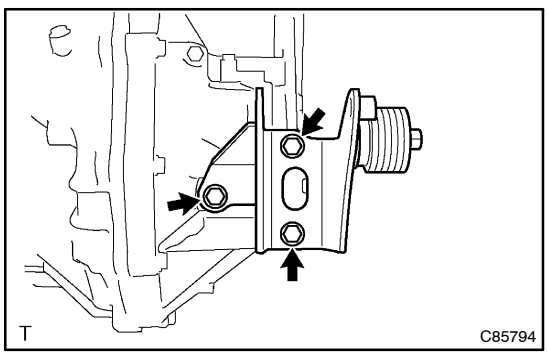

42. INSTALL ENGINE MOUNTING BRACKET RR

(a) Install the engine mounting bracket RR and 3 bolts to the automatic transaxle.
Torque: 64 N·m (653 kgf·cm, 47 ft·lbf)

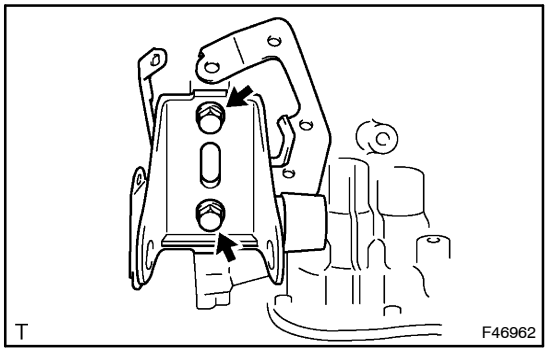

43. INSTALL ENGINE MOUNTING BRACKET FR

(a) Install the engine mounting bracket FR and 2 bolts to the automatic transaxle.
Torque: 64 N·m (653 kgf·cm, 47 ft·lbf)

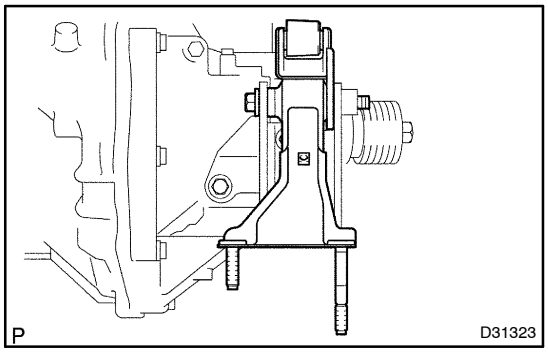

44. TEMPORARILY TIGHTEN ENGINE MOUNTING INSULATOR RR

(a) Install the engine mounting insulator RR to the engine mounting bracket RR, and temporarily tighten the bolt.

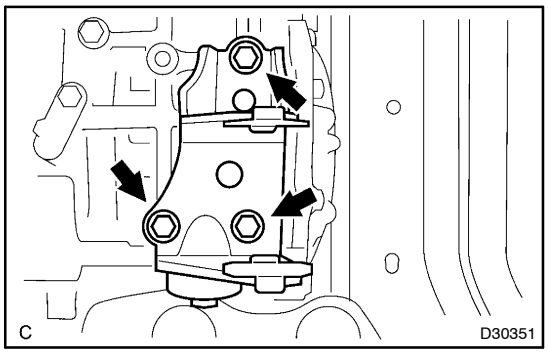

45. INSTALL ENGINE MOUNTING BRACKET LH

(a) Install the engine mounting bracket LH and 3 bolts to the automatic transaxle.
Torque: 64 N·m (653 kgf·cm, 47 ft·lbf)

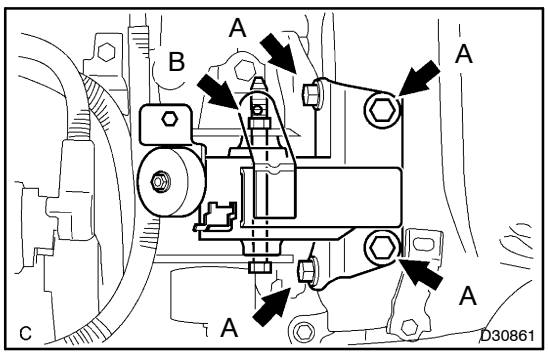

46. INSTALL ENGINE MOUNTING INSULATOR LH

(a) Install the engine mounting insulator LH, 5 bolts and nut.
Torque:
Bolt A: 52 N·m (530 kgf·cm, 38 ft·lbf)
Nut B: 80 N·m (816 kgf·cm, 59 ft·lbf)

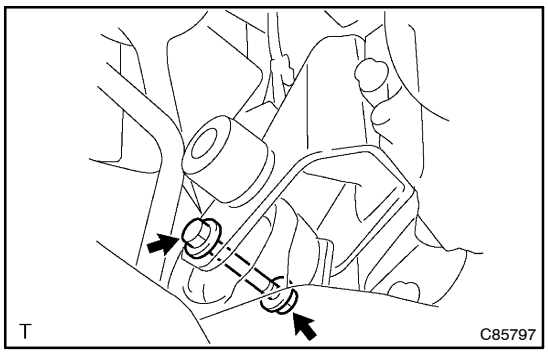

47. TEMPORARILY TIGHTEN ENGINE MOUNTING INSULATOR FR

(a) Install the engine mounting insulator FR to the engine mounting bracket FR, and temporarily tighten the bolt and nut.

48. INSTALL FRONT SUSPENSION CROSSMEMBER SUB–ASSY (SEE PAGE 14–23)

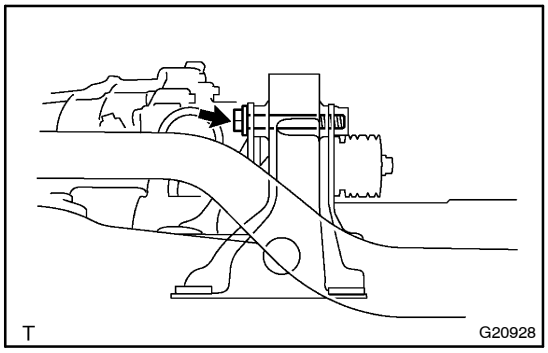

49. FULLY TIGHTEN ENGINE MOUNTING INSULATOR RR

(a) Fully tighten the bolt.
Torque: 87 N·m (887 kgf·cm, 64 ft·lbf)

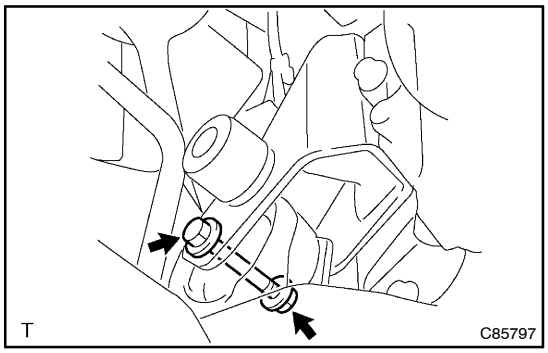

50. FULLY TIGHTEN ENGINE MOUNTING INSULATOR FR

(a) Fully tighten the bolt and nut.
Torque: 52 N·m (530 kgf·cm, 38 ft·lbf)

51. INSTALL STARTER ASSY

(a) Install the starter with the 2 bolts.
Torque: 37 N·m (377 kgf·cm, 27 ft·lbf)

(b) Connect the connector.

(c) Install the starter wire with the nut.
Torque: 9.8 N·m (99 kgf·cm, 87 in.·lbf)

52. INSTALL FRONT DRIVE SHAFT ASSY LH (SEE PAGE 30–4)

53. INSTALL FRONT DRIVE SHAFT ASSY RH (SEE PAGE 30–4)

54. INSTALL EXHAUST PIPE ASSY FRONT (SEE PAGE 15–2)

55. INSTALL FRONT WHEELS
Torque: 103 N·m (1,050 kgf·cm, 76 ft·lbf)

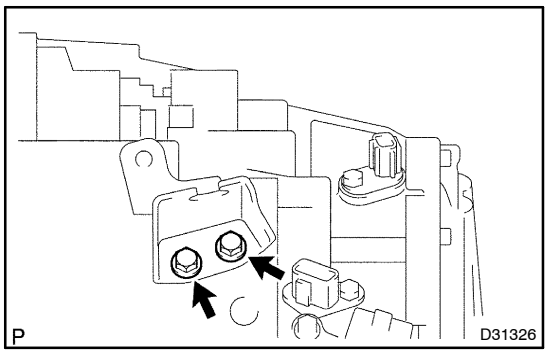

56. INSTALL TRANSMISSION CONTROL CABLE BRACKET NO.1

(a) Install the transmission control cable bracket No.1 with the 2 bolts to the automatic trasaxle.
Torque: 12 N·m (122 kgf·cm, 9 ft·lbf)

57. CONNECT OIL COOLER OUTLET HOSE

(a) Connect the oil cooler outlet hose with the clip to the automatic transaxle assy.

58. CONNECT OIL COOLER INLET HOSE NO.1

(a) Connect the oil cooler inlet hose No.1 with the clip to the automatic transaxle assy.

59. INSTALL TRANSMISSION OIL COOLER

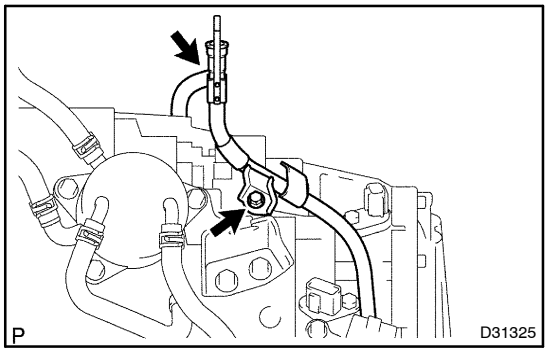

60. INSTALL TRANSMISSION OIL FILLER TUBE SUB–ASSY

(a) Coat a new O–ring with ATF, and install it to the oil filler tube.

(b) Install the oil filler tube and bolt to the automatic transaxle.
Torque: 5.5 N·m (56 kgf·cm, 49 in.·lbf)

(c) Install the breather hose.

(d) Install the ATF level gauge.

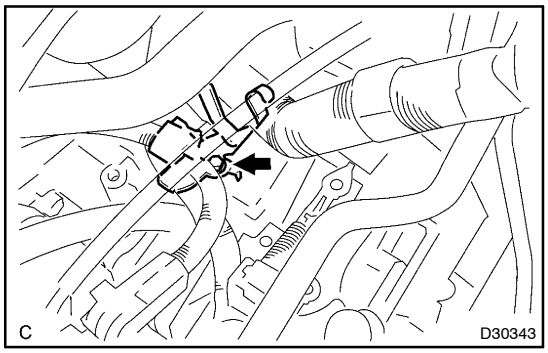

61. INSTALL TRANSMISSION CONTROL CABLE CLAMP

(a) Install the transmission control cable clamp and bolt to the automatic transaxle.
Torque: 12 N·m (122 kgf·cm, 9 ft·lbf)

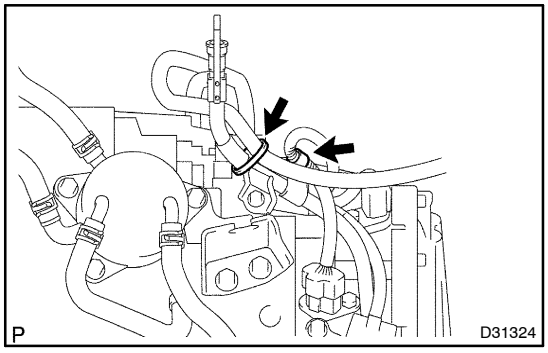

62. CONNECT CONNECTOR

(a) Connect the 2 clamps to the oil filler tube.

(b) Connect the transmission wire connector.

(c) Connect the park/neutral position switch connector.

(d) Connect the 2 speed sensor connectors.

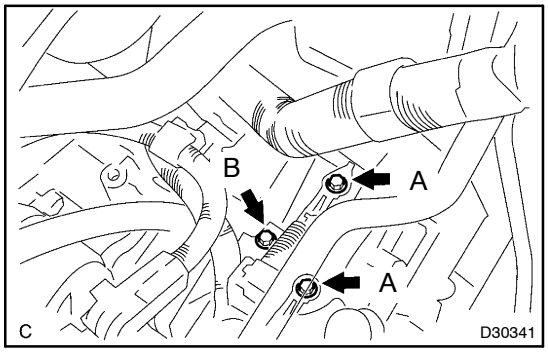

63. INSTALL WIRE HARNESS

(a) Install the 2 wire harnesses and wire harness bracket with the 3 bolts.
Torque:
Bolt A: 5.0 N·m (51 kgf·cm, 44 in.·lbf)
Bolt B: 8.4 N·m (86 kgf·cm, 74 in.·lbf)

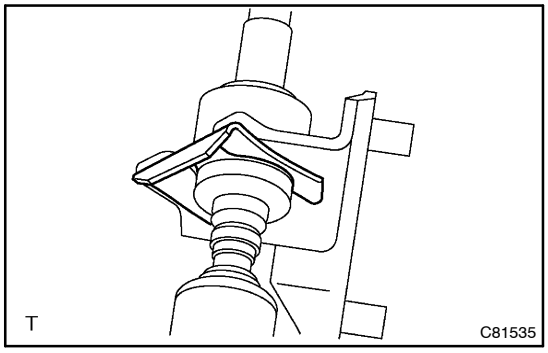

64. INSTALL TRANSMISSION CONTROL CABLE ASSY

(a) Temporarily install the control cable to the control shaft lever with the nut.

(b) Install the control cable and clip to the bracket.

65. INSTALL AIR CLEANER ASSY
Torque: 5.0 N·m (50 kgf·cm, 44 in.·lbf)

66. INSTALL BATTERY CARRIER
Torque: 13 N·m (133 kgf·cm, 10 ft·lbf)

67. INSTALL BATTERY

68. INSTALL ENGINE COVER SUB–ASSY NO.1
Torque: 9.0 N·m (92 kgf·cm, 80 in.·lbf)

69. INSTALL HOOD SUB–ASSY
Torque: 13 N·m (133 kgf·cm, 10 ft·lbf)

70. INSPECT HOOD SUB–ASSY (SEE PUB. NO. RM1018E, PAGE 75–2)

71. ADJUST HOOD SUB–ASSY (SEE PUB. NO. RM1018E, PAGE 75–2)

72. ADD COOLANT (SEE PEGE 16–7)

73. ADD AUTOMATIC TRANSAXLE FLUID (SEE PUB. NO. RM1018E, PAGE 40–2)

74. INSPECT AUTOMATIC TRANSAXLE FLUID (SEE PUB. NO. RM1018E, PAGE 40–2)

75. INSPECT FOR FLUID LEAKS

76. ADJUST SHIFT LEVER POSITION (SEE PUB. NO. RM1018E, PAGE 40–69)

77. INSPECT SHIFT LEVER POSITION (SEE PUB. NO. RM1018E, PAGE 40–69)

78. INSPECT AND ADJUST FRONT WHEEL ALIGNMENT (SEE PUB. NO. RM1018E, PAGE 26–6)

79. CHECK ABS SPEED SENSOR SIGNAL

(a) ABS WITH EBD & BA &TRAC & VSC SYSTEM (SEE PUB. NO. RM1018E, PAGE 5–756)

80. RESET MEMORY (SEE PEGE 05–541)

SPEED SENSOR (U151E)

40186–01

REPLACEMENT

1. **REMOVE BATTERY**
2. **REMOVE BATTERY CARRIER**
3. **REMOVE AIR CLEANER ASSY**

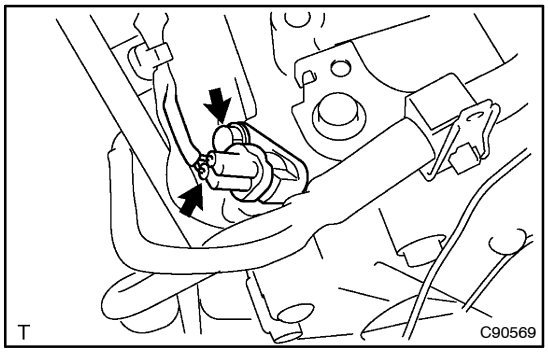

4. REMOVE SPEED SENSOR (NT SENSOR)

(a) Disconnect the speed sensor connector.

(b) Remove the bolt and speed sensor.

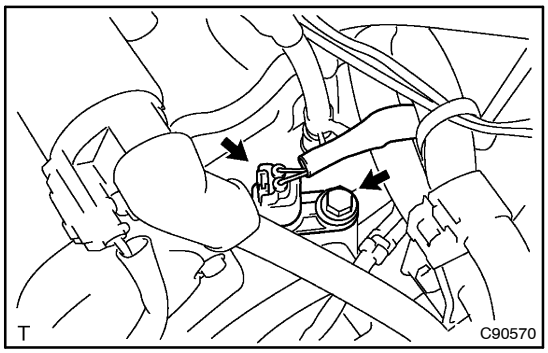

5. REMOVE SPEED SENSOR (NC SENSOR)

(a) Disconnect the speed sensor connector.

(b) Remove the bolt and speed sensor.

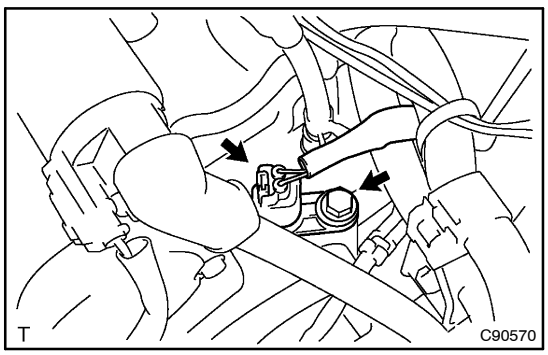

6. INSTALL SPEED SENSOR (NC SENSOR)

(a) Coat the O–ring with ATF.

(b) Install the speed sensor with the bolt.

Torque: 11 N·m (115 kgf·cm, 8 ft·lbf)

HINT:

Make sure of the sensor manufacturer's name.

(c) Connect the speed sensor connector.

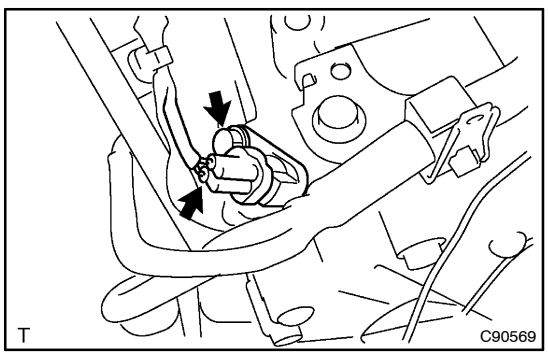

7. INSTALL SPEED SENSOR (NT SENSOR)

(a) Coat the O–ring with ATF.

(b) Install the speed sensor with the bolt.

Torque: 11 N·m (115 kgf·cm, 8 ft·lbf)

HINT:

Make sure of the sensor manufacturer's name.

(c) Connect the speed sensor connector.

8. INSTALL AIR CLEANER ASSY
Torque: 5.0 N·m (51 kgf·cm, 44 in.·lbf)
9. INSTALL BATTERY CARRIER
Torque: 13 N·m (133 kgf·cm, 10 ft·lbf)
10. INSTALL BATTERY

TRANSMISSION WIRE (U151E)

40187–01

REPLACEMENT

1. REMOVE ENGINE UNDER COVER LH

2. DRAIN AUTOMATIC TRANSAXLE FLUID

(a) Remove the drain plug and gasket, and drain ATF.

(b) Install a new gasket and the drain plug.
Torque: 47 N·m (479 kgf·cm, 35 ft·lbf)

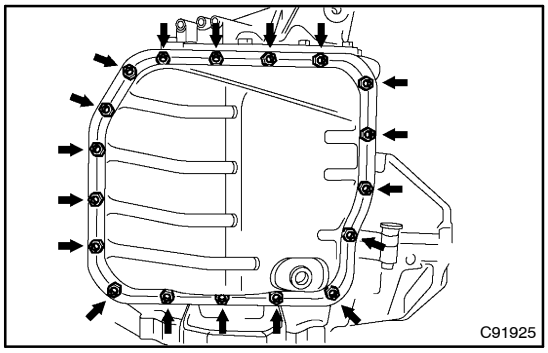

3. REMOVE AUTOMATIC TRANSAXLE OIL PAN SUB–ASSY

(a) Remove the 18 bolts, oil pan and gasket.

NOTICE:

Some fluid will remain in the oil pan. Remove all of the oil pan bolts, and carefully remove the oil pan assembly.

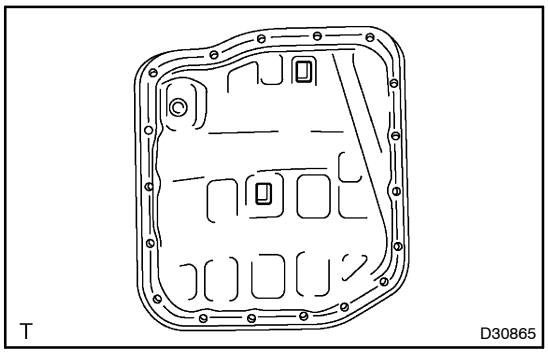

(b) Remove the 2 magnets from the oil pan.

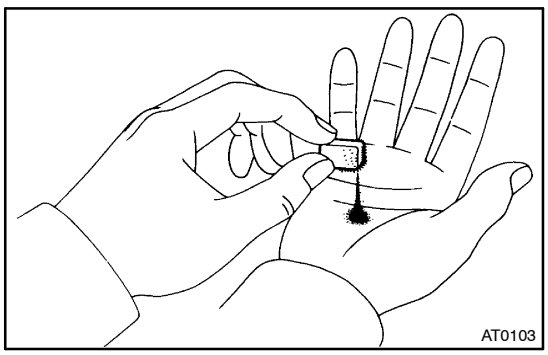

(c) Examine the particles in the oil pan.

(1) Collect any steel chips with the removed magnets. Look at the chips and particles in the pan and on the magnets carefully to see the type of wear which might be found in the transaxle.
Steel (magnetic): bearing, gear and plate wear
Brass (non–magnetic): bearing wear

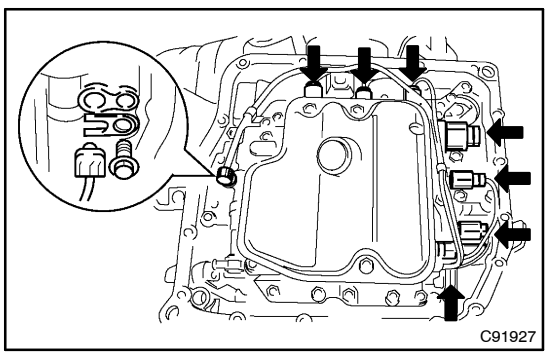

4. DISCONNECT TRANSMISSION WIRE

(a) Disconnect the 7 shift solenoid valve connectors.

(b) Remove the bolt and lock plate, and disconnect the ATF temperature sensor.

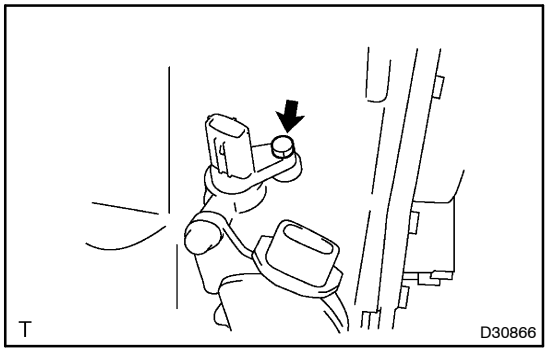

5. REMOVE TRANSMISSION WIRE

(a) Disconnect the transmission wire connectors.

(b) Remove the bolt and transmission wire.

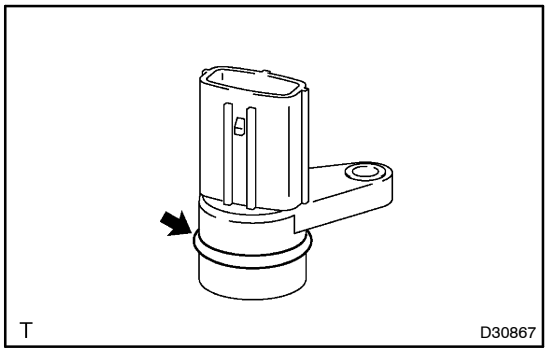

6. INSTALL TRANSMISSION WIRE

(a) Coat an O–ring of the transmission wire connector with ATF.

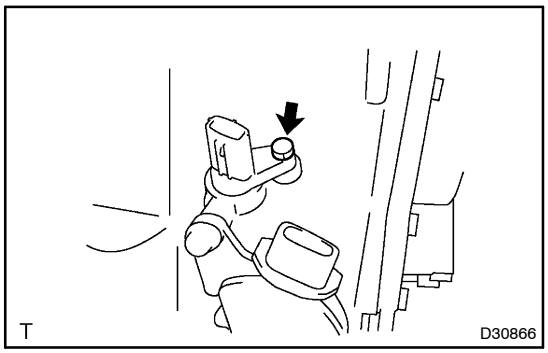

(b) Install the transmission wire and bolt.
Torque: 5.4 N·m (55 kgf·cm, 48 in.·lbf)

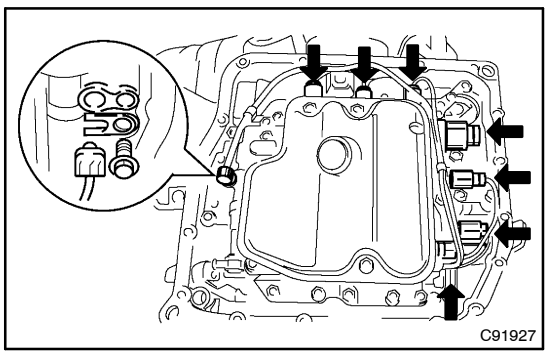

7. CONNECT TRANSMISSION WIRE

(a) Coat an O–ring of the ATF temperature sensor with ATF.

(b) Install the ATF temperature sensor with the lock plate and bolt.
Torque: 6.6 N·m (67 kgf·cm, 58 in.·lbf)

(c) Connect the 7 shift solenoid valve connectors.

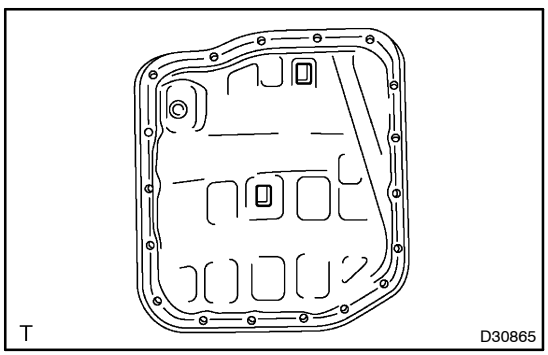

8. INSTALL AUTOMATIC TRANSAXLE OIL PAN SUB–ASSY

(a) Install the 2 magnets in the oil pan.

(b) Apply seal packing to the 18 bolts.
Seal packing:
THREE BOND 1344 or equivalent

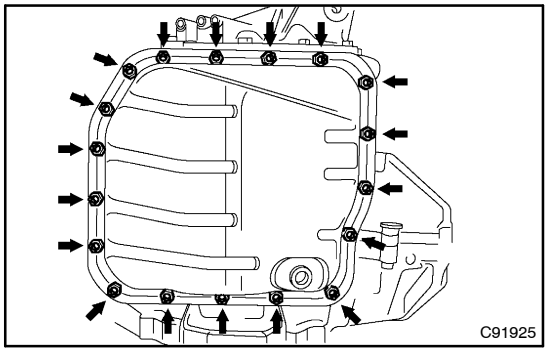

(c) Install a new gasket, the oil pan and 18 bolts to the transaxle case.

Torque: 7.8 N·m (80 kgf·cm, 69 in.·lbf)

NOTICE:

Apply seal packing to the bolts and tighten them within 10 minutes of application.

9. ADD AUTOMATIC TRANSAXLE FLUID (SEE PUB. NO. RM1018E, PAGE 40–2)

10. INSPECT AUTOMATIC TRANSAXLE FLUID (SEE PUB. NO. RM1018E, PAGE 40–2)

11. RESET MEMORY (SEE PAGE 05–541)

TRANSMISSION VALVE BODY ASSY (U151E)

40188–01

REPLACEMENT

1. REMOVE ENGINE UNDER COVER LH

2. DRAIN AUTOMATIC TRANSAXLE FLUID

(a) Remove the drain plug and gasket, and drain ATF.

(b) Install a new gasket and the drain plug.
Torque: 47 N·m (479 kgf·cm, 35 ft·lbf)

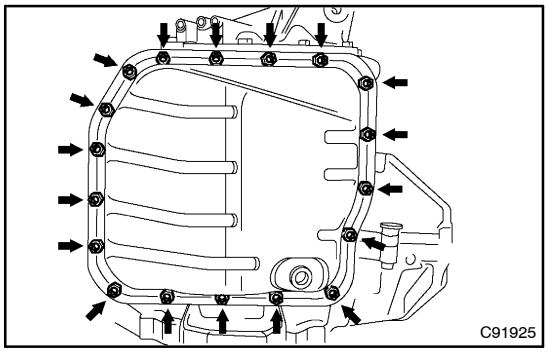

3. REMOVE AUTOMATIC TRANSAXLE OIL PAN SUB–ASSY

(a) Remove the 18 bolts, oil pan and gasket.

NOTICE:

Some fluid will remain in the oil pan. Remove all of the oil pan bolts, and carefully remove the oil pan assembly.

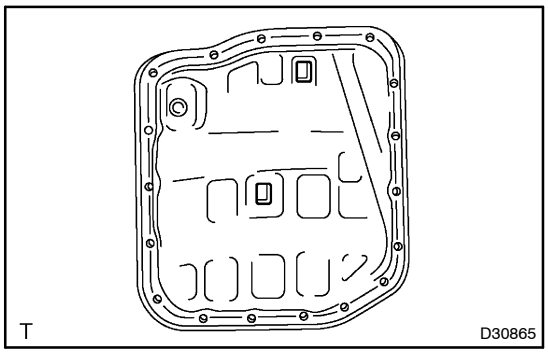

(b) Remove the 2 magnets from the oil pan.

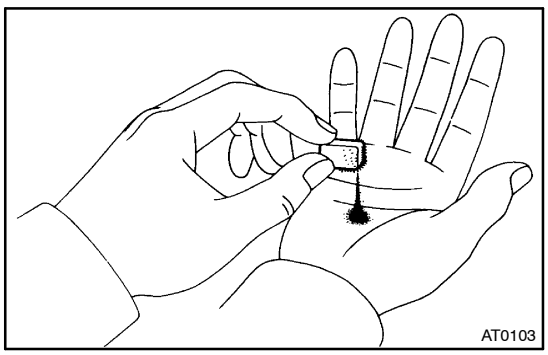

(c) Examine the particles in the oil pan.

(1) Collect any steel chips with the removed magnets. Look at the chips and particles in the pan and on the magnets carefully to see the type of wear which might be found in the transaxle.
Steel (magnetic): bearing, gear and plate wear
Brass (non–magnetic): bearing wear

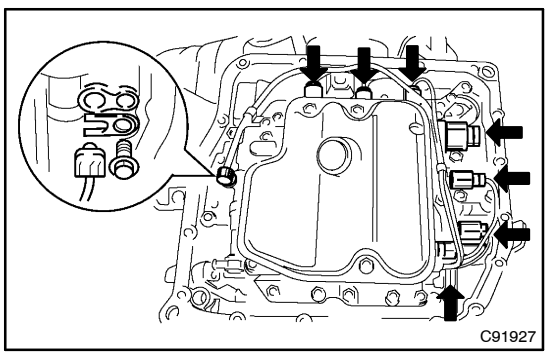

4. DISCONNECT TRANSMISSION WIRE

(a) Disconnect the 7 shift solenoid valve connectors.

(b) Remove the bolt and lock plate, and disconnect the ATF temperature sensor.

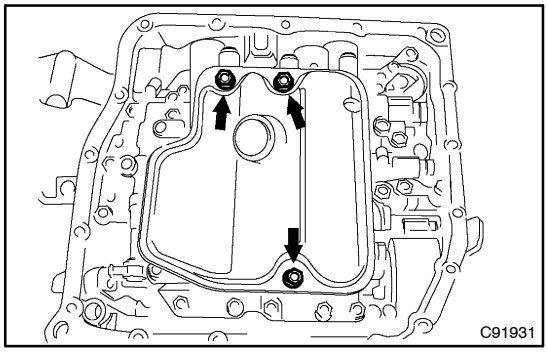

5. REMOVE VALVE BODY OIL STRAINER ASSY

(a) Remove the 3 bolts and oil strainer.

NOTICE:

Be careful that some fluid will come out of the oil strainer.

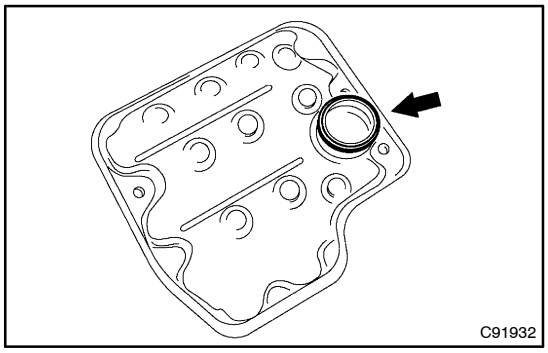

(b) Remove the O–ring from the oil strainer.

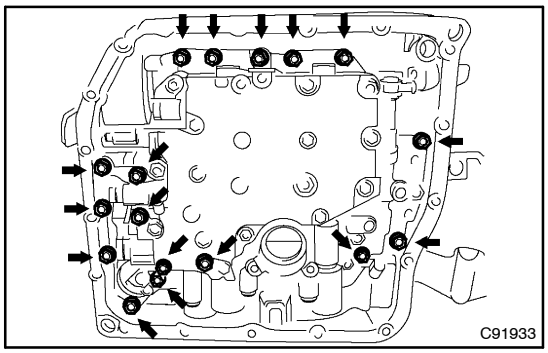

6. REMOVE TRANSMISSION VALVE BODY ASSY

(a) Support the valve body assy and remove the 17 bolts and the valve body assy.

NOTICE:

Be careful not to drop the check ball body, spring and accumulator piston.

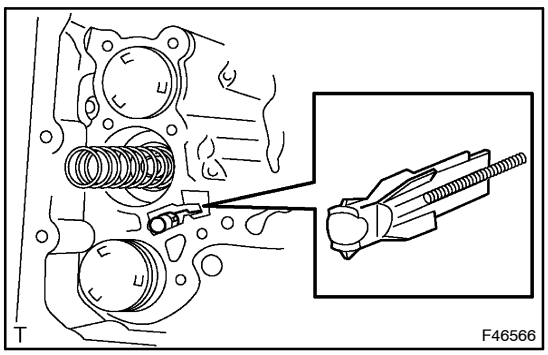

(b) Remove the check ball body and spring.

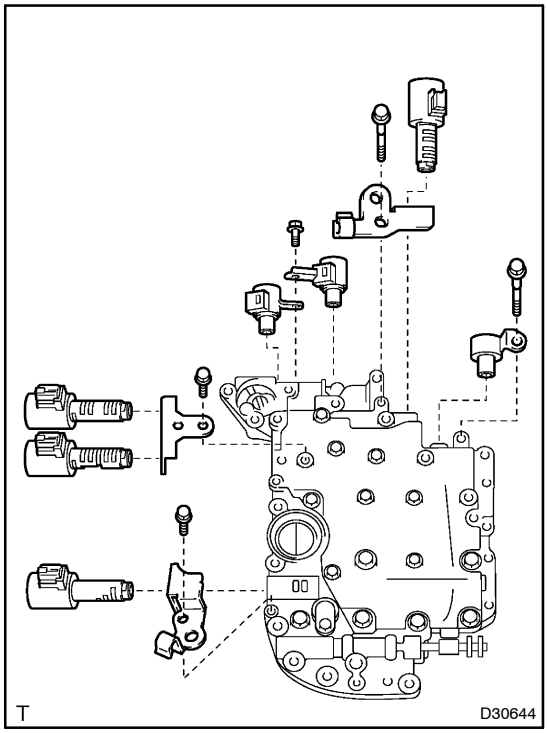

(c) Remove the 5 bolts, 3 lock plates and 7 shift solenoid valves.

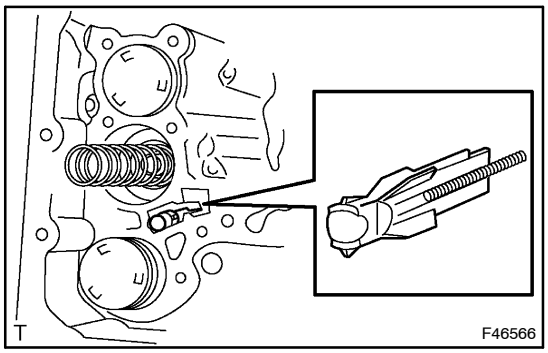

7. INSTALL TRANSMISSION VALVE BODY ASSY

(a) Install the spring and check ball body.

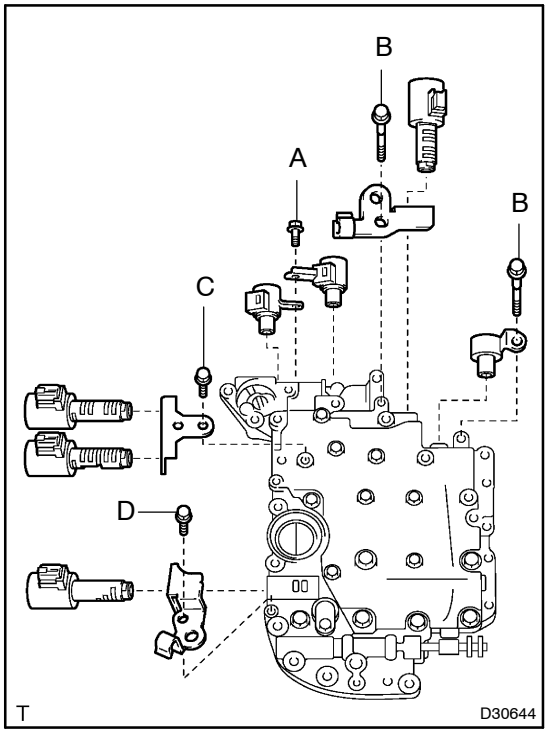

(b) Install the 7 shift solenoid valves and 3 lock plates with the 5 bolts.

Torque:
Bolts A, B: 11 N·m (110 kgf·cm, 8 ft.·lbf)
Bolts C, D: 6.6 N·m (67 kgf·cm, 58 in. lbf)
Bolt length:
Bolt A: 16 mm (0.63 in.)
Bolt B: 57 mm (2.24 in.)
Bolt C: 20 mm (0.79 in.)
Bolt D: 12 mm (0.47 in.)

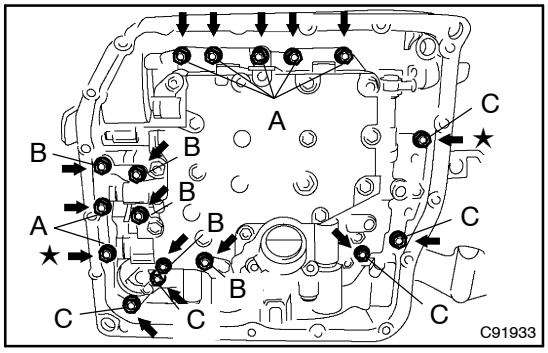

(c) Align the groove of the manual valve with the pin of the lever.

(d) Install the 17 bolts.

Torque: 11 N·m (110 kgf·cm, 8 ft·lbf)

NOTICE:

- **Push the valve body against the accumulator piston spring and the check ball body to install it.**
- **First, temporarily tighten those bolts marked by ★ in the illustration because they are positioning bolts.**

Bolt length:
Bolt A: 25 mm (0.984 in.)
Bolt B: 57 mm (2.244 in.)
Bolt C: 41 mm (1.614 in.)

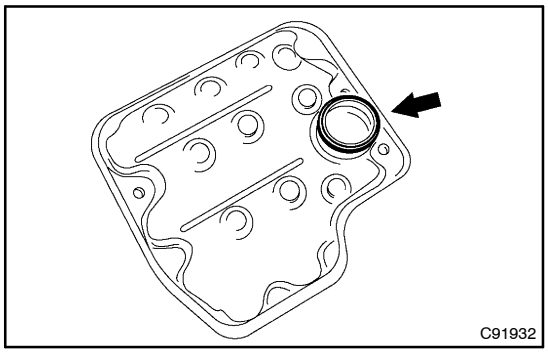

8. INSTALL VALVE BODY OIL STRAINER ASSY

(a) Coat a new O–ring with ATF.

(b) Install the O–ring to the oil strainer.

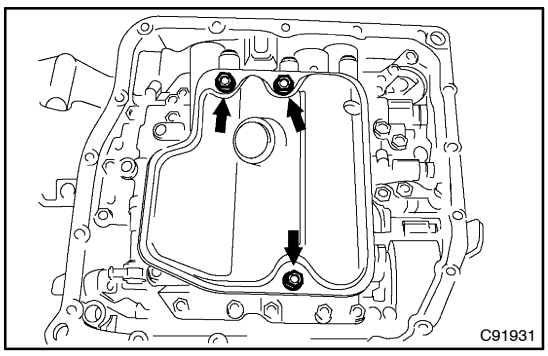

(c) Install the oil strainer with the 3 bolts.

Torque: 11 N·m (110 kgf·cm, 8 ft·lbf)

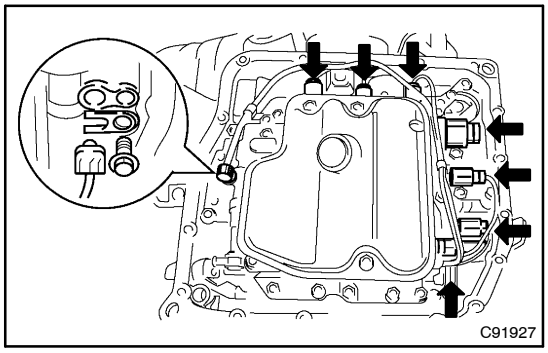

9. INSTALL TRANSMISSION WIRE

(a) Coat an O–ring with ATF.

(b) Install the ATF temperature sensor with the lock plate and bolt.

Torque: 6.6 N·m (67 kgf·cm, 58 in.·lbf)

(c) Connect the 7 shift solenoid valve connectors.

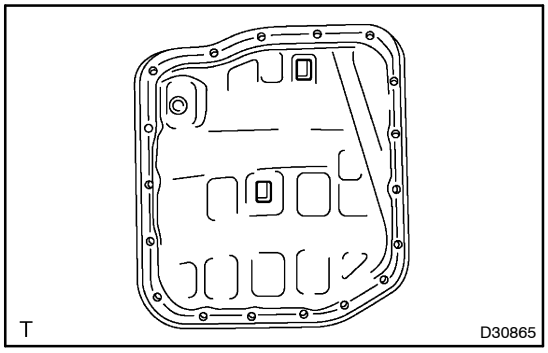

10. INSTALL AUTOMATIC TRANSAXLE OIL PAN SUB–ASSY

(a) Install the 2 magnets to the oil pan.

(b) Apply seal packing to the 18 bolts.

Seal packing:
THREE BOND 1344 or equivalent

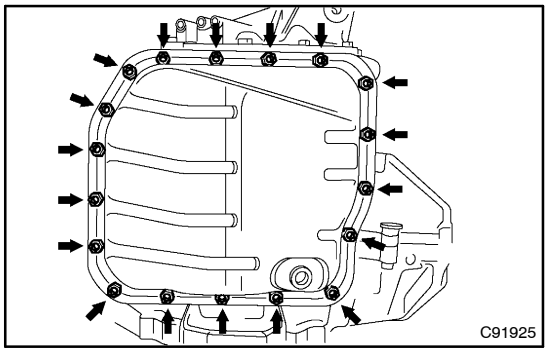

(c) Install a new gasket, the oil pan and 18 bolts to the transaxle case.

Torque: 7.8 N·m (80 kgf·cm, 69 in.·lbf)

NOTICE:
Apply seal packing to the bolts and tighten them within 10 minutes of application.

11. ADD AUTOMATIC TRANSAXLE FLUID (SEE PUB. NO. RM1018E, PAGE 40–2)

12. INSPECT AUTOMATIC TRANSAXLE FLUID (SEE PUB. NO. RM1018E, PAGE 40–2)

13. RESET MEMORY (SEE PAGE 05–541)

FRONT DIFFERENTIAL OIL SEAL (U151E)

40189–01

REPLACEMENT

1. **REMOVE FRONT WHEELS**
2. **REMOVE ENGINE UNDER COVER RH**
3. **REMOVE ENGINE UNDER COVER LH**
4. **DRAIN AUTOMATIC TRANSAXLE FLUID**

(a) Remove the drain plug and gasket, and drain ATF.

(b) Install a new gasket and the drain plug.
Torque: 47 N·m (480 kgf·cm, 35 ft·lbf)

5. **REMOVE FRONT DRIVE SHAFT ASSY RH (SEE PAGE 30–4)**
6. **REMOVE FRONT DRIVE SHAFT ASSY LH (SEE PAGE 30–4)**

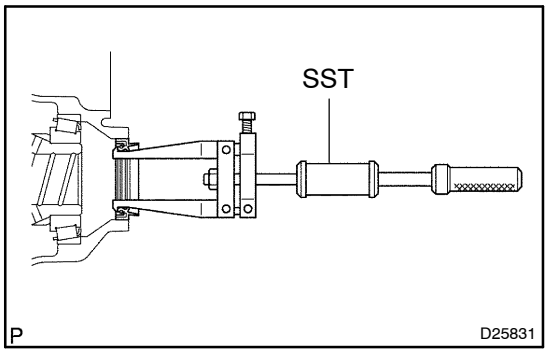

7. **REMOVE TRANSAXLE HOUSING OIL SEAL**

(a) Using SST, pull out the oil seal.
SST 09308–00010

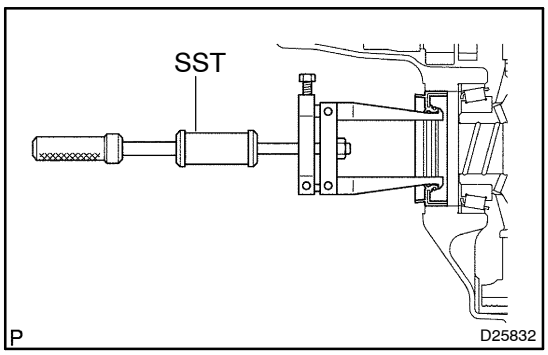

8. **REMOVE DIFFERENTIAL SIDE BEARING RETAINER OIL SEAL**

(a) Using SST, pull out the oil seal.
SST 09308–00010

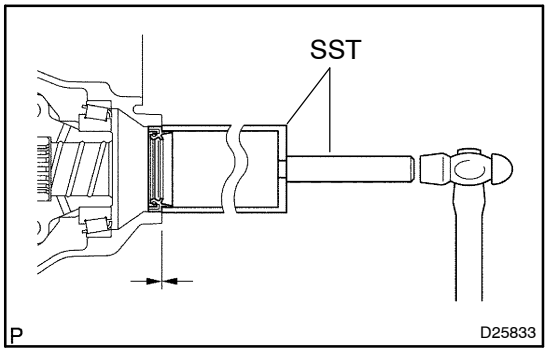

9. **INSTALL TRANSAXLE HOUSING OIL SEAL**

(a) Using SST and a hammer, drive in a new oil seal.
SST 09316–60011 (09316–00011)
Oil seal drive in depth:
0 ± 0.5 mm (0 ± 0.020 in.)

(b) Coat the lip of the oil seal with MP grease.

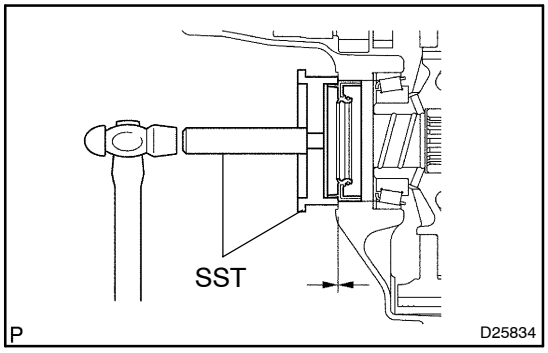

10. INSTALL DIFFERENTIAL SIDE BEARING RETAINER OIL SEAL

(a) Using SST and a hammer, drive in a new oil seal.
SST 09649–17010, 09950–70010 (09951–07150)
Oil seal drive in depth:
0 ± 0.5 mm (0 ± 0.020 in.)

(b) Coat the lip of the oil seal with MP grease.

11. INSTALL FRONT DRIVE SHAFT ASSY LH (SEE PAGE 30–4)
12. INSTALL FRONT DRIVE SHAFT ASSY RH (SEE PAGE 30–4)
13. INSTALL FRONT WHEELS
Torque: 103 N·m (1,050 kgf·cm, 76 ft·lbf)
14. ADD AUTOMATIC TRANSAXLE FLUID (SEE PUB. NO. RM1018E, PAGE40–2)
15. INSPECT AUTOMATIC TRANSAXLE FLUID (SEE PUB. NO. RM1018E, PAGE40–2)
16. CHECK ABS SPEED SENSOR SIGNAL
(a) ABS WITH EBD & BA &TRAC & VSC SYSTEM (SEE PUB, NO. RM1018E, PAGE 5–756)

TRANSMISSION OIL COOLER (U151E)

4018A–01

REPLACEMENT

1. **DRAIN AUTOMATIC TRANSAXLE FLUID (SEE PUB. NO. RM1018E, PAGE 40–2)**
2. **DRAIN COOLANT (SEE PAGE 16–7)**

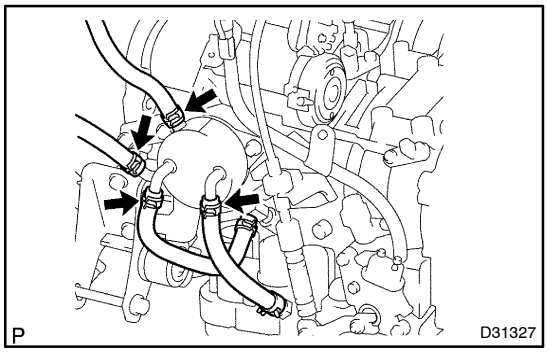

3. REMOVE TRANSMISSION OIL COOLER

(a) Loosen the clips and disconnect the 4 hoses from the transmission oil cooler.

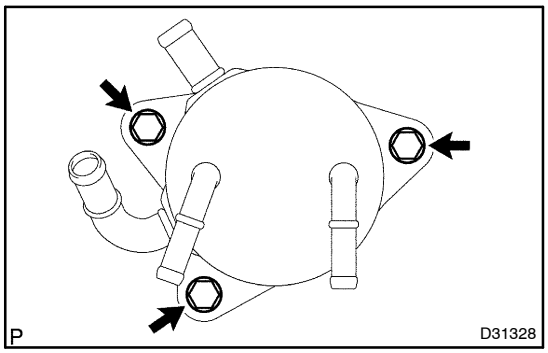

(b) Remove the 3 bolts and the oil cooler from the bracket.

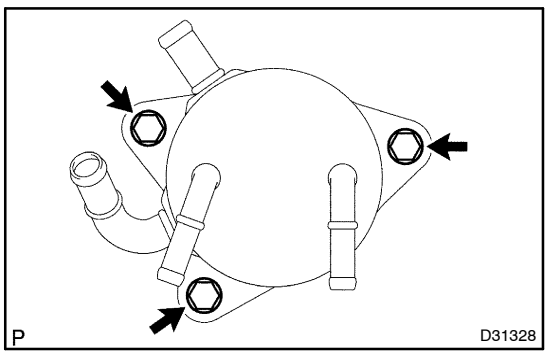

4. INSTALL TRANSMISSION OIL COOLER

(a) Install the oil cooler to the bracket with the 3 bolts.
Torque: 12 N·m (122 kgf·cm, 9 ft·lbf)

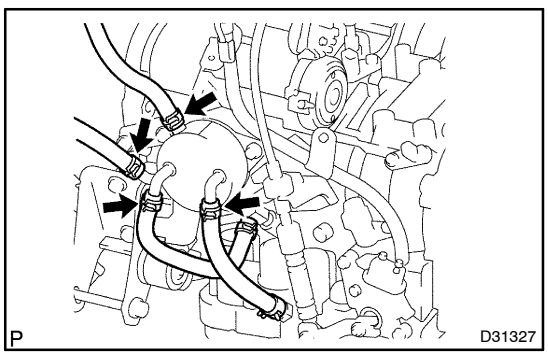

(b) Connect the 4 hoses with the clips to the transmission.

5. ADD COOLANT (SEE PAGE 16–7)
6. ADD AUTOMATIC TRANSAXLE FLUID (SEE PUB. NO. RM1018E, PAGE 40–2)
7. INSPECT AUTOMATIC TRANSAXLE FLUID (SEE PUB. NO. RM1018E, PAGE 40–2)

REFRIGERANT LINE (2AZ–FSE)

COMPONENTS

551AL–01

LHD:

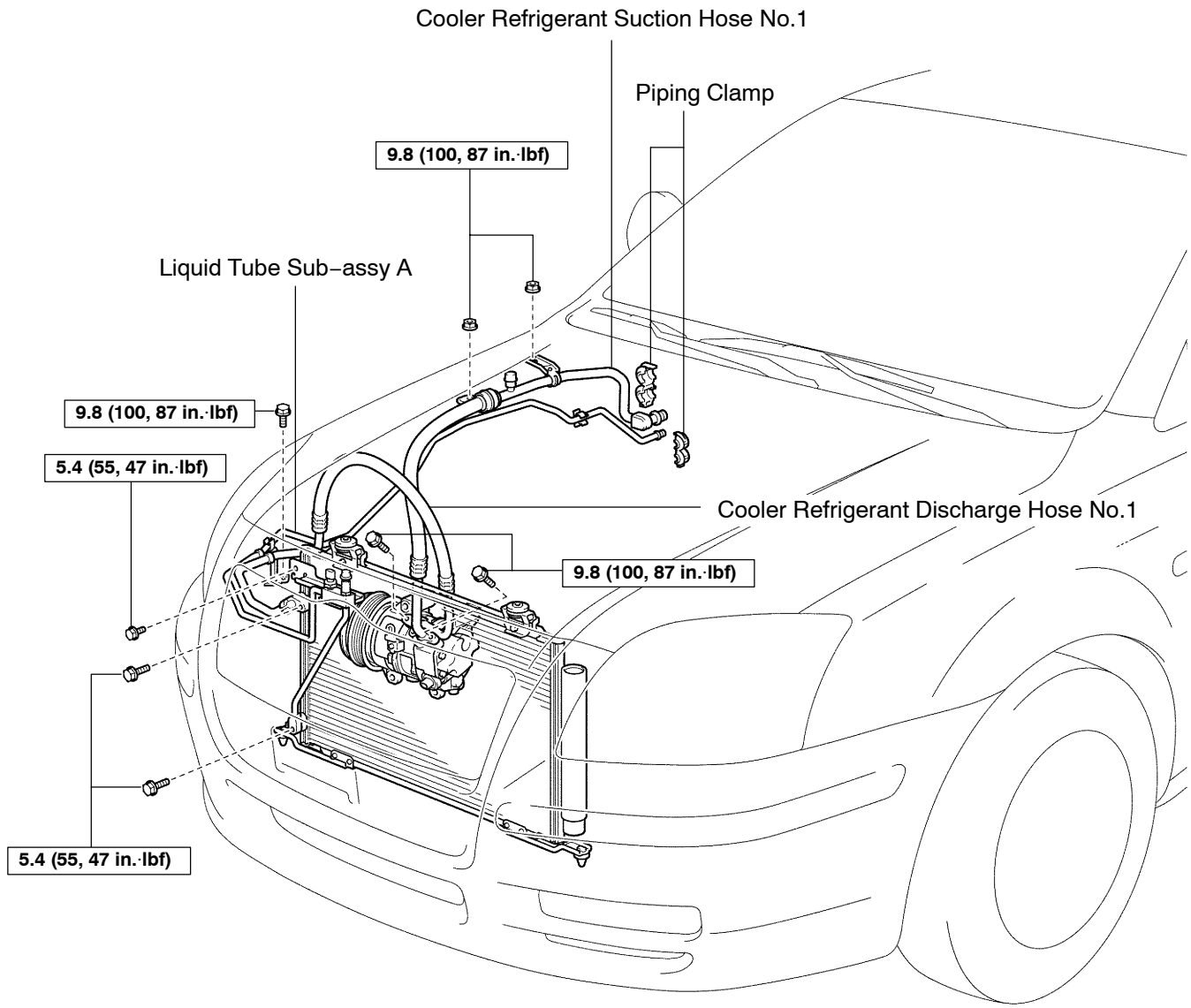

I34977 N·m (kgf·cm, ft·lbf) : Specified torque

I38799

RHD:

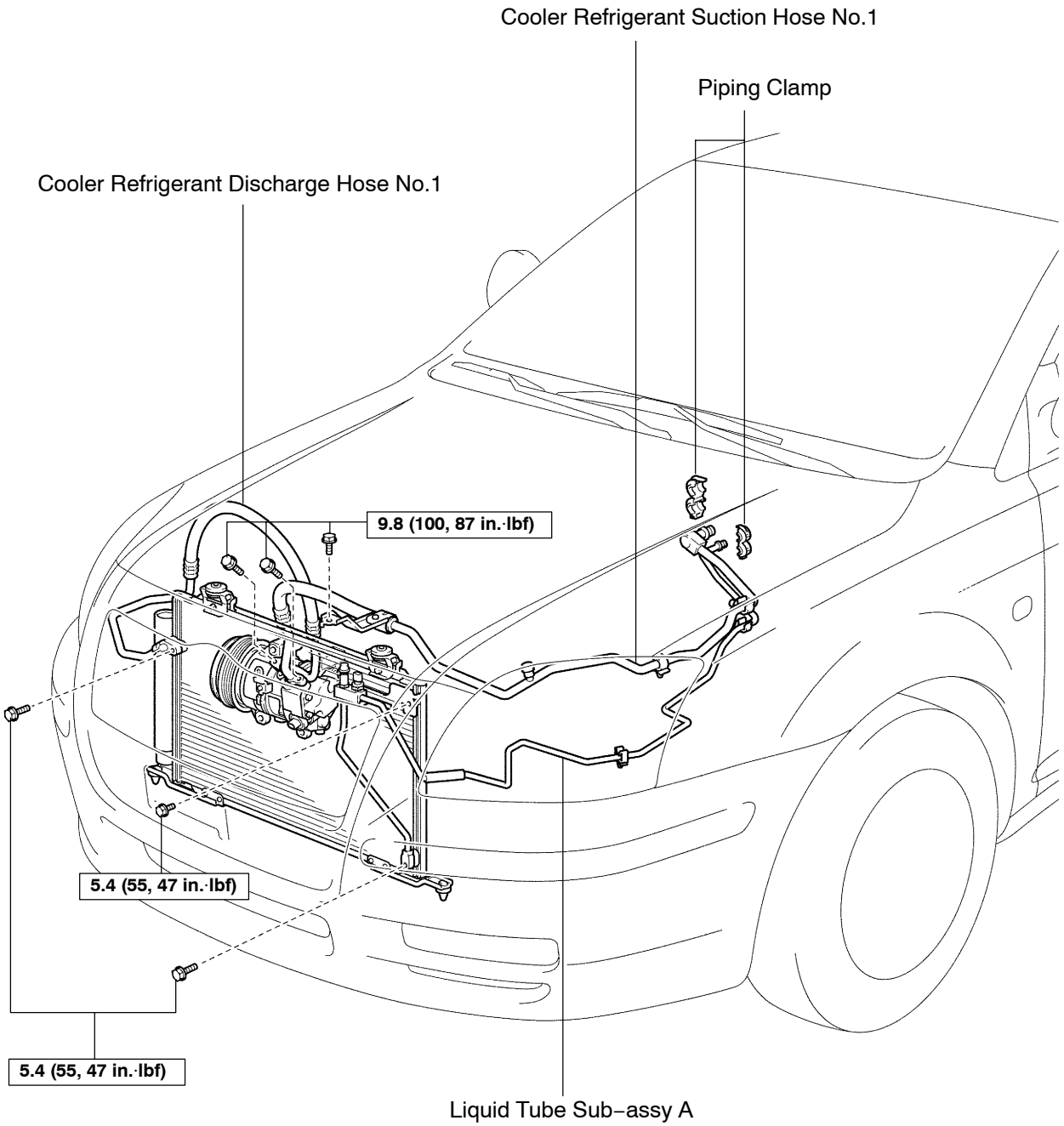

N·m (kgf·cm, ft·lbf) : Specified torque

P

I34978

W/PULLEY COMPRESSOR ASSY (2AZ–FSE)

551AM–01

ON–VEHICLE INSPECTION

1. INSPECT W/PULLEY COMPRESSOR ASSY

(a) Start the engine.

(b) Check that the weight hub of the compressor assy rotates along with the pulley.

NORMAL: The pulley and the weight hub rotate together.

ABNORMAL: The pulley and the weight hub rotate separately when the compressor is locked.

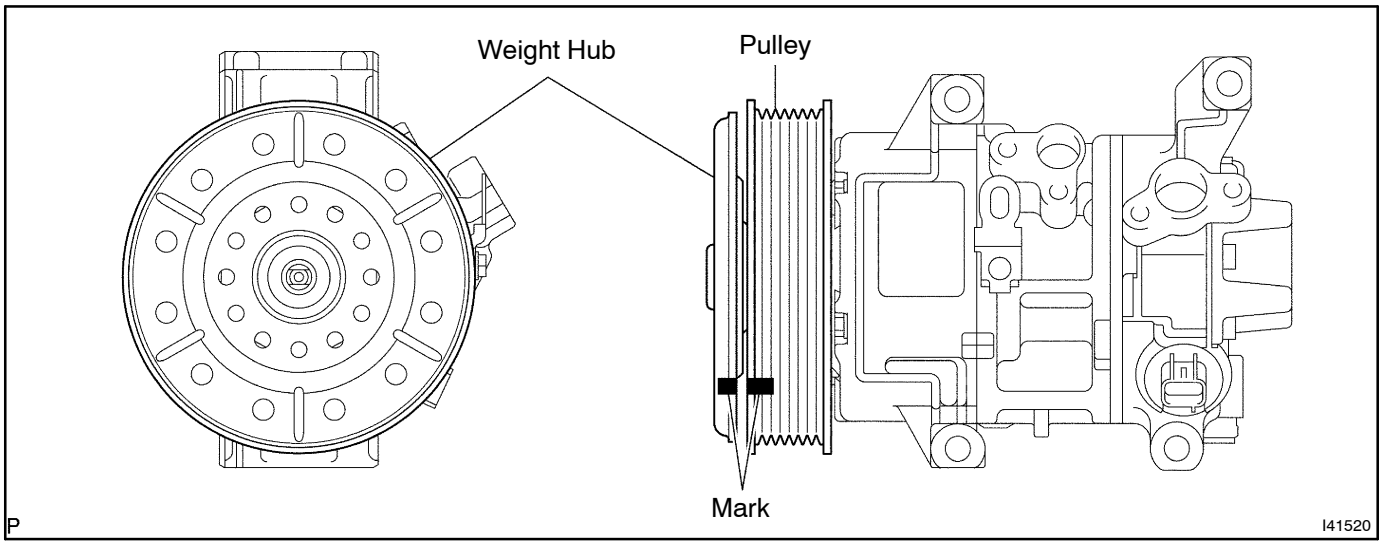

551AN–01

REPLACEMENT

1. DISCHARGE REFRIGERANT FROM REFRIGERATION SYSTEM (See Pub. No. RM1018E, page 55–38)

SST 07110–58060 (07117–58080, 07117–58090, 07117–78050, 07117–88060, 07117–88070, 07117–88080)

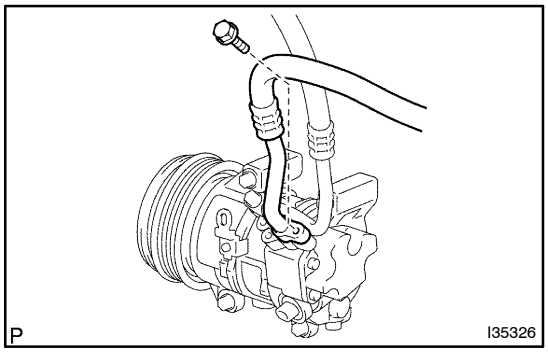

2. DISCONNECT COOLER REFRIGERANT SUCTION HOSE NO.1

(a) Remove the bolt and disconnect the cooler refrigerant suction hose No.1 from the w/pulley compressor assy.

(b) Remove the O–ring from the cooler refrigerant suction hose No.1.

NOTICE:
Seal the opening of the disconnected parts using vinyl tape to prevent moisture and foreign matters from entering.

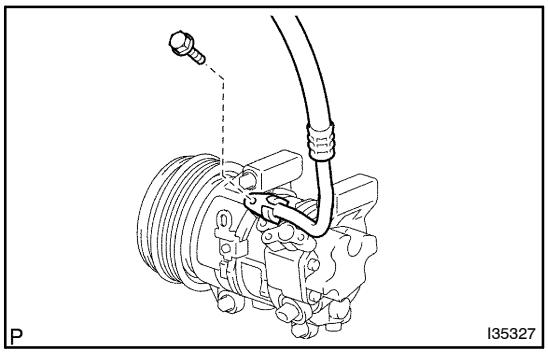

3. DISCONNECT COOLER REFRIGERANT DISCHARGE HOSE NO.1

(a) Remove the bolt and disconnect the cooler refrigerant discharge hose No.1 from the w/pulley compressor assy.

(b) Remove the O–ring from the cooler refrigerant discharge hose No.1.

NOTICE:
Seal the opening of the disconnected parts using vinyl tape to prevent moisture and foreign matters from entering.

4. REMOVE RADIATOR SUPPORT OPENING COVER (See page 14–5)

5. REMOVE ENGINE ROOM COVER SIDE (See page 14–5)

6. REMOVE ENGINE UNDER COVER RH (See page 14–5)

7. REMOVE FAN AND GENERATOR V BELT (See page 14–5)

SST 09249–63010

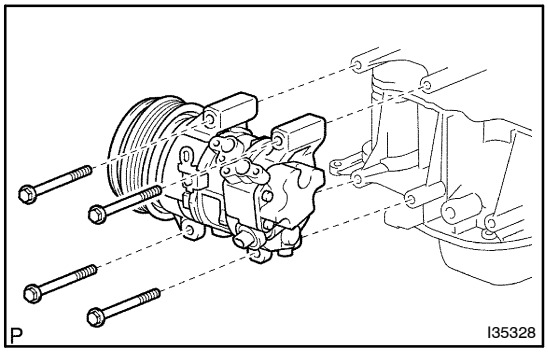

8. REMOVE W/PULLEY COMPRESSOR ASSY

(a) Disconnect the connector.

(b) Remove the 4 bolts and the w/pulley compressor assy.

9. INSPECT COMPRESSOR OIL

(a) When replacing the w/pulley compressor assy with a new one, after gradually removing the refrigerant gas from the service valve, drain the following amount of oil from the new w/pulley compressor assy before installation.

Standard:

(Oil capacity inside new w/pulley compressor assy: 90 + 15 cc (3.0 + 0.5 fl. oz.)) – (Remaining oil amount in the removed w/pulley compressor assy) + (Oil amount to be removed when replacing)

NOTICE:

- **When checking the compressor oil level, observe the precautions on the cooler removal/installation.**
- **Since compressor oil remains in the pipes of the vehicle, if a new w/pulley compressor assy is installed without removing some oil inside, the oil amount becomes excessive, preventing heat exchange in the refrigerant cycle and causing refrigerant failure.**
- **If the remaining oil in the removed w/pulley compressor assy is too small in volume, check for oil leakage.**
- **Be sure to use ND–OIL 8 for compressor oil.**

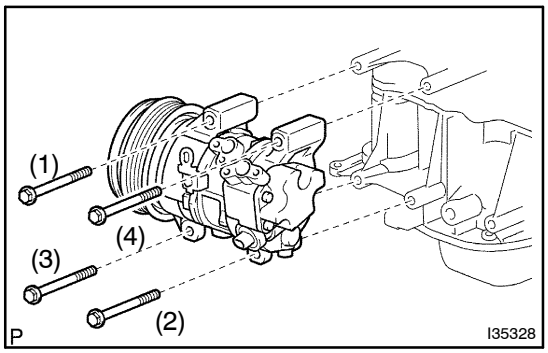

10. INSTALL W/PULLEY COMPRESSOR ASSY

(a) Install the w/pulley compressor assy with the 4 bolts.

Torque: 29 N·m (300 kgf·cm, 21 ft·lbf)

NOTICE:

Tighten the bolts in the order shown in the illustration to install the w/pulley compressor assy.

(b) Connect the connector.

11. INSTALL FAN AND GENERATOR V BELT (See page 14–5)

SST 09249–63010

12. INSTALL COOLER REFRIGERANT DISCHARGE HOSE NO.1

(a) Remove the attached vinyl tape from the hose.

(b) Sufficiently apply compressor oil to a new O–ring and the fitting surface of the w/pulley compressor assy.

Compressor oil: ND–OIL 8 or equivalent

(c) Install the O–ring on the cooler refrigerant discharge hose No.1.

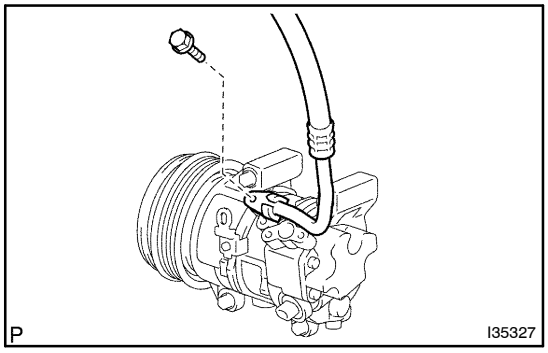

(d) Install the cooler refrigerant discharge hose No.1 on the w/pulley compressor assy with the bolt.
Torque: 9.8 N·m (100 kgf·cm, 87 in.·lbf)

13. INSTALL COOLER REFRIGERANT SUCTION HOSE NO.1

(a) Remove the attached vinyl tape from the hose.
(b) Sufficiently apply compressor oil to a new O–ring and the fitting surface of the w/pulley compressor assy.
Compressor oil: ND–OIL 8 or equivalent
(c) Install the O–ring on the cooler refrigerant suction hose No.1.

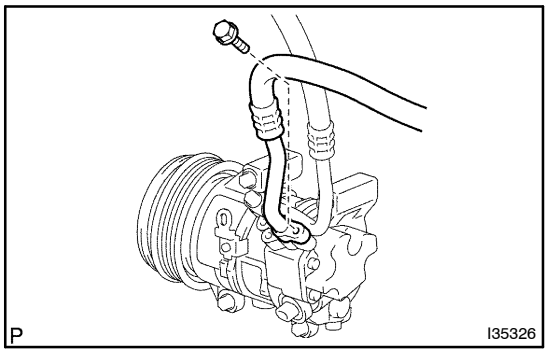

(d) Install the cooler refrigerant suction hose No.1 on the w/pulley compressor assy with the bolt.
Torque: 9.8 N·m (100 kgf·cm, 87 in.·lbf)

14. CHARGE REFRIGERANT (See Pub. No. RM1018E, page 55–38)
SST 07110–58060 (07117–58060, 07117–58070, 07117–58080, 07117–58090, 07117–78050, 07117–88060, 07117–88070, 07117–88080)
Specified amount: 440 ± 30 g (15.51 ± 1.06 oz.)

15. WARM UP ENGINE (See Pub. No. RM1018E, page 55–38)

16. INSPECT LEAKAGE OF REFRIGERANT (See Pub. No. RM1018E, page 55–38)

HOW TO USE THIS MANUAL

010B2–19

GENERAL INFORMATION

1. GENERAL DESCRIPTION

(a) This manual is made in accordance with SAE J2008.

(b) Generally, repair operations can be separated in the following 3 main processes:
1. Diagnosis
2. Removing and Installing, Replacing, Disassembling, Installing and Checking, Adjusting
3. Final Inspection

(c) This manual explains the 1st process of ”Diagnosis” (placed in the ”Diagnostics” section), the 2nd process of ”Removing and Installing, Replacing, Disassembling, Installing and Checking, Adjusting”, but the 3rd process of ”Final Inspection” is omitted.

(d) The following essential operations are not written in this manual. However, these operations must be done in the practical situation.
(1) Operation with a jack or lift
(2) Cleaning of a removed part when necessary
(3) Visual check

2. INDEX

(a) An alphabetical INDEX is provided as a section on the end of the book to guide you to the item to be repaired.

3. PREPARATION

(a) Use of special service tools (SST) and special service materials (SSM) may be required, depending on the repairing condition. Be sure to use SST and SSM when they are required and follow the working procedure properly. A list of SST and SSM is in the Preparation section of this manual.

4. REPAIR PROCEDURES

(a) Component drawing is placed under the title when necessary.

(b) Illustrations are placed as ”disassembled parts drawing” so that it enables you to understand the fitting condition of the components.

(c) Non–reusable parts, grease applied parts, precoated parts and tightening torque are specified in the components drawing.

Example:

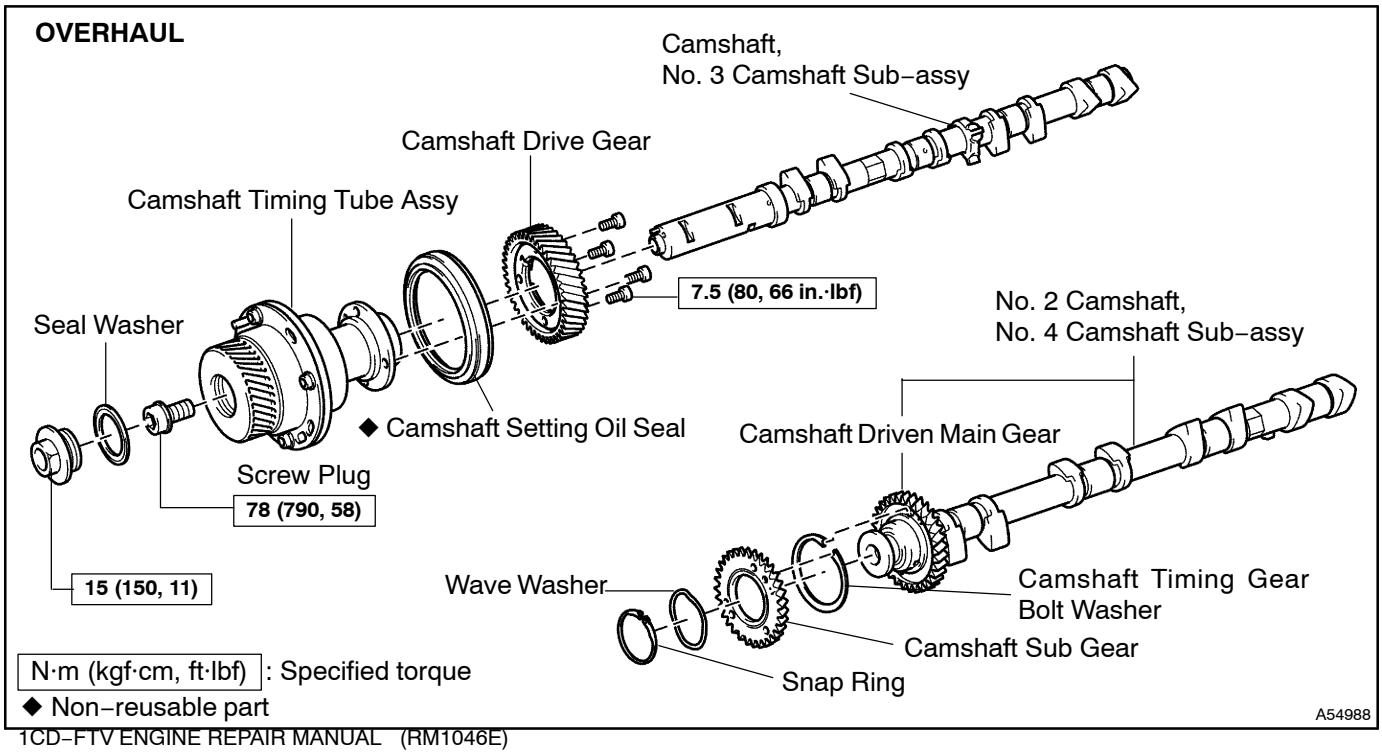

(d) Tightening torque, oil applying position, and non–reusable parts are described as important points in the procedure.

NOTICE:

There are cases where such information can only be indicated by an illustration. In that case, all the information such as torque, oil, etc. are described in the illustration.

(e) Installing procedure of operation items is performed in the reverse order of the removal, and only the important points are described.

(f) Only items with points are described in the procedure, and the operational portion and content are placed using an illustration. In the explanations, details of the operational method, standard value and notice are placed.

(g) There may be a case where the illustrations of the similar models are used. In that case the details may be different from the actual vehicle.

(h) The procedures are presented in a step–by–step format:
   (1) The illustration shows what to do and where to do it.
   (2) The task heading tells what to do.
   (3) The detailed text tells how to perform the task and gives other information such as specifications and warnings.

   Example:

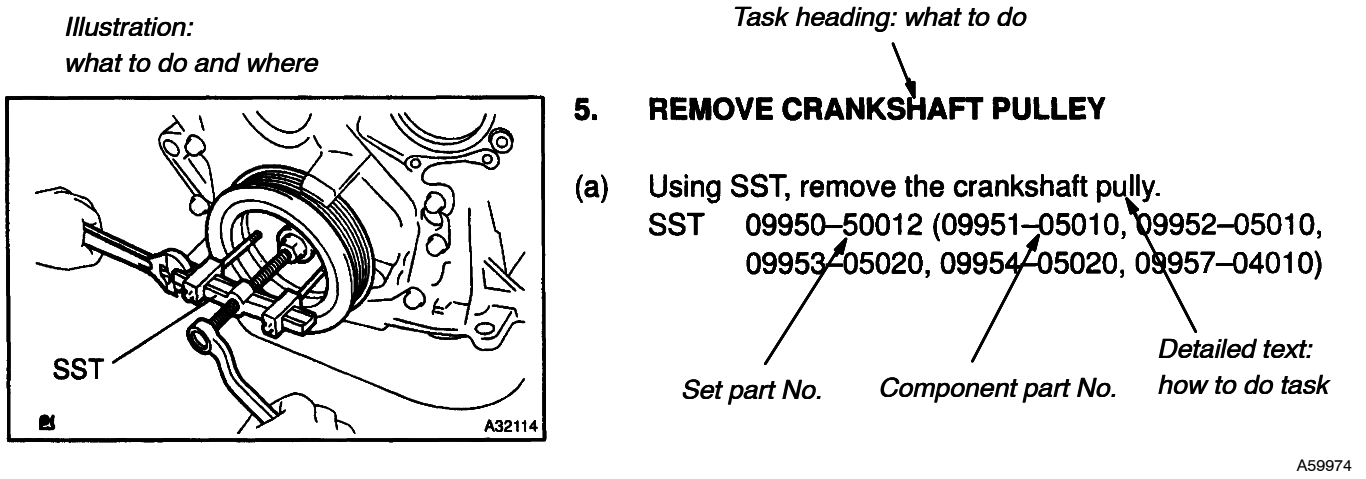

HINT:

This format provides an experienced technician with a FAST TRACK to the necessary information. The task heading can be read at a glance when necessary, and the text below provides detailed information. Important specifications and warnings always stand out in bold type.

5. SERVICE SPECIFICATIONS

(a) Specifications are presented in bold type throughout the manual. You never have to leave the procedure to look up your specifications. The specifications are also found in the Service Specifications section for a quick reference.

6. TERMS DEFINITION

CAUTION	Indicates the possibility of injury to you or other people.
NOTICE	Indicates the possibility of damage to the components being repaired.
HINT	Provides additional information to help you to perform the repair efficiently.

7. SI UNIT

(a) The UNITS given in this manual are primarily expressed according to the SI UNIT (International System of Unit), and alternately expressed in the metric system and in the English System.

Example:

Torque: 30 N·m (310 kgf·cm, 22 ft·lbf)

REPAIR INSTRUCTION

010R3–01

PRECAUTION

1. TO PREVENT FROM ENTERING FOREIGN SUBSTANCES.

(a) When foreign substances such as dust, grain of sand or metallic dust enter inside of engine, it often causes functional failure of the engine.
  (1) Precaution before disassembly.
    • Remove adequately all sand and mud adhere to the outside of engine .
  (2) Precaution at reassembly.
    • Protect disassembled parts from dust by using vinyl sheet to cover.

2. TO PREVENT SCRATCHES ON THE PARTS.

(a) The existence of scratches on the contact and revolving surfaces often causes oil leak and seisure.
  (1) Precautions at disassembly and reassembly.
    • When disassemble the contact surface of the parts, use plastic hummer striking lightly. (Do not pry out by screwdriver).
    • When fix the parts to the vise, do not directly catch it in the vise. Fix the parts through aluminum bar.

3. TO CLEAN AND WASH THE PARTS.

(a) Each parts needs to be well cleaned, washed, and dried by air, and apply specified oil before reassembly.
  (1) Cleaning and washing by alkaline solvent is prohibited:
    • Parts made of aluminum and rubber. (ex. cylinder head cover gasket etc.)
  (2) Cleaning and washing by flushing oil (ex. kerosene, white gasoline etc.) is prohibited:
    • Parts made of rubber. (ex. cylinder head cover gasket etc.)

4. POSITION AND DIRECTION OF EACH PARTS.

(a) Each parts needs to be reassembled as the same position and direction as it disassembled.
  (1) Precautions at disassembly and reassembly.
    • Follow the directions when the manual designates to mark the matchmark and/or direction mark.
    • Disassembled parts needs to be put in order as disassembled, not to change position and/or direction.
    • Follow the directions when the manual instructs the position and direction.

5. INSTALL ENGINE ASSEMBLY TO OVERHAUL STAND WHEN OVERHAUL THE ENGINE.

6. PUT THE DISASSEMBLED PARTS IN ORDER AS THEY DISASSEMBLED.

7. APPLY ENGINE OIL TO THE SLIDING AND ROTATING SURFACES.

8. NON–REUSABLE PARTS SUCH AS GASKET AND SEAL NEEDS TO BE CHANGED TO THE NEW PARTS.

9. BASIC REPAIR HINT

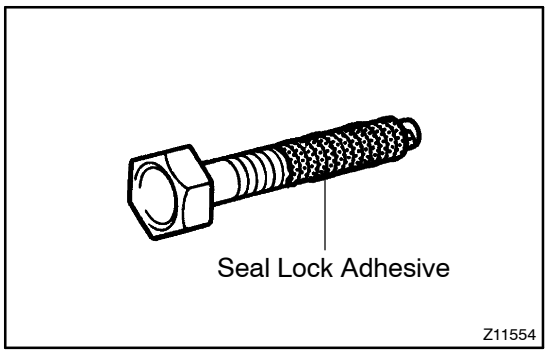

(a) Precoated Parts:
  (1) Precoated parts are bolts, nuts, etc. that are coated with a seal lock adhesive at the factory.
  (2) If a precoated part is retightened, loosened or caused to move in any way, it must be recoated with the specified adhesive.
  (3) When reusing precoated parts, clean off the old adhesive and dry with compressed air. Then apply the specified seal lock adhesive to the bolt, nut or threads.

NOTICE:

Do the torque checking with the lower limit value of the torque tolerance.

(4) Depending on the seal lock agent to apply, there may be a case where it is necessary to leave it for a specified time until it hardens.

(b) Gaskets:
When necessary, use a sealer on gaskets to prevent leaks.

(c) Bolts, Nuts and Screws:
Carefully observe all specifications for bolt tightening torques. Always use a torque wrench.

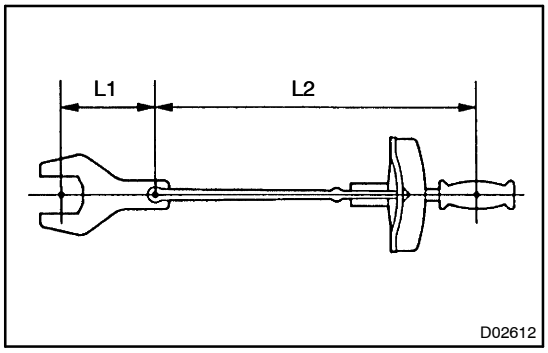

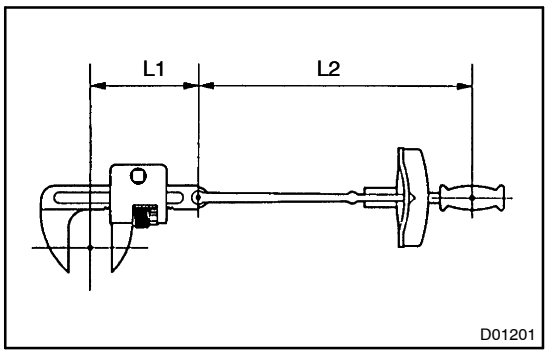

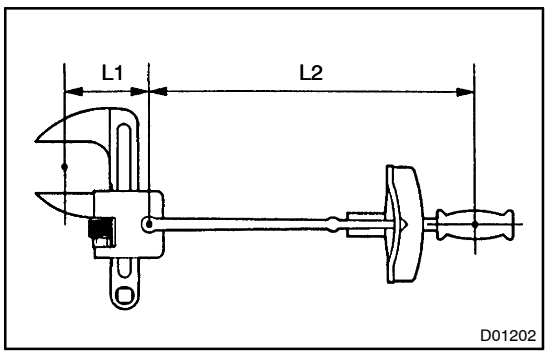

(d) Torque When Using Extension Tool with Torque Wrench:
(1) In case of tightening by extending the entire length of the torque wrench combined with SST or tool, if you tighten until the reading of the torque wrench reached the specified torque value, the actual torque becomes excessive.
(2) In this text, only the specified torque is described. In case of using SST or extension tool, find the reading of the torque wrench by the formula.
(3) Formula T'=T x L2/(L1 + L2)

T'	Reading of torque wrench {N·m (kgf·cm, ft·lbf)}
T	Torque {N·m (kgf·cm, ft·lbf)}
L1	Length of SST or tool (cm)
L2	Length of torque wrench (cm)

10. REMOVAL AND INSTALLATION OF FUEL CONTROL PARTS

(a) Place for Removing and Installing Fuel System Parts:
(1) Place with good air ventilation and without anything flammable such as welder, grinder, drill, electric motor or stove in the surroundings.
(2) Never work in a place like a pit or nearby pit as there is a possibility that vaporized fuel fills those places.

(b) Removing and Installing of Fuel System Parts:
(1) Prepare a fire extinguisher before starting the operation.
(2) For prevention of the static electricity, install a ground on the fuel changer, vehicle and fuel tank, and do not spray much water so as to prevent slipping.

(3) Never use any electric equipment like an electric motor or a working light as they may cause spark or high temperature.
(4) Never use an iron hammer as it may cause spark.
(5) Dispose the shop lag separately from any fuel deposit.

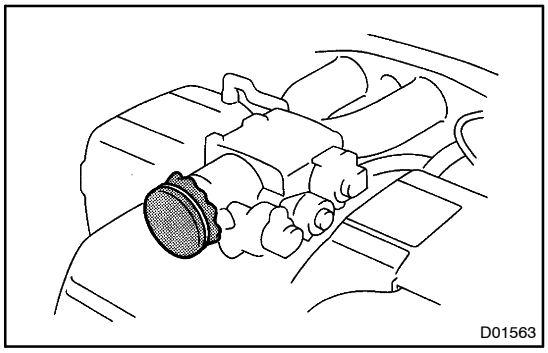
D01563

11. REMOVAL AND INSTALLATION OF ENGINE INTAKE PARTS

(a) If any metal tip is mixed in the inlet pass, that may give a bad effect to the engine and turbo charger.
(b) When removing and installing of the inlet system parts, close the opening of the removed inlet system parts and the engine with a clean shop lag or gum tape.
(c) When installing the inlet system parts, check that there is no mixing of a metal tip.

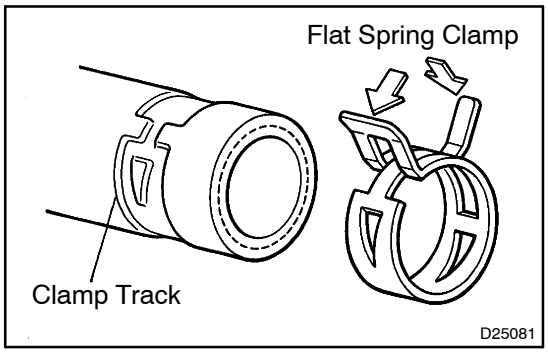

D25081

12. HANDLING OF HOSE CLAMPS

(a) Before removing the hose, check the depth of inserting portion and the clamp position to restore it surely.
(b) Change a deformed or dented into a new one.
(c) In case of reusing the hose, install the clamp on the hose where it has a clamp track.
(d) For a flat spring type clamp, make it adjust by adding force to the arrow mark direction after the installation.

TERMS

ABBREVIATIONS USED IN MANUAL

010B9–17

Abbreviations	Meaning
ABS	Anti–Lock Brake System
A/C	Air Conditioner
AC	Alternating Current
ACC	Accessory
ACIS	Acoustic Control Induction System
ACSD	Automatic Cold Start Device
A.D.D.	Automatic Disconnecting Differential
A/F	Air–Fuel Ratio
AHC	Active Height Control Suspension
ALR	Automatic Locking Retractor
ALT	Alternator
AMP	Amplifier
ANT	Antenna
Approx.	Approximately
ASSY	Assembly
A/T, ATM	Automatic Transmission (Transaxle)
ATF	Automatic Transmission Fluid
AUTO	Automatic
AUX	Auxiliary
AVG	Average
AVS	Adaptive Variable Suspension
B+	Battery Voltage
BA	Brake Assist
BACS	Boost Altitude Compensation System
BAT	Battery
BDC	Bottom Dead Center
B/L	Bi–Level
B/S	Bore–Stroke Ratio
BTDC	Before Top Dead Center
BVSV	Bimetallic Vacuum Switching Valve
CAN	Controller Area Network
CB	Circuit Breaker
CCo	Catalytic Converter For Oxidation
CD	Compact Disc
CF	Cornering Force
CG	Center Of Gravity
CH	Channel
CKD	Complete Knock Down
COMB.	Combination
CPE	Coupe
CPS	Combustion Pressure Sensor
CPU	Central Processing Unit
CRS	Child Restraint System
CTR	Center
C/V	Check Valve
CV	Control Valve
CW	Curb Weight
DC	Direct Current

Abbreviations	Meaning
DEF	Defogger
DFL	Deflector
DIFF.	Differential
DIFF. LOCK	Differential Lock
D/INJ	Direct Injection
DLC	Data Link Connector
DLI	Distributorless Ignition
DOHC	Double Overhead Camshaft
DP	Dash Pot
DS	Dead Soak
DSP	Digital Signal Processor
DTC	Diagnostic Trouble Code
DVD	Digital Versatile Disc
EBD	Electric Brake Force Distribution
ECAM	Engine Control And Measurement System
ECD	Electronic Controlled Diesel
ECDY	Eddy Current Dynamometer
ECT	Electronic Control Transmission
ECU	Electronic Control Unit
ED	Electro–Deposited Coating
EDU	Electronic Driving Unit
EDIC	Electric Diesel Injection Control
EFI	Electronic Fuel Injection
E/G	Engine
EGR	Exhaust Gas Recirculation
EGR–VM	EGR–Vacuum Modulator
ELR	Emergency Locking Retractor
EMPS	Electric Motor Power Steering
ENG	Engine
ESA	Electronic Spark Advance
ETCS–i	Electronic Throttle Control System–intelligent
EVAP	Evaporative Emission Control
EVP	Evaporator
E–VRV	Electric Vacuum Regulating Valve
EX	Exhaust
FE	Fuel Economy
FF	Front–Engine Front–Wheel–Drive
F/G	Fuel Gauge
FIPG	Formed In Place Gasket
FL	Fusible Link
F/P	Fuel Pump
FPU	Fuel Pressure Up
Fr	Front
F/W	Flywheel
FW/D	Flywheel Damper
FWD	Front–Wheel–Drive
GAS	Gasoline
GND	Ground
GPS	Global Positioning System
HAC	High Altitude Compensator
H/B	Hatchback

Abbreviations	Meaning
H–FUSE	High Current Fuse
HI	High
HID	High Intensity Discharge (Head Lamp)
HSG	Housing
HT	Hard Top
HWS	Heated Windshield System
IC	Integrated Circuit
IDI	Indirect Diesel Injection
IFS	Independent Front Suspension
IG	Ignition
IIA	Integrated Ignition Assembly
IN	Intake (Manifold, Valve)
INT	Intermittent
I/P	Instrument Panel
IRS	Independent Rear Suspension
ISC	Idle Speed Control
J/B	Junction Block
J/C	Junction Connector
KD	Kick–Down
LAN	Local Area Network
LB	Liftback
LCD	Liquid Crystal Display
LED	Light Emitting Diode
LH	Left–Hand
LHD	Left–Hand Drive
L/H/W	Length, Height, Width
LLC	Long–Life Coolant
LNG	Liquified Natural Gas
LO	Low
LPG	Liquified Petroleum Gas
LSD	Limited Slip Differential
LSP & PV	Load Sensing Proportioning And Bypass Valve
LSPV	Load Sensing Proportioning Valve
MAP	Manifold Absolute Pressure
MAX.	Maximum
MIC	Microphone
MIL	Malfunction Indicator Lamp
MIN.	Minimum
MG1	Motor Generator No.1
MG2	Motor Generator No.2
MP	Multipurpose
MPI	Multipoint Electronic Injection
MPX	Multiplex Communication System
M/T, MTM	Manual Transmission (Transaxle)
MT	Mount
MTG	Mounting
N	Neutral
NA	Natural Aspiration
No.	Number
O2S	Oxygen Sensor
O/D	Overdrive

Abbreviations	Meaning
OEM	Original Equipment Manufacturing
OHC	Overhead Camshaft
OHV	Overhead Valve
OPT	Option
ORVR	On–board Refilling Vapor Recovery
O/S	Oversize
P & BV	Proportioning And Bypass Valve
PCS	Power Control System
PCV	Positive Crankcase Ventilation
PKB	Parking Brake
PPS	Progressive Power Steering
PTC	Positive Temperature Coefficient
PS	Power Steering
PTO	Power Take–Off
P/W	Power Window
R & P	Rack And Pinion
RAM	Random Access Memory
R/B	Relay Block
RBS	Recirculating Ball Type Steering
R/F	Reinforcement
RFS	Rigid Front Suspension
RH	Right–Hand
RHD	Right–Hand Drive
RLY	Relay
ROM	Read Only Memory
Rr	Rear
RRS	Rigid Rear Suspension
RWD	Rear–Wheel Drive
SDN	Sedan
SEN	Sensor
SICS	Starting Injection Control System
SOC	State Of Charge
SOHC	Single Overhead Camshaft
SPEC	Specification
SPI	Single Point Injection
SRS	Supplemental Restraint System
SSM	Special Service Materials
SST	Special Service Tools
STD	Standard
STJ	Cold–Start Fuel Injection
SW	Switch
SYS	System
T/A	Transaxle
TACH	Tachometer
TBI	Throttle Body Electronic Fuel Injection
TC	Turbocharger
TCCS	TOYOTA Computer–Controlled System
TCV	Timing Control Valve
TDC	Top Dead Center
TEMP.	Temperature
TEMS	TOYOTA Electronic Modulated Suspension

Abbreviations	Meaning
TFT	Toyota Free–Tronic
TIS	Total Information System For Vehicle Development
T/M	Transmission
TMC	TOYOTA Motor Corporation
TMMK	TOYOTA Motor Manufacturing Kentucky, Inc.
TRC	Traction Control System
TURBO	Turbocharge
TWC	Three–Way Catalyst
U/D	Underdrive
U/S	Undersize
VCV	Vacuum Control Valve
VENT	Ventilator
VIN	Vehicle Identification Number
VPS	Variable Power Steering
VSC	Vehicle Stability Control
VSV	Vacuum Switching Valve
VTV	Vacuum Transmitting Valve
VVT–i	Variable Valve Timing–intelligent
w/	With
WGN	Wagon
W/H	Wire Harness
w/o	Without
WU–TWC	Warm Up Three–way Catalytic Converter
WU–OC	Warm Up Oxidation Catalytic Converter
1st	First
2nd	Second
2WD	Two Wheel Drive Vehicle (4 x 2)
3rd	Third
4th	Fourth
4WD	Four Wheel Drive Vehicle (4 x 4)
4WS	Four Wheel Steering System
5th	Fifth

010BA–20

GLOSSARY OF SAE AND TOYOTA TERMS

This glossary lists all SAE–J1930 terms and abbreviations used in this manual in compliance with SAE recommendations, as well as their TOYOTA equivalents.

SAE ABBREVIATIONS	SAE TERMS	TOYOTA TERMS ( )––ABBREVIATIONS
A/C	Air Conditioning	Air Conditioner
ACL	Air Cleaner	Air Cleaner, A/CL
AIR	Secondary Air Injection	Air Injection (AI)
AP	Accelerator Pedal	–
B+	Battery Positive Voltage	+B, Battery Voltage
BARO	Barometric Pressure	HAC
CAC	Charge Air Cooler	Intercooler
CARB	Carburetor	Carburetor
CFI	Continuous Fuel Injection	–
CKP	Crankshaft Position	Crank Angle
CL	Closed Loop	Closed Loop
CMP	Camshaft Position	Cam Angle
CPP	Clutch Pedal Position	–
CTOX	Continuous Trap Oxidizer	–
CTP	Closed Throttle Position	LL ON, Idle ON
DFI	Direct Fuel Injection (Diesel)	Direct Injection (DI/INJ)
DI	Distributor Ignition	–
DLC1 DLC2 DLC3	Data Link Connector 1 Data Link Connector 2 Data Link Connector 3	1: Check Connector 2: Total Diagnosis Communication Link (TDCL) 3: OBD II Diagnostic Connector
DTC	Diagnostic Trouble Code	Diagnostic Trouble Code
DTM	Diagnostic Test Mode	–
ECL	Engine Control Level	–
ECM	Engine Control Module	Engine ECU (Electronic Control Unit)
ECT	Engine Coolant Temperature	Coolant Temperature, Water Temperature (THW)
EEPROM	Electrically Erasable Programmable Read Only Memory	Electrically Erasable Programmable Read Only Memory (EEPROM), Erasable Programmable Read Only Memory (EPROM)
EFE	Early Fuel Evaporation	Cold Mixture Heater (CMH), Heat Control Valve (HCV)
EGR	Exhaust Gas Recirculation	Exhaust Gas Recirculation (EGR)
EI	Electronic Ignition	Distributorless Ignition (DLI)
EM	Engine Modification	Engine Modification (EM)
EPROM	Erasable Programmable Read Only Memory	Programmable Read Only Memory (PROM)
EVAP	Evaporative Emission	Evaporative Emission Control (EVAP)
FC	Fan Control	–
FEEPROM	Flash Electrically Erasable Programmable Read Only Memory	–
FEPROM	Flash Erasable Programmable Read Only Memory	–
FF	Flexible Fuel	–
FP	Fuel Pump	Fuel Pump
GEN	Generator	Alternator
GND	Ground	Ground (GND)

HO2S	Heated Oxygen Sensor	Heated Oxygen Sensor (HO_2S)
IAC	Idle Air Control	Idle Speed Control (ISC)
IAT	Intake Air Temperature	Intake or Inlet Air Temperature
ICM	Ignition Control Module	–
IFI	Indirect Fuel Injection	Indirect Injection (IDL)
IFS	Inertia Fuel–Shutoff	–
ISC	Idle Speed Control	–
KS	Knock Sensor	Knock Sensor
MAF	Mass Air Flow	Air Flow Meter
MAP	Manifold Absolute Pressure	Manifold Pressure Intake Vacuum
MC	Mixture Control	Electric Bleed Air Control Valve (EBCV) Mixture Control Valve (MCV) Electric Air Control Valve (EACV)
MDP	Manifold Differential Pressure	–
MFI	Multiport Fuel Injection	Electronic Fuel Injection (EFI)
MIL	Malfunction Indicator Lamp	Check Engine Lamp
MST	Manifold Surface Temperature	–
MVZ	Manifold Vacuum Zone	–
NVRAM	Non–Volatile Random Access Memory	–
O2S	Oxygen Sensor	Oxygen Sensor, O_2 Sensor (O_2S)
OBD	On–Board Diagnostic	On–Board Diagnostic System (OBD)
OC	Oxidation Catalytic Converter	Oxidation Catalyst Convert (OC), CCo
OP	Open Loop	Open Loop
PAIR	Pulsed Secondary Air Injection	Air Suction (AS)
PCM	Powertrain Control Module	–
PNP	Park/Neutral Position	–
PROM	Programmable Read Only Memory	–
PSP	Power Steering Pressure	–
PTOX	Periodic Trap Oxidizer	Diesel Particulate Filter (DPF) Diesel Particulate Trap (DPT)
RAM	Random Access Memory	Random Access Memory (RAM)
RM	Relay Module	–
ROM	Read Only Memory	Read Only Memory (ROM)
RPM	Engine Speed	Engine Speed
SC	Supercharger	Supercharger
SCB	Supercharger Bypass	E–ABV
SFI	Sequential Multiport Fuel Injection	Electronic Fuel Injection (EFI), Sequential Injection
SPL	Smoke Puff Limiter	–
SRI	Service Reminder Indicator	–
SRT	System Readiness Test	–
ST	Scan Tool	–
TB	Throttle Body	Throttle Body
TBI	Throttle Body Fuel Injection	Single Point Injection Central Fuel Injection (Ci)
TC	Turbocharger	Turbocharger
TCC	Torque Converter Clutch	Torque Converter

TCM	Transmission Control Module	Transmission ECU, ECT ECU
TP	Throttle Position	Throttle Position
TR	Transmission Range	–
TVV	Thermal Vacuum Valve	Bimetallic Vacuum Switching Valve (BVSV) Thermostatic Vacuum Switching Valve (TVSV)
TWC	Three–Way Catalytic Converter	Three–Way Catalytic (TWC) Manifold Converter CC_{RO}
TWC+OC	Three–Way + Oxidation Catalytic Converter	CC_R + CCo
VAF	Volume Air Flow	Air Flow Meter
VR	Voltage Regulator	Voltage Regulator
VSS	Vehicle Speed Sensor	Vehicle Speed Sensor
WOT	Wide Open Throttle	Full Throttle
WU–OC	Warm Up Oxidation Catalytic Converter	–
WU–TWC	Warm Up Three–Way Catalytic Converter	–
3GR	Third Gear	–
4GR	Fourth Gear	–

INTAKE

PREPARATION

023FS–01

SST

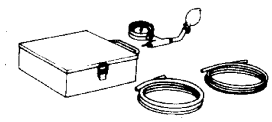	09992–00242 Turbocharger Pressure Gauge	TURBOCHARGER SUB–ASSY(1CD–FTV)(From September, 2003)

ENGINE MECHANICAL

PREPARATION

023EZ–01

SST

	09032–00100	Oil Pan Seal Cutter	PARTIAL ENGINE ASSY(1CD–FTV)(From September, 2003)
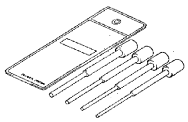	09201–10000	Valve Guide Bushing Remover & Replacer Set	CYLINDER HEAD ASSY(1CD–FTV)(From September, 2003)
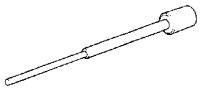	(09201–01060)	Valve Guide Bushing Remover & Replacer 6	CYLINDER HEAD ASSY(1CD–FTV)(From September, 2003)
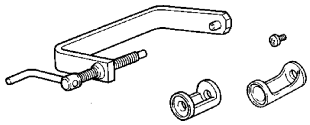	09202–70020	Valve Spring Compressor	CYLINDER HEAD ASSY(1CD–FTV)(From September, 2003)
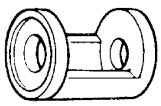	(09202–00010)	Attachment	CYLINDER HEAD ASSY(1CD–FTV)(From September, 2003)
	09223–15030	Oil Seal & Bearing Replacer	PARTIAL ENGINE ASSY(1CD–FTV)(From September, 2003)
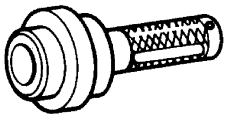	09223–46011	Crankshaft Front Oil Seal Replacer	PARTIAL ENGINE ASSY(1CD–FTV)(From September, 2003)
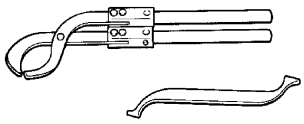	09248–55050	Valve Clearance Adjust Tool Set	PARTIAL ENGINE ASSY(1CD–FTV)(From September, 2003)
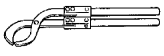	(09248–05510)	Valve Lifter Press	PARTIAL ENGINE ASSY(1CD–FTV)(From September, 2003)
	(09248–05520)	Valve Lifter Stopper	PARTIAL ENGINE ASSY(1CD–FTV)(From September, 2003)
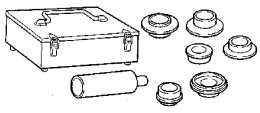	09316–60011	Transmission & Transfer Bearing Replacer	PARTIAL ENGINE ASSY(1CD–FTV)(From September, 2003)
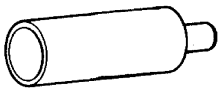	(09316–00011)	Replacer Pipe	PARTIAL ENGINE ASSY(1CD–FTV)(From September, 2003)

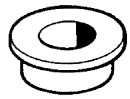	(09316–00021) Replacer "A"	PARTIAL ENGINE ASSY(1CD–FTV)(From September, 2003)
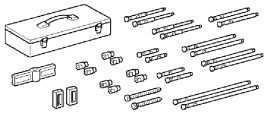	09950–50013 Puller C Set	PARTIAL ENGINE ASSY(1CD–FTV)(From September, 2003)
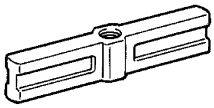	(09951–05010) Hanger 150	PARTIAL ENGINE ASSY(1CD–FTV)(From September, 2003)
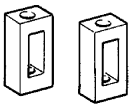	(09952–05010) Slide Arm	PARTIAL ENGINE ASSY(1CD–FTV)(From September, 2003)
	(09953–05010) Center Bolt 100	PARTIAL ENGINE ASSY(1CD–FTV)(From September, 2003)
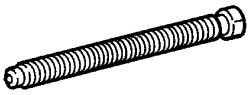	(09953–05020) Center Bolt 150	PARTIAL ENGINE ASSY(1CD–FTV)(From September, 2003)
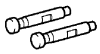	(09954–05021) Claw No.2	PARTIAL ENGINE ASSY(1CD–FTV)(From September, 2003)
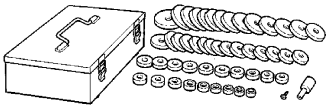	09950–60010 Replacer Set	CYLINDER HEAD ASSY(1CD–FTV)(From September, 2003) CYLINDER BLOCK ASSY(1CD–FTV)(From September, 2003)
	(09951–00210) Replacer 21	CYLINDER HEAD ASSY(1CD–FTV)(From September, 2003)
	(09951–00350) Replacer 35	CYLINDER BLOCK ASSY(1CD–FTV)(From September, 2003)
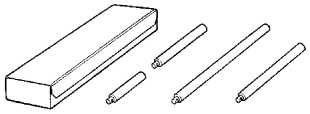	09950–70010 Handle Set	PARTIAL ENGINE ASSY(1CD–FTV)(From September, 2003) CYLINDER HEAD ASSY(1CD–FTV)(From September, 2003) CYLINDER BLOCK ASSY(1CD–FTV)(From September, 2003)

	(09951–07100)	Handle 100	PARTIAL ENGINE ASSY(1CD–FTV)(From September, 2003) CYLINDER HEAD ASSY(1CD–FTV)(From September, 2003) CYLINDER BLOCK ASSY(1CD–FTV)(From September, 2003)
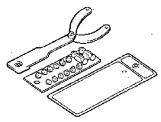	09960–10010	Variable Pin Wrench Set	PARTIAL ENGINE ASSY(1CD–FTV)(From September, 2003)
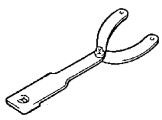	(09962–01000)	Variable Pin Wrench Arm Assy	PARTIAL ENGINE ASSY(1CD–FTV)(From September, 2003)
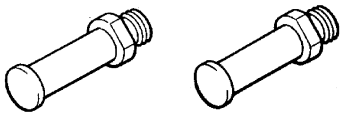	(09963–01000)	Pin 10	PARTIAL ENGINE ASSY(1CD–FTV)(From September, 2003)
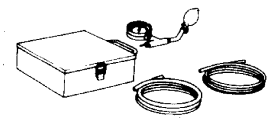	09992–00242	Turbocharger Pressure Gauge	PARTIAL ENGINE ASSY(1CD–FTV)(From September, 2003)

Recommended Tools

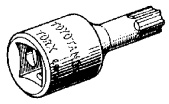	09042–00020	Torx Socket T40	PARTIAL ENGINE ASSY(1CD–FTV)(From September, 2003)

SSM

	08826–00080	Seal Packing Black or equivalent (FIPG)	PARTIAL ENGINE ASSY(1CD–FTV)(From September, 2003) CYLINDER HEAD ASSY(1CD–FTV)(From September, 2003)
	08826–00100	”Seal Packing 1282B,” THREE BOND 1282B or equivalent (FIPG)	PARTIAL ENGINE ASSY(1CD–FTV)(From September, 2003)
	08833–00070	”Adhesive 1324,” THREE BOND 1324 or equivalent	CYLINDER HEAD ASSY(1CD–FTV)(From September, 2003) CYLINDER BLOCK ASSY(1CD–FTV)(From September, 2003)

Equipment

V–block	
Piston ring compressor	
Piston ring expander	
Valve seat cutter	
Hexagon wrench (6 mm)	
Hexagon wrench (8 mm)	
Connecting rod aligner	
Cylinder gauge	
Dial indicator	
Feeler gauge	
Micrometer	
Precision straight edge	
Steel square	
Torque wrench	
Vernier calipers	
Dial indicator with magnetic base	
Slide calipers	
Wooden block	
Spring tester	
Plastigage	
Heater	
Dye penetrate	
Caliper gauge	
Reamer	
Plastic–faced hammer	
Ridge reamer	

LUBRICATION

PREPARATION

023F0–01

Equipment

Feeler gauge	

STARTING & CHARGING

PREPARATION

023FT–01

SST

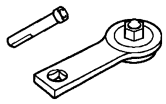	09820–63020	Alternator Pulley Wrench Set	GENERATOR ASSY(1CD–FTV)(From September, 2003)
	09950–40011	Puller B Set	GENERATOR ASSY(1CD–FTV)(From September, 2003)
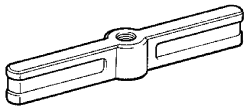	(09951–04020)	Hanger 200	GENERATOR ASSY(1CD–FTV)(From September, 2003)
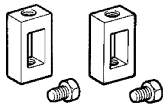	(09952–04010)	Slide Arm	GENERATOR ASSY(1CD–FTV)(From September, 2003)
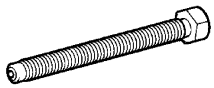	(09953–04020)	Center Bolt 150	GENERATOR ASSY(1CD–FTV)(From September, 2003)
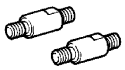	(09954–04010)	Arm 25	GENERATOR ASSY(1CD–FTV)(From September, 2003)
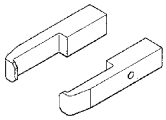	(09955–04071)	Claw No.7	GENERATOR ASSY(1CD–FTV)(From September, 2003)
	(09957–04010)	Attachment	GENERATOR ASSY(1CD–FTV)(From September, 2003)
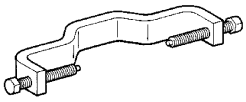	(09958–04011)	Holder	GENERATOR ASSY(1CD–FTV)(From September, 2003)
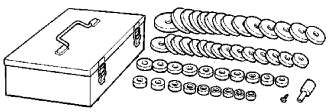	09950–60010	Replacer Set	GENERATOR ASSY(1CD–FTV)(From September, 2003)
	(09951–00250)	Replacer 25	GENERATOR ASSY(1CD–FTV)(From September, 2003)
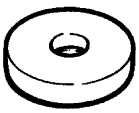	(09951–00470)	Replacer 47	GENERATOR ASSY(1CD–FTV)(From September, 2003)

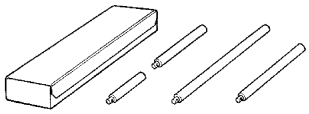	09950–70010 Handle Set	GENERATOR ASSY(1CD–FTV)(From September, 2003)
	(09951–07100) Handle 100	GENERATOR ASSY(1CD–FTV)(From September, 2003)

Equipment

Ohmmeter	
Torque wrench	
Vernier calipers	
Pull scale	
V–block	
Dial indicator with magnetic base	

STANDARD BOLT

HOW TO DETERMINE BOLT STRENGTH

030LK–08

Bolt Type				Class
Hexagon Head Bolt		Stud Bolt	Weld Bolt	
Normal Recess Bolt	Deep Recess Bolt			
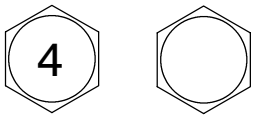 No Mark	 No Mark	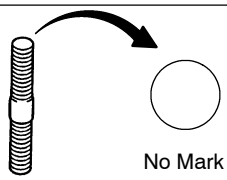 No Mark	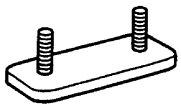	4T
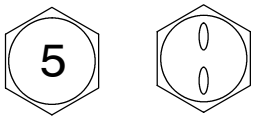	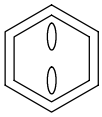			5T
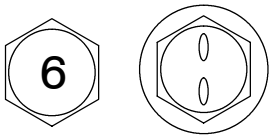 w/ Washer	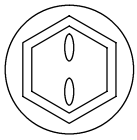 w/ Washer			6T
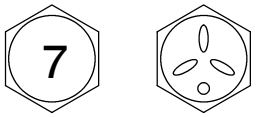	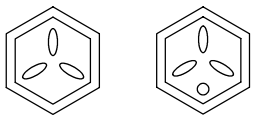			7T
				8T
				9T
	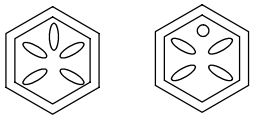			10T
	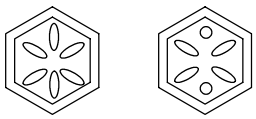			11T

B06431

030LL–08

SPECIFIED TORQUE FOR STANDARD BOLTS

Class	Diameter mm	Pitch mm	Specified torque					
			Hexagon head bolt			Hexagon flange bolt		
			N·m	kgf·cm	ft·lbf	N·m	kgf·cm	ft·lbf
4T	6	1	5	55	48 in.·lbf	6	60	52 in.·lbf
	8	1.25	12.5	130	9	14	145	10
	10	1.25	26	260	19	29	290	21
	12	1.25	47	480	35	53	540	39
	14	1.5	74	760	55	84	850	61
	16	1.5	115	1,150	83	–	–	–
5T	6	1	6.5	65	56 in.·lbf	7.5	75	65 in.·lbf
	8	1.25	15.5	160	12	17.5	175	13
	10	1.25	32	330	24	36	360	26
	12	1.25	59	600	43	65	670	48
	14	1.5	91	930	67	100	1,050	76
	16	1.5	140	1,400	101	–	–	–
6T	6	1	8	80	69 in.·lbf	9	90	78 in.·lbf
	8	1.25	19	195	14	21	210	15
	10	1.25	39	400	29	44	440	32
	12	1.25	71	730	53	80	810	59
	14	1.5	110	1,100	80	125	1,250	90
	16	1.5	170	1,750	127	–	–	–
7T	6	1	10.5	110	8	12	120	9
	8	1.25	25	260	19	28	290	21
	10	1.25	52	530	38	58	590	43
	12	1.25	95	970	70	105	1,050	76
	14	1.5	145	1,500	108	165	1,700	123
	16	1.5	230	2,300	166	–	–	–
8T	8	1.25	29	300	22	33	330	24
	10	1.25	61	620	45	68	690	50
	12	1.25	110	1,100	80	120	1,250	90
9T	8	1.25	34	340	25	37	380	27
	10	1.25	70	710	51	78	790	57
	12	1.25	125	1,300	94	140	1,450	105
10T	8	1.25	38	390	28	42	430	31
	10	1.25	78	800	58	88	890	64
	12	1.25	140	1,450	105	155	1,600	116
11T	8	1.25	42	430	31	47	480	35
	10	1.25	87	890	64	97	990	72
	12	1.25	155	1,600	116	175	1,800	130

030LM–08

HOW TO DETERMINE NUT STRENGTH

Nut Type			Class
Present Standard Hexagon Nut	Old Standard Hexagon Nut		
	Cold Forging Nut	Cutting Processed Nut	
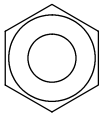 No Mark			4N
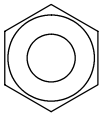 No Mark (w/ Washer)	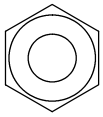 No Mark (w/ Washer)	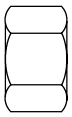 No Mark	5N (4T)
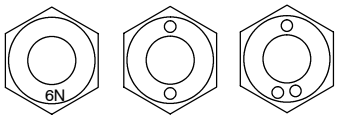 6N			6N
	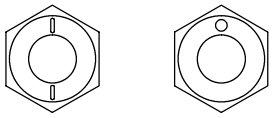	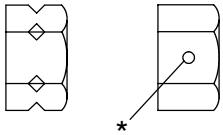 *	7N (5T)
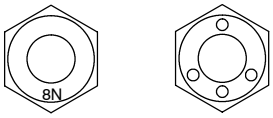 8N			8N
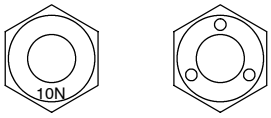 10N	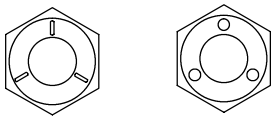	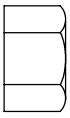 No Mark	10N (7T)
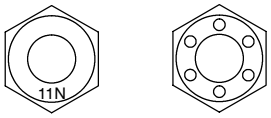 11N			11N
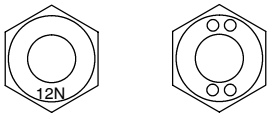 12N			12N

*: Nut with 1 or more marks on one side surface of the nut.

B06432

HINT:

Use the nut with the same number of the nut strength classification or the greater than the bolt strength classification number when tightening parts with a bolt and nut.

Example: Bolt = 4T

Nut = 4N or more

INTAKE

SERVICE DATA

031FQ–03

Actuator push rod		
Standard stroke	50 kpa (375 mmHg, 15 in. Hg)	0.2 mm (0.008 in.)
	30 kpa (225 mmHg, 9 in. Hg)	5.0 mm (0.197 in.)

ENGINE MECHANICAL

SERVICE DATA

031H1–03

Valve clearance		
Intake	(cold)	0.20 to 0.30 mm (0.008 to 0.012 in.)
Exhaust		0.35 to 0.45 mm (0.014 to 0.018 in.)
Adjusting shim thickness	Mark 2.500	2.500 mm (0.0984 in.)
	Mark 2.550	2.550 mm (0.1004 in.)
	Mark 2.600	2.600 mm (0.1024 in.)
	Mark 2.650	2.650 mm (0.1043 in.)
	Mark 2.700	2.700 mm (0.1063 in.)
	Mark 2.750	2.750 mm (0.1083 in.)
	Mark 2.800	2.800 mm (0.1102 in.)
	Mark 2.850	2.850 mm (0.1122 in.)
	Mark 2.900	2.900 mm (0.1142 in.)
	Mark 2.950	2.950 mm (0.1161 in.)
	Mark 3.000	3.000 mm (0.1181 in.)
	Mark 3.050	3.050 mm (0.1201 in.)
	Mark 3.100	3.100 mm (0.1220 in.)
	Mark 3.150	3.150 mm (0.1240 in.)
	Mark 3.200	3.200 mm (0.1260 in.)
	Mark 3.250	3.250 mm (0.1280 in.)
	Mark 3.300	3.300 mm (0.1299 in.)
Cylinder head		
Warpage	Cylinder block side	0.08 mm (0.0031 in.)
	Intake manifold side	0.20 mm (0.0079 in.)
	Exhaust manifold side	0.20 mm (0.0079 in.)
Intake valve		
Overall length	Standard	102.53 mm (4.0366in.)
	Minimum	102.10 mm (4.0197in.)
Valve stem diameter		5.970 to 5.985 mm (0.2350 to 0.2356 in.)
Margin thickness	Standard	0.9 (0.035 in.)
	Minimum	0.6 mm (0.0236 in.)
Exhaust valve		
Overall length	Standard	101.97 mm (4.0146in.)
	Minimum	101.55 mm (3.9980 in.)
Valve stem diameter		5.960 to 5.975 mm (0.2346 to 0.2352 in.)
Margin thickness	Standard	0.9 mm (0.035 in.)
	Minimum	0.6 mm (0.024 in.)
Inner compression spring		
Free length		40.45 mm (1.5925 in.)
Deviation	Maximum	2.0 mm (0.079 in.)
Installed tension	at 31.1 mm (1.224 in.)	177 to 195 N (18.0 to 19.9 kgf, 39.7 to 44.1 lbf)
Intake Valve guide bush		
Bushing inside diameter		6.010 to 6.030 mm (0.2366 to 0.2374 in.)
Oil clearance	Standard	0.025 to 0.060 mm (0.0010 to 0.0024 in.)
	Maximum	0.08 mm (0.0031 in.)
Diameter		10.985 to 11.006 mm (0.4325 to 0.4333 in.)
Protrusion height		10.05 to 10.45 mm (0.3957 to 0.4114 in.)
Exhaust valve guide bush		
Bushing inside diameter		6.010 to 6.030 mm (0.2366 to 0.2374 in.)
Oil clearance	Standard	0.035 to 0.070 mm (0.0014 to 0.0028 in.)
	Maximum	0.10 mm (0.0039 in.)
Diameter		10.985 to 11.006 mm (0.4325 to 0.4333 in.)
Protrusion height		9.65 to 10.05 mm (0.3799 to 0.3957 in.)
Valve lifter		
Lifter diameter		27.975 to 27.985 mm (1.1014 to 1.1018 in.)
Lifter bore diameter		28.010 to 28.031 mm (1.1028 to 1.1036 in.)
Oil clearance	Standard	0.025 to 0.080 mm (0.0010 to 0.0031 in.)

Camshaft		
Circle runout	Maximum	0.06 mm (0.0024 in.)
Cam lobe height (intake)	Standard	46.57 to 46.67 mm (1.8335 to 1.8374 in.)
	Minimum	46.10 mm (1.8150 in.)
Cam lobe height (exhaust)	Standard	47.52 to 47.62 mm (1.8709 to 1.8748 in.)
	Minimum	47.05 mm (1.8524 in.)
Journal diameter		26.969 to 26.985 mm (1.0618 to 1.0624 in.)
Thrust clearance		0.035 to 0.11 mm (0.0014 to 0.0043 in.)
Oil clearance	Standard	0.025 to 0.080 mm (0.0010 to 0.0031 in.)
Gear backlash	Standard	0.014 to 0.170 mm (0.0006 to 0.0067 in.)
Connecting rod		
Thrust clearance	Standard	0.08 to 0.40 mm (0.0031 to 0.0157 in.)
Oil clearance	Standard	0.038 to 0.056 mm (0.0015 to 0.0022 in.)
	Maximum	0.10 mm (0.0039 in.)
Cylinder block		
Warpage	Maximum	0.05 mm (0.0020 in.)
Bore diameter	Standard	82.200 to 82.400 mm (3.2362 to 3.2441 in.)
Piston		
Piston diameter		82.118 to 82.132 mm (3.2330 to 3.2335 in.)
Piston oil clearance	Standard	0.068 to 0.140 mm (0.0027 to 0.0055 in.)
Bushing inside diameter		31.015 to 31.027 mm (1.2211 to 1.2215 in.)
Piston pin		
Piston pin diameter		31.000 to 31.012 mm (1.2205 to 1.2209 in.)
Oil clearance	Standard	0.005 to 0.019 mm (0.0002 to 0.0007 in.)
Cylinder head set bolt		
Out side diameter	Standard	10.40 to 11.00 mm (0.4094 to 0.4331 in.)
Connecting rod bolt		
Diameter	Standard	8.0 to 8.3 mm (0.315 to 0.315 in.)
Connecting rod		
Out–of–alignment	Maximum per 100 mm (3.94 in.)	0.05 mm (0.0020 in.)
Rod twist	Maximum per 100 mm (3.94 in.)	0.15 mm (0.0059 in.)
Ring groove clearance	No. 1	0.11 to 0.15 mm (0.0043 to 0.0059 in.)
	No. 2	0.075 to 0.115 mm (0.0030 to 0.0045 in.)
	Oil	0.03 to 0.07 mm (0.0012 to 0.0028 in.)
Piston ring end gap		
Standard	No. 1	0.27 to 0.39 mm (0.0106 to 0.0514 in.)
	No. 2	0.39 to 0.54 mm (0.0154 to 0.0213 in.)
	Oil	0.20 to 0.40 mm (0.0079 to 0.0157 in.)
Maximum	No. 1	0.82 mm (0.0323 in.)
	No. 2	1.00 mm (0.0394 in.)
	Oil	0.90 mm (0.0354 in.)
Crankshaft		
Thrust clearance	Standard	0.040 to 0.300 mm (0.0016 to 0.0118 in.)
Circle runout	Maximum	0.025 mm (0.0010 in.)
Crank pin taper and out– of –round	Maximum	0.01 mm (0.0004 in.)
Crank pin diameter		50.482 to 50.500 mm (1.9875 to 1.9882 in.)
Main journal diameter		56.992 to 57.010 mm (2.2438 to 2.2445 in.)
Oil clearance	Standard	0.032 to 0.100 mm (0.0013 to 0.0039 in.)

031H2–03

TORQUE SPECIFICATION

Part Tightened		N·m	kgf·cm	ft·lbf
Cylinder block water drain cock x Cylinder block		29	291	21
Oil check valve x Cylinder block		33	331	24
Engine rear oil seal retainer x Cylinder block		7.4	75	65 in.·lbf
Oil pump x Cylinder block		31	320	23
Oil pan x Cylinder block (See page 14–4)	Bolt A	42	428	31
	Bolt B	21	209	15
	Bolt C	11	112	8
	Nut D	11	112	8
Oil strainer x Oil pan sub–assy	Bolt	21	209	15
	Nut	13	135	10
Oil pan No.2 x Oil pan sub–assy		12	119	9.0
Cylinder head x Cylinder block	1st	45	459	33
	2nd	Turn 90°	Turn 90°	Turn 90°
	3rd	Turn 90°	Turn 90°	Turn 90°
	4th	Turn 90°	Turn 90°	Turn 90°
Camshaft bearing cap x Cylinder head		20	204	15
Water pump x Cylinder block		31	320	23
Camshaft oil seal retainer x Cylinder head		9.8	100	7.2
Timing belt idler Sub assy No.2 x Oil pump		47	475	34
Timing belt idler No. 1 x Cylinder head		35	357	26
Camshaft timing pulley x Camshaft		88	899	65
Exhaust fuel addition injector x Cylinder head		12	117	8.5
Nozzle holder clamp x Cylinder head		26	265	19
Nozzle leakage pipe x Cylinder head	Hollow screw	16	163	12
	Flange bolt	20	204	15
Over flow screw x Plug		9.8	100	7.0
Check valve x Cylinder head		21	214	15
Cylinder head cover x Cylinder head		13	135	9.7
Taper screw plug No.1 x Cylinder head		25	255	18
Cylinder head stud bolt (See Page 14–27)	Bolt A	8.8	90	78 in.·lbf
	Bolt B	12	120	8.7
	Bolt C	28	286	21
	Bolt D	8.8	90	78 in.·lbf
	Bolt E	8.8	90	78 in.·lbf
Connecting rod cap x Connecting rod	1st	30	306	22
	2nd	Turn 90°	Turn 90°	Turn 90°
Crankshaft bearing cap x Cylinder block		115	1,173	85
Cylinder block stud bolt		2.9	30	27 in.·lbf
Cylinder block oil orifice x Cylinder block		9.0	92	80 in.·lbf
Oil nozzle No.1 x Cylinder block		7.4	75	65 in.·lbf

LUBRICATION

SERVICE DATA

031H5–03

Oil pump		
Tip clearance	Standard	0.08 to 0.20 mm (0.0031 to 0.0079 in.)
Body clearance	Standard	0.10 to 0.20 mm (0.0039 to 0.0079 in.)

STARTING & CHARGING

031E6–04

SERVICE DATA

Starter armature assy		
Circle runout	Maximum	0.05 mm (0.0020 in.)
Diameter	Standard	35.0 mm (1.378 in.)
	Minimum	34.0 mm (1.339 in.)
Undercut depth	Standard	0.6 mm (0.024 in.)
	Minimum	0.2 mm (0.008 in.)
Brush		
Brush lenght	Standard	15.5 mm (0.610 in.)
	Minimum	10.0 mm (0.394 in.)
Starter brush holder assy		
Spring installed load	Standard	23.5 to 29.5 N (2.4 to 3.0 kgf, 5.3 to 6.6 lbf)
Generator rotor assy		
Rotor coil resistance	at 20°C (68°F)	2.3 to 2.7 Ω
Slip ring diameter	Standard	14.2 to 14.4 mm (0.559 to 0.567 in.)
	Minimum	14.0 mm (0.551 in.)
Generator brush holder assy		
Brush exposed lenght	Standard	10.5 mm (0.413 in.)
	Minimum	4.5 mm (0.177 in.)

031E7–05

TORQUE SPECIFICATION

Part Tightened	N·m	kgf·cm	ft·lbf
Starter commutator end frame assy x Starter brush holder assy	3.8	39	33 in.·lbf
Starter drive housing assy x Starter commutator end frame assy	6.0	61	53 in.·lbf
Magnetic switch x Starter drive housing assy	2.3	23	20 in.·lbf
Magnetic switch x Lead wire	5.9	60	52 in.·lbf
Generator drive end frame assy x Retainer plate	2.3	23	20 in.·lbf
Generator coil assy x Generator drive end frame assy	5.8	59	51 in.·lbf
Generator brush holder assy x Generator coil assy	1.8	18	16 in.·lbf
Generator rear end cover x Generator coil assy	4.6	47	41 in.·lbf
Generator w/clutch pulley x Generator rotor assy	111	1,132	82

TURBOCHARGER SUB–ASSY (1CD–FTV)(From September, 2003)

INSPECTION

1308O–01

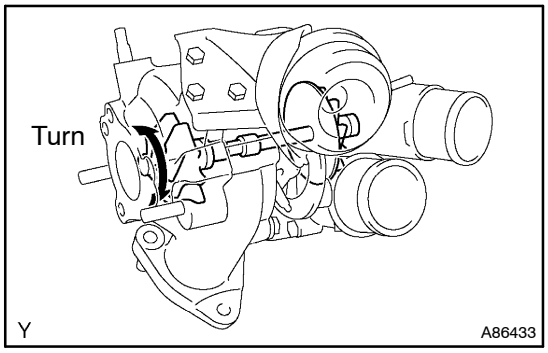

1. INSPECT TURBINE SHAFT

(a) Check the operation.

(1) Grasp the edge of the turbine shaft, then turn it. Check that the turbine shaft turns smoothly.

If the turbine shaft does not turn or it turns with heavy drag, replace the turbocharger.

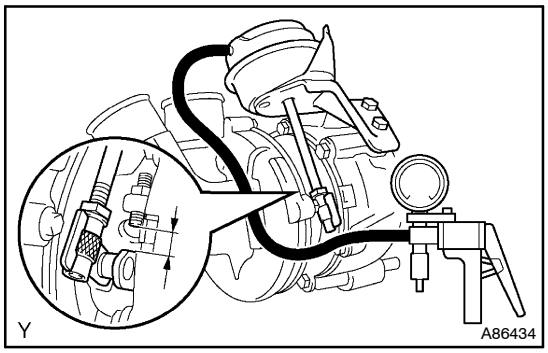

2. INSPECT ACTUATOR OPERATION

(a) Apply vacuum of 66 kPa (500 mmHg, 20 in.Hg), then raise the actuator push rod.

(b) Lower the vacuum, then check the stroke when the vacuum is at the following values.

Standard stroke:

50 kPa (375 mmHg, 15 in.Hg): 0.2 mm (0.008 in.)

30 kPa (225 mmHg, 9 in.Hg): 5.0 mm (0.197 in.)

If the operation is not as specified, replace the turbocharger.

PARTIAL ENGINE ASSY (1CD–FTV)(From September, 2003)

141NP–01

COMPONENTS

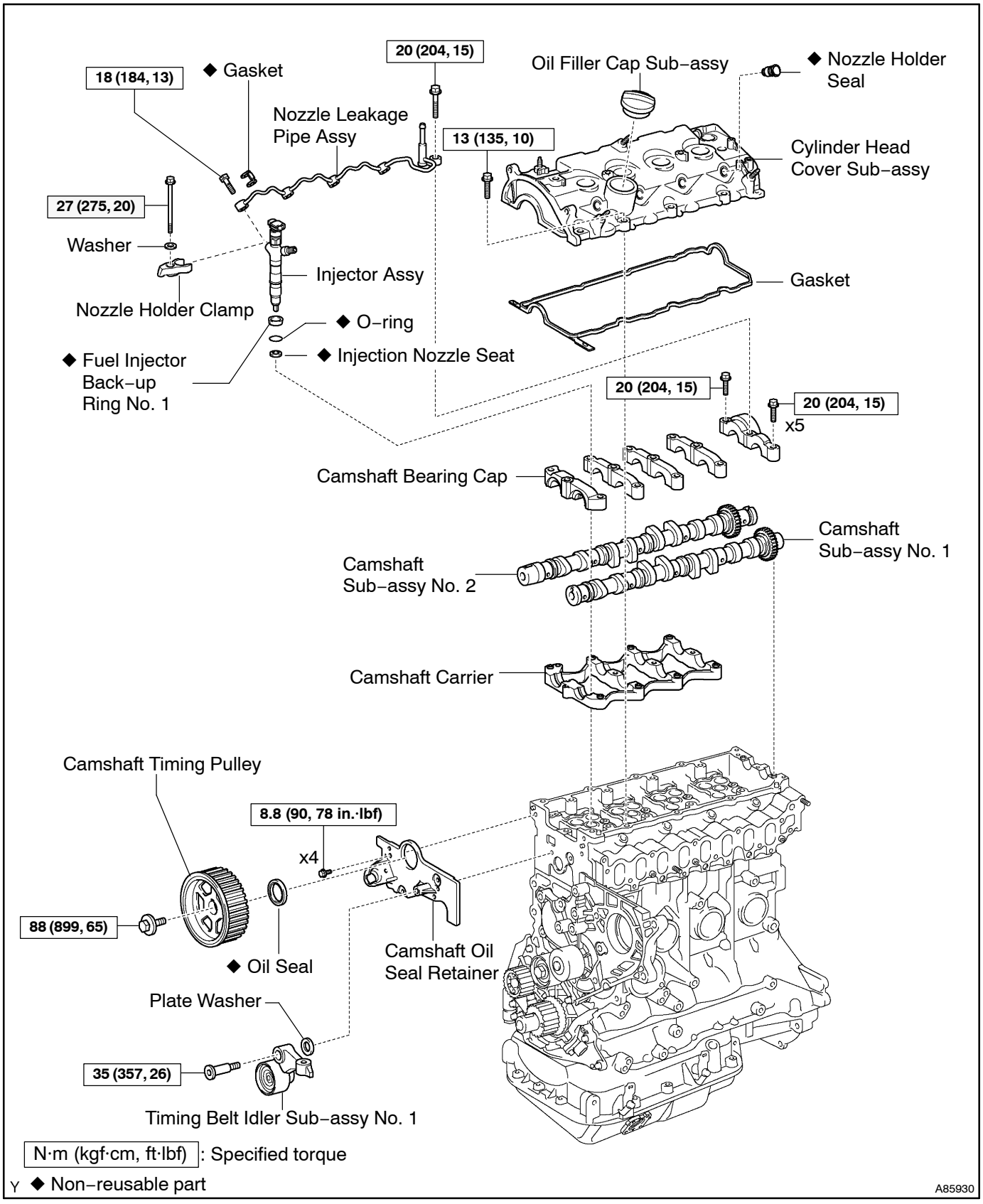

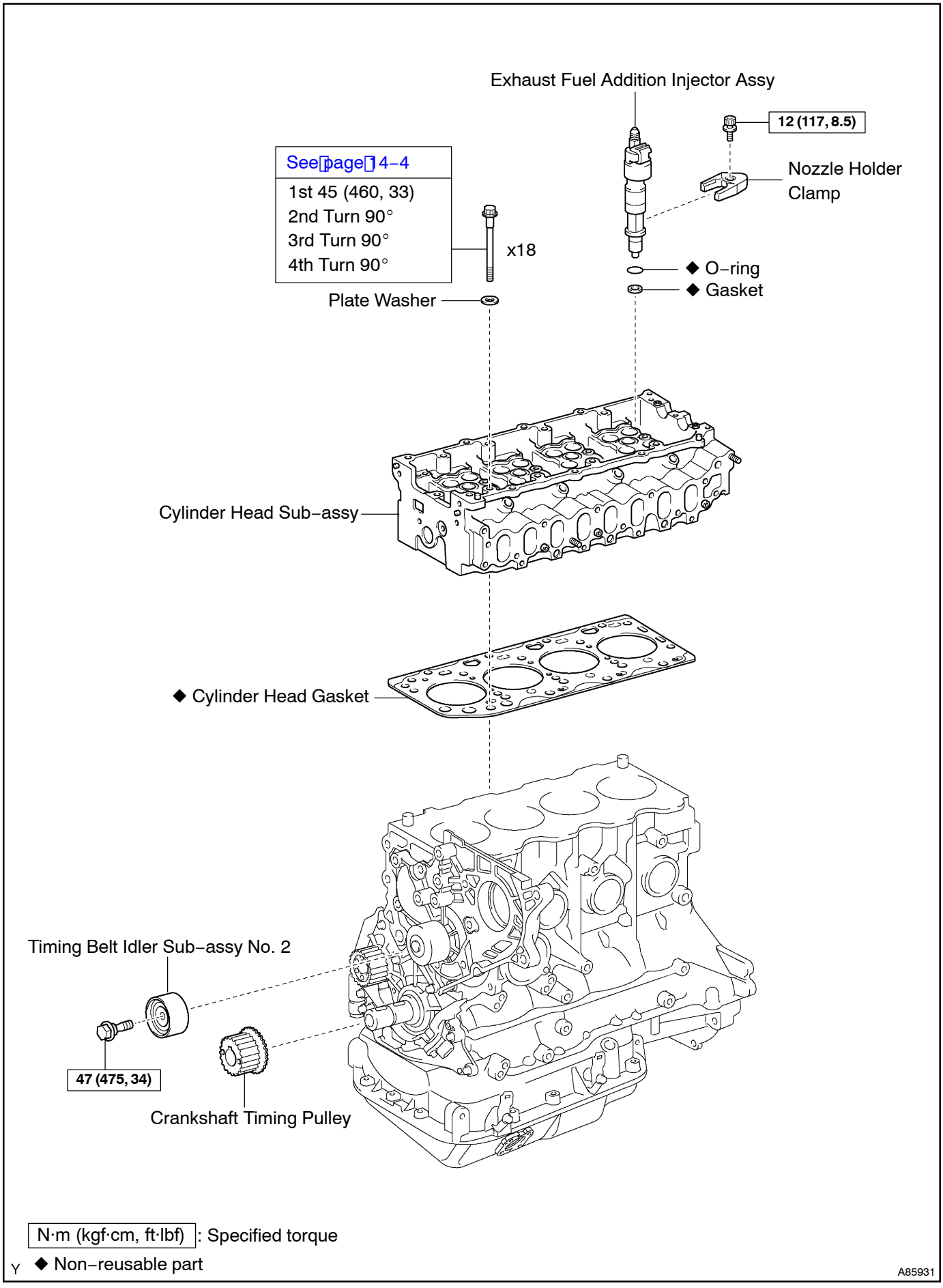

N·m (kgf·cm, ft·lbf) : Specified torque

◆ Non–reusable part

A85931

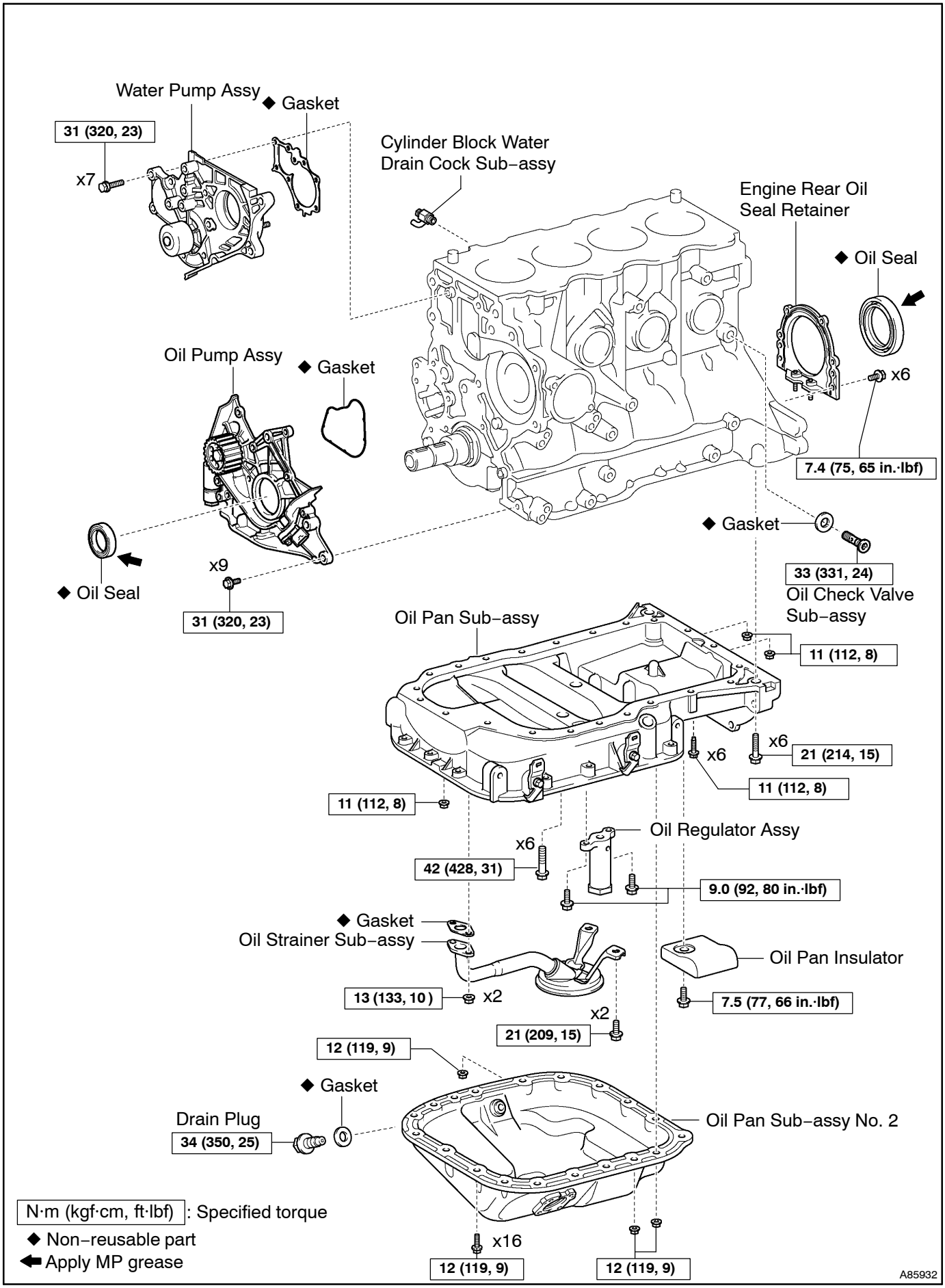
Water Pump Assy
◆ Gasket
31 (320, 23)
x7
Cylinder Block Water Drain Cock Sub–assy
Engine Rear Oil Seal Retainer
◆ Oil Seal
x6
7.4 (75, 65 in.·lbf)
Oil Pump Assy
◆ Gasket
◆ Oil Seal
x9
31 (320, 23)
◆ Gasket
33 (331, 24)
Oil Check Valve Sub–assy
Oil Pan Sub–assy
11 (112, 8)
x6
21 (214, 15)
11 (112, 8)
11 (112, 8)
Oil Regulator Assy
x6
42 (428, 31)
9.0 (92, 80 in.·lbf)
◆ Gasket
Oil Strainer Sub–assy
Oil Pan Insulator
13 (133, 10)
x2
7.5 (77, 66 in.·lbf)
x2
21 (209, 15)
12 (119, 9)
◆ Gasket
Drain Plug
34 (350, 25)
Oil Pan Sub–assy No. 2
x16
12 (119, 9)
12 (119, 9)
N·m (kgf·cm, ft·lbf) : Specified torque
◆ Non–reusable part
Apply MP grease
A85932

141NQ–01

OVERHAUL

1. REMOVE OIL FILLER CAP SUB–ASSY

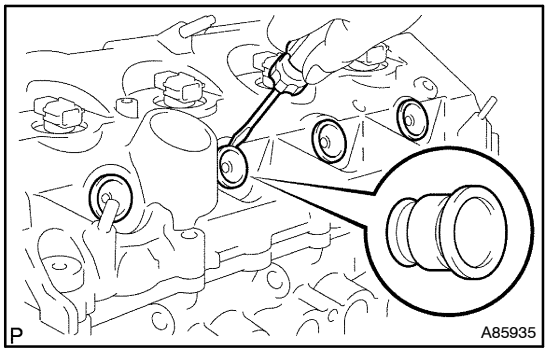

2. REMOVE NOZZLE HOLDER SEAL

(a) Using a screwdriver, pry out the 4 nozzle holder seals.

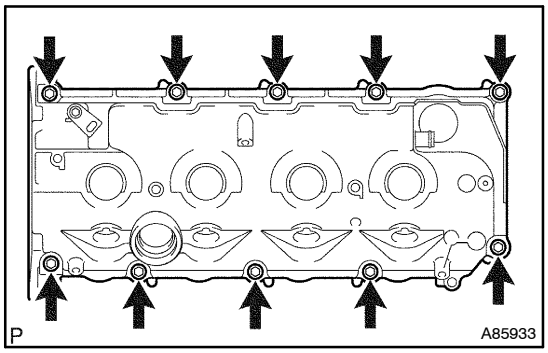

3. REMOVE CYLINDER HEAD COVER SUB–ASSY

(a) Remove the 10 bolts, cylinder head cover and gasket.

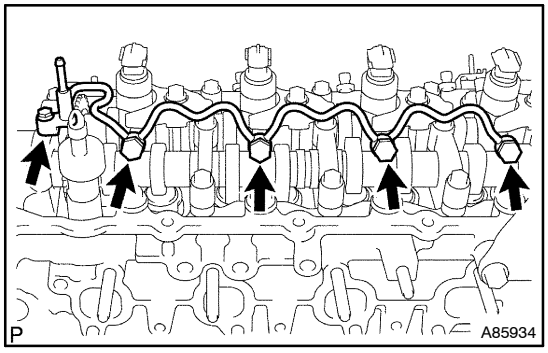

4. REMOVE NOZZLE LEAKAGE PIPE ASSY

(a) Remove the 4 hollow screws and bolt.

(b) Remove the nozzle leakage pipe and 4 gaskets from the cylinder head and injector.

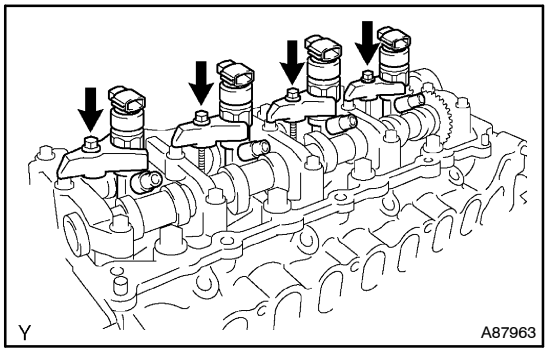

5. REMOVE NOZZLE HOLDER CLAMP

(a) Remove the 4 bolts, 4 washers and 4 nozzle holder clamps.

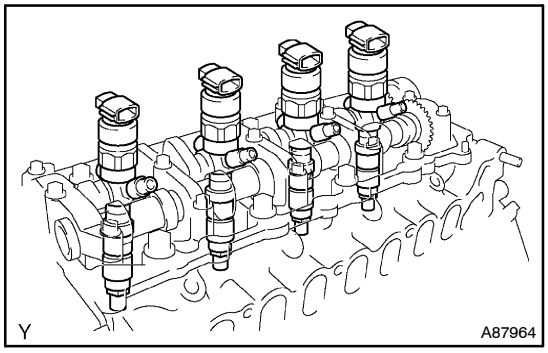

6. REMOVE INJECTOR ASSY

(a) Remove the 4 injectors from the cylinder head.

HINT:

Arrange the injectors in the correct order.

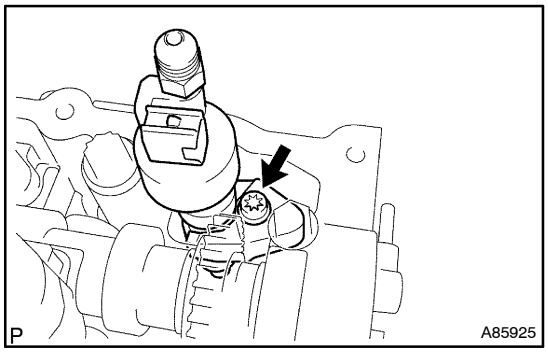

7. REMOVE EXHAUST FUEL ADDITION INJECTOR ASSY

(a) Using a Torx socket wrench (T40), remove the Torx screw.

(b) Remove the nozzle holder clamp, addition injector and gasket.

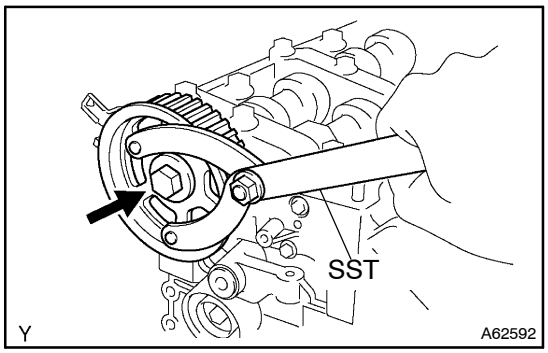

8. REMOVE CAMSHAFT TIMING PULLEY

(a) Using SST, remove the pulley bolt.

SST 09960–10010 (09962–01000, 09963–01000)

(b) Remove the timing pulley.

HINT:

Using a plastic–faced hammer, tap out the pulley.

(c) Remove the set key.

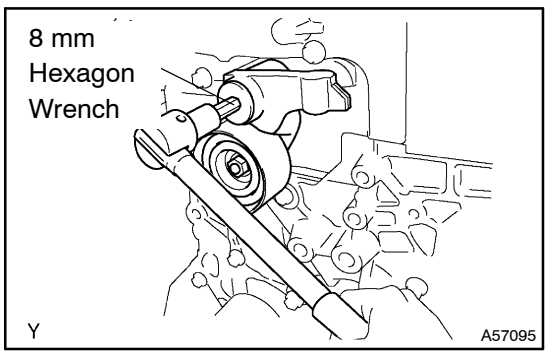

9. REMOVE TIMING BELT IDLER SUB–ASSY NO.1

(a) Using an 8 mm hexagon wrench, remove the idler pulley shaft, idler pulley and plate washer.

10. REMOVE TIMING BELT IDLER SUB–ASSY NO.2

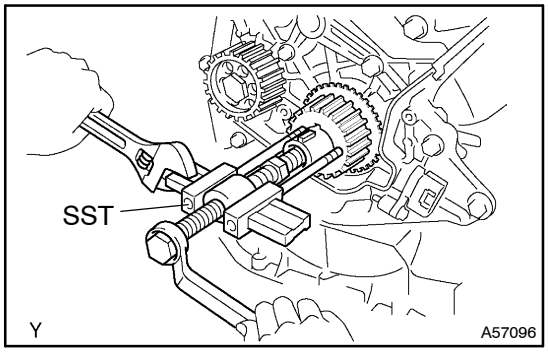

11. REMOVE CRANKSHAFT TIMING PULLEY

(a) If the timing pulley cannot be removed by hand, use SST to remove the pulley.

SST 09950–50013 (09951–05010, 09952–05010, 09953–05010, 09953–05020, 09954–05021)

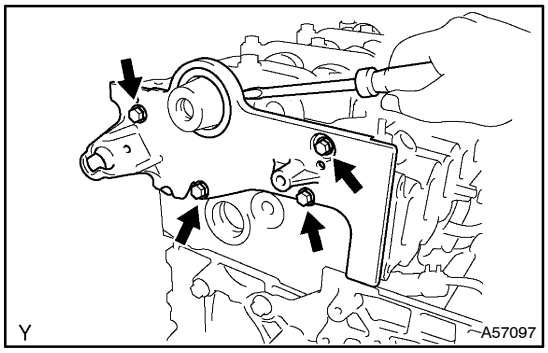

12. REMOVE CAMSHAFT OIL SEAL RETAINER

(a) Remove the 4 bolts.

(b) Using a screwdriver, remove the oil seal retainer by prying between the oil seal retainer and camshaft bearing cap.

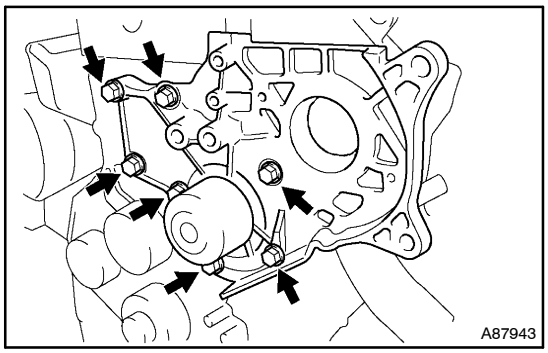

13. REMOVE WATER PUMP ASSY

(a) Remove the 7 bolts, water pump and gasket.

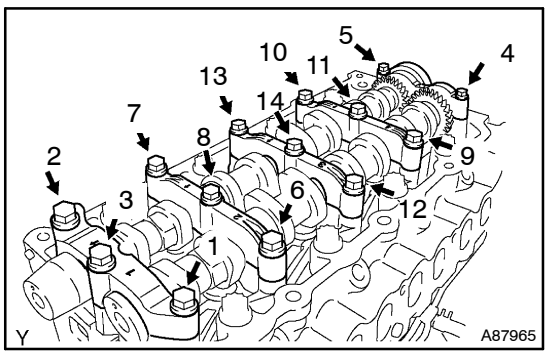

14. REMOVE CAMSHAFT

(a) Using several steps, loosen and remove the 14 bearing cap bolts uniformly in the sequence shown in the illustration.

(b) Remove the 5 bearing caps and camshaft sub–assembly.

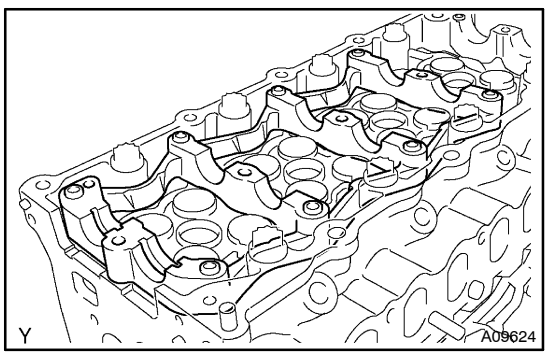

15. REMOVE NO.2 CAMSHAFT

(a) Remove the camshaft sub–assembly and camshaft carrier.

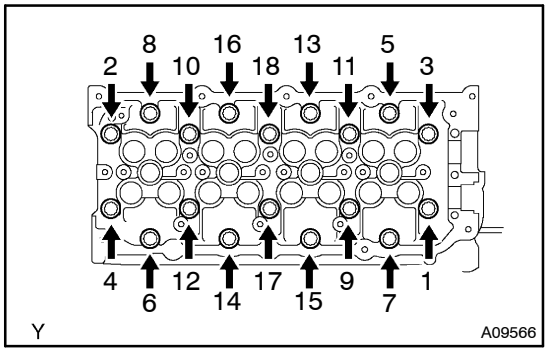

16. REMOVE CYLINDER HEAD SUB–ASSY

(a) Using several steps, loosen the 18 cylinder head bolts uniformly in the sequence shown in the illustration. Remove the 18 cylinder head bolts and plate washers.

NOTICE:

Removing the bolts in a wrong order could cause warpage or cracks of the cylinder head.

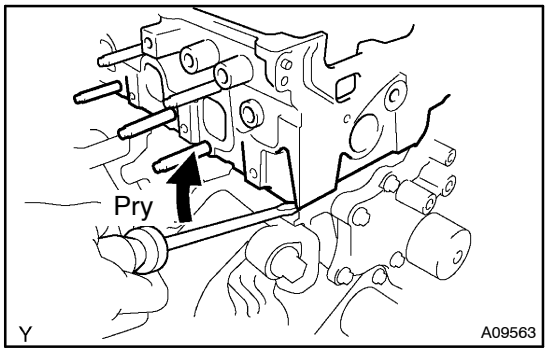

(b) Lift the cylinder head from the dowels on the cylinder block, then place the cylinder head on wooden blocks on a work bench.

HINT:

To lift the cylinder head, pry between the cylinder head and cylinder block using a screwdriver.

NOTICE:

Be careful not to damage the contact surfaces of the cylinder head and cylinder block.

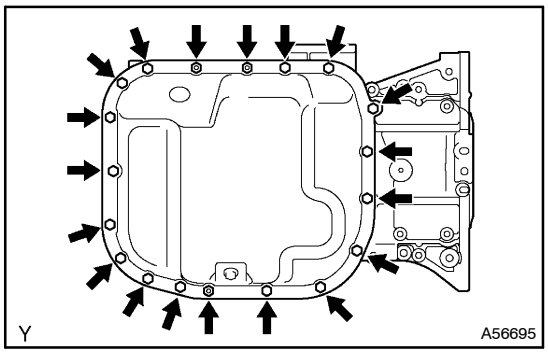

17. REMOVE OIL PAN SUB–ASSY NO.2

(a) Remove the 16 bolts and 3 nuts.

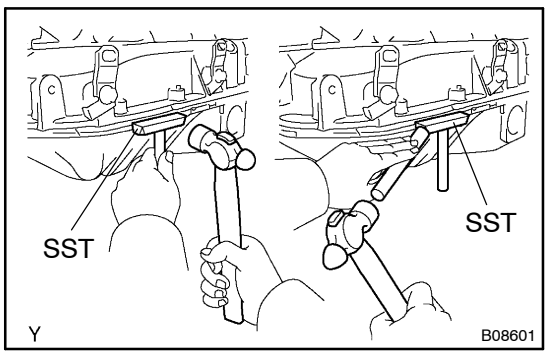

(b) Insert the blade of SST between the No. 1 and No. 2 oil pans, then cut off the applied sealer and remove the No. 2 oil pan.

SST 09032–00100

NOTICE:

Be careful not to damage the No. 1 and No. 2 oil pans.

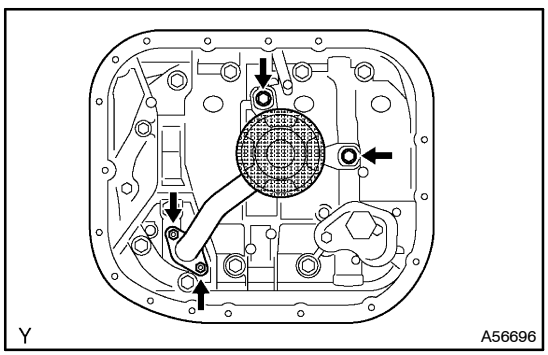

18. REMOVE OIL STRAINER SUB–ASSY

(a) Remove the 2 bolts and 2 nuts, then remove the oil strainer and gasket.

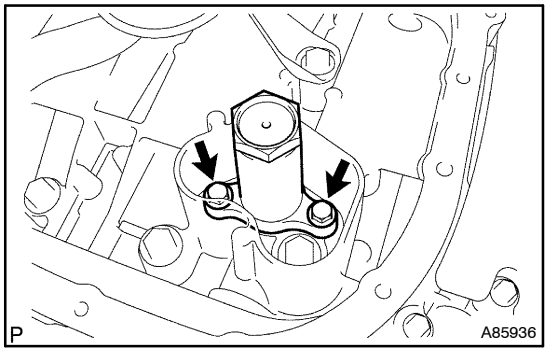

19. REMOVE OIL REGULATOR ASSY

(a) Remove the 2 bolts and oil regulator.

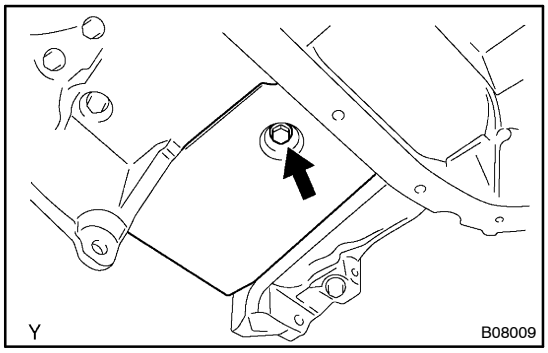

20. REMOVE OIL PAN INSULATOR

(a) Remove the bolt and oil pan insulator.

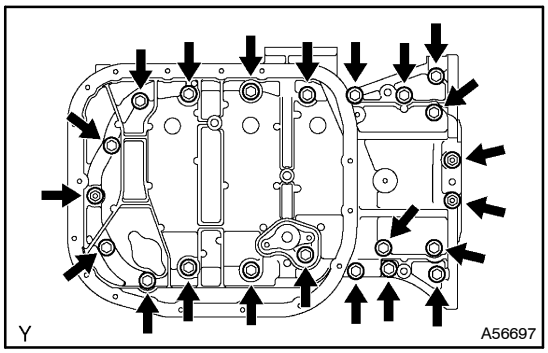

21. REMOVE OIL PAN SUB–ASSY

(a) Remove the 19 bolts and 3 nuts.

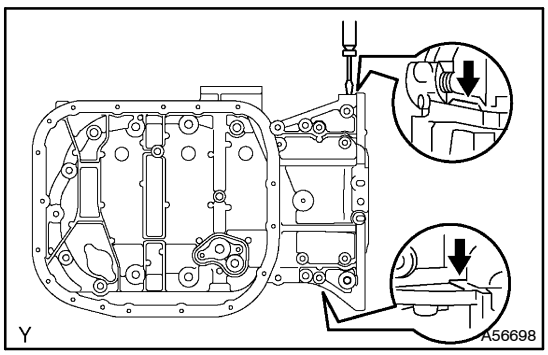

(b) Using a screwdriver, remove the oil pan by prying between the cylinder block and No. 1 oil pan.

NOTICE:

Be careful not to damage the cylinder block and No. 1 oil pan.

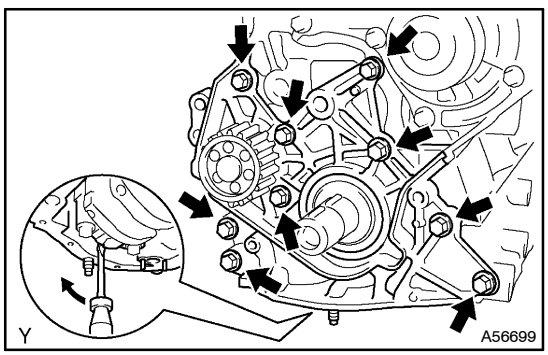

22. REMOVE OIL PUMP ASSY

(a) Remove the 9 bolts.

(b) Remove the oil pump by prying between the oil pump and main bearing cap using a screwdriver.

(c) Remove the gasket.

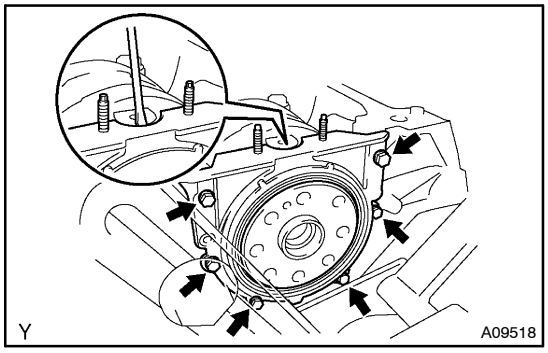

23. REMOVE ENGINE REAR OIL SEAL RETAINER

(a) Remove the 6 bolts.

(b) Using a screwdriver, remove the oil seal retainer by prying between the oil seal retainer and main bearing cap.

NOTICE:

Be careful not to damage the oil seal retainer and main bearing cap.

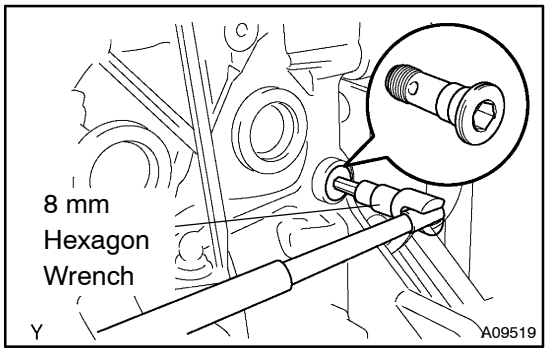

24. REMOVE OIL CHECK VALVE SUB–ASSY

(a) Using an 8 mm hexagon wrench, remove the check valve and gasket.

25. REMOVE CYLINDER BLOCK WATER DRAIN COCK SUB–ASSY

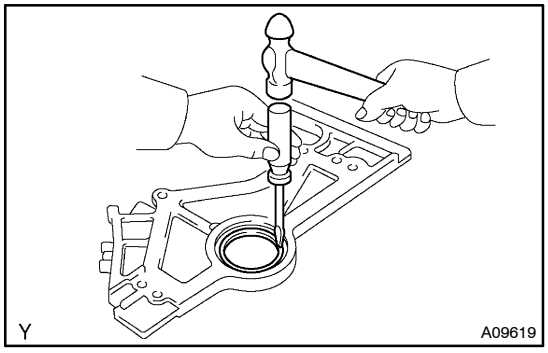

26. REMOVE CAMSHAFT OIL SEAL

(a) Using a screwdriver and hammer, tap out the oil seal.

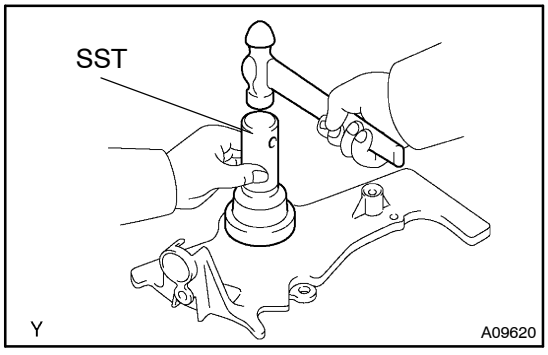

27. INSTALL CAMSHAFT OIL SEAL

(a) Using SST and a hammer, tap in a new oil seal until its surface is flush with the camshaft oil seal retainer edge.
SST 09223–46011

(b) Apply multipurpose grease to a new oil seal lip.

NOTICE:

Keep the lip free of foreign objects.

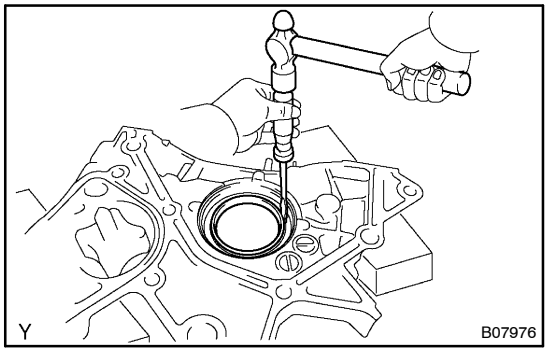

28. REMOVE CRANKSHAFT SEAL

(a) Using a screwdriver and hammer, tap out the oil seal.

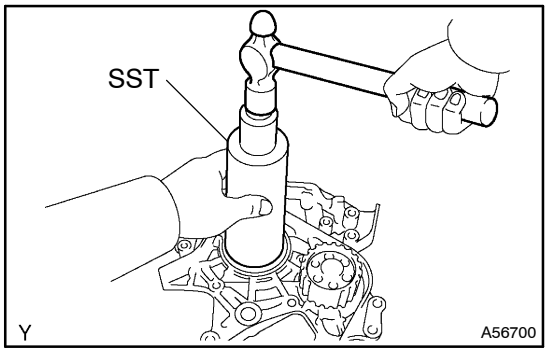

29. INSTALL CRANKSHAFT SEAL

(a) Using SST and a hammer, tap in a new oil seal until its surface is flush with the oil pump edge.
SST 09316–60011 (09316–00011, 09316–00021)

(b) Apply multipurpose grease to a new oil seal lip.

NOTICE:

Keep the lip free of foreign objects.

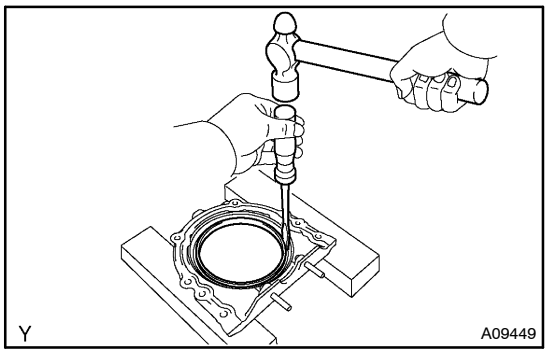

30. REMOVE ENGINE REAR OIL SEAL

(a) Using a screwdriver and hammer, tap out the oil seal.

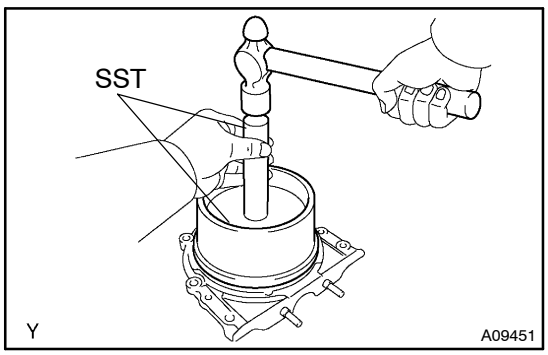

31. INSTALL ENGINE REAR OIL SEAL

(a) Using SST and a hammer, tap in a new oil seal until its surface is flush with the rear oil seal retainer edge.
SST 09223–15030, 09950–70010 (09951–07100)

(b) Apply multipurpose grease to a new oil seal lip.

NOTICE:

Keep the lip free of foreign objects.

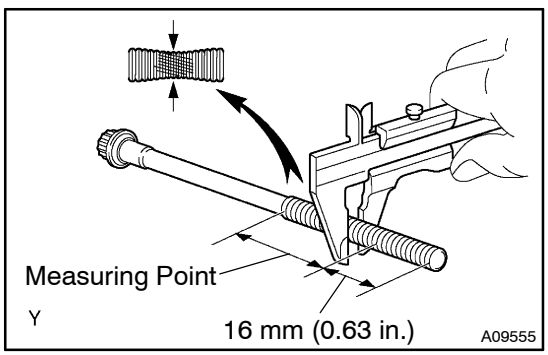

32. INSPECT CYLINDER HEAD SET BOLT

(a) Using vernier calipers, measure the tension portion diameter of the bolt.
Standard outside diameter:
10.40 to 11.00 mm (0.4094 to 0.4331 in.)

If the diameter is less than minimum, replace the bolt.

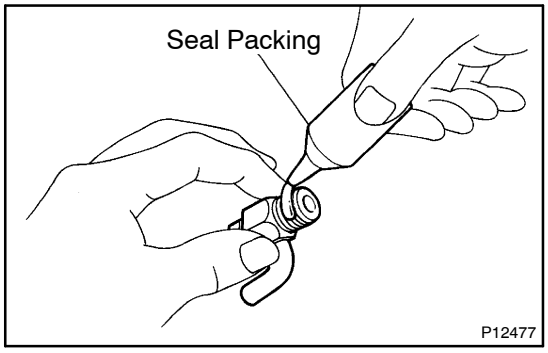

33. INSTALL CYLINDER BLOCK WATER DRAIN COCK SUB–ASSY

(a) Apply seal packing to the 2 or 3 threads.
Seal packing: Part No. 08826–00100 or equivalent

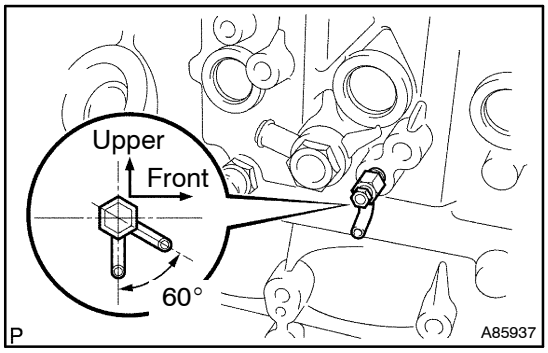

(b) Install the drain union.
Torque: 29 N·m (291 kgf·cm, 21 ft·lbf)

HINT:
After applying the specified torque, if the drain pipe of the drain union is not located as shown in the illustration, rotate the drain union further clockwise so the drain pipe faces downward.

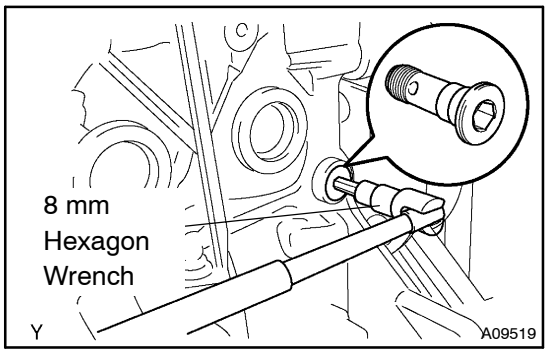

34. INSTALL OIL CHECK VALVE SUB–ASSY

(a) Using an 8 mm hexagon wrench, install a new gasket and the check valve.
Torque: 33 N·m (331 kgf·cm, 24 ft·lbf)

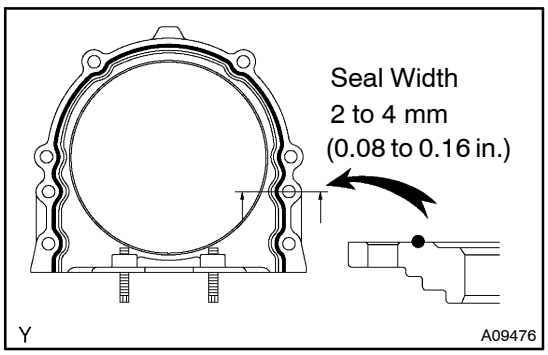

35. INSTALL ENGINE REAR OIL SEAL RETAINER

(a) Apply seal packing to the oil seal retainer as shown in the illustration.
Seal packing: Part No. 08826–00080 or equivalent

NOTICE:

- **Install a nozzle of which opening is cut to 2 to 4 mm (0.08 to 0.16 in.).**
- **The parts must be set within 3 minutes and must be assembled within 15 minutes after applying seal packing. Otherwise the material must be removed and reapplied.**
- **Immediately remove the nozzle from the tube, then re-install the cap.**

(b) Install the oil seal retainer with the 6 bolts. Tighten the bolts uniformly in several steps.
Torque: 7.4 N·m (75 kgf·cm, 65 in.·lbf)

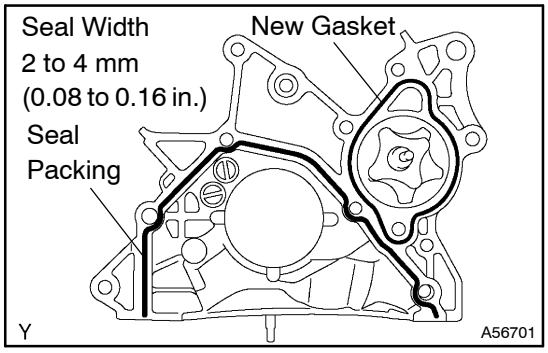

36. INSTALL OIL PUMP ASSY

(a) Apply seal packing to the oil pump as shown in the illustration.

Seal packing: Part No. 08826–00080 or equivalent

NOTICE:

- **Avoid applying an excessive amount to the surface.**
- **Install a nozzle of which opening is cut to 2 to 4 mm (0.08 to 0.16 in.).**
- **The parts must be set within 3 minutes and must be assembled within 15 minutes after applying seal packing. Otherwise the material must be removed and reapplied.**
- **Immediately remove the nozzle from the tube, then reinstall the cap.**

(b) Install a new gasket to the oil pump.

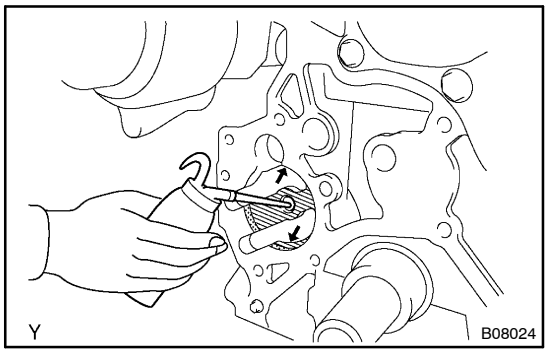

(c) Pour 0.5 cm^3 (0.03 cu in.) or more of engine oil into the bushing of the cylinder block.

(d) Apply engine oil to the cylinder block side which contacts the oil pump driven rotor.

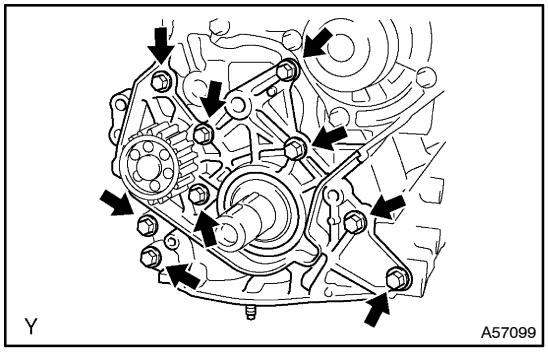

(e) Install the oil pump with the 9 bolts.

Torque: 31 N·m (320 kgf·cm, 23 ft·lbf)

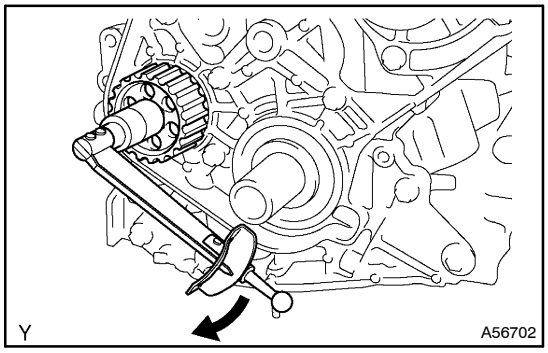

(f) Measure the oil pump rotating torque.

(1) Check that the pump rotates smoothly without making a noise.

(2) Using a torque wrench, check the pump rotating torque.

Rotating torque: 3.0 N·m (31 kgf·cm, 27 in.·lbf) or less

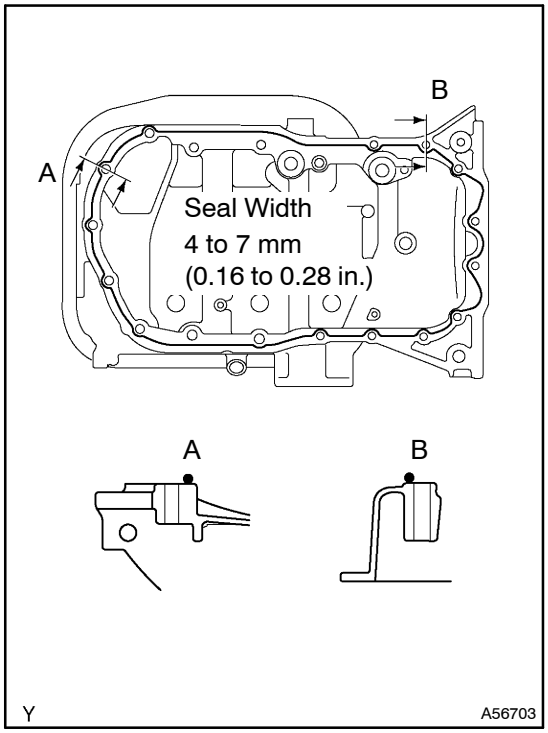

37. INSTALL OIL PAN SUB–ASSY

(a) Apply seal packing to the No. 1 oil pan as shown in the illustration.

Seal packing: Part No. 08826–00080 or equivalent

NOTICE:

- **Install a nozzle of which opening is cut to 4 to 7 mm (0.16 to 0.28 in.).**
- **The parts must be set within 3 minutes and must be assembled within 15 minutes after applying seal packing. Otherwise the material must be removed and reapplied.**
- **Immediately remove the nozzle from the tube, then re-install the cap.**

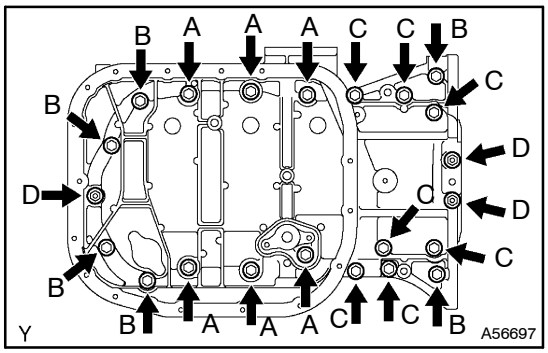

(b) Install the oil pan with 19 bolts and 3 nuts.

Torque:
42 N·m (428 kgf·cm, 31 ft·lbf) for bolt A
21 N·m (209 kgf·cm, 15 ft·lbf) for bolt B
11 N·m (112 kgf·cm, 8 ft·lbf) for bolt C
11 N·m (112 kgf·cm, 8 ft·lbf) for nut D

38. INSTALL OIL REGULATOR ASSY

Torque: 9.0 N·m (92 kgf·cm, 80 in.·lbf)

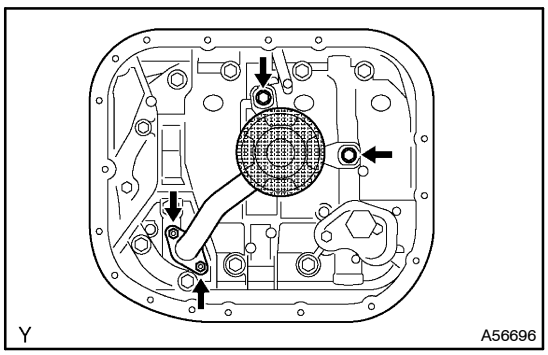

39. INSTALL OIL STRAINER SUB–ASSY

(a) Install a new gasket and the oil strainer with the 2 bolts and 2 nuts.

Torque:
21 N·m (209 kgf·cm, 15 ft·lbf) for bolt
13 N·m (135 kgf·cm, 10 ft·lbf) for nut

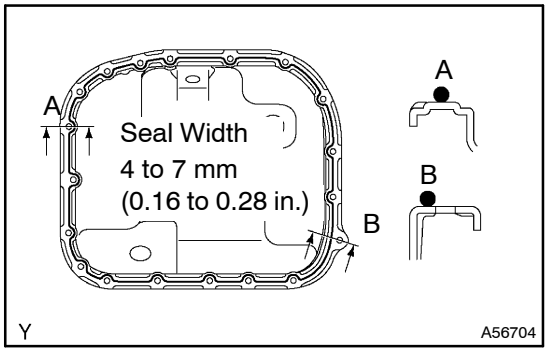

40. INSTALL OIL PAN SUB–ASSY NO.2

(a) Apply seal packing to the oil pan as shown in the illustration.

Seal packing: Part No. 08826–00080 or equivalent

NOTICE:

- **Install a nozzle of which opening is cut to 4 to 7 mm (0.16 to 0.28 in.).**
- **The parts must be set within 3 minutes and must be assembled within 15 minutes after applying seal packing. Otherwise the material must be removed and reapplied.**
- **Immediately remove the nozzle from the tube, then re-install the cap.**

(b) Install the oil pan with the 16 bolts and 3 nuts. Tighten the bolts and nuts uniformly in several steps.

Torque: 12 N·m (119 kgf·cm, 9 ft·lbf)

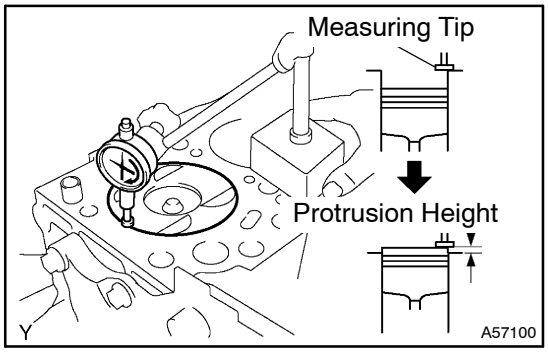

41. INSTALL CYLINDER HEAD SUB–ASSY

(a) Measure the protrusion height of the piston heads.

(1) Clean the cylinder block with solvent.

(2) Set the piston to measure to slightly before the TDC.

(3) Place a dial indicator on the cylinder block, then calibrate the dial indicator at 0 mm (0 in.).

HINT:

- Place the measuring tip of the dial indicator as shown in the illustration.
- Make sure that the measuring tip is square to the cylinder block gasket and piston head when measuring.

(4) Find the most overhung position of the piston head by slowly turning the crankshaft clockwise and counterclockwise.

(5) Measure the protrusion height of the piston head for each cylinder at 2 places as shown in the illustration. (Total of 8 measurements.)

(6) Record the higher protrusion height of the 2 measurements at each cylinder.

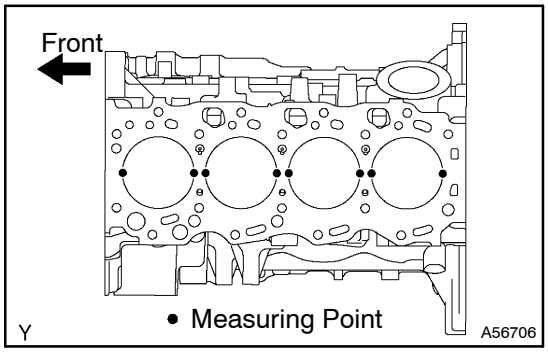

(b) Select a new cylinder head gasket.

HINT:

There are 5 sizes of new cylinder head gaskets, marked ”A”, ”B”, ”C”, ”D”, and ”E”.

New cylinder head gasket thickness:

A	0.85 to 0.95 mm (0.0335 to 0.0374 in.)
B	0.90 to 1.00 mm (0.0354 to 0.0394 in.)
C	0.95 to 1.05 mm (0.0374 to 0.0413 in.)
D	1.00 to 1.10 mm (0.0394 to 0.0433 in.)
E	1.05 to 1.15 mm (0.0413 to 0.0453 in.)

(1) Find the highest protrusion height among the 4 measurement records. It is used to select a new cylinder head gasket.

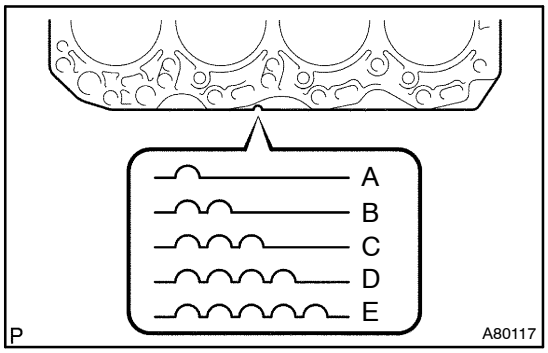

(2) Select a new gasket among A to E using the matrix below.

New gasket matrix:

Piston Protrusion mm (in.)	Gasket Size
0.165 to 0.220 (0.0065 to 0.0087)	A
0.220 to 0.270 (0.0087 to 0.0106)	B
0.270 to 0.320 (0.0106 to 0.0126)	C
0.320 to 0.370 (0.0126 to 0.0146)	D
0.370 to 0.425 (0.0146 to 0.0167)	E

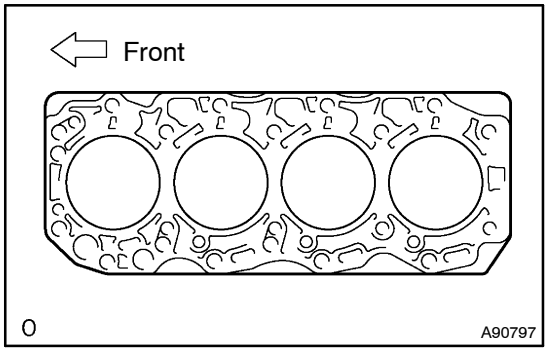

(c) Place the selected new cylinder head gasket on the cylinder block.

NOTICE:

Pay attention to the mounting orientation.

(d) Place the cylinder head in position on the cylinder head gasket.

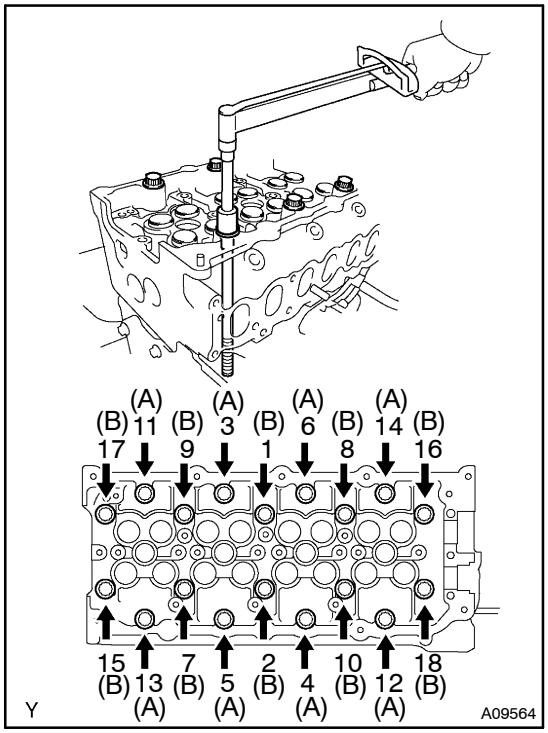

(e) Install the cylinder head bolts.

HINT:

- The cylinder head bolts are tightened in 4 successive steps (steps (3), (5), (6) and (7)).
- If the cylinder head bolt is broken or deformed, replace it with a new bolt.
  (1) Apply a light coat of engine oil to the threads of the cylinder head bolts and plate washers.
  (2) Install the plate washer to the cylinder head bolt.
  (3) Using several steps, install and tighten the 18 cylinder head bolts uniformly in the sequence shown in the illustration.

  Torque: 45 N·m (459 kgf·cm, 33 ft·lbf)

HINT:

See the table below for the bolt length.

Bolt Type	Bolt Length
(A)	160 mm (6.30 in.)
(B)	104 mm (4.09 in.)

If the cylinder head bolt does not meet the specified torque, replace the cylinder head bolt with a new bolt.

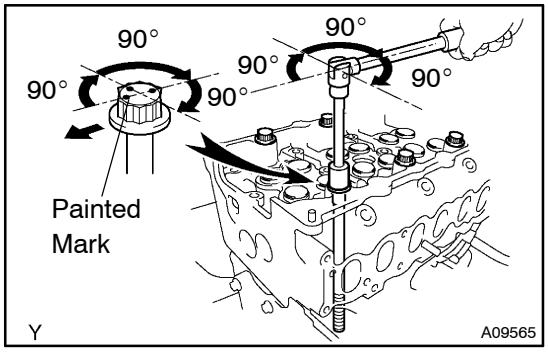

(4) Mark the front of the cylinder head bolt with paint.
(5) Retighten the cylinder head bolts by 90° in the same sequence as step (3).
(6) Retighten the cylinder head bolts by an additional 90° in the same sequence as step (3).
(7) Retighten the cylinder head bolts by one more additional 90° in the same sequence as step (3).
(8) Check that each painted mark is now at the intake manifold side.

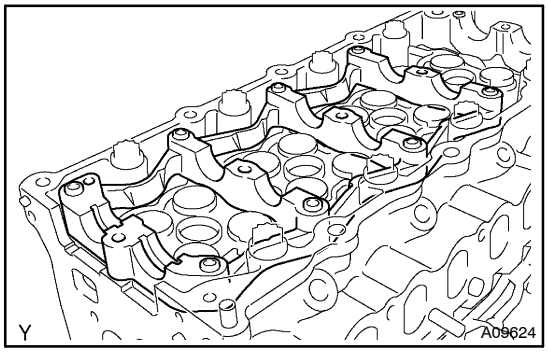

42. INSTALL CAMSHAFT

(a) Place the camshaft carrier on the cylinder head.

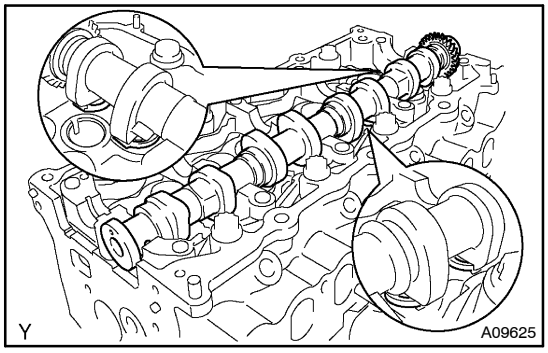

(b) Install the camshaft.
(c) Apply engine oil to the cam and gear of the camshaft, and the journal of the camshaft carrier.
(d) Place the intake camshaft on the camshaft carrier as shown in the illustration so that the No. 3 and No. 4 of the cylinder cam lobes face downward.

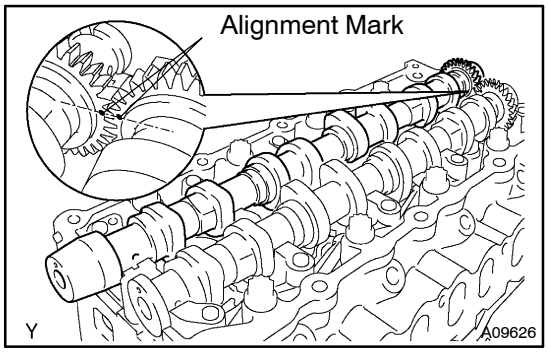

43. INSTALL NO.2 CAMSHAFT

(a) Install the No. 2 camshaft.
(b) Apply engine oil to the cam and gear of the camshaft, and the journal of the camshaft carrier.
(c) Engage the exhaust camshaft gear and intake camshaft gear by matching the alignment marks on each gear.
(d) Roll down the exhaust camshaft onto the bearing journals while engaging gears with each other.

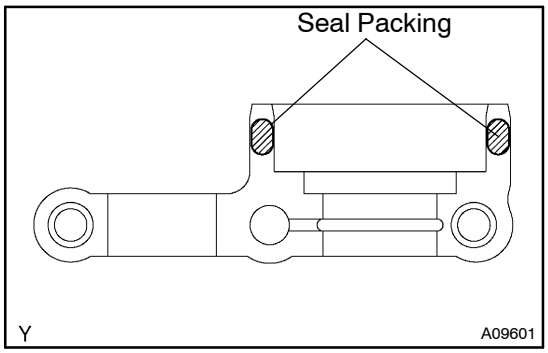

(e) Install the camshaft bearing caps.
(1) Remove any old packing (FIPG) material from the No. 5 camshaft bearing cap.
(2) Apply seal packing to the No. 5 camshaft bearing cap as shown in the illustration.

Seal packing: Part No. 08826–00080 or equivalent

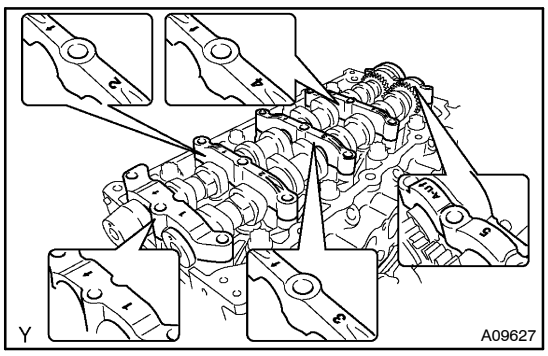

(3) Place the 5 bearing caps in their proper locations.

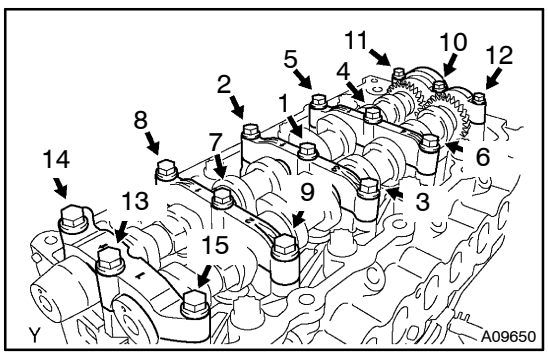

(4) Using several steps, install and tighten the 15 bearing cap bolts uniformly in the sequence shown in the illustration.

Torque: 20 N·m (204 kgf·cm, 15 ft·lbf)

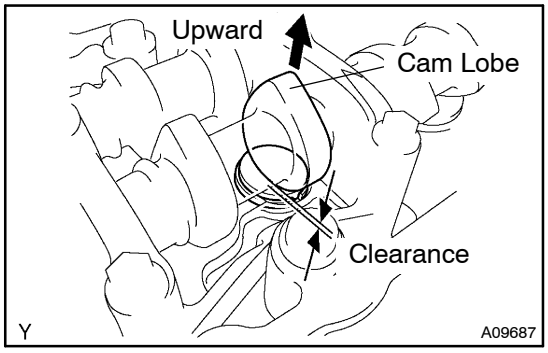

44. INSPECT VALVE CLEARANCE

(a) Turn the crankshaft so that the cam lobe located over the inspecting valve faces upward.

(b) Using a feeler gauge, measure the clearance between the valve lifter and camshaft.

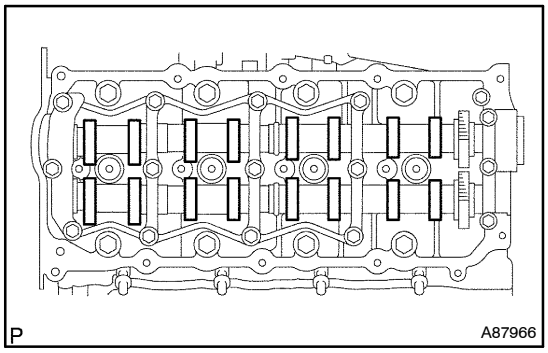

(c) Measure the clearance at 16 places.

(d) Record the out–of–specification valve clearance measurements. They will be used later to select an adjusting shim to replace.

Valve clearance (Cold) :

Intake	0.20 to 0.30 mm (0.008 to 0.012 in.)
Exhaust	0.35 to 0.45 mm (0.014 to 0.018 in.)

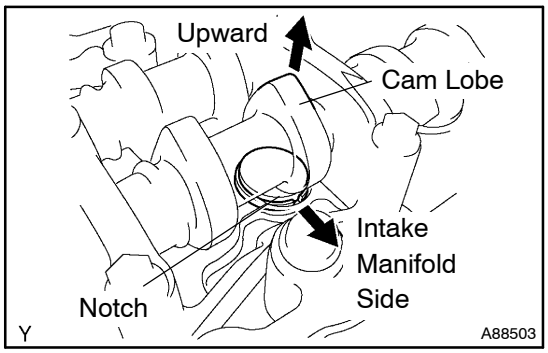

45. ADJUST VALVE CLEARANCE

(a) Remove the adjusting shim.

(1) Turn the crankshaft so that the cam lobe located over the adjusting valve faces upward.

(2) Position the notch of the valve lifter toward the intake manifold side.

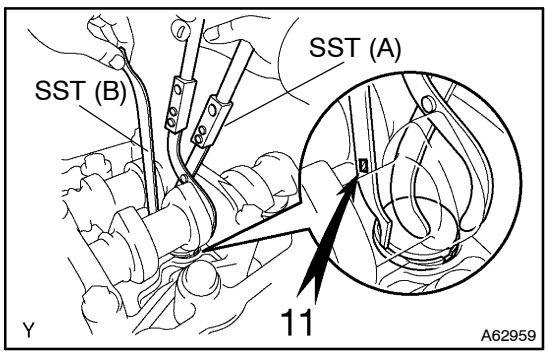

(3) Using SST (A), press down the valve lifter, then place SST (B) between the camshaft and valve lifter. Remove SST (A).

SST 09248–55050 (09248–05510, 09248–05520)

HINT:

Use SST (B) marked with ”11”.

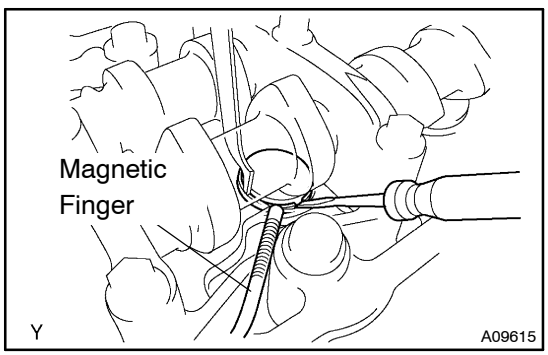

(4) Remove the adjusting shim using a small screwdriver and magnetic finger.

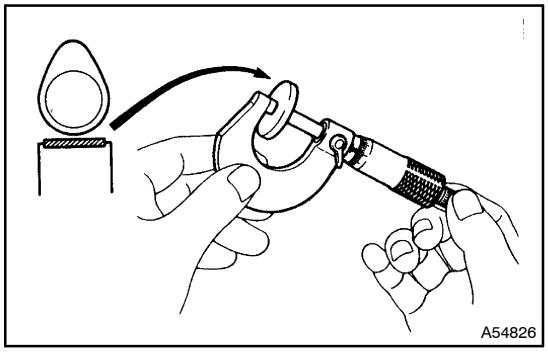

(b) Select the size of an adjusting shim to replace by following the formula or the charts:

(1) Using a micrometer, measure the thickness of the removed shim.

(2) Calculate the thickness of a new shim so that the valve clearance comes within the specified value.

HINT:

T ..... Thickness of the removed adjusting shim
A ..... Measured valve clearance
N ..... Thickness of a new adjusting shim
Intake: N = T + (A – 0.25 mm (0.010 in.))
Exhaust: N = T + (A – 0.40 mm (0.016 in.))

(3) Select a new shim with a thickness which is as close to the calculated value as possible.

EXAMPLE (Intake):
Measured valve clearance = 0.45 mm (0.0177 in.)
0.45 mm (0.0177 in.) – 0.25 mm (0.0098 in.) = 0.20 mm (0.0078 in.)
(Measured – Specification = Excess clearance)
Used shim measurement = 2.80 mm (0.1102 in.)
0.20 mm (0.0078 in.) + 2.80 mm (0.1102 in.) = 3.00 mm (0.1181 in.)
(Excess clearance + Used shim = Ideal new shim)
Closest new shim = 3.00 mm (0.1181 in.)
Select No. 21 shim

HINT:

- The shims are available in 17 sizes in increments of 0.05 mm (0.0020 in.), from 2.50 mm (0.0984 in.) to 3.30 mm (0.1299 in.).
- Refer to New Shim Thickness table on the next 2 pages.

Adjusting Shim Selection Chart (Intake)

	2.500 (0.0984)	2.525 (0.0994)	2.550 (0.1004)	2.575 (0.1014)	2.600 (0.1024)	2.625 (0.1033)	2.650 (0.1043)	2.675 (0.1053)	2.700 (0.1063)	2.725 (0.1073)	2.750 (0.1083)	2.775 (0.1093)	2.800 (0.1102)	2.825 (0.1112)	2.850 (0.1122)	2.875 (0.1132)	2.900 (0.1142)	2.925 (0.1152)	2.950 (0.1161)	2.975 (0.1171)	3.000 (0.1181)	3.025 (0.1191)	3.050 (0.1201)	3.075 (0.1211)	3.100 (0.1220)	3.125 (0.1230)	3.150 (0.1240)	3.175 (0.1250)	3.200 (0.1260)	3.225 (0.1270)	3.250 (0.1280)	3.275 (0.1289)	3.300 (0.1299)
0.000 ~ 0.020 (0.0000 ~ 0.0008)									01	01	01	03	03	05	05	07	07	09	09	11	11	13	13	15	15	17	17	19	19	21	21	23	23
0.021 ~ 0.040 (0.0008 ~ 0.0016)									01	01	03	03	05	05	07	07	09	09	11	11	13	13	15	15	17	17	19	19	21	21	23	23	25
0.041 ~ 0.060 (0.0016 ~ 0.0024)								01	01	03	03	05	05	07	07	09	09	11	11	13	13	15	15	17	17	19	19	21	21	23	23	25	25
0.061 ~ 0.080 (0.0024 ~ 0.0031)							01	01	01	03	03	05	05	07	07	09	09	11	11	13	13	15	15	17	17	19	19	21	21	23	23	25	25
0.081 ~ 0.100 (0.0032 ~ 0.0039)						01	01	01	03	03	05	05	07	07	09	09	11	11	13	13	15	15	17	17	19	19	21	21	23	23	25	25	27
0.101 ~ 0.120 (0.0040 ~ 0.0047)					01	01	01	03	03	05	05	07	07	09	09	11	11	13	13	15	15	17	17	19	19	21	21	23	23	25	25	27	27
0.121 ~ 0.140 (0.0048 ~ 0.0055)					01	01	03	03	05	05	07	07	09	09	11	11	13	13	15	15	17	17	19	19	21	21	23	23	25	25	27	27	29
0.141 ~ 0.160 (0.0056 ~ 0.0063)				01	01	03	03	05	05	07	07	09	09	11	11	13	13	15	15	17	17	19	19	21	21	23	23	25	25	27	27	29	29
0.161 ~ 0.180 (0.0063 ~ 0.0071)			01	01	01	03	03	05	05	07	07	09	09	11	11	13	13	15	15	17	17	19	19	21	21	23	23	25	25	27	27	29	29
0.181 ~ 0.199 (0.0071 ~ 0.0078)		01	01	01	03	03	05	05	07	07	09	09	11	11	13	13	15	15	17	17	19	19	21	21	23	23	25	25	27	27	29	29	31
0.200 ~ 0.300 (0.0079 ~ 0.0118)																																	
0.301 ~ 0.320 (0.0119 ~ 0.0126)	03	05	05	07	07	09	09	11	11	13	13	15	15	17	17	19	19	21	21	23	23	25	25	27	27	29	29	31	31	33	33	33	
0.321 ~ 0.340 (0.0126 ~ 0.0134)	05	05	07	07	09	09	11	11	13	13	15	15	17	17	19	19	21	21	23	23	25	25	27	27	29	29	31	31	33	33	33		
0.341 ~ 0.360 (0.0134 ~ 0.0142)	05	07	07	09	09	11	11	13	13	15	15	17	17	19	19	21	21	23	23	25	25	27	27	29	29	31	31	33	33	33			
0.361 ~ 0.380 (0.0142 ~ 0.0150)	05	07	07	09	09	11	11	13	13	15	15	17	17	19	19	21	21	23	23	25	25	27	27	29	29	31	31	33	33				
0.381 ~ 0.400 (0.0150 ~ 0.0157)	07	07	09	09	11	11	13	13	15	15	17	17	19	19	21	21	23	23	25	25	27	27	29	29	31	31	33	33	33				
0.401 ~ 0.420 (0.0158 ~ 0.0165)	07	09	09	11	11	13	13	15	15	17	17	19	19	21	21	23	23	25	25	27	27	29	29	31	31	33	33	33					
0.421 ~ 0.440 (0.0166 ~ 0.0173)	09	09	11	11	13	13	15	15	17	17	19	19	21	21	23	23	25	25	27	27	29	29	31	31	33	33	33						
0.441 ~ 0.460 (0.0174 ~ 0.0181)	09	11	11	13	13	15	15	17	17	19	19	21	21	23	23	25	25	27	27	29	29	31	31	33	33	33							
0.461 ~ 0.480 (0.0181 ~ 0.0189)	09	11	11	13	13	15	15	17	17	19	19	21	21	23	23	25	25	27	27	29	29	31	31	33	33								
0.481 ~ 0.500 (0.0189 ~ 0.0197)	11	11	13	13	15	15	17	17	19	19	21	21	23	23	25	25	27	27	29	29	31	31	33	33	33								
0.501 ~ 0.520 (0.0197 ~ 0.0205)	11	13	13	15	15	17	17	19	19	21	21	23	23	25	25	27	27	29	29	31	31	33	33	33									
0.521 ~ 0.540 (0.0205 ~ 0.0213)	13	13	15	15	17	17	19	19	21	21	23	23	25	25	27	27	29	29	31	31	33	33	33										
0.541 ~ 0.560 (0.0213 ~ 0.0220)	13	15	15	17	17	19	19	21	21	23	23	25	25	27	27	29	29	31	31	33	33	33											
0.561 ~ 0.580 (0.0221 ~ 0.0228)	13	15	15	17	17	19	19	21	21	23	23	25	25	27	27	29	29	31	31	33	33												
0.581 ~ 0.600 (0.0229 ~ 0.0236)	15	15	17	17	19	19	21	21	23	23	25	25	27	27	29	29	31	31	33	33	33												
0.601 ~ 0.620 (0.0237 ~ 0.0244)	15	17	17	19	19	21	21	23	23	25	25	27	27	29	29	31	31	33	33	33													
0.621 ~ 0.640 (0.0244 ~ 0.0252)	17	17	19	19	21	21	23	23	25	25	27	27	29	29	31	31	33	33	33														
0.641 ~ 0.660 (0.0252 ~ 0.0260)	17	19	19	21	21	23	23	25	25	27	27	29	29	31	31	33	33	33															
0.661 ~ 0.680 (0.0260 ~ 0.0268)	17	19	19	21	21	23	23	25	25	27	27	29	29	31	31	33	33																
0.681 ~ 0.700 (0.0268 ~ 0.0276)	19	19	21	21	23	23	25	25	27	27	29	29	31	31	33	33	33																
0.701 ~ 0.720 (0.0276 ~ 0.0283)	19	21	21	23	23	25	25	27	27	29	29	31	31	33	33	33																	
0.721 ~ 0.740 (0.0284 ~ 0.0291)	21	21	23	23	25	25	27	27	29	29	31	31	33	33	33																		
0.741 ~ 0.760 (0.0292 ~ 0.0299)	21	23	23	25	25	27	27	29	29	31	31	33	33	33																			
0.761 ~ 0.780 (0.0300 ~ 0.0307)	21	23	23	25	25	27	27	29	29	31	31	33	33																				
0.781 ~ 0.800 (0.0307 ~ 0.0315)	23	23	25	25	27	27	29	29	31	31	33	33	33																				
0.801 ~ 0.820 (0.0315 ~ 0.0323)	23	25	25	27	27	29	29	31	31	33	33	33																					
0.821 ~ 0.840 (0.0323 ~ 0.0331)	25	25	27	27	29	29	31	31	33	33	33																						
0.841 ~ 0.860 (0.0331 ~ 0.0339)	25	27	27	29	29	31	31	33	33	33																							
0.861 ~ 0.880 (0.0339 ~ 0.0346)	25	27	27	29	29	31	31	33	33																								
0.881 ~ 0.900 (0.0347 ~ 0.0354)	27	27	29	29	31	31	33	33	33																								
0.901 ~ 0.920 (0.0355 ~ 0.0362)	27	29	29	31	31	33	33	33																									
0.921 ~ 0.940 (0.0363 ~ 0.0370)	29	29	31	31	33	33	33																										
0.941 ~ 0.960 (0.0370 ~ 0.0378)	29	31	31	33	33	33																											
0.961 ~ 0.980 (0.0378 ~ 0.0386)	29	31	31	33	33																												
0.981 ~ 1.000 (0.0386 ~ 0.0394)	31	31	33	33	33																												
1.001 ~ 1.020 (0.0394 ~ 0.0402)	31	33	33	33																													
1.121 ~ 1.040 (0.0402 ~ 0.0409)	33	33	33																														
1.041 ~ 1.060 (0.0410 ~ 0.0417)	33	33																															
1.161 ~ 1.080 (0.0418 ~ 0.0425)	33																																
1.081 ~ 1.100 (0.0426 ~ 0.0433)	33																																

New Shim Thickness mm (in.)

Shim No.	Thickness	Shim No.	Thickness
01	2.500 (0.0984)	19	2.950 (0.1161)
03	2.550 (0.1004)	21	3.000 (0.1181)
05	2.600 (0.1024)	23	3.050 (0.1201)
07	2.650 (0.1043)	25	3.100 (0.1220)
09	2.700 (0.1063)	27	3.150 (0.1240)
11	2.750 (0.1083)	29	3.200 (0.1260)
13	2.800 (0.1102)	31	3.250 (0.1280)
15	2.850 (0.1122)	33	3.300 (0.1299)
17	2.900 (0.1142)		

Intake valve clearance (Cold):

0.20 to 0.30 mm (0.008 to 0.012 in.)

EXAMPLE: The 2.800 mm (0.1102 in.) shim is installed, and the measured clearance is 0.450 mm (0.0177 in.). Replace the 2.800 mm (0.1102 in.) shim with a new No. 21 shim.

Y

A57526

Adjusting Shim Selection Chart (Exhaust)

	2.500 (0.0984)	2.525 (0.0994)	2.550 (0.1004)	2.575 (0.1014)	2.600 (0.1024)	2.625 (0.1033)	2.650 (0.1043)	2.675 (0.1053)	2.700 (0.1063)	2.725 (0.1073)	2.750 (0.1073)	2.775 (0.1093)	2.800 (0.1102)	2.825 (0.1112)	2.850 (0.1122)	2.875 (0.1132)	2.900 (0.1142)	2.925 (0.1152)	2.950 (0.1161)	2.975 (0.1171)	3.000 (0.1181)	3.025 (0.1191)	3.050 (0.1201)	3.075 (0.1211)	3.100 (0.1220)	3.125 (0.1230)	3.150 (0.1240)	3.175 (0.1250)	3.200 (0.1260)	3.225 (0.1270)	3.250 (0.1280)	3.275 (0.1289)	3.300 (0.1299)
0.000 ~ 0.020 (0.0000 ~ 0.0008)															01	01	01	03	03	05	05	07	07	09	09	11	11	13	13	15	15	17	17
0.021 ~ 0.040 (0.0008 ~ 0.0016)															01	01	03	03	05	05	07	07	09	09	11	11	13	13	15	15	17	17	19
0.041 ~ 0.060 (0.0016 ~ 0.0024)														01	01	03	03	05	05	07	07	09	09	11	11	13	13	15	15	17	17	19	19
0.061 ~ 0.080 (0.0024 ~ 0.0031)													01	01	01	03	03	05	05	07	07	09	09	11	11	13	13	15	15	17	17	19	19
0.081 ~ 0.100 (0.0032 ~ 0.0039)												01	01	01	03	03	05	05	07	07	09	09	11	11	13	13	15	15	17	17	19	19	21
0.101 ~ 0.120 (0.0040 ~ 0.0047)											01	01	01	03	03	05	05	07	07	09	09	11	11	13	13	15	15	17	17	19	19	21	21
0.121 ~ 0.140 (0.0048 ~ 0.0055)											01	01	03	03	05	05	07	07	09	09	11	11	13	13	15	15	17	17	19	19	21	21	23
0.141 ~ 0.160 (0.0056 ~ 0.0063)										01	01	03	03	05	05	07	07	09	09	11	11	13	13	15	15	17	17	19	19	21	21	23	23
0.161 ~ 0.180 (0.0063 ~ 0.0071)									01	01	01	03	03	05	05	07	07	09	09	11	11	13	13	15	15	17	17	19	19	21	21	23	23
0.181 ~ 0.200 (0.0071 ~ 0.0079)								01	01	01	03	03	05	05	07	07	09	09	11	11	13	13	15	15	17	17	19	19	21	21	23	23	25
0.201 ~ 0.220 (0.0079 ~ 0.0087)							01	01	01	03	03	05	05	07	07	09	09	11	11	13	13	15	15	17	17	19	19	21	21	23	23	25	25
0.221 ~ 0.240 (0.0087 ~ 0.0094)							01	01	01	03	03	05	05	07	07	09	09	11	11	13	13	15	15	17	17	19	19	21	21	23	23	25	25
0.241 ~ 0.260 (0.0095 ~ 0.0102)						01	01	01	03	03	05	05	07	07	09	09	11	11	13	13	15	15	17	17	19	19	21	21	23	23	25	25	27
0.261 ~ 0.280 (0.0103 ~ 0.0110)					01	01	01	03	03	05	05	07	07	09	09	11	11	13	13	15	15	17	17	19	19	21	21	23	23	25	25	27	27
0.281 ~ 0.300 (0.0111 ~ 0.0118)				01	01	01	03	03	05	05	07	07	09	09	11	11	13	13	15	15	17	17	19	19	21	21	23	23	25	25	27	27	29
0.301 ~ 0.320 (0.0119 ~ 0.0126)			01	01	01	03	03	05	05	07	07	09	09	11	11	13	13	15	15	17	17	19	19	21	21	23	23	25	25	27	27	29	29
0.321 ~ 0.340 (0.0126 ~ 0.0134)			01	01	01	03	03	05	05	07	07	09	09	11	11	13	13	15	15	17	17	19	19	21	21	23	23	25	25	27	27	29	29
0.341 ~ 0.349 (0.0134 ~ 0.0137)		01	01	01	03	03	05	05	07	07	09	09	11	11	13	13	15	15	17	17	19	19	21	21	23	23	25	25	27	27	29	29	31
0.350 ~ 0.450 (0.0138 ~ 0.0177)																																	
0.451 ~ 0.460 (0.0178 ~ 0.0181)	03	05	05	07	07	09	09	11	11	13	13	15	15	17	17	19	19	21	21	23	23	25	25	27	27	29	29	31	31	33	33	33	
0.461 ~ 0.480 (0.0181 ~ 0.0189)	05	05	07	07	09	09	11	11	13	13	15	15	17	17	19	19	21	21	23	23	25	25	27	27	29	29	31	31	33	33	33		
0.481 ~ 0.500 (0.0189 ~ 0.0197)	05	07	07	09	09	11	11	13	13	15	15	17	17	19	19	21	21	23	23	25	25	27	27	29	29	31	31	33	33	33			
0.501 ~ 0.520 (0.0197 ~ 0.0205)	05	07	07	09	09	11	11	13	13	15	15	17	17	19	19	21	21	23	23	25	25	27	27	29	29	31	31	33	33	33			
0.521 ~ 0.540 (0.0205 ~ 0.0213)	07	07	09	09	11	11	13	13	15	15	17	17	19	19	21	21	23	23	25	25	27	27	29	29	31	31	33	33	33				
0.541 ~ 0.560 (0.0213 ~ 0.0220)	07	09	09	11	11	13	13	15	15	17	17	19	19	21	21	23	23	25	25	27	27	29	29	31	31	33	33	33					
0.561 ~ 0.580 (0.0221 ~ 0.0228)	09	09	11	11	13	13	15	15	17	17	19	19	21	21	23	23	25	25	27	27	29	29	31	31	33	33	33						
0.581 ~ 0.600 (0.0229 ~ 0.0236)	09	11	11	13	13	15	15	17	17	19	19	21	21	23	23	25	25	27	27	29	29	31	31	33	33	33	33						
0.601 ~ 0.620 (0.0237 ~ 0.0244)	09	11	11	13	13	15	15	17	17	19	19	21	21	23	23	25	25	27	27	29	29	31	31	33	33	33							
0.621 ~ 0.640 (0.0244 ~ 0.0252)	11	11	13	13	15	15	17	17	19	19	21	21	23	23	25	25	27	27	29	29	31	31	33	33	33								
0.641 ~ 0.660 (0.0252 ~ 0.0260)	11	13	13	15	15	17	17	19	19	21	21	23	23	25	25	27	27	29	29	31	31	33	33	33									
0.661 ~ 0.680 (0.0260 ~ 0.0268)	13	13	15	15	17	17	19	19	21	21	23	23	25	25	27	27	29	29	31	31	33	33	33										
0.681 ~ 0.700 (0.0268 ~ 0.0276)	13	15	15	17	17	19	19	21	21	23	23	25	25	27	27	29	29	31	31	33	33	33	33										
0.701 ~ 0.720 (0.0276 ~ 0.0283)	13	15	15	17	17	19	19	21	21	23	23	25	25	27	27	29	29	31	31	33	33	33											
0.721 ~ 0.740 (0.0284 ~ 0.0291)	15	15	17	17	19	19	21	21	23	23	25	25	27	27	29	29	31	31	33	33	33												
0.741 ~ 0.760 (0.0292 ~ 0.0299)	15	17	17	19	19	21	21	23	23	25	25	27	27	29	29	31	31	33	33	33													
0.761 ~ 0.780 (0.0300 ~ 0.0307)	17	17	19	19	21	21	23	23	25	25	27	27	29	29	31	31	33	33	33														
0.781 ~ 0.800 (0.0307 ~ 0.0315)	17	19	19	21	21	23	23	25	25	27	27	29	29	31	31	33	33	33	33														
0.801 ~ 0.820 (0.0315 ~ 0.0323)	17	19	19	21	21	23	23	25	25	27	27	29	29	31	31	33	33	33															
0.821 ~ 0.840 (0.0323 ~ 0.0331)	19	19	21	21	23	23	25	25	27	27	29	29	31	31	33	33	33																
0.841 ~ 0.860 (0.0331 ~ 0.0339)	19	21	21	23	23	25	25	27	27	29	29	31	31	33	33	33																	
0.861 ~ 0.880 (0.0339 ~ 0.0346)	21	21	23	23	25	25	27	27	29	29	31	31	33	33	33																		
0.881 ~ 0.900 (0.0347 ~ 0.0354)	21	23	23	25	25	27	27	29	29	31	31	33	33	33	33																		
0.901 ~ 0.920 (0.0355 ~ 0.0362)	21	23	23	25	25	27	27	29	29	31	31	33	33	33																			
0.921 ~ 0.940 (0.0363 ~ 0.0370)	23	23	25	25	27	27	29	29	31	31	33	33	33																				
0.941 ~ 0.960 (0.0370 ~ 0.0378)	23	25	25	27	27	29	29	31	31	33	33	33																					
0.961 ~ 0.980 (0.0378 ~ 0.0386)	25	25	27	27	29	29	31	31	33	33	33																						
0.981 ~ 1.000 (0.0386 ~ 0.0394)	25	27	27	29	29	31	31	33	33	33	33																						
1.001 ~ 1.020 (0.0394 ~ 0.0402)	25	27	27	29	29	31	31	33	33	33																							
1.021 ~ 1.040 (0.0402 ~ 0.0409)	27	27	29	29	31	31	33	33	33																								
1.041 ~ 1.060 (0.0410 ~ 0.0417)	27	29	29	31	31	33	33	33																									
1.061 ~ 1.080 (0.0418 ~ 0.0425)	29	29	31	31	33	33	33																										
1.081 ~ 1.100 (0.0426 ~ 0.0433)	29	31	31	33	33	33	33																										
1.101 ~ 1.120 (0.0433 ~ 0.0441)	29	31	31	33	33	33																											
1.121 ~ 1.140 (0.0441 ~ 0.0449)	31	31	33	33	33																												
1.141 ~ 1.160 (0.0449 ~ 0.0457)	31	33	33	33																													
1.161 ~ 1.180 (0.0457 ~ 0.0465)	33	33	33																														
1.181 ~ 1.200 (0.0465 ~ 0.0472)	33	33	33																														
1.201 ~ 1.220 (0.0473 ~ 0.0480)	33	33																															
1.221 ~ 1.240 (0.0481 ~ 0.0488)	33																																

New Shim Thickness mm (in.)

Shim No.	Thickness	Shim No.	Thickness
01	2.500 (0.0984)	19	2.950 (0.1161)
03	2.550 (0.1004)	21	3.000 (0.1181)
05	2.600 (0.1024)	23	3.050 (0.1201)
07	2.650 (0.1043)	25	3.100 (0.1220)
09	2.700 (0.1063)	27	3.150 (0.1240)
11	2.750 (0.1083)	29	3.200 (0.1260)
13	2.800 (0.1102)	31	3.250 (0.1280)
15	2.850 (0.1122)	33	3.300 (0.1299)
17	2.900 (0.1142)		

Exhaust valve clearance (Cold):
0.35 to 0.45 mm (0.014 to 0.018 in.)

EXAMPLE: The 2.800 mm (0.1102 in.) shim is installed, and the measured clearance is 0.590 mm (0.0232 in.). Replace the 2.800 mm (0.1102 in.) shim with a new No. 21 shim.

Y

A57527

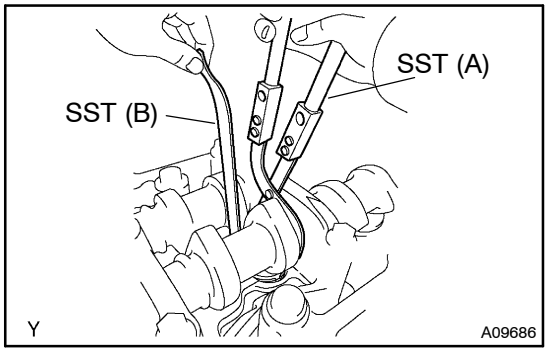

(c) Install the new adjusting shim.
(1) Place the new adjusting shim on the valve lifter.
(2) Using SST (A), press down the valve lifter and remove SST (B).
SST 09248–55050 (09248–05510, 09248–05520)
(d) Recheck the valve clearance.

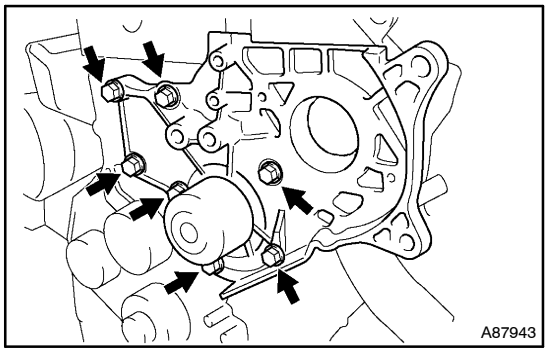

46. INSTALL WATER PUMP ASSY
(a) Install a new gasket and water pump with the 7 bolts.
Torque: 31 N·m (320 kgf·cm, 23 ft·lbf)

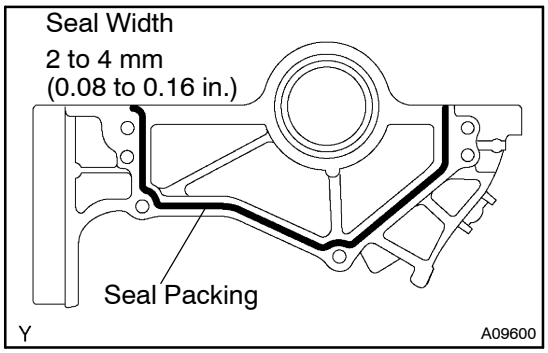

47. INSTALL CAMSHAFT OIL SEAL RETAINER
(a) Apply seal packing to the oil seal retainer as shown in the illustration.
Seal packing: Part No. 08826–00080 or equivalent

NOTICE:
- **Install a nozzle of which opening is cut to 2 to 4 mm (0.08 to 0.16 in.).**
- **The parts must be set within 3 minutes and must be assembled within 15 minutes after applying seal packing. Otherwise the material must be removed and reapplied.**
- **Immediately remove the nozzle from the tube, then reinstall the cap.**

(b) Install the oil seal retainer with 4 bolts. Uniformly tighten the 4 bolts in several passes.
Torque: 9.8 N·m (100 kgf·cm, 7.2 ft·lbf)

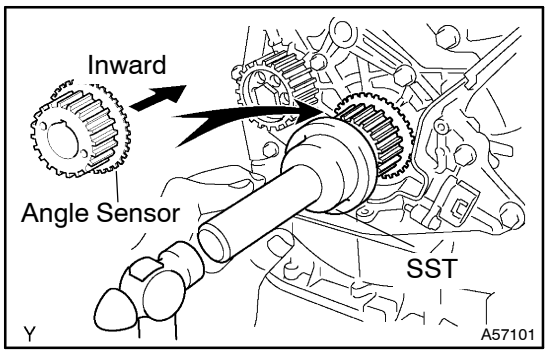

48. INSTALL CRANKSHAFT TIMING PULLEY
(a) Align the keyway of the timing pulley with the key located on the crankshaft, then slide the pulley into place.
(b) Using SST and a hammer, tap in the timing pulley with the angle sensor facing inward.
SST 09223–46011

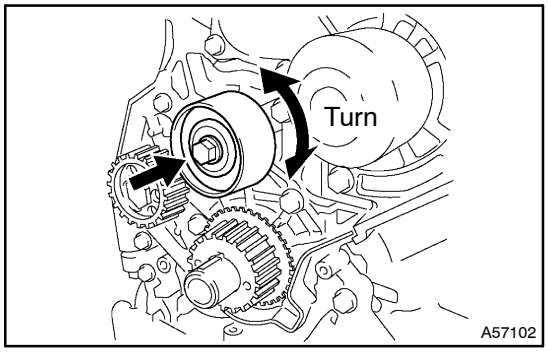

49. INSTALL TIMING BELT IDLER SUB–ASSY NO.2

(a) Install the idler pulley with the bolt.
Torque: 47 N·m (475 kgf·cm, 34 ft·lbf)

(b) Check that the idler pulley moves smoothly.

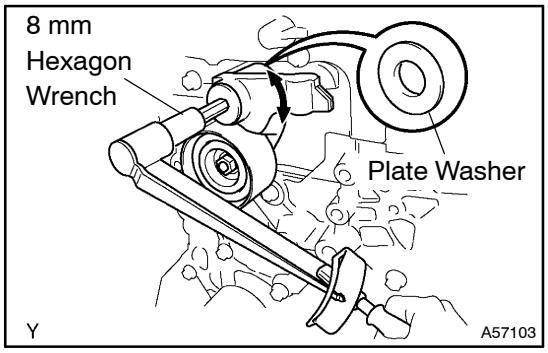

50. INSTALL TIMING BELT IDLER SUB–ASSY NO.1

(a) Using an 8 mm hexagon wrench, install the plate washer and idler pulley with the idler pulley shaft.
Torque: 35 N·m (357 kgf·cm, 26 ft·lbf)

(b) Check that the pulley bracket moves smoothly.

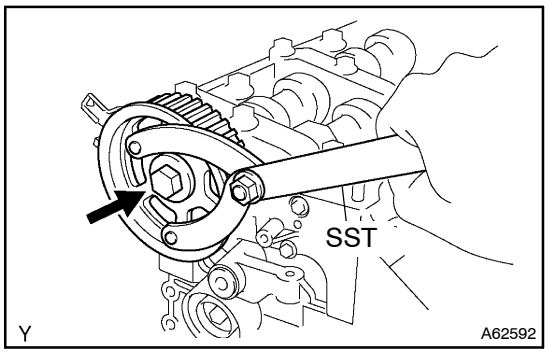

51. INSTALL CAMSHAFT TIMING PULLEY

(a) Install the pulley set key to the key groove of the camshaft.

(b) Align the keyway of the timing pulley with the key located on the camshaft, then slide the pulley into place.

(c) Using SST, install the pulley bolt.
SST 09960–10010 (09962–01000, 09963–01000)
Torque: 88 N·m (899 kgf·cm, 65 ft·lbf)

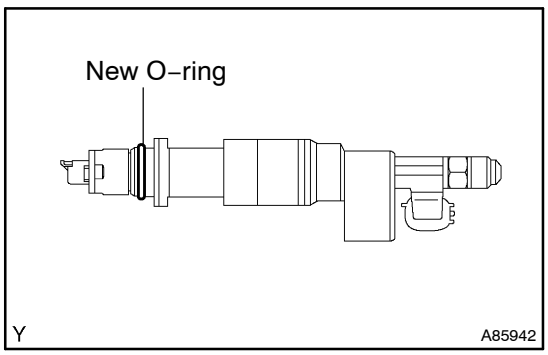

52. INSTALL EXHAUST FUEL ADDITION INJECTOR ASSY

(a) Install a new gasket to the cylinder head.

(b) Install a new O–ring to the injector.

(c) Apply a light coat of engine oil to the O–ring on the injector.

(d) Install the addition injector and nozzle holder clamp.

(e) Using a Torx wrench (T40), install the Torx screw.
Torque: 12 N·m (117 kgf·cm, 8.5 ft·lbf)

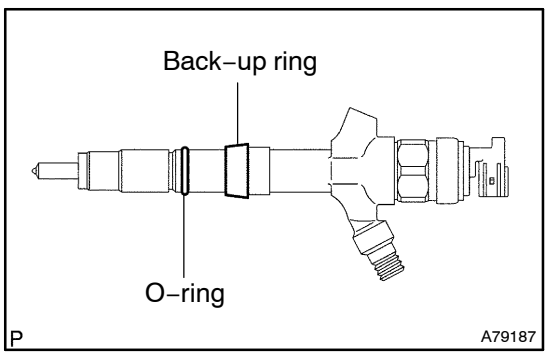

53. INSTALL INJECTOR ASSY

(a) Install the 4 new nozzle seats to the cylinder head.

(b) Install new back–up rings and the O–rings to each injector.

(c) Apply a light coat of engine oil to the O–rings on each injector.

(d) Install the injector to the cylinder head.

NOTICE:

Fit the injectors to the nozzle seats.

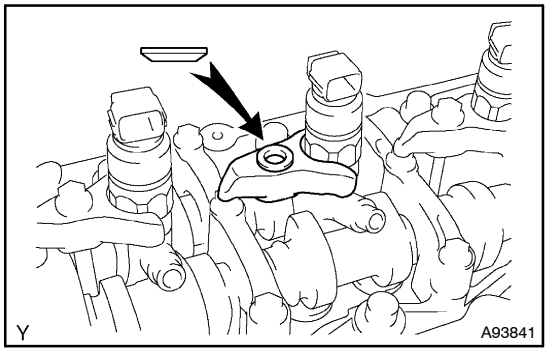

(e) Install the nozzle holder clamp as shown in the illustration. Tighten the camshaft bearing cap bolt by hand to fix the nozzle holder clamp.

NOTICE:

- **Pay attention to the mounting orientation of the washer.**
- **When temporarily attaching the nozzle holder clamp and mounting bolt, be careful not to orient them at an angle.**

HINT:

Apply a light coat of engine oil to the threads of the nozzle holder clamp bolts.

(f) Install the injection pipe No. 1, No. 2, No. 3 and No. 4, then tighten the nuts by hand.

(g) Install new 5 gaskets and the leakage pipe No. 1. Tighten the 4 hollow screws by hand.

(h) Tighten the 4 nozzle holder clamp bolts.

Torque: 26 N·m (265 kgf·cm, 19 ft·lbf)

(i) Remove the 4 injection pipes.

54. INSTALL NOZZLE LEAKAGE PIPE ASSY

(a) Remove the bolt which is tightened at the center of the camshaft bearing cap No. 4.

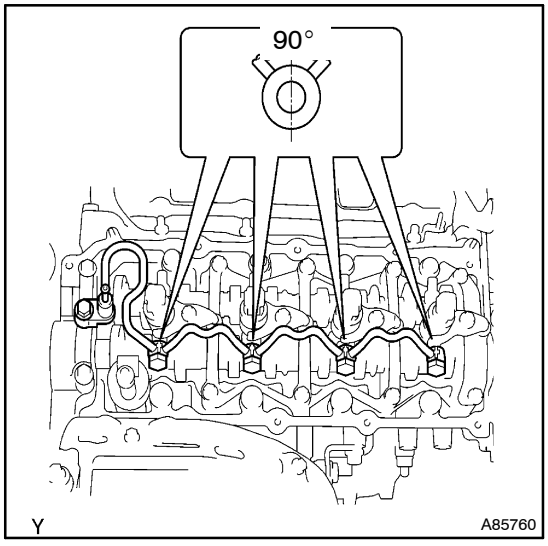

(b) Install the nozzle leakage pipe and 4 new gaskets.

NOTICE:

When installing the gaskets, pay attention to the mounting orientation. Install the gasket so that the joint of the gasket comes within the ranges shown in the illustration.

(c) Apply a light coat of engine oil to the 4 hollow screws and bolt.

(d) Tighten the 4 hollow screws and bolt by hand.

(e) Tighten the 4 hollow screws and bolt.

Torque:

16 N·m (163 kgf·cm, 12 ft·lbf) for hollow screw

20 N·m (204 kgf·cm, 15 ft·lbf) for flange bolt

NOTICE:

In any case, when the torque exceeds the upper limit, replace the leakage pipe hollow screw and gaskets with new ones.

(f) Check that there are no leaks from the nozzle leakage pipe connection.

(1) Apply a light coat of soapy water (any fluid to detect fuel leakage) to the nozzle leakage pipe connection.

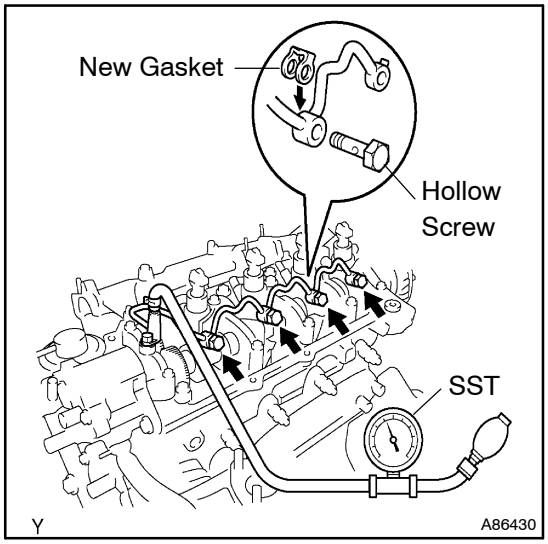

(2) Using SST (a turbocharger pressure gauge), attach SST to the fuel return side of the nozzle leakage pipe, then maintain 100 kPa (1.0 kgf/cm^2, 14.5 psi) of pressure for 60 seconds to check that there are no bubbles from the pipe connection.

SST 09992–00242

(3) After checking fuel leaks, wipe off soapy water from the pipe connection.

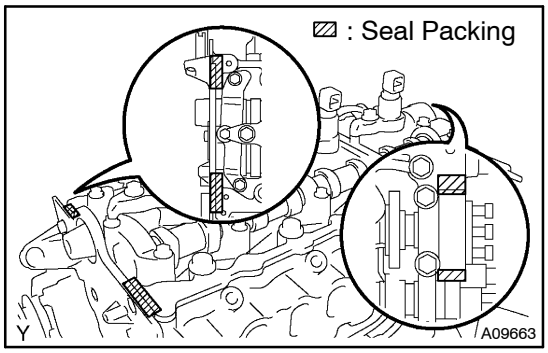

55. INSTALL CYLINDER HEAD COVER SUB–ASSY

(a) Remove any old packing (FIPG) material.

(b) Apply seal packing to the cylinder head.

Seal packing: Part No. 08826–00080 or equivalent

(c) Install the gasket to the head cover.

(d) Install the cylinder head cover with 10 bolts.

Torque: 13 N·m (135 kgf·cm, 9.7 ft·lbf)

CYLINDER HEAD ASSY (1CD–FTV)(From September, 2003)

141NR–01

COMPONENTS

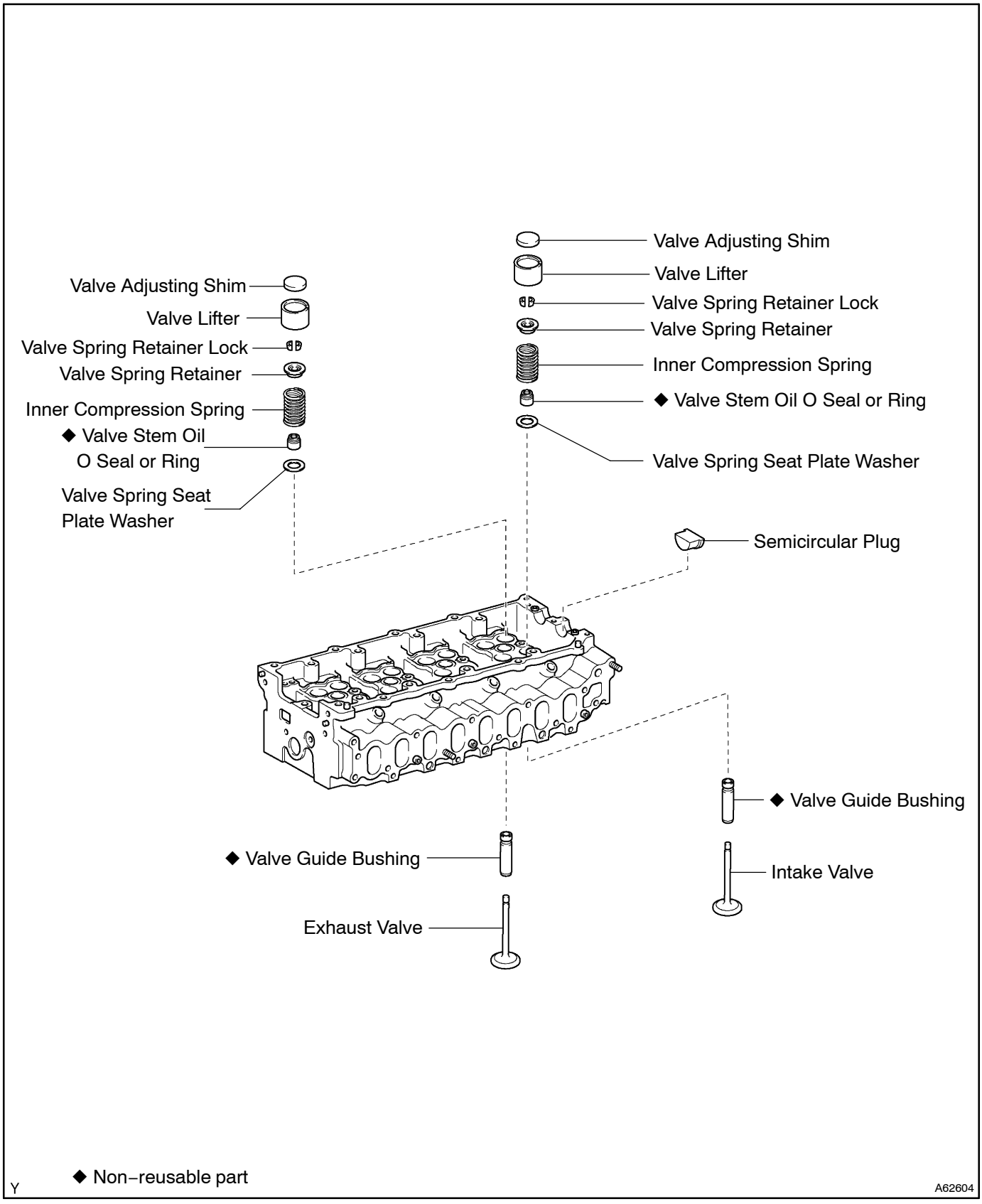

141NS–01

OVERHAUL

1. REMOVE VALVE LIFTER

HINT:

Arrange the valve lifters in the correct order.

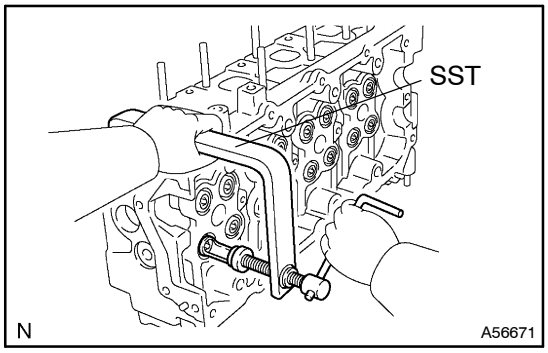

2. REMOVE INTAKE VALVE

(a) Using SST, compress the valve spring and remove the 2 keepers.

SST 09202–70020 (09202–00010)

(b) Remove the spring retainer, valve spring and valve.

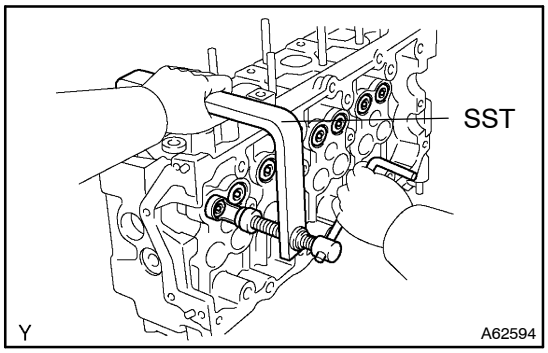

3. REMOVE EXHAUST VALVE

(a) Using SST, compress the valve spring and remove the 2 keepers.

SST 09202–70020 (09202–00010)

(b) Remove the spring retainer, valve spring and valve.

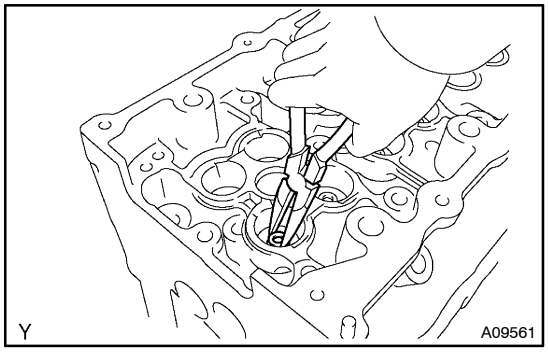

4. REMOVE VALVE STEM OIL O SEAL OR RING

(a) Using needle–nose pliers, remove the oil seal.

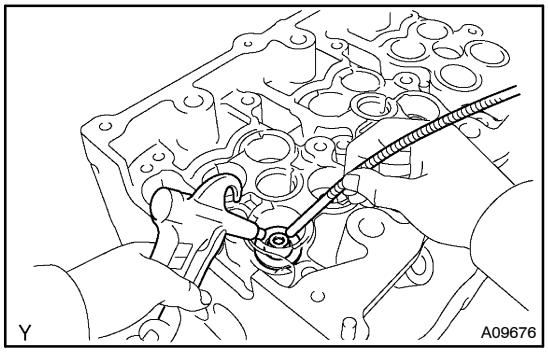

5. REMOVE VALVE SPRING SEAT PLATE WASHER

(a) Using compressed air and a magnetic finger, remove the spring seat by blowing air.

HINT:

Arrange the valves, valve springs, spring seats and spring retainers in the correct order.

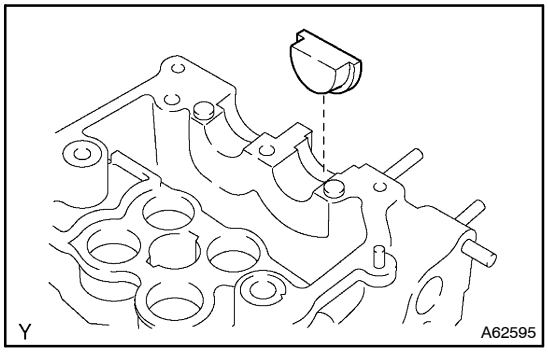

6. REMOVE SEMICIRCULAR PLUG

7. REMOVE W/HEAD TAPER SCREW PLUG NO.1

(a) Using a hexagon wrench (6 mm), remove the 3 plugs.

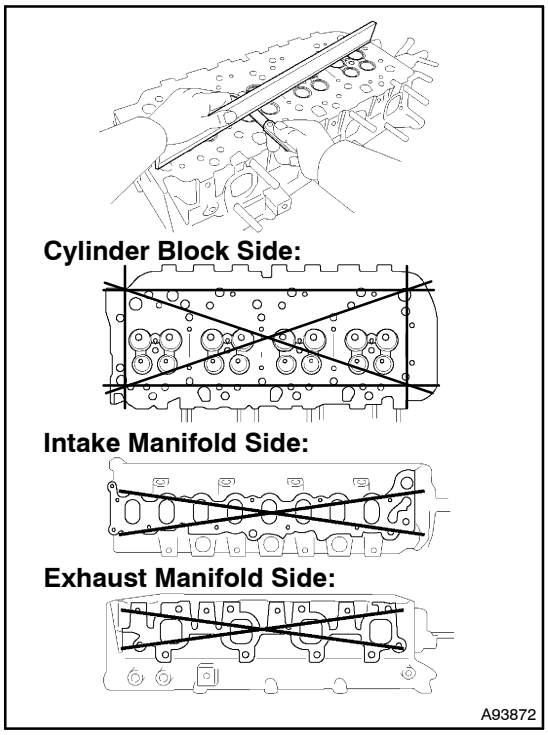

8. INSPECT CYLINDER HEAD FOR FLATNESS

(a) Using a precision straight edge and feeler gauge, measure the warpage on the surfaces which contact the cylinder block and manifolds.

Maximum warpage:

Cylinder block side	0.08mm (0.0031in.)
Intake manifold side	0.20mm (0.0079in.)
Exhaust manifold side	0.20mm (0.0079in.)

If the warpage is greater than maximum, replace the cylinder head.

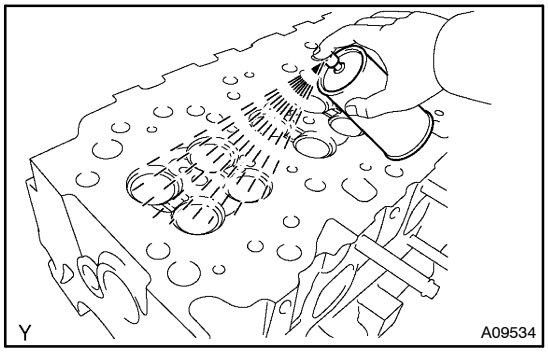

9. INSPECT CYLINDER HEAD FOR CRACKS

(a) Using dye penetrate, check the intake ports, exhaust ports and cylinder block contact surface for cracks.

If cracked, replace the cylinder head.

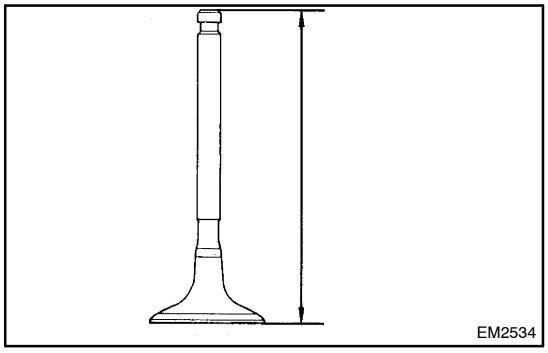

10. INSPECT INTAKE VALVE

(a) Using vernier calipers, measure the valve overall length.

Standard overall length: 102.53 mm (4.0366 in.)

Minimum overall length: 102.10 mm (4.0197 in.)

If the overall length is less than minimum, replace the valve.

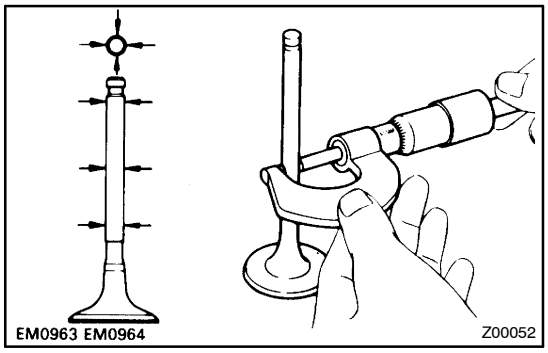

(b) Using a micrometer, measure the diameter of the valve stem.

Valve stem diameter:

5.970 to 5.985 mm (0.2350 to 0.2356 in.)

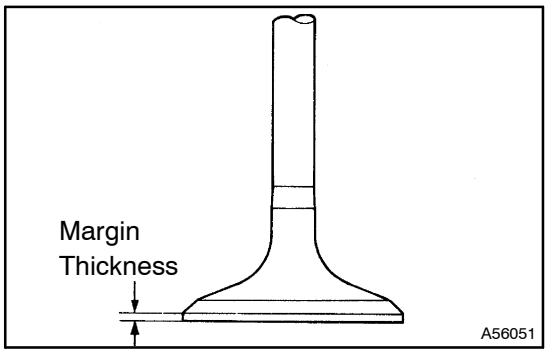

(c) Using vernier calipers, measure the valve head margin thickness.

Standard margin thickness: 0.9 mm (0.035 in.)

Minimum margin thickness: 0.6 mm (0.0236 in.)

If the margin thickness is less than minimum, replace the valve.

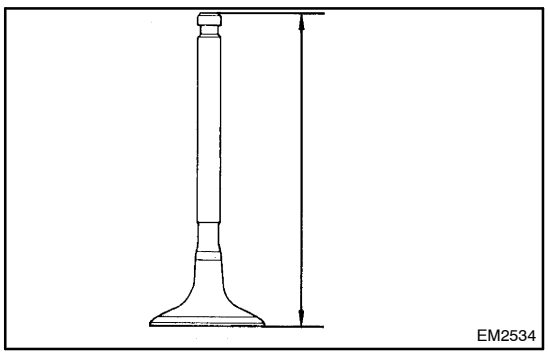

11. INSPECT EXHAUST VALVE

(a) Using vernier calipers, measure the valve overall length.

Standard overall length: 101.97 mm (4.0146 in.)

Minimum overall length: 101.55 mm (3.9980 in.)

If the overall length is less than minimum, replace the valve.

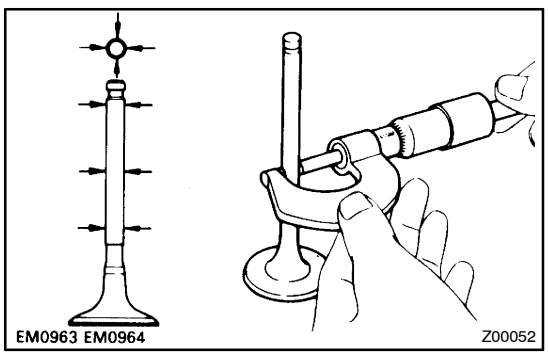

(b) Using a micrometer, measure the diameter of the valve stem.

Valve stem diameter:

5.960 to 5.975 mm (0.2346 to 0.2352 in.)

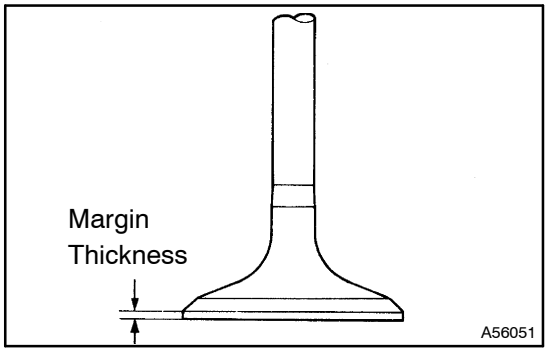

(c) Using vernier calipers, measure the valve head margin thickness.

Standard margin thickness: 0.9 mm (0.035 in.)

Minimum margin thickness: 0.6 mm (0.024 in.)

If the margin thickness is less than minimum, replace the valve.

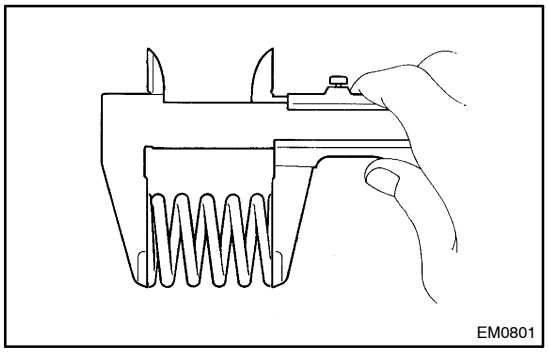

12. INSPECT INNER COMPRESSION SPRING

(a) Using vernier calipers, measure the free length of the valve spring.

Free length: 40.45 mm (1.5925 in.)

If the free length is not as specified, replace the spring.

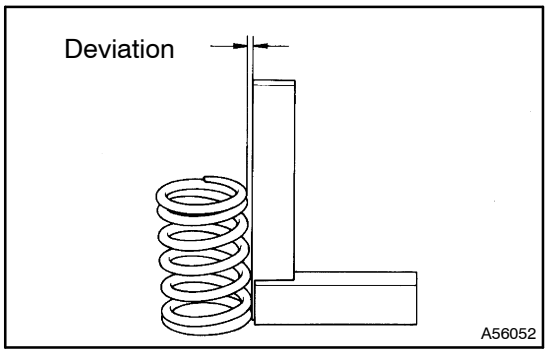

(b) Using a steel square, measure the deviation of the valve spring.

Maximum deviation: 2.0 mm (0.079 in.)

If the deviation is greater than maximum, replace the spring.

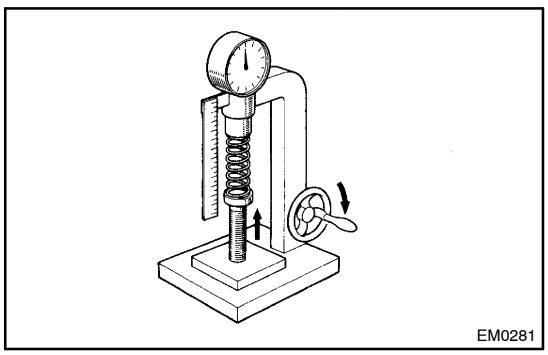

(c) Using a spring tester, measure the tension of the valve spring when the spring is the specified installed length.

Installed tension:

177 to 195 N (18.0 to 19.9 kgf, 39.7 to 44.1 lbf)

at 31.1 mm (1.224 in.)

If the installed tension is not as specified, replace the spring.

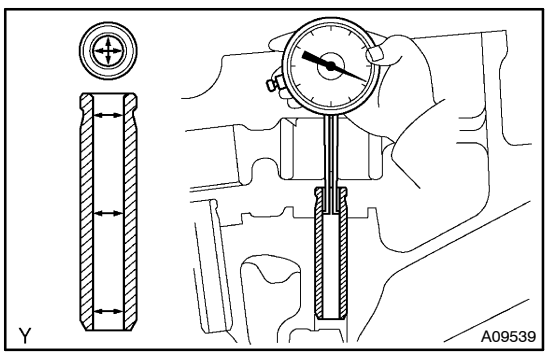

13. INSPECT VALVE GUIDE BUSHING OIL CLEARANCE

(a) Using a caliper gauge, measure the inside diameter of the guide bushing.

Bushing inside diameter:

6.010 to 6.030 mm (0.2366 to 0.2374 in.)

(b) Subtract the valve stem diameter measurement from the guide bushing inside diameter measurement.

Standard oil clearance:

Intake	0.025 to 0.060 mm (0.0010 to 0.0024 in.)
Exhaust	0.035 to 0.070 mm (0.0014 to 0.0028 in.)

Maximum oil clearance:

Intake	0.08 mm (0.0031 in.)
Exhaust	0.10 mm (0.0039 in.)

If the clearance is greater than maximum, replace the valve and valve guide bush.

14. REMOVE INTAKE VALVE GUIDE BUSH

(a) Heat the cylinder head up to 80 to 100°C (176 to 212°F).

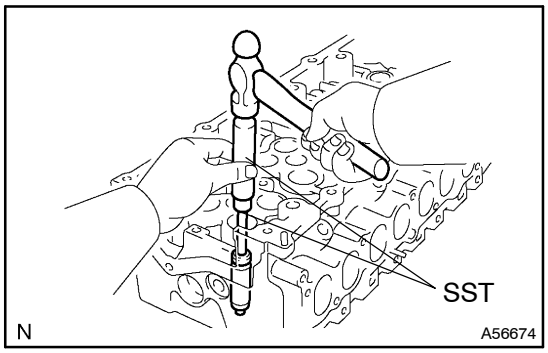

(b) Using SST and a hammer, tap out the guide bushing.
SST 09201–10000 (09201–01060), 09950–70010 (09951–07100)

15. REMOVE EXHAUST VALVE GUIDE BUSH

(a) Heat the cylinder head up to 80 to 100°C (176 to 212°F).

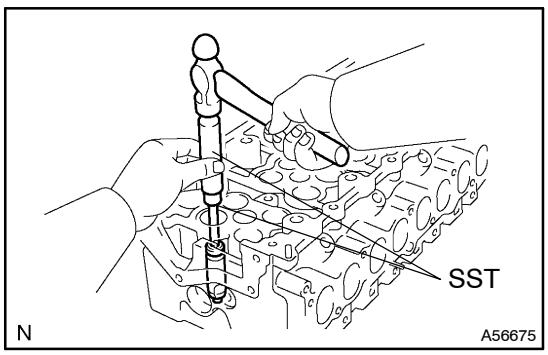

(b) Using SST and a hammer, tap out the guide bushing.
SST 09201–10000 (09201–01060), 09950–70010 (09951–07100)

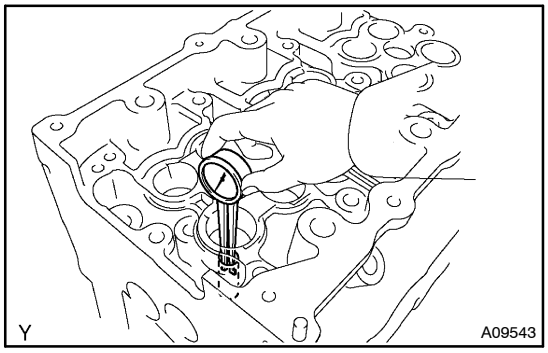

16. INSTALL INTAKE VALVE GUIDE BUSH

(a) Using a caliper gauge, measure the bushing bore diameter of the cylinder head.

Diameter: 10.985 to 11.006 mm (0.4325 to 0.4333 in.)

If the bushing bore diameter of the cylinder head is greater than 11.006 mm (0.4333 in.), machine the bushing bore to the dimension of 11.035 to 11.056 mm (0.4344 to 0.4353 in.).

HINT:

Bushing Size	Bushing Bore Diameter mm (in.)
Use Standard	10.985 to 11.006 (0.4325 to 0.4333)
Use Oversize 0.05	11.035 to 11.056 (0.4344 to 0.4353)

(b) Heat the cylinder head up to 80 to 100°C (176 to 212°F).

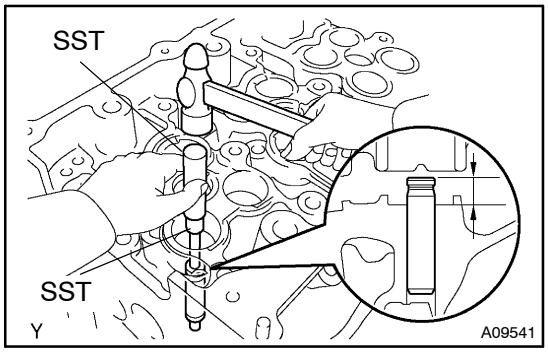

(c) Using SST and a hammer, tap in a new guide bushing until its protrusion heihgt is as specified.
SST 09201–10000 (09201–01060), 09950–70010 (09951–07100)
Protrusion height:
10.05 to 10.45 mm (0.3957 to 0.4114 in.)

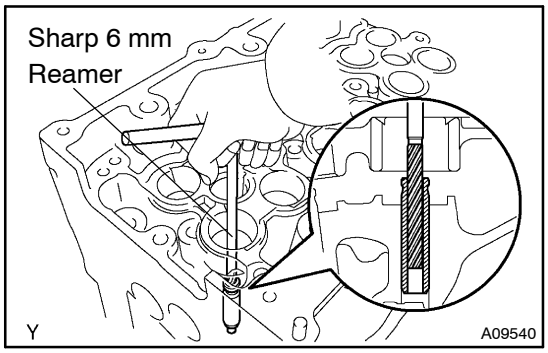

(d) Using a sharp 6 mm reamer, ream the guide bushing to obtain the standard specified clearance between the guide bushing and valve stem.
Standard oil clearance:
0.025 to 0.060 mm (0.0001 to 0.0024 in.)

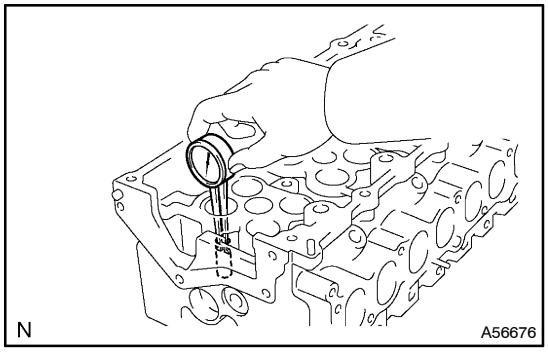

17. INSTALL EXHAUST VALVE GUIDE BUSH

(a) Using a caliper gauge, measure the bushing bore diameter of the cylinder head.
Diameter: 10.985 to 11.006 mm (0.4325 to 0.4333 in.)

If the bushing bore diameter of the cylinder head is greater than 11.006 mm (0.4333 in.), machine the bushing bore to the dimension of 11.035 to 11.056 mm (0.4344 to 0.4353 in.).

HINT:

Bushing Size	Bushing Bore Diameter mm (in.)
Use Standard	10.985 to 11.006 (0.4325 to 0.4333)
Use Oversize 0.05	11.035 to 11.056 (0.4344 to 0.4353)

(b) Heat the cylinder head up to 80 to 100°C (176 to 212°F).

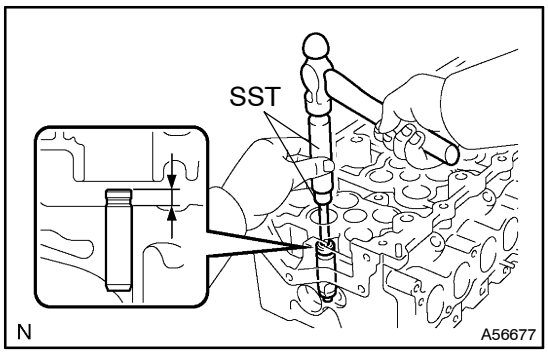

(c) Using SST and a hammer, tap in a new guide bushing untol its protrusion height is as specified.
SST 09201–10000 (09201–01060), 09950–70010 (09951–07100)
Protrusion height:
9.65 to 10.05 mm (0.3799 to 0.3957 in.)

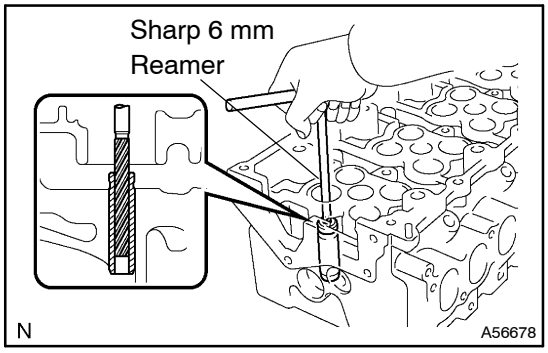

(d) Using a sharp 6 mm reamer, ream the guide bushing to obtain the standard specified clearance between the guide bushing and valve stem.

Standard oil clearance:
0.035 to 0.070 mm (0.0014 to 0.0028 in.)

18. INSPECT VALVE SEATS

(a) Apply a light coat of prussian blue (or white lead) to the valve face.

(b) Lightly press the valve against the seat.

NOTICE:
Do not rotate the valve.

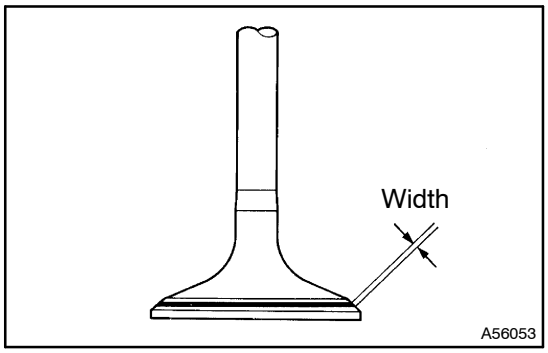

(c) Check the valve face and seat according to the following procedures.

(1) If the blue appears 360° around the face, the valve is concentric. If not, replace the valve.

(2) If the blue appears 360° around the valve seat, the guide and face are concentric. If not, resurface the seat.

(3) Check that the seat contact is in the middle of the valve face with the following width.

Intake	1.2 to 1.6 mm (0.047 to 0.063 in.)
Exhaust	1.6 to 2.0 mm (0.063 to 0.079 in.)

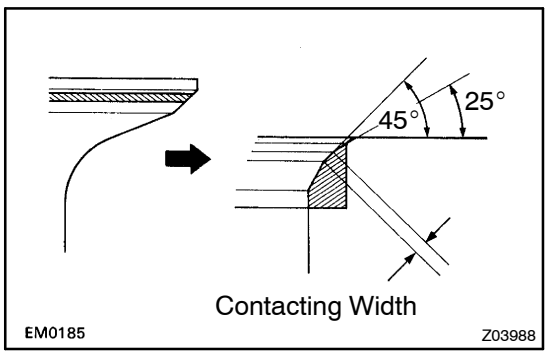

19. REPAIR INTAKE VALVE SEATS

NOTICE:
Releasing the seat cutter pressure gradually helps to make smooth valve seat faces.

(a) If the seating is too high on the valve face, use 25° and 45° cutters to correct the seat.

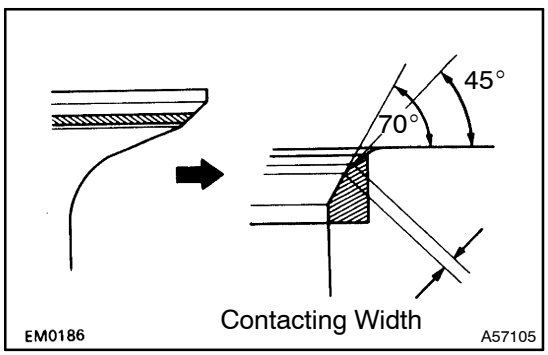

(b) If the seating is too low on the valve face, use 70° and 45° cutters to correct the seat.

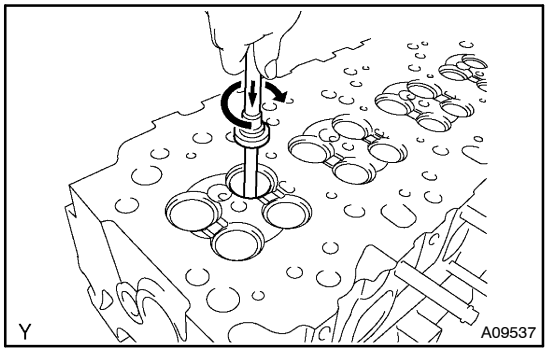

(c) Lap the valve and valve seat by hand using an abrasive compound.
(d) Check the valve seating position.

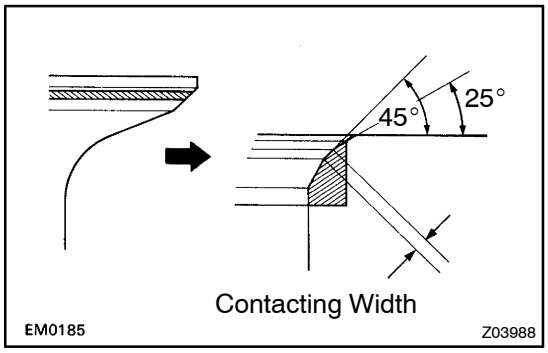

20. REPAIR EXHAUST VALVE SEATS

NOTICE:

Releasing the seat cutter pressure gradually helps to make smooth valve seat faces.

(a) If the seating is too high on the valve face, use 25° and 45° cutters to correct the seat.

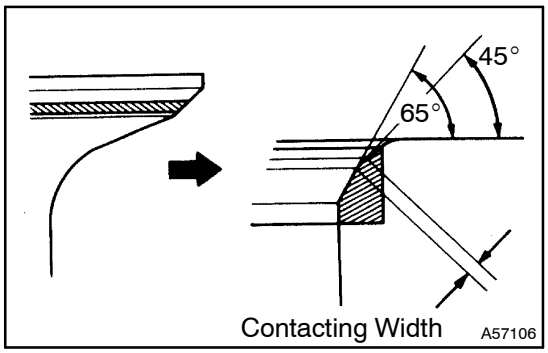

(b) If the seating is too low on the valve face, use 65° and 45° cutters to correct the seat.

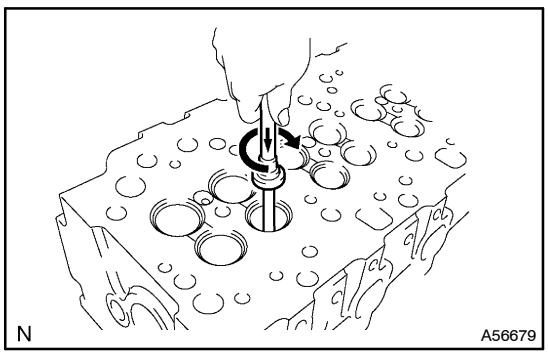

(c) Lap the valve and valve seat by hand using an abrasive compound.
(d) Check the valve seating position.

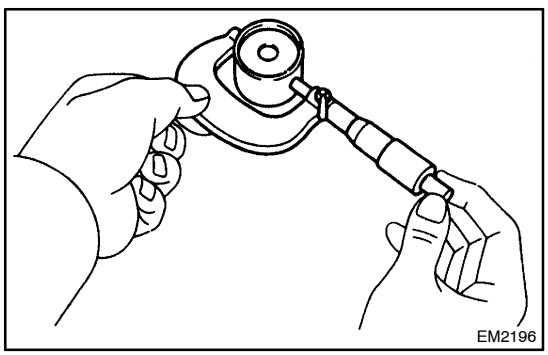

21. INSPECT VALVE LIFTER

(a) Using a micrometer, measure the lifter diameter.
Lifter diameter:
27.975 to 27.985 mm (1.1014 to 1.1018 in.)

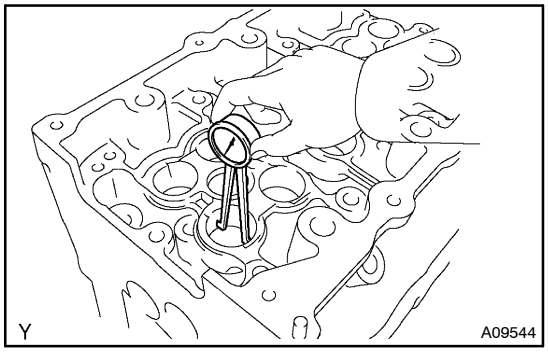

22. INSPECT VALVE LIFTER OIL CLEARANCE

(a) Using a caliper gauge, measure the lifter bore diameter of the cylinder head.

Lifter diameter:

28.010 to 28.031 mm (1.1028 to 1.1036 in.)

(b) Subtract the lifter diameter measurement from the lifter bore diameter measurement.

Standard oil clearance:

0.025 to 0.080 mm (0.0010 to 0.0031 in.)

- If the oil clearance is greater than maximum, replace the valve lifter.
- If necessary, replace the cylinder head.

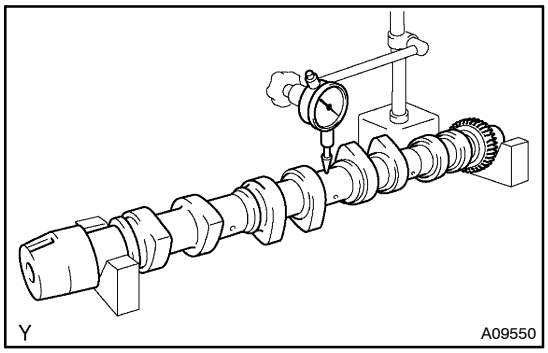

23. INSPECT CAMSHAFT

(a) Inspect the circle runout.

(1) Place the camshaft on V–blocks.

(2) Using a dial indicator, measure the circle runout at the center journal.

Maximum circle runout: 0.06 mm (0.0024 in.)

If the circle runout is greater than maximum, replace the camshaft.

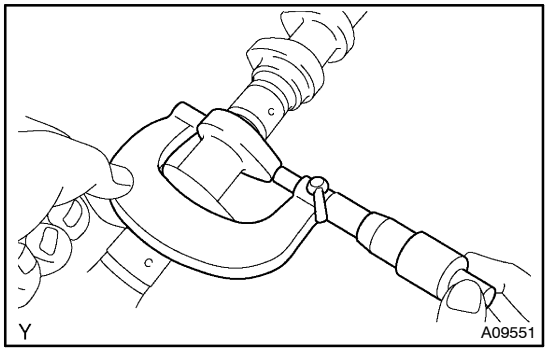

(b) Using a micrometer, measure the cam lobe height.

Standard cam lobe height:

Intake	46.57 to 46.67 mm (1.8335 to 1.8374 in.)
Exhaust	47.52 to 47.62 mm (1.8709 to 1.8748 in.)

Minimum cam lobe height:

Intake	46.10 mm (1.8150 in.)
Exhaust	47.05 mm (1.8524 in.)

If the cam lobe height is less than minimum, replace the camshaft.

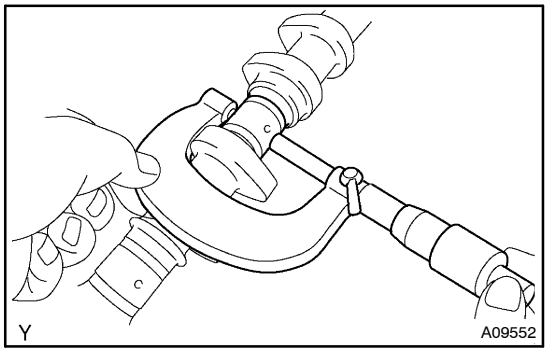

(c) Using a micrometer, measure the journal diameter.

Journal diameter:

26.969 to 26.985 mm (1.0618 to 1.0624 in.)

If the journal diameter is not as specified, check the oil clearance.

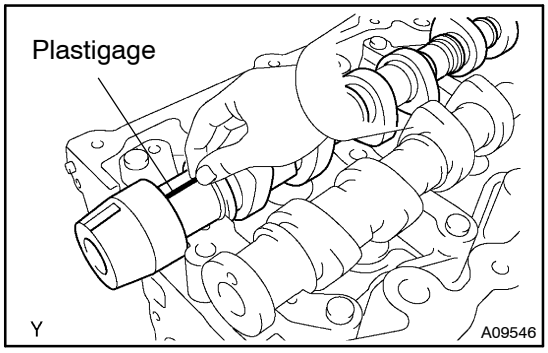

24. INSPECT CAMSHAFT OIL CLEARANCE

(a) Clean the bearing caps and camshaft carrier.

(b) Check the bearings for flaking or score.

If the bearings are damaged, replace the bearing caps, camshaft carrier and cylinder head as a set.

(c) Place the camshaft carrier and camshafts on the cylinder head.

(d) Lay a strip of Plastigage across each of the camshaft journals.

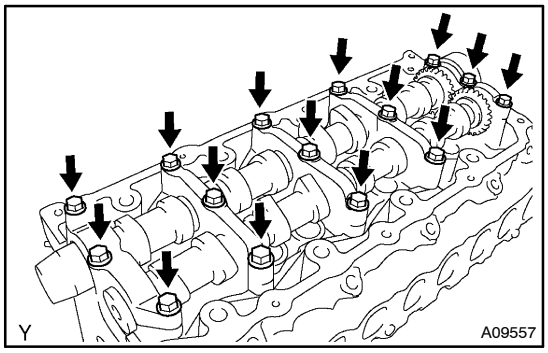

(e) Install the bearing caps.

Torque: 20 N·m (204 kgf·cm, 15 ft·lbf)

NOTICE:

Do not turn the camshaft.

(f) Remove the bearing caps.

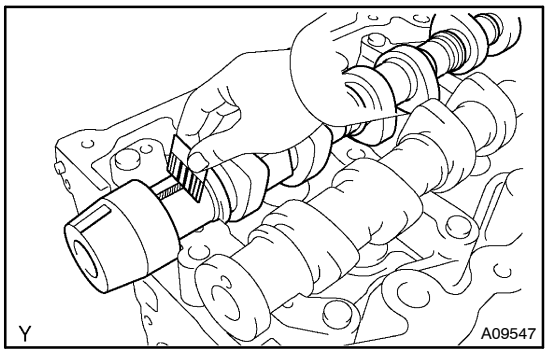

(g) Measure the Plastigage at its widest point.

Standard oil clearance:

0.025 to 0.080 mm (0.0010 to 0.0031 in.)

If the oil clearance is greater than maximum, replace the camshaft. If necessary, replace the bearing caps, camshaft carrier and cylinder head as a set.

(h) Completely remove the Plastigage.

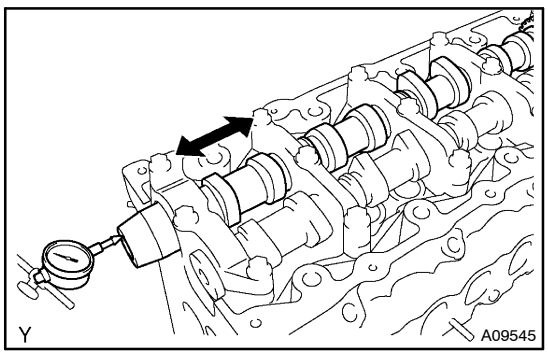

25. INSPECT CAMSHAFT THRUST CLEARANCE

(a) Install the camshaft.

(b) Using a dial indicator, measure the thrust clearance while moving the camshaft back and forth.

Standard thrust clearance:

0.035 to 0.110 mm (0.0014 to 0.0043 in.)

If the thrust clearance is not as specified, replace the camshaft. If necessary, replace the bearing caps, camshaft carrier and cylinder head as a set.

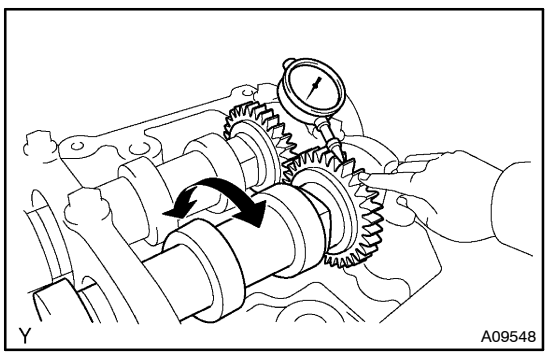

26. INSPECT CAMSHAFT GEAR BACKLASH

(a) Install the camshafts.

(b) Using a dial indicator, measure the backlash.

Standard backlash:

0.014 to 0.170 mm (0.0006 to 0.0067 in.)

If the backlash is greater than maximum, replace the camshafts.

27. INSTALL TIGHT PLUG

(a) Apply adhesive around new tight plugs.
Adhesive: Part No.08833 – 00070, THREE BOND 1324 or equivalent

(b) Using SST, tap in the tight plugs as shown in the illustration.
SST 09950–60010 (09951–00210), 09950–70010 (09951–07100)

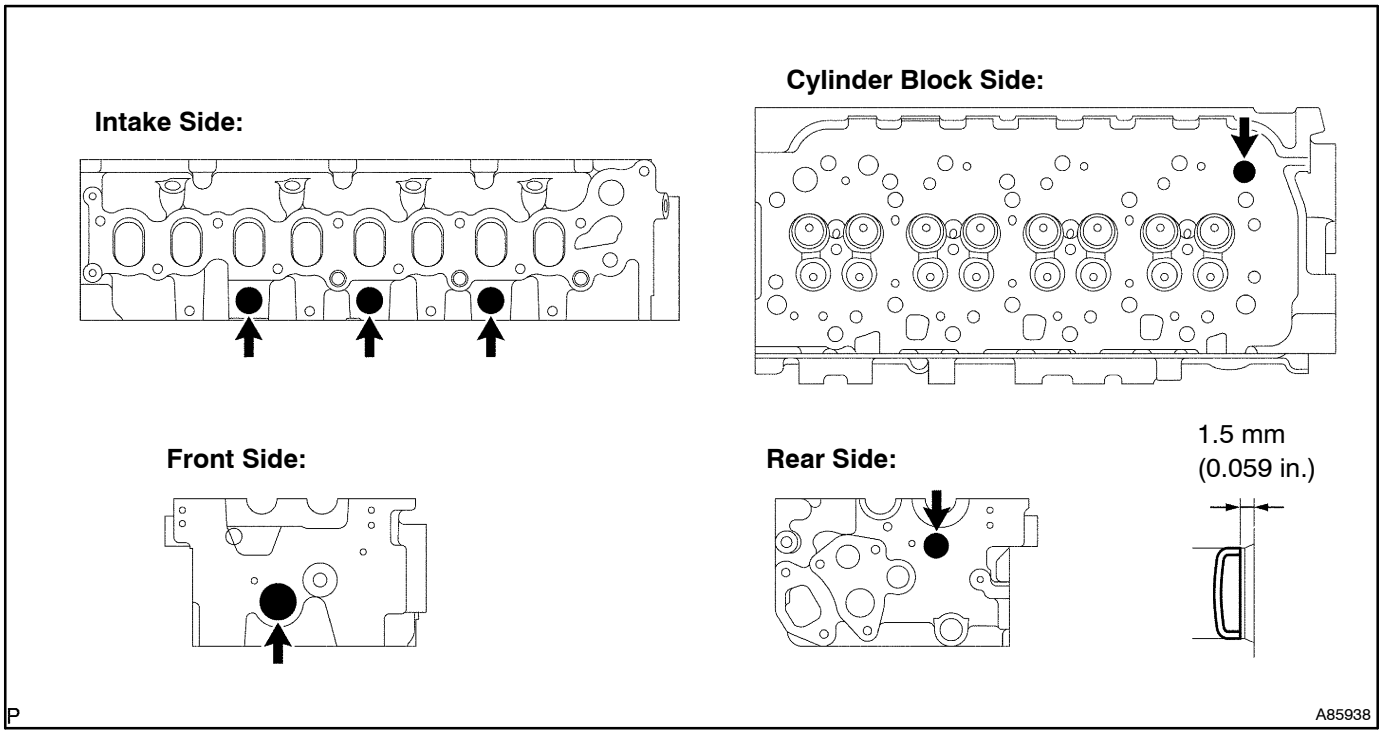

28. INSTALL RING PIN

(a) Using a plastic–faced hammer, tap in new ring pins until thier protrusion heights are as specified.

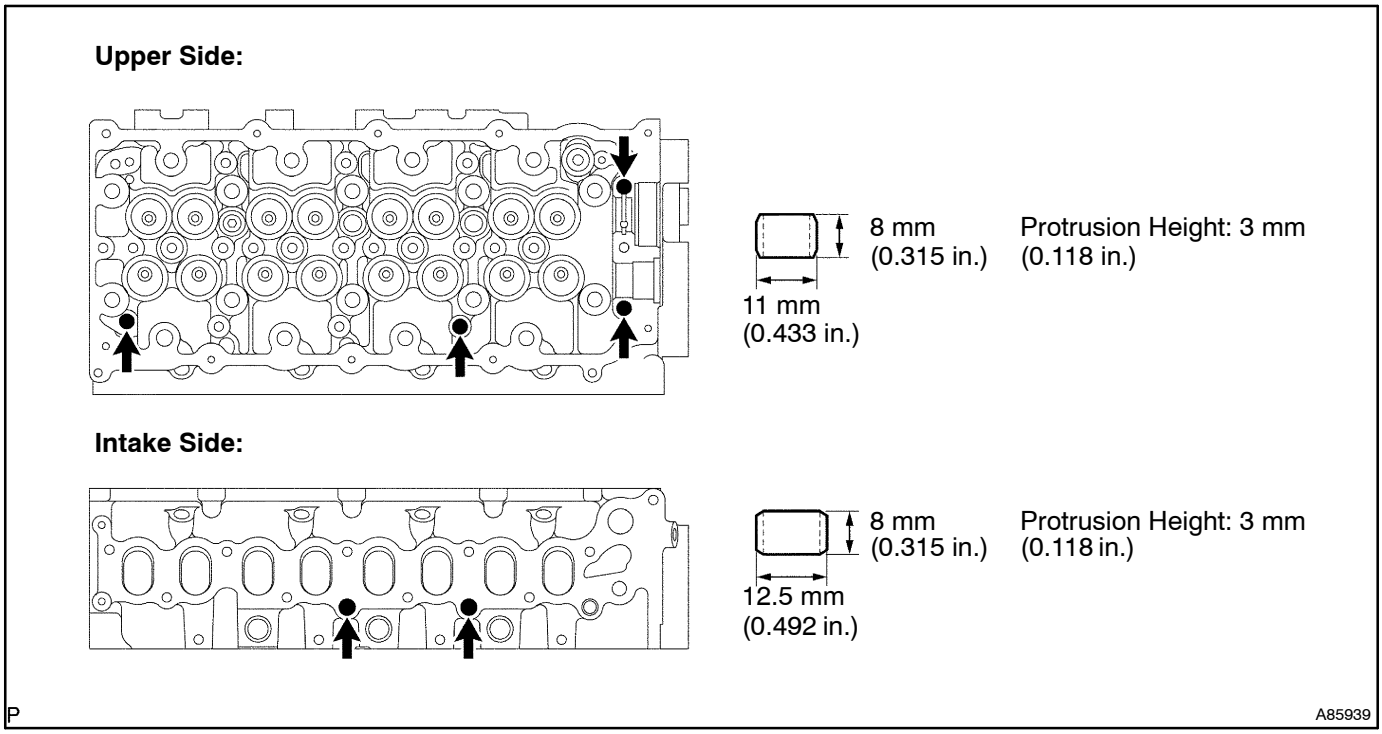

29. INSTALL STRAIGHT PIN

(a) Using a plastic–faced hammer, tap in new straight pins.

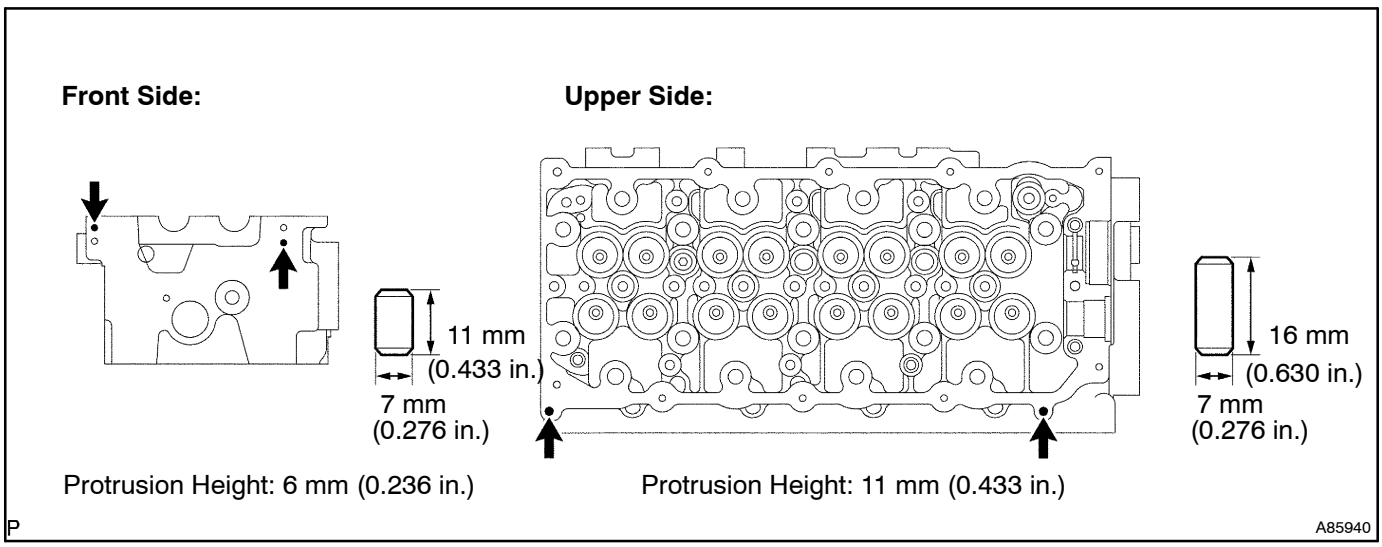

30. INSTALL STUD BOLT

(a) Install the stud bolts as shown in the illustration.

Torque:
8.8 N·m (90 kgf·cm, 78 in.·lbf) for bolt A
12 N·m (120 kgf·cm, 8.7 ft·lbf) for bolt B
28 N·m (286 kgf·cm, 21 ft·lbf) for bolt C
8.8 N·m (90 kgf·cm, 78 in.·lbf) for bolt D
8.8 N·m (90 kgf·cm, 78 in.·lbf) for bolt E

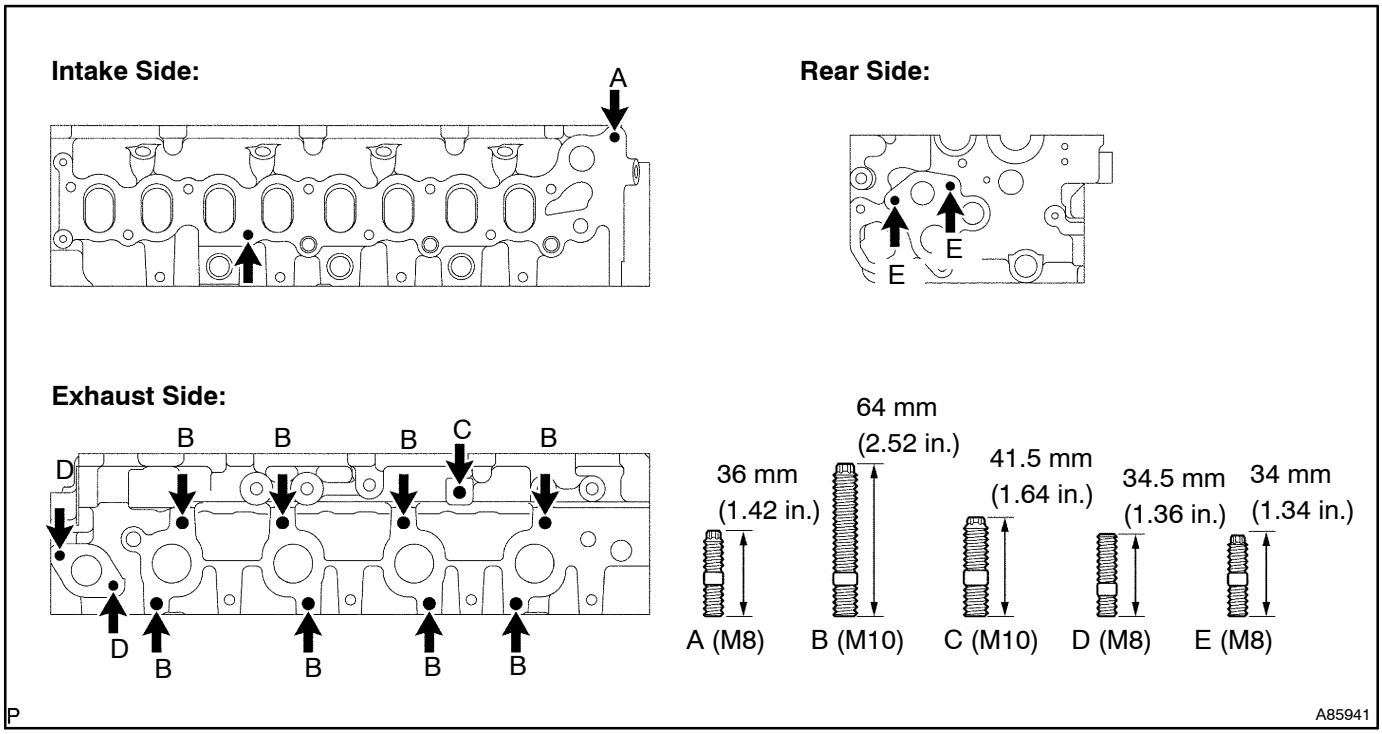

31. INSTALL W/HEAD TAPER SCREW PLUG NO.1

(a) Apply adhesive to the plug ends.
Adhesive: Part No. 08833 – 00070, THREE BOND 1324 or equivalent

(b) Using a hexagon wrench (6 mm), install the 3 plugs.
Torque:25 N·m (255 kgf·cm, 18 ft·lbf)

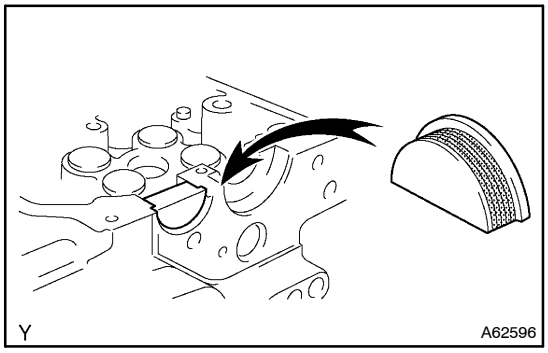

32. INSTALL SEMICIRCULAR PLUG

(a) Apply seal packing to the semicircular plug grooves.
Seal packing: Part No. 08826 – 00080 or equivalent

(b) Install the semicircular plug to the cylinder head.

33. INSTALL VALVE SPRING SEAT PLATE WASHER

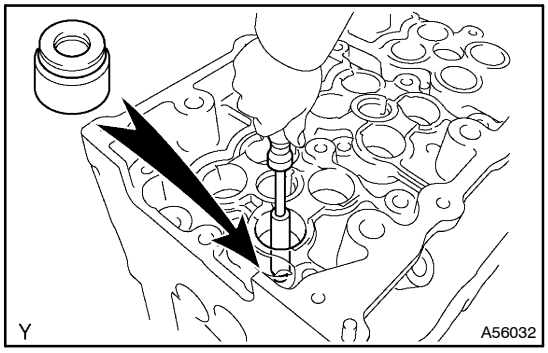

34. INSTALL VALVE STEM OIL O SEAL OR RING

(a) Apply a light coat of engine oil to the valve stem.

(b) Install a new oil seal on the valve guide bushing.

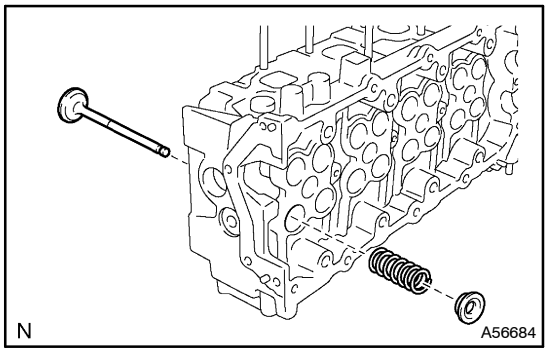

35. INSTALL INTAKE VALVE

(a) Install the valve, valve spring, and spring retainer.

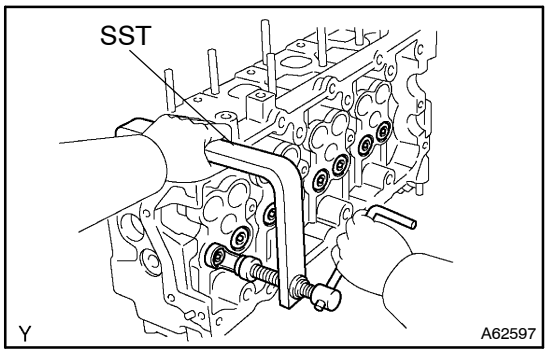

(b) Using SST, compress the valve spring and place the 2 keepers around the valve stem.
SST 09202–70020 (09202–00010)

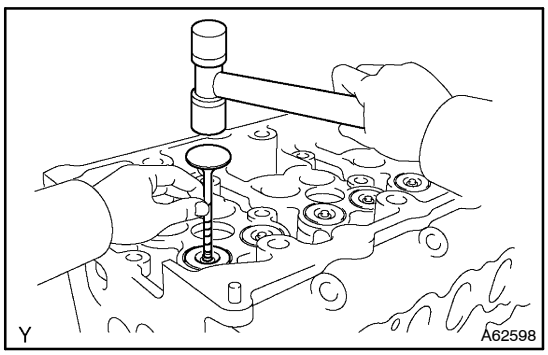

(c) Using a plastic–faced hammer and the valve stem (not in use) with its tip wrapped in vinyl tape, lightly tap the valve stem tip to ensure proper fit.

NOTICE:

Be careful not to damage the valve stem tip.

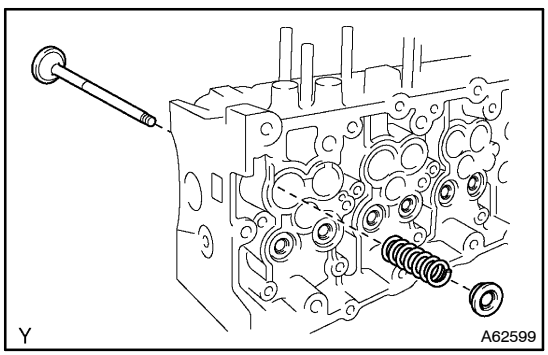

36. INSTALL EXHAUST VALVE

(a) Install the valve, valve spring, and spring retainer.

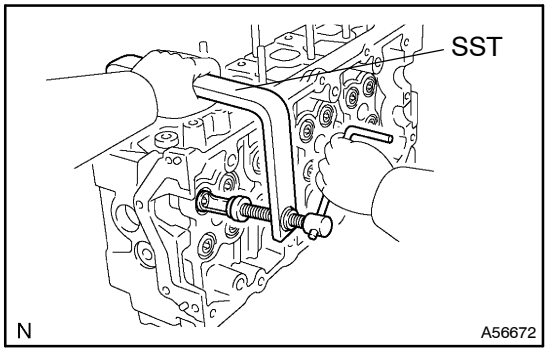

(b) Using SST, compress the valve spring and place the 2 keepers around the valve stem.
SST 09202–70020 (09202–00010)

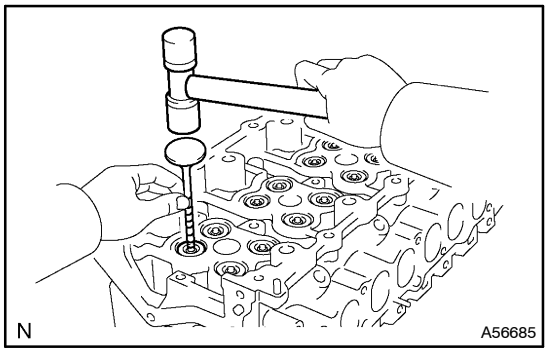

(c) Using a plastic–faced hammer and the valve stem (not in use) with its tip wrapped in vinyl tape, lightly tap the valve stem tip to ensure proper fit.

NOTICE:
Be careful not to damage the valve stem tip.

CYLINDER BLOCK ASSY (1CD–FTV)(From September, 2003)

COMPONENTS

141NT–01

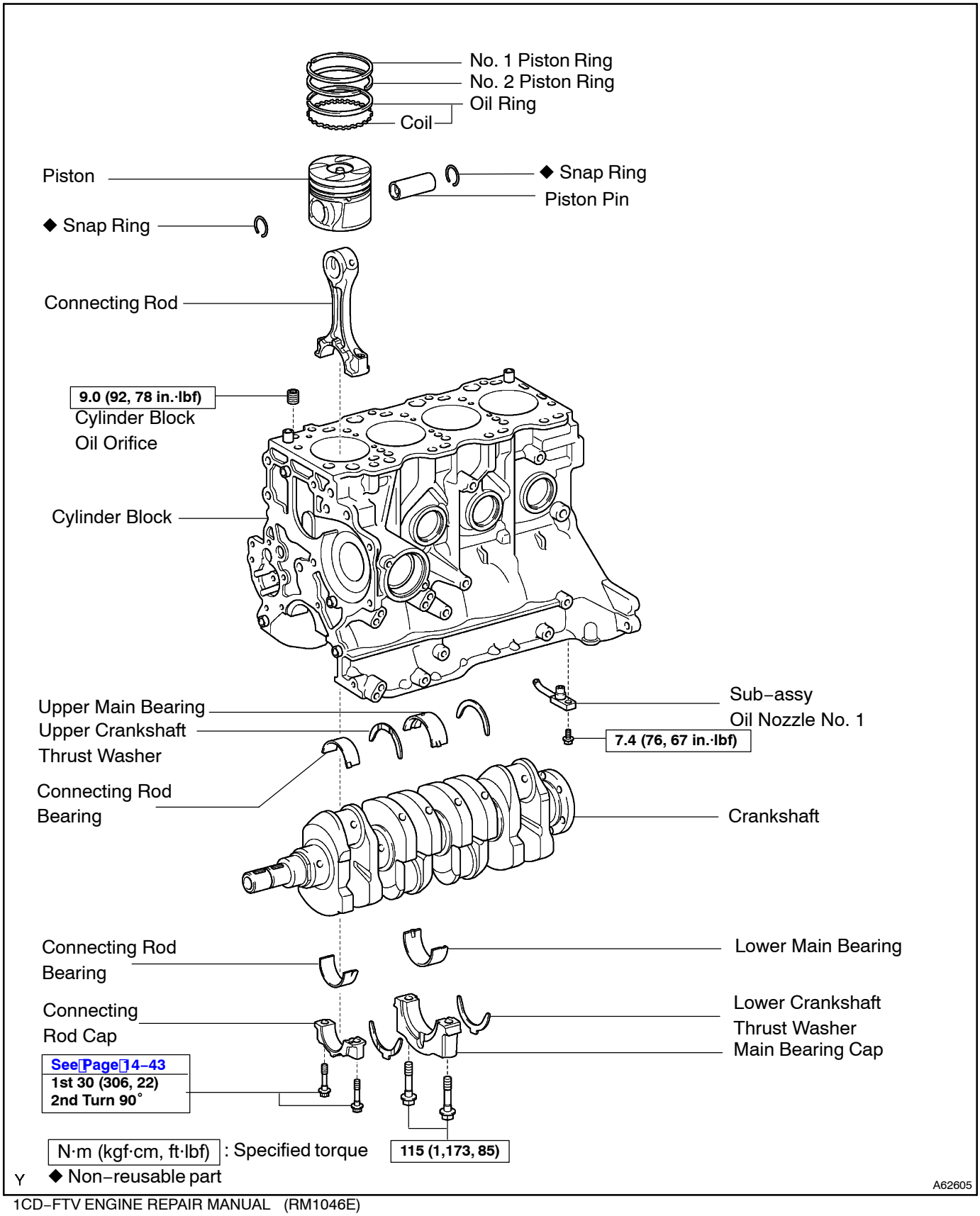

141NU–01

OVERHAUL

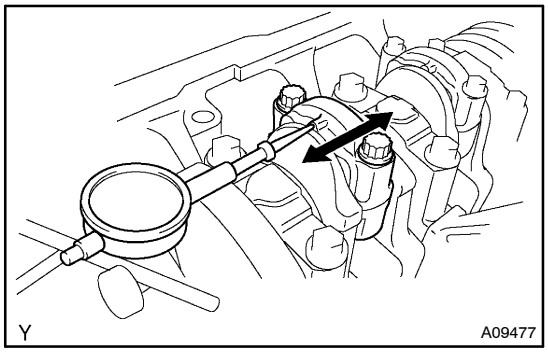

1. INSPECT CONNECTING ROD THRUST CLEARANCE

(a) Using a dial indicator, measure the thrust clearance while moving the connecting rod back and forth.

Standard thrust clearance:
0.08 to 0.40 mm (0.0031 to 0.0157 in.)

If the thrust clearance is greater than maximum, replace the connecting rod assembly(s). If necessary, replace the crankshaft.

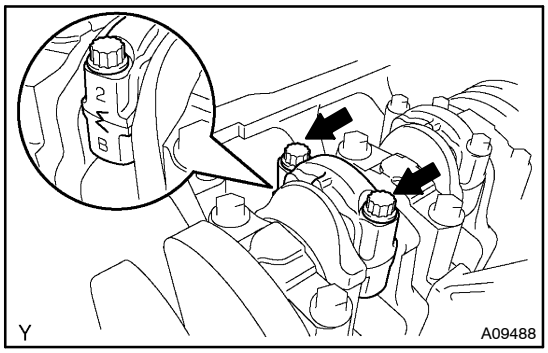

2. INSPECT CONNECTING ROD OIL CLEARANCE

(a) Check the match marks on the connecting rod and cap to ensure correct reassembly.

(b) Remove the 2 connecting rod cap bolts.

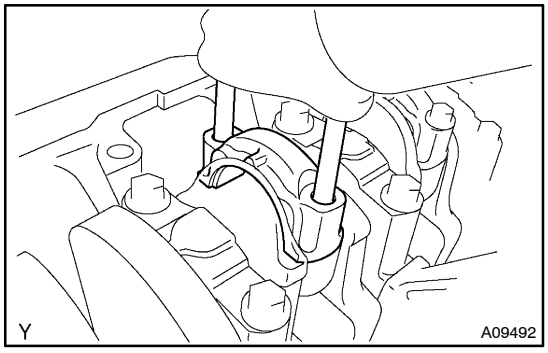

(c) Using the 2 removed connecting rod cap bolts, remove the connecting rod cap and lower bearing by wiggling the connecting rod cap right and left.

HINT:
Keep the lower bearing attached to the connecting rod cap.

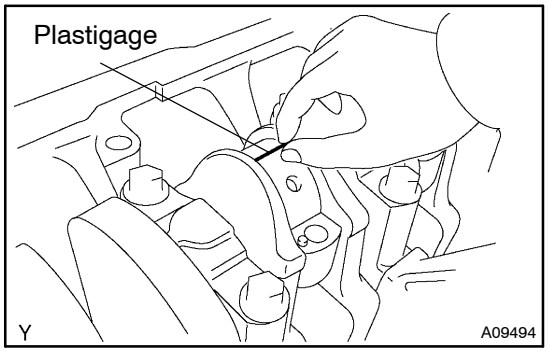

(d) Clean the crank pin and bearing.

(e) Check the crank pin and bearing for pits and scratches.

If the crank pin or bearing is damaged, replace the bearings. If necessary, replace the crankshaft.

(f) Lay a strip of Plastigage across the crank pin.

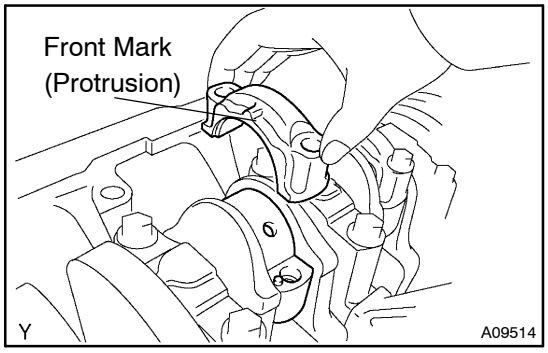

(g) Match the numbered connecting rod cap with the connecting rod.
(h) Install the connecting rod cap with the front mark facing forward.
(i) Apply a light coat of engine oil to the threads and underheads of the connecting rod cap bolts.

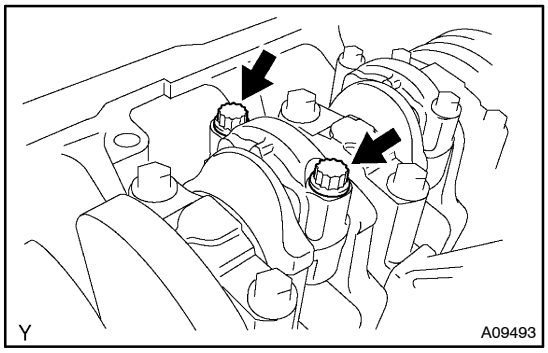

(j) Install and alternately tighten the 2 cap bolts in several steps.
Torque: 30 N·m (306 kgf·cm, 22 ft·lbf)

If any of the cap bolts does not meet the specified torque, replace the connecting rod cap bolts.

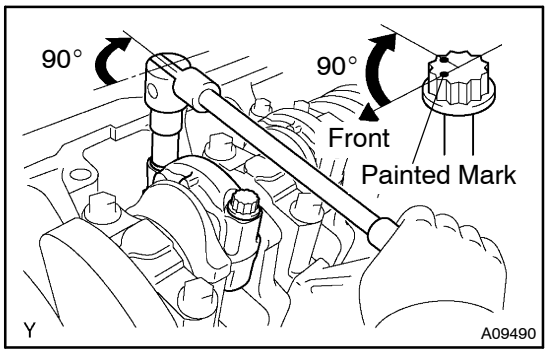

(k) Mark the front of the cap bolt with paint.
(l) Retighten the cap bolts by 90° as illustrated.
(m) Check that the painted mark is now at a 90° angle to the front.

NOTICE:
Do not turn the crankshaft.

(n) Remove the 2 bolts, connecting rod cap and lower bearing.

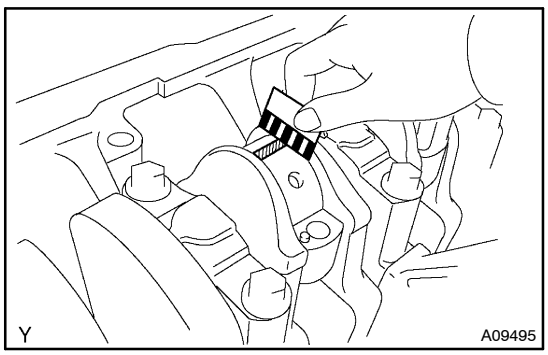

(o) Measure the Plastigage at its widest point.
Standard oil clearance:
0.038 to 0.056 mm (0.0015 to 0.0022 in.)
Maximum oil clearance: 0.10 mm (0.0039 in.)

If the oil clearance is greater than maximum, replace the bearings. If necessary, replace the crankshaft.

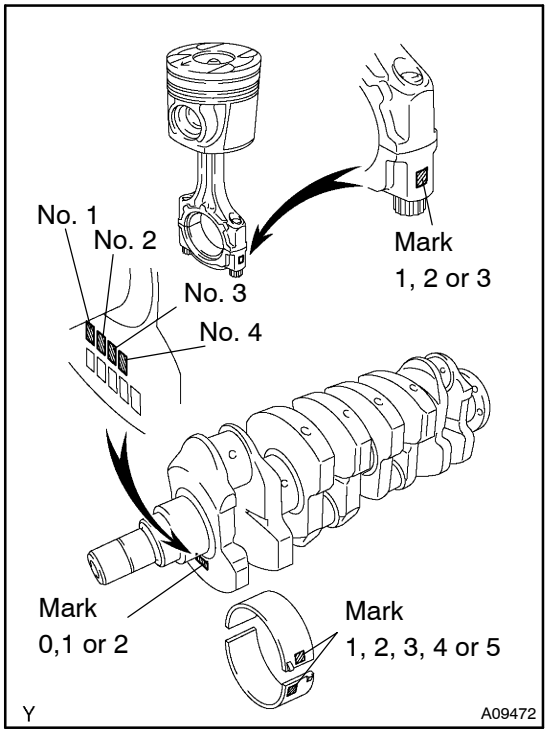

(p) If using the standard bearing, replace it with one having the same number. If the number of the bearing cannot be determined, find the correct number of the bearing by adding together the numbers imprinted on the crankshaft and connecting rod cap, then select the bearing with the same number as the total. There are 5 sizes of standard bearings, marked ”1”, ”2”, ”3”, ”4” and ”5” accordingly.

Connecting Rod Cap	Crankshaft	Use Bearing
1	0	1
1	1	2
1	2	3
2	0	2
2	1	3
2	2	4
3	0	3
3	1	4
3	2	5

HINT:

EXAMPLE: Connecting rod cap ”2” + Crankshaft ”1”
= Total number 3 (Use bearing ”3”)

Connecting rod big end inside diameter:

Mark ”1”	53.500 to 53.506 mm (2.1063 to 2.1065 in.)
Mark ”2”	53.506 to 53.512 mm (2.1065 to 2.1068 in.)
Mark ”3”	53.512 to 53.518 mm (2.1068 to 2.1070 in.)

Crankshaft crank pin diameter:

Mark ”0”	50.494 to 50.500 mm (1.9880 to 1.9882 in.)
Mark ”1”	50.488 to 50.494 mm (1.9877 to 1.9880 in.)
Mark ”2”	50.482 to 50.488 mm (1.9875 to 1.9877 in.)

Standard size bearing center wall thickness:

Mark ”1”	1.478 to 1.481 mm (0.0582 to 0.0583 in.)
Mark ”2”	1.481 to 1.484 mm (0.0583 to 0.0584 in.)
Mark ”3”	1.484 to 1.487 mm (0.0584 to 0.0585 in.)
Mark ”4”	1.487 to 1.490 mm (0.0585 to 0.0587 in.)
Mark ”5”	1.490 to 1.493 mm (0.0587 to 0.0588 in.)

(q) Completely remove the Plastigage.

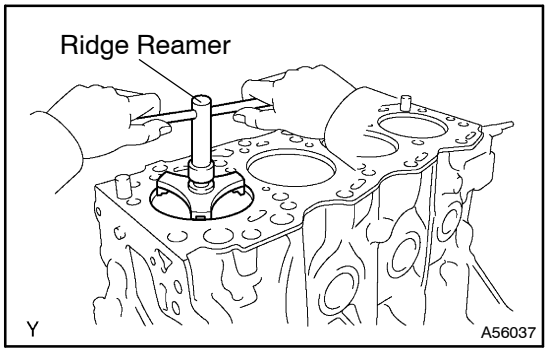

3. REMOVE PISTON SUB–ASSY W/CONNECTING ROD

(a) Using a ridge reamer, remove all the carbon from the top of the cylinder.

(b) Push the piston, connecting rod assembly and upper bearing through the top of the cylinder block.

HINT:

- Keep the bearing, connecting rod and cap together.
- Arrange the piston and connecting rod assemblies in the correct order.

4. REMOVE CONNECTING ROD BEARING

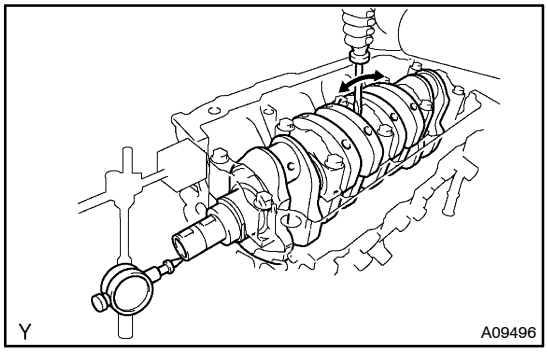

5. INSPECT CRANKSHAFT THRUST CLEARANCE

(a) Using a dial indicator, measure the thrust clearance while prying the crankshaft back and forth with a screwdriver.

Standard thrust clearance:

0.040 to 0.300 mm (0.0016 to 0.0118 in.)

If the thrust clearance is greater than maximum, replace the thrust washer as a set.

Thrust washer thickness:

Standard	2.680 to 2.730 mm (0.1055 to 0.1075 in.)
Oversize 0.125	2.743 to 2.793 mm (0.1080 to 0.1100 in.)
Oversize 0.250	2.805 to 2.855 mm (0.1104 to 0.1124 in.)

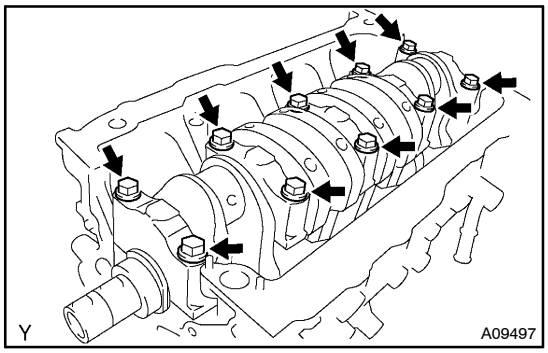

6. REMOVE CRANKSHAFT

(a) Uniformly loosen and remove the 10 main bearing cap bolts.

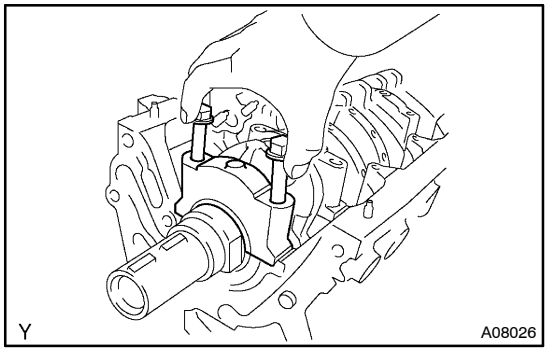

(b) Using the removed main bearing cap bolts, wiggle the cap back and forth, then remove the 5 main bearing caps, 5 lower bearings and 2 lower thrust washers (the No. 3 main bearing cap only).

HINT:

- Keep the lower bearing and main bearing cap together.
- Arrange the main bearing caps and lower thrust washers in the correct order.

(c) Lift the crankshaft out.

HINT:

Keep the upper bearing and upper thrust washers together with the cylinder block.

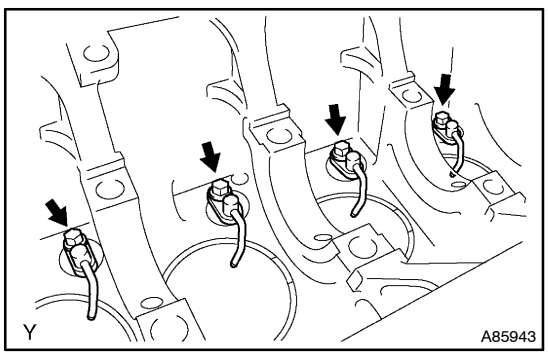

7. REMOVE SUB–ASSY OIL NOZZLE NO.1

(a) Remove the 4 bolts and 4 oil nozzles.

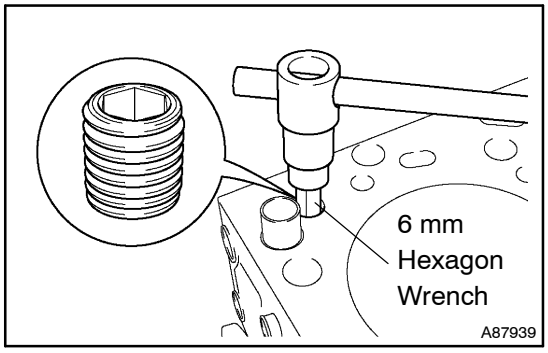

8. REMOVE CYLINDER BLOCK OIL ORIFICE

(a) Using a hexagon wrench (6 mm), remove the oil orifice.

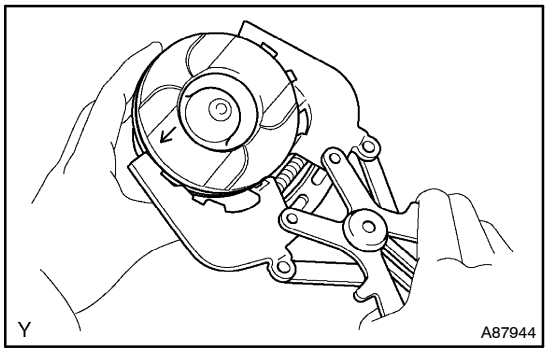

9. REMOVE PISTON RING SET

(a) Using a piston ring expander, remove the No. 1 and No. 2 piston ring and oil ring.

NOTICE:

Try to keep the piston ring expansion as small as possible.

(b) Remove the coil by hand.

HINT:

Arrange the piston rings in the correct order.

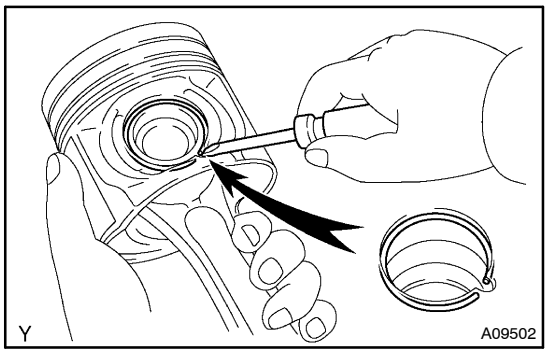

10. REMOVE W/PIN PISTON SUB–ASSY

(a) Using a small screwdriver, pry the snap rings off the piston.

(b) Gradually heat the piston up to approximately 60°C (140°F).

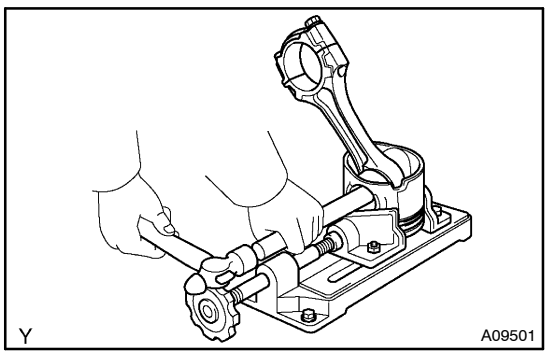

(c) Using a plastic–faced hammer and brass bar, lightly tap out the piston pin and remove the connecting rod.

HINT:

- The piston and pin are a matched set.
- Arrange the pistons, pins, rings, connecting rods and bearings in the correct order.

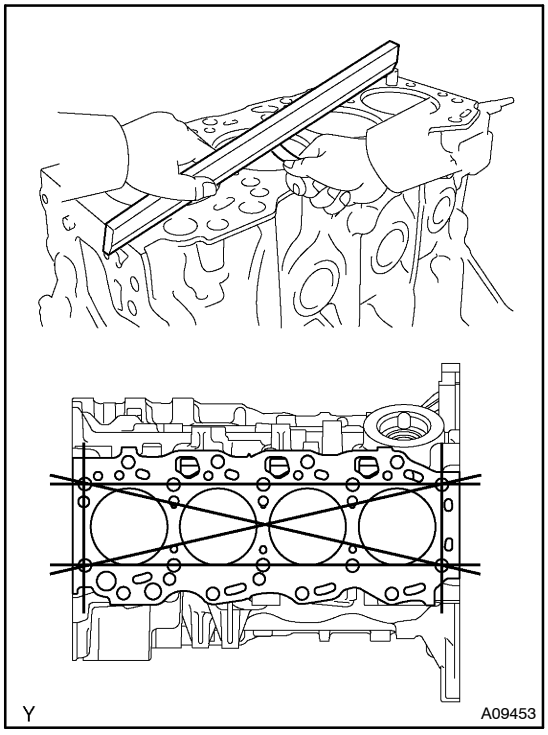

11. INSPECT CYLINDER BLOCK FOR FLATNESS

(a) Using a precision straight edge and feeler gauge, measure the warpage on the surface which contacts the cylinder head gasket.

Maximum warpage: 0.05 mm (0.0020 in.)

If the warpage is greater than maximum, replace the cylinder block.

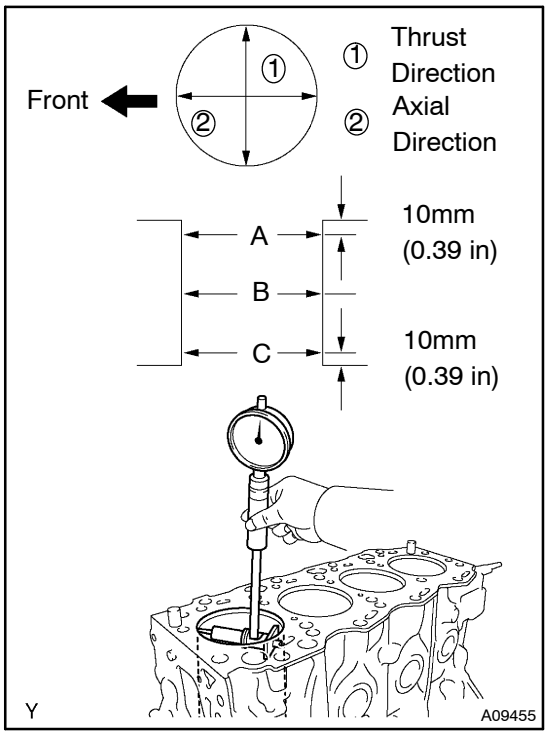

12. INSPECT CYLINDER BORE DIAMETER

(a) Using a cylinder gauge, measure the cylinder bore diameter at positions A, B and C in the thrust and axial directions.

Standard diameter:

82.200 to 82.400 mm (3.2362 to 3.2441 in.)

If the diameter is greater than maximum, replace the cylinder block.

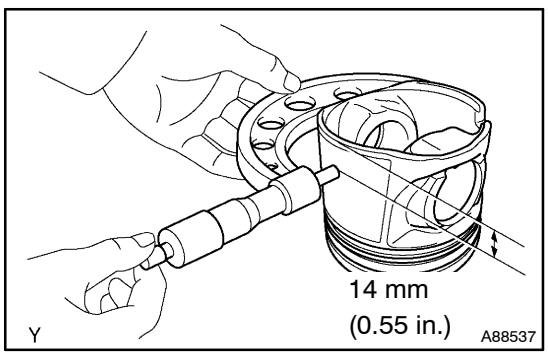

13. INSPECT W/PIN PISTON SUB–ASSY

(a) Using a micrometer, measure the piston diameter at a right angle to the piston pin center line and 14 mm (0.55 in.) from the skirt bottom edge.

Piston diameter:

82.118 to 82.132 mm (3.2330 to 3.2335 in.)

(b) Subtract the piston diameter measurement from the cylinder bore diameter measurement.
Standard oil clearance:
0.068 to 0.140 mm (0.0027 to 0.0055 in.)

If the oil clearance is greater than maximum, replace all the 4 pistons. If necessary, replace the cylinder block.

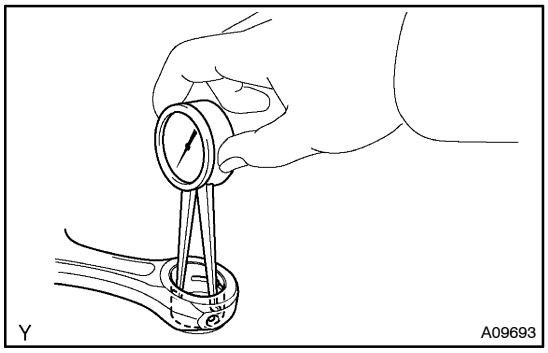

(c) Using a caliper gauge, measure the inside diameter of the connecting rod bushing.
Bushing inside diameter:
31.015 to 31.027 mm (1.2211 to 1.2215 in.)

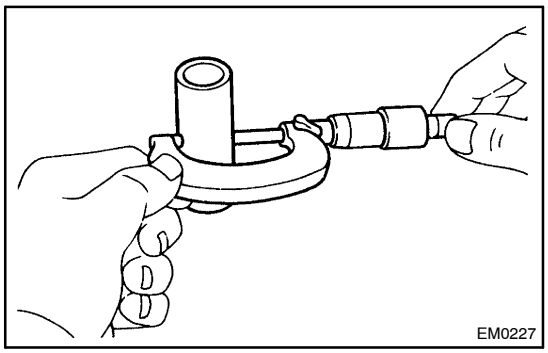

(d) Using a micrometer, measure the piston pin diameter.
Piston pin diameter:
31.000 to 31.012 mm (1.2205 to 1.2209 in.)

(e) Subtract the piston pin diameter measurement from the bushing inside diameter measurement.
Standard oil clearance:
0.005 to 0.019 mm (0.0002 to 0.0007 in.)

If the oil clearance is greater than maximum, replace the connecting rod. If necessary, replace the piston and piston pin as a set.

14. INSPECT CONNECTING ROD SUB–ASSY

(a) Using a rod aligner and feeler gauge, check the connecting rod alignment.

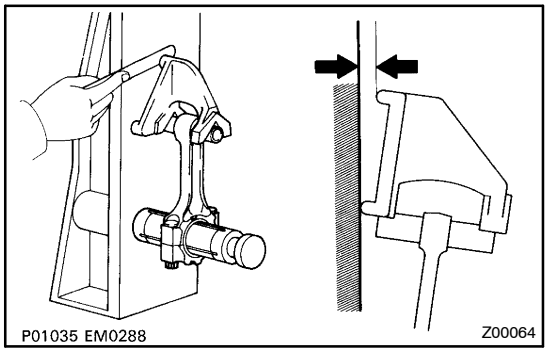

(1) Inspect the misalignment.
Maximum misalignment:
0.05 mm (0.0020 in.) per 100 mm (3.94 in.)

If the alignment is greater than maximum, replace the connecting rod assembly.

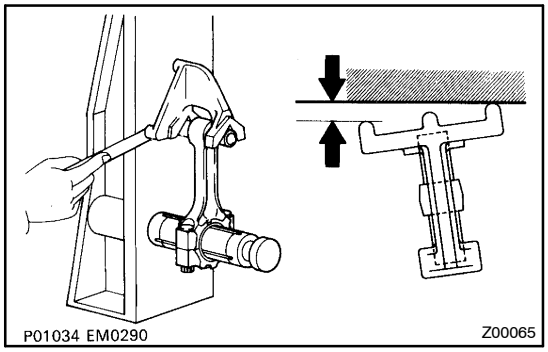

(2) Inspect the twist.

Maximum twist:

0.15 mm (0.0059 in.) per 100 mm (3.94 in.)

If the twist is greater than maximum, replace the connecting rod assembly.

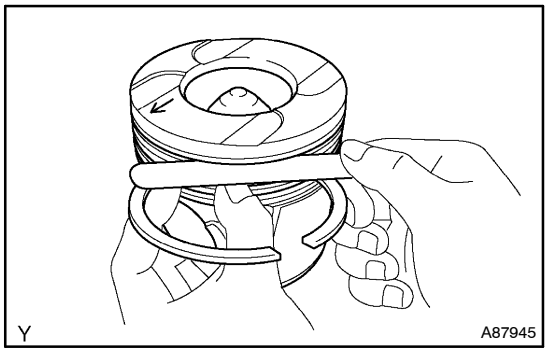

15. INSPECT RING GROOVE CLEARANCE

(a) Using a feeler gauge, measure the clearance between a new piston ring and wall of the ring groove.

Ring groove clearance:

No. 1	0.11 to 0.15 mm (0.0043 to 0.0059 in.)
No. 2	0.075 to 0.115 mm (0.0030 to 0.0045 in.)
Oil	0.03 to 0.07 mm (0.0012 to 0.0028 in.)

If the clearance is not as specified, replace the piston.

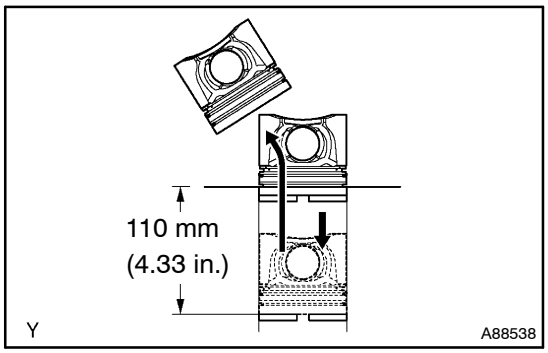

16. INSPECT PISTON RING END GAP

(a) Using a piston, push the piston ring until it is a little below the bottom of the ring travel, 110 mm (4.33 in.) from the top of the cylinder block.

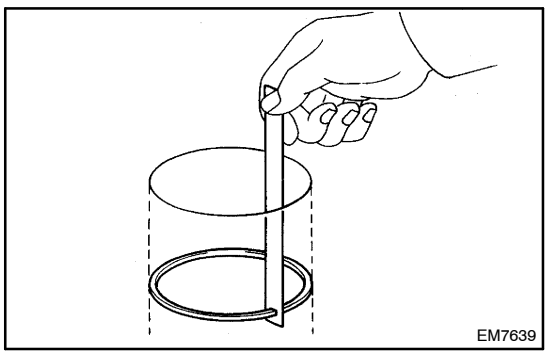

(b) Using a feeler gauge, measure the end gap.

Standard end gap:

No. 1	0.27 to 0.39 mm (0.0106 to 0.0514 in.)
No. 2	0.39 to 0.54 mm (0.0154 to 0.0213 in.)
Oil	0.20 to 0.40 mm (0.0079 to 0.0157 in.)

Maximum end gap:

No. 1	0.82 mm (0.0323 in.)
No. 2	1.00 mm (0.0394 in.)
Oil	0.90 mm (0.0354 in.)

If the end gap is greater than maximum, replace the piston ring.
If the end gap is greater than maximum, even with a new piston ring, replace the cylinder block.

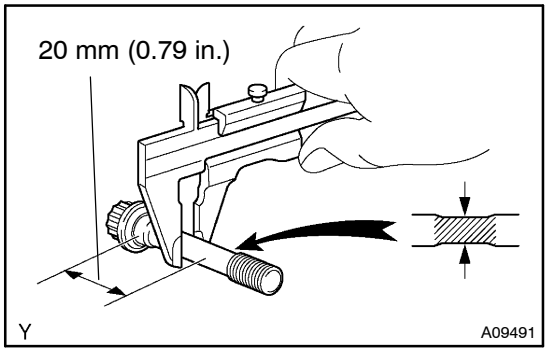

17. INSPECT CONNECTING ROD BOLT

(a) Using vernier calipers, measure the tension portion diameter.

Standard diameter:
8.0 to 8.3 mm (0.315 to 0.327 in.)

If the diameter is less than minimum, replace the connecting rod bolt.

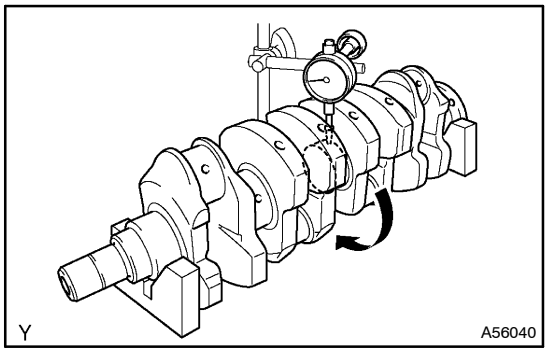

18. INSPECT CRANKSHAFT

(a) Place the crankshaft on V–blocks.

(b) Using a dial indicator, measure the circle runout at the center journal.

Maximum circle runout: 0.025 mm (0.0010 in.)

If the circle runout is greater than maximum, replace the crankshaft.

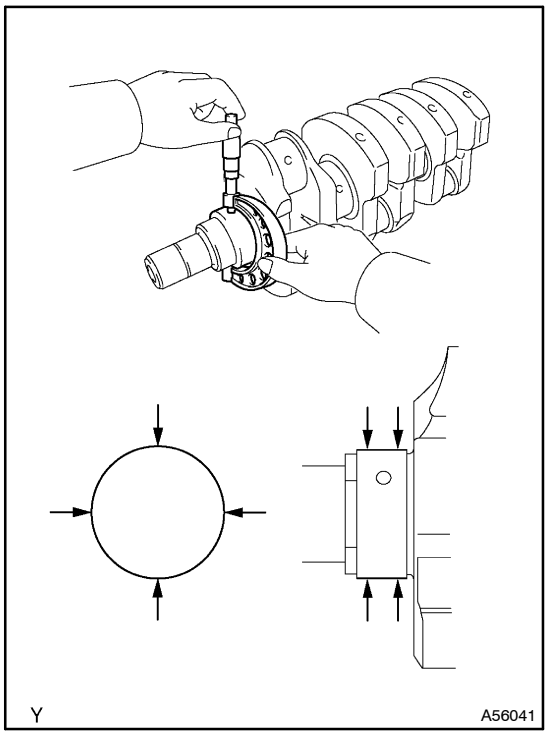

(c) Using a micrometer, measure the diameter of each main journal and crank pin.

Main journal diameter:
56.992 to 57.010 mm (2.2438 to 2.2445 in.)
Crank pin diameter:
50.482 to 50.500 mm (1.9875 to 1.9882 in.)

If the diameter is not as specified, replace the crankshaft.

(d) Check each main journal and crank pin for taper and out–of–round as illustrated.

Maximum taper and out–of–round:
0.01 mm (0.0004 in.)

If the taper and out–of–round is greater than maximum, replace the crankshaft.

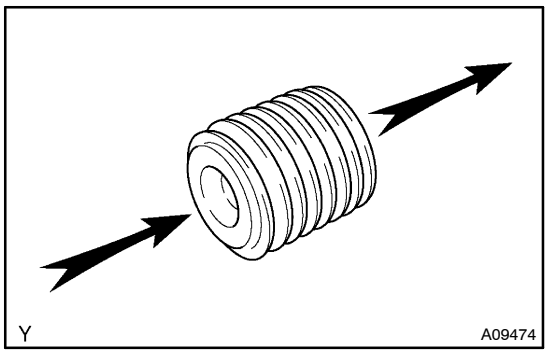

19. INSPECT CYLINDER BLOCK OIL ORIFICE

(a) Check the oil orifice for clogging.

If necessary, replace the oil orifice.

20. INSPECT CRANKSHAFT OIL CLEARANCE

(a) Clean each main journal and bearing.

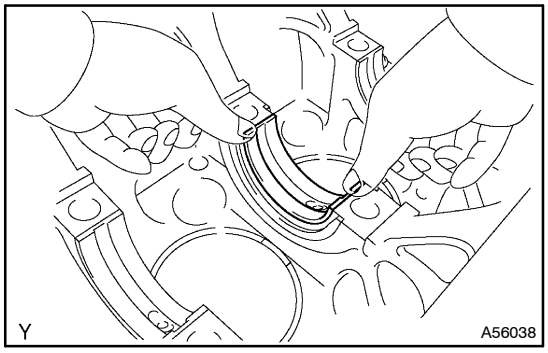

(b) Install the bearing on the cylinder block and bearing cap.
HINT:
Each upper bearing has an oil groove and oil hole and each lower bearing does not.

(1) Align the bearing claw with the claw groove of the cylinder clock, then push in the 5 upper bearings.

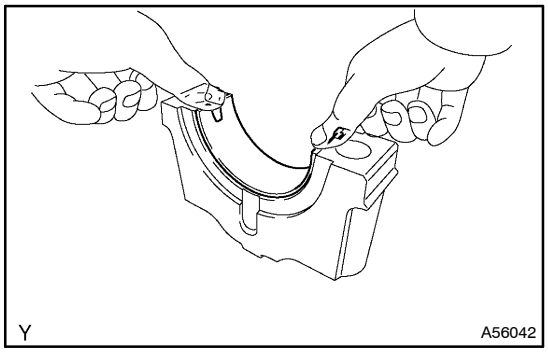

(2) Align the bearing claw with the claw groove of the main bearing cap, then push in the 5 lower bearings.

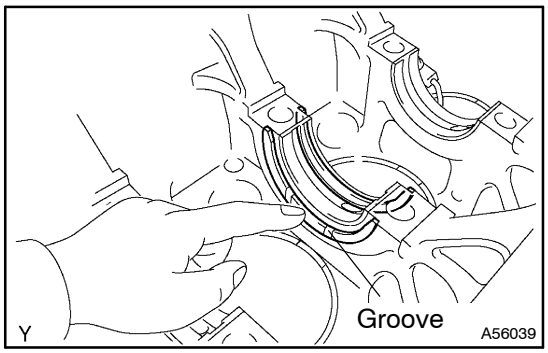

(c) Install the 2 thrust washers under the No. 3 journal position of the cylinder block with the oil grooves facing outward.

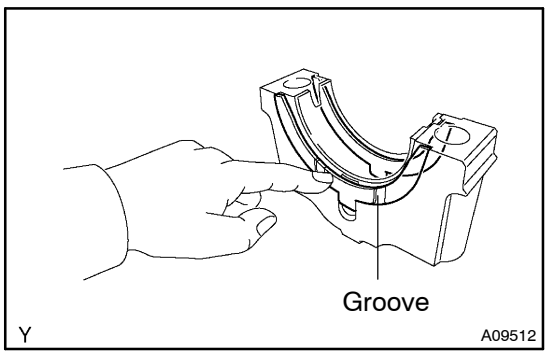

(d) Install the 2 thrust washers on the No. 3 bearing cap with the oil grooves facing outward.

(e) Place the crankshaft on the cylinder block.

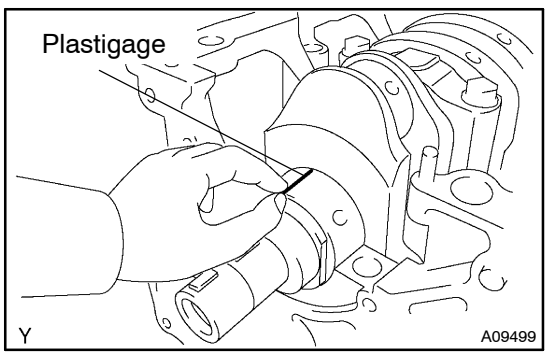

(f) Lay a strip of Plastigage across each journal.

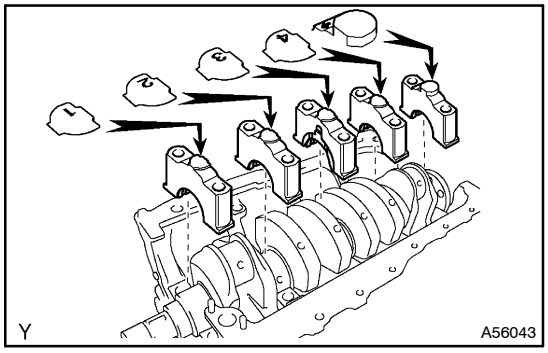

(g) Install the 5 main bearing caps in their proper locations.

HINT:

Each bearing cap has a number and front mark.

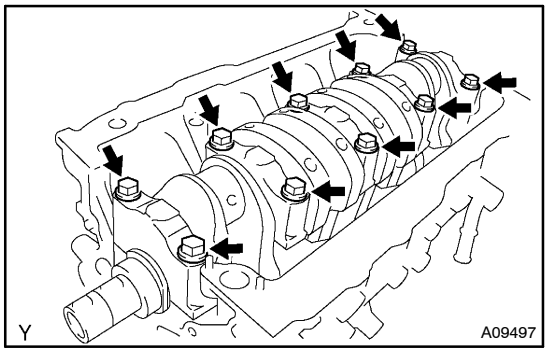

(h) Apply a light coat of engine oil to the threads and under the heads of the main bearing cap bolts.

(i) Install and uniformly tighten the 10 bolts of the main bearing cap in several steps.

Torque: 115 N·m (1,173 kgf·cm, 85 ft·lbf)

NOTICE:

Do not turn the crankshaft.

(j) Remove the bearing cap.

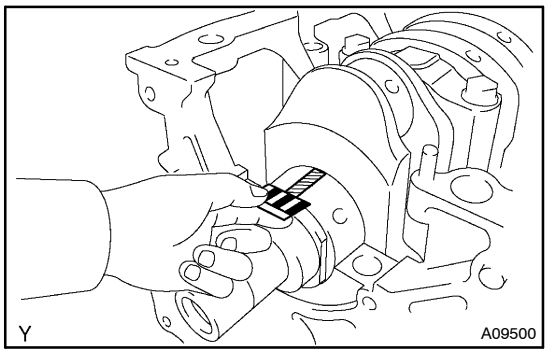

(k) Measure the Plastigage at its widest point.

Standard oil clearance:

0.032 to 0.100 mm (0.0013 to 0.0039 in.)

If the oil clearance is greater than maximum, replace the bearing. If necessary, replace the crankshaft.

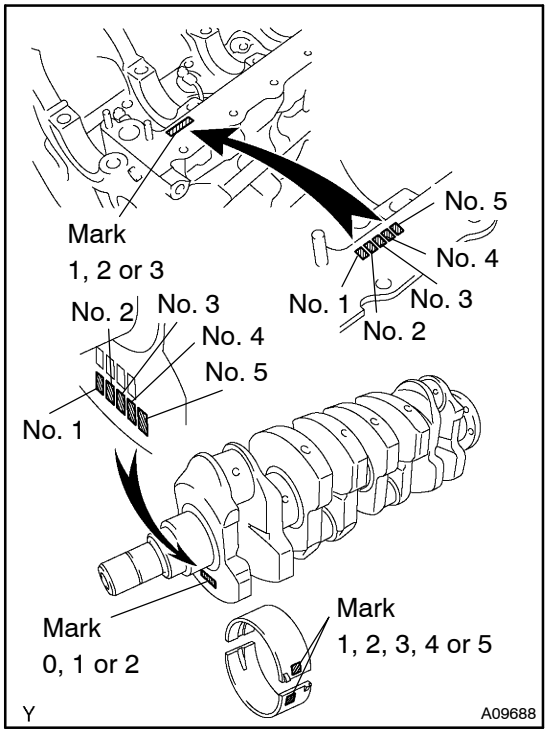

(l) If using the standard bearing, replace it with one having the same number. If the number of the bearing cannot be determined, find the correct number of the bearing by adding together the numbers imprinted on the cylinder block and crankshaft, then select the bearing with the same number as the total. There are 5 sizes of standard bearings, marked "1", "2", "3", "4" and "5" accordingly.

Number Marked

Cylinder Block	Crankshaft	Use Bearing
1	0	1
1	1	2
1	2	3
2	0	2
2	1	3
2	2	4
3	0	3
3	1	4
3	2	5

HINT:

EXAMPLE

Cylinder block "2" + Crankshaft "1" = Total number 3 (Use bearing "3")

Cylinder block main journal bore diameter:

Mark "1"	61.000 to 61.006 mm (2.4016 to 2.4018 in.)
Mark "2"	61.006 to 61.012 mm (2.4018 to 2.4020 in.)
Mark "3"	61.012 to 61.018 mm (2.4020 to 2.4023 in.)

Crankshaft main journal diameter:

Mark "0"	57.004 to 57.010 mm (2.2443 to 2.2445 in.)
Mark "1"	56.998 to 57.004 mm (2.2440 to 2.2443 in.)
Mark "2"	56.992 to 56.998 mm (2.2438 to 2.2440 in.)

Standard size bearing center wall thickness:

Mark "1"	1.976 to 1.979 mm (0.0778 to 0.0779 in.)
Mark "2"	1.979 to 1.982 mm (0.0779 to 0.0780 in.)
Mark "3"	1.982 to 1.985 mm (0.0780 to 0.0781 in.)
Mark "4"	1.985 to 1.988 mm (0.0781 to 0.0783 in.)
Mark "5"	1.988 to 1.991 mm (0.0783 to 0.0784 in.)

(m) Completely remove the Plastigage.

21. INSTALL TIGHT PLUG

(a) Apply adhesive around new tight plugs.
Adhesive: Part No.08833 – 00070, THREE BOND 1324 or equivalent.

(b) Using SST, tap in the tight plugs as shown tn the illustration.
SST 09950–60010 (09951–00350), 09950–70010 (09951–07100)
Standard depth:
2.0 mm (0.079 in.) for intake side
2.0 mm (0.079 in.) for exhaust side
1.5 mm (0.059 in.) for front side
1.5 mm (0.059 in.) for rear side A
2.0 mm (0.079 in.) for rear side B

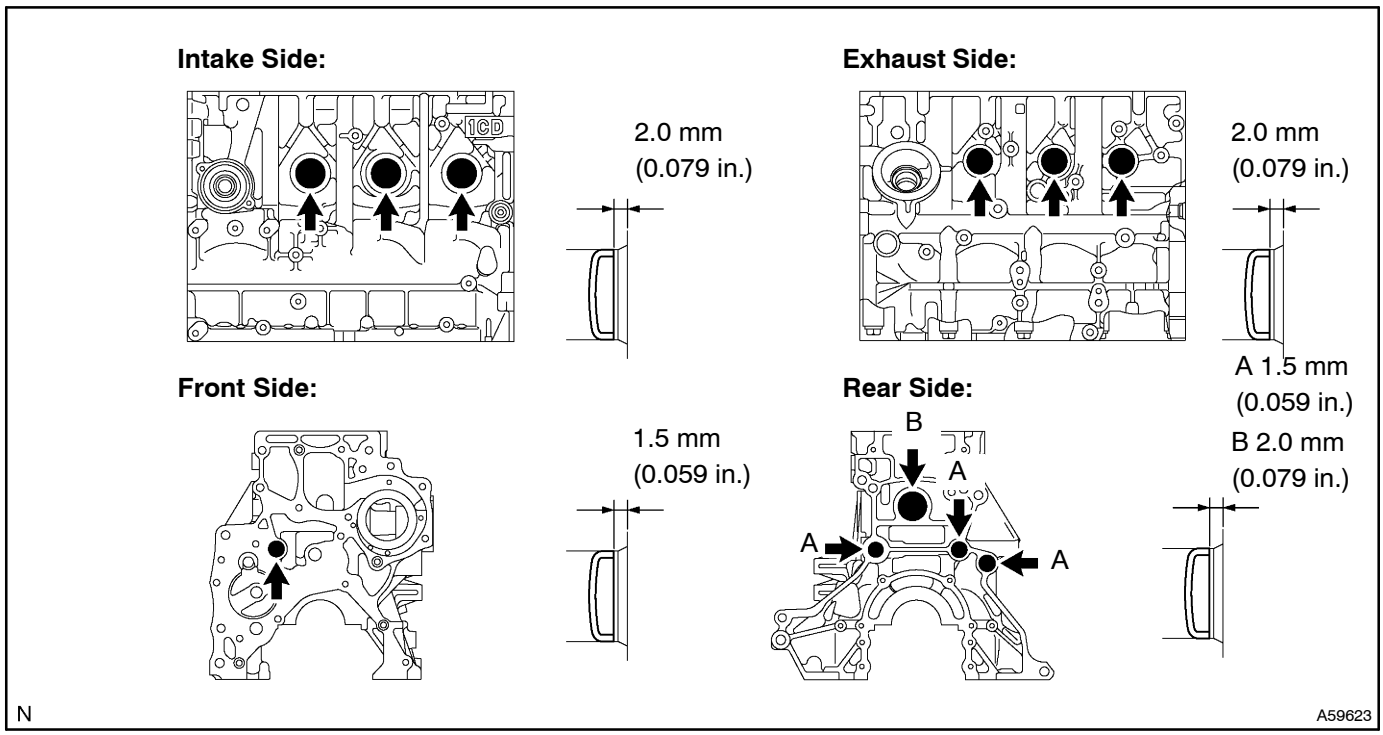

22. INSTALL RING PIN

(a) Using a plastic–faced hammer, tap in new ring pins until their protrusion heights are as specified.

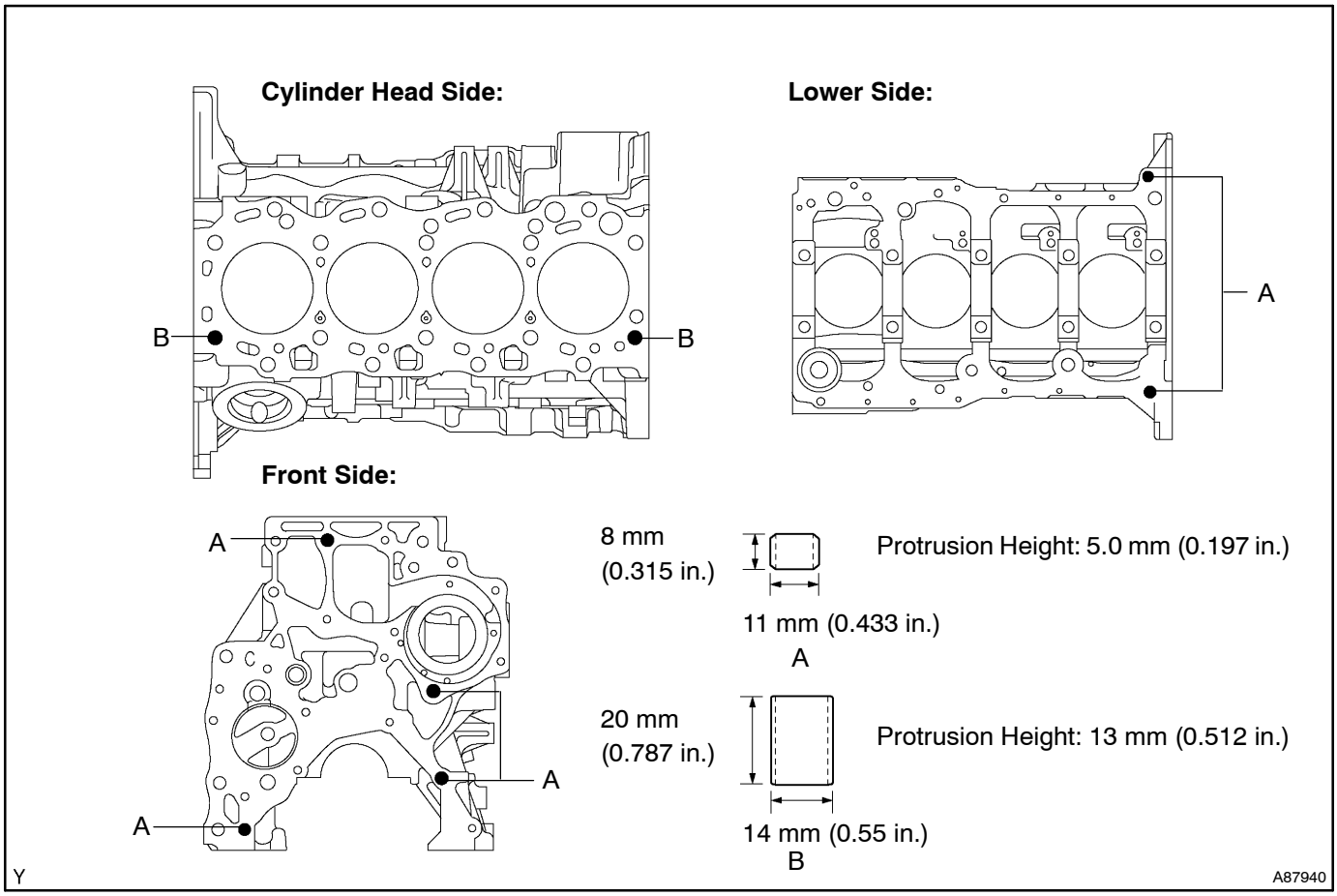

23. INSTALL STRAIGHT PIN

(a) Using a plastic–faced hammer, tap in new straight pins.
Standard protrusion:
13 mm (0.5118 in.) for straight pin A
4.0 mm (0.1575 in.) for straight pin B
5.0 mm (0.1968 in.) for straight pin C

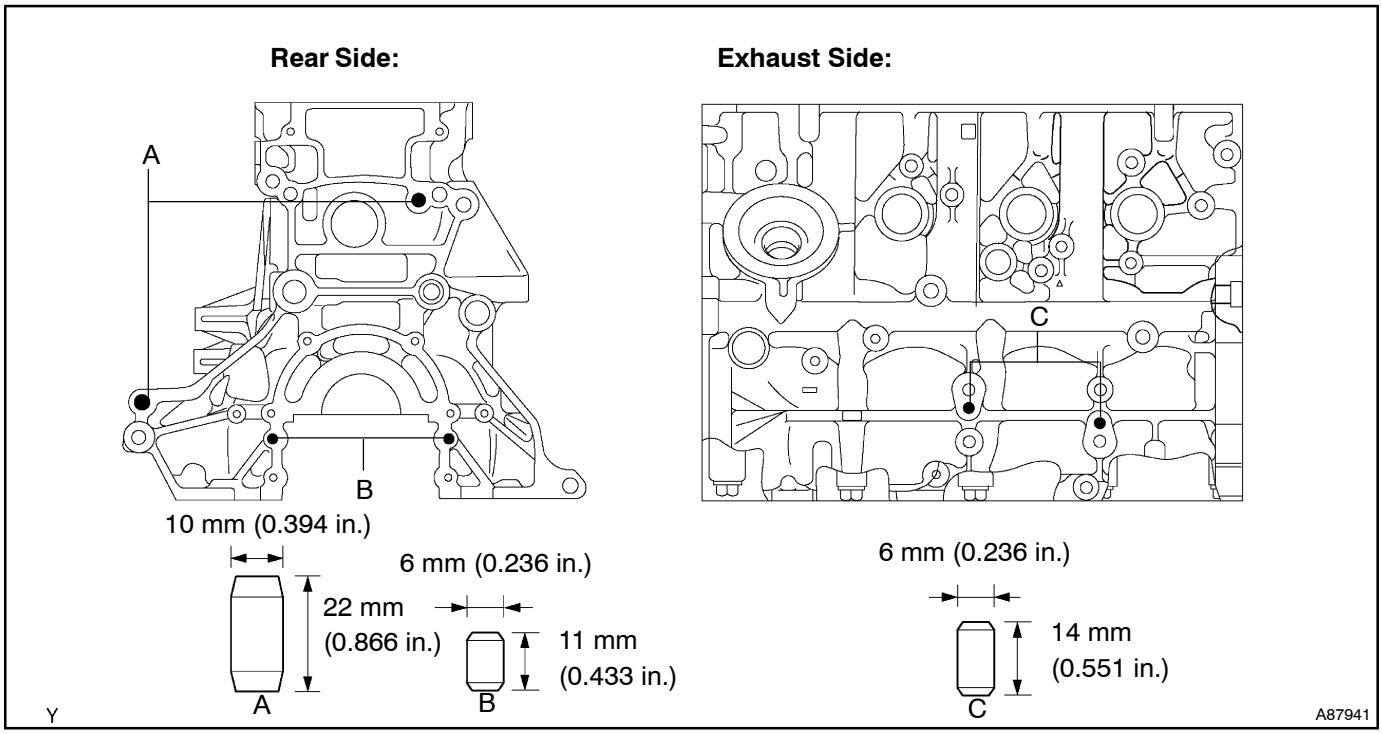

24. INSTALL STUD BOLT

(a) Install the stud bolts as shown in the illustration.
Torque: 2.9 N·m (30 kgf·cm, 27 in.·lbf)

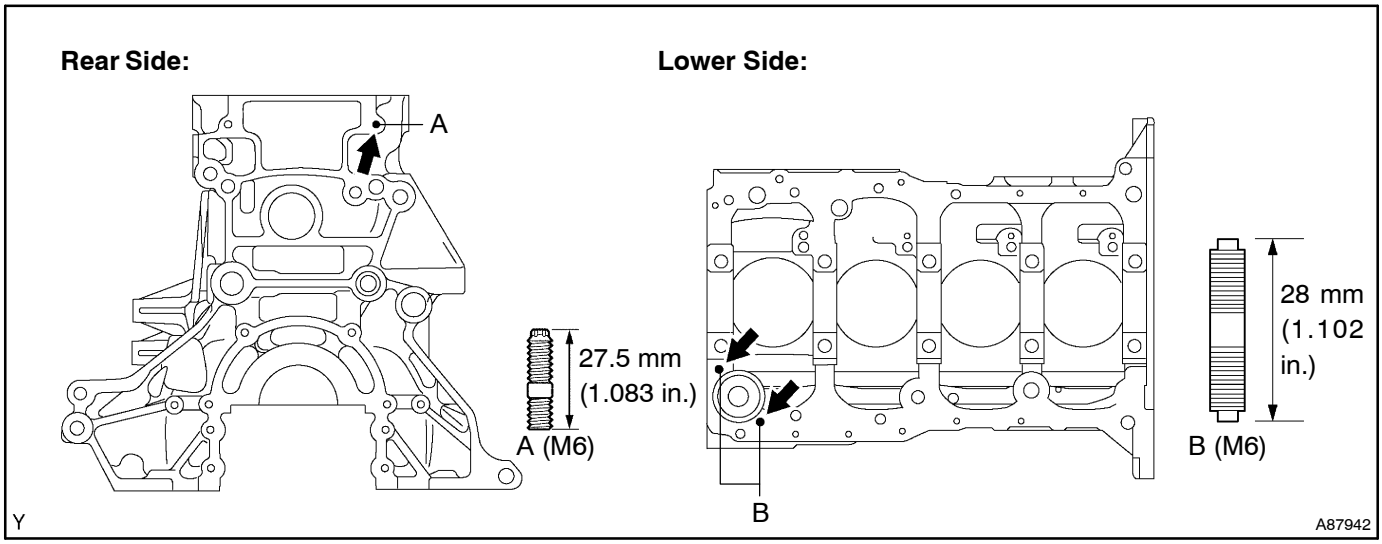

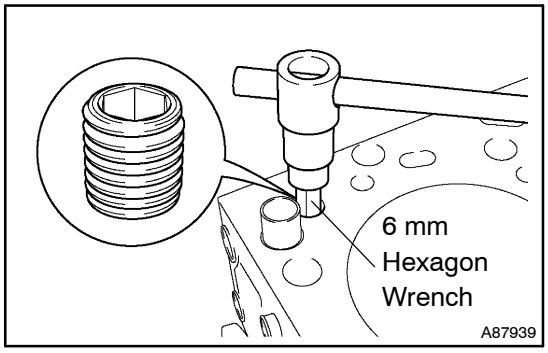

25. INSTALL CYLINDER BLOCK OIL ORIFICE

(a) Using a hexagon wrench (6 mm), install the oil orifice.
Torque: 9.0 N·m (92 kgf·cm, 80 in.·lbf)

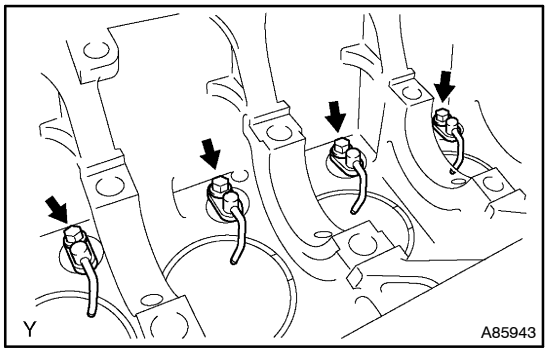

26. INSTALL SUB–ASSY OIL NOZZLE NO.1

(a) Install the 4 oil nozzles with the 4 bolts.
Torque: 7.4 N·m (75 kgf·cm, 65 in.·lbf)

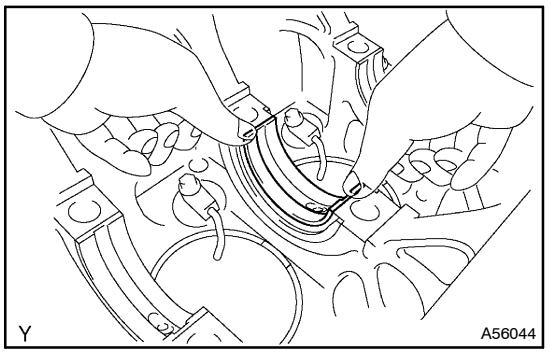

27. INSTALL CRANKSHAFT

(a) Install the bearing on the cylinder block and bearing cap.

HINT:

Each upper bearing has an oil groove and oil hole and each lower bearing does not.

(1) Align the bearing claw with the claw groove of the cylinder block, then push in the 5 upper bearings.

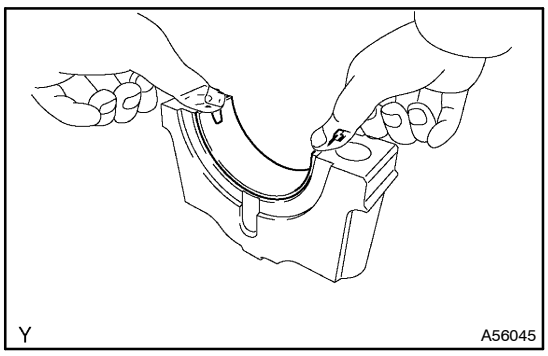

(2) Align the bearing claw with the claw groove of the main bearing cap, then push in the 5 lower bearings.

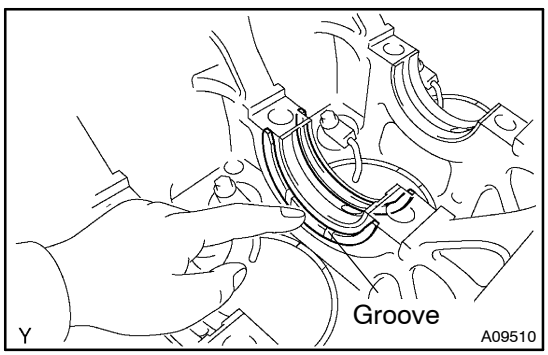

(b) Install the 2 thrust washers under the No. 3 journal position of the cylinder block with the oil grooves facing outward.

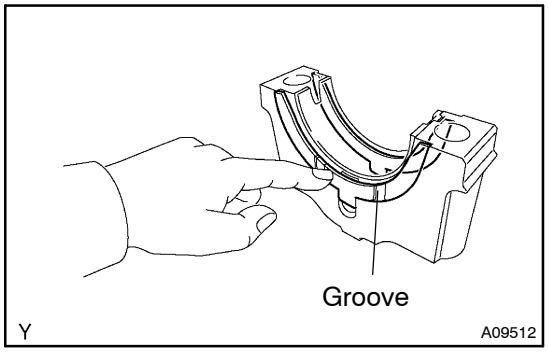

(c) Install the 2 thrust washers on the No. 3 bearing cap with the oil grooves facing outward.

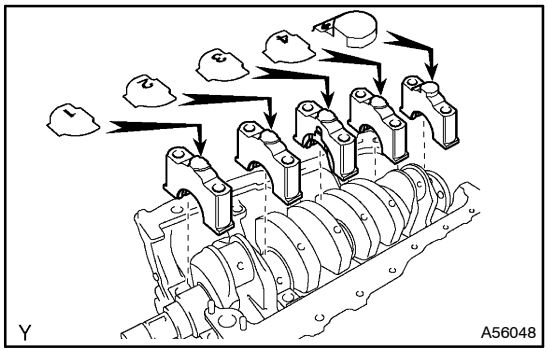

(d) Install the 5 main bearing caps in their proper locations.

HINT:

Each bearing cap has a number and font mark.

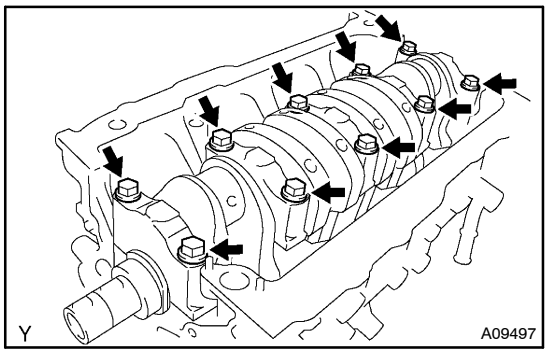

(e) Apply a light coat of engine oil to the threads and underheads of the main bearing cap bolts.

(f) Install and uniformly tighten the 10 bolts of the main bearing cap in several steps.

Torque: 115 N·m (1,173 kgf·cm, 85 ft·lbf)

(g) Check that the crankshaft turns smoothly.

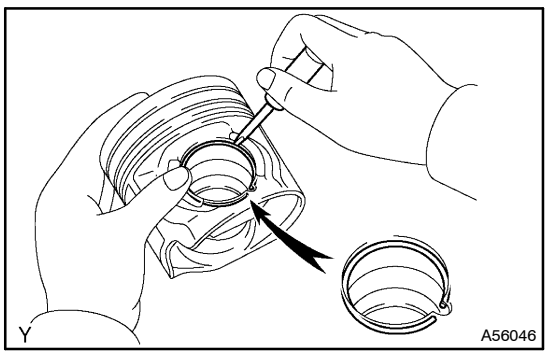

28. INSTALL W/PIN PISTON SUB–ASSY

(a) Install a new snap ring on one side of the piston pin hole.

(b) Gradually heat the piston up to approximately 60°C (140°F).

(c) Coat the piston pin and piston hole of the piston with engine oil.

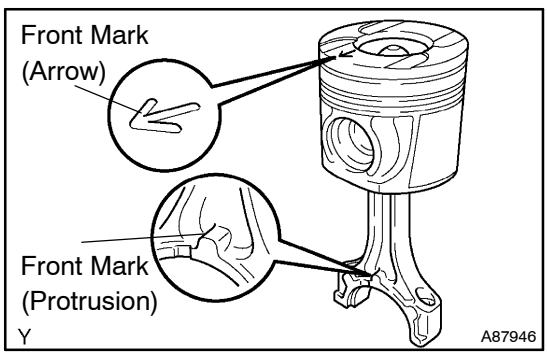

(d) Align the front marks of the piston and connecting rod, then push in the piston pin by hand.

(e) Install a new snap ring on the other side of the piston pin hole.

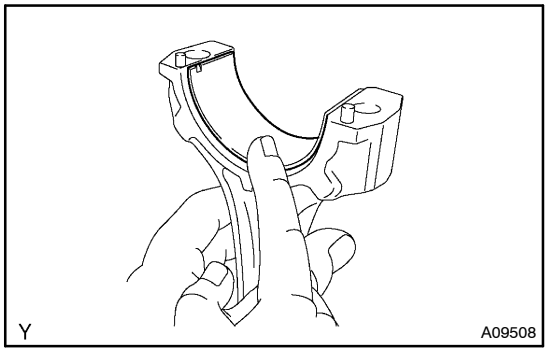

29. INSTALL CONNECTING ROD BEARING

(a) Align the bearing claw with the groove of the connecting rod or connecting cap.

(b) Install the bearings in the connecting rod and connecting rod cap.

30. INSTALL PISTON RING SET

(a) Install the coil by hand.

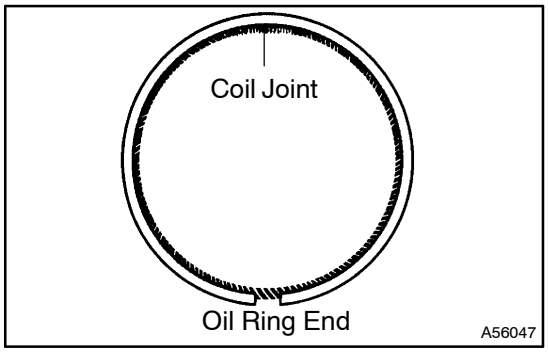

(b) Using a piston ring expander, install the oil ring.

HINT:

Align the oil ring so its end faces the opposite of the coil joint.

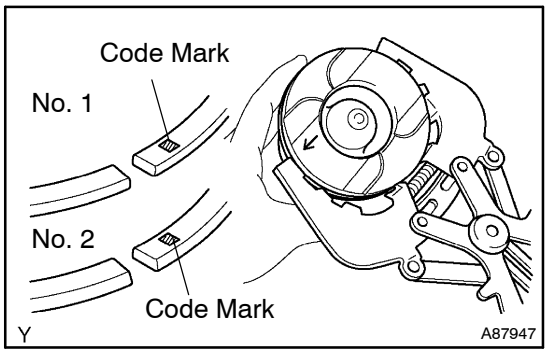

(c) Using a piston ring expander, install the No. 2 and No. 1 piston rings with the code mark facing upward.

Code mark:

No. 1	1T
No. 2	2T

NOTICE:

Try to keep the piston ring expansion as small as possible.

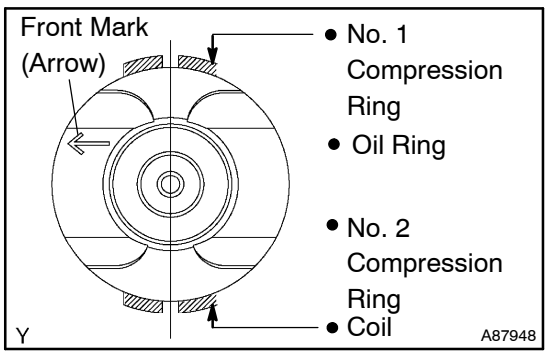

(d) Position the piston rings so that the ring ends are as illustrated.

31. INSTALL PISTON SUB–ASSY W/CONNECTING ROD

(a) Apply engine oil to the cylinder walls, pistons, and surfaces of the connecting rod bearings.

(b) Check the position of the piston ring ends.

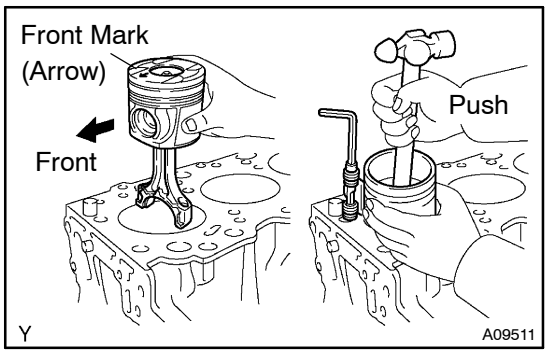

(c) Using a piston ring compressor, push the correctly–numbered piston and connecting rod assemblies into each cylinder with the front mark of the piston facing forward.

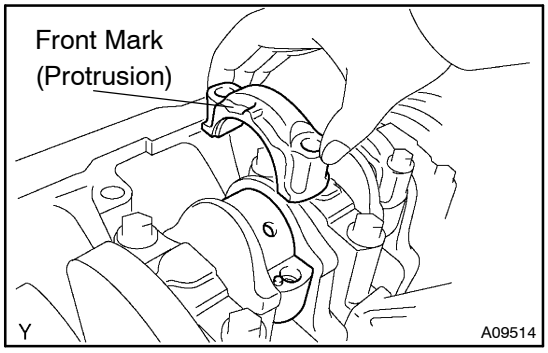

(d) Match the numbered connecting rod cap with the connecting rod.
(e) Install the connecting rod cap with the front mark facing forward.
(f) Apply a light coat of engine oil to the threads and underheads of the connecting rod cap bolts.

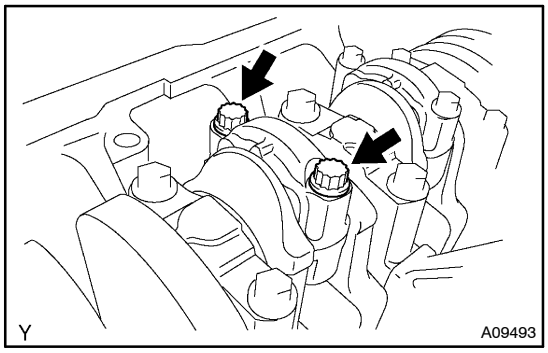

(g) Install and alternately tighten the 2 cap bolts in several steps.
Torque: 30 N·m (306 kgf·cm, 22 ft·lbf)

If any of the cap bolts does not meet the specified torque, replace the connecting rod cap bolts.

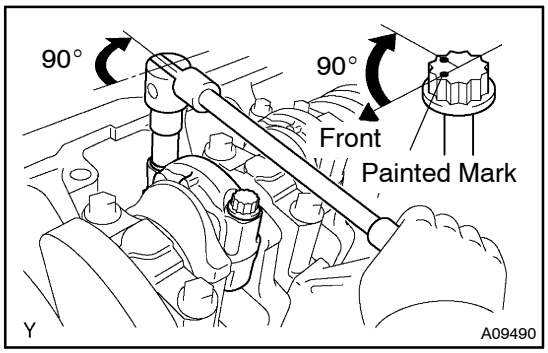

(h) Mark the front of the cap bolt with paint.
(i) Retighten the cap bolts by 90° as illustrated.
(j) Check that the painted mark is now at a 90° angle to the front.
(k) Check that the crankshaft turns smoothly.

WATER PUMP ASSY (1CD–FTV)(From September, 2003)

160T5–01

INSPECTION

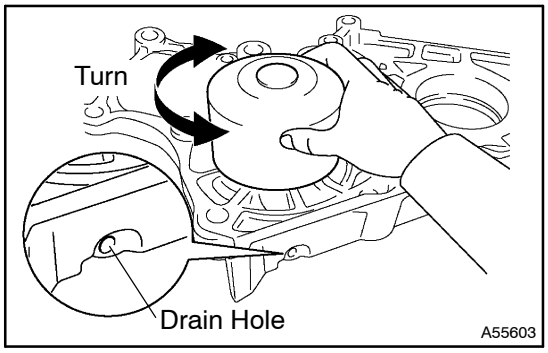

1. INSPECT WATER PUMP ASSY

(a) Visually check the drain hole for coolant leakage.

If leakage is found, replace the water pump.

(b) Turn the pulley, then check that the water pump bearing moves smoothly without making a noise.

If necessary, replace the water pump.

OIL PUMP ASSY (1CD–FTV)(From September, 2003)

170J0–01

INSPECTION

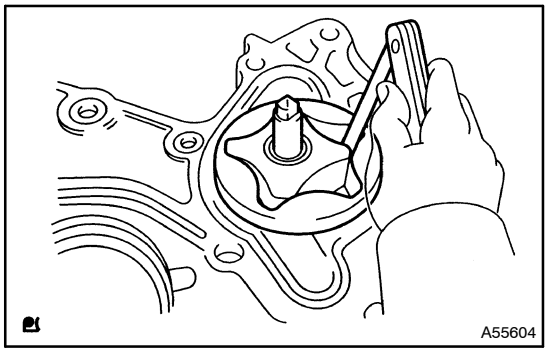

1. INSPECT OIL PUMP ASSY

(a) Inspect the tip clearance.

(1) Using a feeler gauge, measure the clearance between the drive and driven rotor tips.

Standard tip clearance:
0.08 to 0.20 mm (0.0031 to 0.0079 in.)

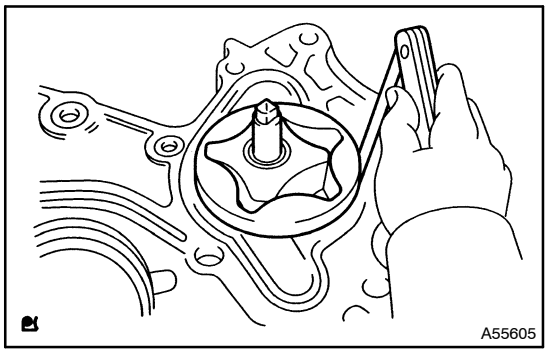

(b) Inspect the body clearance.

(1) Using a feeler gauge, measure the clearance between the driven rotor and body.

Standard body clearance:
0.1 to 0.20 mm (0.0039 to 0.0079 in.)

STARTER ASSY (1CD–FTV)(From September, 2003)

COMPONENTS

190VA–01

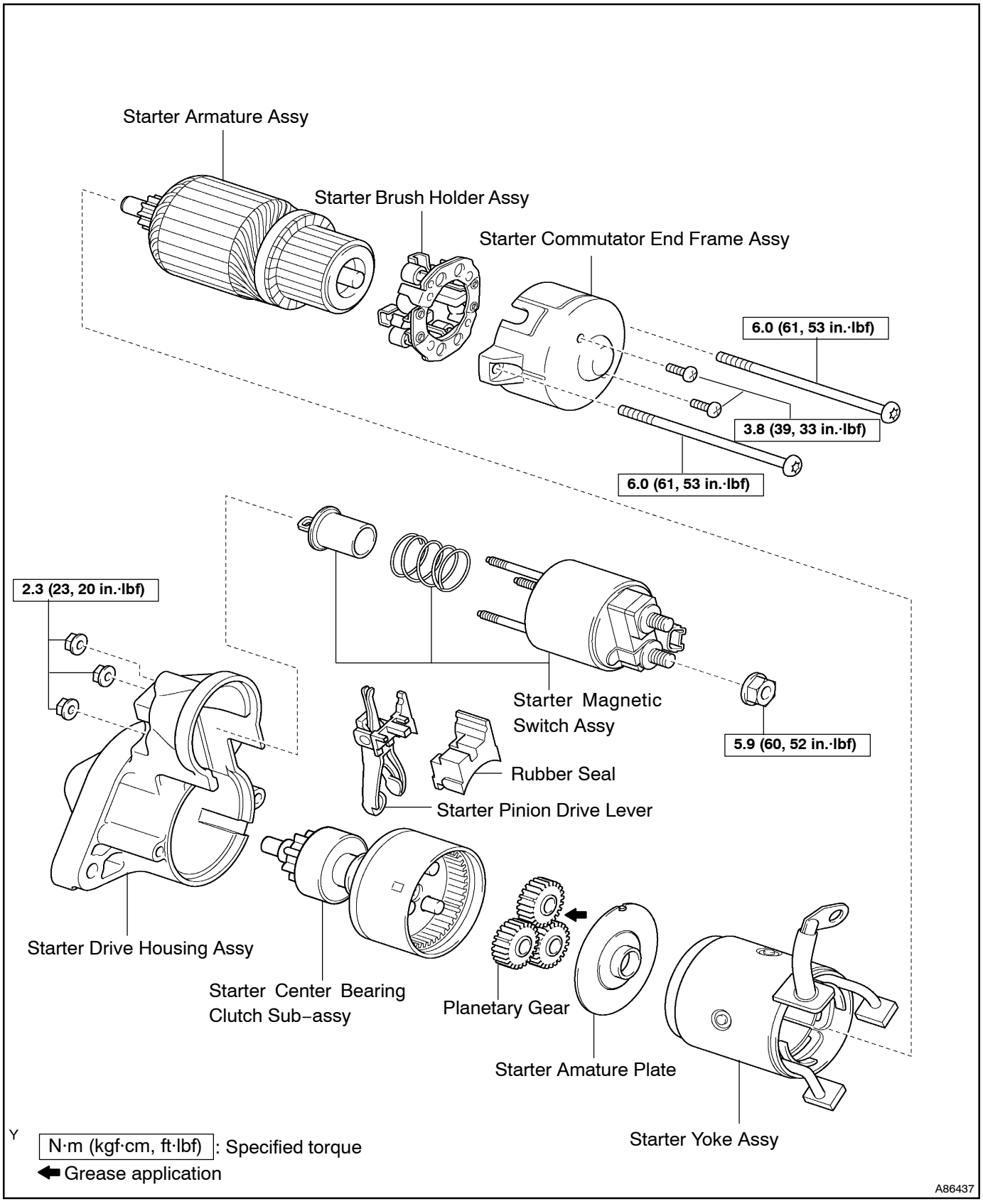

190VB–01

OVERHAUL

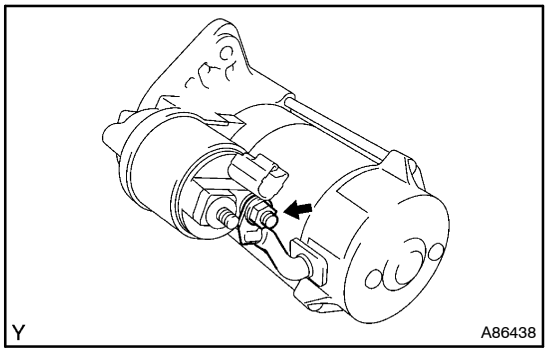

1. REMOVE STARTER MAGNETIC SWITCH ASSY

(a) Remove the nut, then disconnect the lead wire from the starter magnetic switch.

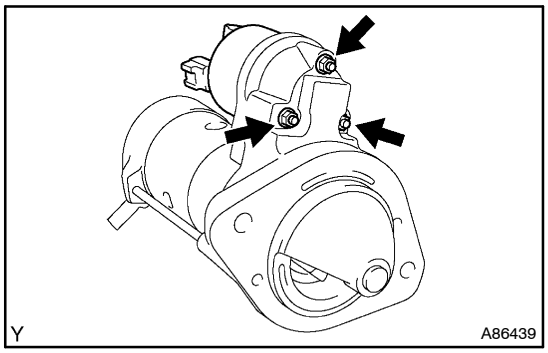

(b) Remove the 3 nuts and starter magnetic switch.

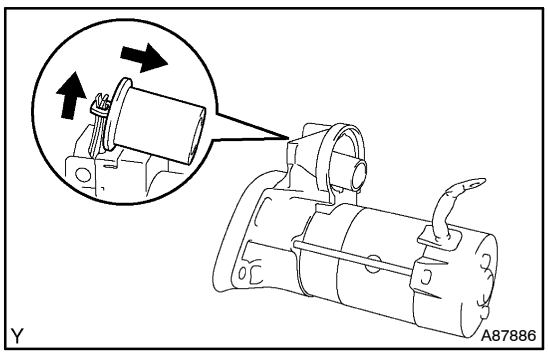

(c) Pull the plunger, then disconnect the plunger hook from the upper side of the starter pinion drive lever.

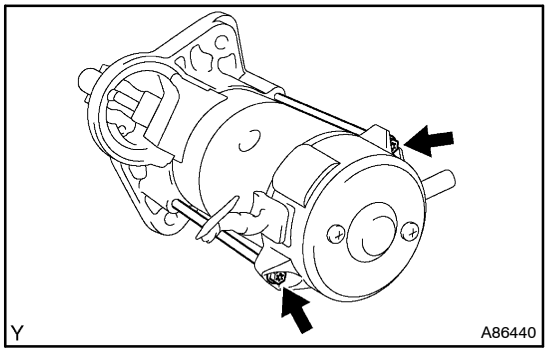

2. REMOVE STARTER DRIVE HOUSING ASSY

(a) Using a Torx wrench, remove the 2 bolts.

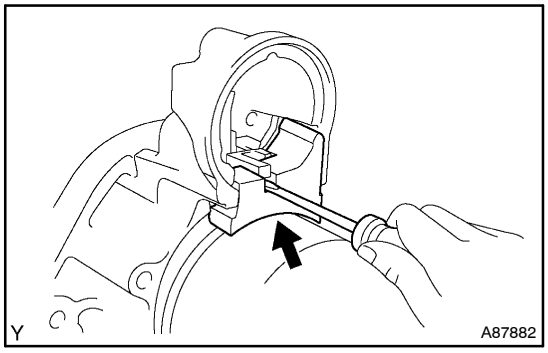

(b) Using a screwdriver, remove the rubber seal from the starter pinion drive lever.

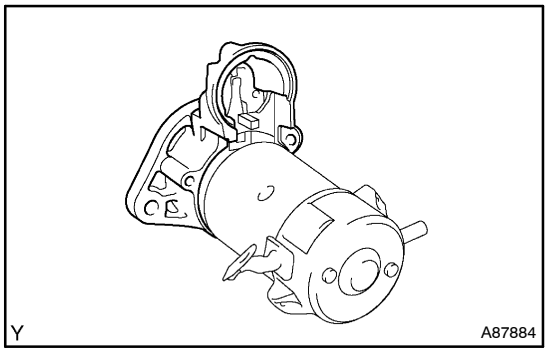

(c) Remove the starter drive housing from the starter pinion drive lever by separating them at the part fitting surface.

(d) Remove the starter center bearing clutch from the starter yoke.

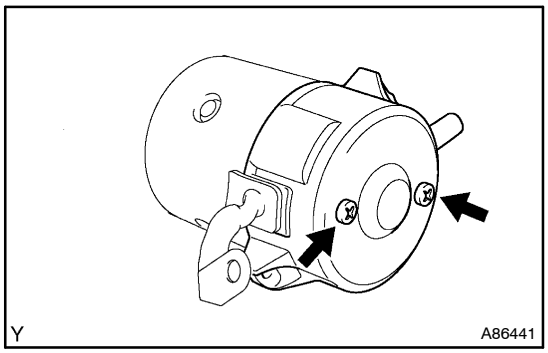

3. REMOVE STARTER COMMUTATOR END FRAME ASSY

(a) Remove the 2 screws and starter commutator end frame.

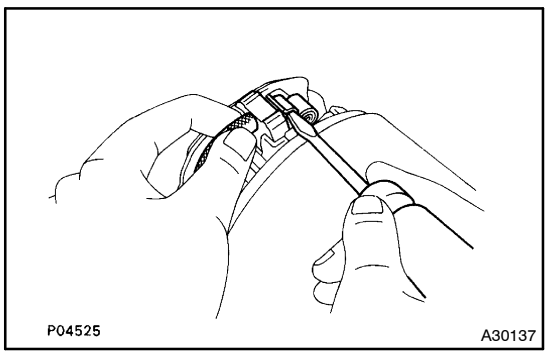

4. REMOVE STARTER ARMATURE ASSY

(a) Using a screwdriver, hold the spring back and disconnect the brush from the brush holder.

(b) Disconnect the 4 brushes, then remove the brush holder.

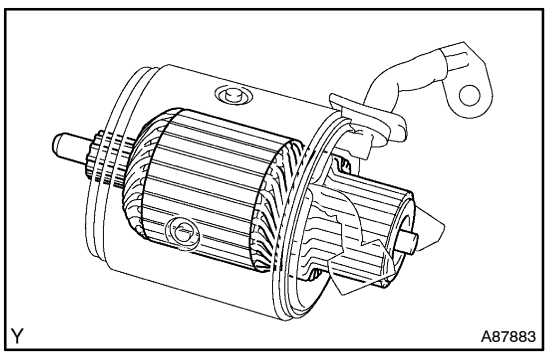

(c) Remove the starter armature from the starter yoke.

5. REMOVE STARTER ARMATURE PLATE

(a) Remove the starter armature plate from the starter center bearing clutch.

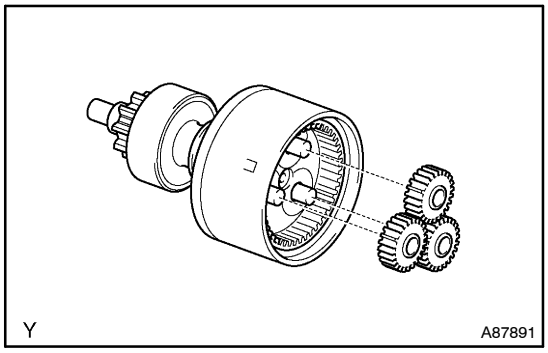

6. REMOVE PLANETARY GEAR

(a) Remove the 3 planetary gears.

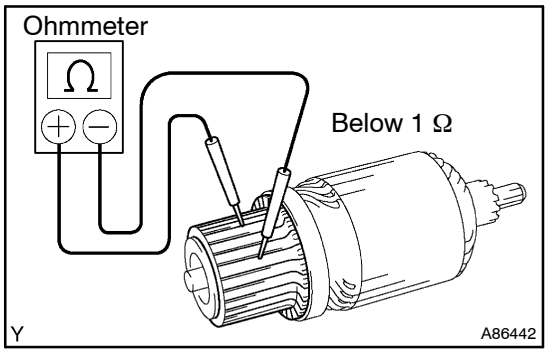

7. INSPECT STARTER ARMATURE ASSY

(a) Inspect the resistance of the commutator.

(1) Using an ohmmeter, measure the resistance between the segments of the commutator.

Standard: Below 1 Ω

If the resistance is not as specified, replace the armature.

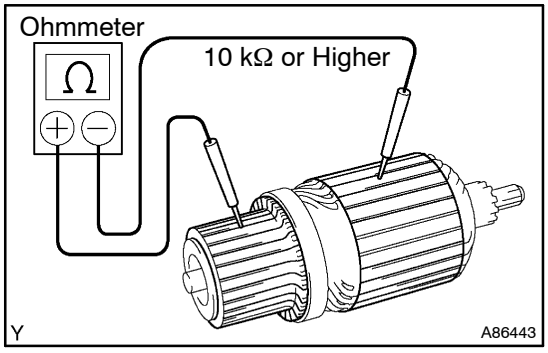

(2) Using an ohmmeter, measure the resistance between the commutator and armature coil core.

Standard: 10 kΩ or higher

If the resistance is not as specified, replace the armature.

(b) Check the commutator surface for dirt or burn.

If the surface is dirty or burnt, smooth it with 400–grit sandpaper or on a lathe.

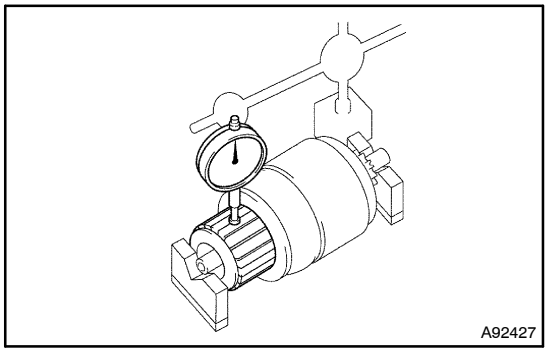

(c) Check the circle runout of the commutator.

(1) Place the commutator on V–blocks.

(2) Using a dial indicator, measure the circle runout.

Maximum circle runout: 0.05 mm (0.0020 in.)

If the circle runout is greater than maximum, correct it on a lathe.

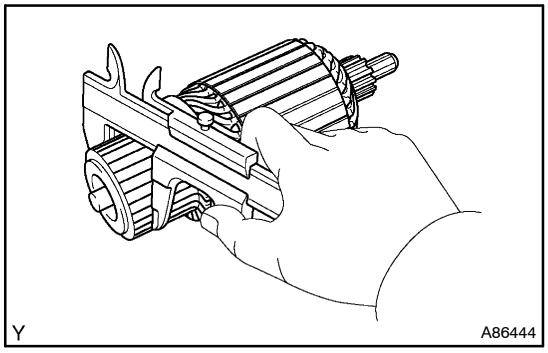

(d) Using vernier calipers, measure the commutator diameter.

Standard diameter: 35.0 mm (1.378 in.)

Minimum diameter: 34.0 mm (1.339 in.)

If the diameter is less than minimum, replace the armature.

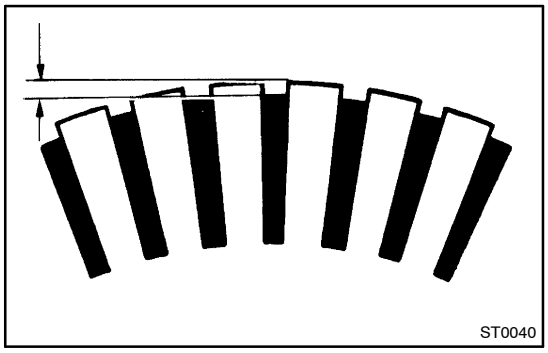

(e) Check that the undercut depth is clean and free of foreign materials. Smooth out the edge.

Standard undercut depth: 0.6 mm (0.024 in.)

Minimum undercut depth: 0.2 mm (0.008 in.)

If the undercut depth is less than minimum, increase the depth using a hacksaw blade.

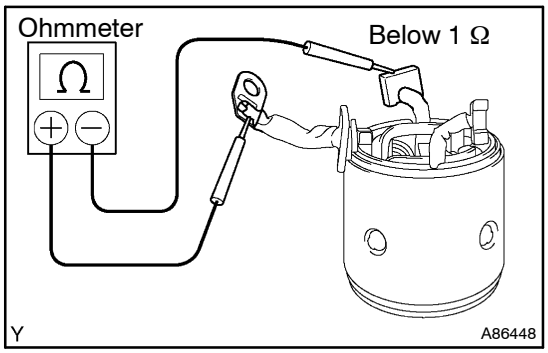

8. INSPECT STARTER YOKE ASSY

(a) Inspect the resistance of the field coil.

(1) Using an ohmmeter, measure the resistance between the lead wire and field coil brush lead.

Standard: Below 1 Ω

If the resistance is not as specified, replace the starter yoke.

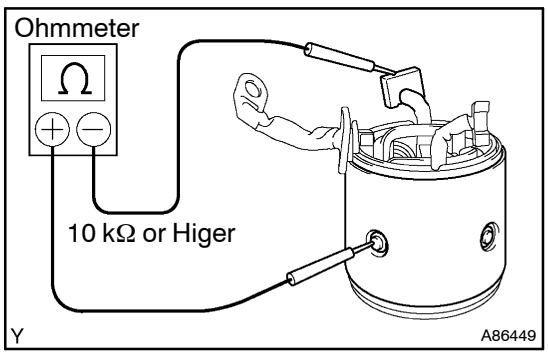

(2) Using an ohmmeter, measure the resistance between the field coil end and field frame.

Standard: 10 kΩ or higer

If the resistance is not as specified, repair or replace the starter yoke.

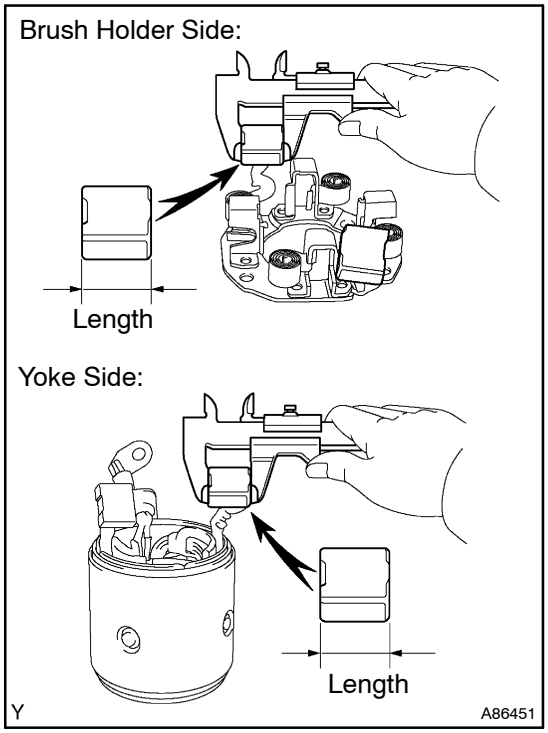

9. INSPECT BRUSH

(a) Using vernier calipers, measure the brush length.

Standard length: 15.5 mm (0.610 in.)

Minimum length: 10.0 mm (0.394 in.)

If the brush length is less than minimum, replace the brush holder and field frame.

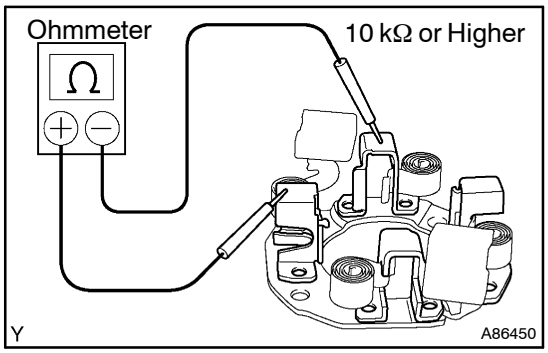

10. INSPECT STARTER BRUSH HOLDER ASSY

(a) Inspect the resistance.

(1) Using an ohmmeter, measure the resistance between the positive (+) and negative (–) brush holders.

Standard: 10 kΩ or higher

If the resistance is not as specified, repair or replace the brush holder.

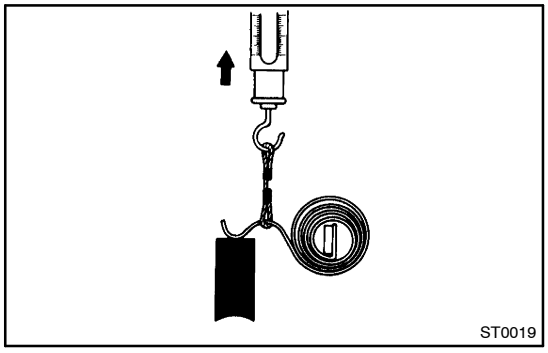

(b) Inspect the load of the brush spring.

(1) Take the pull scale reading immediately after the brush spring separates from the brush.

Standard spring installed load:

23.5 to 29.5 N (2.4 to 3.0 kgf, 5.3 to 6.6 lbf)

If the installed load is less than minimum replace the brush springs.

11. INSPECT STARTER CENTER BEARING CLUTCH SUB–ASSY

(a) Check the gear teeth of the planetary gear and starter center bearing clutch for wear or damage.

If any of the planetary gear is damaged, replace the planetary gear assembly.

If any of the gears of the starter center bearing clutch is damaged, replace the clutch.

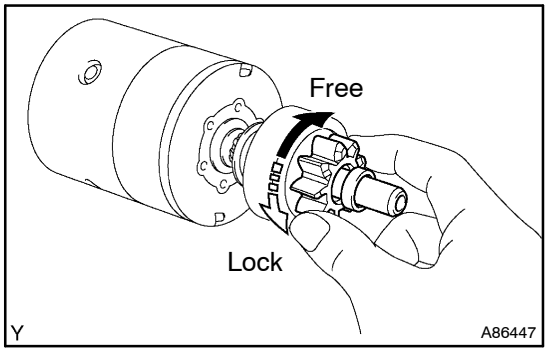

(b) Check the movement of the clutch pinion gear.
  (1) Rotate the clutch pinion gear clockwise, then check that it turns freely.
  (2) Try to rotate the clutch pinion gear counterclockwise, then check that it locks.

If necessary, replace the center bearing clutch sub–assembly.

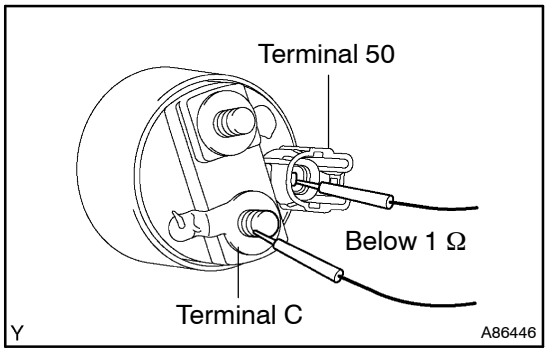

12. INSPECT STARTER MAGNETIC SWITCH ASSY

(a) Inspect the resistance of the pull–in coil.
  (1) Using an ohmmeter, measure the resistance between terminals 50 and C.
  Standard: Below 1 Ω

If the resistance is not as specified, replace the starter magnetic switch.

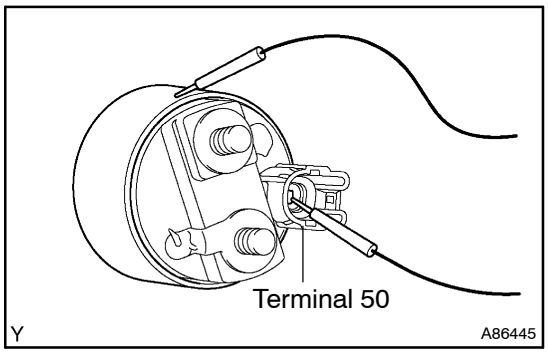

(b) Inspect the resistance of the hold–in coil.
  (1) Using an ohmmeter, measure the resistance between terminal 50 and the switch body.
  Standard: Below 1.5 Ω

If the resistance is not as specified, replace the starter magnetic switch.

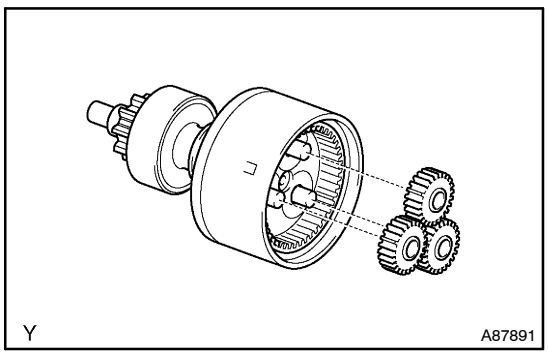

13. INSTALL PLANETARY GEAR

(a) Apply grease to the planetary gears of the planetary shaft.
(b) Install the 3 planetary gears.

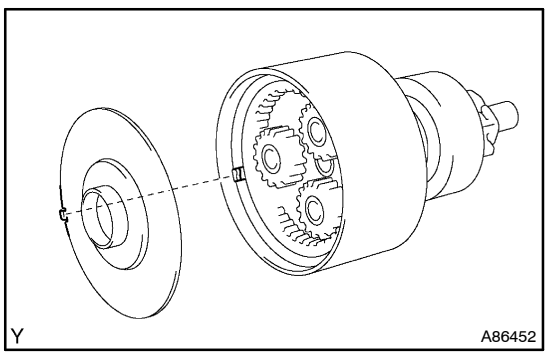

14. INSTALL STARTER ARMATURE PLATE

(a) Insert the starter armature plate to the starter center bearing clutch.
(b) Check that the keyway of the starter armature plate fits into the key of the starter center bearing clutch.

15. INSTALL STARTER ARMATURE ASSY

(a) Install the starter armature to the starter center bearing clutch.

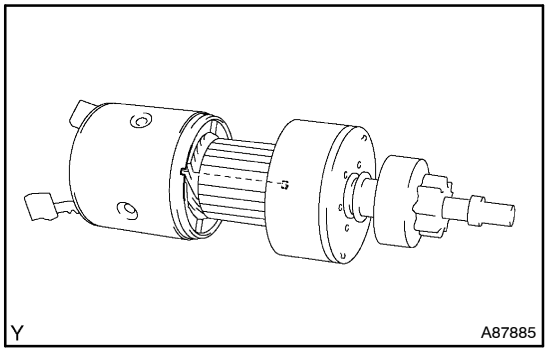

(b) Align the protrusion of the starter center bearing clutch with the cutout of the starter yoke, then install the starter center bearing clutch to the starter yoke.

(c) Install the brush holder.

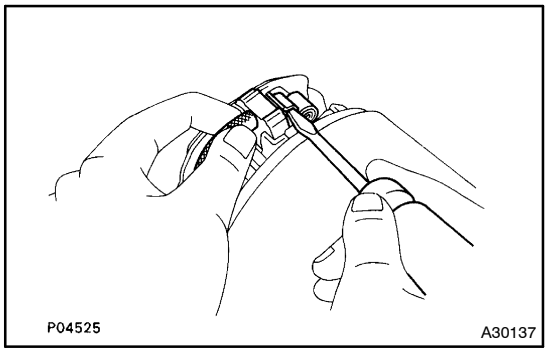

(d) Using a screwdriver, hold the brush spring back and connect the brush into the brush holder.

(e) Connect the 4 brushes.

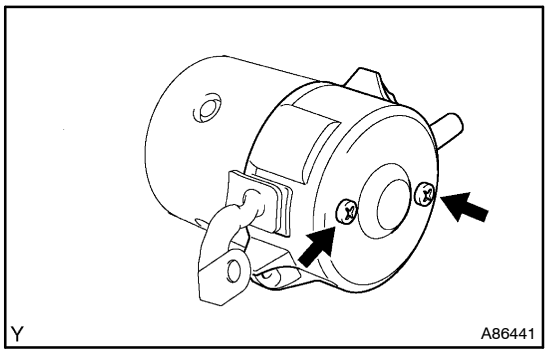

16. INSTALL STARTER COMMUTATOR END FRAME ASSY

(a) Install the starter commutator end frame with the 2 screws.

Torque: 3.8 N·m (39 kgf·cm, 33 in.·lbf)

17. INSTALL STARTER DRIVE HOUSING ASSY

(a) Install the starter pinion drive lever to the starter center bearing clutch.

(b) Install the rubber seal to the starter pinion drive lever.

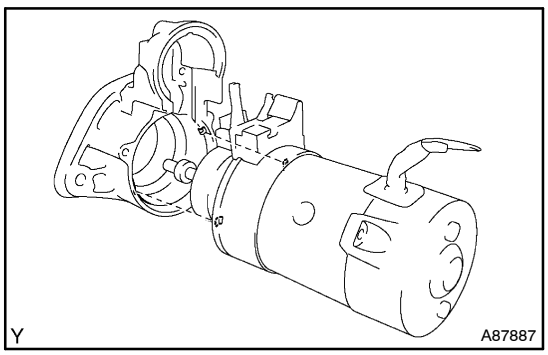

(c) Align the 2 protrusions of the starter center bearing clutch with the 2 cutouts of the starter drive housing, then install the starter center bearing clutch to the starter drive housing.

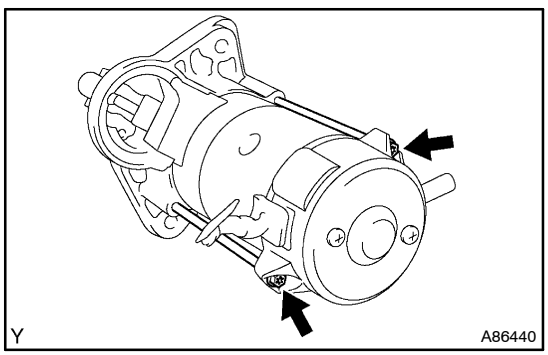

(d) Using a Torx wrench, install the starter drive housing with the 2 bolts.

Torque: 6.0 N·m (61 kgf·cm, 53 in.·lbf)

18. INSTALL STARTER MAGNETIC SWITCH ASSY

(a) Hook the plunger hook on the upper side of the starter pinion drive lever.

(b) Install the spring to the starter magnetic switch.

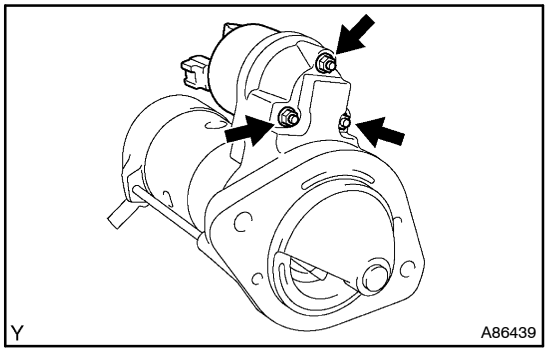

(c) Install the starter magnetic switch the 3 nuts.
Torque: 2.3 N·m (23 kgf·cm, 20 in.·lbf)

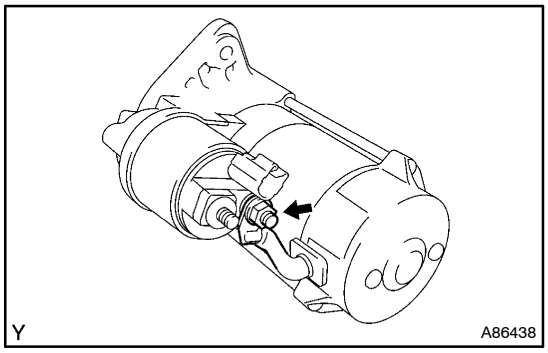

(d) Connect the lead wire to the terminal with the nut.
Torque: 5.9 N·m (60 kgf·cm, 52 in.·lbf)

GENERATOR ASSY (1CD–FTV)(From September, 2003)

COMPONENTS

190VC–01

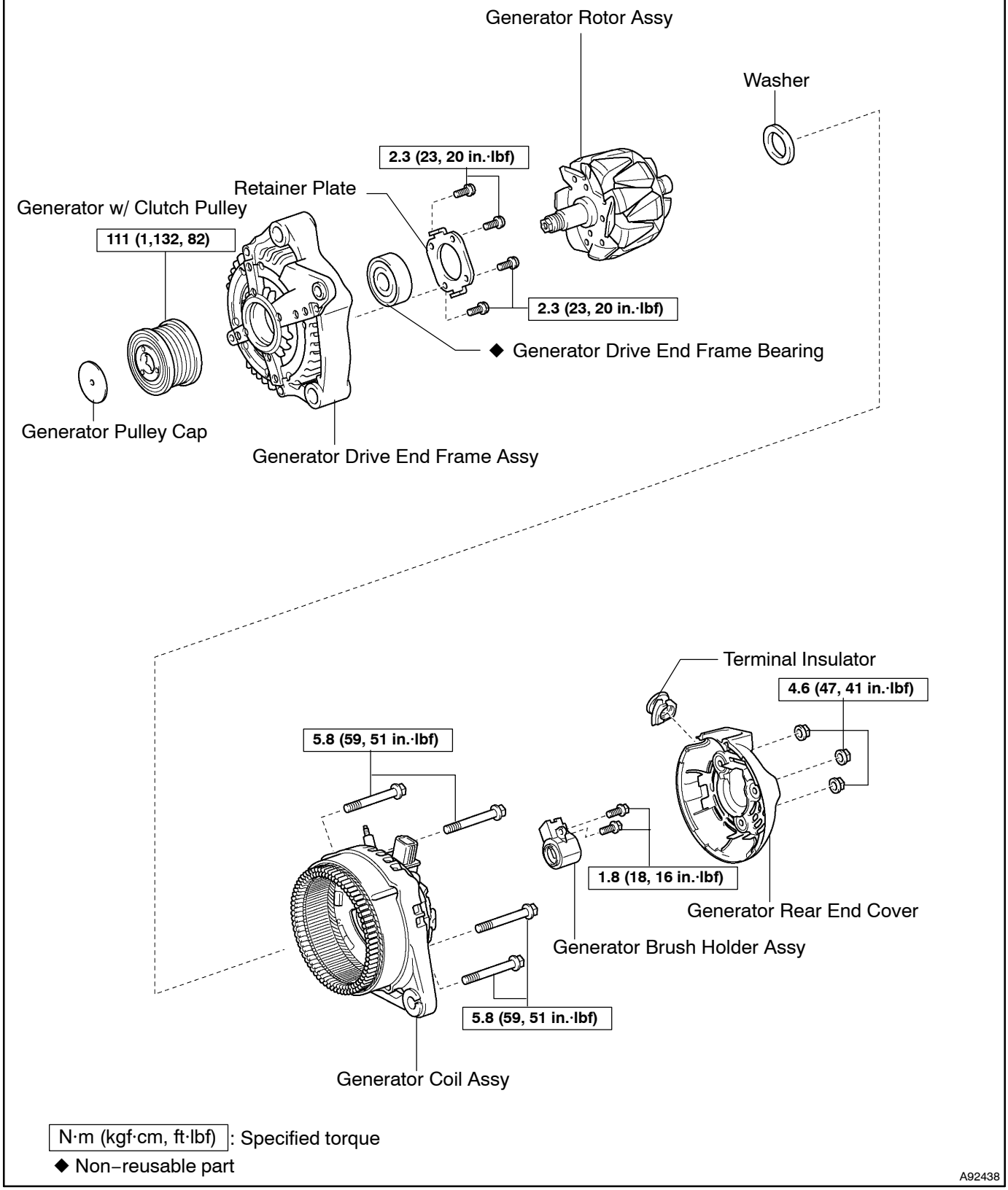

N·m (kgf·cm, ft·lbf) : Specified torque

◆ Non–reusable part

A92438

190VD–01

OVERHAUL

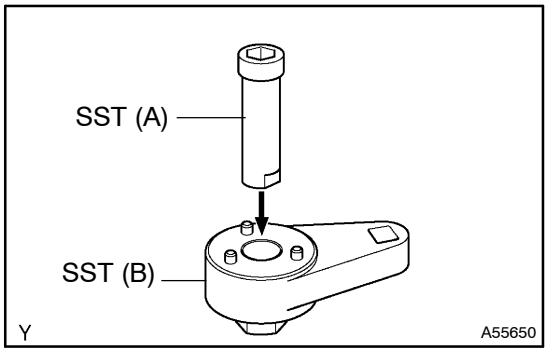

1. REMOVE GENERATOR W/CLUTCH PULLEY

(a) Remove the generator pulley cap.

(b) Set SST (A) and (B).
SST 09820–63020

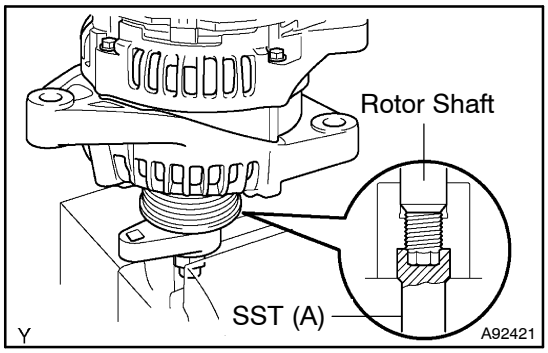

(c) Clamp SST (A) in a vise.

(d) Set the generator to SST.

NOTICE:

At this time, make sure that the generator and SST are perpendicular to one another.

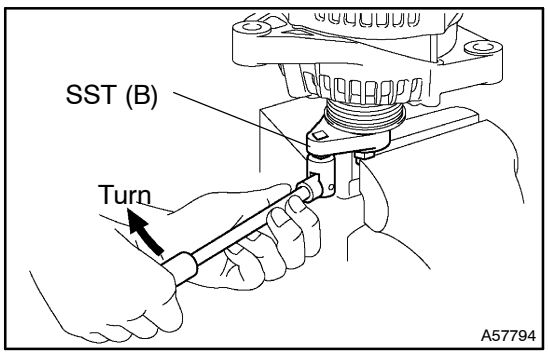

(e) Insert the 3 tabs of SST (B) into the 3 holes on the pulley.

(f) To loosen the pulley, turn SST (B) in the direction shown in the illustration.

(g) Remove the generator from SST.

(h) Remove the pulley from the rotor shaft.

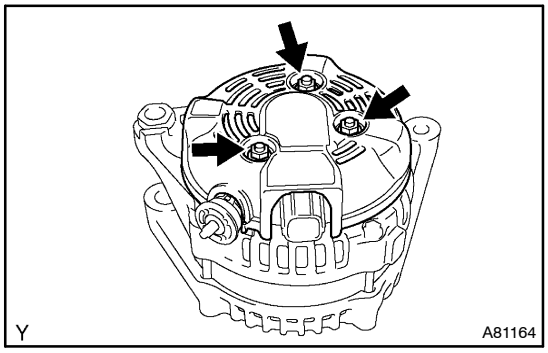

2. REMOVE GENERATOR REAR END COVER

(a) Remove the 3 nuts and end cover.

(b) Remove the terminal insulator.

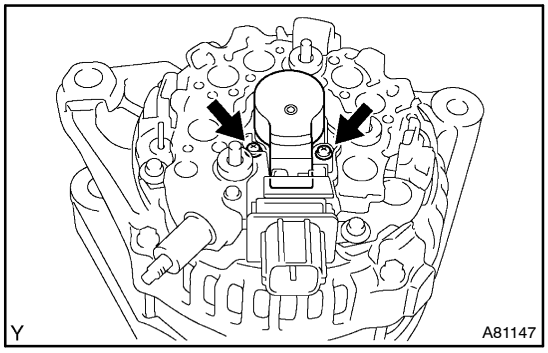

3. REMOVE GENERATOR BRUSH HOLDER ASSY

(a) Remove the 2 screws, then remove the generator brush holder.

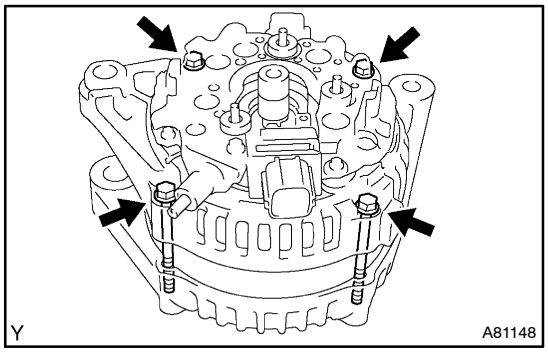

4. REMOVE GENERATOR COIL ASSY

(a) Remove the 4 bolts.

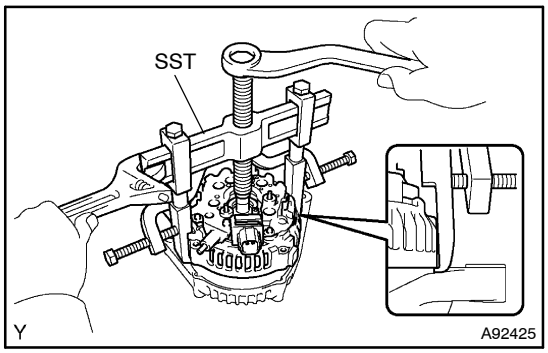

(b) Using SST, remove the coil assembly.

SST 09950–40011 (09951–04020, 09952–04010, 09953–04020, 09954–04010, 09955–04071, 09957–04010, 09958–04011)

5. REMOVE GENERATOR ROTOR ASSY

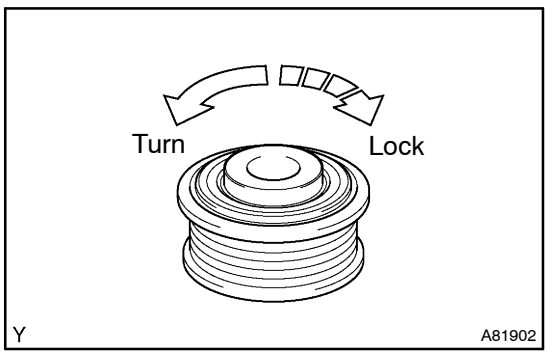

6. INSPECT GENERATOR W/CLUTCH PULLEY

(a) Check that the pulley is locked when it is turned clockwise, and that the pulley rotates smoothly when it is turned counterclockwise.

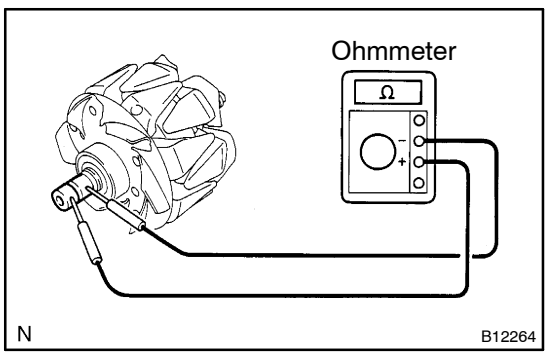

7. INSPECT GENERATOR ROTOR ASSY

(a) Inspect the resistance.

(1) Using an ohmmeter, measure the resistance between the slip rings.

Standard resistance: 2.3 to 2.7 Ω at 20°C (68°F)

If the resistance is not as specified, replace the rotor.

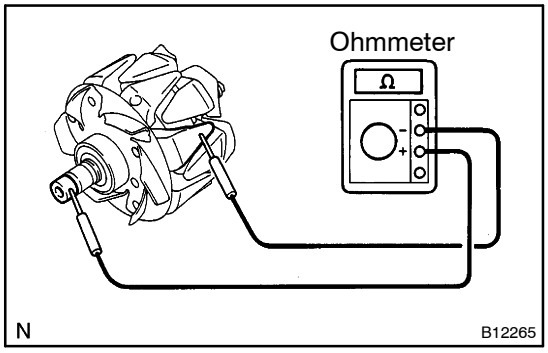

(b) Inspect the resistance.

(1) Using an ohmmeter, measure the resistance between the slip ring and rotor.

Standard: 1 MΩ or higher

If the resistance is not as specified, replace the rotor.

(c) Check that the slip rings are not rough or scored.

If rough or scored, replace the rotor.

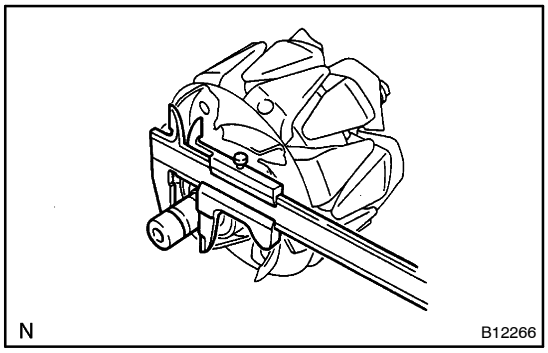

(d) Using vernier calipers, measure the slip ring diameter.

Standard diameter: 14.2 to 14.4 mm (0.559 to 0.567 in.)

Minimum diameter: 14.0 mm (0.551 in.)

If the diameter is less than minimum, replace the rotor.

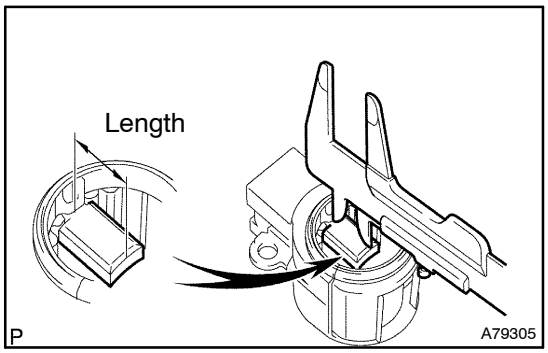

8. INSPECT GENERATOR BRUSH HOLDER ASSY

(a) Using vernier calipers, measure the exposed brush length.

Standard exposed length: 10.5 mm (0.413 in.)

Minimum exposed length: 4.5 mm (0.177 in.)

If the exposed length is less than minimum, replace the brushes and brush holder assembly.

9. INSPECT GENERATOR ROTOR BEARING

(a) Check that the bearing is not rough or worn.

If necessary, replace the rotor.

10. INSPECT GENERATOR DRIVE END FRAME BEARING

(a) Check that the bearing is not rough or worn.

If necessary, replace the bearing.

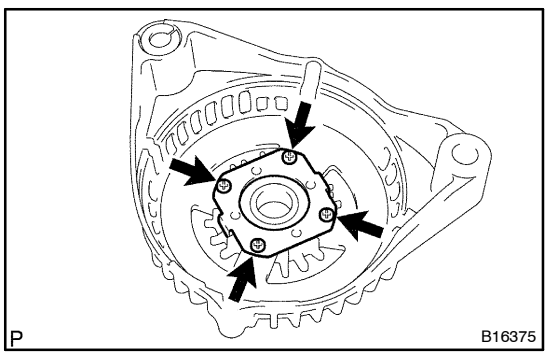

11. REMOVE GENERATOR DRIVE END FRAME BEARING

(a) Remove the 4 screws, bearing retainer.

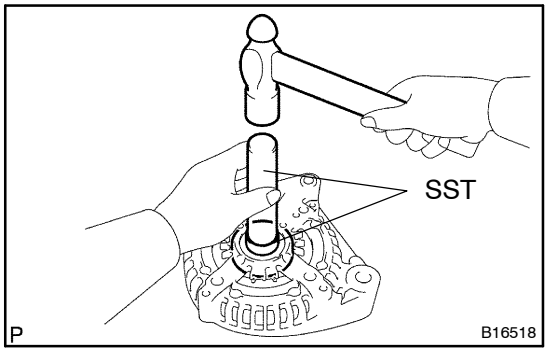

(b) Using SST and a hammer, tap out the bearing.
SST 09950–60010 (09951–00250), 09950–70010 (09951–07100)

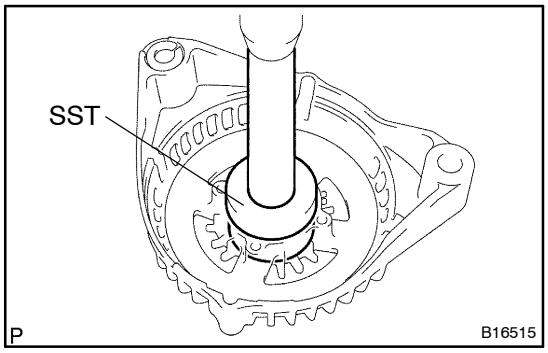

12. INSTALL GENERATOR DRIVE END FRAME BEARING

(a) Using SST and a press, press in a new bearing.
SST 09950–60010 (09951–00470), 09950–70010 (09951–07100)

(b) Install the bearing retainer with the 4 screws.
Torque: 2.3 N·m (23 kgf·cm, 20 in.·lbf)

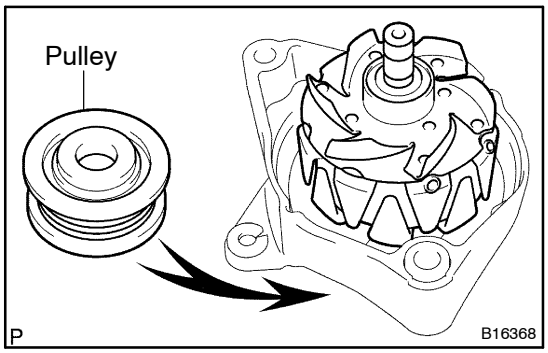

13. INSTALL GENERATOR ROTOR ASSY

(a) Place the drive end frame on the pulley.

(b) Install the rotor to the drive end frame.

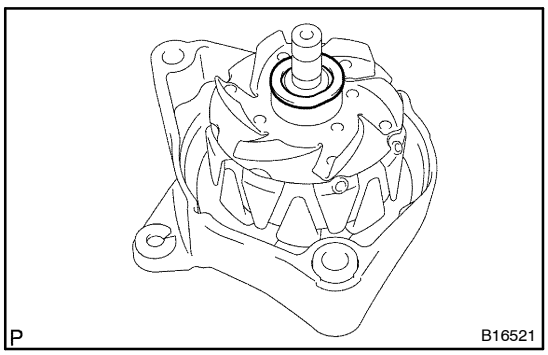

14. INSTALL GENERATOR COIL ASSY

(a) Place the generator washer on the rotor.

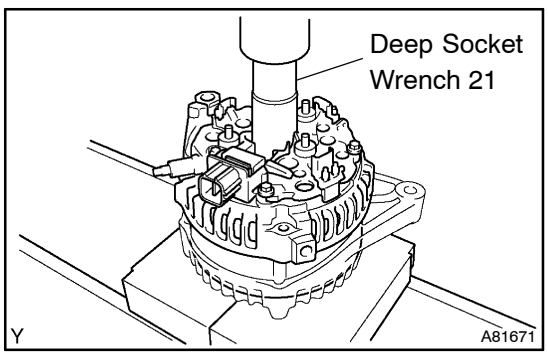

(b) Using a 21 mm deep socket wrench and press, press in the coil carefully.

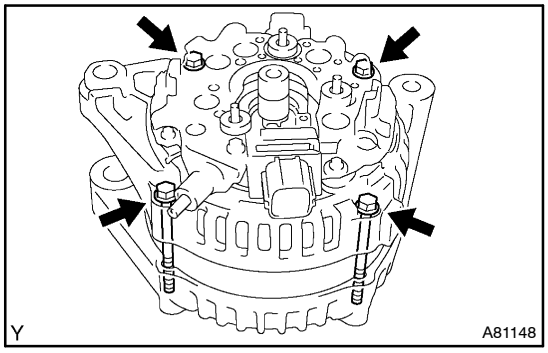

(c) Install the coil assembly with the 4 bolts.
Torque: 5.8 N·m (59 kgf·cm, 51 in.·lbf)

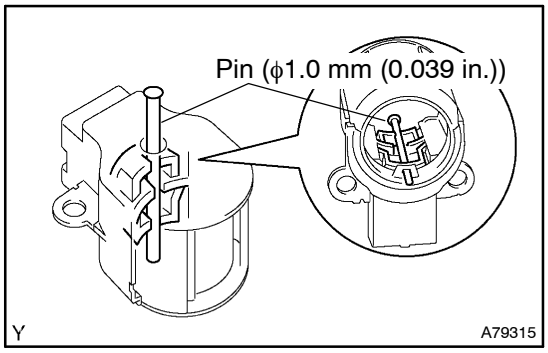

15. INSTALL GENERATOR BRUSH HOLDER ASSY

(a) While pushing the 2 brushes to inside the brush holder, insert a pin (ϕ1.0 mm (0.039 in.)) into the brush holder hole.

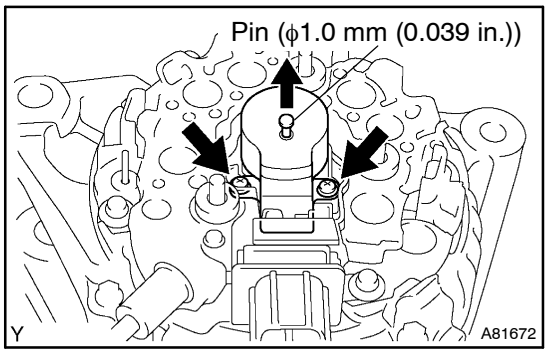

(b) Install the generator brush holder with the 2 screws.
Torque: 1.8 N·m (18 kgf·cm, 16 in.·lbf)

(c) Pull out the pin (ϕ1.0 mm (0.039 in.)) from the generator brush holder.

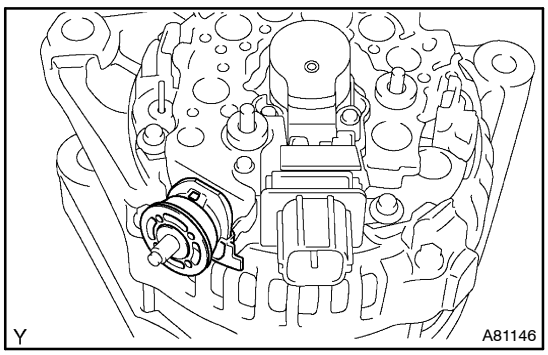

16. INSTALL GENERATOR REAR END COVER

(a) Install the terminal insulator.

NOTICE:

Be careful of the terminal insulator installation direction.

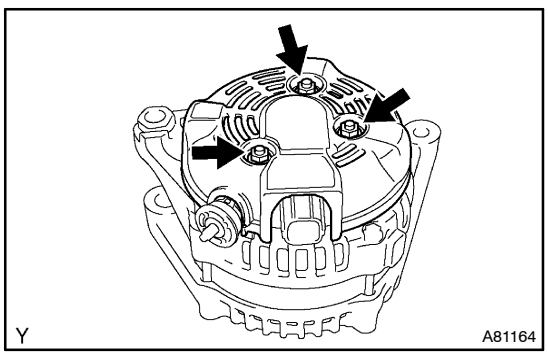

(b) Install the end cover with the 3 nuts.
Torque: 4.6 N·m (47 kgf·cm, 41 in.·lbf)

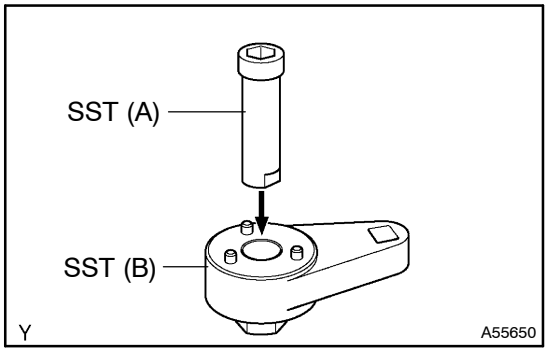

17. INSTALL GENERATOR W/CLUTCH PULLEY

(a) Temporarily install the pulley to the rotor shaft.

(b) Set SST (A) and (B).

SST 09820–63020

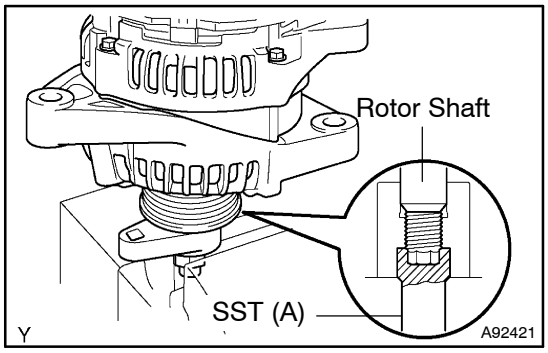

(c) Clamp SST (A) in a vise.

(d) Set the generator to SST.

NOTICE:

At this time, make sure that the generator and SST are perpendicular to one another.

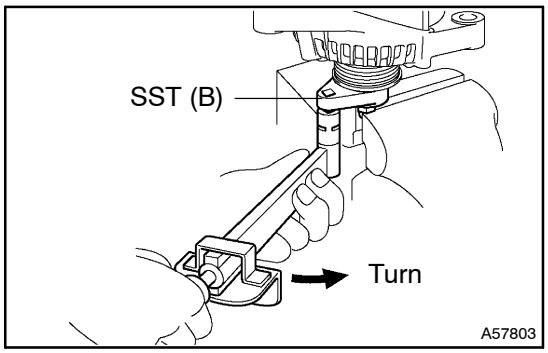

(e) Insert the 3 tabs of SST (B) into the 3 holes on the pulley.

(f) To torque the pulley, turn SST (B) in the direction shown in the illustration.

Torque: 111 N·m (1,132 kgf·cm, 82 ft·lbf)

HINT:

Use a torque wrench with the fulcrum length of 50 cm (19.69 in.).

(g) Remove the generator from SST.

(h) Check that the generator pulley rotates smoothly.

(i) Install the generator pulley cap.

HOW TO USE THIS ENGINE REPAIR MANUAL

0108M–02

GENERAL INFORMATION

1. GENERAL DESCRIPTION

(a) This manual is made in accordance with SAE J2008.

(b) Generally repair operations can be separated in the following 3 main processes:
1. Diagnosis
2. Removing and Installing, Replacing, Disassembling, Installing and Checking, Adjusting
3. Final Inspection

(c) This manual explains ”Removing and Installing, Replacing, Disassembling, Installing and Checking, Adjusting”, but ”Final Inspection” is omitted.

(d) The following essential operations are not written in this manual, however these operations must be done in the practical situation.
(1) Operation with a jack or lift
(2) Cleaning of a removed part when necessary
(3) Visual check

2. INDEX

(a) An alphabetical INDEX is provided as a section on the end of the book to guide you to the item to be repaired.

3. PREPARATION

(a) Use of special service tools (SST) and special service materials (SSM) may be required, depending on the repairing condition. Be sure to use SST and SSM when they are required and follow the working procedure properly. A list of SST and SSM is in the Preparation section of this manual.

4. REPAIR PROCEDURES

(a) Component drawing is placed as the section or title when necessary.

(b) Illustrations of the parts catalog are placed as the ”disassembled parts drawing” so that it enables you to understand the fitting condition of the components.

(c) Non–reusable parts, grease applied parts, precoated parts and tightening torque are specified in the components drawing.

Example:

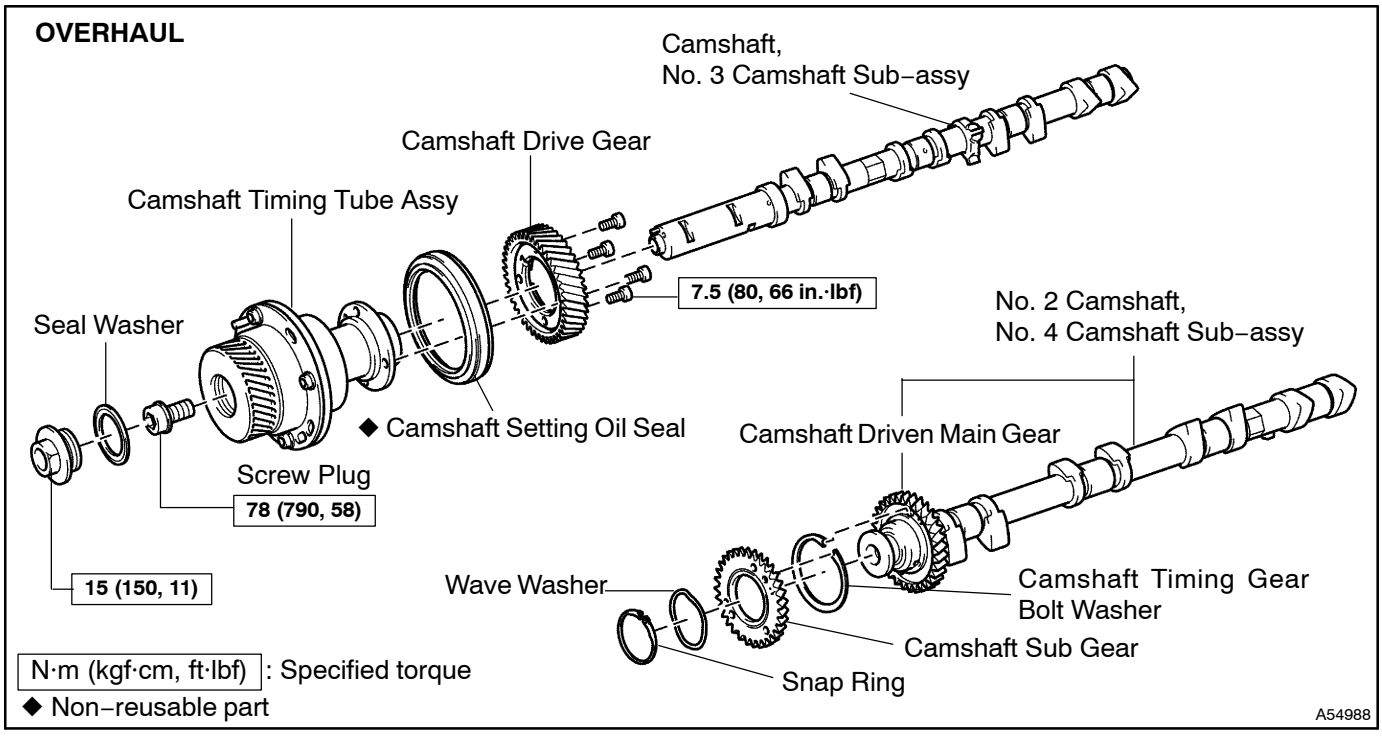

(d) Tightening torque, oil applying position, and non–reusable parts are described as important points in the procedure.

NOTICE:

There are cases where such information can only be indicated by an illustration. In that case, all the information such as torque, oil, etc. are described in the illustration.

(e) Installing procedure of operation items is performed in the reverse order of the removing, and only the important points are described.

(f) Only items with points are described in the procedure, and the operational portion and content are placed using an illustration. In the explanations, details of the operational method, standard value and notice are placed.

(g) There may be a case where the illustrations of similar models are used. In that case the details may be different from the actual vehicle.

(h) The procedures are presented in a step–by–step format:
   (1) The illustration shows what to do and where to do it.
   (2) The task heading tells what to do.
   (3) The detailed text tells how to perform the task and gives other information such as specifications and warnings.

   Example:

Illustration: what to do and where

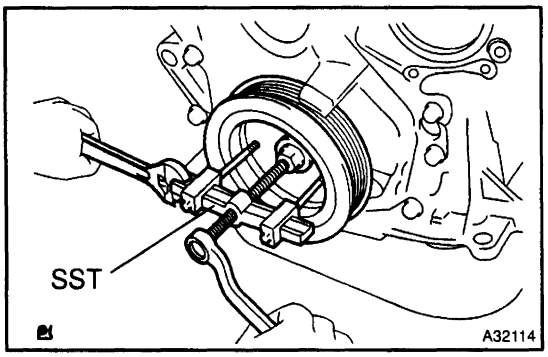

Task heading: what to do

5. REMOVE CRANKSHAFT PULLEY

(a) Using SST, remove the crankshaft pully.
SST 09950–50012 (09951–05010, 09952–05010, 09953–05020, 09954–05020, 09957–04010)

Set part No. *Component part No.* *Detailed text: how to do task*

A59974

HINT:

This format provides an experienced technician with a FAST TRACK to the necessary information. The task heading can be read at a glance when necessary, and the text below provides detailed information. Important specifications and warnings always stand out in bold type.

5. SERVICE SPECIFICATIONS

(a) Specifications are presented in bold type throughout the manual. You never have to leave the procedure to look up your specifications. The specifications are also found in the Service Specifications section for a quick reference.

6. TERMS DEFINITION

CAUTION	Indicate the possibility of injury to you or other people.
NOTICE	Indicate the possibility of damage to the components being repaired.
HINT	Provide additional information to help you perform the repair efficiently.

7. SI UNIT

(a) The UNITS given in this manual are primarily expressed according to the SI UNIT (International System of Unit), and alternately expressed in the metric system and in the English System.

Example:

Torque: 30 N·m (310 kgf·cm, 22 ft·lbf)

REPAIR INSTRUCTION FOR ENGINE REPAIR MANUAL

0108N–02

PRECAUTION

1. TO PREVENT FROM ENTERING FOREIGN SUBSTANCES

(a) When foreign substances such as dust, grain of sand or metallic dust enter inside of engine, it often causes functional failure of the engine.

(1) Precaution before disassembly.

- Remove adequately all sand and mud adhere to the outside of engine .

(2) Precaution at reassembly.

- Protect disassembled parts from dust by using vinyl sheet to cover.

2. TO PREVENT SCRATCHES ON THE PARTS

(a) The existence of scratches on the contact and revolving surfaces often causes oil leak and seisure.

(1) Precautions at disassembly and reassembly.

- When disassemble the contact surface of the parts, use plastic hummer striking lightly. (Do not pry out by screwdriver).
- When fix the parts to the vise, do not directly catch it in the vise. Fix the parts through aluminum bar.

3. TO CLEAN AND WASH THE PARTS

(a) Each parts needs to be well cleaned, washed, and dried by air, and apply specified oil before reassembly.

(1) Cleaning and washing by alkaline solvent is prohibited:

- Parts made of aluminum and rubber. (ex. cylinder head cover gasket etc.)

(2) Cleaning and washing by flushing oil (ex. kerosene, white gasoline etc.) is prohibited:

- Parts made of rubber. (ex. cylinder head cover gasket etc.)

4. POSITION AND DIRECTION OF EACH PARTS

(a) Each parts needs to be reassembled as the same position and direction as it disassembled.

(1) Precautions at disassembly and reassembly.

- Follow the directions when the manual designates to mark the matchmark and/or direction mark.
- Disassembled parts needs to be put in order as disassembled, not to change position and/or direction.
- Follow the directions when the manual instructs the position and direction.

5. INSTALL ENGINE ASSEMBLY TO OVERHAUL STAND WHEN OVERHAUL THE ENGINE

6. PUT THE DISASSEMBLED PARTS IN ORDER AS THEY DISASSEMBLED

7. APPLY ENGINE OIL TO THE SLIDING AND ROTATING SURFACES

8. NON–REUSABLE PARTS SUCH AS GASKET AND SEAL NEEDS TO BE CHANGED TO THE NEW PARTS

9. BASIC REPAIR HINT

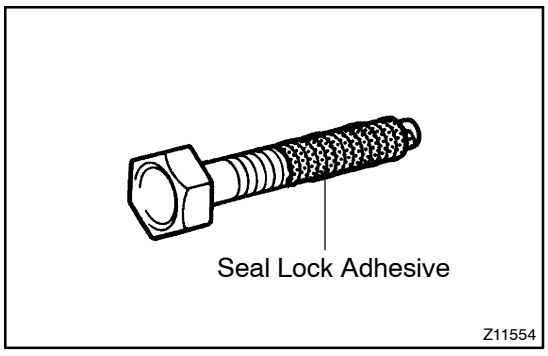

(a) Precoated Parts:

(1) Precoated parts are bolts, nuts, etc. that are coated with a seal lock adhesive at the factory.

(2) If a precoated part is retightened, loosened or caused to move in any way, it must be recoated with the specified adhesive.

(3) When reusing precoated parts, clean off the old adhesive and dry with compressed air. Then apply the specified seal lock adhesive to the bolt, nut or threads.

NOTICE:

Do the torque checking with the lower limit value of the torque tolerance.

(4) Depending on the seal lock agent to apply, there may be a case where it is necessary to leave it for a specified time until it hardens.

(b) Gaskets:
When necessary, use a sealer on gaskets to prevent leaks.

(c) Bolts, Nuts and Screws:
Carefully observe all specifications for bolt tightening torques. Always use a torque wrench.

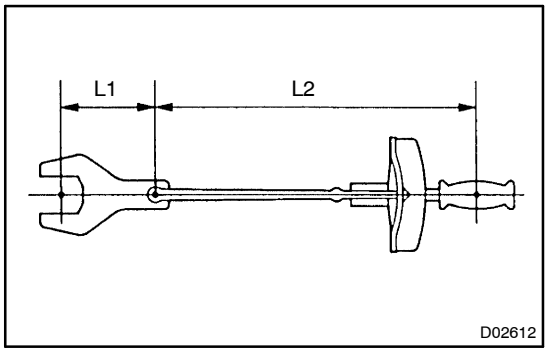

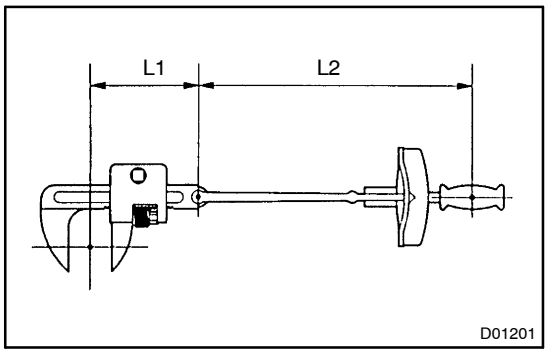

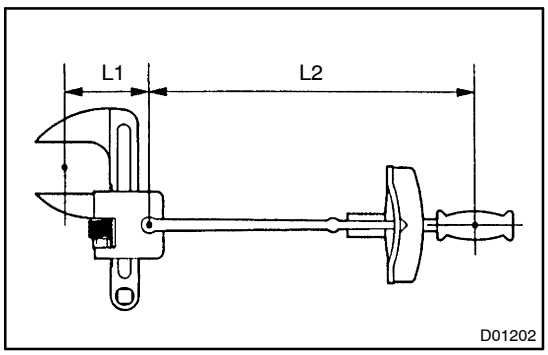

(d) Torque When Using Extension Tool with Torque Wrench:

(1) In case of tightening by extending the entire length of the torque wrench combined with SST or tool, if you tighten until the reading of the torque wrench reached the specified torque value, the actual torque becomes excessive.

(2) In this text, only the specified torque is described. In case of using SST or extension tool, find the reading of the torque wrench by the formula.

(3) Formula T' = T x L2/(L1 + L2)

T'	Reading of torque wrench {N·m (kgf·cm, ft·lbf)}
T	Torque {N·m (kgf·cm, ft·lbf)}
L1	Length of SST or tool (cm)
L2	Length of torque wrench (cm)

10. REMOVAL AND INSTALLATION OF FUEL CONTROL PARTS

(a) Place for Removing and Installing Fuel System Parts:

(1) Place with good air ventilation and without anything flammable such as welder, grinder, drill, electric motor or stove in the surroundings.

(2) Never work in a place like a pit or nearby pit as there is a possibility that vaporized fuel fills those places.

(b) Removing and Installing of Fuel System Parts:

(1) Prepare a fire extinguisher before starting the operation.

(2) For prevention of the static electricity, install a ground on the fuel changer, vehicle and fuel tank, and do not spray much water so as to prevent slipping.

(3) Never use any electric equipment like an electric motor or a working light as they may cause spark or high temperature.
(4) Never use an iron hammer as it may cause spark.
(5) Dispose the shop lag separately from any fuel deposit.

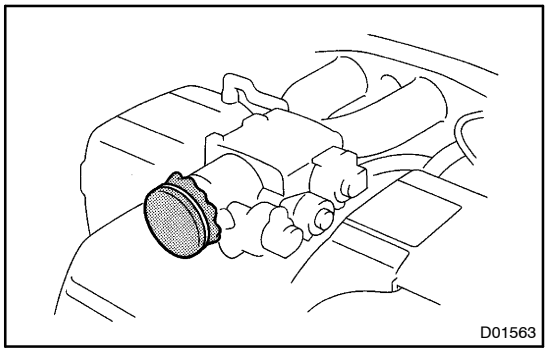
D01563

11. REMOVAL AND INSTALLATION OF ENGINE INTAKE PARTS

(a) If any metal tip is mixed in the inlet pass, that may give a bad effect to the engine and turbo charger.
(b) When removing and installing of the inlet system parts, close the opening of the removed inlet system parts and the engine with a clean shop lag or gum tape.
(c) When installing the inlet system parts, check that there is no mixing of a metal tip.

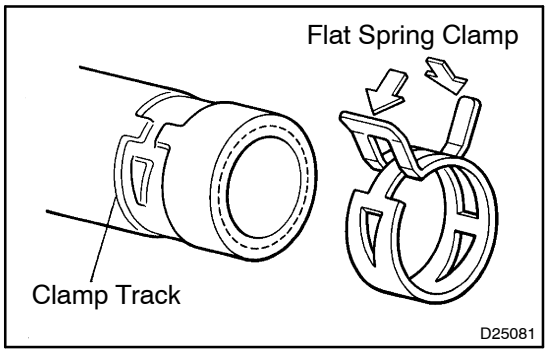

D25081

12. HANDLING OF HOSE CLAMPS

(a) Before removing the hose, check the depth of inserting portion and the clamp position to restore it surely.
(b) Change a deformed or dented into a new one.
(c) In case of reusing the hose, install the clamp on the hose where it has a clamp track.
(d) For a flat spring type clamp, make it adjust by adding force to the arrow mark direction after the installation.

TERMS FOR ENGINE REPAIR MANUAL

0108O–02

ABBREVIATIONS USED IN MANUAL

Abbreviations	Meaning
ABS	Anti–Lock Brake System
A/C	Air Conditioner
AC	Alternating Current
ACC	Accessory
ACIS	Acoustic Control Induction System
ACSD	Automatic Cold Start Device
A.D.D.	Automatic Disconnecting Differential
A/F	Air–Fuel Ratio
AHC	Active Height Control Suspension
ALR	Automatic Locking Retractor
ALT	Alternator
AMP	Amplifier
ANT	Antenna
APPROX.	Approximately
ASSY	Assembly
A/T	Automatic Transmission (Transaxle)
ATF	Automatic Transmission Fluid
AUTO	Automatic
AUX	Auxiliary
AVG	Average
AVS	Adaptive Variable Suspension
B+	Battery Voltage
BACS	Boost Altitude Compensation System
BAT	Battery
BDC	Bottom Dead Center
B/L	Bi–Level
B/S	Bore–Stroke Ratio
BTDC	Before Top Dead Center
BVSV	Bimetallic Vacuum Switching Valve
CB	Circuit Breaker
CCo	Catalytic Converter For Oxidation
CD	Compact Disc
CF	Cornering Force
CG	Center Of Gravity
CH	Channel
CKD	Complete Knock Down
COMB.	Combination
CPE	Coupe
CPS	Combustion Pressure Sensor
CPU	Central Processing Unit
CRS	Child Restraint System
CTR	Center
C/V	Check Valve
CV	Control Valve
CW	Curb Weight
DC	Direct Current
DEF	Defogger
DFL	Deflector

Abbreviations	Meaning
DIFF.	Differential
DIFF. LOCK	Differential Lock
D/INJ	Direct Injection
DLC	Data Link Connector
DLI	Distributorless Ignition
DOHC	Double Overhead Cam
DP	Dash Pot
DS	Dead Soak
DSP	Digital Signal Processor
DTC	Diagnostic Trouble Code
ECAM	Engine Control And Measurement System
ECD	Electronic Controlled Diesel
ECDY	Eddy Current Dynamometer
ECT	Electronic Control Transmission
ECU	Electronic Control Unit
ED	Electro–Deposited Coating
EDU	Electronic Driving Unit
EDIC	Electric Diesel Injection Control
EFI	Electronic Fuel Injection
E/G	Engine
EGR	Exhaust Gas Recirculation
EGR–VM	EGR–Vacuum Modulator
ELR	Emergency Locking Retractor
ENG	Engine
ESA	Electronic Spark Advance
ETCS	Electronic Throttle Control System
EVAP	Evaporative Emission Control
EVP	Evaporator
E–VRV	Electric Vacuum Regulating Valve
EX	Exhaust
FE	Fuel Economy
FF	Front–Engine Front–Wheel–Drive
F/G	Fuel Gauge
FIPG	Formed In Place Gasket
FL	Fusible Link
F/P	Fuel Pump
FPU	Fuel Pressure Up
FR	Front
F/W	Flywheel
FW/D	Flywheel Damper
FWD	Front–Wheel–Drive
GAS	Gasoline
GND	Ground
HAC	High Altitude Compensator
H/B	Hatchback
H–FUSE	High Current Fuse
HI	High
HID	High Intensity Discharge (Head Lamp)
HSG	Housing
HT	Hard Top
HWS	Heated Windshield System

Abbreviations	Meaning
IC	Integrated Circuit
IDI	Indirect Diesel Injection
IFS	Independent Front Suspension
IG	Ignition
IIA	Integrated Ignition Assembly
IN	Intake (Manifold, Valve)
INT	Intermittent
I/P	Instrument Panel
IRS	Independent Rear Suspension
ISC	Idle Speed Control
J/B	Junction Block
J/C	Junction Connector
KD	Kick–Down
LAN	Local Area Network
LB	Liftback
LCD	Liquid Crystal Display
LED	Light Emitting Diode
LH	Left–Hand
LHD	Left–Hand Drive
L/H/W	Length, Height, Width
LLC	Long–Life Coolant
LNG	Liquified Natural Gas
LO	Low
LPG	Liquified Petroleum Gas
LSD	Limited Slip Differential
LSP & PV	Load Sensing Proportioning And Bypass Valve
LSPV	Load Sensing Proportioning Valve
MAP	Manifold Absolute Pressure
MAX.	Maximum
MIC	Microphone
MIL	Malfunction Indicator Lamp
MIN.	Minimum
MP	Multipurpose
MPI	Multipoint Electronic Injection
MPX	Multiplex Communication System
M/T	Manual Transmission
MT	Mount
MTG	Mounting
N	Neutral
NA	Natural Aspiration
NO.	Number
O2S	Oxygen Sensor
O/D	Overdrive
OEM	Original Equipment Manufacturing
OHC	Overhead Camshaft
OHV	Overhead Valve
OPT	Option
O/S	Oversize
P & BV	Proportioning And Bypass Valve
PCS	Power Control System
PCV	Positive Crankcase Ventilation

Abbreviations	Meaning
PKB	Parking Brake
PPS	Progressive Power Steering
PS	Power Steering
PTO	Power Take–Off
P/W	Power Window
R & P	Rack And Pinion
R/B	Relay Block
RBS	Recirculating Ball Type Steering
R/F	Reinforcement
RFS	Rigid Front Suspension
RRS	Rigid Rear Suspension
RH	Right–Hand
RHD	Right–Hand Drive
RLY	Relay
ROM	Read Only Memory
RR	Rear
RRS	Rear–Wheel Drive
RWD	Rear–Wheel Drive
SDN	Sedan
SEN	Sensor
SICS	Starting Injection Control System
SOC	State Of Charge
SOHC	Single Overhead Camshaft
SPEC	Specification
SPI	Single Point Injection
SRS	Supplemental Restraint System
SSM	Special Service Materials
SST	Special Service Tools
STD	Standard
STJ	Cold–Start Fuel Injection
SW	Switch
SYS	System
T/A	Transaxle
TACH	Tachometer
TBI	Throttle Body Electronic Fuel Injection
TC	Turbocharger
TCCS	TOYOTA Computer–Controlled System
TCV	Timing Control Valve
TDC	Top Dead Center
TEMP.	Temperature
TEMS	TOYOTA Electronic Modulated Suspension
TFT	Toyota Free–Tronic
TIS	Total Information System For Vehicle Development
T/M	Transmission
TMC	TOYOTA Motor Corporation
TMMK	TOYOTA Motor Manufacturing Kentucky, Inc.
TRC	Traction Control System
TURBO	Turbocharge
TWC	Three–Way Catalyst
U/D	Underdrive
U/S	Undersize

Abbreviations	Meaning
VCV	Vacuum Control Valve
VENT	Ventilator
VIN	Vehicle Identification Number
VPS	Variable Power Steering
VSC	Vehicle Skid Control
VSV	Vacuum Switching Valve
VTV	Vacuum Transmitting Valve
VVT–i	Variable Valve Timing–intelligent
W/	With
WGN	Wagon
W/H	Wire Harness
W/O	Without
1ST	First
2ND	Second
2WD	Two Wheel Drive Vehicle (4 x 2)
3RD	Third
4TH	Fourth
4WD	Four Wheel Drive Vehicle (4 x 4)
4WS	Four Wheel Steering System
5TH	Fifth

0108P–02

GLOSSARY OF SAE AND TOYOTA TERMS

This glossary lists all SAE–J1930 terms and abbreviations used in this manual in compliance with SAE recommendations, as well as their TOYOTA equivalents.

SAE ABBREVIATIONS	SAE TERMS	TOYOTA TERMS ( )––ABBREVIATIONS
A/C	Air Conditioning	Air Conditioner
ACL	Air Cleaner	Air Cleaner, A/CL
AIR	Secondary Air Injection	Air Injection (AI)
AP	Accelerator Pedal	–
B+	Battery Positive Voltage	+B, Battery Voltage
BARO	Barometric Pressure	HAC
CAC	Charge Air Cooler	Intercooler
CARB	Carburettor	Carburettor
CFI	Continuous Fuel Injection	–
CKP	Crankshaft Position	Crank Angle
CL	Closed Loop	Closed Loop
CMP	Camshaft Position	Cam Angle
CPP	Clutch Pedal Position	–
CTOX	Continuous Trap Oxidizer	–
CTP	Closed Throttle Position	LL ON, Idle ON
DFI	Direct Fuel Injection (Diesel)	Direct Injection (DI)
DI	Distributor Ignition	–
DLC1 DLC2 DLC3	Data Link Connector 1 Data Link Connector 2 Data Link Connector 3	1: Check Connector 2: Total Diagnosis Comunication Link (TDCL) 3: OBD II Diagnostic Connector
DTC	Diagnostic Trouble Code	Diagnostic Code
DTM	Diagnostic Test Mode	–
ECL	Engine Control Level	–
ECM	Engine Control Module	Engine ECU (Electronic Control Unit)
ECT	Engine Coolant Temperature	Coolant Temperature, Water Temperature (THW)
EEPROM	Electrically Erasable Programmable Read Only Memory	Electrically Erasable Programmable Read Only Memory (EEPROM), Erasable Programmable Read Only Memory (EPROM)
EFE	Early Fuel Evaporation	Cold Mixture Heater (CMH), Heat Control Valve (HCV)
EGR	Exhaust Gas Recirculation	Exhaust Gas Recirculation (EGR)
EI	Electronic Ignition	TOYOTA Distributorless Ignition (TDI)
EM	Engine Modification	Engine Modification (EM)
EPROM	Erasable Programmable Read Only Memory	Programmable Read Only Memory (PROM)
EVAP	Evaporative Emission	Evaporative Emission Control (EVAP)
FC	Fan Control	–
FEEPROM	Flash Electrically Erasable Programmable Read Only Memory	–
FEPROM	Flash Erasable Programmable Read Only Memory	–
FF	Flexible Fuel	–
FP	Fuel Pump	Fuel Pump
GEN	Generator	Alternator
GND	Ground	Ground (GND)

HO2S	Heated Oxygen Sensor	Heated Oxygen Sensor (HO_2S)
IAC	Idle Air Control	Idle Speed Control (ISC)
IAT	Intake Air Temperature	Intake or Inlet Air Temperature
ICM	Ignition Control Module	–
IFI	Indirect Fuel Injection	Indirect Injection (IDL)
IFS	Inertia Fuel–Shutoff	–
ISC	Idle Speed Control	–
KS	Knock Sensor	Knock Sensor
MAF	Mass Air Flow	Air Flow Meter
MAP	Manifold Absolute Pressure	Manifold Pressure Intake Vacuum
MC	Mixture Control	Electric Bleed Air Control Valve (EBCV) Mixture Control Valve (MCV) Electric Air Control Valve (EACV)
MDP	Manifold Differential Pressure	–
MFI	Multiport Fuel Injection	Electronic Fuel Injection (EFI)
MIL	Malfunction Indicator Lamp	Check Engine Lamp
MST	Manifold Surface Temperature	–
MVZ	Manifold Vacuum Zone	–
NVRAM	Non–Volatile Random Access Memory	–
O2S	Oxygen Sensor	Oxygen Sensor, O_2 Sensor (O_2S)
OBD	On–Board Diagnostic	On–Board Diagnostic System (OBD)
OC	Oxidation Catalytic Converter	Oxidation Catalyst Convert (OC), CCo
OP	Open Loop	Open Loop
PAIR	Pulsed Secondary Air Injection	Air Suction (AS)
PCM	Powertrain Control Module	–
PNP	Park/Neutral Position	–
PROM	Programmable Read Only Memory	–
PSP	Power Steering Pressure	–
PTOX	Periodic Trap Oxidizer	Diesel Particulate Filter (DPF) Diesel Particulate Trap (DPT)
RAM	Random Access Memory	Random Access Memory (RAM)
RM	Relay Module	–
ROM	Read Only Memory	Read Only Memory (ROM)
RPM	Engine Speed	Engine Speed
SC	Supercharger	Supercharger
SCB	Supercharger Bypass	E–ABV
SFI	Sequential Multiport Fuel Injection	Electronic Fuel Injection (EFI), Sequential Injection
SPL	Smoke Puff Limiter	–
SRI	Service Reminder Indicator	–
SRT	System Readiness Test	–
ST	Scan Tool	–
TB	Throttle Body	Throttle Body
TBI	Throttle Body Fuel Injection	Single Point Injection Central Fuel Injection (Ci)
TC	Turbocharger	Turbocharger
TCC	Torque Converter Clutch	Torque Converter

TCM	Transmission Control Module	Transmission ECU, ECT ECU
TP	Throttle Position	Throttle Position
TR	Transmission Range	–
TVV	Thermal Vacuum Valve	Bimetallic Vacuum Switching Valve (BVSV) Thermostatic Vacuum Switching Valve (TVSV)
TWC	Three–Way Catalytic Converter	Three–Way Catalytic (TWC) Manifold Converter CC_{RO}
TWC+OC	Three–Way + Oxidation Catalytic Converter	CC_R + CCo
VAF	Volume Air Flow	Air Flow Meter
VR	Voltage Regulator	Voltage Regulator
VSS	Vehicle Speed Sensor	Vehicle Speed Sensor
WOT	Wide Open Throttle	Full Throttle
WU–OC	Warm Up Oxidation Catalytic Converter	–
WU–TWC	Warm Up Three–Way Catalytic Converter	–
3GR	Third Gear	–
4GR	Fourth Gear	–

ENGINE MECHANICAL

PREPARATION

023MZ–01

SST

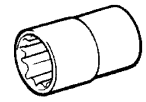	09011–38121	12 mm Socket Wrench for 12 Pointed Head	CYLINDER BLOCK ASSY(2AZ–FSE)
	09032–00100	Oil Pan Seal Cutter	PARTIAL ENGINE ASSY(2AZ–FSE)
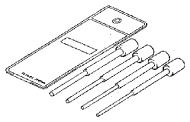	09201–10000	Valve Guide Bushing Remover & Replacer Set	CYLINDER HEAD ASSY(2AZ–FSE)
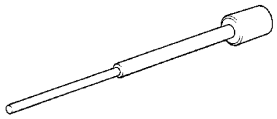	(09201–01050)	Valve Guide Bushing Remover & Replacer 5	CYLINDER HEAD ASSY(2AZ–FSE)
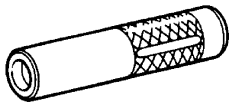	09201–41020	Valve Stem Oil Seal Replacer	CYLINDER HEAD ASSY(2AZ–FSE)
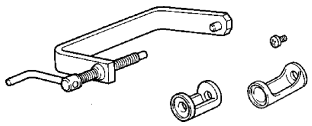	09202–70020	Valve Spring Compressor	CYLINDER HEAD ASSY(2AZ–FSE)
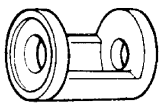	(09202–00010)	Attachment	CYLINDER HEAD ASSY(2AZ–FSE)
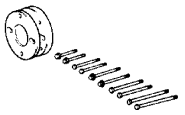	09213–54015	Crankshaft Pulley Holding Tool	PARTIAL ENGINE ASSY(2AZ–FSE)
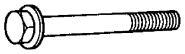	(91651–60855)	Bolt	PARTIAL ENGINE ASSY(2AZ–FSE)
	09223–15030	Oil Seal & Bearing Replacer	PARTIAL ENGINE ASSY(2AZ–FSE)
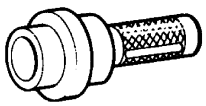	09223–22010	Crankshaft Front Oil Seal Replacer	PARTIAL ENGINE ASSY(2AZ–FSE)
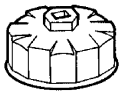	09228–06501	Oil Filter Wrench	PARTIAL ENGINE ASSY(2AZ–FSE)

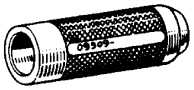	09309–37010	Transmission Bearing Replacer	PARTIAL ENGINE ASSY(2AZ–FSE)
	09330–00021	Companion Flange Holding Tool	PARTIAL ENGINE ASSY(2AZ–FSE)
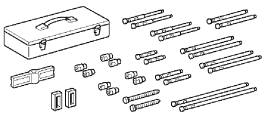	09950–50013	Puller C Set	PARTIAL ENGINE ASSY(2AZ–FSE)
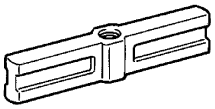	(09951–05010)	Hanger 150	PARTIAL ENGINE ASSY(2AZ–FSE)
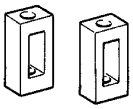	(09952–05010)	Slide Arm	PARTIAL ENGINE ASSY(2AZ–FSE)
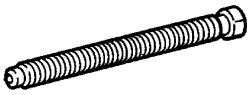	(09953–05020)	Center Bolt 150	PARTIAL ENGINE ASSY(2AZ–FSE)
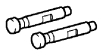	(09954–05021)	Claw No.2	PARTIAL ENGINE ASSY(2AZ–FSE)
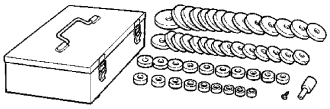	09950–60010	Replacer Set	CYLINDER HEAD ASSY(2AZ–FSE) CYLINDER BLOCK ASSY(2AZ–FSE)
	(09951–00180)	Replacer 18	CYLINDER HEAD ASSY(2AZ–FSE)
	(09951–00200)	Replacer 20	CYLINDER BLOCK ASSY(2AZ–FSE)
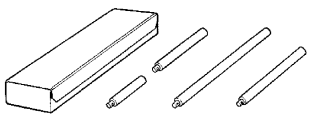	09950–70010	Handle Set	PARTIAL ENGINE ASSY(2AZ–FSE) CYLINDER HEAD ASSY(2AZ–FSE) CYLINDER BLOCK ASSY(2AZ–FSE)
	(09951–07100)	Handle 100	PARTIAL ENGINE ASSY(2AZ–FSE) CYLINDER HEAD ASSY(2AZ–FSE) CYLINDER BLOCK ASSY(2AZ–FSE)
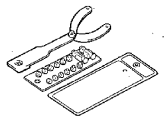	09960–10010	Variable Pin Wrench Set	PARTIAL ENGINE ASSY(2AZ–FSE)

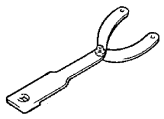	(09962–01000)	Variable Pin Wrench Arm Assy	PARTIAL ENGINE ASSY(2AZ–FSE)
	(09963–00700)	Pin 7	PARTIAL ENGINE ASSY(2AZ–FSE)

Recomended Tools

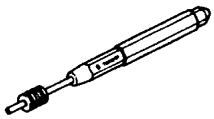	09031–00040	Pin Punch .	CYLINDER HEAD ASSY(2AZ–FSE)
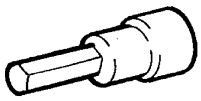	(09043–20060)	Socket Hexagon Wrench 6	PARTIAL ENGINE ASSY(2AZ–FSE)
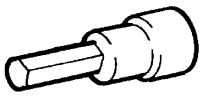	(09043–20120)	Socket Hexagon Wrench 12	PARTIAL ENGINE ASSY(2AZ–FSE)
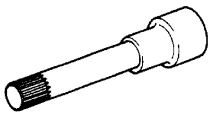	09043–50100	Bi–hexagon Wrench 10 mm	PARTIAL ENGINE ASSY(2AZ–FSE)

SSM

	08833–00070	”Adhesive 1324,” THREE BOND 1324 or equivalent	CYLINDER BLOCK ASSY(2AZ–FSE)

Equipment

Angle gauge	
Cylinder gauge	
Dial indicator	
Feeler gauge	
Micro meter	
Piston heater	
Piston ring compressor	
Plastigage	
Reamer	
Sandpaper (#400)	
Slide calipers	
Spring tension gauge	
Straight edge	
Torque wrench	
V–block	
Wooden block	

LUBRICATION

PREPARATION

023N1–01

Equipment

Feeler gauge	
Straight edge	
Torque wrench	

STARTING & CHARGING

023N0–01

PREPARATION

SST

	09285–76010	Injection Pump Camshaft Bearing Cone Replacer	GENERATOR ASSY (2AZ–FSE)

Recomended Tools

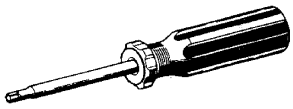	09041–00020	Torx Driver T25	STARTER ASSY (2AZ–FSE)
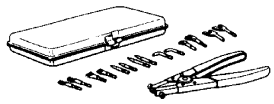	09904–00010	Expander Set	STARTER ASSY (2AZ–FSE)
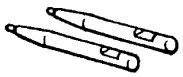	(09904–00050)	No. 4 Claw	STARTER ASSY (2AZ–FSE)

Equipment

Dial indicator	
Ohmmeter	
Torque wrench	
Vernier caliper	
V–block	

STANDARD BOLT

HOW TO DETERMINE BOLT STRENGTH

030LK–08

Bolt Type				Class
Hexagon Head Bolt		Stud Bolt	Weld Bolt	
Normal Recess Bolt	Deep Recess Bolt			
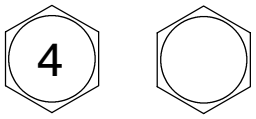 No Mark	 No Mark	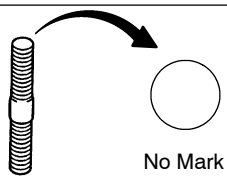 No Mark	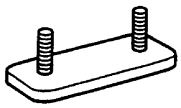	4T
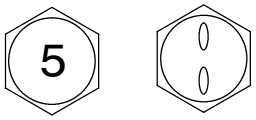	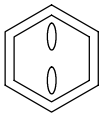			5T
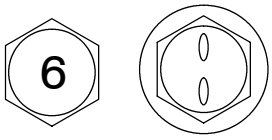 w/ Washer	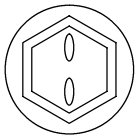 w/ Washer			6T
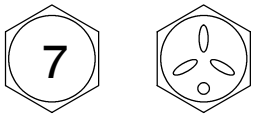	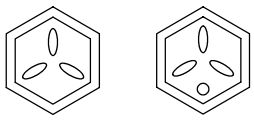			7T
				8T
				9T
	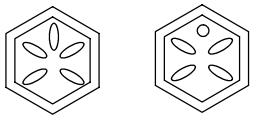			10T
	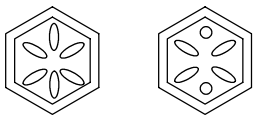			11T

B06431

030LL–08

SPECIFIED TORQUE FOR STANDARD BOLTS

Class	Diameter mm	Pitch mm	Specified torque					
			Hexagon head bolt			Hexagon flange bolt		
			N·m	kgf·cm	ft·lbf	N·m	kgf·cm	ft·lbf
4T	6	1	5	55	48 in.·lbf	6	60	52 in.·lbf
	8	1.25	12.5	130	9	14	145	10
	10	1.25	26	260	19	29	290	21
	12	1.25	47	480	35	53	540	39
	14	1.5	74	760	55	84	850	61
	16	1.5	115	1,150	83	–	–	–
5T	6	1	6.5	65	56 in.·lbf	7.5	75	65 in.·lbf
	8	1.25	15.5	160	12	17.5	175	13
	10	1.25	32	330	24	36	360	26
	12	1.25	59	600	43	65	670	48
	14	1.5	91	930	67	100	1,050	76
	16	1.5	140	1,400	101	–	–	–
6T	6	1	8	80	69 in.·lbf	9	90	78 in.·lbf
	8	1.25	19	195	14	21	210	15
	10	1.25	39	400	29	44	440	32
	12	1.25	71	730	53	80	810	59
	14	1.5	110	1,100	80	125	1,250	90
	16	1.5	170	1,750	127	–	–	–
7T	6	1	10.5	110	8	12	120	9
	8	1.25	25	260	19	28	290	21
	10	1.25	52	530	38	58	590	43
	12	1.25	95	970	70	105	1,050	76
	14	1.5	145	1,500	108	165	1,700	123
	16	1.5	230	2,300	166	–	–	–
8T	8	1.25	29	300	22	33	330	24
	10	1.25	61	620	45	68	690	50
	12	1.25	110	1,100	80	120	1,250	90
9T	8	1.25	34	340	25	37	380	27
	10	1.25	70	710	51	78	790	57
	12	1.25	125	1,300	94	140	1,450	105
10T	8	1.25	38	390	28	42	430	31
	10	1.25	78	800	58	88	890	64
	12	1.25	140	1,450	105	155	1,600	116
11T	8	1.25	42	430	31	47	480	35
	10	1.25	87	890	64	97	990	72
	12	1.25	155	1,600	116	175	1,800	130

030LM–08

HOW TO DETERMINE NUT STRENGTH

Nut Type			Class
Present Standard Hexagon Nut	Old Standard Hexagon Nut		
	Cold Forging Nut	Cutting Processed Nut	
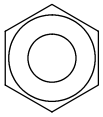 No Mark			4N
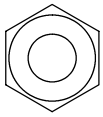 No Mark (w/ Washer)	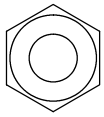 No Mark (w/ Washer)	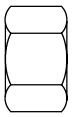 No Mark	5N (4T)
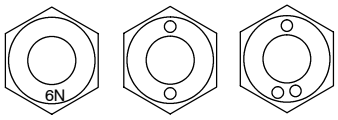 6N			6N
	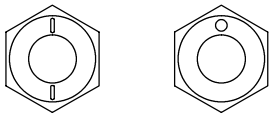	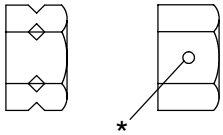 *	7N (5T)
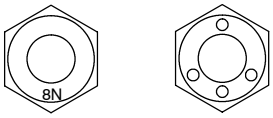 8N			8N
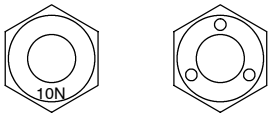 10N	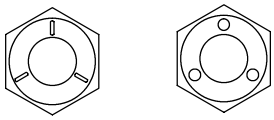	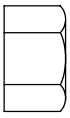 No Mark	10N (7T)
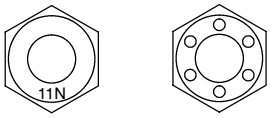 11N			11N
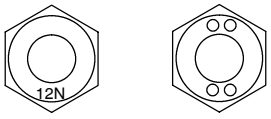 12N			12N

*: Nut with 1 or more marks on one side surface of the nut.

B06432

HINT:

Use the nut with the same number of the nut strength classification or the greater than the bolt strength classification number when tightening parts with a bolt and nut.

Example: Bolt = 4T

Nut = 4N or more

ENGINE MECHANICAL

SERVICE DATA

031H1–04

Oil pump drive gear		
Gear diameter (w/chain)	Minimum	48.2 mm (1.898 in.)
Oil pump drive shaft gear		
Gear diameter (w/chain)	Minimum	48.2 mm (1.898 in.)
Crankshaft timing gear or sprocket		
Gear diameter (w/chain)	Minimum	51.6 mm (2.031 in.)
Chain tensioner slipper		
Wear	Maximum	1.0 mm (0.039 in.)
Chain vibration damper No.1		
Wear	Maximum	1.0 mm (0.039 in.)
Cylinder head set bolt		
Bolt length	Standard	161.3 to 162.7 mm (6.350 to 6.406 in.)
	Maximum	164.2 mm (6.465 in.)
Chain sub–assy		
Elongation	Maximum	115.4 mm (4.543 in.)
Camshaft timing gear or sprocket		
Sprocket diameter (w/chain)	Minimum	97.3 mm (3.831 in.)
Camshaft		
Circle runout	Maximum	0.03 mm (0.0012 in.)
Cam lobe height	Standard	45.510 to 45.610 mm (1.7917 to 1.7957 in.)
	Minimum	45.430 mm (1.7886 in.)
Camshaft No.2		
Circle runout	Maximum	0.03 mm (0.0012 in.)
Cam lobe height	Standard	45.983 to 46.083 mm (1.8106 to 1.8143 in.)
	Minimum	45.900 mm (1.8071 in.)
No. 1 journal diameter		35.971 to 35.985 mm (1.4162 to 1.4167 in.)
Other journal diameter		22.959 to 22.975 mm (0.9039 to 0.9045 in.)
Thrust clearance		
Intake	Standard	0.040 to 0.095 mm (0.0016 to 0.0037 in.)
	Maximum	0.11 mm (0.0043 in.)
Exhaust	Standard	0.080 to 0.135 mm (0.0032 to 0.0053 in.)
	Maximum	0.15 mm (0.0059 in.)
Oil clearance		
Intake No. 1 journal bearing mark 1	Standard	0.007 to 0.038 mm (0.0028 to 0.00150 in.)
Intake No. 1 journal bearing mark 2	Standard	0.008 to 0.038 mm (0.0031 to 0.00150 in.)
Intake No. 1 journal bearing mark 3	Standard	0.008 to 0.038 mm (0.0031 to 0.00150 in.)
Exhaust No. 1 journal	Standard	0.040 to 0.079 mm (0.00157 to 0.00311 in.)
Other journals	Standard	0.025 to 0.062 mm (0.00098 to 0.00244 in.)
Intake No. 1 journal	Maximum	0.07 mm (0.0028 in.)
Other journals	Maximum	0.10 mm (0.0039 in.)
Valve clearance	(Cold)	
Intake		0.19 to 0.29 mm (0.007 to 0.0114 in.)
Exhaust		0.30 to 0.40 mm (0.012 to 0.0160 in.)
Cylinder head		
Warpage		
Cylinder block side	Maximum	0.05 mm (0.0020 in.)
Intake manifold side	Maximum	0.08 mm (0.0031 in.)
Exhaust manifold side	Maximum	0.08 mm (0.0031 in.)
Inner compression spring		
Free length		45.7 mm (1.799 in.)
Deviation	Maximum	1.6 mm (0.063 in.)
Intake valve		
Overall length	Standard	101.71 mm (4.0043in.)
	Minimum	101.21 mm (3.9846in.)
Valve stem diameter		5.470 to 5.485 mm (0.2154 to 0.2159 in.)
Margin thickness	Standard	1.05 to 1.45 mm (0.041 to 0.057 in.)
	Minimum	0.75 mm (0.030 in.)

Exhaust valve		
Overall length	Standard	101.15 mm (3.9823in.)
	Minimum	100.70 mm (3.9646 in.)
Valve stem diameter		5.465 to 5.480 mm (0.2152 to 0.2157 in.)
Margin thickness	Standard	1.2 to 1.6 mm (0.047 to 0.063 in.)
	Minimum	0.9 mm (0.035 in.)
Intake valve guide bush		
Bushing inside diameter		5.510 to 5.530 mm (0.2169 to 0.2177 in.)
Oil clearance	Standard	0.025 to 0.060 mm (0.00098 to 0.00236 in.)
	Maximum	0.08 mm (0.0031 in.)
Diameter		10.285 to 10.306 mm (0.4049 to 0.4057 in.)
Protrusion height		9.6 to 10.0 mm (0.3779 to 0.3937 in.)
Exhaust valve guide bush		
Bushing inside diameter		5.510 to 5.530 mm (0.2169 to 0.2177 in.)
Oil clearance	Standard	0.030 to 0.065 mm (0.0012 to 0.0026 in.)
	Maximum	0.10 mm (0.0039 in.)
Diameter		10.285 to 10.306 mm (0.4049 to 0.4057 in.)
Protrusion height		9.6 to 10.0 mm (0.3779 to 0.3937 in.)
Valve lifter		
Lifter diameter		30.966 to 30.976 mm (1.2191 to 1.2195 in.)
Lifter bore diameter		31.009 to 31.025 mm (1.2208 to 1.2215 in.)
Oil clearance	Standard	0.033 to 0.059 mm (0.0013 to 0.0023 in.)
	Maximum	0.08 mm (0.0032 in.)
Ring w/head pin		
Protrusion height		5.5 mm (0.217 in.)
Connecting rod		
Thrust clearance	Standard	0.160 to 0.362 mm (0.0063 to 0.0143 in.)
	Maximum	0.362 mm (0.0143 in.)
Oil clearance	Standard	0.024 to 0.048 mm (0.0009 to 0.0019 in.)
	Maximum	0.08 mm (0.0031 in.)
Bushing inside diameter		22.005 to 22.014 mm (0.8663 to 0.8667 in.)
Oil clearance	Standard	0.001 to 0.007 mm (0.00004 to 0.00028 in.)
	Maximum	0.05 mm (0.0020 in.)
Out–of–alignment	Maximum per 100 mm (3.94 in.)	0.05 mm (0.0020 in.)
Rod twist	Maximum per 100 mm (3.94 in.)	0.15 mm (0.0059 in.)
Cylinder block		
Warpage	Maximum	0.05 mm (0.0020 in.)
Bore diameter	Standard	88.500 to 88.513 mm (3.4842 to 3.3848 in.)
Piston		
Piston diameter		88.439 to 88.449 mm (3.4818 to 3.4822 in.)
Piston oil clearance	Standard	0.051 to 0.074 mm (0.0020 to 0.0029 in.)
	Maximum	0.1 mm (0.0039 in.)
Piston ring		
Ring groove clearance	No. 1	0.030 to 0.080 mm (0.0012 to 0.0031 in.)
	No. 2	0.020 to 0.060 mm (0.0008 to 0.0024 in.)
	Oil (side rail)	0.020 to 0.070 mm (0.0008 to 0.0028 in.)
End gap	Standard No. 1	0.22 to 0.32 mm (0.0087 to 0.0126 in.)
	No. 2	0.50 to 0.60 mm (0.0197 to 0.0236 in.)
	Oil (side rail)	0.10 to 0.35 mm (0.0039 to 0.0138 in.)
	Maximum No. 1	0.89 mm (0.0350 in.)
	No. 2	1.35 mm (0.0531 in.)
	Oil (side rail)	0.73 mm (0.0287 in.)
Piston pin		
Bushing inside diameter		22.005 to 22.014 mm (0.8663 to 0.8667 in.)
Piston pin diameter		21.997 to 22.009 mm (0.8660 to 0.8665 in.)
Oil clearance	Standard	0.001 to 0.007 mm (0.00004 to 0.00028 in.)
	Maximum	0.010 mm (0.0039 in.)
Connecting rod bolt		
Diameter	Standard	7.2 to 7.3 mm (0.283 to 0.287 in.)
	Minimum	7.0 mm (0.276 in.)

Crankshaft		
Thrust clearance	Standard	0.040 to 0.240 mm (0.0016 to 0.0094 in.)
	Maximum	0.30 mm (0.0118 in.)
Thrust washer thickness		1.930 to 1.980 mm (0.0760 to 0.0780 in.)
Circle runout	Maximum	0.03 mm (0.0012 in.)
Main journal diameter		54.988 to 55.000 mm (2.1648 to 2.06535 in.)
Oil clearance	Standard	0.017 to 0.040 mm (0.0007 to 0.0016 in.)
	Maximum	0.050 mm (0.0020 in.)
Crank pin taper and out– of –round	Maximum	0.003 mm (0.0001 in.)
Crank pin diameter		47.990 to 48.000 mm (1.8894 to 1.8898 in.)
Crankshaft bearing cap set bolt		
Diameter	Standard	7.5 to 7.6 mm (0.295 to 0.299 in.)
	Minimum	7.2 mm (0.283 in.)

031H2-04

TORQUE SPECIFICATION

Part Tightened		N·m	kgf·cm	ft·lbf
Stiffening crankcase assy x Cylinder block		33	332	24
Oil control valve filter x Cylinder block		30	306	22
Cylinder block water drain cock x Stiffening crankcase assy		25	255	18
Cylinder head x Cylinder block	1st 2nd	79 Turn 90°	806 Turn 90°	58 Turn 90°
Camshaft timing gear assy x Camshaft		54	551	40
Camshaft timing sprocket x Camshaft		54	551	40
Camshaft bearing cap No. 1 x Cylinder head		30	301	22
Camshaft bearing cap No. 2 x Cylinder head		30	301	22
Camshaft bearing cap No. 3 x Cylinder head		9.0	92	80 in.·lbf
Oil pump assy x Stiffening crankcase assy		19	194	14
Chain tensioner plate x Stiffening crankcase assy		12	122	9
Oil pump drive sprocket x Oil pump		30	301	22
Chain vibration damper No. 1 x Cylinder head		9.0	92	80 in.·lbf
Chain vibration damper No. 1 x Cylinder block		9.0	92	80 in.·lbf
Chain tensioner slipper x Cylinder block		19	194	14
Timing chain guide x Crankshaft bearing cap No. 1		9.0	92	80 in.·lbf
Timing chain cover (See page 14–5)	Bolt A Bolt B Bolt C Nut	9.0 21 43 9.0	92 214 438 92	80 in.·lbf 15 32 80 in.·lbf
Oil pan x Stiffening crankcase assy		9.0	92	80 in.·lbf
Oil pan drain plug x Oil pan		25	255	18
Water pump assy x Cylinder block		9.0	92	80 in.·lbf
Water pump pulley x Water pump assy		26	265	19
Crankshaft position sensor x Timing chain cover		9.0	92	80 in.·lbf
Crankshaft pulley x Crankshaft		180	1,835	132
Chain tensioner assy No. 1 x Timing chain cover		9.0	92	80 in.·lbf
Camshaft position sensor x Cylinder head		9.0	92	80 in.·lbf
Cylinder head cover x Cylinder head (See page 14–5)	Bolt A Bolt B Bolt C Nut	11 14 21 11	112 143 214 112	8 10 15 8
Oil filter union x Stiffening crankcase assy		30	306	22
Spark plug x Cylinder head		19	194	14
Ventilation valve x Cylinder head cover		19	194	14
Stud bolt x Cylinder head (See page 14–42)	Bolt A Bolt B Bolt C Bolt D	5.0 5.0 9.5 9.5	51 51 97 97	44 in.·lbf 44 in.·lbf 84 in.·lbf 84 in.·lbf
Connecting rod cap x Connecting rod	1st 2nd	25 Turn 90°	250 Turn 90°	18 Turn 90°
Crankshaft bearing cap x Cylinder block	1st 2nd	20 40	204 408	15 30
Stud bolt x Cyllinder block (See page 14–56)	Stud bolt A Stud bolt B Stud bolt C	5.0 10 5.0	51 102 51	44 in.·lbf 7 44 in.·lbf

LUBRICATION

031H5–04

SERVICE DATA

Oil pump		
Side clearance	Standard	0.030 to 0.085 mm (0.0012 to 0.0033 in.)
	Maximum	0.16 mm (0.0063 in.)
Tip clearance	Standard	0.080 to 0.160 mm (0.0031 to 0.0063 in.)
	Maximum	0.35 mm (0.0138 in.)
Body clearance	Standard	0.100 to 0.170 mm (0.00394 to 0.00669 in.)
	Maximum	0.325 mm (0.01280 in.)

031H6–03

TORQUE SPECIFICATION

Part Tightened	N·m	kgf·cm	ft·lbf
Oil pump x Oil pump cover	8.8	90	78 in.·lbf
Oil pump strainer x Oil pump cover	8.8	90	78 in.·lbf

STARTING & CHARGING

SERVICE DATA

031E6–05

Magnetic switch resistance	Terminal 50 – C	Below 1 Ω
	Terminal 50 – Switch body	Below 1.5 Ω
Starter armature resistance	Segments	Below 1 Ω
	Commutator – Coil core	10 kΩ or higher
Starter armature assy		
Circle runout	Standard	0.02 mm (0.0008 in.)
	Maximum	0.05 mm (0.0020 in.)
Diameter	Standard	29 mm (1.142 in.)
	Minimum	28 mm (1.102 in.)
Starter brush holder assy		
Brush length	Standard	15.5 mm (0.610 in.)
	Minimum	9.0 mm (0.354 in.)
Resistance	(+) – (–)	10 kΩ or higher
Generator rotor assy		
Rotor coil resistance	at 20°C (68°F)	1.8 to 2.8 Ω
Slip ring diameter	Standard	15.3 to 15.5 mm (0.602 to 0.610 in.)
	Minimum	14.3 mm (0.561 in.)
Generator brush holder assy		
Brush exposed length	Standard	13.2 mm (0.520 in.) in new condition
	Minimum	6.0 mm (0.236 in.)

031E7–06

TORQUE SPECIFICATION

Part Tightened	N·m	kgf·cm	ft·lbf
Starter commutator end frame assy x Starter brush holder assy	2.0	20	22 in.·lbf
Magnetic switch x Starter drive housing assy	2.3	23	20 in.·lbf
Starter commutator end frame assy x Starter drive housing assy	6.0	61	53 in.·lbf
Lead wire x Magnetic switch assy	5.9	60	52 in.·lbf
Pulley x Generator rotor assy	65	663	48
Drive end shield x Bearing retainer	3.1	32	27 in.·lbf
Stator sub–assy generator w/ rectifier x Drive end frame assy	3.5	36	31 in.·lbf
Regulator sub–assy generator w/ brush x Stator sub–assy generator w/ rectifier w/o washer w/ washer	 2.2 1.2	 22 12	 19 in.·lbf 11 in.·lbf
Generator rear end cover x Stator sub–assy generator w/ rectifier (See page 19–9) Nut A Nut B Screw	 19.5 12 2.4	 199 122 24	 14 9.0 21 in.·lbf

PARTIAL ENGINE ASSY (2AZ–FSE)

141Q4–01

COMPONENTS

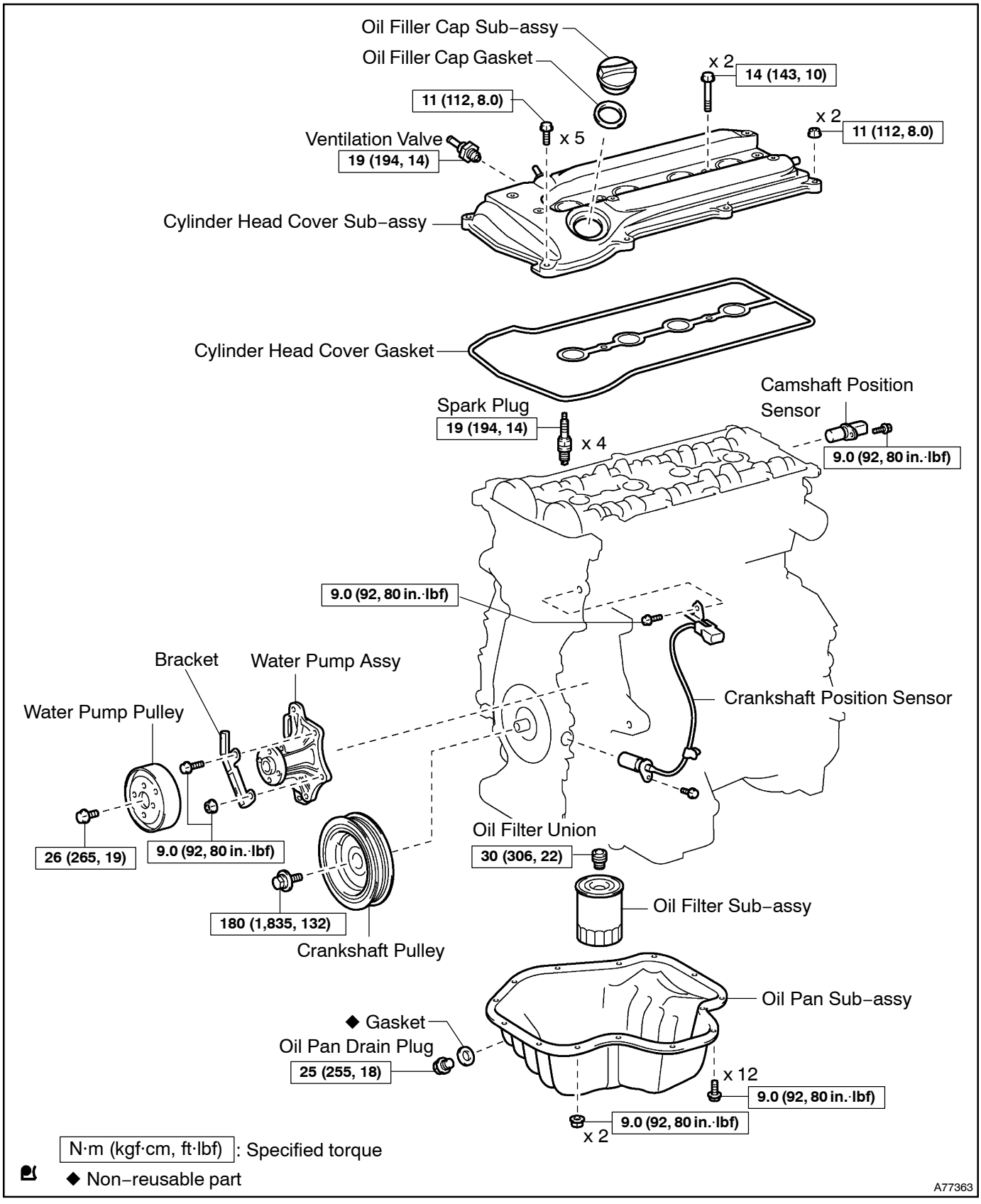

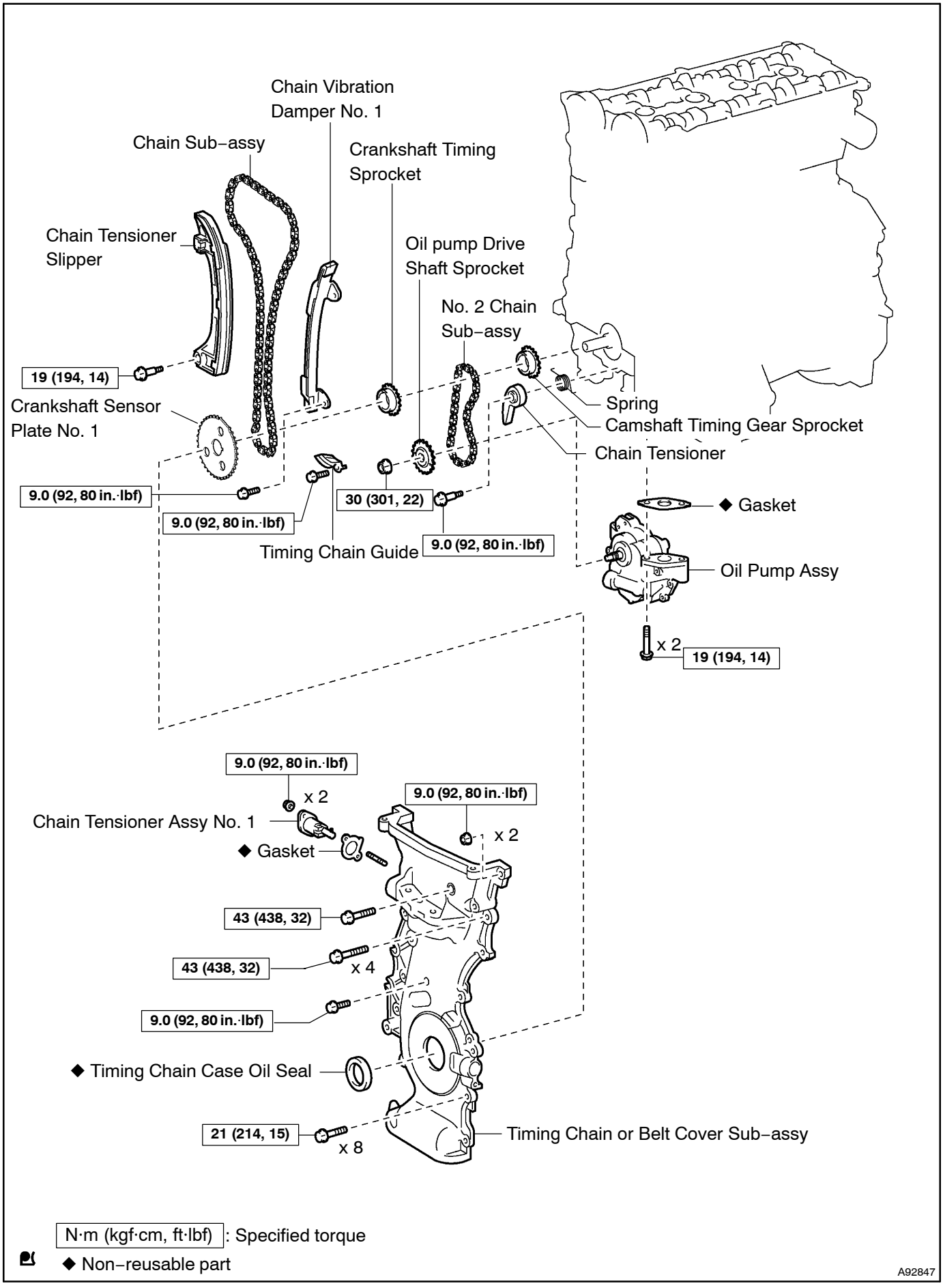
Chain Vibration Damper No. 1
Chain Sub–assy
Crankshaft Timing Sprocket
Chain Tensioner Slipper
Oil pump Drive Shaft Sprocket
No. 2 Chain Sub–assy
19 (194, 14)
Crankshaft Sensor Plate No. 1
Spring
Camshaft Timing Gear Sprocket
Chain Tensioner
9.0 (92, 80 in.·lbf)
9.0 (92, 80 in.·lbf)
30 (301, 22)
9.0 (92, 80 in.·lbf)
Timing Chain Guide
◆ Gasket
Oil Pump Assy
x 2
19 (194, 14)
9.0 (92, 80 in.·lbf)
x 2
Chain Tensioner Assy No. 1
9.0 (92, 80 in.·lbf)
x 2
◆ Gasket
43 (438, 32)
43 (438, 32)
x 4
9.0 (92, 80 in.·lbf)
◆ Timing Chain Case Oil Seal
21 (214, 15)
x 8
Timing Chain or Belt Cover Sub–assy
N·m (kgf·cm, ft·lbf) : Specified torque
◆ Non–reusable part
A92847

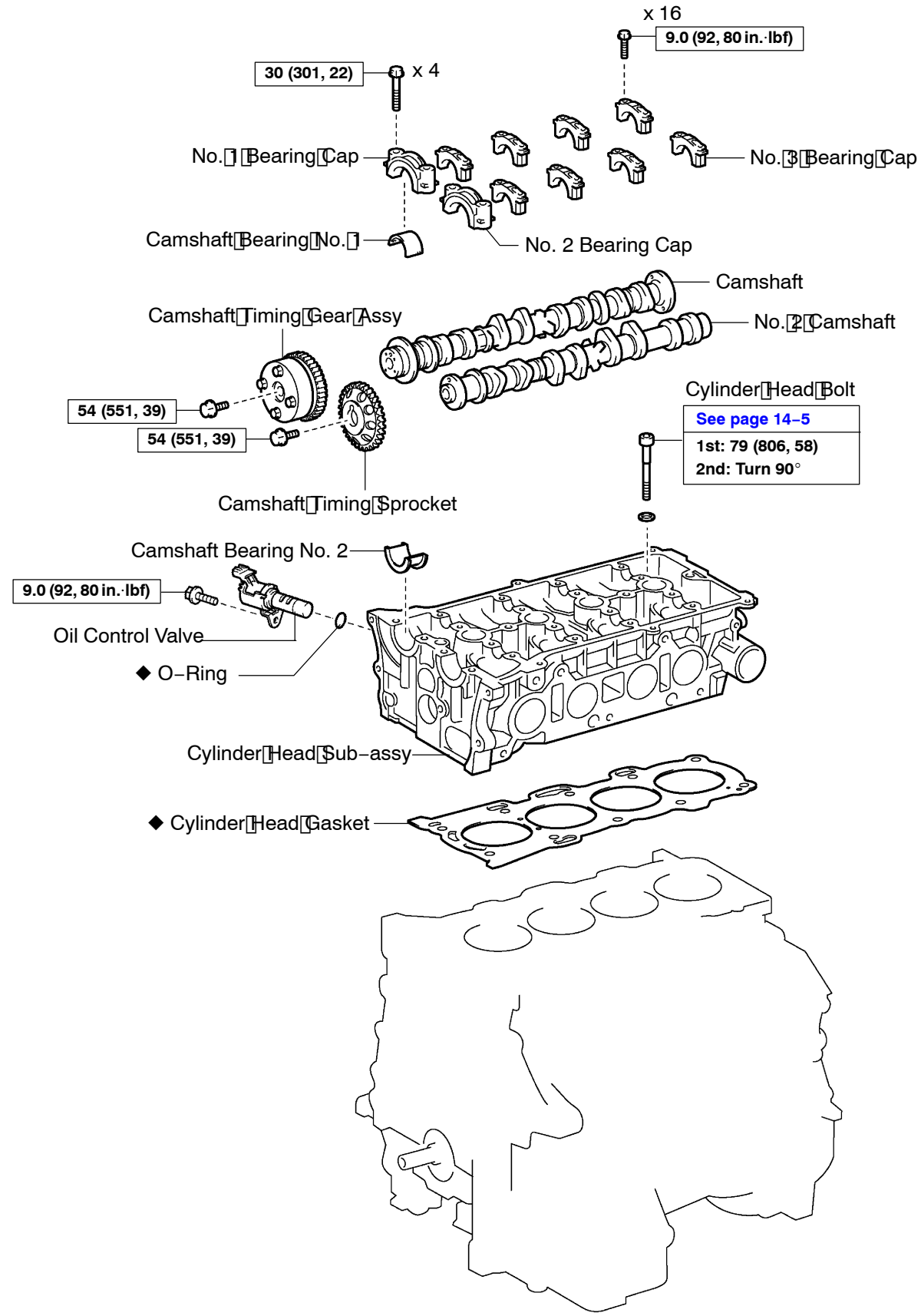

N·m (kgf·cm, ft·lbf) : Specified torque

◆ Non–reusable part

A92010

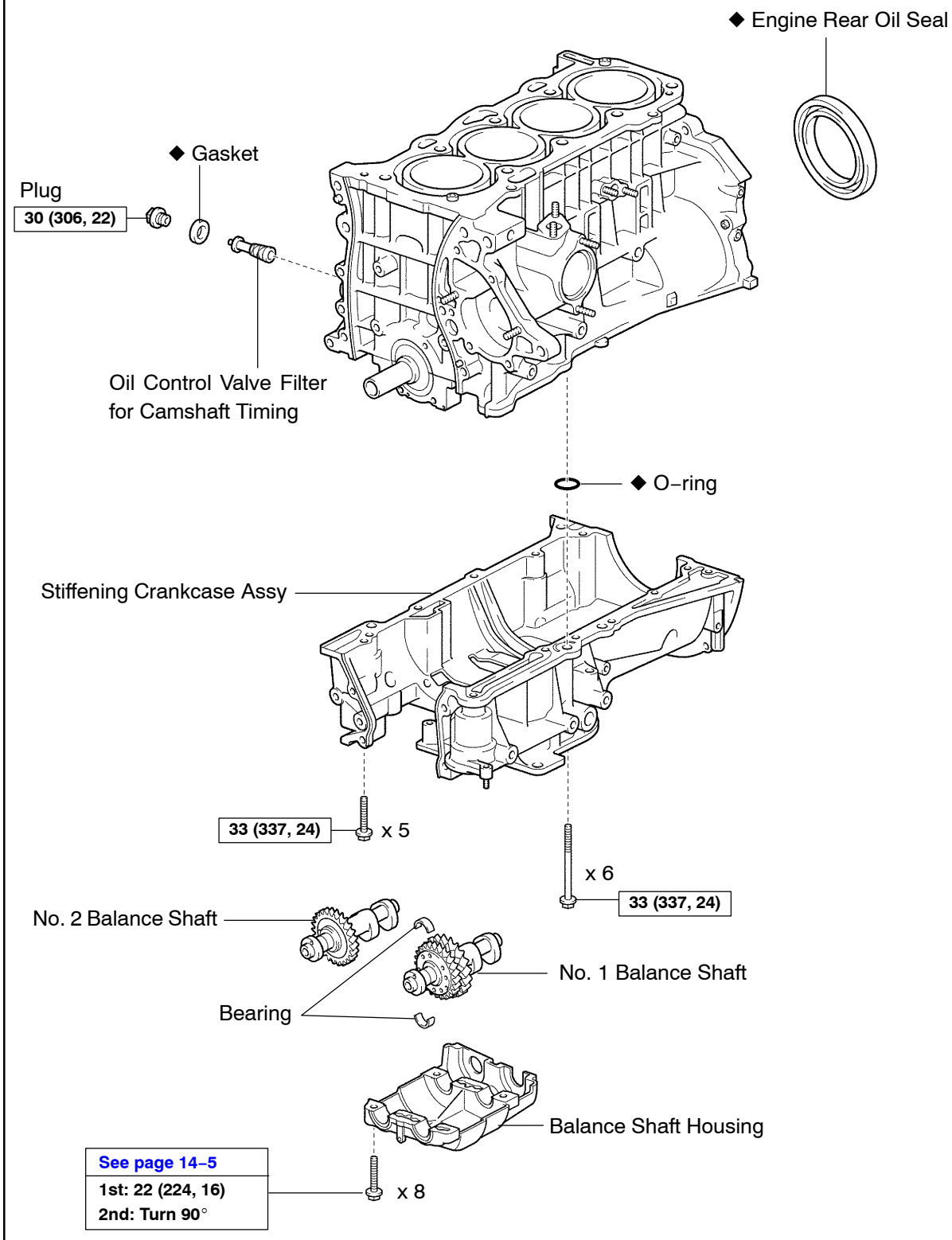

N·m (kgf·cm, ft·lbf) : Specified torque
◆ Non–reusable part

A91573

141Q5–01

OVERHAUL

1. REMOVE OIL FILLER CAP SUB–ASSY

2. REMOVE OIL FILLER CAP GASKET

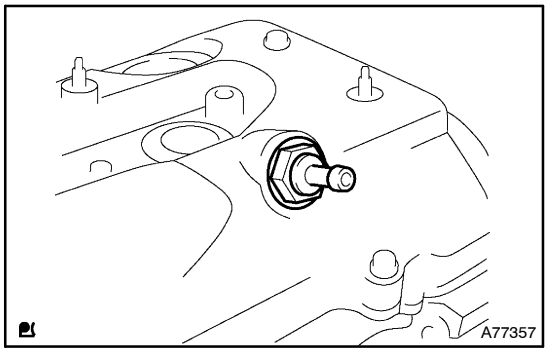

3. REMOVE VENTILATION VALVE SUB–ASSY

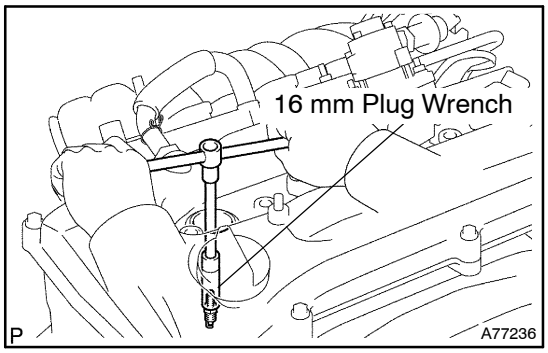

4. REMOVE SPARK PLUG

(a) Using a 16 mm plug wrench, remove the spark plugs.

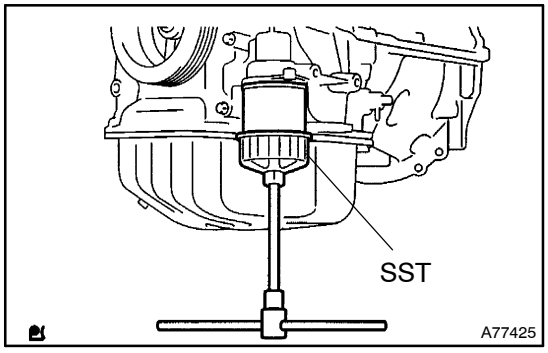

5. REMOVE OIL FILTER SUB–ASSY

(a) Using SST, remove the oil filter.
SST 09228–06501

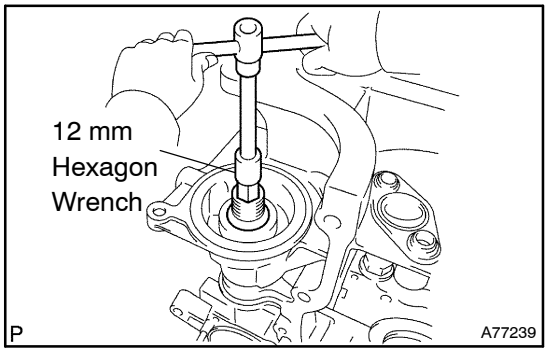

6. REMOVE OIL FILTER UNION

(a) Using a 12 mm socket hexagon wrench, remove the oil filter union.

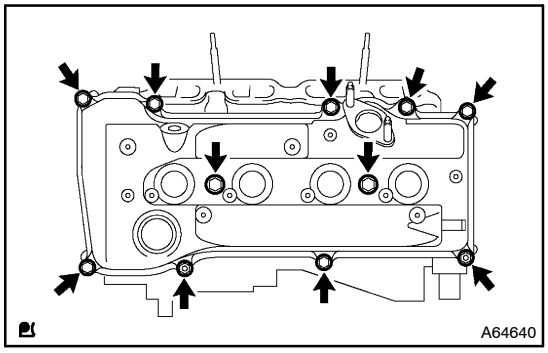

7. REMOVE CYLINDER HEAD COVER SUB–ASSY

(a) Remove the 9 bolts 2 nuts and cylinder head cover.

8. REMOVE CYLINDER HEAD COVER GASKET

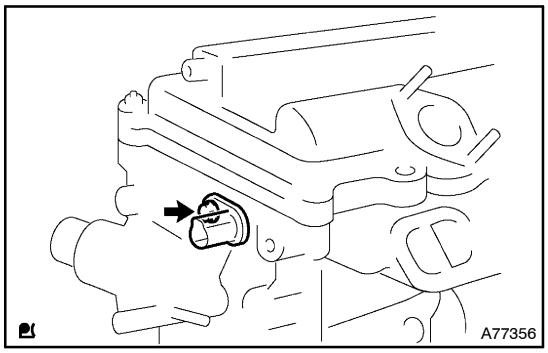

9. REMOVE CAMSHAFT POSITION SENSOR

(a) Remove the bolt and sensor.

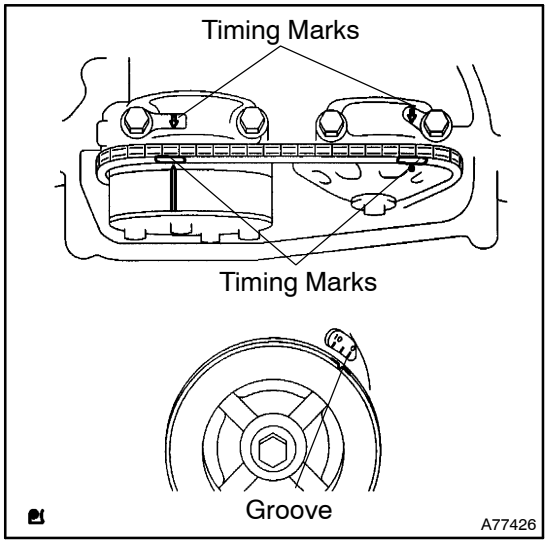

10. REMOVE CRANKSHAFT PULLEY

(a) Turn the crankshaft pulley and align its groove with timing mark 0 of the timing chain cover.

(b) Check that the timing marks of the camshaft timing sprockets are aligned with the timing marks of the No. 1 bearing cap, as shown in the illustration.

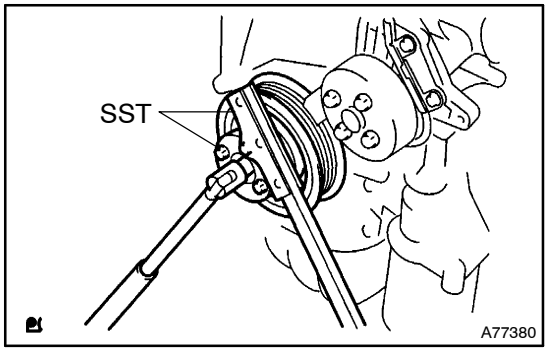

(c) Remove the crankshaft pulley.

(1) Using SST, fix the crankshaft pulley and loosen the pulley set bolt.

SST 09213–54015 (91651–60855), 09330–00021

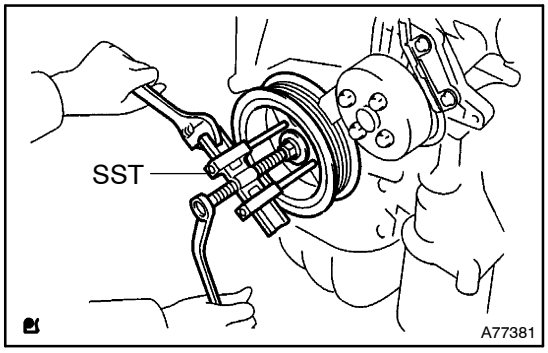

(2) Using SST, remove the crankshaft pulley.
SST 09950–50013 (09951–05010, 09952–05010, 09953–05020, 09954–05021)

11. REMOVE CHAIN TENSIONER ASSY NO.1

(a) Remove the 2 nuts, chain tensioner and gasket.

NOTICE:

Be sure not to operate the crankshaft without the chain tensioner.

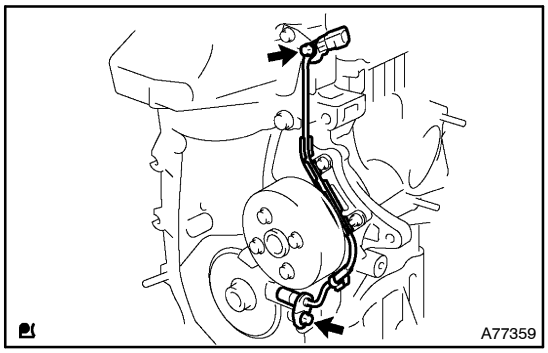

12. REMOVE CRANKSHAFT POSITION SENSOR

(a) Remove the 2 bolts and crankshaft position sensor.

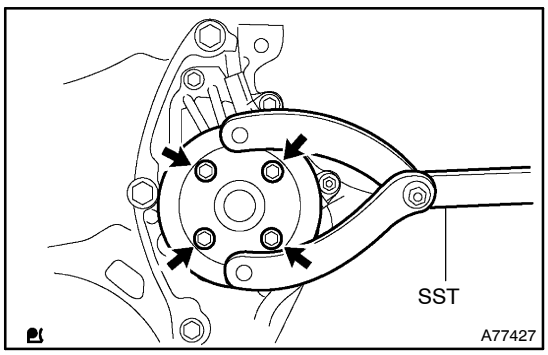

13. REMOVE WATER PUMP PULLEY

(a) Using SST, remove the 4 bolts and pulley.
SST 09960–10010 (09962–01000, 09963–00700)

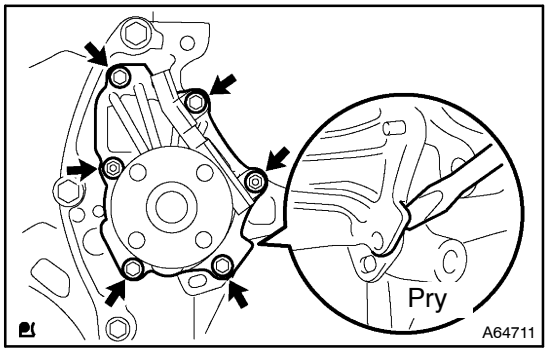

14. REMOVE WATER PUMP ASSY

(a) Remove the 4 bolts, 2 nuts and clamp.

(b) Using a screwdriver, pry between the water pump and cylinder block, and then remove the pump.

NOTICE:

Be careful not to damage the contact surface of the water pump and cylinder block.

15. REMOVE OIL PAN DRAIN PLUG

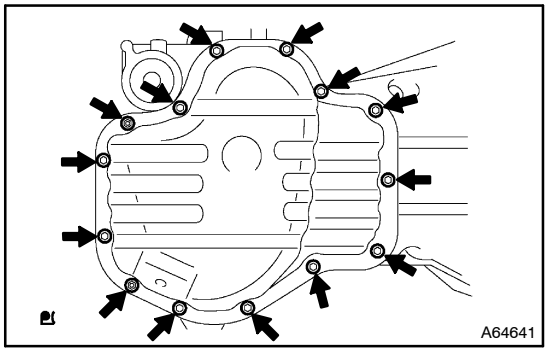

16. REMOVE OIL PAN SUB–ASSY

(a) Remove the 12 bolts and 2 nuts.

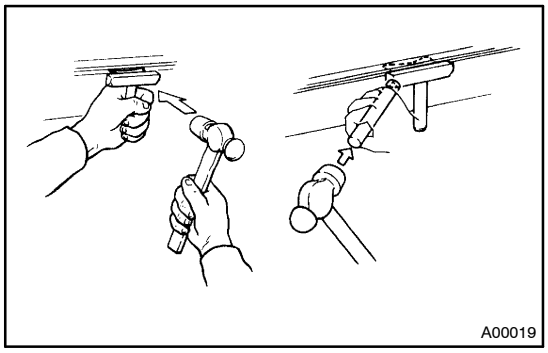

(b) Insert the blade of SST between the crankcase and oil pan. Cut off applied sealer and remove the oil pan.
SST 09032–00100

NOTICE:

Be careful not to damage the contact surface of the cylinder block and oil pan.

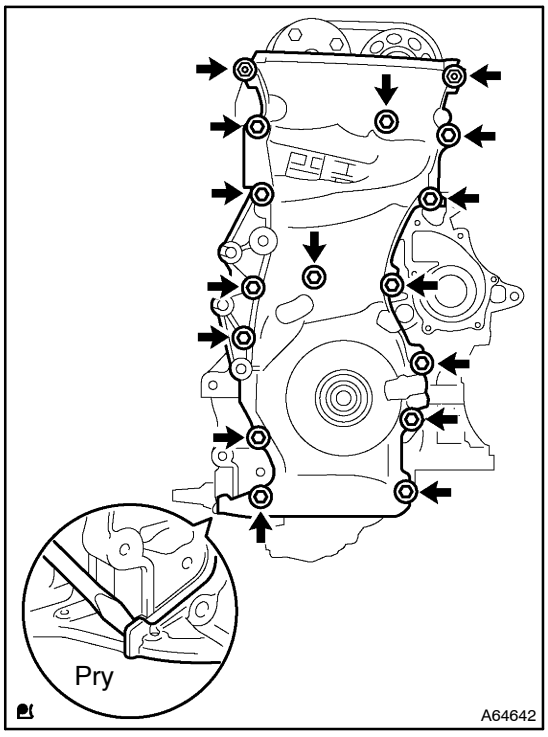

17. REMOVE TIMING CHAIN OR BELT COVER SUB–ASSY

(a) Remove the 14 bolts and 2 nuts.

(b) Remove the timing chain cover by prying between the timing chain cover and cylinder head or cylinder block with a screwdriver.

NOTICE:

Be careful not to damage the contact surfaces of the timing chain cover, cylinder block and cylinder head.

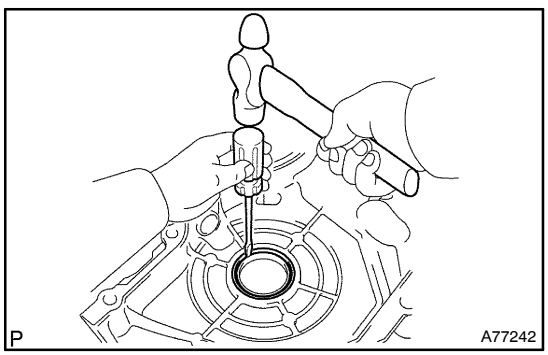

18. REMOVE TIMING GEAR CASE OR TIMING CHAIN CASE OIL SEAL

(a) Using a screwdriver and a hammer, remove the oil seal.

19. REMOVE CRANKSHAFT POSITION SENSOR PLATE NO.1

20. REMOVE CHAIN TENSIONER SLIPPER

(a) Remove the bolt and chain tensioner slipper.

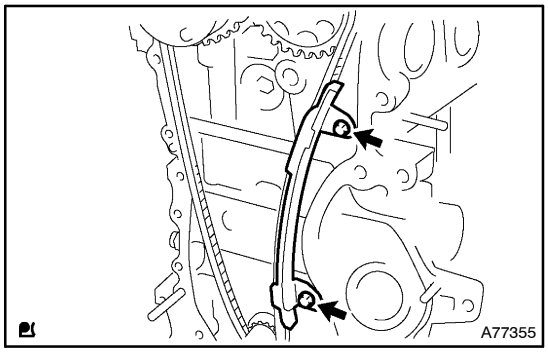

21. REMOVE CHAIN VIBRATION DAMPER NO.1

(a) Remove the 2 bolts and damper.

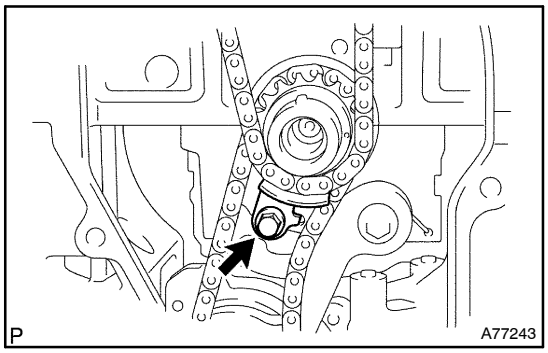

22. REMOVE TIMING CHAIN GUIDE

(a) Remove the bolt and guide.

23. REMOVE CHAIN SUB–ASSY

24. REMOVE CRANKSHAFT TIMING GEAR OR SPROCKET

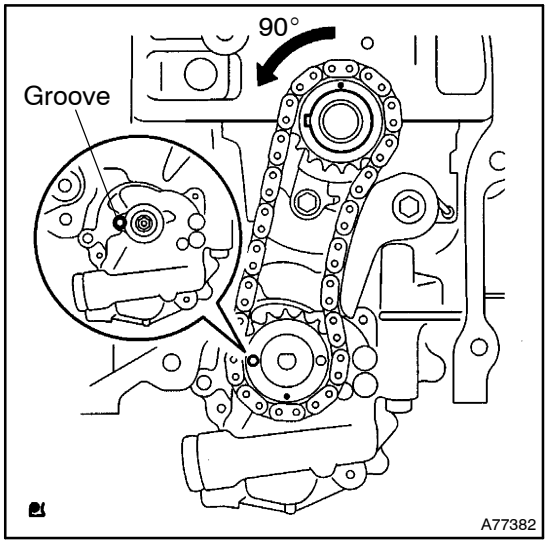

25. REMOVE NO.2 CHAIN SUB–ASSY

(a) Turn the crankshaft counterclockwise by 90°, and align the adjusting hole of the oil pump drive shaft gear with the groove of the oil pump.

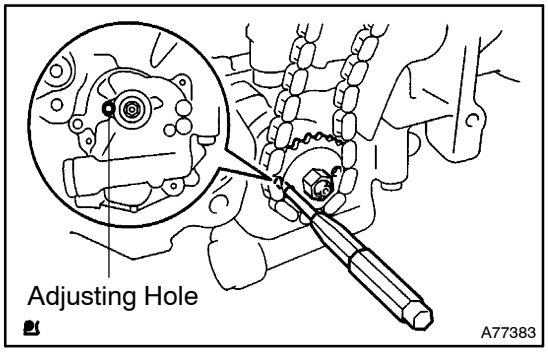

(b) Put a bar (ϕ 4 mm) in the adjusting hole of the oil pump drive shaft gear to temporarily lock the gear in position. Remove the nut.

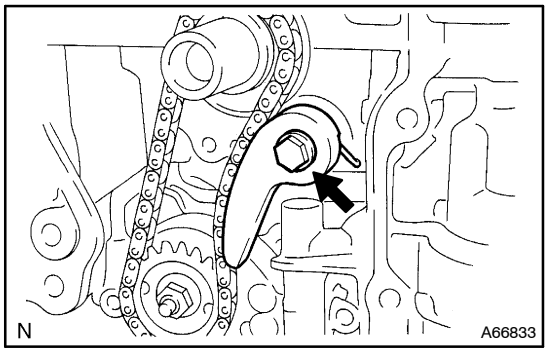

(c) Remove the bolt, chain tensioner plate and spring.
(d) Remove the oil pump drive gear, oil pump drive shaft gear and chain.

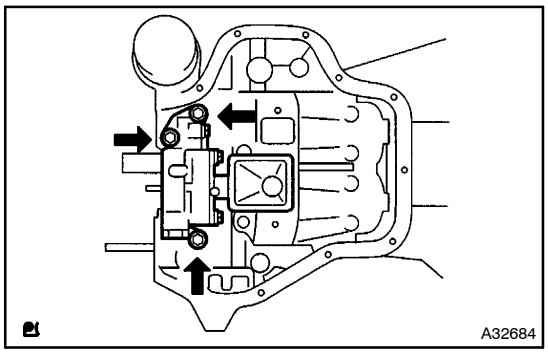

26. REMOVE OIL PUMP ASSY

(a) Remove the 3 bolts, oil pump and gasket.

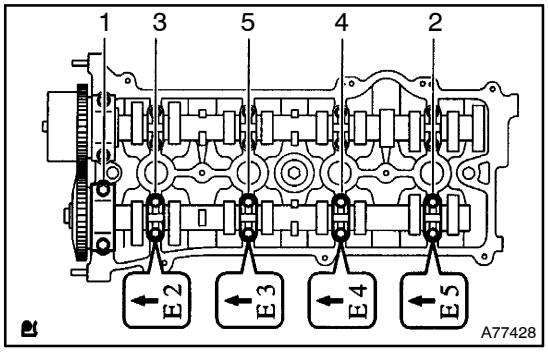

27. REMOVE NO.2 CAMSHAFT

(a) Uniformly loosen and remove the No. 2 camshaft's 10 bearing cap bolts in the sequence shown in the illustration. Then remove the 5 bearings.
(b) Remove the camshaft.

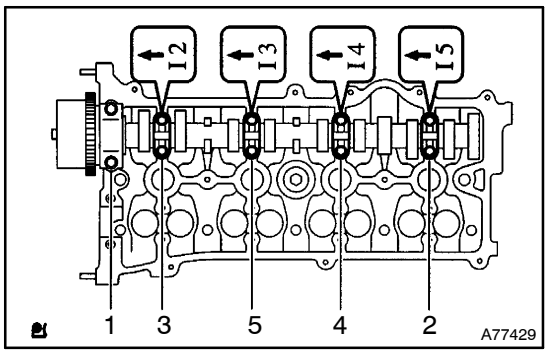

28. REMOVE CAMSHAFT

(a) Uniformly loosen and remove the No. 2 camshaft's 10 bearing cap bolts in the sequence shown in the illustration. Then remove the 5 bearings.
(b) Remove the camshaft.

29. REMOVE CAMSHAFT BEARING NO.1

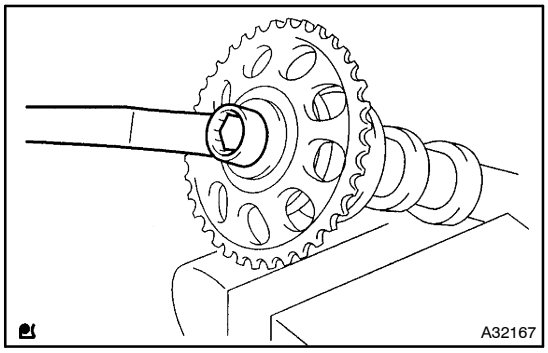

30. REMOVE CAMSHAFT TIMING GEAR OR SPROCKET

(a) Fix the camshaft with a vise and remove the camshaft timing sprocket.

NOTICE:

Be careful not to damage the camshaft.

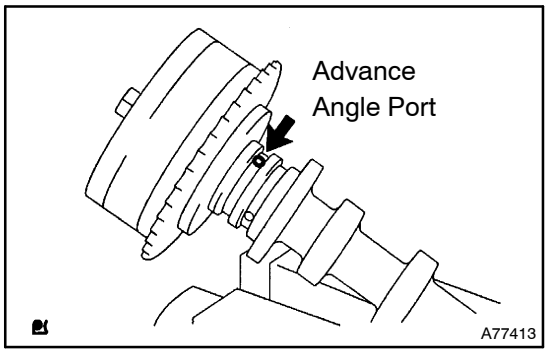

31. REMOVE CAMSHAFT TIMING GEAR ASSY

(a) Fix the camshaft with a vise, and make sure that the camshaft timing gear does not move.

(b) Cover all the oil ports with vinyl tape except the advanced angle side, as shown in the illustration.

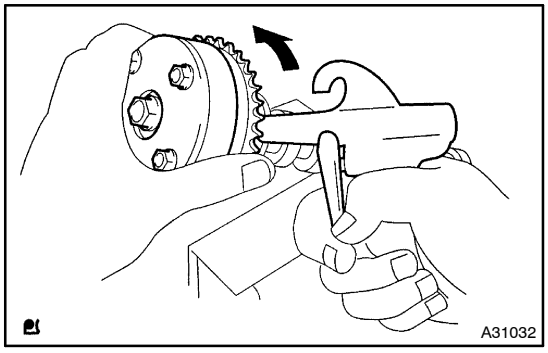

(c) Using an air gun, apply about 150 kPa (1.5 kgf/cm, 21 psi) of air pressure to the port on the advanced angle side.

CAUTION:

Some oil spraying will occur. Contain the spray with a shop rag.

HINT:

This operation releases the lock pin for the extreme retarded angle lock.

(d) Under the condition above, check that the camshaft timing gear can be turned by hand to the advanced angle side (counterclockwise), the direction of the arrow in the illustration.

Standard:

The camshaft timing gear can be turned by hand.

HINT:

The camshaft timing gear will turn to the advanced angle side without applying force by hand depending on the force of the air pressure applied. Also, if applying pressure to the oil path is difficult as a result of air leakage from the port, the lock–pin may be difficult to release.

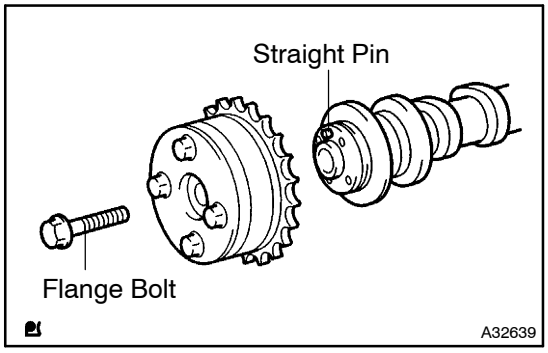

(e) Remove the flange bolt from the camshaft timing gear.

NOTICE:

- **Be sure not to remove the other 4 bolts.**
- **If planning to reuse the camshaft timing gear, release the straight pin lock first, and then install the gear.**

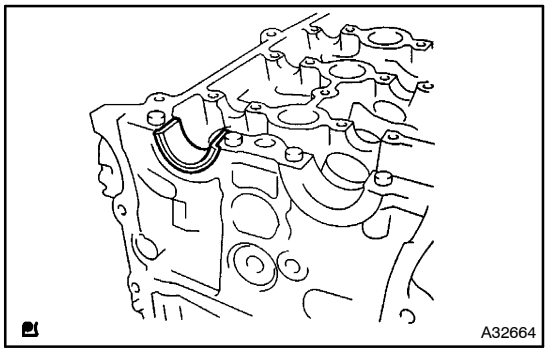

32. REMOVE CAMSHAFT BEARING NO.2

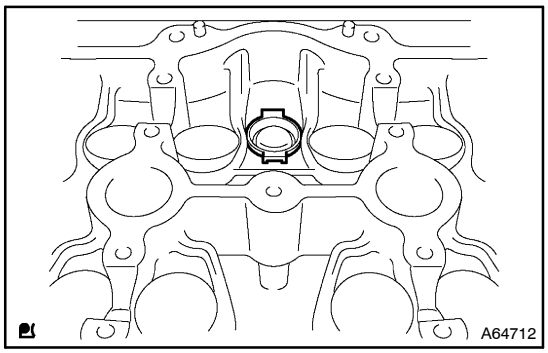

33. REMOVE CAMSHAFT HOUSING PLUG

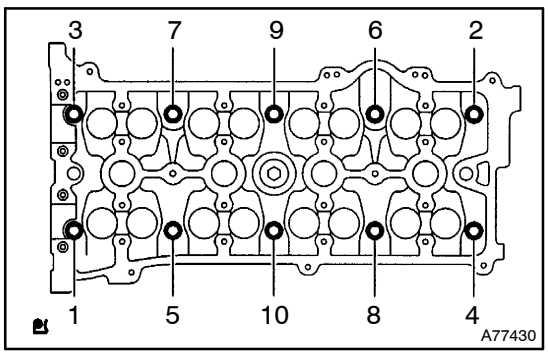

34. REMOVE CYLINDER HEAD SUB–ASSY

(a) Using a 10 mm bi–hexagon wrench, uniformly loosen the 10 bolts in the sequence shown in the illustration. Remove the 10 cylinder head bolts and plate washers.

NOTICE:

- **Be careful not to drop washers into the cylinder head.**
- **Head warpage or cracking could result from removing bolts in an incorrect order.**

35. REMOVE CYLINDER HEAD GASKET

36. REMOVE CYLINDER BLOCK WATER DRAIN COCK SUB–ASSY

37. REMOVE OIL CONTROL VALVE FILTER

(a) Using a 12 mm hexagon wrench, remove the plug, gasket and filter.

38. REMOVE W/HEAD TAPER SCREW PLUG NO.1

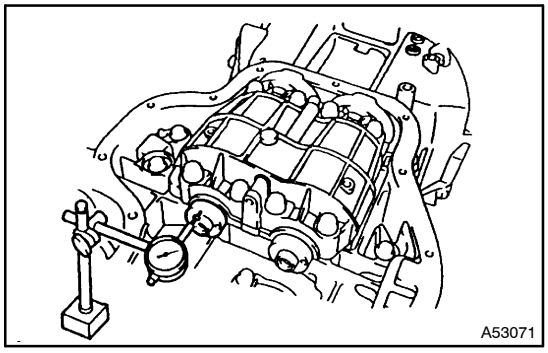

39. REMOVE BALANCE SHAFT THRUST CLEARANCE

(a) Using a dial indicator, measure the thrust clearance while moving the balance shaft back and forth.

Standard thrust clearance:
0.050 to 0.090 mm (0.0020 to 0.0035 in.)
Maximum thrust clearance: 0.090 mm (0.0035 in.)

If the thrust clearance is greater than the maximum, replace the balance shaft housing and bearings. If necessary, replace the balance shaft.

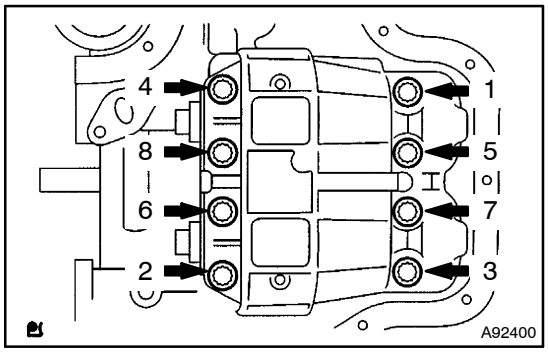

40. REMOVE BALANCE SHAFT OIL CLEARANCE

(a) Uniformly loosen and remove the 8 bolts in the sequence shown in the illustration.

NOTICE:

Be careful not to damage the contact surfaces of the balance shaft housing and crankcase.

HINT:

Keep the lower bearing and balance shaft housing together.

(b) Lift out the No. 1 and No. 2 balance shafts.

HINT:

Keep the upper bearing with the crankcase.

(c) Clean each bearing and journal.

(d) Check each bearing and journal for pitting and scratches.

If a bearing or journal is damaged, replace the bearings. If necessary, replace the balance shaft.

(e) Place the No. 1 and No. 2 balance shafts on the crankcase.

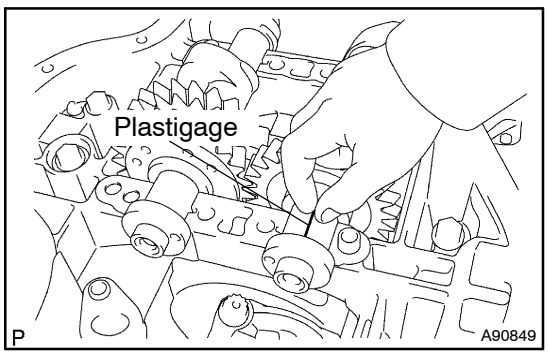

(f) Lay a strip of Plastigage across each journal and install the balance shaft housing.

(g) Apply a light coat of engine oil on the threads and under the heads of the balance shaft housing bolts.

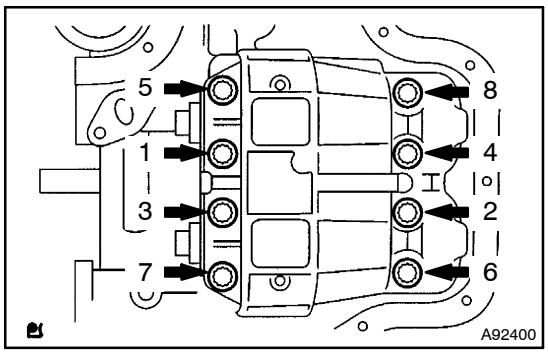

(h) Uniformly tighten the 8 bolts in the sequence shown in the illustration.

Torque: 22 N·m (220 kgf·cm, 16 ft·lbf)

HINT:

The balance shaft housing bolts are tightened in 2 progressive steps.

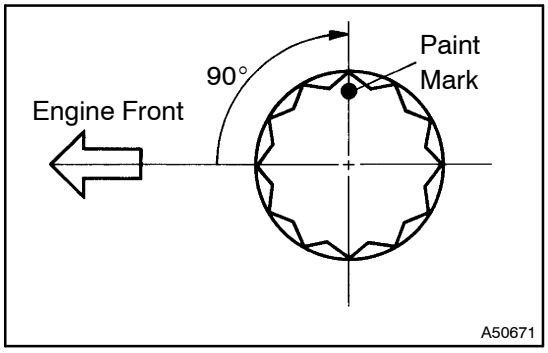

(i) Mark the front side of each balance shaft housing bolt head with paint.
(j) Retighten the bolts by 90° as shown in the illustration.
(k) Check that the paint marks are now at a 90° angle to the front.

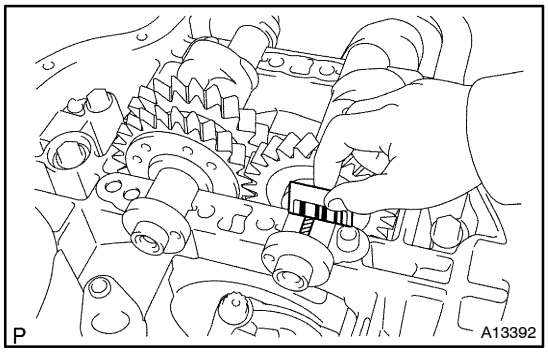

(l) Remove the balance shaft housing, and measure the Plastigage at its widest point.
Standard oil clearance:
0.004 to 0.031 mm (0.0002 to 0.0012 in.)
Maximum oil clearance: 0.031 mm (0.0012 in.)
(m) Completely remove the Plastigage after the inspection.

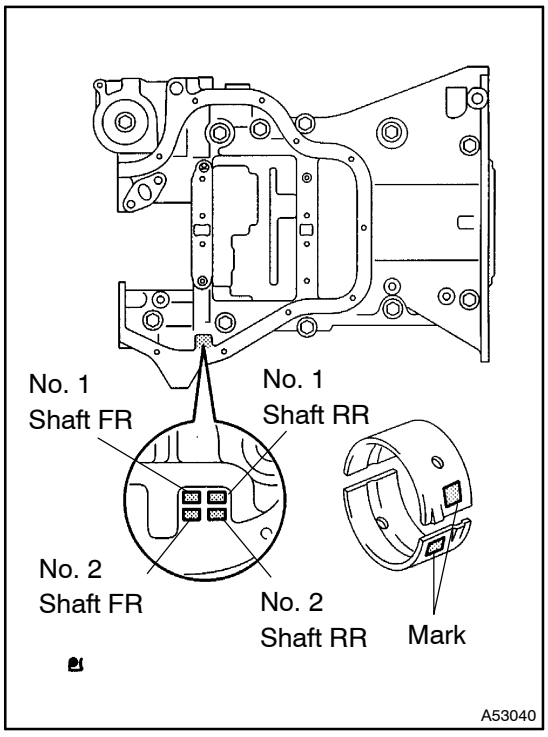

If the clearance is greater than the maximum, replace the bearing. If necessary, replace the balance shaft.
If using a standard bearing, replace it with one of the same number.

Balance shaft housing journal bore diameter:

Mark 1	26.000 to 26.006 mm (1.0236 to 1.0239 in.)
Mark 2	26.007 to 26.012 mm (1.0239 to 1.0241 in.)
Mark 3	26.013 to 26.018 mm (1.0241 to 1.0243 in.)

Balance shaft journal diameter:

	22.985 to 23.000 mm (0.9049 to 0.9055 in.)

Standard bearing center wall thickness:

Mark 1	1.486 to 1.489 mm (0.0585 to 0.0586 in.)
Mark 2	1.490 to 1.492 mm (0.0587 to 0.0587 in.)
Mark 3	1.493 to 1.495 mm (0.0588 to 0.0589 in.)

(n) Completely remove the Plastigage after the inspection.

41. REMOVE BALANCE SHAFT
42. REMOVE BALANCE SHAFT BEARING NO. 1

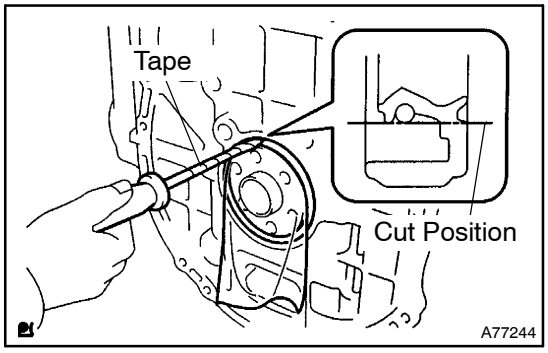

43. REMOVE ENGINE REAR OIL SEAL

(a) Using a knife, cut off the oil seal lip.

(b) Using a screwdriver with its tip taped, pry out the oil seal.

NOTICE:

After the removal, check the crankshaft for damage. If it is damaged, smooth the surface with 400–grit sandpaper.

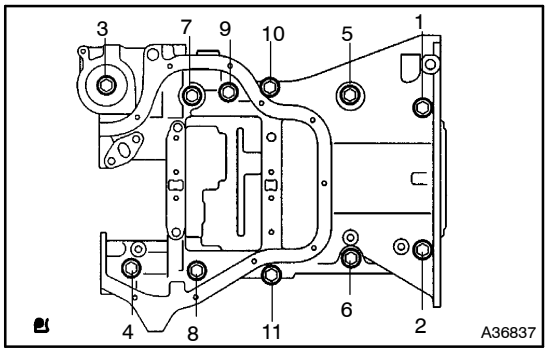

44. REMOVE STIFFENING CRANKCASE ASSY

(a) Uniformly loosen and remove the 11 bolts in the sequence shown in the illustration.

(b) Using a screwdriver, remove the crankcase by prying the portions between the crankcase and cylinder block.

NOTICE:

Be careful not to damage the contact surfaces of the crankcase and cylinder block.

(c) Remove the O–ring from the cylinder block.

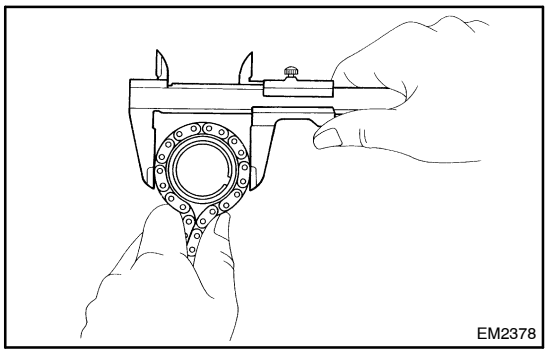

45. INSPECT OIL PUMP DRIVE GEAR

(a) Wrap the chain around the drive gear.

(b) Using a vernier caliper, measure the drive gear diameter with the chain.

Minimum gear diameter (w/chain): 48.2 mm (1.898 in.)

NOTICE:

The vernier caliper must contact the chain rollers for the measurement.

If the diameter is less than the minimum, replace the chain and drive gear.

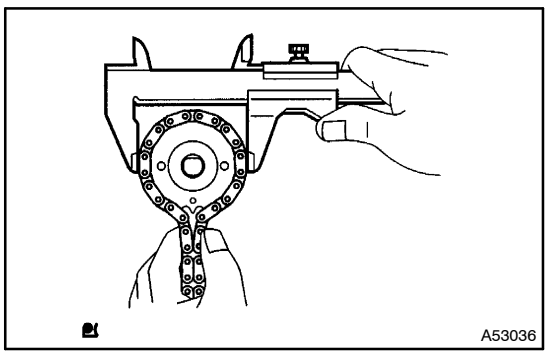

46. INSPECT OIL PUMP DRIVE SHAFT GEAR

(a) Wrap the chain around the drive shaft gear.

(b) Using a vernier caliper, measure the drive shaft gear diameter with the chain.

Minimum gear diameter (w/chain): 48.2 mm (1.898 in.)

NOTICE:

The vernier caliper must contact the chain rollers for the measurement.

If the diameter is less than the minimum, replace the chain and drive shaft gear.

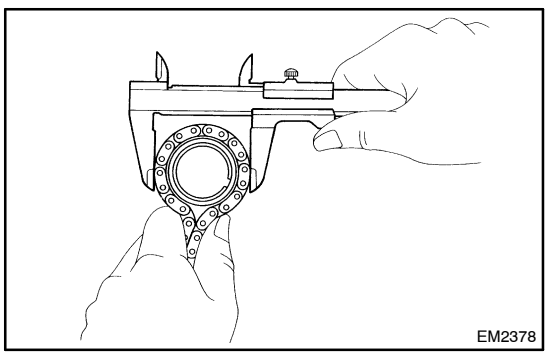

47. INSPECT CRANKSHAFT TIMING GEAR OR SPROCKET

(a) Wrap the chain around the timing gear.

(b) Using a vernier caliper, measure the timing gear diameter with the chain.

Minimum gear diameter (w/chain): 51.6 mm (2.031 in.)

NOTICE:
The vernier caliper must contact the chain rollers for the measurement.
If the diameter is less than the minimum, replace the chain and timing gear.

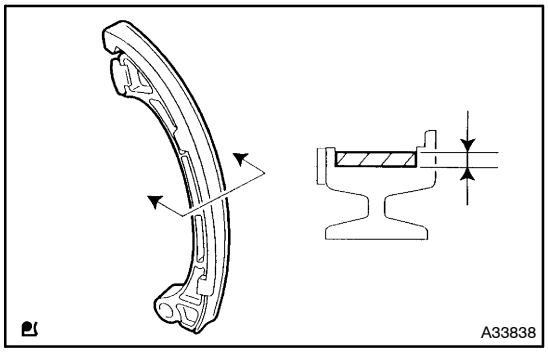

48. INSPECT CHAIN TENSIONER SLIPPER
(a) Measure the tensioner slipper wear.
Maximum wear: 1.0 mm (0.039 in.)
If the wear is greater than the maximum, replace the tensioner slipper.

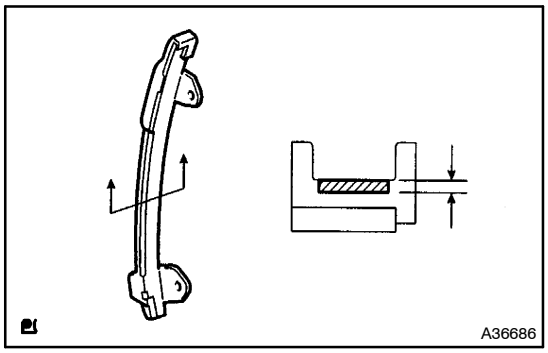

49. INSPECT CHAIN VIBRATION DAMPER NO.1
(a) Measure the vibration damper wear.
Maximum wear: 1.0 mm (0.039 in.)
If the wear is greater than the maximum, replace the chain vibration damper.

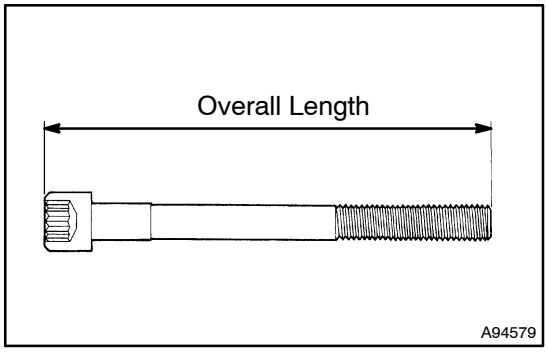

50. INSPECT CYLINDER HEAD SET BOLT
(a) Using a vernier caliper, measure the length of the head bolts from the seat to the end.
Standard bolt length:
161.3 to 162.7 mm (6.350 to 6.406 in.)
Maximum bolt length: 164.2 mm (6.465 in.)
If the length is greater than the maximum, replace the bolt.

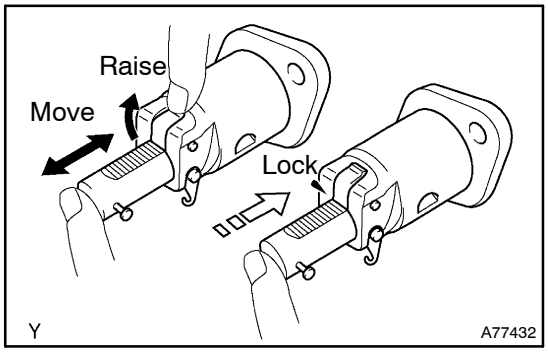

51. INSPECT CHAIN TENSIONER ASSY NO.1
(a) Check that the plunger moves smoothly when the ratchet pawl is raised.
(b) Release the ratchet pawl and check that the plunger is locked in place by the ratchet pawl and does not move when pushed with finger.

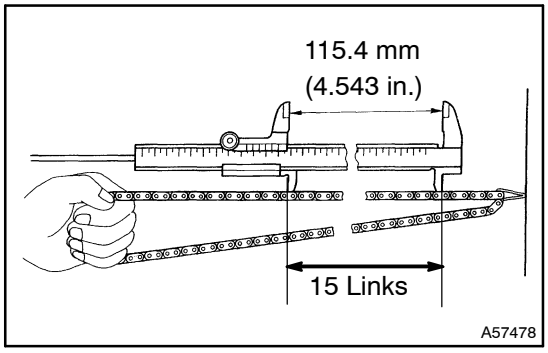

52. INSPECT CHAIN SUB–ASSY

(a) Using a vernier caliper, measure the length of the 15 links with the chain fully stretched.

NOTICE:

Make the same measurements pulling at 3 or more random places to obtain an average length.

Maximum chain elongation: 115.4 mm (4.543 in.)

If the elongation is greater than the maximum, replace the chain.

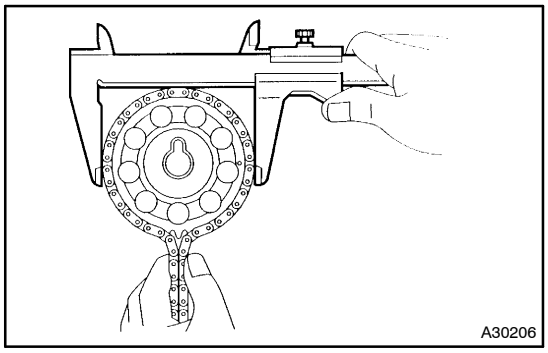

53. INSPECT CAMSHAFT TIMING GEAR OR SPROCKET

(a) Wrap the chain around the timing sprocket.

(b) Using a vernier caliper, measure the timing sprocket diameter with the chain.

Minimum sprocket diameter (w/ chain):
97.3 mm (3.831 in.)

NOTICE:

The vernier caliper must contact the chain rollers for the measurement.

If the diameter is less than the minimum, replace the chain and timing gear.

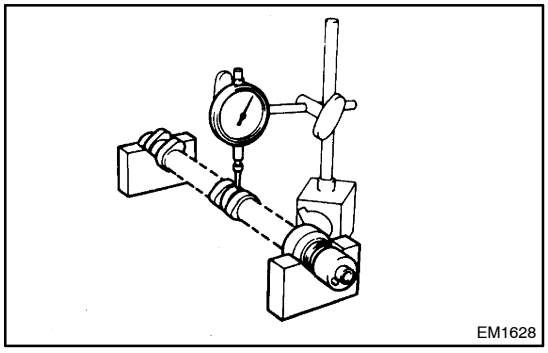

54. INSPECT CAMSHAFT

(a) Check the camshaft for runout.

(1) Place the camshaft on V–blocks.

(2) Using a dial indicator, measure the circle runout at the center journal.

Maximum circle runout: 0.03 mm (0.0012 in.)

If the circle runout is greater than the maximum, replace the camshaft.

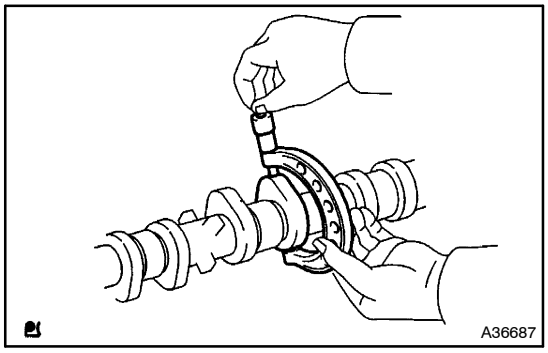

(b) Using a micrometer, measure the cam lobe height.

(1) Using a micrometer, measure the cam lobe height.

Standard cam lobe height:
45.510 to 45.610 mm (1.7917 to 1.7957 in.)

Minimum cam lobe height: 45.430 mm (1.7886 in.)

If the cam lobe height is less than the minimum, replace the camshaft.

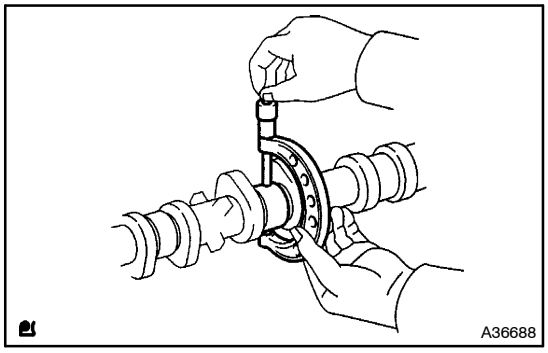

(c) Using a micrometer, measure the journal diameter.
No. 1 Journal diameter:
35.971 to 35.985 mm (1.4162 to 1.4167 in.)
Other journal diameter:
22.959 to 22.975 mm (0.9040 to 0.9045 in.)
If the journal diameter is not as specified, check the oil clearance.

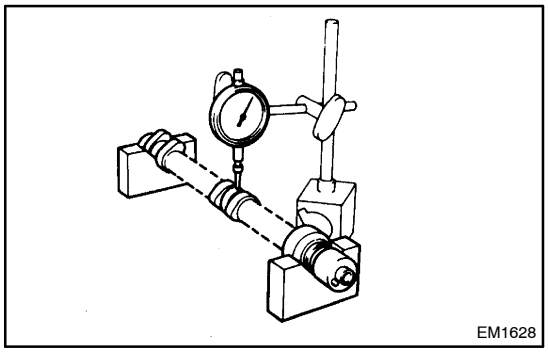

55. INSPECT NO.2 CAMSHAFT
(a) Check the camshaft for runout.
(1) Place the camshaft on V–blocks.
(2) Using a dial indicator, measure the circle runout at the center journal.
Maximum circle runout: 0.03 mm (0.0012 in.)
If the circle runout is greater than the maximum, replace the camshaft.

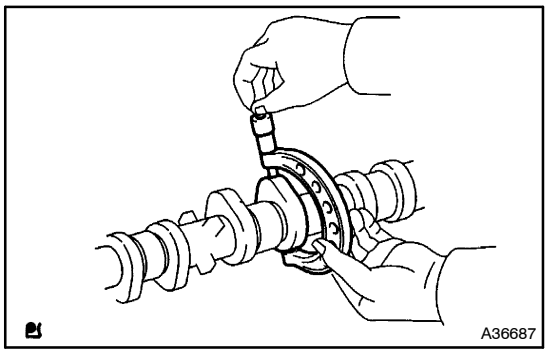

(b) Using a micrometer, measure the cam lobe height.
Standard cam lobe height:
45.983 to 46.083 mm (1.8106 to 1.8143 in.)
Minimum cam lobe height: 45.900 mm (1.8071 in.)
If the cam lobe height is less than the minimum, replace the camshaft.

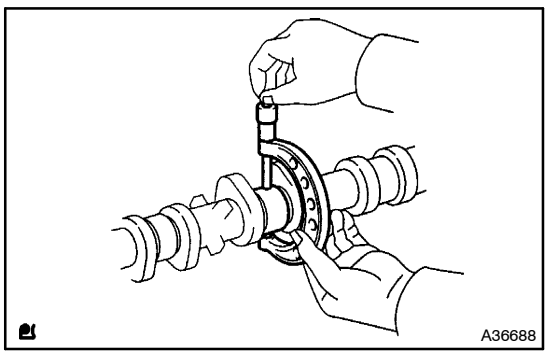

(c) Using a micrometer, measure the journal diameter.
No. 1 journal diameter:
35.971 to 35.985 mm (1.4162 to 1.4167 in.)
Other journal diameter:
22.959 to 22.975 mm (0.9039 to 0.9045 in.)
If the journal diameter is not as specified, check the oil clearance.

56. INSTALL BALANCE SHAFT BEARING NO. 1
(a) Install the bearings in the crankcase and balance shaft housing.
(b) Apply a light coat of engine oil on the bearings.

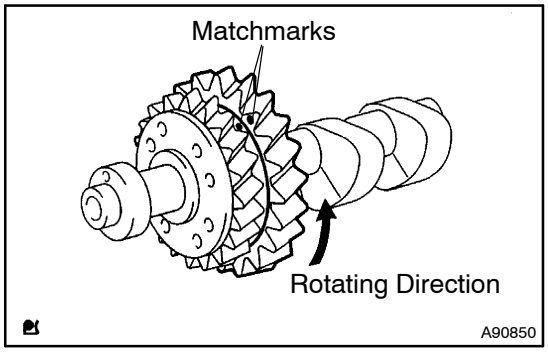

57. INSTALL BALANCE SHAFT NO. 1 AND NO. 2

(a) Rotate the driven gear No. 1 of the balance shaft No. 1 as indicated by the arrow in the illustration until it hits the stopper.

(b) Confirm that the matchmarks on driven gear No. 1 and No. 2 are matched.

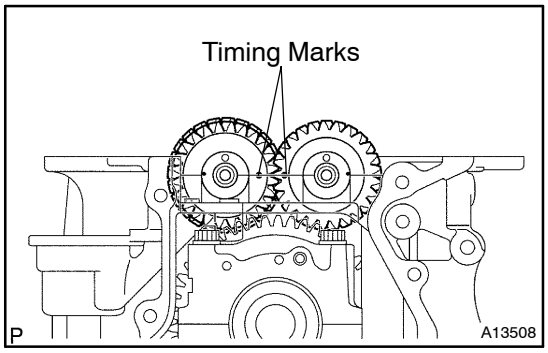

(c) Align the timing marks of the No. 1 and No. 2 balance shafts as shown in the illustration.

(d) Place the No. 1 and No. 2 balance shafts on the crankcase.

(e) Apply a light coat of engine oil under the heads of the balance shaft housing bolts.

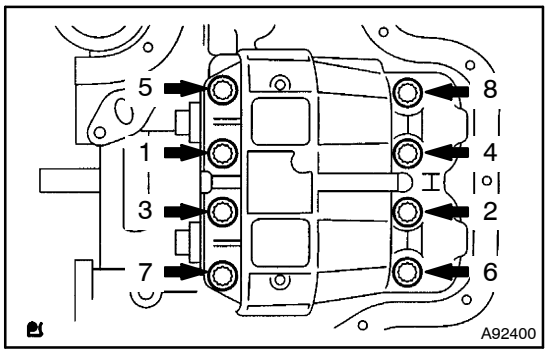

(f) Uniformly tighten the 8 bolts in the sequence shown in the illustration.

Torque: 22 N·m (220 kgf·cm, 16 ft·lbf)

HINT:

The balance shaft housing bolts are tightened in 2 progressive steps.

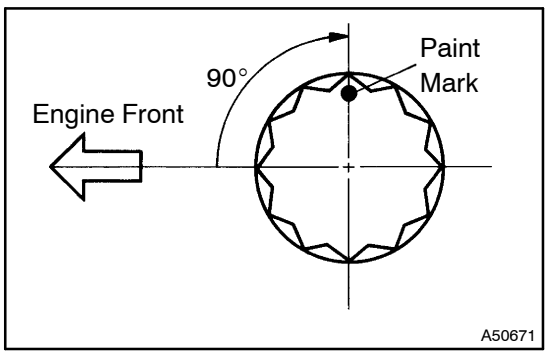

(g) Mark the front side of each balance shaft housing bolt head with paint.

(h) Retighten the bolts by 90° as shown in the illustration.

(i) Check that the painted marks are now at a 90° angle to the front.

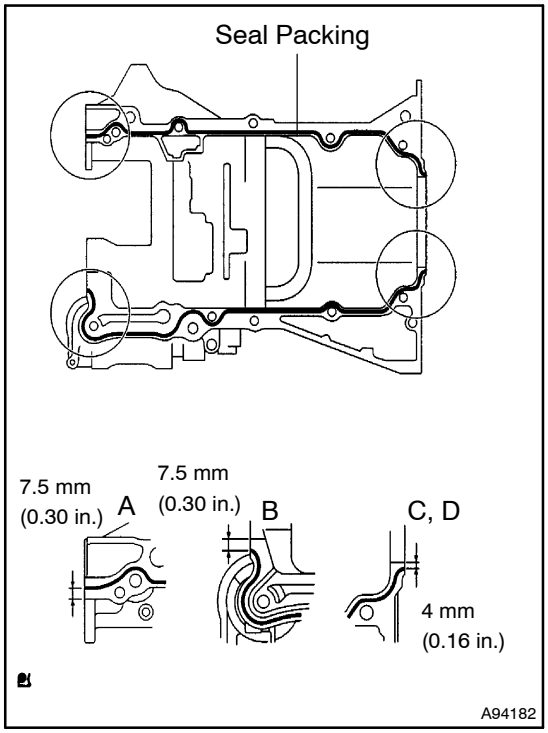

58. INSTALL STIFFENING CRANKCASE ASSY

(a) Apply seal packing in a continuous bead (seal width: 2.5 to 3 mm (0.10 to 0.12 in.)) to the places shown in the illustration.

Seal packing: Part No. 08826–00080 or equivalent

NOTICE:

- **Remove any oil from the contact surface.**
- **Install the crankcase within 3 minutes after applying seal packing.**
- **Do not start the engine for at least 2 hours after the installation.**

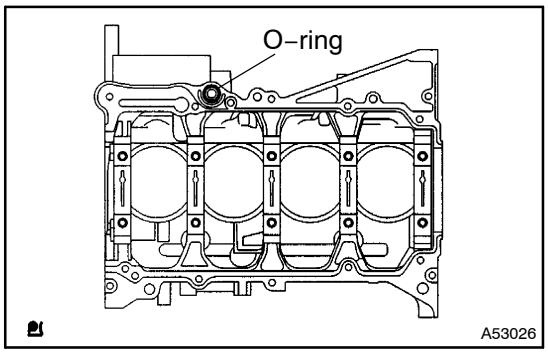

(b) Place a new O–ring on the cylinder block, as shown in the illustration.

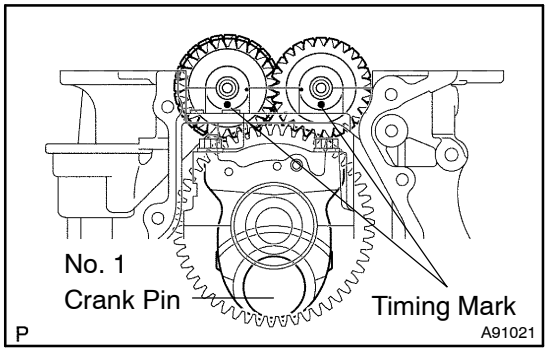

(c) Align the timing marks of the No. 1 and No. 2 balance shafts as shown in the illustration.

(d) With the No. 1 crank pin of the crankshaft placed at 6 o'clock, place the No. 1 and No. 2 balance shafts on the crankcase.

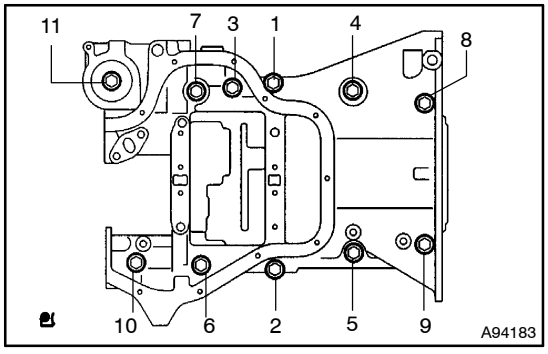

(e) Uniformly tighten the 11 bolts in the sequence shown in the illustration.

Torque: 33 N·m (332 kgf·cm, 24 ft·lbf)

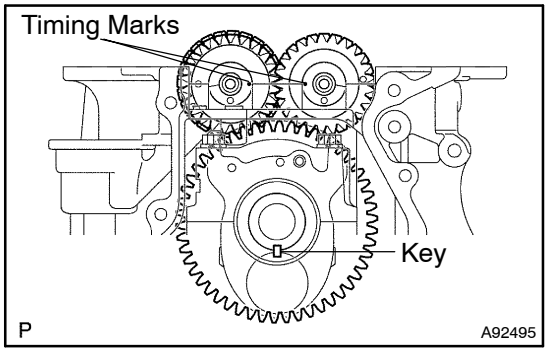

(f) Confirm that the timing marks of the balance shafts are matched when the key groove is placed at 6 o'clock, as shown in the illustration.

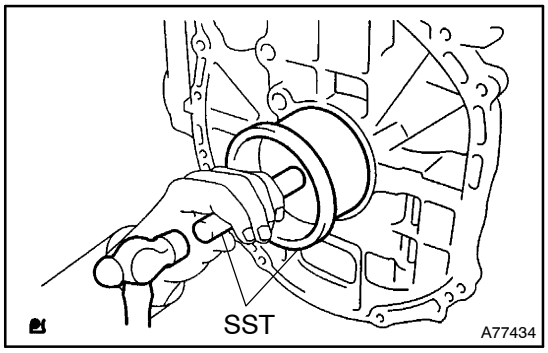

59. INSTALL ENGINE REAR OIL SEAL

(a) Apply MP grease to a new oil seal lip.

NOTICE:

Keep the lip free of foreign materials.

(b) Using SST and a hammer, evenly tap the oil seal until its surface is flush with the rear oil seal retainer edge.
SST 09223–15030, 09950–70010 (09951–07100)

NOTICE:

Wipe off extra grease on the crankshaft.

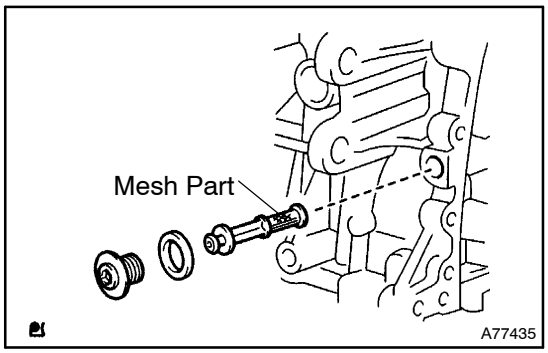

60. INSTALL OIL CONTROL VALVE FILTER

(a) Check that no foreign substance is on the mesh part of the filter.

(b) Using a 6 mm socket hexagon wrench, install a new gasket and the oil control valve filter with the screw plug.
Torque: 30 N·m (306 kgf·cm, 22 ft·lbf)

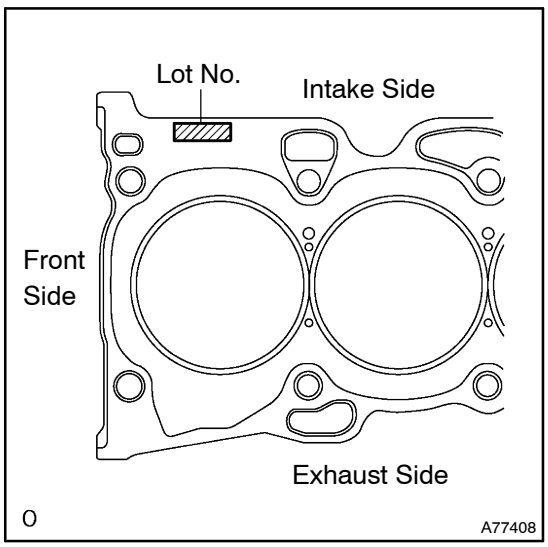

61. INSTALL CYLINDER HEAD GASKET

(a) Place a new gasket on the cylinder block surface with the Lot No. stamp placed upward.

NOTICE:

- **Remove any oil from contact surface.**
- **Be careful of the installation direction.**
- **To avoid damage to the gasket, place the cylinder head on the gasket carefully.**

62. INSTALL CYLINDER HEAD SUB–ASSY

HINT:

The cylinder head bolts are tightened in 2 successive steps.

(a) Apply a light coat of engine oil on the threads and under the heads of the cylinder head bolts.

(b) Install the 10 bolts and plate washers to the cylinder head.

NOTICE:

Do not drop the washers into the cylinder head.

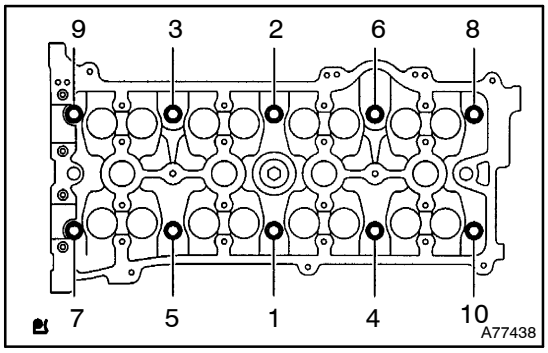

(c) Using a 10 mm bi–hexagon wrench, uniformly tighten the 10 bolts in the sequence shown in the illustration.
Torque: 79 N·m (806 kgf·cm, 58 ft·lbf)

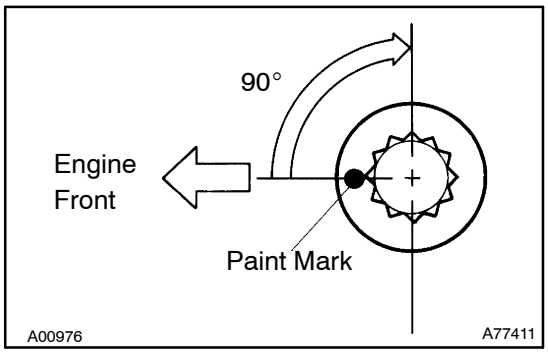

(d) Mark the front side of each cylinder head bolt with paint.

(e) Retighten the cylinder head bolts by 90° in the sequence shown in the illustration.

(f) Check that the painted marks are now at a 90° angle to the front.

63. INSTALL CAMSHAFT HOUSING PLUG

(a) Apply engine oil to a new O–ring, and install the camshaft housing plug.

NOTICE:

- **Install the plug with its flange portions faced the manifold.**
- **Insert the plug into the cylinder head until its flange portions reach the installation surface of the cylinder head.**

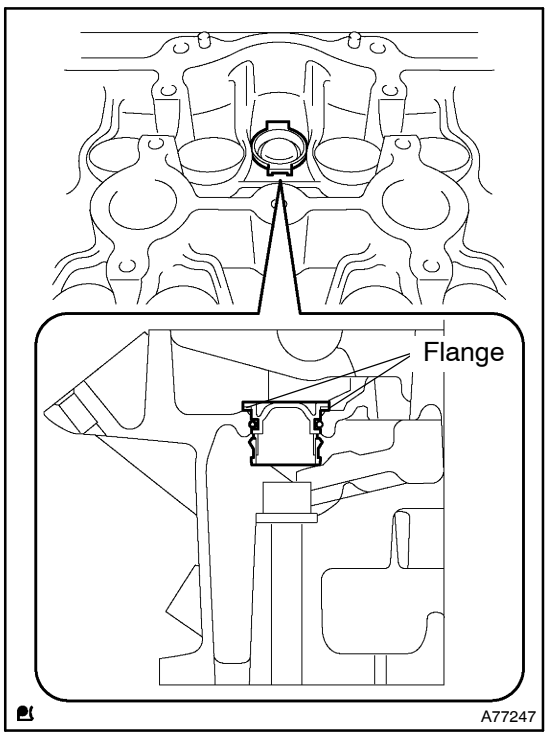

64. INSTALL CAMSHAFT BEARING NO.2

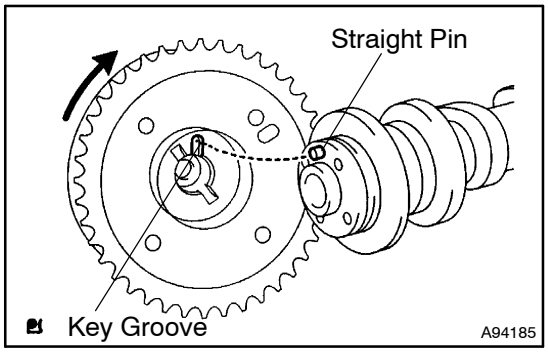

65. INSTALL CAMSHAFT TIMING GEAR ASSY

(a) Put the camshaft timing gear and the camshaft together with the straight pin and key groove.

(b) Turn the camshaft timing gear (as shown in the illustration) while pushing it lightly against the camshaft. Push further at the position where the pin enters the groove.

CAUTION:

Be sure not to turn the camshaft timing gear to the retard angle side (to the right angle).

(c) Check that there is no clearance between the gear's flange and the camshaft.

(d) Tighten the flange bolt with the camshaft timing gear fixed.

Torque: 54 N·m (551 kgf·cm, 40 ft·lbf)

(e) Check that the camshaft timing gear can move to the retarded angle side (the right direction) and is locked at the extreme retarded angle position.

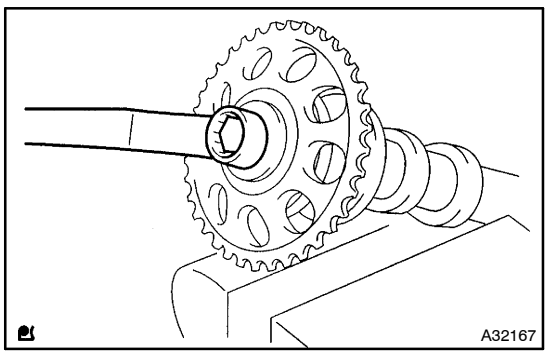

66. INSTALL CAMSHAFT TIMING GEAR OR SPROCKET

(a) Fix the camshaft with a vise, and install the camshaft No. 2 timing gear.

Torque: 54 N·m (551 kgf·cm, 40 ft·lbf)

67. INSTALL CAMSHAFT BEARING NO.1

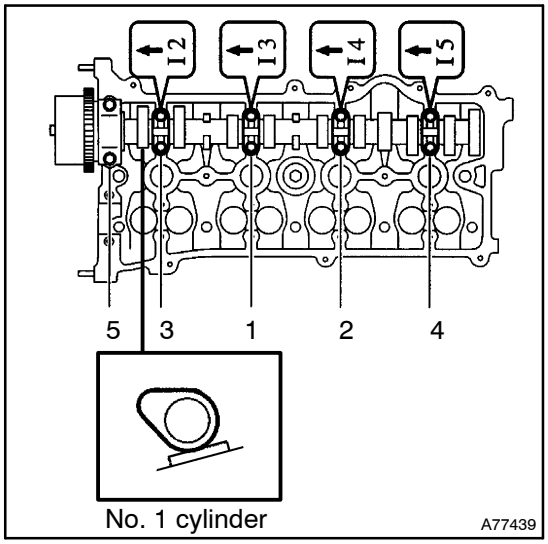

68. INSTALL CAMSHAFT

(a) Examine the front marks and numbers of the 5 bearing caps and install them. Then install the 10 bearing cap bolts. Uniformly tighten the bolts in the sequence shown in the illustration.

Torque:
30 N·m (301 kgf·cm, 22 ft·lbf) for bearing cap No. 1
9.0 N·m (92 kgf·cm, 80 in.·lbf) for bearing cap No. 3

NOTICE:

- **Tighten the bolts after deciding the position for the thrust direction of the camshaft by the bearing cap No. 1.**
- **Install the camshaft with its timing mark of the camshaft timing gear on top.**

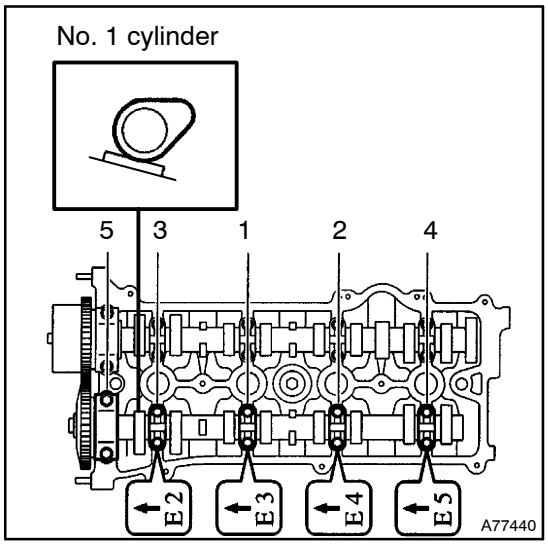

69. INSTALL NO.2 CAMSHAFT

(a) Examine the front marks and numbers of the 5 bearing caps and install them. Then install the 10 bearing cap bolts. Uniformly tighten the bolts in the sequence shown in the illustration.

Torque:
30 N·m (301 kgf·cm, 22 ft·lbf) for bearing cap No. 2
9.0 N·m (92 kgf·cm, 80 in.·lbf) for bearing cap No. 3

NOTICE:

- **Tighten the bolts after deciding the position for the thrust direction of the camshaft by the bearing cap No. 2.**
- **Install the camshaft with its timing mark of the camshaft timing gear on top.**

70. INSTALL OIL PUMP ASSY

(a) Install a new gasket and the oil pump with the 3 bolts.
Torque: 19 N·m (194 kgf·cm, 14 ft·lbf)

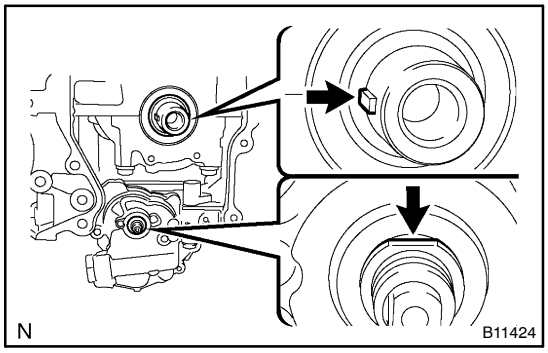

71. INSTALL NO.2 CHAIN SUB–ASSY

(a) Set the crankshaft key into the left horizontal position.
(b) Turn the cutout of the driveshaft to the top.

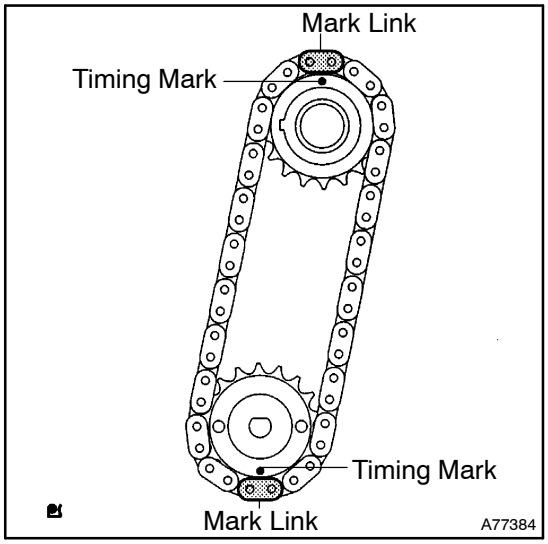

(c) Align the mark links (yellow colored links) of he chain with the timing marks of the gears as shown in the illustration.

(d) Insert the gear with the chain into the crankshaft and oil pump shaft.

(e) Temporarily tighten the oil pump drive shaft gear with the nut.

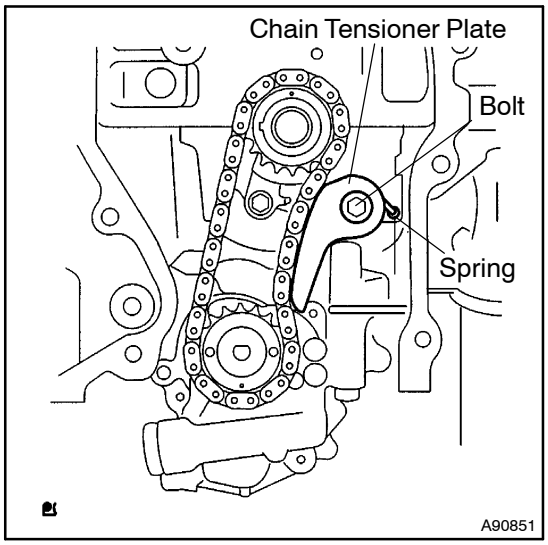

(f) Insert the damper spring into the adjusting hole, and install the chain tensioner plate with the bolt.
Torque: 12 N·m (122 kgf·cm, 9 ft·lbf)

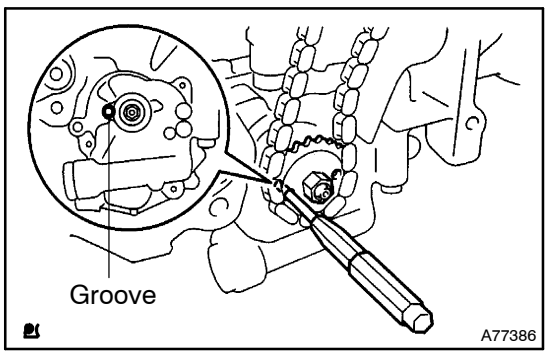

(g) Align the adjusting hole of the sprocket with the groove of the oil pump.

(h) Put a bar (ϕ 4 mm) into the adjusting hole of the sprocket to temporarily lock the gear in position. Install the nut.
Torque: 30 N·m (301 kgf·cm, 22 ft·lbf)

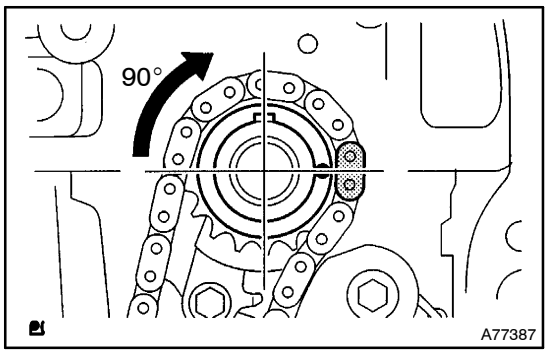

(i) Rotate the crankshaft clockwise by 90°, and align the crankshaft key with the top.

72. INSTALL CRANKSHAFT TIMING GEAR OR SPROCKET

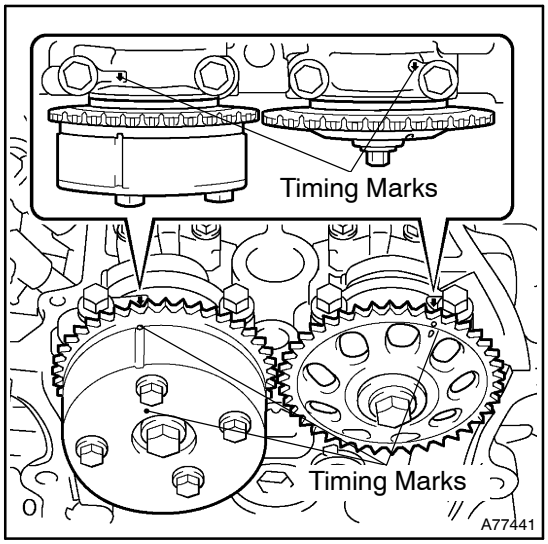

73. INSTALL CHAIN SUB–ASSY

(a) Set the No. 1 cylinder to TDC/compression.

(1) Align the timing marks of the camshaft timing gear/sprocket and bearing caps (No. 1 and No. 2).

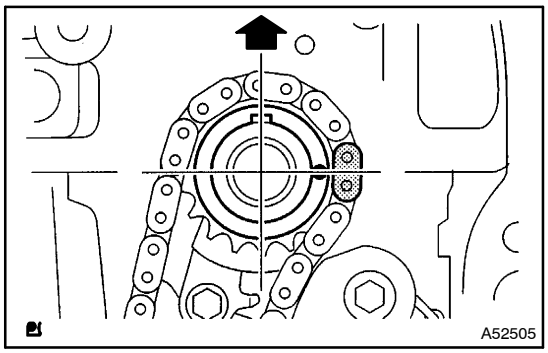

(2) Using the crankshaft pulley bolt, turn the crankshaft and set the set key on the crankshaft upward.

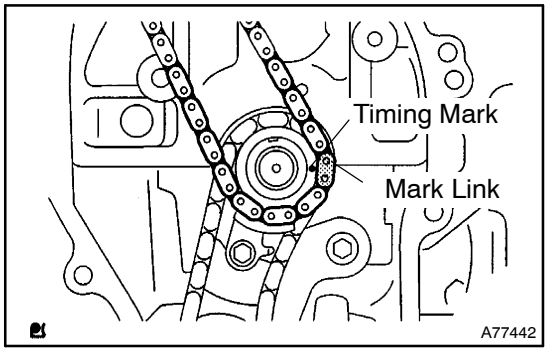

(b) Align the mark link (blue or orange colored link) of the chain with the timing mark of the crankshaft timing sprocket.

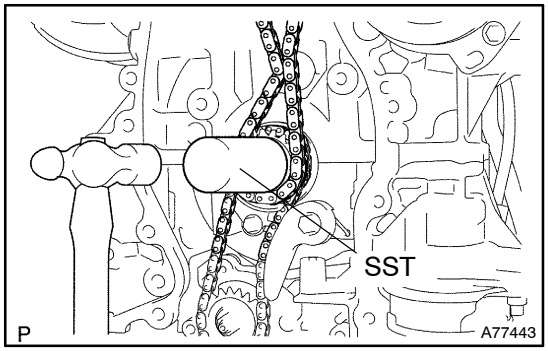

(c) Using SST, tap in the sprocket.
SST 09309–37010

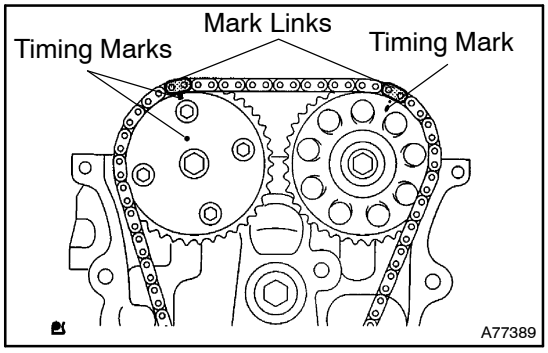

(d) Align the mark links (gold or yellow colored links) of the chain with the timing marks of the camshaft timing gear and camshaft timing sprocket, and install the chain.

74. INSTALL TIMING CHAIN GUIDE
Torque: 9.0 N·m (92 kgf·cm, 80 in.·lbf)

75. INSTALL CHAIN VIBRATION DAMPER NO.1
Torque: 9.0 N·m (92 kgf·cm, 80 in.·lbf)

76. INSTALL CHAIN TENSIONER SLIPPER
Torque: 19 N·m (194 kgf·cm, 14 ft·lbf)

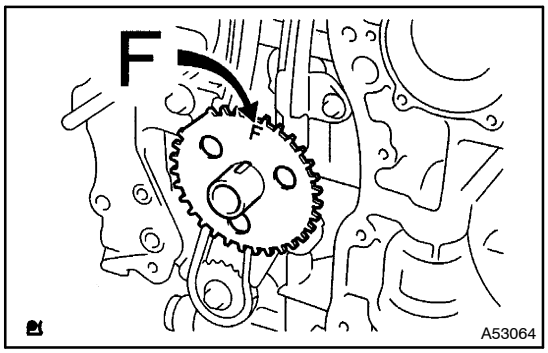

77. INSTALL CRANKSHAFT POSITION SENSOR PLATE NO.1

(a) Install the sensor plate with the F mark facing forward.

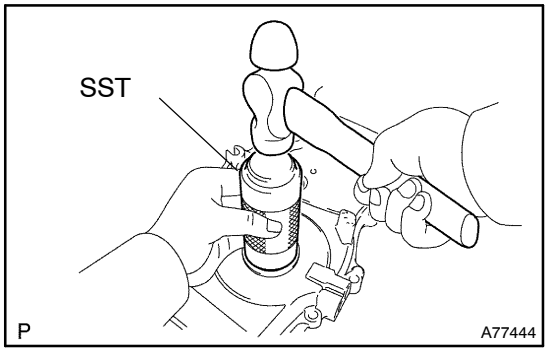

78. INSTALL TIMING GEAR CASE OR TIMING CHAIN CASE OIL SEAL

(a) Using SST, tap in a new oil seal until its surface is flush with the timing chain cover edge.
SST 09223–22010

(b) Apply a light coat of MP grease to the lip of a new oil seal.

NOTICE:
Keep the gap between the timing chain cover edge and the oil seal free of foreign matter.

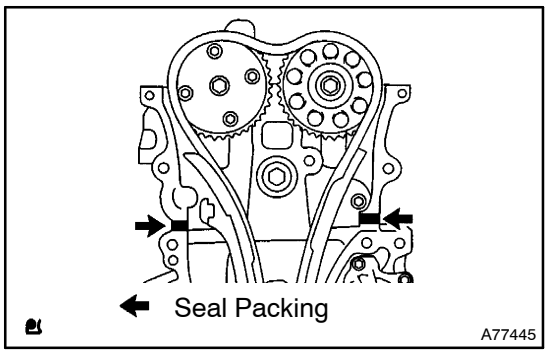

79. INSTALL TIMING CHAIN OR BELT COVER SUB–ASSY

NOTICE:
- **Remove any oil from the contact surface.**
- **Install the chain cover within 3 minutes after applying seal packing.**
- **Do not start the engine for at least 2 hours after the installation.**

(a) Remove any old packing (FIPG) material and be careful not to drop any oil on the contact surfaces of the timing chain cover, cylinder head and cylinder block.

(b) Apply seal packing in a continuous bead (seal width: 2 mm (0.08 in.)) as shown in the illustration.
Seal packing: Part No. 08826–00080 or equivalent

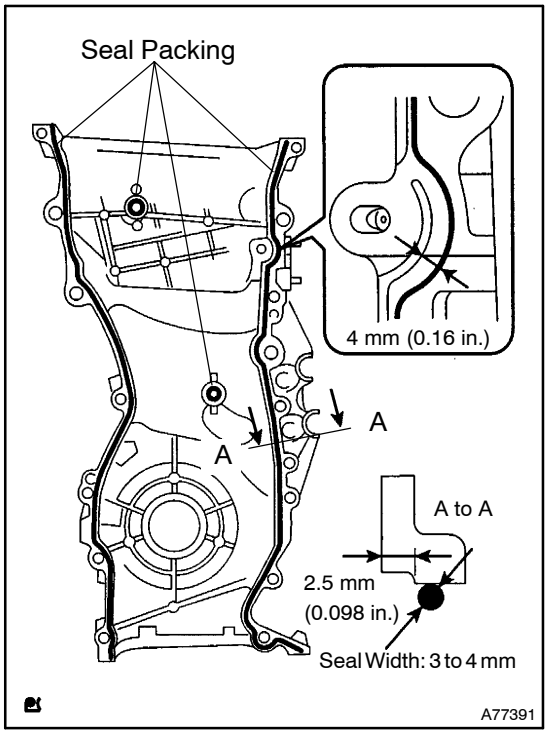

(c) Apply seal packing in a continuous bead (seal width: 3 to 4 mm (0.12 to 0.16 in.)) as shown in the illustration.
Seal packing: Part No. 08826–00080 or equivalent

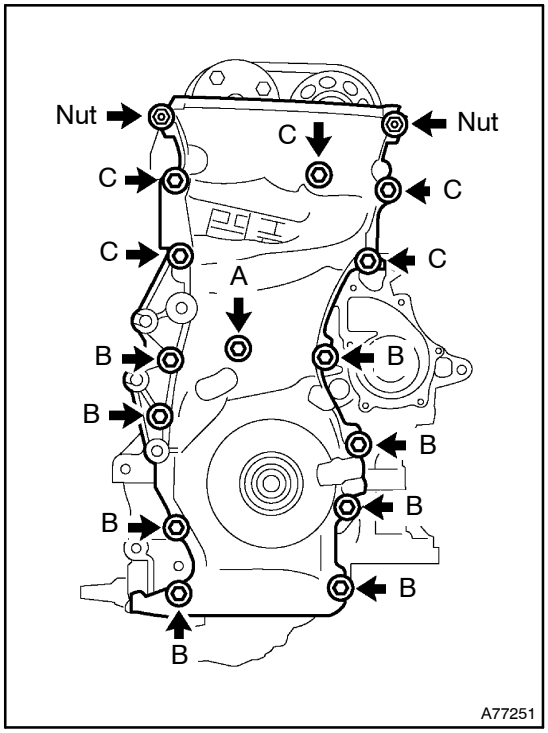

(d) Install the timing chain cover with the 14 bolts and 2 nuts.
Torque:
9.0 N·m (92 kgf·cm, 80 in.·lbf) for bolt A
21 N·m (214 kgf·cm, 15 ft·lbf) for bolt B
43 N·m (438 kgf·cm, 32 ft·lbf) for bolt C
9.0 N·m (92 kgf·cm, 80 in.·lbf) for nut

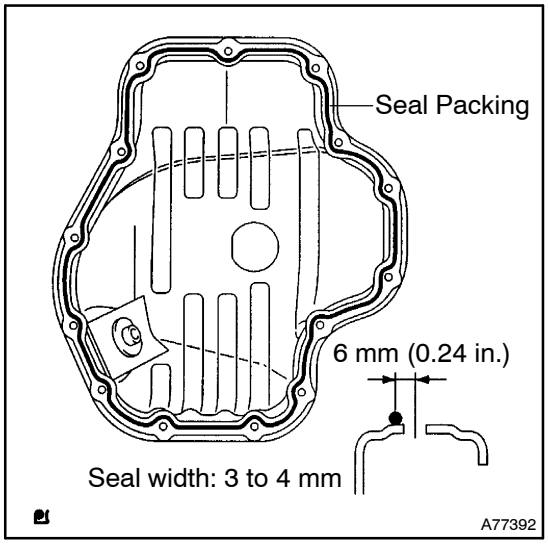

80. INSTALL OIL PAN SUB–ASSY

NOTICE:

- **Remove any oil from the contact surface.**
- **Install the oil pan within 3 minutes after applying seal packing.**
- **Do not start the engine for at least 2 hours after the installation.**

(a) Remove any old packing (FIPG) material and be careful not to drop any oil on the contact surface of the cylinder block and oil pan.

(b) Apply seal packing in a continuous bead (seal width: 3 to 4 mm (0.12 to 0.16 in.)) as shown in the illustration, and install the oil pan.
Seal packing: Part No. 08826–00080 or equivalent

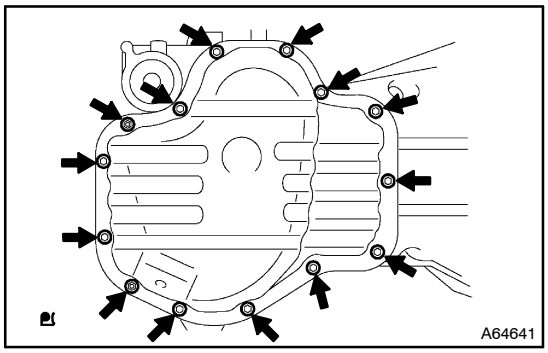

(c) Install the oil pan with the 12 bolts and 2 nuts.
Torque: 9.0 N·m (92 kgf·cm, 80 in.·lbf)

81. INSTALL OIL PAN DRAIN PLUG

(a) Install a new gasket and oil pan drain plug with a new gasket.
Torque: 25 N·m (255 kgf·cm, 18 ft·lbf)

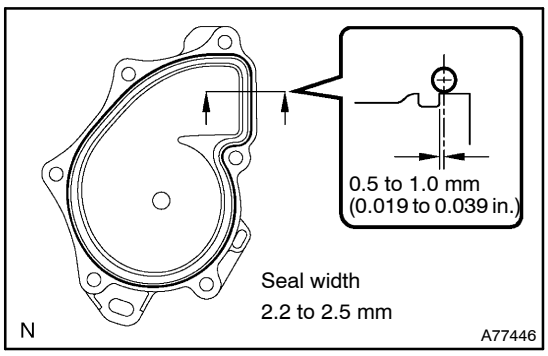

82. INSTALL WATER PUMP ASSY

(a) Clean the contact surface of the cylinder block.

(b) Apply seal packing in a continuous bead (seal width: 2.2 to 2.5 mm (0.09 to 0.10 in.)) to the outside edge of the water pump.
Seal packing: Part No. 08826–00100 or equivalent

NOTICE:

- **Remove any oil from the contact surface.**
- **Install the water pump within 5 minutes after applying seal packing.**
- **Do not start the engine for at least 2 hours after installing.**

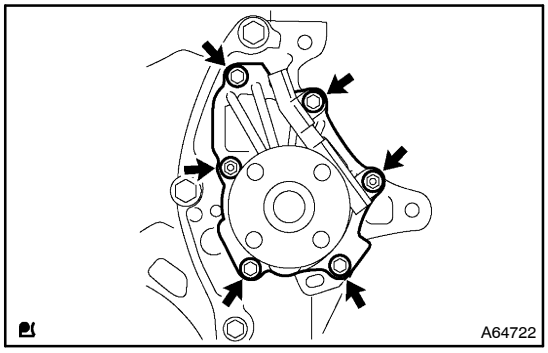

(c) Install the water pump with the 4 bolts and 2 nuts.
Torque: 9.0 N·m (92 kgf·cm, 80 in.·lbf)

NOTICE:
Tighten the outside bolts and nuts with the clamp.

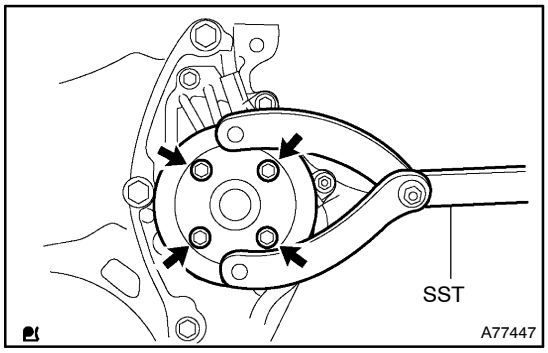

83. INSTALL WATER PUMP PULLEY

(a) Using SST, install the water pump pulley.
SST 09960–10010 (09962–01000, 09963–00700)
Torque: 26 N·m (265 kgf·cm, 19 ft·lbf)

84. INSTALL CRANKSHAFT POSITION SENSOR

(a) Apply a light coat of engine oil to the O–ring.
(b) Install the crankshaft position sensor with the bolt.
Torque: 9.0 N·m (92 kgf·cm, 80 in.·lbf)

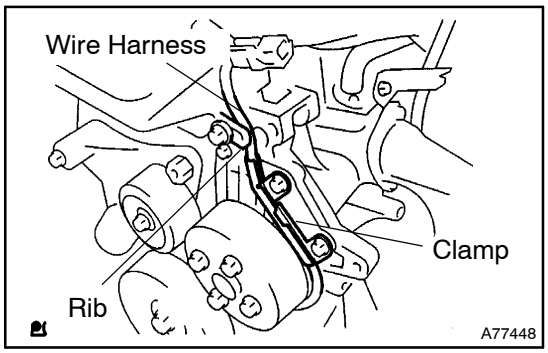

(c) Confirm that the wire harness of the sensor is placed as shown in the illustration.

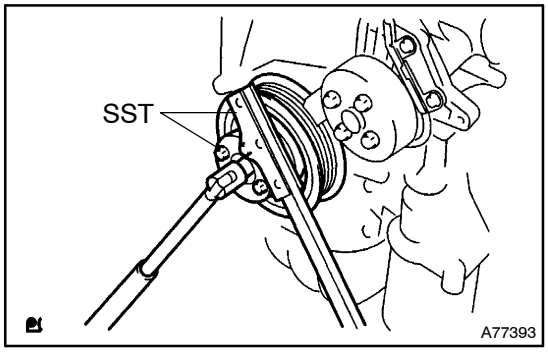

85. INSTALL CRANKSHAFT PULLEY

(a) Install the pulley.
(b) Using SST, tighten the set bolt.
SST 09213–54015 (91651–60855), 09330–00021
Torque: 180 N·m (1,835 kgf·cm, 132 ft·lbf)

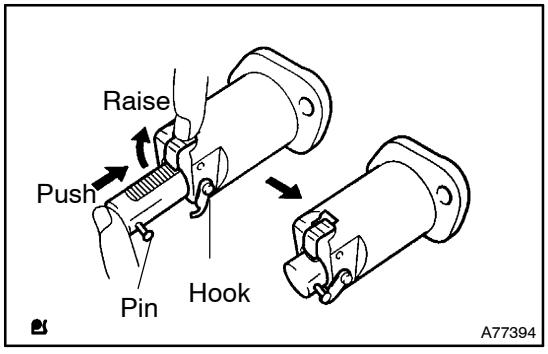

86. INSTALL CHAIN TENSIONER ASSY NO.1

(a) Release the ratchet pawl, fully push in the plunger and apply the hook to the pin so that the plunger cannot spring out.

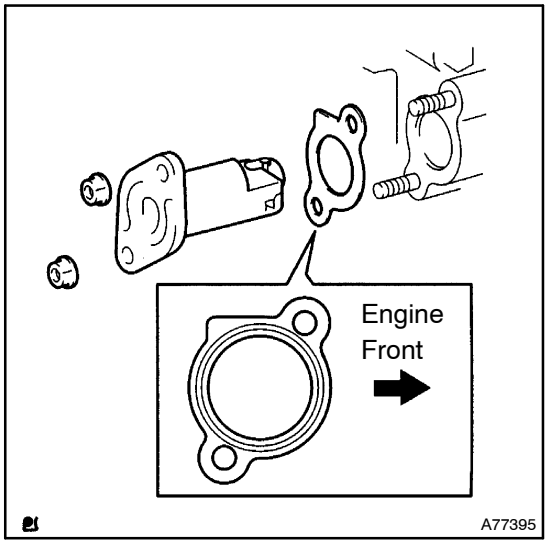

(b) Install a new gasket and the chain tensioner with the 2 nuts.

Torque: 9.0 N·m (92 kgf·cm, 80 in.·lbf)

NOTICE:

If the hook is released while inserting, apply the hook again, and insert the chain tensioner.

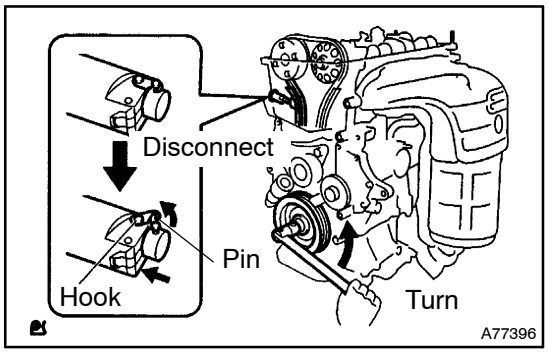

(c) Turn the crankshaft pulley counterclockwise, and check that the plunger knock pin is free from the hook.

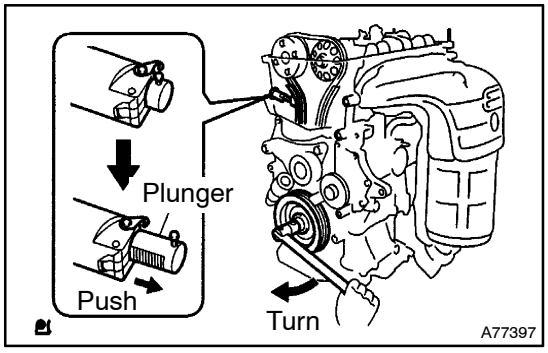

(d) Turn the crankshaft clockwise and check that the slipper is pushed by the plunger.

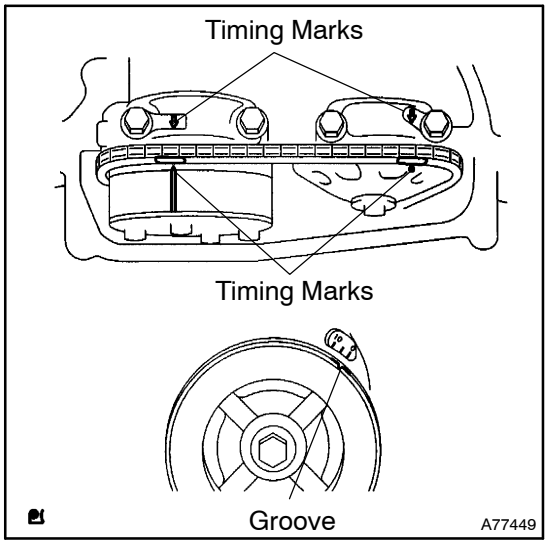

87. INSPECT VALVE CLEARANCE

(a) Turn the crankshaft pulley, and align its groove with timing mark 0 of the timing chain cover.

(b) Check that the timing marks of the camshaft timing gear and sprocket are aligned with the timing marks of the bearing cap No. 1 and No. 2 as shown in the illustration.

HINT:

Inspect and adjust the valve clearance when the engine is cold.

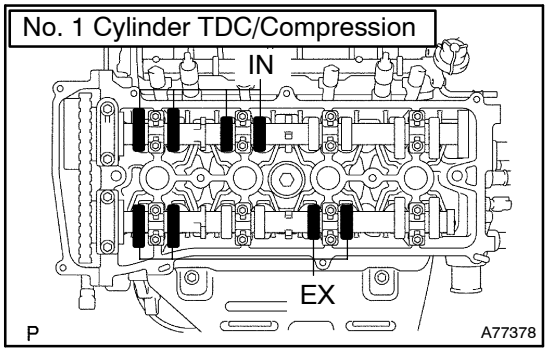

(c) Check only the valve indicated on the left.
(1) Using a feeler gauge, measure the clearance between the valve lifter and the camshaft.
(2) Record valve clearance measurements that are out of the specified range. These measurements will be used later to determine the size of the adjustment shim to be installed.

Valve clearance (Cold):

Item	Specified Condition
Intake	0.19 to 0.29 mm (0.008 to 0.011 in.)
Exhaust	0.30 to 0.40 mm (0.012 to 0.016 in.)

(d) Turn the crankshaft clockwise 1 revolution (360°) and set the No. 4 cylinder to TDC/compression.

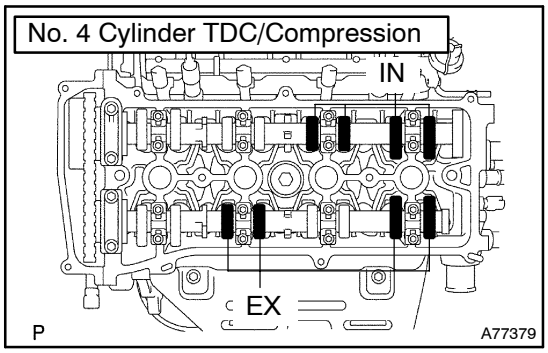

(e) Check only the valve indicated on the left.
(1) Using a feeler gauge, measure the clearance between the valve lifter and the camshaft.
(2) Record valve clearance measurements that are out of the specified range. These measurements will be used later to determine the size of the adjustment shim to be installed.

Valve clearance (Cold):

Item	Specified Condition
Intake	0.19 to 0.29 mm (0.008 to 0.011 in.)
Exhaust	0.30 to 0.40 mm (0.012 to 0.016 in.)

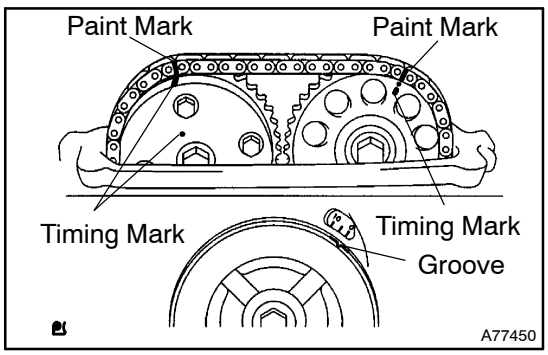

88. ADJUST VALVE CLEARANCE

NOTICE:

Be sure not to turn the crankshaft without the chain tensioner.

(a) Turn the crankshaft 1 revolution (360°) clockwise, and set the No. 1 cylinder to TDC/compression.
(b) Place matchmarks on the timing chain and camshaft timing gear.
(c) Remove the 2 bolts and the chain tensioner.

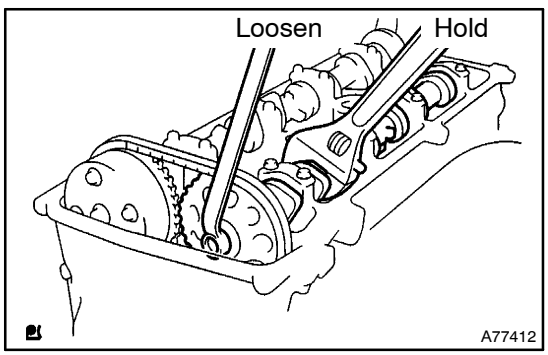

(d) Fix the camshaft with a wrench and then loosen the sprocket bolt.

NOTICE:

Be careful not to damage the valve lifter.

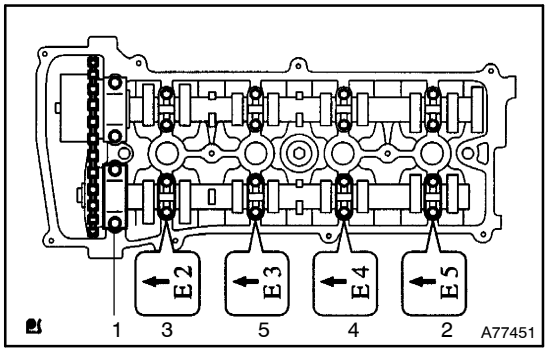

(e) Uniformly loosen and remove the No. 2 camshaft's 10 bearing cap bolts in the sequence shown in the illustration. Then remove the 5 bearing caps.

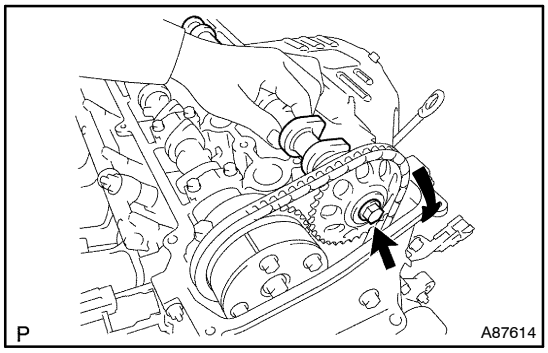

(f) Raise the No. 2 camshaft and remove it. Then remove the sprocket bolt.
(g) Remove the camshaft timing sprocket and the timing chain from the No. 2 camshaft.
(h) Remove the camshaft timing sprocket from the timing chain.

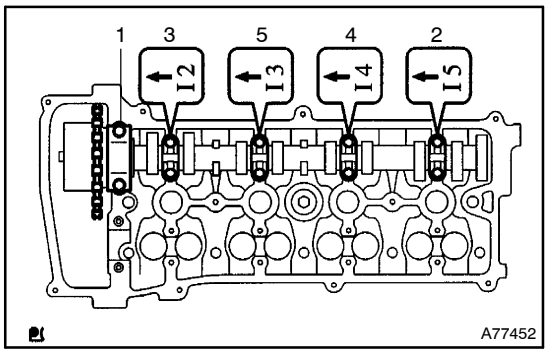

(i) Uniformly loosen and remove the No. 1 camshaft's 10 bearing cap bolts in the sequence shown in the illustration. Then remove the 5 bearing caps.
(j) Remove the camshaft.

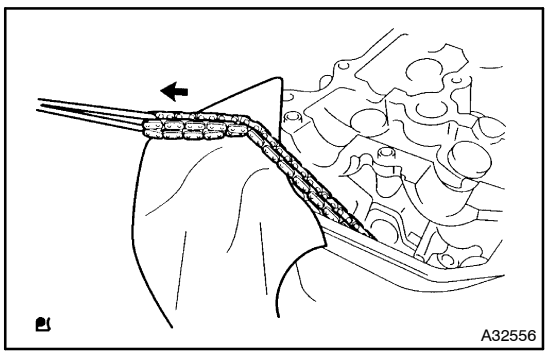

(k) Tie the timing chain with a string.

NOTICE:

Be careful not to drop anything inside the timing chain cover.

(l) Remove the valve lifters.

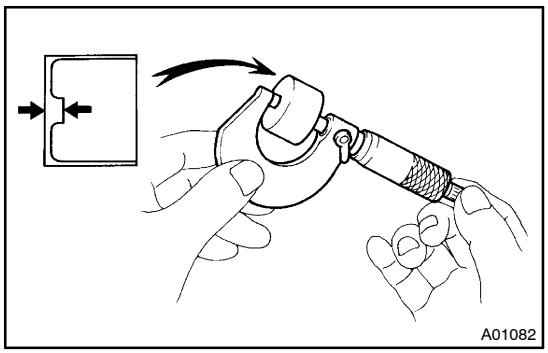

(m) Using a micrometer, measure the thickness of the removed lifter.
(n) Calculate the thickness of a new lifter so that the valve clearance comes within the specified valve.

A	Thickness of the new lifter
B	Thickness of the used lifter
C	Measured valve clearance

Valve clearance:

Item	Specified Condition
Intake	A = B + (C – 0.24 mm (0.0094 in.))
Exhaust	A = B + (C – 0.35 mm (0.0138 in.))

EXAMPLE: (Intake)
Measured valve clearance = 0.44 mm (0.0173 in.)
0.44 mm (0.0173 in.) – 0.24 mm (0.0094 in.) = 0.20 mm (0.0079 in.)
(Measured value – Specification = Excess clearance)
Used shim measurement = 5.30 mm (0.2087 in.)
0.20 mm (0.0079 in.) + 5.30 mm (0.2087 in.) = 5.50 mm (0.2165 in.)
(Excess clearance + Used shim = Ideal new shim)
Closest new shim = 5.50 mm (0.2165 in.) = Shim No. ”50”

(o) Select a new lifter with a thickness as close as possible to the calculated values.

HINT:

- Lifters are available in 35 sizes in increments of 0.020 mm (0.0008 in.), from 5.060 mm (0.1992 in.) to 5.740 mm (0.2260 in.)
- Refer to new lifter thickness table on the following 2 pages.

Valve Lifter Selection Chart (Intake)

Measure clearance mm (in.) \ Installed lifter thickness mm (in.)	5.060 (0.1992)	5.080 (0.2000)	5.100 (0.2008)	5.120 (0.2016)	5.140 (0.2024)	5.160 (0.2031)	5.180 (0.2039)	5.200 (0.2047)	5.210 (0.2051)	5.220 (0.2055)	5.230 (0.2059)	5.240 (0.2063)	5.250 (0.2067)	5.260 (0.2071)	5.270 (0.2075)	5.280 (0.2079)	5.290 (0.2083)	5.300 (0.2087)	5.310 (0.2091)	5.320 (0.2094)	5.330 (0.2098)	5.340 (0.2102)	5.350 (0.2106)	5.360 (0.2110)	5.370 (0.2114)	5.380 (0.2118)	5.390 (0.2122)	5.400 (0.2126)	5.410 (0.2130)	5.420 (0.2134)	5.430 (0.2138)	5.440 (0.2142)	5.450 (0.2146)	5.460 (0.2150)	5.470 (0.2154)	5.480 (0.2157)	5.490 (0.2161)	5.500 (0.2165)	5.510 (0.2169)	5.520 (0.2173)	5.530 (0.2177)	5.540 (0.2181)	5.550 (0.2185)	5.560 (0.2189)	5.570 (0.2193)	5.580 (0.2197)	5.590 (0.2201)	5.600 (0.2205)	5.620 (0.2213)	5.640 (0.2220)	5.660 (0.2228)	5.680 (0.2236)	5.700 (0.2244)	5.720 (0.2252)	5.740 (0.2260)
0.000–0.030 (0.0000–0.0012)													06	06	08	08	10	10	12	12	14	14	16	16	18	18	20	20	22	22	24	24	26	26	28	28	30	30	32	32	34	34	36	36	38	38	40	40	42	44	46	48	50	52	54
0.031–0.050 (0.0012–0.0020)									06	06	06	08	08	10	10	12	12	14	14	16	16	18	18	20	20	22	22	24	24	26	26	28	28	30	30	32	32	34	34	36	36	38	38	40	40	42	42	44	46	48	50	52	54	56	58
0.051–0.070 (0.0020–0.0028)								06	08	08	08	10	10	12	12	14	14	16	16	18	18	20	20	22	22	24	24	26	26	28	28	30	30	32	32	34	34	36	36	38	38	40	40	42	42	44	44	46	48	50	52	54	56	58	60
0.071–0.090 (0.0028–0.0035)							06	08	10	10	10	12	12	14	14	16	16	18	18	20	20	22	22	24	24	26	26	28	28	30	30	32	32	34	34	36	36	38	38	40	40	42	42	44	44	46	46	48	50	52	54	56	58	60	62
0.091–0.110 (0.0036–0.0043)						06	08	10	12	12	12	14	14	16	16	18	18	20	20	22	22	24	24	26	26	28	28	30	30	32	32	34	34	36	36	38	38	40	40	42	42	44	44	46	46	48	48	50	52	54	56	58	60	62	64
0.111–0.130 (0.0044–0.0051)					06	08	10	12	14	14	14	16	16	18	18	20	20	22	22	24	24	26	26	28	28	30	30	32	32	34	34	36	36	38	38	40	40	42	42	44	44	46	46	48	48	50	50	52	54	56	58	60	62	64	66
0.131–0.150 (0.0052–0.0059)				06	08	10	12	14	16	16	16	18	18	20	20	22	22	24	24	26	26	28	28	30	30	32	32	34	34	36	36	38	38	40	40	42	42	44	44	46	46	48	48	50	50	52	52	54	56	58	60	62	64	66	68
0.151–0.170 (0.0059–0.0067)			06	08	10	12	14	16	18	18	18	20	20	22	22	24	24	26	26	28	28	30	30	32	32	34	34	36	36	38	38	40	40	42	42	44	44	46	46	48	48	50	50	52	52	54	54	56	58	60	62	64	66	68	70
0.171–0.189 (0.0067–0.0074)		06	08	10	12	14	16	18	20	20	20	22	22	24	24	26	26	28	28	30	30	32	32	34	34	36	36	38	38	40	40	42	42	44	44	46	46	48	48	50	50	52	52	54	54	56	56	58	60	62	64	66	68	70	72
0.190–0.290 (0.0075–0.0114)																																																								
0.291–0.310 (0.0115–0.0122)	12	14	16	18	20	22	24	26	28	28	30	30	32	32	34	34	36	36	38	38	40	40	42	42	44	44	46	46	48	48	50	50	52	52	54	54	56	56	58	58	60	60	62	62	64	64	66	66	68	70	72	74	74	74
0.311–0.330 (0.0122–0.0130)	14	16	18	20	22	24	26	28	30	30	32	32	34	34	36	36	38	38	40	40	42	42	44	44	46	46	48	48	50	50	52	52	54	54	56	56	58	58	60	60	62	62	64	64	66	66	68	68	70	72	74	74	74	
0.331–0.350 (0.0130–0.0138)	16	18	20	22	24	26	28	30	32	32	34	34	36	36	38	38	40	40	42	42	44	44	46	46	48	48	50	50	52	52	54	54	56	56	58	58	60	60	62	62	64	64	66	66	68	68	70	70	72	74	74	74		
0.351–0.370 (0.0138–0.0146)	18	20	22	24	26	28	30	32	34	34	36	36	38	38	40	40	42	42	44	44	46	46	48	48	50	50	52	52	54	54	56	56	58	58	60	60	62	62	64	64	66	66	68	68	70	70	72	72	74	74	74			
0.371–0.390 (0.0146–0.0154)	20	22	24	26	28	30	32	34	36	36	38	38	40	40	42	42	44	44	46	46	48	48	50	50	52	52	54	54	56	56	58	58	60	60	62	62	64	64	66	66	68	68	70	70	72	72	74	74	74					
0.391–0.410 (0.0154–0.0161)	22	24	26	28	30	32	34	36	38	38	40	40	42	42	44	44	46	46	48	48	50	50	52	52	54	54	56	56	58	58	60	60	62	62	64	64	66	66	68	68	70	70	72	72	74	74	74	74						
0.411–0.430 (0.0162–0.0169)	24	26	28	30	32	34	36	38	40	40	42	42	44	44	46	46	48	48	50	50	52	52	54	54	56	56	58	58	60	60	62	62	64	64	66	66	68	68	70	70	72	72	74	74	74	74								
0.431–0.450 (0.0170–0.0177)	26	28	30	32	34	36	38	40	42	42	44	44	46	46	48	48	50	50	52	52	54	54	56	56	58	58	60	60	62	62	64	64	66	66	68	68	70	70	72	72	74	74	74	74										
0.451–0.470 (0.0178–0.0185)	28	30	32	34	36	38	40	42	44	44	46	46	48	48	50	50	52	52	54	54	56	56	58	58	60	60	62	62	64	64	66	66	68	68	70	70	72	72	74	74	74	74												
0.471–0.490 (0.0185–0.0193)	30	32	34	36	38	40	42	44	46	46	48	48	50	50	52	52	54	54	56	56	58	58	60	60	62	62	64	64	66	66	68	68	70	70	72	72	74	74	74	74														
0.491–0.510 (0.0193–0.0201)	32	34	36	38	40	42	44	46	48	48	50	50	52	52	54	54	56	56	58	58	60	60	62	62	64	64	66	66	68	68	70	70	72	72	74	74	74	74																
0.511–0.530 (0.0201–0.0209)	34	36	38	40	42	44	46	48	50	50	52	52	54	54	56	56	58	58	60	60	62	62	64	64	66	66	68	68	70	70	72	72	74	74	74																			
0.531–0.550 (0.0209–0.0217)	36	38	40	42	44	46	48	50	52	52	54	54	56	56	58	58	60	60	62	62	64	64	66	66	68	68	70	70	72	72	74	74	74	74																				
0.551–0.570 (0.0217–0.0224)	38	40	42	44	46	48	50	52	54	54	56	56	58	58	60	60	62	62	64	64	66	66	68	68	70	70	72	72	74	74	74	74																					
0.571–0.590 (0.0225–0.0232)	40	42	44	46	48	50	52	54	56	56	58	58	60	60	62	62	64	64	66	66	68	68	70	70	72	72	74	74	74	74																										
0.591–0.610 (0.0233–0.0240)	42	44	46	48	50	52	54	56	58	58	60	60	62	62	64	64	66	66	68	68	70	70	72	72	74	74	74	74																											
0.611–0.630 (0.0241–0.0248)	44	46	48	50	52	54	56	58	60	60	62	62	64	64	66	66	68	68	70	70	72	72	74	74	74	74																												
0.631–0.650 (0.0248–0.0256)	46	48	50	52	54	56	58	60	62	62	64	64	66	66	68	68	70	70	72	72	74	74	74	74																													
0.651–0.670 (0.0256–0.0264)	48	50	52	54	56	58	60	62	64	64	66	66	68	68	70	70	72	72	74	74	74	74																														
0.671–0.690 (0.0264–0.0272)	50	52	54	56	58	60	62	64	66	66	68	68	70	70	72	72	74	74	74	74																														
0.691–0.710 (0.0272–0.0280)	52	54	56	58	60	62	64	66	68	68	70	70	72	72	74	74	74	74																														
0.711–0.730 (0.0280–0.0287)	54	56	58	60	62	64	66	68	70	70	72	72	74	74	74	74																														
0.731–0.750 (0.0288–0.0295)	56	58	60	62	64	66	68	70	72	72	74	74	74	74																														
0.751–0.770 (0.0296–0.0303)	58	60	62	64	66	68	70	72	74	74	74	74																														
0.771–0.790 (0.0304–0.0311)	60	62	64	66	68	70	72	74	74	74																														
0.791–0.810 (0.0311–0.0319)	62	64	66	68	70	72	74																																	
0.811–0.830 (0.0319–0.0327)	64	66	68	70	72	74																																		
0.831–0.850 (0.0327–0.0335)	66	68	70	72	74																																			
0.851–0.870 (0.0335–0.0343)	68	70	72	74																																				
0.871–0.890 (0.0343–0.0350)	70	72	74																																					
0.891–0.910 (0.0351–0.0358)	72	74																																						
0.911–0.930 (0.0359–0.0366)	74																																							

New Lifter Thickness mm (in.)

Lifter No.	Thickness	Lifter No.	Thickness	Lifter No.	Thickness
06	5.060 (0.1992)	30	5.300 (0.2087)	54	5.540 (0.2181)
08	5.080 (0.2000)	32	5.320 (0.2094)	56	5.560 (0.2189)
10	5.100 (0.2008)	34	5.340 (0.2102)	58	5.580 (0.2197)
12	5.120 (0.2016)	36	5.360 (0.2110)	60	5.600 (0.2205)
14	5.140 (0.2024)	38	5.380 (0.2118)	62	5.620 (0.2213)
16	5.160 (0.2031)	40	5.400 (0.2126)	64	5.640 (0.2220)
18	5.180 (0.2039)	42	5.420 (0.2134)	66	5.660 (0.2228)
20	5.200 (0.2047)	44	5.440 (0.2142)	68	5.680 (0.2236)
22	5.220 (0.2055)	46	5.460 (0.2150)	70	5.700 (0.2244)
24	5.240 (0.2063)	48	5.480 (0.2157)	72	5.720 (0.2252)
26	5.260 (0.2071)	50	5.500 (0.2165)	74	5.740 (0.2260)
28	5.280 (0.2079)	52	5.520 (0.2173)		

Intake valve clearance (Cold):
0.19 to 0.29 mm (0.008 to 0.011 in.)

EXAMPLE:

The 5.250 mm (0.2067 in.) lifter is installed, and the measured clearance is 0.400 mm (0.0157 in.). Replace the 5.250 mm (0.2067 in.) lifter with a new No. 42 lifter.

A77296

Valve Lifter Selection Chart (Exhaust)

Measure clearance mm (in.) \ Installed lifter thickness mm (in.)	5.060 (0.1992)	5.080 (0.2000)	5.100 (0.2008)	5.120 (0.2016)	5.140 (0.2024)	5.160 (0.2031)	5.180 (0.2039)	5.200 (0.2047)	5.210 (0.2051)	5.220 (0.2055)	5.230 (0.2059)	5.240 (0.2063)	5.250 (0.2067)	5.260 (0.2071)	5.270 (0.2075)	5.280 (0.2079)	5.290 (0.2083)	5.300 (0.2087)	5.310 (0.2091)	5.320 (0.2094)	5.330 (0.2098)	5.340 (0.2102)	5.350 (0.2106)	5.360 (0.2110)	5.370 (0.2114)	5.380 (0.2118)	5.390 (0.2122)	5.400 (0.2126)	5.410 (0.2130)	5.420 (0.2134)	5.430 (0.2138)	5.440 (0.2142)	5.450 (0.2146)	5.460 (0.2150)	5.470 (0.2154)	5.480 (0.2157)	5.490 (0.2161)	5.500 (0.2165)	5.510 (0.2169)	5.520 (0.2173)	5.530 (0.2177)	5.540 (0.2181)	5.550 (0.2185)	5.560 (0.2189)	5.570 (0.2193)	5.580 (0.2197)	5.590 (0.2201)	5.600 (0.2205)	5.620 (0.2213)	5.640 (0.2220)	5.660 (0.2228)	5.680 (0.2236)	5.700 (0.2244)	5.720 (0.2252)	5.740 (0.2260)
0.000–0.030 (0.0000–0.0012)																							06	06	08	08	10	10	12	12	14	14	16	16	18	18	20	20	22	22	24	24	26	26	28	28	30	30	32	32	34	36	38	40	42	44
0.031–0.050 (0.0012–0.0020)																						06	06	08	08	10	10	12	12	14	14	16	16	18	18	20	20	22	22	24	24	26	26	28	28	30	30	32	32	34	36	38	40	42	44	46
0.051–0.070 (0.0020–0.0028)																				06	06	08	08	10	10	12	12	14	14	16	16	18	18	20	20	22	22	24	24	26	26	28	28	30	30	32	32	34	34	36	38	40	42	44	46	48
0.071–0.090 (0.0028–0.0035)																		06	06	08	08	10	10	12	12	14	14	16	16	18	18	20	20	22	22	24	24	26	26	28	28	30	30	32	32	34	34	36	36	38	40	42	44	46	48	50
0.091–0.110 (0.0036–0.0043)															06	06	08	08	10	10	12	12	14	14	16	16	18	18	20	20	22	22	24	24	26	26	28	28	30	30	32	32	34	34	36	36	38	38	40	42	44	46	48	50	52
0.111–0.130 (0.0044–0.0051)														06	06	08	08	10	10	12	12	14	14	16	16	18	18	20	20	22	22	24	24	26	26	28	28	30	30	32	32	34	34	36	36	38	38	40	42	44	46	48	50	52	54
0.131–0.150 (0.0052–0.0059)												06	06	08	08	10	10	12	12	14	14	16	16	18	18	20	20	22	22	24	24	26	26	28	28	30	30	32	32	34	34	36	36	38	38	40	40	42	44	46	48	50	52	54	56
0.151–0.170 (0.0059–0.0067)										06	06	08	08	10	10	12	12	14	14	16	16	18	18	20	20	22	22	24	24	26	26	28	28	30	30	32	32	34	34	36	36	38	38	40	40	42	42	44	44	46	46	48	50	52	54	56	58
0.171–0.190 (0.0067–0.0075)										06	08	08	10	10	12	12	14	14	16	16	18	18	20	20	22	22	24	24	26	26	28	28	30	30	32	32	34	34	36	36	38	38	40	40	42	42	44	44	46	46	48	50	52	54	56	58	60
0.191–0.210 (0.0075–0.0083)									06	08	10	10	12	12	14	14	16	16	18	18	20	20	22	22	24	24	26	26	28	28	30	30	32	32	34	34	36	36	38	38	40	40	42	42	44	44	46	46	48	48	50	52	54	56	58	60	62
0.211–0.230 (0.0083–0.0091)								06	08	10	12	12	14	14	16	16	18	18	20	20	22	22	24	24	26	26	28	28	30	30	32	32	34	34	36	36	38	38	40	40	42	42	44	44	46	46	48	48	50	50	52	54	56	58	60	62	64
0.231–0.250 (0.0091–0.0098)								06	08	10	12	14	14	16	16	18	18	20	20	22	22	24	24	26	26	28	28	30	30	32	32	34	34	36	36	38	38	40	40	42	42	44	44	46	46	48	48	50	50	52	54	56	58	60	62	64	66
0.251–0.270 (0.0099–0.0106)								06	08	10	12	14	16	16	18	18	20	20	22	22	24	24	26	26	28	28	30	30	32	32	34	34	36	36	38	38	40	40	42	42	44	44	46	46	48	48	50	50	52	54	56	58	60	62	64	66	68
0.271–0.290 (0.0107–0.0114)								06	08	10	12	14	16	16	18	18	20	20	22	22	24	24	26	26	28	28	30	30	32	32	34	34	36	36	38	38	40	40	42	42	44	44	46	46	48	48	50	50	52	54	56	58	60	62	64	66	68	70
0.291–0.299 (0.0115–0.0118)								06	08	10	12	14	16	16	18	18	20	20	22	22	24	24	26	26	28	28	30	30	32	32	34	34	36	36	38	38	40	40	42	42	44	44	46	46	48	48	50	50	52	54	56	58	60	62	64	66	68	70	72
0.300–0.400 (0.0118–0.0157)																		

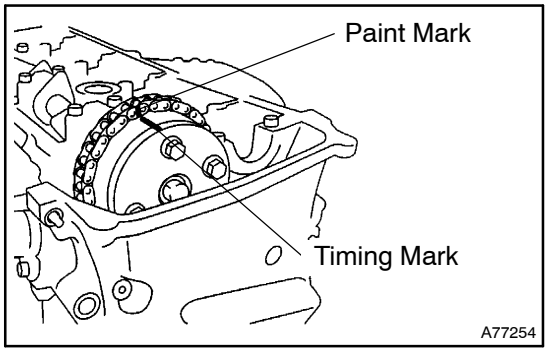

(p) Install the timing chain on the No. 1 camshaft timing gear, with the paint mark aligned with the timing marks on the camshaft timing gear.

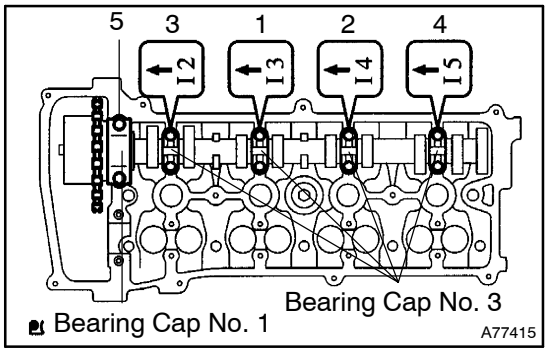

(q) Examine the front marks and numbers of the 5 bearing caps and install them. Then install the 10 bearing cap bolts. Uniformly tighten the bolts in the sequence shown in the illustration.

Torque:
30 N·m (301 kgf·cm, 22 ft·lbf) for bearing cap No. 1
9.0 N·m (92 kgf·cm, 80 in.·lbf) for bearing cap No. 3

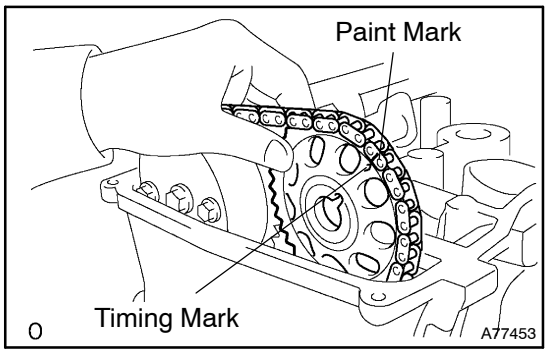

(r) Put the No. 2 camshaft on the cylinder head with the paint mark of the chain aligned with the timing mark on the camshaft timing sprocket.

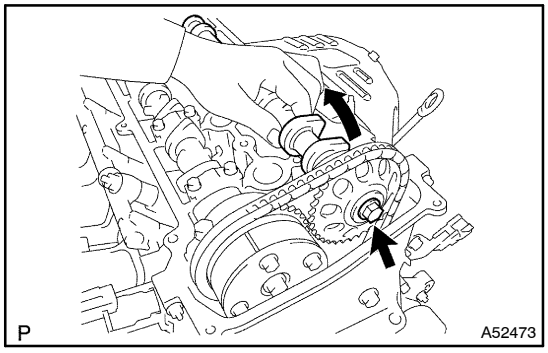

(s) Raise the No. 2 camshaft and temporarily tighten the sprocket bolt.

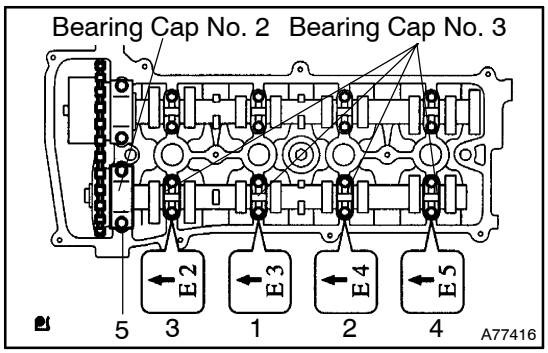

(t) Examine the front marks and numbers of the 5 bearing caps and install them. Then install the 10 bearing cap bolts. Uniformly tighten the bolts in the sequence shown in the illustration.

Torque:
30 N·m (301 kgf·cm, 22 ft·lbf) for bearing cap No. 1
9.0 N·m (92 kgf·cm, 80 in.·lbf) for bearing cap No. 3

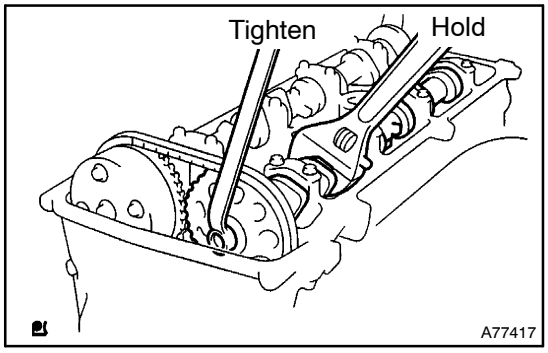

(u) Fix the camshaft with a wrench, then tighten the sprocket bolt.

Torque: 54 N·m (551 kgf·cm, 40 ft·lbf)

NOTICE:

Be careful not to damage the valve lifter.

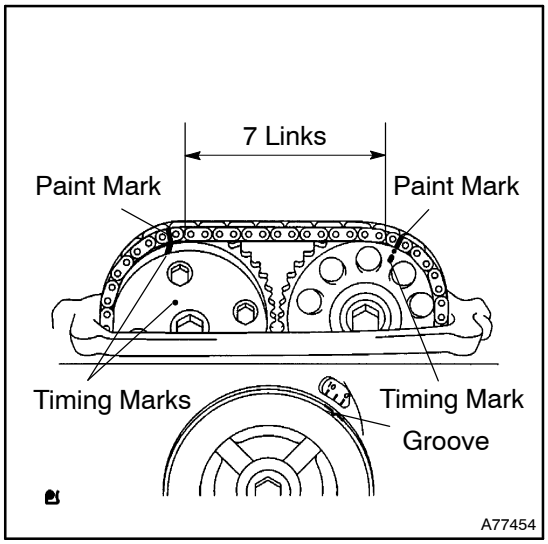

(v) Check that the timing chain paint marks are aligned with the camshaft timing sprocket timing mark and the camshaft timing gear timing mark. Also check the alignment of the pulley groove and chain cover timing mark.

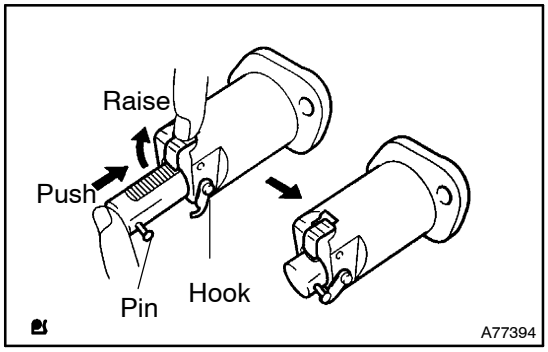

(w) Install the chain tensioner.

(1) Release the ratchet pawl, fully push in the plunger and apply the hook to the pin so that the plunger cannot spring out.

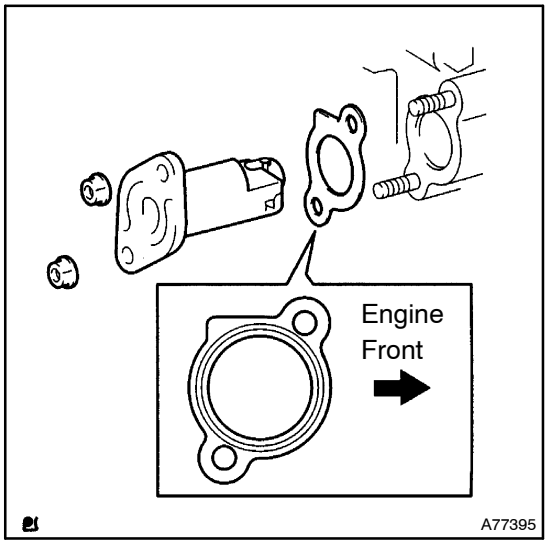

(2) Install a new gasket and the chain tensioner with the 2 nuts.

Torque: 9.0 N·m (92 kgf·cm, 80 in.·lbf)

NOTICE:

When installing the tensioner, set the hook again if the hook releases the plunger.

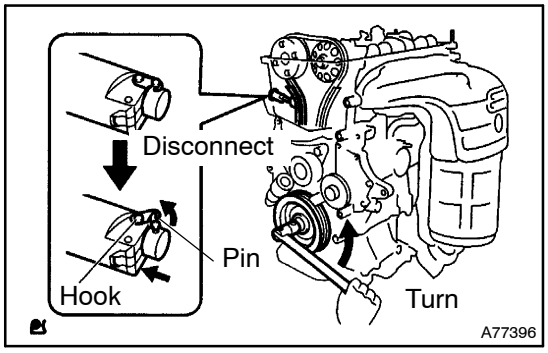

(3) Turn the crankshaft counterclockwise, and disconnect the plunger knock pin from the hook.

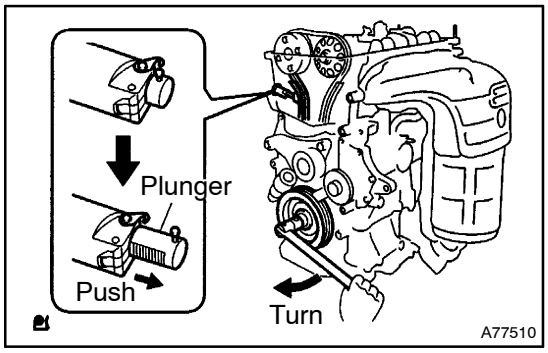

(4) Turn the crankshaft clockwise, and check that the slipper is pushed by the plunger.

89. INSTALL CAMSHAFT POSITION SENSOR
Torque: 9.0 N·m (92 kgf·cm, 80 in.·lbf)

90. INSTALL CYLINDER HEAD COVER GASKET

91. INSTALL CYLINDER HEAD COVER SUB–ASSY

(a) Remove any old packing (FIPG) material.

(b) Apply seal packing to the 2 locations shown in the illustration.
Seal packing: Part No. 08826–00080 or equivalent

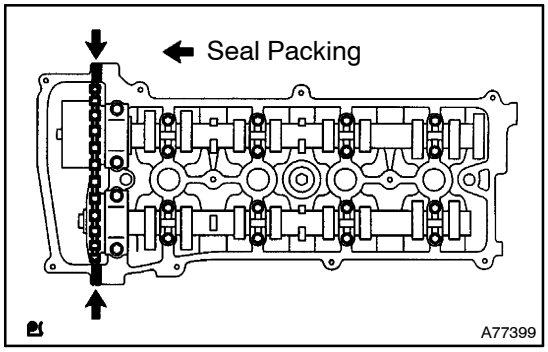

NOTICE:
- **Remove any oil from the contact surface.**
- **Install the cylinder head cover within 5 minutes after applying seal packing.**
- **Do not apply engine oil for at least 2 hours after the installation.**

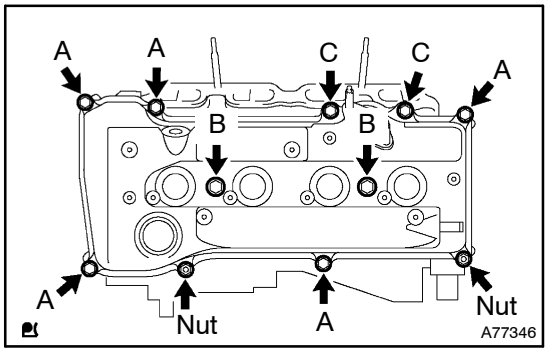

(c) Install the cylinder head cover with the 9 bolts and 2 nuts.
Torque:
11 N·m (112 kgf·cm, 8 ft·lbf) for bolt A
14 N·m (143 kgf·cm, 10 ft·lbf) for bolt B
21 N·m (214 kgf·cm, 15 ft·lbf) for bolt C
11 N·m (112 kgf·cm, 8 ft·lbf) for nut

92. INSTALL OIL FILTER UNION

(a) Using a 12 mm hexagon wrench, install the oil filter union.
Torque: 30 N·m (306 kgf·cm, 22 ft·lbf)

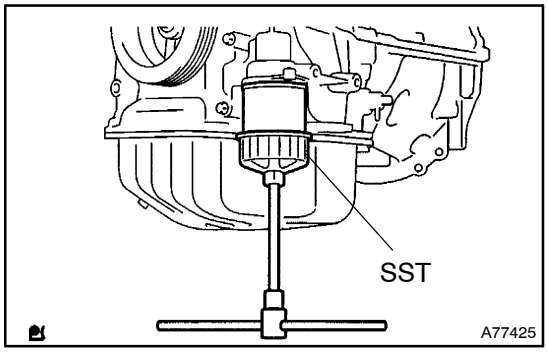

93. INSTALL OIL FILTER SUB–ASSY

(a) Check and clean the oil filter installation surface.
(b) Apply clean engine oil to the gasket of a new oil filter.
(c) Lightly screw the oil filter into place, and tighten it until the gasket contacts the seat.
(d) Using SST, tighten it an additional 3/4 turn.
SST 09228–06501

94. INSTALL SPARK PLUG
Torque: 19 N·m (194 kgf·cm, 14 ft·lbf)

95. INSTALL VENTILATION VALVE SUB–ASSY

(a) Apply adhesive on the threads of the ventilation valve.
Adhesive: Part No. 08833–00070 THREE BOND 1324 or equivalent
Torque: 19 N·m (194 kgf·cm, 14 ft·lbf)

96. INSTALL OIL FILLER CAP GASKET

97. INSTALL OIL FILLER CAP SUB–ASSY

CYLINDER HEAD ASSY (2AZ–FSE)

141Q6–01

COMPONENTS

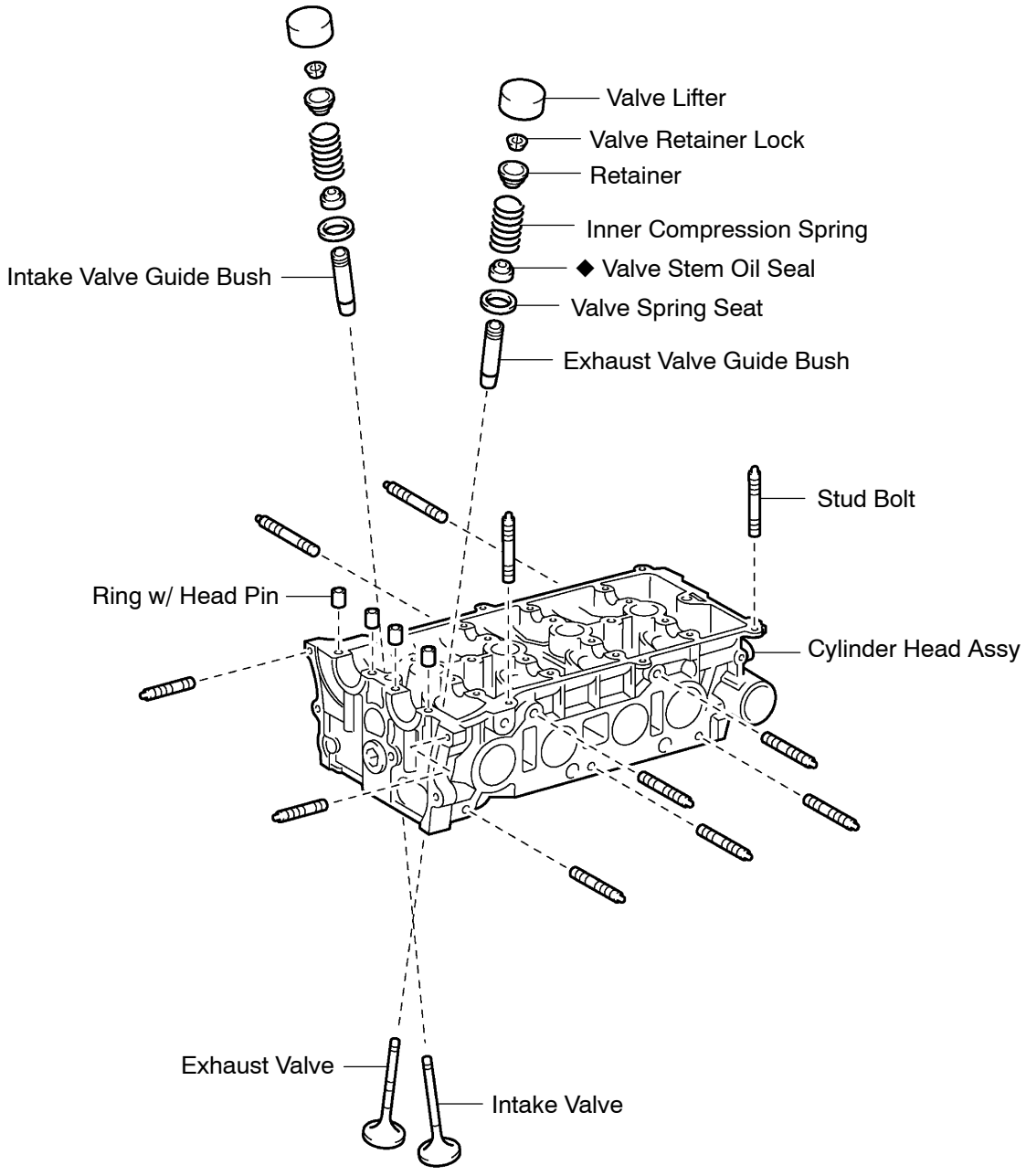

◆ Non–reusable part

A77366

141Q7–01

OVERHAUL

1. REMOVE VALVE LIFTER

HINT:

Arrange the valve lifters in the correct order.

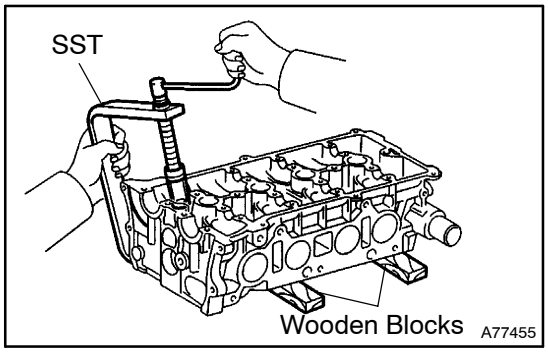

2. REMOVE INTAKE VALVE

(a) Using SST and wooden blocks, compress and remove the 8 valve spring retainer locks.
SST 09202–70020 (09202–00010)

(b) Remove the retainer, valve spring and valve.

HINT:

Arrange the removed parts in the correct order.

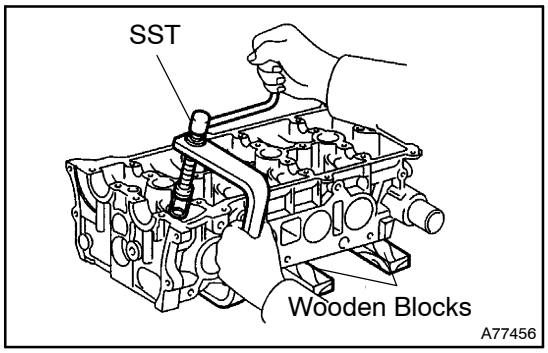

3. REMOVE EXHAUST VALVE

(a) Using SST and wooden blocks, compress and remove the 8 valve spring retainer locks.
SST 09202–70020 (09202–00010)

(b) Remove the retainer, valve spring and valve.

HINT:

Arrange the removed parts in the correct order.

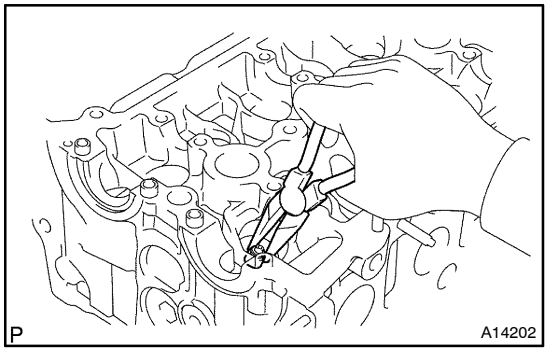

4. REMOVE VALVE STEM OIL SEAL

(a) Using needle–nose pliers, remove the oil seals.

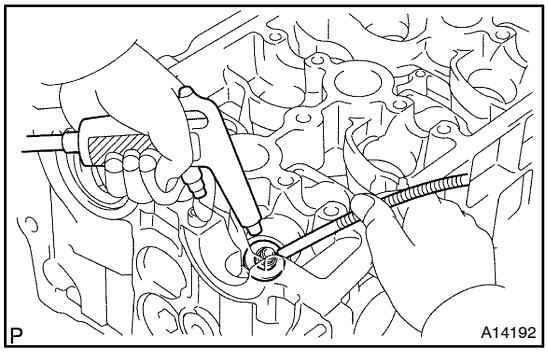

5. REMOVE VALVE SPRING SEAT

(a) Using compressed air and a magnetic finger, remove the spring seat by blowing air.

HINT:

Store the removed parts in the correct order so that they can be returned to the original locations when re–assembling.

6. REMOVE STUD BOLT

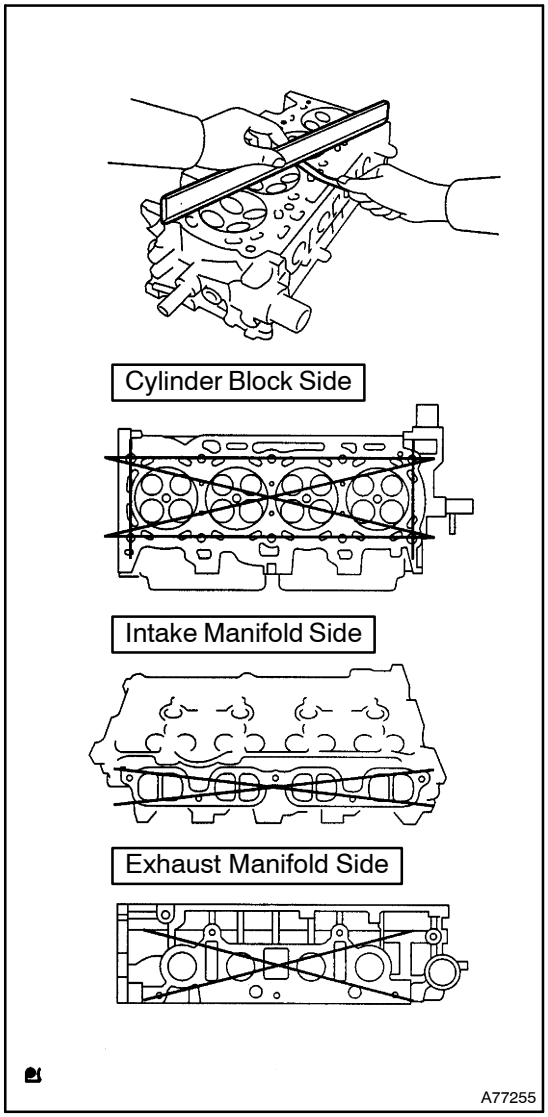

7. INSPECT CYLINDER HEAD FOR FLATNESS

(a) Using a precision straight edge and a feeler gauge, measure the surface contacting the cylinder block and the manifolds for warpage.

Maximum warpage:

Item	Specified Condition
Cylinder block side	0.05 mm (0.0020 in.)
Intake manifold side	0.08 mm (0.0031 in.)
Exhaust manifold side	0.08 mm (0.0031 in.)

If the warpage is greater than the maximum, replace the cylinder head.

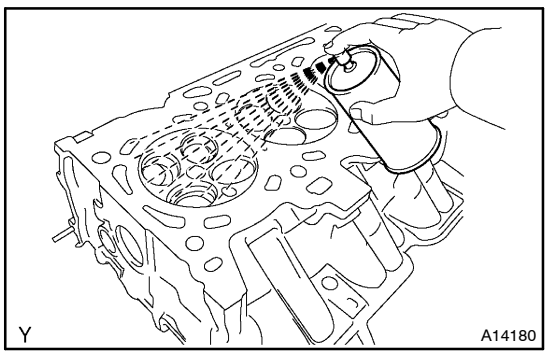

8. INSPECT CYLINDER HEAD FOR CRACKS

(a) Using a dye penetrant, check the intake ports, exhaust ports and cylinder surface for cracks.

If cracked, replace the cylinder head.

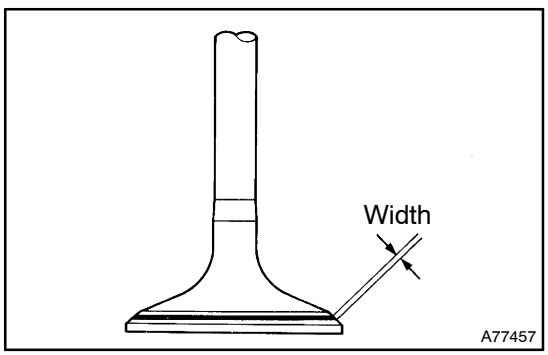

9. INSPECT VALVE SEATS

(a) Apply a light coat of prussian blue (or white lead) to the valve face.

(b) Lightly press the valve face against the valve seat.

(c) Check the valve face and valve seat according to the following procedure.

(1) If blue appears 360° around the valve face, the valve face is concentric. If not, replace the valve.

(2) If blue appears 360° around the valve seat, the guide and valve face are concentric. If not, resurface the valve seat.

(3) Check that the valve seat contact is in the middle of the valve face with the width between 1.0 to 1.4 mm (0.039 to 0.055 in.).

10. REPAIR VALVE SEATS

NOTICE:

Keep the lip free of foreign matter.

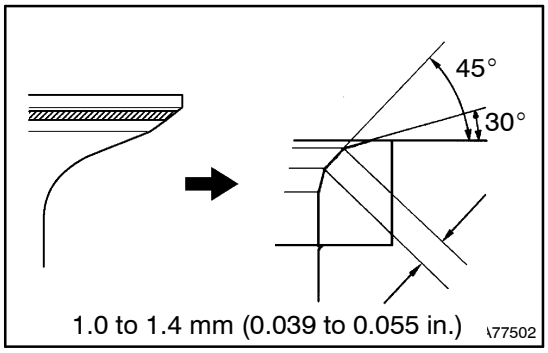

(a) If the seating is too high on the valve face, use 30° and 45° cutters to correct the seat.

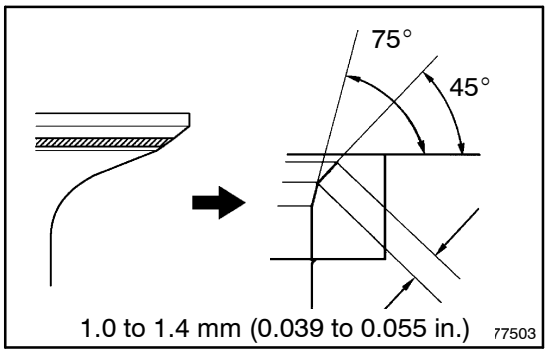

(b) If the seating is too low on the valve face, use 75° and 45° cutters to correct the seat.

(c) Hand–rub the valve and valve seat with an abrasive compound.

(d) Check the valve seating position.

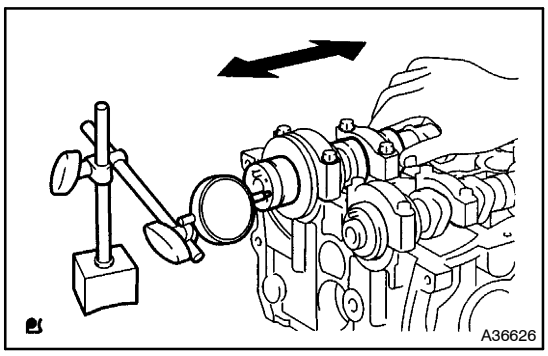

11. INSPECT CAMSHAFT THRUST CLEARANCE

(a) Install the camshafts.

(b) Using a dial indicator, measure the thrust clearance while moving the camshaft back and forth.

Standard thrust clearance:

Item	Specified Condition
Intake	0.040 to 0.095 mm (0.0016 to 0.0037 in.)
Exhaust	0.080 to 0.135 mm (0.0032 to 0.0053 in.)

Maximum thrust clearance:

Item	Specified Condition
Intake	0.11 mm (0.0043 in.)
Exhaust	0.15 mm (0.0059 in.)

If the thrust clearance is greater than the maximum, replace the cylinder head. If the thrust surface is damaged, replace the camshaft.

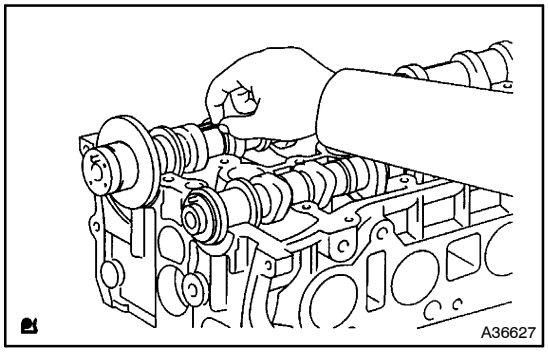

12. INSPECT CAMSHAFT OIL CLEARANCE

(a) Clean the bearing caps and camshaft journals.

(b) Place the camshafts on the cylinder head.

(c) Lay a strip of Plastigage across each of the camshaft journal.

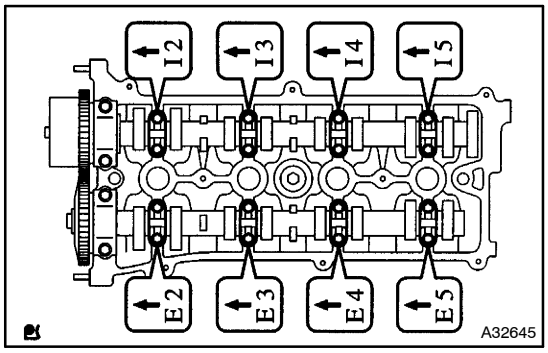

(d) Install the bearing caps.

Torque:

30 N·m (301 kgf·cm, 22 ft·lbf) for No. 1 bearing cap

30 N·m (301 kgf·cm, 22 ft·lbf) for No. 2 bearing cap

9.0 N·m (92 kgf·cm, 80 in.·lbf) for No. 3 bearing cap

NOTICE:

Do not turn the camshaft.

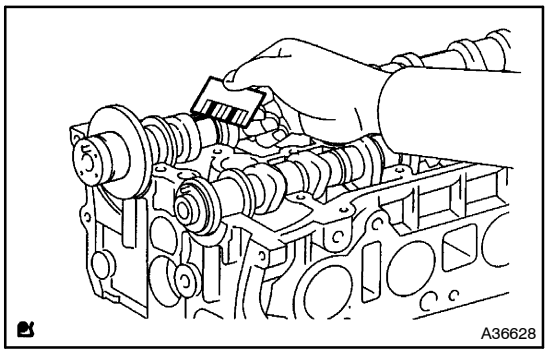

(e) Remove the bearing cap and measure the Plastigage at its widest point.

Standard oil clearance:

Item	Specified Condition
Intake No. 1 journal bearing mark 1	0.007 to 0.038 mm (0.00028 to 0.0015 in.)
Intake No. 1 journal bearing mark 2	0.080 to 0.038 mm (0.00031 to 0.015 in.)
Intake No. 1 journal bearing mark 3	0.080 to 0.038 mm (0.00031 to 0.015 in.)
Exhaust No. 1 journal	0.040 to 0.079 mm (0.00157 to 0.00311 in.)
Other journals	0.025 to 0.062 mm (0.00098 to 0.00244 in.)

Maximum oil clearance:

Item	Specified Condition
Intake No. 1 journal	0.07 mm (0.0028 in.)
Other journals	0.10 mm (0.0039 in.)

NOTICE:

Completely remove the plastigage after the inspection.

If the oil clearance is greater than the maximum, replace the camshaft. If necessary, replace the cylinder head.

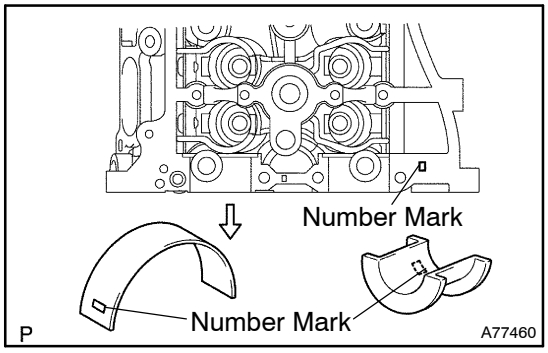

If the oil clearance on the No. 1 journal is greater than the maximum, choose a new bearing and install it.

Cylinder head journal bore diameter:

Mark 1	40.000 to 40.008 mm (1.57480 to 1.57511 in.)
Mark 2	40.009 to 40.017 mm (1.57515 to 1.57547 in.)
Mark 3	40.018 to 40.025 mm (1.57551 to 1.57578 in.)

Standard bearing center wall thickness:

Mark 1	2.000 to 2.004 mm (0.07874 to 0.07890 in.)
Mark 2	2.005 to 2.008 mm (0.07894 to 0.07905 in.)
Mark 3	2.009 to 2.012 mm (0.07909 to 0.07921 in.)

Camshaft journal diameter:
35.971 to 35.985 mm (1.41648 to 1.41673 in.)

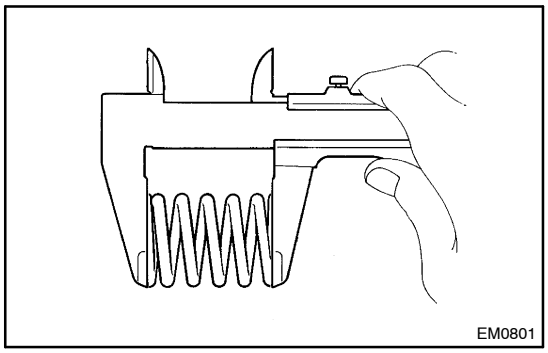

13. INSPECT INNER COMPRESSION SPRING

(a) Using a vernier caliper, measure the free length of the valve spring.

Free length: 45.7 mm (1.799 in.)

If the free length is not as specified, replace the valve spring.

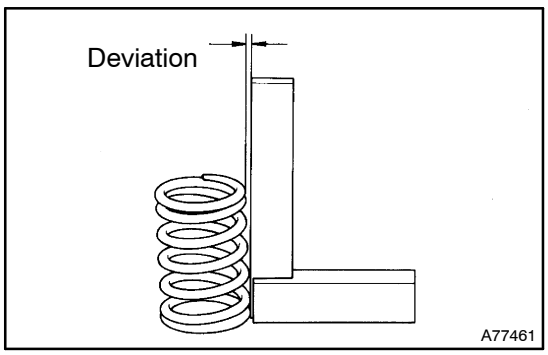

(b) Using steel squares, measure the deviation of the valve spring.

Maximum deviation: 1.6 mm (0.063 in.)

If the deviation is greater than the maximum, replace the valve spring.

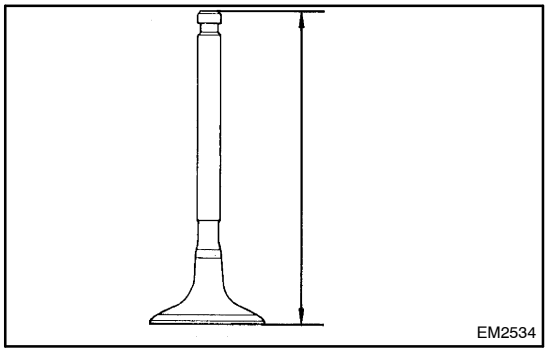

14. INSPECT INTAKE VALVE

(a) Using a vernier caliper, measure the valve overall length.

Standard overall length: 101.71 mm (4.0043 in.)
Minimum overall length: 101.21 mm (3.9846 in.)

If the overall length is less than the minimum, replace the valve.

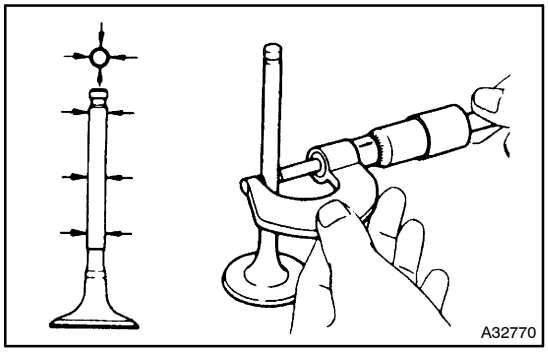

(b) Using a micrometer, measure the diameter of the valve stem.
Valve stem diameter:
5.470 to 5.485 mm (0.2154 to 0.2159 in.)

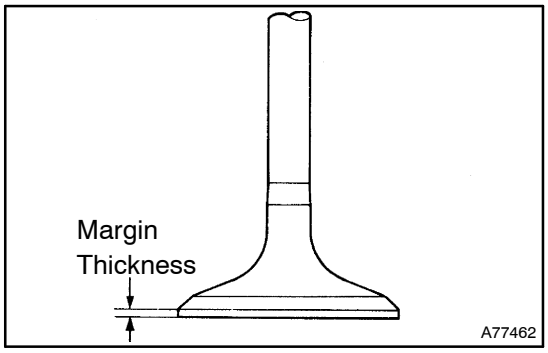

(c) Using a vernier caliper, measure the valve head margin thickness.
Standard margin thickness:
1.05 to 1.45 mm (0.041 to 0.057 in.)
Minimum margin thickness: 0.75 mm (0.030 in.)
If the margin thickness is less than the minimum, replace the valve.

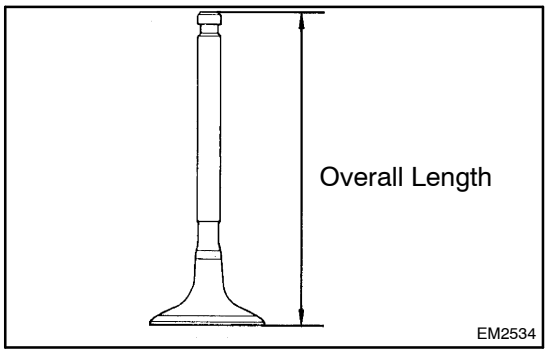

15. INSPECT EXHAUST VALVE
(a) Using a vernier caliper, measure the valve overall length.
Standard overall length: 101.15 mm (3.9823 in.)
Minimum overall length: 100.70 mm (3.9646 in.)
If the overall length is less than the minimum, replace the valve.

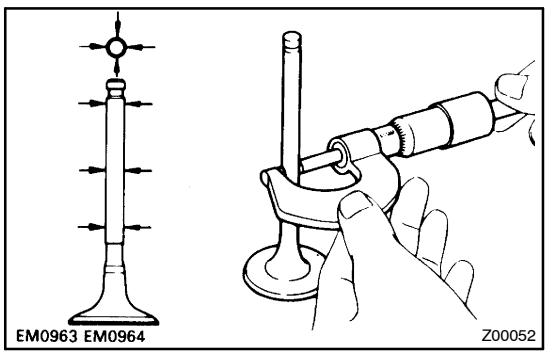

(b) Using a micrometer, measure the diameter of the valve stem.
Valve stem diameter:
5.465 to 5.480 mm (0.2152 to 0.2157 in.)

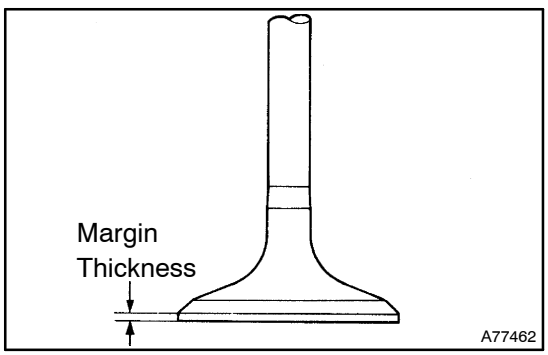

(c) Using a vernier caliper, measure the valve head margin thickness.
Standard margin thickness:
1.2 to 1.6 mm (0.047 to 0.063 in.)
Minimum margin thickness: 0.9 mm (0.035 in.)
If the margin thickness is less than the minimum, replace the valve.

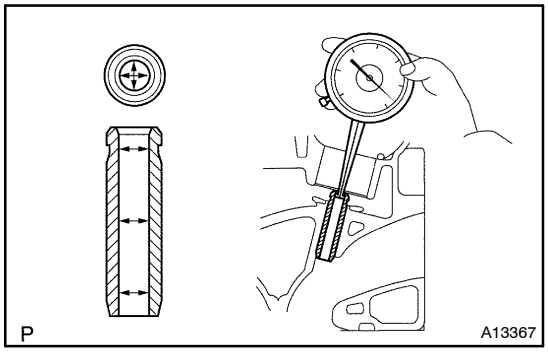

16. INSPECT INTAKE VALVE GUIDE BUSH

(a) Using a caliper gauge, measure the inside diameter of the guide bush.

Bushing inside diameter:
5.510 to 5.530 mm (0.2169 to 0.2177 in.)

(b) Subtract the valve stem diameter measurement from the guide bush inside diameter measurement.

Standard oil clearance:
0.025 to 0.060 mm (0.00098 to 0.00236 in.)
Maximum oil clearance: 0.08 mm (0.0031 in.)

If the clearance is greater than the maximum, replace the valve and guide bush (see steps 18 and 20).

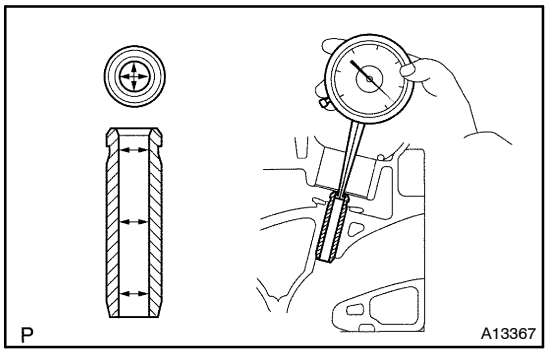

17. INSPECT EXHAUST VALVE GUIDE BUSH

(a) Using a caliper gauge, measure the inside diameter of the guide bush.

Bushing inside diameter:
5.510 to 5.530 mm (0.2169 to 0.2177 in.)

(b) Subtract the valve stem diameter measurement from the guide bushing inside diameter measurement.

Standard oil clearance:
0.030 to 0.065 mm (0.0012 to 0.0026 in.)
Maximum oil clearance: 0.10 mm (0.0039 in.)

If the clearance is greater than the maximum, replace the valve and guide bush (see steps 19 and 21).

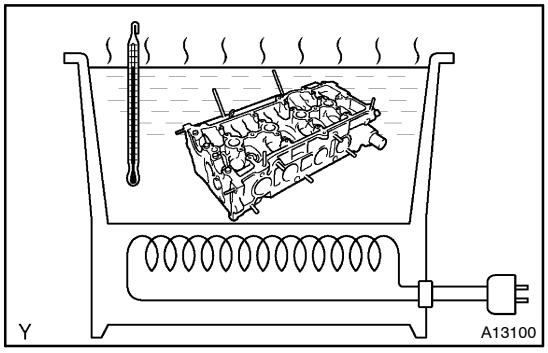

18. REMOVE INTAKE VALVE GUIDE BUSH

(a) Gradually heat the cylinder head to 80 to 100°C (176 to 212°F).

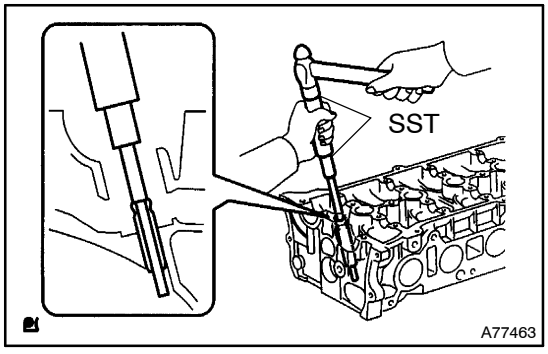

(b) Using SST and a hammer, tap out the guide bush.
SST 09201–10000 (09201–01050), 09950–70010 (09951–07100)

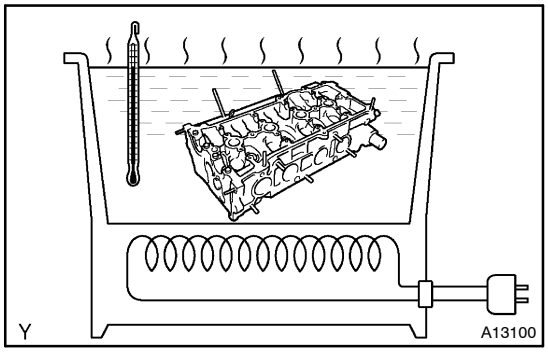

19. REMOVE EXHAUST VALVE GUIDE BUSH

(a) Gradually heat the cylinder head to 80 to 100°C (176 to 212°F).

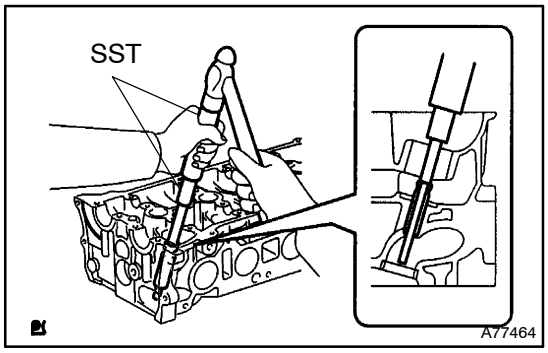

(b) Using SST and a hammer, tap out the guide bush.
SST 09201–10000 (09201–01050), 09950–70010 (09951–07100)

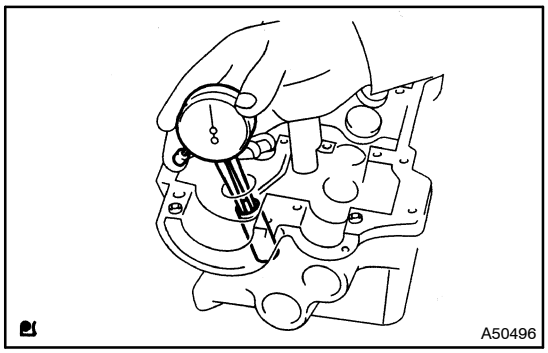

20. INSTALL INTAKE VALVE GUIDE BUSH

(a) Using a caliper gauge, measure the bush bore diameter of the cylinder head.

(b) Select a new guide bush (STD or O/S 0.05).

Bush size	Bush bore diameter
Use STD	10.285 to 10.306 mm (0.4049 to 0.4057 in.)
Use O/S 0.05	10.333 to 10.344 mm (0.4068 to 0.4072 in.)

If the bush bore diameter of the cylinder head is greater than 10.306 mm (0.4057 in.), machine the bush bore diameter to between 10.333 and 10.344 mm (0.4068 to 0.4072 in.).
If the bush bore diameter of the cylinder head is greater than 10.344 mm (0.4072 in.), replace the cylinder head.

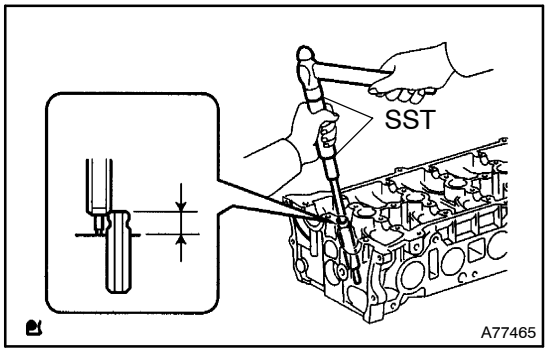

(c) Using SST and a hammer, tap in a new guide bush to the specified protrusion height.
Protrusion height:
9.6 to 10.0 mm (0.3779 to 0.3937 in.)
SST 09201–10000 (09201–01050), 09950–70010 (09951–07100), 23801

(d) Using a sharp 5.5 mm reamer, ream the guide bush to obtain the standard specified clearance between the guide bush and valve stem.
Standard oil clearance:
0.025 to 0.060 mm (0.00098 to 0.00236 in.)

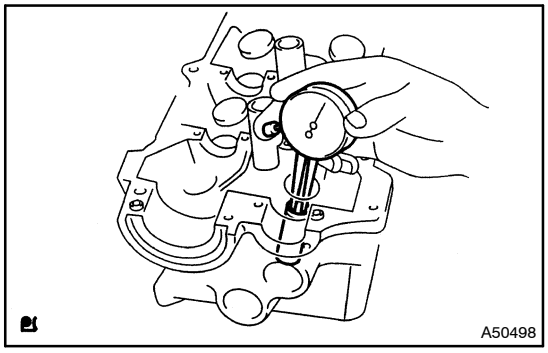

21. INSTALL EXHAUST VALVE GUIDE BUSH

(a) Using a caliper gauge, measure the bush bore diameter of the cylinder head.

(b) Select a new guide bush (STD or O/S 0.05).

Bush size	Bush bore diameter
Use STD	10.285 to 10.306 mm (0.4049 to 0.4057 in.)
Use O/S 0.05	10.333 to 10.344 mm (0.4068 to 0.4072 in.)

If the bush bore diameter of the cylinder head is greater than 10.306 mm (0.4057 in.), machine the bush bore diameter to between 10.333 and 10.344 mm (0.4068 to 0.4072 in.).

If the bush bore diameter of the cylinder head is greater than 10.344 mm (0.4072 in.), replace the cylinder head.

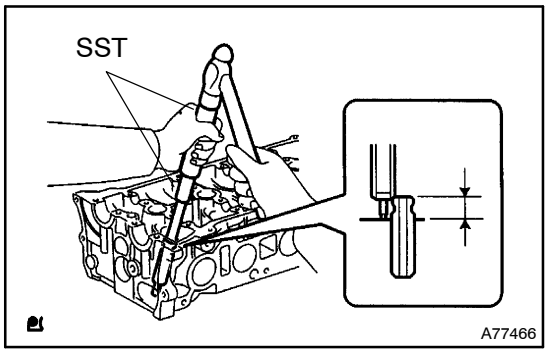

(c) Using SST and a hammer, tap in a new guide bush to the specified protrusion height.

Protrusion height:
9.6 to 10.0 mm (0.3779 to 0.3937 in.)

(d) Using a sharp 5.5 mm reamer, ream the guide bush to obtain the standard specified clearance between the guide bush and valve stem.

SST 09201–10000 (09201–01050), 09950–70010 (09951–07100), 23801

Standard oil clearance:
0.030 to 0.065 mm (0.00118 to 0.00256 in.)

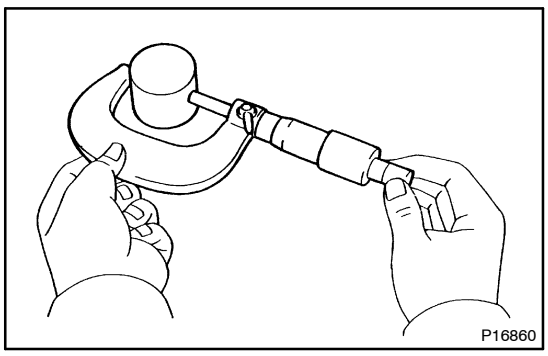

22. INSPECT VALVE LIFTER

(a) Using a micrometer, measure the lifter diameter.

Lifter diameter:
30.966 to 30.976 mm (1.2191 to 1.2195 in.)

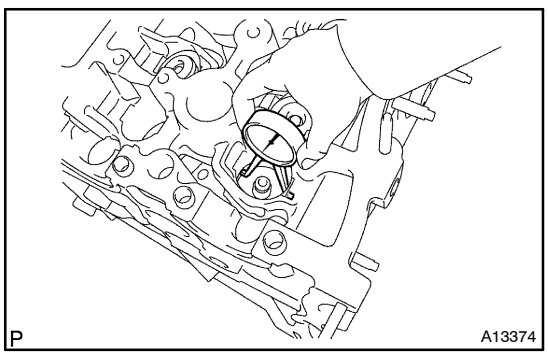

(b) Using a caliper gauge, measure the lifter bore diameter of the cylinder head.

Lifter bore diameter:
31.009 to 31.025 mm (1.2208 to 1.2215 in.)

If the journal diameter is not as specified, check the oil clearance.

(c) Subtract the lifter diameter measurement from the lifter bore diameter measurement.

Standard oil clearance:
0.033 to 0.059 mm (0.0013 to 0.0023 in.)
Maximum oil clearance: 0.08 mm (0.0032 in.)

If the oil clearance is greater than the maximum, replace the lifter. If necessary, replace the cylinder head.

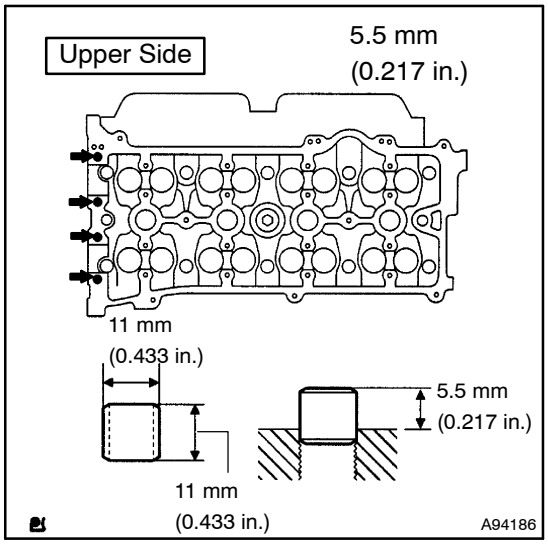

23. INSTALL RING W/HEAD PIN

(a) Using a plastic–faced hammer, tap in a new ring pin to the specified protrusion height.
Protrusion height: 5.5 mm (0.217 in.)

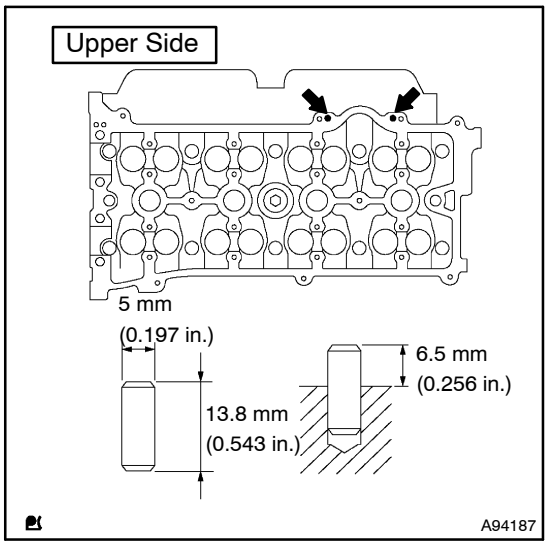

24. INSTALL RING PIN

(a) Using a plastic–faced hammer, tap in a new ring pin to the specified protrusion height.
Protrusion height: 6.5 mm (0.256 in.)

25. INSTALL TIGHT PLUG

(a) Apply seal packing to the cylinder head as shown in the illustration.

(b) Using SST, tap in plug to the specified protrusion height.
SST 09950–60010 (09951–00180), 09950–70010 (09951–07100)
Protrusion height: 1.5 to 2.5 mm (0.059 to 0.098 in.)

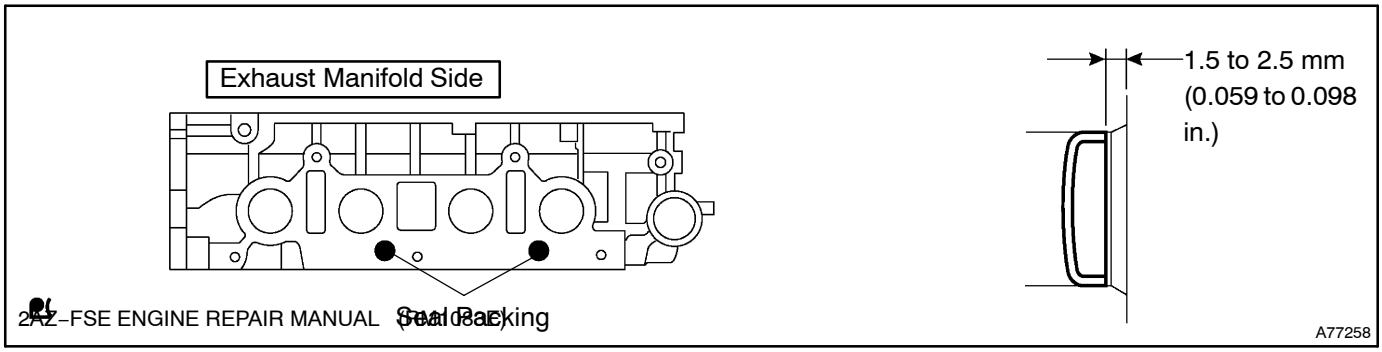

26. INSTALL STUD BOLT

Torque:
5.0 N·m (51 kgf·cm, 44 in.·lbf) for bolt A
5.0 N·m (51 kgf·cm, 44 in.·lbf) for bolt B
9.5 N·m (97 kgf·cm, 84 in.·lbf) for bolt C
9.5 N·m (97 kgf·cm, 84 in.·lbf) for bolt D

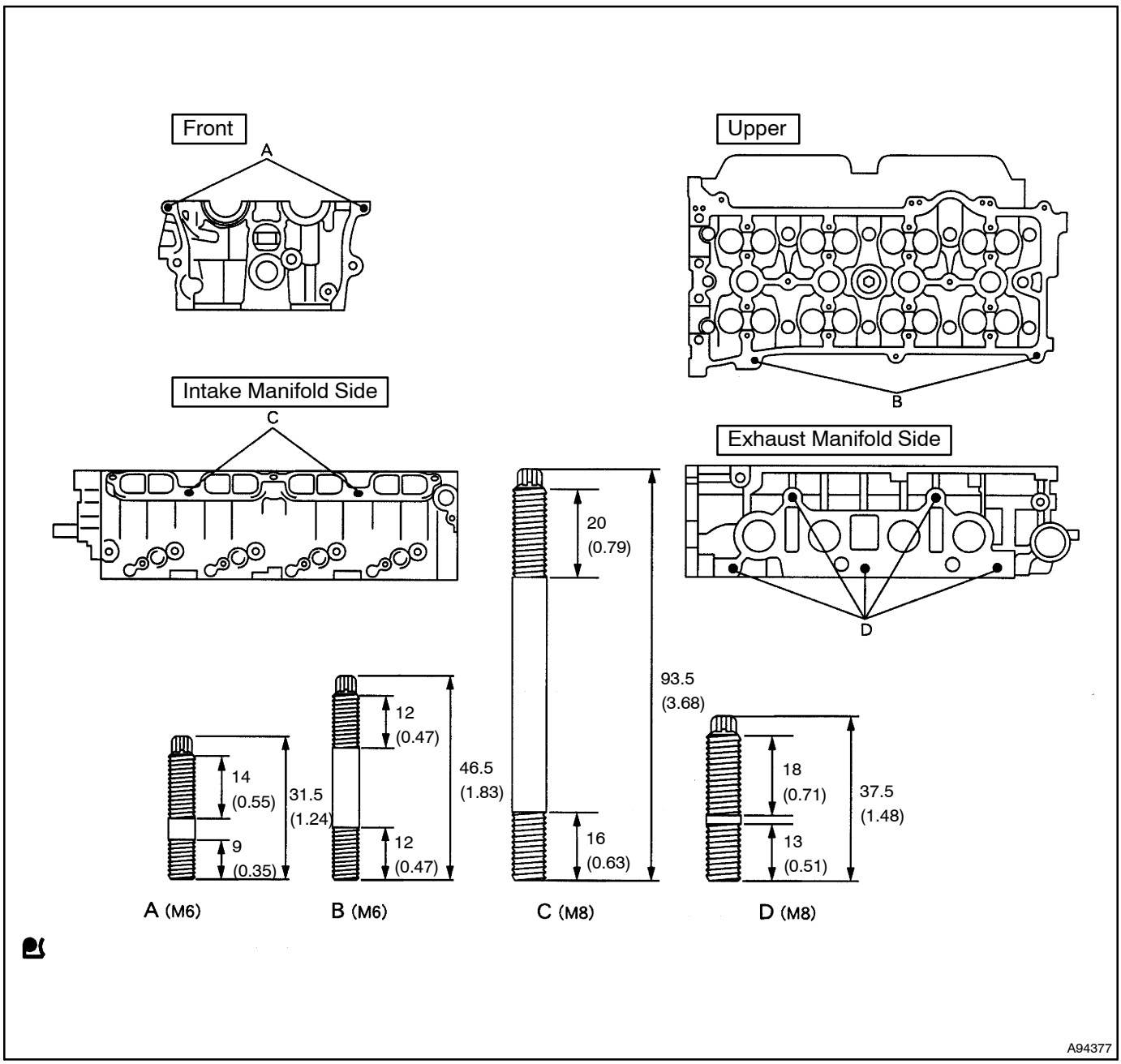

27. INSTALL VALVE SPRING SEAT

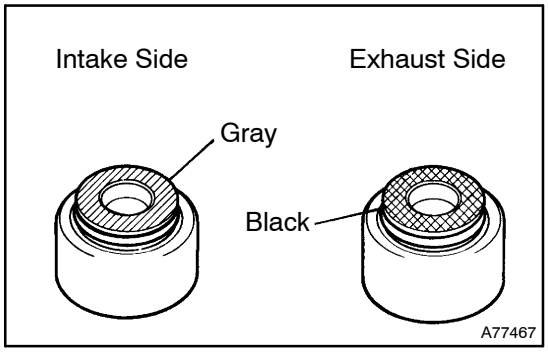

28. INSTALL VALVE STEM OIL SEAL

(a) Apply a light coat of engine oil on a new oil seal.

NOTICE:

Pay close attention when installing the intake and exhaust oil seals. For example, installing the intake oil seal into the exhaust or installing the exhaust oil seal to the intake can cause installation problems later.

HINT:

The intake valve oil seal is gray and the exhaust valve oil seal is black.

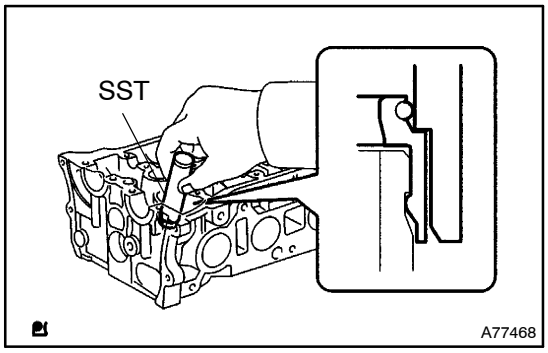

(b) Using SST, push in the oil seal.

SST 09201–41020

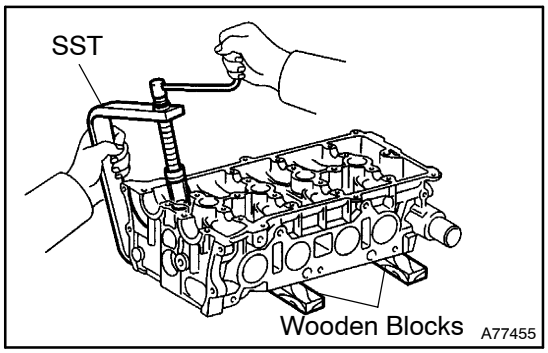

29. INSTALL INTAKE VALVE

(a) Install the valve, spring and retainer to the cylinder head.

(b) Using SST and wooden blocks, compress the spring and install the 2 retainer locks.

SST 09202–70020 (09202–00010)

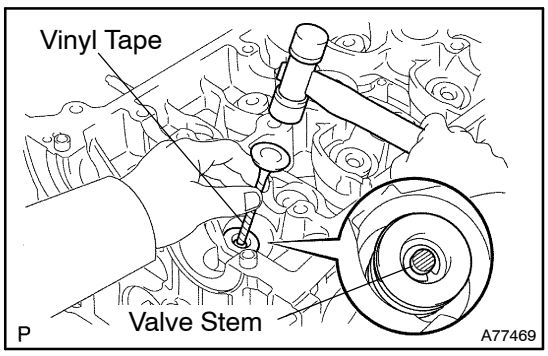

(c) Using a plastic–faced hammer and a discarded valve with its tip wrapped in tape, lightly tap the installed valve to ensure that it is securely fit.

NOTICE:

Be careful not to damage the valve stem tip.

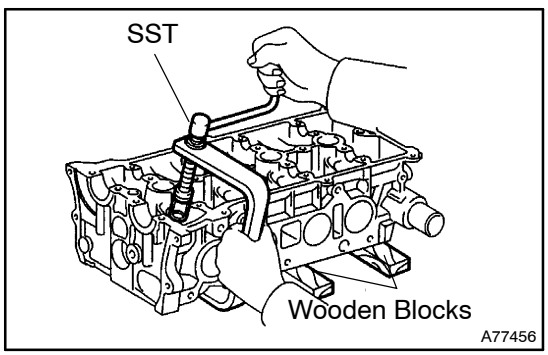

30. INSTALL EXHAUST VALVE

(a) Install the valve, spring and retainer to the cylinder head.

(b) Using SST and wooden blocks, compress the spring and install the 2 retainer locks.

SST 09202–70020 (09202–00010)

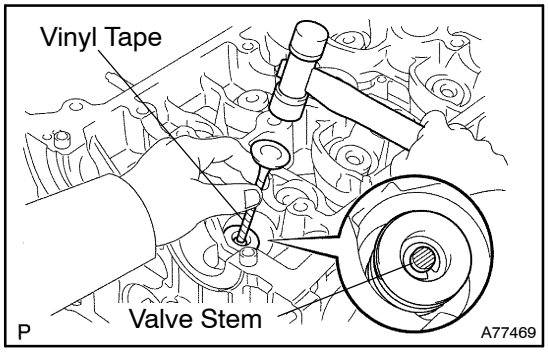

(c) Using a plastic–faced hammer and a discarded valve with its tip wrapped in tape, lightly tap the installed valve to ensure that it is securely fit.

NOTICE:

Be careful not to damage the valve stem tip.

31. INSTALL VALVE LIFTER

(a) Assemble the valve lifter and the tip of the valve stem with a light coat of engine oil applied.

NOTICE:

Install the valve lifters in their original places.

CYLINDER BLOCK ASSY (2AZ–FSE)

COMPONENTS

141Q8–01

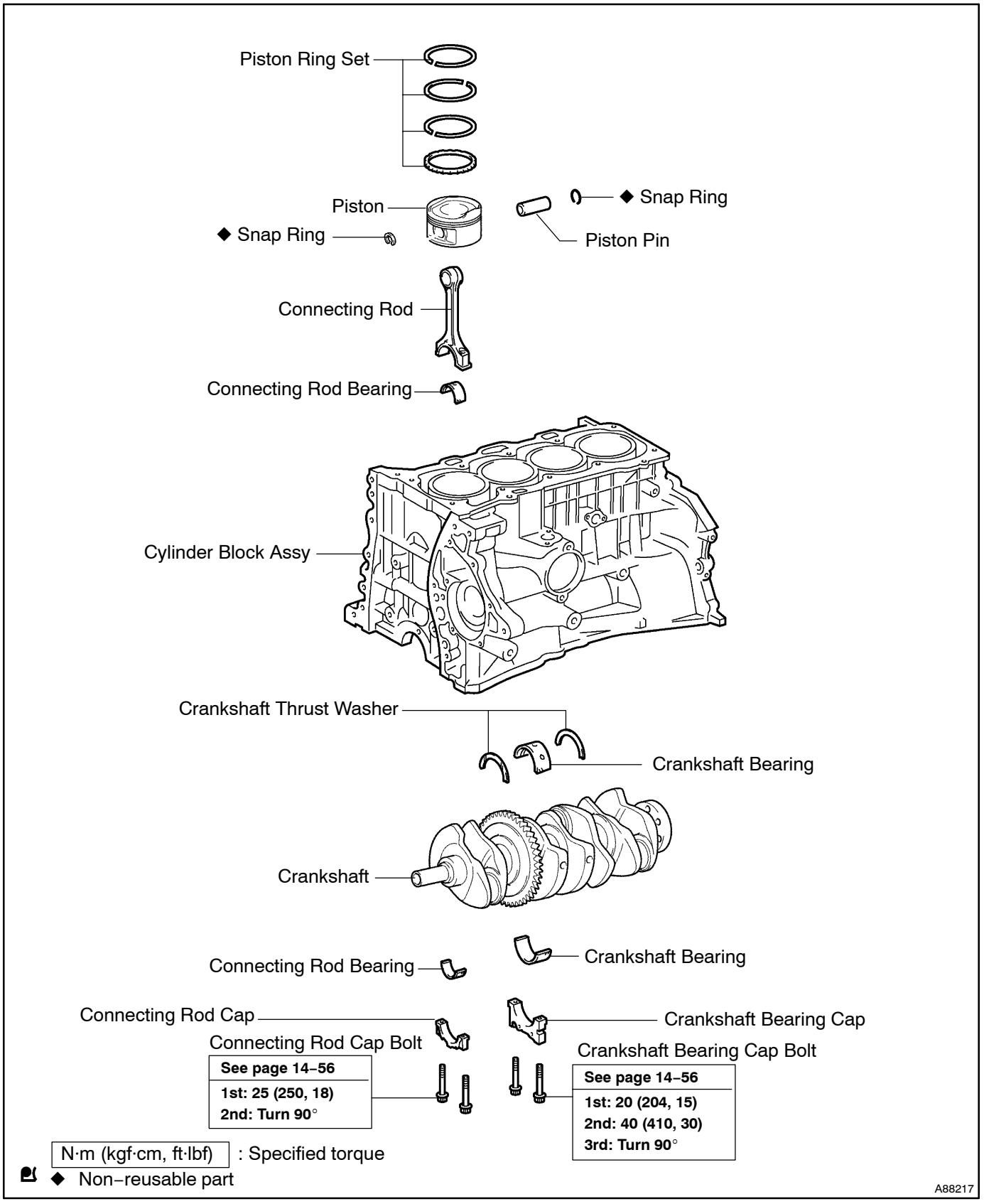

141Q9–01

OVERHAUL

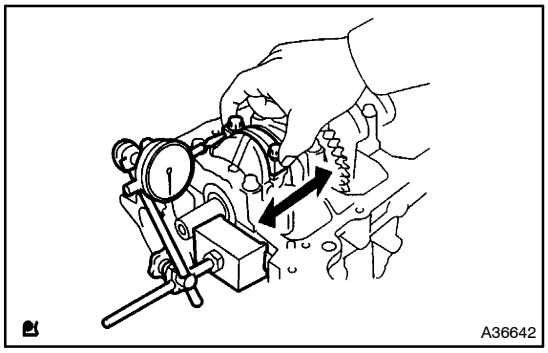

1. INSPECT CONNECTING ROD THRUST CLEARANCE

(a) Using a dial indicator, measure the thrust clearance while moving the connecting rod back and forth.

Standard thrust clearance:
0.160 to 0.362 mm (0.0063 to 0.0143 in.)
Maximum thrust clearance: 0.362 mm (0.0143 in.)

If the thrust clearance is greater than the maximum, replace the connecting rod assembly(s). If necessary, replace the crankshaft.

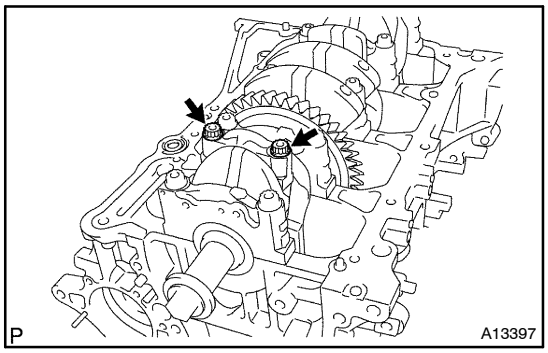

2. INSPECT CONNECTING ROD OIL CLEARANCE

HINT:
The connecting rod cap bolts are tightened in 2 progressive steps.

(a) Check that the matchmarks on the connecting rod and cap are aligned to ensure the correct reassembly.

HINT:
The matchmarks on the connecting rods and caps are for ensuring the correct reassembly.

(b) Using a 12 mm socket wrench, remove the 2 connecting rod cap bolts.

(c) Using the 2 removed connecting rod cap bolts, remove the connecting rod cap and the lower bearing by wiggling the connecting rod cap right and left.

HINT:
Keep the lower bearing inserted to the connecting rod cap.

(d) Clean the crank pin and bearing.

(e) Check the crank pin and bearing for pitting and scratches.

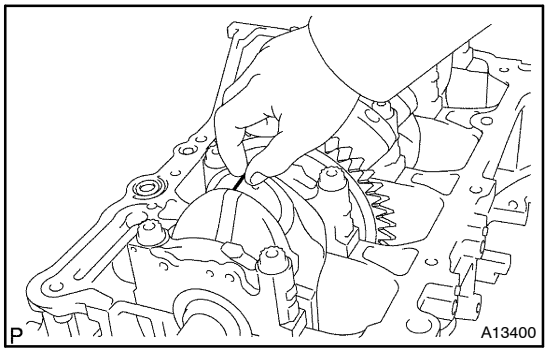

(f) Lay a strip of Plastigage on the crank pin.

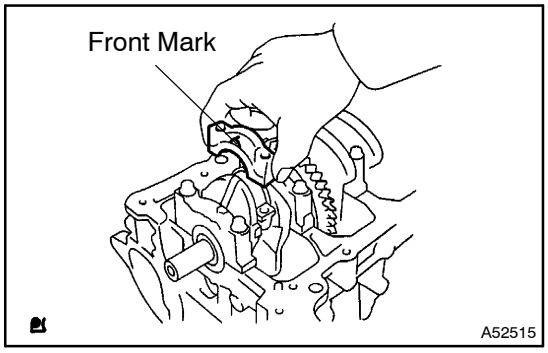

(g) Check that the front mark of the connecting rod cap is facing in the correct direction.
(h) Apply a light coat of engine oil on the threads and under the heads of the connecting rod cap bolts.
(i) Install the connecting cap (see step 37).

NOTICE:
Do not turn the crankshaft.

(j) Remove the 2 bolts and connecting rod cap.

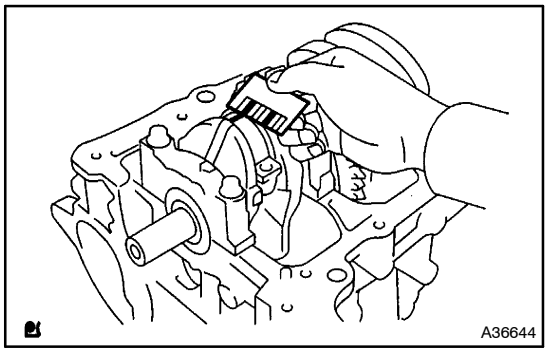

(k) Measure the Plastigage at its widest point.
Standard oil clearance:
0.024 to 0.048 mm (0.0009 to 0.0019 in.)
Maximum oil clearance: 0.08 mm (0.0031 in.)

If the crank pin or bearing is damaged, replace the bearings. If necessary, replace the crankshaft.

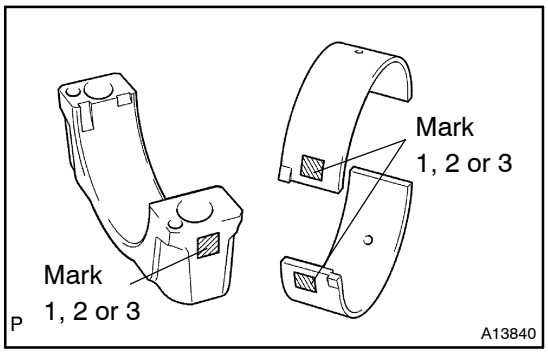

HINT:
If replacing a bearing, replace it with one that has the same number as the connecting rod. There are 3 sizes of standard bearings: 1, 2 and 3.

Standard bearing center wall thickness:

Mark 1	1.485 to 1.488 mm (0.0585 to 0.0586 in.)
Mark 2	1.489 to 1.491 mm (0.0586 to 0.0587 in.)
Mark 3	1.492 to 1.494 mm (0.0587 to 0.0588 in.)

(l) Completely remove the Plastigage.

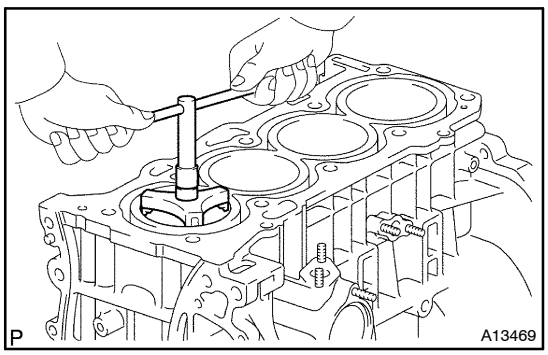

3. REMOVE PISTON SUB–ASSY W/CONNECTING ROD

(a) Using a ridge reamer, remove all the carbon from the top of the cylinder.
(b) Push the piston, connecting rod assembly and upper bearing through the top of the cylinder block.

HINT:
- Keep the bearing, connecting rod and cap together.
- Arrange the piston and connecting rod assemblies in the correct order.

4. REMOVE CONNECTING ROD BEARING

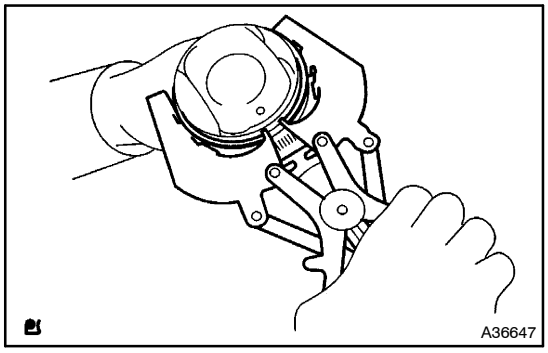

5. REMOVE PISTON RING SET

(a) Using a piston ring expander, remove the 2 compression rings.

(b) Remove the 2 side rails and oil ring by hand.

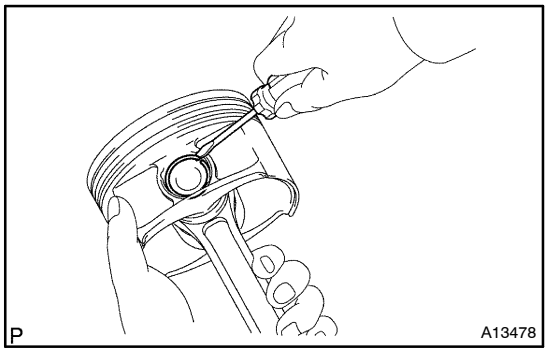

6. REMOVE PISTON PIN HOLE SNAP RING

(a) Using a small screwdriver, pry out the 2 snap rings.

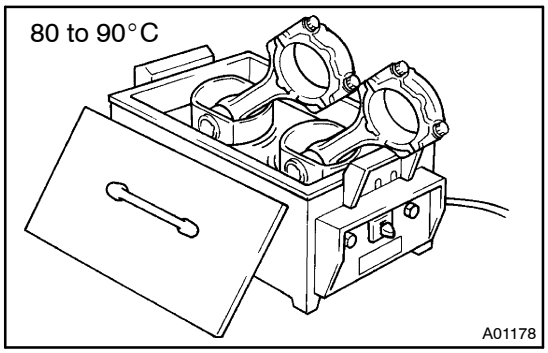

7. REMOVE PISTON

(a) Gradually heat the piston to approximately 80 to 90°C (176 to 194°F).

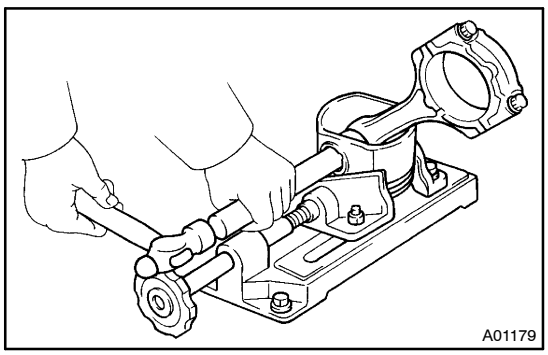

(b) Using a plastic–faced hammer and brass bar, lightly tap out the piston pin and remove the connecting rod.

HINT:

- The piston and pin are a matched set.
- Arrange the pistons, pins, rings, connecting rods and bearings in the correct order.

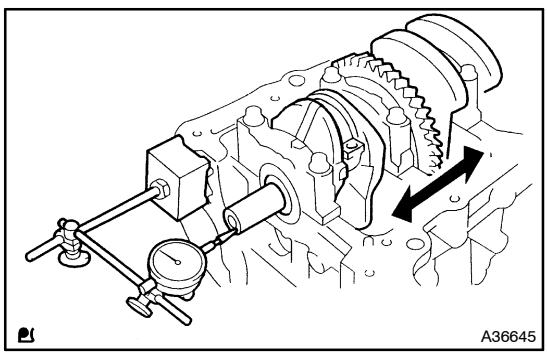

8. INSPECT CRANKSHAFT THRUST CLEARANCE

(a) Using a dial indicator, measure the thrust clearance while prying the crankshaft back and forth with a screwdriver.

Standard thrust clearance:

0.040 to 0.240 mm (0.0016 to 0.0094 in.)

Maximum thrust clearance: 0.30 mm (0.0118 in.)

If the thrust clearance is greater than the maximum, replace the thrust washers as a set.

Thrust washer thickness:

1.930 to 1.980 mm (0.0760 to 0.0780 in.)

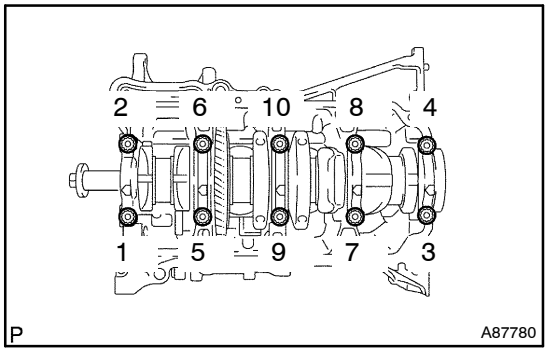

9. INSPECT CRANKSHAFT OIL CLEARANCE

(a) Uniformly loosen and remove the 10 main bearing cap bolts in the sequence shown in the illustration.

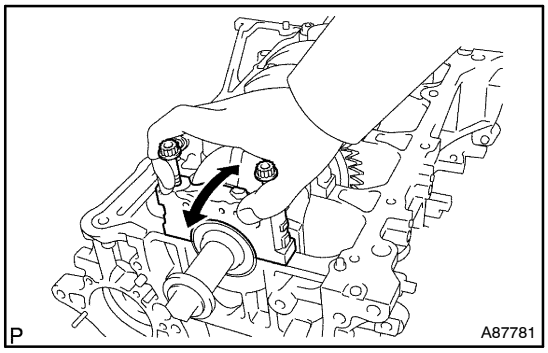

(b) Use 2 removed main bearing cap bolts to remove the 5 main bearing caps and 5 lower bearings.

NOTICE:

Insert the bolts into one of the caps. Ease the cap out by gently pulling up and applying force toward the front and back side of the cylinder block, as shown in the illustration. Take care not to damage the contact surfaces of the cap and cylinder block.

HINT:

- Keep the lower bearing and main bearing cap together.
- Arrange the main bearing caps in the correct order.

(c) Lift out the crankshaft.

HINT:

Keep the upper bearings together with the cylinder block.

(d) Clean each main journal and bearing.

(e) Check each main journal and bearing for pitting and scratches.

If the journal or bearing is damaged, replace the bearings.

If necessary, replace the crankshaft.

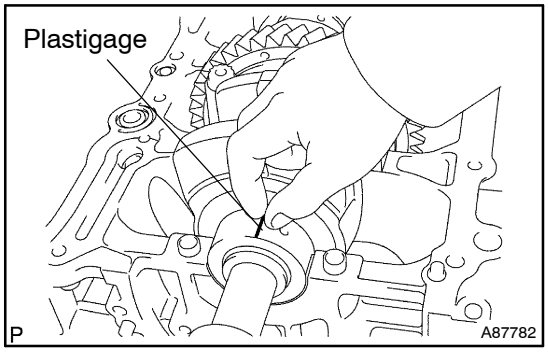

(f) Place the crankshaft on the cylinder block.

(g) Lay a strip of Plastigage across each journal.

(h) Install the main bearing caps (see step 36).

HINT:

Do not turn the crankshaft.

(i) Remove the main bearing cap (see steps (a) to (b) above).

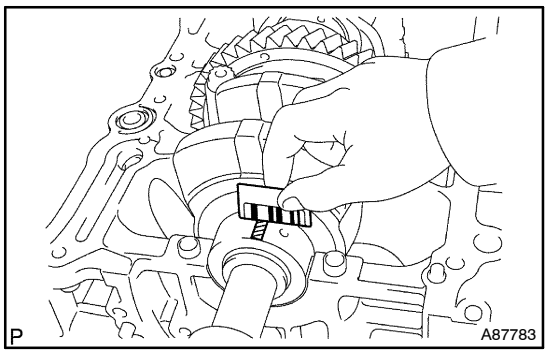

(j) Measure the Plastigage at its widest point.

Standard oil clearance:
0.017 to 0.040 mm (0.00067 to 0.00157 in.)
Maximum oil clearance: 0.050 mm (0.002 in.)

If the oil clearance is greater than the maximum, replace the bearings. If necessary, replace the crankshaft.

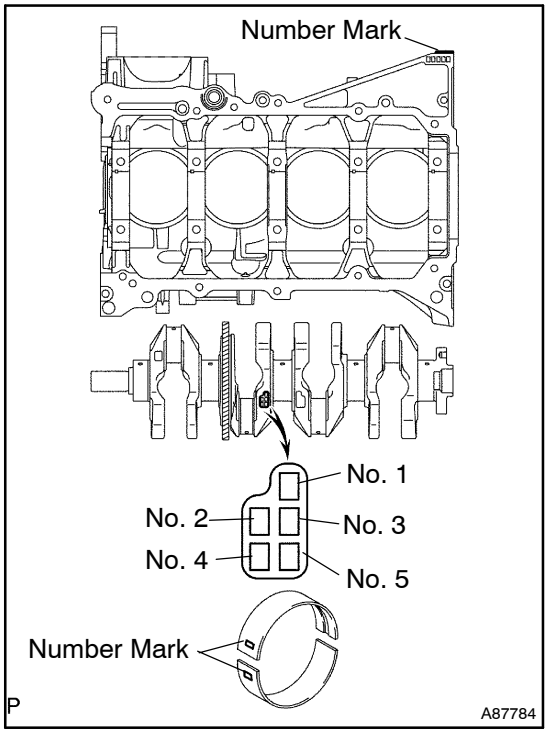

(k) If using a standard bearing, replace it with one having the same number. If the number of the bearing cannot be determined, select the correct bearing by adding together the numbers imprinted on the cylinder block and crankshaft, and then selecting the bearing according to the chart below. There are 4 sizes of standard bearings: 1, 2, 3 and 4.

Cylinder block (A) + Crankshaft (B)	0 to 2	3 to 5	6 to 8	9 to 11
Use bearing	1	2	3	4

HINT:
EXAMPLE
Cylinder block 4 (A) + Crankshaft 3 (B) =
Total number 7 (Use bearing 3)

Reference:

Item	Mark	Specified Condition
Cylinder block main journal bore diameter (A)	0	59.000 to 59.002 mm (2.08683 to 2.32291 in.)
	1	59.003 to 59.004 mm (2.08694 to 2.32299 in.)
	2	59.005 to 59.006 mm (2.08701 to 2.32307 in.)
	3	59.007 to 59.009 mm (2.08708 to 2.32318 in.)
	4	59.010 to 59.011 mm (2.08718 to 2.32326 in.)
	5	59.012 to 59.013 mm (2.08725 to 2.32334 in.)
	6	59.014 to 59.016 mm (2.08733 to 2.32346 in.)
Crankshaft main journal diameter (B)	0	54.999 to 55.000 mm (1.94528 to 2.16535 in.)
	1	54.997 to 54.998 mm (1.94521 to 2.16527 in.)
	2	54.995 to 54.996 mm (1.94514 to 2.16519 in.)
	3	54.993 to 54.994 mm (1.94507 to 2.16511 in.)
	4	54.991 to 54.992 mm (1.94500 to 2.16504 in.)
	5	54.988 to 54.990 mm (1.94493 to 2.16496 in.)
Standard bearing center wall thickness	1	1.993 to 1.996 mm (0.07846 to 0.07858 in.)
	2	1.996 to 1.999 mm (0.07858 to 0.07870 in.)
	3	2.000 to 2.002 mm (0.07874 to 0.07882 in.)
	4	2.003 to 2.005 mm (0.07886 to 0.07894 in.)

(l) Completely remove the Plastigage.

10. REMOVE CRANKSHAFT

(a) Lift out the crankshaft.

(b) Remove the 5 upper main bearings and 2 thrust washers from the cylinder block.

HINT:
Arrange the main bearings and thrust washers in the correct order.

11. REMOVE CRANKSHAFT THRUST WASHER UPPER

12. REMOVE CRANKSHAFT BEARING

HINT:
Arrange the bearings in the correct order.

13. REMOVE CRANKSHAFT BEARING NO.2

HINT:
Arrange the main bearings and thrust washers in the correct order.

14. REMOVE STUD BOLT

15. CLEAN CYLINDER BLOCK

NOTICE:

If the cylinder is washed at high temperatures, the cylinder liner sticks out beyond the cylinder block. Always wash the cylinder block at a temperature of 45°C (113°F) or less.

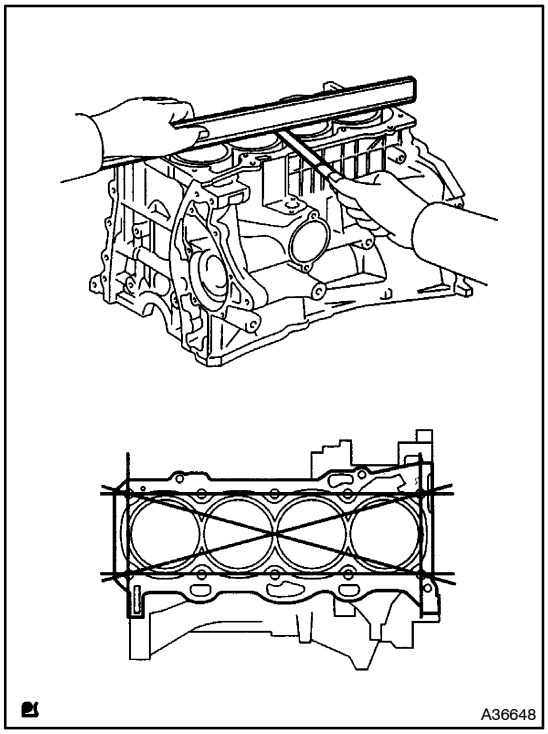

16. INSPECT CYLINDER BLOCK FOR FLATNESS

(a) Using a precision straight edge and feeler gauge, measure the surface contacting the cylinder head gasket for warpage.

Maximum warpage: 0.05 mm (0.0020 in.)

If the warpage is greater than the maximum, replace the cylinder block.

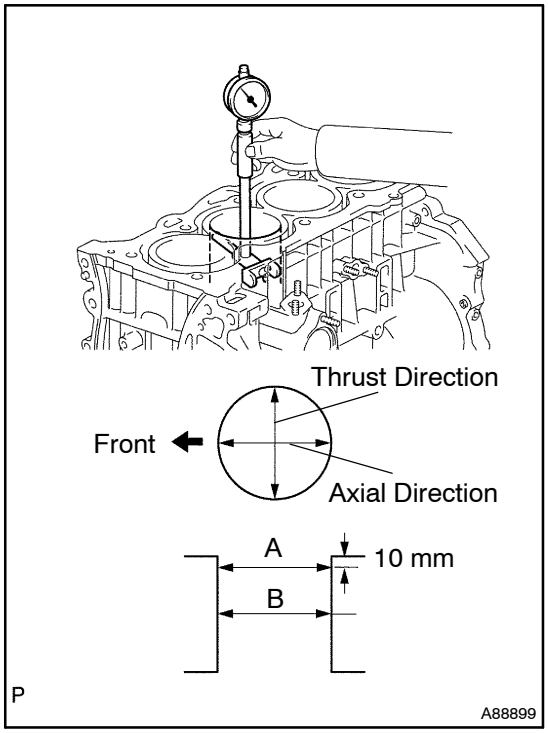

17. INSPECT CYLINDER BORE

(a) Using a cylinder gauge, measure the cylinder bore diameter at positions A and B in the thrust and axial directions.

Standard diameter:

88.500 to 88.513 mm (3.4843 to 3.4848 in.)

Maximum diameter: 88.633 (3.4895 in.)

If the diameter is greater than the maximum, replace the cylinder block.

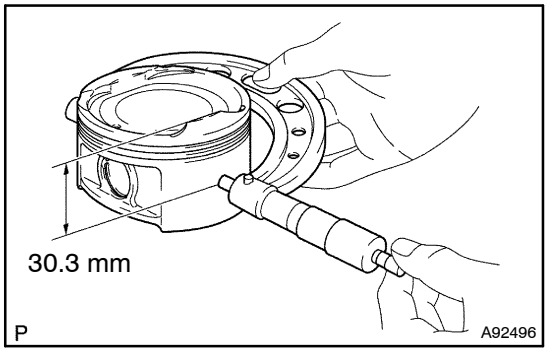

18. INSPECT PISTON DIAMETER

(a) Using a micrometer, measure the piston diameter at right angles to the piston pin center line, 30.3 mm (1.193 in.) from the piston head.
Piston diameter:
88.439 to 88.449 mm (3.4818 to 3.4822 in.)

19. INSPECT PISTON CLEARANCE

(a) Subtract the piston diameter measurement from the cylinder bore diameter measurement.
Standard oil clearance: 0.051 to 0.074 mm (0.0020 to 0.0029 in.)
Maximum oil clearance: 0.1 mm (0.0039 in.)

If the clearance is greater than the maximum, replace all the 4 pistons.
If necessary, replace the cylinder block.

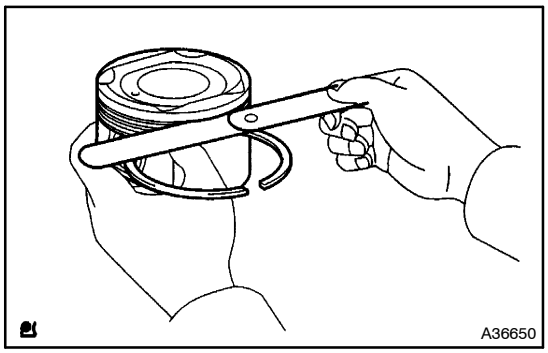

20. INSPECT RING GROOVE CLEARANCE

(a) Using a feeler gauge, measure the clearance between the piston ring and the wall of the ring groove.
Ring groove clearance:

Item	Specified Condition
No. 1	0.030 to 0.080 mm (0.0011 to 0.0031 in.)
No. 2	0.020 to 0.060 mm (0.0008 to 0.0024 in.)
Oil (side rail)	0.020 to 0.070 mm (0.0008 to 0.0028 in.)

If the clearance is not as specified, replace the piston.

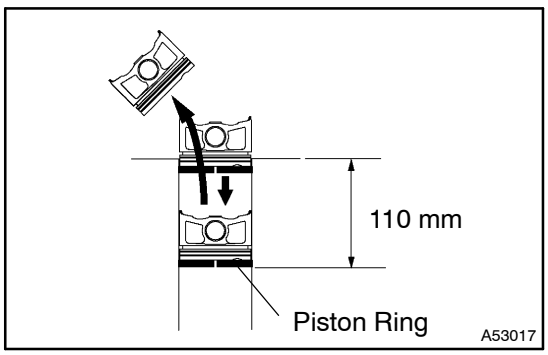

21. INSPECT PISTON RING END GAP

(a) Using a piston, push the piston ring a little beyond the bottom of the ring travel, 110 mm (4.33 in.) from the top of the cylinder block.

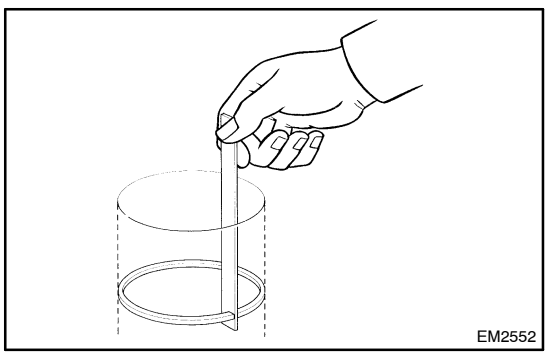

(b) Using a feeler gauge, measure the end gap.
Standard end gap:

Item	Specified Condition
No. 1	0.22 to 0.32 mm (0.0087 to 0.0126 in.)
No. 2	0.50 to 0.60 mm (0.0197 to 0.0236 in.)
Oil (side rail)	0.10 to 0.35 mm (0.0039 to 0.0138 in.)

Maximum end gap:

Item	Specified Condition
No. 1	0.89 mm (0.0350 in.)
No. 2	1.35 mm (0.0531 in.)
Oil (side rail)	0.73 mm (0.0287 in.)

If the end gap is greater than the maximum, replace the piston ring.

If the end gap is greater than the maximum even with a new piston ring, replace the cylinder block.

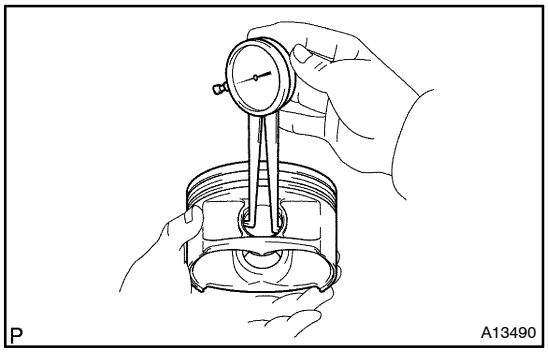

22. INSPECT PISTON PIN OIL CLEARANCE

(a) Using a caliper gauge, measure the pin hole bush diameter of the piston.

Pin hole diameter (Reference):

Mark	Specified Condition
A	22.001 to 22.004 mm (0.8662 to 0.8663 in.)
B	22.005 to 22.007 mm (0.8663 to 0.8664 in.)
C	22.008 to 22.010 mm (0.8665 to 0.8665 in.)

If the diameter is not as specified, check the oil clearance.

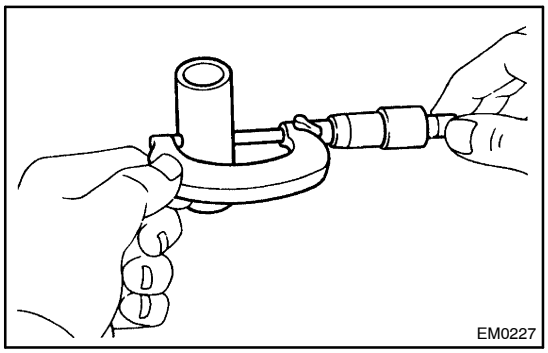

(b) Using a micrometer, measure the piston pin diameter.

Piston pin diameter (Reference):

Mark	Specified Condition
A	21.997 to 22.000 mm (0.8660 to 0.8661 in.)
B	22.001 to 22.003 mm (0.8662 to 0.8663 in.)
C	22.004 to 22.006 mm (0.8663 to 0.8664 in.)
D	22.007 to 22.009 mm (0.8664 to 0.8665 in.)

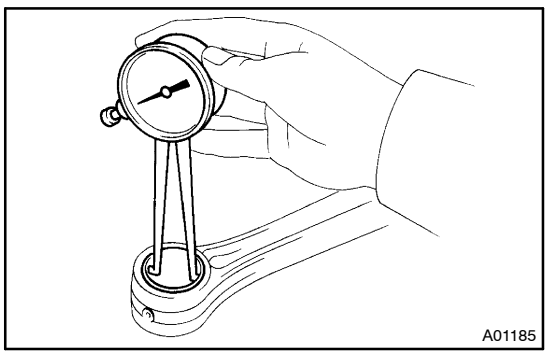

(c) Using a caliper gauge, measure the inside diameter of the connecting rod bush.

Bush inside diameter:

Mark	Specified Condition
A	22.005 to 22.008 mm (0.8663 to 0.8665 in.)
B	22.008 to 22.011 mm (0.8665 to 0.8666 in.)
C	22.011 to 22.014 mm (0.8666 to 0.8667 in.)

(d) Subtract the piston pin diameter measurement from the piton pin hole diameter measurement.

Standard oil clearance:
0.001 to 0.007 mm (0.00004 to 0.00028 in.)
Maximum oil clearance: 0.010 mm (0.0020 in.)

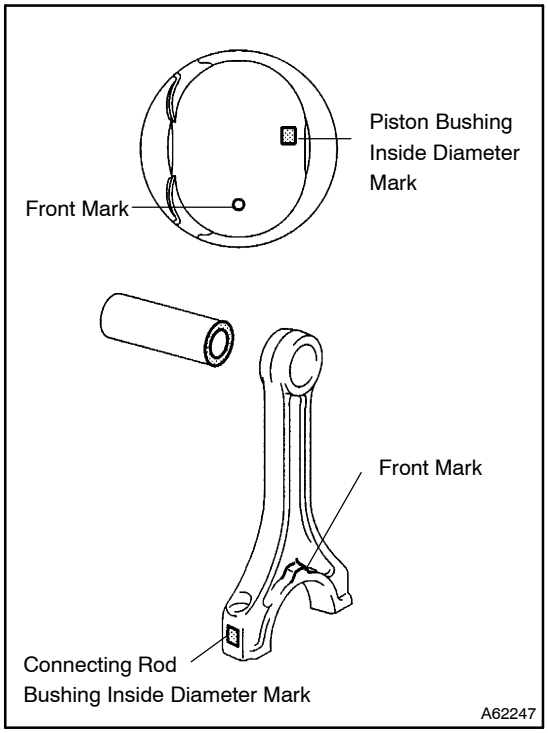

If the oil clearance is greater than the maximum, replace the connecting rod. If necessary, replace the piston and piston pin as a set.

(e) Subtract the piston pin diameter measurement from the bushing inside diameter measurement.

Specified oil clearance:

0.005 to 0.100 mm (0.0002 to 0.0020 in.)

If the oil clearance is greater than the maximum, replace the connecting rod. If necessary, replace the connecting rod and piston pin as a set.

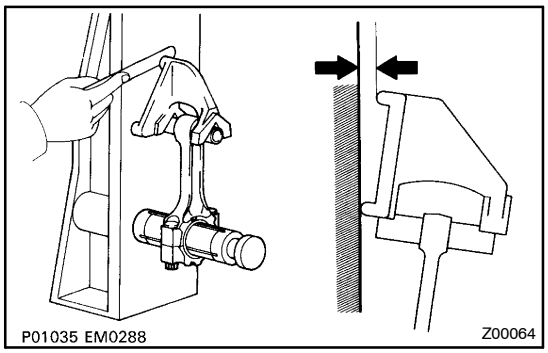

23. INSPECT CONNECTING ROD SUB–ASSY

(a) Using a rod aligner and feeler gauge, check the connecting rod alignment.

(1) Check for out–of–alignment.

Maximum out–of–alignment:

0.05 mm (0.0020 in.) per 100 mm (3.94 in.)

If the out–of–alignment is greater than the maximum, replace the connecting rod assembly.

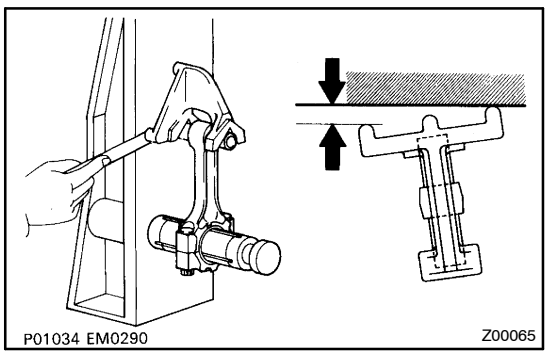

(2) Check for twist.

Maximum twist:

0.15 mm (0.0059 in.) per 100 mm (3.94 in.)

If the twist is greater than the maximum, replace the connecting rod assembly.

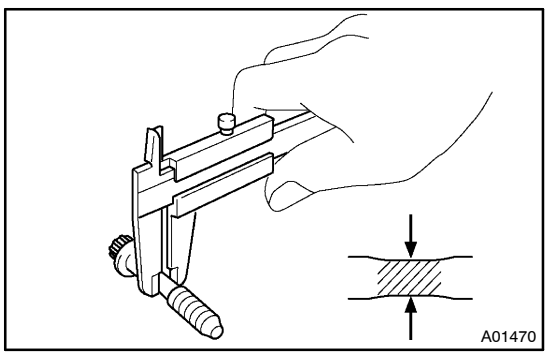

24. INSPECT CONNECTING ROD BOLT

(a) Using a vernier caliper, measure the tension portion diameter of the bolt.

Standard diameter: 7.2 to 7.3 mm (0.283 to 0.287 in.)

Minimum diameter: 7.0 mm (0.276 in.)

If the diameter is less than the minimum, replace the bolt.

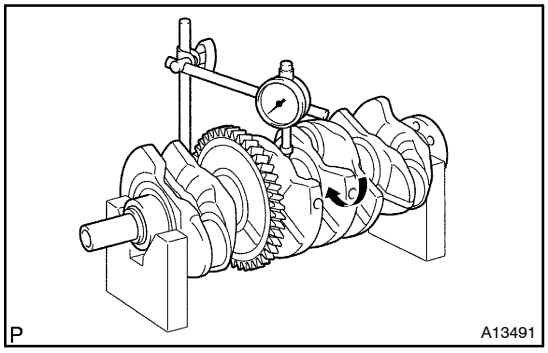

25. INSPECT CRANKSHAFT

(a) Using a dial indicator and V–blocks, measure the circle runout, as shown in the illustration.

Maximum circle runout: 0.03 mm (0.0012 in.)

If the circle runout is greater than the maximum, replace the crankshaft.

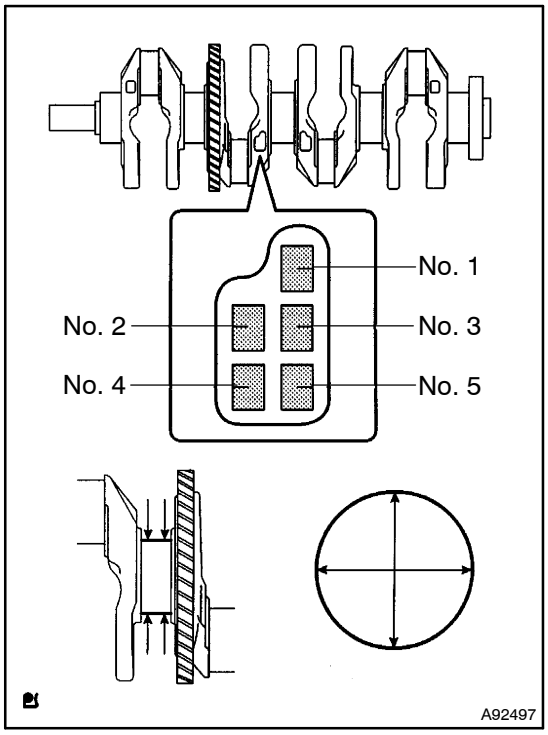

(b) Using a micrometer, measure the diameter of each main journal.

Diameter: 54.988 to 55.000 (2.1648 to 2.06535 in.)

If the diameter is not as specified, check the oil clearance (see step 9). If necessary, replace the crankshaft.

(c) Check each main journal for taper and out–of–round as shown in the illustration.

Maximum taper and out–of–round:
0.003 mm (0.0001 in.)

If the taper and out–of–round is greater than the maximum, replace the crankshaft.

Diameter (Reference):

Mark	Specified Condition
0	54.999 to 55.000 mm (2.16531 to 2.16535 in.)
1	54.997 to 54.998 mm (2.16523 to 2.16528 in.)
2	54.995 to 54.996 mm (2.16515 to 2.16520 in.)
3	54.993 to 54.994 mm (2.16507 to 2.16512 in.)
4	54.991 to 54.992 mm (2.16500 to 2.16504 in.)
5	54.988 to 54.990 mm (2.16490 to 2.16496 in.)

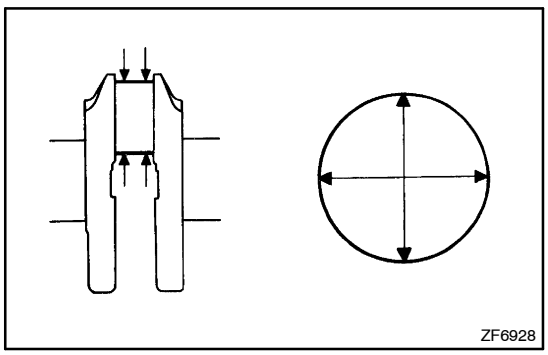

(d) Using a micrometer, measure the diameter of each crank pin.

Diameter: 47.990 to 48.000 mm (1.8894 to 1.8898 in.)

If the diameter is not as specified, check the oil clearance (see step 2). If necessary, replace the crankshaft.

(e) Check each crank pin for taper and out–of–round as shown in the illustration.

Maximum taper and out–of–round:
0.003 mm (0.0001 in.)

If the taper and out–of–round is greater than the maximum, replace the crankshaft.

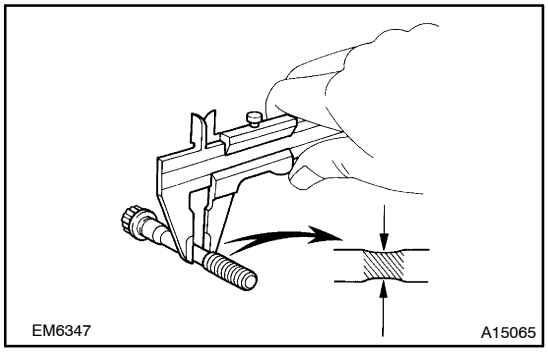

26. INSPECT CRANKSHAFT BEARING CAP SET BOLT

(a) Using a vernier caliper, measure the tension portion diameter of the bolt.

Standard diameter: 7.5 to 7.6 mm (0.295 to 0.299 in.)
Minimum diameter: 7.2 mm (0.283 in.)

If the diameter is less than the minimum, replace the bolt.

27. INSTALL RING PIN

(a) Using a plastic–faced hammer, tap into the ring pin.

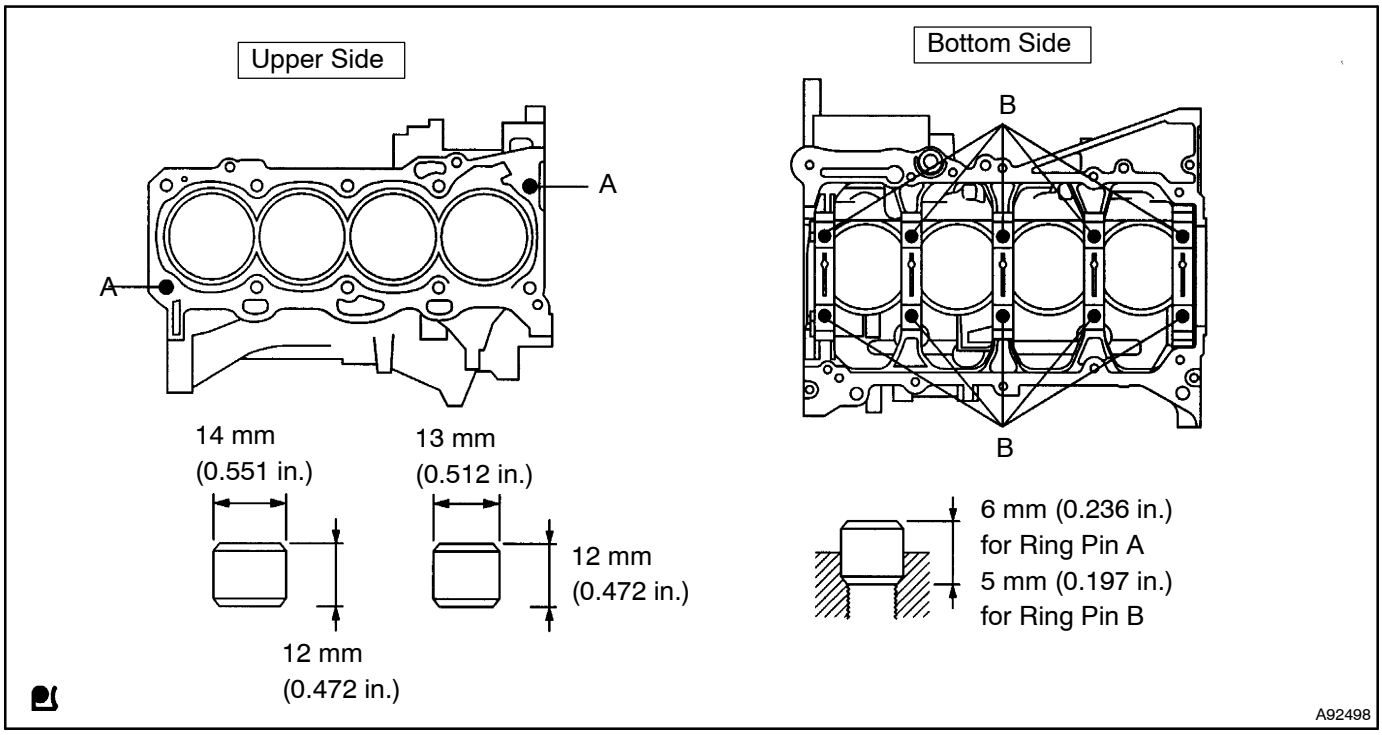

28. INSTALL TIGHT PLUG

(a) Apply adhesive around the tight plugs.
Adhesive: Part No. 08833–00070, THREE BOND 1324 or equivalent

(b) Using SST, install new tight plugs as shown in the illustration.
SST 09950–60010 (09951–00200), 09950–70010 (09951–07100)

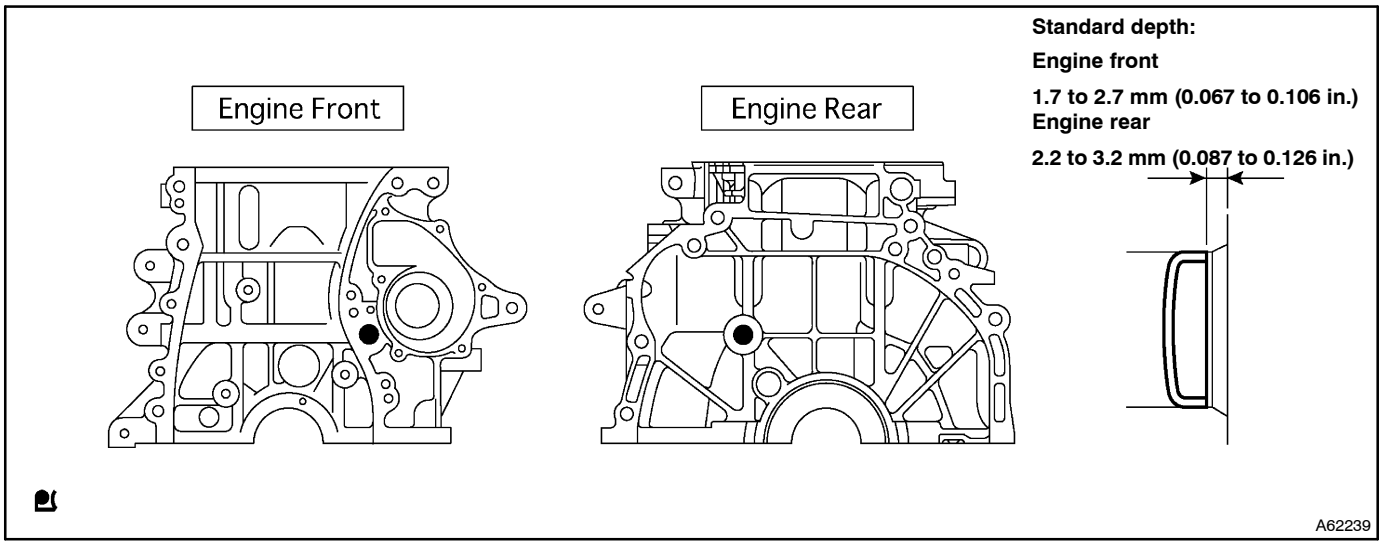

29. INSTALL STUD BOLT

(a) Install the stud bolts as shown in the illustration.
Torque:
5.0 N·m (51 kgf·cm, 44 in.·lbf) for stud bolt A
10 N·m (102 kgf·cm, 7 ft·lbf) for stud bolt B
5.0 N·m (51 kgf·cm, 44 in.·lbf) for stud bolt C

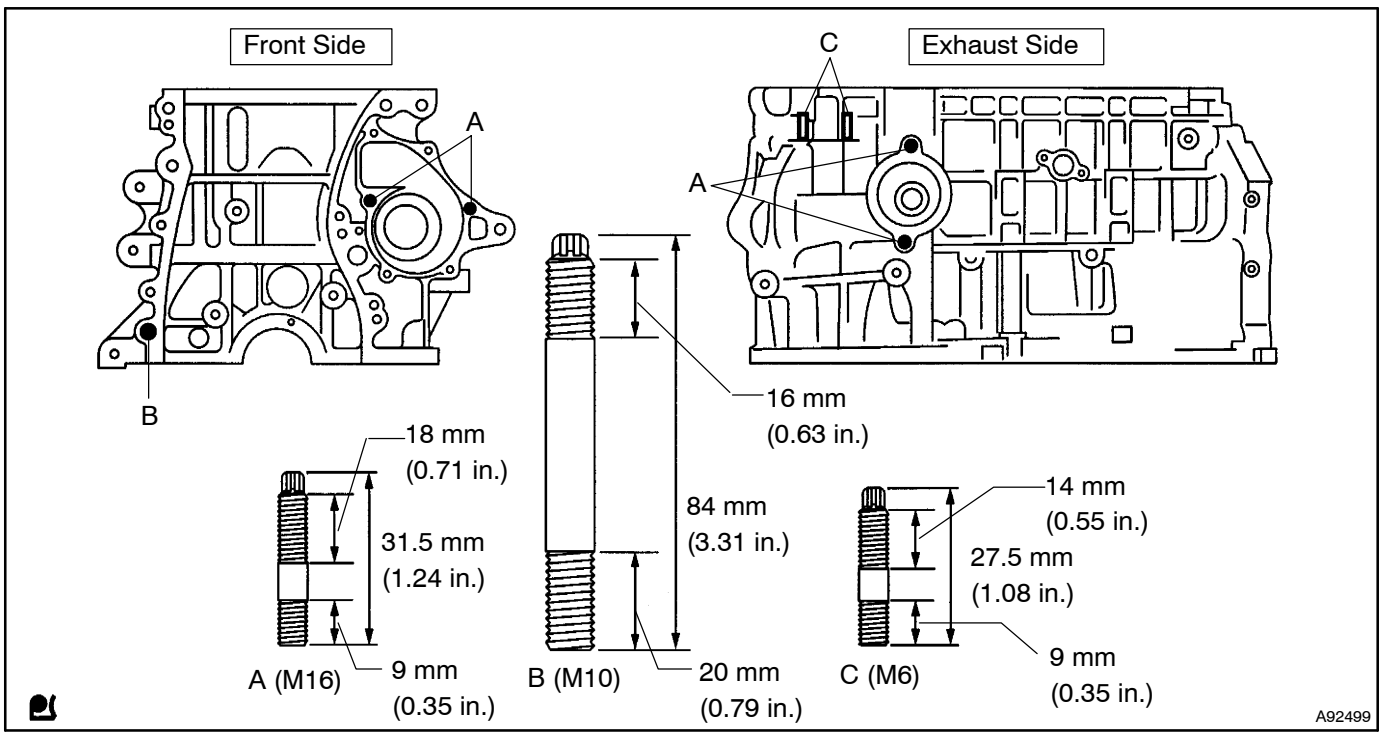

30. INSTALL STRAIGHT PIN

(a) Using a plastic–faced hammer, tap into the straight pin.

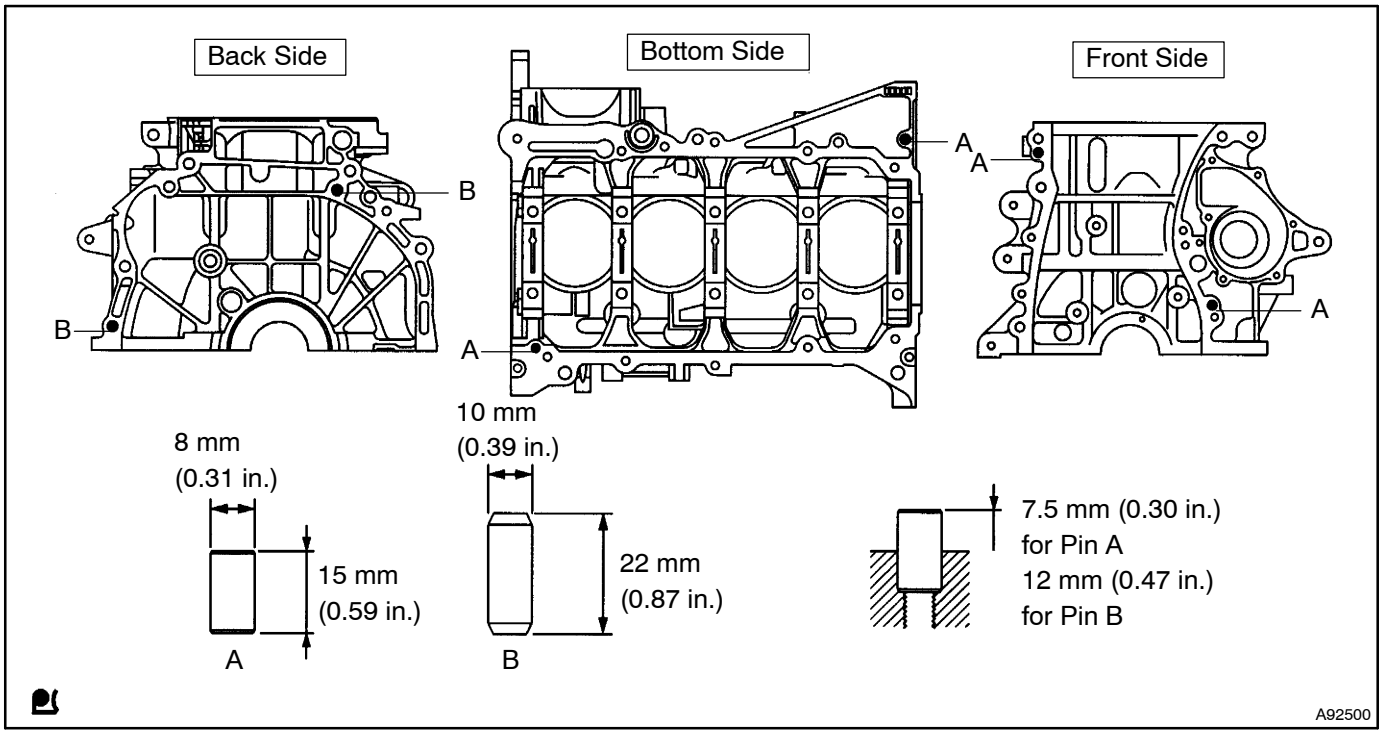

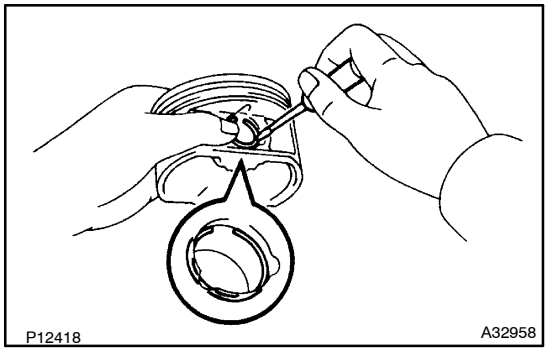

31. INSTALL PISTON

(a) Using a small screwdriver, install a new snap ring at one end of the piston pin hole.

(b) Gradually heat the piston to approximately 80 to 90°C (176 to 194°F).

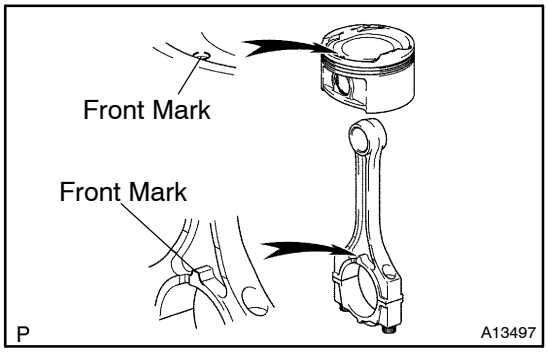

(c) Align the front marks of the piston and connecting rod, and push in the piston with your thumb.

(d) Using a small screwdriver, install a new snap ring on the other end of the piston pin hole.

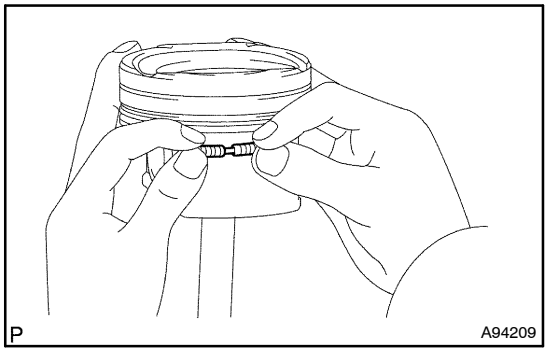

32. INSTALL PISTON RING SET

(a) Install the coil by hand.

(b) Using a piston ring expander, install the oil ring.

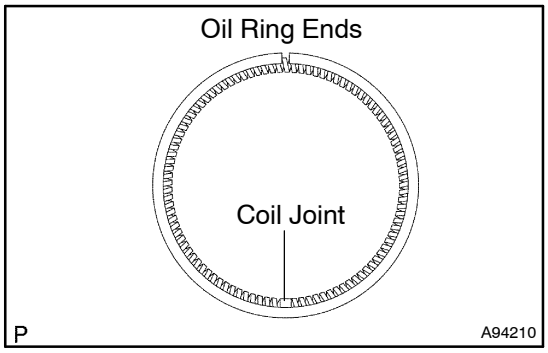

HINT:

Face the end gap of the oil ring in the opposite direction of coil joint.

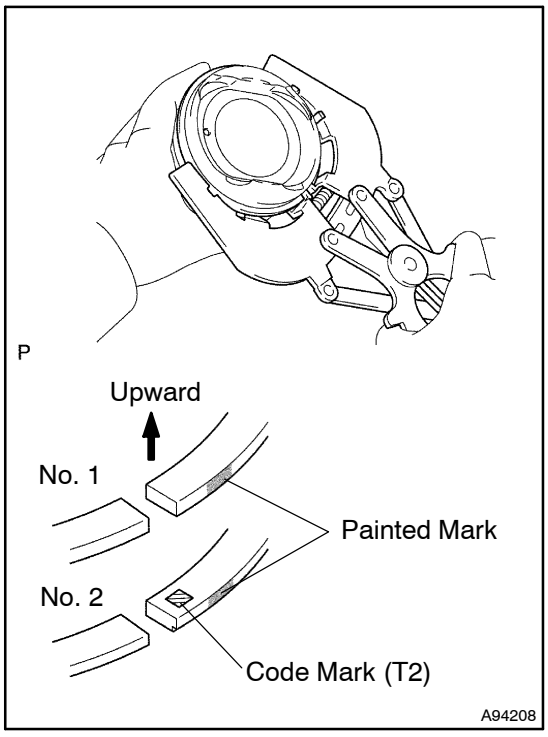

(c) Using a piston ring expander, install the 2 compression rings with the painted mark as shown in the illustration.

NOTICE:

Install the compression ring No. 2 with the code mark (T2) facing upward.

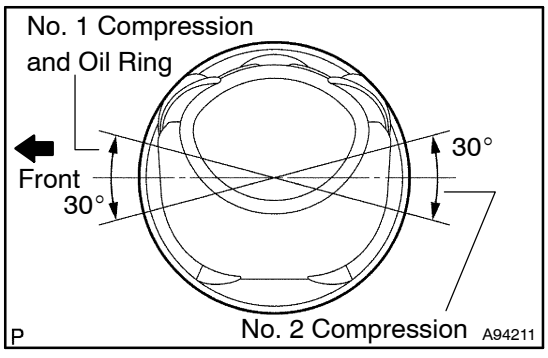

(d) Position the piston rings so that the ring ends are as shown in the illustration.

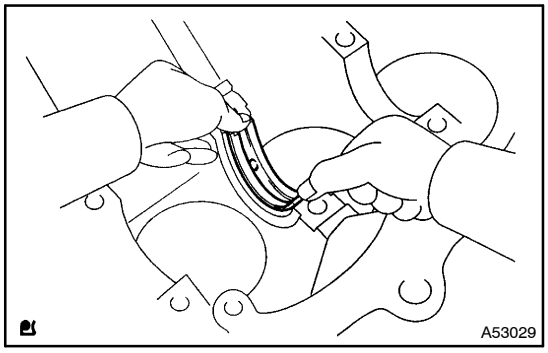

33. INSTALL CRANKSHAFT BEARING

(a) Install the upper bearing with an oil groove on the cylinder block.

NOTICE:

Clean the backside of the bearing and the bearing surface of the connecting rod. The surface should be free of dust and oil.

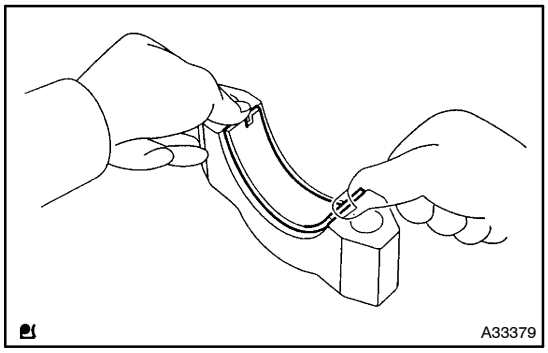

34. INSTALL CRANKSHAFT BEARING NO.2

(a) Install the lower bearing on bearing cap.

NOTICE:

Clean the backside of the bearing and the bearing surface of the connecting rod. The surface should be free of dust and oil.

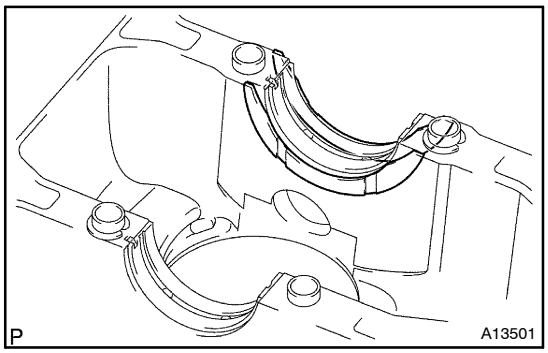

35. INSTALL CRANKSHAFT THRUST WASHER UPPER

(a) Install the 2 thrust washers under the No. 3 journal position of the cylinder block with the oil grooves facing outward.

36. INSTALL CRANKSHAFT

(a) Apply engine oil to the upper bearing and install the crankshaft on the cylinder block.

(b) Apply engine oil to the lower bearing.

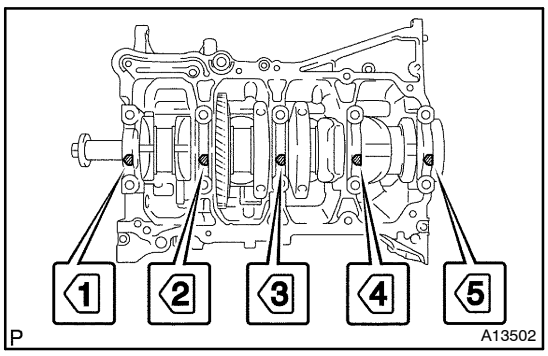

(c) Examine the front marks and install the bearing caps on the cylinder block.

(d) Apply a light coat of engine oil on the threads and under the bearing cap bolts.

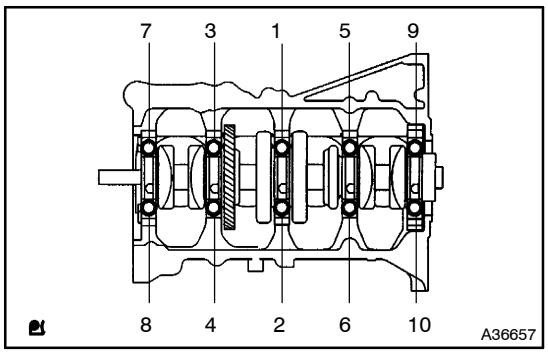

(e) Uniformly install and tighten the 16 main bearing cap bolts in the sequence shown in the illustration.

Torque:

20 N·m (204 kgf·cm, 15 ft·lbf) for 1st

40 N·m (408 kgf·cm, 30 ft·lbf) for 2nd

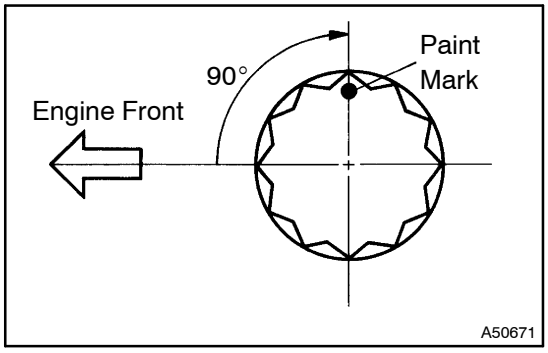

(f) Mark the front of the bearing cap bolts with paint.
(g) Retighten the bearing cap bolts by 90° same sequence as step (e).
(h) Check that the painted mark is now at a 90° angle to the front.
(i) Check that the crankshaft turns smoothly.

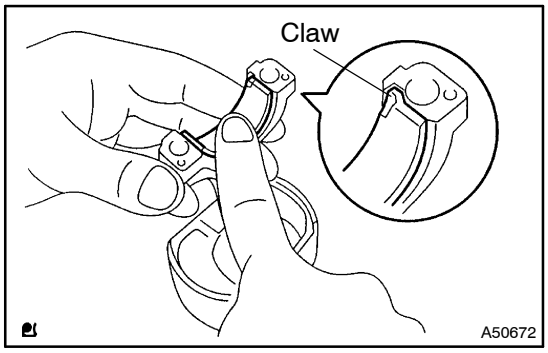

37. INSTALL CONNECTING ROD BEARING

(a) Align the bearing claw with the groove of the connecting rod or connecting cap.

NOTICE:

Clean the backside of the bearing and the bearing surface of the connecting rod. The surface should be free of dust and oil.

38. INSTALL PISTON

NOTICE:

The connecting rod cap bolts are tightened in 2 progressive steps.

(a) Apply engine oil to the cylinder walls, the pistons, and the surfaces of connecting rod bearings.
(b) Check the position of the piston ring ends.

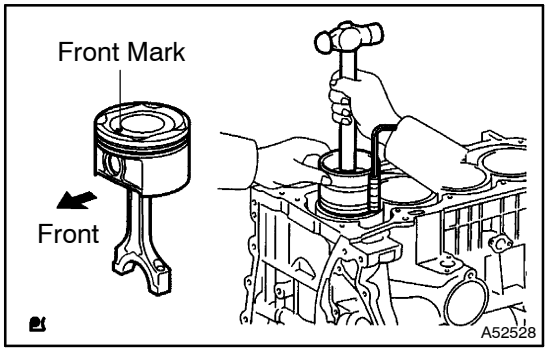

(c) Using a piston ring compressor, push the correctly numbered piston and connecting rod assemblies into each cylinder with the front mark of the piston facing forward.

NOTICE:

Match the numbered connecting rod cap with the connecting rod.

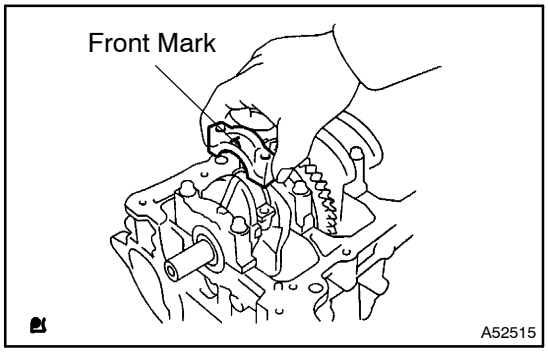

(d) Check that the protrusion of the connecting rod cap is facing in the correct direction.
(e) Apply a light coat of engine oil on the threads and under the heads of the connecting rod cap bolts.
(f) Using a 12 mm socket wrench, uniformly tighten the 2 bolts.

Torque: 25 N·m (255 kgf·cm, 18 ft·lbf)

(g) Mark the front of the connecting cap bolts with paint.

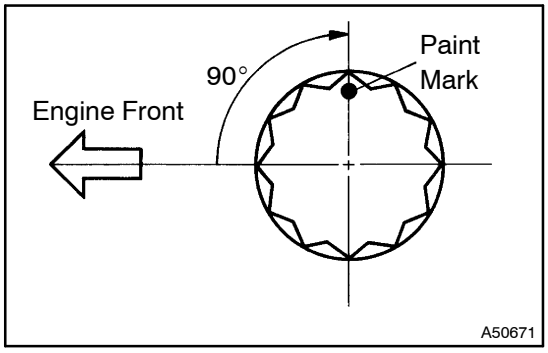

(h) Retighten the cap bolts by 90° as shown in the illustration.
(i) Check that the crankshaft turns smoothly.

WATER PUMP ASSY (2AZ–FSE)

160UF–01

INSPECTION

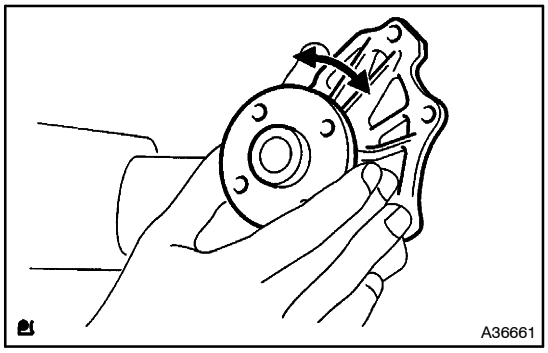

1. INSPECT WATER PUMP ASSY

(a) Visually check the drain hole coolant leakage.

(b) Turn the pulley, and check that the water pump bearing moves smoothly and quietly.

If moves roughly or noisily, replace the water pump.

OIL PUMP ASSY (2AZ–FSE)

COMPONENTS

170JO–01

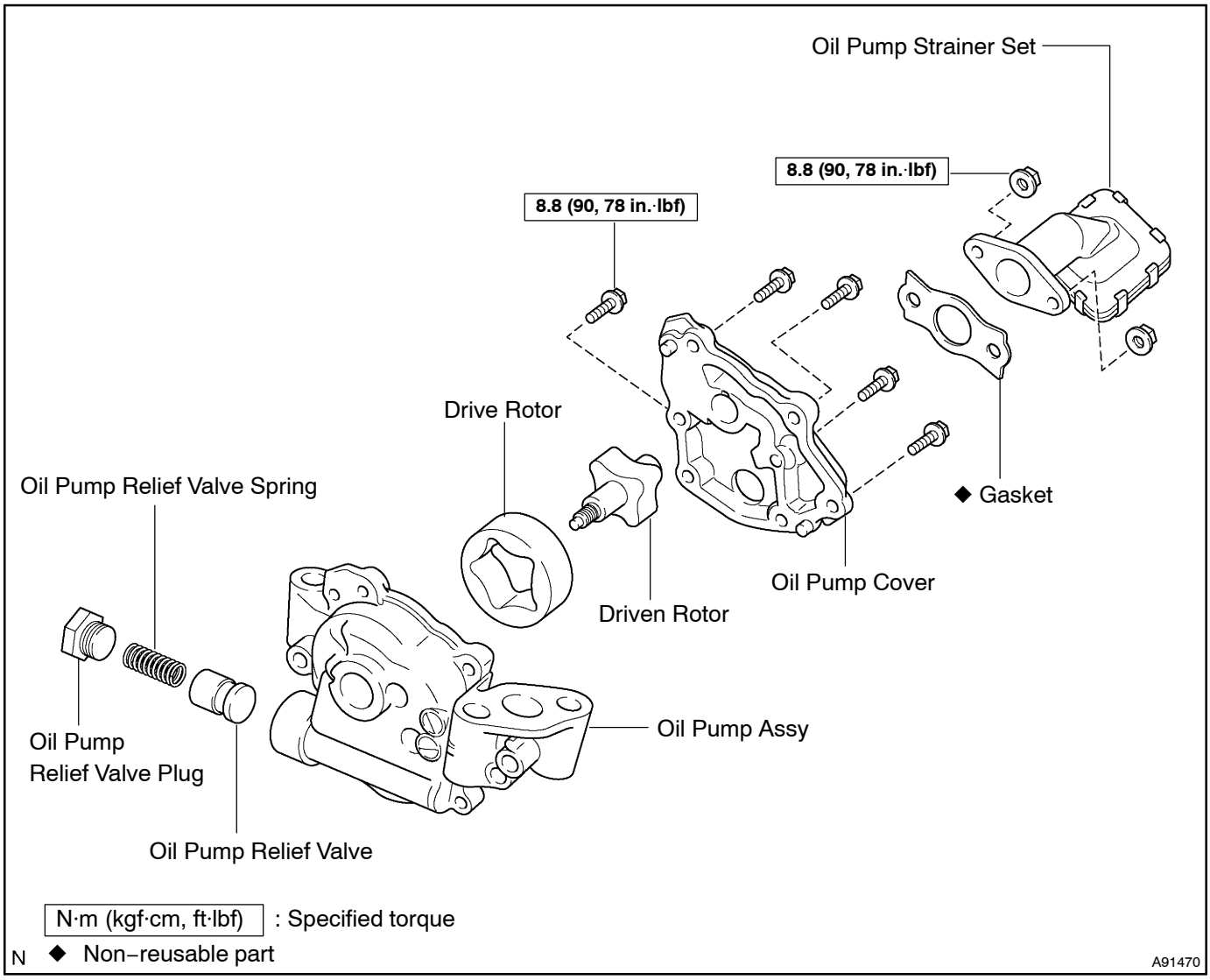

170JP–01

OVERHAUL

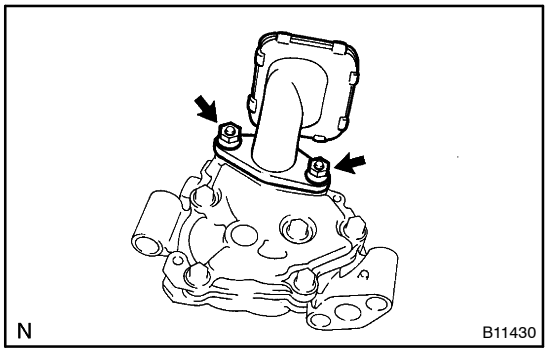

1. REMOVE OIL PUMP STRAINER SET

(a) Remove 2 nuts and oil pump strainer.

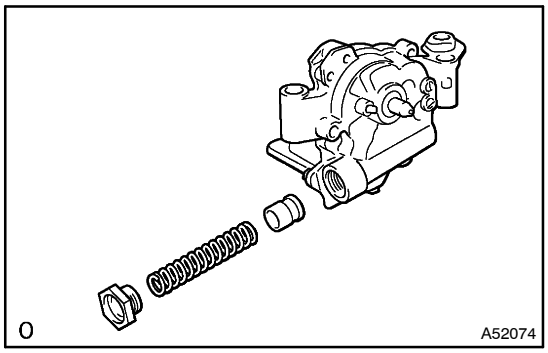

2. REMOVE OIL PUMP RELIEF VALVE

(a) Using a socket wrench (27mm), remove the plug.

(b) Remove the valve spring and relief valve.

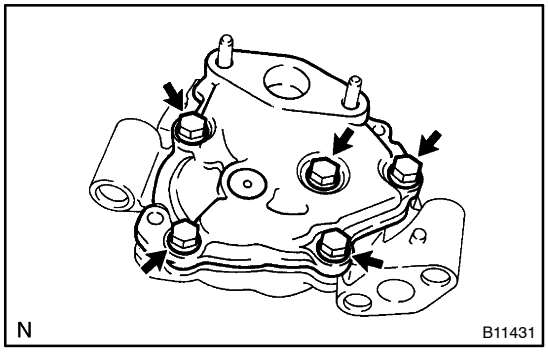

3. REMOVE OIL PUMP COVER

(a) Remove 5 bolts and oil pump cover.

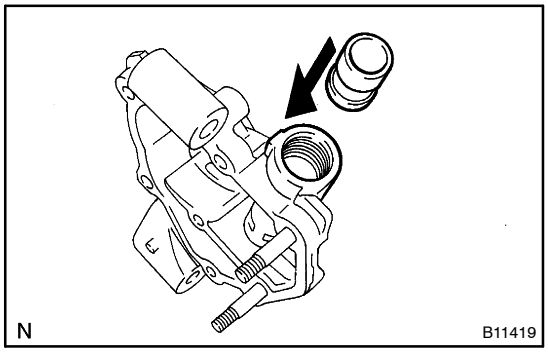

4. INSPECT OIL PUMP RELIEF VALVE

(a) Check the relief valve.

(1) Coat the valve with engine oil and check that it falls smoothly into the valve hole by its own weight.

If it does not, replace the relief valve. If necessary, replace the oil pump assy.

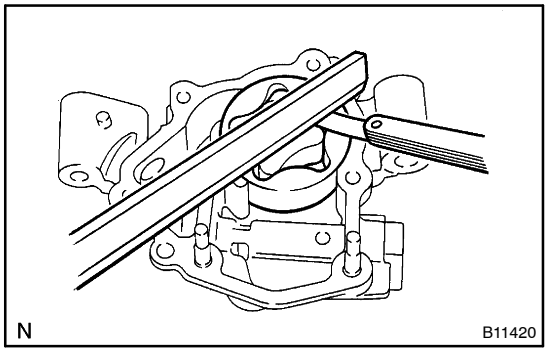

5. INSPECT OIL PUMP ROTOR

(a) Check the rotor side clearance.

(1) Using a feeler gauge and precision straight edge, measure the clearance between the rotors and precision straight edge.

Standard side clearance:
0.030 to 0.085 mm (0.0012 to 0.0033 in.)
Maximum side clearance: 0.16 mm (0.0063 in.)

If the side clearance is greater than the maximum, replace the oil pump assy.

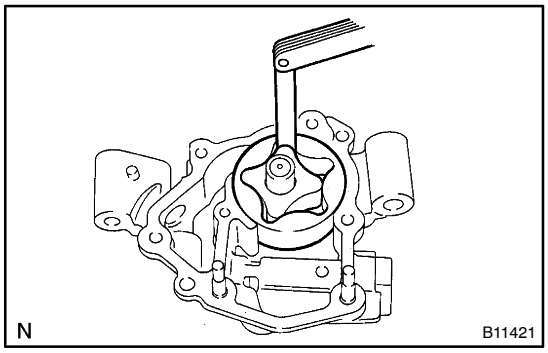

(b) Check the rotor tip clearance.

(1) Using a feeler gauge, measure the clearance between the drive and driven rotor tips.

Standard tip clearance:
0.080 to 0.160 mm (0.0031 to 0.0063 in.)
Maximum tip clearance: 0.35 mm (0.0138 in.)

If the tip clearance is greater than the maximum, replace the oil pump assy.

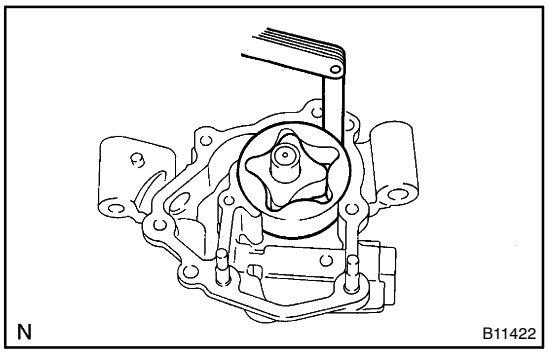

(c) Check the rotor body clearance.

(1) Using a feeler gauge, measure the clearance between the driven rotor and body.

Standard body clearance:
0.100 to 0.170 mm (0.00394 to 0.00669 in.)
Maximum body clearance: 0.325 mm (0.01280 in.)

(d) Remove the oil pump rotors.

If the body clearance is greater than the maximum, replace the oil pump assy.

6. REMOVE OIL PUMP ROTOR

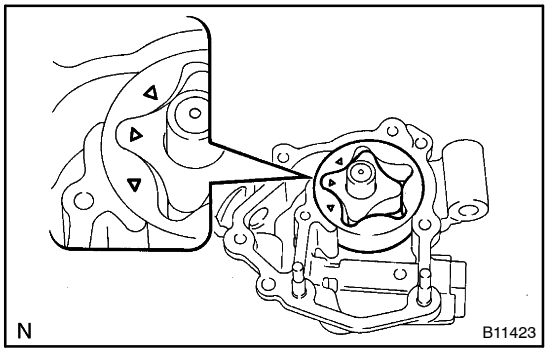

7. INSTALL OIL PUMP ROTOR

(a) Coat the drive rotor and driven rotors with engine oil.

(b) Place the drive and driven rotors into pump body with the marks facing the pump cover side.

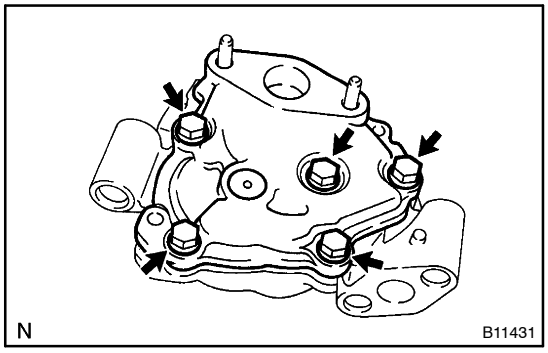

8. INSTALL OIL PUMP COVER

(a) Install the pump body cover with the 5 bolts.
Torque: 8.8 N·m (90 kgf·cm, 78 in.·lbf)

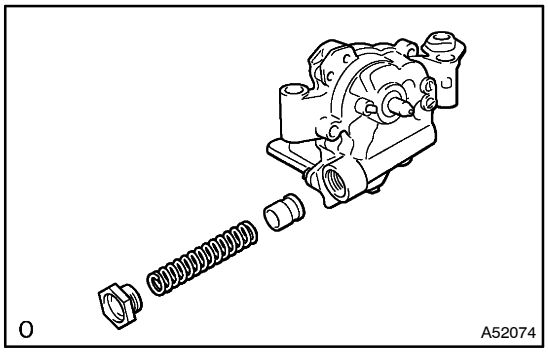

9. INSTALL OIL PUMP RELIEF VALVE

(a) Coat the relief valve with engine oil.
(b) Insert the relief valve and spring into the pump body hole.
(c) Using a socket wrench (27 mm), install the plug.

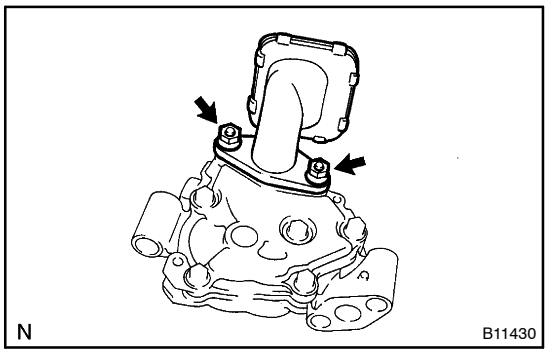

10. INSTALL OIL PUMP STRAINER SET

(a) Place a new gasket on the oil pump.
(b) Install the oil strainer with the 2 nuts.
Torque: 8.8 N·m (90 kgf·cm, 78 in.·lbf)

STARTER ASSY (2AZ–FSE)

COMPONENTS

190VX–01

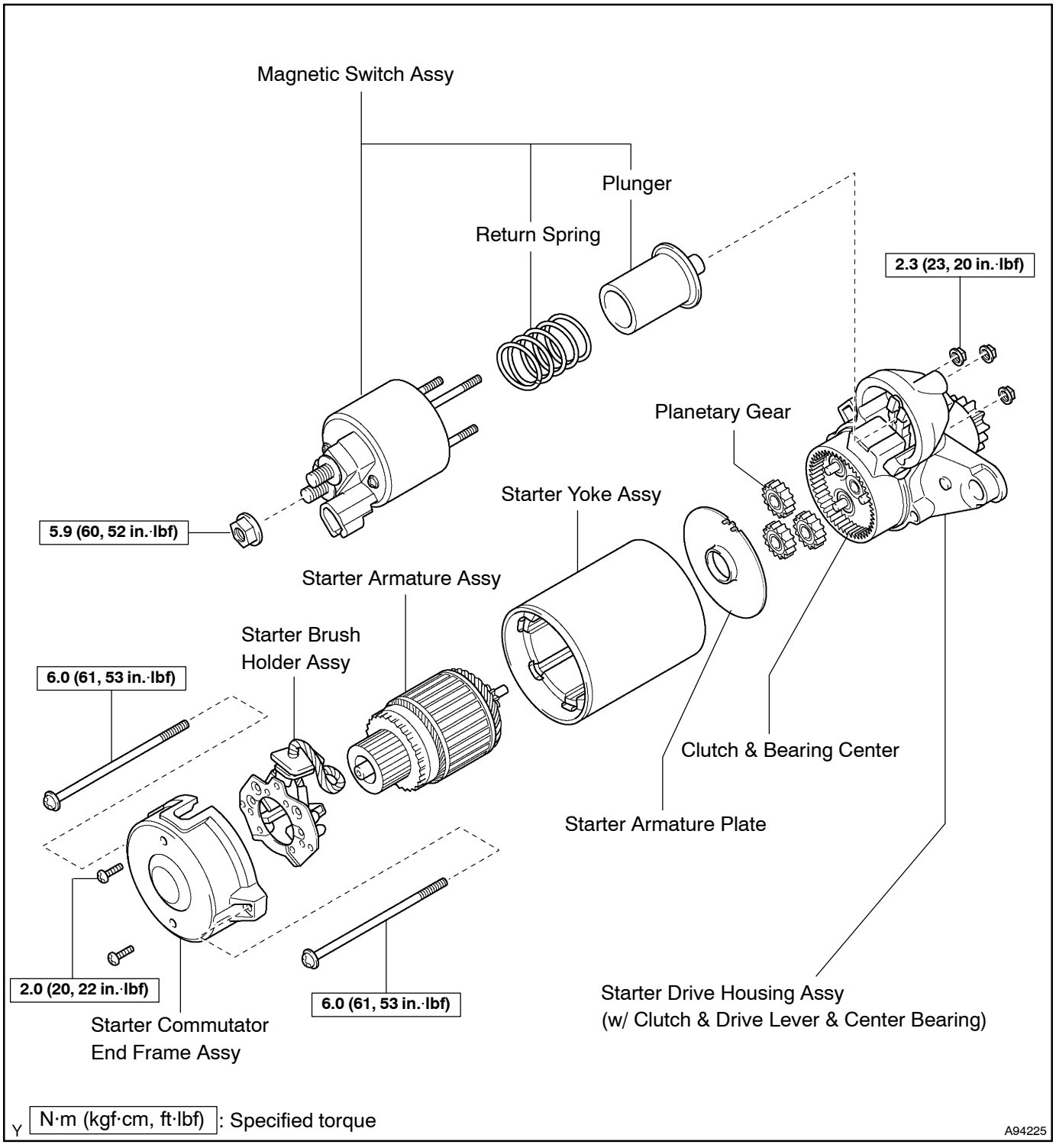

190VY–01

OVERHAUL

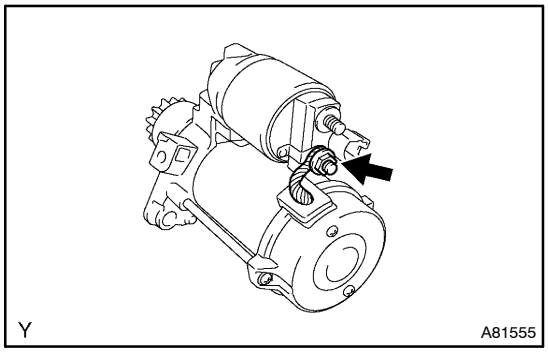

1. REMOVE MAGNETIC SWITCH ASSY

(a) Remove the nut and disconnect the lead wire from the magnetic switch.

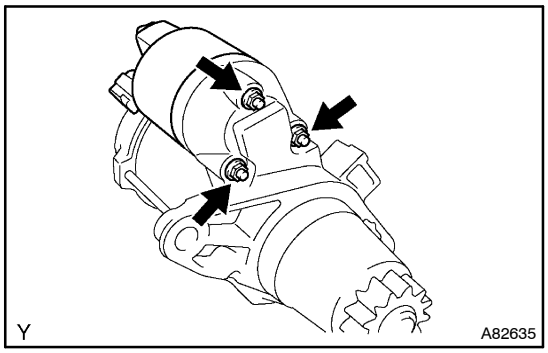

(b) Remove the 3 nuts holding the magnetic switch to the starter drive housing.

(c) Remove the magnetic switch.

(d) Remove the return spring and plunger form the starter drive housing.

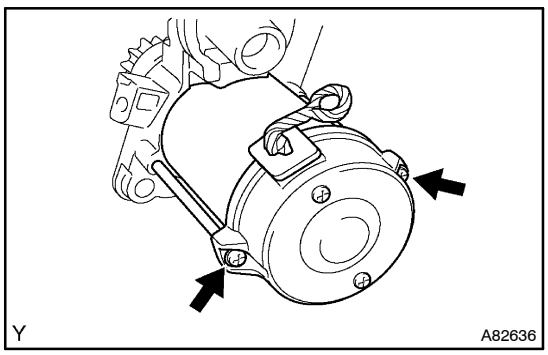

2. REMOVE STARTER YOKE ASSY

(a) Using a torx driver T25, remove the 2 through bolts, and pull out the yoke together with the starter commutator end frame.

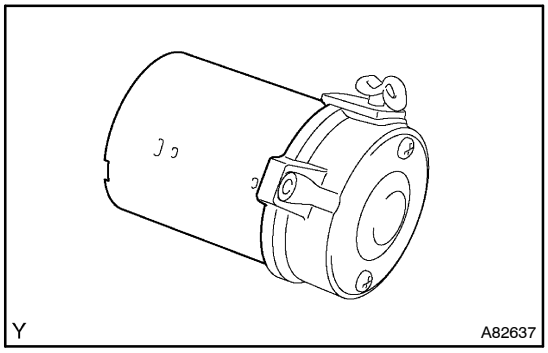

(b) Remove the yoke from the starter commutator end frame.

3. REMOVE STARTER ARMATURE ASSY

(a) Remove the starter armature from the yoke.

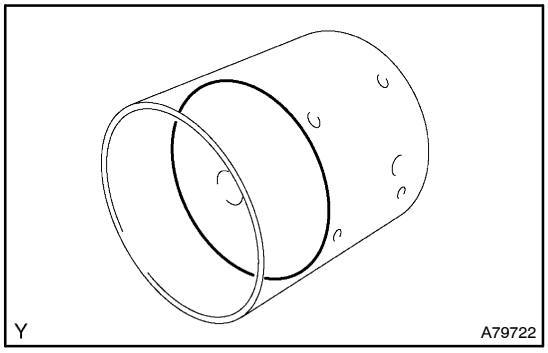

4. REMOVE STARTER ARMATURE PLATE

(a) Remove the armature plate from the yoke.

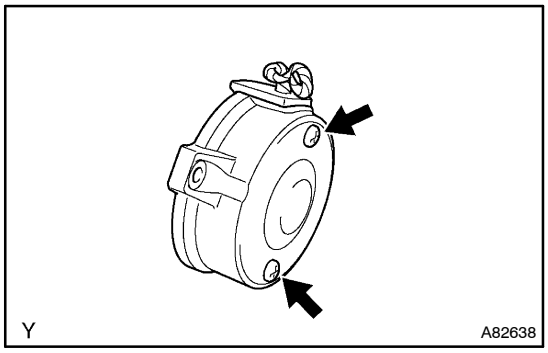

5. REMOVE STARTER BRUSH HOLDER ASSY

(a) Remove the 2 screws and brush holder from the commutator end frame.

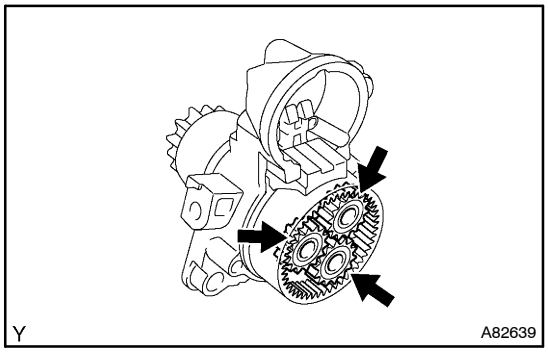

6. REMOVE PLANETARY GEAR

(a) Remove the 3 planetary gears from the starter housing.

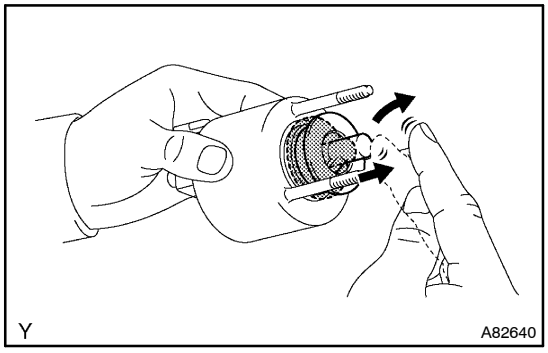

7. INSPECT MAGNETIC SWITCH ASSY

(a) Check the plunger.

(1) Push in the plunger and check that it returns quickly to its original position.

If necessary, replace the magnetic switch assy.

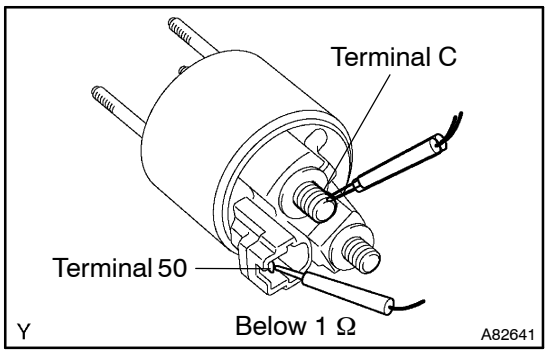

(b) Check if the pull–in coil has an open circuit.

(1) Measure the resistance between terminals 50 and C.

Standard: Below 1 Ω

If the result is not as specified, replace the magnetic switch assy.

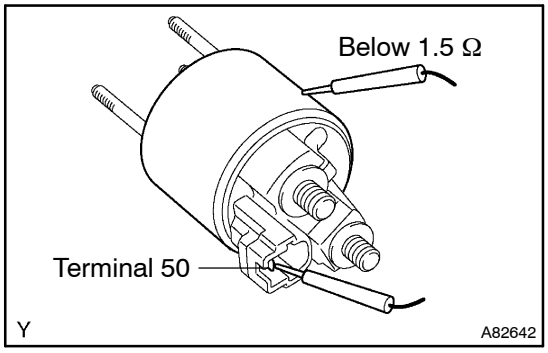

(c) Check if the hold–in coil has an open circuit.
(1) Measure the resistance between terminal 50 and the switch body.
Standard: Below 1.5 Ω

If the result is not as specified, replace the magnetic switch assy.

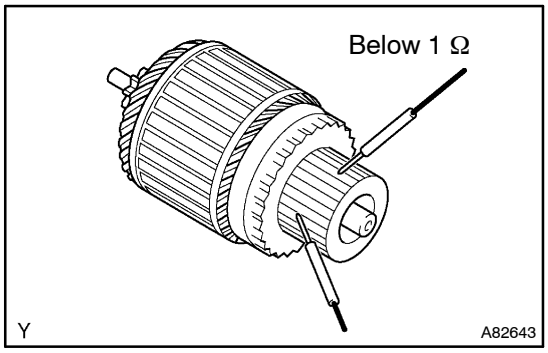

8. INSPECT STARTER ARMATURE ASSY

(a) Check if the commutator has an open circuit.
(1) Measure the resistance between the segments of the commutator.
Standard: Below 1 Ω

If the result is not as specified, replace the armature assy.

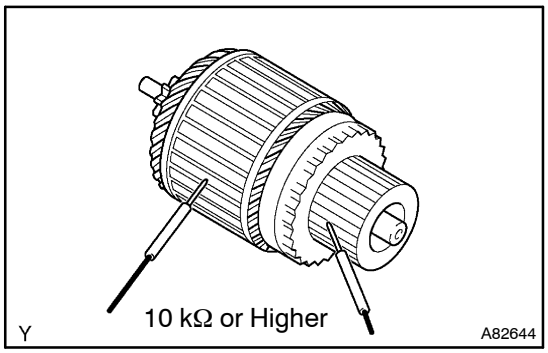

(b) Check if the commutator is grounded.
(1) Measure the resistance between the commutator and armature coil core.
Standard: 10 kΩ or higher

If the result is not as specified, replace the armature assy.

(c) Check the commutator for dirty or burned surface.

If the surface is dirty or burnt, smooth the surface with 400–grit sandpaper.

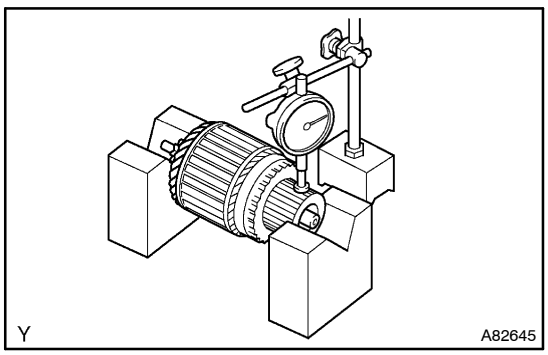

(d) Check for the commutator circle runout.
(1) Place the commutator on V–blocks.
(2) Using a dial indicator, measure the circle runout.
Standard runout: 0.02 mm (0.0008 in.)
Maximum runout: 0.05 mm (0.0020 in.)

If the runout is greater than the maximum, replace the armature assy.

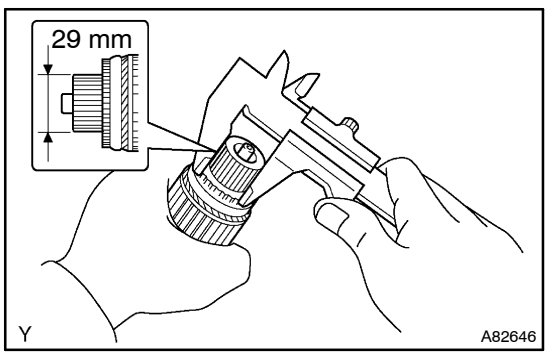

(e) Using a vernier caliper, measure the commutator diameter.
Standard length: 29 mm (1.142 in.)
Minimum length: 28 mm (1.102 in.)

If the diameter is less than the minimum, replace the armature assy.

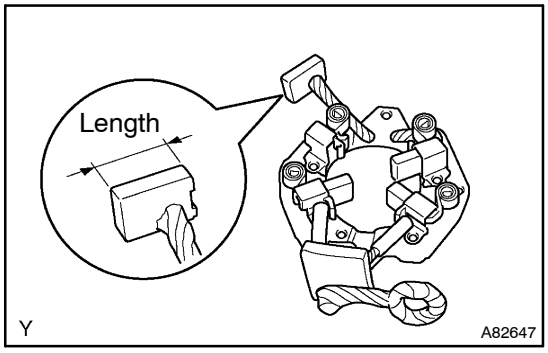

9. INSPECT STARTER BRUSH HOLDER ASSY

(a) Using a vernier caliper, measure the brush length.

Standard length: 15.5 mm (0.610 in.)

Minimum length: 9.0 mm (0.354 in.)

If the length is less than the minimum, replace the starter brush holder assy.

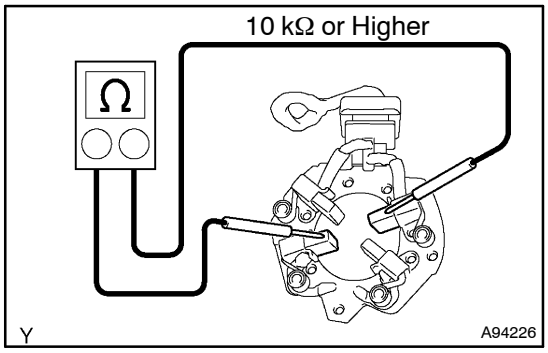

(b) Check the brush insulation.

(1) Measure the resistance between the positive (+) terminal and negative (–) terminal of the brush.

Standard: 10 kΩ or higher

If the result is not as specified, repair or replace the brush holder assy.

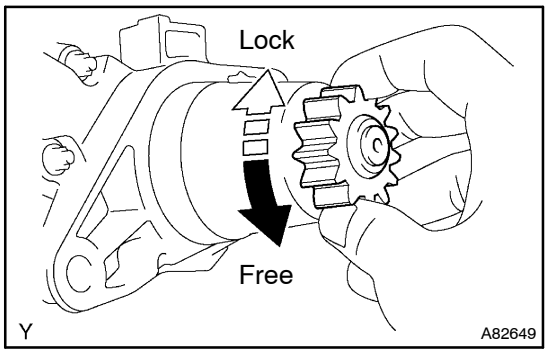

10. INSPECT CLUTCH & BEARING CENTER

(a) Check the starter clutch.

(1) Rotate the clutch pinion gear counterclockwise and check that it turns freely. Try to rotate the clutch pinion gear clockwise and check that it locks.

If necessary, replace the starter drive housing assy.

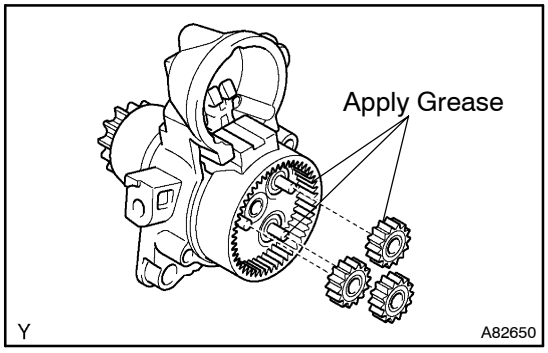

11. INSTALL PLANETARY GEAR

(a) Apply grease to the planetary gears and pin parts of the planetary shaft.

(b) Install the 3 planetary gears.

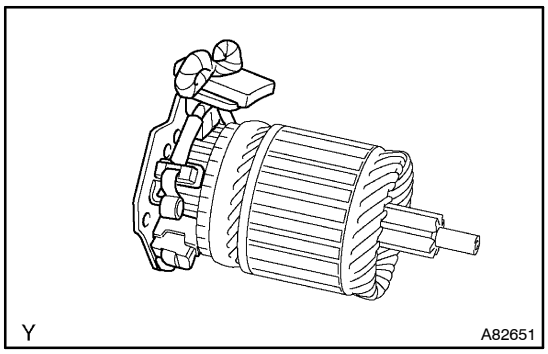

12. INSTALL STARTER BRUSH HOLDER ASSY

(a) Install the brush holder to the starter armature.

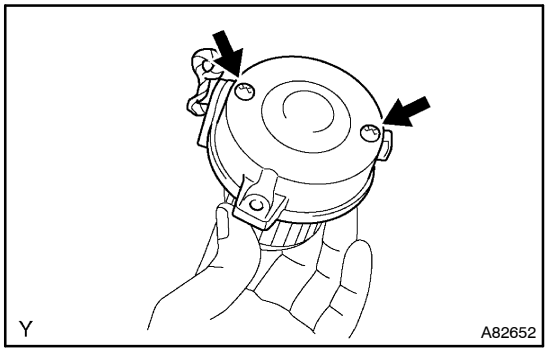

13. INSTALL STARTER COMMUTATOR END FRAME ASSY

(a) Install the commutator end frame with the 2 screws.
Torque: 2.0 N·m (20 kgf·cm, 22 in.·lbf)

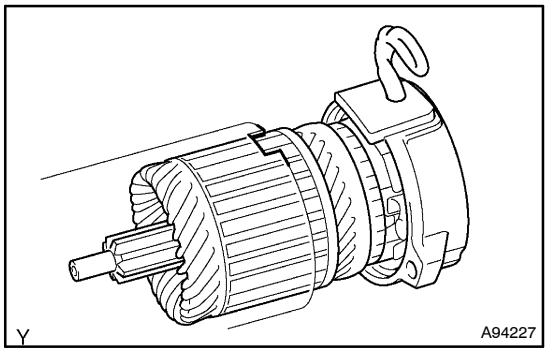

14. INSTALL STARTER ARMATURE ASSY

(a) Align the rubber with the convex cutout of the field frame.
(b) Install the starter armature with the brush holder to the field frame.

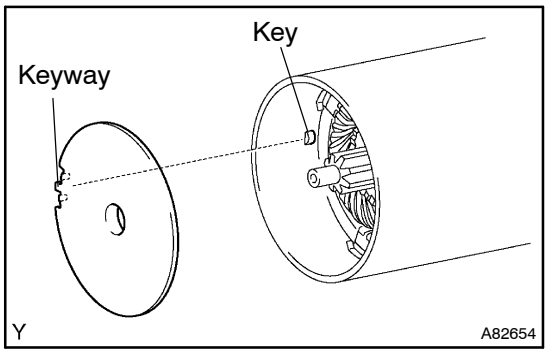

15. INSTALL STARTER ARMATURE PLATE

(a) Insert the starter armature plate to the yoke.
(b) Align the keyway of the starter plate with the key inside the yoke, and install the starter plate.

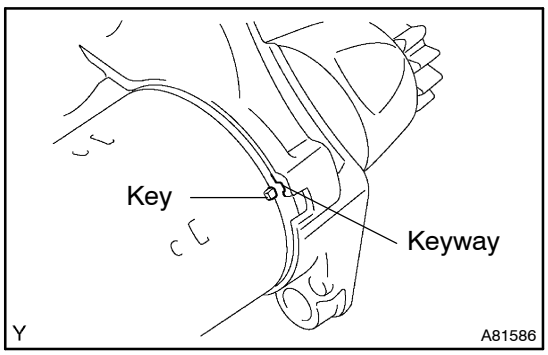

16. INSTALL STARTER YOKE ASSY

(a) Align the key of the yoke with the keyway located on the starter drive housing.

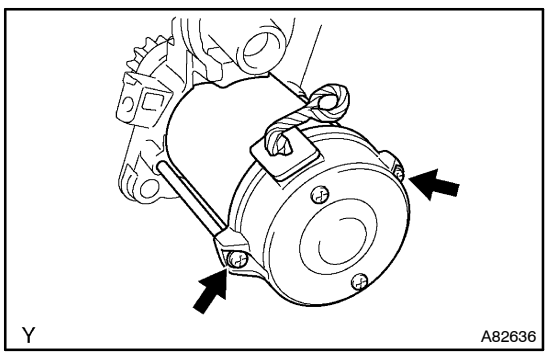

(b) Using a torx driver T25, install the field frame with the 2 through bolts.
Torque: 6.0 N·m (61 kgf·cm, 53 in.·lbf)

17. INSTALL MAGNETIC SWITCH ASSY

(a) Apply grease to the hook.
(b) Set the plunger and hook of the drive housing to the drive lever.
(c) Install the plunger and return spring.

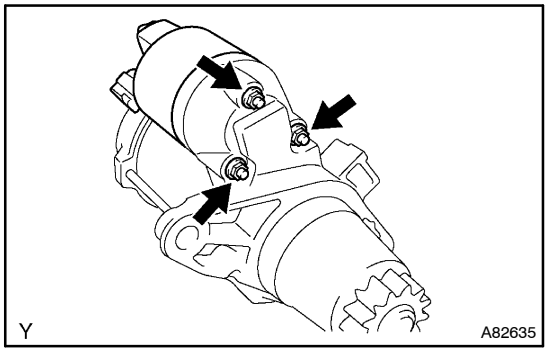

(d) Install the magnetic switch with the 3 nuts.
Torque: 2.3 N·m (23 kgf·cm, 20 in.·lbf)

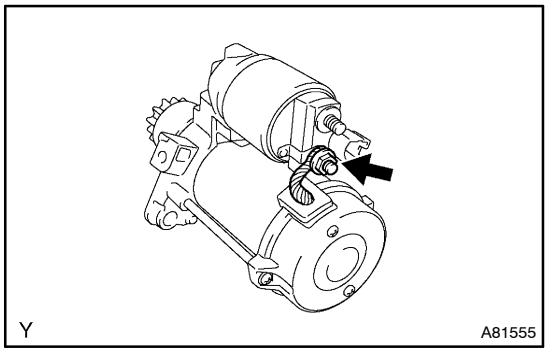

(e) Connect the lead wire to the magnetic switch. Tighten the nut.
Torque: 5.9 N·m (60 kgf·cm, 52 in.·lbf)

GENERATOR ASSY (2AZ–FSE)

COMPONENTS

190VZ–01

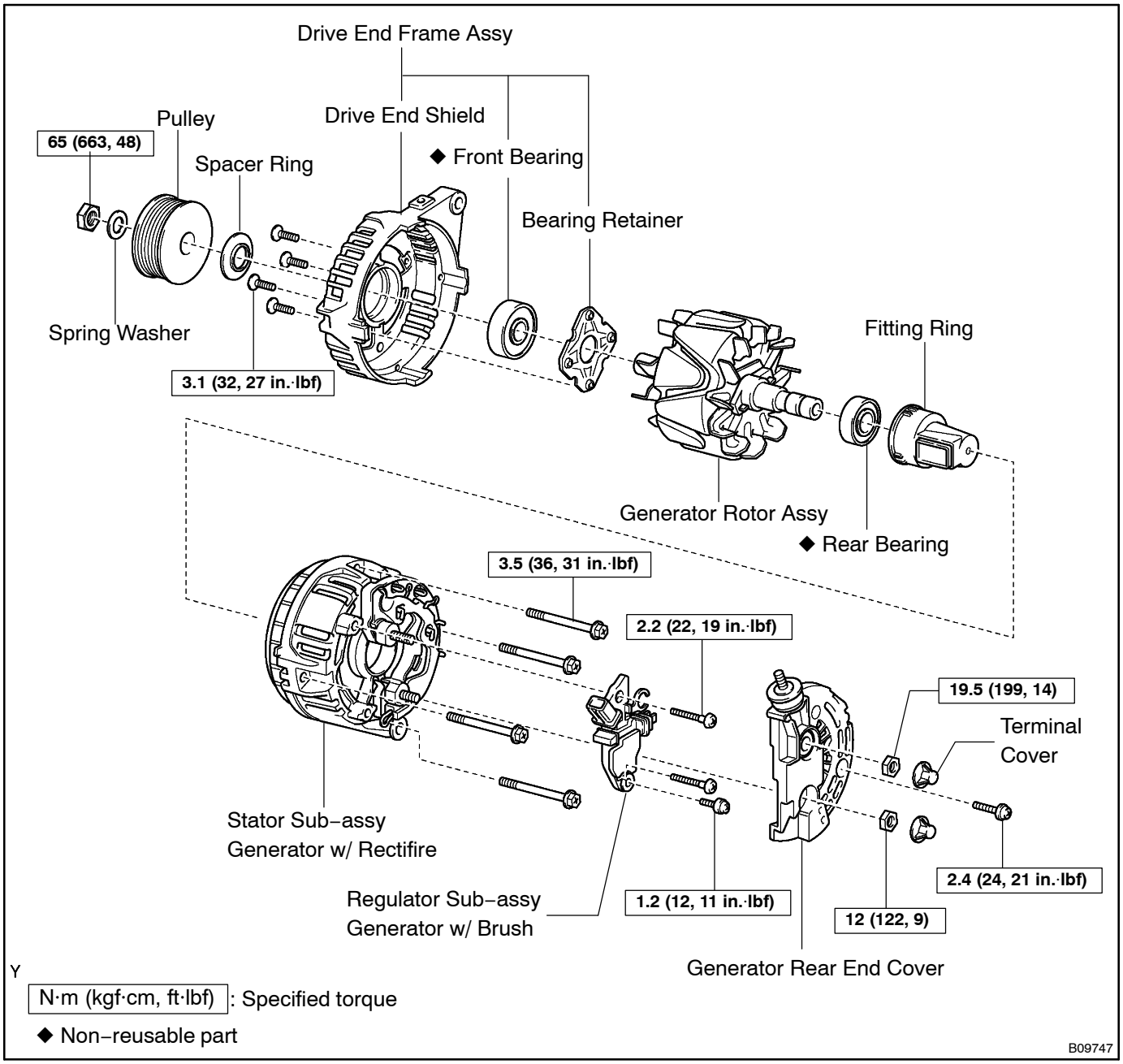

190W0–01

OVERHAUL

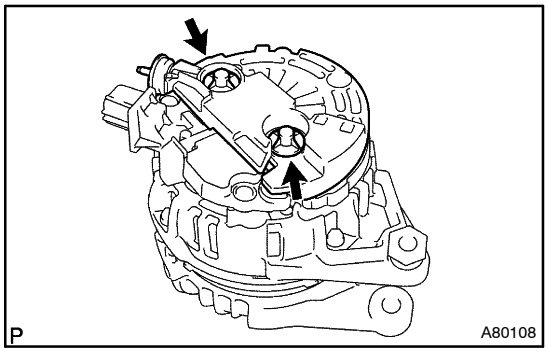

1. REMOVE GENERATOR REAR END COVER

(a) Remove the 2 terminal covers by turning them counter-clockwise.

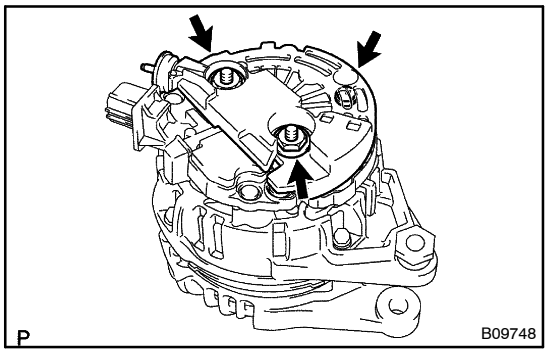

(b) Remove the screw, 2 nuts and end cover.

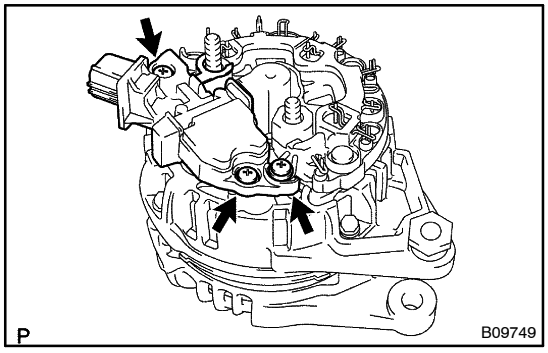

2. REMOVE REGULATOR SUB–ASSY GENERATOR W/BRUSH

(a) Remove the 3 screws and regulator.

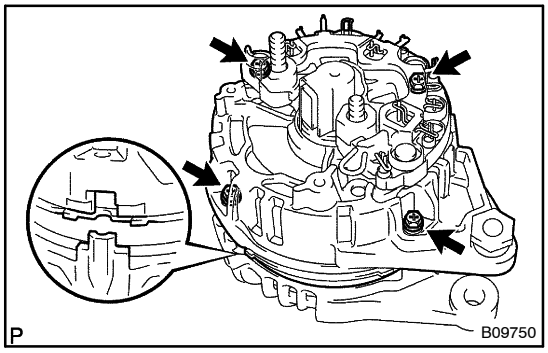

3. REMOVE STATOR SUB–ASSY GENERATOR W/RECTIFIRE

(a) Remove the 4 bolts.

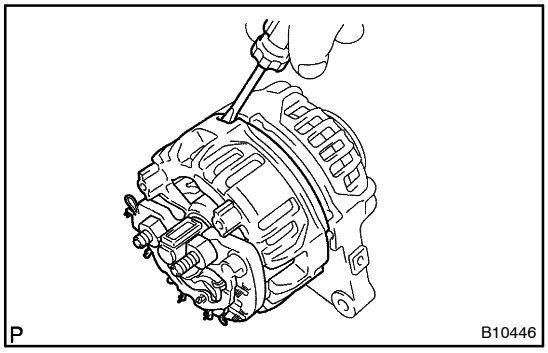

(b) Using a screwdriver, pry out the stator.

4. REMOVE BEARING SET GENERATOR

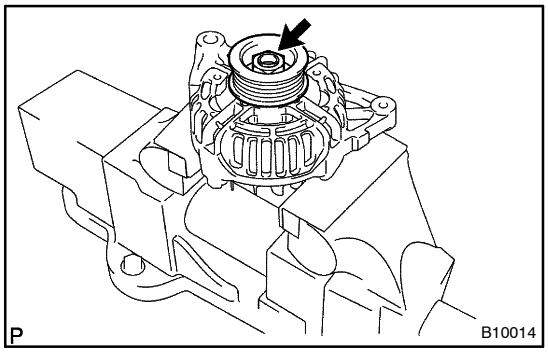

5. REMOVE PULLEY SET GENERATOR

(a) Clamp the swivel arm in a vise.

NOTICE:

Be careful not to damage the fan.

(b) Using an impact wrench, remove the nut and spring washer, then detach the pulley.

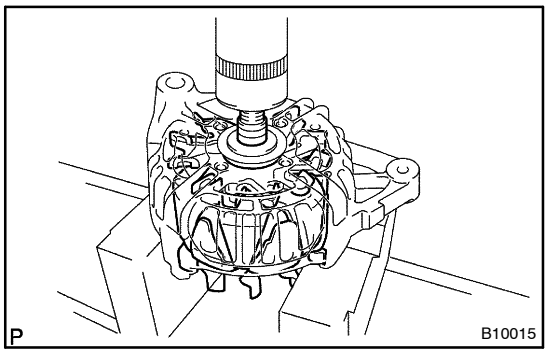

6. REMOVE GENERATOR ROTOR ASSY

(a) Using a press, press out the rotor and spacer ring.

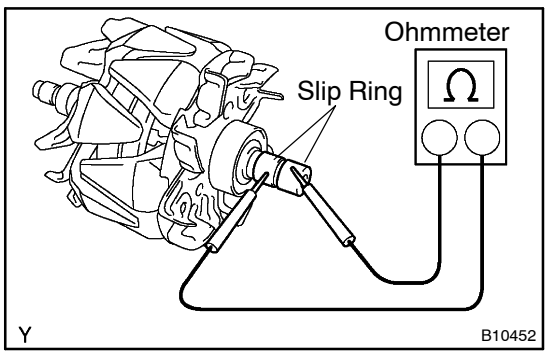

7. INSPECT GENERATOR ROTOR ASSY

(a) Check the rotor for open circuit.

(1) Using an ohmmeter, measure the resistance between the slip rings.

Standard resistance: 1.8 to 2.8 Ω at 20°C (68°F)

If the resistance is not as specified, replace the rotor assy.

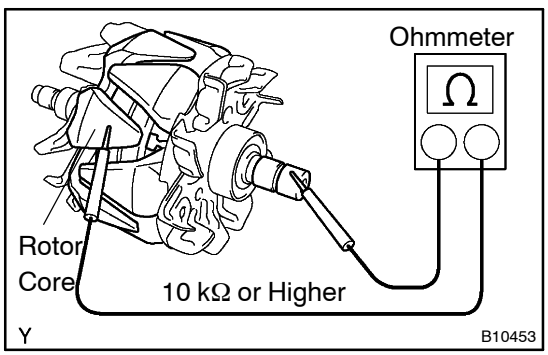

(b) Check the rotor for ground.

(1) Using an ohmmeter, measure the resistance between the slip ring and rotor core.

Standard: 10 kΩ or higher

If the resistance is not as specified, replace the rotor assy.

(c) Inspect slip rings.

(1) Check that the slip rings are not rough or scored.

If rough or scored, replace the rotor assy.

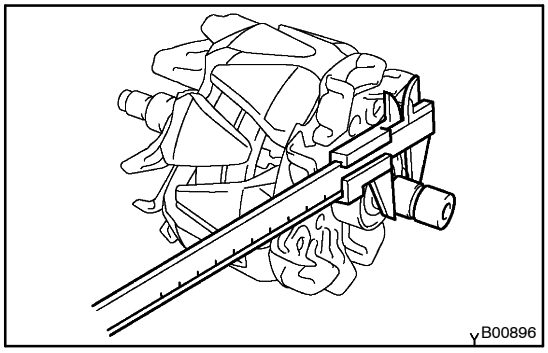

(d) Inspect the slip rings.

(1) Check that the slip rings are not rough or scored.

If rough or scored, replace the rotor assy.

(2) Using a vernier caliper, measure the slip ring diameter.

Standard diameter: 15.3 to 15.5 mm (0.602 to 0.610 in.)

Minimum diameter: 14.3 mm (0.561 in.)

If the diameter is less than the minimum, replace the rotor assy.

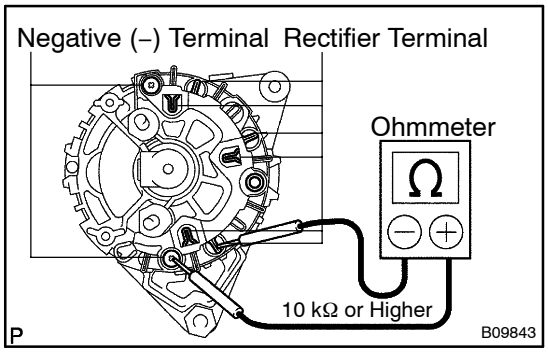

8. INSPECT STATOR SUB–ASSY GENERATOR W/RECTIFIRE

(a) Using an ohmmeter, measure the resistance between the generator's negative (–) terminal and rectifier terminal.

(1) Connect the ohmmeter's positive (+) probe to the generator's negative (–) terminals and the negative (–) probe to the rectifier terminals. Measure the resistance one by one.

Standard: 10 kΩ or higher

(2) Connect the ohmmeter's positive (+) probe to the rectifier terminals and the negative (–) probe to the generator's negative (–) terminals. Measure the resistance one by one.

Standard: Below 1 Ω

If the result is not as specified, replace the stator sub–assy generator w/ rectifier.

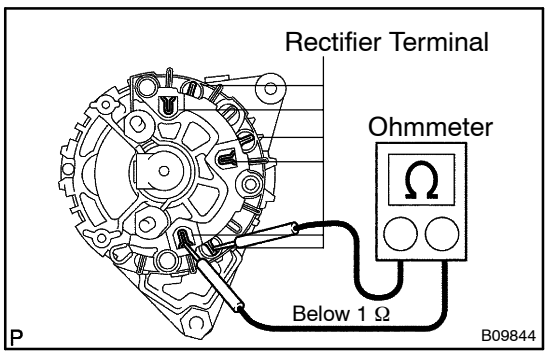

(b) Using an ohmmeter, measure the resistance between the rectifier terminals.

Standard: Below 1 Ω

If the result is not as specified, replace the stator sub–assy generator w/ rectifier.

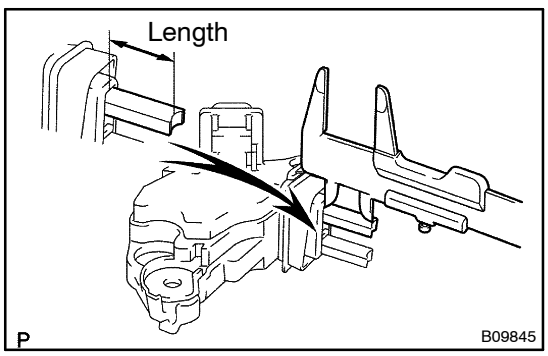

9. INSPECT BRUSH

(a) Using a vernier caliper, measure the exposed brush length.

Standard exposed length:

13.2 mm (0.520 in.) in new condition

Minimum exposed length: 6.0 mm (0.236 in.)

If the exposed length is less than the minimum, replace the regulator sub–assy generator w/ brush.

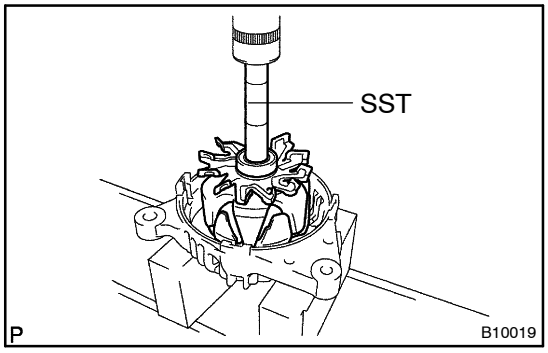

10. INSTALL GENERATOR ROTOR ASSY

(a) Using SST and a press, press in the rotor.
SST 09285–76010

NOTICE:
Avoid misalignment during pressing.

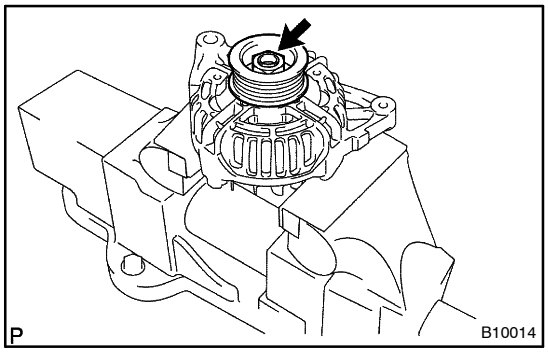

11. INSTALL PULLEY SET GENERATOR

(a) Clamp the rotor in a soft jaw vise.
(b) Install the pulley with the spring washer and nut.
Torque: 65 N·m (663 kgf·cm, 48 ft·lbf)

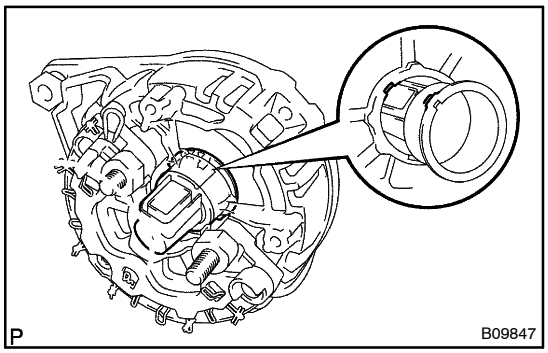

12. INSTALL BEARING SET GENERATOR

(a) Insert the fitting ring into the position shown in the illustration.
(b) Align the key of the fitting ring with the keyway of the stator.
(c) Install the bearing.

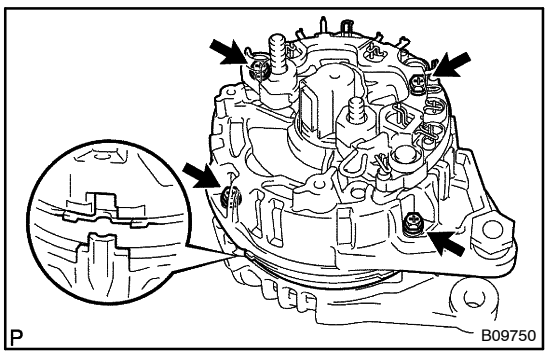

13. INSTALL STATOR SUB–ASSY GENERATOR W/RECTIFIRE

(a) Align the key of the drive end frame with the keyway of the stator generator.
(b) Install the stator with the 4 bolts.
Torque: 3.5 N·m (36 kgf·cm, 31 in.·lbf)

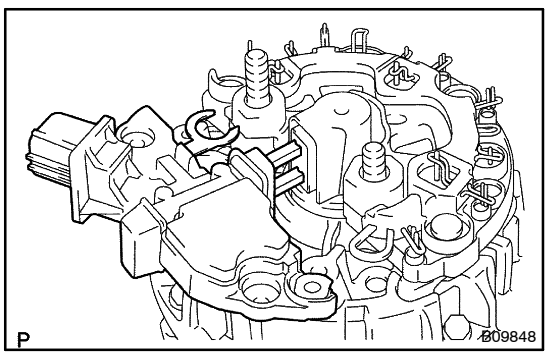

14. INSTALL REGULATOR SUB–ASSY GENERATOR W/BRUSH

(a) Attach the brushes and terminals to the rectifier end frame of the regulator.

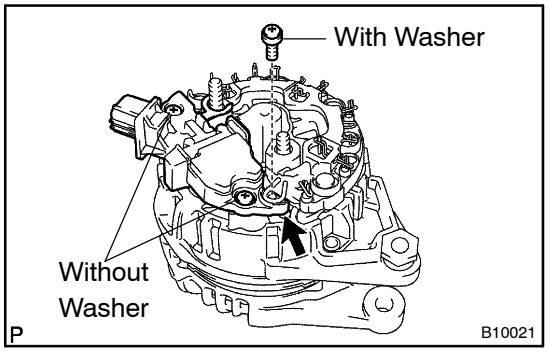

(b) Install the regulator with the 3 screws.

Torque:

2.2 N·m (22 kgf·cm, 19 in.·lbf) for screw without washer

1.2 N·m (12 kgf·cm, 11 in.·lbf) for screw with washer

HINT:

Install the screw with the plate washer to the position shown in the illustration.

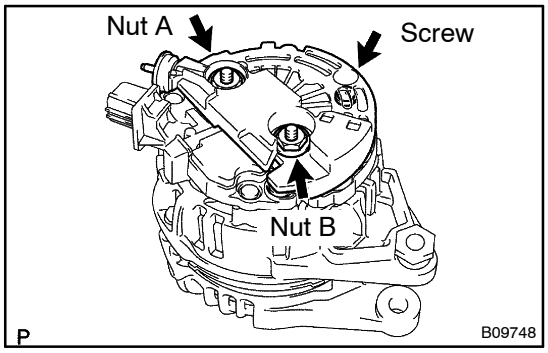

15. INSTALL GENERATOR REAR END COVER

(a) Install the end cover with the 2 nuts and screw.

Torque:

19.5 N·m (199 kgf·cm, 14 ft·lbf) for nut A

12 N·m (122 kgf·cm, 9 ft·lbf) for nut B

2.4 N·m (24 kgf·cm, 21 in.·lbf) for screw

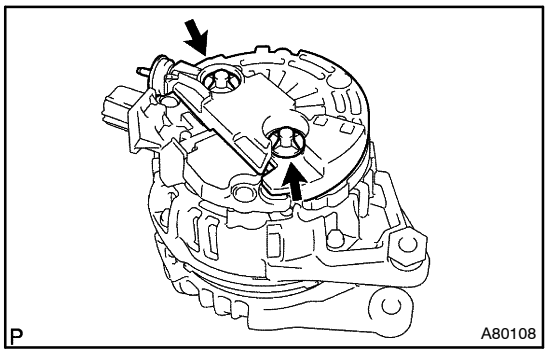

(b) Install the 2 terminal covers by turning them clockwise.

HOW TO USE THIS MANUAL

010B2–23

GENERAL INFORMATION

1. GENERAL DESCRIPTION

(a) This manual is made in accordance with SAE J2008.

(b) Generally repair operations can be separated in the following 3 main processes:
1. Diagnosis
2. Removing and Installing, Replacing, Disassembling, Installing and Checking, Adjusting
3. Final Inspection

(c) This manual explains ”Removing and Installing, Replacing, Disassembling, Installing and Checking, Adjusting”, but ”Final Inspection” is omitted.

(d) The following essential operations are not written in this manual, however these operations must be done in the practical situation.
(1) Operation with a jack or lift
(2) Cleaning of a removed part when necessary
(3) Visual check

2. INDEX

(a) An alphabetical INDEX is provided as a section on the end of the book to guide you to the item to be repaired.

3. PREPARATION

(a) Use of special service tools (SST) and special service materials (SSM) may be required, depending on the repairing condition. Be sure to use SST and SSM when they are required and follow the working procedure properly. A list of SST and SSM is in the Preparation section of this manual.

4. REPAIR PROCEDURES

(a) Component drawing is placed as the section or title when necessary.

(b) Illustrations of the parts catalog are placed as the ”disassembled parts drawing” so that it enables you to understand the fitting condition of the components.

(c) Non–reusable parts, grease applied parts, precoated parts and tightening torque are specified in the components drawing.

Example:

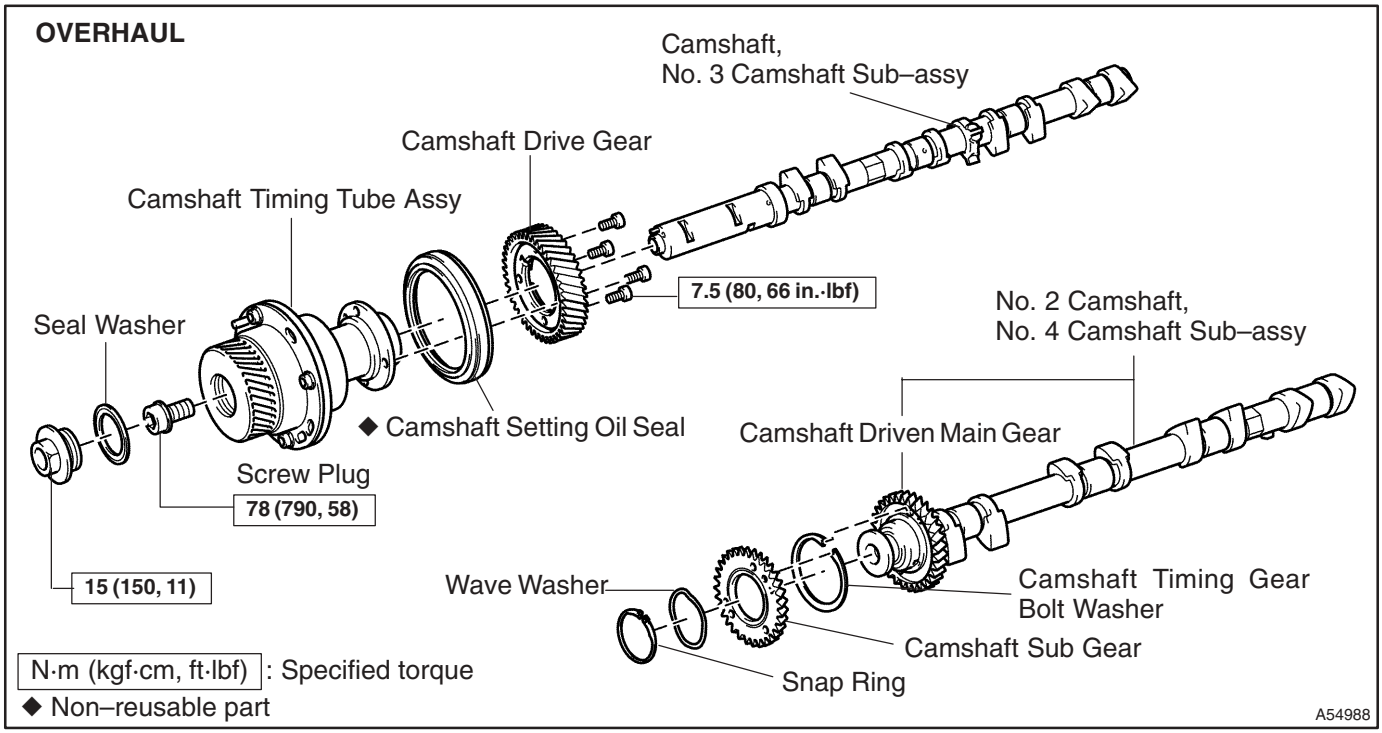

(d) Tightening torque, oil applying position, and non–reusable parts are described as important points in the procedure.

NOTICE:

There are cases where such information can only be indicated by an illustration. In that case, all the information such as torque, oil, etc. are described in the illustration.

(e) Installing procedure of operation items is performed in the reverse order of the removing, and only the important points are described.

(f) Only items with points are described in the procedure, and the operational portion and content are placed using an illustration. In the explanations, details of the operational method, standard value and notice are placed.

(g) There may be a case where the illustrations of similar models are used. In that case the details may be different from the actual vehicle.

(h) The procedures are presented in a step–by–step format:

(1) The illustration shows what to do and where to do it.

(2) The task heading tells what to do.

(3) The detailed text tells how to perform the task and gives other information such as specifications and warnings.

Example:

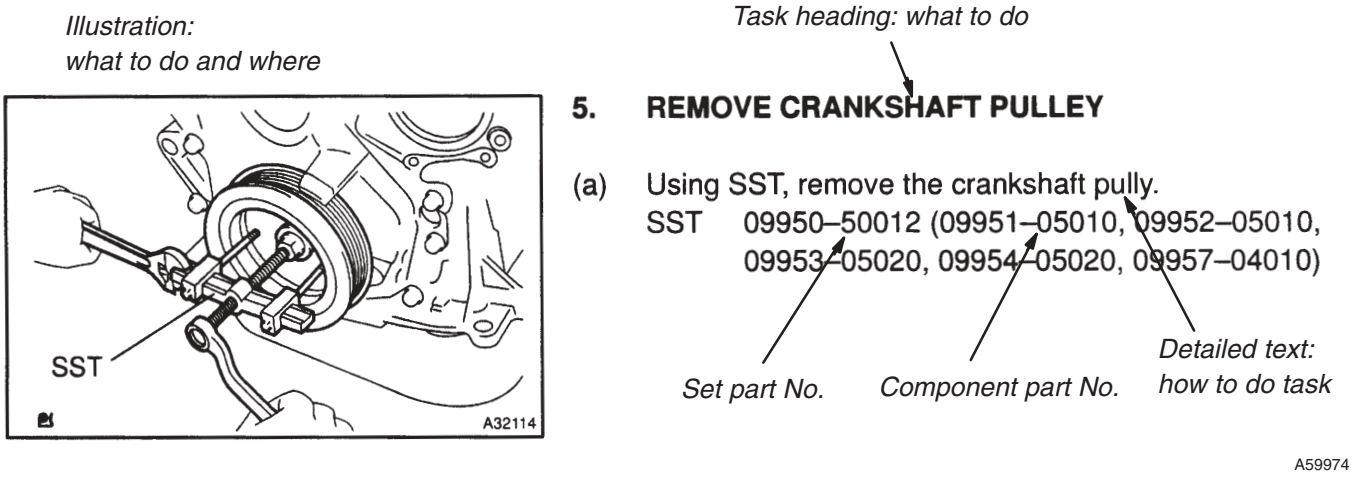

HINT:

This format provides an experienced technician with a FAST TRACK to the necessary information. The task heading can be read at a glance when necessary, and the text below provides detailed information. Important specifications and warnings always stand out in bold type.

5. SERVICE SPECIFICATIONS

(a) Specifications are presented in bold type throughout the manual. You never have to leave the procedure to look up your specifications. The specifications are also found in the Service Specifications section for a quick reference.

6. TERMS DEFINITION

CAUTION	Indicate the possibility of injury to you or other people.
NOTICE	Indicate the possibility of damage to the components being repaired.
HINT	Provide additional information to help you perform the repair efficiently.

7. SI UNIT

(a) The UNITS given in this manual are primarily expressed according to the SI UNIT (International System of Unit), and alternately expressed in the metric system and in the English System.

Example:

Torque: 30 N·m (310 kgf·cm, 22 ft·lbf)

IDENTIFICATION INFORMATION

VEHICLE IDENTIFICATION AND SERIAL NUMBERS

010SB–02

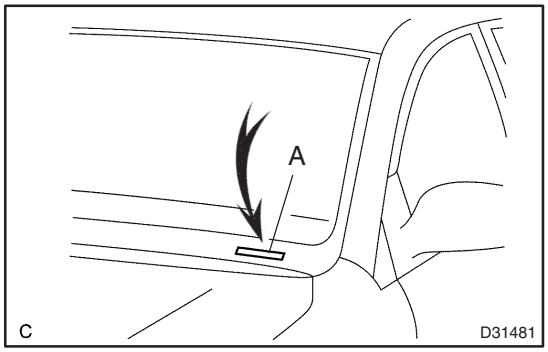

1. VEHICLE IDENTIFICATION NUMBER

(a) The vehicle identification number is stamped on the vehicle identification number plate and the certification label, as shown in the illustration.

A: Vehicle Identification Number Plate

B: Certification Label

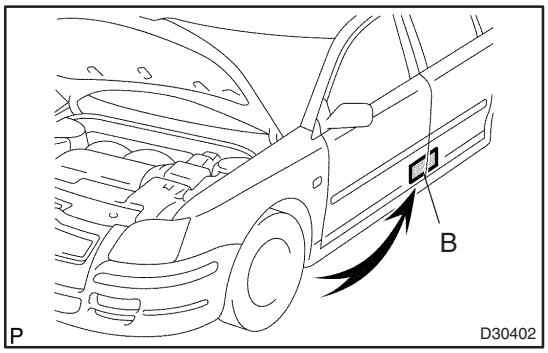

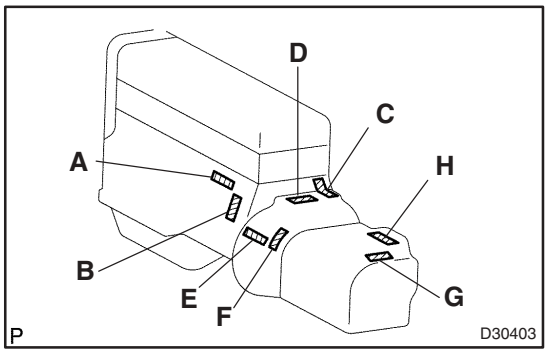

2. ENGINE SERIAL NUMBER AND TRANSAXLE SERIAL NUMBER

(a) The engine serial number is stamped on the cylinder block of the engine and the transmission serial number is stamped on the housing as shown in the illustration.

A: 1CD–FTV

B: 1AZ–FE, 1AZ–FSE, 2AZ–FSE

C: 1ZZ–FE, 3ZZ–FE

D: C50, C250

E: U241E, U151E

F: E354, E357

G: U241E, U151E

H: U341E

REPAIR INSTRUCTION

010LF–04

PRECAUTION

1. BASIC REPAIR HINT

(a) HINTS ON OPERATIONS

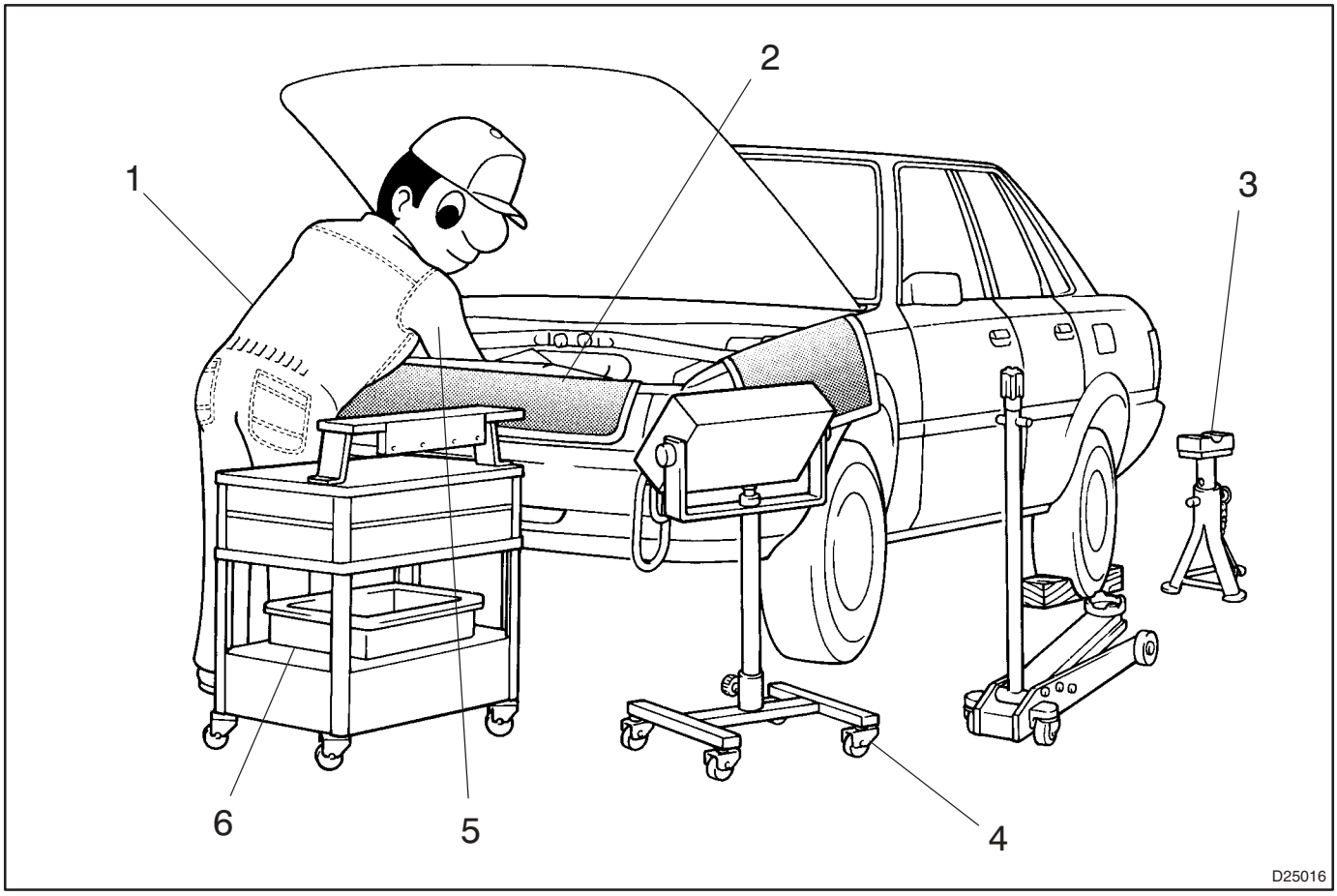

1	Looks	• Always wear a clean uniform. • Hat and safety shoes must be worn.
2	Vehicle protection	• Set a grill cover, fender cover, seat cover and floor mat before starting operation.
3	Safe operation	• When working with 2 or more persons, be sure to check the safety of one another. • When working with the engine running, pay attention to providing ventilation for exhaust fumes in the workshop. • When working with high–temperatures, rotating, moving or vibrating parts, be careful not to burn or injure yourself. • When jacking up the vehicle, be sure to support the specified location with a safety stand. • When lifting up the vehicle, use safety equipment.
4	Preparation of tools and measuring gauge	• Before starting repairs, prepare the tool stand, SST, gauge, oil, shop rag and parts for replacement.
5	Removal and installation, disassembly and assembly operations	• Diagnose with a thorough understanding of the trouble condition and perform effective operation. • Before removing the parts, check the general condition of the assembly, and for deformation and damage. • When the structure is complicated, take a notes or make matchmarks as not to make mistakes that affect the function of the parts. • Clean and wash the removed parts if necessary and assemble them after a thorough check.
6	Removed parts	• Place the removed parts in the correct order to avoid mixing them up or making them dirty. • As for non–reusable parts such as gaskets, O–rings, and self–locking nuts, replace them with new ones following the instructions in this manual. • Organize the parts that were replaced in a box and show them to the customer.

(b) JACKING UP AND SUPPORTING VEHICLE

(1) Care must be taken when jacking up and supporting the vehicle. Be sure to lift and support the vehicle at the proper locations (See page 01–19).

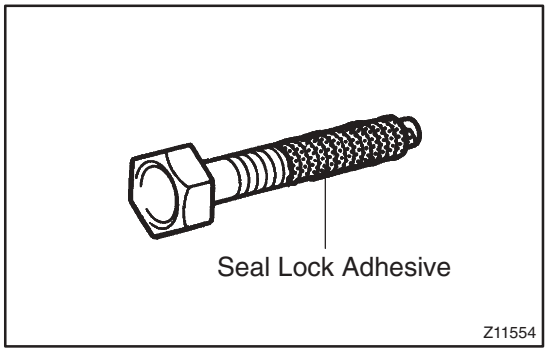

(c) PRECOATED PARTS

(1) Precoated parts such as bolts, nuts, etc., are coated with a seal lock adhesive at the factory.

(2) If a precoated part is retightened, loosened or caused to move in any way, it must be recoated with the specified adhesive.

(3) When reusing precoated parts, clean off the old adhesive and dry the part with compressed air. Then apply the specified seal lock adhesive to the bolt, nut or threads.

NOTICE:

Check the torque with the lower limit value of the torque tolerance.

(4) Depending on the seal lock agent to be applied, there may be cases where it is necessary to leave it for a specified time until it hardens.

(d) GASKETS

(1) When necessary, use a sealer on gaskets to prevent leaks.

(e) BOLTS, NUTS AND SCREWS

(1) Carefully follow all the specifications for tightening torques. Always use a torque wrench.

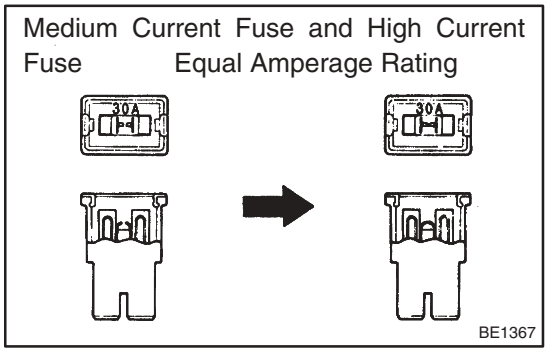

(f) FUSES

(1) When replacing fuses, be sure that a new fuse has the correct amperage rating. DO NOT exceed the rating, or use one with a lower rating.

Illustration	Symbol	Part Name	Abbreviation
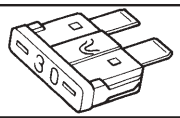 BE5594	IN0365	FUSE	FUSE
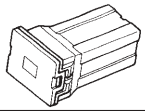 BE5595	 IN0366	MEDIUM CURRENT FUSE	M–FUSE
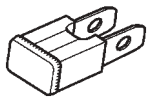 D27353	 IN0367	HIGH CURRENT FUSE	H–FUSE

V35002

(g) CLIPS

(1) The removal and installation methods of typical clips used in body parts are shown in the table below.

HINT:

If the clip is damaged during the procedure, always replace it with a new clip.

Shape (Example)	Removal/Installation
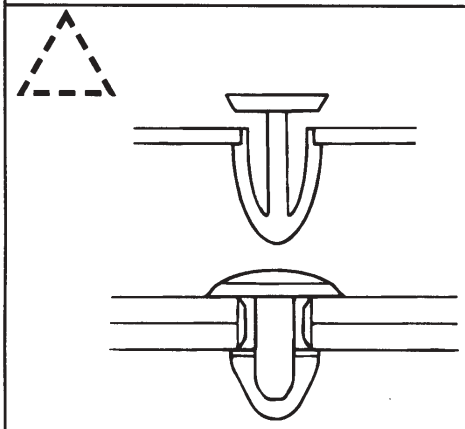	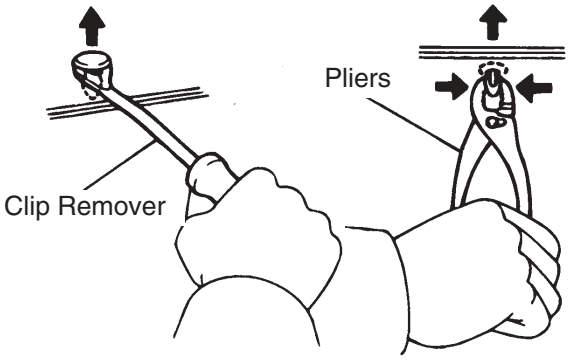
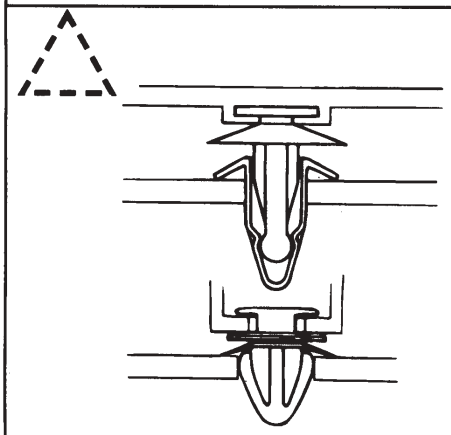	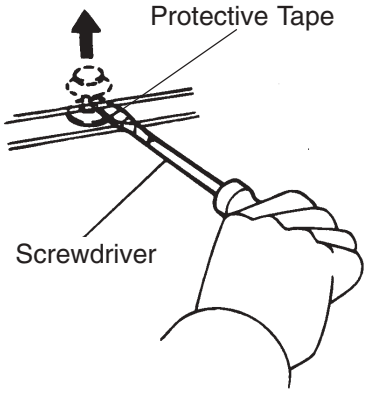
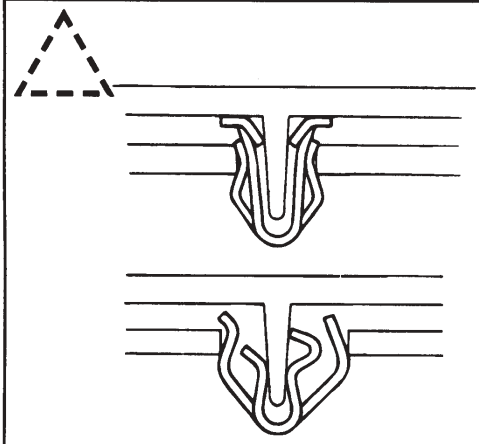	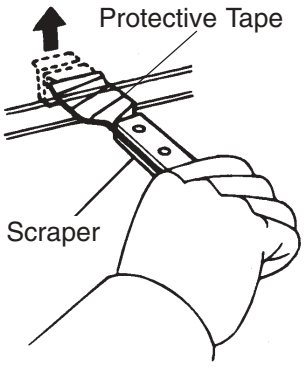

D25786

Shape (Example)	Removal/Installation
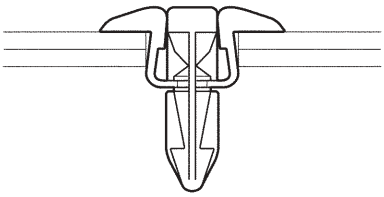	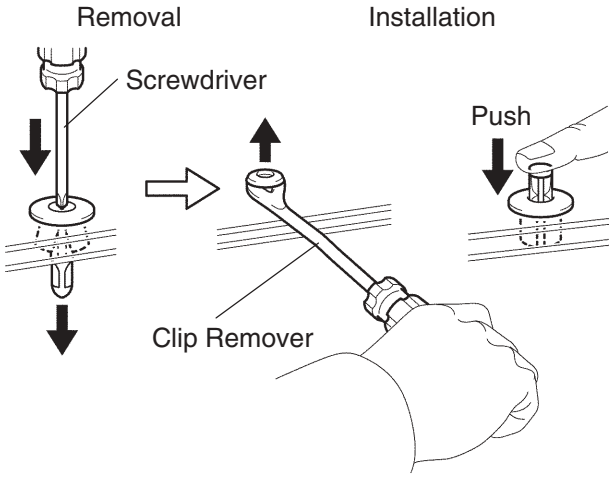
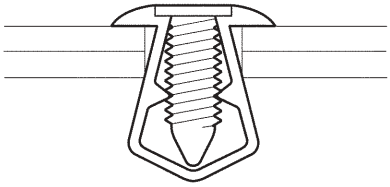	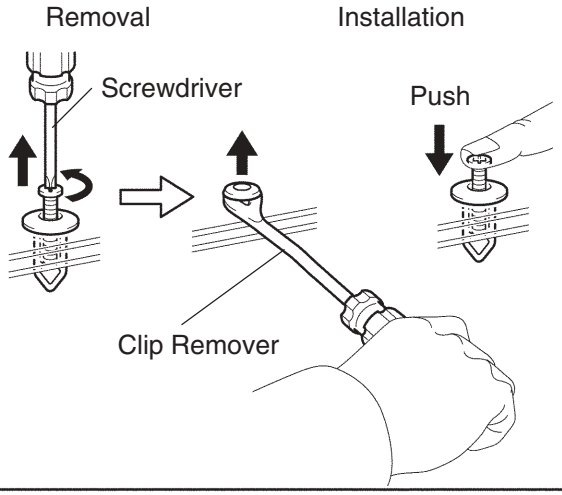
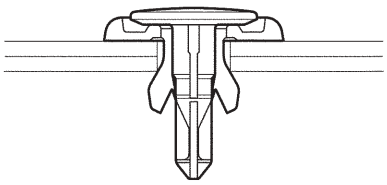	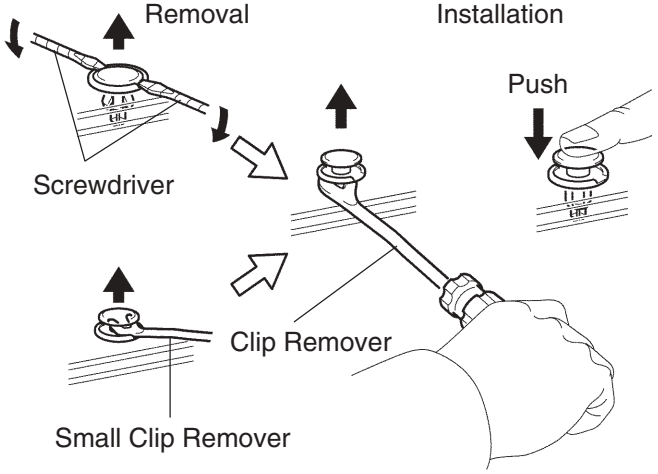

P

V35006

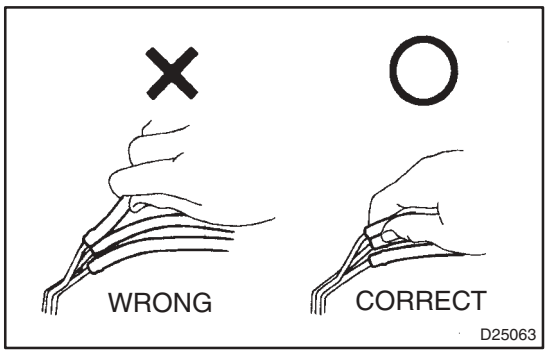

(h) REMOVAL AND INSTALLATION OF VACUUM HOSES

(1) To disconnect vacuum hoses, pull them by holding the end, not the middle of the hose.

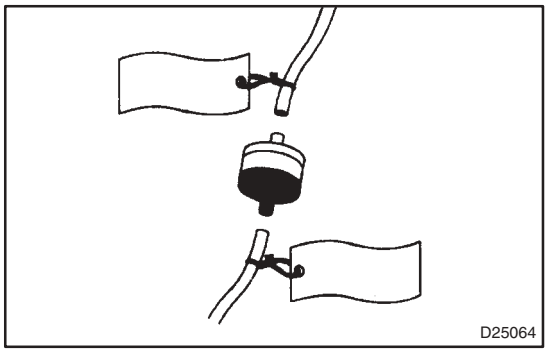

(2) When disconnecting vacuum hoses, use tags to identify where they should be reconnected.

(3) After completing the job, make a double check whether the vacuum hoses are properly connected. A label under the hood shows the proper layout.

(4) When using a vacuum gauge, never force the hose onto a connector that is too large. Use a step–down adapter for adjustment. Once the hose has been stretched, it may leak air.

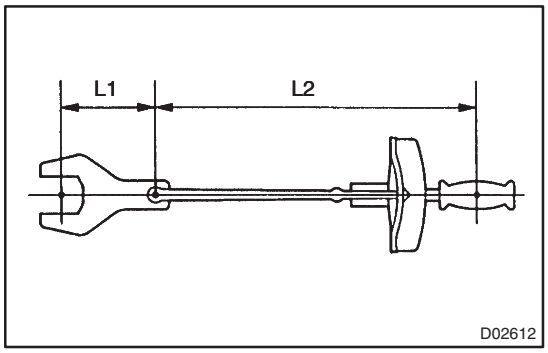

(i) TORQUE WHEN USING TORQUE WRENCH WITH EXTENSION TOOL

(1) When the torque wrench is combined with SST or an extension tool to extend the length, and you tighten until the torque wrench reads the specified torque value, the actual torque becomes excessive.

(2) In this manual, only the specified torque is described. In case of using SST or extension tool, calculate the reading of the torque wrench by the following formula.

(3) Formula T'=T x L2/(L1 + L2)

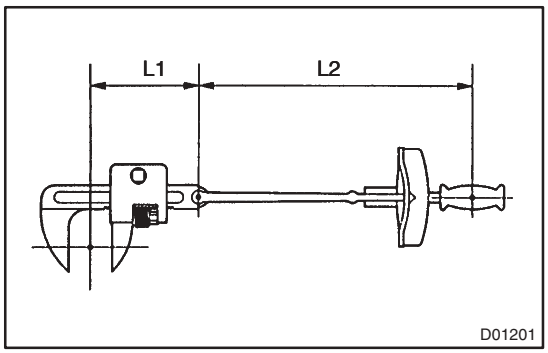

T'	Reading of torque wrench {N·m (kgf·cm, ft·lbf)}
T	Torque {N·m (kgf·cm, ft·lbf)}
L1	Length of SST or extension tool (cm)
L2	Length of torque wrench (cm)

2. FOR VEHICLES EQUIPPED WITH SRS AIRBAG AND SEAT BELT PRETENSIONER

HINT:

The AVENSIS is equipped with an SRS (Supplemental Restraint System), which includes the driver airbag, front passenger airbag, instrument panel passenger airbag, instrument panel lower airbag, side airbag, curtain shield and seat belt pretensioner.

Failure to carry out the service operations in the correct sequence could cause the supplemental restraint system to unexpectedly deploy while servicing. This could cause a serious accident.

Furthermore, if a mistake is made when servicing the supplemental restraint system, it is possible that the SRS will fail to operate when required. Before servicing (including removal or installation of parts, inspection or replacement), be sure to read the following items carefully. Then follow the correct procedures described in this manual.

(a) GENERAL NOTICE

(1) Malfunction symptoms of the supplemental restraint system are difficult to confirm so the diagnostic trouble codes become the most important source of information when troubleshooting. When troubleshooting the supplemental restraint system, always check the diagnostic trouble codes before disconnecting the battery (See Pub. No. RM1018E on 05–1184).

(2) Work must be started after 90 seconds from the time that the ignition switch is turned to the LOCK position and the negative (–) terminal cable is disconnected from the battery.
(The supplemental restraint system is equipped with a back–up power source. So, if work is started within 90 seconds after disconnecting the negative (–) terminal cable from the battery, the SRS may deploy).
When the negative (–) terminal cable is disconnected from the battery, memory of the clock and audio systems is cancelled. So, before starting work, make a record of the contents recorded in each memory system. Then, when work is finished, reset the clock and audio systems as before.

(3) Even in the case of a minor collision where the SRS does not deploy, the horn button assembly, instrument panel passenger airbag assembly and seat belt pretensioner should be inspected (See Pub. No. RM1018E on 60–19 and 60–9).

(4) Never use the SRS related parts from another vehicle. When replacing the parts, replace them with new parts.

(5) Before repairs, remove the airbag sensor if impacts are likely to be applied to the sensor during repairs.

(6) Never disassemble and repair the center airbag sensor assembly, side airbag sensor assembly, horn button assembly, instrument panel passenger airbag assembly, front seat airbag assembly, instrument panel lower airbag assembly, curtain shield airbag assembly or seat belt pretensioner.

(7) If the center airbag sensor assembly, the side airbag sensor assembly, the horn button assembly, the instrument panel passenger airbag assembly, the instrument panel lower airbag assembly have been dropped, or if there are cracks, dents or other defects in the case, bracket or connector, replace them with new ones.

(8) Do not directly expose the airbag sensor assembly, the side airbag sensor assembly, the horn button assembly, the instrument panel passenger airbag assembly, the instrument panel lower airbag assembly or the seat belt pretensioner to hot air or flames.

(9) Use a volt/ohmmeter with high impedance (10 kΩ/V minimum) for troubleshooting an electrical circuits.

(10) Information labels are attached to the SRS components. Follow the instructions on the notices.

(11) After work on the supplemental restraint system is completed, check the SRS warning light (See Pub. No. RM1018E on 05–1184)

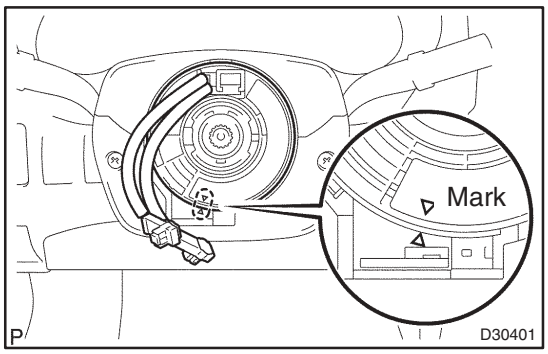

(b) SPIRAL CABLE (in Combination Switch)

(1) The steering wheel must be fitted correctly to the steering column with the spiral cable at the neutral position, otherwise cable disconnection and other troubles may occur. Refer to Pub. No. RM1018E on 60–26 of this manual concerning the correct installation of the steering wheel.

(c) HORN BUTTON ASSEMBLY (with Airbag)

(1) When removing the horn button assembly or handling a new horn button, it should be placed with the top of the pad surface facing upward. Placing it with the pad surface facing downward may lead to a serious accident if the airbag deploys for some reasons. Also, do not place anything on top of the horn button.

(2) Never measure the resistance of the airbag squib (This may cause the airbag to inflate, which is very dangerous).

(3) Grease should not be applied to the horn button assembly, and the pad should not be cleaned with any type of detergent.

(4) Store the horn button assembly where the ambient temperature remains below 93˚C (200˚F), without high humidity and away from electrical noise.

(5) When using electric welding, disconnect the airbag connector (4 yellow pins) under the steering column near the combination switch connector before starting work.

(6) When disposing the vehicle or the horn button assembly unit, the airbag should be deployed using SST before disposal (See Pub. No. RM1018E on 60–19).
Activate in a safe place away from electrical noise.

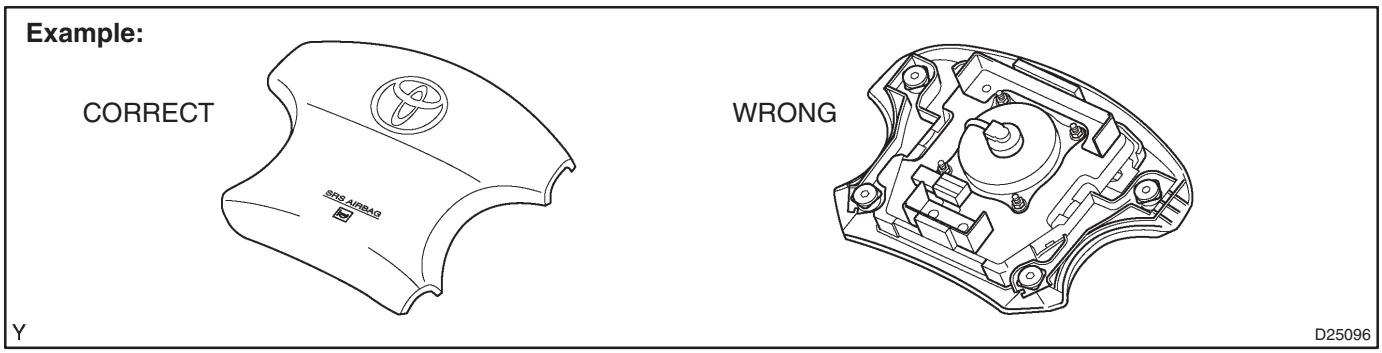

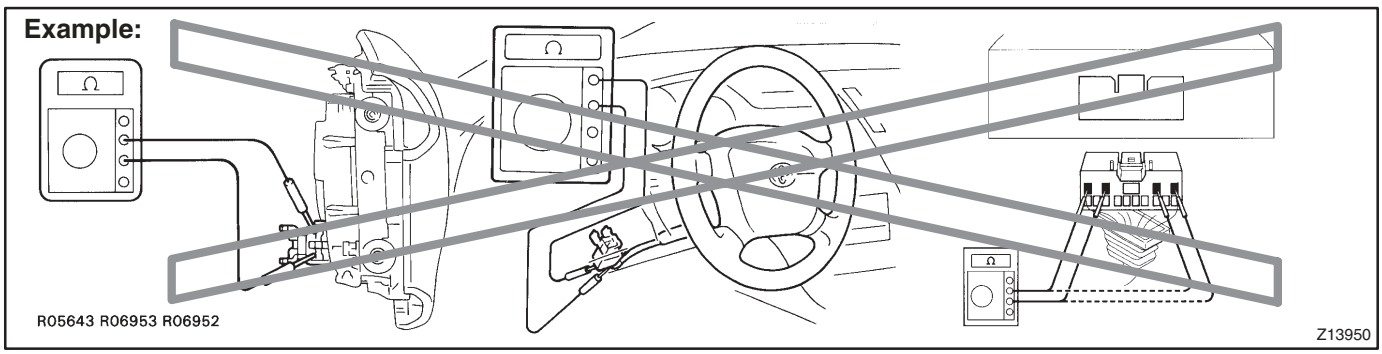

(d) INSTRUMENT PANEL PASSENGER AIRBAG ASSEMBLY

(1) Always place a removed or new instrument panel passenger airbag assembly with the airbag inflation direction facing upward. Placing the airbag assembly with the airbag inflation direction facing downward could cause a serious accident if the airbag deploys.

(2) Never measure the resistance of the airbag squib (This may cause the airbag to inflate, which is very dangerous).

(3) Grease should not be applied to the instrument panel passenger airbag assembly and the airbag door should not be cleaned with detergents of any kind.

(4) Store the airbag assembly where the ambient temperature remains below 93°C (200°F), without high humidity and away from electrical noise.

(5) When using electric welding, disconnect the airbag connector (4 yellow pins) installed on the assembly before starting work.

(6) When disposing of a vehicle or the airbag assembly unit, the airbag should be deployed using SST before disposal (See Pub. No. RM1018E on 60–30).
Activate in a safe place away from electrical noise.

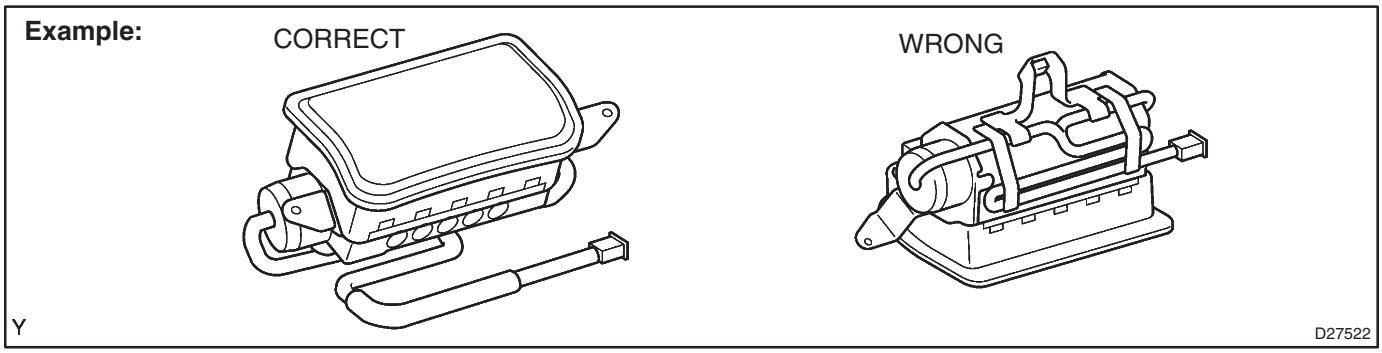

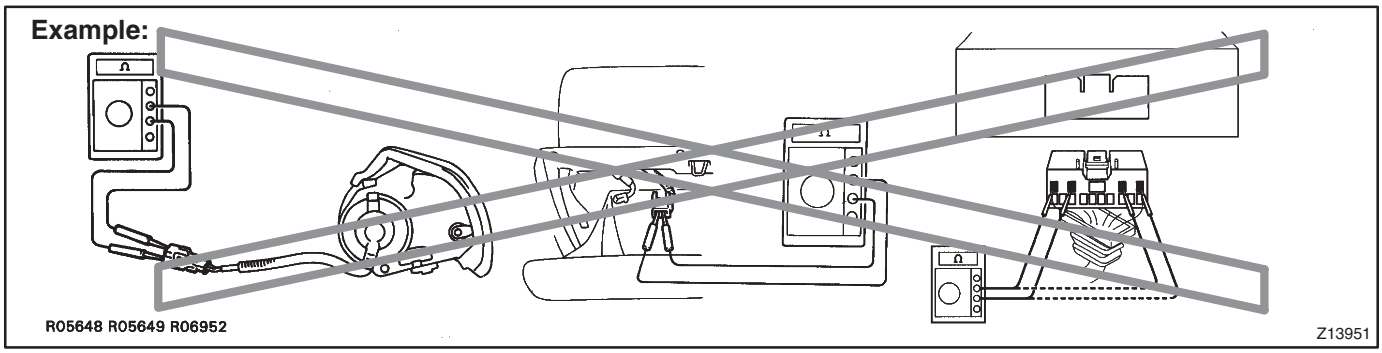

(e) FRONT SEAT AIRBAG ASSEMBLY

(1) Always place a removed or new front seat airbag assembly with the airbag inflating direction facing upward.
Placing the airbag assembly with the airbag inflation direction facing downward could cause a serious accident if the airbag deploys.

(2) Never measure the resistance of the airbag squib (This may cause the airbag to inflate, which is very dangerous.).

(3) Grease should not be applied to the front seat airbag assembly and the airbag door should not be cleaned with detergents of any kind.

(4) Store the airbag assembly where the ambient temperature remains below 93°C (200°F), without high humidity and away from electrical noise.

(5) When using electric welding, first disconnect the airbag connector (2 yellow pins) installed on the assembly before starting work.

(6) When disposing of a vehicle or the airbag assembly unit, the airbag should be inflated using SST before disposal (See Pub. No. RM1018E on 60–47).
Activate in a safe place away from electrical noise.

Example:

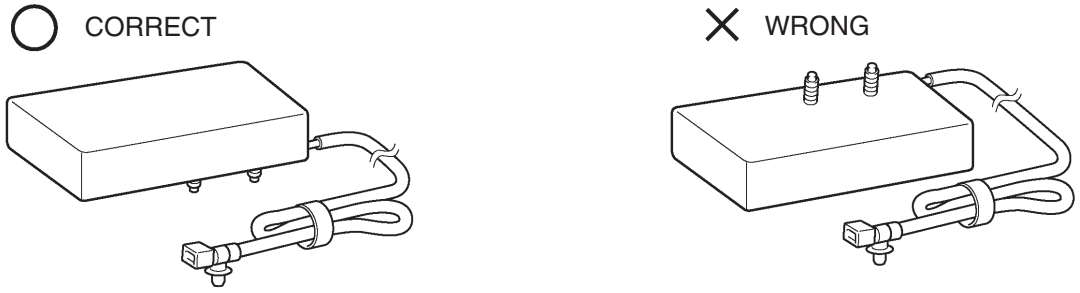

Y D26612

Example:

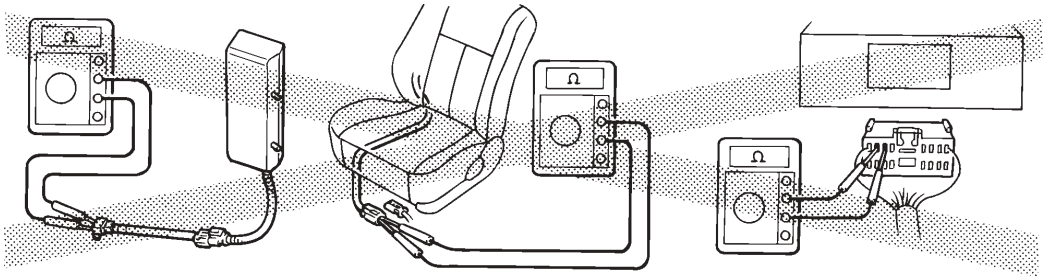

B01546

(f) INSTRUMENT PANEL LOWER AIRBAG ASSEMBLY

(1) Always place a removed or new instrument panel lower airbag assembly with the airbag inflating direction facing upward.
Placing the airbag assembly with the airbag inflation direction facing downward could cause a serious accident if the airbag deploys.

(2) Never measure the resistance of the airbag squib (This may cause the airbag to inflate, which is very dangerous.).

(3) Grease should not be applied to the instrument panel lower airbag assembly and the airbag door should not be cleaned with detergents of any kind.

(4) Store the instrument panel lower airbag assembly where the ambient temperature remains below 93°C (200°F), without high humidity and away from electrical noise.

(5) When using electric welding, first disconnect the airbag connector (2 yellow pins) installed on the instrument panel lower airbag assembly before starting work.

(6) When disposing of a vehicle or the instrument panel lower airbag assembly alone, the airbag should be inflated using an SST before disposal (See Pub. No. RM1018E on 60–55).
Activate in a safe place away from electrical noise.

Example:

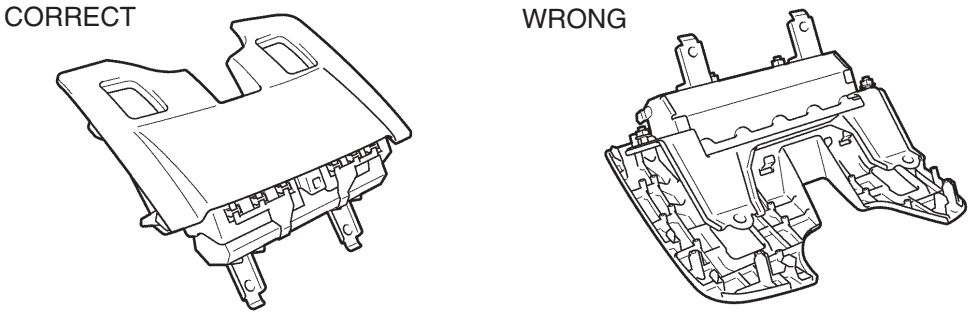

P D30399

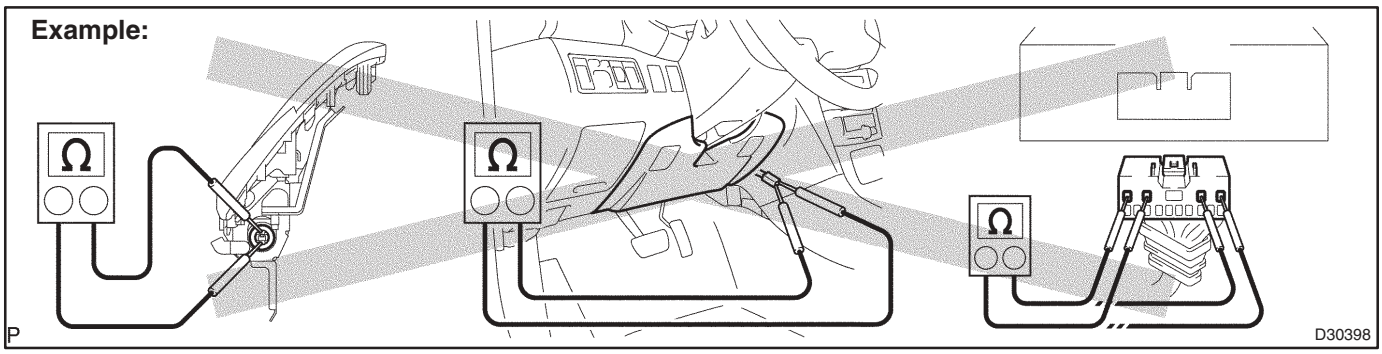

(g) CURTAIN SHIELD AIRBAG ASSEMBLY

(1) Always place the removed or new curtain shield airbag assembly in a clear plastic bag, and keep it in a safe place.

NOTICE:

Protection bag is not re–useable.

CAUTION:

Never disassemble the curtain shield airbag assembly.

(2) Never measure the resistance of the airbag squib (This may cause the airbag to inflate, which is very dangerous).

(3) Grease should not be attached to the curtain shield airbag assembly, and the surface should not be cleared with detergents of any kind.

(4) Store the airbag assembly where the ambient temperature remains below 93˚C (200˚F), without high humidity and away from electrical noise.

(5) When using electric welding, first disconnect the airbag connector (4 yellow pins) from the instrument panel before starting work.

(6) When disposing of a vehicle or the curtain shield airbag assembly alone, the airbag should be deployed using SST before the disposal (See Pub. No. RM1018E on 60–41). Active in a safe place away from electrical noise.

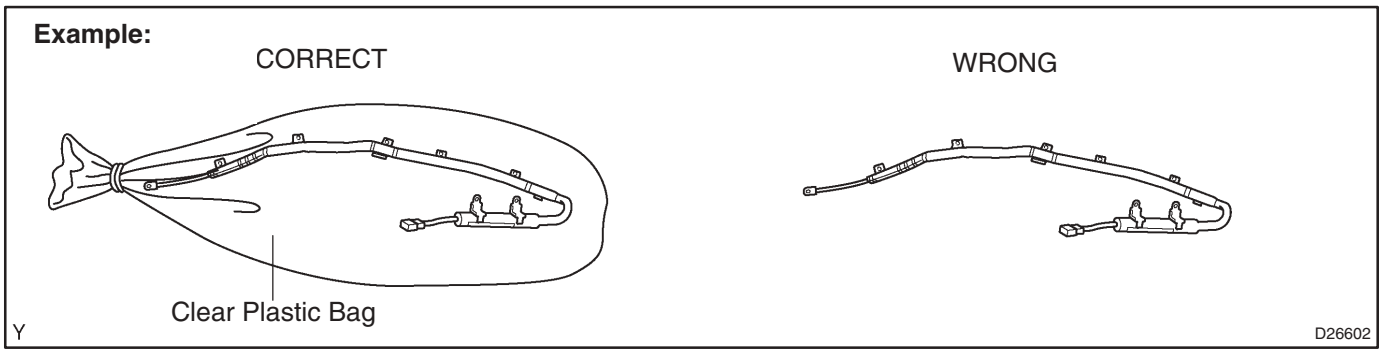

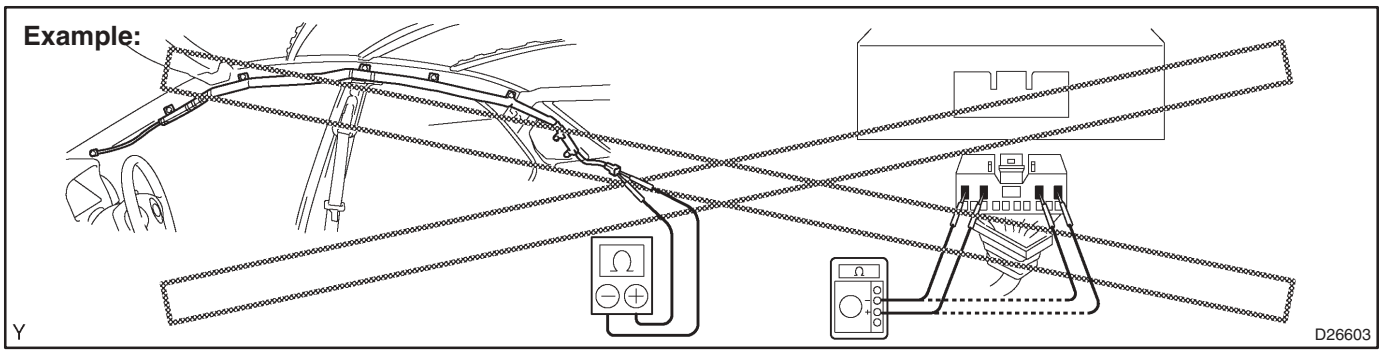

(h) SEAT BELT PRETENSIONER

(1) Never measure the resistance of the seat belt pretensioner (This may cause the seat belt pretensioner to activate, which is very dangerous.).

(2) Never disassemble the seat belt pretensioner.

(3) Never install the seat belt pretensioner in another vehicle.

(4) Store the seat belt pretensioner where the ambient temperature remains below 80°C (176°F) without high humidity and away from electrical noise.

(5) When using electric welding, first disconnect the connector (2 yellow pins) before starting work.

(6) When disposing of a vehicle or the seat belt pretensioner alone, the seat belt pretensioner should be activated before disposal (See Pub. No. RM1018E on 61–9). Perform the operation in a safe place away from electrical noise.

(7) The seat belt pretensioner is hot after being activation so allow some time for it to cool down sufficiently before disposal. Never apply water to cool down the seat belt pretensioner.

(8) Oil or water should not be put on the front seat outer belt, and the front seat outer belt should be cleaned with the appropriate detergents.

Example:

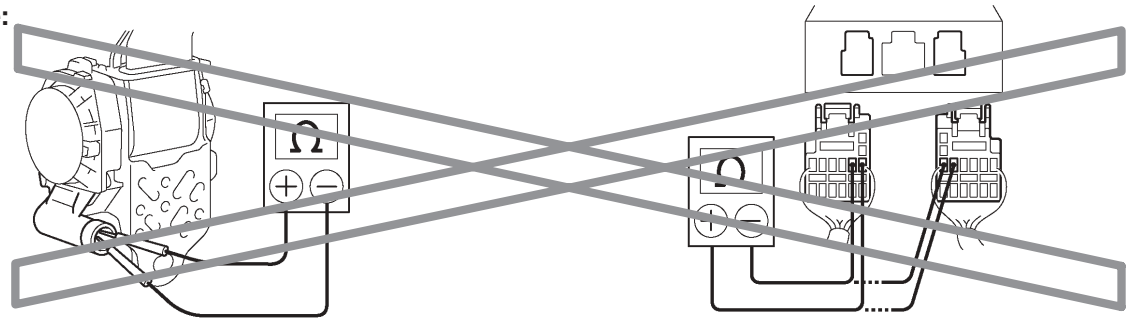

Y D26613

(i) AIRBAG SENSOR ASSEMBLY

(1) Never reuse the airbag sensor assembly involved in a collision where the SRS has deployed.

(2) The connectors to the airbag sensor assembly should be connected or disconnected with the sensor mounted on the floor. If the connectors are connected or disconnected while the airbag sensor assembly is not mounted to the floor, it could cause the supplemental restraint system to deploy potentially resulting in injury.

(3) Work must be started after 90 seconds from the time the ignition switch is turned to the ”LOCK” position and the negative (–) terminal cable is disconnected from the battery, even if only loosening the set bolts of the airbag sensor assembly.

(j) WIRE HARNESS AND CONNECTOR

(1) The SRS wire harness is integrated with the instrument panel wire harness assembly. All the connectors in the system are a standard yellow color. If the SRS wire harness becomes disconnected or the connector becomes broken due to an accident, etc., repair or replace it.

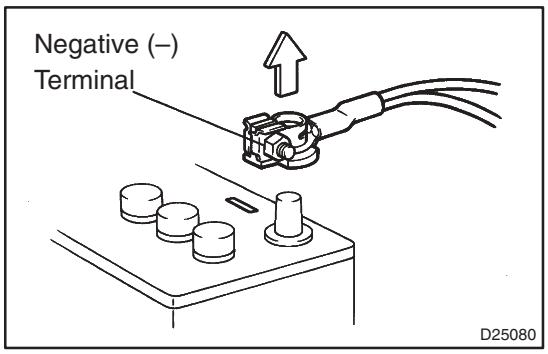

3. ELECTRONIC CONTROL

(a) REMOVAL AND INSTALLATION OF BATTERY TERMINAL

(1) Before performing electronic work, disconnect the battery negative (–) terminal cable beforehand in order to prevent it from shorting and burning out.

(2) When disconnecting and installing the terminal cable, turn the ignition switch and lighting switch OFF, and loosen the terminal nut completely. Perform these operations without twisting or prying the terminal.

(3) When the battery terminal cable is removed, the memories of the clock, radio, DTCs, etc. are erased. So before removing it, check them and make a note of their settings.

(4) When the battery negative (–) terminal cable is disconnected, memories of various systems are erased. Therefore, refer to the PRE–CHECK for each system to make sure whether or not the system needs to be initialized after the battery negative (–) terminal cable is disconnected. If necessary, be sure to initialize the system.

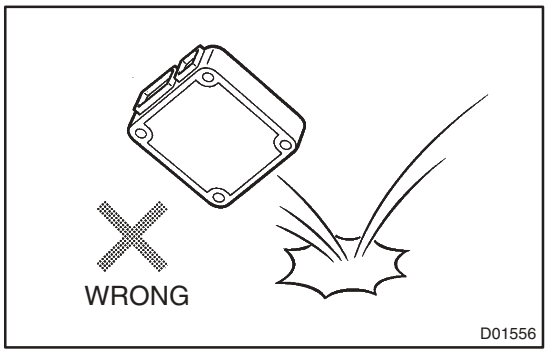

(b) HANDLING OF ELECTRONIC PARTS

(1) Do not open the cover or case of the ECU unless absolutely necessary (If the IC terminals are touched, the IC may be rendered inoperative by static electricity).

(2) To disconnect electronic connectors, pull the connector itself, not the wires.

(3) Be careful not to drop electronic components, such as sensors or relays. If they are dropped on a hard floor, they should be replaced and not be reused.

(4) When cleaning the engine with steam, protect the electronic components, air filter and emission–related components from water.

(5) Never use an impact wrench to remove or install temperature switches or temperature sensors.

(6) When checking the continuity at the wire connector, insert the tester probe carefully to prevent terminals from bending.

4. REMOVAL AND INSTALLATION OF FUEL CONTROL PARTS

(a) PLACE FOR REMOVING AND INSTALLING OF FUEL SYSTEM PARTS
   (1) Work in a place with good air ventilation and without anything that could cause combustion around you such as a welder, grinder, drill, electric motor or stove.
   (2) Never work in a place such as a pit or nearby a pit, as there is a possibility that vaporized fuel will collect in those places.

(b) REMOVING AND INSTALLING OF FUEL SYSTEM PARTS
   (1) Prepare a fire extinguisher before starting operations.
   (2) To prevent static electricity, install a ground on the fuel changer, vehicle and fuel tank, and do not spray much water so as to prevent slipping.
   (3) Never use any electric equipment like an electric motor or a working light, as they may create sparks or a high temperature.
   (4) Never use an iron hammer, as it may create sparks.
   (5) Dispose of shop rags containing fuel deposits separately.

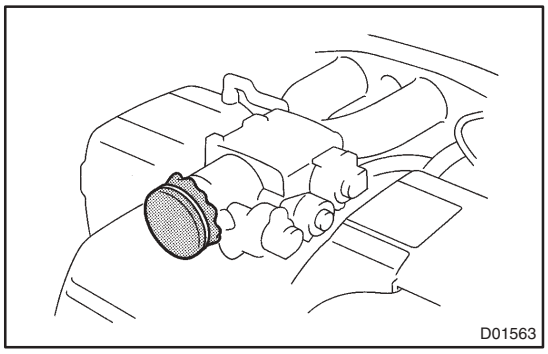
D01563

5. REMOVAL AND INSTALLATION OF ENGINE INTAKE PARTS

(a) If any metal tip is mixed in the inlet pass, this may give a bad effect to the engine and turbocharger.
(b) When removing and installing the inlet system parts, close the opening of the removed inlet system parts and the engine with a clean waste cloth or gum tape.
(c) When installing the inlet system parts, check that no metal particles have entered.

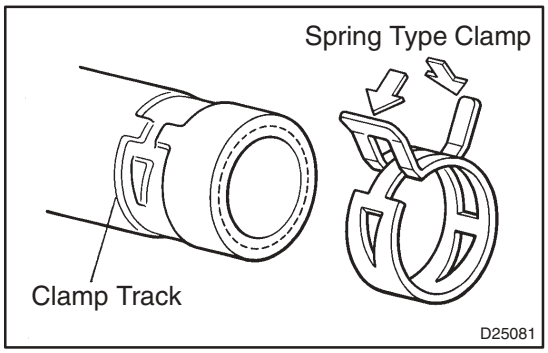

D25081

6. HANDLING OF HOSE CLAMPS

(a) Before removing the hose, check the depth of the inserting portion and the clamp position to restore it surely.
(b) Replace a deformed or dented clamp for a new one.
(c) When reusing a hose, attach the clamp on the clamp track portion of the hose.
(d) For a spring type clamp, adjust it by adding force to the arrow mark direction after the installation.

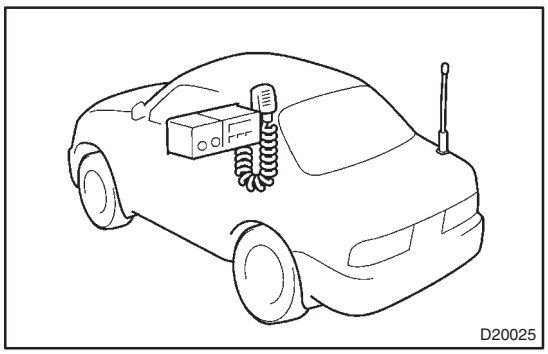
D20025

7. FOR VEHICLES EQUIPPED WITH MOBILE COMMUNICATION SYSTEMS

(a) Install the antenna as far away from the ECU and sensors of the vehicle electronic systems as possible.
(b) Install an antenna feeder at least 20 cm (7.87 in.) away from the ECU and sensors of the vehicle electronic systems. For details of the ECU and sensors locations, refer to the section on applicable components.
(c) Prevent the antenna feeder from getting entangled with the other wiring, and keep the antenna feeder separate from other wiring as much as possible.
(d) Check that the antenna and feeder are correctly adjusted.
(e) Do not install any high–powered mobile communication system.

8. FOR VEHICLES EQUIPPED WITH TRACTION CONTROL (TRC) SYSTEM

(a) NOTICES WHEN USING 2–WHEEL DRUM TESTER

(1) When using a 2–wheel drum tester such as a speedometer tester, a combination tester of speedometer and brake, chassis dynamometer or else, always turn the TRC system off via the TRC OFF switch before measurement.

NOTICE:

TRC system OFF condition can be confirmed by the indication, "TRC OFF", of the indicator light in the combination meter.

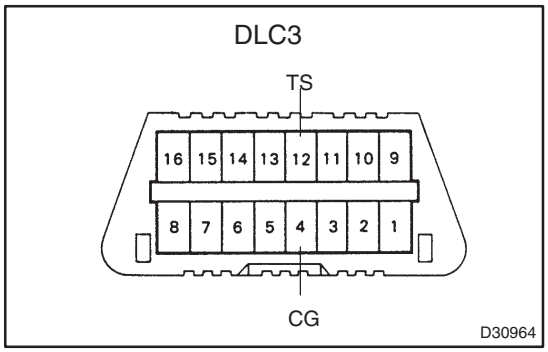

9. FOR VEHICLES EQUIPPED WITH VEHICLE SKID CONTROL (VSC) SYSTEM

(a) NOTICES WHEN USING DRUM TESTER

(1) When using a drum tester, be sure to start the engine with the ignition OFF, and connect SST to the terminals TS and CG of the DLC3 before measurement in order to prohibit the VSC operation.

SST 09843–18040

NOTICE:

- **Confirm that the VSC warning light blinks.**
- **VSC system will be reset when the engine is restarted.**
- **Fasten the vehicle with lock chains.**

(b) NOTICES OF RELATED OPERATIONS TO VSC

(1) Do not carry out unnecessary installation and removal as it might disorder the adjustment of related parts to VSC.

(2) Be sure to carry out the preparation for operation and the confirmation of operation completion in accordance with the instruction of the text and when the related operations to VSC are performed.

10. FOR VEHICLES EQUIPPED WITH CATALYTIC CONVERTER

CAUTION:

If a large amount of unburned gasoline flows into the converter, it may cause overheating and is a fire hazard. To prevent this, observe the following precautions.

(a) Use only unleaded gasoline.

(b) Avoid prolonged idling.
Avoid idling the engine for more than 20 minutes.

(c) Avoid a spark jump test.

(1) Perform a spark jump test only when absolutely necessary. Perform this test as rapidly as possible.

(2) While testing, never race the engine.

(d) Avoid a prolonged engine compression measurement.
Engine compression measurements must be performed as rapidly as possible.

(e) Do not run the engine when the fuel tank is nearly empty. This may cause the engine to misfire and create an extra load on the converter.

010B5–19

VEHICLE LIFT AND SUPPORT LOCATIONS

1. NOTICE ABOUT VEHICLE CONDITION WHEN JACKING UP

(a) As a rule, the vehicle must be unloaded when jacking up. Never jack up or lift up the vehicle loaded with things of heavy weight.

(b) When removing any parts of heavy weight like the engine and transmission, the center of gravity of the vehicle moves. Place a balance weight so as to keep it from rolling, or hold the jacking support location using the mission jack.

2. NOTICE FOR USING 4 POST LIFT

(a) Follow the instruction manual for a safety operation.

(b) Do not damage tires or wheels with a free wheel beam.

(c) Using a wheel stopper, fix the vehicle.

3. NOTICE FOR USING JACK AND SAFETY STAND

(a) Work in the flat place using a wheel stopper at all times.

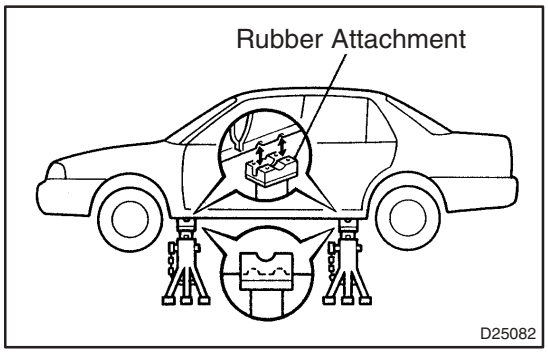

(b) Use a safety stand with a rubber attachment, as shown in the illustration.

(c) Support the specified location with a jack and safety stand accurately.

(d) When jacking up the front wheels, release the parking brake and place wheel stoppers only behind the rear wheels. When jacking up the rear wheels, place wheel stoppers only in front of the front wheels.

(e) Do not work or leave the vehicle supported only by a jack. Be sure to support the vehicle with a safety stand.

(f) When jacking up only the front wheels or only the rear wheels, place wheel stoppers to both sides of the wheels that contact ground.

(g) When jacking down the vehicle with its front wheels jacked up, release the parking brake and place wheel stoppers only in front of the rear wheels. When jacking down the vehicle with its rear wheels jacked up, place wheel stoppers only behind the front wheels.

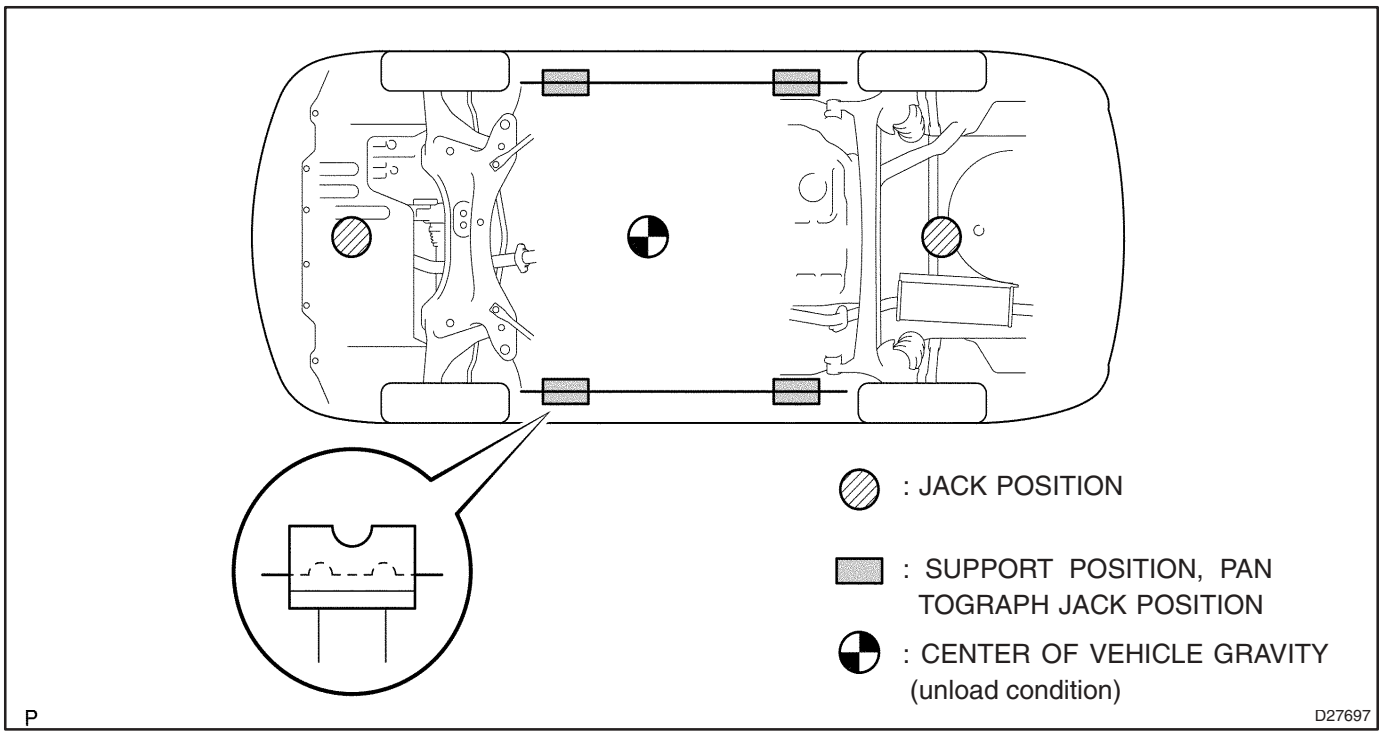

4. NOTICE FOR USING SWING ARM TYPE LIFT

(a) Follow the instruction manual of the lift for a safe operation.
(b) Use a cradle with a rubber attachment, as shown in the illustration.
(c) Set in the vehicle so as to make its center of gravity as close as possible to the center of the lift. (”L” becomes short.)
(d) Place the vehicle horizontally by adjusting the height of the cradle, and match the groove of the cradle and the safety stand support location accurately.
(e) Be sure to lock the swing arm during the operation.
(f) Lift the vehicle up until the tires float, and shake the vehicle to make sure that the vehicle is stable.

5. NOTICE FOR USING PLATE TYPE LIFT

(a) Follow the instruction manual of the lift for a safe operation.
(b) Use a plate lift attachment.
(c) Be sure to set the vehicle to the specified position.

Right and left set position	• Place the vehicle over the center of the lift.
Front and rear set position	• Align the cushion gum ends of the plate with the attachment lower ends (A and C). • Align the attachment upper end (B) with the rocker flange front side notch.

(d) Lift the vehicle up until the tires float a bit, and shake the vehicle to make sure that the vehicle is stable.

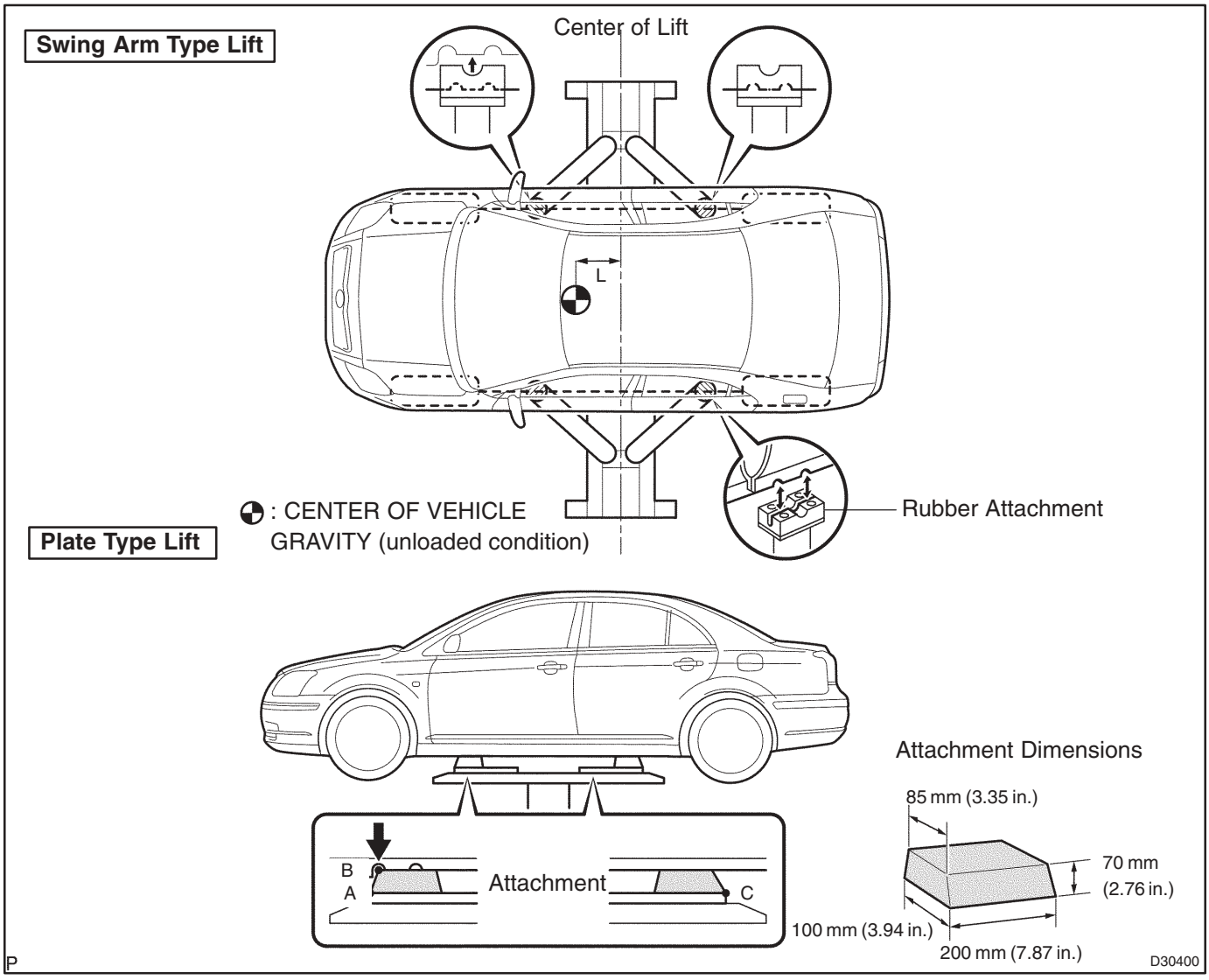

HOW TO TROUBLESHOOT ECU CONTROLLED SYSTEMS

010B6–21

GENERAL INFORMATION

There are many ECU controlled systems used in the AVENSIS. In general, ECU controlled system are considered to be very intricate and require a high level of technical knowledge and expert skill to troubleshoot. The fact is, however, that if you proceed by inspecting the circuits one by one, troubleshooting of these systems is not complex. If you have adequate understanding of the system and basic knowledge of electricity, the problem can be accurately diagnosed and fixed. This manual is designed based on the above principle to help service technicians perform accurate and effective troubleshooting, and is compiled for the following major ECU controlled systems:

The troubleshooting procedures are described on the following pages.

System	Page
1. SFI System [1ZZ–FE/3ZZ–FE]	05–1
2. Electronic Controlled Automatic Transmission [ECT] [U341E]	05–207
3. Cruise Control System [2AZ–FSE]	05–303

FOR USING HAND–HELD TESTER

- Before using the tester, the tester's operator manual should be read thoroughly.
- If the tester cannot communicate with the ECU controlled systems when you have connected the cable of tester to the DLC3 with the ignition switch and tester turned ON, there is a problem on the vehicle side or tester side.
  (1) If the communication is normal when the tester is connected to another vehicle, inspect the diagnosis data link line (Bus⊕line) or ECU power circuit of the vehicle.
  (2) If the communication is still impossible when the tester is connected to another vehicle, the problem is probably in the tester itself, so perform the Self Test procedures outlined in the Tester Operator's Manual.

010B7–21

HOW TO PROCEED WITH TROUBLESHOOTING

HINT:

Carry out troubleshooting in accordance with the procedures on the following page. Here, only the basic procedures are shown. Details are provided in the Diagnostics Section, showing the most effective methods for each circuit. Confirm the troubleshooting procedures first for the relevant circuit before beginning troubleshooting of that circuit.

1	Vehicle brought to workshop

2	Customer problem analysis

(a) Ask the customer about the conditions and environment when the problem occurred.

3	Symptom confirmation and DTC (and freeze frame data) check

(a) Check the battery positive voltage.
Voltage: 11 to 14 V (Engine stopped)
(b) Visually check the wire harness, connectors and fuses for open and short, etc.
(c) Warm up the engine to the normal operating temperature.
(d) Confirm the problem symptoms and conditions, and check for DTCs according to the related chart.

OK → **Go to step 5**

NG

4	DTC chart

(a) Check the results obtained in step 3, then confirm the inspection procedures for the system or the part which should be checked using the DTC chart.

→ **Go to step 6**

5	Problem symptoms chart

(a) Check the results obtained in step 3, then confirm the inspection procedures for the system or the part which should be checked using the problem symptoms table.

6	Circuit inspection or parts inspection

(a) Confirm the circuit for the system or the part which should be checked using the problem symptoms table or the results obtained in step 4.

7	Repair

(a) Repair the affected system or part in accordance with the instructions in step 6.

8	Confirmation test

(a) After completing repairs, confirm that the problem has been solved (If the problem does not recur, perform a confirmation test under the same conditions and in the same environment as when it occurred for the first time).

END

CUSTOMER PROBLEM ANALYSIS

HINT:

- In troubleshooting, the problem symptoms must be confirmed accurately, meaning that all preconceptions must be set aside in order to make an accurate judgement. To ascertain what the problem symptoms are, it is extremely important to ask the customer about the problem and conditions when it occurred.
- The following 5 items are important points in the problem analysis. Past problems which are thought to be unrelated and the repair history, etc. may also help in some cases. Therefore, as much information as possible should be gathered and its relationship with the problem symptoms should be correctly ascertained for use as reference in troubleshooting. A customer problem analysis table is provided for your use in the Diagnostics Section for each system.

Important Points with Customer Problem Analysis

- What ——— Vehicle model, system name
- When ——— Date, time, occurrence frequency
- Where ——— Road conditions
- Under what conditions? ——— Running conditions, driving conditions, weather conditions
- How did it happen? ——— Problem symptoms

(Sample) Supplemental restraint system check sheet.

CUSTOMER PROBLEM ANALYSIS CHECK

Supplemental Restraint System Check Sheet

Inspector's Name

Customer's Name		**Registration No.**	
		Registration Year	/ /
		Frame No.	
Date Vehicle Brought In	/ /	**Odometer Reading**	**km miles**

Date Problem First Occurred	/ /
Weather	☐ Fine ☐ Cloudy ☐ Rainy ☐ Snowy ☐ Other
Temperature	**Approx.**

Vehicle Operation	☐ Starting ☐ Idling ☐ Driving [☐ Constant speed ☐ Acceleration ☐ Deceleration ☐ Other]

SYMPTOM CONFIRMATION AND DIAGNOSTIC TROUBLE CODE

HINT:

- The diagnostic system in AVENSIS has various functions. The first function is the Diagnostic Trouble Code (DTC) Check, in which a malfunction in the signal circuits to the ECU is stored in code form in the ECU memory. Another function is the Input Signal Check, which checks if the signals from various switches are sent to the ECU correctly. By using these check functions, it is possible to quickly narrow down potential problem areas and troubleshooting can be performed effectively. The diagnostic functions are incorporated in the following systems in the AVENSIS.

System	Diagnostic Trouble Code Check	Input Signal Check (Sensor Check)	Diagnostic Test Mode (Active Test)
SFI System [1ZZ–FE/3ZZ–FE]	○ (with Check Mode)	○	○
Electronically Controlled Automatic Transmission [ECT] [U341E]	○ (with Check Mode)	○	○
Cruise Control System [2AZ–FSE]	○	○	–

- In the DTC check, it is very important to determine whether the problem indicated by the DTC is still occurring or has occurred in the past but returned to normal at present. In addition during the problem symptom check, it a check must be made on whether the malfunction indicated by the DTC is directly related to the problem symptom or not. For this reason, the DTC should be checked before and after symptom confirmation to determine the current conditions. If this is not done, it may, depending on the case, result in unnecessary troubleshooting for systems that are operating normally. This would make more difficult to detect the problem area or to try to repair irrelevant areas. Therefore, always follow the procedures in the correct order and perform the DTC check.
- A flow chart showing how to proceed with troubleshooting using the diagnostic trouble code (DTC) check is shown the this page. This flow chart shows how to utilize the DTC check effectively. Then, by carefully checking the results, this chart indicates how to proceed either to the DTC troubleshooting or to the troubleshooting of the problem symptoms table.

1 DTC check

2 Make a note of DTCs displayed and then clear the memory

3 Symptom confirmation

a	Symptoms exist
b	No symptoms exist

a → Go to step 5

b

4 Simulation test using the symptom simulation methods

5	DTC check

a	DTC displayed
b	Normal code displayed

a → **Troubleshooting of problem indicated by DTC**

b

6	Symptom confirmation

a	No symptoms exist
b	Symptoms exist

If a DTC is displayed in the initial DTC check, it indicates that a trouble may have occurred in a wire harness or connector in that circuit in the past. Therefore, check the wire harness and connectors (See page 01–32).

a → **System normal**

b

Troubleshooting of each problem symptom

The problem is still occurring in a place other than the diagnostic circuit (The DTC displayed first is either for a past problem or a secondary problem).

SYMPTOM SIMULATION

HINT:

The most difficult case in troubleshooting is when no symptoms occurs. In such cases, a thorough customer problem analysis must be carried out. Then the same or similar conditions and environment in which the problem occurred in the customer's vehicle should be simulated. No matter how much experience a technician has, or how skilled he may be, if he proceeds to troubleshoot without confirming the problem symptoms, he will tend to overlook something important in the repair operation and make a wrong guess somewhere, which will only lead to a standstill. For example, for a problem which only occurs when the engine is cold, or for a problem which occurs due to vibration caused by the road during driving, etc., the problem can never be determined when the engine is hot or when the vehicles is at a standstill. Since vibration, heat or water penetration (moisture) is a likely cause for the problem which is difficult to reproduce, the symptom simulation tests introduced here are effective measures in a point that the external causes are applied to the vehicle in a stationary condition.

Important points in the symptom simulation test:

In the symptom simulation test, the problem symptoms should be confirmed, and the problem area or parts must also be discovered. To do so, reduce the possible problem circuits according to the symptoms before starting this type of test and have the hand–held tester connected beforehand. After that, carry out the symptom simulation test, judging whether the circuit being tested is defective or normal and also confirming the problem symptoms at the same time. Refer to the problem symptoms table of each system to narrow down the possible causes of the symptom.

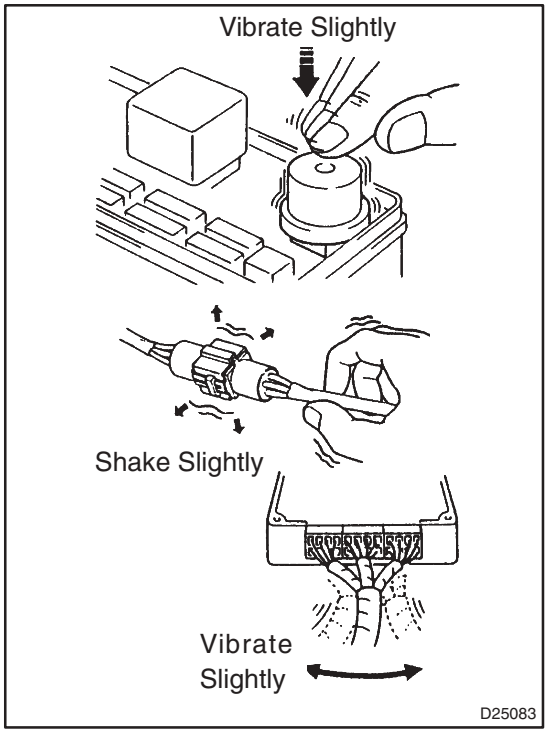

1. VIBRATION METHOD: When vibration seems to be the major cause.

(a) PART AND SENSOR

(1) Apply slight vibration with your finger to the part of the sensor considered to be the problem cause and check whether the malfunction occurs.

HINT:

Applying strong vibration to relays may result in open relays.

(b) CONNECTORS

(1) Slightly shake the connector vertically and horizontally.

(c) WIRE HARNESS

(1) Slightly shake the wire harness vertically and horizontally.

The connector joint and fulcrum of the vibration are the major areas that should be checked thoroughly.

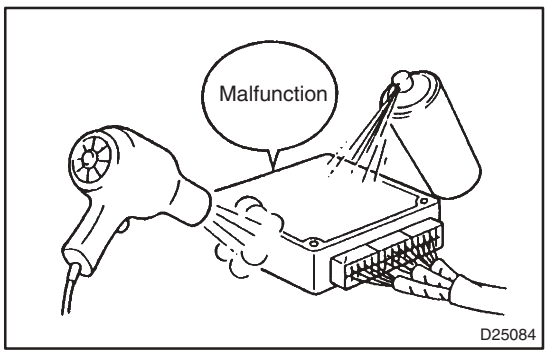

2. HEAT METHOD: If the problem seems to occur when the area in question is heated.

(a) Heat the component that is the possible cause of the malfunction with a hair dryer or similar object. Check if the malfunction occurs.

NOTICE:

- **Do not heat the components to more than 60°C (140°F) (Temperature is limited to keep the components from being damaged).**

- **Do not apply heat directly to the parts in the ECU.**

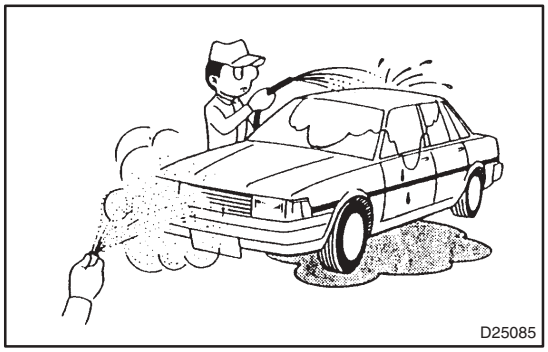

3. WATER SPRINKLING METHOD: When the malfunction seems to occur on a rainy day or in high–humidity.

(a) Sprinkle water onto the vehicle and check if the malfunction occurs.

NOTICE:

- **Never sprinkle water directly onto the engine compartment, but indirectly change the temperature and humidity by spraying a mist of water onto the radiator front surface.**
- **Never apply water directly onto the electronic components.**

HINT:

If a vehicle is subject to water leakage, the leaking water may contaminate the ECU. When testing a vehicle with a water leakage problem, this factor must also be considered.

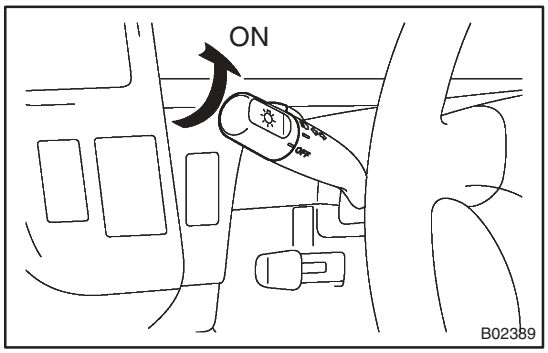

4. OTHERS: If the malfunction seems to occur when electrical load is excessive.

(a) Turn on all the electrical equipment including the heater blower, headlights, rear window defogger, etc., and check if the malfunction occurs.

DIAGNOSTIC TROUBLE CODE CHART

The inspection procedures are shown in the table below. This table allows efficient and accurate troubleshooting using the diagnostic trouble codes displayed in the diagnostic trouble code chart. Proceed with troubleshooting in accordance with the inspection procedures listed in the diagnostic chart corresponding to the diagnostic trouble codes displayed. The diagnostic trouble code chart for the Supplemental Restraint System is shown below as an example.

- DTC No.
  Indicates the diagnostic trouble code.
- Page or Instructions
  Indicates the page where the inspection procedures for each circuit is to be found, or gives instructions for checking and repairs.

- Trouble Area
  Indicates the suspect areas of the problem.

- Detection Item
  Indicates the system or details of the problem.

DIAGNOSTIC TROUBLE CODE CHART

If a malfunction code is displayed during the DTC check, check the circuit for that code listed in the table below (Proceed to the page given for that circuit).

DTC No. (See page)	Detection Item	Trouble Area	SRS Warning Light
B0100/13 (05–119)	● Short in D squib circuit	● Steering wheel pad (squib) ● Spiral cable ● Airbag sensor assembly ● Wire harness	ON
B0101/14 (05–124)	● Open in D squib circuit	● Steering wheel pad (squib) ● Spiral cable ● Airbag sensor assembly ● Wire harness	ON
B0102/11 (05–128)	● Short in D squib circuit (to ground)	● Steering wheel pad (squib) ● Spiral cable ● Airbag sensor assembly ● Wire harness	ON
B0103/12 (05–132)	● Short in D squib circuit (to B+)	● Steering wheel pad (squib) ● Spiral cable ● Airbag sensor assembly ● Wire harness	ON
B0105/53 (05–136)	● Short in P squib circuit	● Front passenger airbag assembly (squib) ● Airbag sensor assembly ● Wire harness	ON
B0106/54	● Open in P squib circuit	● Front passenger airbag assembly (squib) ● Airbag sensor assembly ● Wire harness	
	circuit (to Ground)	● Front passenger airbag assembly (squib) ● Airbag sensor assembly ● Wire harness	

PROBLEM SYMPTOMS TABLE

The suspected circuits or parts for each problem symptom are shown in the table below. Use this table to troubleshoot the problem when a Normal code is displayed in the diagnostic trouble code chart but the problem is still occurring. Numbers in the table indicate the inspection order in which the circuits or parts should be checked.

HINT:

When the problem is not detected by the diagnostic system even though the problem symptom is present, it may be that the problem is occurring outside the detection range of the diagnostic system.

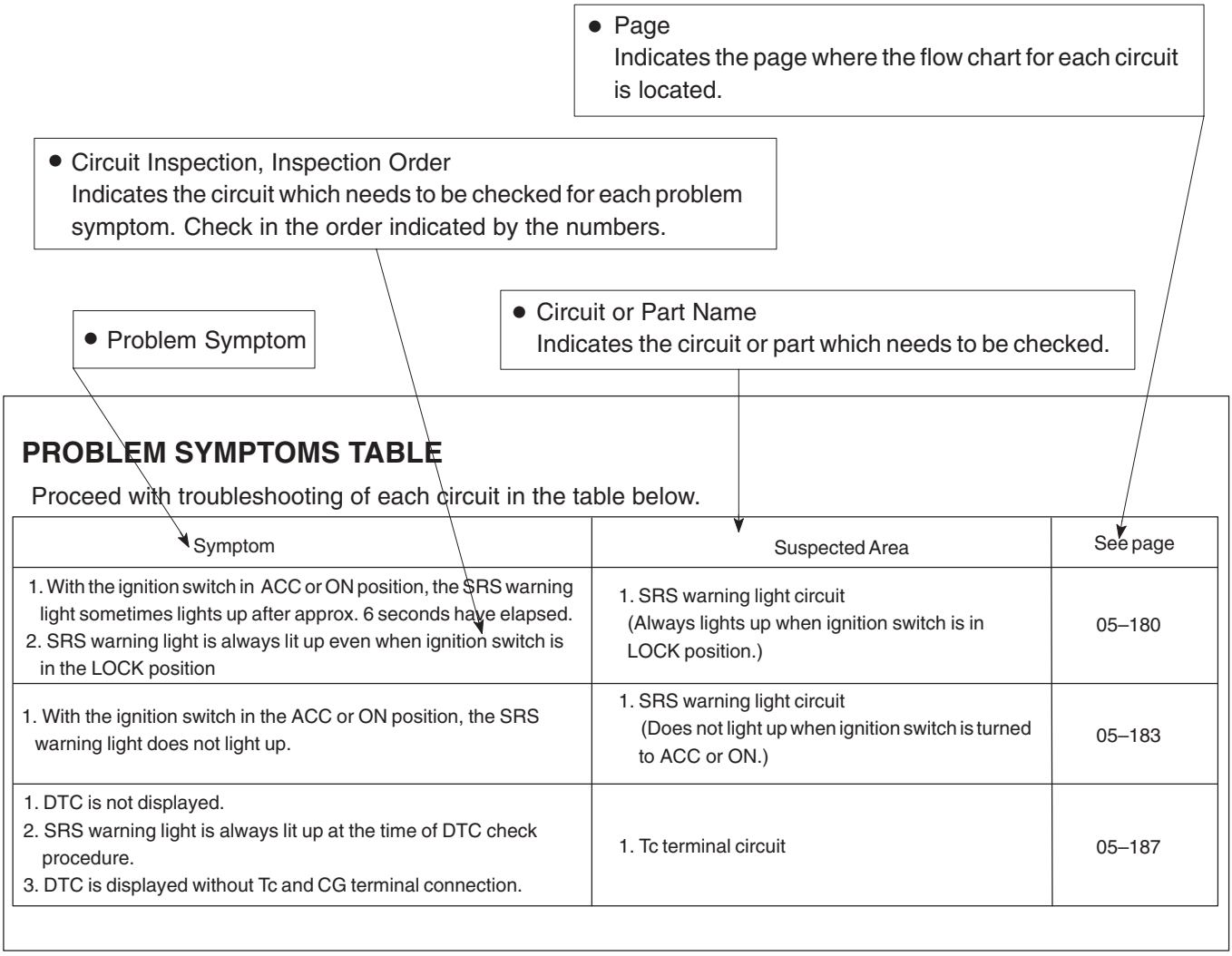

PROBLEM SYMPTOMS TABLE

Proceed with troubleshooting of each circuit in the table below.

Symptom	Suspected Area	See page
1. With the ignition switch in ACC or ON position, the SRS warning light sometimes lights up after approx. 6 seconds have elapsed. 2. SRS warning light is always lit up even when ignition switch is in the LOCK position	1. SRS warning light circuit (Always lights up when ignition switch is in LOCK position.)	05–180
1. With the ignition switch in the ACC or ON position, the SRS warning light does not light up.	1. SRS warning light circuit (Does not light up when ignition switch is turned to ACC or ON.)	05–183
1. DTC is not displayed. 2. SRS warning light is always lit up at the time of DTC check procedure. 3. DTC is displayed without Tc and CG terminal connection.	1. Tc terminal circuit	05–187

CIRCUIT INSPECTION

How to read and use each page is shown below.

● Circuit Description
The major role and, operation of the circuit and its component parts are explained.

● Diagnostic Trouble Code No. and Detection Item

● Indicates the diagnostic trouble codes, diagnostic trouble code settings and suspect areas for a problem.

● Inspection Procedures
Use the inspection procedures to determine if the circuit is normal or abnormal. If it is abnormal, use it to determine whether the problem is located in the sensors, actuators, wire harness or ECU.

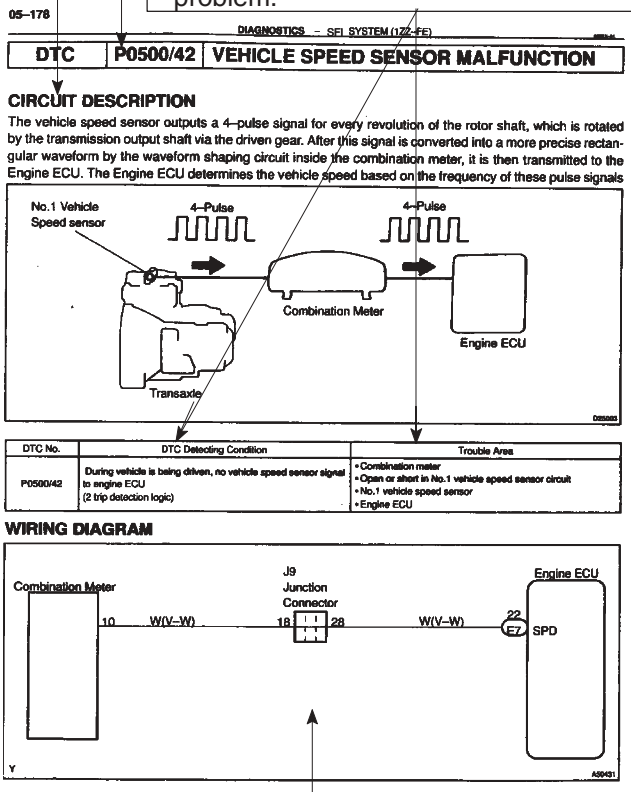

05–178

DIAGNOSTICS – SFI SYSTEM (1ZZ–FE)

DTC P0500/42 VEHICLE SPEED SENSOR MALFUNCTION

CIRCUIT DESCRIPTION

The vehicle speed sensor outputs a 4–pulse signal for every revolution of the rotor shaft, which is rotated by the transmission output shaft via the driven gear. After this signal is converted into a more precise rectangular waveform by the waveform shaping circuit inside the combination meter, it is then transmitted to the Engine ECU. The Engine ECU determines the vehicle speed based on the frequency of these pulse signals

DTC No.	DTC Detecting Condition	Trouble Area
P0500/42	During vehicle is being driven, no vehicle speed sensor signal to engine ECU (2 trip detection logic)	• Combination meter • Open or short in No.1 vehicle speed sensor circuit • No.1 vehicle speed sensor • Engine ECU

WIRING DIAGRAM

● Wiring Diagram
This shows a wiring diagram of the circuit.
Use this diagram together with ELECTRICAL WIRING DIAGRAM to thoroughly understand the circuit.
Wire colors are indicated by an alphabetical code.
B = Black, L = Blue, R = Red, BR = Brown,
LG = Light Green, V = Violet, G = Green,
O = Orange, W = White, GR = Gray, P = Pink,
Y = Yellow, SB = Sky Blue
The first letter indicates the basic wire color and the second letter indicates the color of the stripe.

05–179

DIAGNOSTICS – SFI SYSTEM (1ZZ–FE)

INSPECTION PROCEDURE

1 READ VALUE OF VEHICLE SPEED VALUE(SPEEDOMETER OPERATION)

(a) Select data monitor on the hand–held tester.
(b) Perform a test drive of the vehicle.
(c) Read the vehicle speed on the hand–held tester.
RESULT: The same as the speed displayed on the speed meter.

NG → **REPLACE COMBINATION METER ASSY**

OK

2 INSPECT ECU

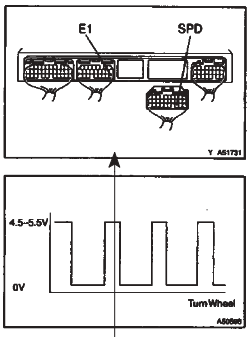

(a) Check the output waveform.
HINT:
Using the oscilloscope function of hand–held tester, it is possible to check the function between the engine ECU and the knock control sensor. The waveform shown in the illustration is an example without noise and chattering.
(1) Connect the hand–held tester between the terminals SPD of the engine ECU E7 connector and E1 of the engine ECU E8 connector.
(2) Select the oscilloscope function on the hand–held tester. (Refer to the hand–held tester's instruction book for operating instructions.)
RESULT: Voltage is intermittently generated

ITEM	CONTENTS
TERMINAL	SPD⇔E1
EQUIPMENT SET	5V/DIV, 20ms/DIV
CONDITION	Running at 20 km/h

HINT:
• The multitude gets shorter as the engine speed becomes faster.

OK → **CHECK AND REPLACE ECU**

NG

● Indicates the condition of the connector of the ECU during the check.

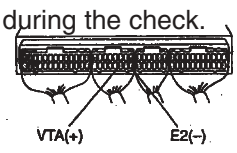

Connector being checked is connected.

Connections of tester are indicated by (+), (–) after terminals name.

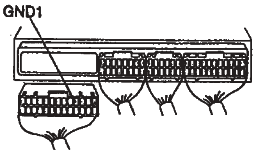

Connector being checked is disconnected.

For inspection of connector with body ground, there is nothing about the body ground written down.

D25842

010B8–13

ELECTRONIC CIRCUIT INSPECTION PROCEDURE

1. BASIC INSPECTION

(a) RESISTANCE MEASURING CONDITION OF ELECTRONIC PARTS

(1) Unless stated, all resistance is measured at an ambient temperature of 20°C (68°F). As the resistance may be outside the specifications if measured at high temperatures immediately after the vehicle has been running, measurements should be made when the engine has cooled down.

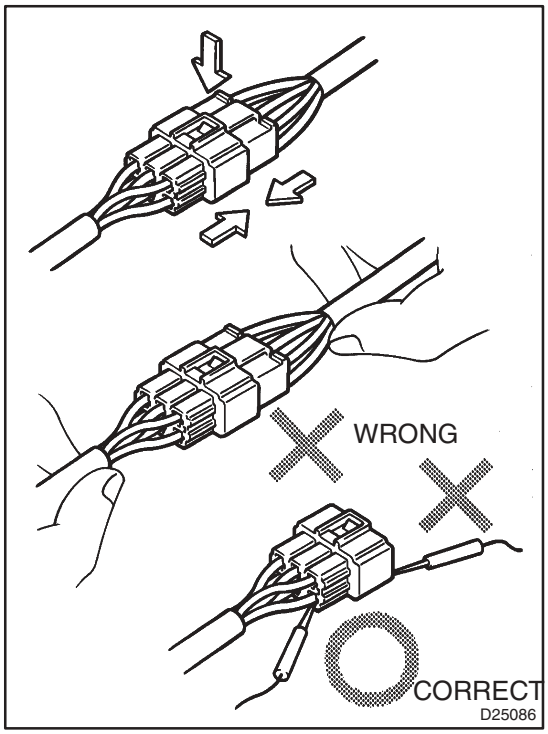

(b) HANDLING OF CONNECTOR

(1) When removing the connector with lock, press the connector in the direction of the engagement and remove the lock by lightly pressing the lock claw.

(2) When removing the connector, do not hold the harness, but hold the connector.

(3) Before connecting the connector, check that there is no deformation, damage or missing terminals.

(4) The connector with a lock should be securely connected until it makes a ”click” sound.

(5) When checking the connector with a Toyota electrical tester, check it from the backside (harness side) of the connector using a mini test lead.

NOTICE:

- **As a water proof connector cannot be checked from the backside, check by connecting the sub–harness.**
- **Do not damage the terminals by moving the inserted tester needle.**

(c) CONNECTOR CHECKING POINTS

(1) Checking when the connector is connected:
By holding the connector, check the inserted condition and locking efficiency (engaged condition).

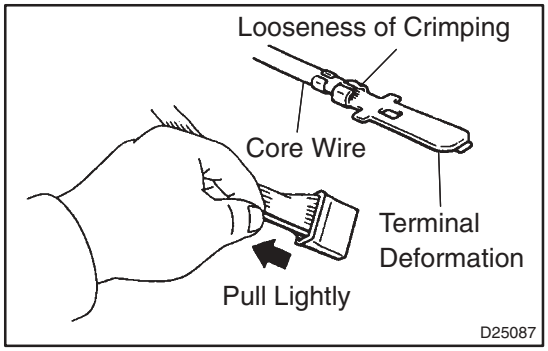

(2) Checking when the connector is removed:
Check by lightly pulling the wire harness (missing terminal, terminal crimping condition, core wire break).
Check visually for any rust, metal particles, water and bent terminals (rust, mixing of foreign object, terminal deformation).

NOTICE:

When testing a gold–plated female terminal, always use a gold–plated male terminal.

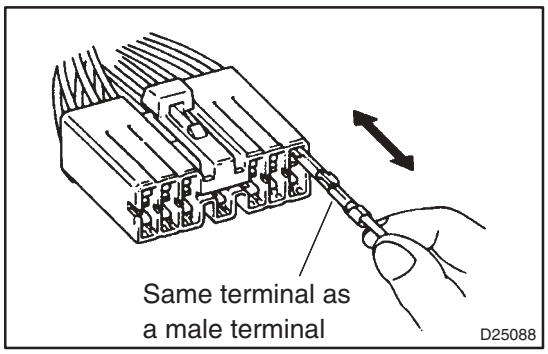

(3) Checking of the contact pressure of the terminal:
Prepare a spare male terminal.
Insert it into a female terminal, check the engaged condition and sliding resistance.

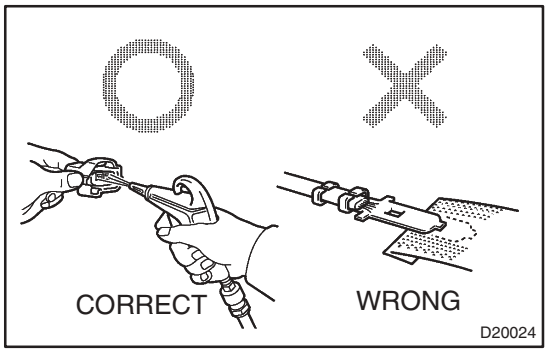

(d) REPAIR METHOD OF CONNECTOR TERMINAL

(1) If there is any dirt on the terminal, clean the contact point using an air gun or shop rag. Never polish the contact point using sandpaper as the platings may come off.

(2) In case of abnormal contact pressure, replace the female terminal. However, if a male terminal is gold–plated (gold color), use gold–plated female terminal and if it is silver–plated (silver color), use silver–plated female terminal.

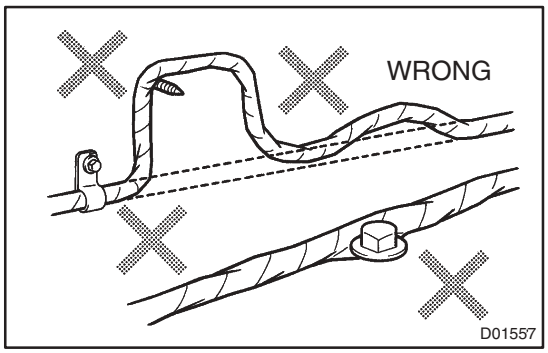

(e) HANDLING OF WIRE HARNESS

(1) When removing the wire harness, check the positioning of the wiring and clamping before starting work in order to be able to restore it correctly.

(2) Never twist, pull or loosen the wire harness more than necessary.

(3) Never allow the wire harness to come into contact with a high–temperature, rotating, moving, vibrating or sharp (edge of the panel, tip of the screw, etc.) part.

(4) When installing parts, never let the wire harness be interfered with.

(5) Never cut or break the cover of the wire harness. If one is cut or broken, replace it or securely repair it with electrical tape.

2. CHECK OPEN CIRCUIT

(a) For the open circuit in the wire harness in Fig. 1, perform a continuity check in step (b) or a voltage check in step (c) to locate the section.

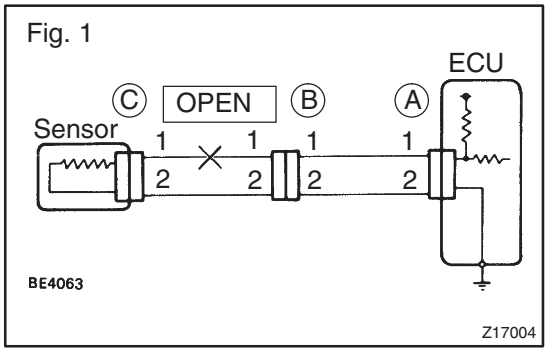

Fig. 2

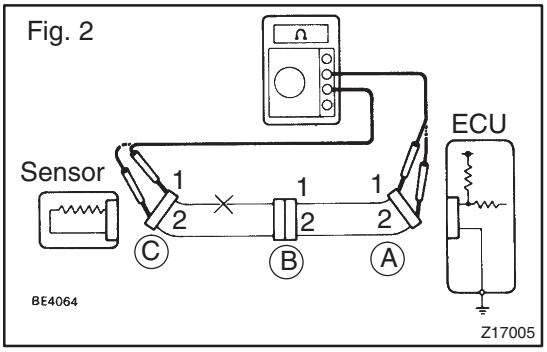

(b) Check the continuity.

(1) Disconnect connectors A and C and measure the resistance between them.

Resistance: 1 Ω or less

HINT:

Measure the resistance while lightly shaking the wire harness vertically and horizontally.

In the case of Fig. 2:

Between terminal 1 of connector A and terminal 1 of connector C → No continuity (open)

Between terminal 2 of connector A and terminal 2 of connector C → Continuity

Therefore, the cause is an open circuit between terminal 1 of connector A and terminal 1 of connector C.

Fig. 3

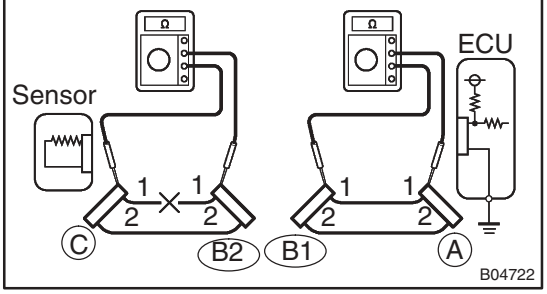

(2) Disconnect connector B and measure the resistance between the connectors.

In the case of Fig. 3:

Between terminal 1 of connector A and terminal 1 of connector B1 → Continuity

Between terminal 1 of connector B2 and terminal 1 of connector C → No continuity (open)

Therefore, the cause is an open circuit between terminal 1 of connector B2 and terminal 1 of connector C.

Fig. 4

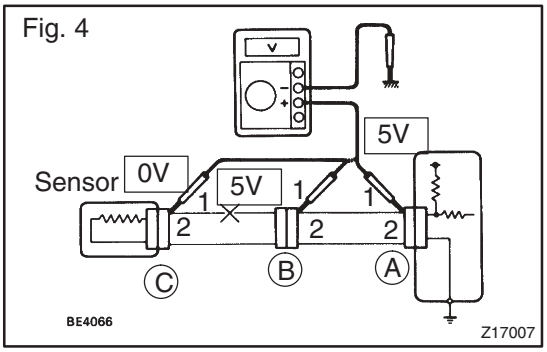

(c) Check the voltage.

(1) In a circuit in which voltage is applied (to the ECU connector terminal), an open circuit can be checked by conducting a voltage check.

As shown in Fig. 4, with each connector still connected, measure the voltage between the body ground and terminal 1 of connector A at the ECU 5 V output terminal, terminal 1 of connector B, and terminal 1 of connector C, in that order.

(2) If the results are:

5 V: Between terminal 1 of connector A and body ground

5 V: Between terminal 1 of connector B and body ground

0 V: Between terminal 1 of connector C and body ground

Therefore, the cause is an open circuit in the wire harness between terminal 1 of connector B and terminal 1 of connector C.

Fig. 5

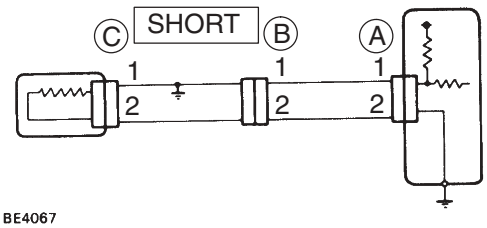

3. CHECK SHORT CIRCUIT

(a) If the wire harness is ground shorted as shown in Fig. 5, locate the section by conducting a continuity check with the body ground in step (b).

Fig. 6

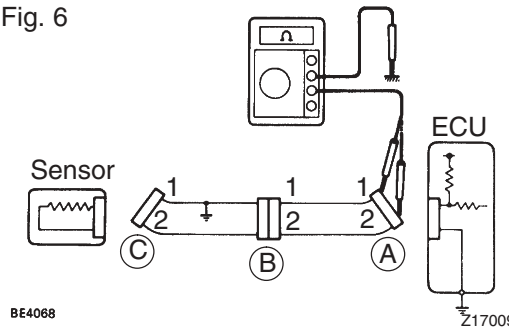

(b) Check the continuity with the body ground.

(1) Disconnect connectors A and C and measure the resistance between terminals 1 and 2 of connector A and the body ground.

Resistance: 10 kΩ or higher

HINT:

Measure the resistance while lightly shaking the wire harness vertically and horizontally.

In the case of Fig. 6:

Between terminal 1 of connector A and body ground → Continuity (short)

Between terminal 2 of connector A and body ground → No continuity

Therefore, the cause is a short circuit between terminal 1 of connector A and terminal 1 of connector C.

Fig. 7

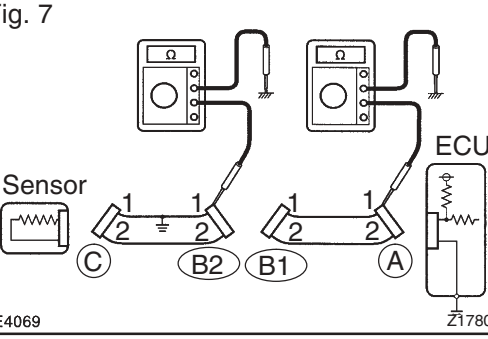

(2) Disconnect connector B and measure the resistance between terminal 1 of connector A and the body ground, and terminal 1 of connector B2 and the body ground.

In the case of Fig. 7:

Between terminal 1 of connector A and body ground → No continuity

Between terminal 1 of connector B2 and body ground → Continuity (short)

Therefore, the cause is a short circuit between terminal 1 of connector B2 and terminal 1 of connector C.

4. CHECK AND REPLACE ECU

NOTICE:

- **Start an inspection of the connector from the backside of the connector on the wire harness side with the connector connected to the ECU.**
- **When no measurement condition is specified, perform the inspection with the engine stopped and also the ignition switch ON.**

(a) First check the ECU ground circuit. If it is faulty, repair it. If it is normal, the ECU could be faulty. In this case, replace the ECU with one that functions normally and check if the symptoms appear.

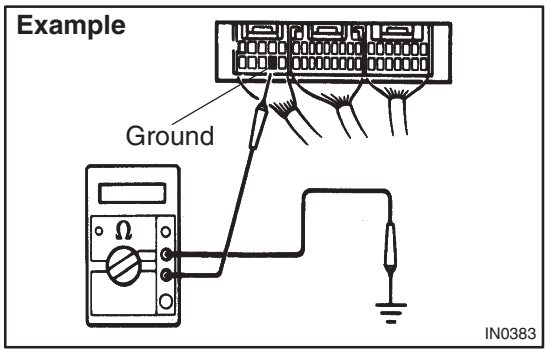

(1) Measure the resistance between the ECU ground terminal and body ground.

Resistance: 1 Ω or less

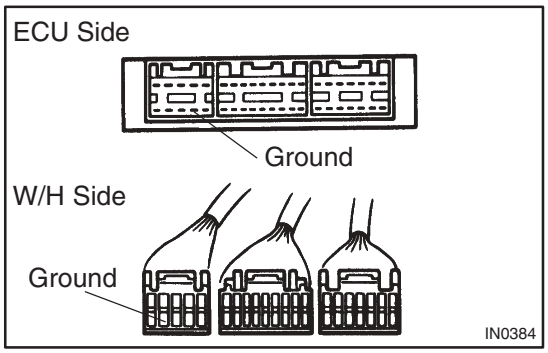

(2) Disconnect the ECU connector, check the ground terminals on the ECU side and wire harness side for bends and check the contact pressure.

TERMS

ABBREVIATIONS USED IN THIS MANUAL

010B9–20

Abbreviations	Meaning
ABS	Anti–Lock Brake System
A/C	Air Conditioner
AC	Alternating Current
ACC	Accessory
ACIS	Acoustic Control Induction System
ACSD	Automatic Cold Start Device
A.D.D.	Automatic Disconnecting Differential
A/F	Air–Fuel Ratio
AHC	Active Height Control Suspension
ALR	Automatic Locking Retractor
ALT	Alternator
AMP	Amplifier
ANT	Antenna
Approx.	Approximately
ASSY	Assembly
A/T, ATM	Automatic Transmission (Transaxle)
ATF	Automatic Transmission Fluid
AUTO	Automatic
AUX	Auxiliary
AVG	Average
AVS	Adaptive Variable Suspension
B+	Battery Voltage
BA	Brake Assist
BACS	Boost Altitude Compensation System
BAT	Battery
BDC	Bottom Dead Center
B/L	Bi–Level
B/S	Bore–Stroke Ratio
BTDC	Before Top Dead Center
BVSV	Bimetallic Vacuum Switching Valve
CAN	Controller Area Network
CB	Circuit Breaker
CCo	Catalytic Converter For Oxidation
CD	Compact Disc
CF	Cornering Force
CG	Center Of Gravity
CH	Channel
CKD	Complete Knock Down
COMB.	Combination
CPE	Coupe
CPS	Combustion Pressure Sensor
CPU	Central Processing Unit
CRS	Child Restraint System
CTR	Center
C/V	Check Valve
CV	Control Valve
CW	Curb Weight
DC	Direct Current

Abbreviations	Meaning
DEF	Defogger
DFL	Deflector
DIFF.	Differential
DIFF. LOCK	Differential Lock
D/INJ	Direct Injection
DLC	Data Link Connector
DLI	Distributorless Ignition
DOHC	Double Overhead Camshaft
DP	Dash Pot
DS	Dead Soak
DSP	Digital Signal Processor
DTC	Diagnostic Trouble Code
DVD	Digital Versatile Disc
EBD	Electric Brake Force Distribution
ECAM	Engine Control And Measurement System
ECD	Electronic Controlled Diesel
ECDY	Eddy Current Dynamometer
ECT	Electronic Control Transmission
ECU	Electronic Control Unit
ED	Electro–DepositedCoating
EDU	Electronic Driving Unit
EDIC	Electric Diesel Injection Control
EFI	Electronic Fuel Injection
E/G	Engine
EGR	Exhaust Gas Recirculation
EGR–VM	EGR–Vacuum Modulator
ELR	Emergency Locking Retractor
EMPS	Electric Motor Power Steering
ENG	Engine
ESA	Electronic Spark Advance
ETCS–i	Electronic Throttle Control System–intelligent
EVAP	Evaporative Emission Control
EVP	Evaporator
E–VRV	Electric Vacuum Regulating Valve
EX	Exhaust
FE	Fuel Economy
FF	Front–EngineFront–Wheel–Drive
F/G	Fuel Gauge
FIPG	Formed In Place Gasket
FL	Fusible Link
F/P	Fuel Pump
FPU	Fuel Pressure Up
Fr	Front
F/W	Flywheel
FW/D	Flywheel Damper
FWD	Front–Wheel–Drive
GAS	Gasoline
GND	Ground
GPS	Global Positioning System
HAC	High Altitude Compensator
H/B	Hatchback

Abbreviations	Meaning
H–FUSE	High Current Fuse
HI	High
HID	High Intensity Discharge (Head Lamp)
HSG	Housing
HT	Hard Top
HWS	Heated Windshield System
IC	Integrated Circuit
IDI	Indirect Diesel Injection
IFS	Independent Front Suspension
IG	Ignition
IIA	Integrated Ignition Assembly
IN	Intake (Manifold, Valve)
INT	Intermittent
I/P	Instrument Panel
IRS	Independent Rear Suspension
ISC	Idle Speed Control
J/B	Junction Block
J/C	Junction Connector
KD	Kick–Down
LAN	Local Area Network
LB	Liftback
LCD	Liquid Crystal Display
LED	Light Emitting Diode
LH	Left–Hand
LHD	Left–Hand Drive
L/H/W	Length, Height, Width
LLC	Long–Life Coolant
LNG	Liquified Natural Gas
LO	Low
LPG	Liquified Petroleum Gas
LSD	Limited Slip Differential
LSP & PV	Load Sensing Proportioning And Bypass Valve
LSPV	Load Sensing Proportioning Valve
MAP	Manifold Absolute Pressure
MAX.	Maximum
MIC	Microphone
MIL	Malfunction Indicator Lamp
MIN.	Minimum
MG1	Motor Generator No.1
MG2	Motor Generator No.2
MP	Multipurpose
MPI	Multipoint Electronic Injection
MPX	Multiplex Communication System
M/T, MTM	Manual Transmission (Transaxle)
MT	Mount
MTG	Mounting
N	Neutral
NA	Natural Aspiration
No.	Number
O2S	Oxygen Sensor
O/D	Overdrive

Abbreviations	Meaning
OEM	Original Equipment Manufacturing
OHC	Overhead Camshaft
OHV	Overhead Valve
OPT	Option
ORVR	On–board Refilling Vapor Recovery
O/S	Oversize
P & BV	Proportioning And Bypass Valve
PCS	Power Control System
PCV	Positive Crankcase Ventilation
PKB	Parking Brake
PPS	Progressive Power Steering
PTC	Positive Temperature Coefficient
PS	Power Steering
PTO	Power Take–Off
P/W	Power Window
R & P	Rack And Pinion
RAM	Random Access Memory
R/B	Relay Block
RBS	Recirculating Ball Type Steering
R/F	Reinforcement
RFS	Rigid Front Suspension
RH	Right–Hand
RHD	Right–Hand Drive
RLY	Relay
ROM	Read Only Memory
Rr	Rear
RRS	Rigid Rear Suspension
RWD	Rear–Wheel Drive
SDN	Sedan
SEN	Sensor
SICS	Starting Injection Control System
SOC	State Of Charge
SOHC	Single Overhead Camshaft
SPEC	Specification
SPI	Single Point Injection
SRS	Supplemental Restraint System
SSM	Special Service Materials
SST	Special Service Tools
STD	Standard
STJ	Cold–Start Fuel Injection
SW	Switch
SYS	System
T/A	Transaxle
TACH	Tachometer
TBI	Throttle Body Electronic Fuel Injection
TC	Turbocharger
TCCS	TOYOTA Computer–Controlled System
TCV	Timing Control Valve
TDC	Top Dead Center
TEMP.	Temperature
TEMS	TOYOTA Electronic Modulated Suspension

Abbreviations	Meaning
TFT	Toyota Free–Tronic
TIS	Total Information System For Vehicle Development
T/M	Transmission
TMC	TOYOTA Motor Corporation
TMMK	TOYOTA Motor Manufacturing Kentucky, Inc.
TRC	Traction Control System
TURBO	Turbocharge
TWC	Three–Way Catalyst
U/D	Underdrive
U/S	Undersize
VCV	Vacuum Control Valve
VENT	Ventilator
VIN	Vehicle Identification Number
VPS	Variable Power Steering
VSC	Vehicle Stability Control
VSV	Vacuum Switching Valve
VTV	Vacuum Transmitting Valve
VVT–i	Variable Valve Timing–intelligent
w/	With
WGN	Wagon
W/H	Wire Harness
w/o	Without
WU–TWC	Warm Up Three–way Catalytic Converter
WU–OC	Warm Up Oxidation Catalytic Converter
1st	First
2nd	Second
2WD	Two Wheel Drive Vehicle (4 x 2)
3rd	Third
4th	Fourth
4WD	Four Wheel Drive Vehicle (4 x 4)
4WS	Four Wheel Steering System
5th	Fifth

010BA–21

GLOSSARY OF SAE AND TOYOTA TERMS

This glossary lists all SAE–J1930 terms and abbreviations used in this manual in compliance with SAE recommendations, as well as their TOYOTA equivalents.

SAE ABBREVIATIONS	SAE TERMS	TOYOTA TERMS ( )—ABBREVIATIONS
A/C	Air Conditioning	Air Conditioner
ACL	Air Cleaner	Air Cleaner, A/CL
AIR	Secondary Air Injection	Air Injection (AI)
AP	Accelerator Pedal	–
B+	Battery Positive Voltage	+B, Battery Voltage
BARO	Barometric Pressure	HAC
CAC	Charge Air Cooler	Intercooler
CARB	Carburetor	Carburetor
CFI	Continuous Fuel Injection	–
CKP	Crankshaft Position	Crank Angle
CL	Closed Loop	Closed Loop
CMP	Camshaft Position	Cam Angle
CPP	Clutch Pedal Position	–
CTOX	Continuous Trap Oxidizer	–
CTP	Closed Throttle Position	LL ON, Idle ON
DFI	Direct Fuel Injection (Diesel)	Direct Injection (DI/INJ)
DI	Distributor Ignition	–
DLC1 DLC2 DLC3	Data Link Connector 1 Data Link Connector 2 Data Link Connector 3	1: Check Connector 2: Total Diagnosis Communication Link (TDCL) 3: OBD II Diagnostic Connector
DTC	Diagnostic Trouble Code	Diagnostic Trouble Code
DTM	Diagnostic Test Mode	–
ECL	Engine Control Level	–
ECM	Engine Control Module	Engine ECU (Electronic Control Unit)
ECT	Engine Coolant Temperature	Coolant Temperature, Water Temperature (THW)
EEPROM	Electrically Erasable Programmable Read Only Memory	Electrically Erasable Programmable Read Only Memory (EEPROM), Erasable Programmable Read Only Memory (EPROM)
EFE	Early Fuel Evaporation	Cold Mixture Heater (CMH), Heat Control Valve (HCV)
EGR	Exhaust Gas Recirculation	Exhaust Gas Recirculation (EGR)
EI	Electronic Ignition	Distributorless Ignition (DLI)
EM	Engine Modification	Engine Modification (EM)
EPROM	Erasable Programmable Read Only Memory	Programmable Read Only Memory (PROM)
EVAP	Evaporative Emission	Evaporative Emission Control (EVAP)
FC	Fan Control	–
FEEPROM	Flash Electrically Erasable Programmable Read Only Memory	–
FEPROM	Flash Erasable Programmable Read Only Memory	–
FF	Flexible Fuel	–
FP	Fuel Pump	Fuel Pump
GEN	Generator	Alternator
GND	Ground	Ground (GND)

HO2S	Heated Oxygen Sensor	Heated Oxygen Sensor (HO_2S)
IAC	Idle Air Control	Idle Speed Control (ISC)
IAT	Intake Air Temperature	Intake or Inlet Air Temperature
ICM	Ignition Control Module	–
IFI	Indirect Fuel Injection	Indirect Injection (IDL)
IFS	Inertia Fuel–Shutoff	–
ISC	Idle Speed Control	–
KS	Knock Sensor	Knock Sensor
MAF	Mass Air Flow	Air Flow Meter
MAP	Manifold Absolute Pressure	Manifold Pressure Intake Vacuum
MC	Mixture Control	Electric Bleed Air Control Valve (EBCV) Mixture Control Valve (MCV) Electric Air Control Valve (EACV)
MDP	Manifold Differential Pressure	–
MFI	Multiport Fuel Injection	Electronic Fuel Injection (EFI)
MIL	Malfunction Indicator Lamp	Check Engine Lamp
MST	Manifold Surface Temperature	–
MVZ	Manifold Vacuum Zone	–
NVRAM	Non–Volatile Random Access Memory	–
O2S	Oxygen Sensor	Oxygen Sensor, O_2 Sensor (O_2S)
OBD	On–Board Diagnostic	On–Board Diagnostic System (OBD)
OC	Oxidation Catalytic Converter	Oxidation Catalyst Convert (OC) Catalytic Converter for Oxidation (CCo)
OP	Open Loop	Open Loop
PAIR	Pulsed Secondary Air Injection	Air Suction (AS)
PCM	Powertrain Control Module	–
PNP	Park/Neutral Position	–
PROM	Programmable Read Only Memory	–
PSP	Power Steering Pressure	–
PTOX	Periodic Trap Oxidizer	Diesel Particulate Filter (DPF) Diesel Particulate Trap (DPT)
RAM	Random Access Memory	Random Access Memory (RAM)
RM	Relay Module	–
ROM	Read Only Memory	Read Only Memory (ROM)
RPM	Engine Speed	Engine Speed
SC	Supercharger	Supercharger
SCB	Supercharger Bypass	E–ABV
SFI	Sequential Multiport Fuel Injection	Electronic Fuel Injection (EFI), Sequential Injection
SPL	Smoke Puff Limiter	–
SRI	Service Reminder Indicator	–
SRT	System Readiness Test	–
ST	Scan Tool	–
TB	Throttle Body	Throttle Body
TBI	Throttle Body Fuel Injection	Single Point Injection Central Fuel Injection (Ci)
TC	Turbocharger	Turbocharger
TCC	Torque Converter Clutch	Torque Converter

TCM	Transmission Control Module	Transmission ECU, ECT ECU
TP	Throttle Position	Throttle Position
TR	Transmission Range	–
TVV	Thermal Vacuum Valve	Bimetallic Vacuum Switching Valve (BVSV) Thermostatic Vacuum Switching Valve (TVSV)
TWC	Three–Way Catalytic Converter	Three–Way Catalytic (TWC) Manifold Converter CC_{RO}
TWC+OC	Three–Way + Oxidation Catalytic Converter	CC_R + CCo
VAF	Volume Air Flow	Air Flow Meter
VR	Voltage Regulator	Voltage Regulator
VSS	Vehicle Speed Sensor	Vehicle Speed Sensor
WOT	Wide Open Throttle	Full Throttle
WU–OC	Warm Up Oxidation Catalytic Converter	–
WU–TWC	Warm Up Three–Way Catalytic Converter	–
3GR	Third Gear	–
4GR	Fourth Gear	–

DIAGNOSTICS

PREPARATION

023WL–01

Recomended Tools

	09082–00040	TOYOTA Electrical Tester	SFI SYSTEM(1ZZ–FE/3ZZ–FE)(From February, 2004) ELECTRONIC CONTROLLED AUTOMATIC TRANSAXLE [ECT](U341E) (From February, 2004)
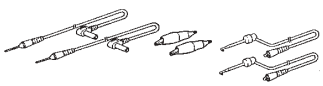	(09083–00150)	Test Lead Set	SFI SYSTEM(1ZZ–FE/3ZZ–FE)(From February, 2004) ELECTRONIC CONTROLLED AUTOMATIC TRANSAXLE [ECT](U341E) (From February, 2004)

ENGINE CONTROL SYSTEM

023VH–01

PREPARATION

Equipment

Ohmmeter	
Radiator cap tester	
Torque wrench	

ENGINE MECHANICAL

PREPARATION

023VZ–01

SST

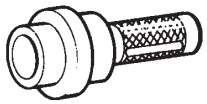	09223–22010	Crankshaft Front Oil Seal Replacer	CYLINDER HEAD GASKET(1ZZ–FE/3ZZ–FE)(From February, 2004)
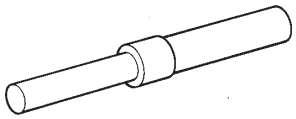	09301–00210	Clutch Guide Tool	PARTIAL ENGINE ASSY(1ZZ–FE/3ZZ–FE)(From February, 2004)
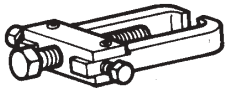	09628–62011	Boll Joint Puller	PARTIAL ENGINE ASSY(1ZZ–FE/3ZZ–FE)(From February, 2004)
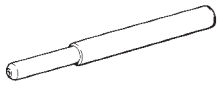	09670–00010	Front Crossmember Guide Tool	PARTIAL ENGINE ASSY(1ZZ–FE/3ZZ–FE)(From February, 2004)
	09817–33190	Sensor Socket Wrench	PARTIAL ENGINE ASSY(1ZZ–FE/3ZZ–FE)(From February, 2004)
	09843–18040	Diagnosis Check Wire No.2	PARTIAL ENGINE ASSY(1ZZ–FE/3ZZ–FE)(From February, 2004) CYLINDER HEAD GASKET(1ZZ–FE/3ZZ–FE)(From February, 2004)
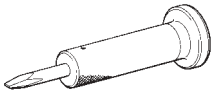	09930–00010	Drive Shaft Nut Chisel	PARTIAL ENGINE ASSY(1ZZ–FE/3ZZ–FE)(From February, 2004)
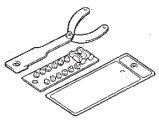	09960–10010	Variable Pin Wrench Set	PARTIAL ENGINE ASSY(1ZZ–FE/3ZZ–FE)(From February, 2004) CYLINDER HEAD GASKET(1ZZ–FE/3ZZ–FE)(From February, 2004)
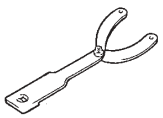	(09962–01000)	Variable Pin Wrench Arm Assy	PARTIAL ENGINE ASSY(1ZZ–FE/3ZZ–FE)(From February, 2004) CYLINDER HEAD GASKET(1ZZ–FE/3ZZ–FE)(From February, 2004)
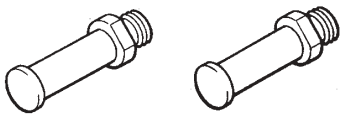	(09963–01000)	Pin 10	PARTIAL ENGINE ASSY(1ZZ–FE/3ZZ–FE)(From February, 2004) CYLINDER HEAD GASKET(1ZZ–FE/3ZZ–FE)(From February, 2004)
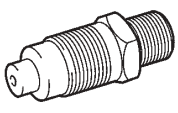	09992–00500	Compression Gauge Attachment	CYLINDER HEAD GASKET(1ZZ–FE/3ZZ–FE)(From February, 2004)

Recomended Tools

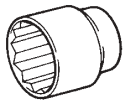	09011–12301	Socket Wrench 30 mm	PARTIAL ENGINE ASSY(1ZZ–FE/3ZZ–FE)(From February, 2004)
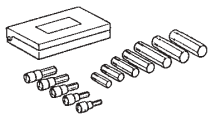	09040–00011	Hexagon Wrench Set	PARTIAL ENGINE ASSY(1ZZ–FE/3ZZ–FE)(From February, 2004)
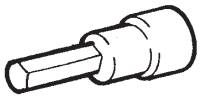	(09043–20050)	Socket Hexagon Wrench 5	PARTIAL ENGINE ASSY(1ZZ–FE/3ZZ–FE)(From February, 2004)
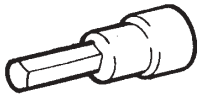	(09043–20100)	Socket Hexagon Wrench 10	PARTIAL ENGINE ASSY(1ZZ–FE/3ZZ–FE)(From February, 2004)
	09090–04020	Engine Sling Device	PARTIAL ENGINE ASSY(1ZZ–FE/3ZZ–FE)(From February, 2004)

SSM

	08826–00080	Seal Packing Black or equivalent (FIPG)	CYLINDER HEAD GASKET(1ZZ–FE/3ZZ–FE)(From February, 2004)
	08833–00070	”Adhesive 1324,” THREE BOND 1324 or equivalent	PARTIAL ENGINE ASSY(1ZZ–FE/3ZZ–FE)(From February, 2004)

Equipment

Feeler gauge	
CO/HC meter	
Dial indicator	
Radiator cap tester	
Straight edge	
Torque wrench	
Tire pressure gauge	
Alignment tester	
Toe–in gauge	
Deep socket wrench 24 mm	
Wooden block	

COOLING

PREPARATION

023W0–01

Equipment

Radiator cap tester	
Thermometer	
Torque wrench	
Slide calipers	
Heater	

Coolant

Item		Capacity	Classification
Engine coolant			
Left–hand drive vehicles	M/T	5.8 liters (6.1 US qts, 5.1 Imp. qts)	”Toyota Super Long Life Coolant ”or similar high quality ethylene glycol based non–silicate, non–amine, non–nitrite, and non–borate coolant with long–life hybrid organic acid technology
	A/T	5.7 liters (6.0 US qts, 5.0 Imp. qts)	
Right–hand drive vehicles	M/T	5.9 liters (6.2 US qts, 5.2 Imp. qts)	
	A/T	5.8 liters (6.1 US qts, 5.1 Imp. qts)	

SUPPLEMENTAL RESTRAINT SYSTEM

023SU–01

PREPARATION

Equipment

Torque wrench	

INSTRUMENT PANEL/METER

023VU–01

PREPARATION

SST

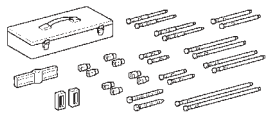	09950–50013	Puller C Set	INSTRUMENT PANEL SUB–ASSY LOWER(From February, 2004)
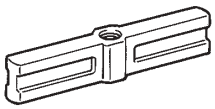	(09951–05010)	Hanger 150	INSTRUMENT PANEL SUB–ASSY LOWER(From February, 2004)
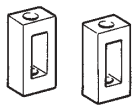	(09952–05010)	Slide Arm	INSTRUMENT PANEL SUB–ASSY LOWER(From February, 2004)
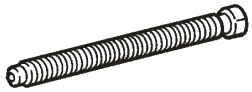	(09953–05020)	Center Bolt 150	INSTRUMENT PANEL SUB–ASSY LOWER(From February, 2004)
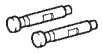	(09954–05021)	Claw No.2	INSTRUMENT PANEL SUB–ASSY LOWER(From February, 2004)

Recomended Tools

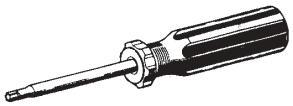	09041–00030	Torx Driver T30	INSTRUMENT PANEL SUB–ASSY LOWER(From February, 2004)
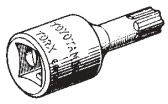	09042–00010	Torx Socket T30	INSTRUMENT PANEL SUB–ASSY LOWER(From February, 2004)
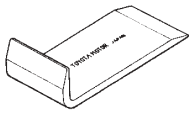	09070–20010	Moulding Remover	INSTRUMENT PANEL SUB–ASSY LOWER(From February, 2004)

Equipment

Torque wrench	
Tape	To avoid surface damage

STANDARD BOLT

HOW TO DETERMINE BOLT STRENGTH

030LK–09

Bolt Type				Class
Hexagon Head Bolt		Stud Bolt	Weld Bolt	
Normal Recess Bolt	Deep Recess Bolt			
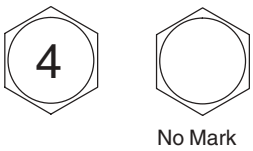 No Mark	 No Mark	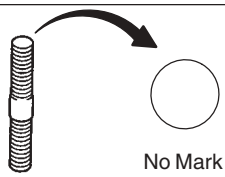 No Mark	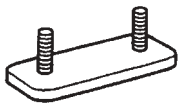	4T
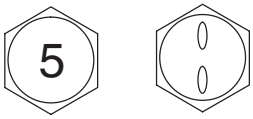				5T
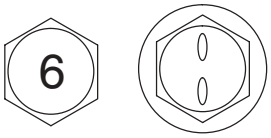 w/ Washer	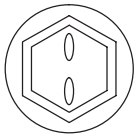 w/ Washer			6T
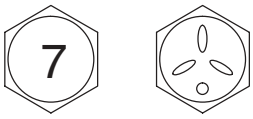	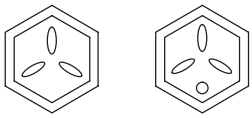			7T
				8T
				9T
	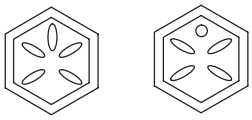			10T
	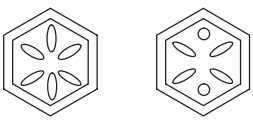			11T

B06431

030LL–09

SPECIFIED TORQUE FOR STANDARD BOLTS

Class	Diameter mm	Pitch mm	Specified torque					
			Hexagon head bolt			Hexagon flange bolt		
			N·m	kgf·cm	ft·lbf	N·m	kgf·cm	ft·lbf
4T	6	1	5	55	48 in.·lbf	6	60	52 in.·lbf
	8	1.25	12.5	130	9	14	145	10
	10	1.25	26	260	19	29	290	21
	12	1.25	47	480	35	53	540	39
	14	1.5	74	760	55	84	850	61
	16	1.5	115	1,150	83	–	–	–
5T	6	1	6.5	65	56 in.·lbf	7.5	75	65 in.·lbf
	8	1.25	15.5	160	12	17.5	175	13
	10	1.25	32	330	24	36	360	26
	12	1.25	59	600	43	65	670	48
	14	1.5	91	930	67	100	1,050	76
	16	1.5	140	1,400	101	–	–	–
6T	6	1	8	80	69 in.·lbf	9	90	78 in.·lbf
	8	1.25	19	195	14	21	210	15
	10	1.25	39	400	29	44	440	32
	12	1.25	71	730	53	80	810	59
	14	1.5	110	1,100	80	125	1,250	90
	16	1.5	170	1,750	127	–	–	–
7T	6	1	10.5	110	8	12	120	9
	8	1.25	25	260	19	28	290	21
	10	1.25	52	530	38	58	590	43
	12	1.25	95	970	70	105	1,050	76
	14	1.5	145	1,500	108	165	1,700	123
	16	1.5	230	2,300	166	–	–	–
8T	8	1.25	29	300	22	33	330	24
	10	1.25	61	620	45	68	690	50
	12	1.25	110	1,100	80	120	1,250	90
9T	8	1.25	34	340	25	37	380	27
	10	1.25	70	710	51	78	790	57
	12	1.25	125	1,300	94	140	1,450	105
10T	8	1.25	38	390	28	42	430	31
	10	1.25	78	800	58	88	890	64
	12	1.25	140	1,450	105	155	1,600	116
11T	8	1.25	42	430	31	47	480	35
	10	1.25	87	890	64	97	990	72
	12	1.25	155	1,600	116	175	1,800	130

030LM–09

HOW TO DETERMINE NUT STRENGTH

Nut Type			Class
Present Standard Hexagon Nut	Old Standard Hexagon Nut		
	Cold Forging Nut	Cutting Processed Nut	
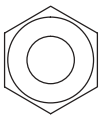 No Mark			4N
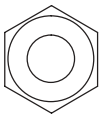 No Mark (w/ Washer)	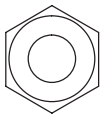 No Mark (w/ Washer)	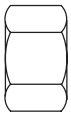 No Mark	5N (4T)
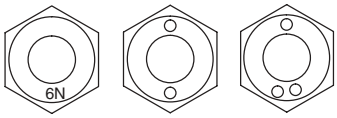 6N			6N
	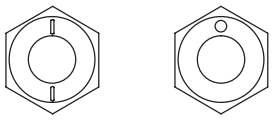	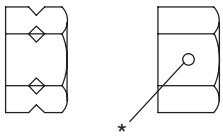 *	7N (5T)
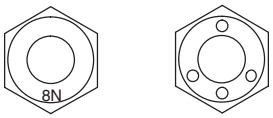 8N			8N
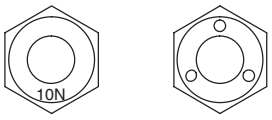 10N	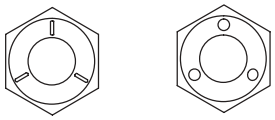	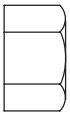 No Mark	10N (7T)
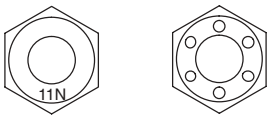 11N			11N
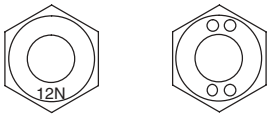 12N			12N

*: Nut with 1 or more marks on one side surface of the nut.

B06432

HINT:

Use the nut with the same number of the nut strength classification or the greater than the bolt strength classification number when tightening parts with a bolt and nut.

Example: Bolt = 4T

Nut = 4N or more

ENGINE CONTROL SYSTEM

SERVICE DATA

031TB–02

Throttle body assy		
Resistance	1 (M–) – 2 (M+)	0.3 to 100 Ω at 20°C (68°F)
	3 (E2) – 5 (VC)	1.2 to 3.2 kΩ at 20°C (68°F)
Accelerator pedal assy (LHD)		
Resistance	3 (EP1) – 6 (VCP1)	1.5 to 6.0 kΩ
	1 (EP2) – 4 (VCP2)	1.5 to 6.0 kΩ
Accelerator pedal assy (RHD)		
Resistance	1 (EP1) – 4 (VCP1)	1.5 to 6.0 kΩ
	3 (EP2) – 6 (VCP2)	1.5 to 6.0 kΩ

031TC–02

TORQUE SPECIFICATION

Part Tightened	N·m	kgf·cm	ft·lbf
Throttle body assy x Intake manifold	9.0	90	80 in.·lbf
Air cleaner hose x Throttle body assy	1.5	15	13 in.·lbf
Cylinder head cover No. 2 x Cylinder head sub–assy	7.0	71	62 in.·lbf
Accelerator pedal assy x Body	5.4	55	48 in.·lbf

ENGINE MECHANICAL

SERVICE DATA

031H1–06

Cylinder head set bolt Length	Standard	146.8 to 148.2 mm (5.780 to 5.835 in.)
	Maximum	148.5 mm (5.846 in.)

031H2–06

TORQUE SPECIFICATION

Part Tightened		N·m	kgf·cm	ft·lbf
Camshaft bearing cap No. 3 x Cylinder head sub–assy		13	133	10
Camshaft bearing cap No. 1 x Cylinder head sub–assy		23	235	17
Chain tensioner assy No. 1 x Timing chain or belt cover sub–assy		9.0	92	80 in.·lbf
V–ribbed belt tensioner assy x Cylinder block sub–assy		69	704	51
V–ribbed belt tensioner assy x Cylinder head sub–assy		29	296	21
Engine mounting insulator RH x Body		52	530	38
Engine mounting insulator RH x Transverse engine engine mounting bracket		52	530	38
Cylinder head cover sub–assy x Cylinder head sub–assy	A B	11 9.0	112 92	8 80 in.·lbf
Cylinder head cover sub–assy x Timing chain or belt cover sub–assy		11	112	8
Ignition coil assy x Cylinder head cover sub–assy		9.0	92	80 in.·lbf
Engine wire x Cylinder head cover sub–assy		9.0	92	80 in.·lbf
Cylinder head cover No. 2 x Cylinder head cover sub–assy		7.0	71	62 in.·lbf
Engine hanger x Cylinder head sub–assy		38	387	28
Radio setting condenser x Cylinder head sub–assy		10	102	7
Engine coolant temperature sensor x Cylinder head sub–assy		20	204	15
Exhaust manifold x Cylinder head sub–assy		37	377	27
Exhaust manifold heat insulator No. 1 x Exhaust manifold	Bolt Nut	18 12	184 122	13 9
Manifold stay No. 2 x Exhaust manifold		49	500	36
Manifold stay No. 2 x Cylinder block sub–assy		49	500	36
Manifold stay x Exhaust manifold	A	49	500	36
Manifold stay x Cylinder block sub–assy	B	37	377	27
Transverse engine engine mounting bracket x Timing chain or belt cover sub–assy		47	479	35
V–ribbed idler assy No.1 x Cylinder block sub–assy		39	400	29
Knock sensor x Cylinder block sub–assy		20	204	15
Crankshaft position sensor x Timing chain or belt cover		9.0	92	80 in.·lbf
Camshaft position sensor x Cylinder head sub–assy		9.0	92	80 in.·lbf
Water inlet x Cylinder block sub–assy		11	112	8
Water by–pass pipe No. 1 x Cylinder block sub–assy		9.0	92	80 in.·lbf
Water by–pass pipe No. 1 x Cylinder head sub–assy		9.0	92	80 in.·lbf
Oil level gage guide x Water by–pass pipe No. 1		13	133	10
Intake manifold x Cylinder head sub–assy		30	306	22
Flywheel sub–assy x Crankshaft	1st 2nd	49 Turn 90°	500 Turn 90°	36 Turn 90°
Drive plate & ring gear sub–assy x Crankshaft		88	897	65
Transverse engine engine mounting bracket front x Transverse engine engine mounting insulator front		52	530	38
Transverse engine engine mounting bracket rear x Transverse engine engine mounting insulator rear		87	887	64
Transverse engine engine mounting bracket LH x Transverse engine engine mounting insulator LH		80	816	59
Transverse engine engine mounting bracket RH x Transverse engine engine mounting insulator RH		52	530	38
Front suspension crossmember sub–assy x Body	A B	45 133	459 1,356	33 98
Front suspension member brace x Body	Bolt A Bolt B	133 80	1,356 816	98 59
Floor panel brace front x Body		30	306	22
Battery carrier x Body		13	131	9

Part Tightened		N·m	kgf·cm	ft·lbf
Battery x Body		5.0	51	44 in.·lbf
Air cleaner case x Body		5.0	51	44 in.·lbf
Air cleaner case x Transverse engine engine mounting bracket LH		5.0	51	44 in.·lbf
Radiator support upper x Body		19	194	14
Front wheel RH & LH x Front axle hub sub–assy RH & LH		103	1,050	76
Chain tensioner slipper x Cylinder block sub–assy		19	194	14
Timing chain or belt cover sub–assy x Cylinder head sub–assy		13	133	10
Timing chain or belt cover sub–assy x Cylinder block sub–assy	M6 M8	13 19	133 194	10 14
Crankshaft pulley x Crankshaft		138	1,407	102
Cylinder head sub–assy x Cylinder block sub–assy	1st 2nd	49 Turn 90°	500 Turn 90°	36 Turn 90°
Camshaft timing oil control valve assy x Cylinder head sub–assy		9.0	92	80 in.·lbf
Chain vibration damper No. 1 x Cylinder head sub–assy		9.0	92	80 in.·lbf
Chain vibration damper No. 1 x Cylinder block sub–assy		9.0	92	80 in.·lbf
Stud bolt x Cylinder head sub–assy		9.5	97	84 in.·lbf
Air cleaner hose No. 1 x Air cleaner		1.5	15	13 in.·lbf
Oil pan sub–assy x Drain plug		37	377	27

COOLING

SERVICE DATA

031H3–03

Thermostat		
Valve opening temperature		80 to 84°C (176 to 183°F)
Valve lift	at 95°C (203°F)	10 mm (0.39 in.) or more
Radiator cap sub–assy		
Standard opening pressure		74 to 103 kPa (0.75 to 1.05 kgf/cm2, 10.7 to 14.9 psi)
Minimum opening pressure		59 kPa (0.6 kgf/cm2, 8.6 psi)

031H4–03

TORQUE SPECIFICATION

Part Tightened	N·m	kgf·cm	ft·lbf
Cylinder block drain plug x Cylinder block sub–assy	13	130	9

SUPPLEMENTAL RESTRAINT SYSTEM

TORQUE SPECIFICATION

031HM–02

Airbag sensor front x Body	9.0	92	80 in.·lbf
Side airbag sensor assy x Body	9.0	92	80 in.·lbf
Airbag sensor rear x Body	9.0	92	80 in.·lbf

INSTRUMENT PANEL/METER

TORQUE SPECIFICATION

031I3–02

Part Tightened	N·m	kgf·cm	ft·lbf
Instrument Panel Reinforcement × Passenger Airbag	20	204	15

SFI SYSTEM (1ZZ–FE/3ZZ–FE)(From February, 2004)

05KNQ–02

PRECAUTION

NOTICE:

Perform the RESET MEMORY (AT initialization) operation after replacing the automatic transaxle assembly, engine assembly or ECM.

HINT:

Initialization cannot be completed by only removing the battery cable.

054JE–19

LOCATION

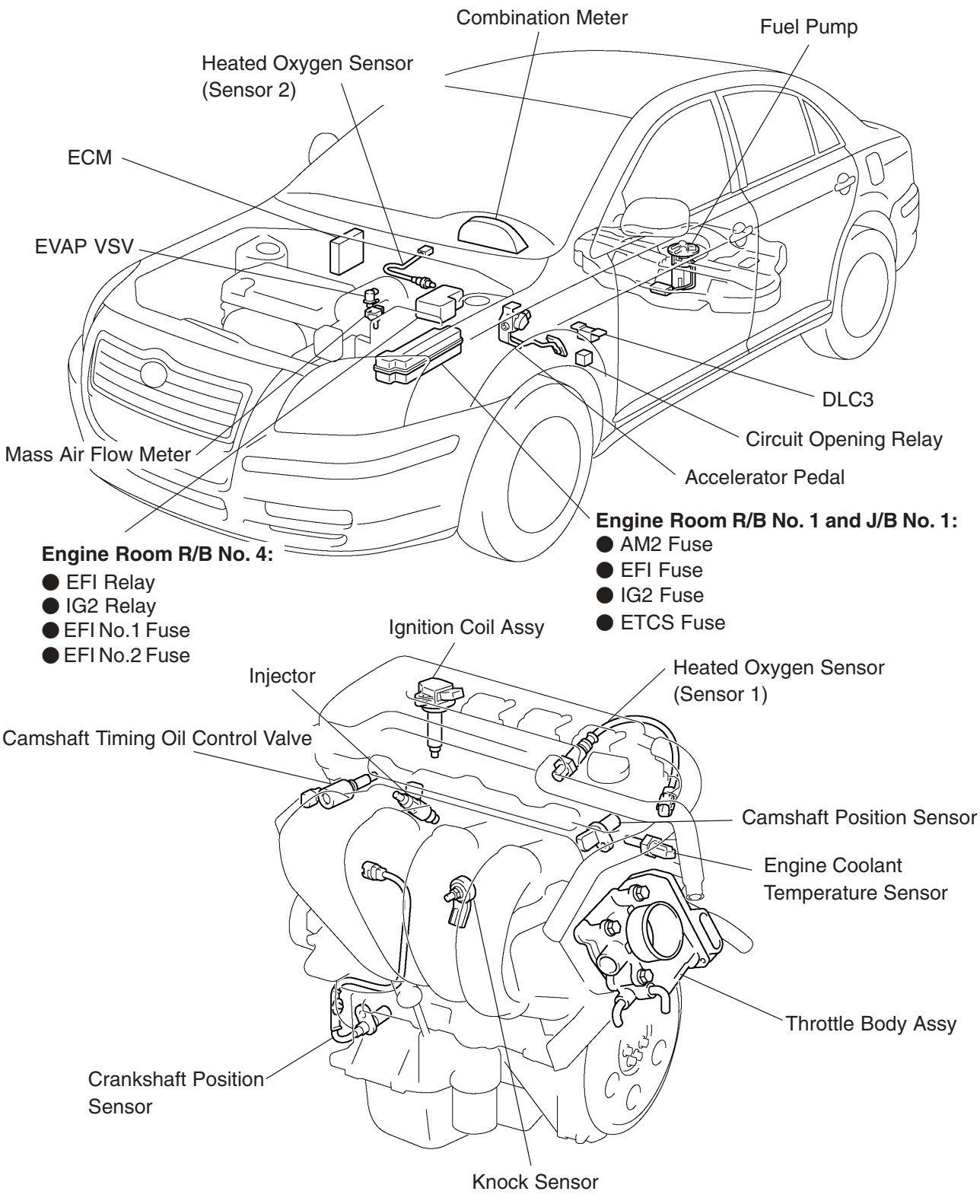

05KNR–02

SYSTEM DIAGRAM

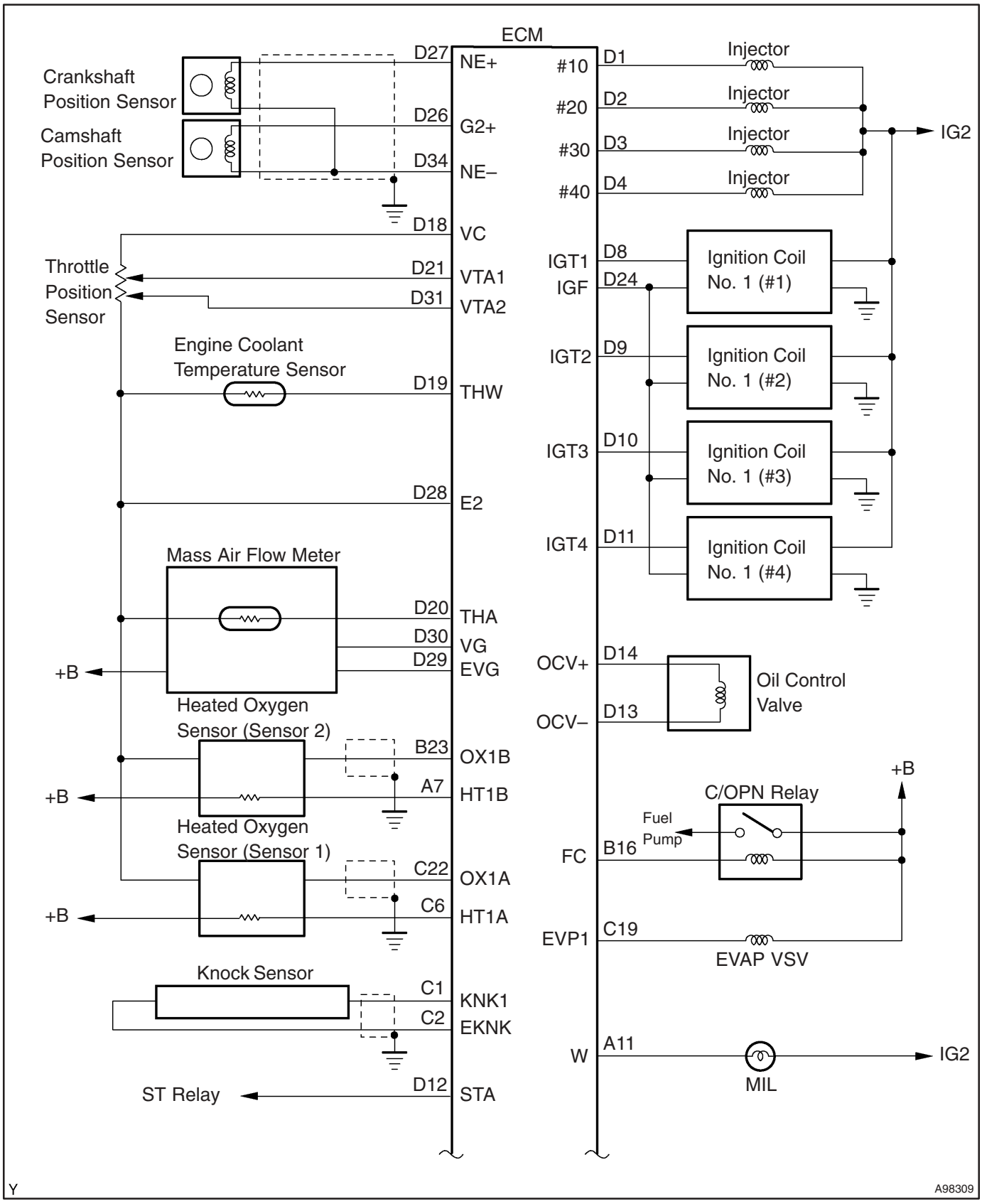

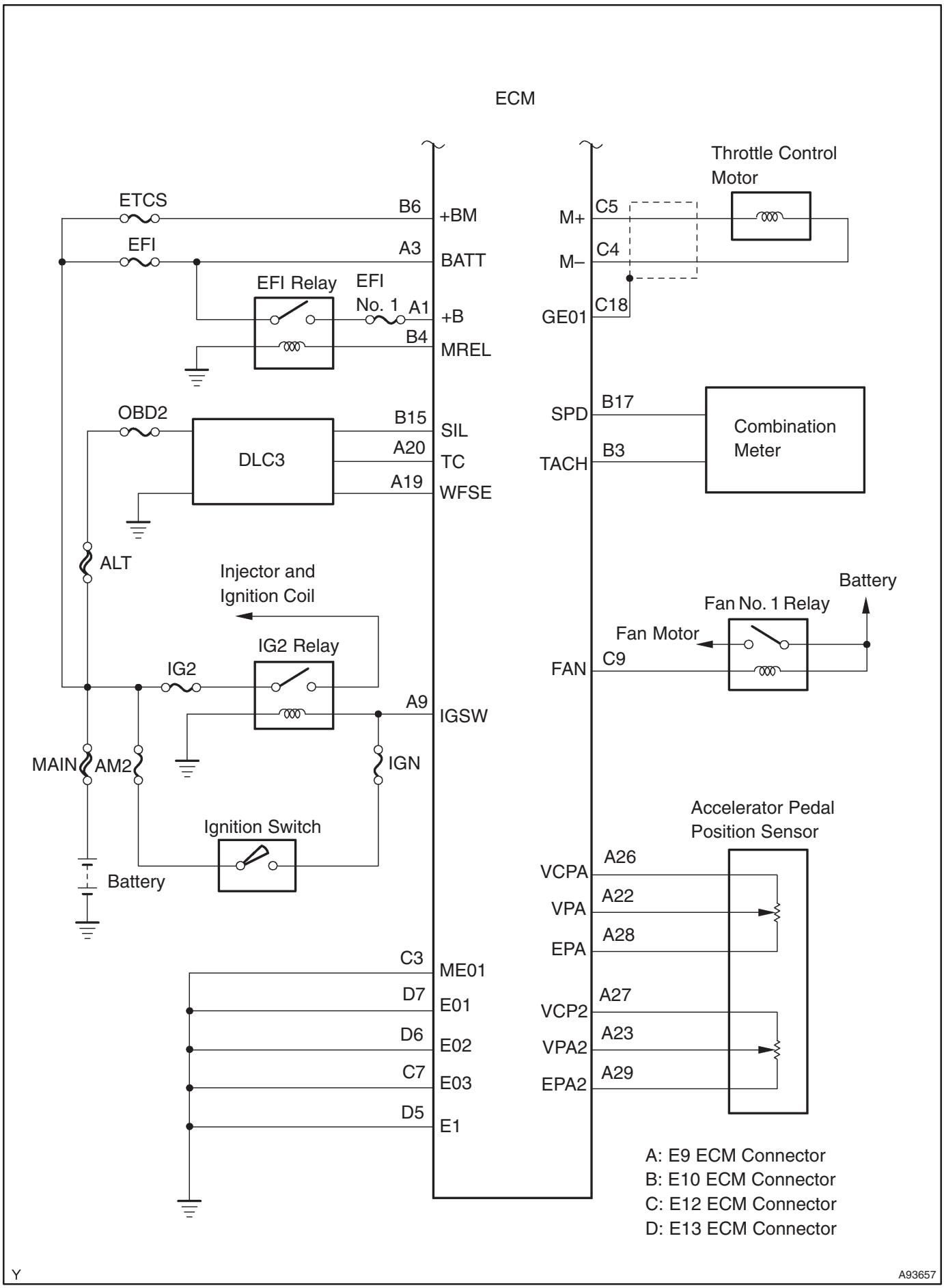
ECM
ETCS
B6
+BM
EFI
A3
BATT
EFI Relay
EFI
No. 1
A1
+B
B4
MREL
OBD2
B15
SIL
DLC3
A20
TC
A19
WFSE
ALT
Injector and
Ignition Coil
IG2 Relay
IG2
A9
IGSW
MAIN
AM2
IGN
Ignition Switch
Battery
C3
ME01
D7
E01
D6
E02
C7
E03
D5
E1
Throttle Control
Motor
M+
C5
M–
C4
GE01
C18
SPD
B17
Combination
Meter
TACH
B3
Battery
Fan No. 1 Relay
Fan Motor
FAN
C9
Accelerator Pedal
Position Sensor
VCPA
A26
VPA
A22
EPA
A28
VCP2
A27
VPA2
A23
EPA2
A29
A: E9 ECM Connector
B: E10 ECM Connector
C: E12 ECM Connector
D: E13 ECM Connector
Y
A93657

054JB–23

HOW TO PROCEED WITH TROUBLESHOOTING

The intelligent tester II is used in steps 3, 4, 5, 7 and 10.

1	VEHICLE BROUGHT TO WORKSHOP

2	CUSTOMER PROBLEM ANALYSIS (See page 05–8)

3	CONNECT INTELLIGENT TESTER II TO DLC3

HINT:
If the display indicates a communication fault in the tester, inspect the DLC3.

4	CHECK DTC AND FREEZE FRAME DATA (See page 05–18)

HINT:
Record or print DTCs and freeze frame data, if needed.

5	CLEAR DTC AND FREEZE FRAME DATA (See page 05–18)

6	CONDUCT VISUAL INSPECTION

7	SET CHECK MODE DIAGNOSIS (See page 05–20)

8	CONFIRM PROBLEM SYMPTOMS

HINT:
If the engine does not start, perform steps 10 and 12 first.

Result	Proceed To
Malfunction does not occur	A
Malfunction occurs	B

B → GO TO STEP 10

A

9	SIMULATE SYMPTOMS

10	CHECK DTC (See page 05–18)

Result	Proceed To
Malfunction code	A
No code	B

B → GO TO STEP 12

A

11	REFER TO DTC CHART (See page 05–27)

GO TO STEP 14

12	CONDUCT BASIC INSPECTION (See page 05–10)

Result	Proceed To
Wrong parts not confirmed	A
Wrong parts confirmed	B

B → GO TO STEP 17

A

13	REFER TO PROBLEM SYMPTOMS TABLE (See page 05–12)

Result	Proceed To
Wrong circuit confirmed	A
Wrong parts confirmed	B

B → GO TO STEP 17

A

14	CHECK ECM POWER SOURCE CIRCUIT (See page 05–195)

15	CONDUCT CIRCUIT INSPECTION

Result	Proceed To
Malfunction not confirmed	A
Malfunctionconfirmed	B

B → GO TO STEP 18

A

16	CHECK FOR INTERMITTENT PROBLEMS (See page 05–9)

GO TO STEP 18

17	CONDUCT PARTS INSPECTION

18	IDENTIFY PROBLEM

19	ADJUST AND/OR REPAIR

20	CONDUCT CONFIRMATION TEST

END

054JC–24

CUSTOMER PROBLEM ANALYSIS CHECK

ENGINE CONTROL SYSTEM Check Sheet

Inspector's Name

Driver's Name		VIN	
Date Vehicle Brought in		Production Date	
License Plate No.		Odometer Reading	km miles

Problem Symptoms	☐ Engine does not Start	☐ Engine does not crank ☐ No initial combustion ☐ No complete combustion
	☐ Difficult to Start	☐ Engine cranks slowly ☐ Other _____
	☐ Poor Idling	☐ Incorrect first idle ☐ Idling rpm is abnormal ☐ High (rpm) ☐ Low (rpm) ☐ Rough idling ☐ Other _____
	☐ Poor Driveability	☐ Hesitation ☐ Back fire ☐ Muffler explosion (after–fire) ☐ Surging ☐ Knocking ☐ Other _____
	☐ Engine Stalling	☐ Soon after starting ☐ After accelerator pedal depressed ☐ After accelerator pedal released ☐ During A/C operation ☐ Shifting from N to D ☐ Other _____
	☐ Others	

Data Problem Occurred		
Problem Frequency		☐ Constant ☐ Sometimes (times per day/month) ☐ Once only ☐ Other _____
Condition When Problem Occurs	Weather	☐ Fine ☐ Cloudy ☐ Rainy ☐ Snowy ☐ Various/Other _____
	Outdoor Temperature	☐ Hot ☐ Warm ☐ Cool ☐ Cold (approx.____ °C/____ °F)
	Place	☐ Highway ☐ Suburbs ☐ Inner city ☐ Uphill ☐ Downhill ☐ Rough road ☐ Other _____
	Engine Temp.	☐ Cold ☐ Warming up ☐ After warming up ☐ Any temp. ☐ Other _____
	Engine Operation	☐ Starting ☐ Just after starting (min.) ☐ Idling ☐ Rev–up ☐ Driving ☐ Constant speed ☐ Acceleration ☐ Deceleration ☐ A/C switch ON/OFF ☐ Other _____

Malfunction Indicator Lamp (MIL)		☐ Remains on	☐ Sometimes lights up ☐ Does not light up
DTC Inspection	Normal mode (Pre–check)	☐ Normal	☐ Malfunction code(s) (code) ☐ Freeze frame data ( )
	Check Mode	☐ Normal	☐ Malfunction code(s) (code) ☐ Freeze frame data ( )

05JO6–03

CHECK FOR INTERMITTENT PROBLEMS

HINT:

Intelligent tester II only:

Inspect the vehicle's ECM using check mode. Intermittent problems are easier to detect with the intelligent tester II when the ECM is in check mode. In check mode, the ECM uses 1 trip detection logic, which has a higher sensitivity to malfunctions than normal mode (default) using 2 trip detection logic.

(a) Clear the DTCs (see page 05–18).

(b) Switch the ECM from normal mode to check mode using the intelligent tester II (see page 05–20).

(c) Perform a simulation test (see page 01–22).

(d) Check the connector(s) and terminal(s) (see page 01–32).

(e) Wiggle the harness(es) and connector(s) (see page 01–32).

05JO7–03

BASIC INSPECTION

When a malfunction is not confirmed in the DTC check, troubleshooting should be carried out in all the circuits considered possible causes of the problem. In many cases, by carrying out the basic engine check shown in the following flowchart, the location of the problem can be found quickly and efficiently. Therefore, using this check is essential in engine troubleshooting.

1	CHECK BATTERY VOLTAGE

NOTICE:
Carry out this check with the engine stopped and ignition switch OFF.

Result	Proceed To
11 V or more	OK
Below 11 V	NG

NG → **CHARGE OR REPLACE BATTERY**

OK

2	CHECK IF ENGINE WILL CRANK

NG → **PROCEED TO PROBLEM SYMPTOMS TABLE ON PAGE 05–12**

OK

3	CHECK IF ENGINE STARTS

NG → **GO TO STEP 7**

OK

4	CHECK AIR FILTER

(a) Visually check if the air filter is not contaminated with dirt or oil.

NG → **REPLACE AIR FILTER**

OK

5	CHECK IDLING SPEED (See page 14–1 of Pub. No. RM1018E AVENSIS)

NG → **PROCEED TO PAGE 14–1 of Pub. No. RM1018E AVENSIS AND CONTINUE TO TROUBLESHOOT**

OK

PROCEED TO PROBLEM SYMPTOMS TABLE ON PAGE 05–12

6	CHECK FUEL PRESSURE (See page 11–5 of Pub. No. RM1018E AVENSIS)

NG → PROCEED TO PAGE 11–5 of Pub. No. RM1018E AVENSIS AND CONTINUE TO TROUBLESHOOT

OK

7	CHECK FOR SPARK (See page 18–3 of Pub. No. RM1018E AVENSIS)

NG → PROCEED TO PAGE 18–3 of Pub. No. RM1018E AVENSIS AND CONTINUE TO TROUBLESHOOT

OK

PROCEED TO PROBLEM SYMPTOMS TABLE ON PAGE 05–12

054JF–24

PROBLEM SYMPTOMS TABLE

When the malfunction is not confirmed in the diagnostic trouble code check and the problem still cannot be confirmed in the basic inspection, use this table and troubleshoot according to the priority order given below.

Symptom	Suspect Area	See Page
Engine does not crank (Does not start)	1. Starter signal circuit 2. Starter 3. ST relay	05–171 *1 *1
No initial combustion (Does not start)	1. ECM power source circuit 2. Fuel pump control circuit 3. ECM	05–195 05–199 *2
No complete combustion (Does not start)	1. Fuel pump control circuit	05–199
Engine cranks normally but difficult to start	1. Starter signal circuit 2. Fuel pump control circuit 3. Compression	05–171 05–199 *3
Difficult to start with cold engine	1. Starter signal circuit 2. Fuel pump control circuit	05–171 05–199
Difficult to start with hot engine	1. Starter signal circuit 2. Fuel pump control circuit	05–171 05–199
High engine idling speed (Poor idling)	1. A/C signal circuit (Compressor circuit) 2. ECM power source circuit	— 05–195
Low engine idling speed (Poor idling)	1. A/C signal circuit (Compressor circuit) 2. Fuel pump control circuit	— 05–199
Rough idling (Poor idling)	1. Compression 2. Fuel pump control circuit	*3 05–199
Hunting (Poor idling)	1. ECM power source circuit 2. Fuel pump control circuit	05–195 05–199
Hesitation/Poor acceleration (Poor driveability)	1. Fuel pump control circuit 2. Automatic transmission assembly	05–199 05–229
Surging (Poor driveability)	1. Fuel pump control circuit	05–199
Engine stalls soon after starting	1. Fuel pump control circuit	05–199
Engine stalls during A/C operation	1. A/C signal circuit (Compressor circuit) 2. ECM	— *2

*1: See page 19–1 of Pub. No. RM1018E AVENSIS

*2: See page 10–65 of Pub. No. RM1018E AVENSIS

*3: See page 14–1 of Pub. No. RM1018E AVENSIS

054KK–23

TERMINALS OF ECM

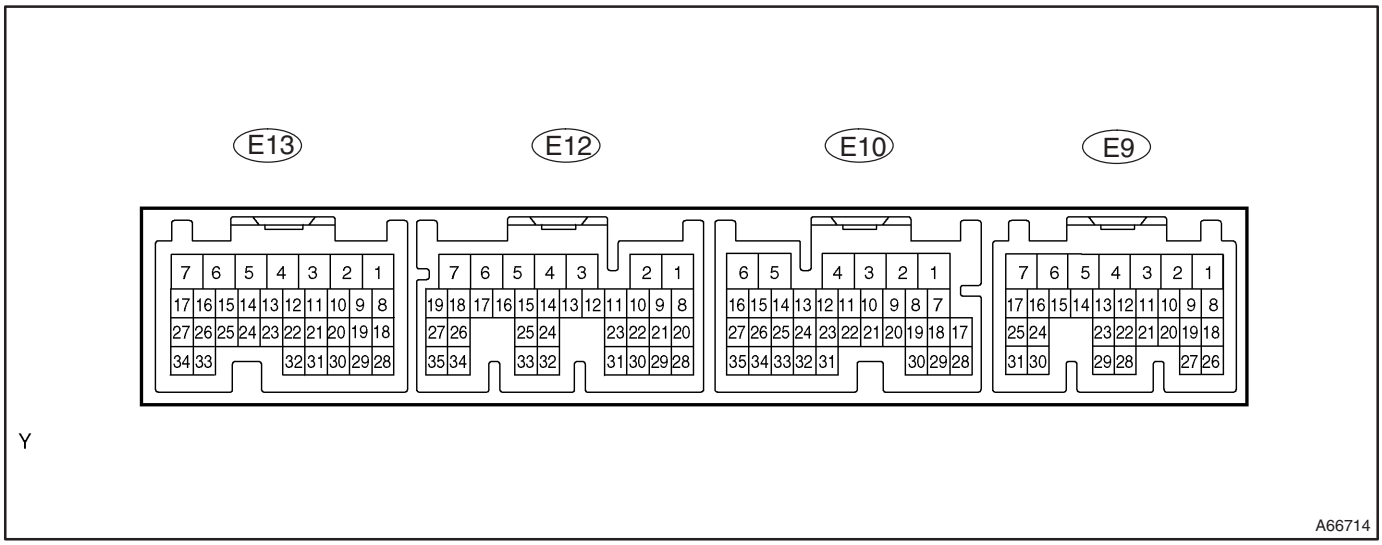

HINT:
Each ECM terminal's standard normal voltage is shown in the table below.
In the table, first follow the information under "Condition." Look under "Symbols (Terminals No.)" for the terminals to be inspected. The standard normal voltage between the terminals is shown under "STD Voltage."
Use the illustration above as a reference for the ECM terminals.

Symbols (Terminals No.)	Wiring Color	Terminal Description	Condition	STD Voltage
BATT (E9–3) – E1 (E13–5)	B–Y – BR	Battery (for measuring the battery voltage and for the ECM memory)	Always	9 to 14 V
+BM (E10–6) – ME01 (E12–3)	G–Y – W–B	Power source of throttle motor	Always	9 to 14 V
IGSW (E9–9) – E1 (E13–5)	B–W – BR	Ignition switch	Ignition switch ON	9 to 14 V
+B (E9–1) – E1 (E13–5)	B–R – BR	Power source of ECM	Ignition switch ON	9 to 14 V
MREL (E10–4) – E01 (E13–7)	GR – W–B	EFI relay	Ignition switch ON	9 to 14 V
VC (E13–18) – E2 (E13–28)	R–W – BR	Power source of sensor (a specific voltage)	Ignition switch ON	4.5 to 5.5 V
VTA1 (E13–21) – E2 (E13–28)	L–W – BR	Throttle position sensor (for engine control)	Ignition switch ON, Accelerator pedal fully released	0.4 to 1.0 V
VTA1 (E13–21) – E2 (E13–28)	L–W – BR	Throttle position sensor (for engine control)	Ignition switch ON, Accelerator pedal fully depressed	3.2 to 4.8 V
VTA2 (E13–31) – E2 (E13–28)	B–R – BR	Throttle position sensor (for sensor malfunction detection)	Ignition switch ON, Accelerator pedal fully released	2.1 to 3.1 V
VTA2 (E13–31) – E2 (E13–28)	B–R – BR	Throttle position sensor (for sensor malfunction detection)	Ignition switch ON, Accelerator pedal fully depressed	4.5 to 5.0 V
VPA (E9–22) – EPA (E9–28)	G – Y	Accelerator pedal position sensor (for engine control)	Ignition switch ON, Accelerator pedal fully released	0.5 to 1.1 V
VPA (E9–22) – EPA (E9–28)	G – Y	Accelerator pedal position sensor (for engine control)	Ignition switch ON, Accelerator pedal fully depressed	2.6 to 4.5 V
VPA2 (E9–23) – EPA2 (E9–29)	W – Y	Accelerator pedal position sensor (for sensor malfunction detection)	Ignition switch ON, Accelerator pedal fully released	1.2 to 2.0 V
VPA2 (E9–23) – EPA2 (E9–29)	W – Y	Accelerator pedal position sensor (for sensor malfunction detection)	Ignition switch ON, Accelerator pedal fully depressed	3.4 to 5.0 V

Symbols (Terminals No.)	Wiring Color	Terminal Description	Condition	STD Voltage
VCPA (E9–26) – EPA (E9–28)	B – Y	Power source of accelerator pedal position sensor (for VPA)	Ignition switch ON	4.5 to 5.0 V
VCP2 (E9–27) – EPA2 (E9–29)	B – Y	Power source of accelerator pedal position sensor (for VPA2)	Ignition switch ON	4.5 to 5.0 V
VG (E13–30) – EVG (E13–29)	G – L–Y	Mass air flow meter	Idling, Shift position P or N, A/C switch OFF	0.5 to 3.0 V
THA (E13–20) – E2 (E13–28)	G–R – BR	Intake air temperature sensor	Idling, Intake air temperature 20°C (68°F)	0.5 to 3.4 V
THW (E13–19) – E2 (E13–28)	B–W – BR	Engine coolant temperature sensor	Idling, Engine coolant temperature 80°C (176°F)	0.2 to 1.0 V
#10 (E13–1) – E01 (E13–7) #20 (E13–2) – E01 (E13–7) #30 (E13–3) – E01 (E13–7) #40 (E13–4) – E01 (E13–7)	B–R – W–B Y – W–B W – W–B B – W–B	Injector	Ignition switch ON	9 to 14 V
#10 (E13–1) – E01 (E13–7) #20 (E13–2) – E01 (E13–7) #30 (E13–3) – E01 (E13–7) #40 (E13–4) – E01 (E13–7)	B–R – W–B Y – W–B W – W–B B – W–B	Injector	Idling	Pulse generation (See page 05–118)
IGT1 (E13–8) – E1 (E13–5) IGT2 (E13–9) – E1 (E13–5) IGT3 (E13–10) – E1 (E13–5) IGT4 (E13–11) – E1 (E13–5)	R–W – BR P – BR LG–B – BR L–Y – BR	Ignition coil with igniter (ignition signal)	Idling	Pulse generation (See page 05–143)
IGF (E13–24) – E1 (E13–5)	W–R – BR	Ignition coil with igniter (ignition confirmation signal)	Ignition switch ON	4.5 to 5.5 V
IGF (E13–24) – E1 (E13–5)	W–R – BR	Ignition coil with igniter (ignition confirmation signal)	Idling	Pulse generation (See page 05–143)
G2+ (E13–26) – NE– (E13–34)	W – R	Camshaft position sensor	Idling	Pulse generation (See page 05–140)
NE+ (E13–27) – NE– (E13–34)	G – R	Crankshaft position sensor	Idling	Pulse generation (See page 05–136)
FC (E10–16) – E01 (E13–7)	G–Y – W–B	Fuel pump control	Ignition switch ON	9 to 14 V
M+ (E12–5) – E01 (E13–7) M– (E12–4) – E01 (E13–7)	B – W–B W – W–B	Throttle actuator	Idling	Pulse generation
OX1A (E12–22) – E2 (E13–28)	B – BR	Heated oxygen sensor	Maintain engine speed at 2,500 rpm for 2 minutes after warming up the sensor	Pulse generation (See page 05–74)
OX1B (E10–23) – E2– (E13–28)	B – BR	Heated oxygen sensor	Maintain engine speed at 2,500 rpm for 2 minutes after warming up the sensor	Pulse generation (See page 05–100)
HT1A (E12–6) – E03 (E12–7) HT1B (E9–7) – E03 (E12–7)	Y – W–B P – W–B	Heated oxygen sensor heater	Idling	Below 3.0 V
HT1A (E12–6) – E03 (E12–7) HT1B (E9–7) – E03 (E12–7)	Y – W–B P – W–B	Heated oxygen sensor heater	Ignition switch ON	9 to 14 V
KNK1 (E12–1) – EKNK (E12–2)	B – W	Knock sensor	Maintain engine speed at 4,000 rpm after warming up the engine	Pulse generation (See page 05–132)
OCV+ (E13–14) – OCV– (E13–13)	W–G – Y–B	Camshaft timing oil control valve (OCV)	Ignition switch ON	Pulse generation (See page 05–34)
EVP1 (E12–19) – E01 (E13–7)	W–G – W–B	EVAP VSV	Ignition switch ON	9 to 14 V
EVP1 (E12–19) – E01 (E13–7)	W–G – W–B	EVAP VSV	Idling	Pulse generation
STA (E13–12) – E1 (E13–5)	B–Y – BR	Starter signal	Shift position N, Ignition switch START	6.0 V or more

Symbols (Terminals No.)	Wiring Color	Terminal Description	Condition	STD Voltage
STP (E10–19) – E1 (E13–5)	G–W – BR	Stop lamp switch	Brake pedal depressed	9 to 14 V
STP (E10–19) – E1 (E13–5)	G–W – BR	Stop lamp switch	Brake pedal released	Below 1.5 V
ST1– (E10–12) – E1 (E13–5)	G–W – BR	Stop lamp switch	Ignition switch ON, Brake pedal depressed	Below 1.5 V
ST1– (E10–12) – E1 (E13–5)	G–W – BR	Stop lamp switch	Ignition switch ON, Brake pedal released	7.5 to 14 V
W (E9–11) – E01 (E13–7)	W – W–B	MIL	Idling	9 to 14 V
W (E9–11) – E01 (E13–7)	W – W–B	MIL	Ignition switch ON	Below 3.0 V
TACH (E10–3) – E1 (E13–5)	GR–R – BR	Engine speed	Idling	Pulse generation
SPD (E10–17) – E01 (E13–7)	V–W – W–B	Speed signal from combination meter	Ignition switch ON, Rotate driving wheel slowly	Pulse generation (See page 05–158)
TC (E9–20) – E1 (E13–5)	W–L – BR	Terminal TC of DLC3	Ignition switch ON	9 to 14 V
SIL (E10–15) – E1 (E13–5)	W–G – BR	Terminal SIL of DLC3	Connect the intelligent tester II to the DLC3	Pulse generation
ELS (E9–12) – E1 (E13–5)	G – BR	Electric load	Taillamp switch OFF	0 to 1.5 V
ELS (E9–12) – E1 (E13–5)	G – BR	Electric load	Taillamp switch ON	9 to 14 V
F/PS (E9–14) – E1 (E13–5)	LG–B – BR	Airbag sensor assembly	Ignition switch ON	Below 1.5 V

05JO8–03

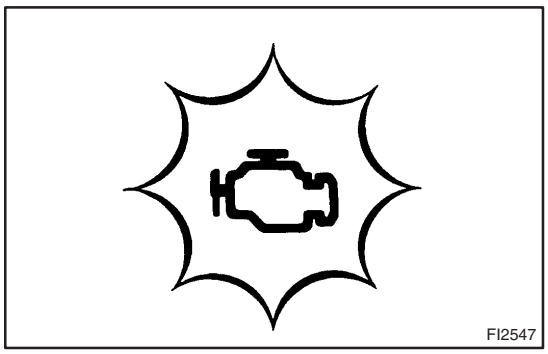
FI2547

DIAGNOSIS SYSTEM

1. DESCRIPTION

- When troubleshooting Euro–OBD vehicles, the only difference from the usual troubleshooting procedure is that you connect an OBD scan tool (complying with ISO 15031–4) or the intelligent tester II to the vehicle, and read the various data output from the vehicle's ECM.
- Euro–OBD regulations require that the vehicle's on–board computer illuminates the MIL (Malfunction Indicator Lamp) on the instrument panel when the computer detects a malfunction in: 1) the emission control systems and components, or 2) the powertrain control components (which affect vehicle emissions), or 3) the computer. In addition, the applicable DTCs (Diagnostic Trouble Codes) prescribed by ISO 15031–4 are recorded in the ECM memory (see page 05–27).

If the malfunction does not recur in 3 consecutive trips, the MIL goes off automatically but the DTCs remain recorded in the ECM memory.

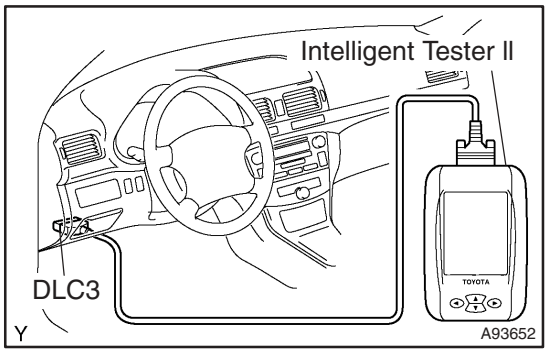

- To check the DTCs, connect the OBD scan tool or intelligent tester II to the DLC3 (Data Link Connector 3) on the vehicle. The OBD scan tool or intelligent tester II also enables you to erase the DTCs and check the freeze frame data and various forms of engine data. (See the instruction manual for the OBD scan tool or intelligent tester II.)
- The diagnosis system operates in normal mode during normal vehicle use. In normal mode, 2 trip detection logic* is used to ensure accurate detection of malfunctions. Check mode is also available to technicians as an option. In check mode, 1 trip detection logic is used for simulating malfunction symptoms and increasing the system's ability to detect malfunctions, including intermittent problems (intelligent tester II only) (see page 05–20).
- *2 trip detection logic:
  When a malfunction is first detected, the malfunction is temporarily stored in the ECM memory (1st trip). If the ignition switch is turned to OFF and then to ON again, and the same malfunction is detected again, the MIL will illuminate (2nd trip).
- Freeze frame data:
  The freeze frame data record the engine condition (fuel system, calculated engine load, engine coolant temperature, fuel trim, engine speed, vehicle speed, etc.) when a malfunction is detected. When troubleshooting, the freeze frame data can help determine if the vehicle was moving or stationary, if the engine was warmed up or not, if the air–fuel ratio was lean or rich, and other data from the time the malfunction occurred.

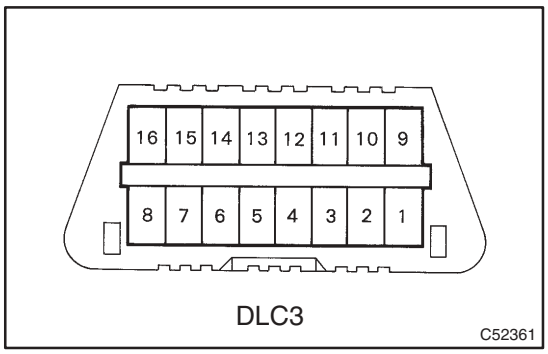

2. CHECK DLC3

(a) The vehicle's ECM uses the ISO 9141–2 (Euro–OBD) communication protocol. The terminal arrangement of the DLC3 complies with ISO 15031–03 and matches the ISO 9141–2 format.

Symbol	Terminal No.	Name	Reference Terminal	Result	Condition
SIL	7	Bus "+" line	5 – Signal ground	Pulse generation	During transmission
CG	4	Chassis ground	Body ground	1 Ω or less	Always
SG	5	Signal ground	Body ground	1 Ω or less	Always
BAT	16	Battery positive	Body ground	9 to 14 V	Always

HINT:

When you use the intelligent tester II, first connect the cable of the tester to the DLC3. Next, turn the ignition switch to ON. Finally turn the tester ON. If the screen displays NO INFORMATION AVAILABLE and bus check is also failed, a problem exists in the vehicle, the tester or the tester cable.

- If communication is normal when the tester is connected to another vehicle, inspect the DLC3 on the original vehicle.
- If communication is still not possible when the tester is connected to another vehicle, the problem is probably in the tester or the cable, so consult the Service Department listed in its instruction manual.

3. INSPECT BATTERY VOLTAGE

Standard: 11 to 14 V

If the voltage is below 11 V, recharge the battery before proceeding.

4. CHECK MIL

(a) The MIL illuminates when the ignition switch is turned to ON and the engine is not running.

HINT:

If the MIL is not illuminated, check the MIL Circuit (see page 05–204).

(b) When the engine is started, the MIL should turn off. If the MIL remains on, the diagnosis system has detected a malfunction or abnormality in the system.

05KNS–02

DTC CHECK/CLEAR

NOTICE:

Intelligent tester II only:

When the diagnosis system is changed from normal mode to check mode or vice–versa, all DTCs and freeze frame data recorded in normal mode will be erased. Before changing modes, always check and make a note of DTCs and freeze frame data.

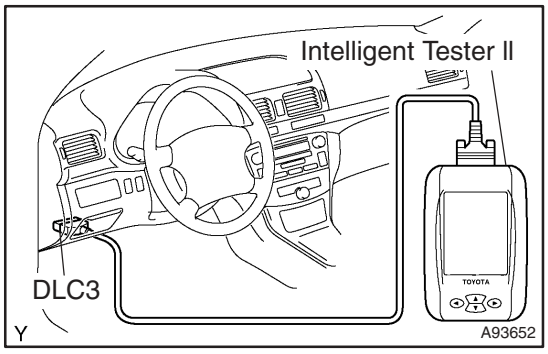

1. CHECK DTC (using the intelligent tester II)

(a) Connect the intelligent tester II to the DLC3.

(b) Turn the ignition switch to ON and turn the intelligent tester II ON.

(c) Select the following menu items: Powertrain / Engine and ECT / DTC.

(d) Check DTCs and freeze frame data, and then write them down.

HINT:

If you need help using the intelligent tester II, refer to the instruction manual.

(e) See page 05–27 to confirm the details of the DTCs.

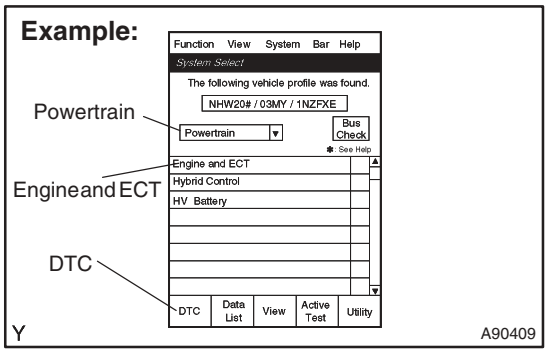

2. FREEZE FRAME DATA

(a) Connect the intelligent tester II to the DLC3.

(b) Turn the ignition switch to ON and turn the intelligent tester II ON.

(c) Read DTCs by selecting the following menu items: Powertrain / Engine and ECT / DTC.

(d) Select a parameter(s) to check the freeze frame data.

(e) Note down the DTC(s) and freeze frame data.

HINT:

If you need help using the intelligent tester II, refer to the instruction manual.

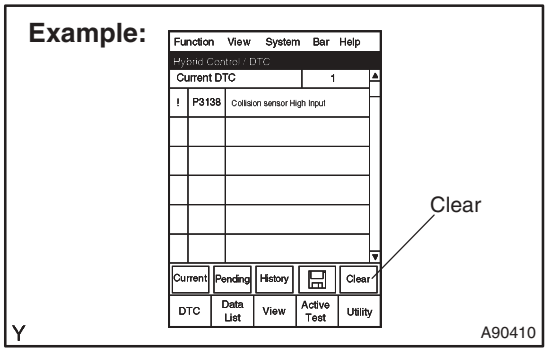

3. CLEAR DTCs AND FREEZE FRAME DATA (using the intelligent tester II)

(a) Connect the intelligent tester II to the DLC3.

(b) Turn the ignition switch to ON (do not start the engine) and turn the intelligent tester II ON.

(c) Select the following menu items: Powertrain / Engine and ECT / DTC / Clear.

(d) Erase DTCs and freeze frame data by pressing the YES button on the tester.

HINT:

If you need help using the intelligent tester II, refer to the instruction manual.

4. CLEAR DTCs AND FREEZE FRAME DATA (not using the intelligent tester II)

(a) Remove the EFI and ETCS fuse from the engine room R/B for more than 60 seconds, or disconnect the negative battery cable for more than 60 seconds. When disconnecting the negative battery cable, perform the ”INITIALIZE” procedure (see page 05–1).

05JOA–03

CHECK MODE PROCEDURE

HINT:

Intelligent tester II only:

Compared to normal mode, check mode has more sensing ability to detect malfunctions. Furthermore, the same diagnostic items which are detected in normal mode can also be detected in check mode.

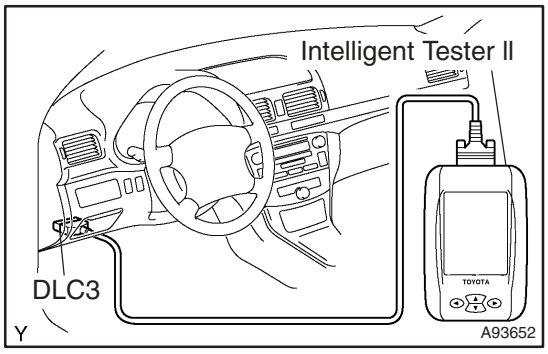

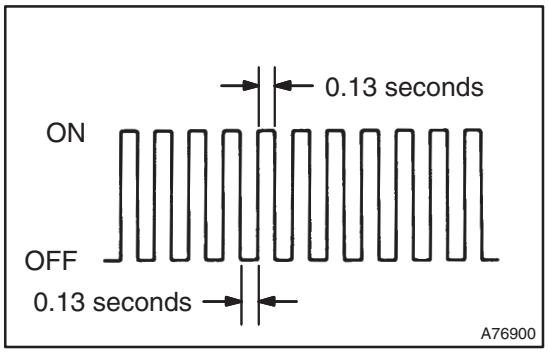

1. CHECK MODE PROCEDURE

(a) Make sure that the items below are true.
  (1) Battery voltage 11 V or more.
  (2) Throttle valve fully closed.
  (3) Transmission in the P or N position.
  (4) A/C switched OFF.

(b) Turn the ignition switch to OFF.

(c) Connect the intelligent tester II to the DLC3.

(d) Turn the ignition switch to ON and turn the intelligent tester II ON.

(e) Select the following menu items: Powertrain / Engine and ECT / Utility / Check Mode.

(f) Make sure that the MIL flashes as shown in the illustration.

NOTICE:

All the recorded DTCs and freeze frame data will be erased if: 1) the intelligent tester II is used to change the ECM from normal mode to check mode or vice–versa; or 2) during check mode, the ignition switch is turned from ON to ACC or OFF.

(g) Start the engine (the MIL should turn off).

(h) Simulate the condition of the malfunction described by the customer.

(i) After simulating the malfunction condition, check the DTCs, freeze frame data and other data.

(j) After checking the DTCs, inspect the applicable circuits (see page 05–12).

05JOB–03

FAIL–SAFE CHART

If any of the following DTCs are recorded, the ECM enters fail–safe mode.

DTC No.	Fail–Safe Operation	Fail–Safe Deactivation Condition
P0031 P0032	Heated oxygen sensor (Sensor 1) heater is turned off	Ignition switch turned to OFF
P0037 P0038	Heated oxygen sensor (Sensor 2) heater is turned off	Ignition switch turned to OFF
P0100 P0102 P0103	Ignition timing is calculated from engine RPM and Throttle Position (TP)	”Pass” condition detected
P0110 P0112 P0113	Intake Air Temperature (IAT) is fixed at 20°C (68°F)	”Pass” condition detected
P0115 P0117 P0118	Engine Coolant Temperature (ECT) is fixed at 80°C (176°F)	”Pass” condition detected
P0120 P0122 P0123 P0220 P0222 P0223 P2102 P2103 P2111 P2112 P2118 P2119 P2135	When Electronic Throttle Control System (ETCS) is malfunctioning, electric current to throttle actuator is cut off and throttle valve returns to throttle position (TP) 16° by its spring. Then, required engine power is calculated using ignition timing and Accelerator Pedal Position (APP). Engine is controlled by intermittent fuel–cut. As a result, fully slowly depressing accelerator pedal enables driving at minimum speed. However, quickly depressing pedal would vary vehicle speed remarkably.	”Pass” condition detected followed by the ignition switch turned to OFF
P0121	Fuel is cut intermittently	”Pass” condition detected followed by the ignition switch turned to OFF
P0325 P0327 P0328	Maximum ignition timing retardation	Ignition switch turned to OFF
P0351 P0352 P0353 P0354	Fuel is cut	”Pass” condition detected
P2120 P2121 P2122 P2123 P2125 P2127 P2128 P2138	Accelerator Pedal Position (APP) sensor has main circuit and associate circuit. When one of circuits is malfunctioning, APP is calculated by output of other circuit. When both of circuits are malfunctioning, it is interpreted that accelerator pedal is releasing. As a result, throttle valve is closed and engine idles.	”Pass” condition detected followed by the ignition switch turned to OFF

05JOC–03

DATA LIST/ACTIVE TEST

1. DATA LIST

HINT:

Using the Data List displayed on the intelligent tester II, you can read values including those of the switches, sensors, and actuators, without removing any parts. Reading the Data List as the first step of troubleshooting is one method to shorten diagnostic time.

NOTICE:

In the table below, the values listed under ”Normal Condition” are reference values. Do not depend solely on these reference values when deciding whether a part is faulty or not.

(a) Warm up the engine.
(b) Turn the ignition switch to OFF.
(c) Connect the intelligent tester II to the DLC3.
(d) Turn the ignition switch to ON.
(e) Turn the intelligent tester II ON.
(f) Select the following menu items: Powertrain / Engine and ECT / Data List.
(g) Check the results by referring to the following table.

Intelligent Tester II Display (Abbreviation)	Measurement Item/Range (Display)	Normal Condition *1	Diagnostic Note
Injector (INJECTOR)	Injection period of the No. 1 cylinder/ Min.: 0 ms, Max.: 32.6 ms	Idling: 1.92 to 3.37 ms	—
IGN Advance (IGN ADVANCE)	Ignition timing advance for No. 1 cylinder/ Min.: –64 deg., Max.: 63.5 deg.	Idling: BTDC 10 to 18 deg. (N position)	—
CALC Load (CALC LOAD)	Calculated load by ECM/ Min.: 0 %, Max.: 100 %	• Idling: 27.5 to 46.4 % • Running without load (2,500 rpm): 19.7 to 40.5 %	—
AFM (AFM)	Air flow rate from MAF meter/ Min.: 0 g/s, Max.: 665.35 g/s	Idling: 3 to 7 g/s (1,500 rpm)	If the value is approximately 0.0 g/s: • Mass air flow meter power source circuit is open • VG circuit is open or shorted If the value is 160.0 g/s or more: • E2G circuit is open
Engine SPD (ENGINE SPD)	Engine speed/ Min.: 0 rpm, Max.: 16,383 rpm	Idling: 650 to 750 rpm (N position)	—
Coolant Temp (COOLANT TEMP)	Engine coolant temperature/ Min.: –40°C (–40°F) Max.: 215°C (419°F)	After warming up the engine: 80° to 95°C (176° to 203°F)	• If the value is –40°C (–40°F): sensor circuit is open • If the value is 140°C (284°F): sensor circuit is shorted
Intake Air (INTAKE AIR)	Intake air temperature/ Min.: –40°C (–40°F) Max.: 215°C (419°F)	Equivalent to ambient air temperature	• If the value is –40°C (–40°F): sensor circuit is open • If the value is 140°C (284°F): sensor circuit is shorted
Throttle POS (THROTTLE POS)	Absolute throttle position sensor/ Min.: 0 %, Max.: 100 %	• Throttle fully closed: 8 to 20 % • Throttle fully open: 64 to 96 %	Read the value with the ignition switch ON (Do not start engine)
Vehicle SPD (VEHICLE SPD)	Vehicle speed/ Min.: 0 km/h, Max.: 255 km/h	Actual vehicle speed	Speed indicated on the speedometer
Accelerator POS No.1 (ACCEL POS #1)	Accelerator pedal position sensor No.1 output voltage/ Min.: 0 V, Max.: 5 V	• Accelerator pedal released: 0.5 to 1.1 V • Accelerator pedal depressed: 2.6 to 4.5 V	Read the value with the ignition switch ON (Do not start engine)

Intelligent Tester II Display (Abbreviation)	MeasurementItem/Range (Display)	Normal Condition *1	Diagnostic Note
Accelerator POS No.2 (ACCEL POS #2)	Accelerator pedal position sensor No.2 output voltage/ Min.: 0 V, Max.: 5 V	• Accelerator pedal released: 1.2 to 2.0 V • Accelerator pedal depressed: 3.4 to 5.0 V	Read the value with the ignition switch ON (Do not start engine)
Throttle POS No.2 (THROTTLE POS #2)	Throttle position sensor No. 2 output voltage/ Min.: 0 V, Max.: 5 V	• Throttle fully closed: 2.1 to 3.1 V • Throttle fully open: 4.5 to 5.0 V	Read the value with the ignition switch ON (Do not start engine)
Throttle Request POS (THROTTLE TARGT)	Throttle requirement position Min.: 0 V, Max.: 5 V	Idling: 0.4 to 1.1 V	—
Throttle Motor Open Duty (THROTL OPN DUTY)	Throttle motor opening duty ratio/ Min.: 0 %, Max.: 100 %	Throttle fully closed: 0 %	• When the accelerator pedal is depressed, duty ratio is increased • Read the value with the ignition switch ON (Do not start engine)
Throttle Motor Close Duty (THROTL CLS DUTY)	Throttle motor closed duty ratio/ Min.: 0 %, Max.: 100 %	Throttle fully open: 0 %	• When the accelerator pedal is released quickly, duty ratio is increased • Read the value with the ignition switch ON (Do not start engine)
Throttle Motor (THROTTLE MOT)	Whether or not throttle motor control is permitted/ ON or OFF	Idling: ON	Read the value with the ignition switch ON (Do not start engine)
ETCS Actuator Power (+BM)	Whether or not Electronic Throttle Control System (ETCS) power is applied/ ON or OFF	Idling: ON	—
Accelerator IDL POS (ACCEL IDL POS)	Whether or not accelerator pedal position sensor is detecting engine idling/ ON or OFF	Idling: ON	—
Throttle IDL POS (THROTTL IDL POS)	Whether or not throttle position sensor is detecting engine idling/ ON or OFF	Idling: ON	—
Fail Safe Drive (FAIL #1)	Whether or not fail–safe function is executed/ ON or OFF	ETCS has failed: ON	—
Fail Safe Drive (Main CPU) (FAIL #2)	Whether or not fail–safe function is executed/ ON or OFF	ETCS has failed: ON	—
Throttle Closed Initial Value (THROTTL INITIAL)	Throttle fully closed (learned value) Min.: 0 V, Max.: 5 V	0.5 to 0.9 V	—
Accelerator Learned Value (ACCEL LEARN VAL)	Accelerator fully closed (learned value) Min.: 0 V, Max.: 5 V	0.4 to 0.8 V	—
Throttle Motor Current (THROTTLE MOT)	Throttle motor current Min.: 0 A, Max.: 20 A	Idling: 0 to 3.0 A	—
O2S B1 S1 (O2S B1 S1)	Heated oxygen sensor output voltage for bank 1 sensor 1/ Min.: 0 V, Max.: 1.275 V	Driving (50 km/h, 31 mph): 0.1 to 0.9 V	Performing the A/F Control function of the Active Test enables the technician to check voltage output of the sensor
O2S B1 S2 (O2S B1 S2)	Heated oxygen sensor output voltage for bank 1 sensor 2/ Min.: 0 V, Max.: 1.275 V	Driving (50 km/h, 31 mph): 0.1 to 0.9 V	Performing the A/F Control function of the Active Test enables the technician to check voltage output of the sensor

Intelligent Tester II Display (Abbreviation)	MeasurementItem/Range (Display)	Normal Condition *1	Diagnostic Note
Short FT #1 (SHORT FT #1)	Short–term fuel trim of bank 1/ Min.: –100 %, Max.: 100 %	0 ± 20 %	This item is the short–term fuel compensation used to maintain the air–fuel ratio at stoichiometric air–fuel ratio
Long FT #1 (LONG FT #1)	Long–term fuel trim of bank 1/ Min.: –100 %, Max.: 99.2 %	0 ± 20 %	This item is overall long–term fuel compensation that helps to maintain air–fuel ratio at stoichiometric air–fuel ratio (steadies long term deviations of short–term fuel trim from central value)
TOTAL FT#1 (TOTAL FT#1)	Total fuel trim of bank 1: Average value for fuel trim system of bank 1/ Min.: –0.5, Max.: 1.496	Idling: 0.5 to 1.4	—
O2 FT B1 S1 (O2 FT B1 S1)	Short–term fuel trim associated with the bank 1 sensor 1/ Min.: –100 %, Max.: 100 %	0 ± 20 %	Same as Short FT #1
O2FT B1 S2 (O2FT B1 S2)	Short–term fuel trim associated with the bank 1 sensor 2/ Min.: –100 %, Max.: 100 %	0 ± 20 %	Same as Short FT #1
FUEL SYS #1 (FUEL SYS #1)	Fuel system status (Bank1) / OL or CL or OL DRIVE or OL FAULT or CL FAULT	Idling after warming up: CL	• OL (Open Loop): Has not yet satisfied conditions for closed loop • CL (Closed Loop): Using the heated oxygen sensor as feed back for fuel control • OL DRIVE: Open loop due to driving conditions (fuel enrichment) • OL FAULT: Open loop due to detected system fault • CL FAULT: Closed loop but the heated oxygen sensor used for fuel control is malfunctioning
FC IDL (FC IDL)	Fuel cut idle/ ON or OFF	Fuel cut operation: ON	Fuel cut idle = ”ON” when the throttle valve is fully closed and engine speed is over 1,500 rpm
MIL Status (MIL/WARN LIGHT)	MIL status/ ON or OFF	MIL ON: ON	—
Starter SIG (STARTER SIG)	Starter signal/ ON or OFF	Cranking: ON	—
A/C SIG (A/C SIG)	A/C signal/ ON or OFF	A/C ON: ON	—
PNP SW (PNP SW [NSW])	Park/Neutral position switch signal/ ON or OFF	P or N position: ON	—
Elect Load SIG (ELECT LOAD SIG)	Electrical load signal/ ON or OFF	• Taillamp switch ON: ON • Defogger switch ON: ON	—
Stop Light SW (STOP LIGHT SW)	Stop lamp switch/ ON or OFF	• Brake pedal depressed: ON • Brake pedal released: OFF	—
PS Oil Press SW (PS OIL PRESS SW)	Power steering oil pressure switch signal/ ON or OFF	• While turning the steering wheel: ON • While not turning the steering wheel: OFF	Idle–up control is performed when PS is ON
PS Signal (PS SIGNAL)	Power steering signal/ ON or OFF	When the steering wheel is turned	This signal is usually ON until the ignition switch is turned to OFF

Intelligent Tester II Display (Abbreviation)	Measurement Item/Range (Display)	Normal Condition *1	Diagnostic Note
Fuel Pump (FUEL PUMP / SPD)	Fuel pump/speed status/ ON/H or OFF/M,L	Idling: ON	—
EVAP VSV (EVAP VSV)	EVAP VSV/ ON or OFF	VSV operating: ON	EVAP VSV is controlled by the ECM (ground side duty control)
VVT CTRL B1 (VVT CTRL B1)	VVT control status (bank 1)/ ON or OFF	VVT system in operation: ON	—
IGNITION (IGNITION)	Ignition counter/ Min.: 0, Max.: 400	0 to 400	—
Cylinder #1,#2,#3,#4 Misfire Rate (Cyl #1, #2, #3, #4)	Misfire ratio of the cylinder 1 to 4/ Min.: 0, Max.: 255	0 %	This item is displayed only when idling
MISFIRE RPM (MISFIRE RPM)	Engine RPM for first misfire range/ Min.: 0 rpm, Max.: 6,375 rpm	Misfire 0: 0 rpm	—
MISFIRE LOAD (MISFIRE LOAD)	Engine load for first misfire range/ Min.: 0 g/rev, Max.: 3.98 g/rev	Misfire 0: 0 g/rev	—
FC TAU (FC TAU)	Fuel cut TAU: Fuel cut during very light load/ ON or OFF	Fuel cut operating: ON	Fuel cut is being performed under very light load to prevent engine combustion from becoming incomplete
Check Mode (CHECK MODE)	Check mode/ ON or OFF	Check mode ON: ON	See page 05–20

*1: If no conditions are specifically stated for ”Idling,” the shift lever is in the N or P position, the A/C switch is OFF and all accessory switches are OFF.

2. ACTIVE TEST

HINT:

Performing an Active Test using the intelligent tester II enables components including the relay, VSV, and actuator to be operated without removing any parts. Performing the Active Test as the first step of trouble-shooting is one method to shorten diagnostic time.

Data List is displayed during an Active Test.

(a) Warm up the engine.
(b) Turn the ignition switch to OFF.
(c) Connect the intelligent tester II to the DLC3.
(d) Turn the ignition switch to ON.
(e) Turn the intelligent tester II ON.
(f) Select the following menu items: Powertrain / Engine and ECT / Active Test.
(g) Perform the Active Test by referring to the following table.

Intelligent Tester II Display (Abbreviation)	Test Details	Diagnostic Note
Injector Volume (INJ VOL)	[Test Details] Control the injection volume Min.: –12 %, Max.: 25 % [Vehicle Condition] Engine speed: 3,000 rpm or less	• All injectors are tested at once • Injection volume is gradually changed between –12 % and 25 %
A/F Control (A/F CONTROL)	[Test Details] Control the injection volume –12.5 or 25 % (Change the injection volume by 12.5 % or 25 %) [Vehicle Condition] Engine speed: 3,000 rpm or less	The following A/F Control procedure enables the technician to check and graph the voltage outputs of both the heated oxygen sensors To display the graph, select the following menu items: View / Line graph 1 or Line graph 2
Fuel Pump Relay (FUEL PMP SP CTL)	[Test Details] Control the fuel pump speed ON or OFF	—
Purge VSV (EVAP (PURGE) VSV)	[Test Details] Activate the EVAP VSV control ON or OFF	—
VVT Control (Bank 1) (VVT CTRL B1)	[Test Details] Activate the VVT system (Bank 1) ON or OFF	• ON: Rough idle or engine stall • OFF: Normal engine speed
FC IDL Prohibit (FC IDL PROHBT)	[Test Details] Control the idle fuel cut prohibition ON or OFF	During idling
TE1 (TC) (TC/TE1)	[Test Details] Connect the TC and TE1 ON or OFF	—

054JD–22

DIAGNOSTIC TROUBLE CODE CHART

HINT:

Parameters listed in the chart may not be exactly the same as your readings due to factors such as the type of instrument.

If a DTC is displayed during the DTC check in check mode, check the circuit for the DTC listed in the table below. For details of each DTC, refer to the ”See page” under the respective ”DTC No.” in this chart.

DTC No. (See Page)	Detection Item	Trouble Area	*1 MIL	Memory
P0010 (05–34)	Camshaft Position ”A” Actuator Circuit (Bank 1)	• Open or short in oil control valve circuit • Oil control valve • ECM	○	○
P0011 (05–38)	Camshaft Position ”A” –Timing Over–Advanced or System Performance (Bank 1)	• Valve timing • Oil control valve • Camshaft timing gear assy • ECM	—	○
P0012 (05–38)	Camshaft Position ”A” –Timing Over– Retarded (Bank 1)	• Valve timing • Oil control valve • Camshaft timing gear assy • ECM	—	○
P0016 (05–42)	Crankshaft Position – Camshaft Position Correlation (Bank 1 Sensor A)	• Mechanical system (Jumped tooth of timing chain or chain stretched) • ECM	—	○
P0031 (05–43)	Oxygen Sensor Heater Control Circuit Low (Bank 1 Sensor 1)	• Open or short in heater circuit of heated oxygen sensor • Heated oxygen sensor heater (Sensor 1) • EFI relay • ECM	○	○
P0032 (05–43)	Oxygen Sensor Heater Control Circuit High (Bank 1 Sensor 1)	• Open or short in heater circuit of heated oxygen sensor • Heated oxygen sensor heater (Sensor 1) • EFI relay • ECM	○	○
P0037 (05–46)	Oxygen Sensor Heater Control Circuit Low (Bank 1 Sensor 2)	• Open in heater circuit of heated oxygen sensor • Heated oxygen sensor heater (Sensor 2) • EFI relay • ECM	○	○
P0038 (05–46)	Oxygen Sensor Heater Control Circuit High (Bank 1 Sensor 2)	• Short in heater circuit of heated oxygen sensor • Heated oxygen sensor heater (Sensor 2) • EFI relay • ECM	○	○
P0100 (05–49)	Mass Air Flow Circuit Malfunction	• Open or short in mass air flow meter circuit • Mass air flow meter • ECM	○	○
P0102 (05–49)	Mass or Volume Air Flow Circuit Low Input	• Open in mass air flow meter circuit • Mass air flow meter • ECM	○	○
P0103 (05–49)	Mass or Volume Air Flow Circuit High Input	• Short in mass air flow meter circuit • Mass air flow meter • ECM	○	○
P0110 (05–55)	Intake Air Temperature Circuit	• Open or short in intake air temperature sensor circuit • Intake air temperature sensor (built into mass air flow meter) • ECM	○	○
P0112 (05–55)	Intake Air Temperature Circuit Low Input	• Short in intake air temperature sensor circuit • Intake air temperature sensor (built into mass air flow meter) • ECM	○	○
P0113 (05–55)	Intake Air Temperature Circuit High Input	• Open in intake air temperature sensor circuit • Intake air temperature sensor (built into mass air flow meter) • ECM	○	○

DTC No. (See Page)	Detection Item	Trouble Area	*1 MIL	Memory
P0115 (05–60)	Engine Coolant Temperature Circuit	• Open or short in engine coolant temperature sensor circuit • Engine coolant temperature sensor • ECM	○	○
P0116 (05–65)	Engine Coolant Temperature Circuit Range/Performance Problem	• Engine coolant temperature sensor	○	○
P0117 (05–60)	Engine Coolant Temperature Circuit Low Input	• Short in engine coolant temperature sensor circuit • Engine coolant temperature sensor • ECM	○	○
P0118 (05–60)	Engine Coolant Temperature Circuit High Input	• Open in engine coolant temperature sensor circuit • Engine coolant temperature sensor • ECM	○	○
P0120 (05–66)	Throttle/Pedal Position Sensor/ Switch "A" Circuit	• Throttle position sensor (built into throttle body) • ECM	○	○
P0121 (05–73)	Throttle/Pedal Position Sensor/ Switch "A" Circuit Range/Performance Problem	• Throttle position sensor (built into throttle body)	○	○
P0122 (05–66)	Throttle/Pedal Position Sensor/ Switch "A" Circuit Low Input	• Throttle position sensor (built into throttle body) • Short in VTA1 circuit • Open in VC circuit • ECM	○	○
P0123 (05–66)	Throttle/Pedal Position Sensor/ Switch "A" Circuit High Input	• Throttle position sensor (built into throttle body) • Open in VTA1 circuit • Open in E2 circuit • VC and VTA1 circuits are short–circuited • ECM	○	○
P0130 *4 (05–74)	Oxygen Sensor Circuit Malfunction (Bank 1 Sensor 1)	• Open or short in heated oxygen sensor circuit • Heated oxygen sensor (Sensor 1) • Heated oxygen sensor heater (Sensor 1) • EFI relay • Air induction system • Fuel pressure • Injector • ECM	○	○
P0133 *4 (05–84)	Oxygen Sensor Circuit Slow Response (Bank 1 Sensor 1)	• Open or short in heated oxygen sensor circuit • Heated oxygen sensor (Sensor 1) • Heated oxygen sensor heater (Sensor 1) • EFI relay • Air induction system • Fuel pressure • Injector • ECM	○	○
P0134 (05–91)	Oxygen Sensor Circuit No Activity Detected (Bank 1 Sensor 1)	• Open or short in heated oxygen sensor circuit • Heated oxygen sensor (Sensor 1) • PCV valve and hose • EFI relay • Air induction system • Fuel pressure • Injector • Gas leakage in exhaust system • ECM	○	○
P0136 (05–100)	Oxygen Sensor Circuit Malfunction (Bank 1 Sensor 2)	• Open or short in heated oxygen sensor circuit • Heated oxygen sensor (sensor 2) • Heated oxygen sensor heater (sensor 2) • EFI relay	○	○

DTC No. (See Page)	Detection Item	Trouble Area	*1 MIL	Memory
P0171 *4 (05–106)	System Too Lean (Bank 1)	• Air induction system • Injector blockage • Mass air flow meter • Engine coolant temperature sensor • Fuel pressure • Gas leakage in exhaust system • Open or short in heated oxygen sensor (sensor 1) circuit • Heated oxygen sensor (sensor 1) • PCV valve and hose • PCV hose connection • ECM	○	○
P0172 *4 (05–106)	System Too Rich (Bank 1)	• Injector leakage or blockage • Mass air flow meter • Engine coolant temperature sensor • Ignition system • Fuel pressure • Gas leakage in exhaust system • Open or short in heated oxygen sensor (sensor 1) circuit • Heated oxygen sensor (sensor 1) • ECM	○	○
P0220 (05–66)	Throttle/Pedal Position Sensor/ Switch "B" Circuit	• Throttle position sensor (built into throttle body) • ECM	○	○
P0222 (05–66)	Throttle/Pedal Position Sensor/ Switch "B" Circuit Low Input	• Throttle position sensor (built into throttle body) • Short in VTA2 circuit • Open in VC circuit • ECM	○	○
P0223 (05–66)	Throttle/Pedal Position Sensor/ Switch "B" Circuit High Input	• Throttle position sensor (built into throttle body) • Open in VTA2 circuit • Open in E2 circuit • VC and VTA2 circuits are short–circuited • ECM	○	○
P0300 *4 (05–118)	Random/Multiple Cylinder Misfire Detected	• Open or short in engine wire harness • Connector connection • Vacuum hose connection • Ignition system • Injector • Fuel pressure • Mass air flow meter • Engine coolant temperature sensor • Compression pressure • Valve clearance • Valve timing • PCV hose connection • PCV hose • ECM	○ *2	○
P0301 *4 (05–118)	Cylinder 1 Misfire Detected	• Same as DTC P0300	○ *2	○
P0302 *4 (05–118)	Cylinder 2 Misfire Detected	• Same as DTC P0300	○ *2	○
P0303 *4 (05–118)	Cylinder 3 Misfire Detected	• Same as DTC P0300	○ *2	○
P0304 *4 (05–118)	Cylinder 4 Misfire Detected	• Same as DTC P0300	○ *2	○
P0325 (05–132)	Knock Sensor 1 Circuit (Bank 1 or Single Sensor)	• Open or short in knock sensor circuit • Knock sensor (under–torqued or looseness) • ECM	○	○

DTC No. (See Page)	Detection Item	Trouble Area	*1 MIL	Memory
P0327 (05–132)	Knock Sensor 1 Circuit Low Input (Bank 1 or Single Sensor)	• Short in knock sensor circuit • Knock sensor • ECM	○	○
P0328 (05–132)	Knock Sensor 1 Circuit High Input (Bank 1 or Single Sensor)	• Open in knock sensor circuit • Knock sensor • ECM	○	○
P0335 (05–136)	Crankshaft Position Sensor "A" Circuit	• Open or short in crankshaft position sensor circuit • Crankshaft position sensor • Sensor plate (crankshaft) • ECM	○	○
P0339 (05–136)	Crankshaft Position Sensor "A" Circuit Intermittent	• Same as DTC P0335	—	○
P0340 (05–140)	Camshaft Position Sensor "A" Circuit (Bank 1 or Single Sensor)	• Open or short in camshaft position sensor circuit • Camshaft position sensor • Camshaft timing pulley • Jumped tooth of timing chain • ECM	○	○
P0341 (05–140)	Camshaft Position Sensor "A" Circuit Range/Performance (Bank 1 or Single Sensor)	• Same as DTC P0340	○	○
P0351 (05–143)	Ignition Coil "A" Primary/Secondary Circuit	• Ignition system • Open or short in IGF or IGT1 to 4 circuit from ignition coil with igniter to ECM • No. 1 to No. 4 ignition coil with igniter • ECM	○	○
P0352 (05–143)	Ignition Coil "B" Primary/Secondary Circuit	• Same as DTC P0351	○	○
P0353 (05–143)	Ignition Coil "C" Primary/Secondary Circuit	• Same as DTC P0351	○	○
P0354 (05–143)	Ignition Coil "D" Primary/Secondary Circuit	• Same as DTC P0351	○	○
P0420 *4 (05–150)	Catalyst System Efficiency Below Threshold (Bank 1)	• Gas leakage in exhaust system • Heated oxygen sensor (sensor 1) • Heated oxygen sensor (sensor 2) • Three–way catalytic converter	○	○
P0443 (05–155)	Evaporative Emission Control System Purge Control Valve Circuit	• Open or short in EVAP VSV circuit • EVAP VSV • ECM	○	○
P0500 (05–158)	Vehicle Speed Sensor "A"	• Open or short in speed sensor circuit • Speed sensor • Combinationmeter • ECM • Skid control ECU	○	○
P0504 (05–161)	Brake Switch "A"/"B" Correlation	• Short in stop lamp switch signal circuit • Stop lamp fuse • Stop lamp switch • ECM	—	○
P0505 (05–165)	Idle Air Control System	• Electronic throttle control system • Air induction system • PCV hose connection	○	○
P0560 (05–167)	System Voltage	• Open in backup power source circuit • ECM	○	○
P0604 (05–170)	Internal Control Module Random Access Memory (RAM) Error	• ECM	○	○
P0606 (05–170)	ECM/PCM Processor	• ECM	○	○

DTC No. (See Page)	Detection Item	Trouble Area	*1 MIL	Memory
P0607 (05–170)	Control Module Performance	• ECM	○	○
P0617 (05–171)	Starter Relay Circuit High	• Short in park/neutral position switch circuit (MMT) • Short in STA circuit • Park/neutral position switch (MMT) • ECM	○	○
P0657 (05–170)	Actuator Supply Voltage Circuit / Open	• ECM	○	○
P0705 (05–247)	Transmission Range Sensor Circuit Malfunction (PRNDL Input)	• Electronic control automatic transaxle	○	○
P0710 (05–252)	Transmission Fluid Temperature Sensor "A" Circuit	• Electronic control automatic transaxle	○	○
P0711 (05–255)	Transmission Fluid Temperature Sensor "A" Performance	• Electronic control automatic transaxle	○	○
P0712 (05–252)	Transmission Fluid Temperature Sensor "A" Circuit Low Input	• Electronic control automatic transaxle	○	○
P0713 (05–252)	Transmission Fluid Temperature Sensor "A" Circuit High Input	• Electronic control automatic transaxle	○	○
P0717 (05–258)	Turbine Speed Sensor Circuit No Signal	• Electronic control automatic transaxle	○	○
P0724 (05–261)	Brake Switch "B" Circuit High	• Electronic control automatic transaxle	○	○
P0741 (05–264)	Torque Converter Clutch Solenoid Performance (Shift Solenoid Valve SL)	• Electronic control automatic transaxle	○	○
P0751 (05–268)	Shift Solenoid "A" Performance (Shift Solenoid Valve S1)	• Electronic control automatic transaxle	○	○
P0756 (05–271)	Shift Solenoid "B" Performance (Shift Solenoid Valve S2)	• Electronic control automatic transaxle	○	○
P0787 (05–274)	Shift/Timing Solenoid Low (Shift Solenoid Valve ST)	• Electronic control automatic transaxle	○	○
P0788 (05–274)	Shift/Timing Solenoid High (Shift Solenoid Valve ST)	• Electronic control automatic transaxle	○	○
P0973 (05–277)	Shift Solenoid "A" Control Circuit Low (Shift Solenoid Valve S1)	• Electronic control automatic transaxle	○	○
P0974 (05–277)	Shift Solenoid "A" Control Circuit High (Shift Solenoid Valve S1)	• Electronic control automatic transaxle	○	○
P0976 (05–280)	Shift Solenoid "B" Control Circuit Low (Shift Solenoid Valve S2)	• Electronic control automatic transaxle	○	○
P0977 (05–280)	Shift Solenoid "B" Control Circuit High (Shift Solenoid Valve S2)	• Electronic control automatic transaxle	○	○
P0998 (05–283)	Shift Solenoid "F" Control Circuit Low (Shift Solenoid Valve SB)	• Electronic control automatic transaxle	○	○
P0999 (05–283)	Shift Solenoid "F" Control Circuit High (Shift Solenoid Valve SB)	• Electronic control automatic transaxle	○	○
P2102 (05–174)	Throttle Actuator Control Motor Circuit Low	• Open in throttle control actuator circuit • Throttle actuator • ECM	○	○
P2103 (05–174)	Throttle Actuator Control Motor Circuit High	• Short in throttle control actuator circuit • Throttle actuator • Throttle valve • Throttle body assembly • ECM	○	○

DTC No. (See Page)	Detection Item	Trouble Area	*1 MIL	Memory
P2111 (05–177)	Throttle Actuator Control System – Stuck Open	• Throttle actuator • Throttle body assembly • Throttle valve	○	○
P2112 (05–177)	Throttle Actuator Control System – Stuck Closed	• Same as DTC P2111	○	○
P2118 (05–179)	Throttle Actuator Control Motor CurrentRange/Performance	• Open in ETCS power source circuit • ETCS fuse • ECM	○	○
P2119 (05–182)	Throttle Actuator Control Throttle BodyRange/Performance	• Electronic throttle control system • ECM	○	○
P2120 (05–184)	Throttle/Pedal Position Sensor/ Switch "D" Circuit	• Accelerator pedal position sensor • ECM	○	○
P2121 (05–192)	Throttle/Pedal Position Sensor/ Switch "D" Circuit Range/Perfor- mance	• Accelerator pedal position sensor circuit • Accelerator pedal position sensor • ECM	○	○
P2122 (05–184)	Throttle/Pedal Position Sensor/ Switch "D" Circuit Low Input	• Accelerator pedal position sensor • Open in VCP1 circuit • Open or ground short in VPA1 circuit • ECM	○	○
P2123 (05–184)	Throttle/Pedal Position Sensor/ Switch "D" Circuit High Input	• Accelerator pedal position sensor • Open in EPA circuit • ECM	○	○
P2125 (05–184)	Throttle/Pedal Position Sensor/ Switch "E" Circuit	• Accelerator pedal position sensor • ECM	○	○
P2127 (05–184)	Throttle/Pedal Position Sensor/ Switch "E" Circuit Low Input	• Accelerator pedal position sensor • Open in VCP2 circuit • Open or ground short in VPA2 circuit • ECM	○	○
P2128 (05–184)	Throttle/Pedal Position Sensor/ Switch "E" Circuit High Input	• Accelerator pedal position sensor • Open in EPA2 circuit • ECM	○	○
P2135 (05–66)	Throttle/Pedal Position Sensor/ Switch "A"/"B" Voltage Correla- tion	• VTA1 and VTA2 circuits are short–circuited • Throttle position sensor (built into throttle body) • ECM	○	○
P2138 (05–184)	Throttle/Pedal Position Sensor/ Switch "D"/"E" Voltage Correla- tion	• VPA1 and VPA2 circuits are short circuited • Accelerator pedal position sensor • ECM	○	○
P2195 *4 (05–74)	Oxygen Sensor Signal Stuck Lean (Bank 1 Sensor 1)	• Open or short in heated oxygen sensor circuit • Heated oxygen sensor (Sensor 1) • Heated oxygen sensor heater (Sensor 1) • EFI relay • Air induction system • Fuel pressure • Injector • ECM	○	○
P2196 *4 (05–74)	Oxygen Sensor Signal Stuck Rich (Bank 1 Sensor 1)	• Same as DTC P2195	○	○
P2716 (05–286)	Pressure Control Solenoid "D" Electrical (Shift Solenoid SLT)	• Electronic control automatic transaxle	○	○
P2769 (05–289)	Torque Converter Clutch Sole- noid Circuit Low (Shift Solenoid Valve SL)	• Electronic control automatic transaxle	○	○

DTC No. (See Page)	Detection Item	Trouble Area	*1 MIL	Memory
P2770 (05–289)	Torque Converter Clutch Solenoid Circuit High (Shift Solenoid Valve SL)	• Electronic control automatic transaxle	○	○
B2799 (*3)	Engine Immobilizer System Malfunction	• Immobilizer system	—	○

*1: MIL (Malfunction Indicator Lamp) illuminates.
*2: MIL illuminates or flashes continuously.
*3: See page 05–1625 of Pub. No. RM1018E AVENSIS.
*4: Euro–OBD vehicles

DTC	P0010	CAMSHAFT POSITION ”A” ACTUATOR CIRCUIT (BANK 1)

CIRCUIT DESCRIPTION

The Variable Valve Timing (VVT) system includes the ECM, Oil Control Valve (OCV) and VVT controller. The ECM sends a target ”duty–cycle” control signal to the OCV. This control signal, applied to the OCV, regulates the oil pressure supplied to the VVT controller. Camshaft timing control is performed based on engine operating conditions such as intake air volume, throttle position and engine coolant temperature.
The ECM controls the OCV based on the signals from several sensors. The VVT controller regulates the intake camshaft angle using oil pressure through the OCV. As a result, the relative position between the camshaft and crankshaft is optimized, the engine torque and the fuel economy improve, and the exhaust emission drops. The ECM detects the actual valve timing using signals from the camshaft and crankshaft position sensors. The ECM performs feedback control and verifies target valve timing.

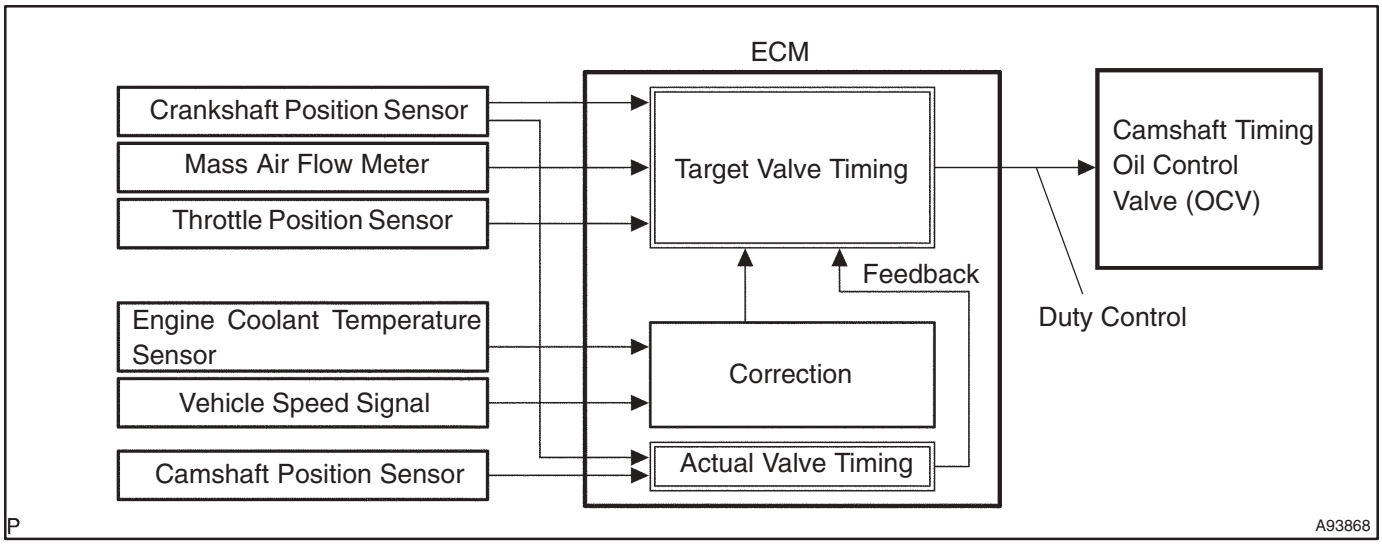

DTC No.	DTC Detection Condition	Trouble Area
P0010	Open or short in oil control valve circuit (1 trip detection logic)	• Open or short in oil control valve circuit • Oil control valve • ECM

WIRING DIAGRAM

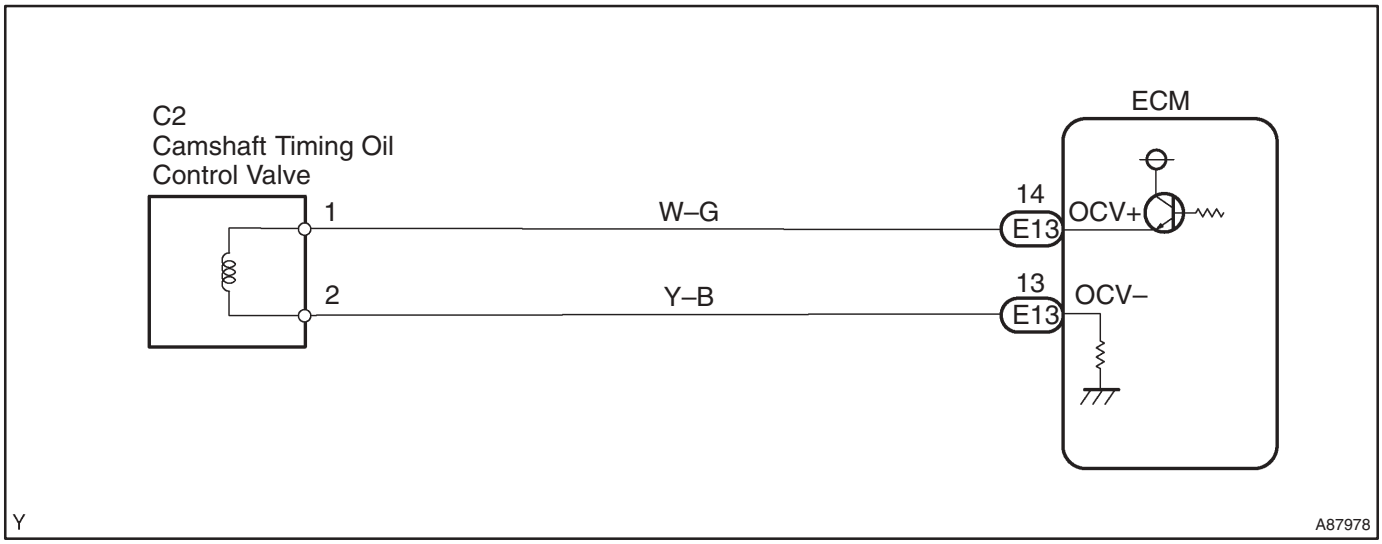

INSPECTION PROCEDURE

HINT:

Read freeze frame data using the intelligent tester II. Freeze frame data record the engine condition when malfunctions are detected. When troubleshooting, freeze frame data can help determine if the vehicle was moving or stationary, if the engine was warmed up or not, if the air–fuel ratio was lean or rich, and other data from the time the malfunction occurred.

1	PERFORM ACTIVE TEST USING INTELLIGENT TESTER II(OPERATE OCV)

(a) Start the engine and warm it up.
(b) Turn the ignition switch to OFF.
(c) Connect the intelligent tester II to the DLC3.
(d) Turn the ignition switch to ON and turn the intelligent tester ll ON.
(e) Select the following menu items: Powertrain / Engine and ECT / Active Test / VVT Control (Bank 1).
(f) Check the engine speed when operating the OCV using the intelligent tester II.

Standard:

Tester Operation	Specified Condition
OCV is OFF	Normal engine speed
OCV is ON	Rough idling or engine stalling

OK → **CHECK FOR INTERMITTENT PROBLEMS (See page 05–9)**

NG

2 INSPECT CAMSHAFT TIMING OIL CONTROL VALVE ASSY(OCV)

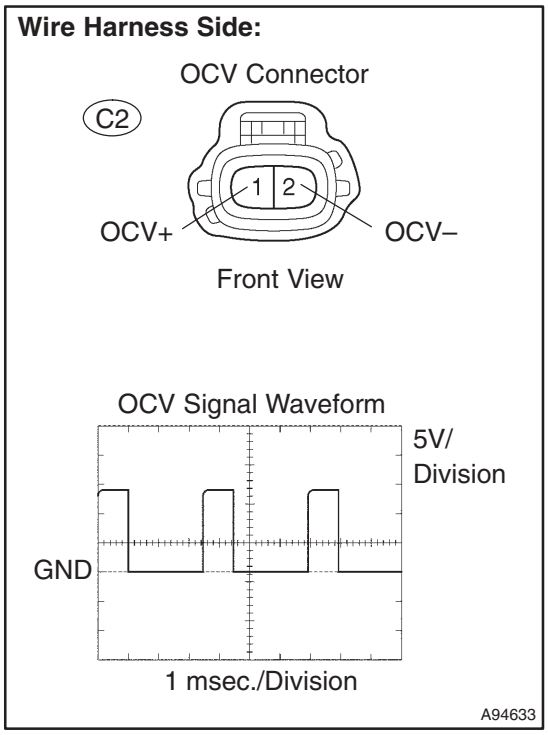

(a) Disconnect the C2 OCV connector.
(b) During idling, check the waveform between the specified terminals of the C2 OCV connector using the oscilloscope.
Standard:

Tester Connection	Specified Condition
OCV+ (C2–1) – OCV– (C2–2)	Correct waveform is as shown

(c) Reconnect the OCV connector.

NG → **REPLACE CAMSHAFT TIMING OIL CONTROL VALVE ASSY**

OK

3 INSPECT ECM(OCV SIGNAL)

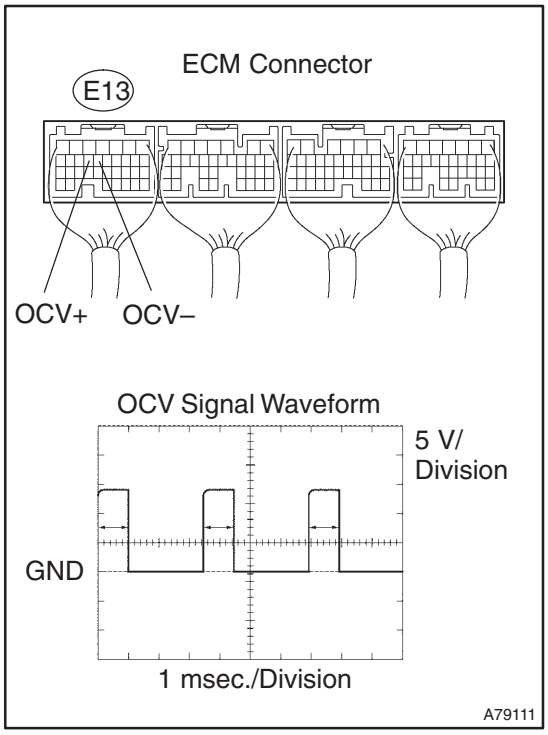

(a) Inspect using the oscilloscope.
(b) During idling, check the waveform between the specified terminals of the E13 ECM connector.
Standard:

Tester Connection	Specified Condition
OCV+ (E13–14) – OCV– (E13–13)	Correct waveform is as shown

NG → **REPLACE ECM (See page 10–65 of Pub. No. RM1018E AVENSIS)**

OK

4	CHECK HARNESS AND CONNECTOR(CAMSHAFT TIMING OIL CONTROL VALVE (OCV) – ECM)

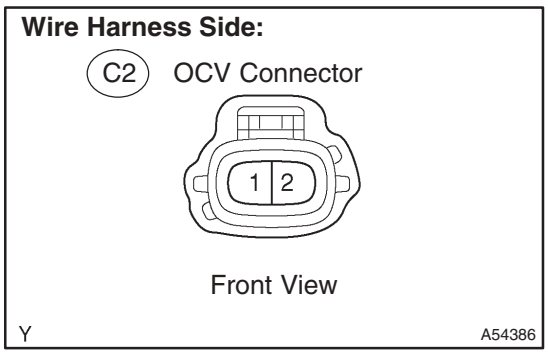

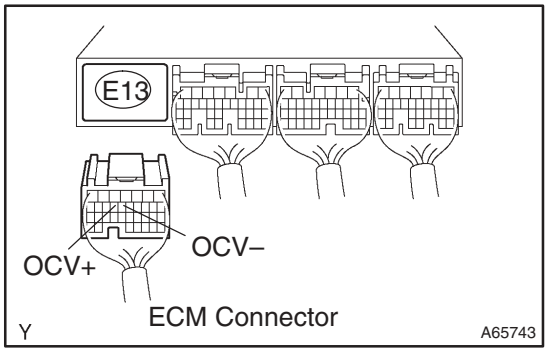

(a) Disconnect the C2 OCV connector.
(b) Disconnect the E13 ECM connector.
(c) Check the resistance.

Standard (Check for open):

Tester Connection	Specified Condition
OCV (C2–1) – OCV+ (E13–14)	Below 1 Ω
OCV (C2–2) – OCV– (E13–13)	Below 1 Ω

Standard (Check for short):

Tester Connection	Specified Condition
OCV (C2–1) or OCV+ (E13–14) – Body ground	10 kΩ or higher
OCV (C2–1) or OCV– (E13–13) – Body ground	10 kΩ or higher

(d) Reconnect the OCV connector.
(e) Reconnect the ECM connector.

NG → **REPAIR OR REPLACE HARNESS OR CONNECTOR**

OK

CHECK FOR INTERMITTENT PROBLEMS (See page 05–9)

DTC	P0011	CAMSHAFT POSITION ”A” –TIMING OVER–ADVANCED OR SYSTEM PERFORMANCE (BANK 1)

DTC	P0012	CAMSHAFT POSITION ”A” –TIMING OVER–RETARDED (BANK 1)

CIRCUIT DESCRIPTION

Refer to DTC P0010 on page 05–34.

DTC No.	DTC Detection Condition	Trouble Area
P0011	Advanced cam timing: After engine is warmed up, valve timing does not change from current valve timing while driving at engine speed of 500 to 4,000 rpm (1 trip detection logic)	• Valve timing • Oil control valve • Camshaft timing gear assy • ECM
P0012	Retarded cam timing: After engine is warmed up, valve timing does not change from current valve timing while driving at engine speed of 500 to 4,000 rpm (2 trip detection logic)	• Valve timing • Oil control valve • Camshaft timing gear assy • ECM

WIRING DIAGRAM

Refer to DTC P0010 on page 05–34.

INSPECTION PROCEDURE

HINT:

Advanced timing over (Valve timing is out of specified range)	P0011
Retarded timing over (Valve timing is out of specified range)	P0012

- If DTC P0011 or P0012 is displayed, check the VVT system circuit.
- Read freeze frame data using the intelligent tester II. Freeze frame data record the engine condition when malfunctions are detected. When troubleshooting, freeze frame data can help determine if the vehicle was moving or stationary, if the engine was warmed up or not, if the air–fuel ratio was lean or rich, and other data from the time the malfunction occurred.

1	CHECK VALVE TIMING (See page 14–49 of Pub. No. RM1018E AVENSIS)

(a) Check for looseness or a jumped tooth of the timing chain.
OK: The matchmarks of the crankshaft pulley and camshaft pulley are aligned.

NG → **ADJUST VALVE TIMING (See page 14–49 of Pub. No. RM1018E AVENSIS)**

OK

2 PERFORM ACTIVE TEST USING INTELLIGENT TESTER II(OPERATE OCV)

(a) Start the engine and warm it up.
(b) Turn the ignition switch to OFF.
(c) Connect the intelligent tester II to the DLC3.
(d) Turn the ignition switch to ON and turn the intelligent tester ll ON.
(e) Select the following menu items: Powertrain / Engine and ECT / Active Test / VVT Control (Bank 1).
(f) Check the engine speed when operating the OCV using the intelligent tester II.

Standard:

Tester Operation	Specified Condition
OCV is OFF	Normal engine speed
OCV is ON	Rough idling or engine stalling

NG → **Go to step 4**

OK

3 CHECK IF DTC OUTPUT RECURS(DTC P0011 OR P0012)

(a) Clear the DTC(s) using the intelligent tester II (see page 05–18).
(b) Start the engine and warm it up.
(c) Drive the vehicle for 10 minutes or more.
(d) Read output DTCs using the intelligent tester II.

OK: No DTC output.

OK → **VVT SYSTEM OK**

HINT:
DTC P0011 or P0012 is output when foreign objects in engine oil are caught in some part of the system. These DTCs will remain set even when the system returns to normal after a short time. Foreign objects are filtered out by the oil filter.

NG

4	INSPECT ECM(OCV SIGNAL)

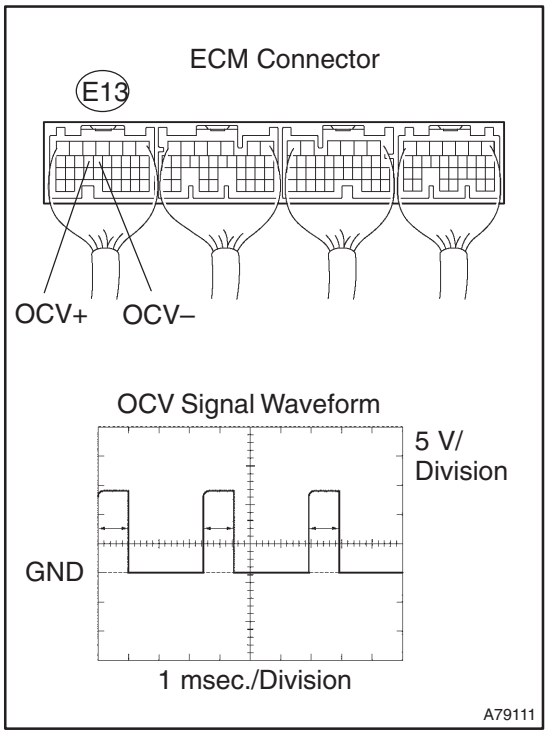

(a) Inspect using the oscilloscope.
(b) During idling, check the waveform between the specified terminals of the E13 ECM connector.

Standard:

Tester Connection	Specified Condition
OCV+ (E13–14) – OCV– (E13–13)	Correct waveform is as shown

NG → **REPLACE ECM(See page 10–65 of Pub. No. RM1018E AVENSIS)**

OK

5	INSPECT OIL CONTROL VALVE FILTER

OK: The filter is not clogged.

NG → **REPLACE OIL CONTROL VALVE FILTER**

OK

6	INSPECT CAMSHAFT TIMING OIL CONTROL VALVE ASSY(OCV) (See page 10–3)

OK: The OCV has no contamination and moves smoothly.

OK → **Go to step 8**

NG

7	REPLACE CAMSHAFT TIMING OIL CONTROL VALVE ASSY(OCV)

GO

8	**INSPECT CAMSHAFT TIMING GEAR ASSY (See page 14–64 of Pub. No. RM1018E AVENSIS)**

OK: The camshaft timing gear rotates smoothly when applying pressure.

OK → **Go to step 10**

NG

9	**REPLACE CAMSHAFT TIMING GEAR ASSY**

GO

10	**CHECK FOR BLOCKAGE(OCV, OIL CHECK VALVE AND OIL HOLE)**

OK: No blockage.

NG → **REPAIR OR REPLACE**

OK

11	**CHECK IF DTC OUTPUT RECURS(DTC P0011 OR P0012)**

(a) Clear the DTC(s) using the intelligent tester II (see page 05–18).
(b) Start the engine and warm it up.
(c) Drive the vehicle for 10 minutes or more.
(d) Read output DTCs using the intelligent tester II.

Standard: No DTC output.

OK → **VVT SYSTEM OK**

HINT:
DTC P0011 or P0012 is output when foreign objects in engine oil are caught in some part of the system. These DTCs will remain set even when the system returns to normal after a short time. Foreign objects are filtered out by the oil filter.

NG

REPLACE ECM (See page 10–65 of Pub. No. RM1018E AVENSIS)

DTC	P0016	CRANKSHAFT POSITION – CAMSHAFT POSITION CORRELATION (BANK 1 SENSOR A)

CIRCUIT DESCRIPTION

Refer to DTC P0335 and P0339 on page 05–136.

DTC No.	DTC Detection Condition	Trouble Area
P0016	Deviation in crankshaft position sensor signal and camshaft position signal (2 trip detection logic)	• Mechanical system (Jumped tooth of timing chain or chain stretched) • ECM

WIRING DIAGRAM

Refer to DTC P0335 and P0339 on page 05–136.

INSPECTION PROCEDURE

Read freeze frame data using the intelligent tester II. Freeze frame data record the engine condition when malfunctions are detected. When troubleshooting, freeze frame data can help determine if the vehicle was moving or stationary, if the engine was warmed up or not, if the air–fuel ratio was lean or rich, and other data from the time the malfunction occurred.

1	CHECK VALVE TIMING(CHECK FOR LOOSENESS AND JUMPED TEETH ON TIMING CHAIN) (See page 14–49 of Pub. No. RM1018E AVENSIS)

(a) Check for looseness or a jumped tooth of the timing chain.
OK: The matchmarks of the crankshaft pulley and camshaft pulley are aligned.

NG → **ADJUST VALVE TIMING (See page 14–49 of Pub. No. RM1018E AVENSIS) (REPAIR OR REPLACE TIMING CHAIN)**

OK

REPLACE ECM (See page 10–65 of Pub. No. RM1018E AVENSIS)

DTC	P0031	OXYGEN SENSOR HEATER CONTROL CIRCUIT LOW (BANK 1 SENSOR 1)

DTC	P0032	OXYGEN SENSOR HEATER CONTROL CIRCUIT HIGH (BANK 1 SENSOR 1)

CIRCUIT DESCRIPTION

Refer to DTC P0130 on page 05–74.

HINT:

The ECM provides a pulse width modulated control circuit to adjust current through the heater. The heated oxygen sensor heater circuit uses a relay on the +B side of the circuit.

Reference (Sensor 1 System Diagram):

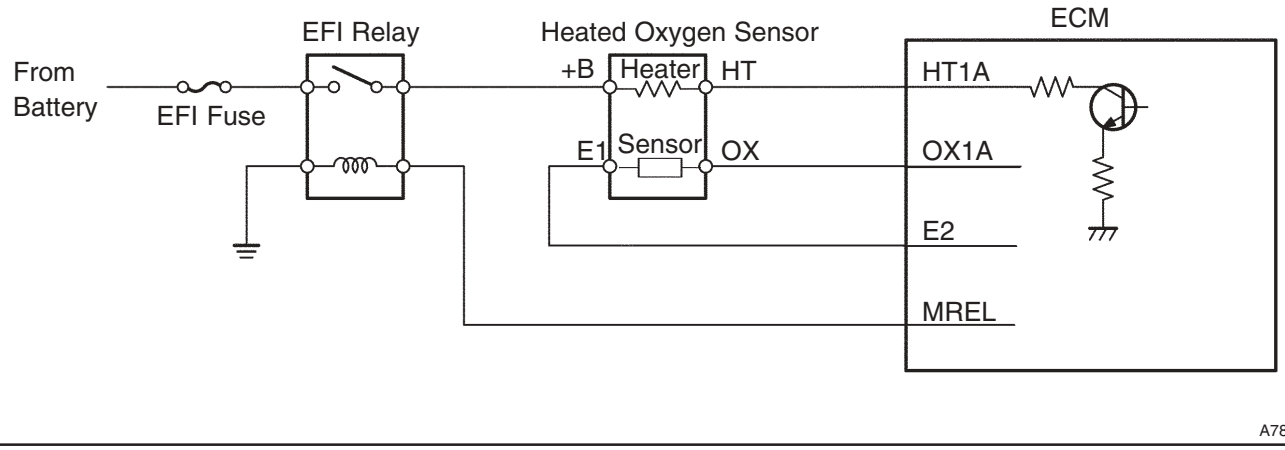

DTC No.	DTC Detection Condition	Trouble Area
P0031	Heated current is 0.8 A or less when heater operates (1 trip detection logic)	• Open or short in heater circuit of heated oxygen sensor • Heated oxygen sensor heater (sensor 1) • EFI relay • ECM
P0032	Heated current exceeds 10 A when the heater operates (1 trip detection logic)	• Open or short in heater circuit of heated oxygen sensor • Heated oxygen sensor heater (sensor 1) • EFI relay • ECM

HINT:

- Sensor 1 refers to the sensor mounted in front of the Three–Way Catalytic Converter (TWC) and located near the engine assembly.
- Sensor 2 refers to the sensor mounted behind the TWC and located far from the engine assembly.

WIRING DIAGRAM

Refer to DTC P0130 on page 05–74.

INSPECTION PROCEDURE

HINT:

Read freeze frame data using the intelligent tester II. Freeze frame data record the engine condition when malfunctions are detected. When troubleshooting, freeze frame data can help determine if the vehicle was moving or stationary, if the engine was warmed up or not, if the air–fuel ratio was lean or rich, and other data from the time the malfunction occurred.

1 INSPECT HEATED OXYGEN SENSOR(HEATER RESISTANCE)

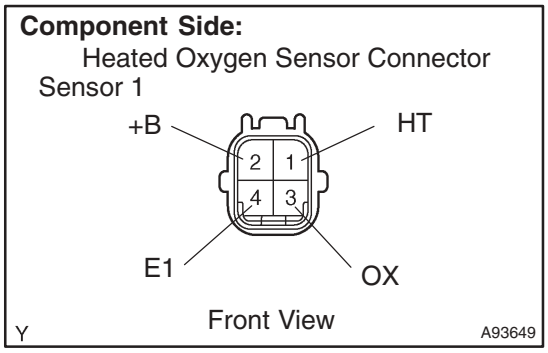

(a) Disconnect the H7 heated oxygen sensor connector.

(b) Measure the resistance between the terminals of the heated oxygen sensor connector.

Standard (Sensor 1):

Tester Connection	Specified Condition
1 (HT) – 2 (+B)	5 to 10 Ω at 20°C (68°F)
1 (HT) – 4 (E1)	10 kΩ or higher

(c) Reconnect the heated oxygen sensor connector.

NG → **REPLACE HEATED OXYGEN SENSOR**

OK

2 INSPECT EFI RELAY

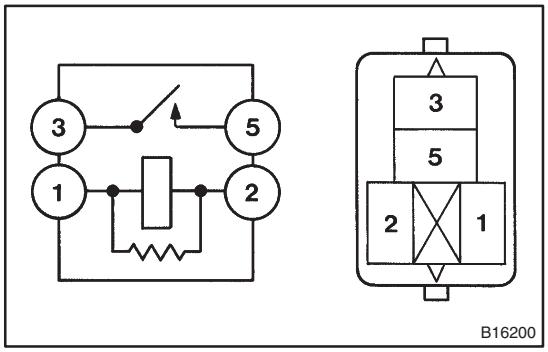

(a) Remove the EFI relay from the engine room R/B.

(b) Check the EFI relay resistance.

Standard:

Tester Connection	Specified Condition
3 – 5	10 kΩ or higher
3 – 5	Below 1 Ω (Apply battery voltage to terminals 1 and 2)

(c) Reinstall the EFI relay.

NG → **REPLACE EFI RELAY**

OK

3 INSPECT ECM(HT1A VOLTAGE)

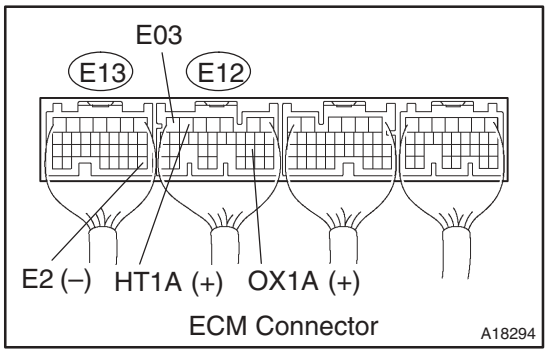

(a) Turn the ignition switch to ON.

(b) Measure the voltage between the applicable terminals of the E12 and E13 ECM connectors.

Standard:

Tester Connection	Specified Condition
HT1A (E12–6) – E03 (E12–7)	9 to 14 V
OX1A (E12–22) – E2 (E13–28)	9 to 14 V

OK → **REPLACE ECM (See page 10–65 of Pub. No. RM1018E AVENSIS)**

NG

4	CHECK HARNESS AND CONNECTOR(HEATED OXYGEN SENSOR – ECM, HEATED OXYGEN SENSOR – EFI RELAY)

Wire Harness Side:

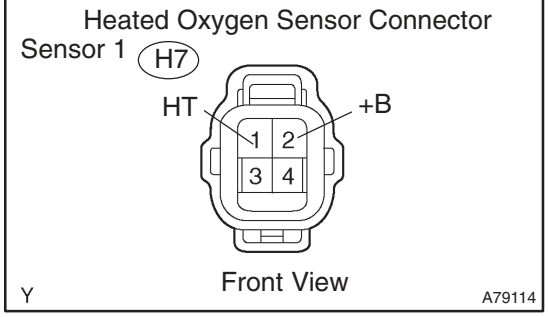

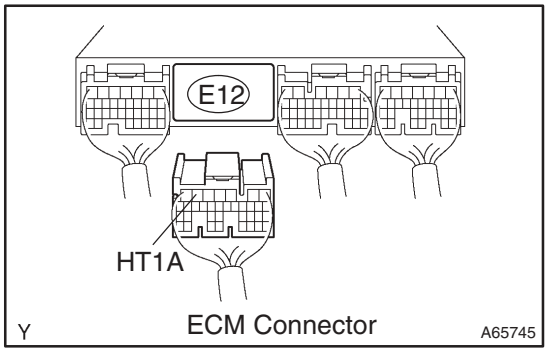

Engine Room R/B No. 4:

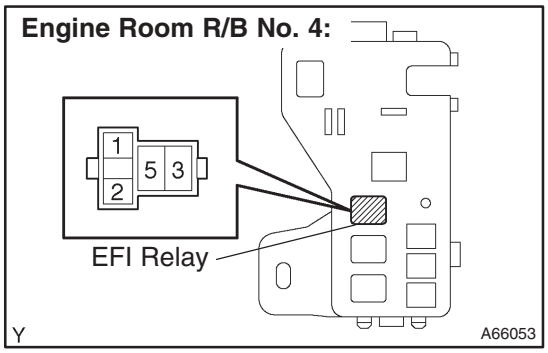

(a) Check the harness and the connectors between the ECM and the heated oxygen sensor.
  (1) Disconnect the H7 heated oxygen sensor connector.
  (2) Disconnect the E12 ECM connector.
  (3) Check the resistance.

Standard (Check for open):

Tester Connection	Specified Condition
HT (H7–1) – HT1A (E12–6)	Below 1 Ω

Standard (Check for short):

Tester Connection	Specified Condition
HT (H7–1) or HT1A (E12–6) – Body ground	10 kΩ or higher

  (4) Reconnect the heated oxygen sensor connector.
  (5) Reconnect the ECM connector.

(b) Check the harness and the connectors between the heated oxygen sensor and EFI relay.
  (1) Disconnect the H7 heated oxygen sensor connector.
  (2) Remove the EFI relay from the engine room R/B No.4.
  (3) Check the resistance.

Standard (Check for open):

Tester Connection	Specified Condition
+B (H7–2) – EFI relay (3)	Below 1 Ω

Standard (Check for short):

Tester Connection	Specified Condition
+B (H7–2) or EFI relay (3) – Body ground	10 kΩ or higher

  (4) Reconnect the heated oxygen sensor connector.
  (5) Reinstall the EFI relay.

NG → **REPAIR OR REPLACE HARNESS OR CONNECTOR**

OK

REPLACE ECM (See page 10–65 of Pub. No. RM1018E AVENSIS)

DTC	P0037	OXYGEN SENSOR HEATER CONTROL CIRCUIT LOW (BANK 1 SENSOR 2)

DTC	P0038	OXYGEN SENSOR HEATER CONTROL CIRCUIT HIGH (BANK 1 SENSOR 2)

CIRCUIT DESCRIPTION

Refer to DTC P0130 on page 05–74.

HINT:

The ECM provides a pulse width modulated control circuit to adjust current through the heater. The heated oxygen sensor heater circuit uses a relay on the +B side of the circuit.

Reference (Sensor 2 System Diagram):

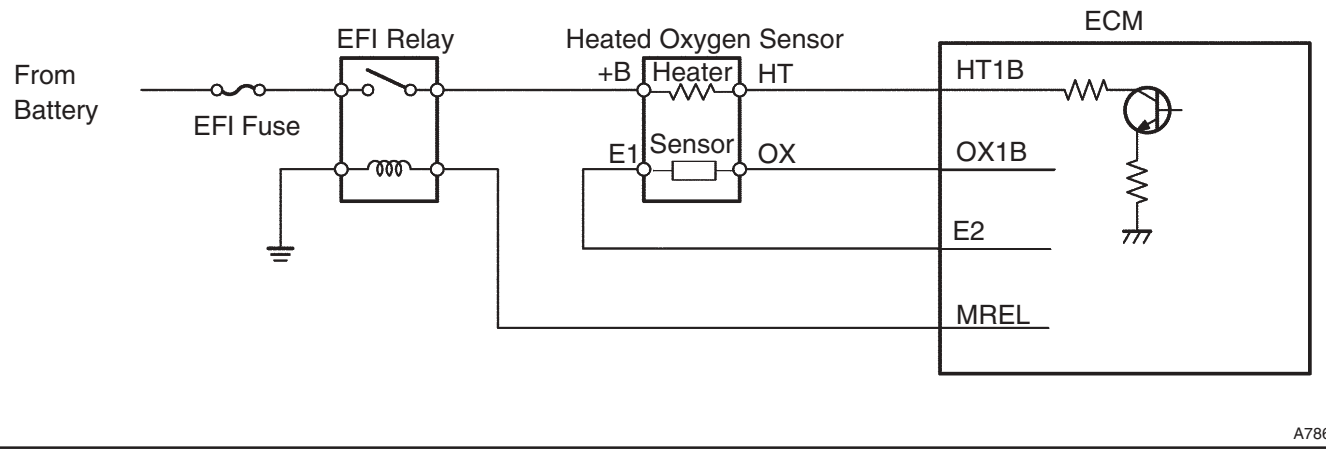

DTC No.	DTC Detection Condition	Trouble Area
P0037	Heated current is 0.25 A or less when heater operates (1 trip detection logic)	• Open in heater circuit of heated oxygen sensor • Heated oxygen sensor heater (sensor 2) • EFI relay • ECM
P0038	Heater current exceeds 2 A when heater operates (1 trip detection logic)	• Short in heater circuit of heated oxygen sensor • Heated oxygen sensor heater (sensor 2) • EFI relay • ECM

HINT:

- Sensor 1 refers to the sensor mounted in front of the Three–Way Catalytic Converter (TWC) and located near the engine assembly.
- Sensor 2 refers to the sensor mounted behind the TWC and located far from the engine assembly.

WIRING DIAGRAM

Refer to DTC P0130 on page 05–74.

INSPECTION PROCEDURE

HINT:

Read freeze frame data using the intelligent tester II. Freeze frame data record the engine condition when malfunctions are detected. When troubleshooting, freeze frame data can help determine if the vehicle was moving or stationary, if the engine was warmed up or not, if the air–fuel ratio was lean or rich, and other data from the time the malfunction occurred.

1 INSPECT HEATED OXYGEN SENSOR(HEATER RESISTANCE)

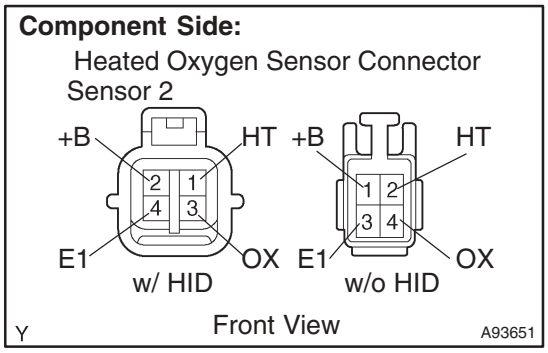

(a) Disconnect the H17 heated oxygen sensor connector.

(b) Measure the resistance between the terminals of the heated oxygen sensor connector.

Standard:

Tester Connection	Specified Condition
With HID: 1 (HT) – 2 (+B)	11 to 16 Ω at 20°C (68°F)
With HID: 1 (HT) – 4 (E1)	No Continuity
Without HID: 2 (HT) – 1 (+B)	11 to 16 Ω at 20°C (68°F)
Without HID: 2 (HT) – 3 (E1)	No Continuity

(c) Reconnect the heated oxygen sensor connector.

NG → **REPLACE HEATED OXYGEN SENSOR**

OK

2 INSPECT EFI RELAY

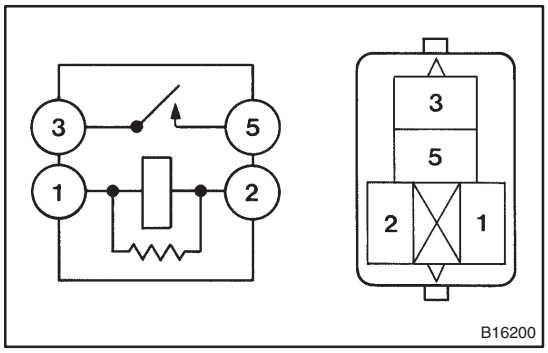

(a) Remove the EFI relay from the engine room R/B No. 4.

(b) Check the EFI relay resistance.

Standard:

Tester Connection	Specified Condition
3 – 5	10 kΩ or higher
3 – 5	Below 1 Ω (Apply battery voltage to terminals 1 and 2)

(c) Reinstall the EFI relay.

NG → **REPLACE EFI RELAY**

OK

3 INSPECT ECM(HT1B VOLTAGE)

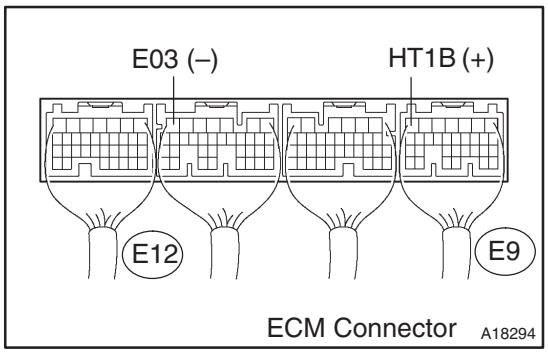

(a) Turn the ignition switch to ON.

(b) Measure the voltage between the applicable terminals of the E9 and E12 ECM connectors.

Standard:

Tester Connection	Specified Condition
HT1B (E9–7) – E03 (E12–7)	9 to 14 V

OK	REPLACE ECM (See page 10–65 of Pub. No. RM1018E AVENSIS)

NG

4	CHECK HARNESS AND CONNECTOR(HEATED OXYGEN SENSOR – ECM, HEATED OXYGEN SENSOR – EFI RELAY)

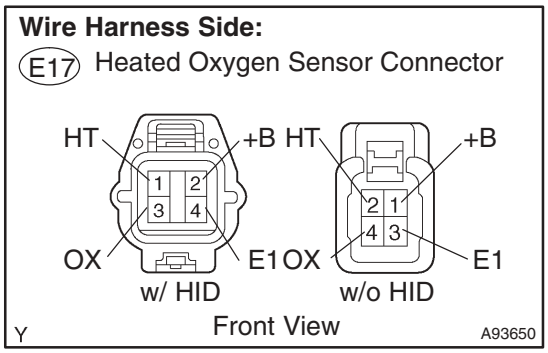

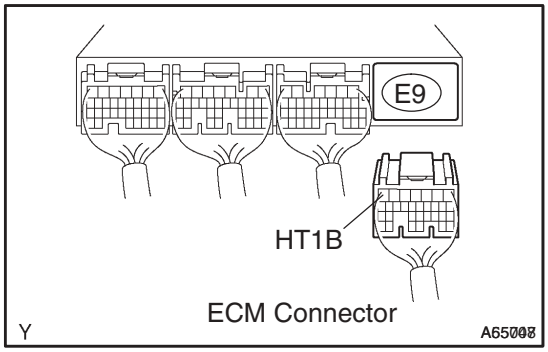

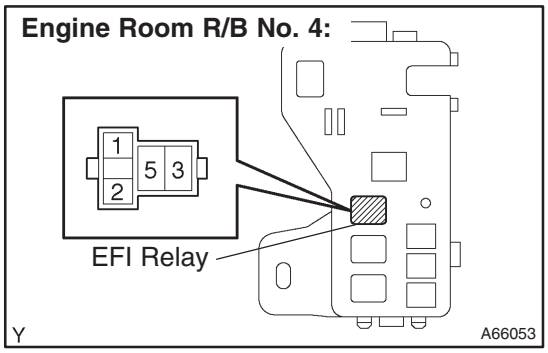

(a) Check the harness and the connectors between the ECM and heated oxygen sensor.
  (1) Disconnect the H17 heated oxygen sensor connector.
  (2) Disconnect the E9 ECM connector.
  (3) Check the resistance.

Standard (Check for open):

Tester Connection	Specified Condition
With HID: HT (H17–1) – HT1B (E9–7)	Below 1 Ω
Without HID: HT (H17–2) – HT1B (E9–7)	Below 1 Ω

Standard (Check for short):

Tester Connection	Specified Condition
With HID: HT (H17–1) or HT1B (E9–7) – Body ground	10 kΩ or higher
Without HID: HT (H17–2) or HT1B (E9–7) – Body ground	10 kΩ or higher

  (4) Reconnect the heated oxygen sensor connector.
  (5) Reconnect the ECM connector.

(b) Check the harness and the connectors between the heated oxygen sensor and EFI relay.
  (1) Disconnect the H17 heated oxygen sensor connector.
  (2) Remove the EFI relay from the engine room R/B No. 4.
  (3) Check the resistance.

Standard (Check for open):

Tester Connection	Specified Condition
+B (H17–1) – EFI relay (3)	Below 1 Ω

Standard (Check for short):

Tester Connection	Specified Condition
+B (H17–1) or EFI relay (3) – Body ground	10 kΩ or higher

  (4) Reconnect the heated oxygen sensor connector.
  (5) Reinstall the EFI relay.

NG	REPAIR OR REPLACE HARNESS OR CONNECTOR

OK

REPLACE ECM (See page 10–65 of Pub. No. RM1018E AVENSIS)

DTC	P0100	MASS AIR FLOW CIRCUIT MALFUNCTION

DTC	P0102	MASS OR VOLUME AIR FLOW CIRCUIT LOW INPUT

DTC	P0103	MASS OR VOLUME AIR FLOW CIRCUIT HIGH INPUT

CIRCUIT DESCRIPTION

The Mass Air Flow (MAF) meter is a sensor that measures the amount of air flowing through the throttle valve. The ECM uses this information to determine the fuel injection time and provides a proper air–fuel ratio. Inside the MAF meter, there is a heated platinum wire exposed to the flow of intake air.

By applying a specific current to the wire, the ECM heats this wire to a given temperature. The flow of incoming air cools the wire and an internal thermistor, affecting their resistance. To maintain a constant current value, the ECM varies the voltage applied to these components in the MAF meter. The voltage level is proportional to the flow of the air passing through the sensor. The ECM interprets this voltage as the intake air amount.

The circuit is constructed so that the platinum hot wire and temperature sensor provide a bridge circuit, and the power transistor is controlled so that the potential of A and B remains equal to maintain the predetermined temperature.

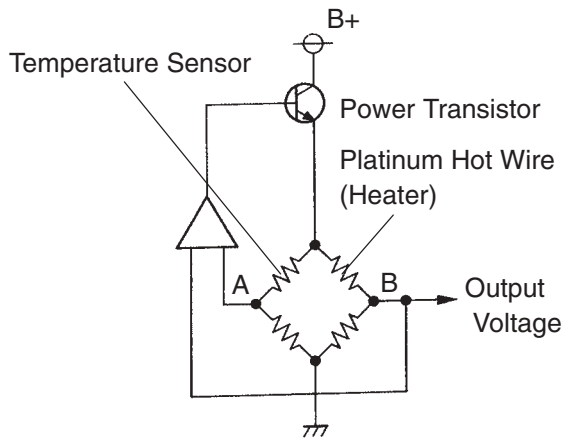

FI6929
A09074

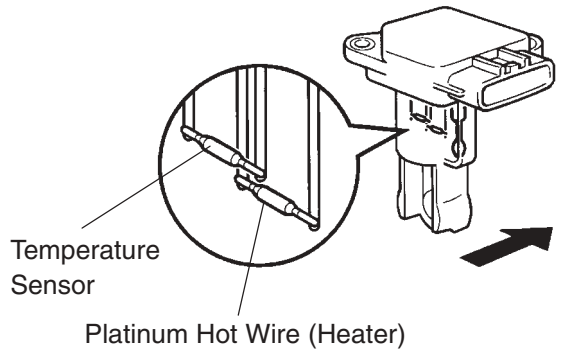

A94508

DTC No.	DTC Detection Condition	Trouble Area
P0100	When the mass air flow meter circuit has an open or a short for more than 3 seconds	• Open or short in mass air flow meter circuit • Mass air flow meter • ECM
P0102	When the mass air flow meter circuit has an open for more than 3 seconds	• Open in mass air flow meter circuit • Mass air flow meter • ECM
P0103	When the mass air flow meter circuit has a short for more than 3 seconds	• Short in mass air flow meter circuit • Mass air flow meter • ECM

HINT:
When DTC P0100, P0102 or P0103 is detected, check the air–flow ratio by selecting Powertrain / Engine and ECT / Data List / AFM on the intelligent tester II.

Air Flow Value (gm/second)	Malfunction
Approximately 0.0	• Open in mass air flow meter power source circuit • Open or short in VG circuit
271.0 or more	• Open in EVG circuit

WIRING DIAGRAM

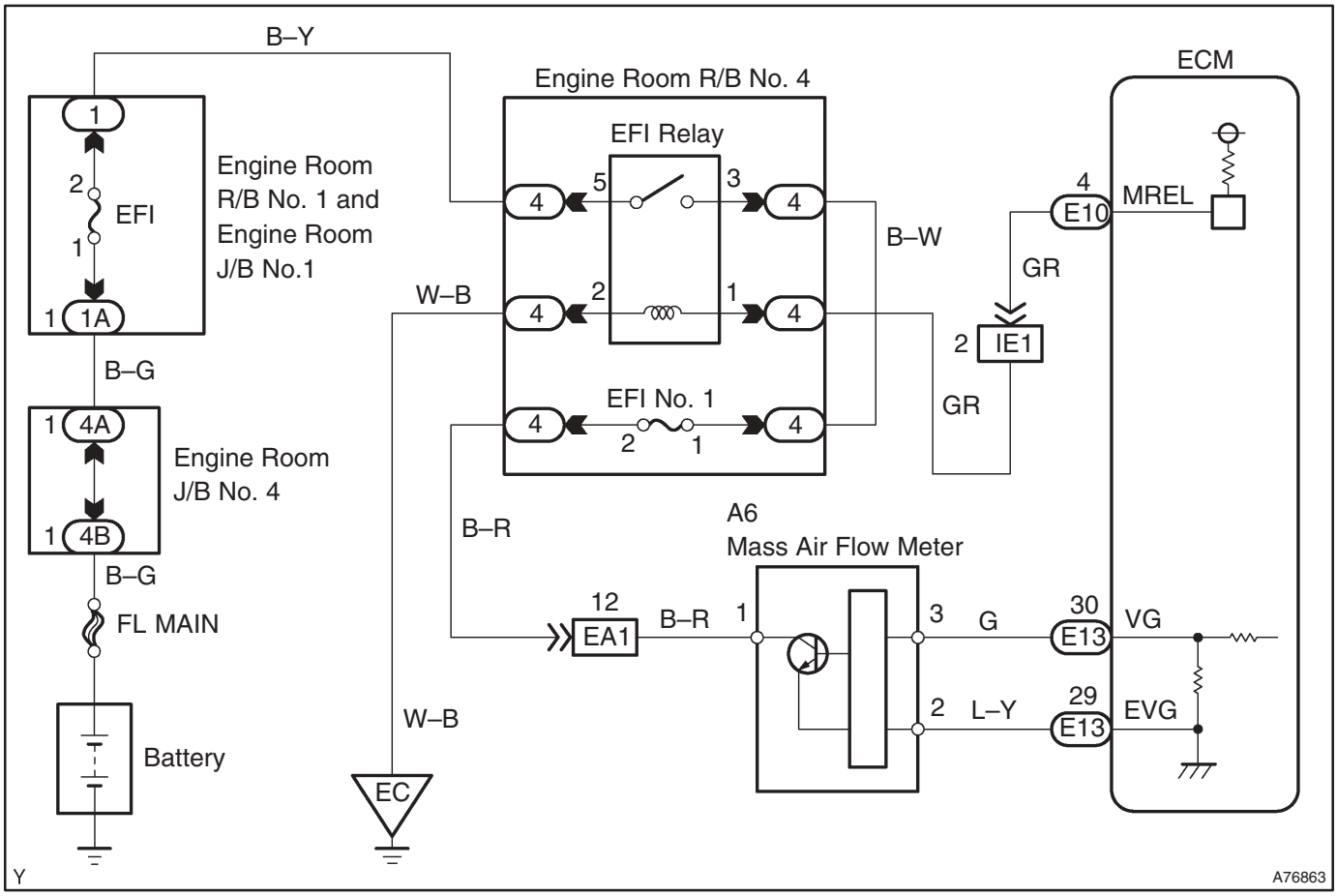

INSPECTION PROCEDURE

HINT:
Read freeze frame data using the intelligent tester II. Freeze frame data record the engine condition when malfunctions are detected. When troubleshooting, freeze frame data can help determine if the vehicle was moving or stationary, if the engine was warmed up or not, if the air–fuel ratio was lean or rich, and other data from the time the malfunction occurred.

1 READ VALUE OF INTELLIGENT TESTER II(MASS AIR FLOW RATE)

(a) Connect the intelligent tester II to the DLC3.
(b) Start the engine.
(c) Turn the intelligent tester II ON.
(d) Select the following menu items: Powertrain / Engine and ECT / Data List / AFM.
(e) Read the value.

Result:

Mass Air Flow Rate (g/second)	Proceed To
0.0	A
271.0 or more	B
Between 1.0 and 270.0 (*1)	C

*1: The value must be changed when the throttle valve is opened or closed.

B → **Go to step 6**

C → **CHECK FOR INTERMITTENT PROBLEMS**

A

2 INSPECT MASS AIR FLOW METER(POWER SOURCE)

Wire Harness Side:

Mass Air Flow Meter Connector

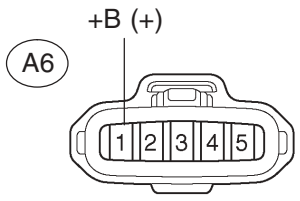

Front View

A84809

(a) Disconnect the A6 mass air flow meter connector.
(b) Turn the ignition switch to ON.
(c) Measure the voltage between the terminal of the wire harness side connector and body ground.

Standard:

Tester Connection	Specified Condition
+B (A6–1) – Body ground	9 to 14 V

(d) Reconnect the mass air flow meter connector.

NG → **Go to step 5**

OK

3 INSPECT ECM(VG VOLTAGE)

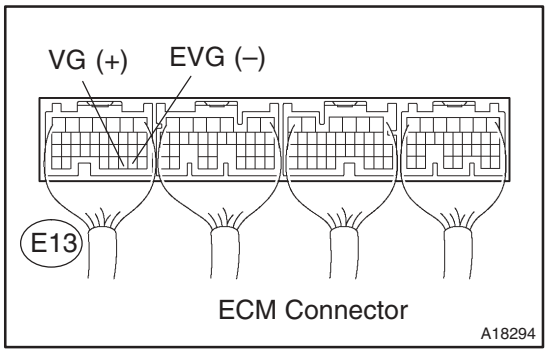

(a) Start the engine.
(b) Measure the voltage between the specified terminals of the E13 ECM connector.

HINT:
The shift position should be P or N and the A/C switch should be turned OFF.

Standard:

Tester Connection	Condition	Specified Condition
VG (E13–30) – EVG (E13–29)	Engine is idling	0.5 to 3.0 V

OK → **REPLACE ECM (See page 10–65 of Pub. No. RM1018E AVENSIS)**

NG

4 CHECK HARNESS AND CONNECTOR(MASS AIR FLOW METER – ECM)

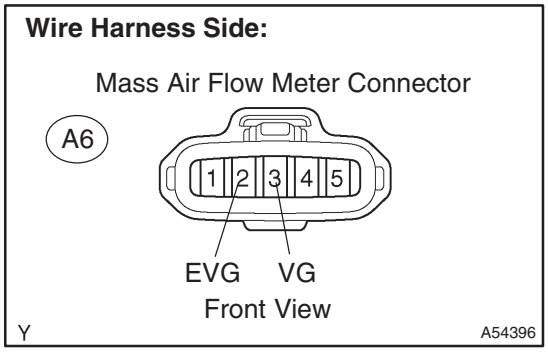

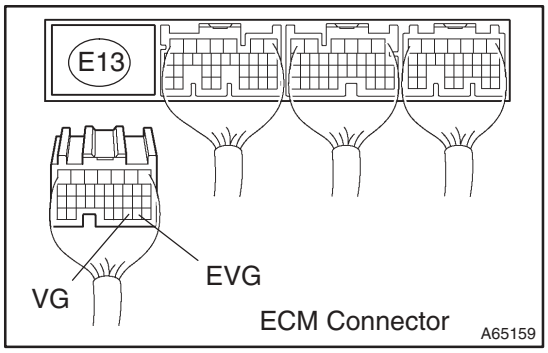

(a) Disconnect the A6 mass air flow meter connector.
(b) Disconnect the E13 ECM connector.
(c) Check the resistance.

Standard (Check for open):

Tester Connection	Specified Condition
VG (A6–3) – VG (E13–30)	Below 1 Ω
EVG (A6–2) – EVG (E13–29)	Below 1 Ω

Standard (Check for short):

Tester Connection	Specified Condition
VG (A6–3) or VG (E13–30) – Body ground	10 kΩ or higher

(d) Reconnect the mass air flow meter connector.
(e) Reconnect the ECM connector.

NG → **REPAIR OR REPLACE HARNESS OR CONNECTOR**

OK

REPLACE MASS AIR FLOW METER

5 CHECK HARNESS AND CONNECTOR(MASS AIR FLOW METER – EFI RELAY)

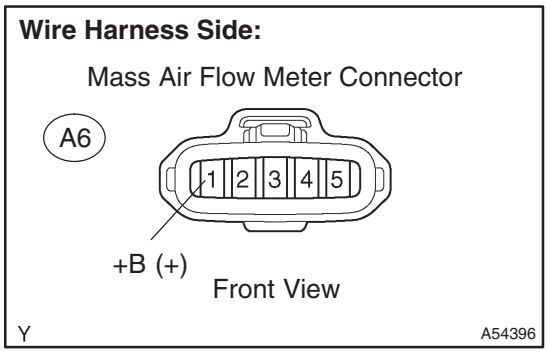

(a) Disconnect the A6 mass air flow meter connector.
(b) Remove the EFI relay from the engine room R/B No. 4.
(c) Check the resistance.

Standard (Check for open):

Tester Connection	Specified Condition
+B (A6–1) – EFI relay (3)	Below 1 Ω

Standard (Check for short):

Tester Connection	Specified Condition
+B (A6–1) or EFI relay (3) – Body ground	10 kΩ or higher

(d) Reconnect the mass air flow meter connector.
(e) Reinstall the EFI relay.

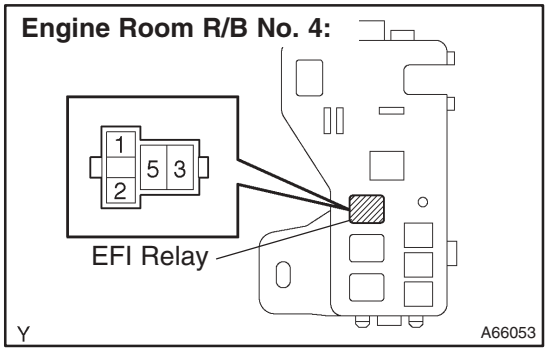

NG → **REPAIR OR REPLACE HARNESS OR CONNECTOR**

OK

INSPECT ECM POWER SOURCE CIRCUIT (See page 05–195)

6 INSPECT ECM(SENSOR GROUND)

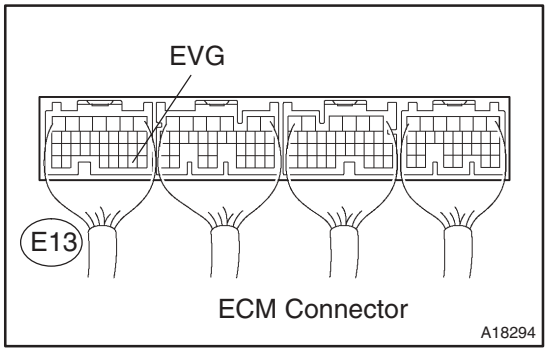

(a) Check the resistance between the specified terminal of the E13 ECM connector and body ground.

Standard:

Tester Connection	Specified Condition
EVG (E13–29) – Body ground	Below 1 Ω

NG → **REPLACE ECM (See page 10–65 of Pub. No. RM1018E AVENSIS)**

OK

7 CHECK HARNESS AND CONNECTOR(MASS AIR FLOW METER – ECM)

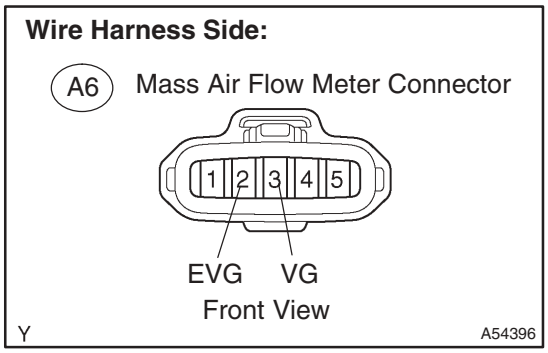

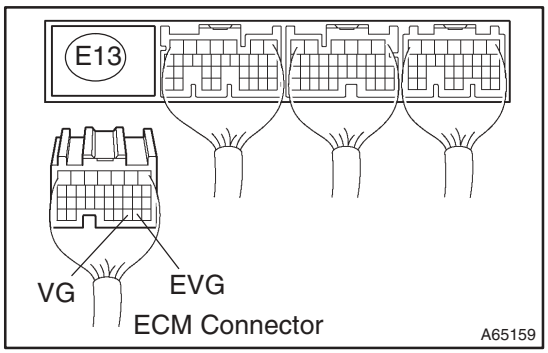

(a) Disconnect the A6 mass air flow meter connector.
(b) Disconnect the E13 ECM connector.
(c) Check the resistance.

Standard (Check for open):

Tester Connection	Specified Condition
VG (A6–3) – VG (E13–30)	Below 1 Ω
EVG (A6–2) – EVG (E13–29)	Below 1 Ω

Standard (Check for short):

Tester Connection	Specified Condition
VG (A6–3) or VG (E13–30) – Body ground	10 kΩ or higher

(d) Reconnect the mass air flow meter connector.
(e) Reconnect the ECM connector.

NG → **REPAIR OR REPLACE HARNESS OR CONNECTOR**

OK

REPLACE MASS AIR FLOW METER

DTC	P0110	INTAKE AIR TEMPERATURE CIRCUIT

DTC	P0112	INTAKE AIR TEMPERATURE CIRCUIT LOW INPUT

DTC	P0113	INTAKE AIR TEMPERATURE CIRCUIT HIGH INPUT

CIRCUIT DESCRIPTION

(Figure 1)

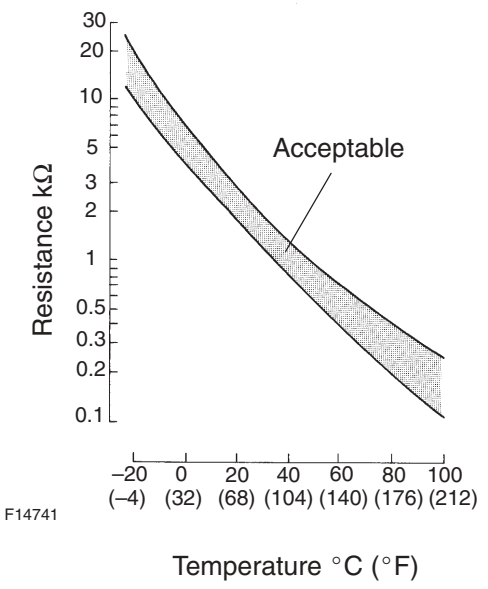

The Intake Air Temperature (IAT) sensor is built into the Mass Air Flow (MAF) meter, and monitors the intake air temperature. The IAT sensor has a built–in thermistor that varies its resistance depending on the temperature of the intake air. When the air temperature is low, the resistance in the thermistor increases. When the temperature is high, the resistance drops. The variations in resistance are reflected as voltage changes to the ECM terminal (see figure 1).

The IAT sensor is connected to the ECM. The 5 V power source voltage in the ECM is applied to the IAT sensor from terminal THA via resistor R.

That is, the resistor R and the IAT sensor are connected in series. When the resistance value of the IAT sensor changes in accordance with changes in the intake air temperature, the voltage at terminal THA also changes. Based on this signal, the ECM increases the fuel injection volume to improve the driveability during cold engine operation.

DTC No.	Proceed To	DTC Detection Condition	Trouble Area
P0110	Step 1	Open or short in intake air temperature sensor circuit for 0.5 seconds (1 trip detection logic)	• Open or short in intake air temperature sensor circuit • Intake air temperature sensor (built into mass air flow meter) • ECM
P0112	Step 4	Short in intake air temperature sensor circuit for 0.5 seconds (1 trip detection logic)	• Short in intake air temperature sensor circuit • Intake air temperature sensor (built into mass air flow meter) • ECM
P0113	Step 2	Open in intake air temperature sensor circuit for 0.5 seconds (1 trip detection logic)	• Open in intake air temperature sensor circuit • Intake air temperature sensor (built into mass air flow meter) • ECM

HINT:
When DTC P0110, P0112 or P0113 is detected, check the intake air temperature by selecting Powertrain / Engine and ECT / Data List / Intake Air on the intelligent tester II.

Temperature Displayed	Malfunction
–40°C (–40°F)	Open circuit
140°C (284°F) or more	Short circuit

WIRING DIAGRAM

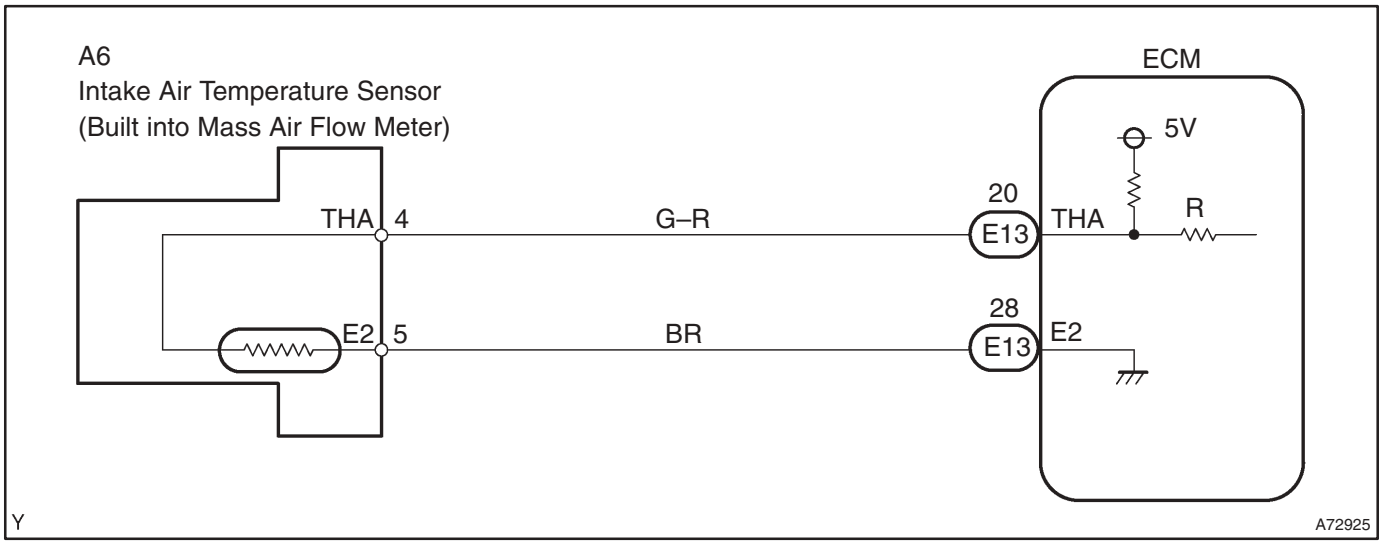

INSPECTION PROCEDURE

HINT:

- If different DTCs related to different systems that have terminal E2 as the ground terminal are output simultaneously, terminal E2 may have an open circuit.
- Read freeze frame data using the intelligent tester II. Freeze frame data record the engine condition when malfunctions are detected. When troubleshooting, freeze frame data can help determine if the vehicle was moving or stationary, if the engine was warmed up or not, if the air–fuel ratio was lean or rich, and other data from the time the malfunction occurred.

1	READ VALUE OF INTELLIGENT TESTER II(INTAKE AIR TEMPERATURE)

(a) Connect the intelligent tester II to the DLC3.
(b) Turn the ignition switch to ON and turn the intelligent tester II ON.
(c) Select the following menu items: Powertrain / Engine and ECT / Data List / Intake Air.
(d) Read the value.
OK:
Temperature value: Same as the actual intake air temperature.
Result:

Temperature Displayed	Proceed To
–40˚C (–40˚F)	A
140˚C (284˚F) or more	B
OK (Same as air actual intake temperature)	C

HINT:
- If there is an open circuit, the intelligent tester II indicates –40˚C (–40˚F).
- If there is a short circuit, the intelligent tester II indicates 140˚C (284˚F) or more.

B → **Go to step 4**

C → **CHECK FOR INTERMITTENT PROBLEMS (See page 05–9)**

A

2	READ VALUE OF INTELLIGENT TESTER II(CHECK FOR OPEN IN WIRE HARNESS)

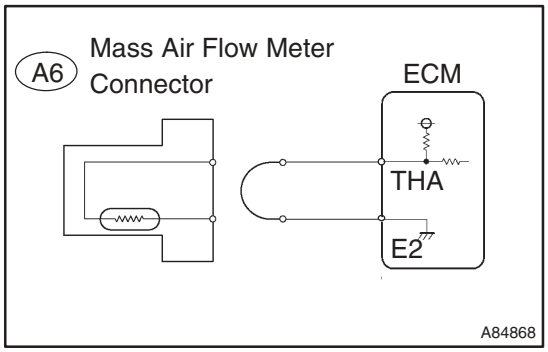

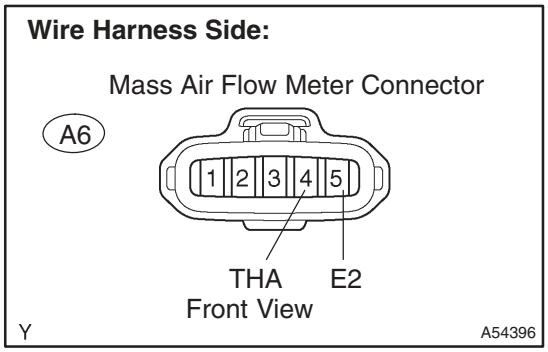

(a) Disconnect the A6 mass air flow meter connector.
(b) Connect terminals THA and E2 of the mass air flow meter wire harness side connector.
(c) Connect the intelligent tester II to the DLC3.
(d) Turn the ignition switch to ON and turn the intelligent tester II ON.
(e) Select the following menu items: Powertrain / Engine and ECT / Data List / Intake Air.
(f) Read the value.
OK:
Temperature value: 140°C (284°F) or more
(g) Reconnect the mass air flow meter connector.

OK → **CONFIRM GOOD CONNECTION AT SENSOR. IF OK, REPLACE MASS AIR FLOW METER**

NG

3 READ VALUE OF INTELLIGENT TESTER II(CHECK FOR OPEN IN ECM)

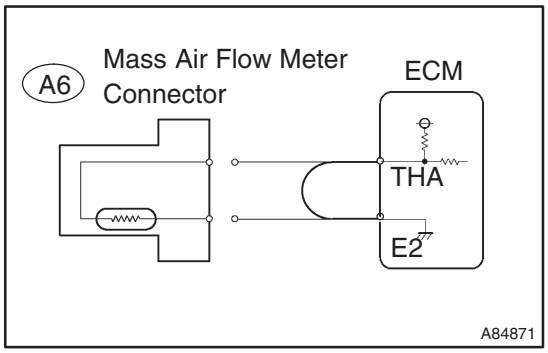

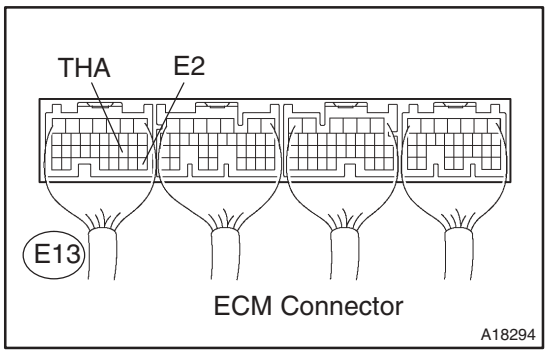

(a) Disconnect the A6 mass air flow meter connector.
(b) Connect terminals THA and E2 of the E13 ECM connector.

HINT:
Before checking, do visual and contact pressure checks on the ECM connector.

(c) Connect the intelligent tester II to the DLC3.
(d) Turn the ignition switch to ON and turn the intelligent tester II ON.
(e) Select the following menu items: Powertrain / Engine and ECT / Data List / Intake Air.
(f) Read the value.
OK:
Temperature value: 140°C (284°F) or more
(g) Reconnect the mass air flow meter connector.

OK → **REPAIR OR REPLACE HARNESS OR CONNECTOR**

NG

CONFIRM GOOD CONNECTION AT ECM. IF OK, REPLACE ECM
(See page 10–65 of Pub. No. RM1018E AVENSIS)

4 READ VALUE OF INTELLIGENT TESTER II(CHECK FOR SHORT IN WIRE HARNESS)

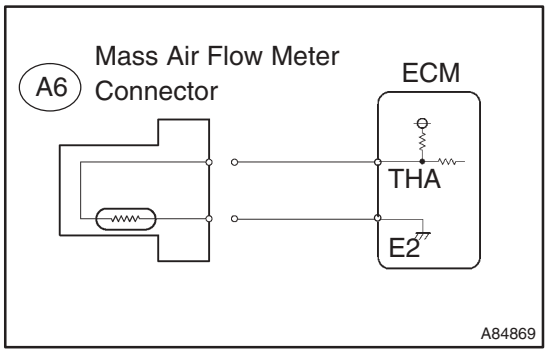

(a) Disconnect the A6 mass air flow meter connector.
(b) Connect the intelligent tester II to the DLC3.
(c) Turn the ignition switch to ON and turn the intelligent tester II ON.
(d) Select the following menu items: Powertrain / Engine and ECT / Data List / Intake Air.
(e) Read the value.
OK:
Temperature value: –40°C (–40°F)
(f) Reconnect the mass air flow meter connector.

OK → **REPLACE MASS AIR FLOW METER**

NG

5	READ VALUE OF INTELLIGENT TESTER II(CHECK FOR SHORT IN ECM)

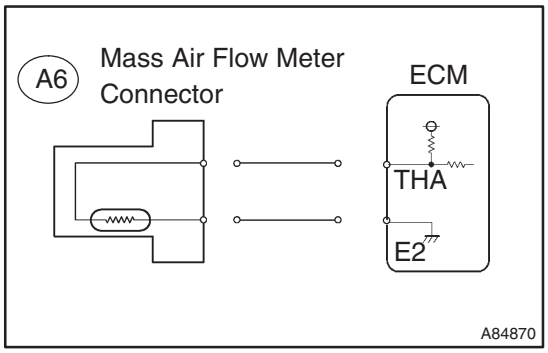

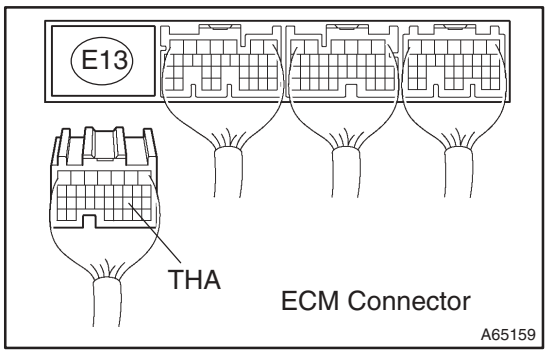

(a) Disconnect the E13 ECM connector.
(b) Disconnect the A6 mass air flow meter connector.
(c) Turn the ignition switch to ON and turn the intelligent tester II ON.
(d) Select the following menu items: Powertrain / Engine and ECT / Data List / Intake Air.
(e) Read the value.
OK:
Temperature value: –40°C (–40°F)
(f) Reconnect the ECM sensor connector.
(g) Reconnect the mass air flow meter connector.

OK	REPAIR OR REPLACE HARNESS OR CONNECTOR

NG

REPLACE ECM (See page 10–65 of Pub. No. RM1018E AVENSIS)

DTC	P0115	ENGINE COOLANT TEMPERATURE CIRCUIT

DTC	P0117	ENGINE COOLANT TEMPERATURE CIRCUIT LOW INPUT

DTC	P0118	ENGINE COOLANT TEMPERATURE CIRCUIT HIGH INPUT

CIRCUIT DESCRIPTION

A thermistor is built in the engine coolant temperature sensor and changes its resistance value according to the engine coolant temperature.

The structure of the sensor and connection to the ECM is the same as those of the intake air temperature sensor.

HINT:

If the ECM detects DTC P0115, P0117 or P0118, the ECM enters fail–safe mode in which the engine coolant temperature is assumed to be 80°C (176°F).

DTC No.	Proceed To	DTC Detection Condition	Trouble Area
P0115	Step 1	Open or short in engine coolant temperature sensor circuit for 0.5 seconds (1 trip detection logic)	• Open or short in engine coolant temperature sensor circuit • Engine coolant temperature sensor • ECM
P0117	Step 4	• Short in engine coolant temperature sensor circuit for 0.5 seconds (Sensor resistance value is less than 79 Ω) (1 trip detection logic)	• Short in engine coolant temperature sensor circuit • Engine coolant temperature sensor • ECM
P0118	Step 2	• Open in engine coolant temperature sensor circuit for 0.5 seconds (Sensor resistance value is more than 156 kΩ) (1 trip detection logic)	• Open in engine coolant temperature sensor circuit • Engine coolant temperature sensor • ECM

HINT:

When DTC P0115, P0117 or P0118 is detected, check the engine coolant temperature by selecting Powertrain / Engine and ECT / Data List / Coolant Temp on the intelligent tester II.

Temperature Displayed	Malfunction
–40°C (–40°F)	Open circuit
140°C (284°F) or more	Short circuit

WIRING DIAGRAM

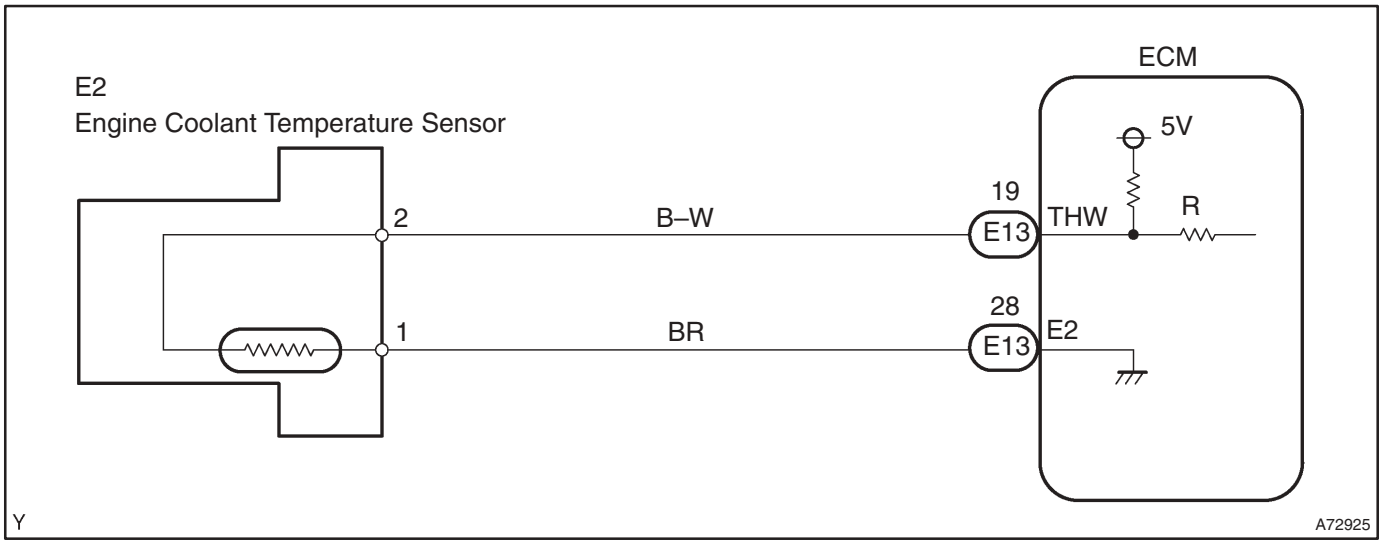

INSPECTION PROCEDURE

HINT:

- If different DTCs related to different systems that have terminal E2 as the ground terminal are output simultaneously, terminal E2 may have an open circuit.
- Read freeze frame data using the intelligent tester II. Freeze frame data record the engine condition when malfunctions are detected. When troubleshooting, freeze frame data can help determine if the vehicle was moving or stationary, if the engine was warmed up or not, if the air–fuel ratio was lean or rich, and other data from the time the malfunction occurred.

1	READ VALUE OF INTELLIGENT TESTER II(ENGINE COOLANT TEMPERATURE)

(a) Connect the intelligent tester II to the DLC3.
(b) Turn the ignition switch to ON and turn the intelligent tester II ON.
(c) Select the following menu items: Powertrain / Engine and ECT / Data List / Coolant Temp.
(d) Read the value.

OK:

Temperature value: 80° to 97°C (176° to 207°F) after warming up the engine.

Result:

Temperature Displayed	Proceed To
–40°C (–40°F)	A
140°C (284°F) or more	B
OK (Same as the actual engine coolant temperature)	C

HINT:

- If there is an open circuit, the intelligent tester II indicates –40°C (–40°F).
- If there is a short circuit, the intelligent tester II indicates 140°C (284°F) or more.

B	Go to step 4
C	CHECK FOR INTERMITTENT PROBLEMS (See page 05–9)

A

2	READ VALUE OF INTELLIGENT TESTER II(CHECK FOR OPEN IN WIRE HARNESS)

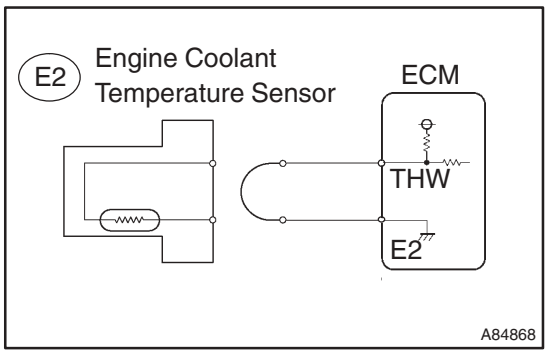

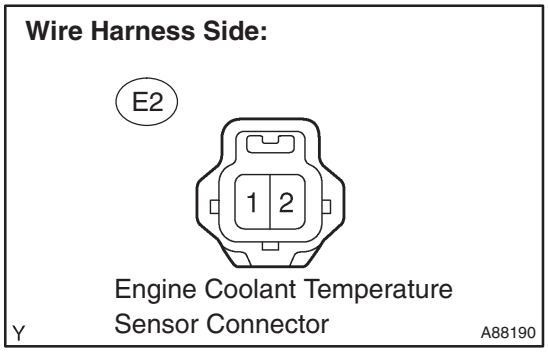

(a) Disconnect the E2 engine coolant temperature sensor connector.
(b) Connect terminals 1 and 2 of the engine coolant temperature sensor wire harness side connector.
(c) Connect the intelligent tester II to the DLC3.
(d) Turn the ignition switch to ON and turn the intelligent tester II ON.
(e) Select the following menu items: Powertrain / Engine and ECT / Data List / Coolant Temp.
(f) Read the value.
OK:
Temperature value: 140°C (284°F) or more
(g) Reconnect the engine coolant temperature sensor connector.

OK	CONFIRM GOOD CONNECTION AT SENSOR. IF OK, REPLACE ENGINE COOLANT TEMPERATURE SENSOR

NG

3	READ VALUE OF INTELLIGENT TESTER II(CHECK FOR OPEN IN ECM)

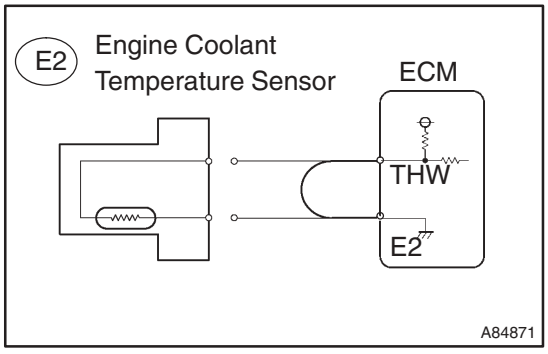

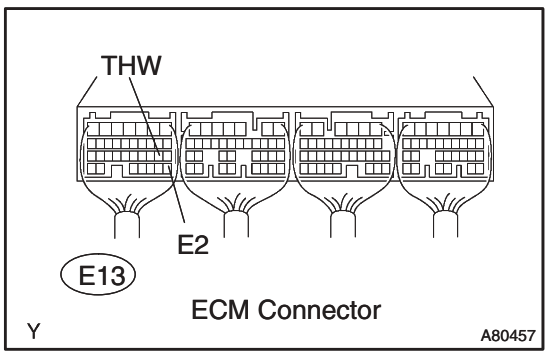

(a) Disconnect the E2 engine coolant temperature sensor connector.
(b) Connect terminals THW and E2 of the E13 ECM connector.

HINT:
Before checking, do visual and contact pressure checks on the ECM connector.

(c) Connect the intelligent tester II to the DLC3.
(d) Turn the ignition switch to ON and turn the intelligent tester II ON.
(e) Select the following menu items: Powertrain / Engine and ECT / Data List / Coolant Temp.
(f) Read the value.
OK:
Temperature value: 140°C (284°F) or more
(g) Reconnect the engine coolant temperature sensor connector.

OK	REPAIR OR REPLACE HARNESS OR CONNECTOR

NG

CONFIRM GOOD CONNECTION AT ECM. IF OK, REPLACE ECM
(See page 10–65 of Pub. No. RM1018E AVENSIS)

4 READ VALUE OF INTELLIGENT TESTER II(CHECK FOR SHORT IN WIRE HARNESS)

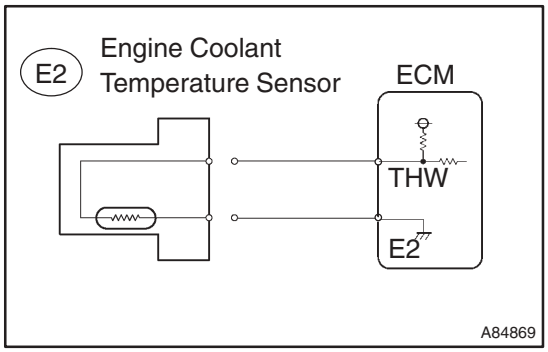

(a) Disconnect the E2 engine coolant temperature sensor connector.
(b) Connect the intelligent tester II to the DLC3.
(c) Turn the ignition switch to ON and turn the intelligent tester II ON.
(d) Select the following menu items: Powertrain / Engine and ECT / Data List / Coolant Temp.
(e) Read the value.
OK:
Temperature value: –40°C (–40°F)
(f) Reconnect the engine coolant temperature sensor connector.

OK	REPLACE ENGINE COOLANT TEMPERATURE SENSOR

NG

5 READ VALUE OF INTELLIGENT TESTER II(CHECK FOR SHORT IN ECM)

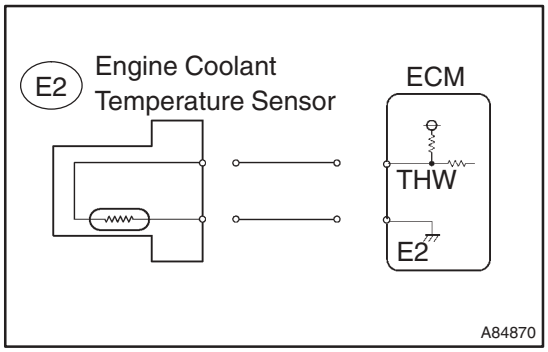

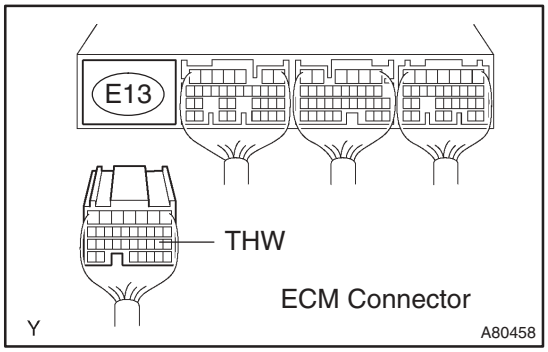

(a) Disconnect the E2 engine coolant temperature sensor connector.
(b) Disconnect the E13 ECM connector.
(c) Connect the intelligent tester II to the DLC3.
(d) Turn the ignition switch to ON and turn the intelligent tester II ON.
(e) Select the following menu items: Powertrain / Engine and ECT / Data List / Coolant Temp.
(f) Read the value.
OK:
Temperature value: –40°C (–40°F)
(g) Reconnect the engine coolant temperature sensor connector.
(h) Reconnect the ECM connector.

OK → REPAIR OR REPLACE HARNESS OR CONNECTOR

NG

REPLACE ECM (See page 10–65 of Pub. No. RM1018E AVENSIS)

DTC	P0116	ENGINE COOLANT TEMPERATURE CIRCUIT RANGE/PERFORMANCE PROBLEM

CIRCUIT DESCRIPTION

Refer to DTC P0115 on page 05–60.

DTC No.	DTC Detection Condition	Trouble Area
P0116	If the engine coolant temperature was between 35°C (95°F) and 60°C (140°F) at engine start, and conditions (a) and (b) are met (2 trip detection logic): (a) Vehicle is driven at varying speeds (under acceleration and deceleration) (b) Engine coolant temperature remains within 3°C (5.4°F) of the engine starting temperature	• Engine coolant temperature sensor
P0116	If the engine coolant temperature was more than 60°C (140°F) at engine start, and conditions (a) and (b) are met (6 trip detection logic): (a) Vehicle is driven at varying speeds (under acceleration and deceleration) (b) Engine coolant temperature remains within 1°C (1.8°F) of the engine starting temperature, and this is successively recorded 6 times	• Engine coolant temperature sensor

WIRING DIAGRAM

Refer to DTC P0115 on page 05–60.

INSPECTION PROCEDURE

HINT:

- If DTCs P0115, P0116, P0117 and P0118 are output simultaneously, the engine coolant temperature sensor may have an open or short circuit. Troubleshoot those DTCs first.
- Read freeze frame data using the intelligent tester II. Freeze frame data record the engine condition when malfunctions are detected. When troubleshooting, freeze frame data can help determine if the vehicle was moving or stationary, if the engine was warmed up or not, if the air–fuel ratio was lean or rich, and other data from the time the malfunction occurred.

REPLACE ENGINE COOLANT TEMPERATURE SENSOR

DTC	P0120	THROTTLE/PEDAL POSITION SENSOR/SWITCH ”A” CIRCUIT

DTC	P0122	THROTTLE/PEDAL POSITION SENSOR/SWITCH ”A” CIRCUIT LOW INPUT

DTC	P0123	THROTTLE/PEDAL POSITION SENSOR/SWITCH ”A” CIRCUIT HIGH INPUT

DTC	P0220	THROTTLE/PEDAL POSITION SENSOR/SWITCH ”B” CIRCUIT

DTC	P0222	THROTTLE/PEDAL POSITION SENSOR/SWITCH ”B” CIRCUIT LOW INPUT

DTC	P0223	THROTTLE/PEDAL POSITION SENSOR/SWITCH ”B” CIRCUIT HIGH INPUT

DTC	P2135	THROTTLE/PEDAL POSITION SENSOR/SWITCH ”A”/”B” VOLTAGE CORRELATION

HINT:
These DTCs are related to the throttle position sensor.

CIRCUIT DESCRIPTION

HINT:

- This ETCS (Electronic Throttle Control System) does not use a throttle cable.
- This throttle position sensor is a non–contact type.

The throttle position sensor is mounted on the throttle body and it detects the opening angle of the throttle valve. This sensor is electronically controlled and uses Hall–effect elements, so that accurate control and reliability can be obtained. The throttle position sensor has 2 sensor elements and signal output: VTA1 and VTA2. VTA1 is used to detect the throttle opening angle and VTA2 is used to detect a malfunction in VTA1. Voltage applied to VTA1 and VTA2 changes between 0V and 5V in proportion to the opening angle of the throttle valve. There are several checks that the ECM performs to confirm proper operation of the throttle position sensor and VTA1.

The ECM judges the actual opening angle of the throttle valve from these signals input from terminals VTA1 and VTA2, and the ECM controls the throttle motor to make the throttle valve angle properly in response to driver input.

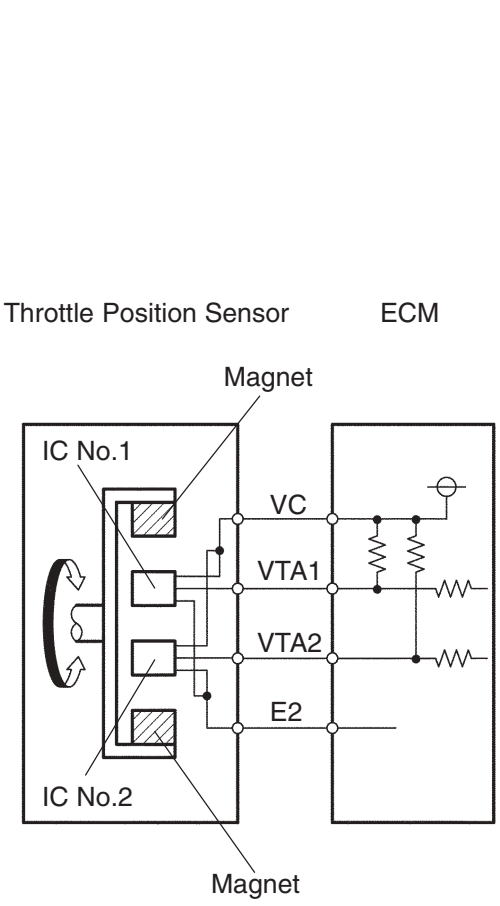

A19755

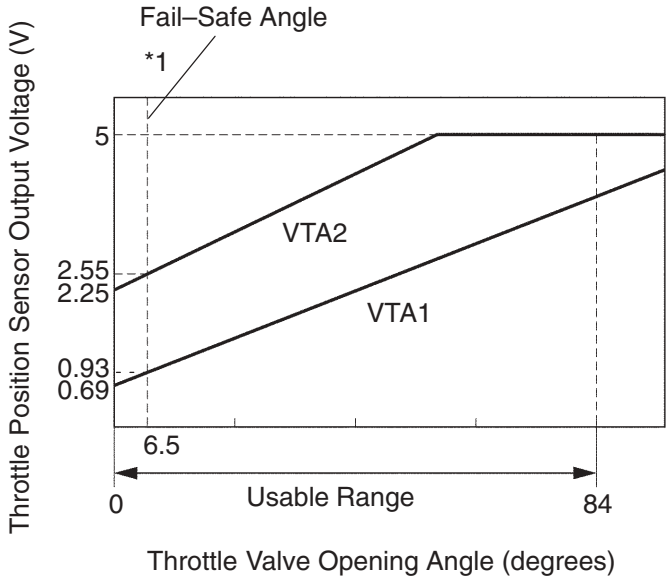

Throttle Valve Fully Closed, VTA1 is 10 to 20 %

Throttle Valve Fully Opened, VTA1 is 64 to 96 %

*1: Fail–Safe Angle (6.5°), VTA1 is approximately 16 %

NOTE: Throttle valve opening angle detected by the sensor terminal VTA1 is expressed as percentages.

A19802

DTC No.	DTC Detection Condition	Trouble Area
—	Conditions of DTC P0120, P0122, P0123, P0220, P0222 or P0223 continue for 2 seconds (Open or short in the throttle position sensor circuit)	—
P0120	Output voltage of VTA1 quickly fluctuates up and down beyond lower and upper malfunction thresholds	• Throttle position sensor (built into throttle body) • ECM
P0122	VTA1 is 0.2 V or less	• Throttle position sensor (built into throttle body) • Short in VTA1 circuit • Open in VC circuit • ECM
P0123	VTA1 is 4.8 V or more	• Throttle position sensor (built into throttle body) • Open in VTA1 circuit • Open in E2 circuit • VC and VTA1 circuits are short–circuited • ECM
P0220	Output voltages of VTA1 and VTA2 quickly fluctuate up and down beyond their respective lower and upper malfunction thresholds	• Throttle position sensor (built into throttle body) • ECM
P0222	VTA2 is 0.5 V or less	• Throttle position sensor (built into throttle body) • Short in VTA2 circuit • Open in VC circuit • ECM
P0223	VTA2 is 4.8 V or more, VTA1 is between 0.2 V and 1.8 V	• Throttle position sensor (built into throttle body) • Open in VTA2 circuit • Open in E2 circuit • VC and VTA2 circuits are short–circuited • ECM
P2135	Condition (a) continues for 0.5 seconds or more, or condition (b) continues for 0.4 seconds or more: (a) Difference between VTA1 and VTA2 is 0.02 V or less (b) VTA1 is 0.2 V or less and VTA2 is 0.5 V or less	• VTA1 and VTA2 circuits are short–circuited • Throttle position sensor (built into throttle body) • ECM

NOTICE:

When a malfunction is detected, the throttle valve is locked at a certain opening angle. Also, the whole electronically controlled throttle operation is cancelled until the system returns to normal and the ignition switch is turned to OFF.

HINT:

- When any of these DTCs is detected, check the throttle valve opening angle (Throttle POS and Throttle POS No. 2) using the intelligent tester II.
- The Throttle POS means VTA1 signal (expressed as percentages), and Throttle POS No. 2 means the VTA2 signal (expressed as voltages).

  Reference (Normal condition):

Tester Display	Accelerator Pedal Fully Released	Accelerator Pedal Fully Depressed
Throttle POS	10 to 24 %	64 to 96 %
Throttle POS No. 2	2.1 to 3.1 V	4.5 to 5.0 V

WIRING DIAGRAM

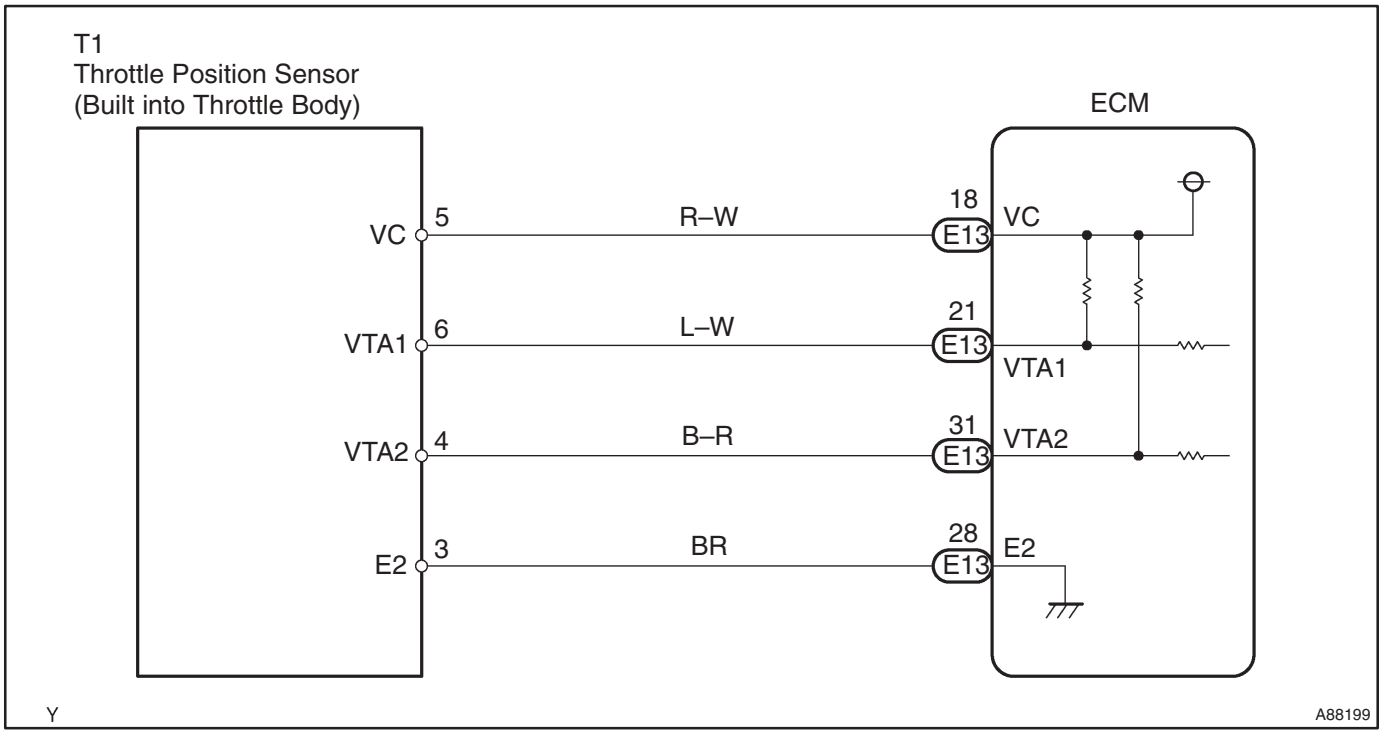

INSPECTION PROCEDURE

HINT:

- If different DTCs related to different systems that have terminal E2 as the ground terminal are output simultaneously, terminal E2 may have an open circuit.
- Read freeze frame data using the intelligent tester II. Freeze frame data record the engine condition when malfunctions are detected. When troubleshooting, freeze frame data can help determine if the vehicle was moving or stationary, if the engine was warmed up or not, if the air–fuel ratio was lean or rich, and other data from the time the malfunction occurred.

1	READ VALUE OF INTELLIGENT TESTER II(THROTTLE POS AND THROTTLE POS NO.2)

(a) Connect the intelligent tester II to the DLC3.
(b) Turn the ignition switch to ON and turn the intelligent tester II ON.
(c) Select the following menu items: Powertrain / Engine and ECT / Data List / Throttle POS and Throttle POS No. 2.
(d) Check the values displayed on the intelligent tester II.

Result:

TP (VTA1) When AP Released	TP No. 2 (VTA2) When AP Released	TP (VTA1) When AP Depressed	TP No. 2 (VTA2) When AP Depressed	Trouble Area	Proceed To
0 %	0 to 0.2 V	0 %	0 to 0.2 V	VC circuit open	A
100 %	4.5 to 5.0 V	100 %	4.5 to 5.0 V	E2 circuit open	A
0 or 100 %	2.1 to 3.1 V (Fail–safe)	0 % or 100 %	2.1 to 3.1 V (Fail–safe)	VTA1 circuit open or ground short	A
10 to 24 % (Fail–safe)	0 to 0.2 V or 4.5 to 5.0 V	10 to 24 % (Fail–safe)	0 to 0.2 V or 4.5 to 5.0 V	VTA2 circuit open or ground short	A
10 to 24 %	2.1 to 3.1 V	64 to 96 % (Not fail–safe)	4.5 to 5.0 V (Not fail–safe)	Throttle position sensor circuit is normal	B

HINT:

- TP stands for Throttle Position, and AP stands for Accelerator Pedal.
- VTA1 is expressed as percentages, and VTA2 is expressed as voltages.

B → **Go to step 5**

A

2 CHECK HARNESS AND CONNECTOR(THROTTLE POSITION SENSOR – ECM)

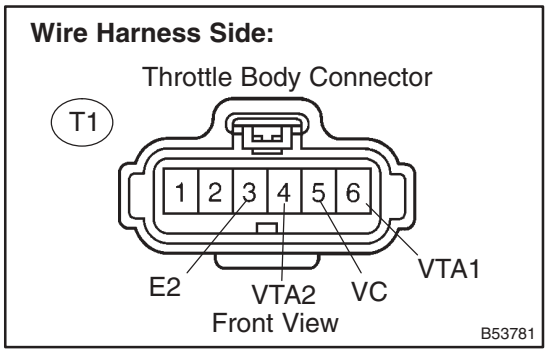

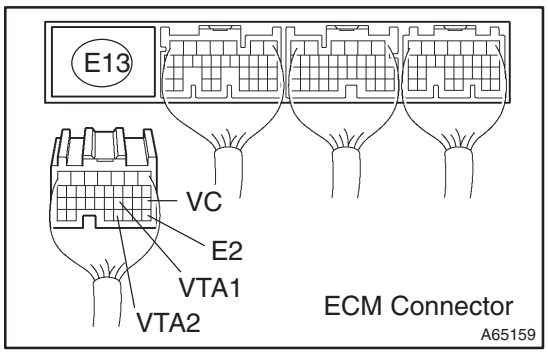

(a) Disconnect the T1 throttle body connector.
(b) Disconnect the E13 ECM connector.
(c) Check the resistance.

Standard (Check for open):

Tester Connection	Specified Condition
VC (T1–5) – VC (E13–18)	Below 1 Ω
VTA1 (T1–6) – VTA1 (E13–21)	Below 1 Ω
VTA2 (T1–4) – VTA2 (E13–31)	Below 1 Ω
E2 (T1–3) – E2 (E13–28)	Below 1 Ω

Standard (Check for short):

Tester Connection	Specified Condition
VC (T1–5) or VC (E13–18) – Body ground	10 kΩ or higher
VTA1 (T1–6) or VTA1 (E13–21) – Body ground	10 kΩ or higher
VTA2 (T1–4) or VTA2 (E13–31) – Body ground	10 kΩ or higher

(d) Reconnect the throttle body connector.
(e) Reconnect the ECM connector.

NG → **REPAIR OR REPLACE HARNESS OR CONNECTOR**

OK

3 INSPECT ECM(VC VOLTAGE)

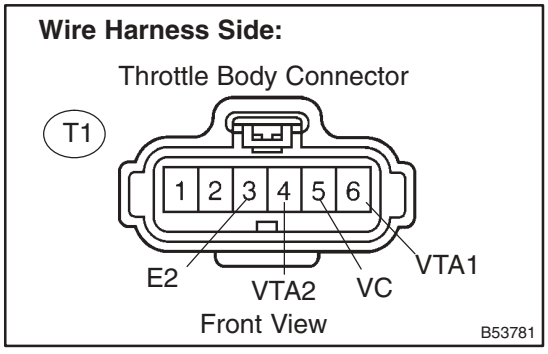

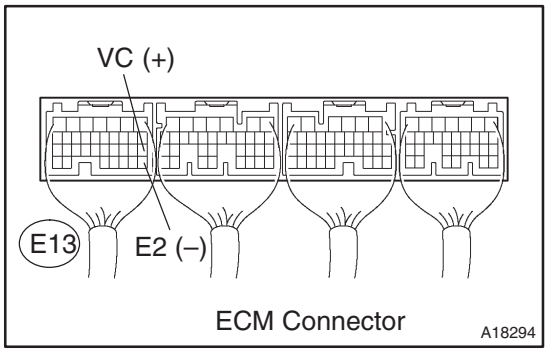

(a) Disconnect the T1 throttle body connector.
(b) Turn the ignition switch to ON and turn the intelligent tester II ON.
(c) Measure the voltage between the specified terminals of the E13 ECM connector.

Standard:

Tester Connection	Specified Condition
VC (E13–18) – E2 (E13–28)	4.5 to 5.5 V

(d) Reconnect the throttle body connector.

NG → **REPLACE ECM (See page 10–65 of Pub. No. RM1018E AVENSIS)**

OK

4	REPLACE THROTTLE BODY ASSY (See page 10–6)

GO

5	CHECK IF DTC OUTPUT RECURS(THROTTLE POSITION SENSOR DTCS)

(a) Clear the DTC(s) (see page 05–18).
(b) Start the engine.
(c) Run the engine in idling for 15 seconds or more.
(d) Connect the intelligent tester II to the DLC3.
(e) Turn the ignition switch to ON and turn the intelligent tester II ON.
(f) Select the following menu items: Powertrain / Engine and ECT / DTC.
(g) Read DTCs.

Result:

Display (DTC Output)	Proceed To
P0120, P0122, P0123, P0220, P0222, P0223 and/or P2135	A
No output	B

B → **SYSTEM OK**

A

REPLACE ECM (See page 10–65 of Pub. No. RM1018E AVENSIS)

DTC	P0121	THROTTLE/PEDAL POSITION SENSOR/SWITCH ”A” CIRCUIT RANGE/PERFORMANCE PROBLEM

HINT:
These DTCs are related to the throttle position sensor.

CIRCUIT DESCRIPTION

Refer to DTC P0120 on page 05–66.

DTC No.	DTC Detection Condition	Trouble Area
P0121	Difference between VTA and VTA2 voltage deviates from the malfunction criteria (1 trip detection logic)	• Throttle position sensor (built into throttle body)

INSPECTION PROCEDURE

HINT:
Read freeze frame data using the intelligent tester II. Freeze frame data record the engine condition when malfunctions are detected. When troubleshooting, freeze frame data can help determine if the vehicle was moving or stationary, if the engine was warmed up or not, if the air–fuel ratio was lean or rich, and other data from the time the malfunction occurred.

REPLACE THROTTLE BODY ASSY (See page 10–6)

DTC	P0130	OXYGEN SENSOR CIRCUIT MALFUNCTION (BANK 1 SENSOR 1)

DTC	P2195	OXYGEN SENSOR SIGNAL STUCK LEAN (BANK 1 SENSOR 1)

DTC	P2196	OXYGEN SENSOR SIGNAL STUCK RICH (BANK 1 SENSOR 1)

CIRCUIT DESCRIPTION

In order to obtain a high purification rate for the carbon monoxide (CO), hydrocarbon (HC) and nitrogen oxide (NOx) components of the exhaust gas, a Three–Way Catalytic Converter (TWC) is used. For the most efficient use of the TWC, the air–fuel ratio must be precisely controlled so that it is always close to the stoichiometric air–fuel ratio.

The heated oxygen sensor has the characteristic whereby its output voltage changes suddenly in the vicinity of the stoichiometric air–fuel ratio. This is used to detect the oxygen concentration in the exhaust gas and provide the ECM with feedback to control the air–fuel ratio.

When the air–fuel ratio becomes lean, the oxygen concentration in the exhaust gas increases. The heated oxygen sensor informs the ECM of the lean condition (low voltage, i.e. less than 0.45 V).

When the air–fuel ratio is richer than the stoichiometric air–fuel ratio, the oxygen concentration in the exhaust gas is reduced. And the heated oxygen sensor informs the ECM of the rich condition (high voltage, i.e. more than 0.45 V). The ECM judges by the voltage output of the heated oxygen sensor whether the air–fuel ratio is rich or lean and controls the injection time accordingly. If a malfunction of the heated oxygen sensor causes an output of abnormal voltage, the ECM will be unable to perform accurate air–fuel ratio control.

The heated oxygen sensor includes a heater which heats the zirconia element. The heater is controlled by the ECM. When the intake air volume is low (the temperature of the exhaust gas is low), a current flows to the heater in order to heat the sensor for accurate oxygen concentration detection.

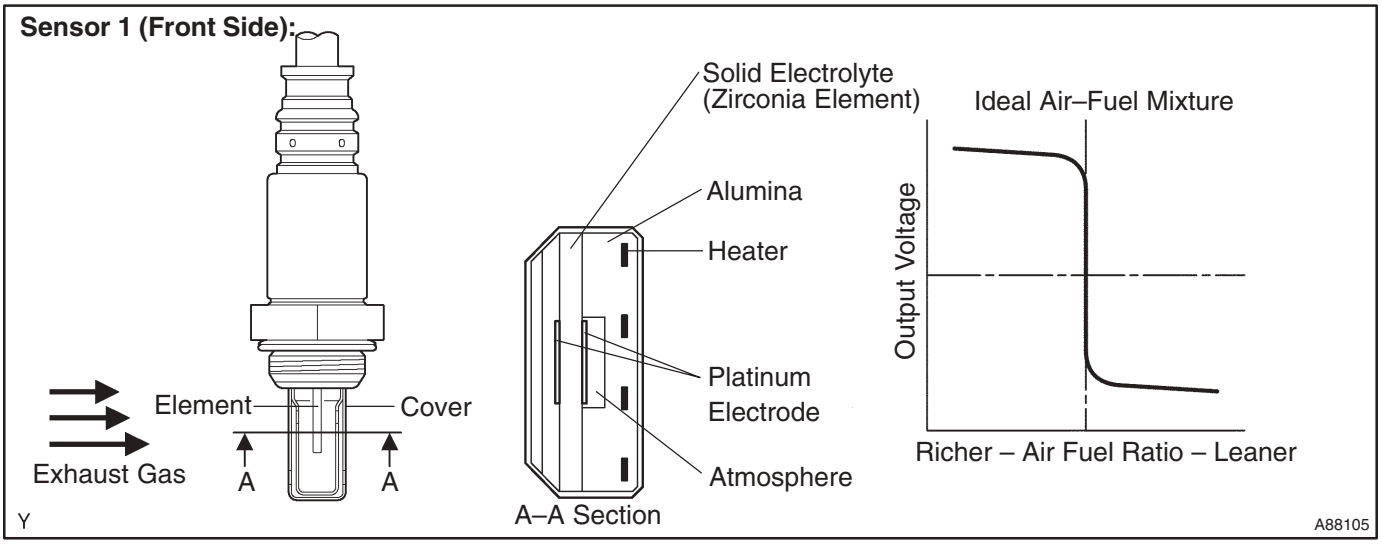

Sensor 2 (Rear Side):

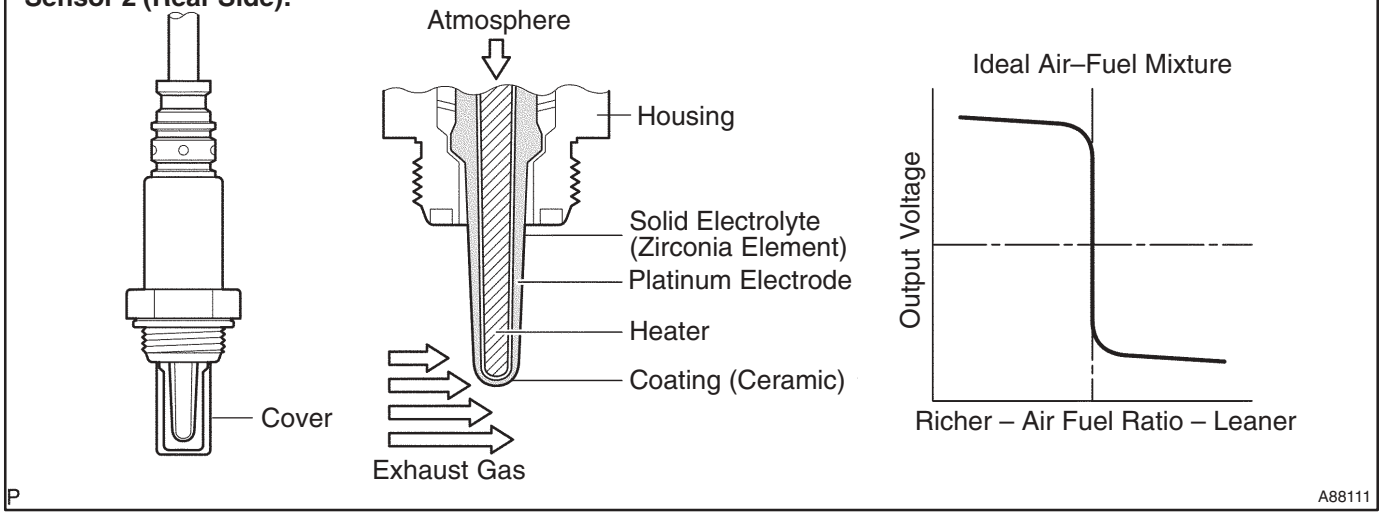

DTC No.	DTC Detection Condition	Trouble Area
P0130	After engine is warmed up, output voltage of heated oxygen sensor remains at 0.4 V or more, or 0.5 V or less, during engine idling (2 trip detection logic)	• Open or short in heated oxygen sensor circuit • Heated oxygen sensor (sensor 1) • Heated oxygen sensor heater (sensor 1) • EFI relay • Air induction system • Fuel pressure • Injector • ECM
P2195	The following conditions are met (2 trip detection logic): • Heated oxygen sensor (sensor 1) voltage remains at below 0.5 V (stuck in lean condition) • Engine is idling after engine warm–up	• Open or short in heated oxygen sensor circuit • Heated oxygen sensor (sensor 1) • Heated oxygen sensor heater (sensor 1) • EFI relay • Air induction system • Fuel pressure • Injector • ECM
P2196	The following conditions are met (2 trip detection logic): • Heated oxygen sensor (sensor 1) voltage remains at 0.4 V or more (stuck in rich condition) • Engine is idling after engine warm–up	• Open or short in heated oxygen sensor circuit • Heated oxygen sensor (sensor 1) • Heated oxygen sensor heater (sensor 1) • EFI relay • Air induction system • Fuel pressure • Injector • ECM

HINT:

- Sensor 1 refers to the sensor near the engine assembly.
- The output voltage of the heated oxygen sensor and the short–term fuel trim value can be read using the intelligent tester II.

WIRING DIAGRAM

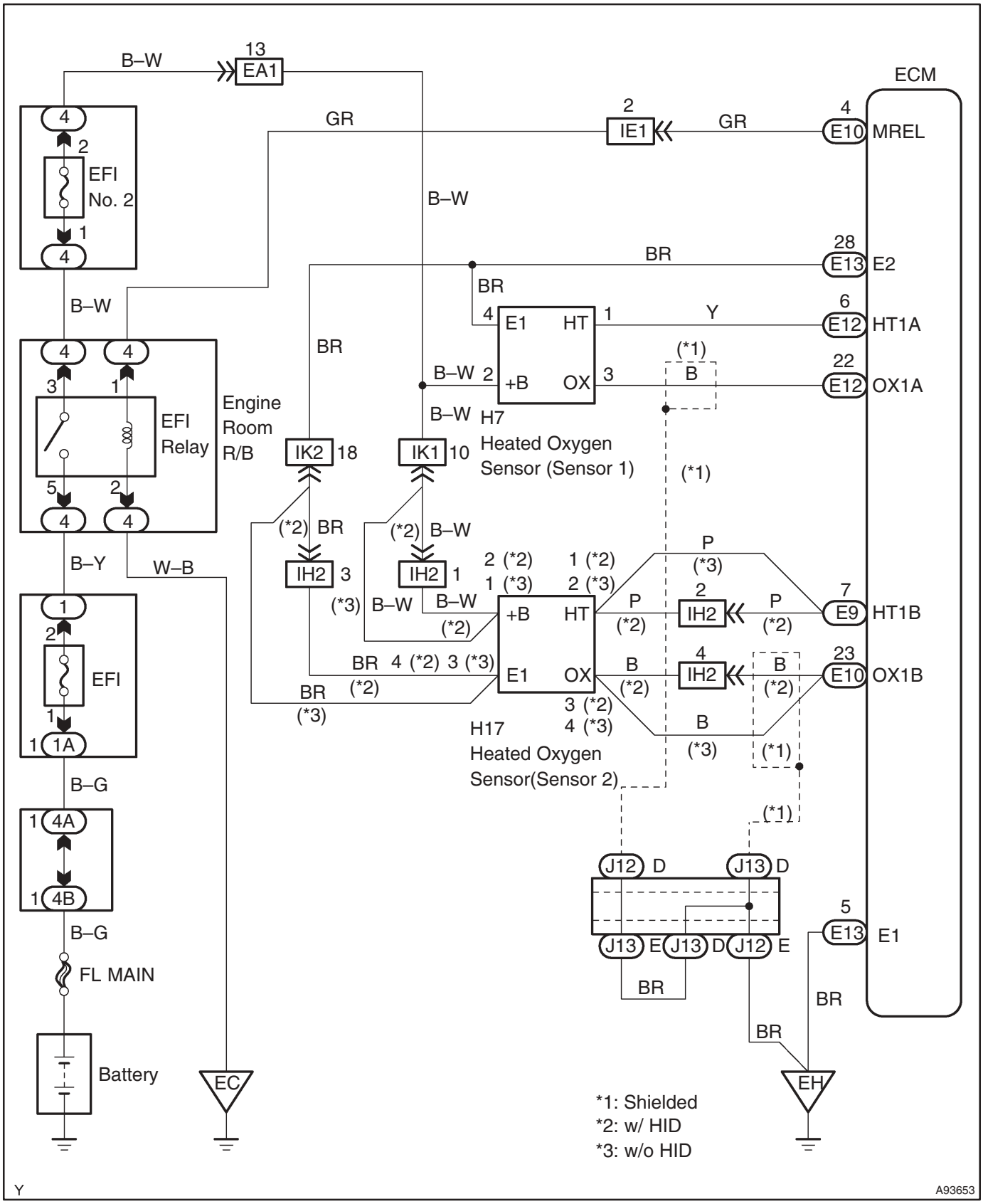

CONFIRMATION DRIVING PATTERN

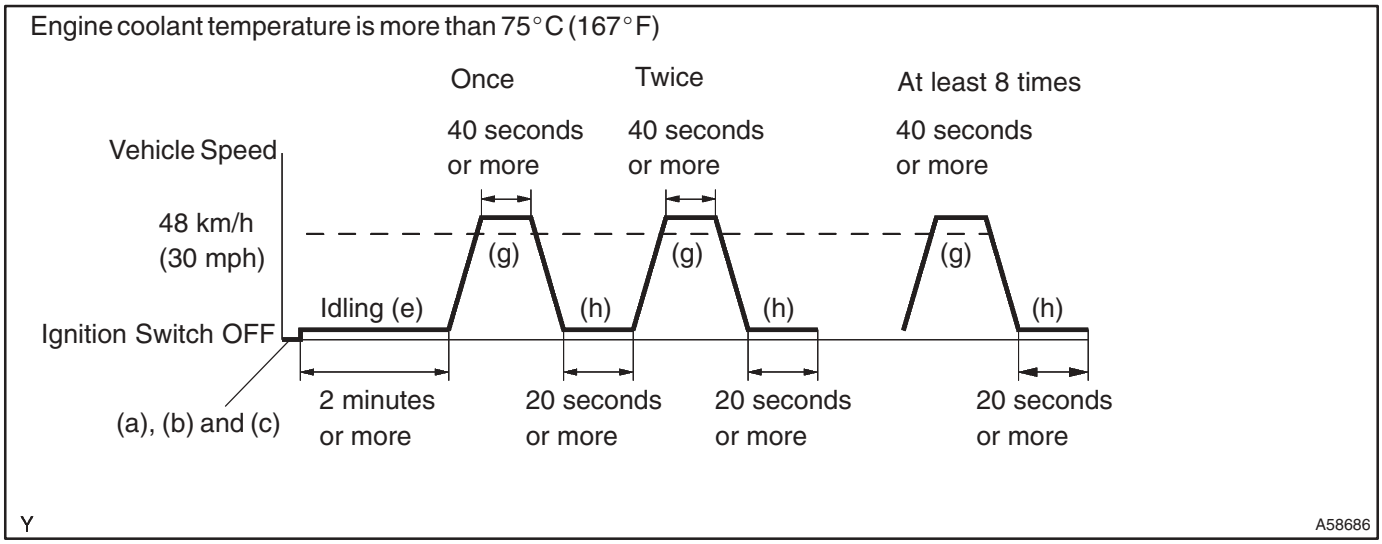

(a) Connect the intelligent tester II to the DLC3.
(b) Turn the ignition switch to ON and turn the intelligent tester II ON.
(c) Switch the ECM from normal mode to check mode using the intelligent tester II (see page 05–20).
(d) Start the engine.
(e) Allow the engine to idle for 2 minutes.
(f) Warm up the engine until the engine coolant temperature reaches more than 75°C (167°F).
(g) Drive the vehicle at 48 km/h (30 mph) or more for 40 seconds or more.
(h) Stop the vehicle and allow the engine to idle for 20 seconds or more.
(i) Repeat the steps (g) and (h) at least 8 times in one driving cycle.

HINT:

If a malfunction exists, the MIL will be illuminated during step (i).

NOTICE:

If the conditions in this test are not strictly followed, no malfunction will be detected. If you do not have the intelligent tester II, turn the ignition switch to OFF after performing steps from (d) to (i), then perform steps (d) to (i) again.

INSPECTION PROCEDURE

HINT:

Intelligent tester II only:

Malfunctioning areas can be found using the Active Test / A/F Control operation. The A/F Control operation can determine if the heated oxygen sensor or other potential trouble areas are malfunctioning or not.

(a) Perform the Active Test using the intelligent tester II.

HINT:

The A/F Control operation lowers the injection volume by 12.5 % or increases the injection volume by 25 %.

(1) Connect the intelligent tester II to the DLC3.
(2) Start the engine and turn the intelligent tester II ON.
(3) Warm up the engine by running the engine at 2,500 rpm for approximately 3 minutes.
(4) On the intelligent tester II, select the following menu items: Powertrain / Engine and ECT / Active Test / A/F Control.
(5) Select the following monitor items: O2S B1 S1 and O2S B1 S2.
(6) Perform the A/F Control operation with the engine in an idling condition (press the right or left button).

Result:

The heated oxygen sensor reacts in accordance with increases and decreases of the injection volume:

+25 % → Rich output: More than 0.5 V

–12.5 % → Lean output: Less than 0.4 V

NOTICE:

Sensor 1 (front sensor) has an output delay of a few seconds. Sensor 2 (rear sensor) has a maximum output delay of approximately 20 seconds.

	Output Voltage of Heated Oxygen Sensor (sensor 1: front sensor)	Output Voltage of Heated Oxygen Sensor (sensor 2: rear sensor)	Main Suspect Trouble Area
Case 1	Injection volume +25 % –12.5 % 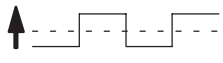 Output voltage More than 0.5 V Less than 0.4V  **OK**	Injection volume +25 % –12.5 % 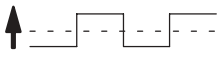 Output voltage More than 0.5 V Less than 0.4V  **OK**	—
Case 2	Injection volume +25 % –12.5 % 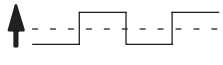 Output voltage Almost no reaction **NG**	Injection volume +25 % –12.5 % 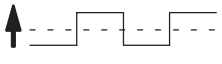 Output voltage More than 0.5 V Less than 0.4V  **OK**	Sensor 1: front sensor (Sensor 1, heater, sensor 1 circuit)
Case 3	Injection volume +25 % –12.5 % 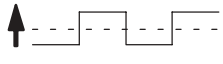 Output voltage More than 0.5 V Less than 0.4V  **OK**	Injection volume +25 % –12.5 % 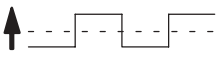 Output voltage Almost no reaction **NG**	Sensor 2: rear sensor (Sensor 2, heater, sensor 2 circuit)
Case 4	Injection volume +25 % –12.5 % 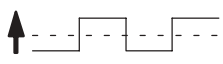 Output voltage Almost no reaction **NG**	Injection volume +25 % –12.5 % 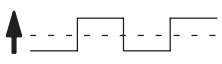 Output voltage Almost no reaction **NG**	Extremely rich or lean actual air–fuel ratio (Injector, fuel pressure, gas leakage in exhaust system, etc.)

The following A/F Control procedure enables the technician to check and graph the voltage output of both the heated oxygen sensors.

To display the graph, select the following menu items on the tester: View / Line Graph.

NOTICE:

If the vehicle is short of fuel, the air–fuel ratio becomes lean and the heated oxygen sensor DTCs will be recorded, and the MIL then illuminates.

HINT:

- If different DTCs related to different systems that have terminal E2 as the ground terminal are output simultaneously, terminal E2 may have an open circuit.
- Read freeze frame data using the intelligent tester II. Freeze frame data record the engine condition when malfunctions are detected. When troubleshooting, freeze frame data can help determine if the vehicle was moving or stationary, if the engine was warmed up or not, if the air–fuel ratio was lean or rich, and other data from the time the malfunction occurred.
- A high heated oxygen sensor (sensor 1) voltage (0.5 V or more) could be caused by a rich air–fuel mixture. Check for conditions that would cause the engine to run rich.
- A low heated oxygen sensor (sensor 1) voltage (0.4 V or less) could be caused by a lean air–fuel mixture. Check for conditions that would cause the engine to run lean.

1	CHECK OTHER DTC OUTPUT(IN ADDITION TO DTC P0130, P2195 AND P2196)

(a) Connect the intelligent tester II to the DLC3.
(b) Turn the ignition switch to ON and turn the intelligent tester II ON.
(c) Select the following menu items: Powertrain / Engine and ECT / DTC.
(d) Read DTCs.
Result:

Display (DTC Output)	Proceed To
P0130 and/or P2195 or P2196	A
P0130 or P2195 and/or P2196 and other DTCs	B

HINT:
If any DTCs other than P0130, P2195 and P2196 are output, troubleshoot those DTCs first.

B → **GO TO RELEVANT DTC CHART (See page 05–27)**

A

2	READ VALUE OF INTELLIGENT TESTER II(OUTPUT VOLTAGE OF HEATED OXYGEN SENSOR)

(a) Connect the intelligent tester II to the DLC3.
(b) Start the engine and turn the intelligent tester II ON.
(c) Select the following menu items: Powertrain / Engine and ECT / Data List / O2S B1 S1.
(d) Warm up the heated oxygen sensor at the engine speed of 2,500 rpm for approximately 90 seconds.
(e) Read the output voltage of the heated oxygen sensor during engine idling.
Standard:
Fluctuates between less than 0.4 V and more than 0.5 V (see the following figure).

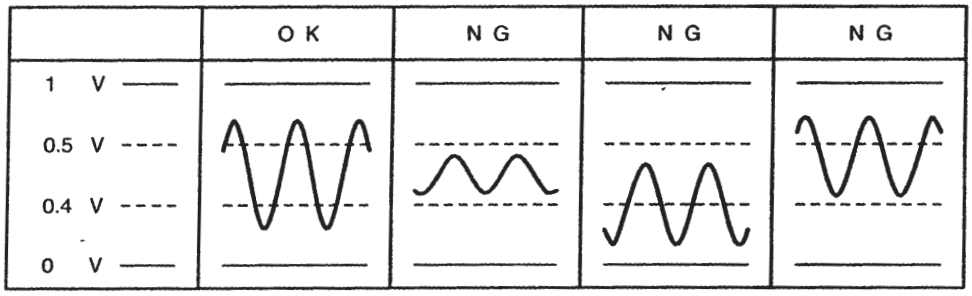

A97090

OK → **Go to step 9**

NG

3 INSPECT HEATED OXYGEN SENSOR(HEATER RESISTANCE)

Component Side:
Heated Oxygen Sensor Connector

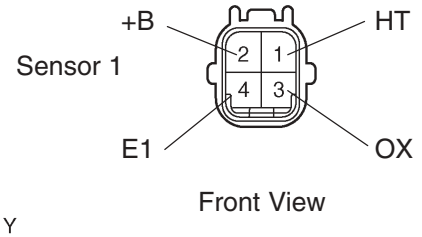

(a) Disconnect the H7 heated oxygen sensor connector.
(b) Measure the resistance between the terminals of the heated oxygen sensor connector.
Standard:

Tester Connection	Specified Condition
1 (HT) – 2 (+B)	5 to 10 Ω at 20°C (68°F)
1 (HT) – 4 (E1)	10 kΩ or higher

(c) Reconnect the heated oxygen sensor connector.

NG → **REPLACE HEATED OXYGEN SENSOR**

OK

4 INSPECT EFI RELAY

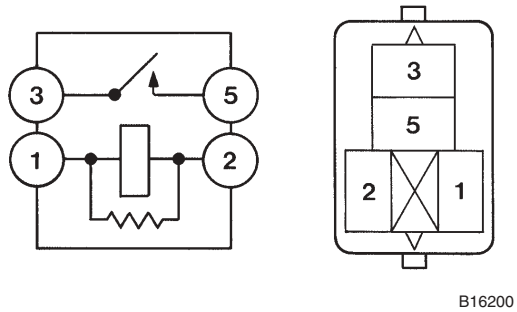

(a) Remove the EFI relay from the engine room R/B No. 4.
(b) Check the EFI relay resistance.
Standard:

Tester Connection	Specified Condition
3 – 5	10 kΩ or higher
3 – 5	Below 1 Ω (Apply battery voltage to terminals 1 and 2)

(c) Reinstall the EFI relay.

NG → **REPLACE EFI RELAY**

OK

5 CHECK HARNESS AND CONNECTOR(HEATED OXYGEN SENSOR – ECM)

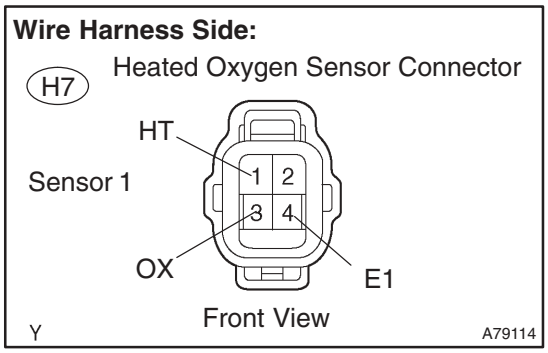

(a) Disconnect the H7 heated oxygen sensor connector.
(b) Disconnect the E12 and E13 ECM connectors.
(c) Check the resistance.

Standard (Check for open):

Tester Connection	Specified Condition
OX (H7–3) – OX1A (E12–22)	Below 1 Ω
HT (H7–1) – HT1A (E12–6)	Below 1 Ω
E1 (H7–4) – E2 (E13–28)	Below 1 Ω

Standard (Check for short):

Tester Connection	Specified Condition
OX (H7–3) or OX1A (E12–22) – Body ground	10 kΩ or higher
HT (H7–1) or HT1A (E12–6) – Body ground	10 kΩ or higher

(d) Reconnect the heated oxygen sensor connector.
(e) Reconnect the ECM connector.

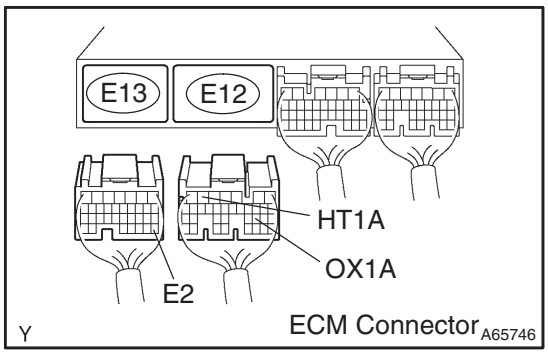

Reference (Sensor 1 System Diagram):

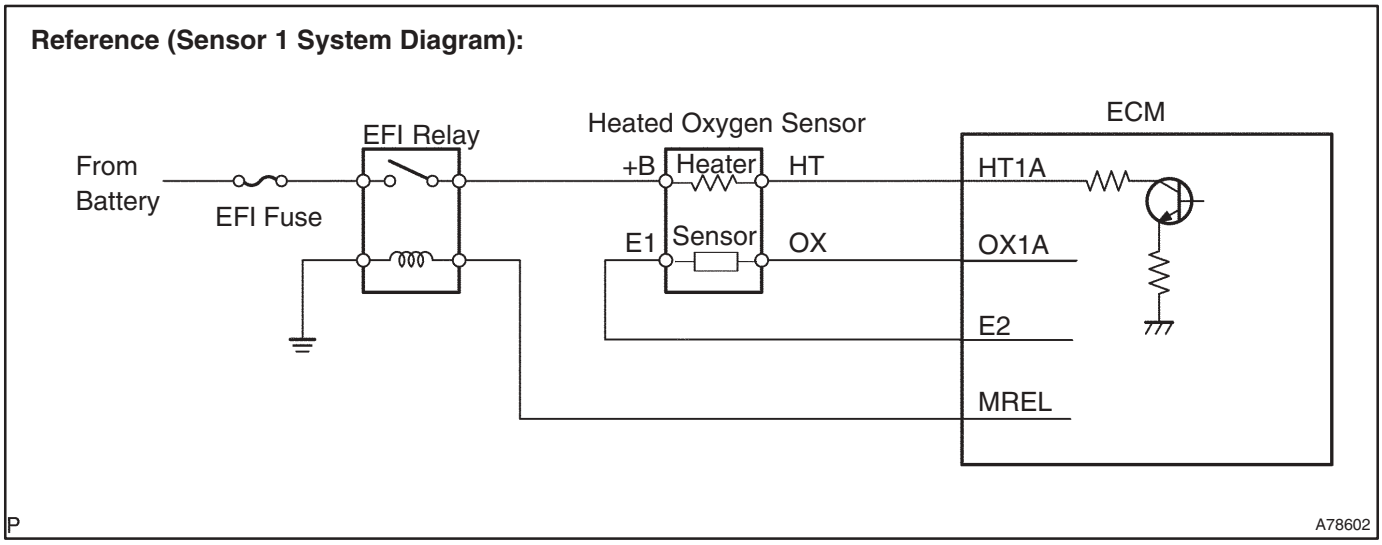

NG → **REPAIR OR REPLACE HARNESS OR CONNECTOR**

OK

6	CHECK AIR INDUCTION SYSTEM

(a) Check for vacuum leaks in the air induction system.

NG → REPAIR OR REPLACE AIR INDUCTION SYSTEM

OK

7	CHECK FUEL PRESSURE (See page 11–5 of Pub. No. RM1018E AVENSIS)

(a) Check the fuel pressure (high or low pressure).

NG → REPAIR OR REPLACE FUEL SYSTEM

OK

8	INSPECT FUEL INJECTOR ASSY(INJECTION AND VOLUME) (See page 11–8 of Pub. No. RM1018E AVENSIS)

NG → REPLACE FUEL INJECTOR ASSY (See page 11–10 of Pub. No. RM1018E AVENSIS)

OK

REPLACE HEATED OXYGEN SENSOR

9	PERFORM CONFIRMATION DRIVING PATTERN

HINT:
Clear all DTCs prior to performing the confirmation driving pattern.

GO

10	CHECK IF DTC OUTPUT RECURS(DTC P0130, P2195 AND P2196)

(a) Connect the intelligent tester II to the DLC3.
(b) Turn the ignition switch to ON and turn the intelligent tester II ON.
(c) Select the following menu items: Powertrain / Engine and ECT / DTC.
(d) Read DTCs.

Result:

Display (DTC Output)	Proceed To
P0130 and/or P2195 or P2196	A
No output	B

B → CHECK FOR INTERMITTENT PROBLEMS (See page 05–9)

A

REPLACE HEATED OXYGEN SENSOR

DTC	P0133	OXYGEN SENSOR CIRCUIT SLOW RESPONSE (BANK 1 SENSOR 1)

CIRCUIT DESCRIPTION

Refer to DTC P0130 on page 05–74.

DTC No.	DTC Detection Condition	Trouble Area
P0133	Voltage of heated oxygen sensor (sensor 1) does not fluctuate between lean and rich for 0.9 seconds (2 trip detection logic) Lean: 0.35 V or less Rich: 0.45 V or more	• Open or short in heated oxygen sensor circuit • Heated oxygen sensor (sensor 1) • Heated oxygen sensor heater (sensor 1) • EFI relay • Air induction system • Fuel pressure • Injector • ECM

HINT:

- Sensor 1 refers to the sensor near the engine assembly.

WIRING DIAGRAM

Refer to DTC P0130 on page 05–74.

CONFIRMATION DRIVING PATTERN

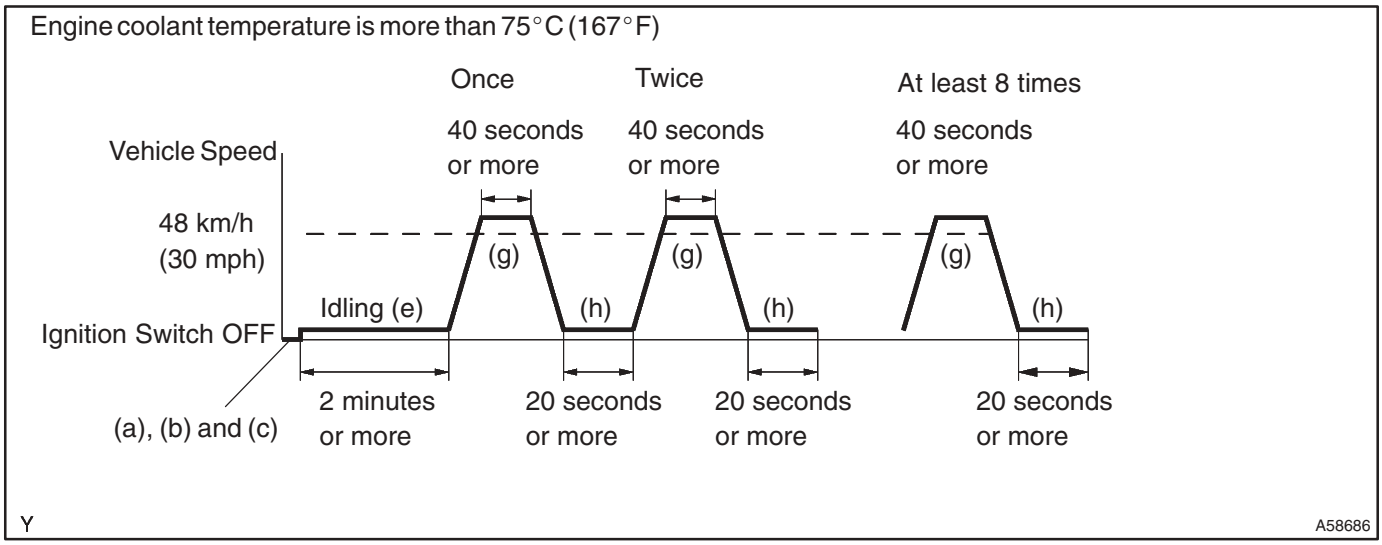

(a) Connect the intelligent tester II to the DLC3.
(b) Turn the ignition switch to ON and turn the intelligent tester II ON.
(c) Switch the ECM from normal mode to check mode using the intelligent tester II (see page 05–20).
(d) Start the engine.
(e) Allow the engine to idle for 2 minutes.
(f) Warm up the engine until the engine coolant temperature reaches more than 75°C (167°F).
(g) Drive the vehicle at 48 km/h (30 mph) or more for 40 seconds or more.
(h) Stop the vehicle and allow the engine to idle for 20 seconds or more.
(i) Repeat the steps (g) and (h) at least 8 times in one driving cycle.

HINT:

If a malfunction exists, the MIL will be illuminated during step (i).

NOTICE:

If the conditions in this test are not strictly followed, no malfunction will be detected. If you do not have the intelligent tester II, turn the ignition switch to OFF after performing steps from (d) to (i), then perform steps (d) to (i) again.

INSPECTION PROCEDURE

HINT:

Intelligent tester II only:

Malfunctioning areas can be found using the Active Test / A/F Control operation. The A/F Control operation can determine if the heated oxygen sensor or other potential trouble areas are malfunctioning or not.

(a) Perform the Active Test using the intelligent tester II.

HINT:

The A/F Control operation lowers the injection volume by 12.5 % or increases the injection volume by 25 %.

(1) Connect the intelligent tester II to the DLC3.
(2) Start the engine and turn the intelligent tester II ON.
(3) Warm up the engine by running the engine at 2,500 rpm for approximately 3 minutes.
(4) On the intelligent tester II, select the following menu items: Powertrain / Engine and ECT / Active Test / A/F Control.
(5) Select the following monitor items: O2S B1 S1 and O2S B1 S2.
(6) Perform the A/F Control operation with the engine in an idling condition (press the right or left button).

Result:

The heated oxygen sensor reacts in accordance with increases and decreases of the injection volume:

+25 % → Rich output: More than 0.5 V

–12.5 % → Lean output: Less than 0.4 V

NOTICE:

Sensor 1 (front sensor) has an output delay of a few seconds. Sensor 2 (rear sensor) has a maximum output delay of approximately 20 seconds.

	Output Voltage of Heated Oxygen Sensor (sensor 1: front sensor)	Output Voltage of Heated Oxygen Sensor (sensor 2: rear sensor)	Main Suspect Trouble Area
Case 1	Injection volume +25 % –12.5 % Output voltage More than 0.5 V Less than 0.4V **OK**	Injection volume +25 % –12.5 % Output voltage More than 0.5 V Less than 0.4V **OK**	—
Case 2	Injection volume +25 % –12.5 % Output voltage Almost no reaction **NG**	Injection volume +25 % –12.5 % Output voltage More than 0.5 V Less than 0.4V **OK**	Sensor 1: front sensor (Sensor 1, heater, sensor 1 circuit)
Case 3	Injection volume +25 % –12.5 % Output voltage More than 0.5 V Less than 0.4V **OK**	Injection volume +25 % –12.5 % Output voltage Almost no reaction **NG**	Sensor 2: rear sensor (Sensor 2, heater, sensor 2 circuit)
Case 4	Injection volume +25 % –12.5 % Output voltage Almost no reaction **NG**	Injection volume +25 % –12.5 % Output voltage Almost no reaction **NG**	Extremely rich or lean actual air–fuel ratio (Injector, fuel pressure, gas leakage in exhaust system, etc.)

The following A/F Control procedure enables the technician to check and graph the voltage output of both the heated oxygen sensors.

To display the graph, select the following menu items on the tester: View / Line Graph.

NOTICE:

If the vehicle is short of fuel, the air–fuel ratio becomes lean and the heated oxygen sensor DTCs will be recorded, and the MIL then illuminates.

HINT:

- If different DTCs related to different systems that have terminal E2 as the ground terminal are output simultaneously, terminal E2 may have an open circuit.
- Read freeze frame data using the intelligent tester II. Freeze frame data record the engine condition when malfunctions are detected. When troubleshooting, freeze frame data can help determine if the vehicle was moving or stationary, if the engine was warmed up or not, if the air–fuel ratio was lean or rich, and other data from the time the malfunction occurred.
- A high heated oxygen sensor (sensor 1) voltage (0.5 V or more) could be caused by a rich air–fuel mixture. Check for conditions that would cause the engine to run rich.
- A low heated oxygen sensor (sensor 1) voltage (0.4 V or less) could be caused by a lean air–fuel mixture. Check for conditions that would cause the engine to run lean.

1	CHECK OTHER DTC OUTPUT(IN ADDITION TO DTC P0133)

(a) Connect the intelligent tester II to the DLC3.
(b) Turn the ignition switch to ON and turn the intelligent tester II ON.
(c) Select the following menu items: Powertrain / Engine and ECT / DTC.
(d) Read DTCs.
Result:

Display (DTC Output)	Proceed To
P0133	A
P0133 and other DTCs	B

HINT:
If any DTCs other than P0133 are output, troubleshoot those DTCs first.

B → **GO TO RELEVANT DTC CHART (See page 05–27)**

A

2	READ VALUE OF INTELLIGENT TESTER II(HEATED OXYGEN SENSOR DURING IDLING)

(a) Connect the intelligent tester II to the DLC3.
(b) Start the engine and turn the intelligent tester II ON.
(c) Select the following menu items: Powertrain / Engine and ECT / Data List / O2S B1 S1.
(d) Warm up the heated oxygen sensor at the engine speed of 2,500 rpm for approximately 90 seconds.
(e) Read the output voltage of the heated oxygen sensor during engine idling.
Standard:
Fluctuates between less than 0.4 V and more than 0.5 V (see the following figure).

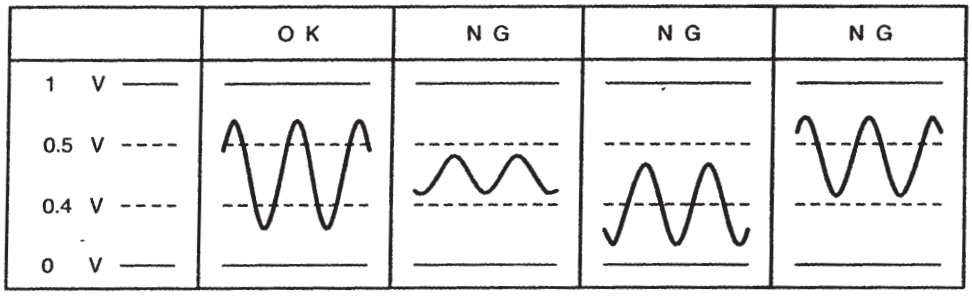

A97090

OK → **Go to step 9**

NG

3 INSPECT HEATED OXYGEN SENSOR(HEATER RESISTANCE)

Component Side:
Heated Oxygen Sensor Connector

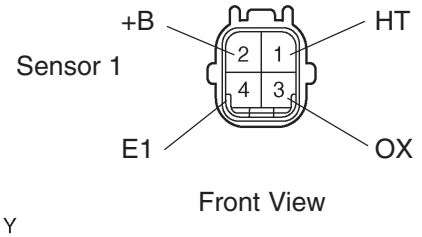

(a) Disconnect the H7 heated oxygen sensor connector.
(b) Measure the resistance between the terminals of the heated oxygen sensor connector.

Standard:

Tester Connection	Specified Condition
1 (HT) – 2 (+B)	5 to 10 Ω at 20°C (68°F)
1 (HT) – 4 (E1)	10 kΩ or higher

(c) Reconnect the heated oxygen sensor connector.

NG → **REPLACE HEATED OXYGEN SENSOR**

OK

4 INSPECT EFI RELAY

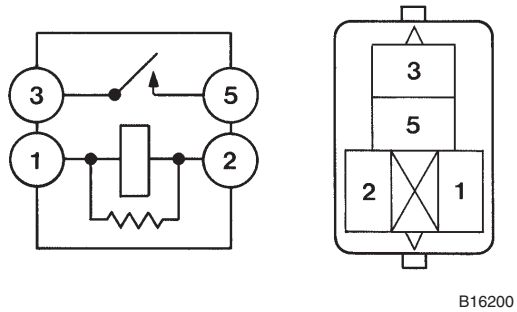

(a) Remove the EFI relay from the engine room R/B No. 4.
(b) Check the EFI relay resistance.

Standard:

Tester Connection	Specified Condition
3 – 5	10 kΩ or higher
3 – 5	Below 1 Ω (Apply battery voltage to terminals 1 and 2)

(c) Reinstall the EFI relay.

NG → **REPLACE EFI RELAY**

OK

5 CHECK HARNESS AND CONNECTOR(HEATED OXYGEN SENSOR – ECM)

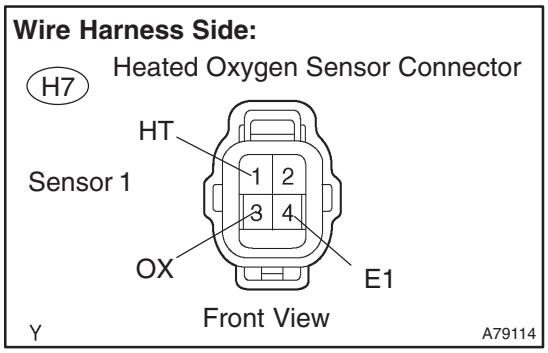

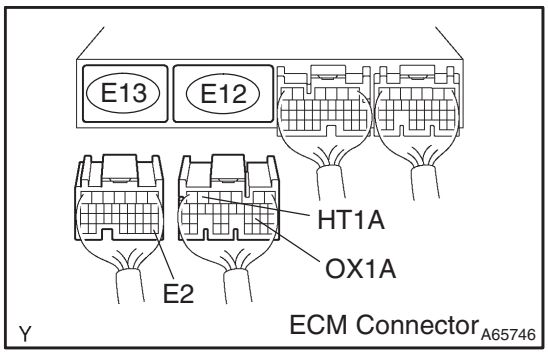

(a) Disconnect the H7 heated oxygen sensor connector.
(b) Disconnect the E12 and E13 ECM connectors.
(c) Check the resistance.

Standard (Check for open):

Tester Connection	Specified Condition
OX (H7–3) – OX1A (E12–22)	Below 1 Ω
HT (H7–1) – HT1A (E12–6)	Below 1 Ω
E1 (H7–4) – E2 (E13–28)	Below 1 Ω

Standard (Check for short):

Tester Connection	Specified Condition
OX (H7–3) or OX1A (E12–22) – Body ground	10 kΩ or higher
HT (H7–1) or HT1A (E12–6) – Body ground	10 kΩ or higher

(d) Reconnect the heated oxygen sensor connector.
(e) Reconnect the ECM connector.

Reference (Sensor 1 System Diagram):

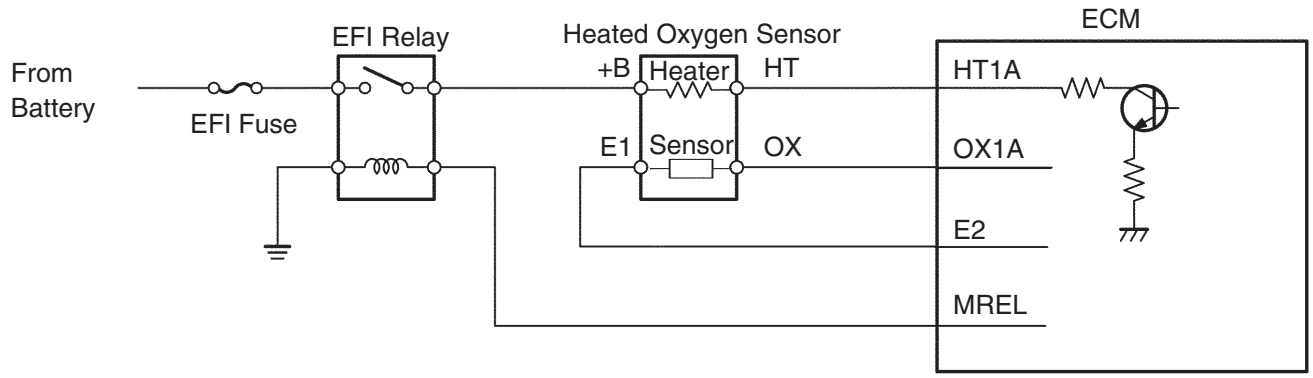

NG → **REPAIR OR REPLACE HARNESS OR CONNECTOR**

OK

6 CHECK AIR INDUCTION SYSTEM

(a) Check for vacuum leaks in the air induction system.

NG → **REPAIR OR REPLACE AIR INDUCTION SYSTEM**

OK

7	CHECK FUEL PRESSURE (See page 11–5 of Pub. No. RM1018E AVENSIS)

(a) Check the fuel pressure (high or low pressure).

NG → REPAIR OR REPLACE FUEL SYSTEM

OK

8	INSPECT FUEL INJECTOR ASSY(INJECTION AND VOLUME) (See page 11–8 of Pub. No. RM1018E AVENSIS)

NG → REPLACE FUEL INJECTOR ASSY (See page 11–10 of Pub. No. RM1018E AVENSIS)

OK

REPLACE HEATED OXYGEN SENSOR

9	PERFORM CONFIRMATION DRIVING PATTERN

HINT:
Clear all DTCs prior to performing the confirmation driving pattern.

GO

10	CHECK IF DTC OUTPUT RECURS(DTC P0133)

(a) Connect the intelligent tester II to the DLC3.
(b) Turn the ignition switch to ON and turn the intelligent tester II ON.
(c) Select the following menu items: Powertrain / Engine and ECT / DTC.
(d) Read DTCs.

Result:

Display (DTC Output)	Proceed To
P0133	A
No output	B

B → CHECK FOR INTERMITTENT PROBLEMS (See page 05–9)

A

REPLACE HEATED OXYGEN SENSOR

DTC	P0134	OXYGEN SENSOR CIRCUIT NO ACTIVITY DETECTED (BANK 1 SENSOR 1)

CIRCUIT DESCRIPTION

Refer to DTC P0130 on page 05–74.

DTC No.	DTC Detecting Condition	Trouble Area
P0134	After engine is warmed up, voltage of heated oxygen sensor (sensor 1) does not become rich (greater than 0.45 V) even once when conditions (a), (b), (c), (d) and (e) continue for more than 50 seconds (1 trip detection logic): (a) Engine speed: 1,400 rpm or more (b) Vehicle speed: 40 km/h (25 mph) or more (c) Throttle valve is not fully closed (d) 180 seconds or more after starting engine (e) Engine coolant temperature is more than 40°C (104°F)	• Open or short in heated oxygen sensor circuit • Heated oxygen sensor (sensor 1) • PCV valve and hose • EFI relay • Air induction system • Fuel pressure • Injector • Gas leakage in exhaust system • ECM

HINT:

- Sensor 1 refers to the sensor near the engine assembly.
- When DTC P0134 is detected, confirm the output voltage of the heated oxygen sensor (sensor 1) in the Data List using the intelligent tester II.
  If the voltage output of the heated oxygen sensor is less than 0.1 V, the heated oxygen sensor circuit may be open or short.

WIRING DIAGRAM

Refer to DTC P0130 on page 05–74.

CONFIRMATION DRIVING PATTERN

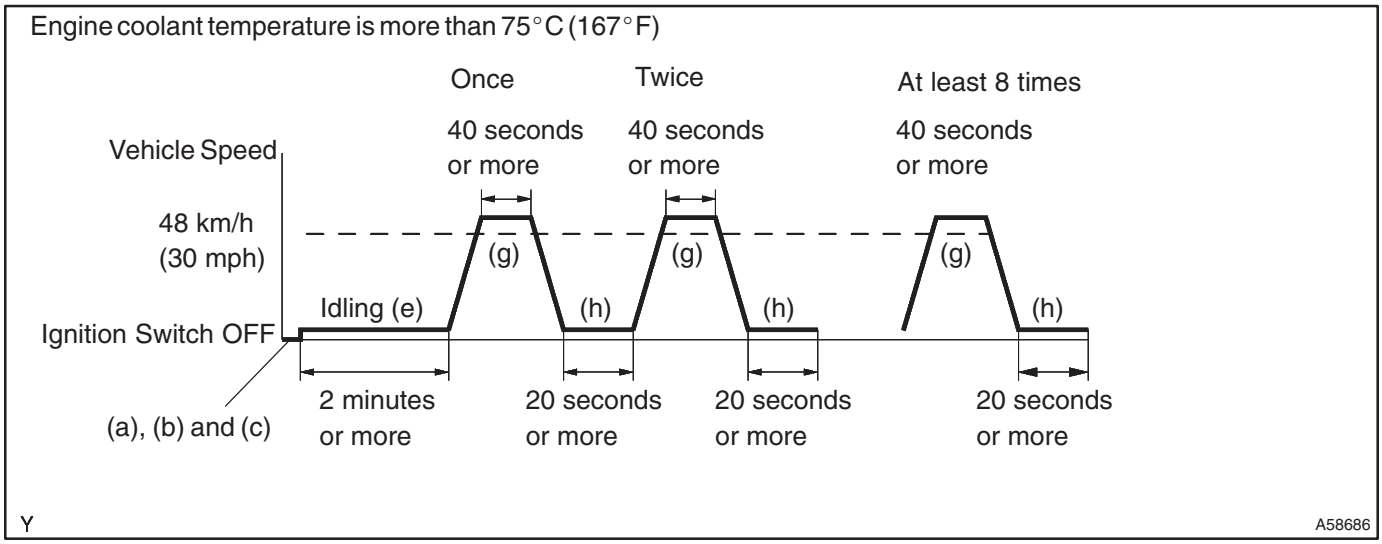

(a) Connect the intelligent tester II to the DLC3.
(b) Turn the ignition switch to ON and turn the intelligent tester II ON.
(c) Switch the ECM from normal mode to check mode using the intelligent tester II (see page 05–20).
(d) Start the engine.
(e) Allow the engine to idle for 2 minutes.
(f) Warm up the engine until the engine coolant temperature reaches more than 75°C (167°F).
(g) Drive the vehicle at 48 km/h (30 mph) or more for 40 seconds or more.
(h) Stop the vehicle and allow the engine to idle for 20 seconds or more.
(i) Repeat the steps (g) and (h) at least 8 times in one driving cycle.

HINT:

If a malfunction exists, the MIL will be illuminated during step (i).

NOTICE:

If the conditions in this test are not strictly followed, no malfunction will be detected. If you do not have the intelligent tester II, turn the ignition switch to OFF after performing steps from (d) to (i), then perform steps (d) to (i) again.

INSPECTION PROCEDURE

HINT:

Intelligent tester II only:

Malfunctioning areas can be found using the Active Test / A/F Control operation. The A/F Control operation can determine if the heated oxygen sensor or other potential trouble areas are malfunctioning or not.

(a) Perform the Active Test using the intelligent tester II.

HINT:

The A/F Control operation lowers the injection volume by 12.5 % or increases the injection volume by 25 %.

(1) Connect the intelligent tester II to the DLC3.
(2) Start the engine and turn the intelligent tester II ON.
(3) Warm up the engine by running the engine at 2,500 rpm for approximately 3 minutes.
(4) On the intelligent tester II, select the following menu items: Powertrain / Engine and ECT / Active Test / A/F Control.
(5) Select the following monitor items: O2S B1 S1 and O2S B1 S2.
(6) Perform the A/F Control operation with the engine in an idling condition (press the right or left button).

Result:

The heated oxygen sensor reacts in accordance with increases and decreases of the injection volume:

+25 % → Rich output: More than 0.5 V

–12.5 % → Lean output: Less than 0.4 V

NOTICE:

Sensor 1 (front sensor) has an output delay of a few seconds. Sensor 2 (rear sensor) has a maximum output delay of approximately 20 seconds.

	Output Voltage of Heated Oxygen Sensor (sensor 1: front sensor)	Output Voltage of Heated Oxygen Sensor (sensor 2: rear sensor)	Main Suspect Trouble Area
Case 1	Injection volume +25 % –12.5 % 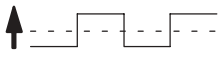 Output voltage More than 0.5 V Less than 0.4V  **OK**	Injection volume +25 % –12.5 % 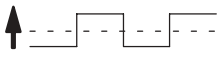 Output voltage More than 0.5 V Less than 0.4V  **OK**	—
Case 2	Injection volume +25 % –12.5 % 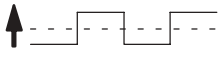 Output voltage Almost no reaction **NG**	Injection volume +25 % –12.5 % 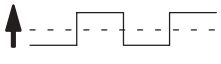 Output voltage More than 0.5 V Less than 0.4V  **OK**	Sensor 1: front sensor (Sensor 1, heater, sensor 1 circuit)
Case 3	Injection volume +25 % –12.5 % 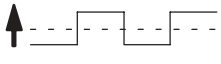 Output voltage More than 0.5 V Less than 0.4V  **OK**	Injection volume +25 % –12.5 % 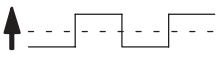 Output voltage Almost no reaction **NG**	Sensor 2: rear sensor (Sensor 2, heater, sensor 2 circuit)
Case 4	Injection volume +25 % –12.5 % 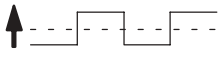 Output voltage Almost no reaction **NG**	Injection volume +25 % –12.5 % 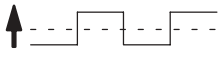 Output voltage Almost no reaction **NG**	Extremely rich or lean actual air–fuel ratio (Injector, fuel pressure, gas leakage in exhaust system, etc.)

The following A/F Control procedure enables the technician to check and graph the voltage output of both the heated oxygen sensors.

To display the graph, select the following menu items on the tester: View / Line Graph.

NOTICE:

If the vehicle is short of fuel, the air–fuel ratio becomes lean and the heated oxygen sensor DTCs will be recorded, and the MIL then illuminates.

HINT:

- If different DTCs related to different systems that have terminal E2 as the ground terminal are output simultaneously, terminal E2 may have an open circuit.
- Read freeze frame data using the intelligent tester II. Freeze frame data record the engine condition when malfunctions are detected. When troubleshooting, freeze frame data can help determine if the vehicle was moving or stationary, if the engine was warmed up or not, if the air–fuel ratio was lean or rich, and other data from the time the malfunction occurred.
- A high heated oxygen sensor (sensor 1) voltage (0.5 V or more) could be caused by a rich air–fuel mixture. Check for conditions that would cause the engine to run rich.
- A low heated oxygen sensor (sensor 1) voltage (0.4 V or less) could be caused by a lean air–fuel mixture. Check for conditions that would cause the engine to run lean.

1	CHECK OTHER DTC OUTPUT(IN ADDITION TO DTC P0134)

(a) Connect the intelligent tester II to the DLC3.
(b) Turn the ignition switch to ON and turn the intelligent tester II ON.
(c) Select the following menu items: Powertrain / Engine and ECT / DTC.
(d) Read DTCs.
Result:

Display (DTC Output)	Proceed To
P0134	A
P0134 and other DTCs	B

HINT:
If any DTCs other than P0134 are output, troubleshoot those DTCs first.

B → **GO TO RELEVANT DTC CHART (See page 05–27)**

A

2	READ VALUE OF INTELLIGENT TESTER II(OUTPUT VOLTAGE OF HEATED OXYGEN SENSOR)

(a) Connect the intelligent tester II to the DLC3.
(b) Start the engine and turn the intelligent tester II ON.
(c) Select the following menu items: Powertrain / Engine and ECT / Data List / O2S B1 S1.
(d) Warm up the heated oxygen sensor at the engine speed of 2,500 rpm for approximately 90 seconds.
(e) Read the output voltage of the heated oxygen sensor during engine idling.
Standard:
Fluctuates between less than 0.4 V and more than 0.5 V (see the following figure).

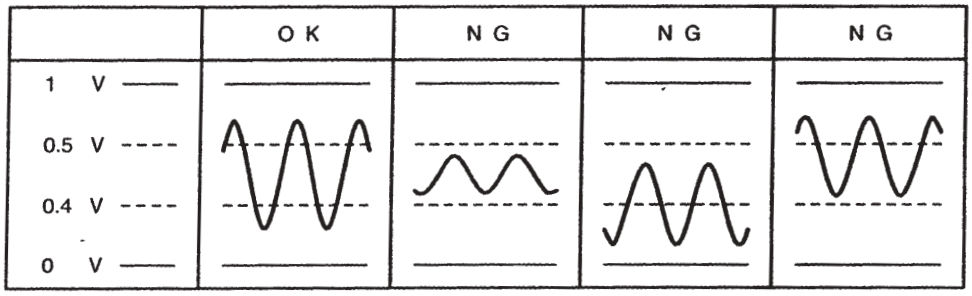

A97090

OK → **Go to step 12**

NG

3	CHECK CONNECTION OF PCV HOSE

OK: The PCV hose is connected correctly and not damaged.

NG → **REPAIR OR REPLACE PCV HOSE**

OK

4 INSPECT HEATED OXYGEN SENSOR(HEATER RESISTANCE)

Component Side:
Heated Oxygen Sensor Connector

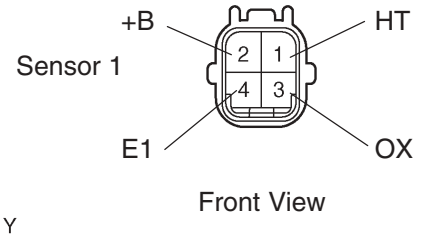

(a) Disconnect the H7 heated oxygen sensor connector.
(b) Measure the resistance between the terminals of the heated oxygen sensor connector.
Standard:

Tester Connection	Specified Condition
1 (HT) – 2 (+B)	5 to 10 Ω at 20°C (68°F)
1 (HT) – 4 (E1)	10 kΩ or higher

(c) Reconnect the heated oxygen sensor connector.

NG → **REPLACE HEATED OXYGEN SENSOR**

OK

5 INSPECT EFI RELAY

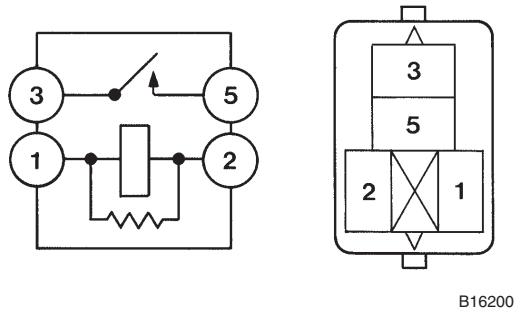

(a) Remove the EFI relay from the engine room R/B No. 4.
(b) Check the EFI relay resistance.
Standard:

Tester Connection	Specified Condition
3 – 5	10 kΩ or higher
3 – 5	Below 1 Ω (Apply battery voltage to terminals 1 and 2)

(c) Reinstall the EFI relay.

NG → **REPLACE EFI RELAY**

OK

6 CHECK HARNESS AND CONNECTOR(HEATED OXYGEN SENSOR – ECM)

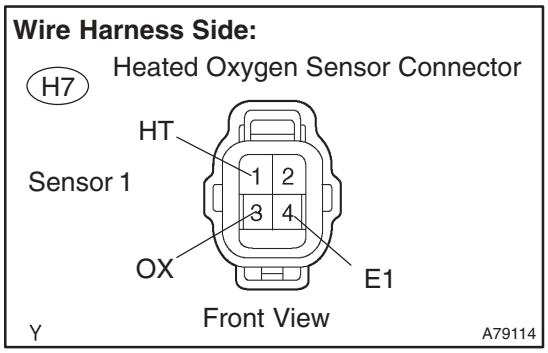

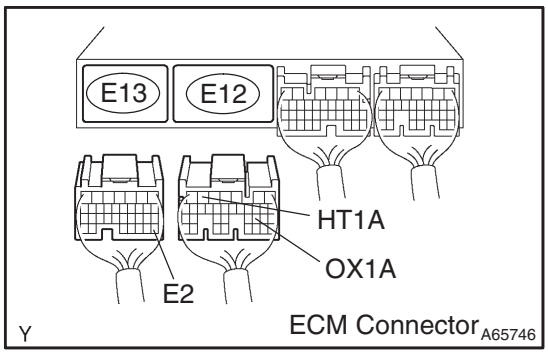

(a) Disconnect the H7 heated oxygen sensor connector.
(b) Disconnect the E12 and E13 ECM connectors.
(c) Check the resistance.

Standard (Check for open):

Tester Connection	Specified Condition
OX (H7–3) – OX1A (E12–22)	Below 1 Ω
HT (H7–1) – HT1A (E12–6)	Below 1 Ω
E1 (H7–4) – E2 (E13–28)	Below 1 Ω

Standard (Check for short):

Tester Connection	Specified Condition
OX (H7–3) or OX1A (E12–22) – Body ground	10 kΩ or higher
HT (H7–1) or HT1A (E12–6) – Body ground	10 kΩ or higher

(d) Reconnect the heated oxygen sensor connector.
(e) Reconnect the ECM connector.

Reference (Sensor 1 System Diagram):

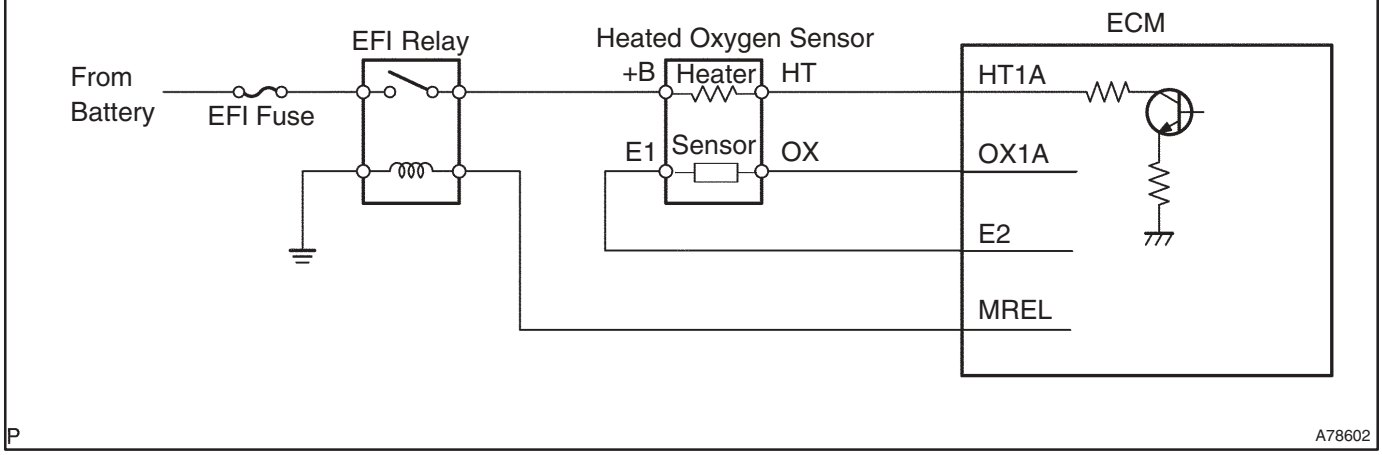

NG → **REPAIR OR REPLACE HARNESS OR CONNECTOR**

OK

7	CHECK WHETHER MISFIRE OCCURS OR NOT BY MONITORING DTC AND DATA LIST

NG → TROUBLESHOOT MISFIRES

OK

8	CHECK AIR INDUCTION SYSTEM

(a) Check for vacuum leaks in the air induction system.

NG → REPAIR OR REPLACE AIR INDUCTION SYSTEM

OK

9	CHECK FUEL PRESSURE (See page 11–5 of Pub. No. RM1018E AVENSIS)

(a) Check the fuel pressure (high or low pressure).

NG → REPAIR OR REPLACE FUEL SYSTEM

OK

10	INSPECT FUEL INJECTOR ASSY(INJECTION AND VOLUME) (See page 11–8 of Pub. No. RM1018E AVENSIS)

NG → REPLACE FUEL INJECTOR ASSY (See page 11–10 of Pub. No. RM1018E AVENSIS)

OK

11	CHECK FOR EXHAUST GAS LEAKS

NG → REPAIR OR REPLACE EXHAUST GAS LEAKAGE POINT

OK

REPAIR OR REPLACE EXHAUST GAS LEAKAGE POINT

12	PERFORM CONFIRMATION DRIVING PATTERN

HINT:
Clear all DTCs prior to performing the confirmation driving pattern.

GO

13	CHECK IF DTC OUTPUT RECURS(DTC P0134)

(a) Connect the intelligent tester II to the DLC3.
(b) Turn the ignition switch to ON and turn the intelligent tester II ON.
(c) Select the following menu items: Powertrain / Engine and ECT / DTC.
(d) Read DTCs.

Result:

Display (DTC Output)	Proceed To
P0134	A
No output	B

B → **REPLACE ECM (See page 10–65 of Pub. No. RM1018E AVENSIS)**

A

14	CONFIRM IF VEHICLE HAS RUN OUT OF FUEL IN PAST

NO → **CHECK FOR INTERMITTENT PROBLEMS (see page 05–9)**

YES

DTC IS CAUSED BY RUNNING OUT OF FUEL

DTC	P0136	OXYGEN SENSOR CIRCUIT MALFUNCTION (BANK 1 SENSOR 2)

CIRCUIT DESCRIPTION

Refer to DTC P0130 on page 05–74.

DTC No	DTC Detection Condition	Trouble Area
P0136	Heated oxygen sensor voltage does not change during driving (1 trip detection logic)	• Open or short in heated oxygen sensor circuit • Heated oxygen sensor (sensor 2) • Heated oxygen sensor heater (sensor 2) • EFI relay

HINT:

Sensor 2 refers to the sensor farthest away from the engine assembly.

WIRING DIAGRAM

Refer to DTC P0130 on page 05–74.

CONFIRMATION DRIVING PATTERN

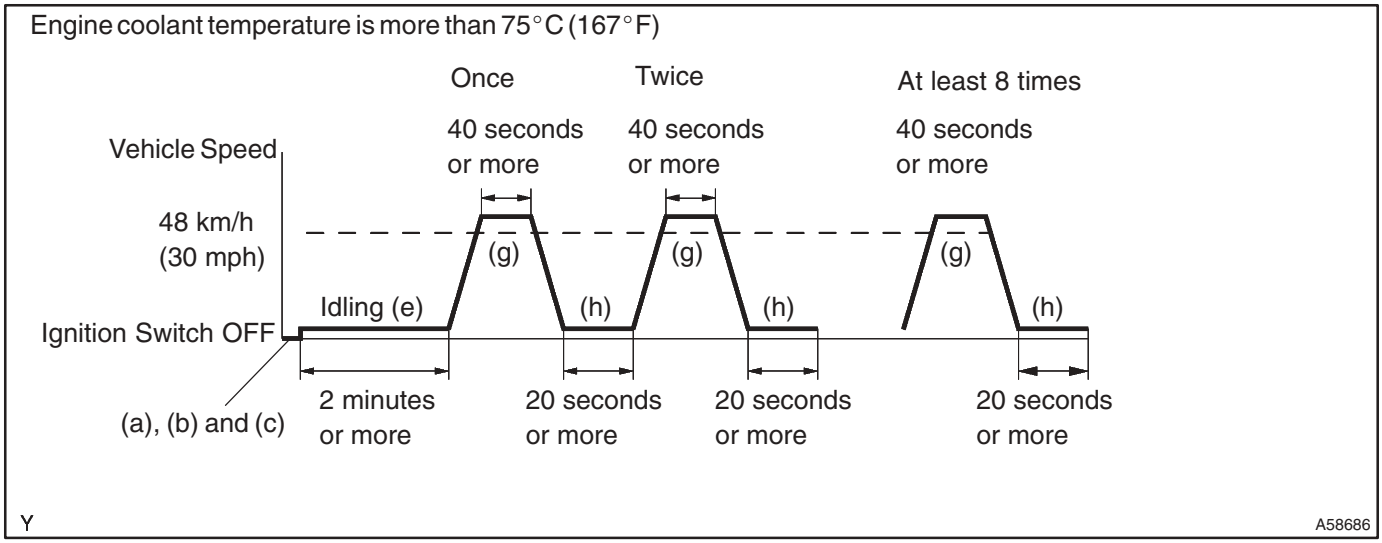

(a) Connect the intelligent tester II to the DLC3.
(b) Turn the ignition switch to ON and turn the intelligent tester II ON.
(c) Switch the ECM from normal mode to check mode using the intelligent tester II (see page 05–20).
(d) Start the engine.
(e) Allow the engine to idle for 2 minutes.
(f) Warm up the engine until the engine coolant temperature reaches more than 75°C (167°F).
(g) Drive the vehicle at 48 km/h (30 mph) or more for 40 seconds or more.
(h) Stop the vehicle and allow the engine to idle for 20 seconds or more.
(i) Repeat the steps (g) and (h) at least 8 times in one driving cycle.

HINT:

If a malfunction exists, the MIL will be illuminated during step (i).

NOTICE:

If the conditions in this test are not strictly followed, no malfunction will be detected. If you do not have the intelligent tester II, turn the ignition switch to OFF after performing steps from (d) to (i), then perform steps (d) to (i) again.

INSPECTION PROCEDURE

HINT:

Intelligent tester II only:

Malfunctioning areas can be found using the Active Test / A/F Control operation. The A/F Control operation can determine if the heated oxygen sensor or other potential trouble areas are malfunctioning or not.

(a) Perform the Active Test using the intelligent tester II.

HINT:

The A/F Control operation lowers the injection volume by 12.5 % or increases the injection volume by 25 %.

(1) Connect the intelligent tester II to the DLC3.
(2) Start the engine and turn the intelligent tester II ON.
(3) Warm up the engine by running the engine at 2,500 rpm for approximately 3 minutes.
(4) On the intelligent tester II, select the following menu items: Powertrain / Engine and ECT / Active Test / A/F Control.
(5) Select the following monitor items: O2S B1 S1 and O2S B1 S2.
(6) Perform the A/F Control operation with the engine in an idling condition (press the right or left button).

Result:

The heated oxygen sensor reacts in accordance with increases and decreases of the injection volume:

+25 % → Rich output: More than 0.5 V

–12.5 % → Lean output: Less than 0.4 V

NOTICE:

Sensor 1 (front sensor) has an output delay of a few seconds. Sensor 2 (rear sensor) has a maximum output delay of approximately 20 seconds.

	Output Voltage of Heated Oxygen Sensor (sensor 1: front sensor)	Output Voltage of Heated Oxygen Sensor (sensor 2: rear sensor)	Main Suspect Trouble Area
Case 1	Injection volume +25 % –12.5 % Output voltage More than 0.5 V Less than 0.4V **OK**	Injection volume +25 % –12.5 % Output voltage More than 0.5 V Less than 0.4V **OK**	—
Case 2	Injection volume +25 % –12.5 % Output voltage Almost no reaction **NG**	Injection volume +25 % –12.5 % Output voltage More than 0.5 V Less than 0.4V **OK**	Sensor 1: front sensor (Sensor 1, heater, sensor 1 circuit)
Case 3	Injection volume +25 % –12.5 % Output voltage More than 0.5 V Less than 0.4V **OK**	Injection volume +25 % –12.5 % Output voltage Almost no reaction **NG**	Sensor 2: rear sensor (Sensor 2, heater, sensor 2 circuit)
Case 4	Injection volume +25 % –12.5 % Output voltage Almost no reaction **NG**	Injection volume +25 % –12.5 % Output voltage Almost no reaction **NG**	Extremely rich or lean actual air–fuel ratio (Injector, fuel pressure, gas leakage in exhaust system, etc.)

The following A/F Control procedure enables the technician to check and graph the voltage output of both the heated oxygen sensors.

To display the graph, select the following menu items on the tester: View / Line Graph.

NOTICE:

If the vehicle is short of fuel, the air–fuel ratio becomes lean and the heated oxygen sensor DTCs will be recorded, and the MIL then illuminates.

HINT:

- If different DTCs related to different systems that have terminal E2 as the ground terminal are output simultaneously, terminal E2 may have an open circuit.
- Read freeze frame data using the intelligent tester II. Freeze frame data record the engine condition when malfunctions are detected. When troubleshooting, freeze frame data can help determine if the vehicle was moving or stationary, if the engine was warmed up or not, if the air–fuel ratio was lean or rich, and other data from the time the malfunction occurred.
- A high heated oxygen sensor (sensor 1) voltage (0.5 V or more) could be caused by a rich air–fuel mixture. Check for conditions that would cause the engine to run rich.
- A low heated oxygen sensor (sensor 1) voltage (0.4 V or less) could be caused by a lean air–fuel mixture. Check for conditions that would cause the engine to run lean.

1 CHECK OTHER DTC OUTPUT(IN ADDITION TO DTC P0136)

(a) Connect the intelligent tester II to the DLC3.
(b) Turn the ignition switch to ON and turn the intelligent tester II ON.
(c) Select the following menu items: Powertrain / Engine and ECT / DTC.
(d) Read DTCs.

Result:

Display (DTC Output)	Proceed To
P0136	A
P0136 and other DTCs	B

HINT:
If any DTCs other than P0136 are output, troubleshoot those DTCs first.

B → **GO TO RELEVANT DTC CHART (See page 05–27)**

A

2 READ VALUE OF INTELLIGENT TESTER II(OUTPUT VOLTAGE OF HEATED OXYGEN SENSOR)

(a) Connect the intelligent tester II to the DLC3.
(b) Start the engine and turn the intelligent tester II ON.
(c) Select the following menu items: Powertrain / Engine and ECT / DTC.
(d) After warming up the engine, run the engine at 2,500 rpm for 3 minutes.
(e) Read the output voltage of the heated oxygen sensor when the engine speed is suddenly increased.

HINT:
Quickly accelerate the engine to 4,000 rpm 3 times by using the accelerator pedal.

Standard: Fluctuates between 0.4 V or less and 0.5 V or more.

OK → **Go to step 6**

NG

3 INSPECT HEATED OXYGEN SENSOR(HEATER RESISTANCE)

Component Side:

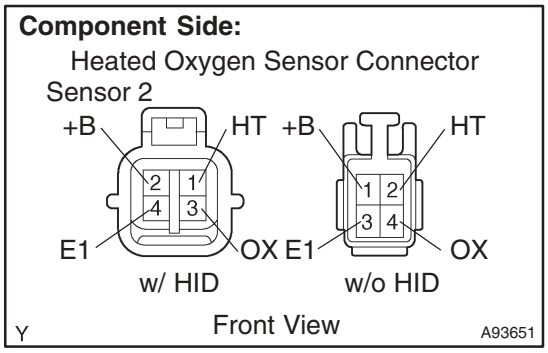

(a) Disconnect the H17 heated oxygen sensor connector.
(b) Measure the resistance between the terminals of the heated oxygen sensor connector.

Standard:

Tester Connection	Specified Condition
With HID: 1 (HT) – 2 (+B)	11 to 16 Ω at 20°C (68°F)
With HID: 1 (HT) – 4 (E1)	10 kΩ or higher
Without HID: 2 (HT) – 1 (+B)	11 to 16 Ω at 20°C (68°F)
Without HID: 2 (HT) – 3 (E1)	10 kΩ or higher

(c) Reconnect the heated oxygen sensor connector.

NG → **REPLACE HEATED OXYGEN SENSOR**

OK

4 INSPECT EFI RELAY

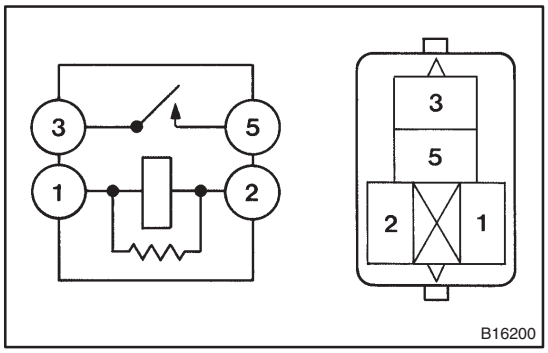

(a) Remove the EFI relay from the engine room R/B No. 4.
(b) Check the EFI relay resistance.

Standard:

Tester Connection	Specified Condition
3 – 5	10 kΩ or higher
3 – 5	Below 1 Ω (Apply battery voltage to terminals 1 and 2)

(c) Reinstall the EFI relay.

NG → **REPLACE EFI RELAY**

OK

5 CHECK HARNESS AND CONNECTOR(HEATED OXYGEN SENSOR – ECM)

Wire Harness Side:

H17 Heated Oxygen Sensor Connector Sensor 2

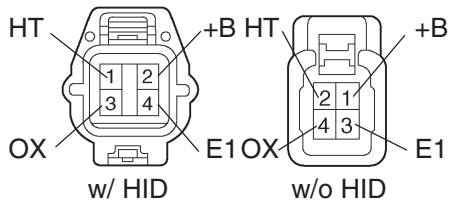

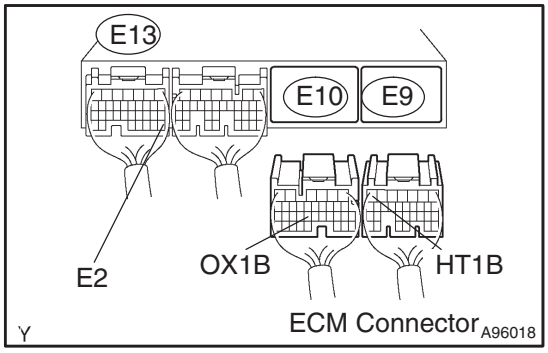

(a) Disconnect the H17 heated oxygen sensor connector.
(b) Disconnect the E9 and E10 ECM connectors.
(c) Check the resistance.

Standard (Check for open):

Tester Connection	Specified Condition
With HID: OX (H17–3) – OX1B (E10–23)	Below 1 Ω
With HID: HT (H17–1) – HT1B (E9–7)	Below 1 Ω
With HID: E1 (H17–4) – E2 (E13–28)	Below 1 Ω
Without HID: OX (H17–4) – OX1B (E10–23)	Below 1 Ω
Without HID: HT (H17–2) – HT1B (E9–7)	Below 1 Ω
Without HID: E1 (H17–3) – E2 (E13–28)	Below 1 Ω

Standard (Check for short):

Tester Connection	Specified Condition
With HID: OX (H17–3) or OX1B (E10–23) – Body ground	10 kΩ or higher
With HID: HT (H17–1) or HT1B (E9–7) – Body ground	10 kΩ or higher
Without HID: OX (H17–4) or OX1B (E10–23) – Body ground	10 kΩ or higher
Without HID: HT (H17–2) or HT1B (E9–7) – Body ground	10 kΩ or higher

(d) Reconnect the heated oxygen sensor connector.
(e) Reconnect the ECM connector.

Reference (Sensor 2 System Diagram):

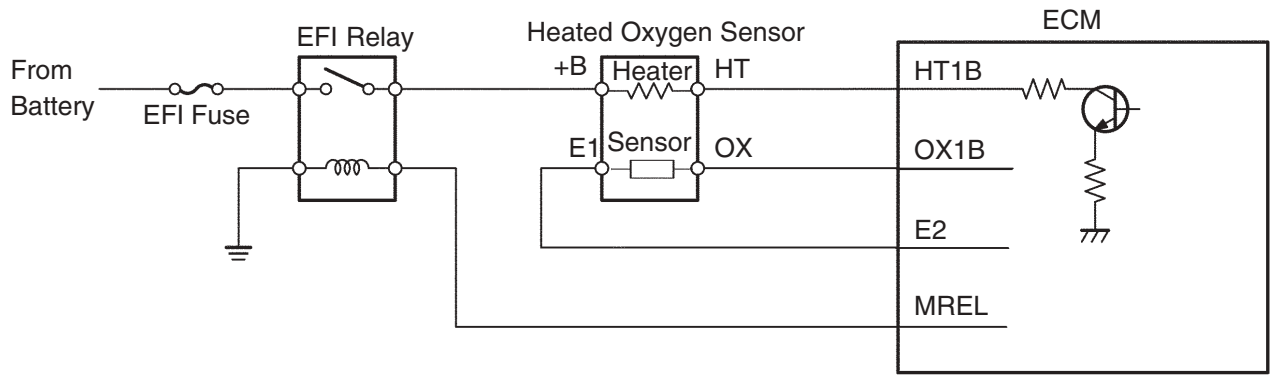

NG → REPAIR OR REPLACE HARNESS OR CONNECTOR

OK

REPLACE HEATED OXYGEN SENSOR

6	PERFORM CONFIRMATION DRIVING PATTERN

HINT:
Clear all DTCs prior to performing the confirmation driving pattern.

GO

7	CHECK IF DTC OUTPUT RECURS(DTC P0136)

(a) Connect the intelligent tester II to the DLC3.
(b) Turn the ignition switch to ON and turn the intelligent tester II ON.
(c) Select the following menu items: Powertrain / Engine and ECT / DTC.
(d) Read DTCs.

Result:

Display (DTC Output)	Proceed To
No output	A
P0136	B

B → REPLACE HEATED OXYGEN SENSOR

A

CHECK FOR INTERMITTENT PROBLEMS (See page 05–9)

DTC	P0171	SYSTEM TOO LEAN (BANK 1)

DTC	P0172	SYSTEM TOO RICH (BANK 1)

CIRCUIT DESCRIPTION

The fuel trim is related to the feedback compensation value, not to the basic injection time. The fuel trim includes the short–term fuel trim and the long–term fuel trim.
The short–term fuel trim is the short–term fuel compensation used to maintain the air–fuel ratio at its ideal theoretical value. The signal from the heated oxygen sensor indicates whether the air–fuel ratio is rich or lean compared to the ideal theoretical value, triggering a reduction in the fuel volume if the air–fuel ratio is rich, and an increase in the fuel volume if it is lean.
The long–term fuel trim is the overall fuel compensation in order to balance the short–term fuel trim for a continual deviation from the central value by individual engine differences, operating environment and age deterioration.
If both the short–term fuel trim and the long–term fuel trim are lean or rich beyond a standard level, it is detected as a malfunction in the SFI system. The ECM illuminates the MIL and the DTC is set.

DTC No.	DTC Detection Condition	Trouble Area
P0171	When air–fuel ratio feedback is stable after warming up engine, fuel trim is considerably in error on lean side (2 trip detection logic)	• Air induction system • Injector blockage • Mass air flow meter • Engine coolant temperature sensor • Fuel pressure • Gas leakage in exhaust system • Open or short in heated oxygen sensor (sensor 1) circuit • Heated oxygen sensor (sensor 1) • PCV valve and hose • PCV hose connection • ECM
P0172	When air–fuel ratio feedback is stable after warming up engine, fuel trim is considerably in error on rich side (2 trip detection logic)	• Injector leakage or blockage • Mass air flow meter • Engine coolant temperature sensor • Ignition system • Fuel pressure • Gas leakage in exhaust system • Open or short in heated oxygen sensor (sensor 1) circuit • Heated oxygen sensor (sensor 1) • ECM

HINT:

- When DTC P0171 is set, the actual air–fuel ratio is lean. When DTC P0172 is set, the actual air–fuel ratio is rich.
- If the vehicle runs out of fuel, the air–fuel ratio is lean and DTC P0171 may be set. The MIL then illuminates.
- If the total of the short–term fuel trim value and long–term fuel trim value is within ± 20 %, the system is functioning normally.

WIRING DIAGRAM

Refer to DTC P0130 on page 05–74.

INSPECTION PROCEDURE

HINT:

Intelligent tester II only:

Malfunctioning areas can be found using the Active Test / A/F Control operation. The A/F Control operation can determine if the heated oxygen sensor or other potential trouble areas are malfunctioning or not.

(a) Perform the Active Test using the intelligent tester II.

HINT:

The A/F Control operation lowers the injection volume by 12.5 % or increases the injection volume by 25 %.

(1) Connect the intelligent tester II to the DLC3.
(2) Start the engine and turn the intelligent tester II ON.
(3) Warm up the engine by running the engine at 2,500 rpm for approximately 3 minutes.
(4) On the intelligent tester II, select the following menu items: Powertrain / Engine and ECT / Active Test / A/F Control.
(5) Select the following monitor items: O2S B1 S1 and O2S B1 S2.
(6) Perform the A/F Control operation with the engine in an idling condition (press the right or left button).

Result:

The heated oxygen sensor reacts in accordance with increases and decreases of the injection volume:

+25 % → Rich output: More than 0.5 V

–12.5 % → Lean output: Less than 0.4 V

NOTICE:

Sensor 1 (front sensor) has an output delay of a few seconds. Sensor 2 (rear sensor) has a maximum output delay of approximately 20 seconds.

	Output Voltage of Heated Oxygen Sensor (sensor 1: front sensor)	Output Voltage of Heated Oxygen Sensor (sensor 2: rear sensor)	Main Suspect Trouble Area
Case 1	Injection volume +25 % –12.5 % Output voltage More than 0.5 V Less than 0.4V **OK**	Injection volume +25 % –12.5 % Output voltage More than 0.5 V Less than 0.4V **OK**	—
Case 2	Injection volume +25 % –12.5 % Output voltage Almost no reaction **NG**	Injection volume +25 % –12.5 % Output voltage More than 0.5 V Less than 0.4V **OK**	Sensor 1: front sensor (Sensor 1, heater, sensor 1 circuit)
Case 3	Injection volume +25 % –12.5 % Output voltage More than 0.5 V Less than 0.4V **OK**	Injection volume +25 % –12.5 % Output voltage Almost no reaction **NG**	Sensor 2: rear sensor (Sensor 2, heater, sensor 2 circuit)
Case 4	Injection volume +25 % –12.5 % Output voltage Almost no reaction **NG**	Injection volume +25 % –12.5 % Output voltage Almost no reaction **NG**	Extremely rich or lean actual air–fuel ratio (Injector, fuel pressure, gas leakage in exhaust system, etc.)

The following A/F Control procedure enables the technician to check and graph the voltage output of both the heated oxygen sensors.

To display the graph, select the following menu items on the tester: View / Line Graph.

NOTICE:

If the vehicle is short of fuel, the air–fuel ratio becomes lean and the heated oxygen sensor DTCs will be recorded, and the MIL then illuminates.

HINT:

- Read freeze frame data using the intelligent tester II. Freeze frame data record the engine condition when malfunctions are detected. When troubleshooting, freeze frame data can help determine if the vehicle was moving or stationary, if the engine was warmed up or not, if the air–fuel ratio was lean or rich, and other data from the time the malfunction occurred.
- A high heated oxygen sensor (sensor 1) voltage (0.5 V or more) could be caused by a rich air–fuel mixture. Check for conditions that would cause the engine to run rich.
- A low heated oxygen sensor (sensor 1) voltage (0.4 V or less) could be caused by a lean air–fuel mixture. Check for conditions that would cause the engine to run lean.

1	CHECK AIR INDUCTION SYSTEM

(a) Check for vacuum leaks in the air induction system.
OK: No vacuum leak.

NG → **REPAIR OR REPLACE AIR INDUCTION SYSTEM**

OK

2	CHECK CONNECTION OF PCV HOSE

OK: The PCV hose is connected correctly and not damaged.

NG → **REPAIR OR REPLACE PCV HOSE**

OK

3	INSPECT FUEL INJECTOR ASSY(INJECTION AND VOLUME) (See page 11–8 of Pub. No. RM1018E AVENSIS)

NG → **REPLACE FUEL INJECTOR ASSY (See page 11–10 of Pub. No. RM1018E AVENSIS)**

OK

4 INSPECT MASS AIR FLOW METER

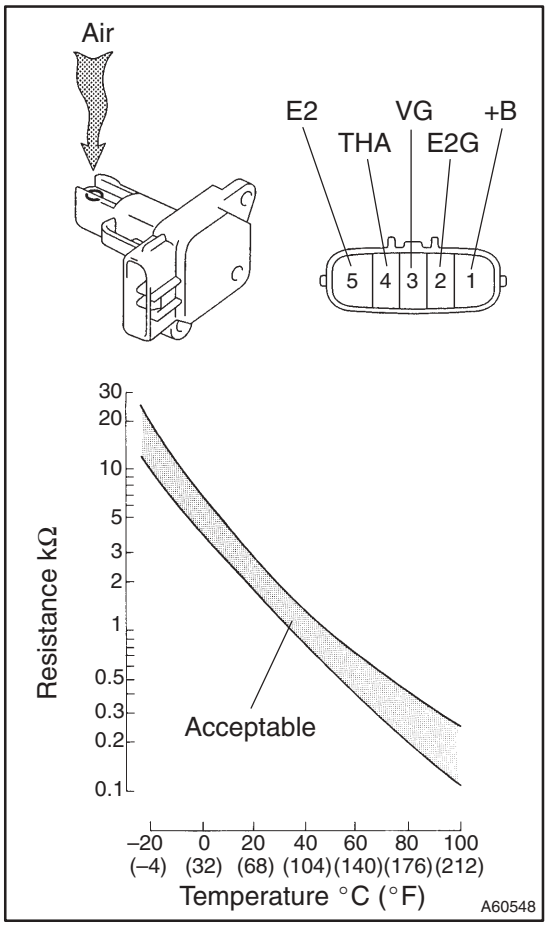

(a) Remove the mass air flow meter.

(b) Inspect output voltage.

(1) Apply the battery voltage across terminals +B and E2G.

(2) Connect the positive (+) tester probe to terminal VG, and negative (–) tester probe to terminal E2G.

(3) Blow air into the mass air flow meter, and check that the voltage fluctuates.

(c) Inspect the resistance.

(1) Measure the resistance between the terminals of the intake air temperature sensor.

Standard:

Tester Connection	Specified Condition
THA (4) – E2 (5)	13.6 to 18.4 kΩ at –20°C (–4°F)
THA (4) – E2 (5)	2.21 to 2.69 kΩ at 20°C (68°F)
THA (4) – E2 (5)	0.49 to 0.67 kΩ at 60°C (140°F)

(d) Reinstall the mass air flow meter.

NG → **REPLACE MASS AIR FLOW METER**

OK

5	INSPECT ENGINE COOLANT TEMPERATURE SENSOR(RESISTANCE)

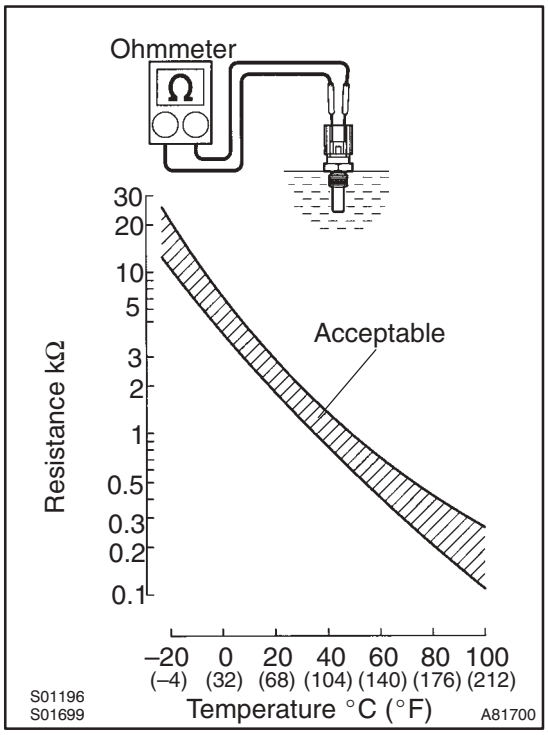

(a) Remove the engine coolant temperature sensor.
(b) Measure the resistance between the terminals of the engine coolant temperature sensor.

Standard:

Tester Connection	Specified Condition
1 – 2	2.32 to 2.59 kΩ at 20°C (68°F)
1 – 2	0.310 to 0.326 kΩ at 80°C (176°F)

NOTICE:

When checking the engine coolant temperature sensor in water, be careful not to allow water to get in contact with the terminals. After checking, dry the sensor.

HINT:

Alternative procedure: Connect an ohmmeter to the installed engine coolant temperature sensor and read the resistance. Use an infrared thermometer to measure the engine temperature in the immediate vicinity of the sensor. Compare these values against the resistance/temperature graph. Change the engine temperature (warm up or allow to cool down) and repeat the test.

NG → **REPLACE ENGINE COOLANT TEMPERATURE SENSOR**

OK

6	CHECK FOR SPARK AND IGNITION (See page 18–3 of Pub. No. RM1018E AVENSIS)

OK: The spark occurs.

NG → **REPAIR OR REPLACE**

OK

7	CHECK FUEL PRESSURE (See page 11–5 of Pub. No. RM1018E AVENSIS)

(a) Check the fuel pressure (high or low pressure).

NG → **CHECK AND REPLACE FUEL SYSTEM**

OK

8	CHECK FOR EXHAUST GAS LEAKAGE

OK: No gas leak.

NG → **REPAIR OR REPLACE EXHAUST GAS LEAKAGE POINT**

OK

9	READ VALUE OF INTELLIGENT TESTER II(OUTPUT VOLTAGE OF HEATED OXYGEN SENSOR)

(a) Connect the intelligent tester II to the DLC3.
(b) Start the engine and turn the intelligent tester II ON.
(c) Select the following menu items: Powertrain / Engine and ECT / Data List / O2S B1 S1.
(d) Warm up the heated oxygen sensor at the engine speed of 2,500 rpm for approximately 90 seconds.
(e) Read the output voltage of the heated oxygen sensor during engine idling.
Standard:
Fluctuates between less than 0.4 V and more than 0.5 V (see the following figure).

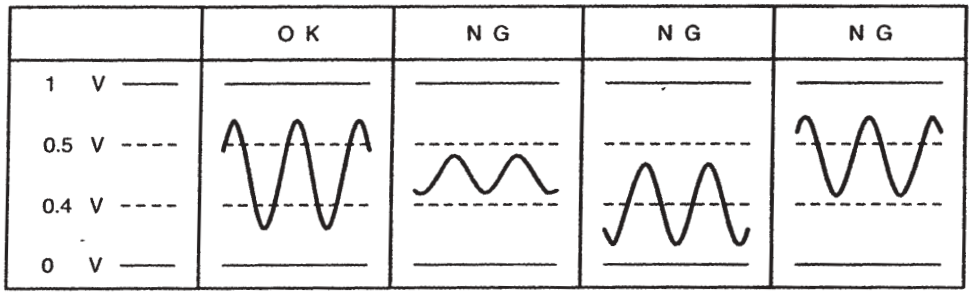

A97090

OK → **Go to step 17**

NG

10	INSPECT HEATED OXYGEN SENSOR(HEATER RESISTANCE)

Component Side:
Heated Oxygen Sensor Connector

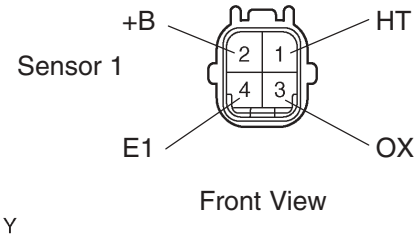

Y A93649

(a) Disconnect the H7 heated oxygen sensor connector.
(b) Measure the resistance between the terminals of the heated oxygen sensor connector.
Standard:

Tester Connection	Specified Condition
1 (HT) – 2 (+B)	5 to 10 Ω at 20°C (68°F)
1 (HT) – 4 (E1)	10 kΩ or higher

(c) Reconnect the heated oxygen sensor connector.

NG → **REPLACE HEATED OXYGEN SENSOR**

OK

11	INSPECT EFI RELAY

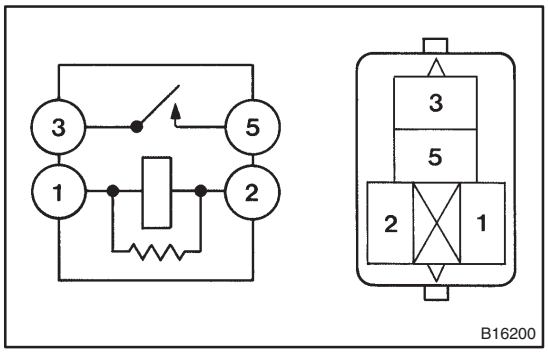

(a) Remove the EFI relay from the engine room R/B No. 4.
(b) Check the EFI relay resistance.

Standard:

Tester Connection	Specified Condition
3 – 5	10 kΩ or higher
3 – 5	Below 1 Ω (Apply battery voltage to terminals 1 and 2)

(c) Reinstall the EFI relay.

NG → **REPLACE EFI RELAY**

OK

12 CHECK HARNESS AND CONNECTOR(HEATED OXYGEN SENSOR – ECM)

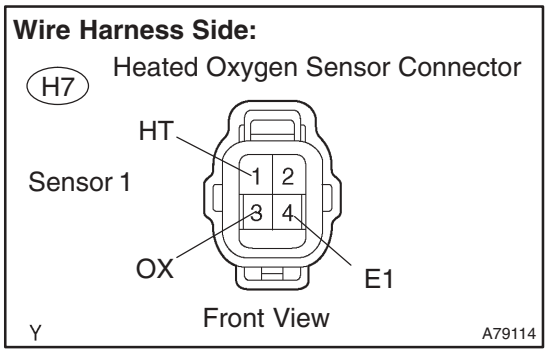

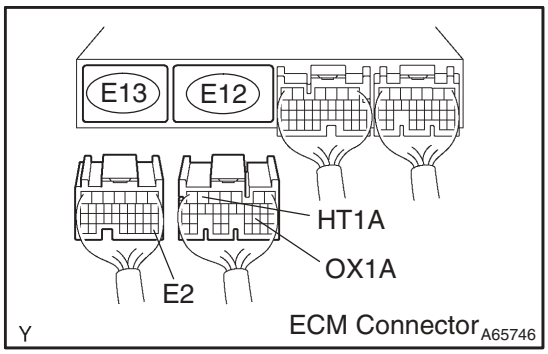

(a) Disconnect the H7 heated oxygen sensor connector.
(b) Disconnect the E12 and E13 ECM connectors.
(c) Check the resistance.

Standard (Check for open):

Tester Connection	Specified Condition
OX (H7–3) – OX1A (E12–22)	Below 1 Ω
HT (H7–1) – HT1A (E12–6)	Below 1 Ω
E1 (H7–4) – E2 (E13–28)	Below 1 Ω

Standard (Check for short):

Tester Connection	Specified Condition
OX (H7–3) or OX1A (E12–22) – Body ground	10 kΩ or higher
HT (H7–1) or HT1A (E12–6) – Body ground	10 kΩ or higher

(d) Reconnect the heated oxygen sensor connector.
(e) Reconnect the ECM connector.

Reference (Sensor 1 System Diagram):

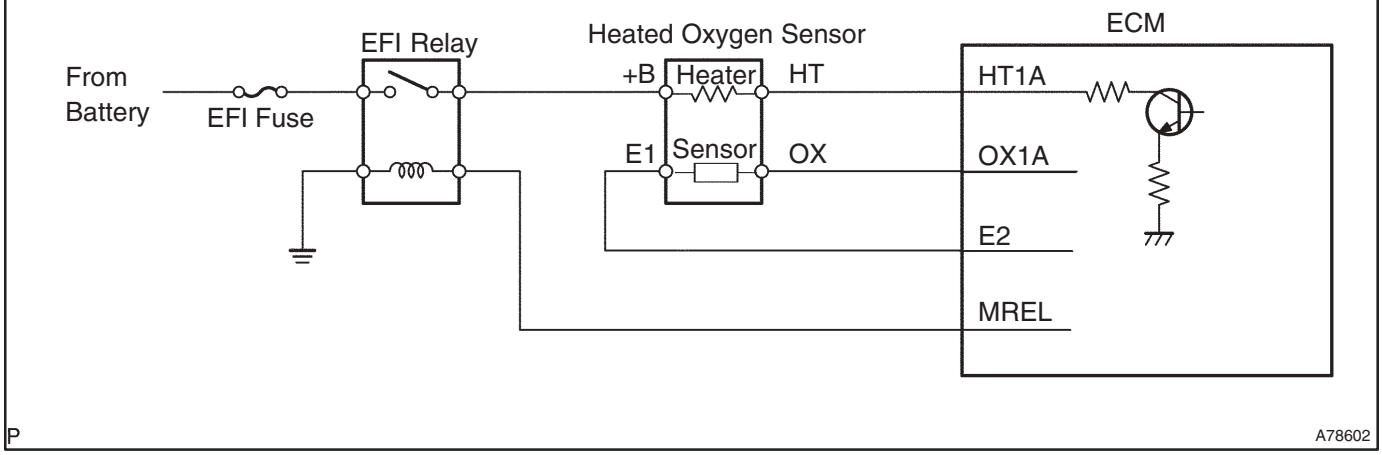

NG → **REPAIR OR REPLACE HARNESS OR CONNECTOR**

OK

13 REPLACE HEATED OXYGEN SENSOR

GO

14	PERFORM CONFIRMATION DRIVING PATTERN

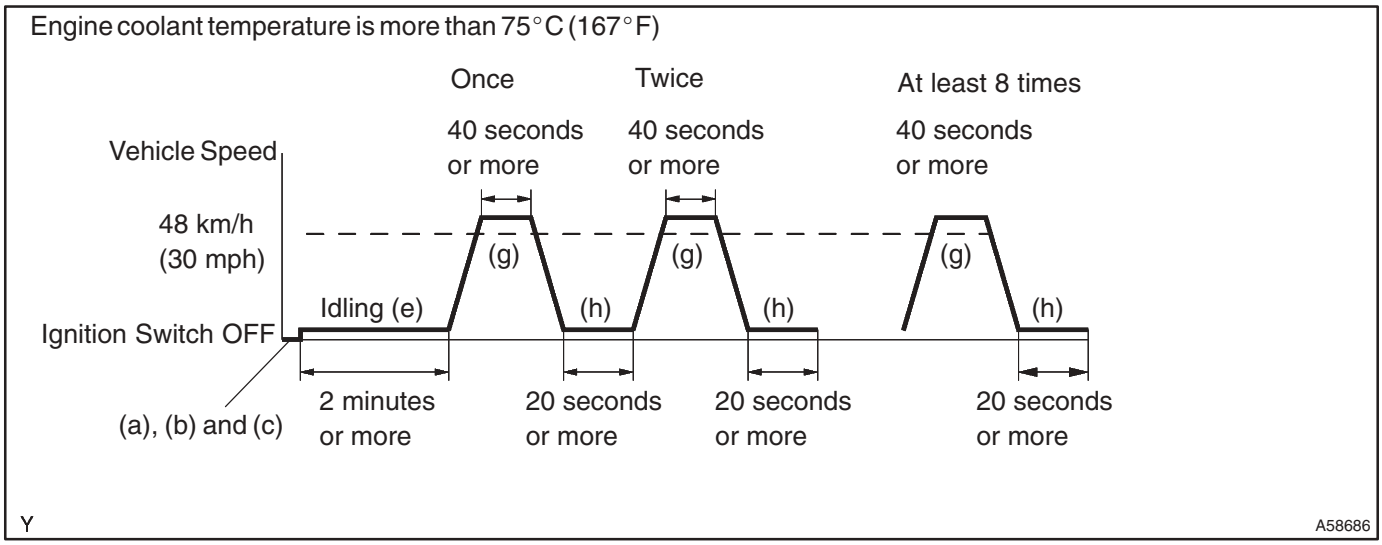

(a) Connect the intelligent tester II to the DLC3.
(b) Turn the ignition switch to ON and turn the intelligent tester II ON.
(c) Switch the ECM from normal mode to check mode using the intelligent tester II (see page 05–20).
(d) Start the engine.
(e) Allow the engine to idle for 2 minutes.
(f) Warm up the engine until the engine coolant temperature reaches more than 75°C (167°F).
(g) Drive the vehicle at 48 km/h (30 mph) or more for 40 seconds or more.
(h) Stop the vehicle and allow the engine to idle for 20 seconds or more.
(i) Repeat the steps (g) and (h) at least 8 times in one driving cycle.

HINT:

If a malfunction exists, the MIL will be illuminated during step (i).

NOTICE:

If the conditions in this test are not strictly followed, no malfunction will be detected. If you do not have the intelligent tester II, turn the ignition switch to OFF after performing steps from (d) to (i), then perform steps (d) to (i) again.

GO

15	CHECK IF DTC OUTPUT RECURS(DTC P0171 AND/OR P0172)

(a) Connect the intelligent tester II to the DLC3.
(b) Turn the ignition switch to ON and turn the intelligent tester II ON.
(c) Select the following menu items: Powertrain / Engine and ECT / DTC.
(d) Read DTCs.

Result:

Display (DTC Output)	Proceed To
No output	A
P0171 and/or P0172	B

B → **REPLACE ECM AND PERFORM CONFIRMATION DRIVING PATTERN (Refer to step 14)**

A

16	CONFIRM IF VEHICLE HAS RUN OUT OF FUEL IN PAST

NO → **CHECK FOR INTERMITTENT PROBLEMS (See page 05–9)**

YES

DTCS ARE CAUSED BY RUNNING OUT OF FUEL (DTCS P0171 AND/OR P0172)

17	PERFORM CONFIRMATION DRIVING PATTERN

HINT:
Clear all DTCs prior to performing the confirmation driving pattern (refer to step 14).

GO

18	CHECK IF DTC OUTPUT RECURS(DTC P0171 AND/OR P0172)

(a) Connect the intelligent tester II to the DLC3.
(b) Turn the ignition switch to ON and turn the intelligent tester II ON.
(c) Select the following menu items: Powertrain / Engine and ECT / DTC.
(d) Read DTCs.

Result:

Display (DTC Output)	Proceed To
P0171 and/or P0172	A
No output	B

B → **Go to step 22**

A

19	REPLACE HEATED OXYGEN SENSOR

GO

20	PERFORM CONFIRMATION DRIVING PATTERN

HINT:
Clear all DTCs prior to performing the confirmation driving pattern (refer to step 14).

GO

21	CHECK IF DTC OUTPUT RECURS(DTC P0171 AND/OR P0172)

(a) Connect the intelligent tester II to the DLC3.
(b) Turn the ignition switch to ON and turn the intelligent tester ll ON.
(c) Select the following menu items: Powertrain / Engine and ECT / DTC.
(d) Read DTCs.
Result:

Display (DTC Output)	Proceed To
No output	A
P0171 and/or P0172	B

B → **REPLACE ECM AND PERFORM CONFIRMATION DRIVING PATTERN (Refer to step 14)**

A

22	CONFIRM IF VEHICLE HAS RUN OUT OF FUEL IN PAST

NO → **CHECK FOR INTERMITTENT PROBLEMS (See page 05–9)**

YES

DTCS ARE CAUSED BY RUNNING OUT OF FUEL (DTCS P0171 AND/OR P0172)

DTC	P0300	RANDOM/MULTIPLE CYLINDER MISFIRE DETECTED

DTC	P0301	CYLINDER 1 MISFIRE DETECTED

DTC	P0302	CYLINDER 2 MISFIRE DETECTED

DTC	P0303	CYLINDER 3 MISFIRE DETECTED

DTC	P0304	CYLINDER 4 MISFIRE DETECTED

CIRCUIT DESCRIPTION

When a misfire occurs in the engine, hydrocarbons (HC) enter the exhaust gas in high concentrations. If this HC concentration is high enough, there could be an increase in exhaust emission levels. High concentrations of HC can also cause temperature of the catalyst to increase, possibly damaging the catalyst. To prevent this increase in emissions and limit the possibility of thermal damage, the ECM monitors the misfire rate. When the temperature of the catalyst reaches a point of thermal degradation, the ECM will blink the MIL. For monitoring misfire, the ECM uses both the camshaft position sensor and the crankshaft position sensor. The camshaft position sensor is used to identify misfiring cylinders and the crankshaft position sensor is used to measure variations in the crankshaft rotation speed. The misfire counter increments when crankshaft rotation speed variations exceed threshold values.

If the misfiring rate exceeds the threshold and could cause emission deterioration, the ECM illuminates the MIL.

HINT:

- For any particular 200 revolutions of the engine, misfiring which could result in overheating of the catalyst is detected. This will cause the MIL to blink (1 trip detection logic).
- For any particular 1,000 revolutions of the engine, misfiring which could result in emission deterioration is detected. This will cause the MIL to illuminate (2 trip detection logic).

DTC No.	DTC Detection Condition	Trouble Area
P0300	Misfiring of random cylinders is detected	• Open or short in engine wire harness • Connector connection • Vacuum hose connection • Ignition system • Injector • Fuel pressure • Mass air flow meter • Engine coolant temperature sensor • Compression pressure • Valve clearance • Valve timing • PCV hose connection • PCV hose • ECM
P0301 P0302 P0303 P0304	Misfiring of each cylinder is detected	• Open or short in engine wire harness • Connector connection • Vacuum hose connection • Ignition system • Injector • Fuel pressure • Mass air flow meter • Engine coolant temperature sensor • Compression pressure • Valve clearance • Valve timing • PCV hose connection • PCV hose • ECM

HINT:

When the DTCs for misfiring cylinders are recorded repeatedly but no random misfire DTC is recorded, it indicates that the misfires have been set and recorded at different times.

Reference: Inspection using the oscilloscope

With the engine idling, check the waveform between terminals #10 to #40 and E01 of the ECM connectors.

Item	Contents
Terminal	#10 to #40 – E01
Equipment Setting	20V/Division, 100 or 1 ms/Division
Condition	Idling

HINT:

The correct waveform is as shown.

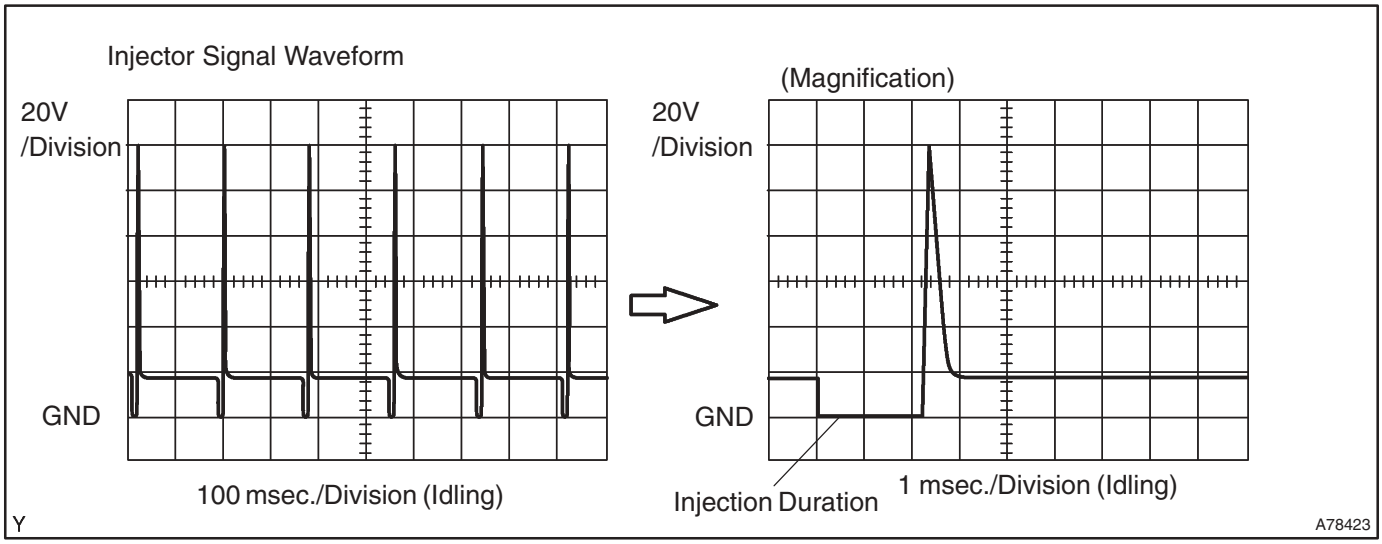

WIRING DIAGRAM

Refer to DTC P0351 on page 05–143 for the wiring diagram of the ignition system.

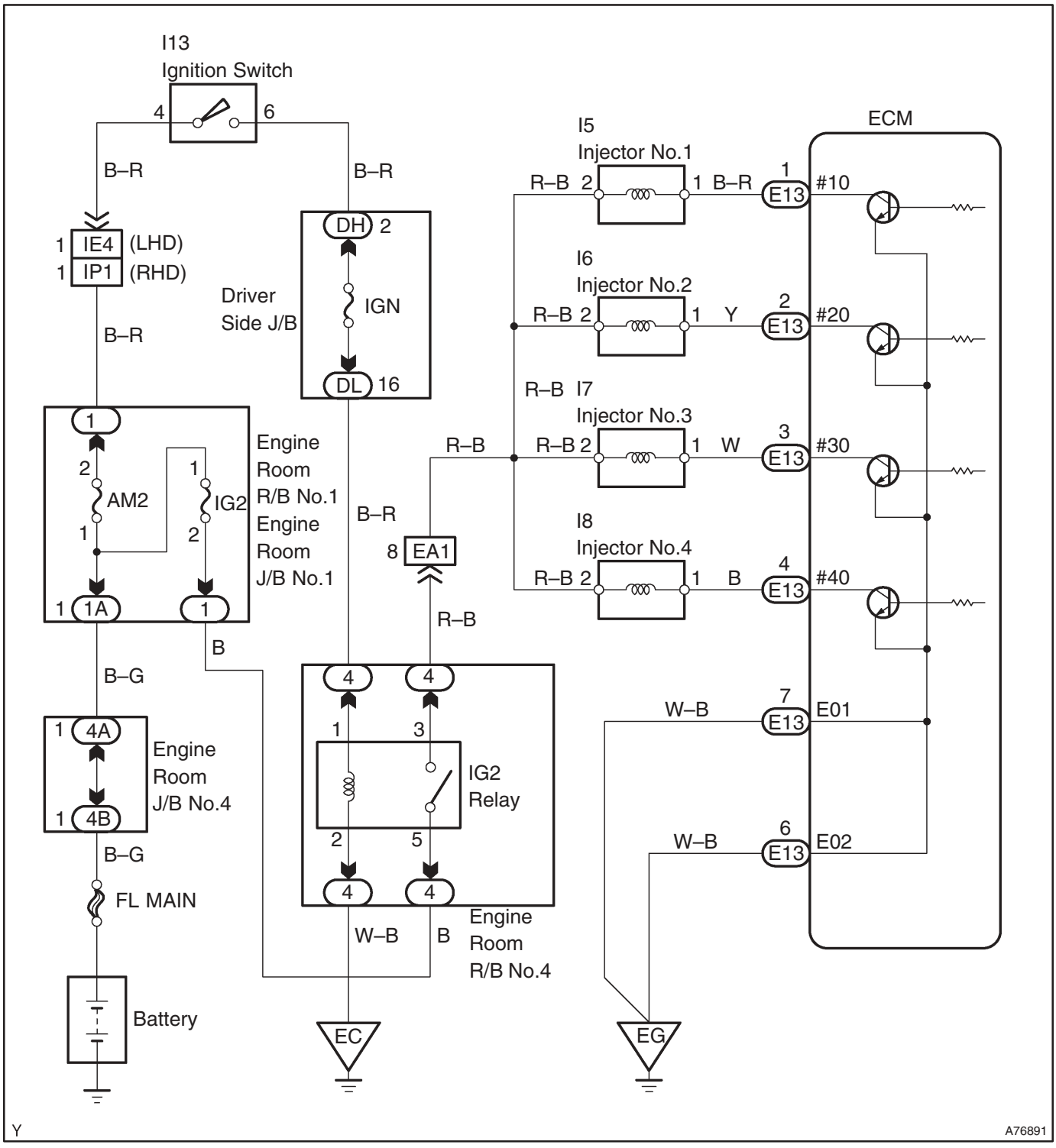

CONFIRMATION DRIVING PATTERN

(a) Connect the intelligent tester II to the DLC3.
(b) Turn the ignition switch to ON and turn the intelligent tester II ON.
(c) Note down the DTC(s) and freeze frame data.
(d) Switch the ECM from normal mode to check mode using the intelligent tester II (see page 05–20).
(e) Check the misfire counter values for each cylinder when idling. If the misfire counter value indicates 0, perform the following procedure of the confirmation driving pattern.
(f) Drive the vehicle several times using an engine speed (Engine Speed), engine load (Calculate Load) and other data stored in the freeze frame data.

If you have no intelligent tester II, turn the ignition switch to OFF after the symptom is simulated once. Then repeat the simulation process again.

HINT:

In order to record the misfire DTCs, it is necessary to drive around Misfire RPM and Misfire Load in Data List for the following period of time. Do not turn the ignition switch to OFF. Turning the ignition switch to OFF switches the diagnosis system from check mode to normal mode. So all DTCs and other data will be erased.

Engine Speed	Time
Idling	3 minutes 30 seconds or more
1,000 rpm	3 minutes or more
2,000 rpm	1 minute 30 seconds or more
3,000 rpm	1 minute or more

(g) Check if there is the DTC(s) to verify whether misfires have occurred. If the DTC(s) is present, record the DTC and freeze frame data.
(h) Turn the ignition switch to OFF and wait for at least 5 seconds.

INSPECTION PROCEDURE

HINT:

- If any DTCs other than the misfire DTCs are set simultaneously, first troubleshoot them.
- If a misfire does not occur when the vehicle is brought to the workshop, a misfire can be confirmed by reproducing the condition of the freeze frame data. Also, after finishing repairs, confirm that misfires do not recur (see the confirmation driving pattern).
- Read freeze frame data using the intelligent tester II. Freeze frame data record the engine condition when malfunctions are detected. When troubleshooting, freeze frame data can help determine if the vehicle was moving or stationary, if the engine was warmed up or not, if the air–fuel ratio was lean or rich, and other data from the time the malfunction occurred.
- On 6 and 8 cylinder engines, misfiring cylinders cannot be identified at high engine speed and only a general misfire DTC P0300 is stored instead of the individual misfiring cylinder DTCs (P0301 to P0308).
  If a misfire starts in a high engine speed area or a misfire occurs only in a high engine speed area, only DTC P0300 may be stored.

  When only a general misfire DTC P0300 is stored:
- Erase the general misfire DTC from the ECM using the intelligent tester II.
- Start the engine and perform the confirmation driving pattern.
- Check the value of the misfire ratio for each cylinder. Or check the DTC(s).
- Perform repairs on the cylinder that has a high misfire ratio. Or repair the cylinder indicated by the DTC.
- After finishing repairs, perform the confirmation driving pattern again and confirm that no misfire occurs.
- When either of Short FT #1 and Long FT #1 in the freeze frame data is over the range of ±20 %, there is a possibility that the air–fuel ratio is becoming rich (–20 % or less) or lean (+20 % or more).
- When Coolant Temp in the freeze frame data is less than 80°C (176°F), there is a possibility that misfires occur only during engine warm–up.
- If a misfire cannot be reproduced, the following reasons may apply: 1) the vehicle has low fuel, 2) improper fuel is being used, and 3) the ignition plug has been contaminated.
- Be sure to check the misfire counter value after repairs.

1	CHECK OTHER DTC OUTPUT(IN ADDITION TO MISFIRE DTCS)

(a) Connect the intelligent tester II to the DLC3.
(b) Turn the ignition switch to ON and turn the intelligent tester ll ON.
(c) Select the following menu items: Powertrain / Engine and ECT / DTC.
(d) Read DTCs.
Result:

Display (DTC Output)	Proceed To
P0300, P0301, P0302, P0303 and/or P0304	A
P0300, P0301, P0302, P0303 or P0304 and other DTCs	B

HINT:
If any DTCs other than P0300, P0301, P0302, P0303 or P0304 are output, troubleshoot those DTCs.

B → **GO TO RELEVANT DTC CHART** **(See page 05–27)**

A

2	CHECK WIRE HARNESS, CONNECTOR AND VACUUM HOSE IN ENGINE ROOM

(a) Check the connection condition of the wire harnesses and connector.
(b) Check the piping of the vacuum hose.
(c) Check the vacuum hose for disconnection or breakage.

OK: Connected correctly and no damage on the wire harnesses.

NG → **REPAIR OR REPLACE, THEN CONFIRM THAT THERE IS NO MISFIRE**

OK

3	CHECK CONNECTION OF PCV HOSE

OK: The PCV hose is connected correctly and not damaged.

NG → **REPAIR OR REPLACE PCV HOSE**

OK

4	READ VALUE OF INTELLIGENT TESTER II(NUMBER OF MISFIRING CYLINDERS)

(a) Connect the intelligent tester II to the DLC3.
(b) Turn the ignition switch to ON and turn the intelligent tester ll ON.
(c) Start the engine.
(d) On the intelligent tester II, select the following menu items: Powertrain / Engine and ECT / Data List / Cylinder #1 Misfire Rate – Cylinder #4 Misfire Rate.
(e) Check the number of misfiring cylinders on the intelligent tester II.

HINT:

When a misfire is not reproduced, be sure to proceed according to the table below based on the stored DTC.

Result:

High Misfire Rate Cylinder	Proceed To
1 or 2 cylinders	A
3 cylinders or more	B

B → **Go to step 15**

A

5	CHECK SPARK PLUG AND SPARK OF MISFIRING CYLINDER

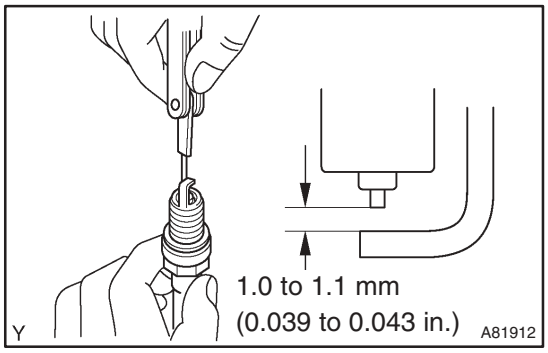

(a) Remove the ignition coil assembly.
(b) Remove the spark plug.
(c) Check the spark plug type.
Recommended spark plug:

Supplier	Type
DENSO	K16R–U11

(d) Check the spark plug electrode gap.
Standard: 1.0 to 1.1 mm (0.039 to 0.043 in.)
Maximum: 1.3 mm (0.047 in.)

NOTICE:
If adjusting the gap of a new spark plug, bend only the ground electrode. Do not touch the tip. Never attempt to adjust the gap of a used plug.

(e) Check the electrode for carbon deposits.
(f) Perform a spark test.

CAUTION:
Completely disconnect each injector connector.
NOTICE:
Do not crank the engine for more than 5 to 10 seconds.

(1) Install the spark plug to the ignition coil, and connect the ignition coil connector.
(2) Disconnect the injector connector.
(3) Ground the spark plug.
(4) Check if a spark occurs while the engine is being cranked.

OK: A spark jumps across electrode gap.

(g) Reinstall the spark plug.
(h) Reinstall the ignition coil assembly.

OK	Go to step 8

NG

6	CHANGE NORMAL SPARK PLUG AND CHECK SPARK OF MISFIRING CYLINDER

(a) Change the spark plug with the normal spark plug.
(b) Perform a spark test.

CAUTION:
Completely disconnect each injector connector.
NOTICE:
Do not crank the engine for more than 5 to 10 seconds.

(1) Install the spark plug to the ignition coil, and connect the ignition coil connector.
(2) Disconnect the injector connector.
(3) Ground the spark plug.
(4) Check if a spark occurs while the engine is being cranked.

OK: A spark jumps across electrode gap.

OK → **REPLACE IGNITION COIL ASSY**

NG

7	CHECK HARNESS AND CONNECTOR OF MISFIRING CYLINDER(IGNITION COIL ASSY – ECM)

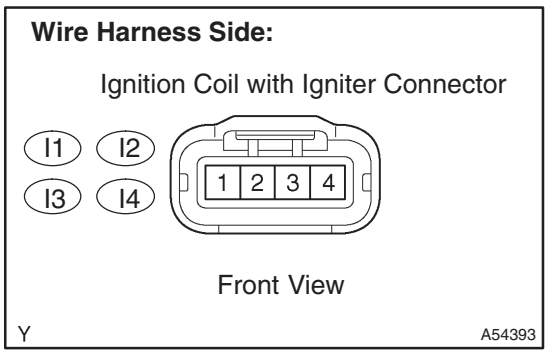

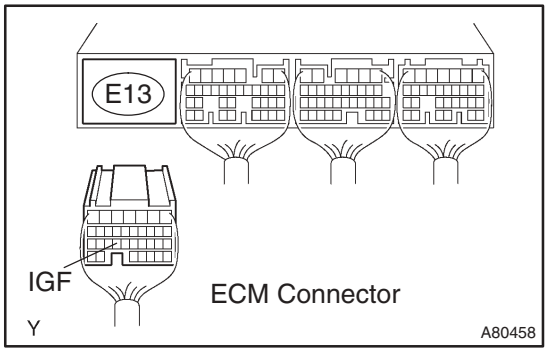

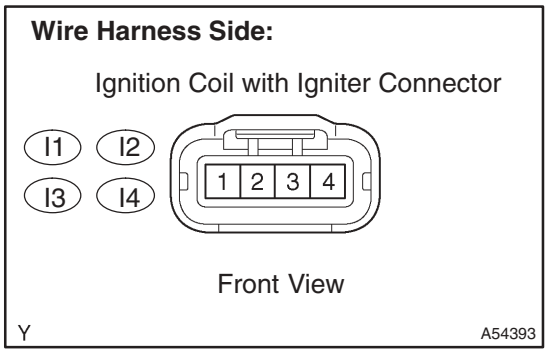

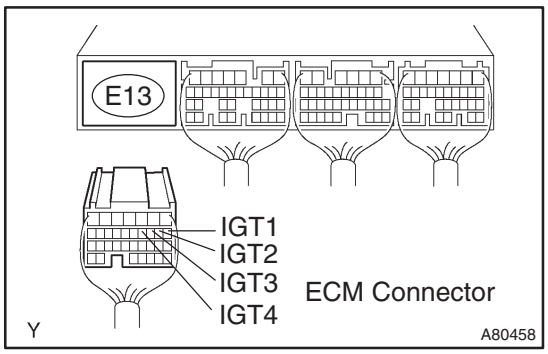

(a) Check the harness and the connectors between the ignition coil with igniter and ECM (IGF terminal).
  (1) Disconnect the I1, I2, I3 and/or I4 ignition coil with igniter connector.
  (2) Disconnect the E13 ECM connector.
  (3) Check the resistance.

Standard (Check for open):

Tester Connection	Specified Condition
Ignition coil (I1–2) – IGF (E13–24)	Below 1 Ω
Ignition coil (I2–2) – IGF (E13–24)	Below 1 Ω
Ignition coil (I3–2) – IGF (E13–24)	Below 1 Ω
Ignition coil (I4–2) – IGF (E13–24)	Below 1 Ω

Standard (Check for short):

Tester Connection	Specified Condition
Ignition coil (I1–2) or IGF (E13–24) – Body ground	10 kΩ or higher
Ignition coil (I2–2) or IGF (E13–24) – Body ground	10 kΩ or higher
Ignition coil (I3–2) or IGF (E13–24) – Body ground	10 kΩ or higher
Ignition coil (I4–2) or IGF (E13–24) – Body ground	10 kΩ or higher

  (4) Reconnect the ignition coil with igniter connector.
  (5) Reconnect the ECM connector.

(b) Check the harness and the connectors between the ignition coil with igniter and ECM (IGT terminal).
  (1) Disconnect the I1, I2, I3 and/or I4 ignition coil with igniter connector.
  (2) Disconnect the E13 ECM connector.
  (3) Check the resistance.

Standard (Check for open):

Tester Connection	Specified Condition
Ignition coil (I1–3) – IGT1 (E13–8)	Below 1 Ω
Ignition coil (I2–3) – IGT2 (E13–9)	Below 1 Ω
Ignition coil (I3–3) – IGT3 (E13–10)	Below 1 Ω
Ignition coil (I4–3) – IGT4 (E13–11)	Below 1 Ω

Standard (Check for short):

Tester Connection	Specified Condition
Ignition coil (I1–3) or IGT1 (E13–8) – Body ground	10 kΩ or higher
Ignition coil (I2–3) or IGT2 (E13–9) – Body ground	10 kΩ or higher
Ignition coil (I3–3) or IGT3 (E13–10) – Body ground	10 kΩ or higher
Ignition coil (I4–3) or IGT4 (E13–11) – Body ground	10 kΩ or higher

  (4) Reconnect the ignition coil with igniter connector.
  (5) Reconnect the ECM connector.

OK → **REPLACE IGNITION COIL ASSY**

NG

REPAIR OR REPLACE HARNESS OR CONNECTOR

8	INSPECT ECM TERMINAL OF MISFIRING CYLINDER(#10, #20, #30 OR #40 VOLTAGE)

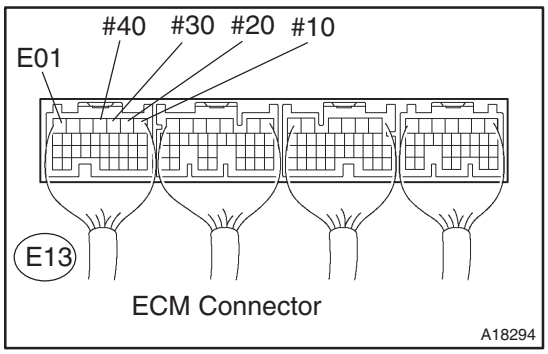

(a) Turn the ignition switch to ON.

(b) Measure the voltage between the specified terminals of the E13 ECM connector.

Standard:

Tester Connection	Specified Condition
#10 (E13–1) – E01 (E13–7)	9 to 14 V
#20 (E13–2) – E01 (E13–7)	9 to 14 V
#30 (E13–3) – E01 (E13–7)	9 to 14 V
#40 (E13–4) – E01 (E13–7)	9 to 14 V

OK → **Go to step 11**

NG

9	INSPECT FUEL INJECTOR RESISTANCE OF MISFIRING CYLINDER (See page 11–8 of Pub. No. RM1018E AVENSIS)

NG → **REPLACE FUEL INJECTOR ASSY (See page 11–10 of Pub. No. RM1018E AVENSIS)**

OK

10 CHECK HARNESS AND CONNECTOR OF MISFIRING CYLINDER(INJECTOR – ECM, INJECTOR – IG2 RELAY)

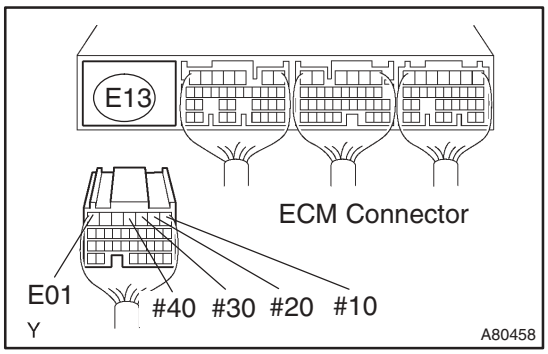

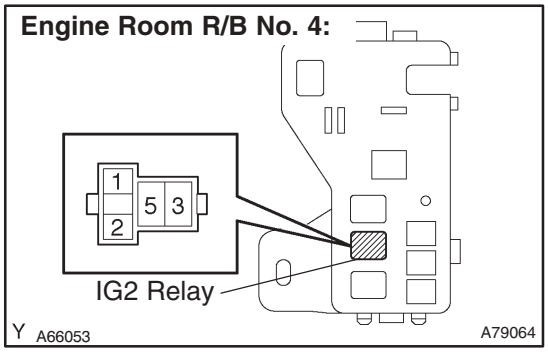

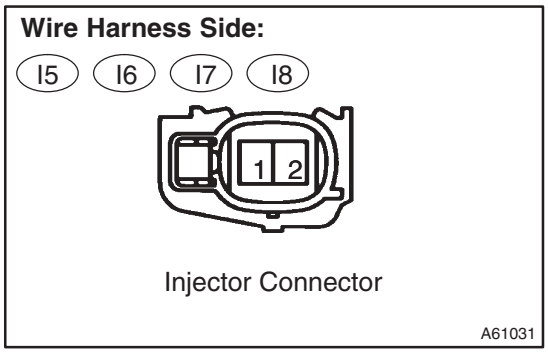

(a) Check the harness and connectors between the injector and ECM.

(1) Disconnect the I5, I6, I7 and/or I8 injector connector.

(2) Disconnect the E13 ECM connector.

(3) Check the resistance.

Standard (Check for open):

Tester Connection	Specified Condition
Injector (I5–1) – #10 (E13–1)	Below 1 Ω
Injector (I6–1) – #20 (E13–2)	Below 1 Ω
Injector (I7–1) – #30 (E13–3)	Below 1 Ω
Injector (I8–1) – #40 (E13–4)	Below 1 Ω

Standard (Check for short):

Tester Connection	Specified Condition
Injector (I5–1) or #10 (E13–1) – Body ground	10 kΩ or higher
Injector (I6–1) or #20 (E13–2) – Body ground	10 kΩ or higher
Injector (I7–1) or #30 (E13–3) – Body ground	10 kΩ or higher
Injector (I8–1) or #40 (E13–4) – Body ground	10 kΩ or higher

(4) Reconnect the injector connector.

(5) Reconnect the ECM connector.

(b) Check the harness and connectors between the injector and IG2 relay.

(1) Disconnect the I5, I6, I7 and/or I8 injector connector.

(2) Remove the IG2 relay from the engine room R/B No. 4.

(3) Check the resistance.

Standard (Check for open):

Tester Connection	Specified Condition
Injector (I5–2) – Engine room R/B No. 4 (IG2 relay terminal 3)	Below 1 Ω
Injector (I6–2) – Engine room R/B No. 4 (IG2 relay terminal 3)	Below 1 Ω
Injector (I7–2) – Engine room R/B No. 4 (IG2 relay terminal 3)	Below 1 Ω
Injector (I8–2) – Engine room R/B No. 4 (IG2 relay terminal 3)	Below 1 Ω

Standard (Check for short):

Tester Connection	Specified Condition
Injector (I5–2) or Engine room R/B No. 4 (IG2 relay terminal 3) – Body ground	10 kΩ or higher
Injector (I6–2) or Engine room R/B No. 4 (IG2 relay terminal 3) – Body ground	10 kΩ or higher
Injector (I7–2) or Engine room R/B No. 4 (IG2 relay terminal 3) – Body ground	10 kΩ or higher
Injector (I8–2) or Engine room R/B No. 4 (IG2 relay terminal 3) – Body ground	10 kΩ or higher

(4) Reconnect the injector connector.

(5) Reinstall the IG2 relay.

NG → REPAIR OR REPLACE HARNESS OR CONNECTOR

OK

11	INSPECT FUEL INJECTOR INJECTION AND INJECTION VOLUME OF MISFIRING CYLINDER (See page 11–8 of Pub. No. RM1018E AVENSIS)

NG → REPLACE FUEL INJECTOR ASSY (See page 11–10 of Pub. No. RM1018E AVENSIS)

OK

12	CHECK CYLINDER COMPRESSION PRESSURE OF MISFIRING CYLINDER (See page 14–1 of Pub. No. RM1018E AVENSIS)

NG → REPAIR OR REPLACE

OK

13	CHECK VALVE CLEARANCE OF MISFIRING CYLINDER (See page 14–6 of Pub. No. RM1018E AVENSIS)

NG → ADJUST VALVE CLEARANCE (See page 14–6 of Pub. No. RM1018E AVENSIS)

OK

14	PROCEED TO STEP APPROPRIATE FOR NUMBER OF MISFIRING CYLINDERS(REFER TO RESULT OF STEP 4)

HINT:

- If the result of step 4 is ”1 or 2 cylinders”, proceed to A.
- If the result of step 4 is ” 3 cylinders or more”, proceed to B.

B → CHECK FOR INTERMITTENT PROBLEMS (See page 05–9)

A

15	CHECK VALVE TIMING(CHECK FOR LOOSENESS AND JUMPED TEETH ON TIMING CHAIN) (See page 14–49 of Pub. No. RM1018E AVENSIS)

OK: The matchmarks of the crankshaft pulley and camshaft pulley are aligned.

NG → ADJUST VALVE TIMING (See page 14–49 of Pub. No. RM1018E AVENSIS)

OK

16	CHECK FUEL PRESSURE (See page 11–5 of Pub. No. RM1018E AVENSIS)

NG → CHECK AND REPLACE FUEL PUMP, PRESSURE REGULATOR, FUEL PIPE LINE AND FILTER

OK

17	READ VALUE OF INTELLIGENT TESTER II(INTAKE AIR TEMPERATURE AND MASS AIR FLOW RATE)

(a) Connect the intelligent tester II to the DLC3.
(b) Turn the ignition switch to ON.
(c) Check the intake air temperature.
  (1) On the intelligent tester II, select the following menu items: Powertrain / Engine and ECT / Data List / Intake Air.
  (2) Read the value.
  Standard: Equivalent to ambient air temperature.
(d) Check the mass air flow rate.
  (1) On the intelligent tester II, select the following menu items: Powertrain / Engine and ECT / Data List / AFM.
  (2) Read the values.
  Standard:

Condition	Mass Air Flow Rate (gm/s)
Ignition switch ON (do not start engine)	0
Idling	3.2 to 4.7
Revving up without load (2,500 rpm)	13.1 to 18.9
Idling – Revving up	Mass air flow rate fluctuates

NG → REPLACE MASS AIR FLOW METER

OK

18 INSPECT ENGINE COOLANT TEMPERATURE SENSOR(RESISTANCE)

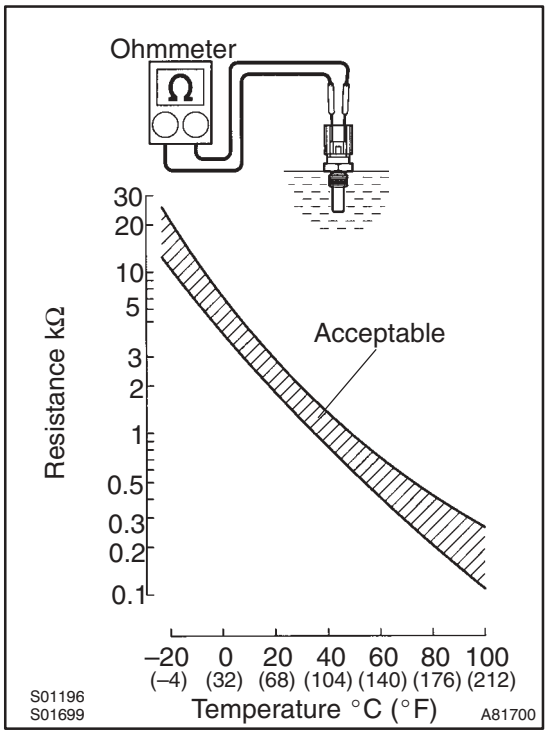

(a) Remove the engine coolant temperature sensor.
(b) Measure the resistance between the terminals.
Standard:

Tester Connection	Specified Condition
1 – 2	2.32 to 2.59 kΩ at 20°C (68°F)
1 – 2	0.310 to 0.326 kΩ at 80°C (176°F)

NOTICE:
When checking the engine coolant temperature sensor in water, be careful not to allow water to get in contact with the terminals. After the check, dry the sensor.
HINT:
Alternative procedure: Connect an ohmmeter to the installed engine coolant temperature sensor and read the resistance. Use an infrared thermometer to measure the engine temperature in the immediate vicinity of the sensor. Compare these values against the resistance/temperature graph. Change the engine temperature (warm up or allow to cool down) and repeat the test.

NG → **REPLACE ENGINE COOLANT TEMPERATURE SENSOR**

OK

19 PROCEED TO STEP APPROPRIATE FOR NUMBER OF MISFIRING CYLINDERS(REFER TO RESULT OF STEP 4)

HINT:
- If the result of step 4 is ”1 or 2 cylinders”, proceed to A.
- If the result of step 4 is ”3 cylinders or more”, proceed to B.

B → **GO BACK TO STEP 4**

A

CHECK FOR INTERMITTENT PROBLEMS (See page 05–9)

DTC	P0325	KNOCK SENSOR 1 CIRCUIT (BANK 1 OR SINGLE SENSOR)

DTC	P0327	KNOCK SENSOR 1 CIRCUIT LOW INPUT (BANK 1 OR SINGLE SENSOR)

DTC	P0328	KNOCK SENSOR 1 CIRCUIT HIGH INPUT (BANK 1 OR SINGLE SENSOR)

CIRCUIT DESCRIPTION

The flat type knock sensor (non–resonant type) has a structure that can detect vibration in a wider band of frequency, from about 6 kHz to 15 kHz and has the following features:

- The knock sensor is fitted on the cylinder block to detect engine knocking.
- The sensor contains a piezoelectric element which generates voltage when it becomes deformed. This occurs when the cylinder block vibrates due to knocking. If engine knocking occurs, the ignition timing is retarded to suppress it.

DTC No.	DTC Detecting Condition	Trouble Area
P0325	Knock sensor signal level remains at low for more than 10 seconds	• Open or short in knock sensor circuit • Knock sensor (under–torqued or looseness) • ECM
P0327	Output voltage of the knock sensor is 0.5 V or less	• Short in knock sensor circuit • Knock sensor • ECM
P0328	Output voltage of the knock sensor is 4.5 V or more	• Open in knock sensor circuit • Knock sensor • ECM

HINT:

If the ECM detects DTC P0325, P0327 and/or P0328, it enters fail–safe mode in which the corrective retarded angle value is set to the maximum value.

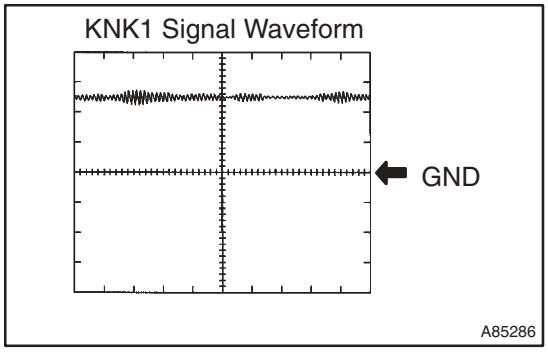

Reference: Inspection by using the oscilloscope.

The correct waveform is as shown.

Item	Contents
Terminal	KNK1 – EKNK
Equipment Setting	0.01 to 10 V/Division, 0.01 to 10 msec./Division
Condition	After warming up the engine, keep the engine speed at 4,000 rpm

DTC	P0325	KNOCK SENSOR 1 CIRCUIT (BANK 1 OR SINGLE SENSOR)

DTC	P0327	KNOCK SENSOR 1 CIRCUIT LOW INPUT (BANK 1 OR SINGLE SENSOR)

DTC	P0328	KNOCK SENSOR 1 CIRCUIT HIGH INPUT (BANK 1 OR SINGLE SENSOR)

CIRCUIT DESCRIPTION

The flat type knock sensor (non–resonant type) has a structure that can detect vibration in a wider band of frequency, from about 6 kHz to 15 kHz and has the following features:

- The knock sensor is fitted on the cylinder block to detect engine knocking.
- The sensor contains a piezoelectric element which generates voltage when it becomes deformed. This occurs when the cylinder block vibrates due to knocking. If engine knocking occurs, the ignition timing is retarded to suppress it.

DTC No.	DTC Detecting Condition	Trouble Area
P0325	Knock sensor signal level remains at low for more than 10 seconds	• Open or short in knock sensor circuit • Knock sensor (under–torqued or looseness) • ECM
P0327	Output voltage of the knock sensor is 0.5 V or less	• Short in knock sensor circuit • Knock sensor • ECM
P0328	Output voltage of the knock sensor is 4.5 V or more	• Open in knock sensor circuit • Knock sensor • ECM

HINT:

If the ECM detects DTC P0325, P0327 and/or P0328, it enters fail–safe mode in which the corrective retarded angle value is set to the maximum value.

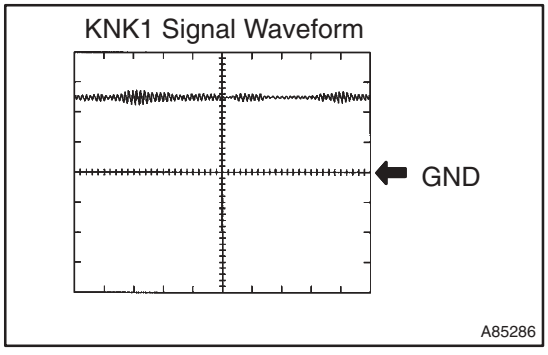

Reference: Inspection by using the oscilloscope.

The correct waveform is as shown.

Item	Contents
Terminal	KNK1 – EKNK
Equipment Setting	0.01 to 10 V/Division, 0.01 to 10 msec./Division
Condition	After warming up the engine, keep the engine speed at 4,000 rpm

WIRING DIAGRAM

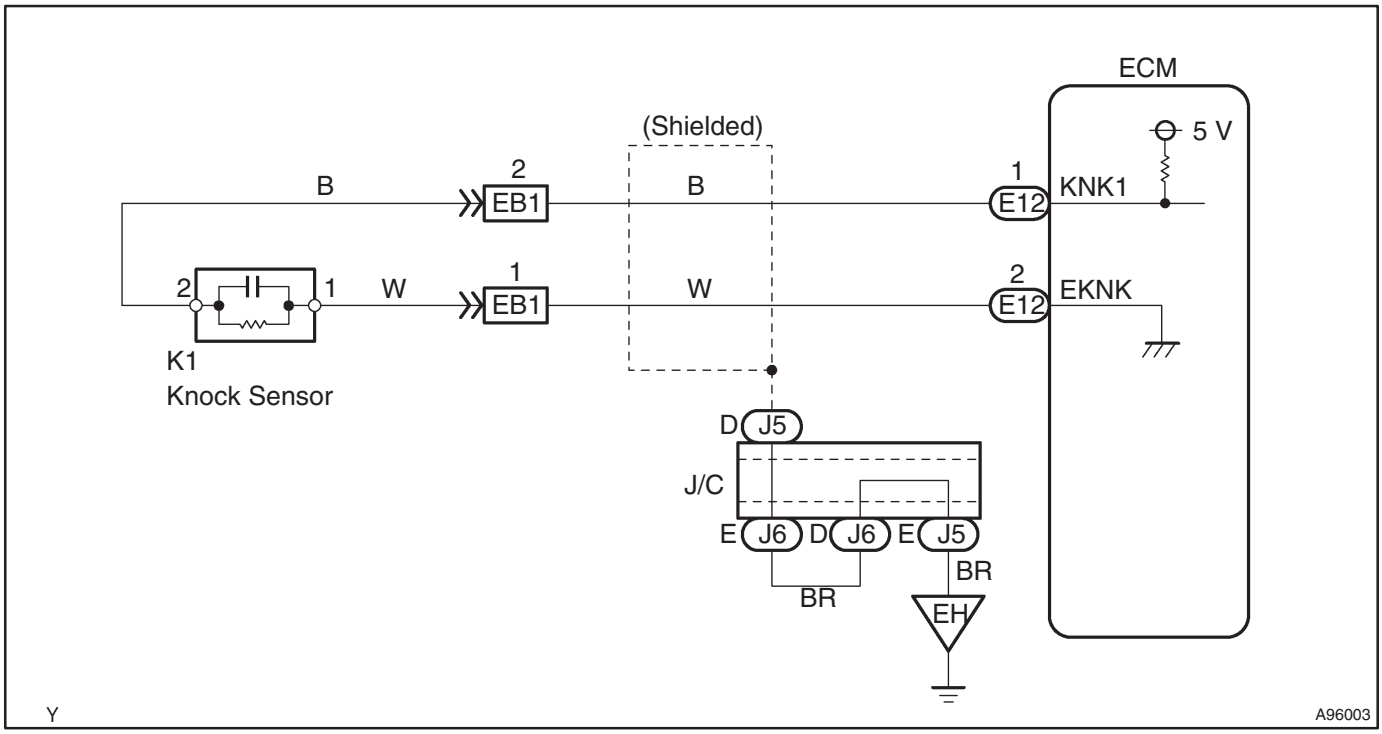

INSPECTION PROCEDURE

HINT:

Read freeze frame data using the intelligent tester II. Freeze frame data record the engine condition when malfunctions are detected. When troubleshooting, freeze frame data can help determine if the vehicle was moving or stationary, if the engine was warmed up or not, if the air–fuel ratio was lean or rich, and other data from the time the malfunction occurred.

1	READ OUTPUT DTC

(a) Clear the DTC(s) (see page 05–18).
(b) Warm up the engine.
(c) Run the engine at 3,000 rpm for 10 seconds or more.
(d) Connect the intelligent tester II to the DLC3.
(e) Turn the ignition switch to ON and turn the intelligent tester II ON.
(f) Select the following menu items: Powertrain / Engine and ECT / DTC.
(g) Read DTCs.

Result :

Display (DTC Output)	Proceed To
P0325	A
P0325, and P0327 and/or P0328	B
No output	C

B → **Go to step 3**

C → **CHECK FOR INTERMITTENT PROBLEMS (See page 05–9)**

A

2 INSPECT KNOCK SENSOR

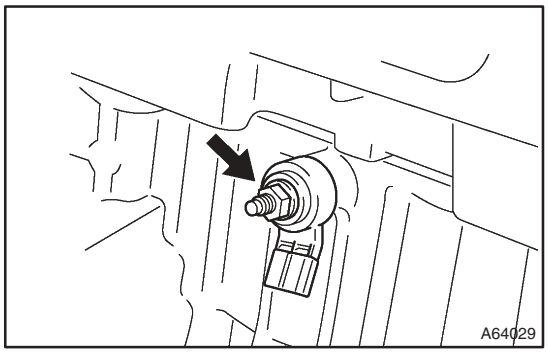

(a) Check the knock sensor installation.
OK:
Torque: 20 N·m (204 kgf·cm, 15 ft·lbf)

NG → **SECURELY REINSTALL SENSOR**

OK

REPLACE KNOCK SENSOR

3 CHECK HARNESS AND CONNECTOR(ECM – KNOCK SENSOR)

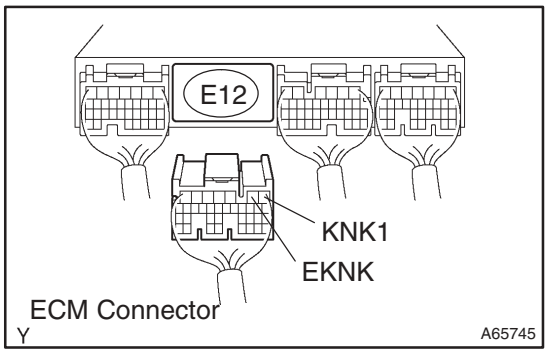

(a) Disconnect the E12 ECM connector.
(b) Measure the resistance between the terminals of the E12 ECM connector.
Standard:

Tester Connection	Specified Condition
KNK1 (E12–1) – EKNK (E12–2)	120 to 280 kΩ at 20°C (68°F)

(c) Reconnect the ECM connector.

NG → **Go to step 5**

OK

4 INSPECT ECM(KNK1 VOLTAGE)

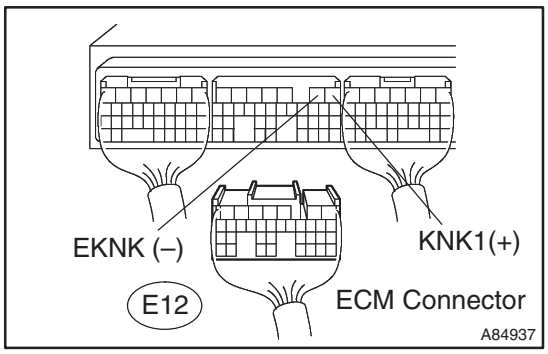

(a) Disconnect the E12 ECM connector.
(b) Turn the ignition switch to ON.
(c) Measure the voltage between the terminals of the E12 ECM terminal.
Standard:

Tester Connection	Specified Condition
KNK1 (E12–1) – EKNK (E12–2)	4.5 to 5.5 V

(d) Reconnect the ECM connector.

NG → **REPLACE ECM (See page 10–65 of Pub. No. RM1018E AVENSIS)**

OK

CHECK FOR INTERMITTENT PROBLEMS (See page 05–9)

NOTICE:
Fault may be intermittent. Check the wire harness and connectors carefully.

5	INSPECT KNOCK SENSOR

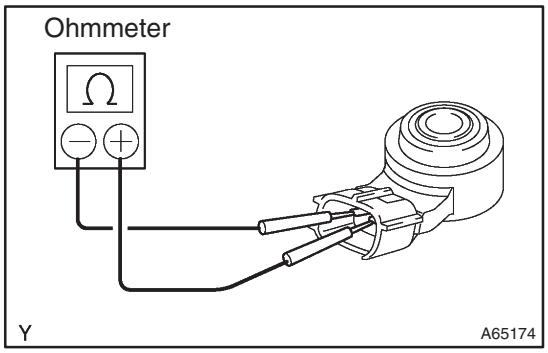

(a) Remove the knock sensor.
(b) Measure the resistance between the terminals.
Standard:

Tester Connection	Specified Condition
KNK1 (K1–1) – EKNK (K1–2)	120 to 280 kΩ at 20°C (68°F)

(c) Reinstall the knock sensor.

NG → **REPLACE KNOCK SENSOR**

OK

REPAIR OR REPLACE HARNESS OR CONNECTOR

DTC	P0335	CRANKSHAFT POSITION SENSOR ”A” CIRCUIT

DTC	P0339	CRANKSHAFT POSITION SENSOR ”A” CIRCUIT INTERMITTENT

CIRCUIT DESCRIPTION

The crankshaft position sensor system consists of a crankshaft position sensor plate and a pickup coil. The sensor plate has 34 teeth and is installed on the crankshaft. The pickup coil is made of an iron core and magnet. The sensor plate rotates and as each tooth passes through the pickup coil, a pulse signal is created. The pickup coil generates 34 signals per engine revolution. Based on these signals, the ECM calculates the crankshaft position and engine RPM. Using these calculations, the fuel injection time and ignition timing are controlled.

DTC No.	DTC Detection Condition	Trouble Area
P0335	No crankshaft position sensor signal to ECM during cranking (2 trip detection logic)	• Open or short in crankshaft position sensor circuit • Crankshaft position sensor • Sensor plate (crankshaft) • ECM
P0335	No crankshaft position sensor signal to ECM at engine speed of 600 rpm or more (2 trip detection logic)	• Open or short in crankshaft position sensor circuit • Crankshaft position sensor • Sensor plate (crankshaft) • ECM
P0339	In conditions (a), (b) and (c), when no crankshaft position sensor (NE) signal is input for 0.05 seconds or more. (a) Engine revolution 1,000 rpm or more (b) Starter signal is OFF (c) 3 seconds or more has lapsed after starter signal was switched from ON to OFF	• Open or short in crankshaft position sensor circuit • Crankshaft position sensor • Sensor plate (crankshaft) • ECM

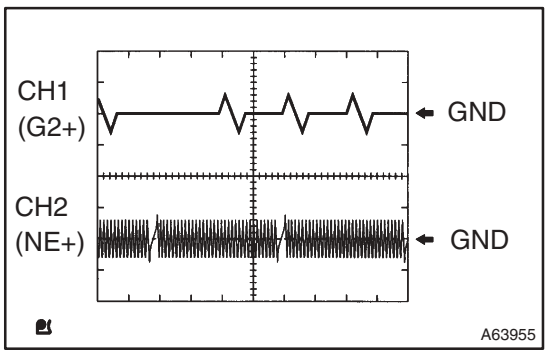

Reference: Inspection using the oscilloscope.
HINT:

- The correct waveform is as shown on the left.
- G2+ stands for the camshaft position sensor signal, and NE+ stands for the crankshaft position sensor signal.

Item	Contents
Terminal	CH1: G2+ – NE– CH2: NE+ – NE–
Equipment Setting	5V/Division, 20ms/Division
Condition	During cranking or idling

WIRING DIAGRAM

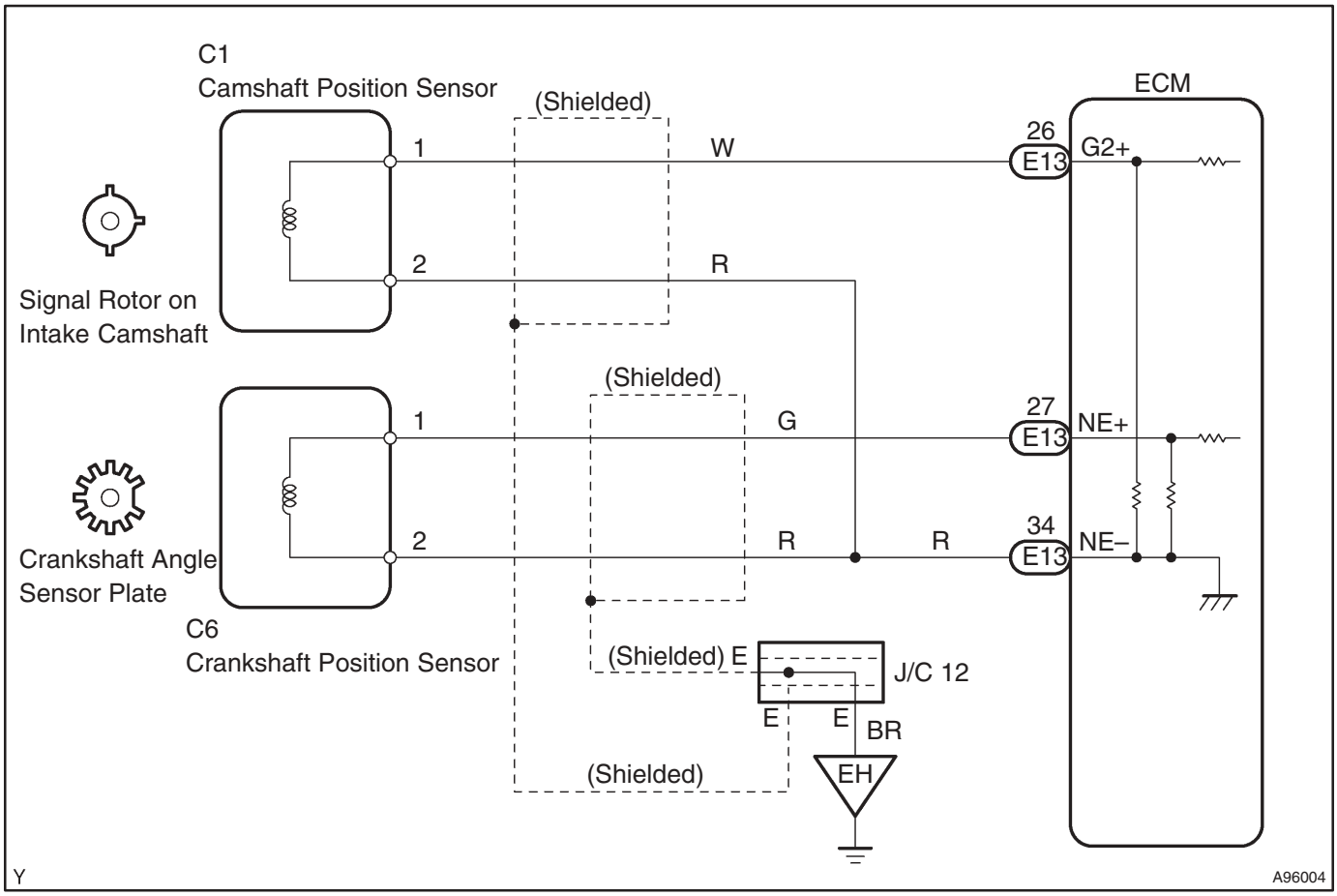

INSPECTION PROCEDURE

HINT:

- If no problem is found in the diagnostic troubleshooting procedure of DTC P0335, troubleshoot the engine mechanical systems.
- Check the value on the intelligent tester II.
  (a) Connect the intelligent tester II to the DLC3.
  (b) Start the engine and turn the intelligent tester II ON.
  (c) Select the following menu items: Powertrain / Engine and ECT / Data List / Engine SPD.
- The engine speed can be confirmed in the Data List using the intelligent tester II. If there are no NE signals from the crankshaft position sensor despite the engine revolving, the engine speed will be indicated as zero. If the voltage output of the crankshaft position sensor is insufficient, the engine speed will be indicated as lower than the actual engine rpm.
- Read freeze frame data using the intelligent tester II. Freeze frame data record the engine condition when malfunctions are detected. When troubleshooting, freeze frame data can help determine if the vehicle was moving or stationary, if the engine was warmed up or not, if the air–fuel ratio was lean or rich, and other data from the time the malfunction occurred.

1 INSPECT CRANKSHAFT POSITION SENSOR(RESISTANCE)

Component Side:

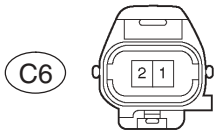

Crankshaft Position Sensor

Y A73303

(a) Disconnect the C6 crankshaft position sensor connector.
(b) Measure the resistance between terminals 1 and 2.

Standard:

Tester Connection	Specified Condition
1 – 2	1,630 to 2,740 Ω at cold
1 – 2	2,065 to 3,225 Ω at hot

NOTICE:

Terms ”cold” and ”hot” refer to the temperature of the coils. ”Cold” means approximately –10° to 50°C (14° to 122°F). ”Hot” means approximately 50° to 100°C (122° to 212°F).

(c) Reconnect the crankshaft position sensor connector.

NG → **REPLACE CRANKSHAFT POSITION SENSOR (See page 18–6 of Pub. No. RM1018E AVENSIS)**

OK

2 CHECK HARNESS AND CONNECTOR(CRANKSHAFT POSITION SENSOR – ECM)

Wire Harness Side:

Crankshaft Position Sensor Connector

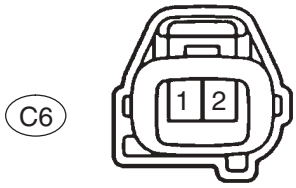

Front View

A66132

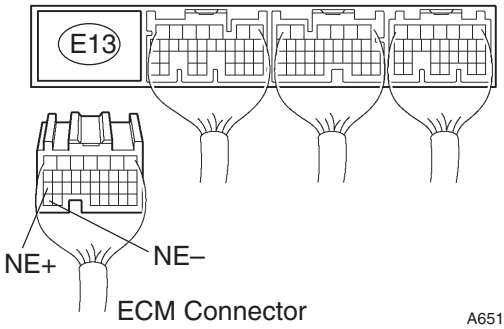

ECM Connector

A65159

(a) Disconnect the C6 crankshaft position sensor connector.
(b) Disconnect the E13 ECM connector.
(c) Check the resistance.

Standard (Check for open):

Tester Connection	Specified Condition
Crankshaft position sensor (C6–1) – NE+ (E13–27)	Below 1 Ω
Crankshaft position sensor (C6–2) – NE– (E13–34)	Below 1 Ω

Standard (Check for short):

Tester Connection	Specified Condition
Crankshaft position sensor (C6–1) or NE+ (E13–27) – Body ground	10 kΩ or higher
Crankshaft position sensor (C6–2) or NE– (E13–34) – Body ground	10 kΩ or higher

(d) Reconnect the crankshaft position sensor connector.
(e) Reconnect the ECM connector.

NG → **REPAIR OR REPLACE HARNESS OR CONNECTOR**

OK

3	CHECK SENSOR INSTALLATION(CRANKSHAFT POSITION SENSOR)

(a) Check the crankshaft position sensor installation.
OK: The sensor is installed correctly.

NG → **SECURELY REINSTALL SENSOR**

OK

4	CHECK CRANKSHAFT POSITION SENSOR PLATE(TEETH OF SENSOR PLATE(CRANKSHAFT))

(a) Check the teeth of the sensor plate.
OK: The plate does not have any cracks or deformation.

NG → **REPLACE CRANKSHAFT POSITION SENSOR PLATE (CRANKSHAFT)**

OK

REPLACE ECM (See page 10–65 of Pub. No. RM1018E AVENSIS)

DTC	P0340	CAMSHAFT POSITION SENSOR ”A” CIRCUIT (BANK 1 OR SINGLE SENSOR)

DTC	P0341	CAMSHAFT POSITION SENSOR ”A” CIRCUIT RANGE/PERFORMANCE (BANK 1 OR SINGLE SENSOR)

CIRCUIT DESCRIPTION

The Camshaft Position (CMP) sensor consists of a magnet and an iron core which is wrapped with copper wire, and is installed on the cylinder head. When the camshaft rotates, each of 3 teeth on the camshaft passes through the CMP sensor. This activates the internal magnet in the sensor, generating a voltage in the copper wire. The camshaft rotation is synchronized with the crankshaft rotation. When the crankshaft turns twice the voltage is generated 3 times in the CMP sensor. The generated voltage in the sensor acts as a signal, allowing the ECM to locate the camshaft position. This signal is then used to control ignition timing, fuel injection timing, and the VVT system.

DTC No.	DTC Detection Condition	Trouble Area
P0340	• No camshaft position sensor signal to ECM during cranking (2 trip detection logic) • No camshaft position sensor signal to ECM at engine speed of 600 rpm or more (1 trip detection logic)	• Open or short in camshaft position sensor circuit • Camshaft position sensor • Camshaft timing pulley • Jumped tooth of timing chain • ECM
P0341	While crankshaft rotates twice, camshaft position sensor signal is input to ECM 12 times or more (1 trip detection logic)	• Open or short in camshaft position sensor circuit • Camshaft position sensor • Camshaft timing pulley • Jumped tooth of timing chain • ECM

HINT:

- DTC P0340 indicates a malfunction related to the CMP sensor (+) circuit (the wire harness between the ECM and CMP sensor, and the CMP sensor itself).
- DTC P0341 indicates a malfunction related to the CMP sensor (–) circuit (the wire harness between the ECM and CMP sensor, and the CMP sensor itself).

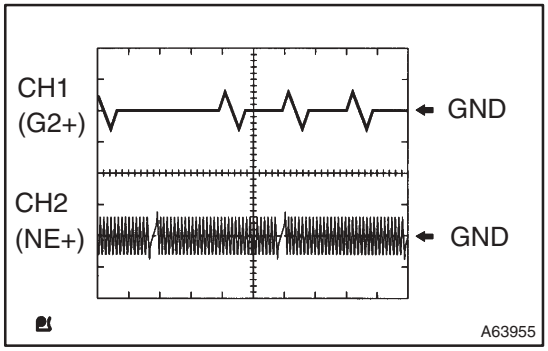

Reference: Inspection using the oscilloscope.

HINT:

- The correct waveform is as shown on the left.
- G2+ stands for the camshaft position sensor signal, and NE+ stands for the crankshaft position sensor signal.

Item	Contents
Terminal	CH1: G2+ – NE– CH2: NE+ – NE–
Equipment Setting	5V/Division, 20ms/Division
Condition	During cranking or idling

WIRING DIAGRAM

Refer to DTC P0335 on page 05–136.

INSPECTION PROCEDURE

HINT:

Read freeze frame data using the intelligent tester II. Freeze frame data record the engine condition when malfunctions are detected. When troubleshooting, freeze frame data can help determine if the vehicle was moving or stationary, if the engine was warmed up or not, if the air–fuel ratio was lean or rich, and other data from the time the malfunction occurred.

1	INSPECT CAMSHAFT POSITION SENSOR(RESISTANCE)

Component Side:

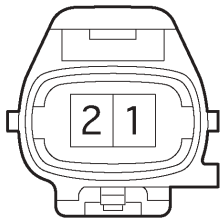

Camshaft Position Sensor

A64984

(a) Disconnect the C1 camshaft position sensor connector.

(b) Measure the resistance between the terminals of the camshaft position sensor.

Standard:

Tester Connection	Specified Condition
1 – 2	835 to 1,400 Ω at cold
1 – 2	1,060 to 1,645 Ω at hot

NOTICE:

Terms ”cold” and ”hot” refer to the temperature of the coils. ”Cold” means approximately –10° to 50°C (14° to 122°F). ”Hot” means approximately 50° to 100°C (122° to 212°F).

(c) Reconnect the camshaft position sensor connector.

NG → **REPLACE CAMSHAFT POSITION SENSOR (See page 18–5 of Pub. No. RM1018E AVENSIS)**

OK

2 CHECK HARNESS AND CONNECTOR(CAMSHAFT POSITION SENSOR – ECM)

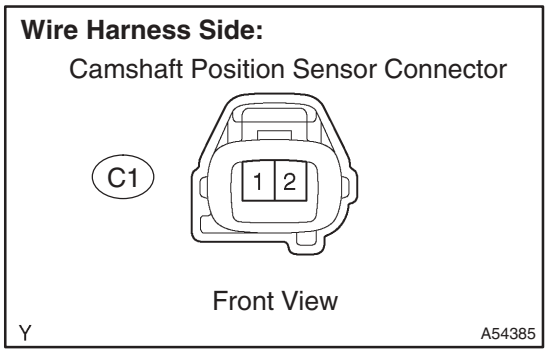

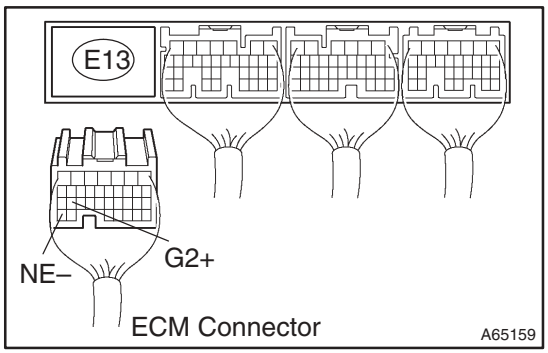

(a) Disconnect the C1 camshaft position sensor connector.
(b) Disconnect the E13 ECM connector.
(c) Check the resistance.

Standard (Check for open):

Tester Connection	Specified Condition
Camshaft position sensor (C1–1) – G2+ (E13–26)	Below 1 Ω
Camshaft position sensor (C1–2) – NE– (E13–34)	Below 1 Ω

Standard (Check for short):

Tester Connection	Specified Condition
Camshaft position sensor (C1–1) or G2+ (E13–26) – Body ground	10 kΩ or higher
Camshaft position sensor (C1–2) or NE– (E13–34) – Body ground	10 kΩ or higher

(d) Reconnect the camshaft position sensor connector.
(e) Reconnect the ECM connector.

NG → **REPAIR OR REPLACE HARNESS OR CONNECTOR**

OK

3 CHECK SENSOR INSTALLATION(CAMSHAFT POSITION SENSOR)

(a) Check the sensor installation.
OK: The sensor is installed correctly.

NG → **SECURELY REINSTALL SENSOR**

OK

4 CHECK CAMSHAFT

(a) Check the teeth of the camshaft.
OK: The teeth do not have any cracks or deformation.

NG → **REPLACE CAMSHAFT**

OK

REPLACE ECM (See page 10–65 of Pub. No. RM1018E AVENSIS)

DTC	P0351	IGNITION COIL ”A” PRIMARY/SECONDARY CIRCUIT

DTC	P0352	IGNITION COIL ”B” PRIMARY/SECONDARY CIRCUIT

DTC	P0353	IGNITION COIL ”C” PRIMARY/SECONDARY CIRCUIT

DTC	P0354	IGNITION COIL ”D” PRIMARY/SECONDARY CIRCUIT

CIRCUIT DESCRIPTION

HINT:

- These DTCs indicate a malfunction related to the primary circuit.
- If DTC P0351 is displayed, check No. 1 ignition coil with igniter circuit.
- If DTC P0352 is displayed, check No. 2 ignition coil with igniter circuit.
- If DTC P0353 is displayed, check No. 3 ignition coil with igniter circuit.
- If DTC P0354 is displayed, check No. 4 ignition coil with igniter circuit.

A Direct Ignition System (DIS) is used on this vehicle.

The DIS is a 1–cylinder ignition system which ignites one cylinder with one ignition coil. In the 1–cylinder ignition system, one spark plug is connected to the end of the secondary winding. High–voltage is generated in the secondary winding and is applied directly to the spark plug. The spark of the spark plug passes from the center electrode to the ground electrode.

The ECM determines the ignition timing and transmits the ignition (IGT) signals for each cylinder. Using the IGT signals, the ECM turns ON and OFF the power transistor inside the igniter, which switches ON and OFF a current to the primary coil. When the current to the primary coil is cut off, high–voltage is generated in the secondary coil and this voltage is applied to the spark plugs to create sparks inside the cylinders. As the ECM cuts the current to the primary coil, the igniter sends back the ignition confirmation (IGF) signal to the ECM.

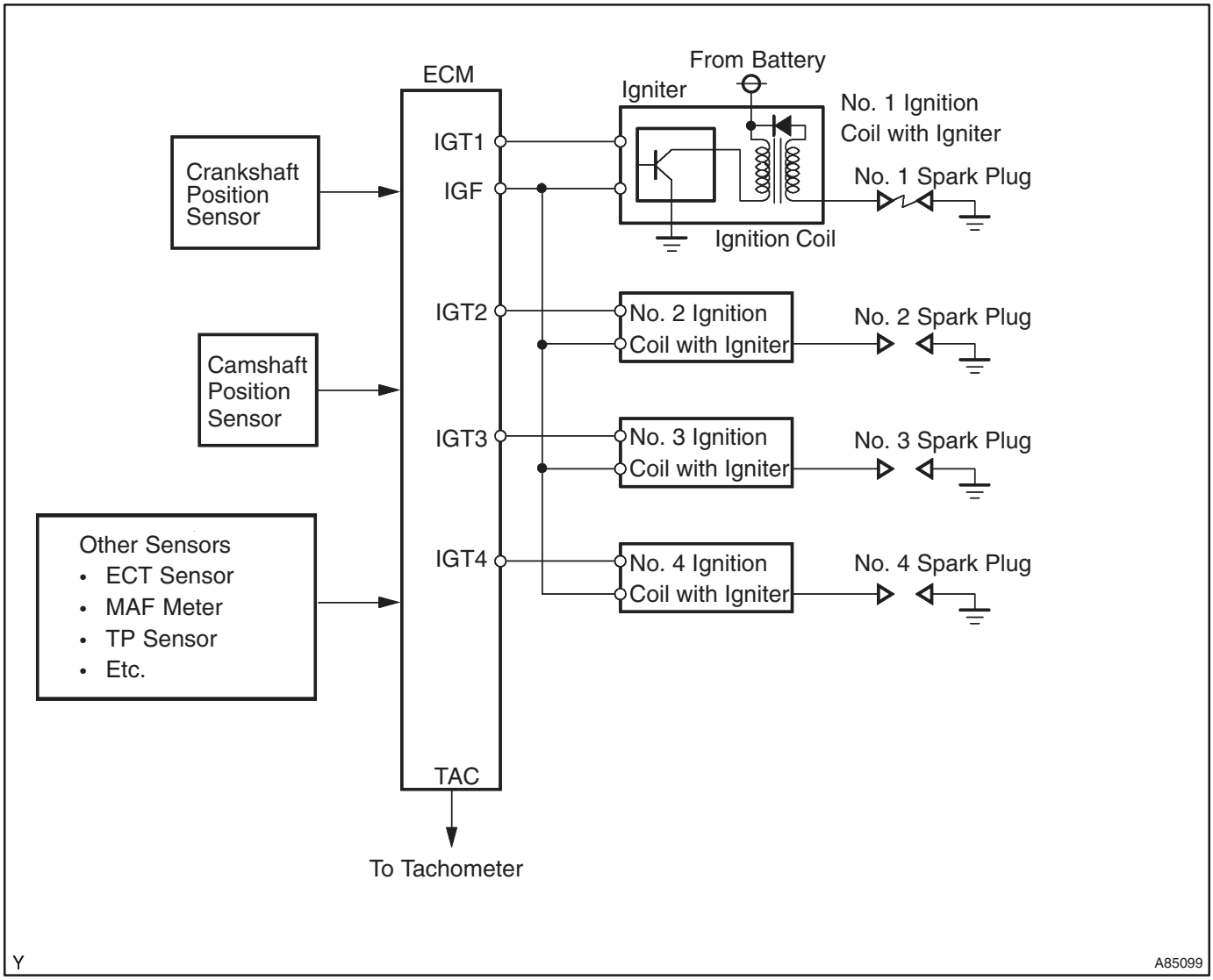

DTC No.	DTC Detection Condition	Trouble Area
P0351 P0352 P0353 P0354	No IGF signal to ECM while engine is running	• Ignition system • Open or short in IGF or IGT1 to 4 circuit from ignition coil with igniter to ECM • No. 1 to No. 4 ignition coil with igniter • ECM

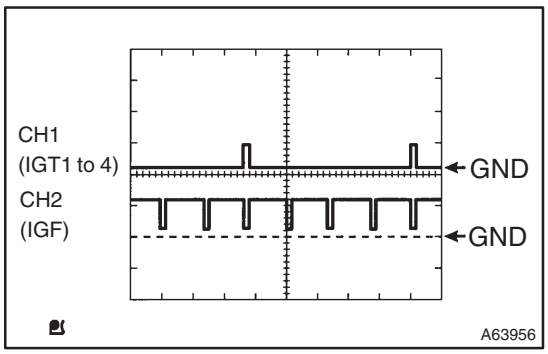

Reference: Inspection using the oscilloscope.
During cranking or idling, check the waveform between terminals IGT1 to IGT4 and E1, and IGF and E1 of the E11 ECM connector.

Item	Contents
Terminal	CH1: IGT1, IGT2, IGT3, IGT4 – E1 CH2: IGF1 – E1
Equipment Setting	2 V/Division, 20 ms/Division
Condition	While the engine is cranking or idling

WIRING DIAGRAM

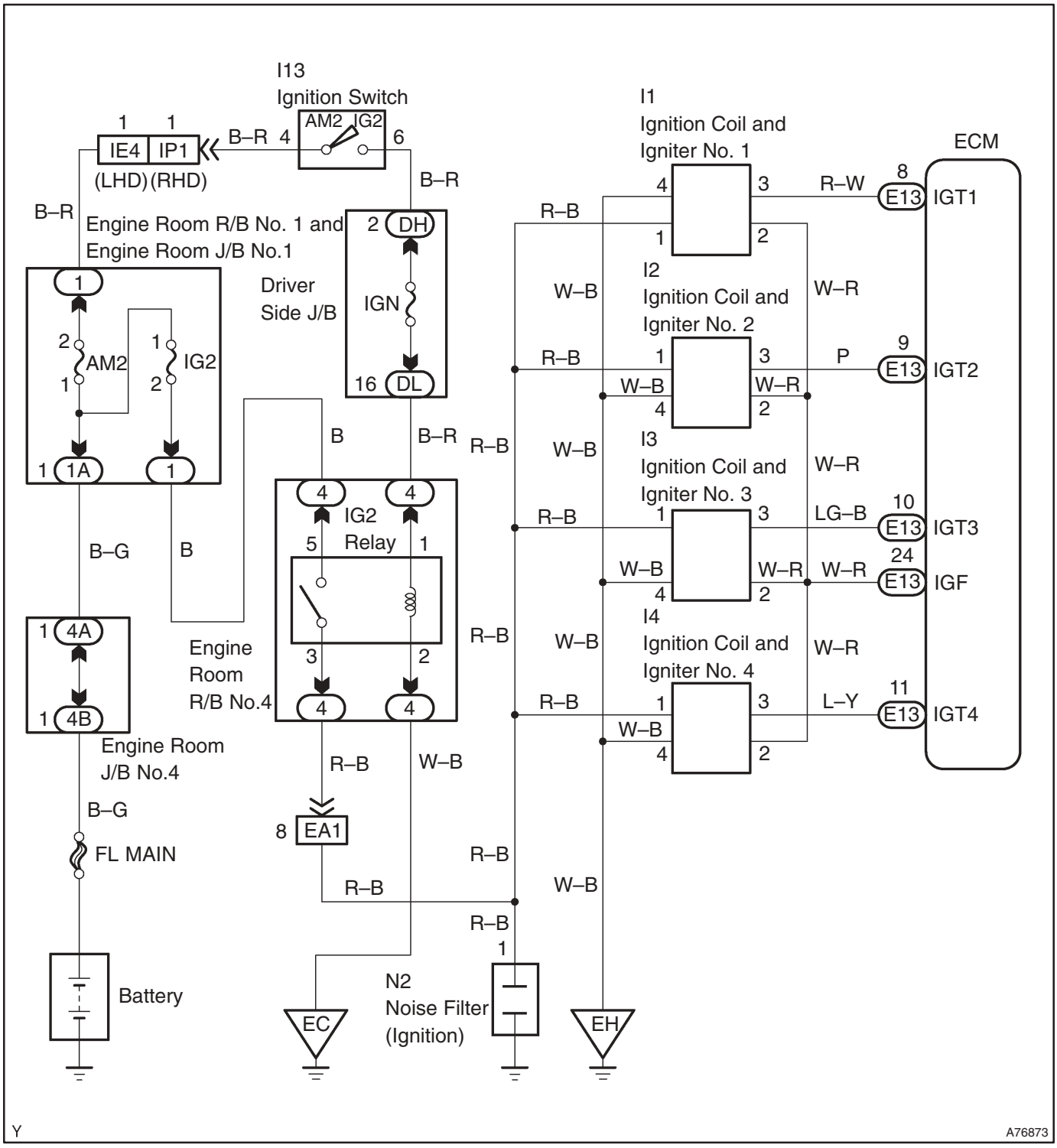

INSPECTION PROCEDURE

HINT:

Read freeze frame data using the intelligent tester II. Freeze frame data record the engine condition when malfunctions are detected. When troubleshooting, freeze frame data can help determine if the vehicle was moving or stationary, if the engine was warmed up or not, if the air–fuel ratio was lean or rich, and other data from the time the malfunction occurred.

1	PERFORM SIMULATION TEST

(a) Clear the DTC(s) (see page 05–18).

(b) Shuffle arrangement of the ignition coil with igniters.

NOTICE:

Do not shuffle the connectors.

(c) Perform the simulation test.

Result:

Display (DTC Output)	Proceed To
Same DTCs (that have been erased)	A
Other DTCs	B

B → **REPLACE IGNITION COIL ASSY**

A

2	INSPECT ECM(IGT1, IGT2, IGT3, IGT4 AND IGF1 SIGNAL)

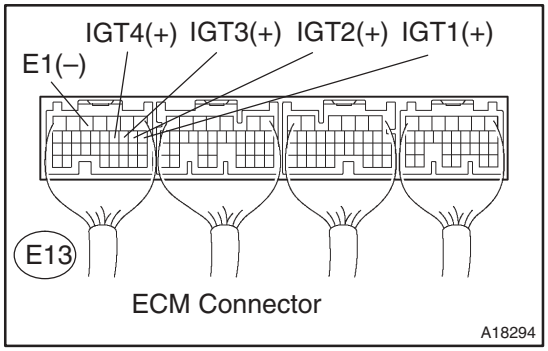

(a) Inspect using the oscilloscope.

(b) During cranking or idling, check the waveform between the specified terminals of the E13 ECM connector.

Standard:

Tester Connection	Specified Condition
IGT1 (E13–8) – E1 (E13–5)	Correct waveform is as shown
IGT2 (E13–9) – E1 (E13–5)	Correct waveform is as shown
IGT3 (E13–10) – E1 (E13–5)	Correct waveform is as shown
IGT4 (E13–11) – E1 (E13–5)	Correct waveform is as shown

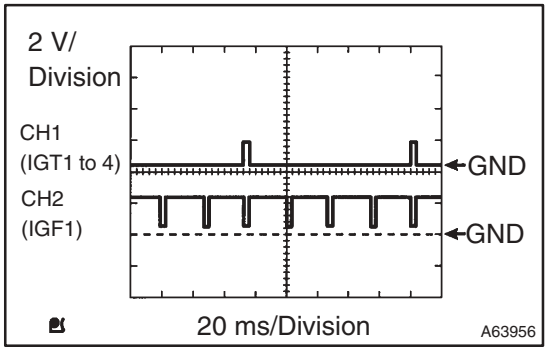

NG → **REPLACE ECM (See page 10–65 of Pub. No. RM1018E AVENSIS)**

OK

3 CHECK HARNESS AND CONNECTOR(IGNITION COIL ASSY – ECM)

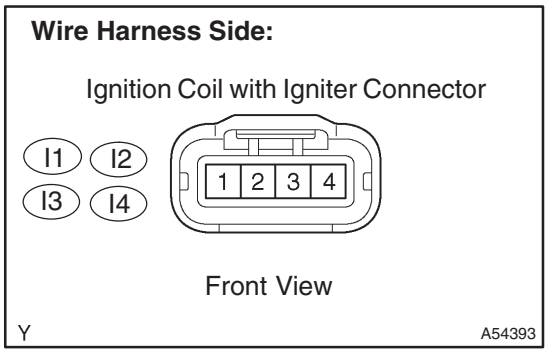

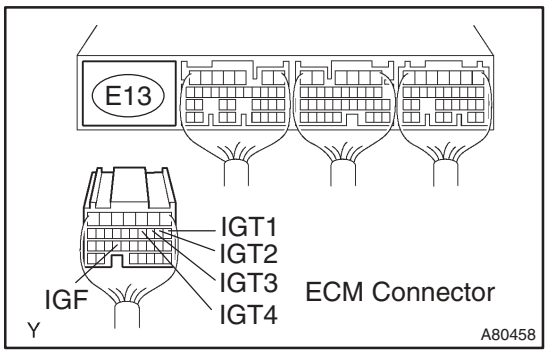

(a) Disconnect the I1, I2, I3 or I4 ignition coil with igniter connector.
(b) Disconnect the E13 ECM connector.
(c) Check the resistance.

Standard (Check for open):

Tester Connection	Specified Condition
Ignition coil (I1–2) – IGF (E13–24)	Below 1 Ω
Ignition coil (I2–2) – IGF (E13–24)	Below 1 Ω
Ignition coil (I3–2) – IGF (E13–24)	Below 1 Ω
Ignition coil (I4–2) – IGF (E13–24)	Below 1 Ω

Standard (Check for open):

Tester Connection	Specified Condition
Ignition coil (I1–3) – IGT1 (E13–8)	Below 1 Ω
Ignition coil (I2–3) – IGT2 (E13–9)	Below 1 Ω
Ignition coil (I3–3) – IGT3 (E13–10)	Below 1 Ω
Ignition coil (I4–3) – IGT4 (E13–11)	Below 1 Ω

Standard (Check for short):

Tester Connection	Specified Condition
Ignition coil (I1–2) or IGF (E13–24) – Body ground	10 kΩ or higher
Ignition coil (I2–2) or IGF (E13–24) – Body ground	10 kΩ or higher
Ignition coil (I3–2) or IGF (E13–24) – Body ground	10 kΩ or higher
Ignition coil (I4–2) or IGF (E13–24) – Body ground	10 kΩ or higher

Standard (Check for short):

Tester Connection	Specified Condition
Ignition coil (I1–3) or IGT1 (E13–8) – Body ground	10 kΩ or higher
Ignition coil (I2–3) or IGT2 (E13–9) – Body ground	10 kΩ or higher
Ignition coil (I3–3) or IGT3 (E13–10) – Body ground	10 kΩ or higher
Ignition coil (I4–3) or IGT4 (E13–11) – Body ground	10 kΩ or higher

(d) Reconnect the ECM connector.
(e) Reconnect the ignition coil with igniter connector.

NG → **REPAIR OR REPLACE HARNESS OR CONNECTOR**

OK

4 INSPECT SPARK PLUG(POWER SOURCE)

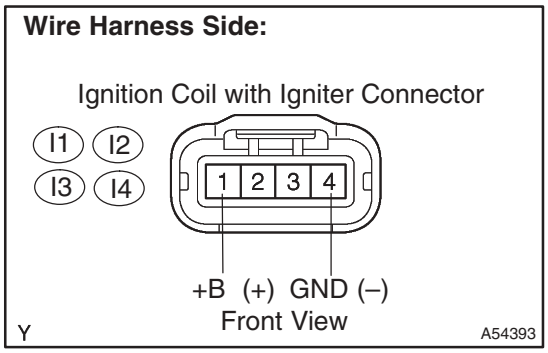

(a) Disconnect the I1, I2, I3 or I4 ignition coil with igniter connector.

(b) Check the resistance.

Standard (Check for open):

Tester Connection	Specified Condition
GND (I1–4) – Body ground	Below 1 Ω
GND (I2–4) – Body ground	Below 1 Ω
GND (I3–4) – Body ground	Below 1 Ω
GND (I4–4) – Body ground	Below 1 Ω

(c) Turn the ignition switch to ON.

(d) Measure the voltage between the terminals of the wire harness side connectors.

Standard:

Tester Connection	Specified Condition
+B (I1–1) – GND (I1–4)	9 to 14 V
+B (I2–1) – GND (I2–4)	9 to 14 V
+B (I3–1) – GND (I3–4)	9 to 14 V
+B (I4–1) – GND (I4–4)	9 to 14 V

(e) Reconnect the ignition coil with igniter connector.

OK → **REPLACE IGNITION COIL ASSY**

NG

5 CHECK HARNESS AND CONNECTOR(IGNITION COIL ASSY – IG2 RELAY)

Wire Harness Side:

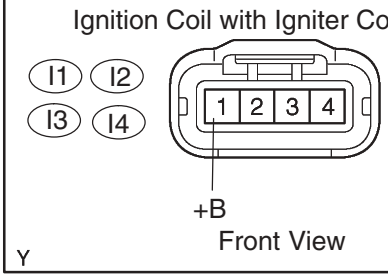

Engine Room R/B No. 4:

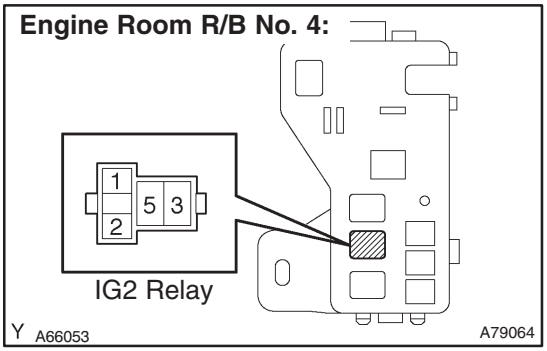

(a) Disconnect the I1, I2, I3 or I4 ignition coil with igniter connector.

(b) Remove the IG2 relay from the engine room R/B No. 4.

(c) Check the resistance.

Standard (Check for open):

Tester Connection	Specified Condition
Ignition coil (I1–1) – Engine room R/B No. 4 (IG2 relay terminal 3)	Below 1 Ω
Ignition coil (I2–1) – Engine room R/B No. 4 (IG2 relay terminal 3)	Below 1 Ω
Ignition coil (I3–1) – Engine room R/B No. 4 (IG2 relay terminal 3)	Below 1 Ω
Ignition coil (I4–1) – Engine room R/B No. 4 (IG2 relay terminal 3)	Below 1 Ω

Standard (Check for short):

Tester Connection	Specified Condition
Ignition coil (I1–1) or Engine room R/B No. 4 (IG2 relay terminal 3) – Body ground	10 kΩ or higher
Ignition coil (I2–1) or Engine room R/B No. 4 (IG2 relay terminal 3) – Body ground	10 kΩ or higher
Ignition coil (I3–1) or Engine room R/B No. 4 (IG2 relay terminal 3) – Body ground	10 kΩ or higher
Ignition coil (I4–1) or Engine room R/B No. 4 (IG2 relay terminal 3) – Body ground	10 kΩ or higher

(d) Reconnect the ignition coil with igniter connector.

(e) Reinstall the IG2 relay.

NG → **REPAIR OR REPLACE HARNESS OR CONNECTOR**

OK

REPLACE IGNITION COIL ASSY

DTC	P0420	CATALYST SYSTEM EFFICIENCY BELOW THRESHOLD (BANK 1)

CIRCUIT DESCRIPTION

This vehicle has two Heated Oxygen (O2) sensors. One is located in front of the Three–Way Catalyst Converter (TWC), and the other is mounted behind the TWC. Each signal output of the sensors is converted into a waveform inside the ECM. The front O2 sensor is used to monitor the air–fuel ratio by the ECM, and whose signal prompts the ECM to perform air–fuel ratio feedback control. As a result, the air–fuel ratio is balanced, and the waveform of the front O2 sensor oscillates between rich and lean regularly.

To determine whether or not the catalyst performance has deteriorated, the ECM compares the waveforms of the front and rear O2 sensors. While the catalyst is functioning normally, the waveform of the rear O2 sensor fluctuates between rich and lean more slowly than the front O2 sensor's waveform. When the rear O2 sensor's waveform frequently fluctuates, it indicates that the catalyst performance deteriorates.

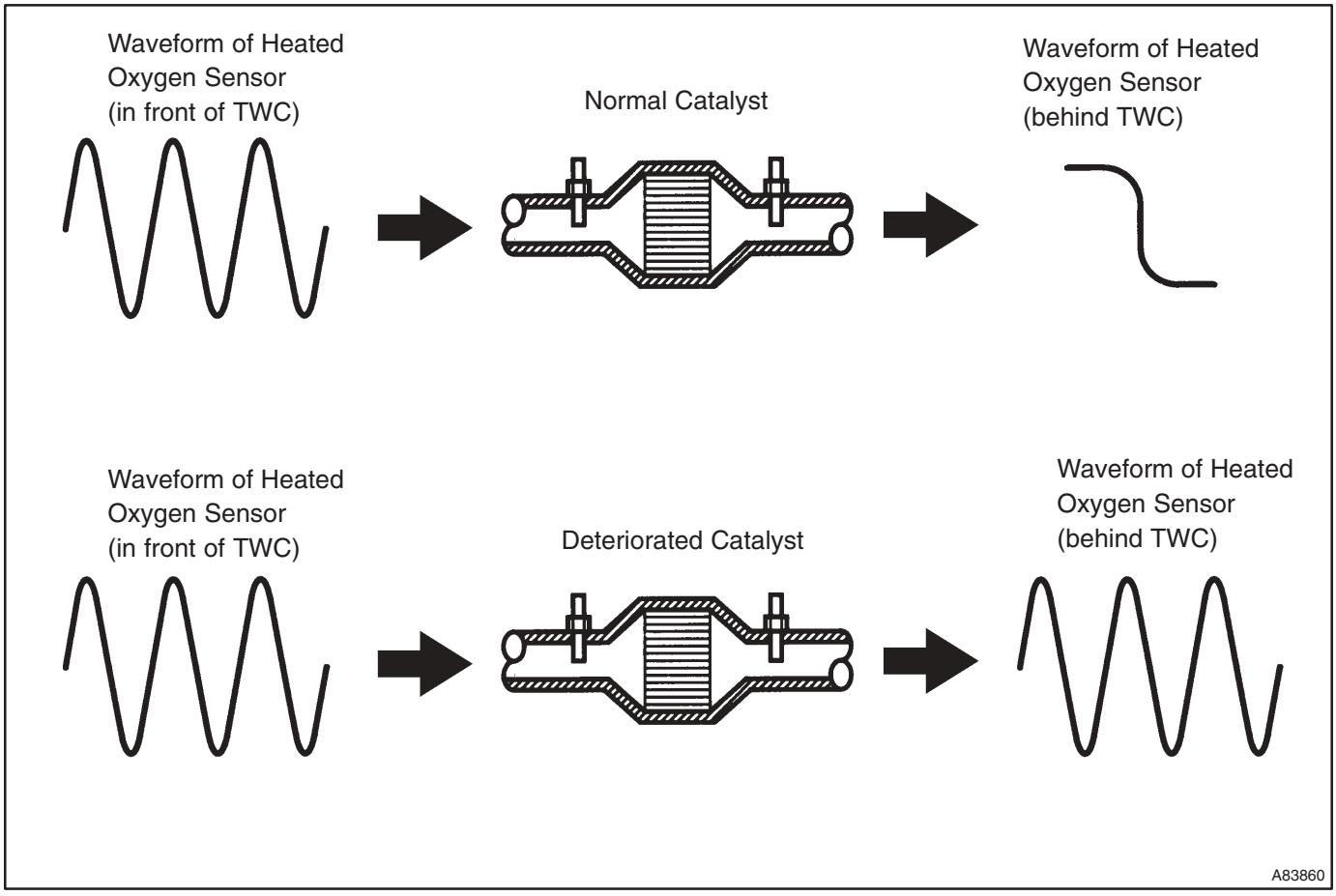

Heated Oxygen Sensor Signal Length:

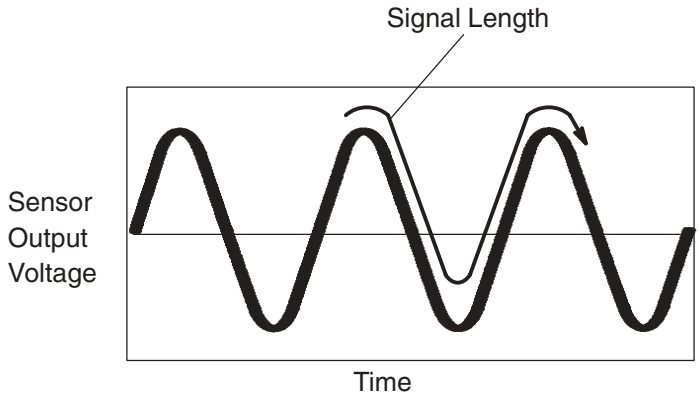

A82718

DTC No.	DTC Detecting Condition	Trouble Area
P0420	After engine and TWC are warmed up, and while vehicle is driven within predetermined vehicle speed and engine speed range: Waveforms of heated oxygen sensor (sensor 2) frequently fluctuates between rich and lean (2 trip detection logic)	• Gas leakage in exhaust system • Heated oxygen sensor (sensor 1) • Heated oxygen sensor (sensor 2) • Three–way catalytic converter (TWC)

CONFIRMATION DRIVING PATTERN

Engine coolant temperature is more than 75°C (167°F)

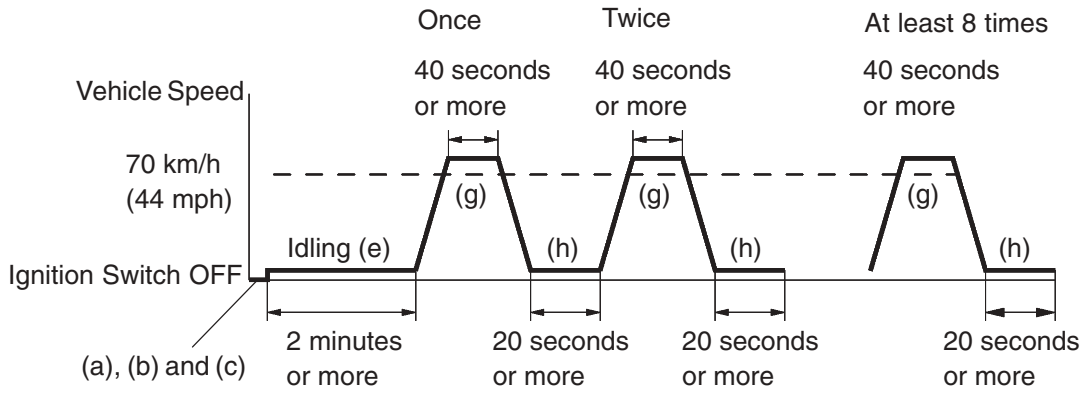

Y

A58686

(a) Connect the intelligent tester II to the DLC3.
(b) Turn the ignition switch to ON and turn the intelligent tester II ON.
(c) Switch the ECM from normal mode to check mode using the intelligent tester II (see page 05–20).
(d) Start the engine.
(e) Allow the engine to idle for 2 minutes.
(f) Warm up the engine until the engine coolant temperature reaches more than 75°C (167°F).
(g) Drive the vehicle at 70 km/h (44 mph) or more for 40 seconds or more.
(h) Stop the vehicle and allow the engine to idle for 20 seconds or more.
(i) Repeat the steps (g) and (h) at least 8 times in one driving cycle.

HINT:

If a malfunction exists, the MIL will be illuminated during step (i).

NOTICE:
If the conditions in this test are not strictly followed, no malfunction will be detected. If you do not have the intelligent tester II, turn the ignition switch to OFF after performing steps from (d) to (i), then perform steps (d) to (i) again.

WIRING DIAGRAM

Refer to DTC P0130 on page 05–74.

INSPECTION PROCEDURE

HINT:
Read freeze frame data using the intelligent tester II. Freeze frame data record the engine condition when malfunctions are detected. When troubleshooting, freeze frame data can help determine if the vehicle was moving or stationary, if the engine was warmed up or not, if the air–fuel ratio was lean or rich, and other data from the time the malfunction occurred.

1	CHECK OTHER DTC OUTPUT(IN ADDITION TO DTC P0420)

(a) Connect the intelligent tester II to the DLC3.
(b) Turn the ignition switch to ON and turn the intelligent tester II ON.
(c) Select the following menu items: Powertrain / Engine and ECT / DTC.
(d) Read DTCs.
Result:

Display (DTC Output)	Proceed To
P0420	A
P0420 and other DTCs	B

HINT:
If any DTCs other than P0420 are output, troubleshoot those DTCs first.

B → **GO TO RELEVANT DTC CHART (See page 05–27)**

A

2	CHECK FOR EXHAUST GAS LEAKAGE

OK: No gas leakage.

NG → **REPAIR OR REPLACE EXHAUST GAS LEAKAGE POINT**

OK

3	INSPECT HEATED OXYGEN SENSOR(SENSOR 1) (See page 05–74)

NG → **REPLACE HEATED OXYGEN SENSOR**

OK

4	INSPECT HEATED OXYGEN SENSOR(SENSOR 2) (See page 05–100)

OK: During air–fuel ratio feedback, the oxygen sensor output fluctuates between rich and lean.

NG → **REPLACE HEATED OXYGEN SENSOR**

OK

REPLACE THREE–WAY CATALYTIC CONVERTER (BOTH FRONT AND REAR TWC)

NOTICE:

On the damaged bank, replace both the front and rear catalysts.

HINT:

Intelligent tester II only:

Malfunctioning areas can be found by performing the Active Test / A/F Control operation. The A/F Control operation can determine if the heated oxygen sensor or other potential trouble areas are malfunctioning or not.

(a) Perform the Active Test using the intelligent tester II.

HINT:

The A/F Control operation lowers the injection volume by 12.5 % or increases the injection volume by 25 %.

(1) Connect the intelligent tester II to the DLC3.
(2) Start the engine and turn the intelligent tester II ON.
(3) Warm up the engine by running the engine at 2,500 rpm for approximately 3 minutes.
(4) On the intelligent tester II, select the following menu items: Powertrain / Engine and ECT / Active Test / A/F Control.
(5) Select the following monitor items: O2S B1 S1 and O2S B1 S2.
(6) Perform the A/F Control operation with the engine in an idling condition (press the right or left button).

Result:

The heated oxygen sensor reacts in accordance with increases and decreases of the injection volume:

+25 % → Rich output: More than 0.5 V

–12.5 % → Lean output: Less than 0.4 V

NOTICE:

Sensor 1 (front sensor) has an output delay of a few seconds. Sensor 2 (rear sensor) has a maximum output delay of approximately 20 seconds.

	Output Voltage of Heated Oxygen Sensor (sensor 1: front sensor)	Output Voltage of Heated Oxygen Sensor (sensor 2: rear sensor)	Main Suspect Trouble Area
Case 1	Injection volume +25 % –12.5 % 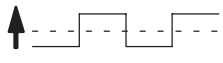 Output voltage More than 0.5 V Less than 0.4V  **OK**	Injection volume +25 % –12.5 % 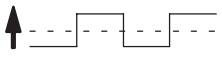 Output voltage More than 0.5 V Less than 0.4V  **OK**	—
Case 2	Injection volume +25 % –12.5 % 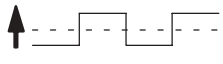 Output voltage Almost no reaction **NG**	Injection volume +25 % –12.5 % 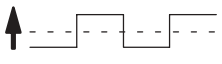 Output voltage More than 0.5 V Less than 0.4V  **OK**	Sensor 1: front sensor (Sensor 1, heater, sensor 1 circuit)
Case 3	Injection volume +25 % –12.5 % 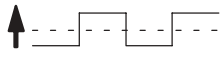 Output voltage More than 0.5 V Less than 0.4V  **OK**	Injection volume +25 % –12.5 % 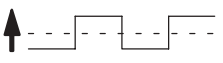 Output voltage Almost no reaction **NG**	Sensor 2: rear sensor (Sensor 2, heater, sensor 2 circuit)
Case 4	Injection volume +25 % –12.5 % 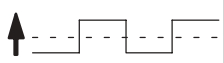 Output voltage Almost no reaction **NG**	Injection volume +25 % –12.5 % 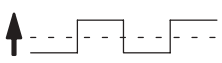 Output voltage Almost no reaction **NG**	Extremely rich or lean actual air–fuel ratio (Injector, fuel pressure, gas leakage in exhaust system, etc.)

The following A/F Control procedure enables the technician to check and graph the voltage output of both the heated oxygen sensors.

To display the graph, select the following menu items on the tester: View / Line Graph.

DTC	P0443	EVAPORATIVE EMISSION CONTROL SYSTEM PURGE CONTROL VALVE CIRCUIT

CIRCUIT DESCRIPTION

In order to reduce hydrocarbon (HC) emissions, evaporated fuel from the fuel tank is routed through the charcoal canister to the intake manifold for combustion in the cylinders.

The ECM changes the duty signal to the EVAP VSV so that the intake of HC emissions is appropriate for the driving conditions (engine load, engine speed, vehicle speed, etc.) after the engine is warmed up.

DTC No.	DTC Detection Condition	Trouble Area
P0443	Proper response to ECM command does not occur (1 trip detection logic)	• Open or short in EVAP VSV circuit • EVAP VSV • ECM

WIRING DIAGRAM

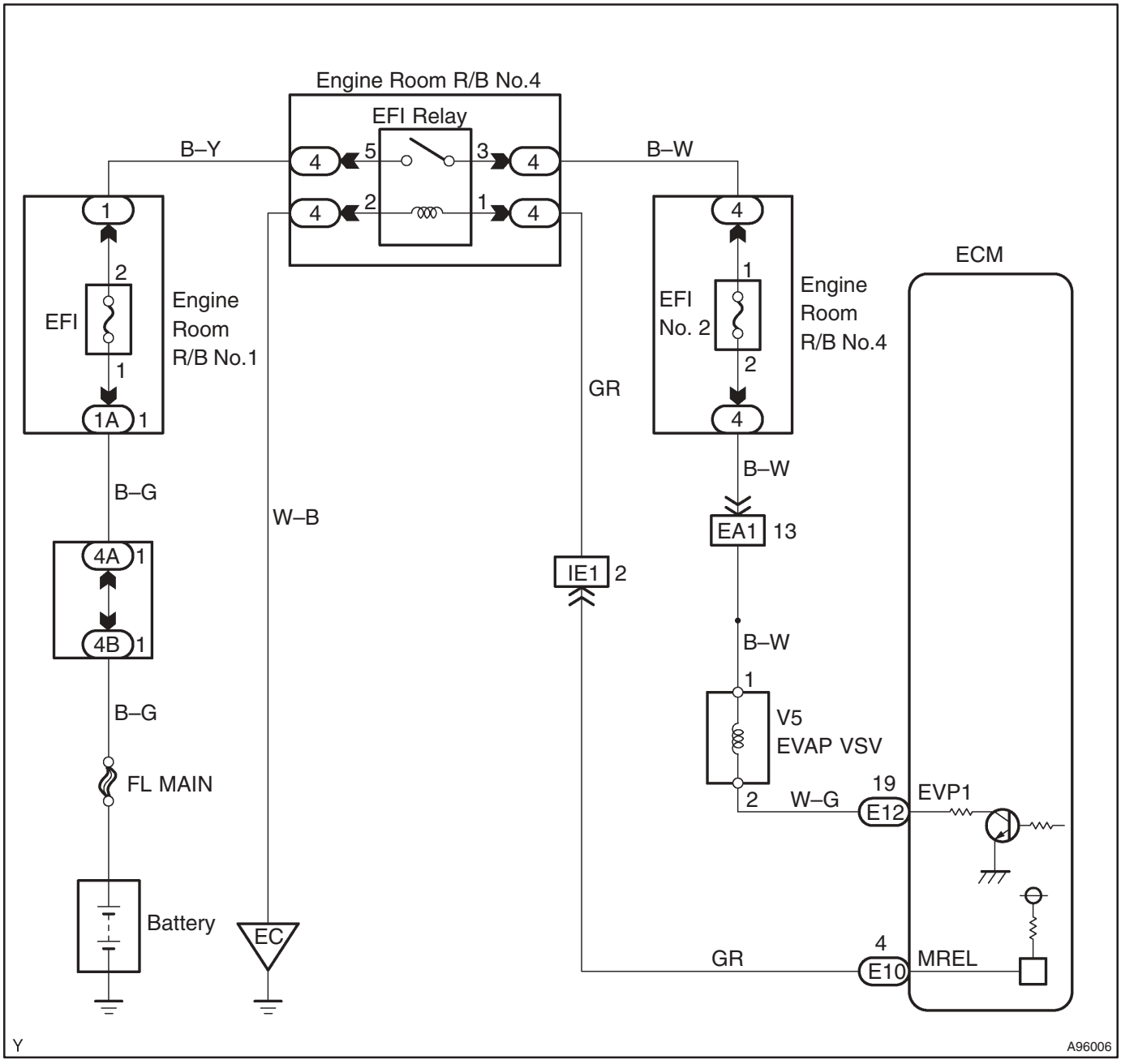

INSPECTION PROCEDURE

HINT:

Read freeze frame data using the intelligent tester II. Freeze frame data record the engine condition when malfunctions are detected. When troubleshooting, freeze frame data can help determine if the vehicle was moving or stationary, if the engine was warmed up or not, if the air–fuel ratio was lean or rich, and other data from the time the malfunction occurred.

1 PERFORM ACTIVE TEST USING INTELLIGENT TESTER II(EVAP VSV)

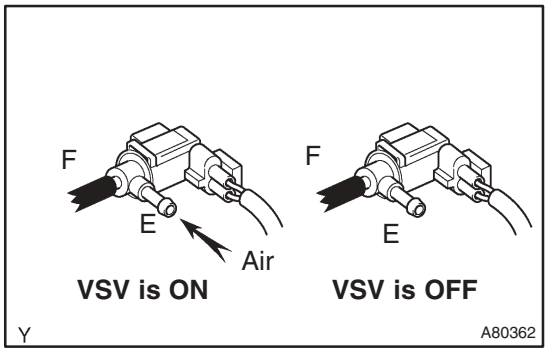

(a) Disconnect the vacuum hose of the EVAP VSV.
(b) Connect the intelligent tester II to the DLC3.
(c) Start the engine and turn the intelligent tester II ON.
(d) Select the following menu items: Powertrain / Engine and ECT / Active Test / Purge VSV. Press the right or left button.
(e) Check if the disconnected port applies suction to your finger when operating the EVAP VSV using the intelligent tester II.

Standard:

Tester Operation	Specified Condition
VSV is ON	Applies suction to your finger
VSV is OFF	Applies no suction to your finger

(f) Reconnect the vacuum hose.

OK → **CHECK FOR INTERMITTENT PROBLEMS (See page 05–9)**

NG

2 INSPECT ECM(CHECK VOLTAGE)

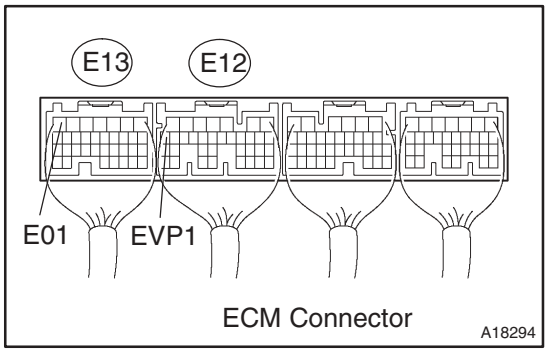

(a) Turn the ignition switch to ON.
(b) Measure the voltage between the terminals of the E12 and E13 ECM connectors.

Standard:

Tester Connection	Specified Condition
EVP1 (E12–19) – E01 (E13–7)	9 to 14 V

OK → **REPLACE ECM (See page 10–65 of Pub. No. RM1018E AVENSIS)**

NG

3 INSPECT VACUUM SWITCHING VALVE(OPERATION OF EVAP VSV)

OK: Air flows when the battery voltage is applied to the EVAP VSV.

NG → **REPLACE VACUUM SWITCHING VALVE**

OK

4 CHECK HARNESS AND CONNECTOR(ECM – EVAP VSV)

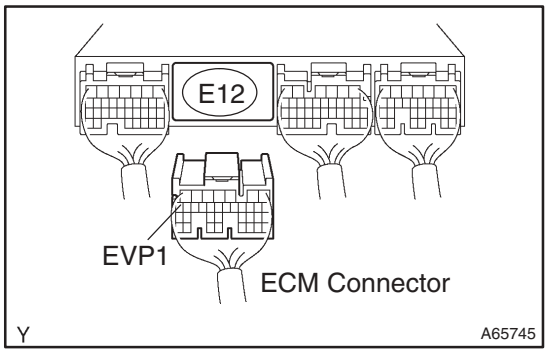

(a) Disconnect the E12 ECM connector.
(b) Disconnect the V5 EVAP VSV connector.
(c) Check the resistance.

Standard (Check for open):

Tester Connection	Specified Condition
EVAP VSV (V5–2) – EVP1 (E12–19)	Below 1 Ω

Standard (Check for short):

Tester Connection	Specified Condition
EVAP VSV (V5–2) or PRG (E12–19) – Body ground	10 kΩ or higher

(d) Reconnect the ECM connector.
(e) Reconnect the EVAP VSV connector.

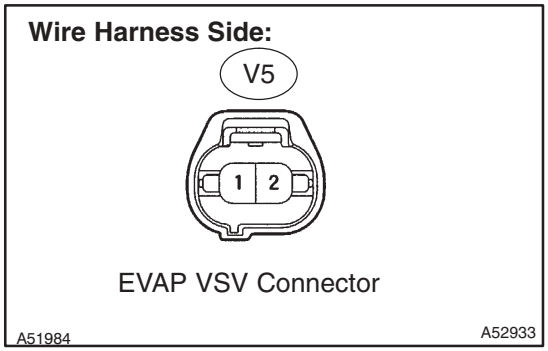

NG → **REPAIR OR REPLACE HARNESS OR CONNECTOR**

OK

5 CHECK HARNESS AND CONNECTOR(EFI RELAY – EVAP VSV)

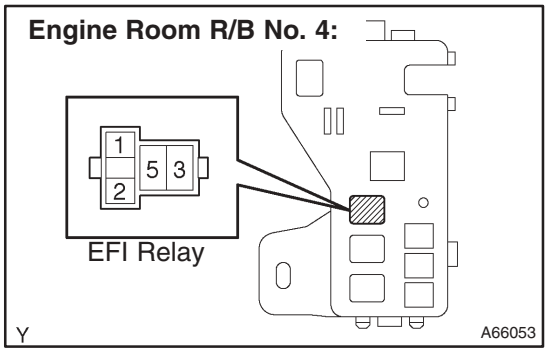

(a) Remove the EFI relay from the engine room R/B No. 4.
(b) Disconnect the V5 EVAP VSV connector.
(c) Check the resistance.

Standard (Check for open):

Tester Connection	Specified Condition
EVAP VSV (V5–1) – EFI relay (3)	Below 1 Ω

Standard (Check for short):

Tester Connection	Specified Condition
EVAP VSV (V5–1) or EFI relay (3) – Body ground	10 kΩ or higher

(d) Reinstall the EFI relay
(e) Reconnect the EVAP VSV connector.

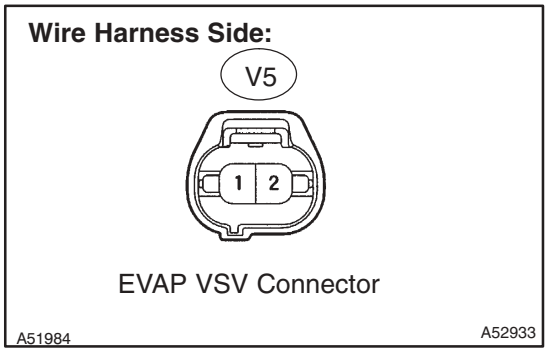

NG → **REPAIR OR REPLACE HARNESS OR CONNECTOR**

OK

INSPECT ECM POWER SOURCE CIRCUIT (See page 05–195)

DTC	P0500	VEHICLE SPEED SENSOR ”A”

CIRCUIT DESCRIPTION

The speed sensor detects the wheel speed and sends appropriate signals to the skid control ECU. The skid control ECU converts these wheel speed signals into a 4–pulse signal and outputs it to the ECM via the combination meter. The ECM determines the vehicle speed based on the frequency of these pulse signals.

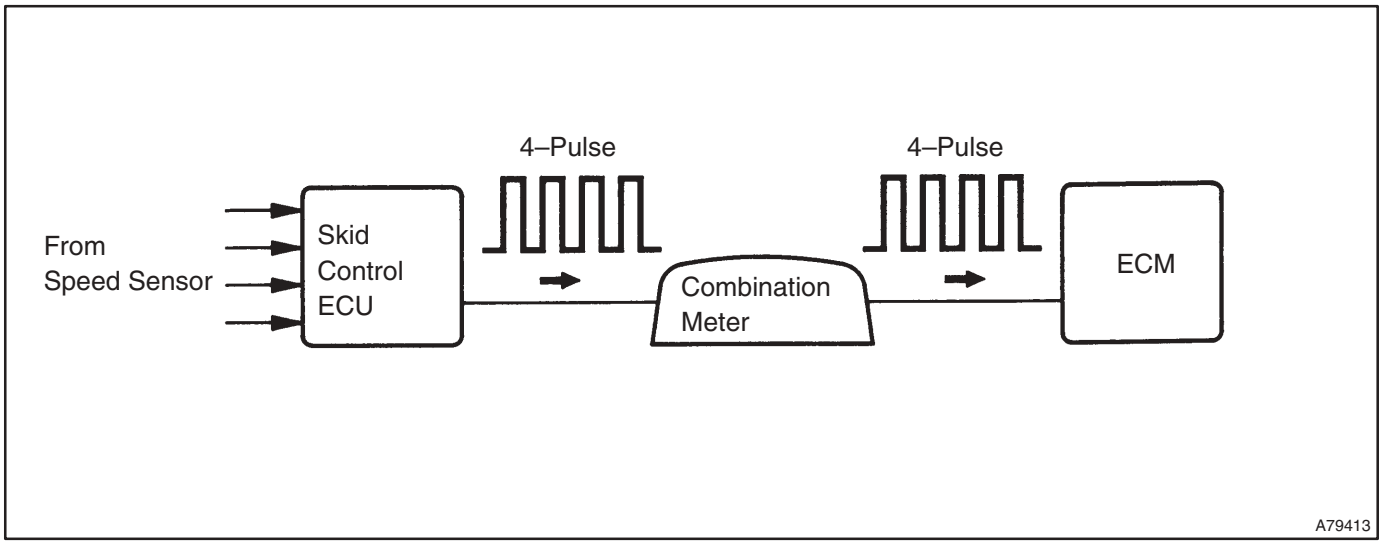

DTC No.	DTC Detection Condition	Trouble Area
P0500	Conditions (a), (b) and (c) continue for 8 seconds or more (2 trip detection logic): (a) Engine coolant temperature is more than 60°C (140°F) (b) Engine speed is between 2,000 rpm and 3,000 rpm (c) No speed signal is input to ECM	• Open or short in speed sensor circuit • Speed sensor • Combination meter • ECM • Skid control ECU

WIRING DIAGRAM

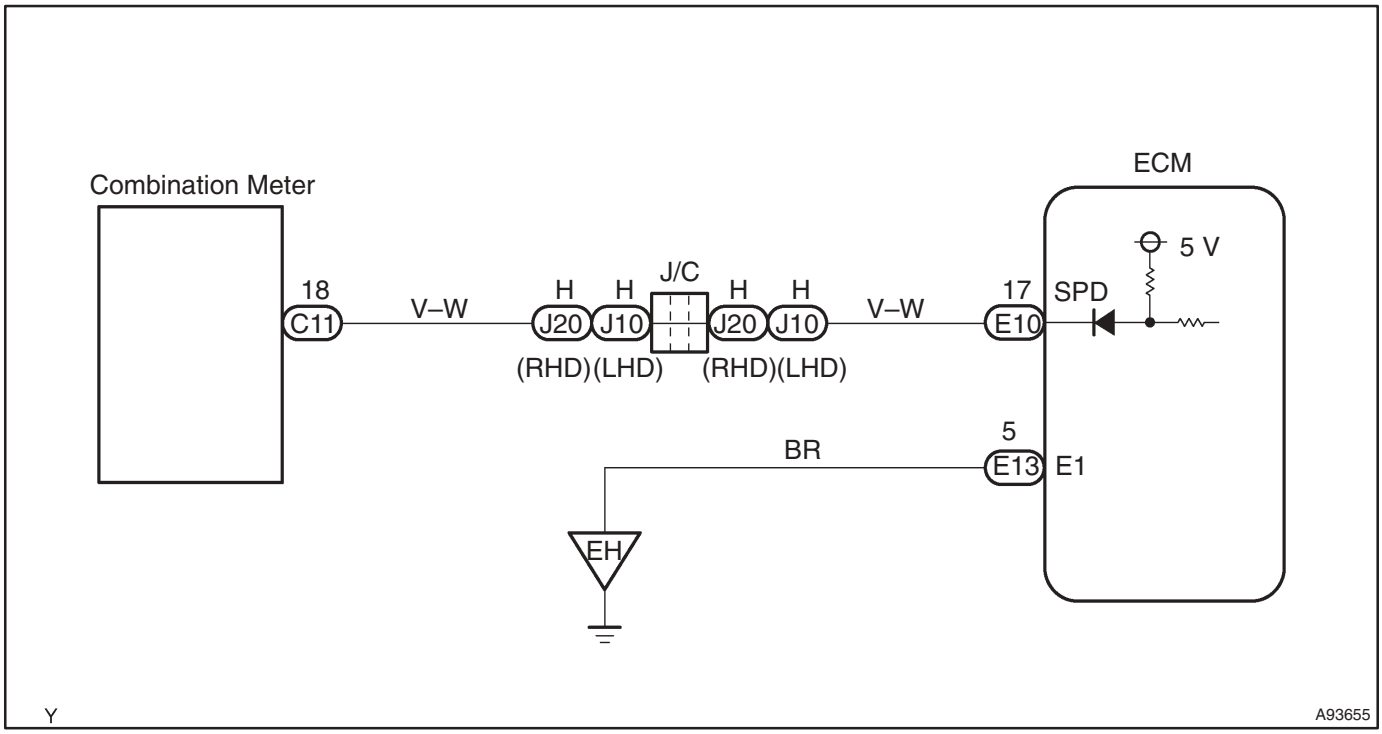

INSPECTION PROCEDURE

HINT:

Read freeze frame data using the intelligent tester II. Freeze frame data record the engine condition when malfunctions are detected. When troubleshooting, freeze frame data can help determine if the vehicle was moving or stationary, if the engine was warmed up or not, if the air–fuel ratio was lean or rich, and other data from the time the malfunction occurred.

1	CHECK OPERATION OF SPEEDOMETER

(a) Drive the vehicle and check if the operation of the speedometer in the combination meter is normal.

HINT:

The vehicle speed sensor is operating normally if the speedometer reading is normal.

NG → **CHECK SPEEDOMETER CIRCUIT (See page 05–1510 of Pub. No. RM1018E AVENSIS)**

OK

2	READ VALUE OF INTELLIGENT TESTER II(VEHICLE SPEED)

(a) Connect the intelligent tester II to the DLC3.
(b) Start the engine and turn the intelligent tester II ON.
(c) On the intelligent tester II, select the following menu items: Powertrain / Engine and ECT / Data List / Vehicle SPD.
(d) Check the vehicle speed at the engine speed of 2,000 rpm or more when the vehicle is running.
Standard: Same value as the actual vehicle speed.

YES → **CHECK FOR INTERMITTENT PROBLEMS (See page 05–9)**

NO

3	INSPECT ECM(SPD VOLTAGE)

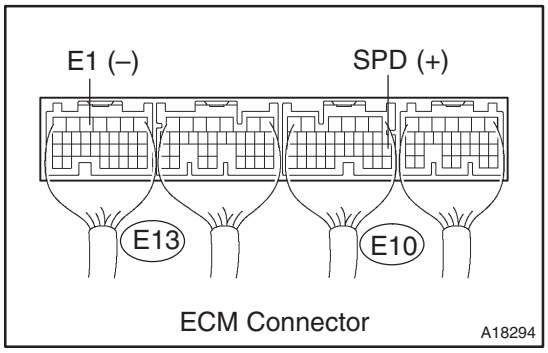

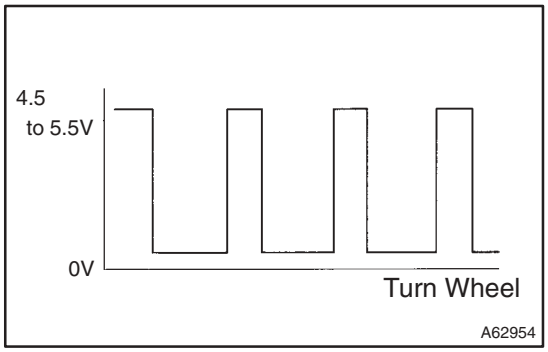

(a) Shift the transmission gear selector lever to the neutral position.
(b) Jack up the vehicle.
(c) Turn the ignition switch to ON.
(d) Measure the voltage between the terminals of the E10 and E13 ECM connectors as the wheel is turned slowly.
Standard:

Tester Connection	Specified Condition
SPD (E10–17) – E1 (E13–5)	Generated intermittently

HINT:
The output voltage should fluctuate up and down similarly to the diagram on the left when the wheel is turned slowly.

NG → **REPAIR OR REPLACE HARNESS OR CONNECTOR**

OK

REPLACE ECM (See page 10–65 of Pub. No. RM1018E AVENSIS)

DTC	P0504	BRAKE SWITCH ”A”/”B” CORRELATION

CIRCUIT DESCRIPTION

In this system, the signal of the stop lamp switch is used to judge whether the brake system is abnormal or not.

The stop lamp switch has a duplex system (signals STP and ST1–) to detect abnormalities. When the signals of depressing and releasing the brake pedal are detected simultaneously, the ECM interprets this as a malfunction of the stop lamp switch.

HINT:

Normal condition is as shown in the table.

Signal	Brake Pedal Released	In Transition	Brake Pedal Depressed
STP	OFF	ON	ON
ST1–	ON	ON	OFF

DTC No.	DTC Detection Condition	Trouble Area
P0504	Conditions (a), (b) and (c) continue for 0.5 seconds or more: (a) Ignition switch ON (b) Brake pedal released (c) STP signal is OFF when the ST1– signal is OFF	• Short in stop lamp switch signal circuit • Stop lamp fuse • Stop lamp switch • ECM

WIRING DIAGRAM

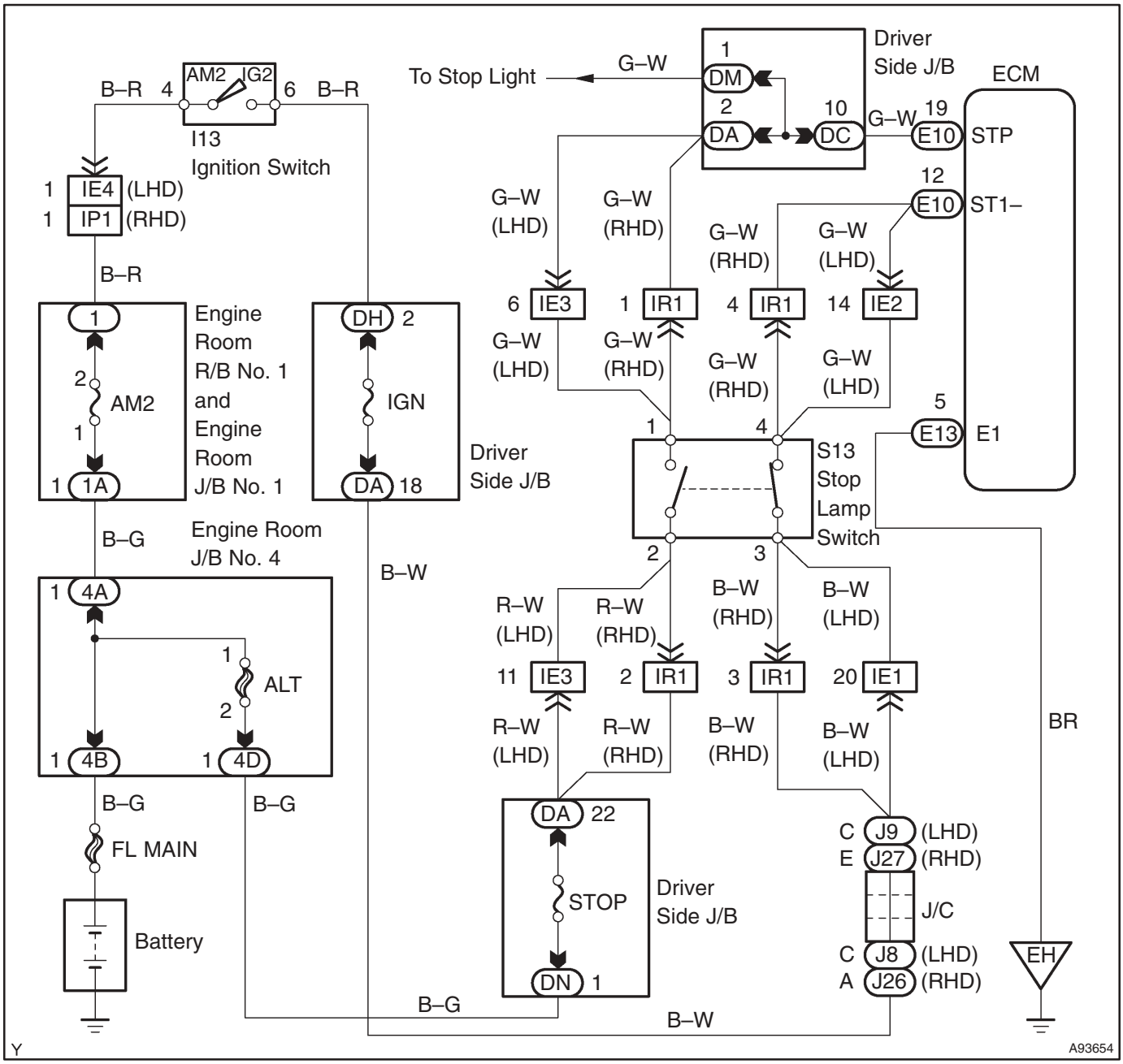

INSPECTION PROCEDURE

HINT:

Read freeze frame data using the intelligent tester II. Freeze frame data record the engine condition when malfunctions are detected. When troubleshooting, freeze frame data can help determine if the vehicle was moving or stationary, if the engine was warmed up or not, if the air–fuel ratio was lean or rich, and other data from the time the malfunction occurred.

1 CHECK OPERATION OF STOP LAMP

(a) Check if the stop lamps go on and off normally when the brake pedal is depressed and released.
OK: The stop lamps turn ON when you depress the brake pedal.

NG → **REPAIR OR REPLACE STOP LAMP SWITCH CIRCUIT**

OK

2 INSPECT STOP LAMP SWITCH ASSY

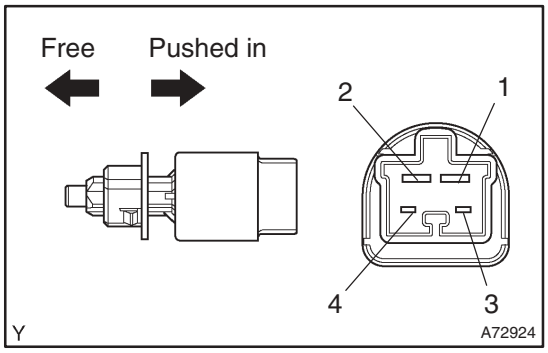

(a) Check the resistance between each pair of terminals.
Standard:

Switch Position	Tester Connection	Specified Condition
Switch pin free	1 – 2	Below 1 Ω
Switch pin free	3 – 4	10 kΩ or higher
Switch pin pushed in	1 – 2	10 kΩ or higher
Switch pin pushed in	3 – 4	Below 1 Ω

NG → **REPLACE STOP LAMP SWITCH ASSY**

OK

3 READ VALUE OF INTELLIGENT TESTER II(STP SIGNAL AND ST1– VOLTAGE)

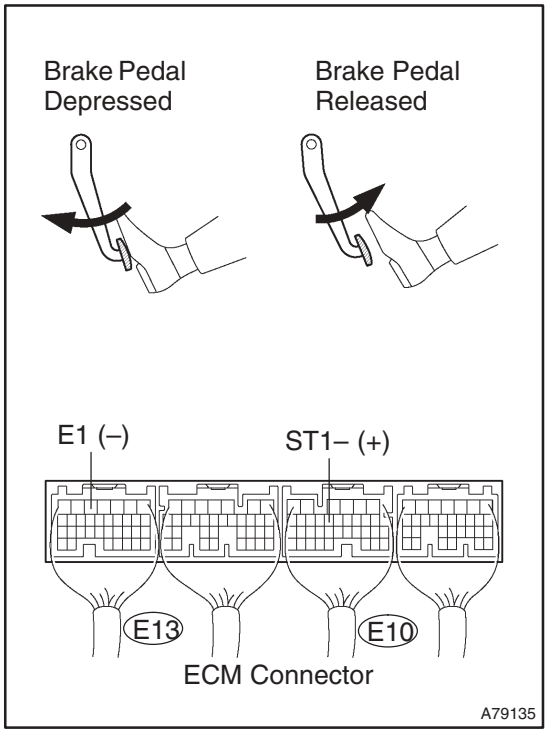

(a) Connect the intelligent tester II to the DLC3.
(b) Turn the ignition switch to ON and turn the intelligent tester II ON.
(c) Select the following menu items: Powertrain / Engine and ECT / Data List / Stop Light SW.
(d) Check the result.
Standard:

Brake Pedal	Specified Condition
Depressed	STP Signal ON
Released	STP Signal OFF

(e) Measure the voltage between the specified terminals of the E10 and E13 ECM connectors.
Standard:

Tester Connection	Brake Pedal	Specified Condition
ST1– (E10–12) – E1 (E13–5)	Depressed	Below 1.5 V
ST1– (E10–12) – E1 (E13–5)	Released	7.5 to 14 V

OK → **CHECK FOR INTERMITTENT PROBLEMS (See page 05–9)**

NG

4 CHECK HARNESS AND CONNECTOR(STOP LAMP SWITCH – ECM)

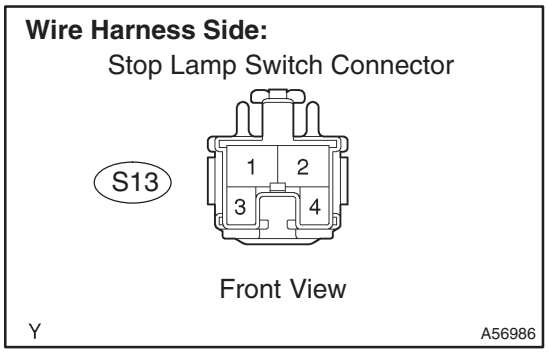

(a) Disconnect the S13 stop lamp switch connector.
(b) Disconnect the E10 ECM connector.
(c) Check the resistance.

Standard (Check for open):

Tester Connection	Specified Condition
Stop lamp switch (S13–1) – STP (E10–19)	Below 1 Ω
Stop lamp switch (S13–4) – ST1– (E10–12)	Below 1 Ω

(d) Reconnect the stop lamp switch connector.
(e) Reconnect the ECM connector.

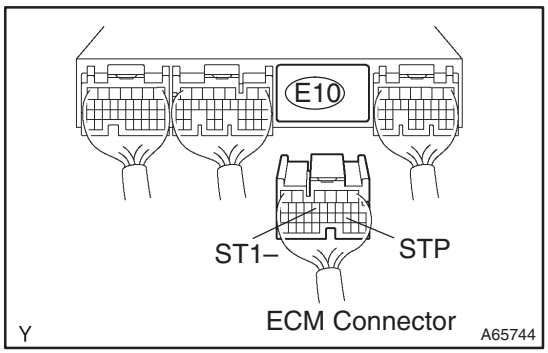

NG → **REPAIR OR REPLACE HARNESS OR CONNECTOR**

OK

REPLACE ECM (See page 10–65 of Pub. No. RM1018E AVENSIS)

DTC P0505 IDLE AIR CONTROL SYSTEM

CIRCUIT DESCRIPTION

The idle speed is controlled by the ETCS (Electronic Throttle Control System).
The ETCS is composed of the throttle actuator which operates the throttle valve, and the throttle position sensor which detects an opening angle of the throttle valve.
The ECM controls the throttle motor to provide the proper throttle valve opening angle to obtain the target idling speed.

DTC No.	DTC Detection Condition	Trouble Area
P0505	Idling speed continues to vary greatly from target speed (2 trip detection logic)	• Electronic throttle control system • Air induction system • PCV hose connection

INSPECTION PROCEDURE

HINT:
Read freeze frame data using the intelligent tester II. Freeze frame data record the engine condition when malfunctions are detected. When troubleshooting, freeze frame data can help determine if the vehicle was moving or stationary, if the engine was warmed up or not, if the air–fuel ratio was lean or rich, and other data from the time the malfunction occurred.

1 CHECK OTHER DTC OUTPUT(IN ADDITION TO DTC P0505)

(a) Connect the intelligent tester II to the DLC3.
(b) Turn the ignition switch to ON and turn the intelligent tester ll ON.
(c) Select the following menu items: Powertrain / Engine and ECT / DTC.
(d) Read DTCs.

Result:

Display (DTC Output)	Proceed To
P0505	A
P0505 and other DTCs	B

HINT:
If any DTCs other than P0505 are output, troubleshoot those DTCs first.

B → **GO TO RELEVANT DTC CHART (See page 05–27)**

A

2 CHECK CONNECTION OF PCV HOSE

OK: The PCV hose is connected correctly and not damaged.

NG → **REPAIR OR REPLACE PCV HOSE**

OK

3	CHECK AIR INDUCTION SYSTEM

(a) Check for vacuum leaks in the air induction system.
OK: No leak in the air induction system.

NG → **REPAIR OR REPLACE AIR INDUCTION SYSTEM**

OK

CHECK ELECTRONIC THROTTLE CONTROL SYSTEM (See page 10–1)

DTC	P0560	SYSTEM VOLTAGE

CIRCUIT DESCRIPTION

The battery supplies electricity to terminal BATT of the ECM even when the ignition switch is OFF. This electricity allows the ECM to store DTC histories, freeze frame data, fuel trim values, and other data.

DTC No.	DTC Detection Condition	Trouble Area
P0560	Open in backup power source circuit	• Open in backup power source circuit • ECM

HINT:
If DTC P0560 is set, the ECM does not store other DTCs.

WIRING DIAGRAM

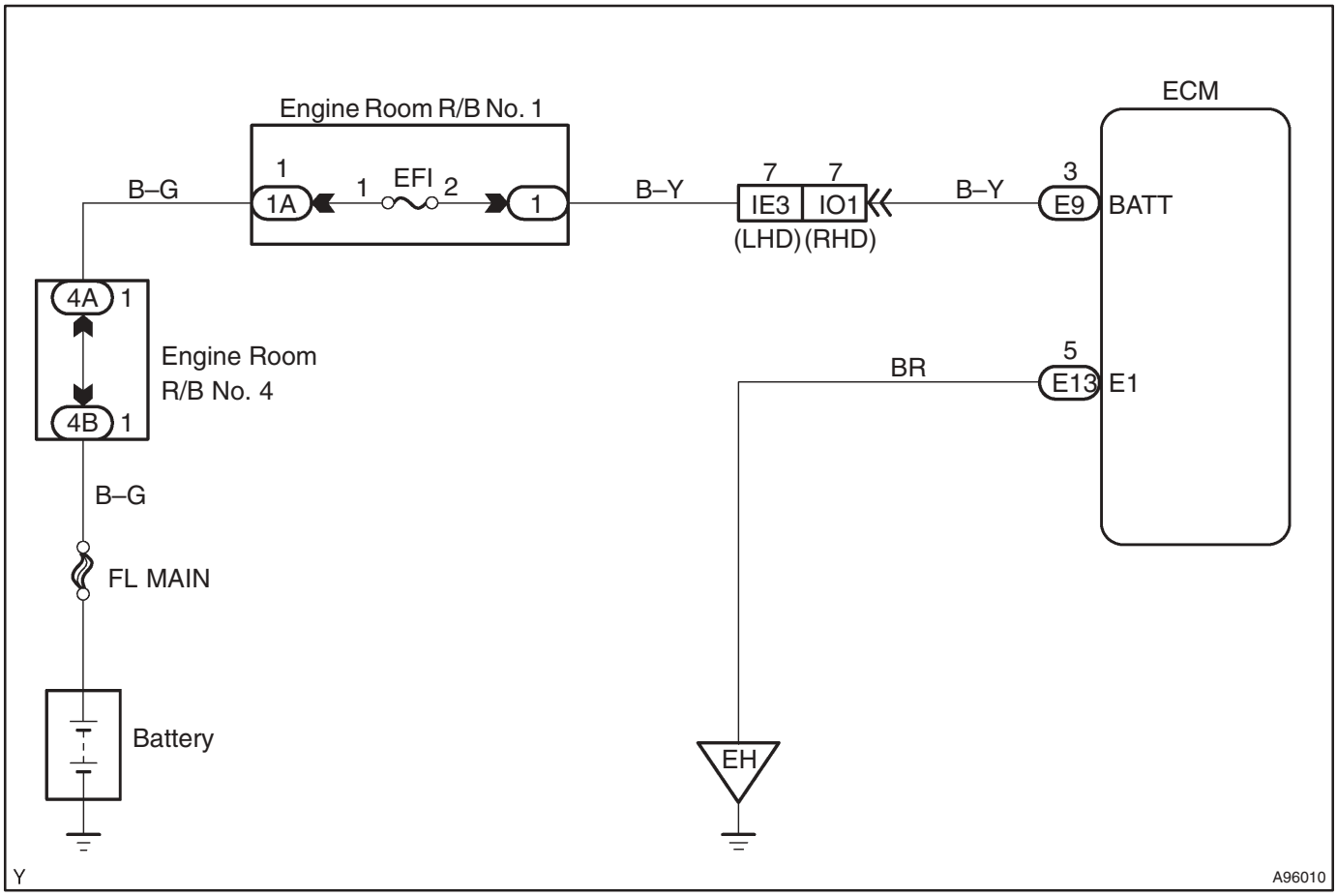

INSPECTION PROCEDURE

HINT:
Read freeze frame data using the intelligent tester II. Freeze frame data record the engine condition when malfunctions are detected. When troubleshooting, freeze frame data can help determine if the vehicle was moving or stationary, if the engine was warmed up or not, if the air–fuel ratio was lean or rich, and other data from the time the malfunction occurred.

1 CHECK FUSE(EFI FUSE)

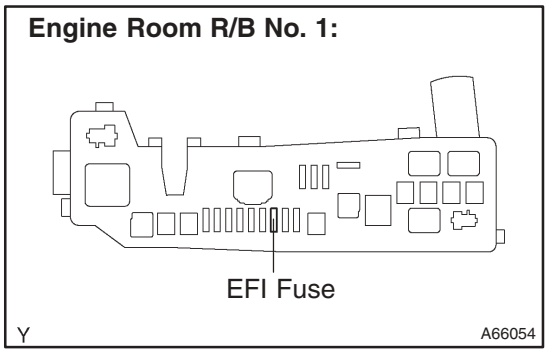

(a) Remove the EFI fuse from the engine room R/B No. 1.
(b) Check the EFI fuse resistance.
Standard: Below 1 Ω
(c) Reinstall the EFI fuse.

NG → **CHECK FOR SHORT IN ALL HARNESSES AND COMPONENTS CONNECTED TO FUSE**

OK

2 INSPECT ECM(BATT VOLTAGE)

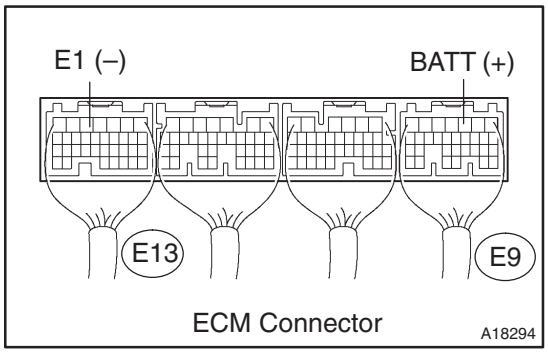

(a) Measure the voltage between the terminals of the E9 and E13 ECM connectors.
Standard:

Tester Connection	Specified Condition
BATT (E9–3) – E1 (E13–5)	9 to 14 V

OK → **REPLACE ECM (See page 10–65 of Pub. No. RM1018E AVENSIS)**

NG

3 CHECK HARNESS AND CONNECTOR(ECM – EFI FUSE, EFI FUSE – BATTERY)

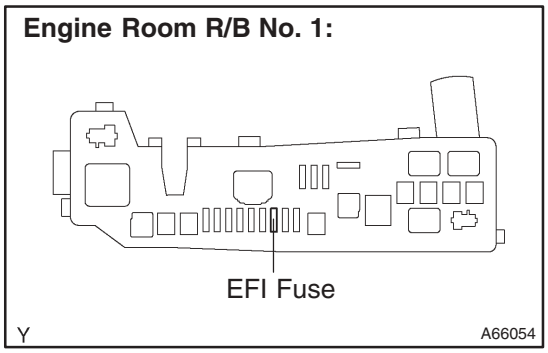

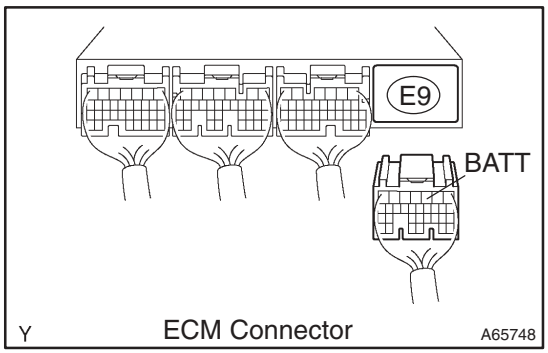

(a) Check the harness and the connectors between the EFI fuse and ECM.
   (1) Remove the EFI fuse from the engine room R/B No. 1.
   (2) Disconnect the E9 ECM connector.
   (3) Check the resistance.

Standard (Check for open):

Tester Connection	Specified Condition
EFI fuse (2) – BATT (E9–3)	Below 1 Ω

Standard (Check for short):

Tester Connection	Specified Condition
EFI fuse (2) or BATT (E9–3) – Body ground	10 kΩ or higher

   (4) Reinstall the EFI fuse.
   (5) Reconnect the ECM connector.

(b) Check the harness and the connector between the EFI fuse and battery.
   (1) Remove the EFI fuse from the engine room R/B No. 1.
   (2) Disconnect the positive battery cable.
   (3) Check the resistance.

Standard (Check for open):

Tester Connection	Specified Condition
Positive battery cable terminal – EFI fuse (1)	Below 1 Ω

Standard (Check for short):

Tester Connection	Specified Condition
Positive battery cable terminal or EFI fuse (1) – Body ground	10 kΩ or higher

   (4) Reinstall the EFI fuse.
   (5) Reconnect the positive battery cable.

NG → **REPAIR OR REPLACE HARNESS OR CONNECTOR**

OK

CHECK AND REPLACE ENGINE ROOM RELAY BLOCK

DTC	P0604	INTERNAL CONTROL MODULE RANDOM ACCESS MEMORY (RAM) ERROR

DTC	P0606	ECM/PCM PROCESSOR

DTC	P0607	CONTROL MODULE PERFORMANCE

DTC	P0657	ACTUATOR SUPPLY VOLTAGE CIRCUIT/OPEN

CIRCUIT DESCRIPTION

The ECM continuously monitors its internal memory status, internal circuits, and output signals to the throttle actuator. This self–check ensures that the ECM is functioning properly. If any malfunction is detected, the ECM will set appropriate DTCs and illuminate the MIL.
The ECM memory status is diagnosed by internal ”mirroring” of the main CPU and the sub CPU to detect Random Access Memory (RAM) errors. The two CPUs also perform continuous mutual monitoring.

DTC No.	DTC Detection Condition	Trouble Area
P0604 P0606 P0607 P0657	ECM internal error	• ECM

INSPECTION PROCEDURE

HINT:
Read freeze frame data using the intelligent tester II. Freeze frame data record the engine condition when malfunctions are detected. When troubleshooting, freeze frame data can help determine if the vehicle was moving or stationary, if the engine was warmed up or not, if the air–fuel ratio was lean or rich, and other data from the time the malfunction occurred.

REPLACE ECM (See page 10–65 of Pub. No. RM1018E AVENSIS)

DTC	P0617	STARTER RELAY CIRCUIT HIGH

CIRCUIT DESCRIPTION

While the engine is being cranked, the positive battery voltage is applied to terminal STA of the ECM.

DTC No.	DTC Detection Condition	Trouble Area
P0617	When conditions (a), (b) and (c) are met when the battery voltage of 10.5 V or more is applied for 20 seconds (a) Vehicle speed greater than 20 km/h (12 mph) (b) Engine RPM greater than 1,000 rpm (c) STA signal ON	• Short in park/neutral position switch circuit (MMT) • Short in STA circuit • Park/neutral position switch (MMT) • ECM

WIRING DIAGRAM

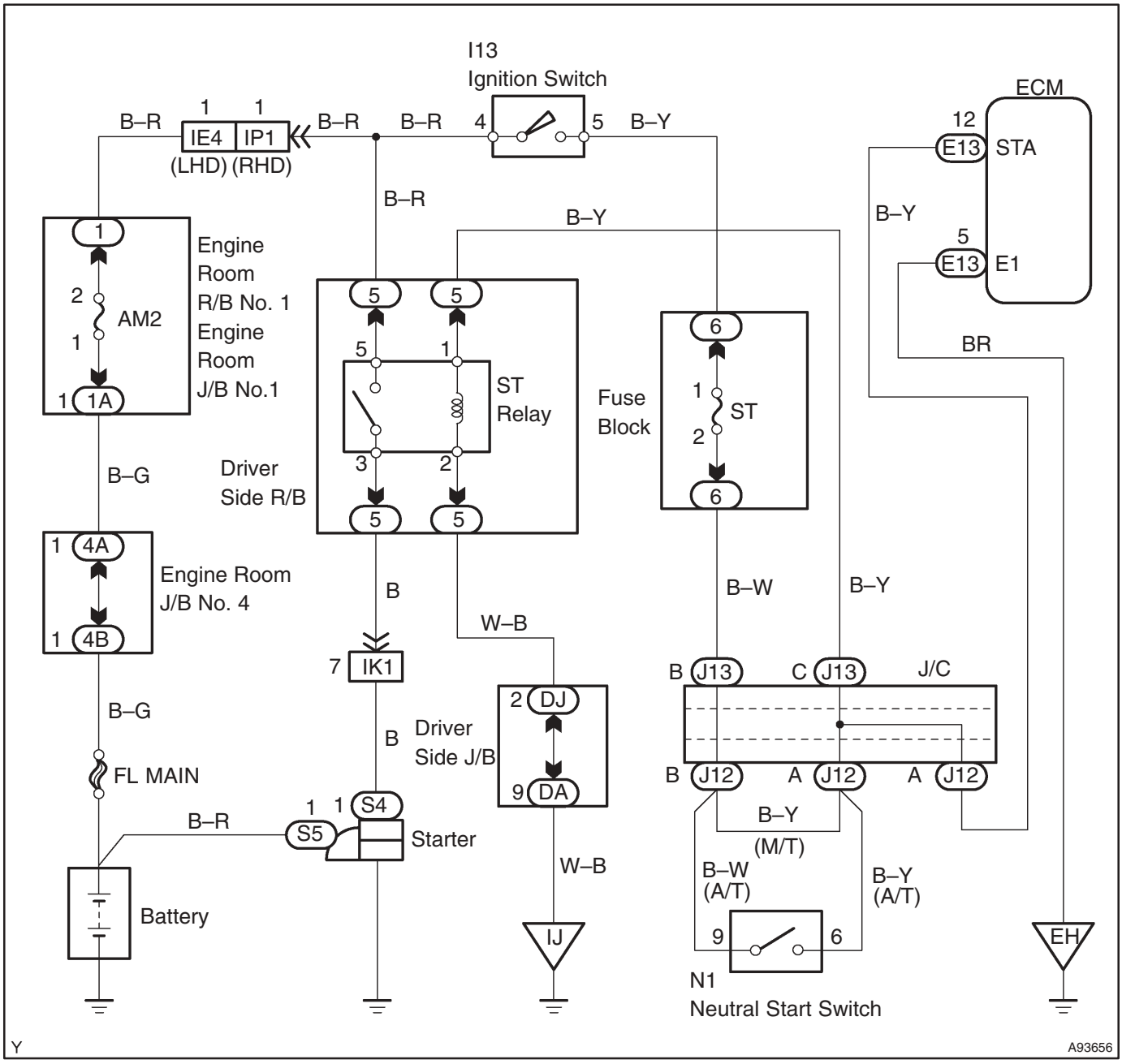

INSPECTION PROCEDURE

HINT:

Read freeze frame data using the intelligent tester II. Freeze frame data record the engine condition when malfunctions are detected. When troubleshooting, freeze frame data can help determine if the vehicle was moving or stationary, if the engine was warmed up or not, if the air–fuel ratio was lean or rich, and other data from the time the malfunction occurred.

1	READ VALUE OF INTELLIGENT TESTER II(STA SIGNAL)

(a) Connect the intelligent tester ll to the DLC3.
(b) Turn the ignition switch to ON and turn the intelligent tester ll ON.
(c) Select the following menu items: Powertrain / Engine and ECT / Data List / Starter SIG.
(d) Check the result when the ignition switch is turned to the ON and START positions.

Standard:

Ignition Switch Position	ON	START
STARTER SIG	OFF	ON

OK → **PROCEED TO NEXT CIRCUIT INSPECTION SHOWN ON PROBLEM SYMPTOMS TABLE (See page 05–12)**

NG

2 CHECK HARNESS AND CONNECTOR(ECM – ST RELAY)

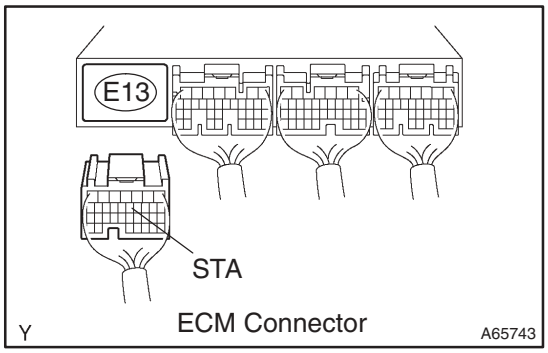

(a) Disconnect the E13 ECM connector.
(b) Remove the ST relay from the driver side R/B.
(c) Check the resistance.

Standard (Check for open):

Tester Connection	Specified Condition
ST relay (1) – STA (E13–12)	Below 1 Ω

Standard (Check for short):

Tester Connection	Specified Condition
ST relay (1) or STA (E13–12) – Body ground	10 kΩ or higher

(d) Reconnect the ECM connector.
(e) Reinstall the ST relay.

Driver Side R/B LHD:

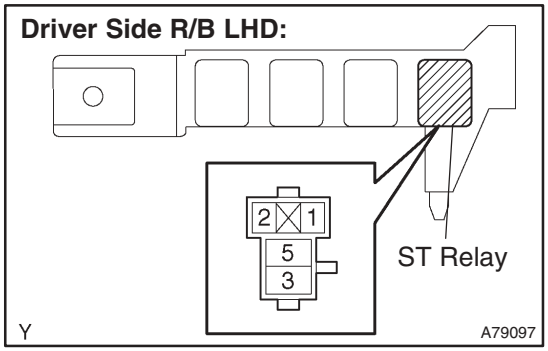

Driver Side R/B RHD:

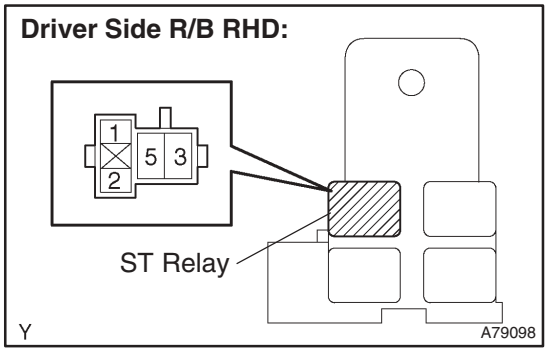

NG → **REPAIR OR REPLACE HARNESS OR CONNECTOR**

OK

REPLACE ECM (See page 10–65 of Pub. No. RM1018E AVENSIS)

DTC	P2102	THROTTLE ACTUATOR CONTROL MOTOR CIRCUIT LOW

DTC	P2103	THROTTLE ACTUATOR CONTROL MOTOR CIRCUIT HIGH

CIRCUIT DESCRIPTION

The throttle actuator is operated by the ECM and it opens and closes the throttle valve.
The opening angle of the throttle valve is detected by the throttle position sensor which is mounted on the throttle body. It provides feedback to the ECM to control the throttle actuator in order to control the throttle valve opening angle properly in response to the driving condition.
If this malfunction is detected, the ECM shuts down the power for the throttle actuator, and the throttle valve is locked at a certain angle by the return spring. Also, the whole electronically controlled throttle operation is cancelled until the system returns to normal and the ignition switch is turned to OFF.
HINT:
This ETCS (Electronic Throttle Control System) does not use a throttle cable.

DTC No.	DTC Detection Condition	Trouble Area
P2102	Conditions (a) and (b) continue for 2.0 seconds (1 trip detection logic): (a) Throttle actuator output duty ratio is 80 % or more (b) Throttle actuator current is 0.5 A or less	• Open in throttle actuator circuit • Throttle actuator • ECM
P2103	Either of following conditions is met (1 trip detection logic): • Throttle actuator current is 10 A or more for 0.1 seconds • Throttle actuator current is 7A or more for 0.6 seconds	• Short in throttle actuator circuit • Throttle actuator • Throttle valve • Throttle body assembly • ECM

WIRING DIAGRAM

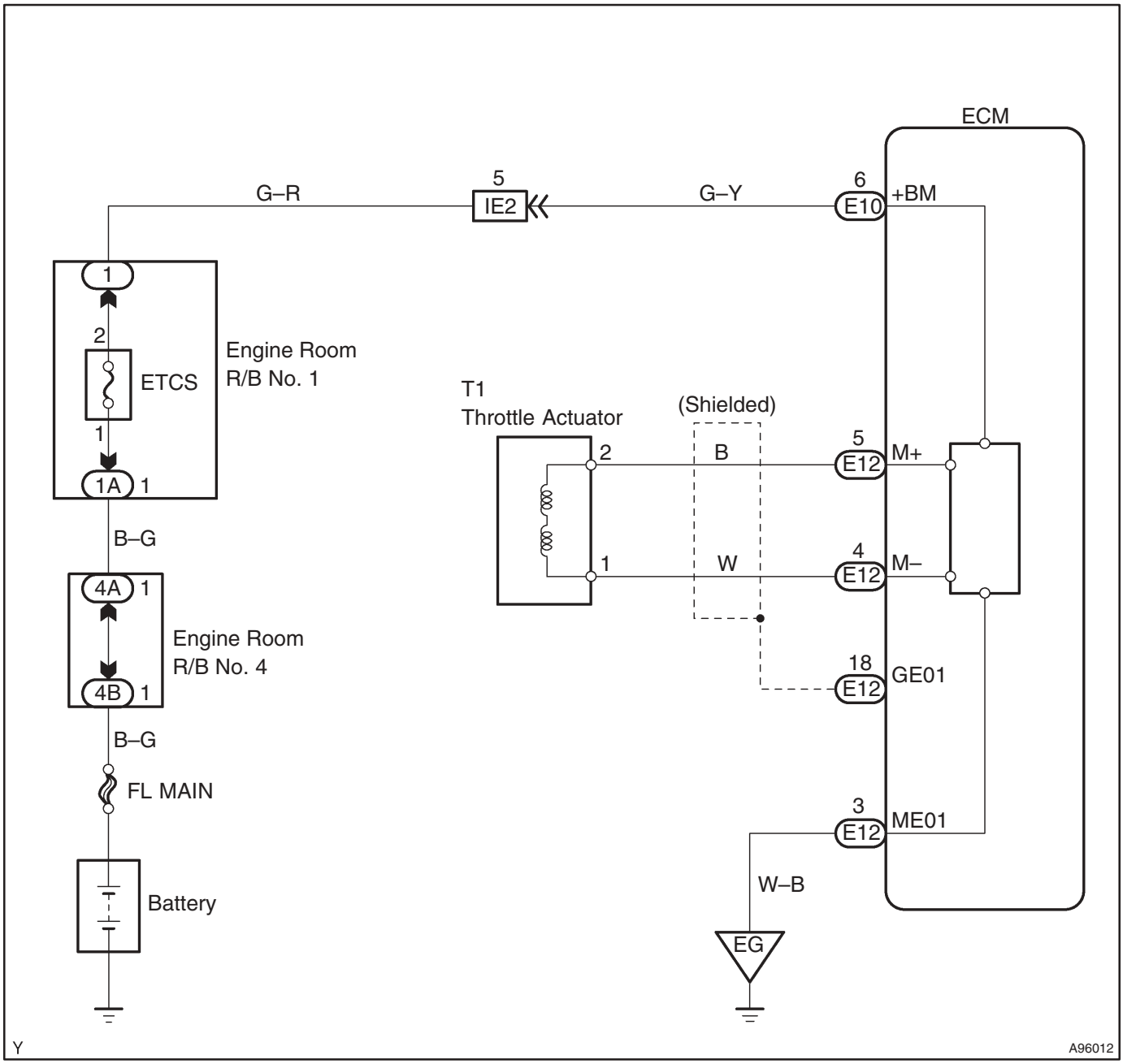

INSPECTION PROCEDURE

HINT:

Read freeze frame data using the intelligent tester II. Freeze frame data record the engine condition when malfunctions are detected. When troubleshooting, freeze frame data can help determine if the vehicle was moving or stationary, if the engine was warmed up or not, if the air–fuel ratio was lean or rich, and other data from the time the malfunction occurred.

1 INSPECT THROTTLE BODY ASSY(RESISTANCE OF THROTTLE ACTUATOR)

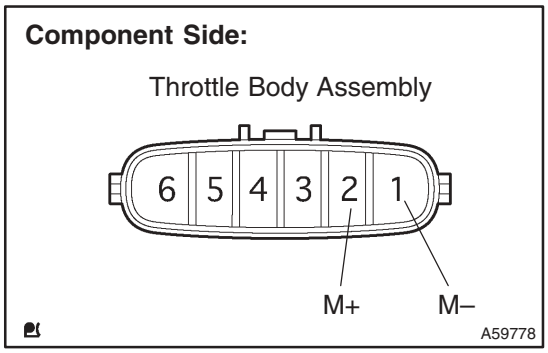

(a) Disconnect the T1 throttle body connector.
(b) Measure the resistance between the terminals of the throttle actuator.
Standard:

Tester Connection	Specified Condition
M+ (T1–2) – M– (T1–1)	0.3 to 100 Ω at 20°C (68°F)

(c) Reconnect the throttle body connector.

NG → **REPLACE THROTTLE BODY ASSY (See page 10–6)**

OK

2 CHECK HARNESS AND CONNECTOR(THROTTLE ACTUATOR – ECM)

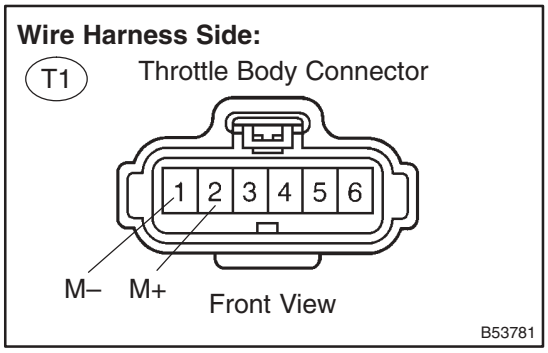

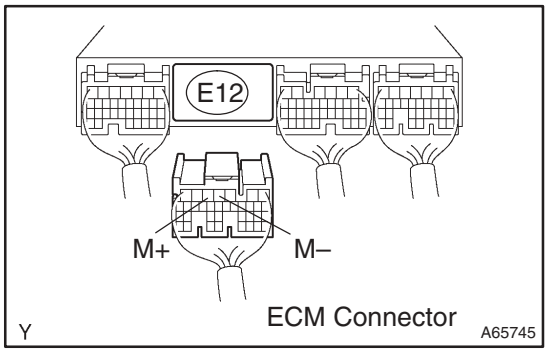

(a) Disconnect the T1 throttle body connector.
(b) Disconnect the E12 ECM connector.
(c) Check the resistance.
Standard (Check for open):

Tester Connection	Specified Condition
M+ (T1–2) – M+ (E12–5)	Below 1 Ω
M– (T1–1) – M– (E12–4)	Below 1 Ω

Standard (Check for short):

Tester Connection	Specified Condition
M+ (T1–2) or M+ (E12–5) – Body ground	10 kΩ or higher
M– (T1–1) or M– (E12–4) – Body ground	10 kΩ or higher

(d) Reconnect the throttle body connector.
(e) Reconnect the ECM connector.

NG → **REPAIR OR REPLACE HARNESS OR CONNECTOR**

OK

3 INSPECT THROTTLE BODY ASSY

(a) Visually check for foreign objects between the throttle valve and the housing.
Also, check if the valve can open and close smoothly.
OK: The throttle valve is not contaminated with foreign objects and can move smoothly.

NG → **REMOVE FOREIGN OBJECT AND CLEAN THROTTLE BODY**

OK

REPLACE ECM (See page 10–65 of Pub. No. RM1018E AVENSIS)

DTC	P2111	THROTTLE ACTUATOR CONTROL SYSTEM – STUCK OPEN

DTC	P2112	THROTTLE ACTUATOR CONTROL SYSTEM – STUCK CLOSED

CIRCUIT DESCRIPTION

The throttle actuator is operated by the ECM and it opens and closes the throttle valve using gears. The opening angle of the throttle valve is detected by the throttle position sensor which is mounted on the throttle body. And, it provides feedback to the ECM to control the throttle actuator in order to control the throttle valve opening angle properly in response to the driving condition. If this malfunction is detected, the ECM shuts down the power for the throttle actuator, and the throttle valve is locked at a certain angle by the return spring. Also, the whole electronically controlled throttle operation is cancelled until the system returns to normal and the ignition switch is turned to OFF.

HINT:

This ETCS (Electronic Throttle Control System) does not use a throttle cable.

DTC No.	DTC Detection Condition	Trouble Area
P2111	Throttle actuator locked during ECM ordering it to close (1 trip detection logic)	• Throttle actuator • Throttle body assembly • Throttle valve
P2112	Throttle actuator locked during ECM ordering it to open (1 trip detection logic)	• Throttle actuator • Throttle body assembly • Throttle valve

WIRING DIAGRAM

Refer to DTC P2102 on page 05–174.

INSPECTION PROCEDURE

HINT:

Read freeze frame data using the intelligent tester II. Freeze frame data record the engine condition when malfunctions are detected. When troubleshooting, freeze frame data can help determine if the vehicle was moving or stationary, if the engine was warmed up or not, if the air–fuel ratio was lean or rich, and other data from the time the malfunction occurred.

1	CHECK OTHER DTC OUTPUT(IN ADDITION TO DTC P2111 AND/OR P2112)

(a) Connect the intelligent tester II to the DLC3.
(b) Turn the ignition switch to ON and turn the intelligent tester II ON.
(c) Select the following menu items: Powertrain / Engine and ECT / DTC.
(d) Read DTCs.

Result:

Display (DTC Output)	Proceed To
P2111 or P2112	A
P2111 or P2112 and other DTCs	B

HINT:

If any DTCs other than P2111 or P2112 are output, troubleshoot those DTCs first.

B → **GO TO RELEVANT DTC CHART (See page 05–27)**

A

2	INSPECT THROTTLE BODY ASSY(VISUALLY CHECK THROTTLE VALVE)

(a) Check for contamination between the throttle valve and the housing. If necessary, clean the throttle body. And check that the throttle valve moves smoothly.
OK: The throttle valve is not contaminated with foreign objects and can move smoothly.

NG → **REPLACE THROTTLE BODY ASSY (See page 10–6)**

OK

3	CHECK IF DTC OUTPUT RECURS(DTC P2111 AND/OR P2112)

(a) Clear the DTC(s) (see page 05–18).
(b) Start the engine, and depress and release the accelerator pedal quickly (to fully open and fully close the throttle valve).
(c) Connect the intelligent tester II to the DLC3.
(d) Turn the ignition switch to ON and turn the intelligent tester II ON.
(e) Select the following menu items: Powertrain / Engine and ECT / DTC.
(f) Read DTCs.
Result:

Display (DTC Output)	Proceed To
No DTC	A
P2111 and/or P2112	B

B → **REPLACE ECM (See page 10–65 of Pub. No. RM1018E AVENSIS)**

A

CHECK FOR INTERMITTENT PROBLEMS (See page 05–9)

DTC	P2118	THROTTLE ACTUATOR CONTROL MOTOR CURRENT RANGE/PERFORMANCE

CIRCUIT DESCRIPTION

The ETCS (Electronic Throttle Control System) has a dedicated power supply circuit. The voltage (+BM) is monitored and when the voltage is low (less than 4 V), the ECM concludes that the ETCS has a fault and a current to the throttle actuator is cut.
When the voltage becomes unstable, the ETCS becomes unstable. For this reason, when the voltage is low, the current to the actuator is cut. If repairs are made and the system has returned to normal, turn the ignition switch to OFF. The ECM then allows the current to flow to the actuator and the actuator can be restarted.
HINT:
This ETCS does not use a throttle cable.

DTC No.	DTC Detection Condition	Trouble Area
P2118	Open in ETCS power source circuit	• Open in ETCS power source circuit • ETCS fuse • ECM

WIRING DIAGRAM

Refer to DTC P2102 on page 05–174.

INSPECTION PROCEDURE

HINT:
Read freeze frame data using the intelligent tester II. Freeze frame data record the engine condition when malfunctions are detected. When troubleshooting, freeze frame data can help determine if the vehicle was moving or stationary, if the engine was warmed up or not, if the air–fuel ratio was lean or rich, and other data from the time the malfunction occurred.

1	CHECK FUSE(ETCS FUSE)

Engine Room R/B No. 1:

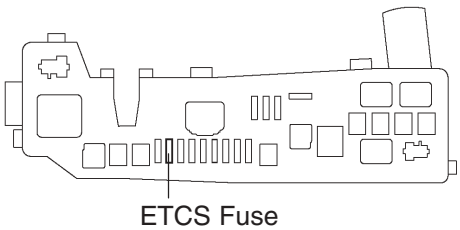

Y A82233

(a) Remove the ETCS fuse from the engine room R/B No. 1.
(b) Check the ETCS fuse resistance.
Standard: Below 1 Ω
(c) Reinstall the ETCS fuse.

NG → **CHECK FOR SHORT IN ALL HARNESSES AND COMPONENTS CONNECTED TO FUSE**

OK

2 INSPECT ECM(+BM VOLTAGE)

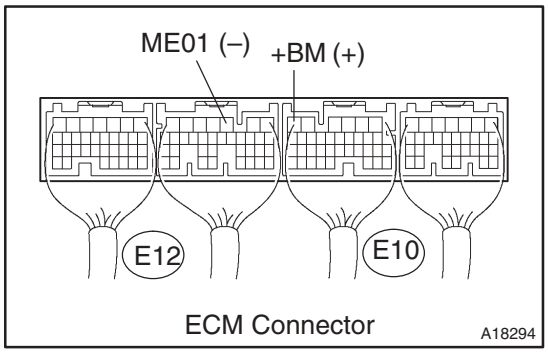

(a) Measure the voltage between the specified terminals of the E10 and E12 ECM connectors.

Standard:

Tester Connection	Specified Condition
+BM (E10–6) – ME01 (E12–3)	9 to 14 V

OK → **REPLACE ECM (See page 10–65 of Pub. No. RM1018E AVENSIS)**

NG

3	CHECK HARNESS AND CONNECTOR(ECM – ETCS FUSE, ETCS FUSE – BATTERY)

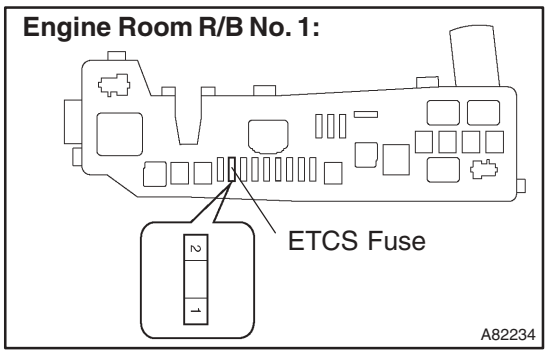

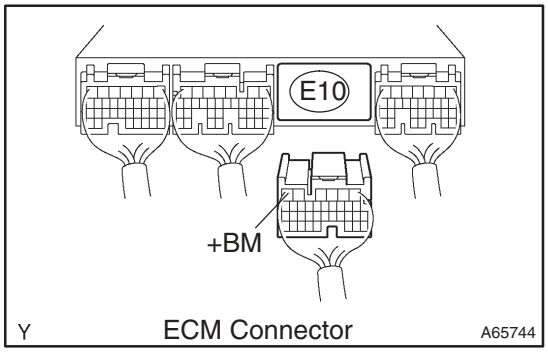

(a) Check the harness and connectors between the ETCS fuse and ECM.
  (1) Remove the ETCS fuse from the engine room R/B No. 1.
  (2) Disconnect the E10 ECM connector.
  (3) Check the resistance.

Standard (Check for open):

Tester Connection	Specified Condition
ETCS fuse (2) – +BM (E10–6)	Below 1 Ω

Standard (Check for short):

Tester Connection	Specified Condition
ETCS fuse (2) or +BM (E10–6) – Body ground	10 kΩ or higher

  (4) Reinstall the ETCS fuse.
  (5) Reconnect the ECM connector.

(b) Check the harness and connector between the ETCS fuse and positive battery cable.
  (1) Remove the ETCS fuse from the engine room R/B No. 1.
  (2) Disconnect the positive battery cable.
  (3) Check the resistance.

Standard (Check for open):

Tester Connection	Specified Condition
Positive battery cable terminal – ETCS fuse (1)	Below 1 Ω

Standard (Check for short):

Tester Connection	Specified Condition
Positive battery cable terminal or ETCS fuse (1) – Body ground	10 kΩ or higher

  (4) Reinstall the ETCS fuse.
  (5) Reconnect the positive battery cable.

NG → **REPAIR OR REPLACE HARNESS OR CONNECTOR**

OK

CHECK AND REPLACE ENGINE ROOM RELAY BLOCK

DTC	P2119	THROTTLE ACTUATOR CONTROL THROTTLE BODY RANGE/PERFORMANCE

CIRCUIT DESCRIPTION

The ETCS (Electronic Throttle Control System) is composed of the throttle actuator, the Throttle Position (TP) sensor, the Accelerator Pedal Position (APP) sensor, and the ECM. This system is the one valve type throttle body. In order to deliver the proper opening angle of the throttle valve in response to the driving condition, the TP sensor mounted on the throttle body detects the actual throttle valve opening angle, and provides feedback for the ECM in order that the ECM controls the actuator.
If the ETCS has a malfunction, the ECM shuts down the power for the actuator, and the throttle valve is locked at a certain angle by the return spring. Also, the whole electronically controlled throttle operation is cancelled until the system returns to normal and the ignition switch is turned to OFF.

DTC No.	DTC Detection Condition	Trouble Area
P2119	Throttle valve opening angle continues to vary greatly from target opening angle	• Electronic throttle control system • ECM

WIRING DIAGRAM

Refer to DTC P2102 on page 05–174.

INSPECTION PROCEDURE

HINT:
Read freeze frame data using the intelligent tester II. Freeze frame data record the engine condition when malfunctions are detected. When troubleshooting, freeze frame data can help determine if the vehicle was moving or stationary, if the engine was warmed up or not, if the air–fuel ratio was lean or rich, and other data from the time the malfunction occurred.

1	CHECK OTHER DTC OUTPUT(IN ADDITION TO DTC P2119)

(a) Connect the intelligent tester II to the DLC3.
(b) Turn the ignition switch to ON and turn the intelligent tester II ON.
(c) Select the following menu items: Powertrain / Engine and ECT / DTC.
(d) Read DTCs.
Result:

Display (DTC Output)	Proceed To
P2119	A
P2119 and other DTCs	B

HINT:
If any DTCs other than P2119 are output, troubleshoot those DTCs first.

B → GO TO RELEVANT DTC CHART (See page 05–27)

A

2	CHECK IF DTC OUTPUT RECURS(DTC P2119)

(a) Clear the DTC(s) (see page 05–18).
(b) Allow the engine to idle for 15 seconds.
(c) Securely apply the parking brake, and place the shift position in D.
(d) Depress the brake pedal securely and the accelerator pedal fully for 5 seconds.
(e) Connect the intelligent tester II to the DLC3.
(f) Turn the ignition switch to ON and turn the intelligent tester ll ON.
(g) Select the following menu items: Powertrain / Engine and ECT / DTC.
(h) Read DTCs.

HINT:
Actual throttle valve angle can be confirmed in Throttle POS under the Data List menus on the intelligent tester II.

OK: No DTC output.

NG → **REPLACE THROTTLE BODY ASSY (See page 10–6)**

OK

NORMAL

DTC	P2120	THROTTLE/PEDAL POSITION SENSOR/SWITCH ”D” CIRCUIT

DTC	P2122	THROTTLE/PEDAL POSITION SENSOR/SWITCH ”D” CIRCUIT LOW INPUT

DTC	P2123	THROTTLE/PEDAL POSITION SENSOR/SWITCH ”D” CIRCUIT HIGH INPUT

DTC	P2125	THROTTLE/PEDAL POSITION SENSOR/SWITCH ”E” CIRCUIT

DTC	P2127	THROTTLE/PEDAL POSITION SENSOR/SWITCH ”E” CIRCUIT LOW INPUT

DTC	P2128	THROTTLE/PEDAL POSITION SENSOR/SWITCH ”E” CIRCUIT HIGH INPUT

DTC	P2138	THROTTLE/PEDAL POSITION SENSOR/SWITCH ”D”/”E” VOLTAGE CORRELATION

HINT:
These DTCs are related to the accelerator pedal position sensor.

CIRCUIT DESCRIPTION

The accelerator pedal position sensor is mounted on the accelerator pedal bracket and it has the 2 sensors to detect the accelerator position and malfunctions of the accelerator position sensor itself.
In the accelerator pedal position sensor, the voltage applied to pedal terminals VPA1 and VPA2 of the ECM changes between 0 V and 5 V in proportion to the opening angle of the accelerator pedal. The VPA1 is a signal to indicate the actual accelerator pedal opening angle which is used for engine control, and the VPA2 is a signal to indicate the information about the opening angle which is used for detecting a malfunction in the sensor itself.
The ECM judges the current accelerator pedal opening angle with the signals from pedal terminals VPA1 and VPA2, and the ECM controls the throttle motor based on these signals.
HINT:
This ETCS (Electronic Throttle Control System) does not use a throttle cable.

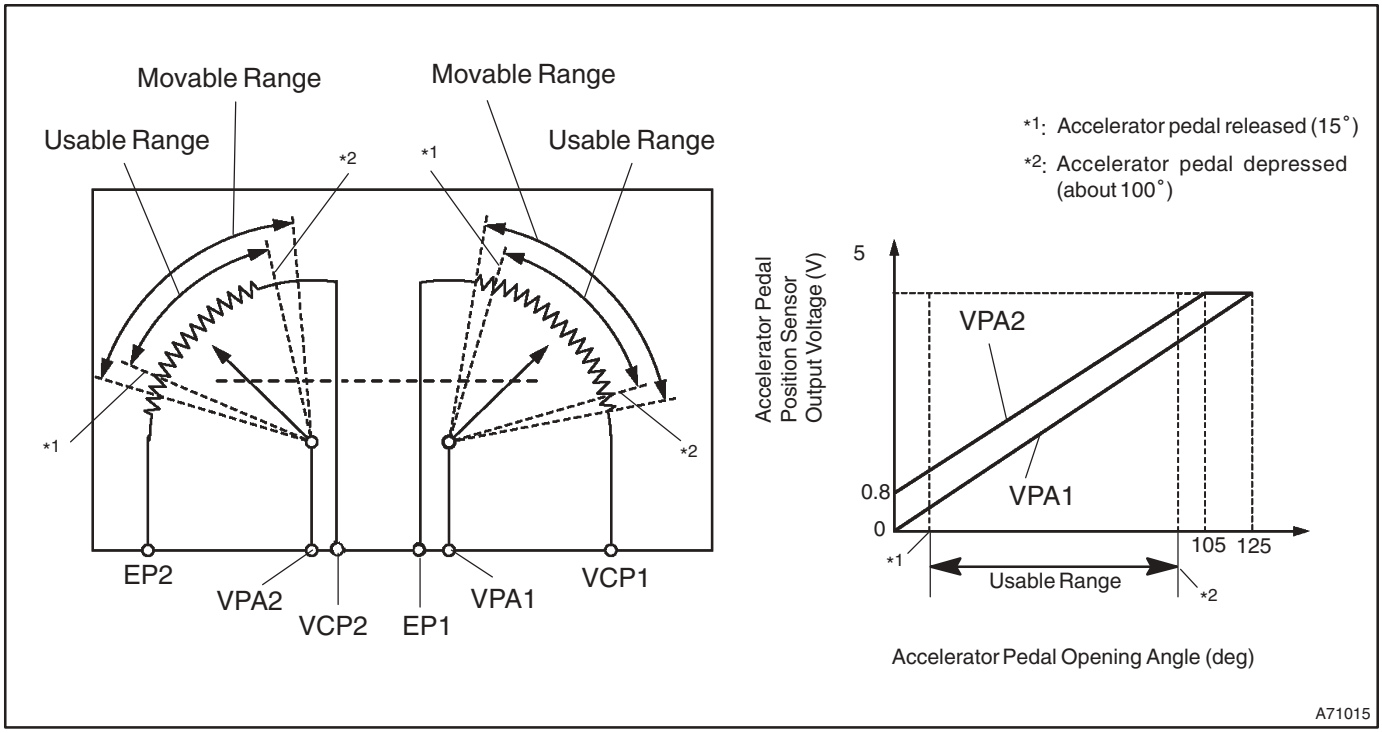

DTC No.	DTC Detection Condition	Trouble Area
P2120	VPA1 quickly fluctuates up and down beyond upper and lower malfunction thresholds for 0.5 seconds or more	• Accelerator pedal position sensor • ECM
P2122	Condition (a) continues for 0.5 seconds or more when accelerator pedal is fully released: (a) VPA1 is 0.2 V or less	• Accelerator pedal position sensor • Open in VCP1 circuit • Open or ground short in VPA1 circuit • ECM
P2123	Condition (a) continues for 2.0 seconds or more: (a) VPA1 is 4.8 V or more	• Accelerator pedal position sensor • Open in EPA circuit • ECM
P2125	VPA2 quickly fluctuates up and down beyond upper and lower malfunction thresholds for 0.5 seconds or more	• Accelerator pedal position sensor • ECM
P2127	Condition (a) continues for 0.5 seconds or more when accelerator pedal is fully released: (a) VPA2 is 0.5 V or less	• Accelerator pedal position sensor • Open in VCP2 circuit • Open or ground short in VPA2 circuit • ECM
P2128	Conditions (a) and (b) continue for 2.0 seconds or more: (a) VPA2 is 4.8 V or more (b) VPA1 is 0.2 V or more and VPA1 is 3.45 V or less	• Accelerator pedal position sensor • Open in EPA2 circuit • ECM
P2138	Condition (a) or (b) continues for 2.0 seconds or more: (a) Difference between VPA1 and VPA2 is 0.02 V or less (b) VPA1 is 0.2 V or less and VPA2 is 0.5 V or less	• VPA1 and VPA2 circuits are short–circuited • Accelerator pedal position sensor • ECM

HINT:

When DTC P2120, P2122, P2123, P2125, P2127, P2128 and/or P2138 is detected, check the output voltage of the accelerator pedal position sensor by selecting Powertrain / Engine and ECT / Data List / Accelerator POS No. 1 and Accelerator POS No. 2 on the intelligent tester II.

Reference:

Trouble Area	Accelerator Pedal Position (Voltage Output)			
	Accelerator Pedal Released		Accelerator Pedal Depressed	
	Accelerator POS No. 1	Accelerator POS No. 2	Accelerator POS No. 1	Accelerator POS No. 2
Normal condition	0.5 to 1.1 V	1.2 to 2.0 V	2.6 to 4.5 V	3.4 to 5.0 V
VCP circuit open	0 to 0.2 V	0 to 0.2 V	0 to 0.2 V	0 to 0.2 V
Open or ground short in VPA1 circuit	0 to 0.2 V	1.2 to 2.0 V	0 to 0.2 V	3.4 to 5.0 V
Open or ground short in VPA2 circuit	0.5 to 1.1 V	0 to 0.2 V	2.6 to 4.5 V	0 to 0.2 V
EPA circuit open	4.5 to 5.0 V	4.5 to 5.0 V	4.5 to 5.0 V	4.5 to 5.0 V

Accelerator pedal position is expressed as voltages.

WIRING DIAGRAM

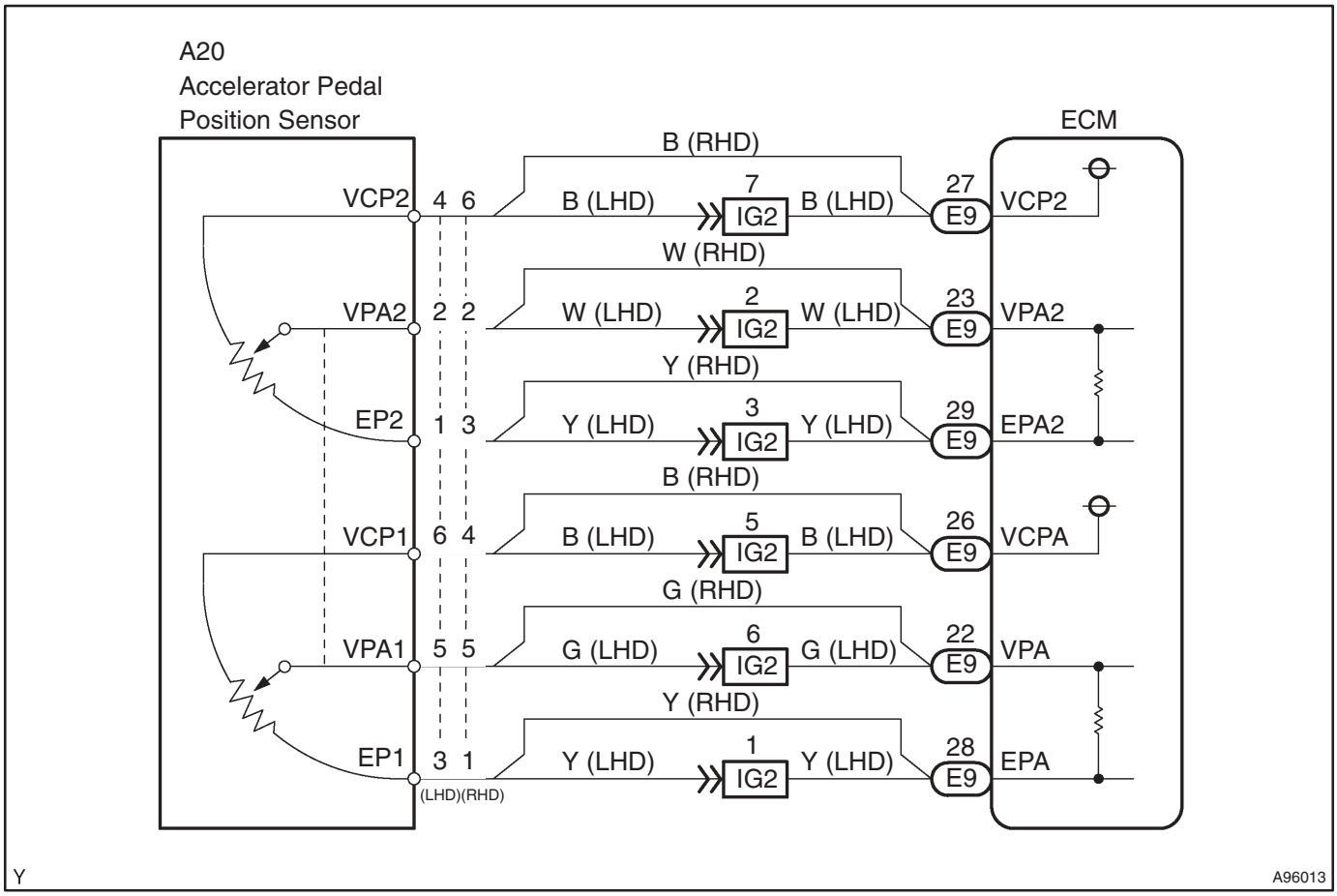

INSPECTION PROCEDURE

HINT:

Read freeze frame data using the intelligent tester II. Freeze frame data record the engine condition when malfunctions are detected. When troubleshooting, freeze frame data can help determine if the vehicle was moving or stationary, if the engine was warmed up or not, if the air–fuel ratio was lean or rich, and other data from the time the malfunction occurred.

1	READ VALUE OF INTELLIGENT TESTER II(ACCELERATOR POS NO.1 AND ACCELERATOR POS NO.2)

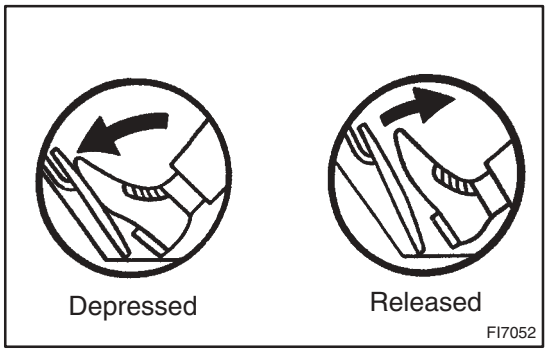

(a) Connect the intelligent tester II to the DLC3.
(b) Turn the ignition switch to ON and turn the intelligent tester II ON.
(c) Select the following menu items: Powertrain / Engine and ECT / Data List / Accelerator POS No. 1 and Accelerator POS No. 2.
(d) Read the value.

Standard:

Accelerator Pedal	Accelerator POS No. 1	Accelerator POS No. 2
Released	0.5 to 1.1 V	1.2 to 2.0 V
Depressed	2.6 to 4.5 V	3.4 to 5.0 V

OK	Go to step 6

NG

2 INSPECT ACCELERATOR PEDAL ASSY(ACCELERATOR PEDAL POSITION SENSOR)

Component Side (RHD):

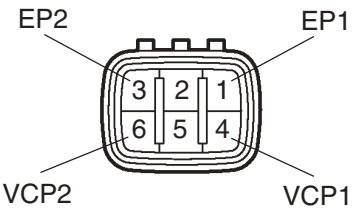

Accelerator Pedal Position Sensor

A84814

Component Side (LHD):

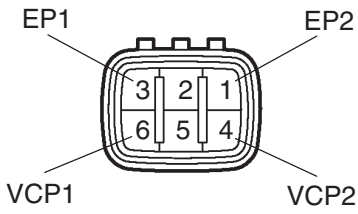

Accelerator Pedal Position Sensor

A84814

(a) Disconnect the A20 accelerator pedal position sensor connector.

(b) Measure the resistance between each pair of terminals.

Standard (RHD):

Tester Connection	Specified Condition
EP1 (1) – VCP1 (4)	2.25 to 4.75 kΩ at 20°C (68°F)
EP2 (3) – VCP2 (6)	2.25 to 4.75 kΩ at 20°C (68°F)

Standard (LHD):

Tester Connection	Specified Condition
EP1 (3) – VCP1 (6)	2.25 to 4.75 kΩ at 20°C (68°F)
EP2 (1) – VCP2 (4)	2.25 to 4.75 kΩ at 20°C (68°F)

(c) Reconnect the accelerator pedal position sensor connector.

NG	REPLACE ACCELERATOR PEDAL ASSY (See page 10–12)

OK

3 INSPECT ECM(VCPA AND VCP2 VOLTAGE)

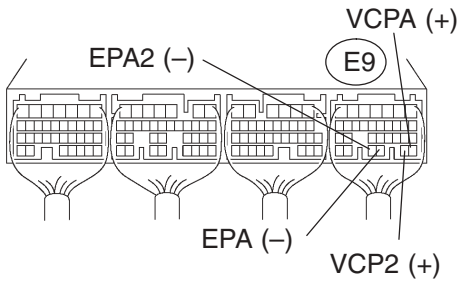

Y ECM Connector

A66060

(a) Turn the ignition switch to ON.

(b) Measure the voltage between the specified terminals of the E9 ECM connector.

Standard:

Tester Connection	Specified Condition
VCPA (E9–26) – EPA (E9–28)	4.5 to 5.0 V
VCP2 (E9–27) – EPA2 (E9–29)	4.5 to 5.0 V

NG	REPLACE ECM (See page 10–65 of Pub. No. RM1018E AVENSIS)

OK

4 INSPECT ECM(VPA AND VPA2 VOLTAGE)

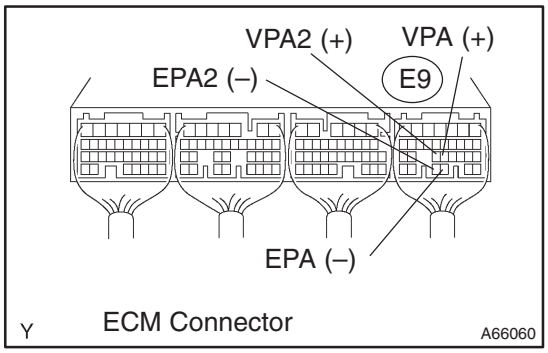

(a) Turn the ignition switch to ON.
(b) Measure the voltage between the specified terminals of the E9 ECM connector.

Standard:

Accelerator Pedal Position	Tester Connection	Specified Condition
Released	VPA (E9–22) – EPA (E9–28)	0.5 to 1.1 V
Depressed	VPA (E9–22) – EPA (E9–28)	2.6 to 4.5 V
Released	VPA2 (E9–23) – EPA2 (E9–29)	1.2 to 2.0 V
Depressed	VPA2 (E9–23) – EPA2 (E9–29)	3.4 to 5.0 V

OK → **REPLACE ECM (See page 10–65 of Pub. No. RM1018E AVENSIS)**

NG

5	CHECK HARNESS AND CONNECTOR(ACCELERATOR PEDAL POSITION SENSOR – ECM)

Wire Harness Side (RHD):

Accelerator Pedal Position Sensor Connector

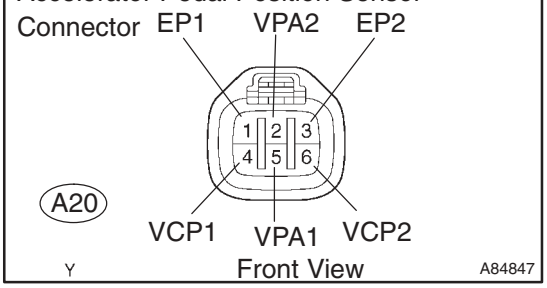

Wire Harness Side (LHD):

Accelerator Pedal Position Sensor Connector

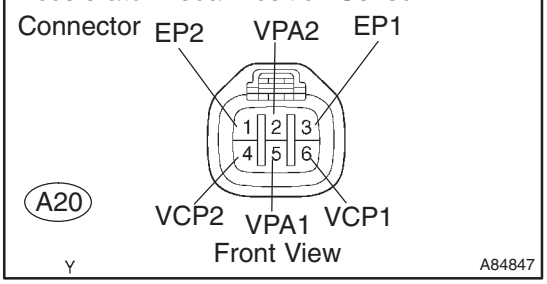

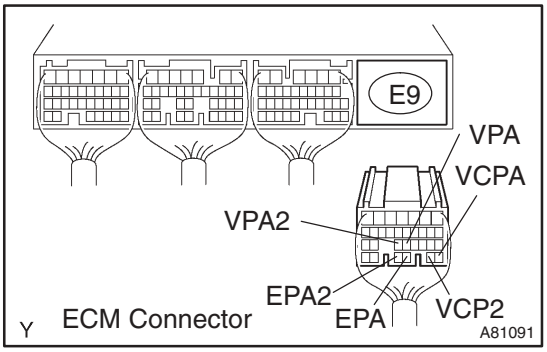

(a) Disconnect the A20 accelerator pedal position sensor connector.

(b) Disconnect the E9 ECM connector.

(c) Check the resistance.

Standard (RHD) (Check for open):

Tester Connection	Specified Condition
VPA1 (A20–5) – VPA (E9–22)	Below 1 Ω
EP1 (A20–1) – EPA (E9–28)	Below 1 Ω
VCP1 (A20–4) – VCPA (E9–26)	Below 1 Ω
VPA2 (A20–2) – VPA2 (E9–23)	Below 1 Ω
EP2 (A20–3) – EPA2 (E9–29)	Below 1 Ω
VCP2 (A20–6) – VCP2 (E9–27)	Below 1 Ω

Standard (LHD) (Check for open):

Tester Connection	Specified Condition
VPA1 (A20–5) – VPA (E9–22)	Below 1 Ω
EP1 (A20–3) – EPA (E9–28)	Below 1 Ω
VCP1 (A20–6) – VCPA (E9–26)	Below 1 Ω
VPA2 (A20–2) – VPA2 (E9–23)	Below 1 Ω
EP2 (A20–1) – EPA2 (E9–29)	Below 1 Ω
VCP2 (A20–4) – VCP2 (E9–27)	Below 1 Ω

Standard (RHD) (Check for short):

Tester Connection	Specified Condition
VPA1 (A20–5) or VPA (E9–22) – Body ground	10 kΩ or higher
EP1 (A20–1) or EPA (E9–28) – Body ground	10 kΩ or higher
VCP1 (A20–4) or VCPA (E9–26) – Body ground	10 kΩ or higher
VPA2 (A20–2) or VPA2 (E9–23) – Body ground	10 kΩ or higher
EP2 (A20–3) or EPA2 (E9–29) – Body ground	10 kΩ or higher
VCP2 (A20–6) or VCP2 (E9–27) – Body ground	10 kΩ or higher

Standard (LHD) (Check for short):

Tester Connection	Specified Condition
VPA1 (A20–5) or VPA (E9–22) – Body ground	10 kΩ or higher
EP1 (A20–3) or EPA (E9–28) – Body ground	10 kΩ or higher
VCP1 (A20–6) or VCPA (E9–26) – Body ground	10 kΩ or higher
VPA2 (A20–2) or VPA2 (E9–23) – Body ground	10 kΩ or higher
EP2 (A20–1) or EPA2 (E9–29) – Body ground	10 kΩ or higher
VCP2 (A20–4) or VCP2 (E9–27) – Body ground	10 kΩ or higher

(d) Reconnect the accelerator pedal position sensor connector.

(e) Reconnect the ECM connector.

NG → **REPAIR OR REPLACE HARNESS OR CONNECTOR**

OK

6	CHECK IF DTC OUTPUT RECURS(ACCELERATOR PEDAL POSITION SENSOR DTCS)

(a) Connect the intelligent tester II to the DLC3.
(b) Turn the ignition switch to ON and turn the intelligent tester II ON.
(c) Clear the DTC(s) (see page 05–18).
(d) Start the engine.
(e) Run the engine at idling speed for 15 seconds or more.
(f) Select the following menu items: Powertrain / Engine and ECT / DTC.
(g) Read DTCs (see page 05–18).

Result:

Display (DTC Output)	Proceed To
P2120, P2122, P2123, P2125, P2127, P2128 and/or P2138	A
No output	B

B → **NORMAL**

A

REPLACE ECM (See page 10–65 of Pub. No. RM1018E AVENSIS)

DTC	P2121	THROTTLE/PEDAL POSITION SENSOR/SWITCH ”D” CIRCUIT RANGE/PERFORMANCE

HINT:
This DTC is related to the accelerator pedal position sensor.

CIRCUIT DESCRIPTION

Refer to DTC P2120 on page 05–184.

DTC No.	DTC Detection Condition	Trouble Area
P2121	Conditions (a) and (b) continue for 0.5 seconds: (a) Difference between VPA1 and VPA2 exceeds the threshold (b) IDL is OFF	• Accelerator pedal position sensor circuit • Accelerator pedal position sensor • ECM

HINT:
When DTC P2121 is detected, check the output voltage of the accelerator pedal position sensor by selecting Powertrain / Engine and ECT / Data List / Accelerator POS No. 1 and Accelerator POS No. 2 on the intelligent tester II.

Reference:

Trouble Area	Accelerator Pedal Position (Voltage Output)			
	Accelerator Pedal Released		Accelerator Pedal Depressed	
	Accelerator POS No. 1	Accelerator POS No. 2	Accelerator POS No. 1	Accelerator POS No. 2
Normal condition	0.5 to 1.1 V	1.2 to 2.0 V	2.6 to 4.5 V	3.4 to 5.0 V
VCP circuit open	0 to 0.2 V	0 to 0.2 V	0 to 0.2 V	0 to 0.2 V
VPA circuit open or ground short	0 to 0.2 V	1.2 to 2.0 V	0 to 0.2 V	3.4 to 5.0 V
VPA2 circuit open or ground short	0.5 to 1.1 V	0 to 0.2 V	2.6 to 4.5 V	0 to 0.2 V
EPA circuit open	4.5 to 5.0 V	4.5 to 5.0 V	4.5 to 5.0 V	4.5 to 5.0 V

WIRING DIAGRAM

Refer to DTC P2120 on page 05–184.

INSPECTION PROCEDURE

HINT:
Read freeze frame data using the intelligent tester II. Freeze frame data record the engine condition when malfunctions are detected. When troubleshooting, freeze frame data can help determine if the vehicle was moving or stationary, if the engine was warmed up or not, if the air–fuel ratio was lean or rich, and other data from the time the malfunction occurred.

1 INSPECT ACCELERATOR PEDAL ASSY(ACCELERATOR PEDAL POSITION SENSOR)

Component Side (RHD):

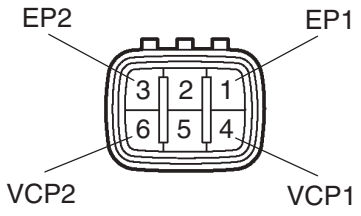

Component Side (LHD):

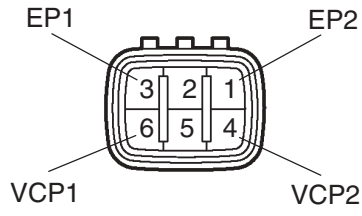

(a) Disconnect the A20 accelerator pedal position sensor connector.

(b) Measure the resistance between each pair of terminals.

Standard (RHD):

Tester Connection	Specified Condition
EP1 (1) – VCP1 (4)	2.25 to 4.75 kΩ at 20°C (68°F)
EP2 (3) – VCP2 (6)	2.25 to 4.75 kΩ at 20°C (68°F)

Standard (LHD):

Tester Connection	Specified Condition
EP1 (3) – VCP1 (6)	2.25 to 4.75 kΩ at 20°C (68°F)
EP2 (1) – VCP2 (4)	2.25 to 4.75 kΩ at 20°C (68°F)

(c) Reconnect the accelerator pedal position sensor connector.

NG → **REPLACE ACCELERATOR PEDAL ASSY (See page 10–12)**

OK

2 INSPECT ECM(VPA AND VPA2 VOLTAGE)

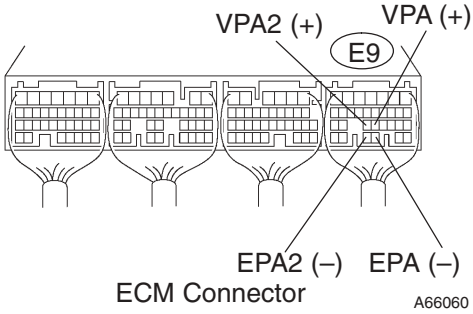

(a) Turn the ignition switch to ON.

(b) Measure the voltage between the specified terminals of the E9 ECM connector.

Accelerator Pedal Position	Tester Connection	Specified Condition
Released	VPA (E9–22) – EPA (E9–28)	0.5 to 1.1 V
Depressed	VPA (E9–22) – EPA (E9–28)	2.6 to 4.5 V
Released	VPA2 (E9–23) – EPA2 (E9–29)	1.2 to 2.0 V
Depressed	VPA2 (E9–23) – EPA2 (E9–29)	3.4 to 5.0 V

OK → **REPLACE ECM (See page 10–65 of Pub. No. RM1018E AVENSIS)**

NG

3 CHECK HARNESS AND CONNECTOR(ACCELERATOR PEDAL POSITION SENSOR – ECM)

Wire Harness Side (RHD):

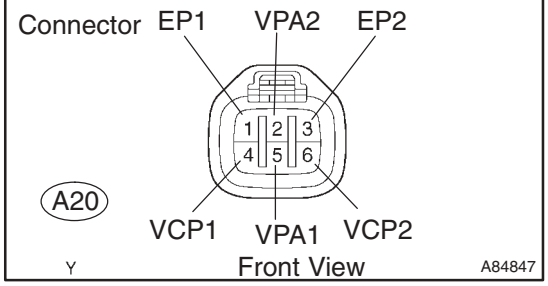

Wire Harness Side (LHD):

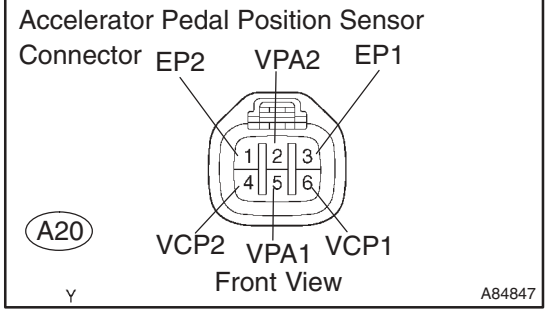

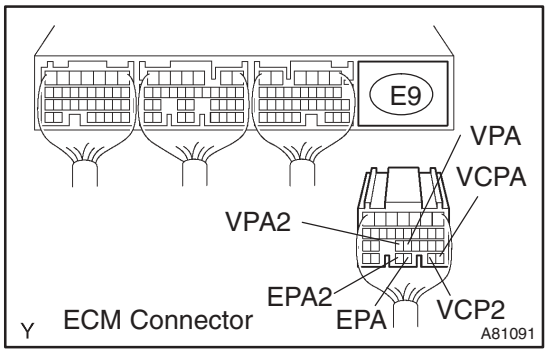

(a) Disconnect the A20 accelerator pedal position sensor connector.

(b) Disconnect the E9 ECM connector.

(c) Check the resistance.

Standard (RHD) (Check for open):

Tester Connection	Specified Condition
VPA1 (A20–5) – VPA (E9–22)	Below 1 Ω
EP1 (A20–1) – EPA (E9–28)	Below 1 Ω
VCP1 (A20–4) – VCPA (E9–26)	Below 1 Ω
VPA2 (A20–2) – VPA2 (E9–23)	Below 1 Ω
EP2 (A20–3) – EPA2 (E9–29)	Below 1 Ω
VCP2 (A20–6) – VCP2 (E9–27)	Below 1 Ω

Standard (LHD) (Check for open):

Tester Connection	Specified Condition
VPA1 (A20–5) – VPA (E9–22)	Below 1 Ω
EP1 (A20–3) – EPA (E9–28)	Below 1 Ω
VCP1 (A20–6) – VCPA (E9–26)	Below 1 Ω
VPA2 (A20–2) – VPA2 (E9–23)	Below 1 Ω
EP2 (A20–1) – EPA2 (E9–29)	Below 1 Ω
VCP2 (A20–4) – VCP2 (E9–27)	Below 1 Ω

Standard (RHD) (Check for short):

Tester Connection	Specified Condition
VPA1 (A20–5) or VPA (E9–22) – Body ground	10 kΩ or higher
EP1 (A20–1) or EPA (E9–28) – Body ground	10 kΩ or higher
VCP1 (A20–4) or VCPA (E9–26) – Body ground	10 kΩ or higher
VPA2 (A20–2) or VPA2 (E9–23) – Body ground	10 kΩ or higher
EP2 (A20–3) or EPA2 (E9–29) – Body ground	10 kΩ or higher
VCP2 (A20–6) or VCP2 (E9–27) – Body ground	10 kΩ or higher

Standard (LHD) (Check for short):

Tester Connection	Specified Condition
VPA1 (A20–5) or VPA (E9–22) – Body ground	10 kΩ or higher
EP1 (A20–3) or EPA (E9–28) – Body ground	10 kΩ or higher
VCP1 (A20–6) or VCPA (E9–26) – Body ground	10 kΩ or higher
VPA2 (A20–2) or VPA2 (E9–23) – Body ground	10 kΩ or higher
EP2 (A20–1) or EPA2 (E9–29) – Body ground	10 kΩ or higher
VCP2 (A20–4) or VCP2 (E9–27) – Body ground	10 kΩ or higher

(d) Reconnect the accelerator pedal position sensor connector.

(e) Reconnect the ECM connector.

NG → **REPAIR OR REPLACE HARNESS OR CONNECTOR**

OK

REPLACE ACCELERATOR PEDAL ASSY (See page 10–12)

ECM POWER SOURCE CIRCUIT

CIRCUIT DESCRIPTION

When the ignition switch is turned to ON, the battery voltage is applied to terminal IGSW of the ECM. The ECM "MREL" output signal causes a current to flow to the coil, closing the contacts of the EFI relay and supplying power to terminal +B of the ECM.

WIRING DIAGRAM

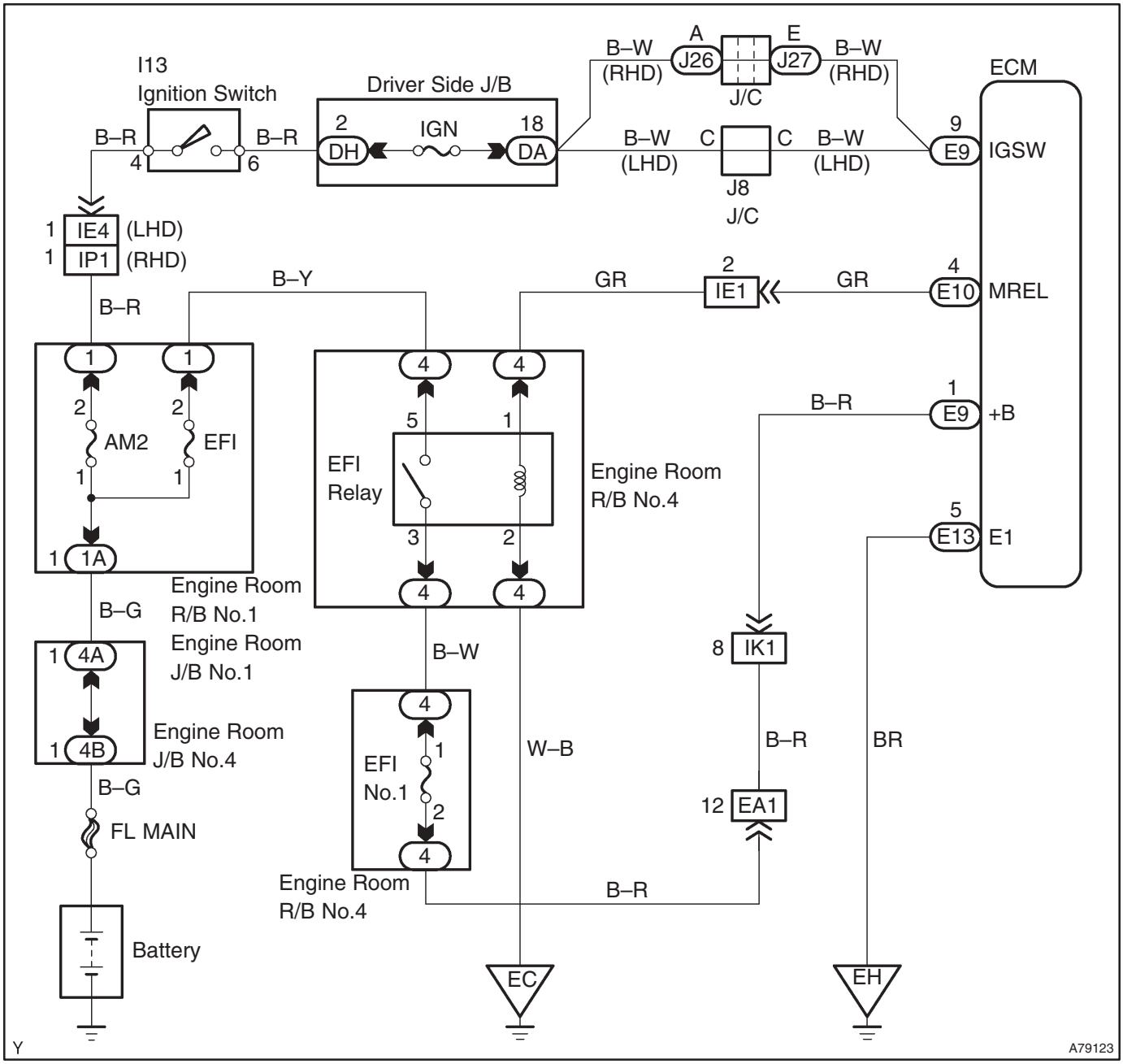

INSPECTION PROCEDURE

1 INSPECT ECM(+B VOLTAGE)

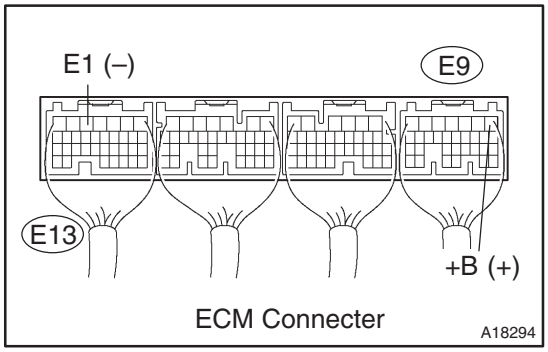

(a) Turn the ignition switch to ON.
(b) Measure the voltage between the terminals of the E9 and E13 ECM connectors.
Standard:

Tester Connection	Specified Condition
+B (E9–1) – E1 (E13–5)	9 to 14 V

OK → **PROCEED TO NEXT CIRCUIT INSPECTION SHOWN ON PROBLEM SYMPTOMS TABLE (See page 05–12)**

NG

2 CHECK HARNESS AND CONNECTOR(ECM – BODY GROUND)

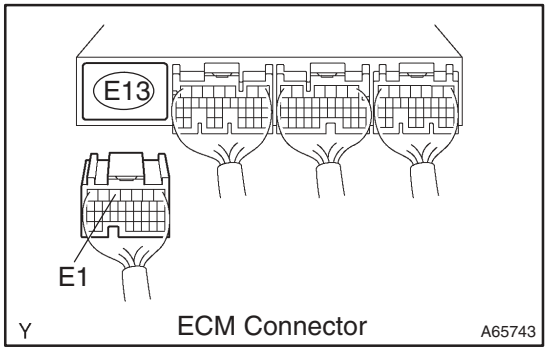

(a) Disconnect the negative (–) battery cable.
(b) Disconnect the E13 ECM connector.
(c) Check the resistance.
Standard (Check for open):

Tester Connection	Specified Condition
E1 (E13–5) – Body ground	Below 1 Ω

(d) Reconnect the ECM connector.
(e) Reconnect the negative battery cable.

NG → **REPAIR OR REPLACE HARNESS OR CONNECTOR**

OK

3 INSPECT ECM(IGSW VOLTAGE)

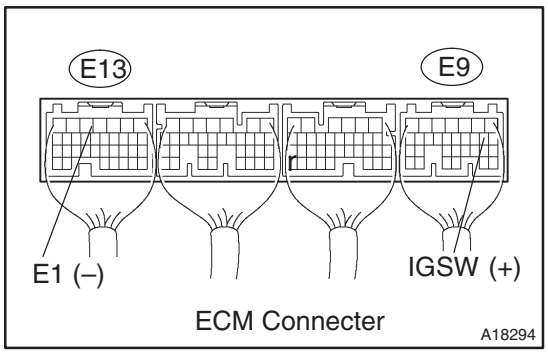

(a) Turn the ignition switch to ON.
(b) Measure the voltage between the terminals of the E9 and E13 ECM connectors.
Standard:

Tester Connection	Specified Condition
IGSW (E9–9) – E1 (E13–5)	9 to 14 V

OK → **Go to step 5**

NG

4 CHECK FUSE(IGN FUSE)

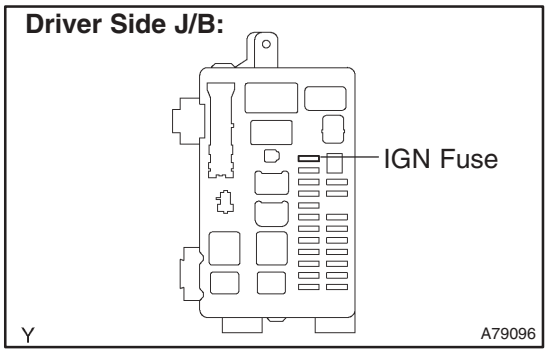

(a) Remove the IGN fuse from the driver side J/B.
(b) Check the IGN fuse resistance.
Standard: Below 1 Ω
(c) Reinstall the IGN fuse.

NG → **CHECK FOR SHORT IN ALL HARNESSES AND COMPONENTS CONNECTED TO FUSE**

OK

CHECK AND REPAIR HARNESS AND CONNECTOR (BATTERY – ECM)

5 INSPECT ECM(MREL VOLTAGE)

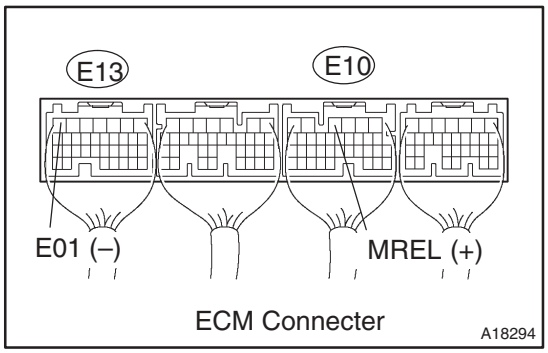

(a) Turn the ignition switch to ON.
(b) Measure the voltage between the terminals of the E10 and E13 ECM connectors.
Standard:

Tester Connection	Specified Condition
MREL (E10–4) – E01 (E13–7)	9 to 14 V

NG → **REPLACE ECM (See page 10–65 of Pub. No. RM1018E AVENSIS)**

OK

6 CHECK FUSE(EFI FUSE)

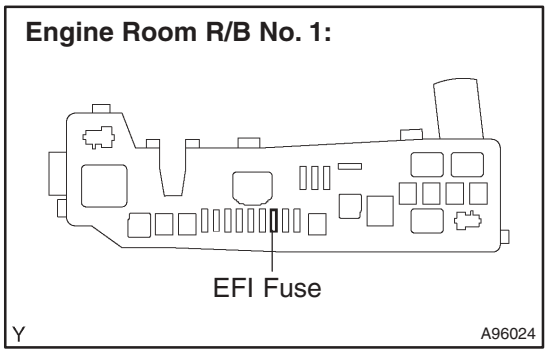

(a) Remove the EFI fuse from the engine room R/B No. 1.
(b) Check the EFI fuse resistance.
Standard: Below 1 Ω
(c) Reinstall the EFI fuse.

NG → **CHECK FOR SHORT IN ALL HARNESSES AND COMPONENTS CONNECTED TO FUSE**

OK

7 INSPECT EFI RELAY

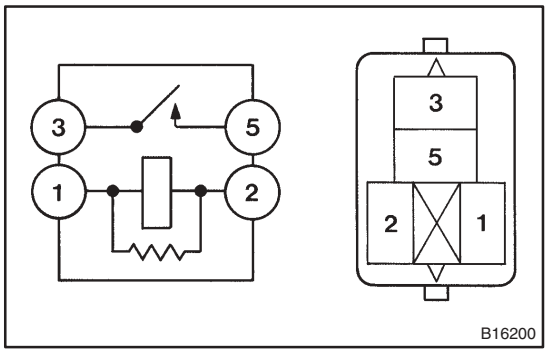

(a) Remove the EFI relay from the engine room R/B No. 4.
(b) Check the EFI relay resistance.

Standard:

Tester Connection	Specified Condition
3 – 5	10 kΩ or higher
3 – 5	Below 1 Ω (Apply battery voltage to terminals 1 and 2)

(c) Reinstall the EFI relay.

NG	REPLACE EFI RELAY

OK

8 CHECK HARNESS AND CONNECTOR(EFI RELAY – ECM, EFI RELAY – BODY GROUND)

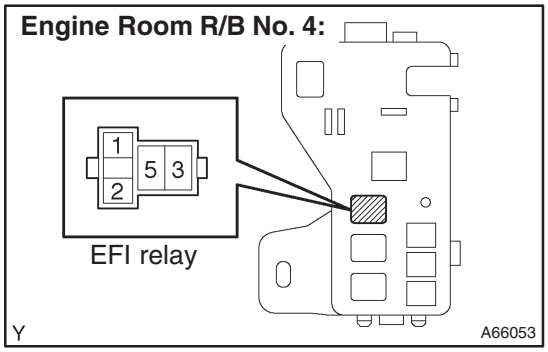

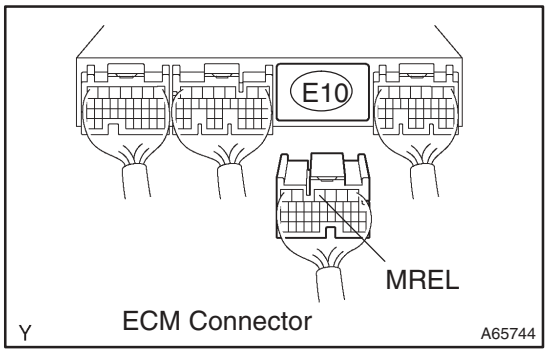

(a) Check the harness and connectors between the EFI relay and the ECM connector.
  (1) Remove the EFI relay from the engine room R/B No. 4.
  (2) Disconnect the E10 ECM connector.
  (3) Check the resistance.

Standard (Check for open):

Tester Connection	Specified Condition
EFI relay (1) – MREL (E10–4)	Below 1 Ω

Standard (Check for short):

Tester Connection	Specified Condition
EFI relay (1) or MREL (E10–4) – Body ground	10 kΩ or higher

  (4) Reinstall the EFI relay.
  (5) Reconnect the ECM connector.

(b) Check the harness and connector between the EFI relay and the body ground.
  (1) Remove the EFI relay from the engine room R/B No. 4.
  (2) Check the resistance.

Standard (Check for open):

Tester Connection	Specified Condition
EFI relay (2) – Body ground	Below 1 Ω

  (3) Reinstall the EFI relay.

OK	REPAIR OR REPLACE HARNESS OR CONNECTOR

NG

CHECK AND REPAIR HARNESS AND CONNECTOR (TERMINAL +B OF ECM – BATTERY POSITIVE TERMINAL)

FUEL PUMP CONTROL CIRCUIT

CIRCUIT DESCRIPTION

In the diagram below, when the engine is cranked, a current flows from terminal ST2 of the ignition switch to the starter relay coil and also a current flows to terminal STA of the ECM (STA signal).
When the STA signal and NE signal are transmitted to the ECM, the power transistor (Tr) is turned ON, a current flows to the coil of the circuit opening relay, the relay switches on, the power is supplied to the fuel pump and the fuel pump operates.
While the NE signal is generated (when engine running), the ECM keeps Tr ON (circuit opening relay ON) and the fuel pump also keeps operating.

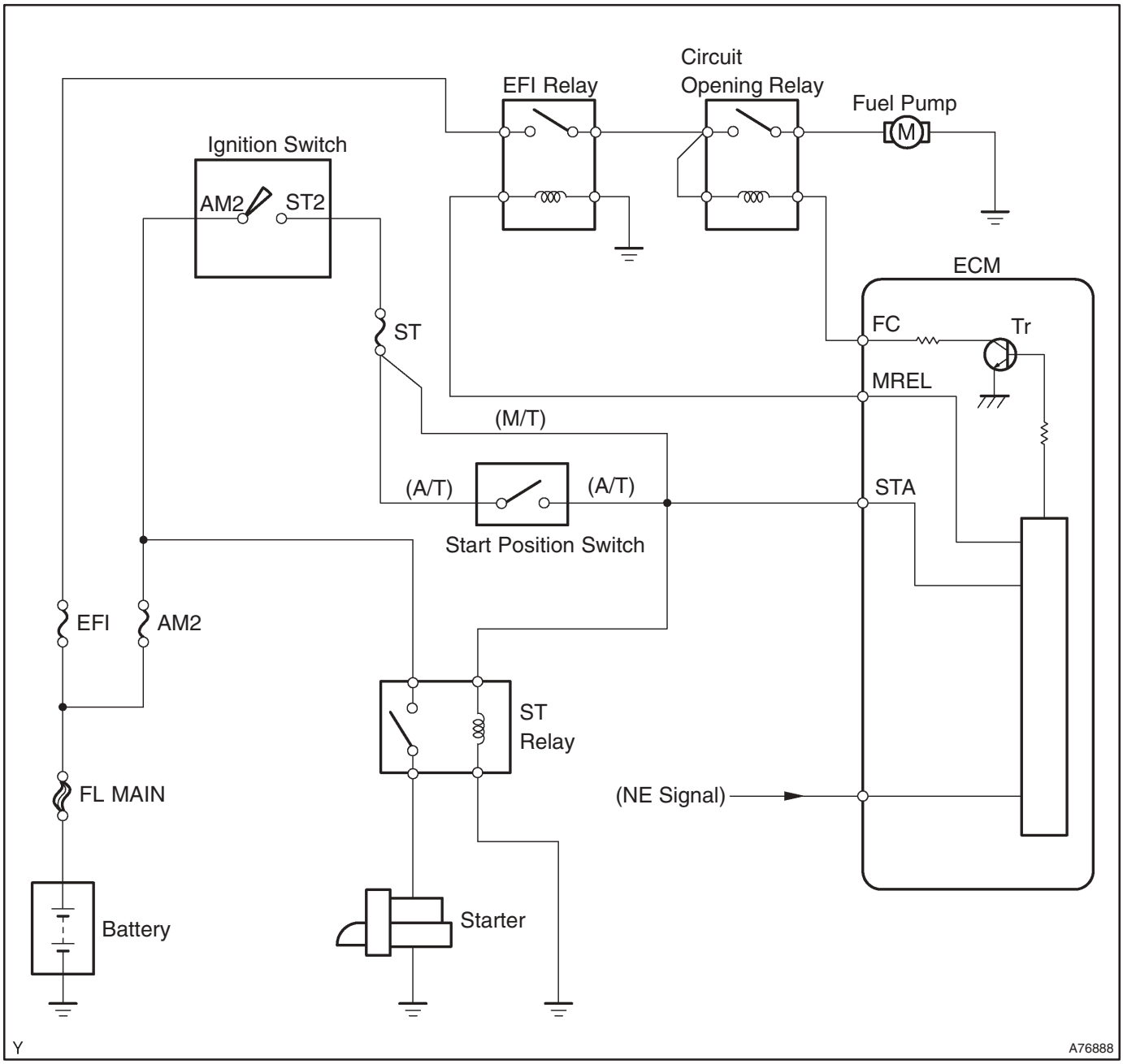

WIRING DIAGRAM

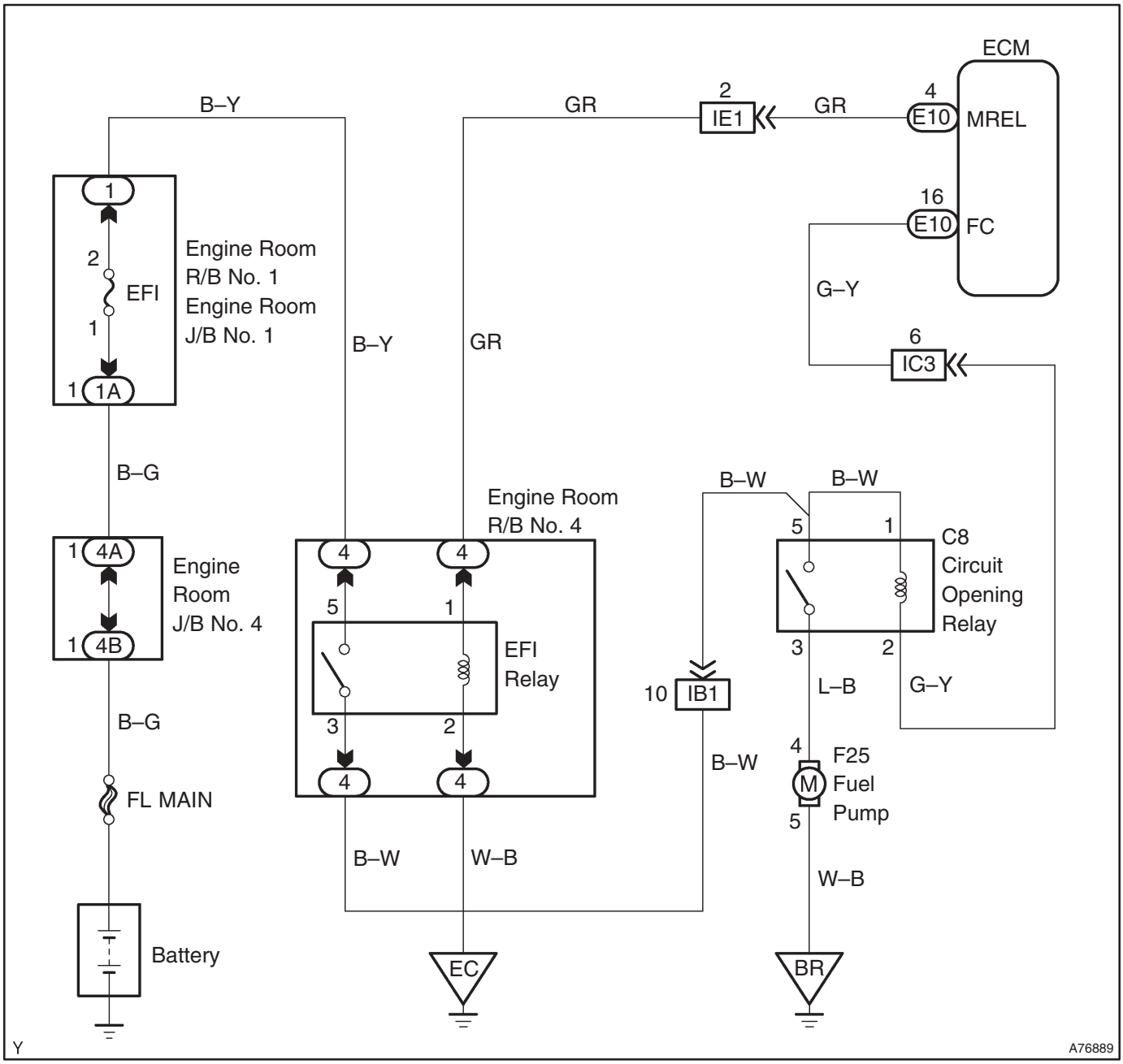

INSPECTION PROCEDURE

1	PERFORM ACTIVE TEST USING INTELLIGENT TESTER II(OPERATE CIRCUIT OPENING RELAY)

(a) Connect the intelligent tester II to the DLC3.
(b) Turn the ignition switch to ON and turn the intelligent tester II ON.
(c) Select the following menu items: Powertrain / Engine and ECT / Active Test / Fuel Pump Relay.
(d) Check the operation of the relay while operating it using the intelligent tester II.
Standard: Operating sounds can be heard from the relay.

OK	PROCEED TO NEXT CIRCUIT INSPECTION SHOWN ON PROBLEM SYMPTOMS TABLE (See page 05–12)

NG

2	CHECK ECM POWER SOURCE CIRCUIT (See page 05–195)

NG	REPAIR OR REPLACE POWER SOURCE CIRCUIT

OK

3	INSPECT CIRCUIT OPENING RELAY

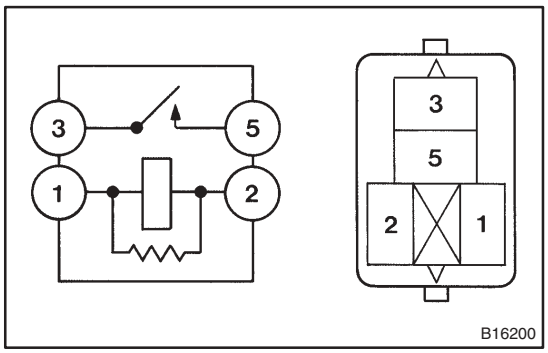

(a) Remove the C8 circuit opening relay.
(b) Check the circuit opening relay resistance.
Standard:

Tester Connection	Specified Condition
3 – 5	10 kΩ or higher
3 – 5	Below 1 Ω (Apply battery voltage to terminals 1 and 2)

(c) Reinstall the circuit opening relay.

NG	REPLACE CIRCUIT OPENING RELAY

OK

4 INSPECT ECM(FC VOLTAGE)

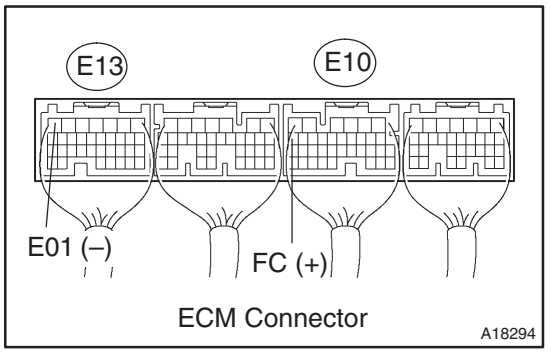

(a) Turn the ignition switch to ON.
(b) Measure the voltage between the terminals of the E10 and E13 ECM connectors.

Standard:

Tester Connection	Specified Condition
FC (E10–16) – E01 (E13–7)	9 to 14 V

OK → **Go to step 6**

NG

5 CHECK HARNESS AND CONNECTOR(EFI RELAY – ECM, CIRCUIT OPENING RELAY – ECM, EFI RELAY – CIRCUIT OPENING RELAY)

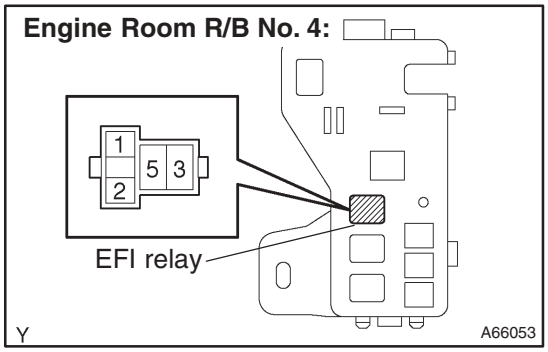

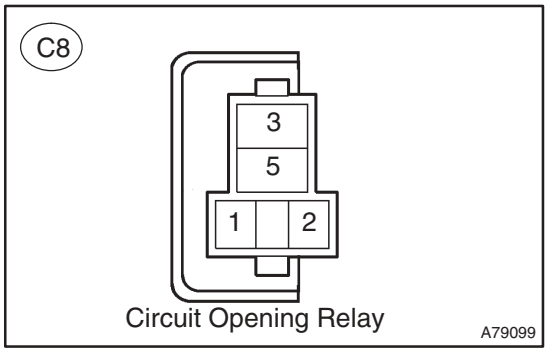

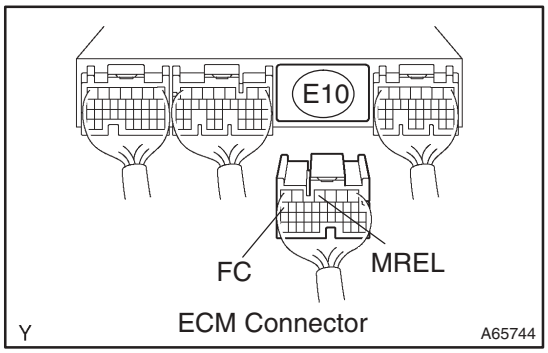

(a) Remove the EFI relay from the engine room R/B No. 4.
(b) Remove the C8 circuit opening relay.
(c) Disconnect the E10 ECM connector.
(d) Check the resistance.

Standard (Check for open):

Tester Connection	Specified Condition
Engine room R/B No. 4 (EFI relay terminal 1) – MREL (E10–4)	Below 1 Ω
Circuit opening relay (C8–2) – FC (E10–16)	Below 1 Ω
Engine room R/B No. 4 (EFI relay terminal 3) – Circuit opening relay (C8–5)	Below 1 Ω

Standard (Check for short):

Tester Connection	Specified Condition
Engine room R/B No. 4 (EFI relay terminal 1) or MREL (E10–4) – Body ground	10 kΩ or higher
Circuit opening relay (C8–2) or FC (E10–16) – Body ground	10 kΩ or higher
Engine room R/B No. 4 (EFI relay terminal 3) or Circuit opening relay (C8–5) – Body ground	10 kΩ or higher

(e) Reinstall the EFI relay.
(f) Reinstall the circuit opening relay.
(g) Reconnect the ECM connector.

NG → **REPAIR OR REPLACE HARNESS OR CONNECTOR**

OK

REPLACE ECM (See page 10–65 of Pub. No. RM1018E AVENSIS)

6	INSPECT FUEL PUMP (See page 11–9 of Pub. No. RM1018E AVENSIS)

NG → REPAIR OR REPLACE FUEL PUMP

OK

7	CHECK HARNESS AND CONNECTOR(CIRCUIT OPENING RELAY – FUEL PUMP, FUEL PUMP – BODY GROUND)

C8

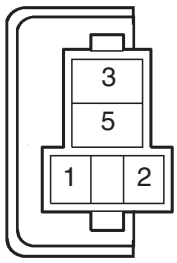

Circuit Opening Relay

A79099

(a) Remove the C8 circuit opening relay.
(b) Disconnect the F25 fuel pump connector.
(c) Check the resistance.

Standard (Check for open):

Tester Connection	Specified Condition
Circuit opening relay (C8–3) – Fuel pump (F25–4)	Below 1 Ω
Fuel pump (F25–5) – Body ground	Below 1 Ω

Standard (Check for short):

Tester Connection	Specified Condition
Circuit opening relay (C8–3) or Fuel pump (F25–4) – Body ground	10 kΩ or higher

(d) Reinstall the circuit opening relay.
(e) Reconnect the fuel pump connector.

Wire Harness Side:

F25 Fuel Pump Connector



Front View

A66276

NG → REPAIR OR REPLACE HARNESS OR CONNECTOR

OK

REPLACE ECM (See page 10–65 of Pub. No. RM1018E AVENSIS)

MIL CIRCUIT

CIRCUIT DESCRIPTION

The MIL (Malfunction Indicator Lamp) is used to indicate the ECM detection of vehicle malfunctions.
By turning the ignition switch to ON, the power is supplied to the MIL circuit, and the ECM provides the circuit ground that illuminates the MIL.
Operation of the MIL should be checked visually:
When the ignition switch is first turned to ON, the MIL should be illuminated. If it is always OFF or ON, use the intelligent tester II and follow the procedure below to determine cause of the problem.

WIRING DIAGRAM

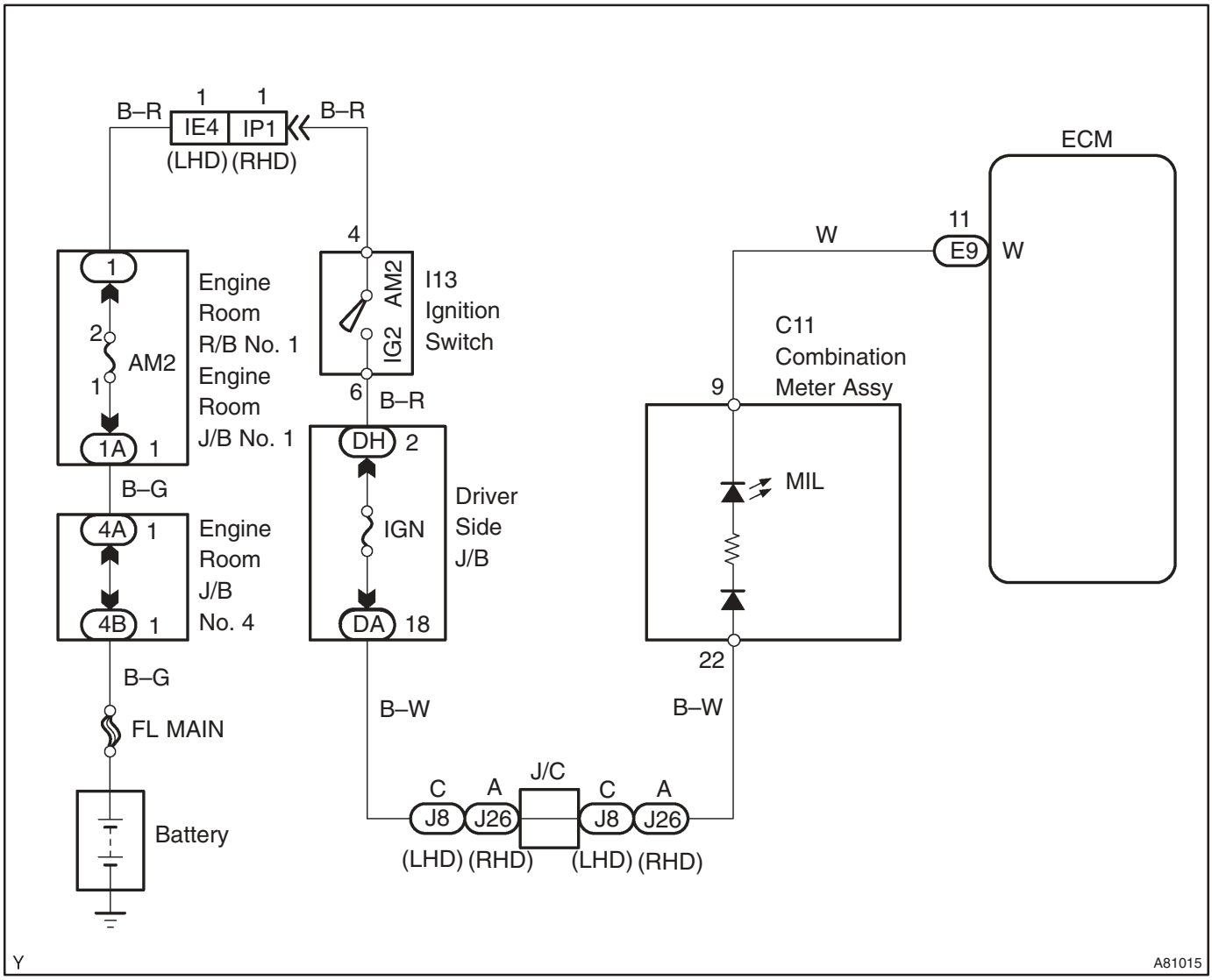

INSPECTION PROCEDURE

HINT:
Troubleshoot each trouble symptom in accordance with the chart below.

Reference:

Result	Proceed To
MIL remains on	Start inspection from step 1
MIL is not illuminated	Start inspection from step 3

1	CHECK IF MIL TURNS OFF

(a) Connect the intelligent tester II to the DLC3.
(b) Turn the ignition switch to ON and turn the intelligent tester II ON.
(c) Select the following menu items: Powertrain / Engine and ECT / DTC.
(d) Check if DTCs have been stored. Note down if there are DTCs.
(e) Select the following menu items: Powertrain / Engine and ECT / DTC / Clear.
(f) Clear the DTC(s).
(g) Check if the MIL turns off.
Standard: The MIL should turn off.

OK	REPAIR CIRCUIT INDICATED BY OUTPUT DTC (See page 05–27)

NG

2	CHECK HARNESS AND CONNECTOR(CHECK FOR SHORT IN WIRE HARNESS)

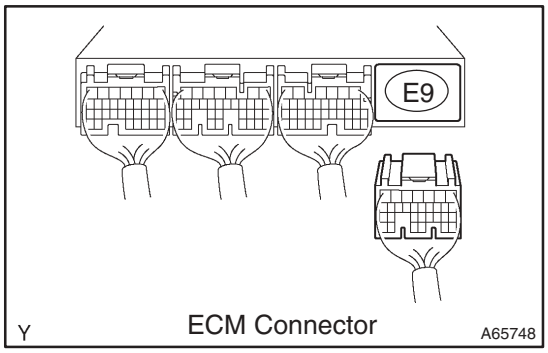

(a) Disconnect the E9 ECM connector.
(b) Turn the ignition switch to ON.
(c) Check that the MIL is not illuminated.
Standard: MIL is not illuminated.
(d) Reconnect the ECM connector.

OK	REPLACE ECM (See page 10–65 of Pub. No. RM1018E AVENSIS)

NG

CHECK AND REPAIR HARNESS AND CONNECTOR

3	CHECK IF MIL ILLUMINATES

(a) Check if the MIL illuminates when turning the ignition switch to ON.
Standard: The MIL should illuminate.

OK	NORMAL

NG

4	INSPECT COMBINATION METER ASSY(MIL CIRCUIT)

(a) See the combination meter troubleshooting procedure on page 05–1510 of Pub. No. RM1018E AVENSIS.

NG → REPAIR OR REPLACE BULB OR COMBINATION METER ASSEMBLY

OK

CHECK AND REPAIR HARNESS AND CONNECTOR (COMBINATION METER – ECM)

ELECTRONIC CONTROLLED AUTOMATIC TRANSAXLE [ECT] (U341E) (From February, 2004)

05CVL–07

PRECAUTION

NOTICE:

Perform the RESET MEMORY (AT initialization) when replacing the automatic transaxle assy, engine assy or ECM (see page 05–225).

HINT:

Initialization can not be completed by only disconnecting the battery terminal.

05KAJ–01

DEFINITION OF TERMS

Term	Definition
Monitor description	Description of what the ECM monitors and how it detects malfunctions (monitoring purpose and its details).

05KAK–01

PART AND SYSTEM NAME LIST

This reference list indicates the part names used in this manual along with their definitions.

Part and system name	Definition
Toyota HCAC system, Hydrocarbon adsorptive Catalyst (HCAC) system, HC adsorptive three–way catalyst	HC adsorptive three–way catalytic converter
Variable Valve Timing sensor, VVT sensor	Camshaft position sensor
Variable valve timing system, VVT system	Camshaft timing control system
Camshaft timing oil control valve, Oil control valve OCV, VVT, VSV	Camshaft timing oil control valve
Variable timing and lift, VVTL	Camshaft timing and lift control
Crankshaft position sensor ”A”	Crankshaft position sensor
Engine speed sensor	Crankshaft position sensor
THA	Intake air temperature
Knock control module	Engine knock control module
Knock sensor	Engine knock sensor
Mass or volume air flow circuit	Mass air flow sensor circuit
Vacuum sensor	Manifold air pressure sensor
Internal control module, Control module, Engine control ECU, PCM	Power train control module
FC idle	Deceleration fuel cut
Idle air control valve	Idle speed control
VSV for CCV, Canister close valve VSV for canister control	Evaporative emissions canister vent valve
VSV for EVAP, Vacuum switching valve assembly No. 1, EVAP VAV, Purge VSV	Evaporative emissions canister purge valve
VSV for pressure switching valve, Bypass VSV	Evaporative emission pressure switching valve
Vapor pressure sensor, EVAP pressure sensor, Evaporative emission control system pressure sensor	Fuel tank pressure sensor
Charcoal canister	Evaporative emissions canister
ORVR system	On–boad refueling vapor recovery system
Intake manifold runner control	Intake manifold tuning system
Intake manifold runner valve, IMRV, IACV (runner valve)	Intake manifold tuning valve
Intake control VSV	Intake manifold tuning solenoid valve
AFS	Air fuel ratio sensor
O2 sensor	Heater oxygen sensor
Oxygen sensor pumping current circuit	Oxygen sensor output signal
Oxygen sensor reference ground circuit	Oxygen sensor signal ground
Accel position sensor	Accelerator pedal position sensor
Throttle actuator control motor, Actuator control motor, Electronic throttle motor, Throttle control motor	Electronic throttle actuator
Electronic throttle control system, Throttle actuator control system	Electronic throttle control system
Throttle/pedal position sensor, Throttle/pedal position switch, Throttle position sensor/switch	Throttle position sensor
Turbo press sensor	Turbocharger pressure sensor
Turbo VSV	Turbocharger pressure control solenoid valve
P/S pressure switch	Power–steering pressure switch
VSV for ACM	Active control engine mount
Speed sensor, Vehicle speed sensor ”A”, Speed sensor for skid control ECU	Vehicle speed sensor
ATF temperature sensor, Trans. fluid temp. sensor, ATF temperature sensor ”A”	Transmission fluid temperature sensor
Electronic controlled automatic transmission, ECT	Electronically controlled automatic
Intermediate shaft speed sensor ”A”	Couter gear speed sensor

Part and system name	Definition
Output speed sensor	Output shaft speed sensor
Input speed sensor, Input turbine speed sensor ”A”, Speed sensor (NT), Turbine speed sensor	Input turbine speed sensor
PNP switch, NSW	Park/neutral position switch
Pressure control solenoid	Transmission pressure control solenoid
Shift solenoid	Transmission shift solenoid valve
Transmission control switch, Shift lock control unit	Shift lock control module
Engine immobilizer system, Immobilizer system	Vehicle anti–theft system

05L2I–01

LOCATION

LHD:

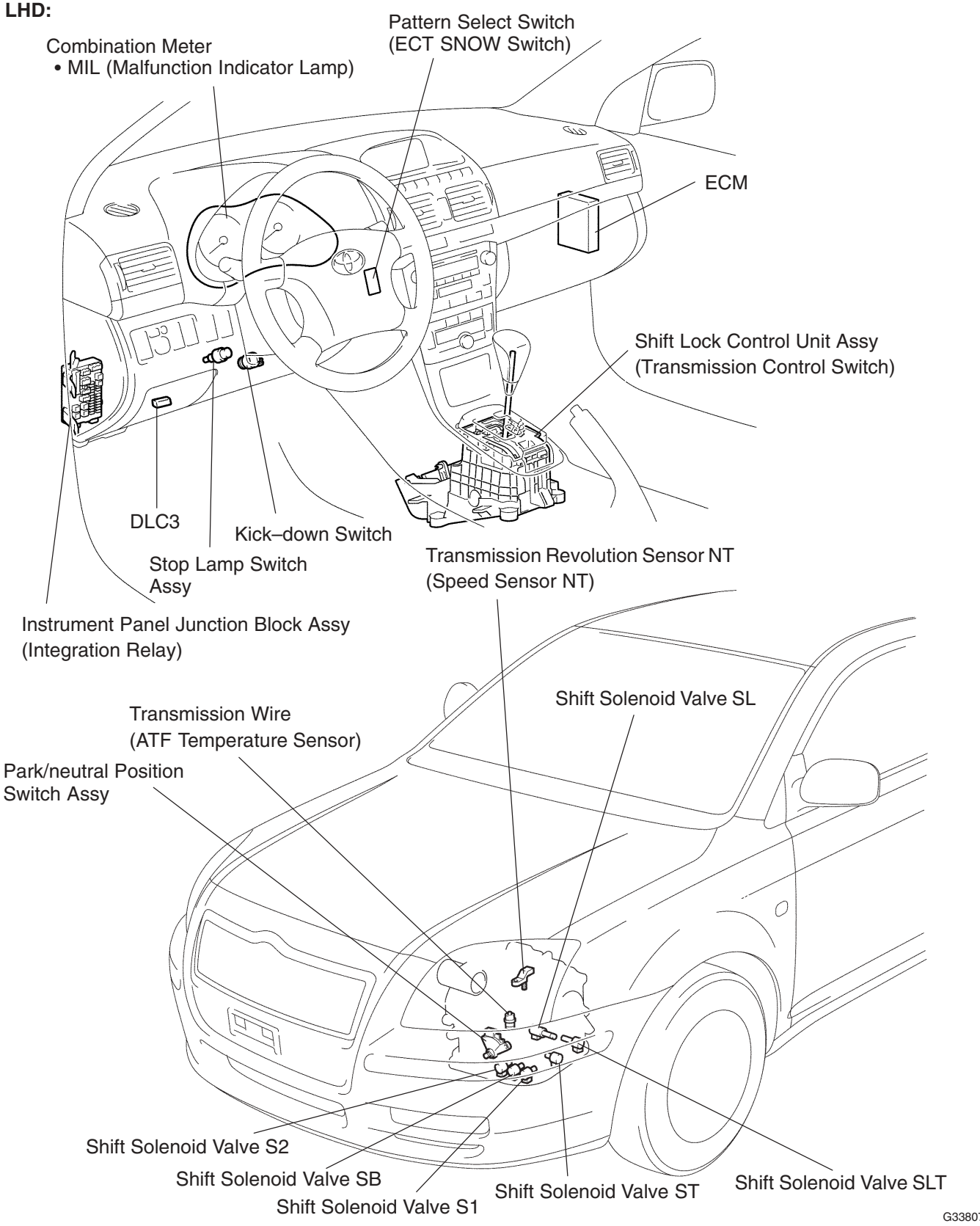

RHD:

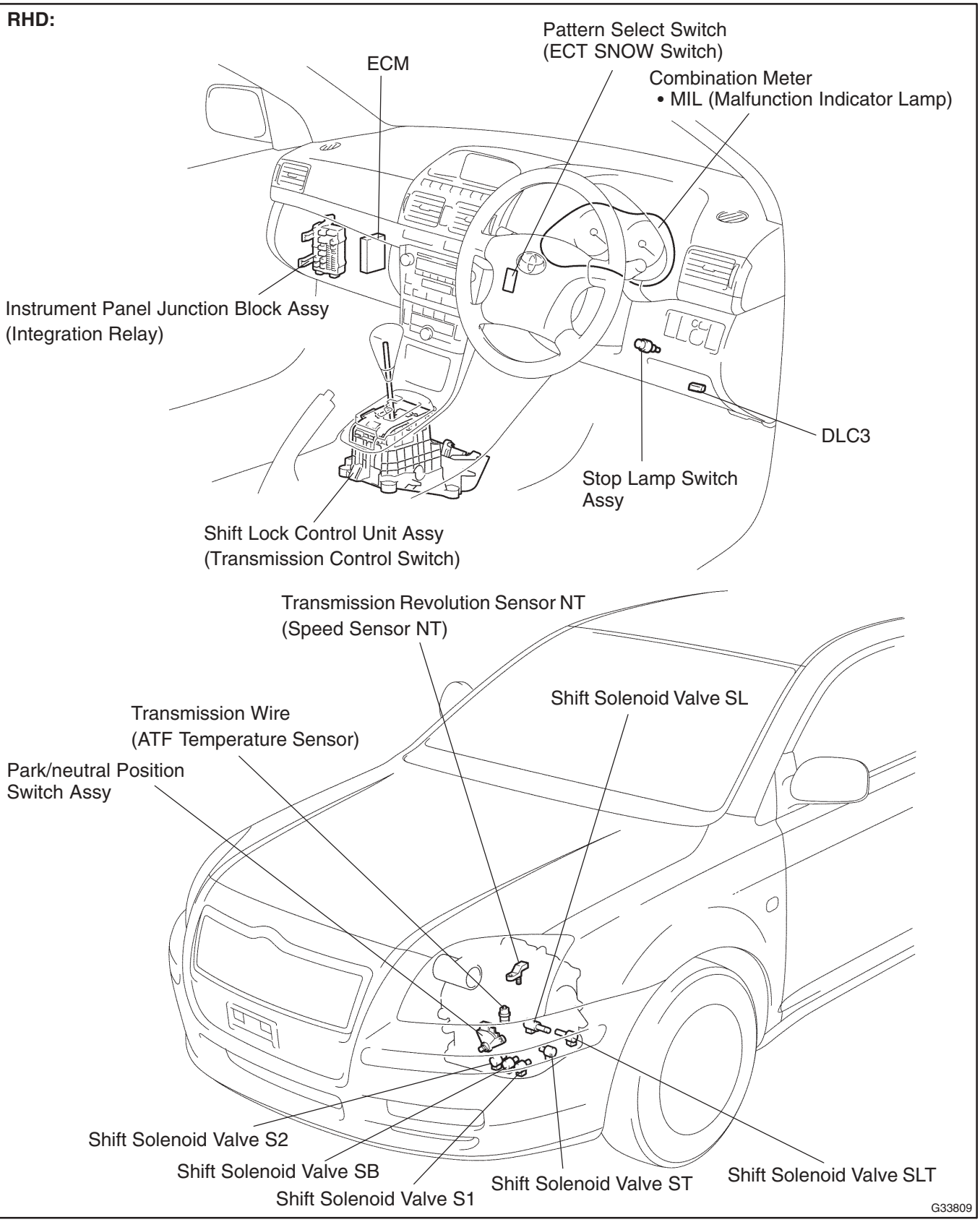
Pattern Select Switch
(ECT SNOW Switch)
ECM
Combination Meter
• MIL (Malfunction Indicator Lamp)
Instrument Panel Junction Block Assy
(Integration Relay)
DLC3
Stop Lamp Switch
Assy
Shift Lock Control Unit Assy
(Transmission Control Switch)
Transmission Revolution Sensor NT
(Speed Sensor NT)
Shift Solenoid Valve SL
Transmission Wire
(ATF Temperature Sensor)
Park/neutral Position
Switch Assy
Shift Solenoid Valve S2
Shift Solenoid Valve SB
Shift Solenoid Valve S1
Shift Solenoid Valve ST
Shift Solenoid Valve SLT
G33809

05KAM–02

SYSTEM DIAGRAM

The configuration of the electronic control system in the U341E automatic transaxles is as shown in the following chart.

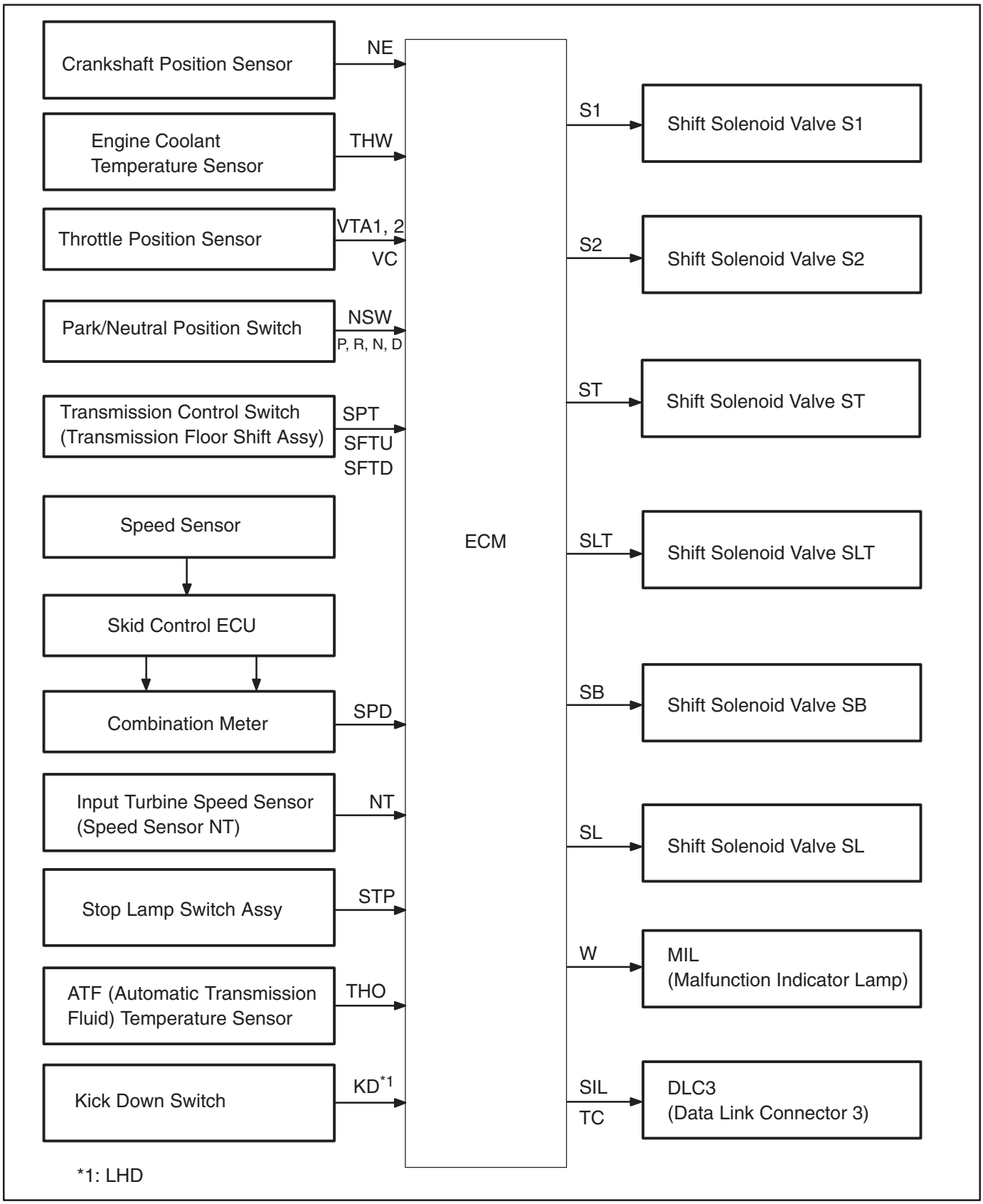

05KAN–01

SYSTEM DESCRIPTION

1. SYSTEM DESCRIPTION

(a) The ECT (Electronic controlled automatic transmission/transaxle) is an automatic transmission/transaxle that electronically controls shift timing using the ECM. The ECM detects electrical signals that indicate engine and driving conditions, controls the shift point, and selects the appropriate shift pattern based on driver habits and road conditions. As a result, fuel efficiency and power transmission/transaxle performance are improved.

Shift shock has been reduced by controlling the engine and transmission/transaxle simultaneously.

In addition, the ECT has the following features:

- Diagnostic function.
- Fail–safe function when a malfunction occurs.

056IH–10

HOW TO PROCEED WITH TROUBLESHOOTING

HINT:

- The intelligent tester II can be used at steps 3, 4, 6, and 9.

1	Vehicle Brought to Workshop

2	Customer Problem Analysis (SEE PAGE 05–218)

3	Connect the intelligent tester II to DLC3

4	Check and Clear DTC and Freeze Frame Data (SEE PAGE 05–239)

5	Visual Inspection

6	Setting the Check Mode Diagnosis (SEE PAGE 05–240)

7	Problem Symptom Confirmation (SEE PAGE 05–219)

- Symptom does not occur: Go to step 8
- Symptom occur: Go to step 9

8	Symptom Simulation (SEE PAGE 01–22)

9	DTC Check (SEE PAGE 05–239)

- DTC is not output: Go to step 10
- DTC is output: Go to step 17

10	Basic Inspection (See Pub. No. RM1018E, page 40–2, 40–8 and 40–69)

NG → Go to step 19

OK

11	Mechanical System Test (SEE PAGE 05–221)

NG → Go to step 16

OK

12	Hydraulic Test (SEE PAGE 05–223)

NG → Go to step 16

OK

13	Manual Shifting Test (SEE PAGE 05–224)

NG → Go to step 15

OK

14	Problem Symptoms Table Chapter 1 (SEE PAGE 05–229)

NG → Go to step 18

OK

15	Problem Symptoms Table Chapter 2 (SEE PAGE 05–229)

16	Part Inspection

→ Go to step 19

17	DTC Chart (SEE PAGE 05–245)

18	Circuit Inspection

19	Repair or Replace

20	Confirmation Test

End

056II–07

CUSTOMER PROBLEM ANALYSIS CHECK

Automatic Transaxle System Check Sheet

Inspector's Name :

Customer's Name		VIN	
		Production Date	/ /
		Licence Plate No.	
Date Vehicle Brought In	/ /	Odometer Reading	km mile

Date Problem Occurred	/ /
How Often Does Problem Occur?	☐ Continuous ☐ Intermittent (times a day)

Symptoms	☐ Vehicle does not move (☐ Any position ☐ Particular position)
	☐ No up–shift (☐ 1st → 2nd ☐ 2nd → 3rd ☐ 3rd → O/D)
	☐ No down–shift (☐ O/D → 3rd ☐ 3rd → 2nd ☐ 2nd → 1st)
	☐ Lock–up malfunction
	☐ Shift point too high or too low
	☐ Harsh engagement (☐ N → D ☐ Lock–up ☐ Any drive position)
	☐ Slip or shudder
	☐ No kick–down
	☐ Others ( )

Check Item	MIL	☐ Normal ☐ Remains ON

DTC Check	1st Time	☐ Normal code ☐ Malfunction code (DTC)
	2nd Time	☐ Normal code ☐ Malfunction code (DTC)

05KAO–02

ROAD TEST

1. PROBLEM SYMPTOM CONFIRMATION

(a) Based on the result of the customer problem analysis, try to reproduce the symptoms. If the problem is that the transaxle does not shift up, shift down, or the shift point is too high or too low, conduct the following road test referring to the automatic shift schedule and simulate the problem symptoms.

2. ROAD TEST

NOTICE:

Perform the test at the ATF (Automatic Transmission Fluid) temperature 50 to 80˚C (122 to 176˚F) in the normal operation.

(a) D position test:

Shift into the D position and fully depress the accelerator pedal and check the following points.

(1) Check up–shift operation.

Check that 1 → 2, 2 → 3 and 3 → 4 up–shifts take place, and that the shift points conform to the automatic shift schedule (See Pub. No. RM1018E, page 03–45).

HINT:

4th Gear Up–shift Prohibition Control

- Engine coolant temperature is 60 ˚C (140 ˚F) or less and vehicle speed is at 70 km/h (43 mph) or less.
- ATF temperature is 10 ˚C (50 ˚F) or less.

4th and 3rd Gear Lock–up Prohibition Control

- Brake pedal is depressed.
- Accelerator pedal is released.
- ATF temp. is 10˚C (50˚F) or less.
- Engine coolant temperature is 60 ˚C (140 ˚F) or less.

(2) Check for shift shock and slip.

Check for shock and slip at the 1 → 2, 2 → 3 and 3 → 4 up–shifts.

(3) Check for abnormal noise and vibration.

Check for abnormal noise and vibration when up–shifting from 1 → 2, 2 → 3 and 3 → 4 while driving with the shift lever in the D position, and check while driving in the lock–up condition.

HINT:

The check for the cause of abnormal noise and vibration must be done thoroughly as it could also be due to loss of balance in the differential, torque converter clutch, etc.

(4) Check kick–down operation.

Check vehicle speeds when the 2nd to 1st, 3rd to 2nd and 4th to 3rd kick–downs take place while driving with the shift lever in the D position. Confirm that each speed is within the applicable vehicle speed range indicated in the automatic shift schedule (See Pub. No. RM1018E, page 03–45).

(5) Check for abnormal shock and slip at kick–down.

(6) Check the lock–up mechanism.

- Drive in D position (4th gear), at a steady speed (lock–up ON).
- Lightly depress the accelerator pedal and check that the engine speed does not change abruptly.

HINT:

- There is no lock–up function in the 1st and 2nd gear.
- If there is a big jump in engine speed, there is no lock–up.

(b) S position test

Shift to the S position, depress the accelerator pedal and check the following points:

(1) Check shift operation.

- While driving in the D position and 4th gear, shift into the S position and back to the D position. Check that the gear change 4 → 3 down–shift and 3 → 4 up–shift can be performed.
- With the shift lever in the S position (while the vehicle is stopped), shift into the "+" position to check that the shift position on the combination meter changes as follows: 1 → 2, 2 → 3 and 3 → 4.
- While driving in the 3(S) position and 3rd gear (at a vehicle speed of approximately 30 to 40 km/h (19 to 25 mph)), shift into the "–" position and check if the 2nd gear down–shift occurs and the engine brake performs properly.
- While driving in the 2(S) position and 2nd gear (at a vehicle speed of approximately 20 to 30 km/h (12 to 19 mph)), shift into the "–" position and check if the 1st gear down–shift occurs and the engine brake performs properly.

HINT:

Manual shift (S position) is prohibited under either of the following conditions:

- Down–shifting may cause engine overrun.
- The driver continuously down–shifts. (Down–shifting to 1st gear may not be performed.)

(c) R position test:

Shift into the R position, lightly depress the accelerator pedal, and check that the vehicle moves backward without any abnormal noise or vibration.

CAUTION:

Before conducting this test ensure that the test area is free from people and obstruction.

(d) P position test:

Stop the vehicle on the grade (more than 5°) and after shifting into the P position, release the parking brake. Then, check that the parking lock pawl holds the vehicle in place.

05KAP–02

MECHANICAL SYSTEM TESTS

1. PERFORM MECHANICAL SYSTEM TESTS

(a) Measure the stall speed.

The object of this test is to check the overall performance of the transaxle and engine by measuring the stall speeds in the D and R positions.

NOTICE:

- **Perform the test at the normal operating ATF (Automatic Transmission Fluid) temperature 50 to 80°C (122 to 176°F).**
- **Do not continuously run this test for longer than 10 seconds.**
- **To ensure safety, do this test in a wide, clear level area which provides good traction.**
- **The stall test should always be carried out in pairs. One technician should observe the conditions of wheels or wheel stoppers outside the vehicle while the other is doing the test.**

(1) Chock the 4 wheels.

(2) Connect an Intelligent Tester II to the DLC3.

(3) Fully apply the parking brake.

(4) Keep your left foot pressed firmly on the brake pedal.

(5) Start the engine.

(6) Shift into the D position. Press all the way down on the accelerator pedal with your right foot.

(7) Quickly read the stall speed at this time.

Stall speed: 2,400 ± 150 rpm

(8) Do the same test in the R position.

Stall speed: 2,400 ± 150 rpm

Evaluation:

Problem	Possible cause
(a) Stall engine speed is low in D and R positions	• Engine power output may be insufficient • Stator one–way clutch not operating properly HINT: If the value is less than the specified value by 600 rpm or more, the torque converter could be faulty.
(b) Stall engine speed is high in D position	• Line pressure is too low • Forward clutch slipping • One–way clutch No.2 not operating properly
(c) Stall engine speed is high in R position	• Line pressure is too low • Reverse clutch slipping • 1st and reverse brake slipping
(d) Stall engine speed is high in D and R positions	• Line pressure is too low • Improper fluid level

(b) Measure the time lag.

(1) When the shift lever is shifted while the engine is idling, there will be a certain time lapse or lag before the shock can be felt. This is used for checking the condition of the direct clutch, forward clutch, and 1st and reverse brake.

NOTICE:

- **Perform the test at the normal operating ATF temperature 50 to 80 °C (122 to 176 °F).**
- **Be sure to allow 1 minute interval between tests.**
- **Perform the test three times, and measure the time lags. Calculate the average value of the three time lags.**

(2) Connect an Intelligent Tester II to the DLC3.

(3) Fully apply the parking brake.

(4) Start and warm up the engine and check idle speed.

Idle speed: approx. 700 rpm (In N position and A/C OFF)

(5) Shift the lever from N to D position. Using a stop watch, measure the time from when the lever is shifted until the shock is felt.

Time lag: N → D less than 1.2 seconds

(6) In the same way, measure the time lag for N → R.

Time lag: N → R less than 1.5 seconds

Evaluation (If N → D or N → R time lag is longer than the specified):

Problem	Possible cause
N → D time lag is longer	• Line pressure is too low • Forward clutch worn • One–way clutch No.2 not operating properly
N → R time lag is longer	• Line pressure is too low • Reverse clutch worn • 1st and reverse brake worn

05KAQ–02

HYDRAULIC TEST

1. PERFORM HYDRAULIC TEST

(a) Measure the line pressure.

NOTICE:

- **Perform the test at the normal operating ATF (Automatic Transmission Fluid) temperature 50 to 80˚C (122 to 176˚F).**
- **The line pressure test should always be carried out in pairs. One technician should observe the conditions of wheels or wheel stopper outside the vehicle while the other is doing the test.**
- **Be careful to prevent SST's hose from interfering with the exhaust pipe.**
- **This check must be conducted after checking and adjusting engine.**
- **Perform under condition that A/C is OFF.**
- **When conducting stall test, do not continue more than 10 seconds.**

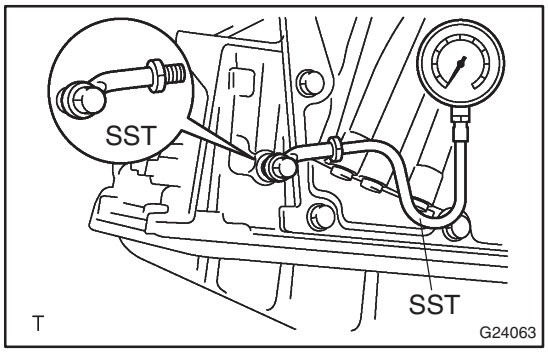

(1) Warm up the ATF.
(2) Remove the test plug on the left side of the transaxle case and connect SST.

SST 09992–00095 (09992– 00231, 09992–00271)

(3) Fully apply the parking brake and chock the 4 wheels.
(4) Connect an Intelligent Tester II to the DLC3.
(5) Start the engine and check idling speed.
(6) Keep your left foot pressing firmly on the brake pedal and shift into D position.
(7) Measure the line pressure when the engine is idling.
(8) Depress the accelerator pedal all the way down. Quickly read the highest line pressure when engine speed reaches stall speed.
(9) In the same way, do the test in R position.

Specified line pressure:

Condition	D position kPa (kgf / cm^2, psi)	R position kPa (kgf / cm^2, psi)
Idling	372 to 412 kPa (3.8 to 4.2 kgf/cm^2, 54 to 60 psi)	553 to 623 kPa (5.6 to 6.4 kgf/cm^2, 80 to 90 psi)
Stall test	1,126 to 1,226 kPa (11.5 to 12.5 kgf/cm^2, 163 to 178 psi)	1,664 to 1,864 kPa (17.0 to 19.0 kgf/cm^2, 241 to 270 psi)

Evaluation:

Problem	Possible cause
If the measured values at all positions are higher	• Shift solenoid valve SLT defective • Regulator valve detective
If the measured values at all positions are lower	• Shift solenoid valve SLT defective • Regulator valve detective • Oil pump defective
If pressure is low in the D position only	• D position circuit fluid leak • Forward clutch defective
If pressure is low in the R position only	• R position circuit fluid leak • Reverse clutch defective • 1st and reverse brake defective

05KAR–02

MANUAL SHIFTING TEST

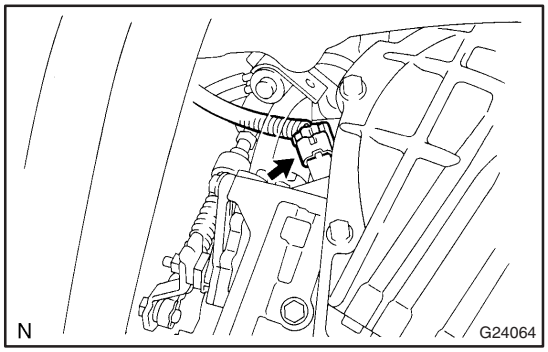

1. PERFORM MANUAL SHIFTING TEST

HINT:

- With this test, it can be determined whether the trouble occurs in the electrical circuit or is a mechanical problem in the transaxle.
- If any abnormalities are found in the following test, the problem is in the transaxle itself.

(a) Disconnect the transmission wire connector.

(b) Drive with the transmission wire disconnected.
Shifting the shift lever to the D position to check whether the shifting condition changes the table below.

Shift Position	Shifting Condition
D	No Shift (Not Change)

HINT:

When driving with the transmission wire disconnected, the gear position will be as follows:

- When the shift lever is in the D position, the gear is held in the 3rd position.
- When the shift lever is in the R or the P position, the gear is also in the R or the P position respectively.

(c) Connect the transmission wire connector.

(d) Clear the DTC (see page 05–239).

05KAS–02

INITIALIZATION

1. RESET MEMORY

CAUTION:

Perform the RESET MEMORY (AT initialization) when replacing the automatic transaxle assy, engine assy or ECM.

NOTICE:

Intelligent tester II only

HINT:

The ECM memorizes the condition that the ECT controls the automatic transaxle assy and engine assy according to those characteristics. Therefore, when the automatic transaxle assy, engine assy, or ECM has been replaced, it is necessary to reset the memory so that the ECM can memorize the new information. Reset procedure is as follows.

(a) Turn the ignition switch off.
(b) Connect the intelligent tester II to the DLC3.
(c) Turn the ignition switch to the ON position.
(d) Turn the intelligent tester II main switch on.
(e) Perform the reset memory procedure from the main menu.

CAUTION:

After performing the RESET MEMORY, be sure to perform the ROAD TEST (see page 05–219) described earlier.

HINT:

The ECM is learned by performing the ROAD TEST.

Tester menu flow:

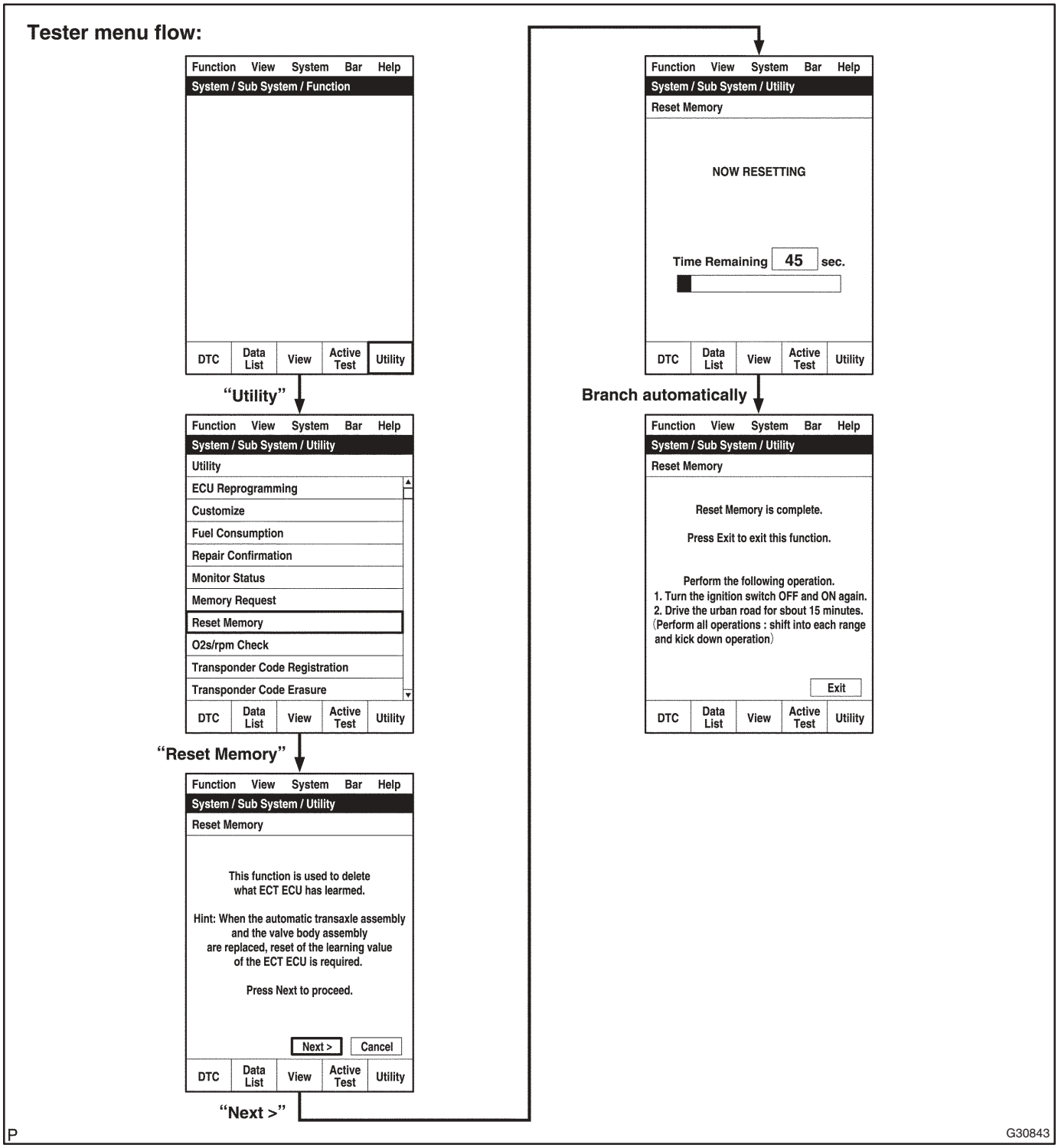

05KAT–02

MONITOR DRIVE PATTERN

1. MONITOR DRIVE PATTERN FOR ECT TEST

(a) Perform this drive pattern as one method to simulate the detection conditions of the ECT malfunctions. (The DTCs may not be detected due the actual driving conditions. And some codes may not be detected through this drive pattern).

HINT:

Preparation for driving

- Warm up the engine sufficiently. (Engine coolant temperature is 60 °C (140 °F) or higher)
- Drive the vehicle when the atmospheric temperature is –10 °C (14 °F) or higher. (Malfunction is not detected when the atmospheric temperature is –10 °C (14 °F) or less)

Driving note

- Drive the vehicle through all gears.
  Stop → 1st → 2nd → 3rd → 4th → 4th (lock–up ON).
- Perform engine brake test in the S position.
  While driving in the 4(S) position and 4th gear lock–up, shift into the "–" position and down–shift from 4th to 3rd, 3rd to 2nd, 2nd to 1st.
  Check that the engine brake performs properly whenever down–shift takes place.
- Repeat the above driving pattern three times or more.

NOTICE:

- **When using the intelligent tester II, monitor status can be found in the "Power train / Engine and ECT / Data List".**
- **In the event that the drive pattern must be interrupted (possibly due to traffic conditions or other factors) the drive pattern can be resumed and, in most cases, the monitor can be completed.**

CAUTION:

Perform this drive pattern on a level road as much as possible and strictly observe the posted speed limits and traffic laws while driving.

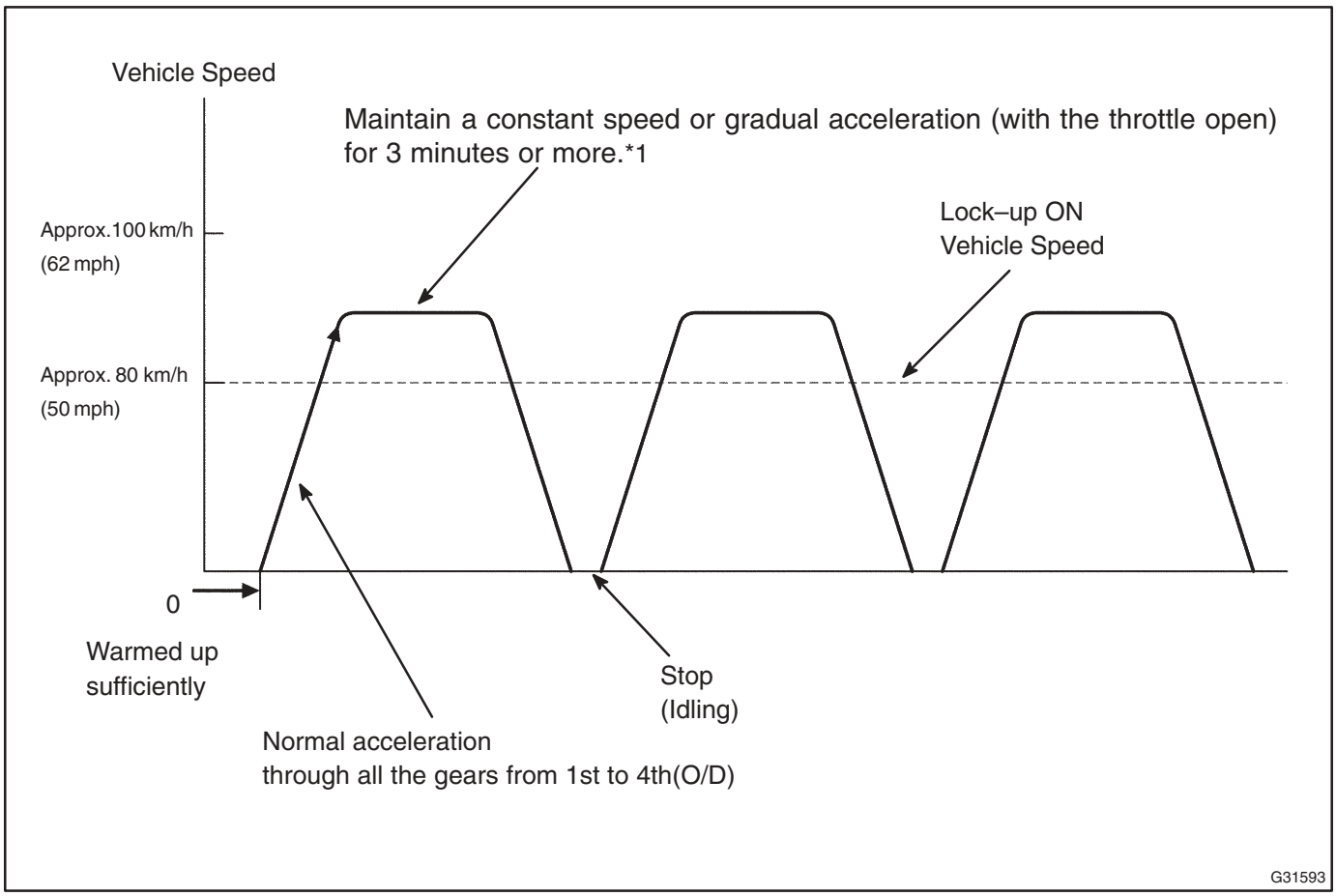

HINT:

*1: Drive at such a speed in the uppermost gear, to engage lock–up. The vehicle can be driven at a speed lower than that in the above diagram under the lock–up condition.

NOTICE:

It is necessary to drive the vehicle for approximately 30 minutes to detect DTC P0711 (ATF temperature sensor malfunction).

056IN–10

PROBLEM SYMPTOMS TABLE

HINT:

If a normal code is displayed during the diagnostic trouble code check although the trouble still occurs, check the electrical circuits for each symptom in the order given in the charts on the following pages and proceed to the page given for troubleshooting.

The Matrix Chart is divided into 2 chapters.

1. **Chapter 1: Electronic Circuit Matrix Chart**

- Refer to the table below when the trouble cause is considered to be electrical.
- If the instruction ”Proceed to next circuit inspection shown on matrix chart” is given in the flow chart of each circuit, proceed to the circuit with the next highest number in the table to continue the check.
- If the trouble still occurs even though there are no abnormalities in any of the other circuits, check and replace the ECM.

HINT:

*1: When the circuit on which mark *1 is attached is a malfunction, DTC could be output (see page 05–245).

*2: LHD

Symptom	Suspect Area	See page
No up–shift (1st → 2nd)	ECM	01–32
No up–shift (2nd → 3rd)	ECM	01–32
No up–shift (3rd → 4th)	1. Park/neutral position switch circuit *1 2. ECM	05–247 01–32
No down–shift (4th → 3rd)	1. Park/neutral position switch circuit *1 2. ECM	05–247 01–32
No down–shift (3rd → 2nd)	ECM	01–32
No down–shift (2nd → 1st)	ECM	01–32
No lock–up or No lock–up off	1. Shift solenoid valve (SL) circuit *1 2. Stop light switch circuit *1 3. Engine coolant temp. sensor circuit *1 4. ECM	05–289 05–261 05–27 01–32
Shift point too high or too low	1. Throttle position sensor circuit *1 2. Shift solenoid valve (SLT) circuit *1 3. Engine coolant temp. sensor circuit *1 4. ECM	05–27 05–286 05–27 01–32
Up–shift to 4th from 3rd while engine is cold	1. Engine coolant temp. sensor circuit *1 2. ATF temperature sensor circuit *1 3. ECM	05–27 05–252 01–32
No gear change by shifting into ”+” or ”–” while the shift lever is in the S position	1. Transmission control switch circuit 2. ECM	05–292 01–32
Harsh engagement (N → D)	ECM	01–32
Harsh engagement (Lock–up)	ECM	01–32
Harsh engagement (Any driving position)	1. Shift solenoid valve (SLT) circuit *1 2. ECM	05–286 01–32
Poor acceleration	1. Shift solenoid valve (SLT) circuit *1 2. Pattern select (ECT SNOW) switch circuit 3. ECM	05–286 05–297 01–32
Engine stalls when starting off or stopping	1. Shift solenoid valve (SL) circuit *1 2. ECM	05–289 01–32

No kick–down	1. Kick–down switch circuit *2 2. ECM	05–301 01–32
Malfunction in shifting	1. Park/neutral position switch circuit *1 2. Transmission control switch circuit 3. ECM	05–247 05–292 01–32

2. Chapter 2: On–Vehicle Repair and Off–Vehicle Repair (★: U340E AUTOMATIC TRANSAXLE Repair Manual Pub. No. RM824E) (●:AVENSIS Repair Manual Pub. No. RM1018E, page 05–1001)

Symptom	Suspected Area	See page
Vehicle does not move in any forward position and reverse position	1. Manual valve 2. Valve body assy (Primary regulator valve) 3. Valve body assy (Secondary regulator valve) 4. Planetary gear unit 5. Forward clutch 6. One–way clutch No. 2 7. Reverse Clutch 8. 1st and reverse brake	★ ● ● ★ ★ ★ ★ ★
Vehicle does not move in R position	1. Manual valve 2. Planetary gear unit 3. Reverse Clutch 4. 1st and reverse brake	★ ★ ★ ★
No up–shift (1st → 2nd)	1. Valve body assy (1–2 shift valve) 2. 2nd brake 3. One–way clutch No. 1	● ★ ★
No up–shift (2nd → 3rd)	1. Valve body assy (2–3 shift valve) 2. Direct clutch	● ★
No up–shift (3rd → 4th)	1. Valve body assy (3–4 shift valve) 2. O/D and 2nd brake	● ★
No down–shift (4th → 3rd)	Valve body assy (3–4 shift valve)	●
No down–shift (3rd → 2nd)	Valve body assy (2–3 shift valve)	●
No down–shift (2nd → 1st)	Valve body assy (1–2 shift valve)	●
No lock–up or No lock–up off	1. Valve body assy (Lock–up relay valve) 2. Valve body assy (Lock–up control valve) 3. Valve body assy (Solenoid relay valve) 4. Valve body assy (Solenoid modulator valve) 5. Torque converter clutch	● ● ● ● ●
Harsh engagement (N → D)	1. Valve body assy (C_1 accumulator) 2. Valve body assy (Accumulator control valve) 3. Forward clutch 4. One–way clutch No. 2	● ● ★ ★
Harsh engagement (N → R)	1. C_3 accumulator 2. Valve body assy (Accumulator control valve) 3. Valve body assy (Reverse control valve) 4. Reverse clutch 5. 1st and reverse brake	★ ● ● ★ ★
Harsh engagement (Lock–up)	1. Valve body assy (Lock–up relay valve) 2. Valve body assy (Accumulator control valve) 3. Valve body assy (Lock–up control valve) 4. Torque converter clutch	● ● ● ●
Harsh engagement (1st → 2nd)	1. B_2 accumulator 2. Valve body assy (Accumulator control valve) 3. 2nd brake 4. One–way clutch No. 1	★ ● ★ ★
Harsh engagement (2nd → 3rd)	1. C_2 accumulator 2. Valve body assy (Accumulator control valve) 3. Direct clutch	★ ● ★

Harsh engagement (3rd → 4th)	1. Valve body assy (B_1 accumulator) 2. Valve body assy (Accumulator control valve) 3. Valve body assy (3–4 shift timing valve) 4. O/D and 2nd brake	● ● ● ★
Harsh engagement (4th → 3)	1. Valve body assy (3–4 shift timing valve) 2. Valve body assy (4–3 shift timing valve)	● ●
Harsh engagement (D, 2, 1 position)	Valve body assy (Coast relay valve)	●
Slip or shudder (Forward position)	1. Valve body assy (Oil strainer) 2. Torque converter clutch 3. Forward clutch 4. Direct clutch 5. O/D and 2nd brake 6. 2nd brake 7. One–way clutch No. 1 8. One–way clutch No. 2	● ● ★ ★ ★ ★ ★ ★
Slip or shudder (Reverse position)	1. Valve body assy (Oil strainer) 2. Reverse clutch 3. 1st and reverse brake	● ★ ★
Slip or shudder (1st)	One–way clutch No. 2	★
Slip or shudder (2nd)	1. 2nd brake 2. One–way clutch No. 1	★ ★
Slip or shudder (3rd)	Direct clutch	★
Slip or shudder (4th)	O/D and 2nd brake	★
No engine braking (1st: 1 position)	1. Valve body assy (Reverse control valve) 2. 1st and reverse brake	● ★
No engine braking (2nd: 2 position)	1. Valve body assy (3–4 shift valve) 2. O/D and 2nd brake	● ★
No kick–down	1. Valve body assy (1–2 shift valve) 2. Valve body assy (2–3 shift valve) 3. Valve body assy (3–4 shift valve)	● ● ●
Poor acceleration	1. Valve body assy (SLT damper) 2. Torque converter clutch	● ●
Large shift shock or engine stalls when starting off or stopping	Torque converter clutch	●

05L2J–01

TERMINALS OF ECM

1. ECM

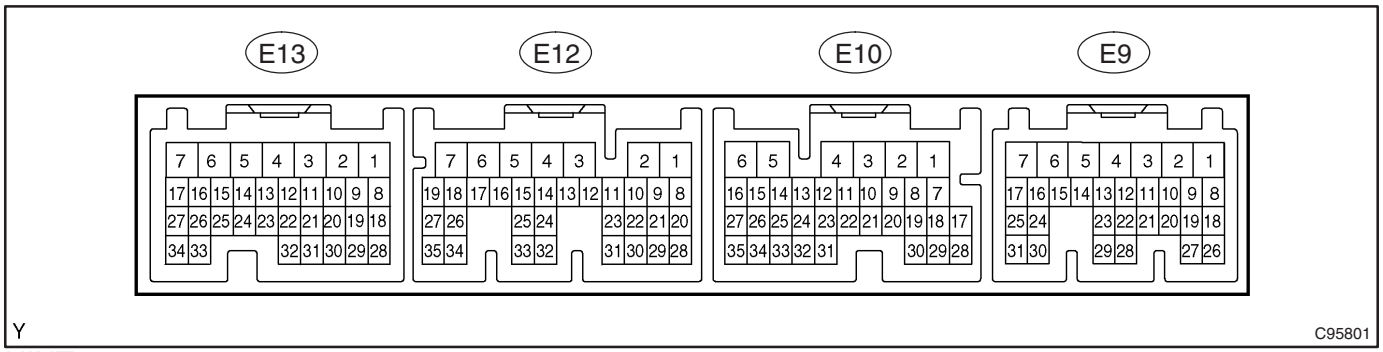

HINT:

Each ECM terminal's standard voltage is shown in the table below.

In the table, first follow the information under "Condition". Look under "Symbols (Terminal No.)" for the terminals to inspected. The standard voltage between the terminals is shown under "Specific Condition".

Use the illustration above as a reference for the ECM terminals.

Symbols (Terminals No.)	Wiring Color	Terminal Description	Condition	Specified Condition
SLT+ (E12–13) – SLT– (E12–12)	P–L – P	SLT solenoid signal	Engine idle speed	Pulse generation (See waveform 1)
THO (E12–32) – E2 (E13–28)	V – BR	ATF temperature sensor signal	ATF temperature: 115 °C (239 °F) or more	Below 1.5 V
ST (E12–20) – E1 (E13–5)	R–B – BR	ST solenoid signal	IG switch ON	Below 1 V
↑	↑	↑	IG switch ON and R gear	10 to 14 V
SL (E12–15) – E1 (E13–5)	R – BR	SL solenoid signal	IG switch ON	Below 1 V
↑	↑	↑	Vehicle driving under lock–up range	10 to 14 V
S2 (E12–10) – E1 (E13–5)	P – BR	S2 solenoid signal	IG switch ON	Below 1 V
↑	↑	↑	1st or O/D gear	10 to 14 V
↑	↑	↑	2nd or 3rd gear	Below 1 V
S1 (E12–11) – E1 (E13–5)	P–L – BR	S1 solenoid signal	IG switch ON	10 to 14 V
↑	↑	↑	1st or 2nd gear	10 to 14 V
↑	↑	↑	3rd or O/D gear	Below 1 V
SB (E12–8) – E1 (E13–5)	L – BR	SB solenoid signal	IG switch ON	Below 1 V
NT+ (E12–26) – NT– (E12–34)	B–O – B	Speed sensor (NT) signal	Vehicle speed 20 km/h (12 mph)	Pulse generation (See waveform 2)
SPT (E10–8) – E1 (E13–5)	L – BR	S shift position switch signal	IG switch ON and shift lever S position	10 to 14 V
↑	↑	↑	IG switch ON and shift lever except S position	Below 1 V
D (E10–10) – E1 (E13–5)	LG–B – BR	D shift position switch signal	IG switch ON and shift lever D and S position	10 to 14 V
↑	↑	↑	IG switch ON and shift lever except D and S position	Below 1 V
R (E10–11) – E1 (E13–5)	R–Y – BR	R shift position switch signal	IG switch ON and shift lever R position	10 to 14 V
↑	↑	↑	IG switch ON and shift lever except R position	Below 1 V

KD *1 (E10–31) – E1 (E13–5)	W – BR	Kick–down switch signal	IG switch ON and Accelerator pedal is depressed	Below 1 V
↑	↑	↑	IG switch ON and Accelerator pedal is released	10 to 14 V
SPD (E10–17) – E1 (E13–5)	V–W – BR	Speed signal	Vehicle speed 20 km/h (12 mph)	Pulse generation (See waveform 3)
STP (E10–19) – E1 (E13–5)	G–W – BR	Stop lamp switch signal	Brake pedal is depressed	7.5 to 14 V
↑	↑	↑	Brake pedal is released	Below 1.5 V
SFTU (E10–2) – E1 (E13–5)	R – BR	Up shift switch signal	IG switch ON and shift lever S position	10 to 14 V
↑	↑	↑	IG switch ON and shift lever "+" position (Up shift)	Below 1 V
SFTD (E10–1) – E1 (E13–5)	B – BR	Down shift switch signal	IG switch ON and shift lever S position	10 to 14 V
↑	↑	↑	IG switch ON and shift lever "–" position (Down shift)	Below 1 V
P (E9–13) – E1 (E13–5)	W–L – BR	Park position switch signal	IG switch ON and shift lever P position	10 to 14 V
↑	↑	↑	IG switch ON and shift lever except P position	Below 1 V
N (E10–20) – E1 (E13–5)	R – BR	Neutral position switch signal	IG switch ON and shift lever N position	10 to 14 V
↑	↑	↑	IG switch ON and shift lever except N position	Below 1 V
NSW (E13–23) – E1 (E13–5)	B–W – BR	Park neutral switch signal	IG switch ON and shift lever P and N position	Below 1 V
↑	↑	↑	IG switch ON and shift lever except P and N position	10 to 14 V

HINT:

*1: LHD

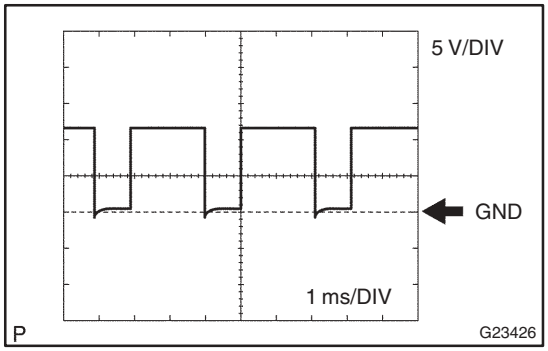

Waveform 1

Reference:

Terminal	SLT+ – SLT–
Tool setting	5V/DIV, 1ms/DIV
Vehicle condition	Engine idle speed

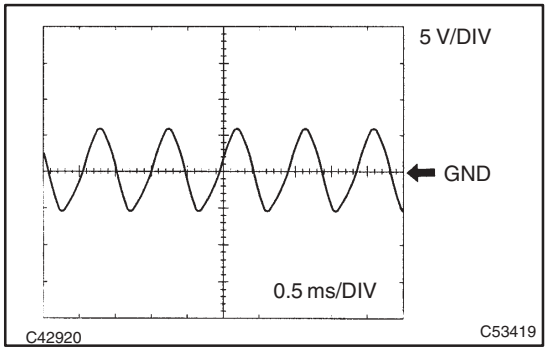

Waveform 2

Reference:

Terminal	NT+ – NT–
Tool setting	5V/DIV, 0.5ms/DIV
Vehicle condition	Vehicle speed 20 km/h (12 mph)

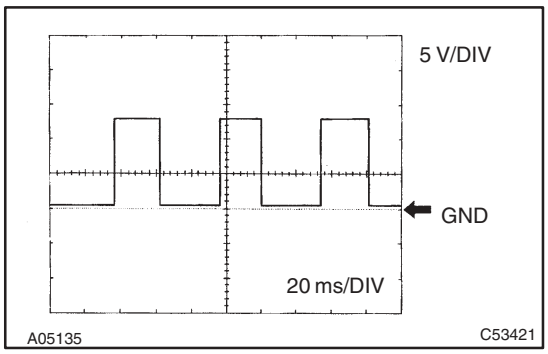

Waveform 3

Reference:

Terminal	SPD – E1
Tool setting	5V/DIV, 20ms/DIV
Vehicle condition	Vehicle speed 20 km/h (12 mph)

05KAV–02

DIAGNOSIS SYSTEM

EURO–OBD (EUROPE)

When troubleshooting Europe On–Board Diagnostic (Euro–OBD) vehicles, the vehicle must be connected to an OBD scan tool (complying with ISO 15031–4). Various data output from the vehicle's ECM can then be read.

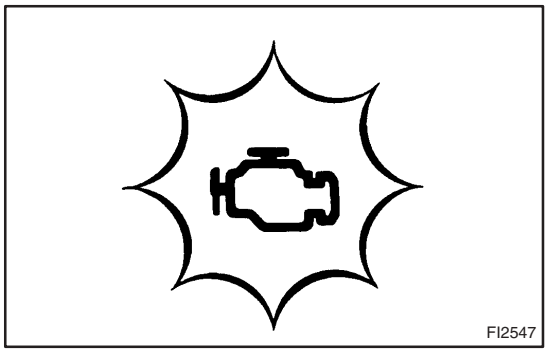

Euro–OBD regulations require that the vehicle's on–board computer illuminates the Malfunction Indicator Lamp (MIL) on the instrument panel when the computer detects a malfunction in:

1) The emission control system/components.
2) The powertrain control components (which affect vehicle emissions).
3) The computer.

In addition, the applicable Diagnostic Trouble Codes (DTCs) prescribed by ISO 15031–6 are recorded in the ECM memory. If the malfunction does not reoccur in 3 consecutive trips, the MIL turns off automatically but the DTCs remain recorded in the ECM memory.

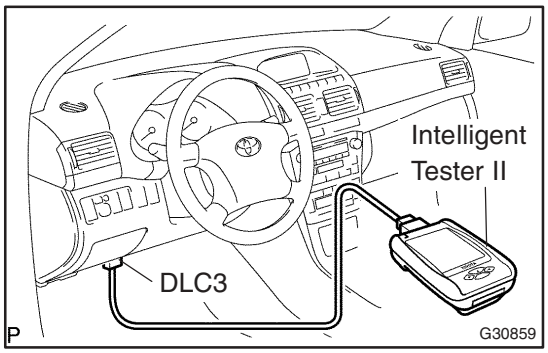

To check DTCs, connect the Intelligent Tester II or OBD scan tool to the Data Link Connector 3 (DLC3) of the vehicle.
The scan tool displays DTCs, the freeze frame data and a variety of the engine data.
The DTCs and freeze frame data can be erased with the scan tool (see page 05–239).

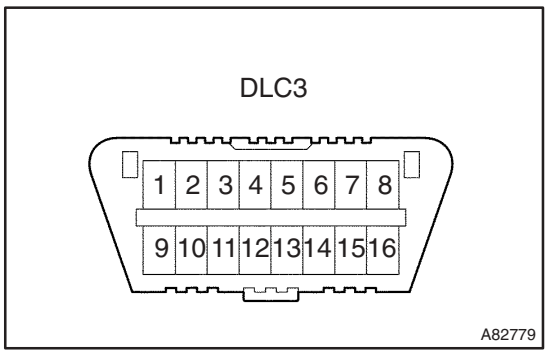

M–OBD (EXCEPT EUROPEAN SPEC.)

When troubleshooting Multiplex On–Board Diagnostic (M–OBD) vehicles, the vehicle must be connected to the Intelligent Tester II. Various data output from the ECM can then be read.

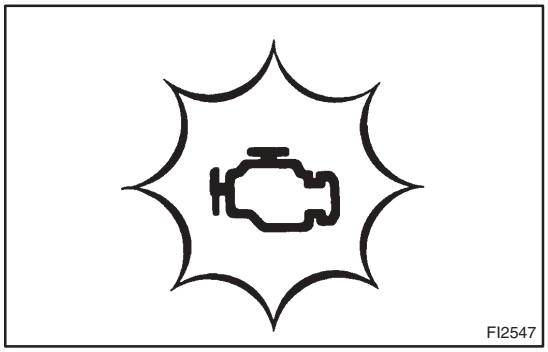

OBD II regulations require that the vehicle's on–board computer illuminates the MIL on the instrument panel when the computer detects a malfunction in:

1) The emission control system / components
2) The power train control components (which affect vehicle emissions)
3) The computer

In addition to, the applicable DTCs are recorded in the ECM memory. If the malfunction does not recur in 3 consecutive trips, the MIL turns off automatically but the DTCs remain recorded in the ECM memory.

NORMAL MODE AND CHECK MODE

The diagnosis system operates in "normal mode" during normal vehicle use. In normal mode, "2 trip detection logic" is used to ensure accurate detection of malfunctions. "Check mode" is also available to technicians as an option. In check mode, "1–trip detection logic" is used for simulating malfunction symptoms and increasing the system's ability to detect malfunctions, including intermittent malfunctions (Intelligent Tester II only).

2–TRIP DETECTION LOGIC

When a malfunction is first detected, the malfunction is temporarily stored in the ECM memory (1st trip). If the ignition switch is turned OFF and then ON again, and the same malfunction is detected again, the MIL will illuminate.

FREEZE FRAME DATA

Freeze frame data records the engine conditions (fuel system, calculated load, engine coolant temperature, fuel trim, engine speed, vehicle speed, etc.) when a malfunction is detected. When troubleshooting, freeze frame data can help determine if the vehicle was running or stopped, if the engine was warmed up or not, if the air/fuel ratio was Lean or Rich, and other data from the time the malfunction occurred.

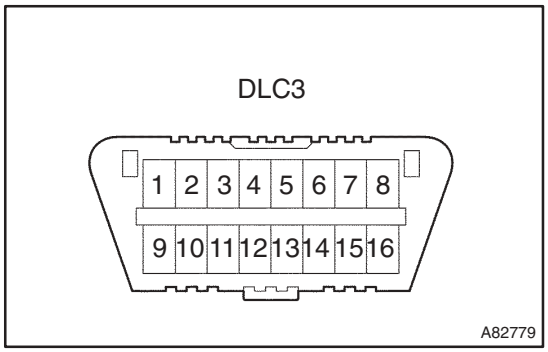

DLC3 (Data Link Connector 3)

The vehicle's ECM uses the ISO 9141–2 (Euro–OBD)/ ISO 14230(M–OBD) communication protocol. The terminal arrangement of the DLC3 complies with ISO 15031–03 and matches the ISO 9141–2/ ISO 14230 format.

HINT:

Connect the cable of the Intelligent Tester II to the DLC3, turn the ignition switch ON and attempt to use the Intelligent Tester II. If the screen displays UNABLE TO CONNECT TO VEHICLE, a problem exists in the vehicle side or the tester side.

If the communication is normal when the tool is connected to another vehicle, inspect the DLC3 on the original vehicle.

If the communication is still impossible when the tool is connected to another vehicle, the problem is probably in the tool itself. Consult the Service Department listed in the tool's instruction manual.

Symbol	Terminal No.	Name	Reference terminal	Result	Condition
SIL	7	Bus "+" line	5 – Signal ground	Pulse generation	During transmission
CG	4	Chassis ground	Body ground	1 Ω or less	Always
SG	5	Signal ground	Body ground	1 Ω or less	Always
BAT	16	Battery positive	Body ground	9 to 14 V	Always

INSPECT BATTERY VOLTAGE

Battery Voltage: 11 to 14 V

If voltage is below 11 V, replace the battery before proceeding.

CHECK MIL

(a) Check that the MIL illuminates when turning the ignition switch ON.

If the MIL does not illuminate, there is a problem in the MIL circuit (refer to MIL CIRCUIT on page 05–204).

(b) When the engine is started, the MIL should turn off.

05KAW–02

DTC CHECK/CLEAR

1. CHECK DTC WITH INTELLIGENT TESTER II

DTCs which are stored in the ECM can be displayed with the Intelligent Tester II and generic OBD scantool.

These scan tools can display pending DTCs and current DTCs. Some DTC aren't stored if the ECM doesn't detect a malfunction during consecutive driving. However, the detected malfunction during once driving is stored as pending DTC.

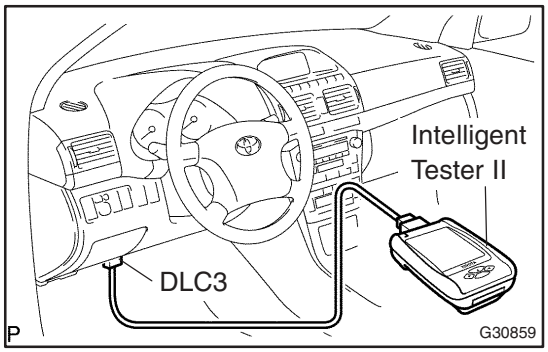

(a) Connect the Intelligent Tester II to the Data Link Connector 3 (DLC3).
(b) Turn the ignition switch ON.
(c) Enter the following menus: Enter/ Power train/ Engine and ECT/ DTC/ Current (or Pending).
(d) Confirm the DTCs and freeze frame data and then write them down.
(e) See page 05–245 to confirm the details of the DTCs.

NOTICE:

When simulating a symptom with the scan tool to check the DTCs, use normal mode. For codes on DIAGNOSTIC TROUBLE CODE CHART subject to "2–trip detection logic", perform the following actions.

Turn the ignition switch OFF after the symptom is simulated once. Then repeat the simulation process again. When the problem has been simulated twice, the MIL illuminates and the DTCs are recorded in the ECM.

2. CLEAR DTC WITH INTELLIGENT TESTER II

(a) Connect the Intelligent Tester II to the DLC3.
(b) Turn the ignition switch ON.
(c) Enter the following menus: Enter/ Power train/ Engine and ECT/ DTC/ Clear.

3. CLEAR DTC WITHOUT INTELLIGENT TESTER II

Disconnecting the battery terminal or remove the EFI and ETCS fuses from the engine room R/B for 60 seconds or more. But if you disconnect the battery terminal, you should do the "INITIALIZE" procedure.

05KAX–02

CHECK MODE PROCEDURE

DESCRIPTION

Check mode has a higher sensitivity to malfunctions and can detect malfunctions that normal mode cannot detect. Check mode can also detect all the malfunctions that normal mode can detect. In check mode, DTCs are detected with 1–tirp detection logic.

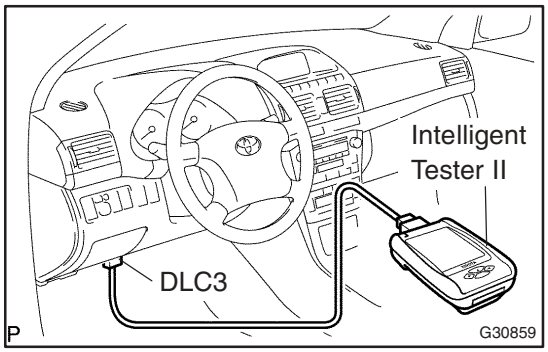

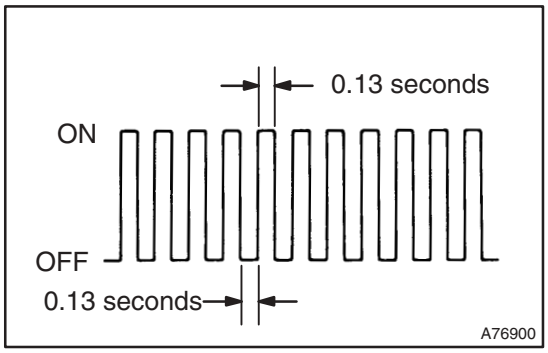

CHECK MODE PROCEDURE

(a) Make sure that the items below are true:
  (1) Battery positive voltage 11 V or more
  (2) Throttle valve fully closed
  (3) Transmission in the P or N position
  (4) A/C switched OFF

(b) Turn the ignition switch OFF.

(c) Connect the Intelligent Tester II to the DLC3.

(d) Turn the ignition switch ON.

(e) Enter the following menues: Utility/ Check Mode.

(f) Change the ECM to check mode. Make sure the MIL flashes as shown in the illustration.

NOTICE:

All DTCs and freeze frame data recorded will be erased if: 1) the intelligent tester II is used to change the ECM from normal mode to check mode or vice versa; or 2) during check mode, the ignition switch is turned from ON to ACC or LOCK.

Before check mode, make notes of the DTCs and freeze frame data.

(g) Start the engine. The MIL should turn off after the engine starts.

(h) Perform ”MONITOR DRIVE PATTERN” for the ECT test (see page 05–227).
  (Or, simulate the conditions of the malfunction described by the customer).

(i) After simulating the malfunction conditions, use the Intelligent Tester II diagnosis selector to check the DTC and freeze frame data.

05KAY–02

FAIL–SAFE CHART

1. FAIL–SAFE

This function minimizes the loss of the ECT functions when any malfunction occurs in each sensor or solenoid.

(a) ATF (Automatic Transmission Fluid) temperature sensor:
When the ATF temperature sensor has a malfunction, 4th upshift is prohibited.

(b) Input turbine speed sensor NT (Speed sensor NT):
When the Input turbine speed sensor has a malfunction, 4th upshift is prohibited.

(c) Shift solenoid valve ST:
When the solenoid valve ST has a malfunction, 4th upshift is prohibited.

(d) Shift solenoid valve SLT:
When the solenoid valve SLT has a malfunction, 4th upshift is prohibited.

(e) Shift solenoid valve SB:
When the solenoid valve SB has a malfunction, S shift control is prohibited, and the driving mode turns to the normal D position.

(f) Shift solenoid valve S1 and S2:

Fail safe function:

If either of the shift solenoid valve circuits develops an open or short, the ECM turns the other shift solenoid ”ON” and ”OFF” in order to shift into the gear positions shown in the table below.

Manual shifting as shown in the following table must be done (In case of a short circuit, the ECM stops sending the current to the short circuit solenoid).

Even if starting the engine in the fail–safe mode, the gear position remain in the same position.

Position	NORMAL			SHIFT SOLENOID VALVE S1 MALFUNCTIONING			SHIFT SOLENOID VALVE S2 MALFUNCTIONING			BOTH SHIFT SOLENOID VALVES MALFUNCTIONING
	Solenoid valve		Gear	Solenoid valve		Gear	Solenoid valve		Gear	Gear when shift selector is manually operated
	S1	S2		S1	S2		S1	S2		
D	ON	ON	1st	X	OFF	3rd	ON	X	2nd	3rd
	ON	OFF	2nd	X	OFF	3rd	ON	X	2nd	3rd
	OFF	OFF	3rd	X	OFF	3rd	OFF	X	3rd	3rd
	OFF	ON	4th	X	ON	4th	OFF	X	3rd	3rd
2 (S position)	ON	ON	1st	X	OFF	3rd	ON	X	2nd	3rd
	ON	OFF	2nd	X	OFF	3rd	ON	X	2nd	3rd
	OFF	OFF	3rd	X	OFF	3rd	OFF	X	3rd	3rd
1 (S position)	ON	ON	1st	X	OFF	3rd	ON	X	2nd	3rd
	ON	OFF	2nd	X	OFF	3rd	ON	X	2nd	3rd

X: OFF (the ECM stops sending current to a malfunctioning solenoid valve)

05KAZ–02

DATA LIST/ACTIVE TEST

1. DATA LIST

HINT:

Using the Intelligent Tester II Data List allows switch, sensor, actuator and other item values to be read without removing any parts. Reading the Data List early in troubleshooting is one way to shorten labor time.

NOTICE:

In the table below, the values listed under ”Normal Condition” are reference values. Do not depend solely on these reference values when deciding whether a part is faulty or not.

(a) Warm up the engine.
(b) Turn the ignition switch off.
(c) Connect the Intelligent Tester II to the DLC3.
(d) Turn the ignition switch to the ON position.
(e) Turn on the tester.
(f) Select the item ”Enter / Power train / Engine and ECT / Data List”.
(g) Follow the instructions on the tester and read the Data List.

Item	Measurement Item/ Range (display)	Normal Condition	Diagnostic Note
Stop Light Switch	Stop light SW Status/ ON or OFF	• Brake Pedal is depressed: ON • Brake Pedal is released: OFF	–
Neutral Position SW Signal	PNP SW Status/ ON or OFF	Shift lever position is; P and N: ON Except P and N: OFF	When the shift lever position displayed on the hand–held tester differs from the actual position, adjustment of the PNP switch or the shift cable may be incorrect. HINT: When the failure still occurs even after adjusting these parts, see page 05–247.
Shift SW Status (R Range)	PNP SW Status/ ON or OFF	Shift lever position is; R: ON Except R: OFF	↑
Shift SW Status (D Range)	PNP SW Status/ ON or OFF	Shift lever position is; D and S: ON Except D and S: OFF	↑
Shift Status	Actual Gear position/ 1st, 2nd, 3rd, 4th (O/D)	Shift lever position is; • D: 1st, 2nd, 3rd or 4th • S: 1st, 2nd, 3rd or 4th	–
Lock Up Solenoid Status	Lock Up Solenoid Status/ ON or OFF	• Lock Up: ON • Except Lock Up: OFF	–
SLT Solenoid Status	Shift Solenoid SLT Status/ ON or OFF	• Accelerator pedal is depressed: OFF • Accelerator pedal is released: ON	–
A/T Oil Temperature 1	ATF Temp. Sensor Value/ min.: –40°C (–40°F) max.: 215°C (419°F)	• After Stall Test; Approx. 80°C (176°F) • Equal to ambient temperature when the engine is cold	If the value is ”–40°C (–40°F)” or ”215°C (419°F)”, ATF temp. sensor circuit is opened or shorted.

Kick Down Switch Status *1	Kick down SW Status/ ON or OFF	• Accelerator Pedal is depressed all the way down: ON • Accelerator Pedal is released: OFF	–
Snow Switch Status	Pattern SW (ECT SNOW) Status/ ON or OFF	• IG SW ON: OFF ↓ • Pattern SW (ECT SNOW) Push: ON ↓ • Pattern SW (ECT SNOW) Push: OFF	–

HINT:
*1: LHD

2. ACTIVE TEST

HINT:
Performing the Intelligent Tester II Active Test allows relay, Vacuum Switching Valve (VSV), actuator and other items to be operated without removing any parts. Performing the Active Test early in troubleshooting is one way to shorten labor time. The Data List can be displayed during the Active Test.
(a) Warm up the engine.
(b) Turn the ignition switch off.
(c) Connect the Intelligent Tester II to the DLC3.
(d) Turn the ignition switch to the ON position.
(e) Turn on the tester.
(f) Select the item ”Enter / Power train / Engine and ECT / Active Test”.
(g) Follow the instructions on the tester and read the Active Test.

Item	Test Details	Diagnostic Note
Control the Shift Position	[Test Details] Operate the shift solenoid valve and set the each shift position by yourself. [Vehicle Condition] Less than 50 km/h (31 mph) [Others] • Press ”→” button: Shift up • Press ”←” button: Shift down	Possible to check the operation of the shift solenoid valves.
Control the Lock Up	[Test Details] Control the shift solenoid SL to set the automatic transaxle to the lock–up condition. [Vehicle Condition] Vehicle Speed: 58 km/h (36 mph) or more	Possible to check the SL operation.
Control the Line Pressure Up *	[Test Details] Operate the shift solenoid SLT and raise the line pressure. [Vehicle Condition] • Vehicle Stopped. • IDL: ON [HINT] OFF: Line pressure up (When the active test of ”LINE PRESS UP” is performed, the ECM commands the SLT solenoid to turn off). ON: No action (normal operation)	–

*: ”Control the Line Pressure Up” in the ACTIVE TEST is performed to check the line pressure changes by connecting the SST to the automatic transmission, which is used in the HYDRAULIC TEST (see page 05–223) as well.
HINT:
The pressure values in ACTIVE TEST and HYDRAULIC TEST are different from each other.

056IK–10

DIAGNOSTIC TROUBLE CODE CHART

If a DTC is displayed during the DTC check, check the parts listed in the table below and proceed to the page given.

HINT:

- *1 : ● ... MIL (Malfunction Indicator Lamp) light up
- *2 : "○" mark means ECM memorizes the malfunction code if the ECM detects the DTC detection condition.
- This DTC may be output when the clutch, brake and gear components etc. inside the automatic transaxle are damaged.

DTC No. (See Page)	Detection Item	Trouble Area	MIL *1	Memory *2
P0500 (05–158)	Vehicle Speed Sensor "A"	• Combination meter • Open or short in vehicle speed sensor circuit • Vehicle speed sensor • ECM	●	○
P0705 (05–247)	Transmission Range Sensor Circuit Malfunction (PRNDL Input)	• Open or short in park/neutral position switch circuit • Park/neutral position switch • ECM	●	○
P0710 (05–252)	Transmission Fluid Temperature Sensor "A" Circuit	• Open or short in ATF temperature sensor circuit • Transmission wire (ATF temperature sensor) • ECM	●	○
P0711 (05–255)	Transmission Fluid Temperature Sensor "A" Performance	• Open or short in ATF temperature sensor circuit • Transmission wire (ATF temperature sensor) • ECM	●	○
P0712 (05–252)	Transmission Fluid Temperature Sensor "A" Circuit Low Input	• Short in ATF temperature sensor circuit • Transmission wire (ATF temperature sensor) • ECM	●	○
P0713 (05–252)	Transmission Fluid Temperature Sensor "A" Circuit High Input	• Open in ATF temperature sensor circuit • Transmission wire (ATF temperature sensor) • ECM	●	○
P0717 (05–258)	Turbine Speed Sensor Circuit No Signal	• Open or short in transmission revolution sensor NT (speed sensor NT) circuit • Transmission revolution sensor NT (speed sensor NT) • ECM • Automatic transaxle assembly	●	○
P0724 (05–261)	Brake Switch "B" Circuit High	• Short in stop light switch circuit • Stop light switch • ECM	●	○
P0741 (05–264)	Torque Converter Clutch Solenoid Performance (Shift Solenoid Valve SL)	• Shift solenoid valve SL remains open or closed • Valve body is blocked • Shift solenoid valve SL • Torque converter clutch • Automatic transaxle (clutch, brake or gear etc.) • Line pressure is too low • ECM	●	○
P0751 (05–268)	Shift Solenoid "A" Performance (Shift Solenoid Valve S1)	• Shift solenoid valve S1 remains open or closed • Valve body is blocked • Shift solenoid valve S1 • Automatic transaxle (clutch, brake or gear etc.) • ECM	●	○
P0756 (05–271)	Shift Solenoid "B" Performance (Shift Solenoid Valve S2)	• Shift solenoid valve S2 remains open or closed • Valve body is blocked • Shift solenoid valve S2 • Automatic transaxle (clutch, brake or gear etc.) • ECM	●	○

P0787 (05–274)	Shift/Timing Solenoid Low (Shift Solenoid Valve ST)	• Short in shift solenoid valve ST circuit • Shift solenoid valve ST • ECM	●	○
P0788 (05–274)	Shift/Timing Solenoid High (Shift Solenoid Valve ST)	• Open in shift solenoid valve ST circuit • Shift solenoid valve ST • ECM	●	○
P0973 (05–277)	Shift Solenoid "A" Control Circuit Low (Shift Solenoid Valve S1)	• Short in shift solenoid valve S1 circuit • Shift solenoid valve S1 • ECM	●	○
P0974 (05–277)	Shift Solenoid "A" Control Circuit High (Shift Solenoid Valve S1)	• Open in shift solenoid valve S1 circuit • Shift solenoid valve S1 • ECM	●	○
P0976 (05–280)	Shift Solenoid "B" Control Circuit Low (Shift Solenoid Valve S2)	• Short in shift solenoid valve S2 circuit • Shift solenoid valve S2 • ECM	●	○
P0977 (05–280)	Shift Solenoid "B" Control Circuit High (Shift Solenoid Valve S2)	• Open in shift solenoid valve S2 circuit • Shift solenoid valve S2 • ECM	●	○
P0998 (05–283)	Shift Solenoid "F" Control Circuit Low (Shift Solenoid Valve SB)	• Short in shift solenoid valve SB circuit • Shift solenoid valve SB • ECM	●	○
P0999 (05–283)	Shift Solenoid "F" Control Circuit High (Shift Solenoid Valve SB)	• Open in shift solenoid valve SB circuit • Shift solenoid valve SB • ECM	●	○
P2716 (05–286)	Pressure Control Solenoid "D" Electrical (Shift Solenoid Valve SLT)	• Open or short in shift solenoid valve SLT circuit • Shift solenoid valve SLT • ECM	●	○
P2769 (05–289)	Torque Converter Clutch Solenoid Circuit Low (Shift Solenoid Valve SL)	• Short in shift solenoid valve SL circuit • Shift solenoid valve SL • ECM	●	○
P2770 (05–289)	Torque Converter Clutch Solenoid Circuit High (Shift Solenoid Valve SL)	• Open in shift solenoid valve SL circuit • Shift solenoid valve SL • ECM	●	○

DTC	P0705	TRANSMISSION RANGE SENSOR CIRCUIT MALFUNCTION (PRNDL INPUT)

CIRCUIT DESCRIPTION

The park/neutral position switch detects the shift lever position and sends signals to the ECM.

DTC No.	DTC Detection Condition	Trouble Area
P0705	(A) Any 2 or more signals of the following are ON simultaneously (2–trip detection logic) • P input signal is ON. • N input signal is ON. • R input signal is ON. • D input signal is ON. (B) When any of following conditions is met for 2.0 sec. or more in the S position (2–trip detection logic) • P input signal is ON. • N input signal is ON. • R input signal is ON.	• Open or short in park/neutral position switch circuit • Park/neutral position switch • ECM

MONITOR DESCRIPTION

The park/neutral position switch detects the shift lever position and sends a signal to the ECM.
For security, the park/neutral position switch detects the shift lever position so that engine can be started only when the vehicle is in P or N shift position.
When the park/neutral position switch sends more than one signal at a time from switch positions P, R, N or D, the ECM interprets this as a fault in the switch. The ECM will turn on the MIL and store the DTC.

WIRING DIAGRAM

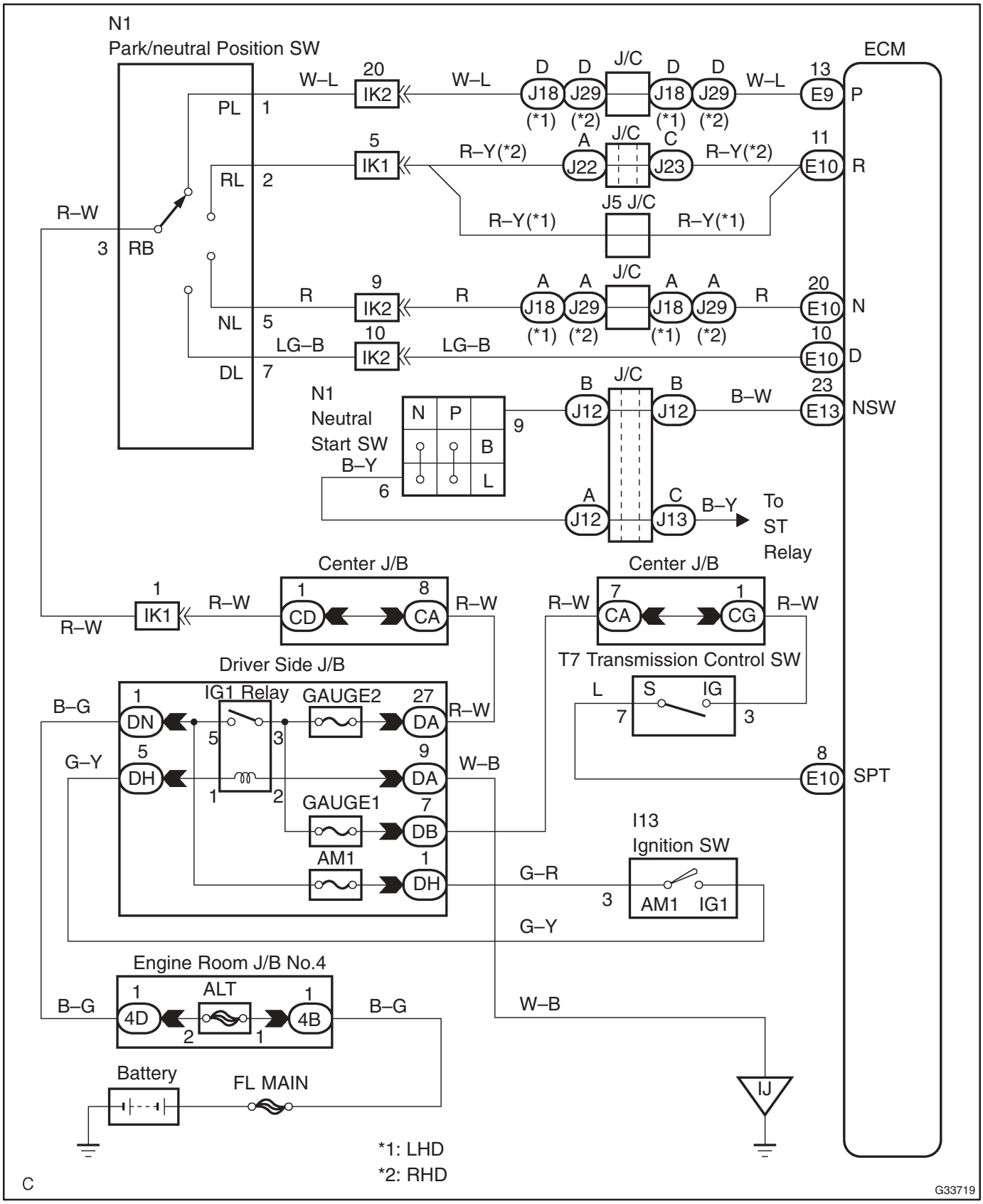

INSPECTION PROCEDURE

HINT:

Using the Intelligent Tester II Data List allows switch, sensor, actuator and other item values to be read without removing any parts. Reading the Data List early in troubleshooting is one way to shorten labor time.

NOTICE:

In the table below, the values listed under ”Normal Condition” are reference values. Do not depend solely on these reference values when deciding whether a part is faulty or not.

(a) Turn the ignition switch off.
(b) Connect the Intelligent Tester II to the DLC3.
(c) Turn the ignition switch to the ON position.
(d) Turn on the tester.
(e) Select the item ”Enter / Power train / Engine and ECT / Data List”.
(f) Follow the instructions on the tester and read the Data List.

Item	Measurement Item/ Range (display)	Normal Condition	Diagnostic Note
Neutral Position SW Signal	PNP SW Status/ ON or OFF	Shift lever position is; P and N: ON Except P and N: OFF	When the shift lever position displayed on the hand–held tester differs from the actual position, adjustment of the PNP switch or the shift cable may be incorrect.
Shift SW Status (R Range)	PNP SW Status/ ON or OFF	Shift lever position is; R: ON Except R: OFF	↑
Shift SW Status (D Range)	PNP SW Status/ ON or OFF	Shift lever position is; D and S: ON Except D and S: OFF	↑

1 INSPECT PARK/NEUTRAL POSITION SWITCH ASSY

Switch Side:
(Connector Front View):

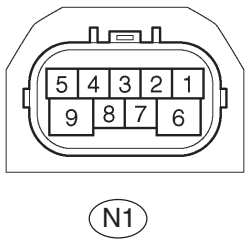

(a) Disconnect the park/neutral position switch connector.
(b) Measure resistance according to the value(s) in the table below when the shift lever is moved to each position.

Standard:

Shift Position	Tester Connection	Specified Condition
P	1 – 3 and 6 – 9	Below 1 Ω
Except P	↑	10 kΩ or higher
R	2 – 3	Below 1 Ω
Except R	↑	10 kΩ or higher
N	3 – 5 and 6 – 9	Below 1 Ω
Except N	↑	10 kΩ or higher
D, S, ”+” and ”–”	3 – 7	Below 1 Ω
Except D, S, ”+” and ”–”	↑	10 kΩ or higher

NG → **REPLACE PARK/NEUTRAL POSITION SWITCH ASSY (See Pub. No. RM1018E, page 40–3)**

OK

2 INSPECT SHIFT LOCK CONTROL UNIT ASSY

Switch Side:
(Connector Front View):

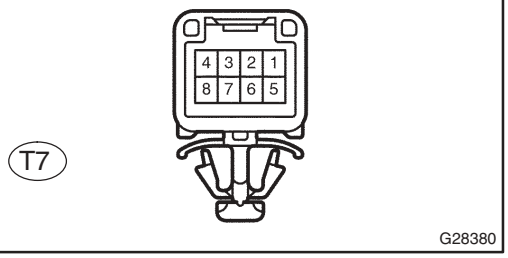

(a) Connect the park/neutral position switch connector.
(b) Disconnect the transmission control switch connector of shift lock control unit assy.
(c) Measure resistance according to the value(s) in the table below when the shift lever is moved to each position.

Standard:

Shift Position	Tester Connection	Specified Condition
S, "+" and "–"	3 – 7	Below 1 Ω
Except S, "+" and "–"	↑	10 kΩ or higher

NG → **REPLACE SHIFT LOCK CONTROL UNIT ASSY (See Pub. No. RM1018E, page 40–60)**

OK

3	CHECK HARNESS AND CONNECTOR(PARK/NEUTRAL POSITION SWITCH – ECM)

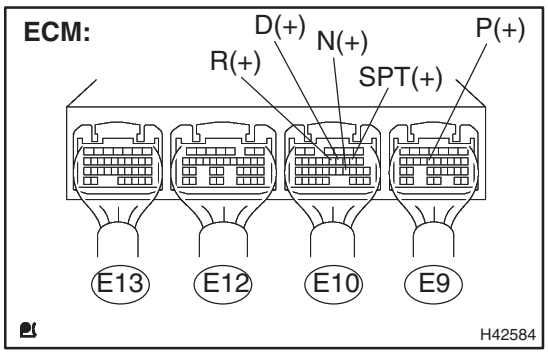

(a) Connect the transmission control switch connector of shift lock control unit assy.

(b) Turn the ignition switch to the ON position, and measure the voltage according to the value(s) in the table below when the shift lever is moved to each position.

Standard:

Shift Position	Tester connection	Specified condition
P	E9 – 13 (P) – Body ground	10 to 14 V
Except P	↑	Below 1 V
N	E10 – 20 (N) – Body ground	10 to 14 V
Except N	↑	Below 1 V
R	E10 – 11 (R) – Body ground	10 to 14 V*
Except R	↑	Below 1 V
D and S	E10 – 10 (D) – Body ground	10 to 14 V
Except D and S	↑	Below 1 V
S, "+" and "–"	E10 – 8 (SPT) – Body ground	10 to 14 V
Except S, "+" and "–"	↑	Below 1 V

HINT:

*: The voltage will drop slightly due to lighting up of the back up light.

NG → **REPAIR OR REPLACE HARNESS OR CONNECTOR (SEE PAGE 01–32)**

OK →

REPLACE ECM

DTC	P0710	TRANSMISSION FLUID TEMPERATURE SENSOR ”A” CIRCUIT

DTC	P0712	TRANSMISSION FLUID TEMPERATURE SENSOR ”A” CIRCUIT LOW INPUT

DTC	P0713	TRANSMISSION FLUID TEMPERATURE SENSOR ”A” CIRCUIT HIGH INPUT

CIRCUIT DESCRIPTION

The ATF (Automatic Transmission Fluid) temperature sensor converts the fluid temperature into a resistance value which is input into the ECM.
The ECM applies a voltage to the temperature sensor through ECM terminal THO.
The sensor resistance changes with the transmission fluid temperature. As the temperature becomes higher, the sensor resistance decreases.
One terminal of the sensor is grounded so that the sensor resistance decreases and the voltage goes down as the temperature becomes higher.
The ECM calculates the fluid temperature based on the voltage signal.

DTC No.	DTC Detection Condition	Trouble Area
P0710	(a) and (b) is detected momentary within 0.5 sec. when neither P0712 or P0713 is not detected (1–trip detection logic) (a) ATF temperature sensor resistance is less than 79 Ω. (b) ATF temperature sensor resistance is more than 156 kΩ. HINT: Within 0.5 sec., the malfunction switches from (a) to (b) or from (b) to (a)	• Open or short in ATF temperature sensor circuit • Transmission wire (ATF temperature sensor) • ECM
P0712	ATF temperature sensor resistance is less than 79 Ω for 0.5 sec. or more (1–trip detection logic)	• Short in ATF temperature sensor circuit • Transmission wire (ATF temperature sensor) • ECM
P0713	ATF temperature sensor resistance is more than 156 kΩ when 15 minutes or more after the engine start DTC is detected for 0.5 sec. or more (1–trip detection logic)	• Open in ATF temperature sensor circuit • Transmission wire (ATF temperature sensor) • ECM

MONITOR DESCRIPTION

The automatic transmission fluid (ATF) temperature sensor converts ATF temperature to an electrical resistance value. Based on the resistance, the ECM determines the ATF temperature, and the ECM detects an opens or shorts in the ATF temperature circuit. If the resistance value of the ATF temperature is less than 79 Ω*1 or more than 156 kΩ*2, the ECM interprets this as a fault in the ATF sensor or wiring. The ECM will turn on the MIL and store the DTC.
*1: 150°C (302°F) or more is indicated regardless of the actual ATF temperature.
*2: –40°C (–40°F) is indicated regardless of the actual ATF temperature.
HINT:
The ATF temperature can be checked on the Intelligent Tester II display.

WIRING DIAGRAM

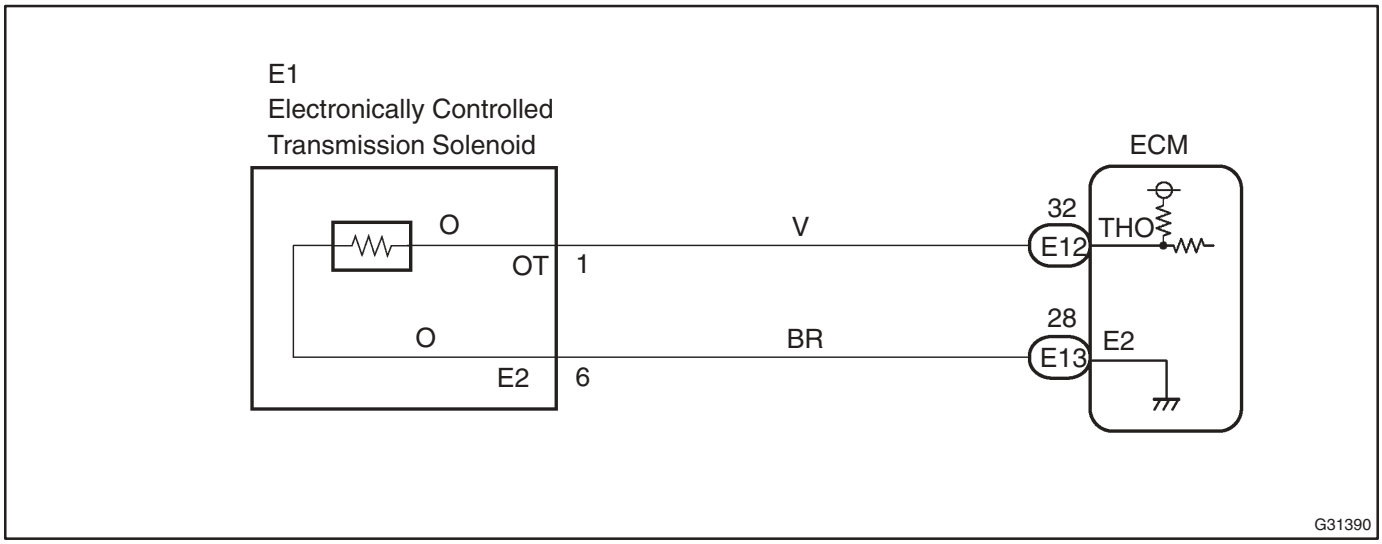

INSPECTION PROCEDURE

HINT:
Using the Intelligent Tester II Data List allows switch, sensor, actuator and other item values to be read without removing any parts. Reading the Data List early in troubleshooting is one way to shorten labor time.
NOTICE:
In the table below, the values listed under ”Normal Condition” are reference values. Do not depend solely on these reference values when deciding whether a part is faulty or not.
(a) Warm up the engine.
(b) Turn the ignition switch off.
(c) Connect the Intelligent Tester II to the DLC3.
(d) Turn the ignition switch to the ON position.
(e) Turn on the tester.
(f) Select the item ”Enter / Power train / Engine and ECT / Data List”.
(g) Follow the instructions on the tester and read the Data List.

Item	Measurement Item/ Range (display)	Normal Condition
A/T Oil Temperature 1	ATF Temp. Sensor Value/ min.: –40°C (–40°F) max.: 215°C (419°F)	• After Stall Test; Approx. 80°C (176°F) • Equal to ambient temperature when cold soak

HINT:
When DTC P0712 is output and Intelligent Tester II output is 150°C (302°F) or more, there is a short circuit.
When DTC P0713 is output and Intelligent Tester II output is –40°C (–40°F), there is an open circuit.
Measure the resistance between terminal THO (OT) and body ground.

Temperature Displayed	Malfunction
–40˚C (–40˚F)	Open circuit
150˚C (302˚F) or more	Short circuit

HINT:
If a circuit related to the ATF temperature sensor becomes open, P0713 is immediately set (in 0.5 second).
When P0713 is set, P0711 cannot be detected.
It is not necessary to inspect the circuit when P0711 is set.

1 INSPECT TRANSMISSION WIRE(ATF TEMPERATURE SENSOR)

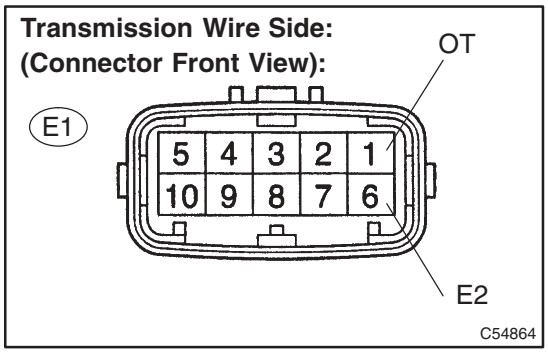

(a) Disconnect the transmission wire connector from the transaxle.

(b) Measure the resistance according to the value(s) in the table below.

Standard:

Tester Connection	Specified Condition
1 (OT) – 6 (E2)	79 Ω to 156 kΩ

(c) Measure the resistance according to the value(s) in the table below.

Standard (Check for short):

Tester Connection	Specified Condition
1 (OT) – Body ground	10 kΩ or higher
6 (E2) – Body ground	↑

NG → **REPAIR OR REPLACE TRANSMISSION WIRE (See Pub. No. RM1018E, page 40–51)**

OK

2 CHECK HARNESS AND CONNECTOR(TRANSMISSION WIRE – ECM)

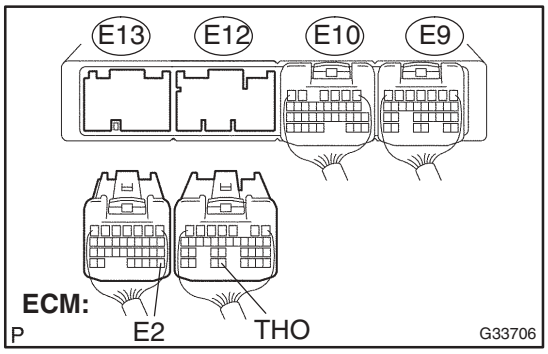

(a) Connect the transmission wire connector to the transaxle.

(b) Disconnect the ECM connector.

(c) Measure the resistance according to the value(s) in the table below.

Standard:

Tester Connection	Specified Condition
E12 – 32 (THO) – E13 – 28 (E2)	79 Ω to 156 kΩ

(d) Measure the resistance according to the value(s) in the table below.

Standard (Check for short):

Tester Connection	Specified Condition
E12 – 32 (THO) – Body ground	10 kΩ or higher
E13 – 28 (E2) – Body ground	↑

NG → **REPAIR OR REPLACE HARNESS OR CONNECTOR (SEE PAGE 01–32)**

OK

REPLACE ECM

DTC	P0711	TRANSMISSION FLUID TEMPERATURE SENSOR ”A” PERFORMANCE

CIRCUIT DESCRIPTION

The ATF (Automatic Transmission Fluid) temperature sensor converts the fluid temperature into a resistance value which is input into the ECM.

DTC No.	DTC Detection Condition	Trouble Area
P0711	(A) Both (a) and (b) are detected: (2–trip detection logic) (a) Intake air and engine coolant temperatures are more than –10˚C (14°F) at engine start (b) After normal driving for over 19 min. and 8 km (5 mile) or more, ATF temp. is less than 10˚C (50°F)	• Open or short in ATF temperature sensor circuit • Transmission wire (ATF temperature sensor) • ECM

MONITOR DESCRIPTION

The ATF temperature sensor converts the ATF temperature to an electrical resistance value. Based on the resistance, the ECM determines the ATF temperature and detects an opens or shorts in the ATF temperature circuit or a fault of the ATF temperature sensor.

After running the vehicle for a certain period, the ATF temperature should increase. If the ATF temperature is below 10°C (50°F) after running the vehicle for a certain period, the ECM interprets this as a fault, and turns on the MIL.

WIRING DIAGRAM

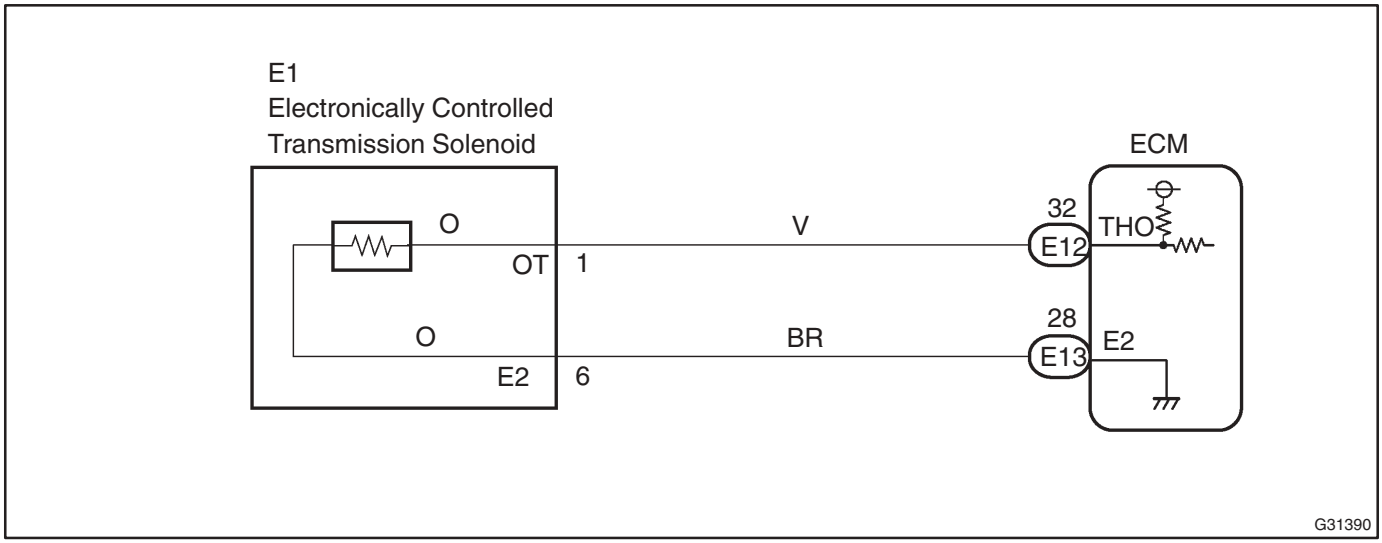

INSPECTION PROCEDURE

HINT:
Using the Intelligent Tester II Data List allows switch, sensor, actuator and other item values to be read without removing any parts. Reading the Data List early in troubleshooting is one way to shorten labor time.
NOTICE:
In the table below, the values listed under ”Normal Condition” are reference values. Do not depend solely on these reference values when deciding whether a part is faulty or not.
(a) Warm up the engine.
(b) Turn the ignition switch off.
(c) Connect the Intelligent Tester II to the DLC3.
(d) Turn the ignition switch to the ON position.
(e) Turn on the tester.
(f) Select the item ”Enter / Power train / Engine and ECT / Data List”.
(g) Follow the instructions on the tester and read the Data List.

Item	Measurement Item/ Range (display)	Normal Condition
A/T Oil Temperature 1	ATF Temp. Sensor Value/ min.: –40°C (–40°F) max.: 215°C (419°F)	• After Stall Test; Approx. 80°C (176°F) • Equal to ambient temperature when cold soak

HINT:
When DTC P0712 is output and Intelligent Tester II output is 150°C (302°F) or more, there is a short circuit.
When DTC P0713 is output and Intelligent Tester II output is –40°C (–40°F), there is an open circuit.
Measure the resistance between terminal THO (OT) and body ground.

Temperature Displayed	Malfunction
–40˚C (–40˚F)	Open circuit
150˚C (302˚F) or more	Short circuit

HINT:
If a circuit related to the ATF temperature sensor becomes open, P0713 is immediately set (in 0.5 second).
When P0713 is set, P0711 cannot be detected.
It is not necessary to inspect the circuit when P0711 is set.

1	CHECK OTHER DTCS OUTPUT(IN ADDITION TO DTC P0711)

(a) Connect the Intelligent Tester II to the DLC3.
(b) Turn the ignition switch to the ON position.
(c) Turn on the tester.
(d) Select the item ”Power train / Engine and ECT / DTC / Current or Pending”.
(e) Read the DTCs using the Intelligent Tester II.
Result:

Display (DTC output)	Proceed to
Only ”P0711” is output	A
”P0711” and other DTCs	B

HINT:
If any other codes besides ”P0711” are output, perform troubleshooting for those DTCs first.

B → **GO TO RELEVANT DTC CHART (SEE PAGE 05–245)**

A

2	CHECK TRANSAXLE FLUID LEVEL (See Pub. No. RM1018E, page 40–2)

OK:
Automatic transaxle fluid level is correct.

NG → **ADD FLUID**

OK

REPLACE TRANSMISSION WIRE (See Pub. No. RM1018E, page 40–51)

DTC	P0717	TURBINE SPEED SENSOR CIRCUIT NO SIGNAL

CIRCUIT DESCRIPTION

This sensor detects the rotation speed of the input turbine. By comparing the input turbine speed signal (NT) with the vehicle speed sensor signal, the ECM detects the shift timing of the gears and appropriately controls the engine torque and hydraulic pressure according to various conditions. Thus, providing smooth gear shift.

DTC No.	DTC Detection Condition	Trouble Area
P0717	ECM detects conditions (a), (b) and (c) continuity for 5 sec. or more: (1–trip detection logic) (a) Vehicle speed: 50 km/h (31 mph) or more (b) Park/neutral position switch (NSW, R and L) is OFF (c) Speed sensor (NT): less than 300 rpm	• Open or short in transmission revolution sensor NT (speed sensor NT) circuit • Transmission revolution sensor NT (speed sensor NT) • ECM

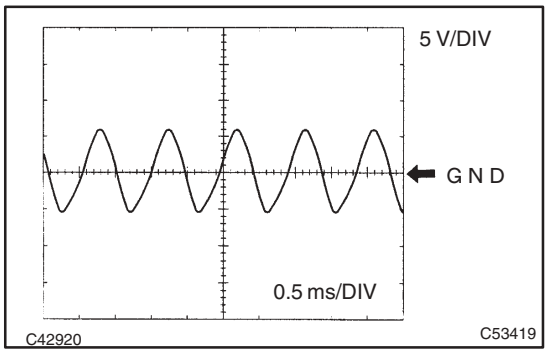

Reference (Using an oscilloscope):

Check the waveform between the terminals NT+ and NT– of the ECM connector.

Standard: Refer to the illustration.

Terminal	NT+ – NT–
Tool setting	5V/DIV, 0.5ms/DIV
Vehicle condition	Vehicle speed 20 km/h (12 mph)

MONITOR DESCRIPTION

The input speed sensor detects the transmission input shaft speed. The ECM determines the gear shift timing based on a comparison of the input speed sensor (input shaft speed) with the output speed sensor (output shaft speed).

When the output shaft speed is higher then the expected value and the input shaft speed is 300 rpm or less while running with the shift in the D position, the ECM will conclude that there is malfunction of the input turbine speed sensor (NT). The ECM will illuminate the MIL.

WIRING DIAGRAM

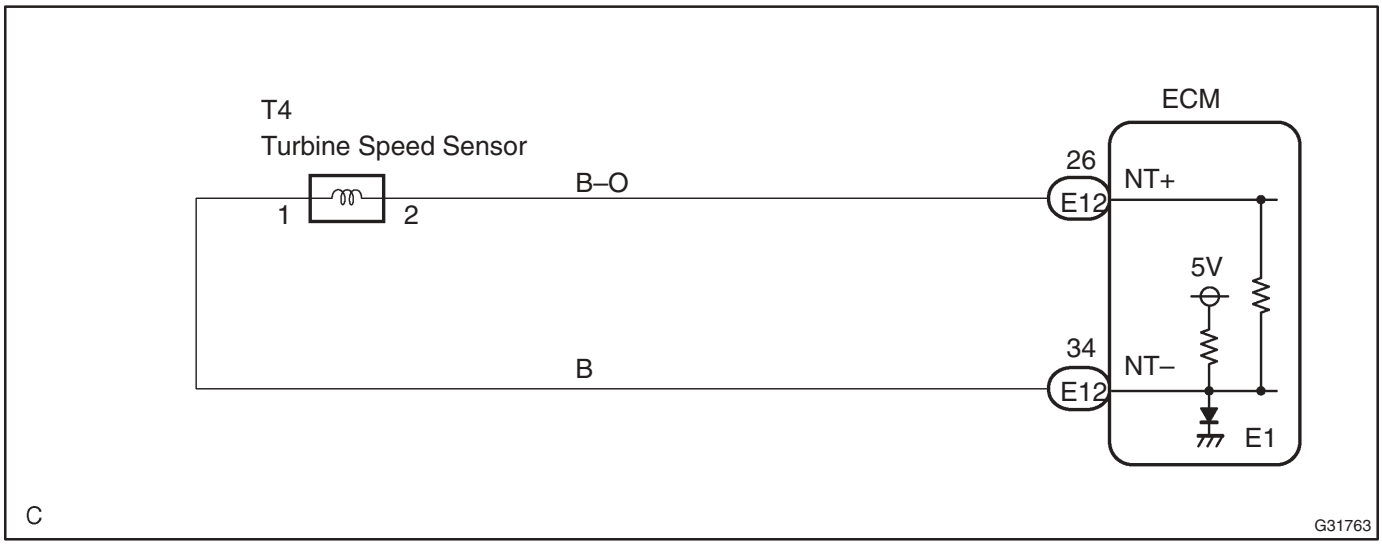

INSPECTION PROCEDURE

1 INSPECT SPEED SENSOR INSTALLATION

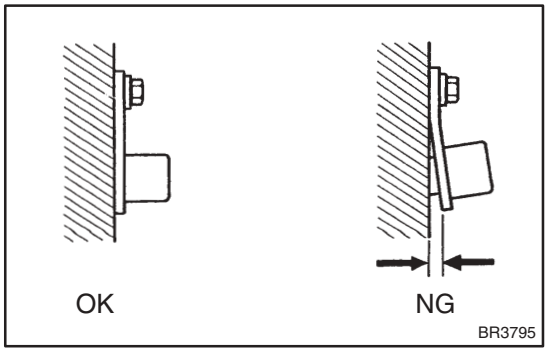

(a) Check the speed sensor installation.
OK:
The installation bolt is tightened properly and there is no clearance between the sensor and transaxle case.

NG → **REPLACE SPEED SENSOR(NT)**

OK

2 INSPECT SPEED SENSOR(NT)

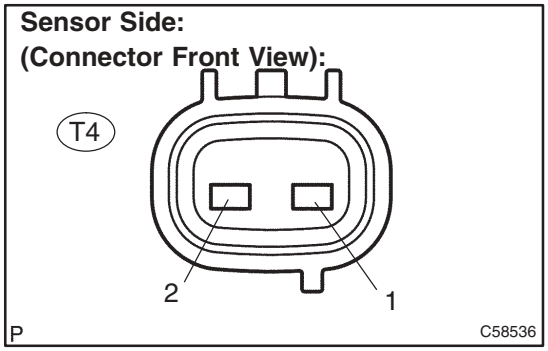

(a) Disconnect the speed sensor connector from the transaxle.
(b) Measure the resistance according to the value(s) in the table below.
Standard:

Tester Connection	Specified Condition 20 °C (68 °F)
1 – 2	560 to 680 Ω

NG → **REPLACE SPEED SENSOR(NT)**

OK

3 CHECK HARNESS AND CONNECTOR(SPEED SENSOR – ECM)

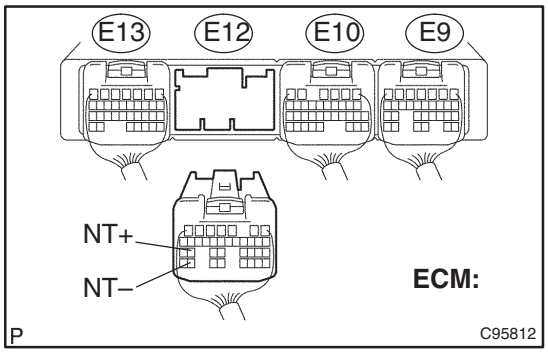

(a) Connect the speed sensor connector.
(b) Disconnect the ECM connector.
(c) Measure the resistance according to the value(s) in the table below.

Standard:

Tester Connection	Specified Condition 20 °C (68 °F)
E12 – 26 (NT+) – E12 – 34 (NT–)	560 to 680 Ω

(d) Measure the resistance according to the value(s) in the table below.

Standard (Check for short):

Tester Connection	Specified Condition
E12 – 26 (NT+) – Body ground	10 kΩ or higher
E12 – 34 (NT–) – Body ground	↑

NG → **REPAIR OR REPLACE HARNESS OR CONNECTOR (SEE PAGE 01–32)**

OK

REPLACE ECM

DTC P0724 BRAKE SWITCH ”B” CIRCUIT HIGH

CIRCUIT DESCRIPTION

The purpose of this circuit is to prevent the engine from stalling while driving in lock–up condition, when brakes are suddenly applied.
When the brake pedal is depressed, this switch sends a signals to the ECM. Then the ECM cancels the operation of the lock–up clutch while braking is in progress.

DTC No.	DTC Detecting Condition	Trouble Area
P0724	The stop light switch remains ON even when the vehicle is driven in a GO (30 km/h) and STOP (3 km/h) fashion 10 times. (2–trip detection logic).	• Short in stop light switch signal circuit • Stop light switch • ECM

MONITOR DESCRIPTION

This DTC indicates that the stop light switch remains on. When the stop light switch remains ON during ”stop and go” driving, the ECM interprets this as a fault in the stop light switch and the MIL comes on and the ECM stores the DTC. The vehicle must stop (less than 3 km/h (2 mph)) and go (30 km/h (19 mph) or more) ten times for two driving cycles in order to detect malfunction.

WIRING DIAGRAM

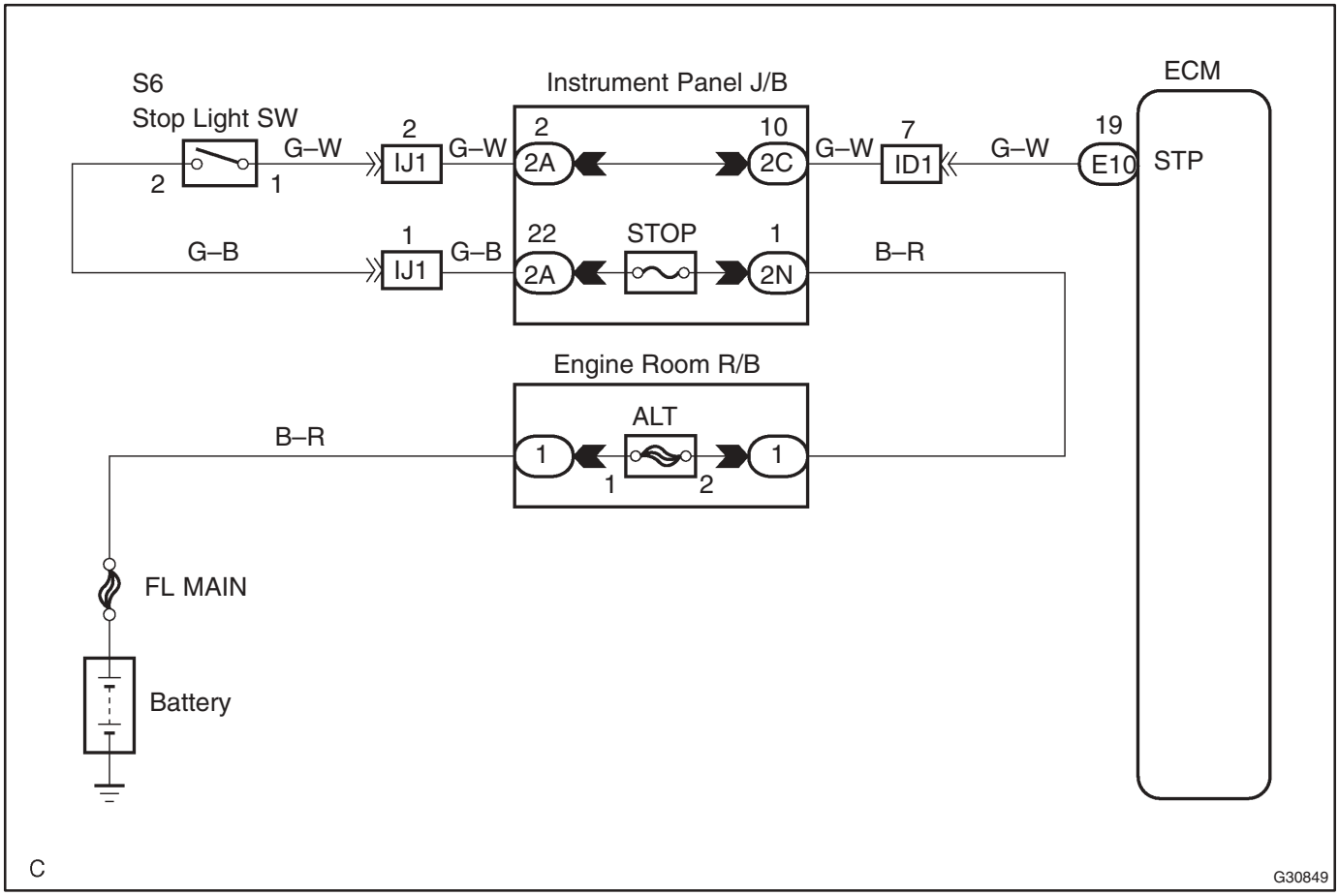

INSPECTION PROCEDURE

HINT:

Using the Intelligent Tester II Data List allows switch, sensor, actuator and other item values to be read without removing any parts. Reading the Data List early in troubleshooting is one way to shorten labor time.

NOTICE:

In the table below, the values listed under ”Normal Condition” are reference values. Do not depend solely on these reference values when deciding whether a part is faulty or not.

(a) Warm up the engine.
(b) Turn the ignition switch off.
(c) Connect the Intelligent Tester II to the DLC3.
(d) Turn the ignition switch to the ON position.
(e) Turn on the tester.
(f) Select the item ”Enter / Power train / Engine and ECT / Data List”.
(g) Follow the instructions on the tester and read the Data List.

Item	Measurement Item/ Range (display)	Normal Condition
Stop Light Switch	Stop light SW Status/ ON or OFF	• Brake Pedal is depressed: ON • Brake Pedal is released: OFF

1 INSPECT STOP LAMP SWITCH ASSY

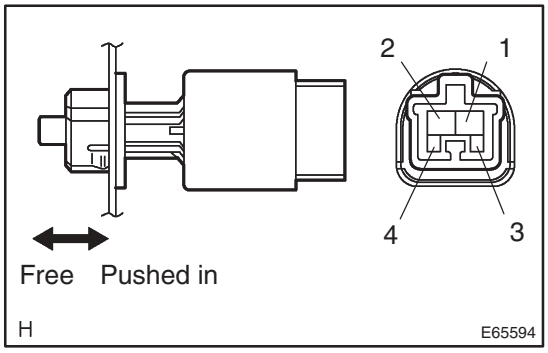

(a) Remove the stop lamp switch assy.
(b) Measure the resistance according to the value(s) in the table below.

Standard:

Switch position	Tester Connection	Specified Condition
Switch pin free	1 – 2	Below 1 Ω
Switch pin pushed in	↑	10 kΩ or higher
Switch pin free	3 – 4	10 kΩ or higher
Switch pin pushed in	↑	Below 1 Ω

NG → **REPLACE STOP LAMP SWITCH ASSY**

OK

2	CHECK HARNESS AND CONNECTOR(STOP LAMP SWITCH ASSY – ECM)

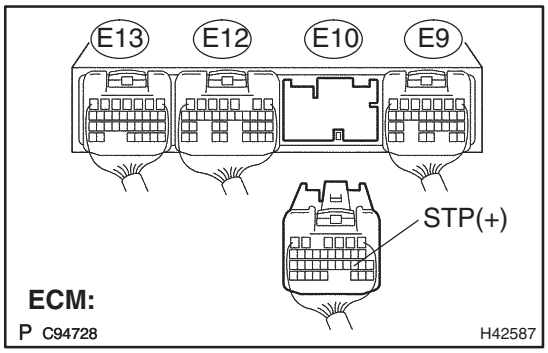

(a) Install the stop lamp switch assy.
(b) Measure the voltage according to the value(s) in the table below when the brake pedal is depressed and released.

Standard:

Condition	Tester Connection	Specified Condition
Brake pedal is depressed	E10 – 19 (STP) – Body ground	10 to 14 V
Brake pedal is released	↑	Below 1 V

NG → **REPAIR OR REPLACE HARNESS OR CONNECTOR (SEE PAGE 01–32)**

OK

REPLACE ECM

DTC	P0741	TORQUE CONVERTER CLUTCH SOLENOID PERFORMANCE (SHIFT SOLENOID VALVE SL)

SYSTEM DESCRIPTION

The ECM uses the signals from the throttle position sensor, Air–flow meter, turbine (input) speed sensor and crankshaft position sensor to monitor the engagement condition of the lock–up clutch.
Then the ECM compares the engagement condition of the lock–up clutch with the lock–up schedule in the ECM memory to detect a mechanical problems of the shift solenoid valve SL, valve body and torque converter clutch.

DTC No.	DTC Detection Condition	Trouble Area
P0741	Lock–up does not occur when driving in lock–up range (normal driving at 85 km/h [53 mph]), or lock–up remains ON in lock–up OFF range (2–trip detection logic)	• Shift solenoid valve SL remains open or closed • Valve body is blocked • Shift solenoid valve SL • Torque converter clutch • Automatic transaxle (clutch, brake or gear etc.) • Line pressure is too low • ECM

MONITOR DESCRIPTION

Based on the signals from the throttle position sensor, the airflow meter and the crankshaft position sensor, the ECM sends a signal to the shift solenoid valve SL to regulate the hydraulic pressure and provide smoother gearshifts. The shift–solenoid valve SL responds to commands from the ECM. The valve controls the lock–up relay valve to perform torque converter lock–up functions.
The ECM compares the engine rpm (NE) signal and the input turbine speed signal to detect torque converter lock–up. The ECM then compares the lock–up status against the lock–up schedule in the ECM memory. If the ECM does not detect lock–up at the appropriate time, it will conclude that there is a malfunction of shift solenoid SL. The ECM will illuminate the MIL.

INSPECTION PROCEDURE

HINT:

Performing the Intelligent Tester II Active Test allows relay, Vacuum Switching Valve (VSV), actuator and other items to be operated without removing any parts. Performing the Active Test early in troubleshooting is one way to shorten labor time. The Data List can be displayed during the Active Test.

(a) Warm up the engine.
(b) Turn the ignition switch off.
(c) Connect the Intelligent Tester II to the DLC3.
(d) Turn the ignition switch to the ON position.
(e) Turn on the tester.
(f) Clear the DTC.
(g) Select the item ”Enter / Power train / Engine and ECT / Active Test / Control the Lock Up”.
(h) Follow the instructions on the tester and read the Active Test.

Item	Test Details	Diagnostic Note
Control the Lock Up	[Test Details] Control the shift solenoid SL to set the automatic transaxle to the lock–up condition. [Vehicle Condition] Vehicle Speed: 58 km/h (36 mph) or more	Possible to check the SL operation.

HINT:

- This test can be conducted when the vehicle speed is 58 km/h (36 mph) or more.
- This test can be conducted with the 3rd or 4th gear.

(i) Lightly depress the accelerator pedal and check that the engine speed does not change abruptly.

HINT:

- When changing the accelerator pedal opening angle while driving, if the engine speed does not change, lock–up is on.
- Slowly release, but not fully, the accelerator pedal in order to decelerate. (Fully releasing the pedal will close the throttle valve and lock–up may be turned off.)

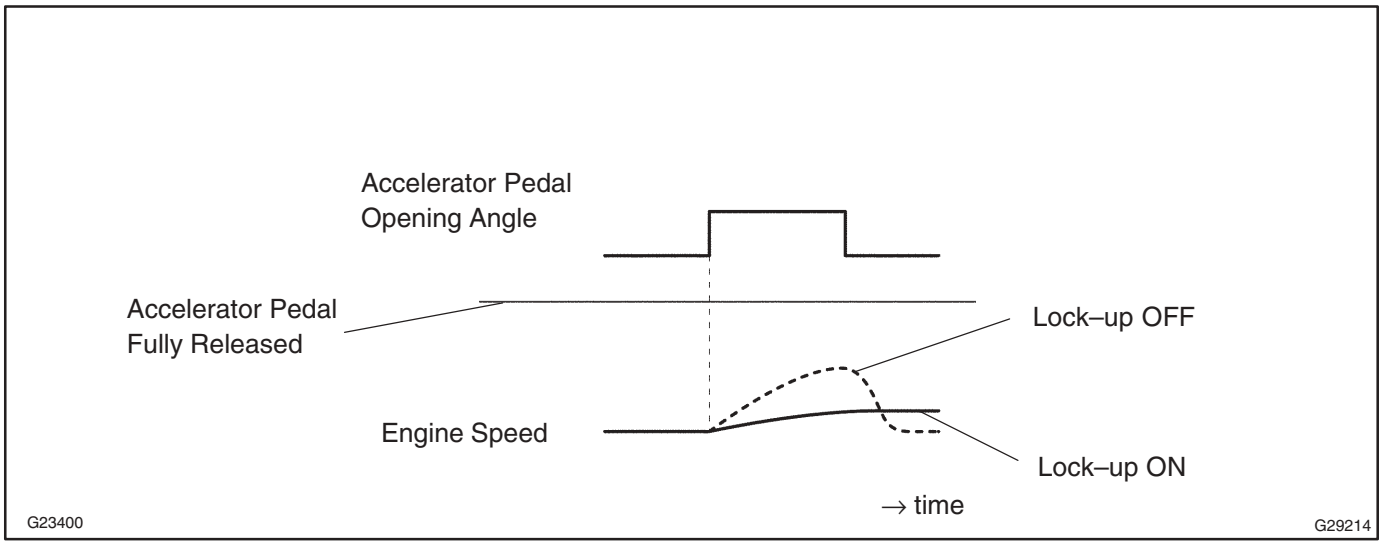

1 CHECK OTHER DTCS OUTPUT(IN ADDITION TO DTC P0741)

(a) Connect the Intelligent Tester II to the DLC3.
(b) Turn the ignition switch to the ON position.
(c) Turn on the tester.
(d) Select the item ”Power train / Engine and ECT / DTC / Current or Pending”.
(e) Read the DTCs using the Intelligent Tester II.

Result:

Display (DTC output)	Proceed to
Only ”P0741” is output	A
”P0741” and other DTCs	B

HINT:
If any other codes besides ”P0741” is output, perform the troubleshooting for those DTCs first.

B → **GO TO RELEVANT DTC CHART (SEE PAGE 05–245)**

A

2 INSPECT SHIFT SOLENOID VALVE(SL)

Shift Solenoid Valve SL:

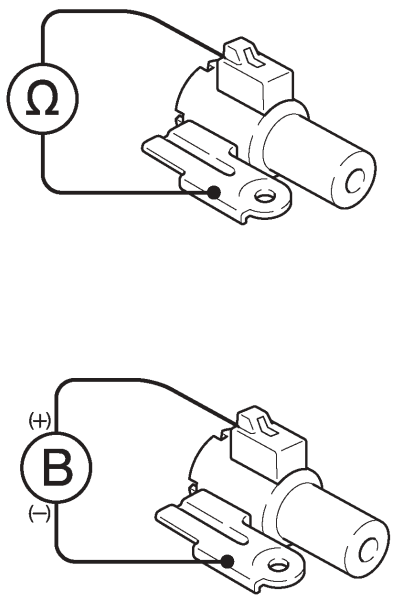

(a) Remove the shift solenoid valve SL.
(b) Measure the resistance according to the value(s) in the table below.

Standard:

Tester Connection	Specified Condition 20 °C (68 °F)
Solenoid Connector (SL) – Solenoid Body (SL)	11 to 15 Ω

(c) Connect positive (+) lead to the terminal of solenoid connector, negative (–) lead to the solenoid body.

OK:

The solenoid makes an operating noise.

NG → **REPLACE SHIFT SOLENOID VALVE(SL)**

OK

3	**INSPECT TRANSMISSION VALVE BODY ASSY(See chapter 2 in the problem symptoms table) (SEE PAGE 05–229)**

OK:

There are no foreign objects on each valve and they operate smoothly.

NG → **REPAIR OR REPLACE TRANSMISSION VALVE BODY ASSY (See Pub. No. RM1018E, page 40–42)**

OK

4	**INSPECT TORQUE CONVERTER CLUTCH ASSY (See Pub. No. RM1018E, page 40–37)**

OK:

The torque converter clutch operates normally.

NG → **REPLACE TORQUE CONVERTER CLUTCH ASSY**

OK

REPAIR OR REPLACE AUTOMATIC TRANSAXLE ASSY (See Pub. No. RM1018E, page 40–11)

DTC	P0751	SHIFT SOLENOID ”A” PERFORMANCE (SHIFT SOLENOID VALVE S1)

SYSTEM DESCRIPTION

The ECM uses signals from the vehicle speed sensor and speed sensor NT to detect the actual gear position (1st, 2nd, 3rd or 4th gear).

Then the ECM compares the actual gear with the shift schedule in the ECM memory to detect mechanical problems of the shift solenoid valves and valve body.

DTC No.	DTC Detecting Condition	Trouble Area
P0751	The gear required by the ECM does not match the actual gear when driving (2–trip detection logic)	• Shift solenoid valve S1 remains open or closed • Valve body is blocked • Shift solenoid valve S1 • Automatic transaxle (clutch, brake or gear etc.) • ECM

MONITOR DESCRIPTION

The ECM commands gear shifts by turning the shift solenoid valves ”ON/OFF”. According to the input shaft revolution, intermediate (counter) shaft revolution and output shaft revolution, the ECM detects the actual gear position (1st, 2nd, 3rd or 4th gear position). When the gear position commanded by the ECM and the actual gear position are not same, the ECM illuminates the MIL.

Example:

When either condition (a) or (b) is met, the ECM detects a malfunction.

(a) The ECM commands the 1st gear, but the actual gear is 2nd.

(b) The ECM commands the 2nd gear, but the actual gear is 1st.

INSPECTION PROCEDURE

HINT:

Performing the Intelligent Tester II Active Test allows relay, Vacuum Switching Valve (VSV), actuator and other items to be operated without removing any parts. Performing the Active Test early in troubleshooting is one way to shorten labor time. The Data List can be displayed during the Active Test.

(a) Warm up the engine.
(b) Turn the ignition switch off.
(c) Connect the Intelligent Tester II to the DLC3.
(d) Turn the ignition switch to the ON position.
(e) Turn on the tester.
(f) Clear the DTC.
(g) Select the item "Enter / Power train / Engine and ECT / Active Test / Control the Shift Position".
(h) Follow the instructions on the tester and read the Active Test.

HINT:

While driving, the shift position can be forcibly changed with the Intelligent Tester II.
Comparing the shift position commanded by the ACTIVE TEST with the actual shift position enables you to confirm the problem (see page 05–241).

Item	Test Details	Diagnostic Note
Control the Shift Position	[Test Details] Operate the shift solenoid valve and set the each shift position by yourself. [Vehicle Condition] • IDL: ON • Less than 50 km/h (31 mph) [Others] • Press "→" button: Shift up • Press "←" button: Shift down	Possible to check the operation of the shift solenoid valves.

HINT:

- This test can be conducted when the vehicle speed is 50 km/h (31 mph) or less.
- The shift position commanded by the ECM is shown in the DATA LIST (Shift Status) display on the Intelligent Tester II.

1	CHECK OTHER DTCS OUTPUT(IN ADDITION TO DTC P0751)

(a) Connect the Intelligent Tester II to the DLC3.
(b) Turn the ignition switch to the ON position.
(c) Turn on the tester.
(d) Select the item "Power train / Engine and ECT / DTC / Current or Pending".
(e) Read the DTCs using the Intelligent Tester II.

Result:

Display (DTC output)	Proceed to
Only "P0751" is output	A
"P0751" and other DTCs	B

HINT:

If any other codes besides "P0751" is output, perform the troubleshooting for those DTCs first.

B → GO TO RELEVANT DTC CHART (SEE PAGE 05–245)

A

2	INSPECT SHIFT SOLENOID VALVE(S1)

Shift Solenoid Valve S1:

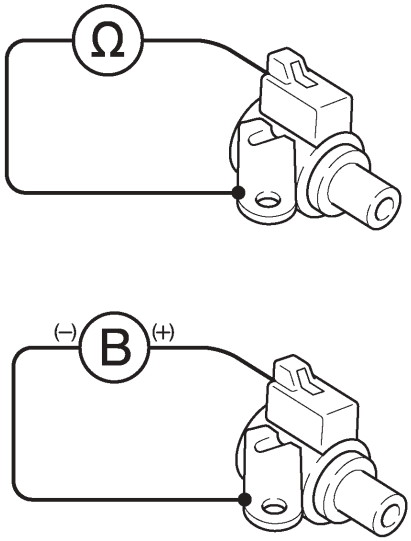

(a) Remove the shift solenoid valve S1.

(b) Measure the resistance according to the value(s) in the table below.

Standard:

Tester Connection	Specified Condition 20 °C (68 °F)
Solenoid Connector (S1) – Solenoid Body (S1)	11 to 15 Ω

(c) Connect positive (+) lead to the terminal of solenoid connector, negative (–) lead to the solenoid body.

OK:

The solenoid makes an operating noise.

NG → **REPLACE SHIFT SOLENOID VALVE(S1)**

OK

3	INSPECT TRANSMISSION VALVE BODY ASSY(See chapter 2 in the problem symptoms table) (SEE PAGE 05–229)

OK:

There are no foreign objects on each valve and they operate smoothly.

NG → **REPAIR OR REPLACE TRANSMISSION VALVE BODY ASSY (See Pub. No. RM1018E, page 40–42)**

OK

4	INSPECT TORQUE CONVERTER CLUTCH ASSY (See Pub. No. RM1018E, page 40–37)

OK:

The torque converter clutch operates normally.

NG → **REPLACE TORQUE CONVERTER CLUTCH ASSY**

OK

REPAIR OR REPLACE AUTOMATIC TRANSAXLE ASSY (See Pub. No. RM1018E, page 40–11)

DTC	P0756	SHIFT SOLENOID ”B” PERFORMANCE (SHIFT SOLENOID VALVE S2)

SYSTEM DESCRIPTION

The ECM uses signals from the vehicle speed sensor to detect the actual gear position (1st, 2nd, 3rd or 4th gear).

Then the ECM compares the actual gear with the shift schedule in the ECM memory to detect mechanical problems of the shift solenoid valves and valve body.

DTC No.	DTC Detecting Condition	Trouble Area
P0756	The gear required by the ECM does not match the actual gear when driving (2–trip detection logic)	• Shift solenoid valve S2 remains open or closed • Valve body is blocked • Shift solenoid valve S2 • Automatic transaxle (clutch, brake or gear etc.) • ECM

MONITOR DESCRIPTION

The ECM commands gear shifts by turning the shift solenoid valves ”ON/OFF”. According to the input shaft revolution, intermediate (counter) shaft revolution and output shaft revolution, the ECM detects the actual gear position (1st, 2nd, 3rd or 4th gear position). When the gear position commanded by the ECM and the actual gear position are not same, the ECM illuminates the MIL and stores the DTC.

INSPECTION PROCEDURE

HINT:

Performing the Intelligent Tester II Active Test allows relay, Vacuum Switching Valve (VSV), actuator and other items to be operated without removing any parts. Performing the Active Test early in troubleshooting is one way to shorten labor time. The Data List can be displayed during the Active Test.

(a) Warm up the engine.
(b) Turn the ignition switch off.
(c) Connect the Intelligent Tester II to the DLC3.
(d) Turn the ignition switch to the ON position.
(e) Turn on the tester.
(f) Clear the DTC.
(g) Select the item ”Enter / Power train / Engine and ECT / Active Test / Control the Shift Position”.
(h) Follow the instructions on the tester and read the Active Test.

HINT:

While driving, the shift position can be forcibly changed with the Intelligent Tester II.
Comparing the shift position commanded by the ACTIVE TEST with the actual shift position enables you to confirm the problem (see page 05–241).

Item	Test Details	Diagnostic Note
Control the Shift Position	[Test Details] Operate the shift solenoid valve and set the each shift position by yourself. [Vehicle Condition] • IDL: ON • Less than 50 km/h (31 mph) [Others] • Press ”→” button: Shift up • Press ”←” button: Shift down	Possible to check the operation of the shift solenoid valves.

HINT:

- This test can be conducted when the vehicle speed is 50 km/h (31 mph) or less.
- The shift position commanded by the ECM is shown in the DATA LIST (Shift Status) display on the Intelligent Tester II.

1	CHECK OTHER DTCS OUTPUT(IN ADDITION TO DTC P0756)

(a) Connect the Intelligent Tester II to the DLC3.
(b) Turn the ignition switch to the ON position.
(c) Turn on the tester.
(d) Select the item ”Power train / Engine and ECT / DTC / Current or Pending”.
(e) Read the DTCs using the Intelligent Tester II.

Result:

Display (DTC output)	Proceed to
Only ”P0756” is output	A
”P0756” and other DTCs	B

HINT:

If any other codes besides ”P0756” is output, perform the troubleshooting for those DTCs first.

B → GO TO RELEVANT DTC CHART (SEE PAGE 05–245)

A

2	INSPECT SHIFT SOLENOID VALVE(S2)

Shift Solenoid Valve S2:

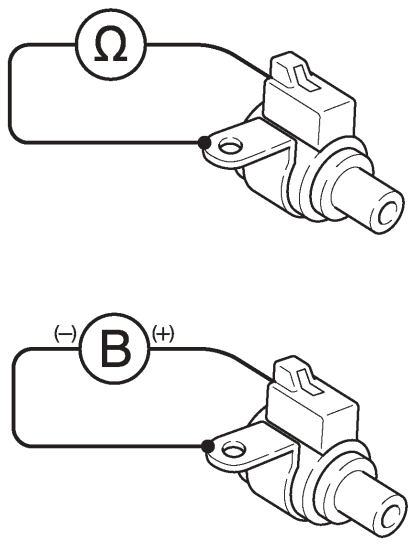

G27220

(a) Remove the shift solenoid valve S2.

(b) Measure the resistance according to the value(s) in the table below.

Standard:

Tester Connection	Specified Condition 20 °C (68 °F)
Solenoid Connector (S2) – Solenoid Body (S2)	11 to 15 Ω

(c) Connect positive (+) lead to the terminal of solenoid connector, negative (–) lead to the solenoid body.

OK:

The solenoid makes an operating noise.

NG → **REPLACE SHIFT SOLENOID VALVE(S2)**

OK

3	INSPECT TRANSMISSION VALVE BODY ASSY(See chapter 2 in the problem symptoms table) (SEE PAGE 05–229)

OK:

There are no foreign objects on each valve and they operate smoothly.

NG → **REPAIR OR REPLACE TRANSMISSION VALVE BODY ASSY (See Pub. No. RM1018E, page 40–42)**

OK

4	INSPECT TORQUE CONVERTER CLUTCH ASSY (See Pub. No. RM1018E, page 40–37)

OK:

The torque converter clutch operates normally.

NG → **REPLACE TORQUE CONVERTER CLUTCH ASSY**

OK

REPAIR OR REPLACE AUTOMATIC TRANSAXLE ASSY (See Pub. No. RM1018E, page 40–11)

DTC	P0787	SHIFT/TIMING SOLENOID LOW (SHIFT SOLENOID VALVE ST)

DTC	P0788	SHIFT/TIMING SOLENOID HIGH (SHIFT SOLENOID VALVE ST)

CIRCUIT DESCRIPTION

The shift solenoid valve ST is used for shifting from the 3rd to 4th gear, and from the 4th to 3rd gear. Actuates solenoid valves ST and SLT in accordance with the signals from the ECM, and guides this output pressure directly to 4–3 shift timing valve and 3–4 shift timing valve in order to regulate the line pressure that acts on the B_1 brake and C_1 clutch.

DTC No.	DTC Detection Condition	Trouble Area
P0787	ECM detects short in solenoid valve ST circuit 4 times when solenoid valve ST is operated (1–trip detection logic)	• Short in shift solenoid valve ST circuit • Shift solenoid valve ST • ECM
P0788	ECM detects open in solenoid valve ST circuit 4 times when solenoid valve ST is not operated (1–trip detection logic)	• Open in shift solenoid valve ST circuit • Shift solenoid valve ST • ECM

MONITOR DESCRIPTION

The ECM commands gear shifts by turning the shift solenoid valves ”ON/OFF”. When there is an open or short circuit in any shift solenoid valve circuit, the ECM detects the problem and illuminates the MIL and stores the DTC. And the ECM performs the fail–safe function and turns the other shift solenoid valves in good condition ”ON/OFF” (In case of an open or short circuit, the ECM stops sending current to the circuit.) (see page 05–241).

WIRING DIAGRAM

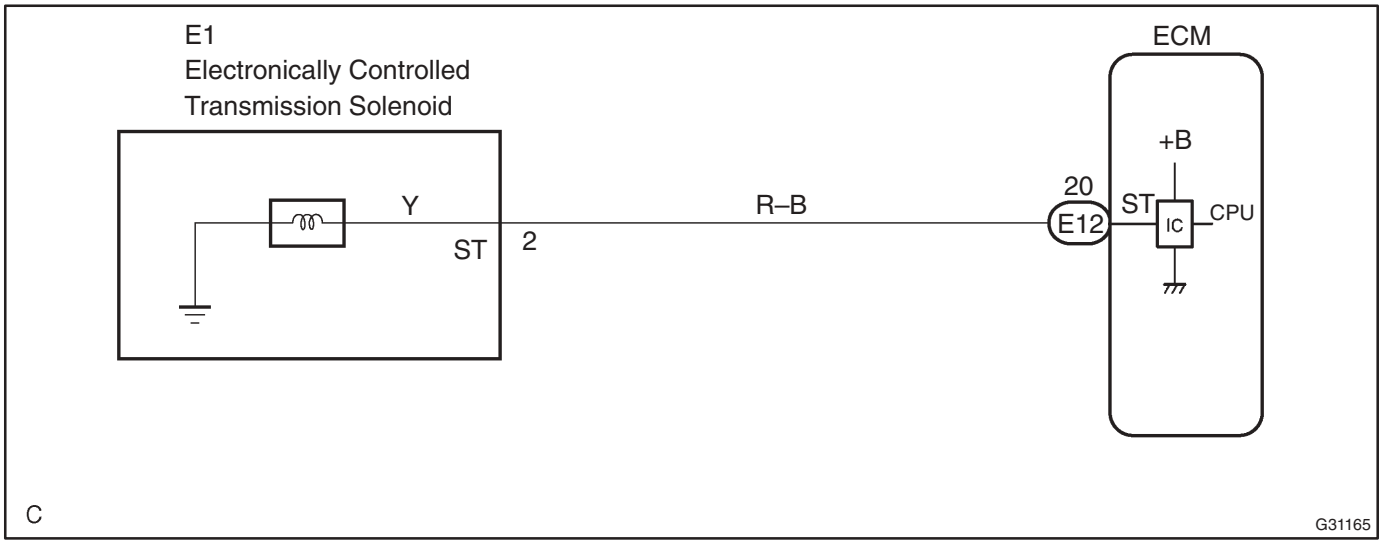

INSPECTION PROCEDURE

1 INSPECT TRANSMISSION WIRE(ST)

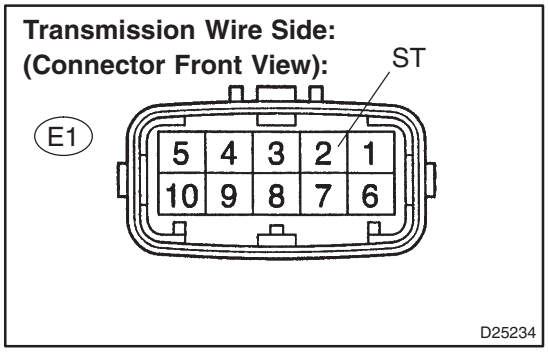

(a) Disconnect the transmission wire connector from the transaxle.
(b) Measure the resistance according to the value(s) in the table below.

Standard:

Tester Connection	Specified Condition 20 °C (68 °F)
2 – Body ground	11 to 15 Ω

NG → **Go to step 3**

OK

2 CHECK HARNESS AND CONNECTOR(TRANSMISSION WIRE – ECM)

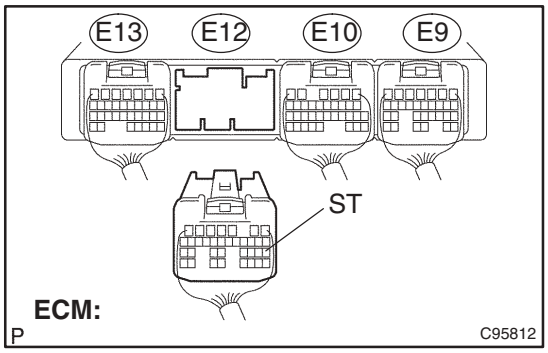

(a) Connect the transmission connector to the transaxle.
(b) Disconnect the connector from the ECM.
(c) Measure the resistance according to the value(s) in the table below.

Standard:

Tester Connection	Specified Condition 20 °C (68 °F)
E12 – 20 (ST) – Body ground	11 to 15 Ω

NG → **REPAIR OR REPLACE HARNESS OR CONNECTOR (SEE PAGE 01–32)**

OK

REPLACE ECM

3 INSPECT SHIFT SOLENOID VALVE(ST)

Shift Solenoid Valve ST:

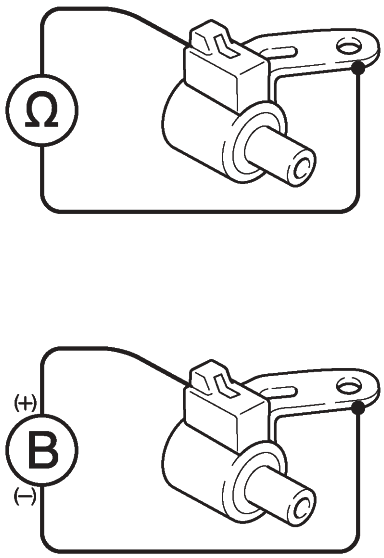

N D09034

(a) Remove the shift solenoid valve ST.

(b) Measure the resistance according to the value(s) in the table below.

Standard:

Tester Connection	Specified Condition 20 °C (68 °F)
Solenoid Connector (ST) – Solenoid Body (ST)	11 to 15 Ω

(c) Connect positive (+) lead to the terminal of solenoid connector, negative (–) lead to the solenoid body.

OK:

The solenoid makes an operating noise.

NG → **REPLACE SHIFT SOLENOID VALVE(ST)**

OK

REPAIR OR REPLACE TRANSMISSION WIRE (See Pub. No. RM1018E, page 40–51)

DTC	P0973	SHIFT SOLENOID ”A” CONTROL CIRCUIT LOW (SHIFT SOLENOID VALVE S1)

DTC	P0974	SHIFT SOLENOID ”A” CONTROL CIRCUIT HIGH (SHIFT SOLENOID VALVE S1)

CIRCUIT DESCRIPTION

Shifting from 1st to 4th is performed in combination with ”ON” and ”OFF” operation of the shift solenoid valves S1 and S2 which is controlled by the ECM. If an open or short circuit occurs in either of the shift solenoid valves, the ECM controls the remaining normal shift solenoid valve to allow the vehicle to be operated smoothly (Fail safe function).

DTC No.	DTC Detection Condition	Trouble Area
P0973	ECM detects short in solenoid valve S1 circuit 2 times when solenoid valve S1 is operated (1–trip detection logic)	• Short in shift solenoid valve S1 circuit • Shift solenoid valve S1 • ECM
P0974	ECM detects open in solenoid valve S1 circuit 2 times when solenoid valve S1 is not operated (1–trip detection logic)	• Open in shift solenoid valve S1 circuit • Shift solenoid valve S1 • ECM

MONITOR DESCRIPTION

The ECM commands gear shifts by turning the shift solenoid valves ”ON/OFF”. When there is an open or short circuit in any shift solenoid valve circuit, the ECM detects the problem and illuminates the MIL and stores the DTC. And the ECM performs the fail–safe function and turns the other shift solenoid valves in good condition ”ON/OFF” (In case of an open or short circuit, the ECM stops sending current to the circuit.) (see page 05–241).

WIRING DIAGRAM

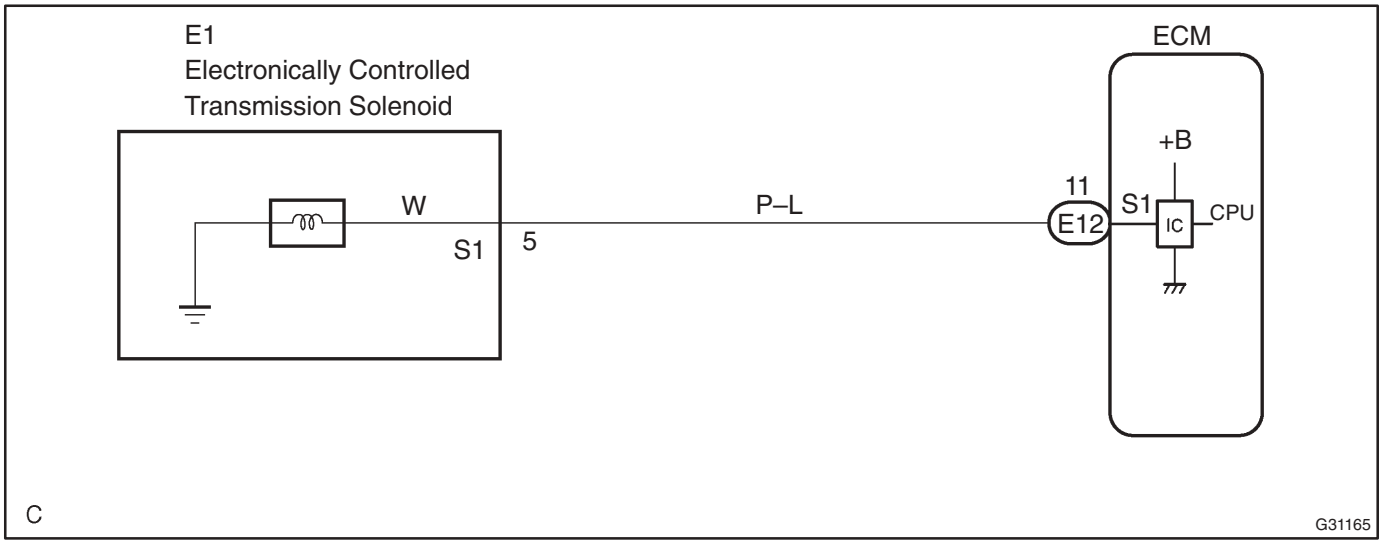

INSPECTION PROCEDURE

1 INSPECT TRANSMISSION WIRE(S1)

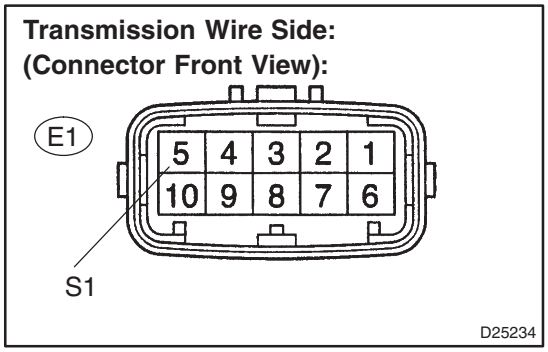

(a) Disconnect the transmission wire connector from the transaxle.
(b) Measure the resistance according to the value(s) in the table below.

Standard:

Tester Connection	Specified Condition 20 °C (68 °F)
5 – Body ground	11 to 15 Ω

NG → **Go to step 3**

OK

2 CHECK HARNESS AND CONNECTOR(TRANSMISSION WIRE – ECM)

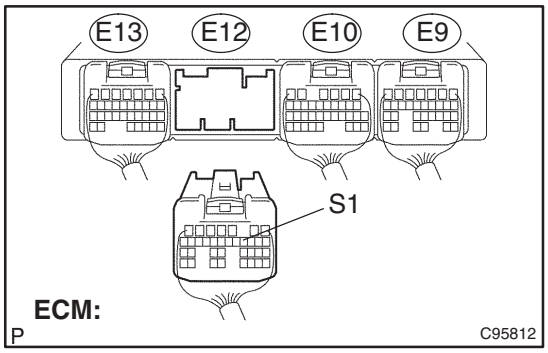

(a) Connect the transmission connector to the transaxle.
(b) Disconnect the connector from the ECM.
(c) Measure the resistance according to the value(s) in the table below.

Standard:

Tester Connection	Specified Condition 20 °C (68 °F)
E12 – 11 (S1) – Body ground	11 to 15 Ω

NG → **REPAIR OR REPLACE HARNESS OR CONNECTOR (SEE PAGE 01–32)**

OK

REPLACE ECM

3 INSPECT SHIFT SOLENOID VALVE(S1)

Shift Solenoid Valve S1:

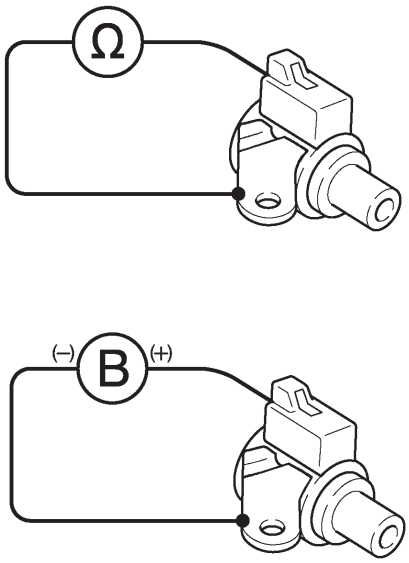

(a) Remove the shift solenoid valve S1.

(b) Measure the resistance according to the value(s) in the table below.

Standard:

Tester Connection	Specified Condition 20 °C (68 °F)
Solenoid Connector (S1) – Solenoid Body (S1)	11 to 15 Ω

(c) Connect positive (+) lead to the terminal of solenoid connector, negative (–) lead to the solenoid body.

OK:

The solenoid makes an operating noise.

NG → **REPLACE SHIFT SOLENOID VALVE(S1)**

OK

REPAIR OR REPLACE TRANSMISSION WIRE (See Pub. No. RM1018E, page 40–51)

DTC	P0976	SHIFT SOLENOID ”B” CONTROL CIRCUIT LOW (SHIFT SOLENOID VALVE S2)

DTC	P0977	SHIFT SOLENOID ”B” CONTROL CIRCUIT HIGH (SHIFT SOLENOID VALVE S2)

CIRCUIT DESCRIPTION

Shifting from 1st to 4th is performed in combination with ”ON” and ”OFF” operation of the shift solenoid valves S1 and S2 which is controlled by the ECM. If an open or short circuit occurs in either of the shift solenoid valves, the ECM controls the remaining normal shift solenoid valve to allow the vehicle to be operated smoothly (Fail safe function).

DTC No.	DTC Detection Condition	Trouble Area
P0976	ECM detects short in solenoid valve S2 circuit 2 times when solenoid valve S2 is operated (1–trip detection logic)	• Short in shift solenoid valve S2 circuit • Shift solenoid valve S2 • ECM
P0977	ECM detects open in solenoid valve S2 circuit 2 times when solenoid valve S2 is not operated (1–trip detection logic)	• Open in shift solenoid valve S2 circuit • Shift solenoid valve S2 • ECM

MONITOR DESCRIPTION

The ECM commands gear shifts by turning the shift solenoid valves ”ON/OFF”. When there is an open or short circuit in any shift solenoid valve circuit, the ECM detects the problem and illuminates the MIL and stores the DTC. And the ECM performs the fail–safe function and turns the other shift solenoid valves in good condition ”ON/OFF” (In case of an open or short circuit, the ECM stops sending current to the circuit.) (see page 05–241).

WIRING DIAGRAM

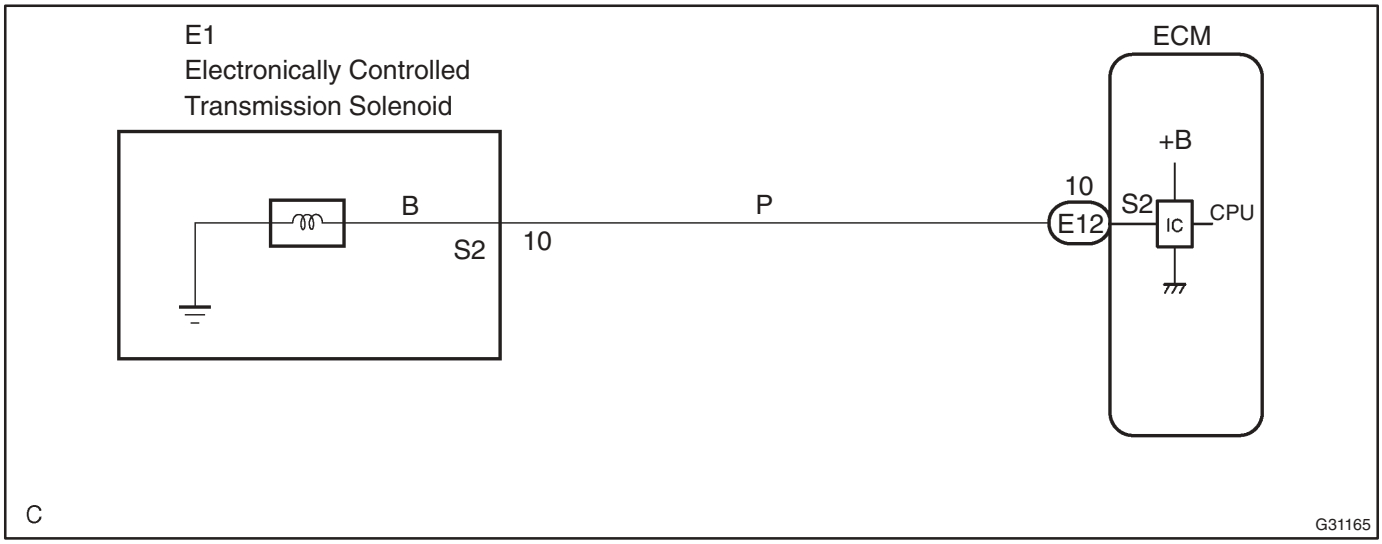

INSPECTION PROCEDURE

1 INSPECT TRANSMISSION WIRE(S2)

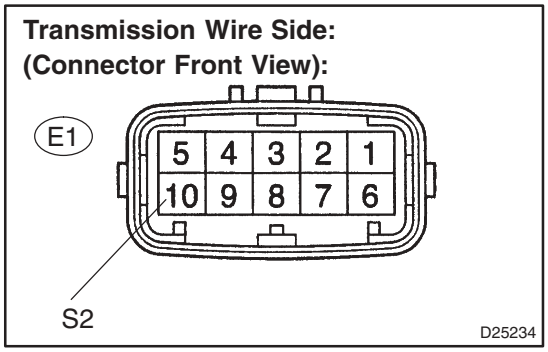

(a) Disconnect the transmission wire connector from the transaxle.
(b) Measure the resistance according to the value(s) in the table below.

Standard:

Tester Connection	Specified Condition 20 °C (68 °F)
10 – Body ground	11 to 15 Ω

NG → **Go to step 3**

OK

2 CHECK HARNESS AND CONNECTOR(TRANSMISSION WIRE – ECM)

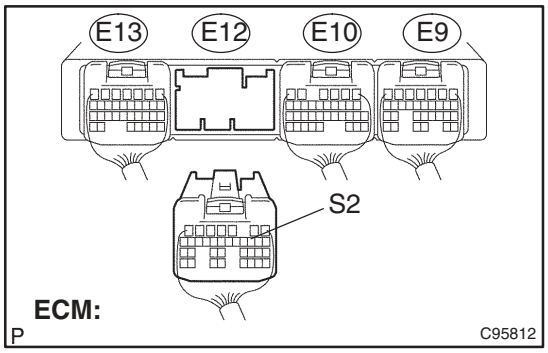

(a) Connect the transmission connector to the transaxle.
(b) Disconnect the connector from the ECM.
(c) Measure the resistance according to the value(s) in the table below.

Standard:

Tester Connection	Specified Condition 20 °C (68 °F)
E12 – 10 (S2) – Body ground	11 to 15 Ω

NG → **REPAIR OR REPLACE HARNESS OR CONNECTOR (SEE PAGE 01–32)**

OK

REPLACE ECM

3 INSPECT SHIFT SOLENOID VALVE(S2)

Shift Solenoid Valve S2:

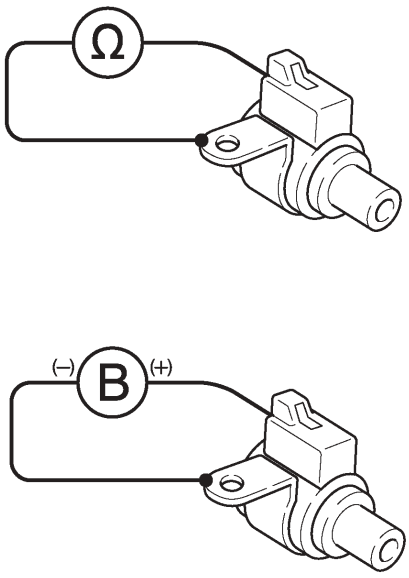

G33708

(a) Remove the shift solenoid valve S2.

(b) Measure the resistance according to the value(s) in the table below.

Standard:

Tester Connection	Specified Condition 20 °C (68 °F)
Solenoid Connector (S2) – Solenoid Body (S2)	11 to 15 Ω

(c) Connect positive (+) lead to the terminal of solenoid connector, negative (–) lead to the solenoid body.

OK:

The solenoid makes an operating noise.

NG → **REPLACE SHIFT SOLENOID VALVE(S2)**

OK

REPAIR OR REPLACE TRANSMISSION WIRE (See Pub. No. RM1018E, page 40–51)

DTC	P0998	SHIFT SOLENOID ”F” CONTROL CIRCUIT LOW (SHIFT SOLENOID VALVE SB)

DTC	P0999	SHIFT SOLENOID ”F” CONTROL CIRCUIT HIGH (SHIFT SOLENOID VALVE SB)

CIRCUIT DESCRIPTION

Shift solenoid valve SB controls the 2nd brake (B_1) and 1st and reverse brake pressures and performs the 1st and 2nd engine brake control.

Fail safe function:

- S shift control prohibition.
- On activating the fail–safe function during S shift, the driving mode turns to the normal D position.

DTC No.	DTC Detection Condition	Trouble Area
P0998	ECM detects short in solenoid valve SB circuit 2 times when solenoid valve SB is operated (1–trip detection logic)	• Short in shift solenoid valve SB circuit • Shift solenoid valve SB • ECM
P0999	ECM detects open in solenoid valve SB circuit 2 times when solenoid valve SB is not operated (1–trip detection logic)	• Open in shift solenoid valve SB circuit • Shift solenoid valve SB • ECM

MONITOR DESCRIPTION

The ECM commands gear shifts by turning the shift solenoid valves ”ON/OFF”. When there is an open or short circuit in any shift solenoid valve circuit, the ECM detects the problem and illuminates the MIL and stores the DTC. And the ECM performs the fail–safe function and turns the other shift solenoid valves in good condition ”ON/OFF” (In case of an open or short circuit, the ECM stops sending current to the circuit.) (see page 05–241).

WIRING DIAGRAM

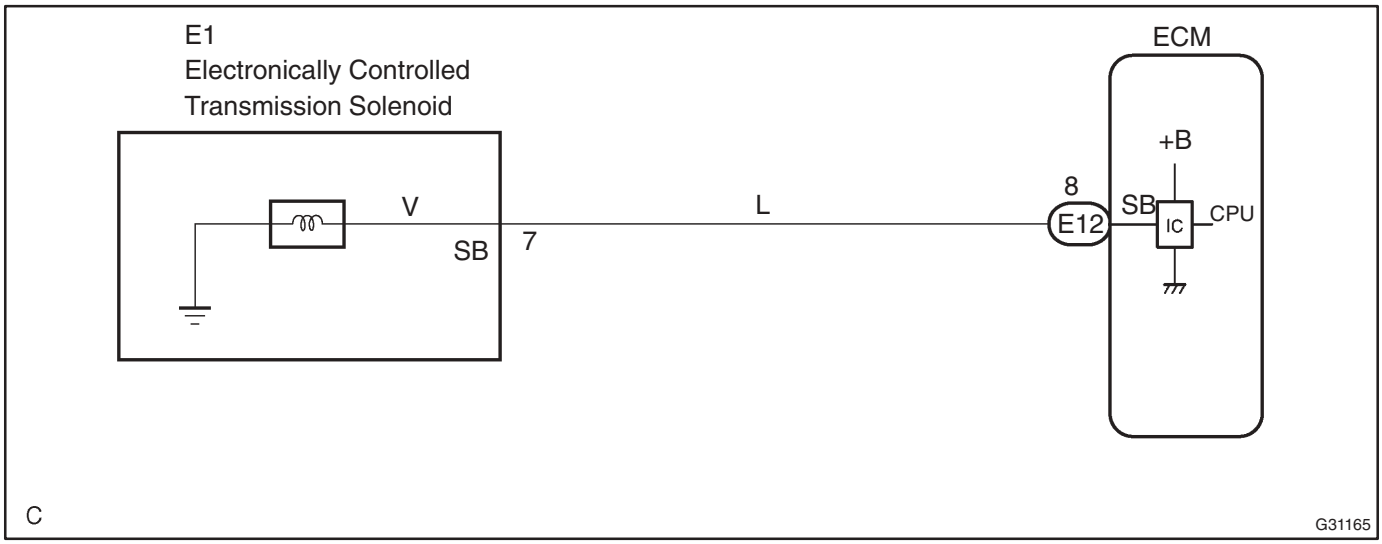

INSPECTION PROCEDURE

1 INSPECT TRANSMISSION WIRE(SB)

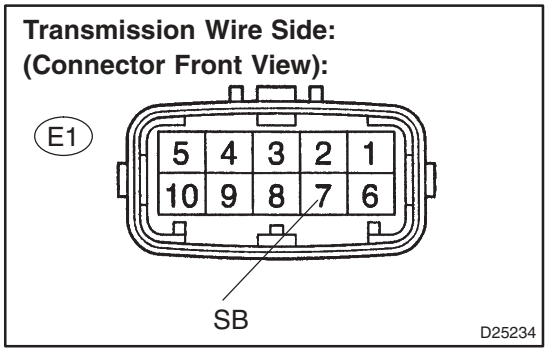

(a) Disconnect the transmission wire connector from the transaxle.
(b) Measure the resistance according to the value(s) in the table below.

Standard:

Tester Connection	Specified Condition 20 °C (68 °F)
7 – Body ground	11 to 15 Ω

NG → **Go to step 3**

OK

2 CHECK HARNESS AND CONNECTOR(TRANSMISSION WIRE – ECM)

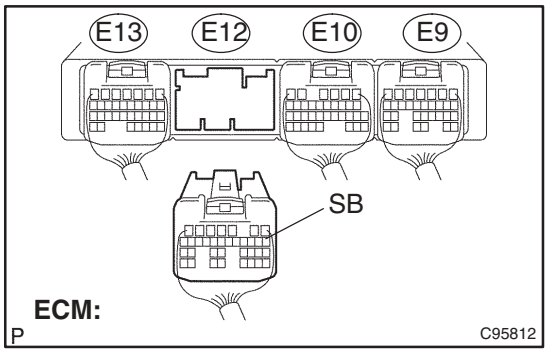

(a) Connect the transmission connector to the transaxle.
(b) Disconnect the connector from the ECM.
(c) Measure the resistance according to the value(s) in the table below.

Standard:

Tester Connection	Specified Condition 20 °C (68 °F)
E12 – 8 (SB) – Body ground	11 to 15 Ω

NG → **REPAIR OR REPLACE HARNESS OR CONNECTOR (SEE PAGE 01–32)**

OK

REPLACE ECM

3 INSPECT SHIFT SOLENOID VALVE(SB)

Shift Solenoid Valve SB:

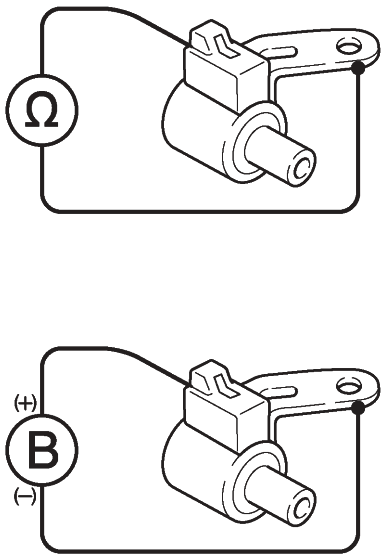

N D09034

(a) Remove the shift solenoid valve SB.

(b) Measure the resistance according to the value(s) in the table below.

Standard:

Tester Connection	Specified Condition 20 °C (68 °F)
Solenoid Connector (SB) – Solenoid Body (SB)	11 to 15 Ω

(c) Connect positive (+) lead to the terminal of solenoid connector, negative (–) lead to the solenoid body.

OK:

The solenoid makes an operating noise.

NG → **REPLACE SHIFT SOLENOID VALVE(SB)**

OK

REPAIR OR REPLACE TRANSMISSION WIRE (See Pub. No. RM1018E, page 40–51)

DTC	P2716	PRESSURE CONTROL SOLENOID ”D” ELECTRICAL (SHIFT SOLENOID SLT)

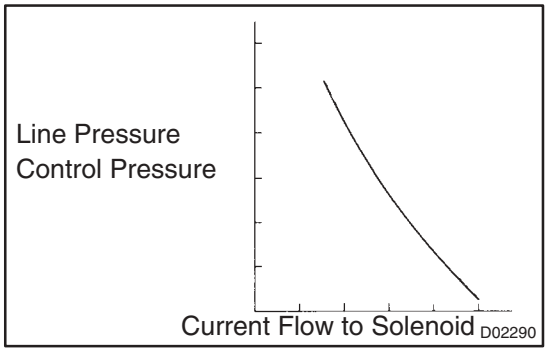

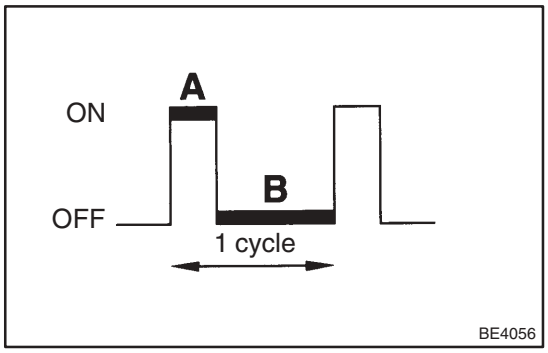

CIRCUIT DESCRIPTION

The linear solenoid valve (SLT) controls the transaxle line pressure for smooth transaxle operation based on signals from the throttle position sensor and the vehicle speed sensor. The ECM adjusts the duty cycle of the SLT solenoid valve to control hydraulic line pressure coming from the primary regulator valve. Appropriate line pressure assures smooth shifting with varying engine outputs.

(*): Duty Ratio

The duty ratio is the ratio of the period of continuity in one cycle. For example, if A is the period of continuity in one cycle, and B is the period of non–continuity, then

Duty Ratio=A/(A+B) x 100 (%)

DTC No.	DTC Detection Condition	Trouble Area
P2716	Condition (a) or (b) below is detected 1 sec. or more: (1–trip detection logic) (a) SLT– terminal: 0V (b) SLT– terminal: 12V	• Open or short in shift solenoid valve SLT circuit • Shift solenoid valve SLT • ECM

MONITOR DESCRIPTION

When an open or short in the linear solenoid valve (SLT) circuit is detected, the ECM interprets this as a fault. The ECM will turn ON the MIL and store the DTC.

WIRING DIAGRAM

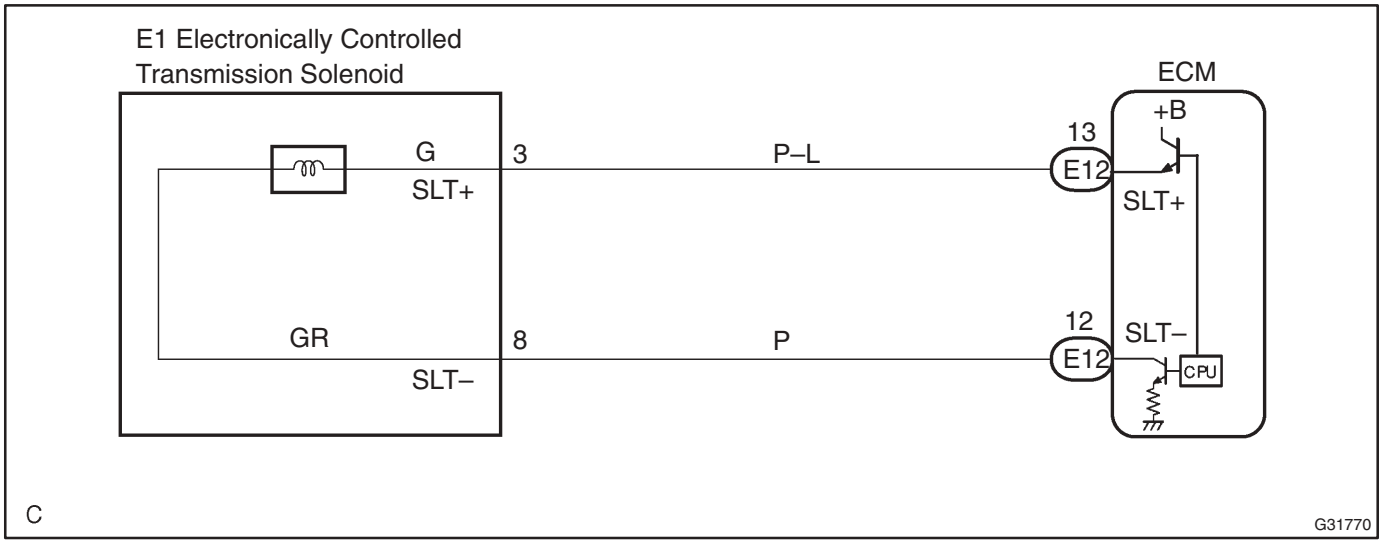

INSPECTION PROCEDURE

1 INSPECT TRANSMISSION WIRE(SLT)

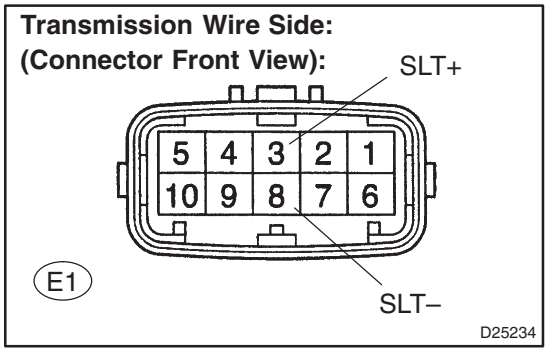

(a) Disconnect the transmission wire connector from the transaxle.

(b) Measure the resistance according to the value(s) in the table below.

Standard:

Tester Connection	Specified Condition 20 °C (68 °F)
3 (SLT+) – 8 (SLT–)	5.0 to 5.6 Ω

(c) Measure the resistance according to the value(s) in the table below.

Standard (Check for short):

Tester Connection	Specified Condition
3 (SLT+) – Body ground	10 kΩ or higher
8 (SLT–) – Body ground	↑

NG → **Go to step 3**

OK

2 CHECK HARNESS AND CONNECTOR(TRANSMISSION WIRE – ECM)

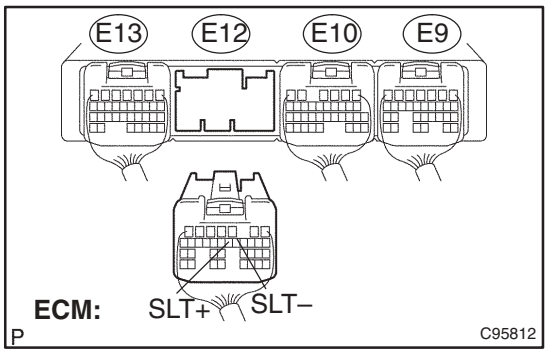

(a) Connect the transmission wire connector to the transaxle.

(b) Disconnect the ECM connector.

(c) Measure the resistance according to the value(s) in the table below.

Standard:

Tester Connection	Specified Condition 20 °C (68 °F)
E12 – 13 (SLT+) – E12 – 12 (SLT–)	5.0 to 5.6 Ω

(d) Measure the resistance according to the value(s) in the table below.

Standard (Check for short):

Tester Connection	Specified Condition
E12 – 13 (SLT+) – Body ground	10 kΩ or higher
E12 – 12 (SLT–) – Body ground	↑

NG → **REPAIR OR REPLACE HARNESS OR CONNECTOR (SEE PAGE 01–32)**

OK

REPLACE ECM

3 INSPECT SHIFT SOLENOID VALVE(SLT)

Shift Solenoid Valve SLT:

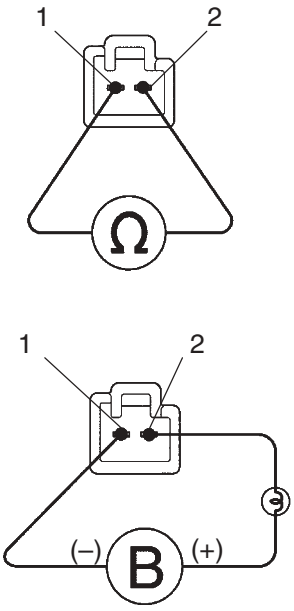

(a) Remove the shift solenoid valve SLT.

(b) Measure the resistance according to the value(s) in the table below.

Standard:

Tester Connection	Specified Condition 20 °C (68 °F)
1 – 2	5.0 to 5.6 Ω

(c) Connect the positive (+) lead with a 21 W bulb to terminal 2 and the negative (–) lead to terminal 1 of the solenoid valve connector, then check the movement of the valve.

OK:

The solenoid makes an operating noise.

NG → **REPLACE SHIFT SOLENOID VALVE(SLT)**

OK

REPAIR OR REPLACE TRANSMISSION WIRE (See Pub. No. RM1018E, page 40–51)

DTC	P2769	TORQUE CONVERTER CLUTCH SOLENOID CIRCUIT LOW (SHIFT SOLENOID VALVE SL)

DTC	P2770	TORQUE CONVERTER CLUTCH SOLENOID CIRCUIT HIGH (SHIFT SOLENOID VALVE SL)

CIRCUIT DESCRIPTION

The shift solenoid valve SL is turned ”ON” and ”OFF” by signals from the ECM in order to control the hydraulic pressure operation, the lock–up relay valve, which then the controls operation of the lock–up clutch.

DTC No.	DTC Detection Condition	Trouble Area
P2769	ECM detects short in solenoid valve SL circuit (0.1 sec.) when solenoid valve SL is operated (2–trip detection logic)	• Short in shift solenoid valve SL circuit • Shift solenoid valve SL • ECM
P2770	ECM detects open in solenoid valve SL circuit (0.1 sec.) when solenoid valve SL is not operated (2–trip detection logic)	• Open in shift solenoid valve SL circuit • Shift solenoid valve SL • ECM

MONITOR DESCRIPTION

Based on the signals from the Throttle Position Sensor, the Airflow Meter and the Crankshaft Position Sensor, the ECM sends a signal to the shift solenoid valve SL to regulate the hydraulic pressure and provide smoother gearshifts. The shift solenoid valve SL responds to commands from the ECM. The valve controls the lock–up relay valve to perform the torque–converter lock–up function. If the ECM detects an open or short circuit for shift solenoid valve SL, it will illuminate the MIL.

WIRING DIAGRAM

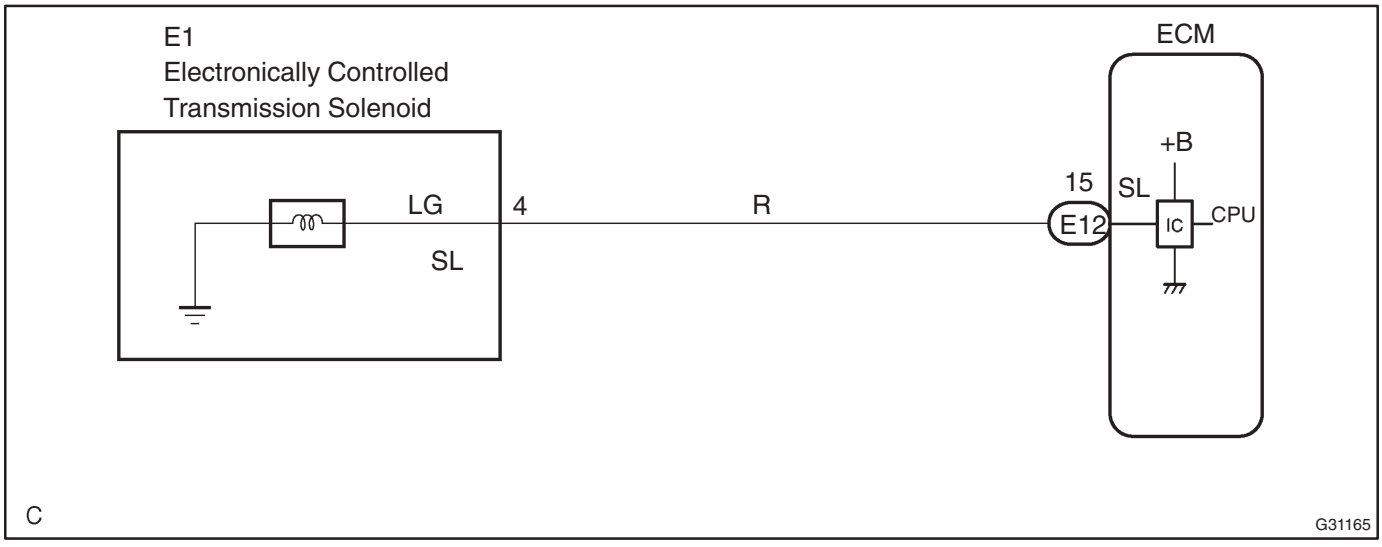

INSPECTION PROCEDURE

1 INSPECT TRANSMISSION WIRE(SL)

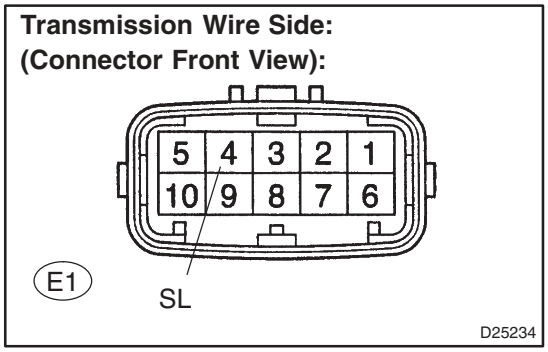

(a) Disconnect the transmission wire connector from the transaxle.

(b) Measure the resistance according to the value(s) in the table below.

Standard:

Tester Connection	Specified Condition 20 °C (68 °F)
4 – Body ground	11 to 15 Ω

NG → **Go to step 3**

OK

2 CHECK HARNESS AND CONNECTOR(TRANSMISSION WIRE – ECM)

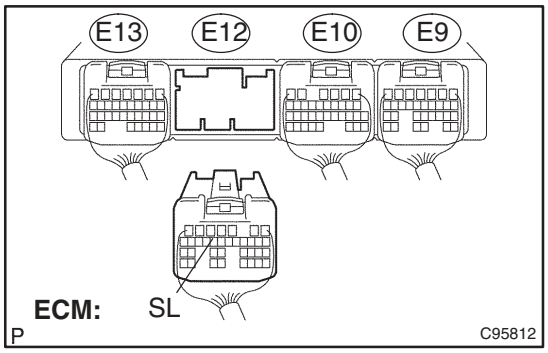

(a) Connect the transmission wire connector.

(b) Disconnect the ECM connector.

(c) Measure the resistance according to the value(s) in the table below.

Standard:

Tester Connection	Specified Condition 20 °C (68 °F)
E12 – 15 (SL) – Body ground	11 to 15 Ω

NG → **REPAIR OR REPLACE HARNESS OR CONNECTOR (SEE PAGE 01–32)**

OK

REPLACE ECM

3 INSPECT SHIFT SOLENOID VALVE(SL)

Shift Solenoid Valve SL:

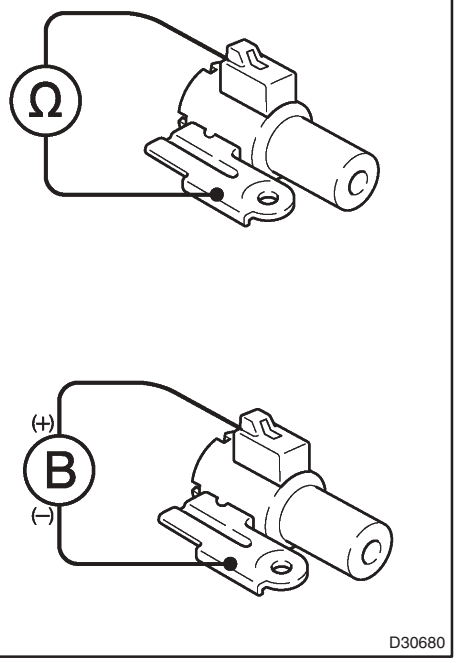

(a) Remove the shift solenoid valve SL.

(b) Measure the resistance according to the value(s) in the table below.

Standard:

Tester Connection	Specified Condition 20 °C (68 °F)
Solenoid Connector (SL) – Solenoid Body (SL)	11 to 15 Ω

(c) Connect positive (+) lead to the terminal of solenoid connector, negative (–) lead to the solenoid body.

OK:

The solenoid valve makes an operating noise.

NG → **REPLACE SHIFT SOLENOID VALVE(SL)**

OK

REPAIR OR REPLACE TRANSMISSION WIRE (See Pub. No. RM1018E, page 40–51)

TRANSMISSION CONTROL SWITCH CIRCUIT

CIRCUIT DESCRIPTION

When moving the shift lever into the S position using the transmission control switch, it is possible to switch the shift range position between ”1” (first range) and ”4” (forth range).
Shifting up ”+” once raises one shift range position, and shifting down ”–” lowers one shift range position.

WIRING DIAGRAM

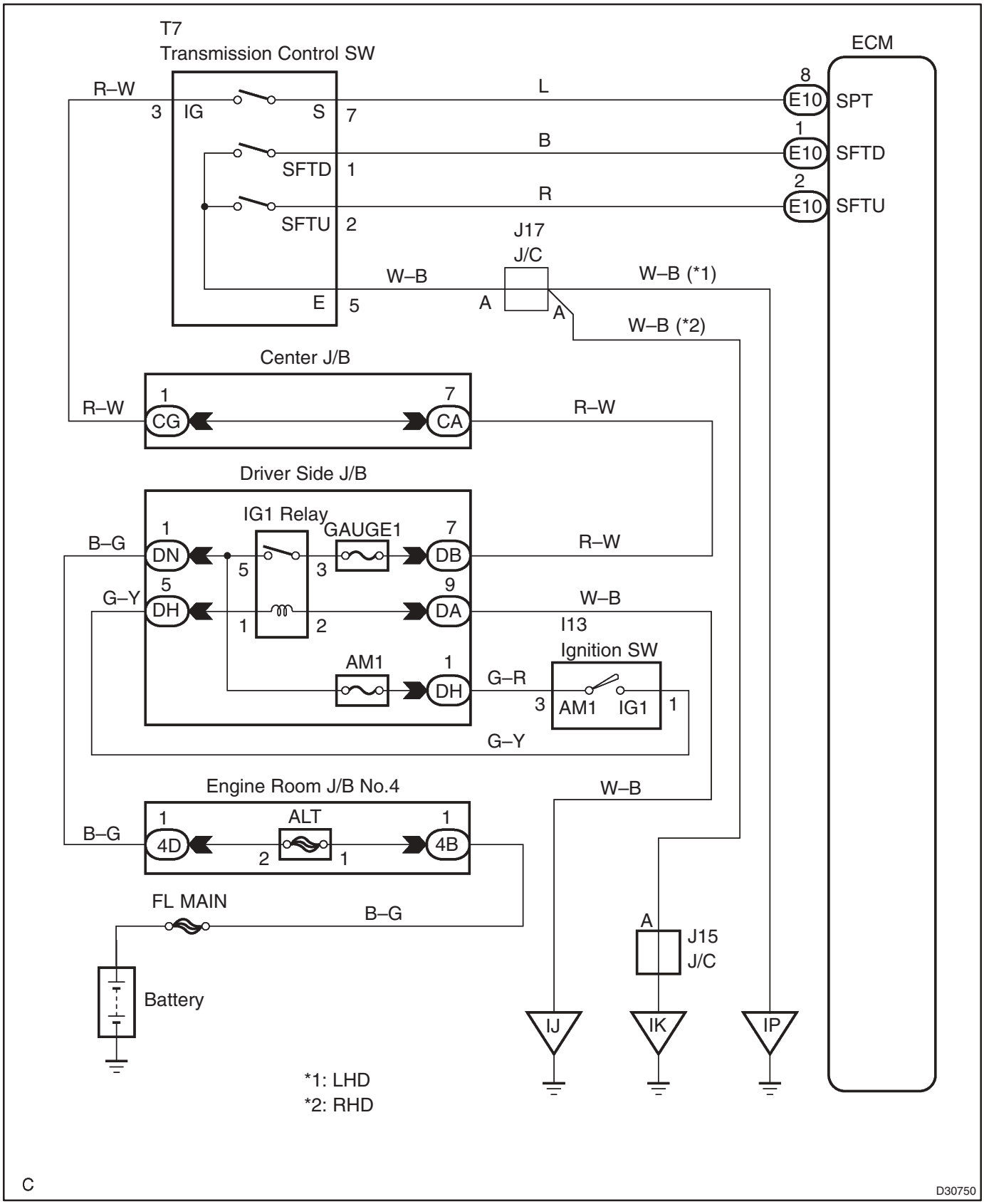

INSPECTION PROCEDURE

1	CHECK HARNESS AND CONNECTOR(BATTERY – TRANSMISSION CONTROL SWITCH)

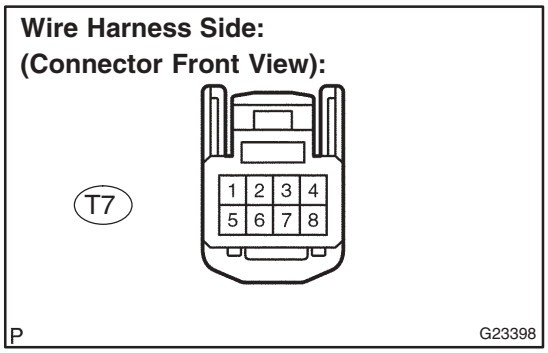

(a) Disconnect the transmission control switch connector of shift lock control unit assy.

(b) Measure the voltage according to the value(s) in the table below.

Standard:

Switch Condition	Tester Connection	Specified Condition
IG switch ON	3 – Body ground	10 to 14 V
IG switch OFF	↑	Below 1 V

NG → REPAIR OR REPLACE HARNESS OR CONNECTOR (SEE PAGE 01–32)

OK

2	CHECK HARNESS AND CONNECTOR(TRANSMISSION CONTROL SWITCH – BODY GROUND)

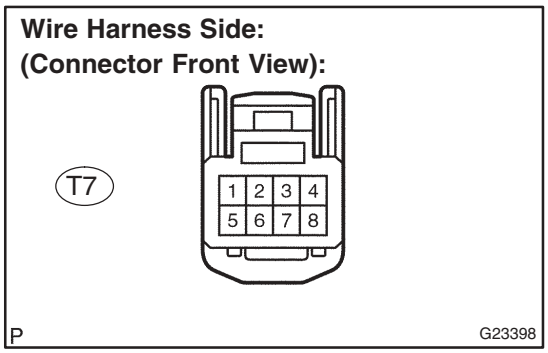

(a) Measure the resistance according to the value(s) in the table below.

Standard:

Tester Connection	Specified Condition
5 – Body ground	Below 1 Ω

NG → REPAIR OR REPLACE HARNESS OR CONNECTOR (SEE PAGE 01–32)

OK

3 INSPECT SHIFT LOCK CONTROL UNIT ASSY

Switch Side:
(Connector Front View):

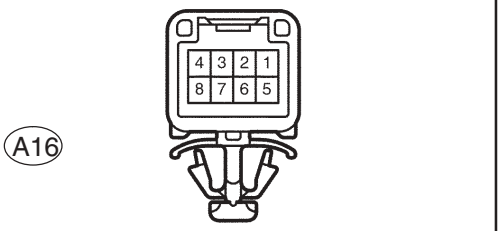

(a) Measure resistance between each terminal of shift lock control unit assy when the shift lever is moved to each position.

Standard:

Shift Position	Tester Connection	Specified Condition
S, "+" and "–"	3 – 7	Below 1 Ω
Except S, "+" and "–"	↑	10 kΩ or higher
Press continuously "+" (Up shift)	2 – 5	Below 1 Ω
S	↑	10 kΩ or higher
Press continuously "–" (Down shift)	1 – 5	Below 1 Ω
S	↑	10 kΩ or higher

NG → **REPLACE SHIFT LOCK CONTROL UNIT ASSY (See Pub. No. RM1018E, page 40–60)**

OK

4 CHECK HARNESS AND CONNECTOR(TRANSMISSION CONTROL SWITCH – ECM)

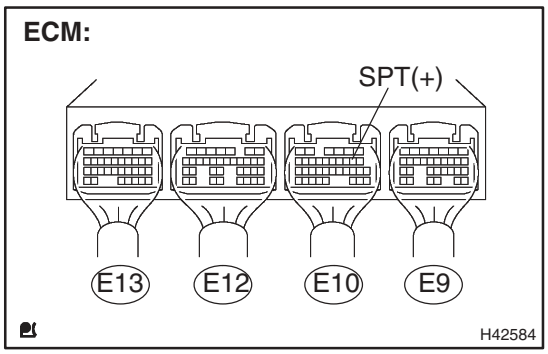

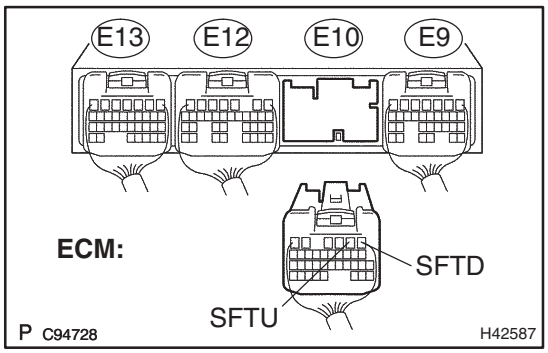

(a) Connect the transmission control switch connector of shift lock control unit assy.

(b) Turn the ignition switch to the ON position, and measure the voltage according to the value(s) in the table below when the shift lever is moved to each position.

Standard:

Shift Position	Tester Connection	Specified Condition
S, "+" and "–"	E10 – 8 (SPT) – Body ground	10 to 14 V
Except S, "+" and "–"	↑	Below 1 V

(c) Turn the ignition switch to the LOCK position.

(d) Disconnect the ECM connector.

(e) Measure the resistance according to the value(s) in the table below when the shift lever is moved to each position.

Standard:

Shift Position	Tester Connection	Specified Condition
Press continuously "+" (Up shift)	E10 – 2 (SFTU) – Body ground	Below 1 Ω
S	↑	10 kΩ or higher
Press continuously "–" (Down shift)	E10 – 1 (SFTD) – Body ground	Below 1 Ω
S	↑	10 kΩ or higher

NG → **REPAIR OR REPLACE HARNESS OR CONNECTOR (SEE PAGE 01–32)**

OK

PROCEED TO NEXT CIRCUIT INSPECTION SHOWN IN PROBLEM SYMPTOMS TABLE (SEE PAGE 05–229)

PATTERN SELECT SWITCH CIRCUIT

CIRCUIT DESCRIPTION

Integration relay receives pattern select switch information, and sends it through the multiplex communication system to the ECM.

ECT SNOW is the system that operates the throttle motor to control engine output to reduce skidding of the driving wheels, guarantee takeoff acceleration, driving straightness and turning stability.

WIRING DIAGRAM

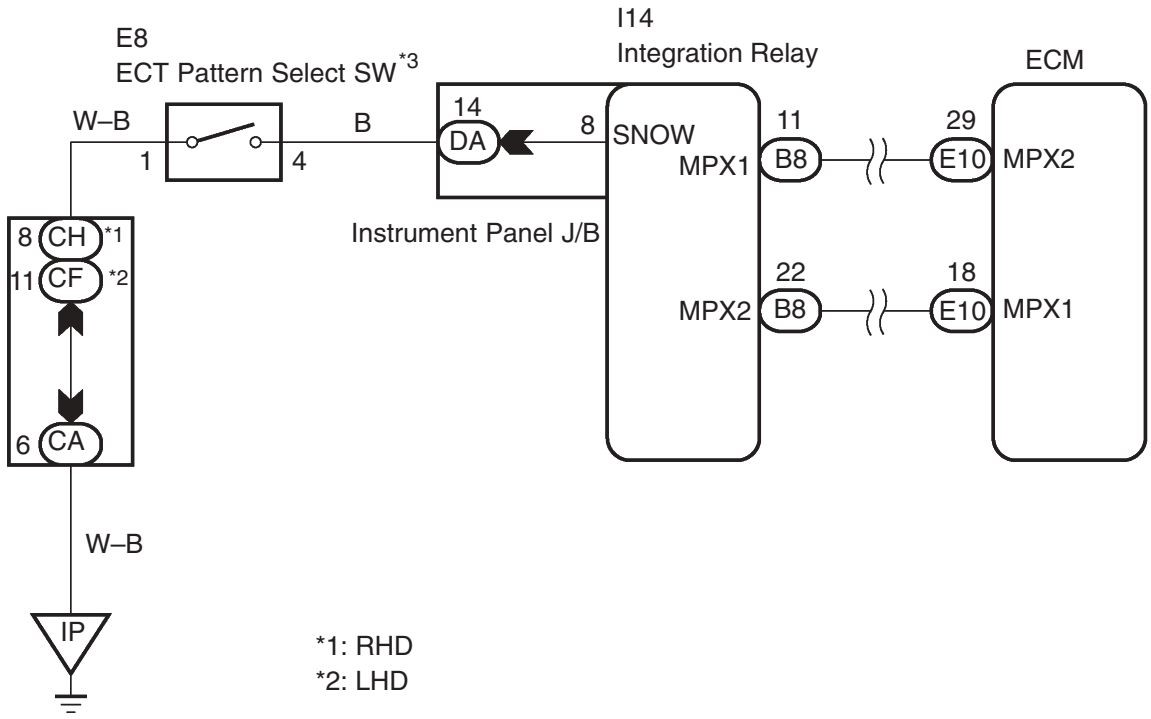

(*3) Pattern Select Switch (ECT SNOW Switch)

When the ECT SNOW switch is pushed, the switch contact is made and the ECT SNOW mode is selected. To cancel the ECT SNOW mode, push the ECT SNOW switch once again. The ECT SNOW mode is automatically cancelledout when the ignition switch is turned ”OFF”.

C

D30688

INSPECTION PROCEDURE

1	DRIVING TEST

(a) Start the engine.
(b) Turn the ECT SNOW switch ”OFF” (Normal drive mode).
(c) Confirm vehicle response by driving from a parked position to fully depressing the accelerator pedal.
(d) Turn the ECT SNOW switch ”ON” and perform the same check as (c).
Confirm that there is a difference between ECT SNOW switch ”ON” and ”OFF”.

HINT:
- Driving test should be done on a paved road (a nonskid road).
- Make sure not to use the TRAC system when testing a vehicle equipped with one.

OK:
There is a difference in acceleration between ”ON” and ”OFF”.

NG → **Go to step 2**

OK

PROCEED TO NEXT CIRCUIT INSPECTION SHOWN IN PROBLEM SYMPTOMS TABLE (SEE PAGE 05–229)

2	CHECK HARNESS AND CONNECTOR(PATTERN SELECT SWITCH ASSY NO.1 – BODY GROUND)

Wire Harness Side:
(Connector Front View):

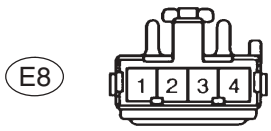

B59192

(a) Disconnect the connector of pattern select switch.
(b) Measure the resistance according to the value(s) in the table below.

Standard:

Tester Connection	Specified Condition
1 – Body ground	Below 1 Ω

NG → **REPAIR OR REPLACE HARNESS OR CONNECTOR (SEE PAGE 01–32)**

OK

3	INSPECT PATTERN SELECT SWITCH ASSY

Switch Side:
(Connector Front View):

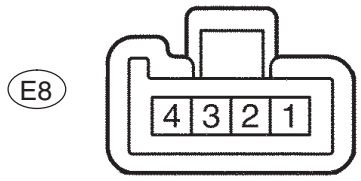

(a) Measure the resistance according to the value(s) in the table below.

Standard:

Switch Condition	Tester Connection	Specified Condition
Press continuously Pattern select switch (SNOW)	1 – 4	Below 1 Ω
Release Pattern select switch (SNOW)	↑	10 kΩ or higher

NG → **REPLACE PATTERN SELECT SWITCH ASSY**

OK

4	CHECK HARNESS AND CONNECTOR(PATTERN SELECT SWITCH ASSY NO.1 – MULTIPLEX NETWORK BODY ECU)

Instrument Panel J/B Assy

Vehicle Front Side:

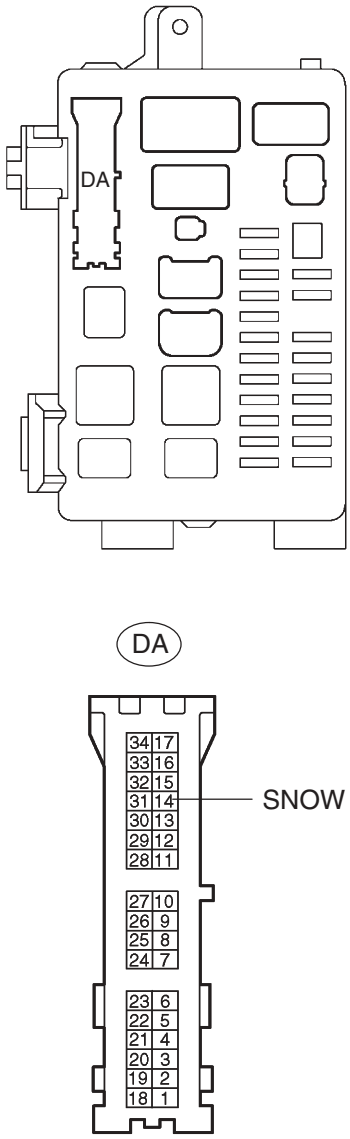

(a) Connect the connector of pattern select switch.

(b) Disconnect the instrument panel J/B assy (integration relay) connector.

(c) Measure the resistance between terminal SNOW of instrument panel J/B assy (integration relay) connector and body ground.

Standard:

Switch Condition	Tester Connection	Specified Condition
Press continuously Pattern select switch (SNOW)	DA – 14 (SNOW) – Body ground	Below 1 Ω
Release Pattern select switch (SNOW)	↑	10 kΩ or higher

NG → **REPAIR OR REPLACE HARNESS OR CONNECTOR (SEE PAGE 01–32)**

OK

PROCEED TO NEXT CIRCUIT INSPECTION SHOWN IN PROBLEM SYMPTOMS TABLE (SEE PAGE 05–229)

KICK–DOWN SWITCH CIRCUIT

CIRCUIT DESCRIPTION

The kick–down switch is turned ON when the accelerator pedal is fully depressed and a signal is sent to the ECM.
When the kick–down switch is turned ON, the ECM controls gear shifting according to the programmed shift diagrams.
If a short circuit develops in the kick–down switch, the ECM disregards the kick–down signals and controls shifting at the normal shift points.

WIRING DIAGRAM

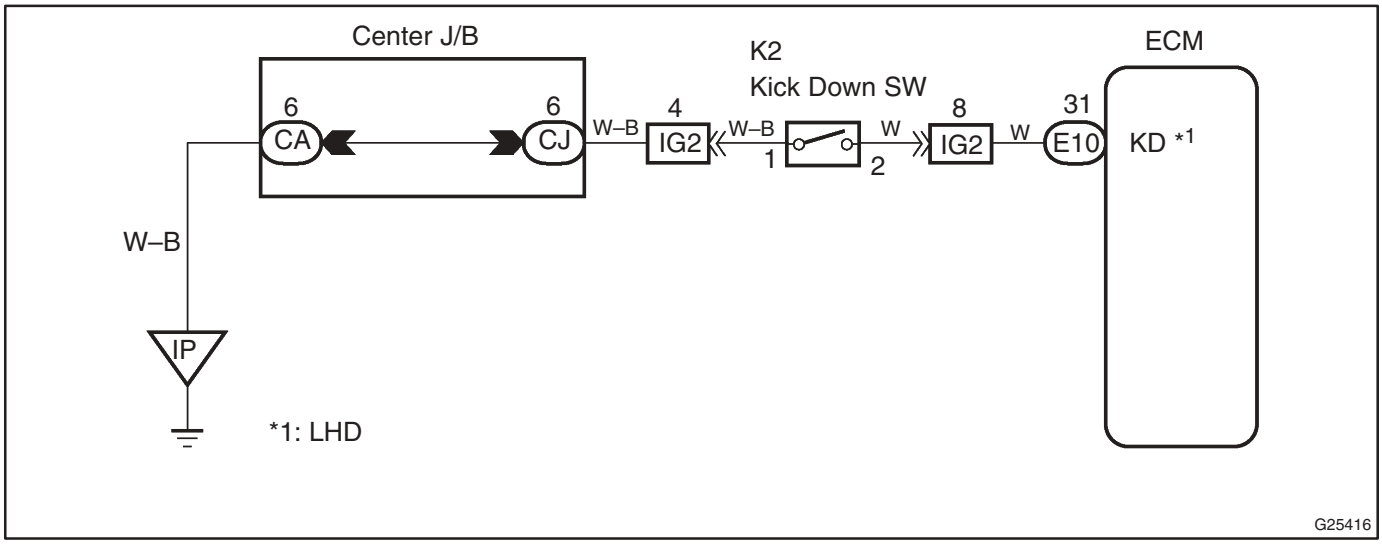

INSPECTION PROCEDURE

1	CHECK HARNESS AND CONNECTOR(KICK DOWN SWITCH – BODY GROUND)

Wire Harness Side:
(Connector Front View):

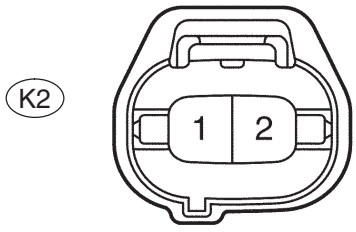

(a) Disconnect the kick–down switch connector.
(b) Measure the voltage according to the value(s) in the table below.

Standard:

Tester Connection	Specified Condition
1 – Body ground	Below 1 Ω

NG → **REPAIR OR REPLACE HARNESS OR CONNECTOR (SEE PAGE 01–32)**

OK

2 INSPECT KICK DOWN SWITCH

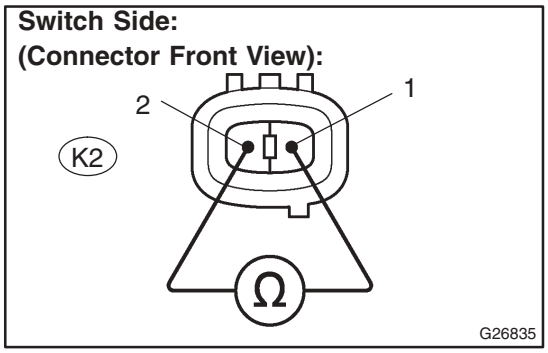

(a) Measure resistance according to the value(s) in the table below when kick–down switch is ON and OFF.

Standard:

Switch Condition	Tester Connection	Specified Condition
Press continuously (Kick–down switch is ON)	1 – 2	Below 1 Ω
Release (Kick–down switch is OFF)	↑	10 kΩ or higher

NG → **REPLACE KICK DOWN SWITCH**

OK

3 CHECK HARNESS AND CONNECTOR(KICK DOWN SWITCH – ECM)

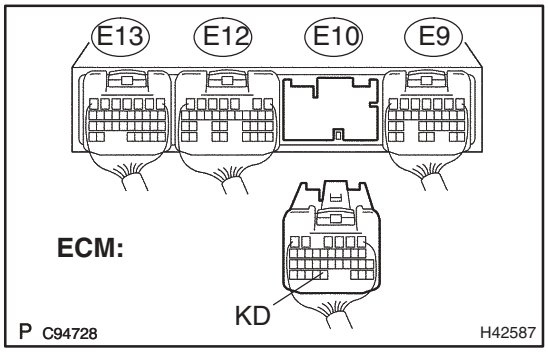

(a) Connect the kick–down switch connector.
(b) Disconnect the ECM connector.
(c) Measure resistance according to the value(s) in the table below when accelerator pedal is fully depressed or not.

Standard:

Switch Condition	Tester Connection	Specified Condition
Fully depressed (Kick–down switch is ON)	E10 –31 (KD) – Body ground	Below 1 Ω
Release (Kick–down switch is OFF)	↑	10 kΩ or higher

NG → **REPAIR OR REPLACE HARNESS OR CONNECTOR (SEE PAGE 01–32)**

OK

PROCEED TO NEXT CIRCUIT INSPECTION SHOWN IN PROBLEM SYMPTOMS TABLE (SEE PAGE 05–229)

CRUISE CONTROL SYSTEM (2AZ–FSE)(From February, 2004)

HOW TO PROCEED WITH TROUBLESHOOTING

05ADI–06

1	VEHICLE BROUGHT TO WORKSHOP

2	CUSTOMER PROBLEM ANALYSIS (SEE PAGE 05–305)

3	CHECK AND CLEAR DTCS (SEE PAGE 05–306)

4	PROBLEM SYMPTOM CONFIRMATION

- SYMPTOM DOES NOT OCCUR (GO TO STEP 5)
- SYMPTOM OCCURS (GO TO STEP 6)

5	SYMPTOM SIMULATION (SEE PAGE 01–22)

6	DTC CHECK (SEE PAGE 05–306)

(a) Check for cruise control system DTC output.

- TROUBLE CODE (GO TO STEP 7)
- NORMAL SYSTEM CODE (GO TO STEP 8)

7	DTC CHART (SEE PAGE 05–313)

8	PROBLEM SYMPTOMS TABLE (SEE PAGE 05–316)

9	CIRCUIT INSPECTION (SEE PAGE 05–317 TO 05–328)

10	TERMINAL OF ECM (SEE PAGE 05–315)

11	IDENTIFICATION OF PROBLEM

12	REPAIR OR REPLACE

13	CONFIRMATION TEST

END

HINT:
The intelligent tester II can be used at the following diagnostic steps; 3, 6, 9 and 13.

05ADJ–06

CUSTOMER PROBLEM ANALYSIS CHECK

CRUISE CONTROL SYSTEM Check Sheet

Inspector's name: _____

Customer's Name		**VIN**	
		Production Date	
		Licence Plate No.	
Date Vehicle Brought in	/ /	**Odometer Reading**	**km mile**

Condition of Problem Occurrence	**Date Problem Occurred**	/ /
	Frequency Problem Occurs?	☐ Continuous ☐ Intermittent (times a day)
	Vehicle Speed when Problem Occurred	**km mile**

Symptoms	☐ Auto cancel occurs	● Driving condition ☐ City driving ☐ Freeway ☐ Uphill ☐ Downhill ● After cancel occurred, did the driver activate cruise control again? ☐ Yes ☐ No
	☐ Cancel does not occur	☐ Depressing the brake pedal ☐ Shifting into any position except D while driving ☐ Pulling the cruise control main switch to CANCEL
	☐ Cruise control malfunction	☐ Acceleration function failure ☐ Deceleration function failure ☐ Hunting occurs ☐ O/D cut off does not occur ☐ O/D does not return
	☐ Switch malfunction	☐ SET ☐ ACCEL ☐ COAST ☐ RESUME ☐ CANCEL
	☐ CRUISE main indicator light	☐ Remains ON ☐ Does not come on ☐ Blinks

DTC Check	**1st Time**	☐ Normal System Code ☐ Trouble Code (Code)
	2nd Time	☐ Normal System Code ☐ Trouble Code (Code)

05KYC–01

PRE–CHECK

1. DIAGNOSIS SYSTEM

(a) Description

The ECM stores trouble codes when trouble occurs on the vehicle.

The diagnosis system allows for reading of the trouble codes from the DLC3. If the CRUISE main indicator light does not come on after DTC check, it means a malfunction has occurred in the cruise control system.

Use the intelligent tester II to check and solve the problem.

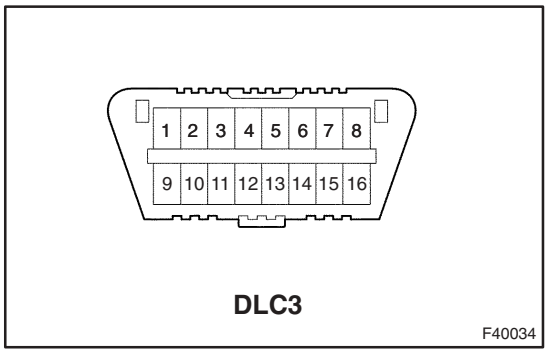

(b) Check the DLC3.

The vehicle's ECM uses ISO 9141–2 (Euro–OBD)/ISO 14230 (M–OBD) for communication protocol. The terminal arrangement of the DLC3 complies with ISO 15031–3 and matches the ISO 9141–2/ISO 14230 format.

Symbols (Terminals No.)	Terminal Description	Condition	Specified Condition
SIL(7) – SG(5)	Bus "+" line	During transmission	Pulse generation
CG(4) – Body ground	Chassis ground	Always	Below 1 Ω
SG(5) – Body ground	Signal ground	Always	Below 1 Ω
BAT(16) – Body ground	Battery positive	Always	11 to 14 V

HINT:

If the display shows "UNABLE TO CONNECT TO VEHICLE" after connecting the intelligent tester II to the DLC3 and turning the ignition to the ON position, there is a problem with either the vehicle or the tool. (Intelligent tester II only)

- If communication is normal when connecting the tool to another vehicle, inspect the DLC3 on the original vehicle.
- If communication is still not possible when connecting the tool to another vehicle, it suggests the problem is the tool's own. In this case, consult Service Department listed in the tool's instruction manual.

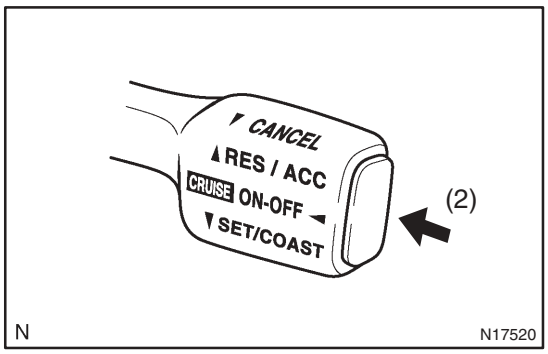

(c) Check the indicator.
(1) Turn the ignition switch to the ON position.
(2) Check that the CRUISE main indicator light comes on when the cruise control main switch ON–OFF button is pushed on, and that the indicator light goes off when the ON–OFF button is pushed off.

HINT:
If there is a problem with the indicator light, inspect the CRUISE main indicator light circuit (see page 05–327).

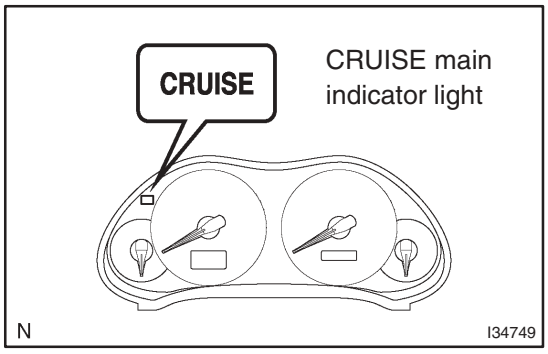

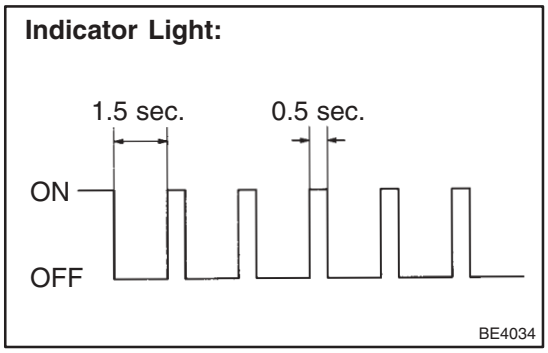

HINT:
If a malfunction occurs in the vehicle speed sensors, stop lamp switch assy or other related parts during cruise control driving, the ECM actuates AUTO CANCEL of the cruise control. Then the CRUISE main indicator light starts to blink, informing the driver of the malfunction. At the same time, data of the malfunction is stored as a diagnostic trouble code (DTC).

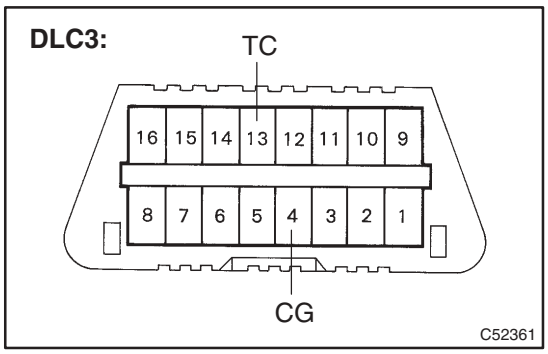

(d) Output DTCs using diagnosis check wire.
(1) Using SST, create a short–circuit between terminals TC and CG of the DLC3.
(2) Turn the ignition switch to the ON position.

(3) Read and record DTCs from the CRUISE main indicator light on the combination meter. As examples, refer to the chart below for the blinking patterns of the normal system code and diagnosis trouble code 21 and 52.

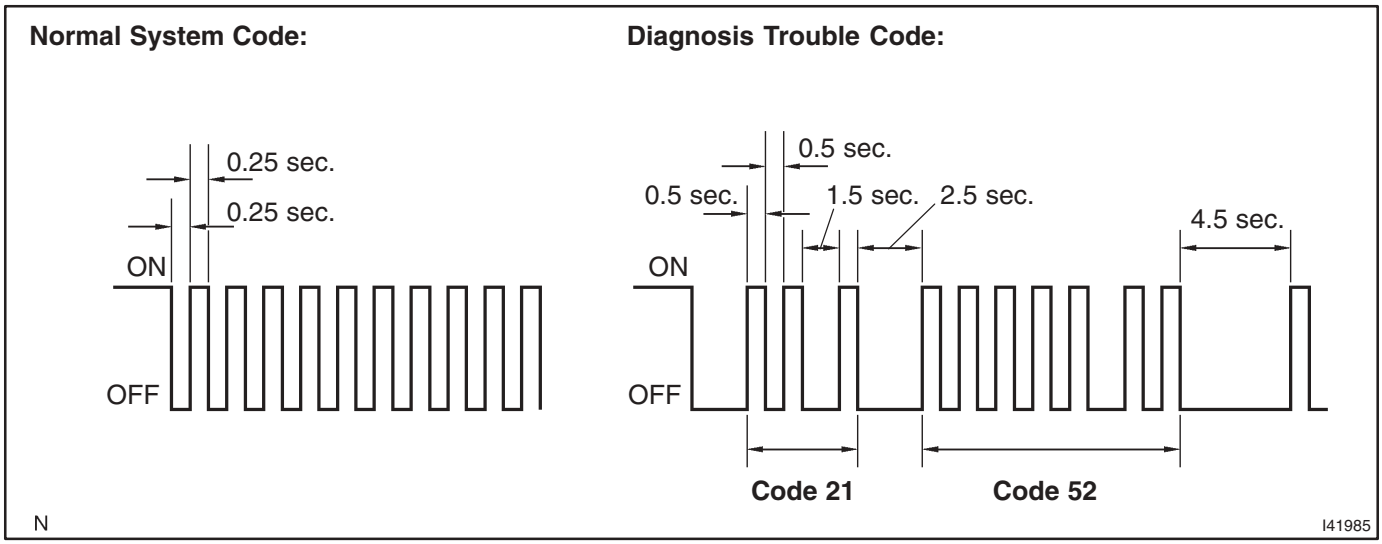

HINT:
If the CRUISE main indicator light does not blink because of any DTC or in the normal code blinking pattern, inspect the following circuits.

Relevant Circuit	See Page
Diagnosis circuit	05–328
CRUISE main indicator circuit	05–327

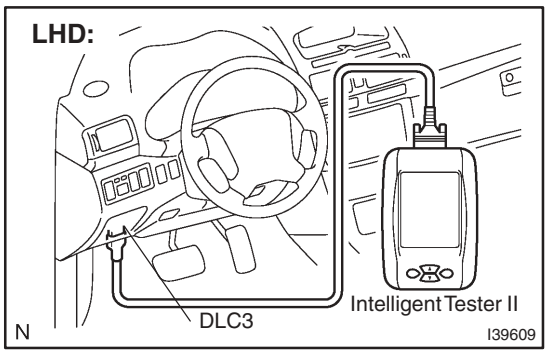

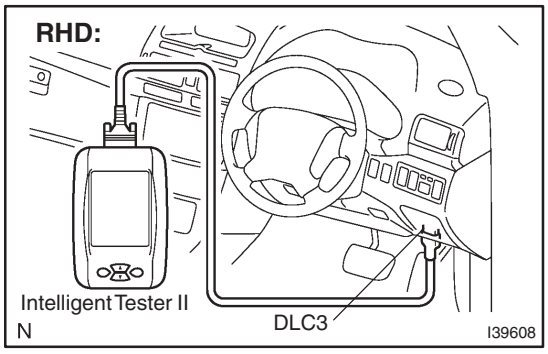

2. USING INTELLIGENT TESTER II

(a) Connect the intelligent tester II to the DLC3.

(b) Turn the ignition switch to the ON position.

(c) Read the DTCs on the tester screen.

HINT:

Intelligent tester II has a ”Snapshot” function which records the monitored data.

Refer to the intelligent tester II operator’s manual for further details.

3. DATA LIST

(a) While the intelligent tester II is connected to the DLC3 with the ignition switch in the ON position, the CRUISE CONTROL data list can be displayed. Follow the prompts on the tester screen to access the data list.

CC (ECM):

Item	Measurement Item / Display (Range)	Normal Condition	Diagnostic Note
CCS Vehicle Spd	Vehicle speed / min.: 0 km/h (0 mph), max.: 255 km/h (158 mph)	Actual vehicle speed	–
CCS Mem Vehicle Spd	Cruise control memorized speed / min.: 36 km/h (22.5 mph), max.: 200 km/h (125 mph)	Actual stored vehicle speed	–
Throttle Opening Angle	Required throttle opening angle / min.: 0°, max.: 125°	Actual required throttle opening	–
Cruise Control	Cruise control system active condition / ON or OFF	ON: Cruise control activated OFF: Cruise control inactivated	–
Main SW M–CPU	Main SW signal (Main CPU) / ON or OFF	ON: Main SW ON (Pushed on) OFF: Main SW OFF (Pushed off)	”3”
Main SW S–CPU	Main SW signal (Sub CPU) / ON or OFF	ON: Main SW ON (Pushed on) OFF: Main SW OFF (Pushed off)	”3”
CCS Ready M–CPU	Cruise control system standby condition (Main CPU) / ON or OFF	ON ⇔ OFF: Change ON/OFF each time Main SW is pushed in.	”1”
CCS Ready S–CPU	Cruise control system standby condition (Sub CPU) / ON or OFF	ON ⇔ OFF: Change ON/OFF each time Main SW is pushed in.	”1”
CCS indicator M–CPU	Cruise indicator signal (Main CPU) / ON or OFF	ON: ”CRUISE” ON OFF: ”CRUISE” OFF	”2”
CCS indicator S–CPU	Cruise indicator signal (Sub CPU) / ON or OFF	ON: ”CRUISE” ON OFF: ”CRUISE” OFF	”2”
Cancel Switch	CANCEL SW signal / ON or OFF	ON: CANCEL SW ON OFF: CANCEL SW OFF	–
SET/COAST Switch	SET/COAST SW signal / ON or OFF	ON: SET/COAST SW ON OFF: SET/COAST SW OFF	–
RES/ACC Switch	RES/ACC SW signal / ON or OFF	ON: RES/ACC SW ON OFF: RES/ACC SW OFF	–
Stp Light SW M–CPU	Stop lamp SW signal (Main CPU) / ON or OFF	ON: Brake pedal depressed OFF: Brake pedal released	–
Stp Light SW S1–CPU	Stop lamp SW signal (Sub CPU) / ON or OFF	ON: Brake pedal depressed OFF: Brake pedal released	–
Stp Light SW S2–CPU	Stop light SW signal (Sub CPU) / ON or OFF	ON: Brake pedal depressed OFF: Brake pedal released	–
Shift D Position	PNP SW signal (D position) / ON or OFF	ON: Shift D position OFF: Any shift position except D	–

HINT:

”3” is OK but ”1” is NG → ECM failure

”1” is OK but ”2” is NG → DTC output or ECM failure

”3” is OK but the cruise indicator does not come on → CRUISE main indicator, wire harness or ECM failure

4. DTC CLEAR

(a) The following methods will erase the DTCs and freeze frame data.
  (1) The intelligent tester II can be used to erase the codes.
  (2) Disconnecting the battery terminal or EFI No.1 fuse can also erase the codes.

(b) After completing repair, the DTC retained in the memory can be cleared by removing the EFI No.1 fuse for 1 minute or more with the ignition switch off.

(c) Check that the normal system code is displayed after connecting the fuse.

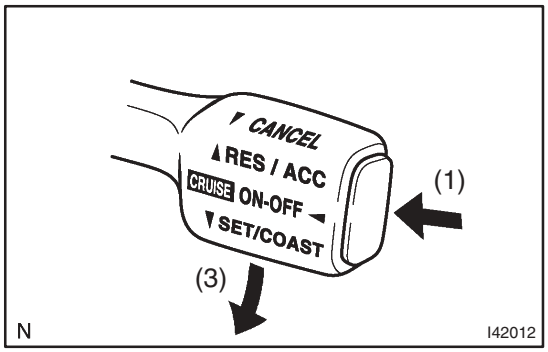

5. PROBLEM SYMPTOM CONFIRMATION (ROAD TEST)

(a) Inspect the SET function.
  (1) Push the ON–OFF button on.
  (2) Drive at the required speed (40 km/h (25 mph) or higher).
  (3) Push down the cruise control main switch to SET/COAST.
  (4) After releasing the switch, check that the vehicle cruises at the set speed.

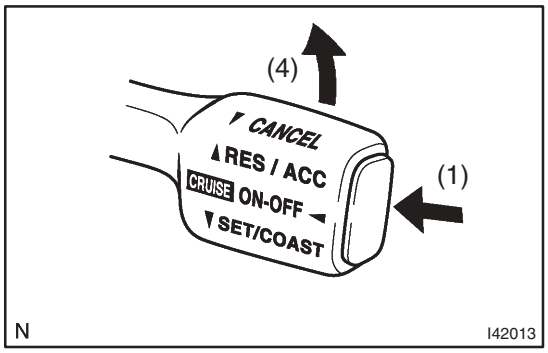

(b) Inspect the ACC (ACCEL) switch.
  (1) Push the ON–OFF button on.
  (2) Drive at the required speed (40 km/h (25 mph) or higher).
  (3) Push down the cruise control main switch to SET/COAST.
  (4) Check that vehicle speed increases while the cruise control main switch is pushed up to RES/ACC, and that the vehicle cruises at the newly set speed when the switch is released.
  (5) Momentarily push up the cruise control main switch to RES/ACC and then immediately release it. Check that vehicle speed increases by approximately 1.6 km/h (1.0 mph) (Tap–up function).

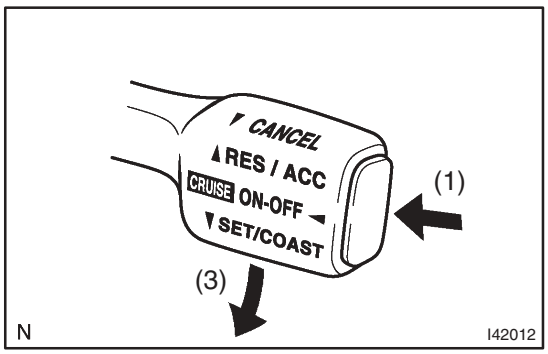

(c) Inspect the COAST function.
  (1) Push the ON–OFF button on.
  (2) Drive at the required speed (40 km/h (25 mph) or higher).
  (3) Push down the cruise control main switch to SET/COAST.
  (4) Check that vehicle speed decreases while the cruise control main switch is pushed down to SET/COAST, and that the vehicle cruises at the newly set speed when the switch is released.
  (5) Momentarily push down the cruise control main switch to SET/COAST, and then immediately release it.
  Check that vehicle speed decreases by approximately 1.6 km/h (1.0 mph) (Tap–down function).

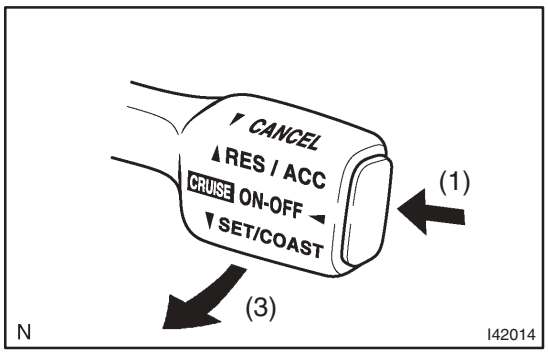

(d) Inspect the CANCEL function.
(1) Push the ON–OFF button on.
(2) Drive at the required speed (40 km/h (25 mph) or higher).
(3) Push down the cruise control main switch to SET/COAST.
(4) When doing one of the following, check that the cruise control system is cancelled and that the normal driving mode is reset.
- Depressing the brake pedal
- Shifting into any position except D while driving
- Pushing the ON–OFF button off
- Pulling the cruise control main switch to CANCEL

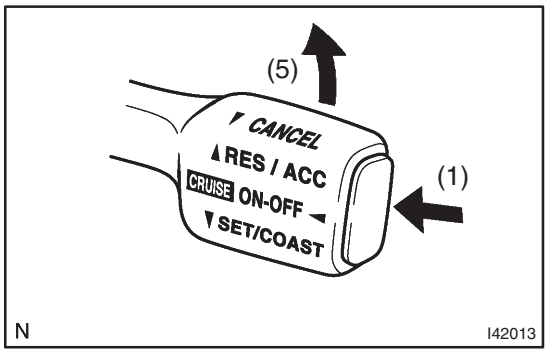

(e) Inspect the RES (RESUME) function.
(1) Push the ON–OFF button on.
(2) Drive at the required speed (40 km/h (25 mph) or higher).
(3) Push down the cruise control main switch to SET/COAST.
(4) When doing one of the following, check that the cruise control system is cancelled and that the normal driving mode is reset.
- Depressing the brake pedal
- Shifting into any position except D while driving
- Pulling the cruise control main switch to CANCEL

(5) After pushing up the cruise control main switch to RES/ACC at a driving speed of more than 40 km/h (25 mph), check that the vehicle restores the speed prior to the cancellation.

056HH–07

DIAGNOSTIC TROUBLE CODE CHART

If a trouble code is indicated while checking DTCs, inspect the circuit listed for that code in the table below, and proceed to the applicable page.

DTC No. (See Page)	Circuit Inspection	Trouble Area
P0500/21 (05–317)	Vehicle speed sensor circuit	• Vehicle speed sensor • Vehicle speed sensor signal circuit • ECM
P0503/23 (05–317)	Vehicle speed sensor circuit	• Vehicle speed sensor • Vehicle speed sensor signal circuit • ECM
P0571/52 (05–318)	Stop light switch circuit	• Stop lamp switch assy • Stop lamp switch assy circuit • ECM
P0607/54 (05–321)	Input signal circuit	• ECM

05ADK–06

LOCATION

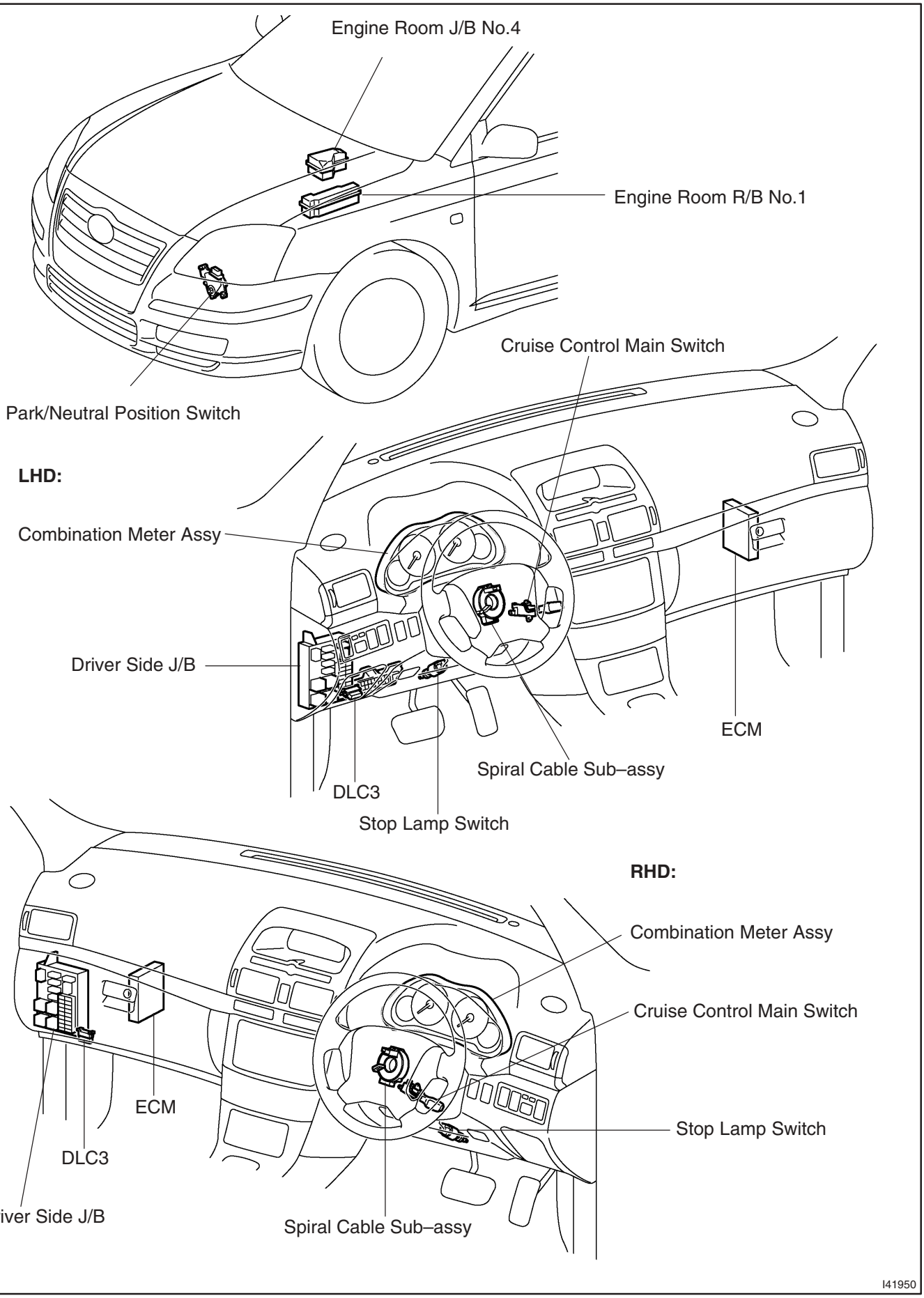

H

I41950

05KYD–01

TERMINALS OF ECM

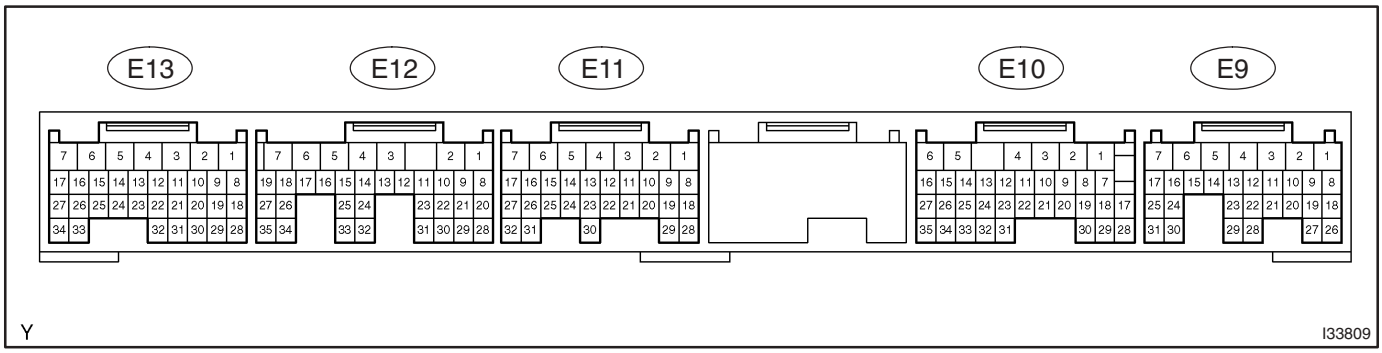

Symbols (Terminals No.)	Wiring Color	Terminal Description	Condition	Specified Condition
TC (E9–20) – E1 (E11–1)	W–L – BR	DTC input signal	Ignition switch ON → Connect terminals TC and CG of DLC3	10 to 14 V → Below 2 V
ST1– (E10–12) – E1 (E11–1)	G–W – BR	Cruise cancel input signal	Ignition switch ON, depress brake pedal → release brake pedal	Below 1 V → 10 to 14 V
STP (E10–19) – E1 (E11–1)	G–W – BR	Stop lamp switch input signal	Ignition switch ON, depress brake pedal → release brake pedal	10 to 14 V → Below 1 V
CCS (E10–24) – E1 (E11–1)	W – BR	Cruise control main switch input signal	Ignition switch ON Cancel switch held ON SET/COAST switch held ON RES/ACC switch held ON MAIN switch held ON	10 to 14 V 6.6 to 10.1 V 4.5 to 7.1 V 2.3 to 4 V Below 1 V

056HK–07

PROBLEM SYMPTOMS TABLE

If a normal system code is displayed during the DTC check but the problem still occurs, check the circuits for each problem symptom in the order given in the table below and proceed to the relevant troubleshooting page.

HINT:

Inspect the ”Fuse” and ”Relay” before confirming the suspected areas as shown in the chart below.

Inspect each malfunction circuit in numerical order for the corresponding symptom.

Symptom	Suspected Area	See Page
Main switch cannot be turned ON. (Cruise indicator light in combination meter does not come on.)	1. Cruise control switch circuit 2. CRUISE main indicator light circuit 3. ECM 4. Combination meter assy	05–322 05–327 *2 *1
Vehicle speed setting cannot be done. (Although indicator light in combination meter comes on when the main switch is turned ON, it goes off when vehicle speed is set.)	1. Cruise control switch circuit 2. ECM	05–322 *2
Setting cannot be done. (Indicator light in combination meter comes on when the main switch is turned ON and it remains ON while setting.)	1. Cruise control switch circuit 2. Stop lamp switch circuit 3. Park/Neutral position switch circuit 4. Combination meter system 5. ECM	05–322 05–318 *2 *1 *2
While the vehicle is driven with cruise control, the set control is cancelled. (Indicator light and CRUISE remain ON.)	1. Cruise control switch circuit 2. Vehicle speed sensor circuit 3. Stop lamp switch circuit 4. CRUISE main indicator light circuit 5. Park/Neutral position switch circuit 6. ECM 7. Combination meter assy	05–322 05–317 05–318 05–327 *2 *2 *1
Hunting (Speed is not constant.)	1. Vehicle speed sensor circuit 2. ECM	05–317 *2
Setting cannot be cancelled. (When Coast, Acceleration, Resume, Set speed change and Control switch are operated.)	1. Cruise control switch circuit 2. ECM	05–322 *2
DTC is not output, or is output when should not be.	1. Diagnosis circuit	05–328
CRUISE main indicator light does not come on.	1. Cruise control switch circuit 2. CRUISE main indicator light circuit 3. ECM 4. Combination meter assy	05–322 05–327 *2 *1

*1: See Pub. No. RM1018E

*2: See Pub. No. RM1045E

DTC	P0500/21	VEHICLE SPEED SENSOR CIRCUIT

DTC	P0503/23	VEICLE SPEED SENSOR CIRCUIT

CIRCUIT DESCRIPTION

See Pub. No. RM1045E, page 05–183.

DTC No.	DTC Detection Condition	Trouble Area
P0500/21	This trouble code is output when the vehicle speed signal from the vehicle speed sensor is cut for 0.14 sec. or more while the cruise control is in operation.	• Vehicle speed sensor • Vehicle speed sensor signal circuit • ECM
P0503/23	Momentary interruption and noise are detected when a rapid change of vehicle speed occurs while the cruise control is in operation.	• Vehicle speed sensor • Vehicle speed sensor signal circuit • ECM

WIRING DIAGRAM

See Pub. No. RM1045E, page 05–183.

INSPECTION PROCEDURE

See Pub. No. RM1045E, page 05–183.

DTC P0571/52 STOP LIGHT SWITCH CIRCUIT

CIRCUIT DESCRIPTION

When the brake pedal is depressed, the stop lamp switch assy sends a signal to the ECM. When the ECM receives this signal, it cancels the cruise control.

Fail–safe function operates to enable normal driving even if there is a malfunction in the stop lamp signal circuit.

The cancel condition occurs when positive battery voltage is applied to terminal STP.

When the brake is applied, battery positive voltage is normally applied to terminal STP of the ECM through the STOP fuse and the stop lamp switch assy, and the ECM turns the cruise control off.

DTC No.	DTC Detection Condition	Trouble Area
P0571/52	This trouble code is output when the voltage of the STP terminal and that of the ST1– terminal on the ECM are below 1 V for 0.5 sec. or more.	• Stop lamp switch assy • Stop lamp switch assy circuit • ECM

WIRING DIAGRAM

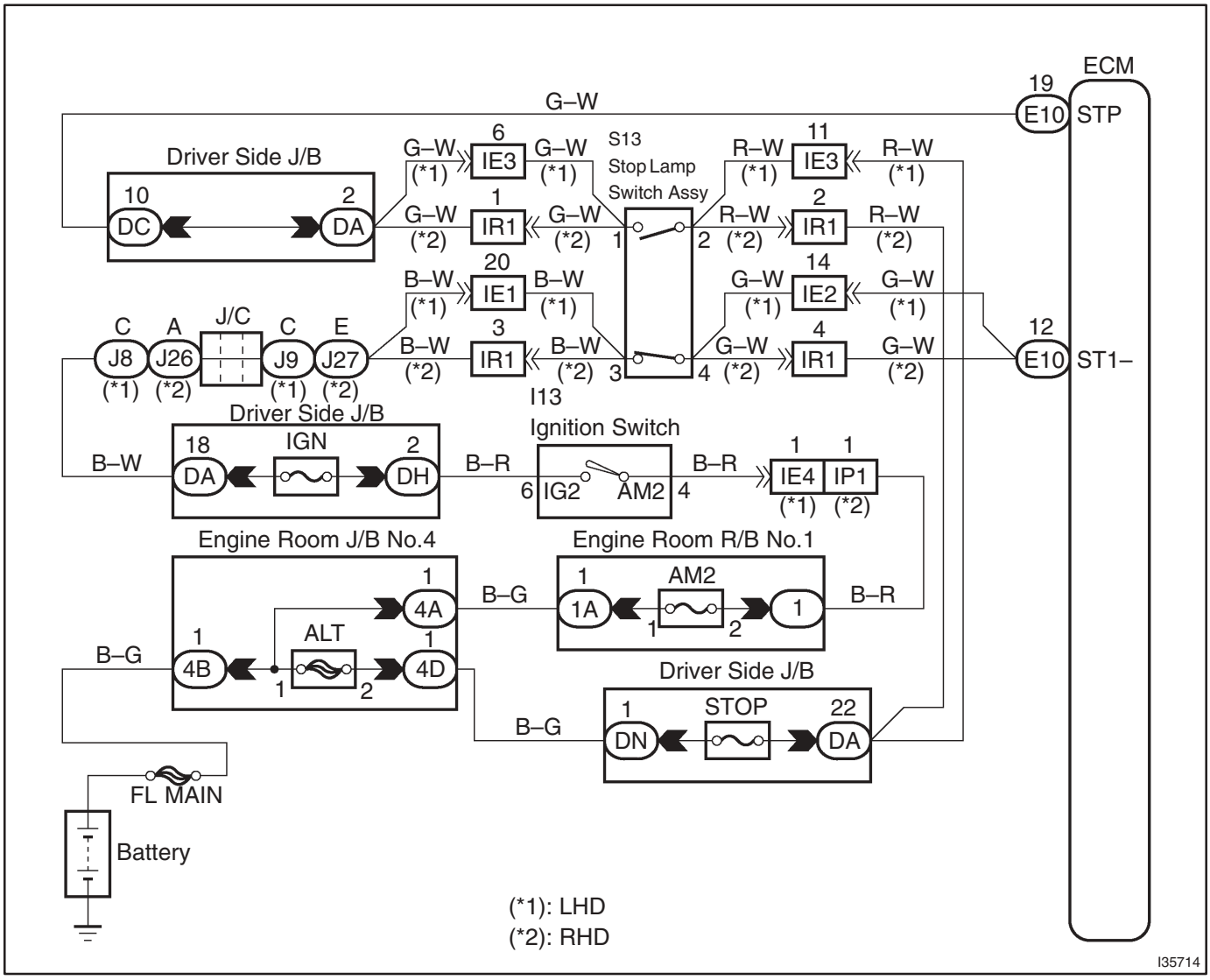

INSPECTION PROCEDURE

HINT:

Start the inspection from step 1 when using the intelligent tester II and start from step 2 when not using the intelligent tester II.

1 READ VALUE ON INTELLIGENT TESTER II

(a) Connect the intelligent tester II to the DLC3.
(b) Turn the ignition switch to the ON position, and turn the intelligent tester II main switch on.
(c) Select the item "Stp Light SW M–CPU", "Stp Light SW S1–CPU" or "Stp Light SW S2–CPU" in the DATA LIST, and read its value displayed on the intelligent tester II.
(d) Check that the stop lamp comes on when the brake pedal is depressed, and goes off when the brake pedal is released.

ECM:

Item	Measurement Item / Display (Range)	Normal Condition	Diagnostic Note
Stp Light SW M–CPU	Stop lamp SW signal (Main CPU) / ON or OFF	ON : Brake pedal depressed OFF : Brake pedal released	–
Stp Light SW S1–CPU	Stop lamp SW signal (Sub CPU) / ON or OFF	ON : Brake pedal depressed OFF : Brake pedal released	–
Stp Light SW S2–CPU	Stop lamp SW signal (Sub CPU) / ON or OFF	ON : Brake pedal depressed OFF : Brake pedal released	–

OK:

When the brake pedal is operated, the display changes as shown above.

NG → **Go to step 2**

OK

REPLACE ECM (SEE PUB. NO. RM1045E, PAGE 10–29)

2 INSPECT STOP LAMP SWITCH ASSY

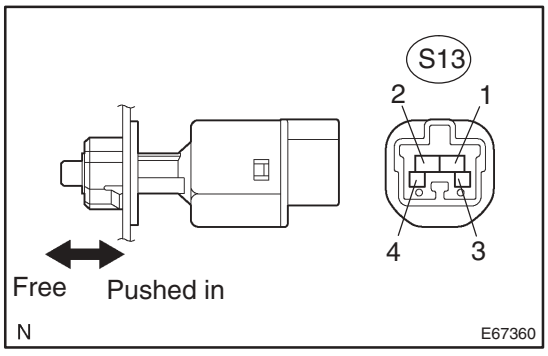

(a) Disconnect the stop lamp switch connector.
(b) Measure the resistance according to the value(s) in the table below.

Standard:

Tester Connection	Condition	Specified Condition
1 – 2	Switch pin free	Below 1 Ω
3 – 4	Switch pin free	10 kΩ or higher
1 – 2	Switch pin pushed in	10 kΩ or higher
3 – 4	Switch pin pushed in	Below 1 Ω

NG → **REPLACE STOP LAMP SWITCH ASSY**

OK

3 CHECK HARNESS AND CONNECTOR (STOP LAMP SWITCH – BATTERY)

Stop Lamp Switch
Connector Front View:

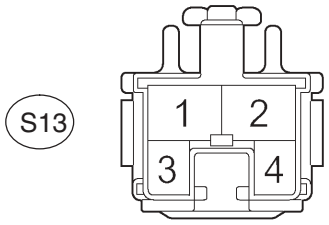

(a) Measure the voltage according to the value(s) in the table below.

Standard:

Tester Connection	Condition	Specified Condition
2 – Body ground	Always	10 to 14 V
3 – Body ground	Ignition switch ON	10 to 14 V

NG → **REPAIR OR REPLACE HARNESS OR CONNECTOR**

OK

4 INSPECT ECM

ECM
Wire Harness View:

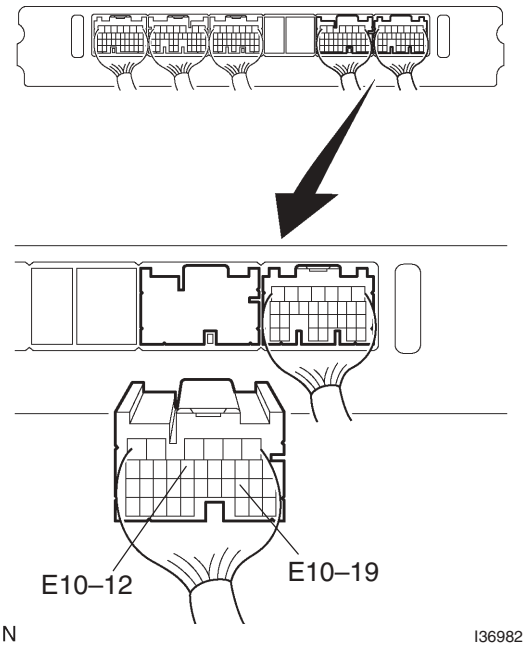

(a) Reconnect the stop lamp switch connector.
(b) Disconnect the E10 connector from the ECM.
(c) Measure the voltage according to the value(s) in the table below.

Standard:

Tester Connection	Condition	Specified Condition
E10–12 – Body ground	Ignition switch ON, depress brake pedal → release brake pedal	Below 1 V → 10 to 14 V
E10–19 – Body ground	Ignition switch ON, depress brake pedal → release brake pedal	10 to 14 V → Below 1 V

NG → **REPAIR OR REPLACE HARNESS OR CONNECTOR (STOP LAMP SWITCH – ECM)**

OK

REPLACE ECM (SEE PUB. NO. RM1045E, PAGE 10–29)

DTC	P0607/54	INPUT SIGNAL CIRCUIT

CIRCUIT DESCRIPTION

This DTC indicates the internal abnormalities of the ECM.

DTC No.	Detection Item	Trouble Area
P0607/54	The ECM has a supervisory CPU and a control ECU inside. When each input STP signal is different for 0.15 sec. or more, this trouble code is output. This trouble code is output after 0.4 sec. has passed from the time the cruise cancel input signal (STP input) is input into the ECM.	• ECM

HINT:

The ECM receives signals from each sensor to control all the functions of the cruise control with the micro-computer.

When a trouble code is detected, fail–safe remains on until the ignition switch is turned off.

INSPECTION PROCEDURE

1	REPLACE ECM (SEE PUB. NO. RM1045E, PAGE 10–29)

CRUISE CONTROL SWITCH CIRCUIT

CIRCUIT DESCRIPTION

The cruise control main switch operates seven functions: SET, COAST, TAP–DOWN, RESUME, ACCEL, TAP–UP, and CANCEL. The SET, TAP–DOWN and COAST functions, and the RESUME, TAP–UP and ACCEL functions are operated with the same switch. The cruise control main switch is an automatic return type switch which turns on only while operating it in each arrow direction and turns off after releasing it. The internal contact point of the cruise control main switch is turned on with the switch operation. Then the ECM reads the voltage value that has been changed by the switch operation to control SET, COAST, RESUME, ACCEL and CANCEL.

WIRING DIAGRAM

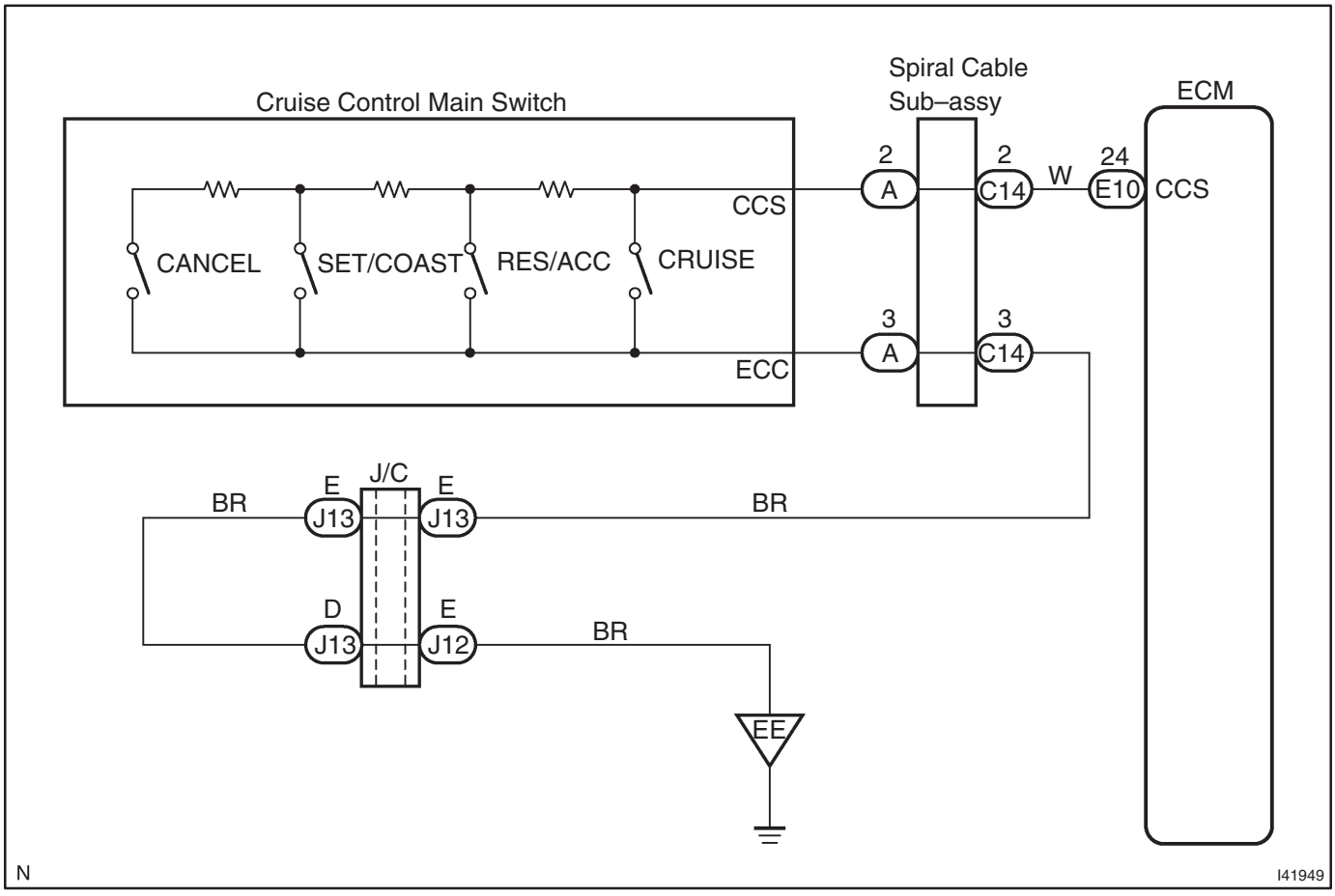

INSPECTION PROCEDURE

HINT:
Start the inspection from step 1 when using the intelligent tester II and start from step 2 when not using the intelligent tester II.

1	READ VALUE ON INTELLIGENT TESTER II

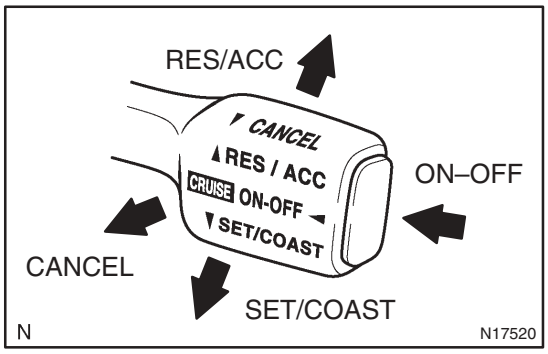

(a) Connect the intelligent tester II to the DLC3.
(b) Turn the ignition switch to the ON position.
(c) According to the display on the intelligent tester II, read the "DATA LIST".

ECM:

Item	Measurement Item / Display (Range)	Normal Condition	Diagnostic Note
Main SW M–CPU	Main SW signal (Main CPU) / ON or OFF	ON : Main SW ON (Pushed on) OFF Main SW OFF (Pushed off)	–
Main SW S–CPU	Main SW signal (Sub CPU) / ON or OFF	ON : Main SW ON (Pushed on) OFF Main SW OFF (Pushed off)	–
Cancel Switch	CANCEL SW signal / ON or OFF	ON : CANCEL SW ON OFF : CANCEL SW OFF	–
SET/COAST Switch	SET/COAST SW signal / ON or OFF	ON : SET/COAST SW ON OFF : SET/COAST SW OFF	–
RES/ACC Switch	RES/ACC SW signal / ON or OFF	ON : RES/ACC SW ON OFF : RES/ACC SW OFF	–

OK:
When the cruise control main switch is operated, the display changes as shown above.
Result:

OK	A
NG (All items are defective.)	B
NG (One to four items are defective.)	C

B → **Go to step 2**

C → **REPLACE CRUISE CONTROL MAIN SWITCH ASSY**

A

PROCEED TO NEXT CIRCUIT INSPECTION SHOWN IN PROBLEM SYMPTOMS TABLE (SEE PAGE 05–316)

2 INSPECT CRUISE CONTROL MAIN SWITCH ASSY

(a) Disconnect the cruise control main switch connector.

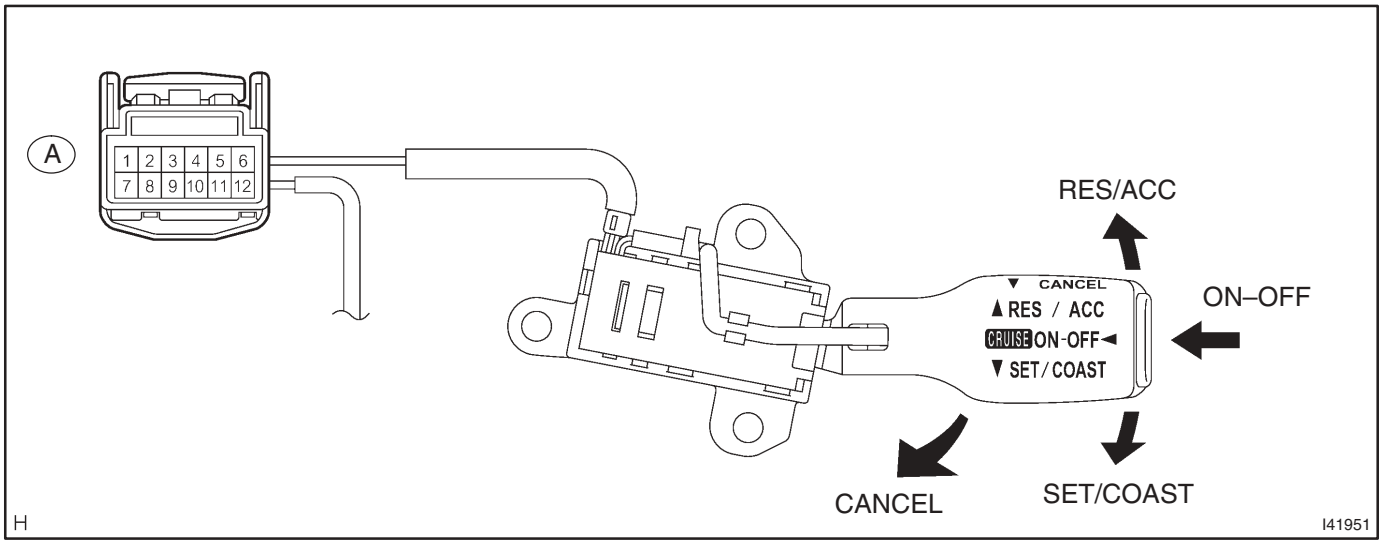

(b) Measure the resistance according to the value(s) in the table below.
Standard:

Tester Connection	Condition	Specified Condition
2 – 3	Neutral	10 kΩ or higher
2 – 3	RES/ACC	210 to 270 Ω
2 – 3	SET/COAST	560 to 700 Ω
2 – 3	CANCEL	1,380 to 1,700 Ω
2 – 3	Main Switch OFF	10 kΩ or higher
2 – 3	Main Switch ON	Below 1 Ω

NG → **REPLACE CRUISE CONTROL MAIN SWITCH ASSY**

OK

3 INSPECT SPIRAL CABLE SUB–ASSY

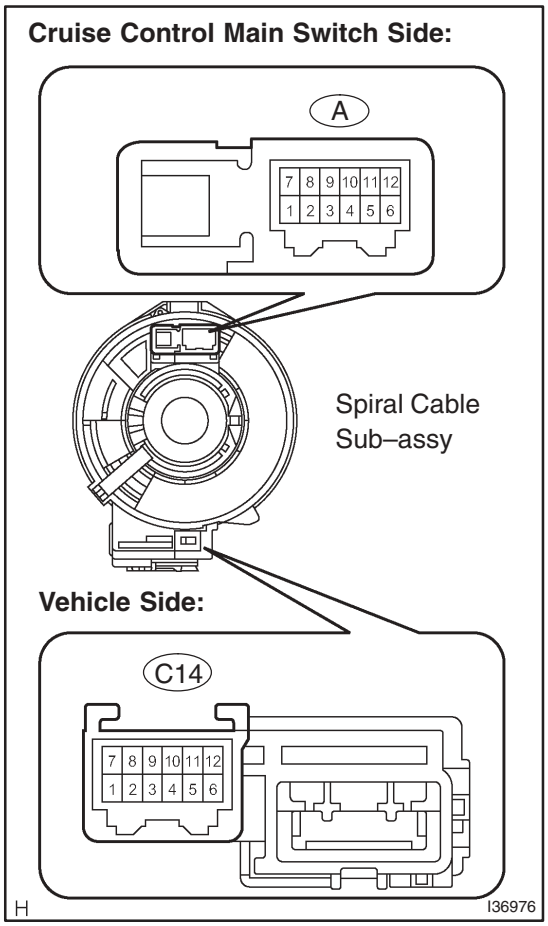

(a) Disconnect the spiral cable sub–assy connector.

(b) Measure the resistance according to the value(s) in the table below.

Standard:

Tester Connection	Specified Condition
A–2 – C14–2	Below 1 Ω
A–3 – C14–3	Below 1 Ω

NG → **REPLACE SPIRAL CABLE SUB–ASSY (SEE PUB. NO. RM1018E, PAGE 60–26)**

OK

4	CHECK HARNESS AND CONNECTOR (SPIRAL CABLE SUB–ASSY – ECM, BODY GROUND)

Spiral Cable Sub–assy (Vehicle Side)
Connector Front View:

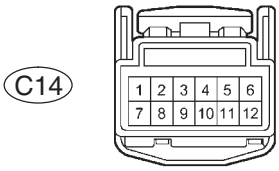

I38526

(a) Measure the resistance according to the value(s) in the table below.

Standard:

Tester Connection	Condition	Specified Condition
C14–2 – E10–24	Always	Below 1 Ω
E10–24 – Body ground	Always	10 kΩ or higher
C14–3 – Body ground	Always	Below 1 Ω

ECM
Wire Harness View:

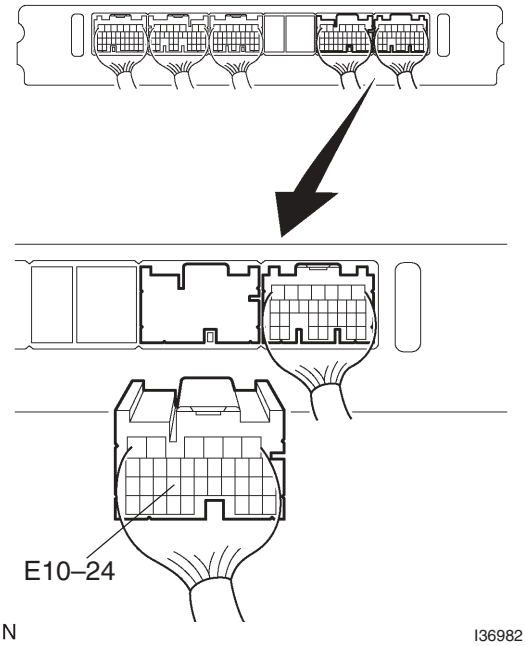

I36982

NG → **REPAIR OR REPLACE HARNESS OR CONNECTOR**

OK

PROCEED TO NEXT CIRCUIT INSPECTION SHOWN IN PROBLEM SYMPTOMS TABLE (SEE PAGE 05–316)

CRUISE MAIN INDICATOR LIGHT CIRCUIT

CIRCUIT DESCRIPTION

- The ECM detects a cruise control switch signal and sends it to the combination meter via BEAN. Then the CRUISE main indicator light comes on.
- The CRUISE main indicator light circuit uses BEAN for communication. If there are any malfunctions in this circuit, check for DTCs in the multiplex communication system.

INSPECTION PROCEDURE

1	READ VALUE ON INTELLIGENT TESTER II

(a) Connect the intelligent tester II to the DLC3.
(b) Turn the ignition switch to the ON position and turn the intelligent tester II main switch on.
(c) Select the item below in the ”DATA LIST”, and read the display on the intelligent tester II.

CC (ECM):

Item	Measurement Item / Display (Range)	Normal Condition	Diagnostic Note
CCS Indicator M–CPU	Cruise indicator signal (Main CPU) / ON or OFF	ON : ”CRUISE” ON OFF : ”CRUISE” OFF	–
CCS Indicator S–CPU	Cruise indicator signal (Sub CPU) / ON or OFF	ON : ”CRUISE” ON OFF : ”CRUISE” OFF	–

OK:
When the cruise control main switch is operated, the display changes as shown above.

NG → **REPLACE ECM (SEE PUB. NO. RM1045E, PAGE 10–29)**

OK

PROCEED TO NEXT CIRCUIT INSPECTION SHOWN IN PROBLEM SYMPTOMS TABLE (SEE PAGE 05–316)

DIAGNOSIS CIRCUIT

CIRCUIT DESCRIPTION

Making a short circuit between terminals TC and CG of the DLC3 will output DTCs from the DLC3.

WIRING DIAGRAM

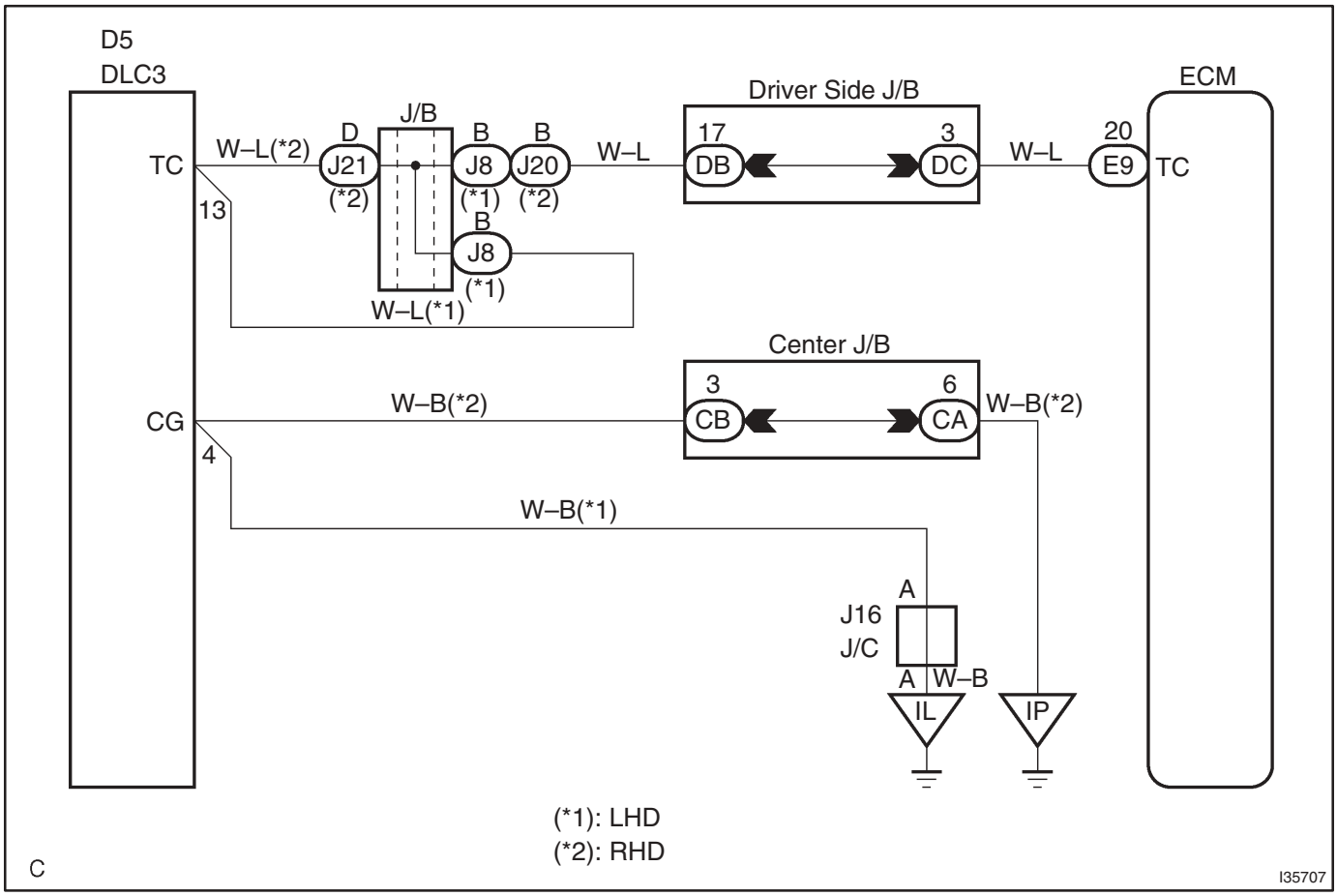

HINT:

When a particular warning light stays blinking, a ground short in the wiring of terminal TC of the DLC3 or an internal ground short in the relevant ECU is suspected.

INSPECTION PROCEDURE

1	CHECK HARNESS AND CONNECTOR (TC of DLC3 – ECM)

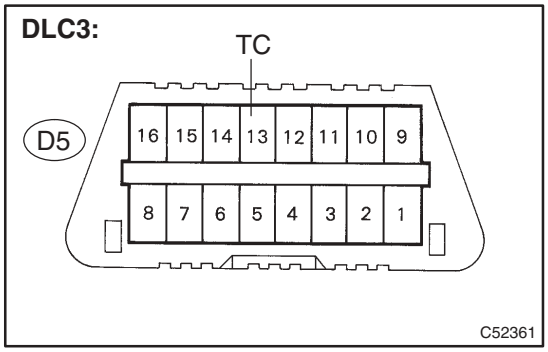

(a) Disconnect the E9 connector from the ECM.

(b) Measure the resistance according to the value(s) in the table below.

Standard:

Tester Connection	Condition	Specified Condition
D5–13 – E9–20	Always	Below 1 Ω

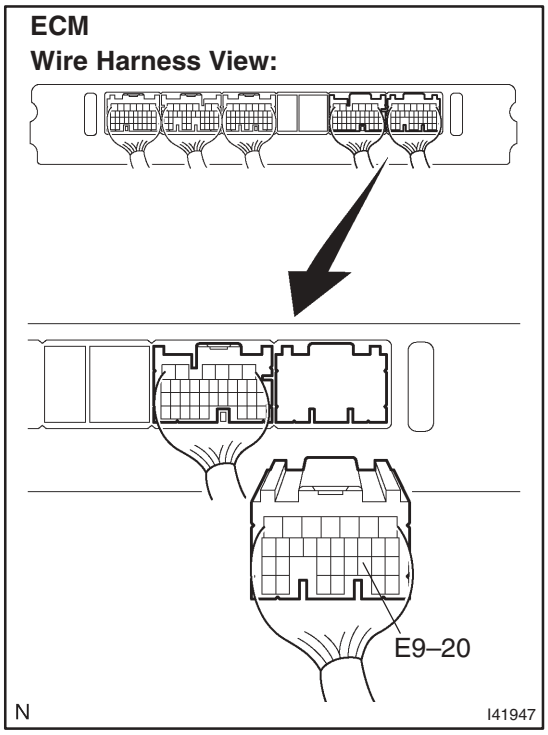

NG → REPAIR OR REPLACE HARNESS OR CONNECTOR (DLC3 – ECM)

OK

2 CHECK HARNESS AND CONNECTOR (CG of DLC3 – BODY GROUND)

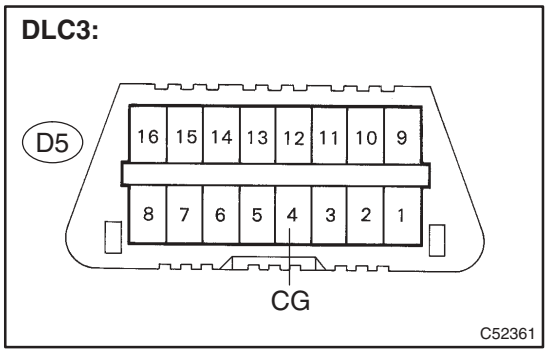

(a) Measure the resistance according to the value(s) in the table below.

Standard:

Tester Connection	Condition	Specified Condition
4 – Body ground	Always	Below 1 Ω

NG → **REPAIR OR REPLACE HARNESS OR CONNECTOR (DLC3 – BODY GROUND)**

OK

3 CHECK HARNESS AND CONNECTOR (TC of DLC3 – BODY GROUND)

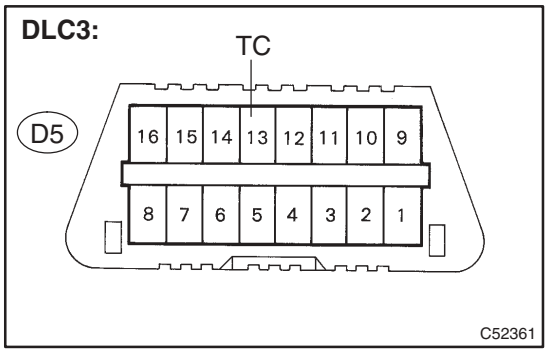

(a) Measure the resistance according to the value(s) in the table below.

Standard:

Tester Connection	Condition	Specified Condition
13 – Body ground	Ignition switch off	10 kΩ or higher

NG → **REPAIR OR REPLACE WIRE HARNESS OR EACH ECU**

OK

REPLACE ECM (SEE PUB. NO. RM1045E, PAGE 10–29)

SFI SYSTEM (1ZZ–FE/3ZZ–FE)(From February, 2004)

100P0–01

ON–VEHICLE INSPECTION

1. INSPECT THROTTLE BODY ASSY

(a) Listen to the throttle control motor operating sounds.
  (1) Turn the ignition switch to ON.
  (2) When pressing the accelerator pedal position sensor lever, listen to the running sound of the motor. Make sure no friction noise comes from the motor.

If friction noise exists, replace the throttle body.

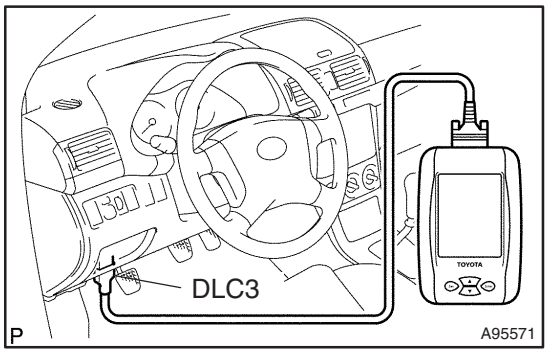

(b) Inspect the throttle position sensor.
  (1) Connect the intelligent tester II to the DLC3.
  (2) Turn the ignition switch to ON.
  (3) Turn the intelligent tester II ON.
  (4) Check that the engine warning light does not light up.
  (5) Select the item: Powertrain / Engine and ECT / Data List / Throttle POS.
  (6) Depress the accelerator pedal. When the throttle valve is fully opened, check that the value of the ”Throttle POS” is within the specification.

Standard throttle valve opening percentage:
60 % or more

NOTICE:

When checking the standard throttle valve opening percentage, the transmission should be in the neutral position.

If the result is not as specified, check the throttle body, wire harness and ECM.

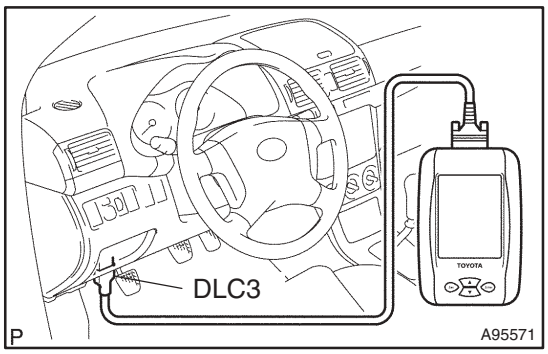

2. INSPECT ACCELERATOR PEDAL ASSY

(a) Connect the intelligent tester II to the DLC3.
(b) Turn the ignition switch to ON.
(c) Turn the intelligent tester II ON.
(d) Select the item: Powertrain / Engine and ECT / Data List / Accelerator POS No. 1, Accelerator POS No. 2.
(e) Operate the accelerator pedal, then check that the values of the ”Accelerator POS No. 1” and ”Accelerator POS No. 2” are within the specification.

Accelerator POS No. 1:

Accelerator Pedal Condition	Specified Condition
Released	0.5 to 1.1 V
Depressed	2.6 to 4.5 V

Accelerator POS No. 2:

Accelerator Pedal Condition	Specified Condition
Released	1.2 to 2.0 V
Depressed	3.4 to 5.0 V

If the result is not as specified, check the accelerator pedal, wire harness and ECM.

100P1–01

INSPECTION

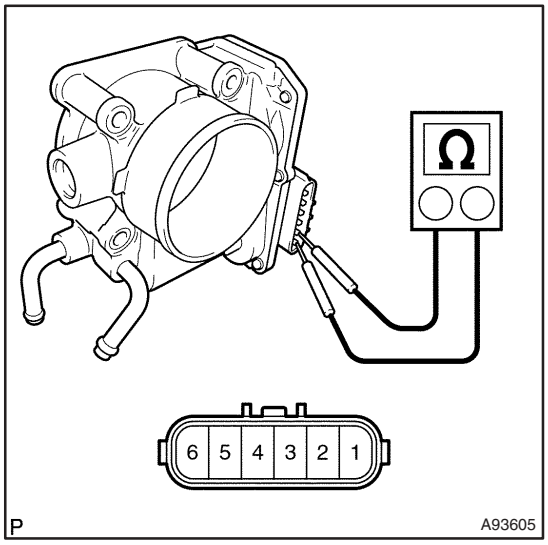

1. INSPECT THROTTLE BODY ASSY

(a) Inspect the resistance.

(1) Using an ohmmeter, measure the resistance between the terminals.

Standard:

Tester Connection	Specified Condition
1 (M–) – 2 (M+)	0.3 to 100 Ω at 20°C (68°F)
3 (E2) – 5 (VC)	1.2 to 3.2 kΩ at 20°C (68°F)

If the resistance is not as specified, replace the throttle body.

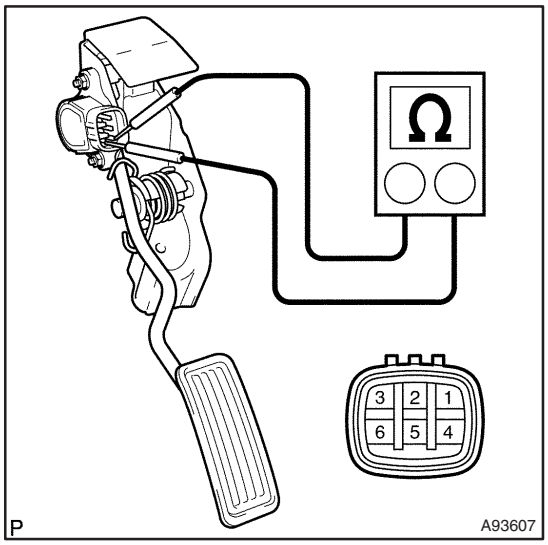

2. INSPECT ACCELERATOR PEDAL ASSY

(a) Inspect the resistance.

(1) Using an ohmmeter, measure the resistance between the terminals.

Standard:

LHD Steering Position Type:

Tester Connection	Specified Condition
3 (EP1) – 6 (VCP1)	1.5 to 6.0 kΩ
1 (EP2) – 4 (VCP2)	1.5 to 6.0 kΩ

RHD Steering Position Type:

Tester Connection	Specified Condition
1 (EP1) – 4 (VCP1)	1.5 to 6.0 kΩ
3 (EP2) – 6 (VCP2)	1.5 to 6.0 kΩ

If the resistance is not as specified, replace the accelerator pedal.

THROTTLE BODY ASSY (1ZZ–FE/3ZZ–FE)(From February, 2004)

100P2–01

COMPONENTS

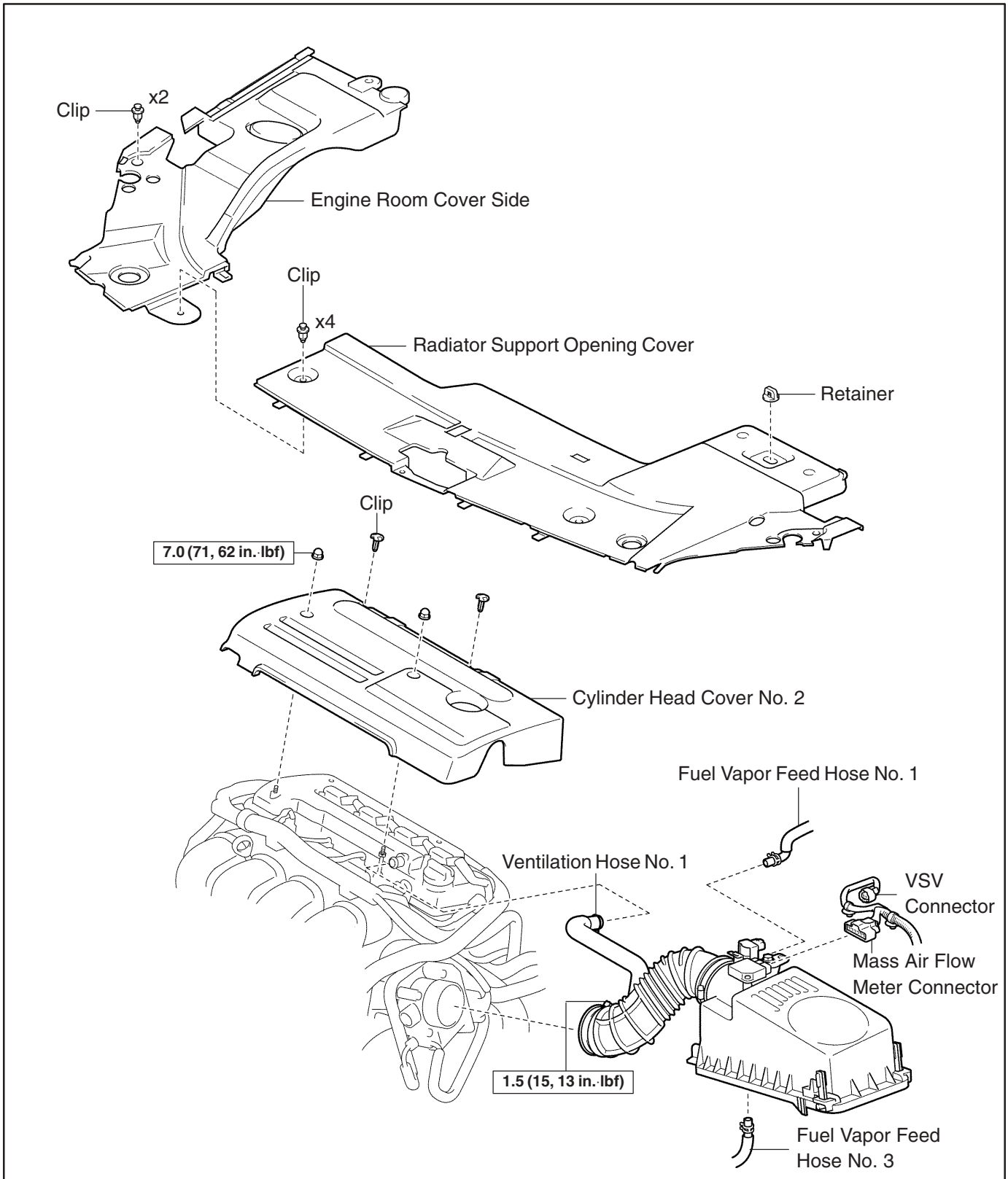

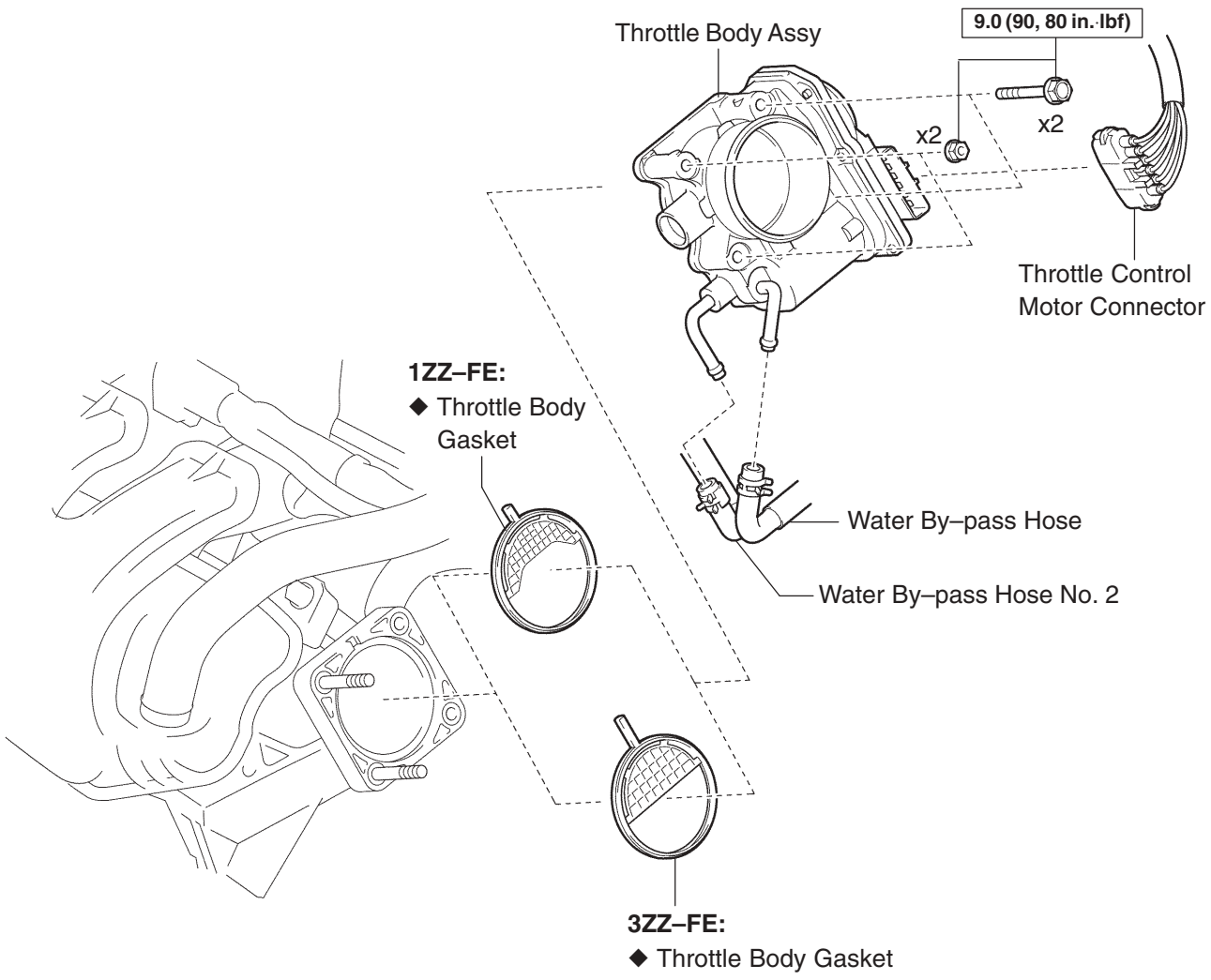

N·m (kgf·cm, ft·lbf): Specified torque

P ◆ Non–reusable part

A95569

100P3–01

REPLACEMENT

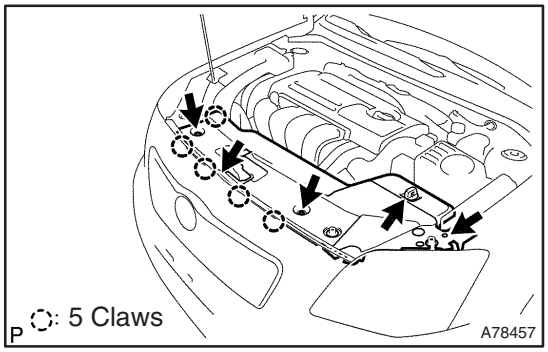

1. REMOVE RADIATOR SUPPORT OPENING COVER

(a) Remove the retainer and 4 clips.

(b) Unfasten the 5 claws, then remove the radiator support opening cover.

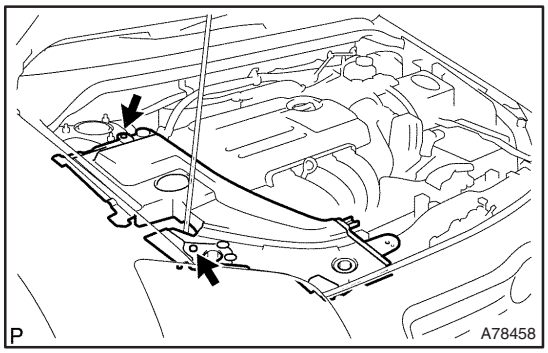

2. REMOVE ENGINE ROOM COVER SIDE

(a) Remove the 2 clips and engine room cover side.

3. DISCONNECT BATTERY NEGATIVE TERMINAL

4. DRAIN ENGINE COOLANT (See page 16–5)

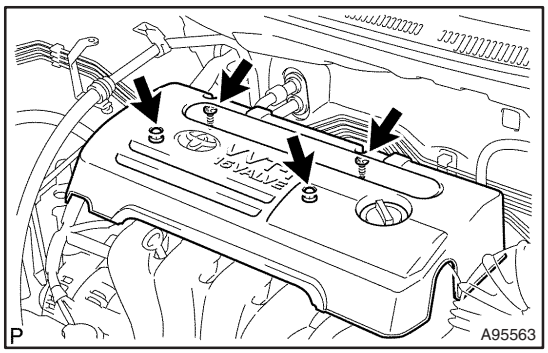

5. REMOVE CYLINDER HEAD COVER NO.2

(a) Remove the 2 nuts and 2 clips, then remove cylinder head cover No. 2.

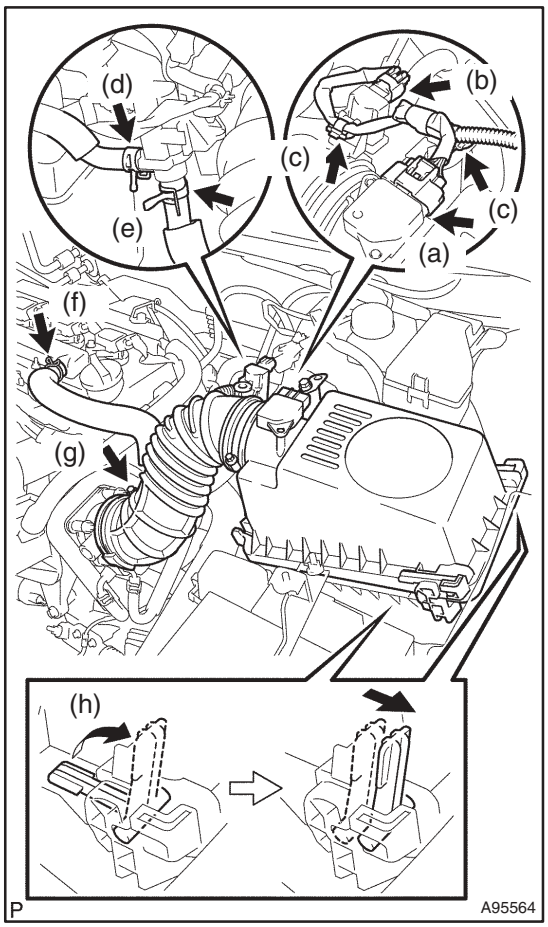

6. REMOVE AIR CLEANER CAP SUB–ASSY

(a) Disconnect the mass air flow meter connector.
(b) Disconnect the VSV connector.
(c) Remove the 2 wire harness clamps.
(d) Disconnect fuel vapor feed hose No. 1 from the VSV.
(e) Disconnect fuel vapor feed hose No. 3 from the VSV.
(f) Disconnect ventilation hose No. 1 from the cylinder head cover.
(g) Loosen the hose clamp bolt, then disconnect the air cleaner hose.
(h) Raise the air cleaner clamp up, then slide it to the air cleaner cap.
(i) Remove the air cleaner cap together with the air cleaner hose.

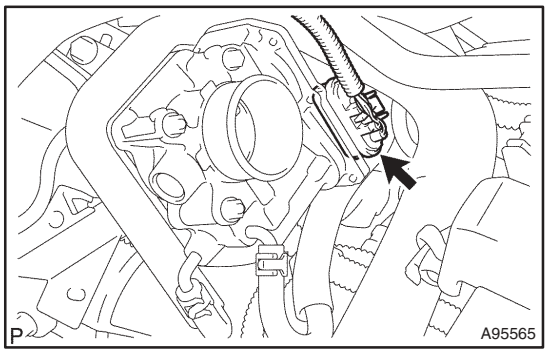

7. REMOVE THROTTLE BODY ASSY

(a) Disconnect the throttle control motor connector.

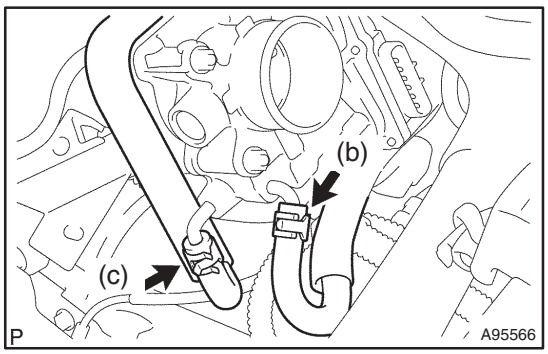

(b) Disconnect the water by–pass hose.
(c) Disconnect water by–pass hose No. 2.

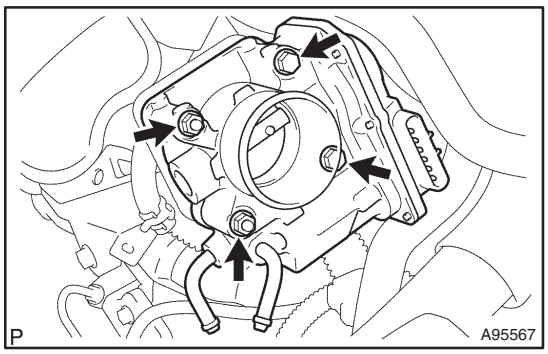

(d) Remove the 2 bolts and 2 nuts, then remove the throttle body.

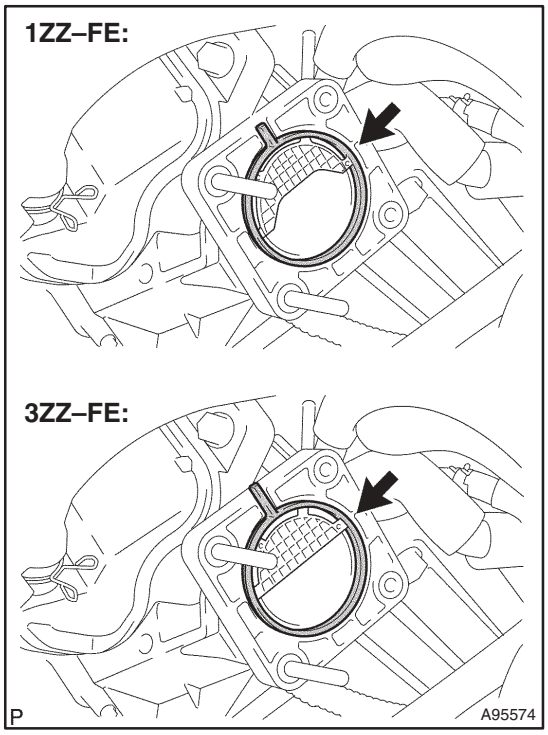

(e) Remove the gasket from the intake manifold.

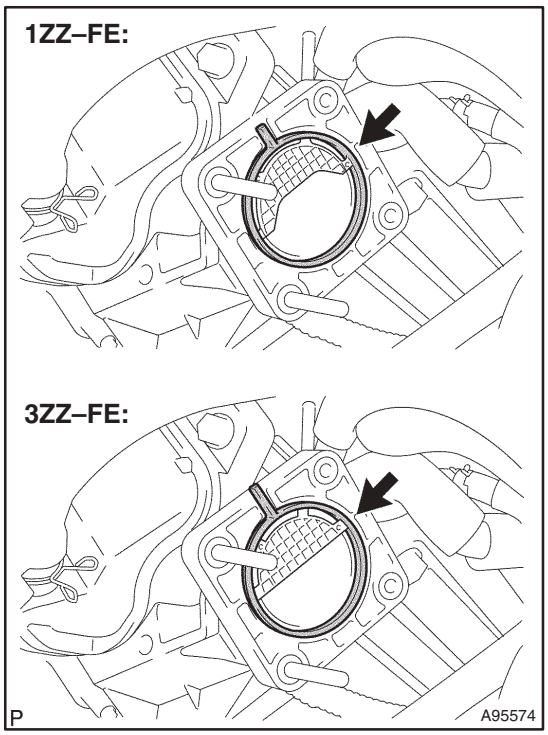

8. INSTALL THROTTLE BODY ASSY

(a) Install a new gasket onto the intake manifold.

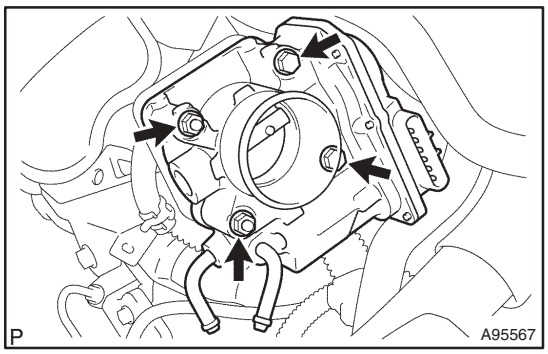

(b) Install the throttle body with the 2 bolts and 2 nuts.
Torque: 9.0 N·m (90 kgf·cm, 80 in.·lbf)

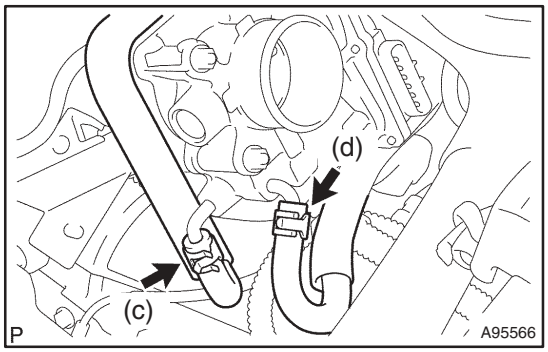

(c) Connect water by–pass hose No. 2 to the throttle body.
(d) Connect the water by–pass hose to the throttle body.

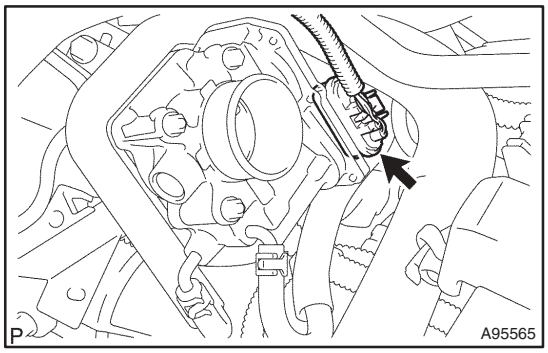

(e) Connect the throttle control motor connector.

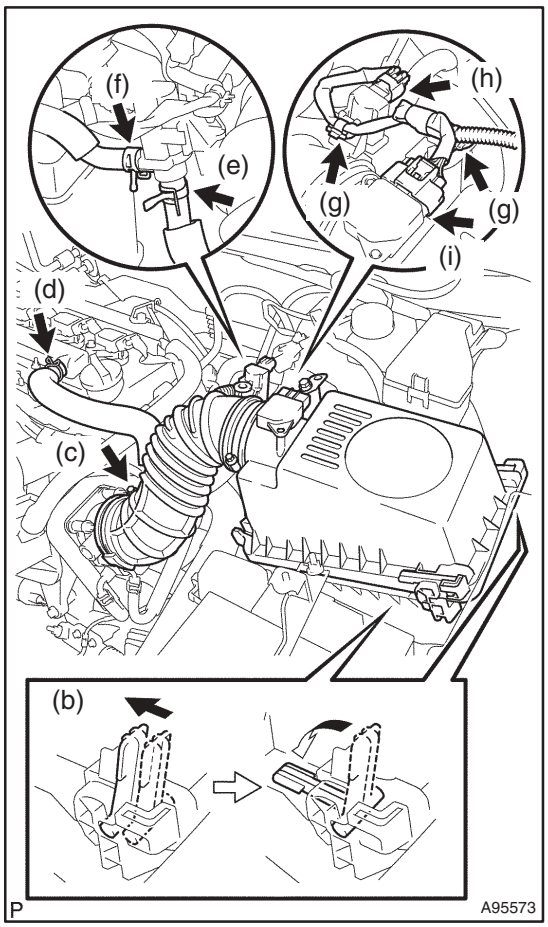

9. INSTALL AIR CLEANER CAP SUB–ASSY

(a) Install the air cleaner cap together with the air cleaner hose.

(b) Slide the air cleaner clamp to the air cleaner case, then put it down.

(c) Tighten the hose clamp bolt, then connect the air cleaner hose.

Torque: 1.5 N·m (15 kgf·cm, 13 in.·lbf)

(d) Connect ventilation hose No. 1 to the cylinder head cover.

(e) Connect fuel vapor feed hose No. 3 to the VSV.

(f) Connect fuel vapor feed hose No. 1 to the VSV.

(g) Install the 2 wire harness clamps.

(h) Connect the VSV connector.

(i) Connect the mass air flow meter connector.

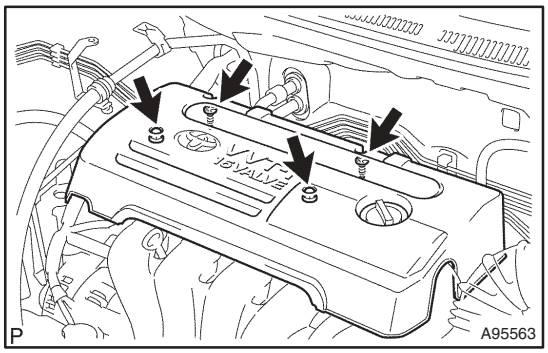

10. INSTALL CYLINDER HEAD COVER NO.2

(a) Install cylinder head cover No. 2 with the 2 nuts and 2 clips.

Torque: 7.0 N·m (71 kgf·cm, 62 in.·lbf)

11. CONNECT BATTERY NEGATIVE TERMINAL

Torque: 5.0 N·m (51 kgf·cm, 44 in.·lbf)

12. ADD ENGINE COOLANT (See page 16–5)

13. CHECK FOR ENGINE COOLANT LEAKS (See page 16–1)

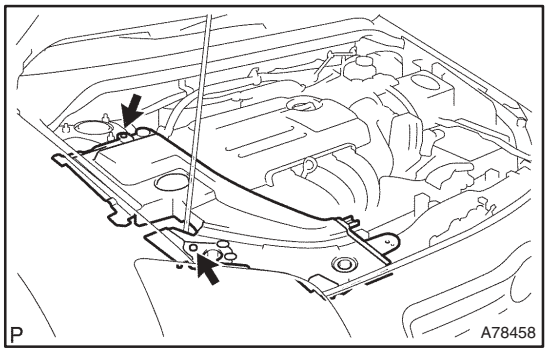

14. INSTALL ENGINE ROOM COVER SIDE

(a) Install the engine room cover side with the 2 clips.

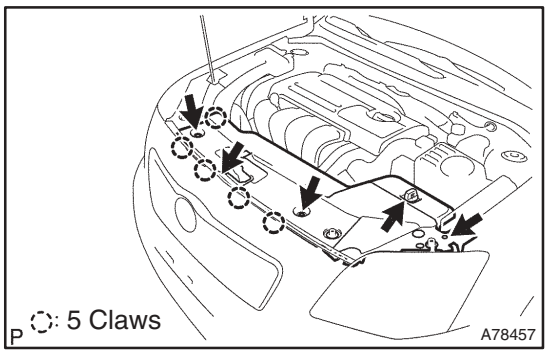

15. INSTALL RADIATOR SUPPORT OPENING COVER

(a) Install the radiator support opening cover with the 4 clips and retainer.

ACCELERATOR PEDAL ASSY (1ZZ–FE/3ZZ–FE)(From February, 2004)

100P4–01

REPLACEMENT

1. DISCONNECT BATTERY NEGATIVE TERMINAL

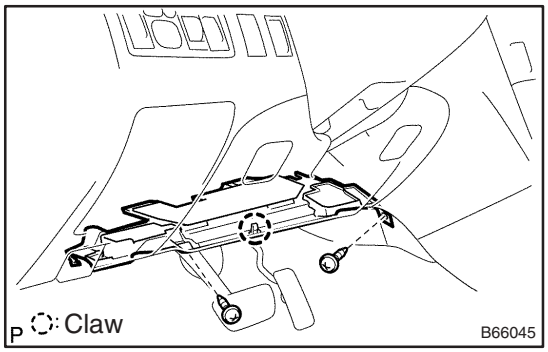

2. REMOVE INSTRUMENT PANEL UNDER COVER SUB–ASSY NO.1

(a) Remove the 2 screws.

(b) Disengage the claw and remove instrument panel under cover sub–assembly No. 1.

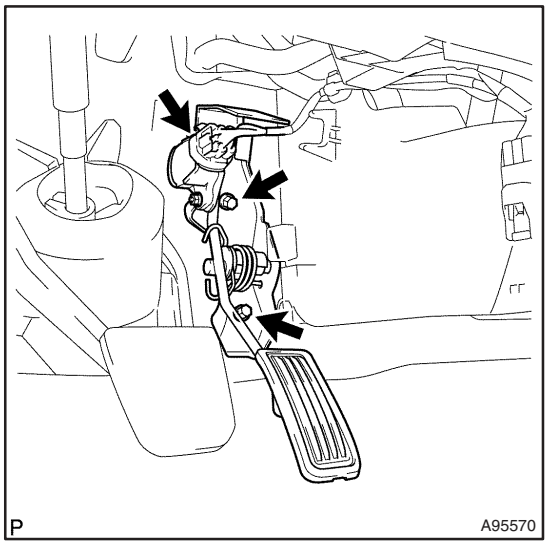

3. REMOVE ACCELERATOR PEDAL ASSY

(a) Disconnect the accelerator pedal sensor connector.

(b) Remove the 2 bolts and accelerator pedal assembly.

4. INSTALL ACCELERATOR PEDAL ASSY
Torque: 5.4 N·m (55 kgf·cm, 48 in.·lbf)

5. INSTALL INSTRUMENT PANEL UNDER COVER SUB–ASSY NO.1

6. CONNECT BATTERY NEGATIVE TERMINAL
Torque: 5.0 N·m (51 kgf·cm, 44 in.·lbf)

PARTIAL ENGINE ASSY (1ZZ–FE/3ZZ–FE)(From February, 2004)

COMPONENTS

141CF–02

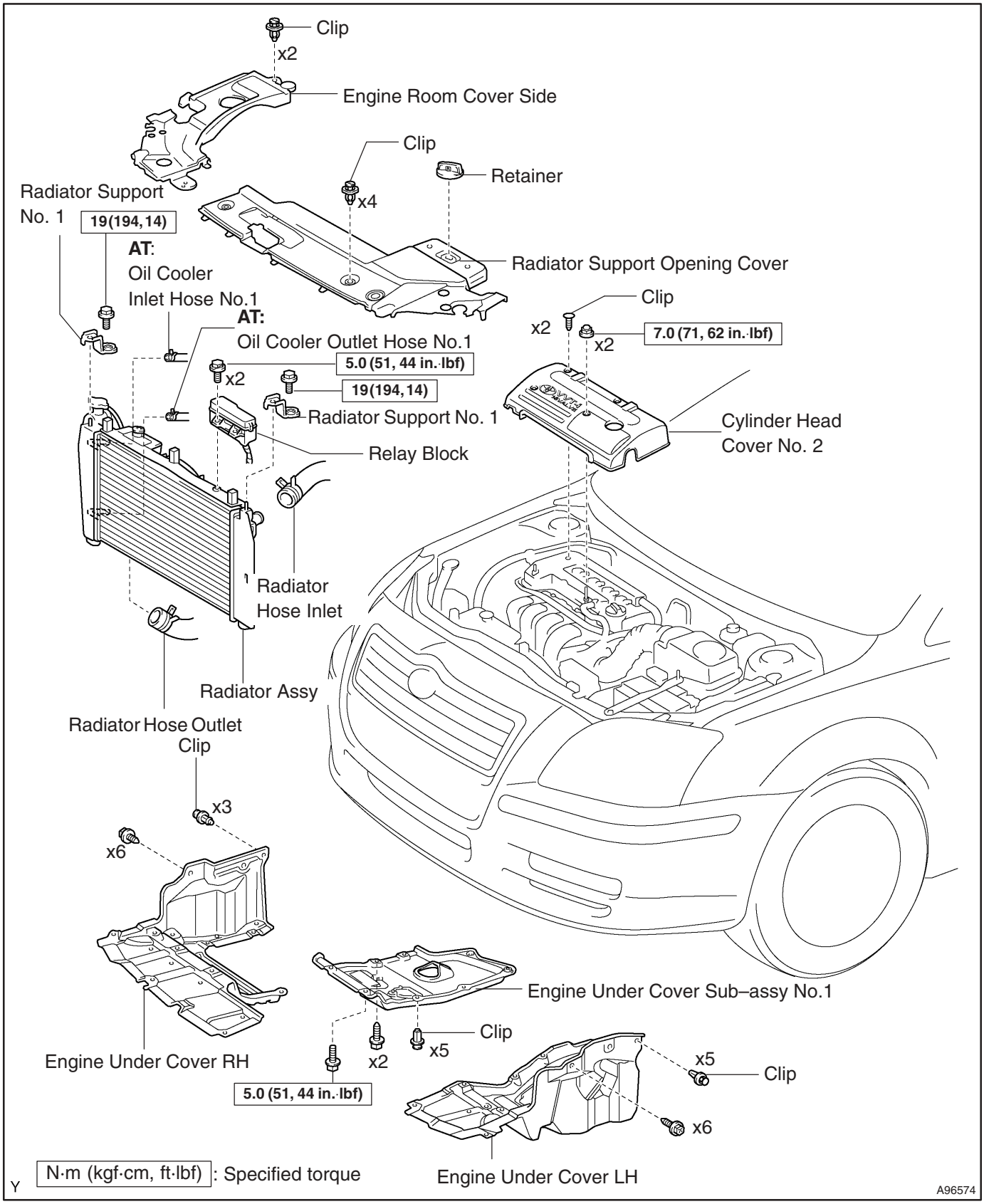

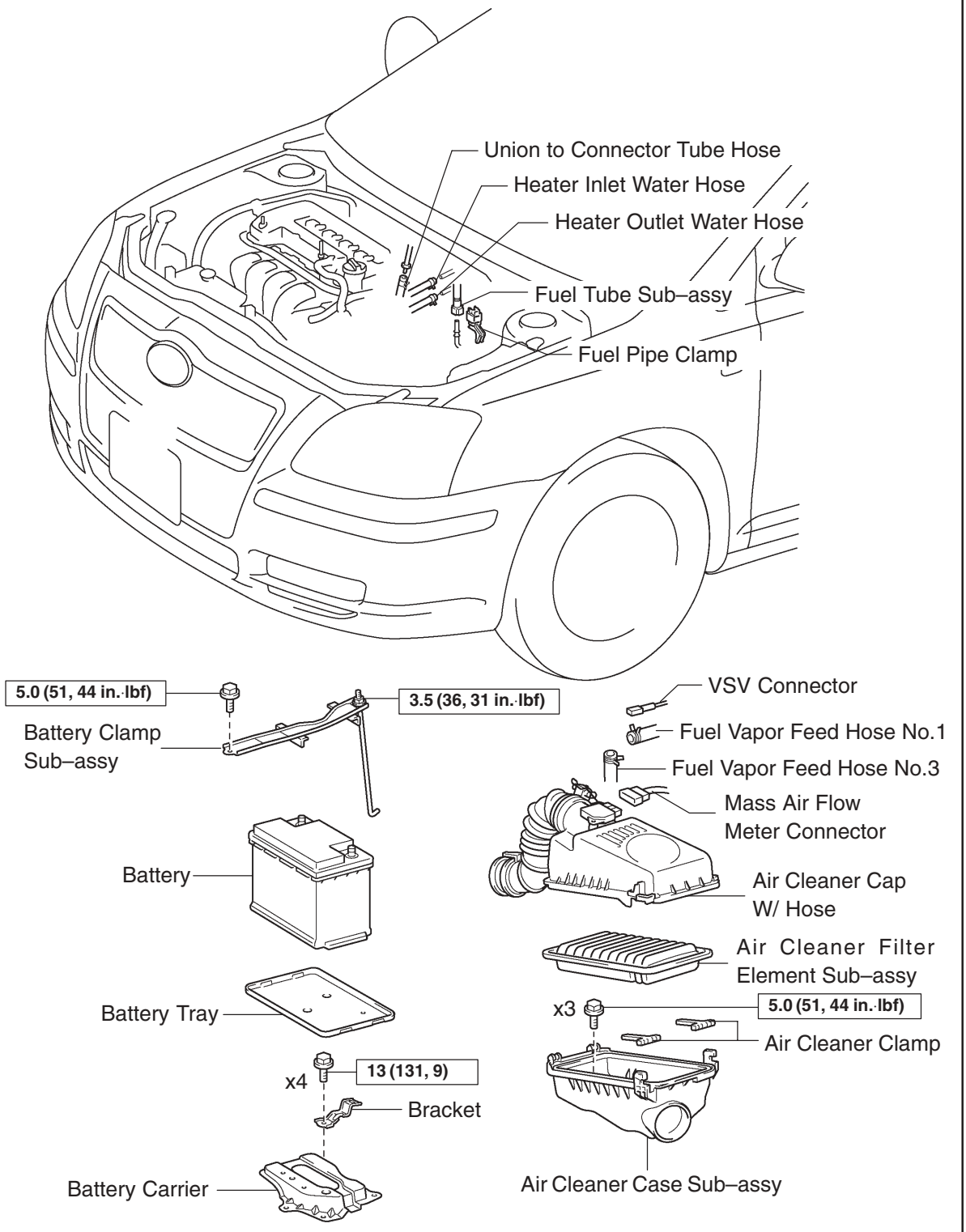

o N·m (kgf·cm, ft·lbf) : Specified torque

A96572

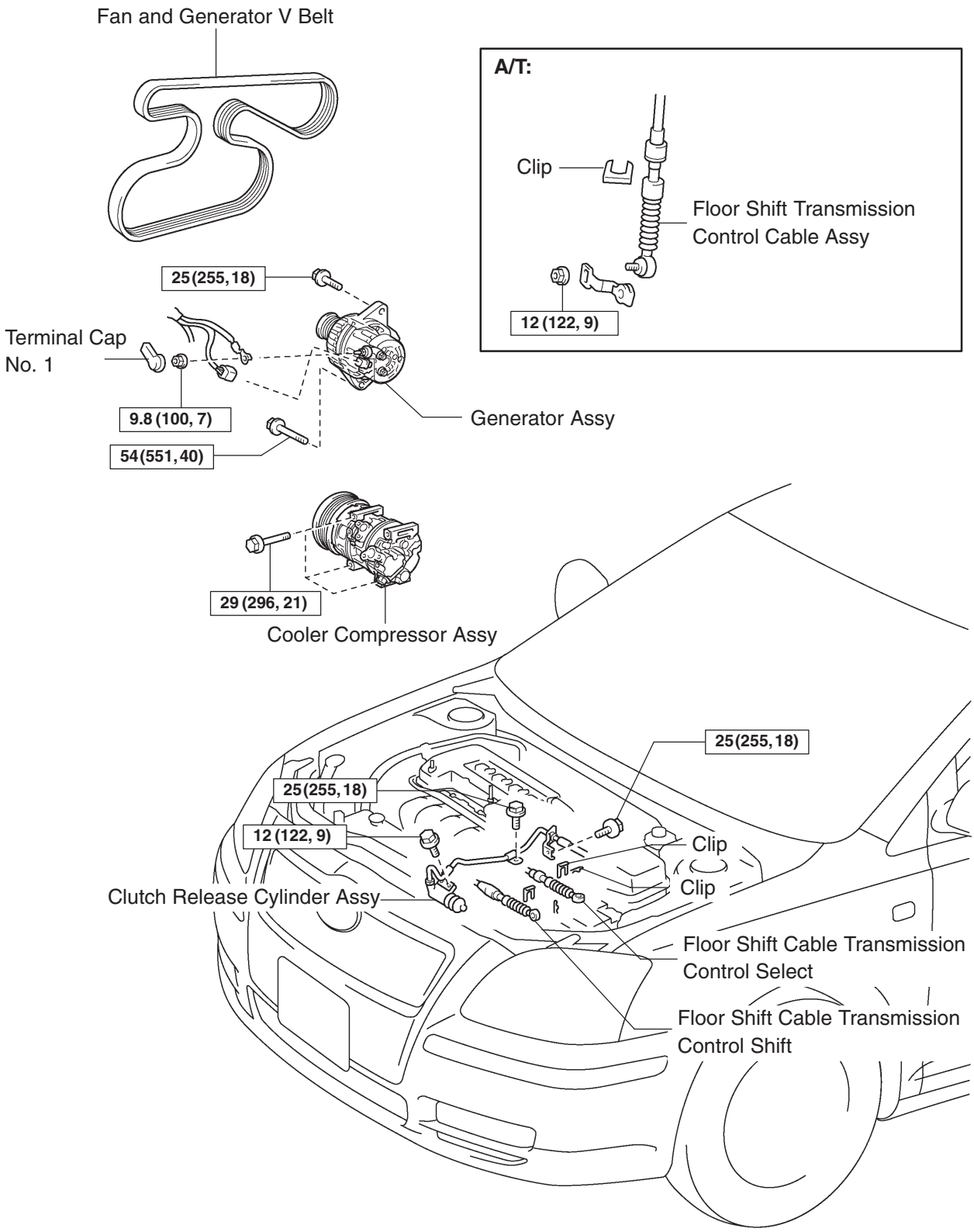

o N·m (kgf·cm, ft·lbf): Specified torque

A76703

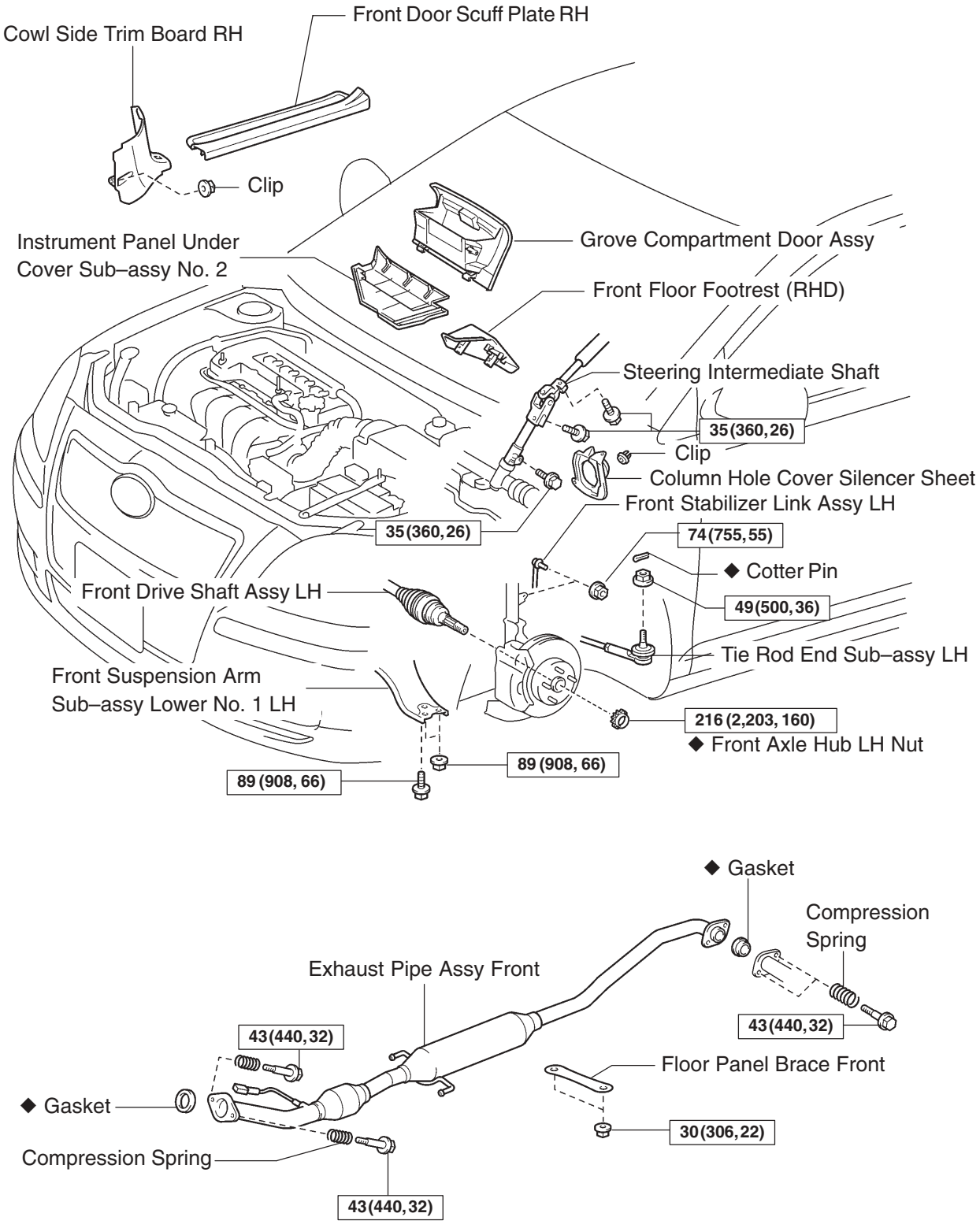

N·m (kgf·cm, ft·lbf) : Specified torque

◆ Non–reusable part

A96568

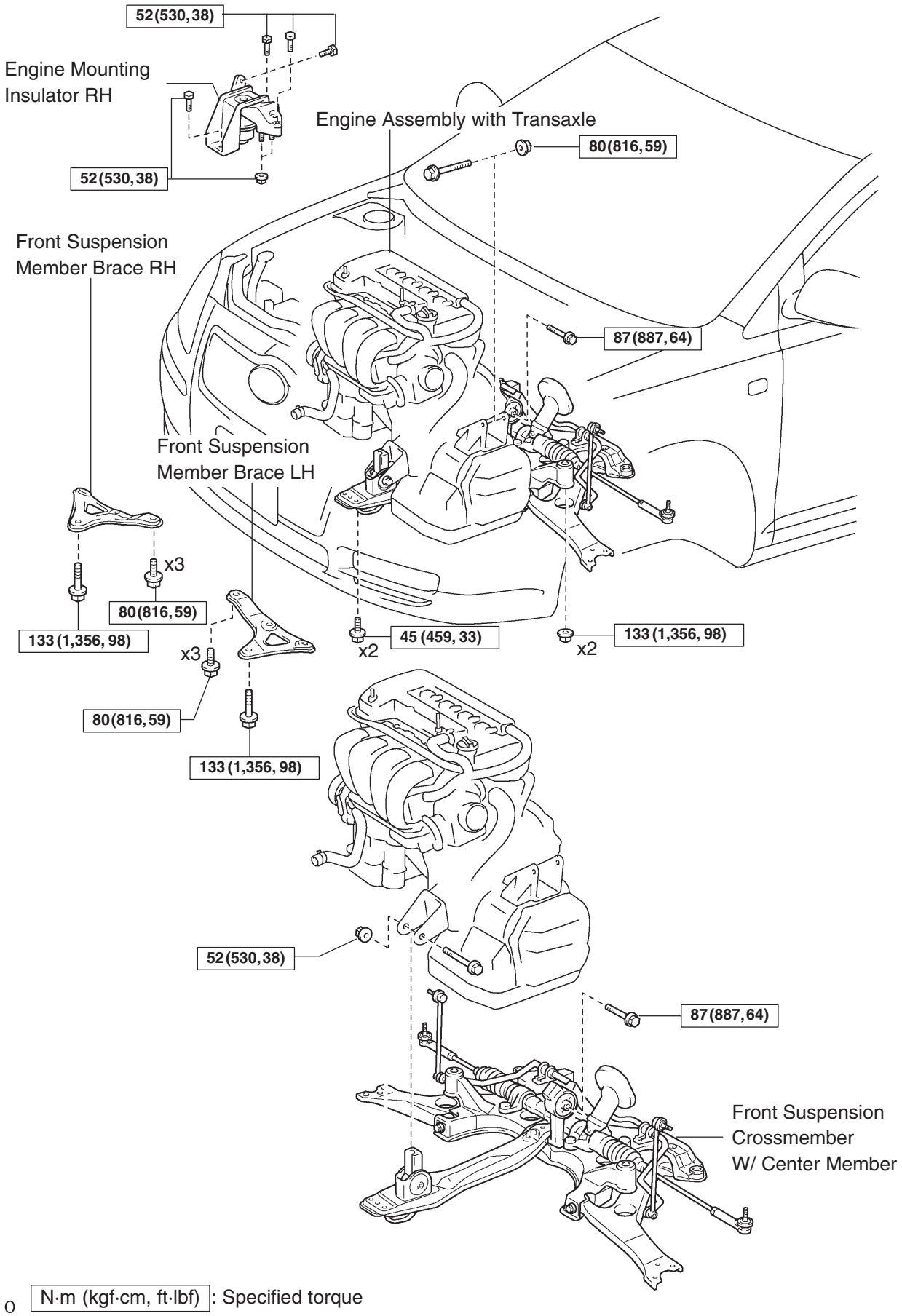

o N·m (kgf·cm, ft·lbf): Specified torque

A96575

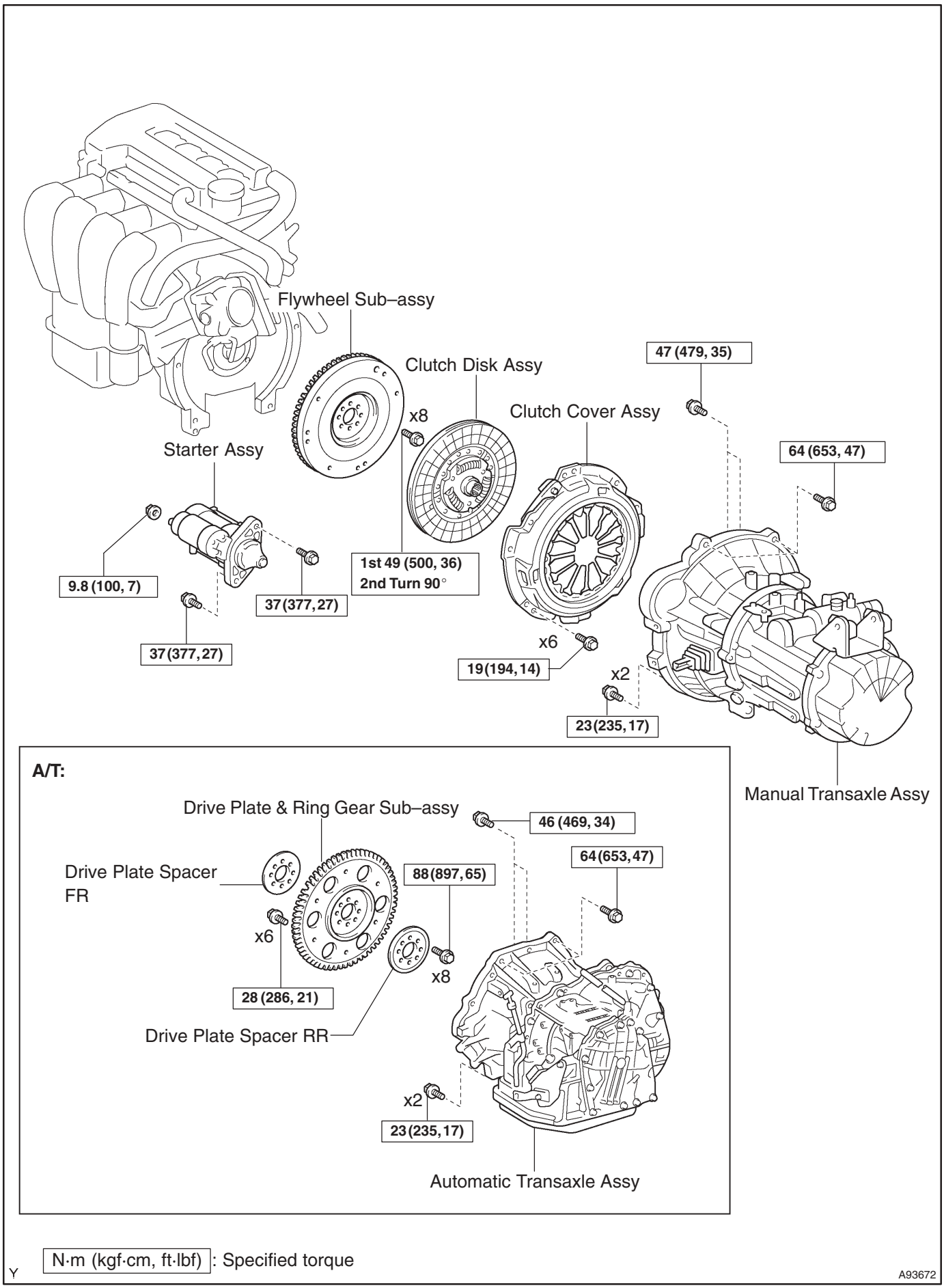
Flywheel Sub–assy
Clutch Disk Assy
x8
Clutch Cover Assy
47 (479, 35)
64 (653, 47)
Starter Assy
9.8 (100, 7)
37 (377, 27)
37 (377, 27)
1st 49 (500, 36)
2nd Turn 90°
x6
19 (194, 14)
x2
23 (235, 17)
Manual Transaxle Assy
A/T:
Drive Plate & Ring Gear Sub–assy
46 (469, 34)
64 (653, 47)
Drive Plate Spacer FR
88 (897, 65)
x6
x8
28 (286, 21)
Drive Plate Spacer RR
x2
23 (235, 17)
Automatic Transaxle Assy
N·m (kgf·cm, ft·lbf): Specified torque
Y
A93672

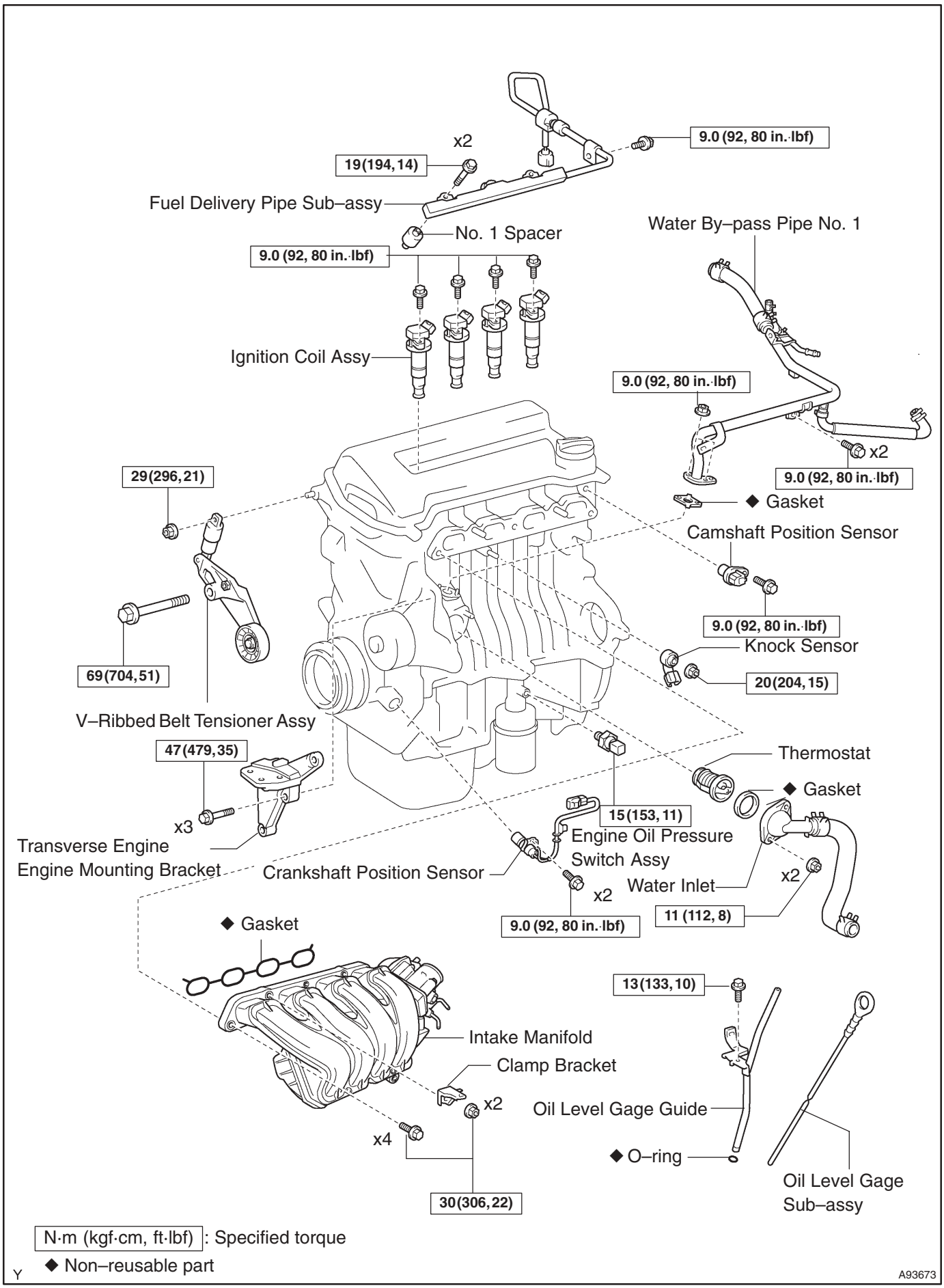

N·m (kgf·cm, ft·lbf) : Specified torque

◆ Non–reusable part

Y

A93673

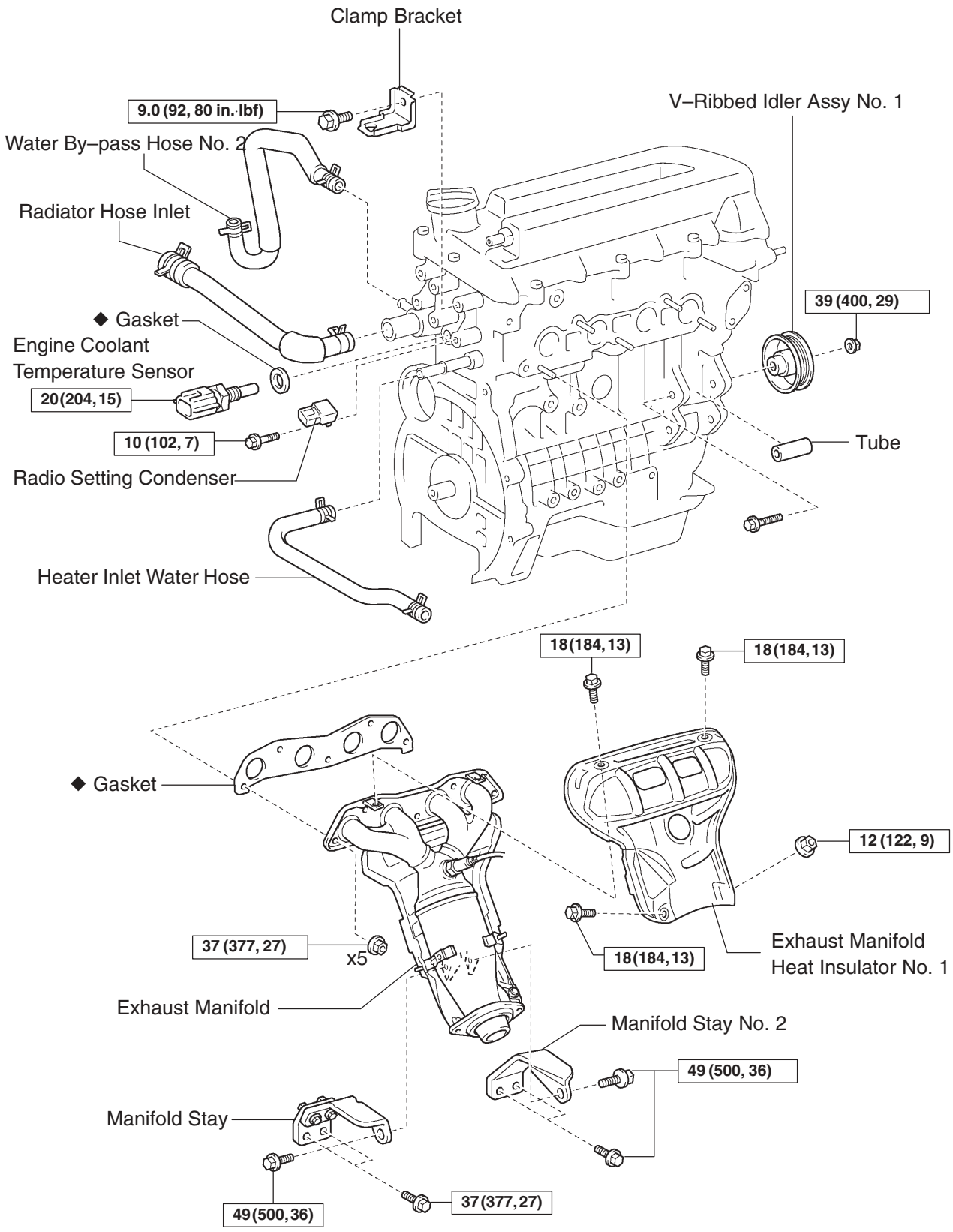

N·m (kgf·cm, ft·lbf) : Specified torque

◆ Non–reusable part

A93674

141UK–01

REPLACEMENT

1. DISCHARGE FUEL SYSTEM PRESSURE (See Pub. No. RM1018E on page 11–1)

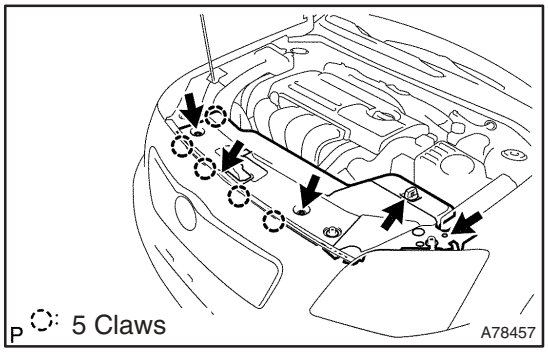

2. REMOVE RADIATOR SUPPORT OPENING COVER

(a) Remove the retainer and 4 clips.

(b) Unfasten the 5 claws, then remove the radiator support opening cover.

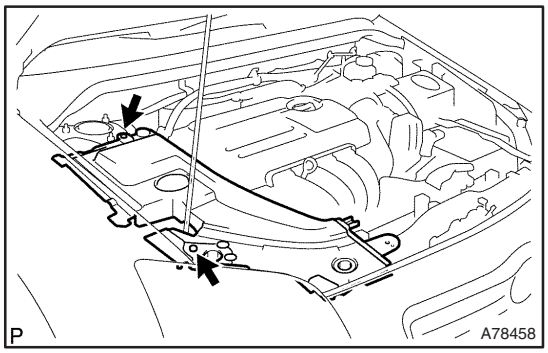

3. REMOVE ENGINE ROOM COVER SIDE

(a) Remove the 2 clips and engine room cover side.

4. REMOVE FRONT WHEELS

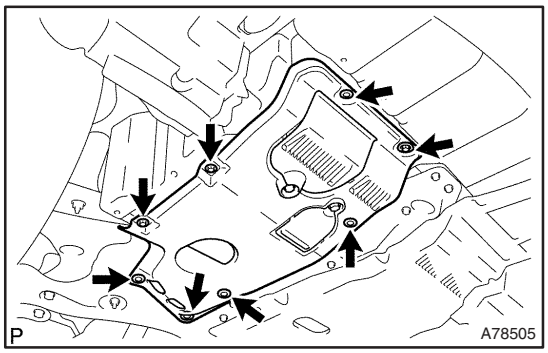

5. REMOVE ENGINE UNDER COVER SUB–ASSY NO.1

(a) Remove the 5 clips, 2 screws and bolt, then detach the engine under cover.

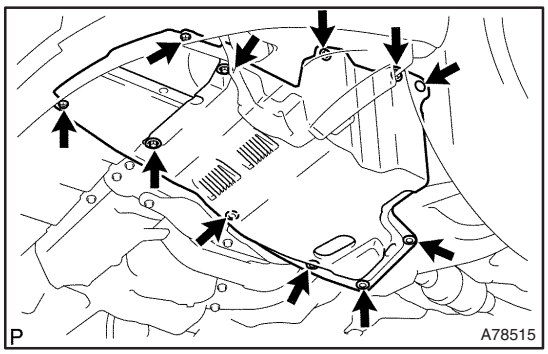

6. REMOVE ENGINE UNDER COVER LH

(a) Remove the 6 screws and 5 clips, then detach the engine under cover.

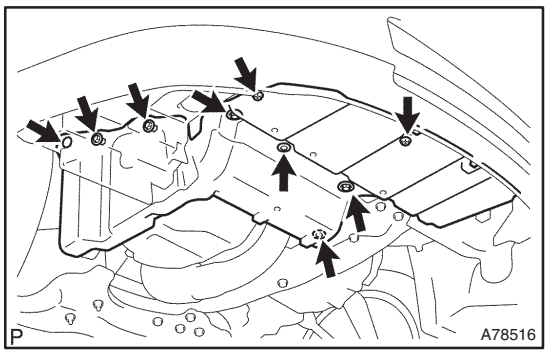

7. REMOVE ENGINE UNDER COVER RH

(a) Remove the 6 screws and 3 clips, then detach the engine under cover.

8. DRAIN ENGINE COOLANT (See page 16–5)

9. DRAIN ENGINE OIL

(a) Install a new gasket and the drain plug after draining engine oil.
Torque: 37 N·m (377 kgf·cm, 27 ft·lbf)

10. DRAIN MANUAL TRANSAXLE OIL (M/T TRANSAXLE) (See Pub. No. RM1018E on page 41–15)

11. DRAIN AUTOMATIC TRANSAXLE FLUID (A/T TRANSAXLE) (See Pub. No. RM1018E on page 40–42)

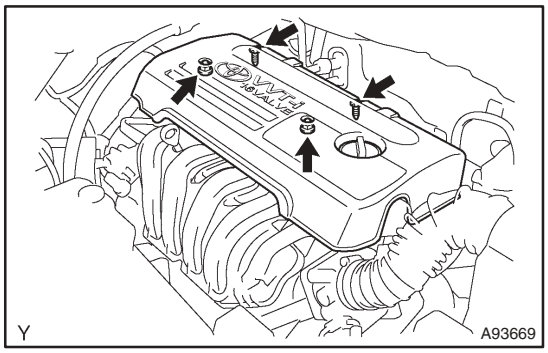

12. REMOVE CYLINDER HEAD COVER NO.2

(a) Remove the 2 nuts and 2 clips, then detach cylinder head cover No.2.

13. REMOVE AIR CLEANER ASSEMBLY WITH HOSE (See page 10–6)

14. REMOVE AIR CLEANER FILTER ELEMENT SUB–ASSY

15. REMOVE AIR CLEANER CASE SUB–ASSY

(a) Remove the 3 bolts and air cleaner case.

16. DISCONNECT RADIATOR HOSE INLET

(a) Disconnect the radiator hose inlet from the radiator.

17. DISCONNECT RADIATOR HOSE OUTLET

(a) Disconnect the radiator hose outlet from the radiator.

18. DISCONNECT OIL COOLER INLET HOSE NO.1 (A/T TRANSAXLE)

(a) Disconnect the oil cooler inlet hose from the radiator.

19. DISCONNECT OIL COOLER OUTLET HOSE NO.1 (A/T TRANSAXLE)

(a) Disconnect the oil cooler outlet hose from the radiator.

20. DISCONNECT OIL COOLER INLET TUBE NO.1 (A/T TRANSAXLE)

(a) Disconnect the oil cooler inlet tube from the radiator.

21. DISCONNECT OIL COOLER OUTLET TUBE NO.1 (A/T TRANSAXLE)

(a) Disconnect the oil cooler outlet tube from the radiator.

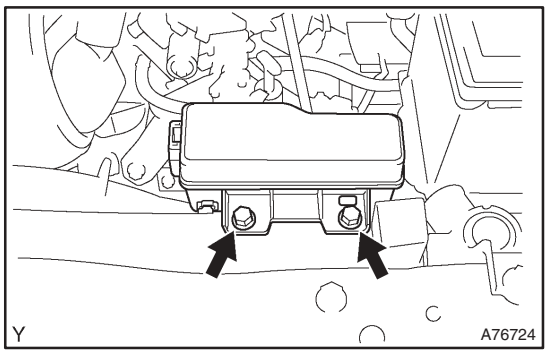

22. REMOVE RADIATOR ASSY

(a) Remove the 2 bolts and relay block.

(b) Disconnect the connector and 2 harness clamps.

(c) Remove the 2 bolts, 2 radiator support uppers and radiator.

23. REMOVE BATTERY

24. REMOVE BATTERY TRAY

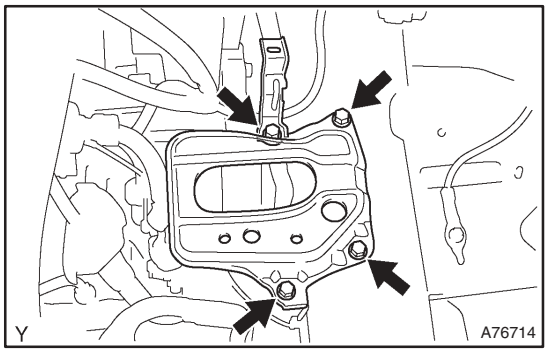

25. REMOVE BATTERY CARRIER

(a) Remove the 4 bolts, battery carrier and bracket.

26. REMOVE EFI FUEL PIPE CLAMP
(See Pub. No. RM1018E on page 11–11)

27. DISCONNECT FUEL TUBE SUB–ASSY
(See Pub. No. RM1018E on page 11–11)

28. DISCONNECT UNION TO CONNECTOR TUBE HOSE

(a) Disconnect the union to connector tube hose.

29. DISCONNECT HEATER INLET WATER HOSE

(a) Disconnect the heater inlet water hose from the heater core inlet tube.

30. DISCONNECT HEATER OUTLET WATER HOSE

(a) Disconnect the heater outlet water hose from the heater core outlet tube.

31. SEPARATE FLOOR SHIFT CABLE TRANSMISSION CONTROL SELECT (M/T TRANSAXLE)
(See Pub. No. RM1018E on page 41–15)

32. SEPARATE FLOOR SHIFT CABLE TRANSMISSION CONTROL SHIFT (M/T TRANSAXLE)
(See Pub. No. RM1018E on page 41–15)

33. SEPARATE FLOOR SHIFT CABLE TRANSMISSION CONTROL SHIFT (A/T TRANSAXLE)
(See Pub. No. RM1018E on page 40–11)

34. SEPARATE CLUTCH RELEASE CYLINDER ASSY (M/T TRANSAXLE)
(See Pub. No. RM1018E on page 41–15)

35. REMOVE GLOVE COMPARTMENT DOOR ASSY (See Pub. No. RM1018E on page 71–11)

36. REMOVE INSTRUMENT PANEL UNDER COVER SUB–ASSY NO.2

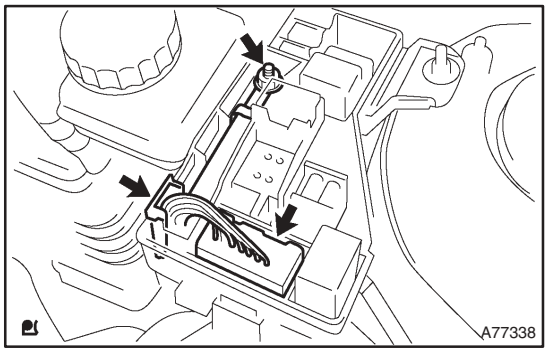

37. DISCONNECT ENGINE WIRE

(a) Disconnect the engine wire from the ECM and junction block.

(b) Pull out the engine wire.

(c) Remove the engine room relay block No.2 cover.

(d) Remove a nut, then disconnect a connector as shown in the illustration.

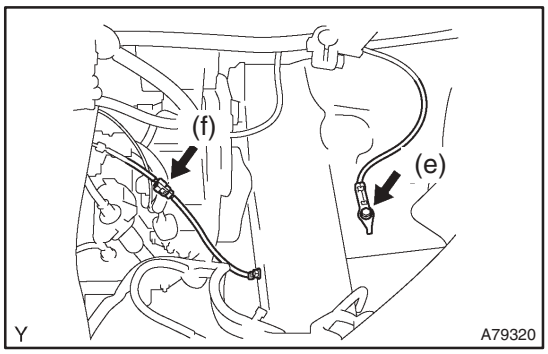

(e) Remove the bolt, then disconnect the ground terminal.
(f) Disconnect the ground terminal connector.

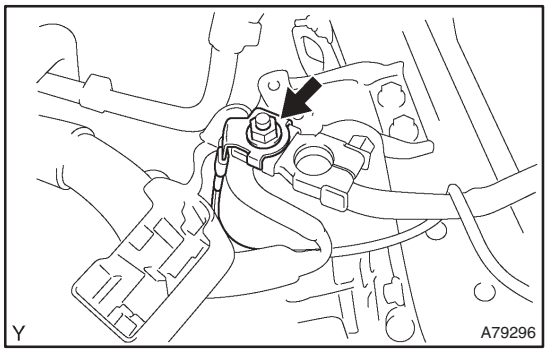

(g) Remove the nut and disconnect battery terminal B.

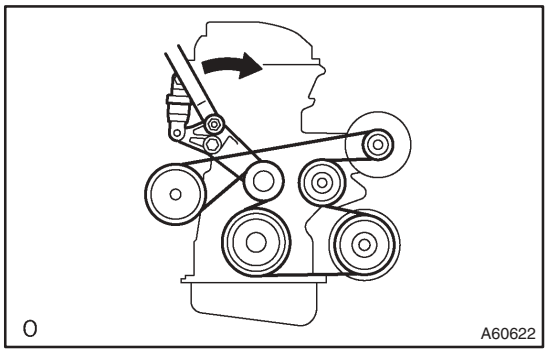

38. REMOVE FAN AND GENERATOR V BELT

(a) Turn the V–ribbed belt tensioner clockwise slowly and loosen it. Then, remove the fan and generator V belt and put back the V–ribbed belt tensioner carefully.

39. REMOVE GENERATOR ASSY (See Pub. No. RM1018E on page 19–7)

40. SEPARATE COMPRESSOR AND MAGNETIC CLUTCH (W/ AIR CONDITIONING)

HINT:

- Secure the compressor and hoses off to the side instead of discharging the A/C system.
- 1ZZ–FE (See Pub. No. RM1018E on page 55–74)
- 3ZZ–FE (See Pub. No. RM1018E on page 55–70)

41. REMOVE COLUMN HOLE COVER SILENCER SHEET

(a) Remove the 2 clips and column hole cover silencer sheet.

42. SEPARATE STEERING INTERMEDIATE SHAFT (See Pub. No. RM1018E on page 50–9)

43. REMOVE FRONT DOOR SCUFF PLATE RH (See Pub. No. RM1018E on page 71–11)

44. REMOVE COWL SIDE TRIM BOARD RH (See Pub. No. RM1018E on page 71–11)

45. REMOVE FRONT FLOOR FOOTREST (RHD STEERING POSITION TYPE)

46. REMOVE FLOOR PANEL BRACE FRONT

(a) Remove the 2 nuts and floor panel brace front.

47. REMOVE EXHAUST PIPE ASSY FRONT (See Pub. No. RM1018E on page 15–2)

48. REMOVE FRONT AXLE HUB LH NUT (See Pub. No. RM1018E on page 30–6)

SST 09930–00010

49. REMOVE FRONT AXLE HUB RH NUT

SST 09930–00010

HINT:

Perform the same procedure as above on the opposite side.

50. SEPARATE TIE ROD END SUB–ASSY LH (See Pub. No. RM1018E on page 30–6)

SST 09628–62011

51. SEPARATE TIE ROD END SUB–ASSY RH

SST 09628–62011

HINT:

Perform the same procedure as above on the opposite side.

52. SEPARATE FRONT STABILIZER LINK ASSY LH (See Pub. No. RM1018E on page 30–6)

53. SEPARATE FRONT STABILIZER LINK ASSY RH

HINT:

Perform the same procedure as above on the opposite side.

54. SEPARATE FRONT SUSPENSION ARM SUB–ASSY LOWER NO.1 LH (See Pub. No. RM1018E on page 30–6)

55. SEPARATE FRONT SUSPENSION ARM SUB–ASSY LOWER NO.1 RH

HINT:

Perform the same procedure as above on the opposite side.

56. SEPARATE FRONT AXLE ASSY LH (See Pub. No. RM1018E on page 30–6)

57. SEPARATE FRONT AXLE ASSY RH

HINT:

Perform the same procedure as above on the opposite side.

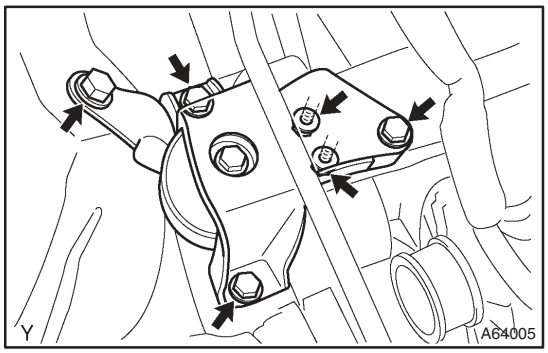

58. REMOVE ENGINE ASSEMBLY WITH TRANSAXLE

(a) Set the engine lifter.

(b) Remove the 4 bolts and 2 nuts, then detach the engine mounting insulator.

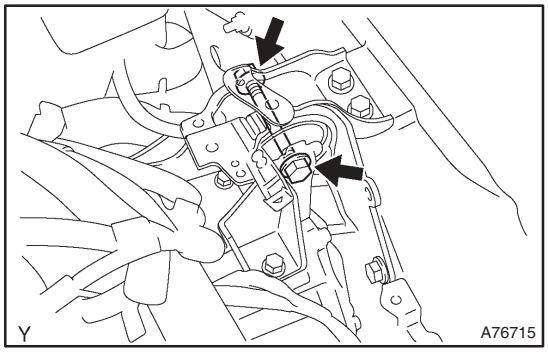

(c) Remove the through bolt and nut, then detach the engine mounting insulator from the vehicle.

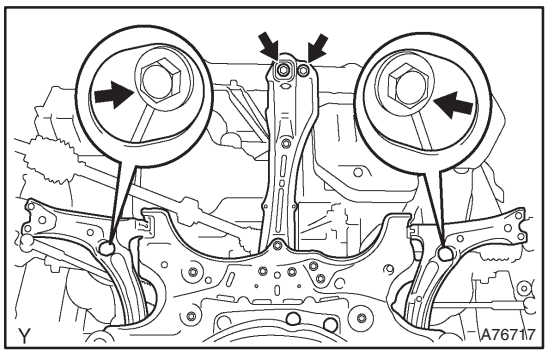

(d) Remove the 2 bolts and 2 nuts as shown in the illustration.

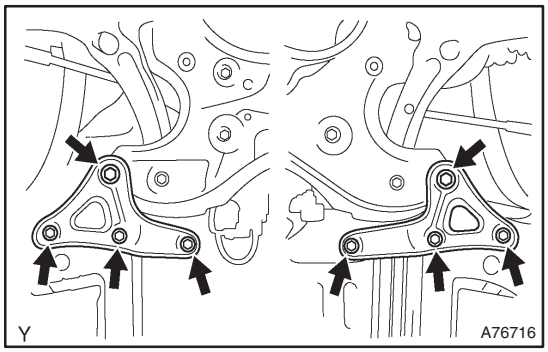

(e) Remove the 8 bolts and front suspension member brace rear RH and LH.

(f) Carefully remove the engine with transaxle from the engine compartment.

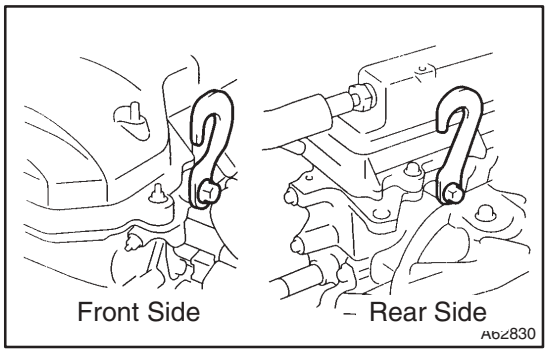

(g) Install the engine hanger No. 1 (12281–15040) and bolt (91512–B1016).

Torque: 38 N·m (387 kgf·cm, 28 ft·lbf)

(h) Install the engine hanger (12281–22021) and bolt (91512–B1016).

Torque: 38 N·m (387 kgf·cm, 28 ft·lbf)

HINT:

Securely install the front engine hanger (12281–22021) and rear engine hanger No. 1 (12281–15040) onto the engine assembly.

(i) Attach the engine sling, then hang the engine with the chain block.

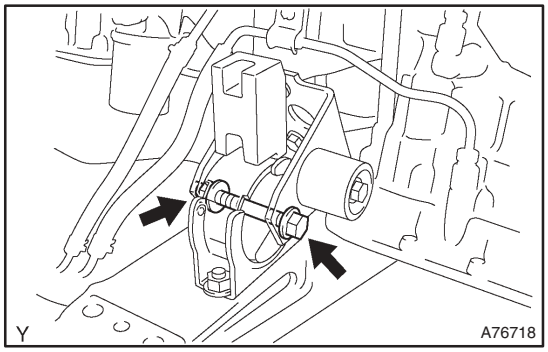

59. REMOVE FRONT SUSPENSION CROSSMEMBER W/CENTER MEMBER

(a) Remove the through bolt and nut, then detach the engine mounting insulator FR from the engine mounting bracket.

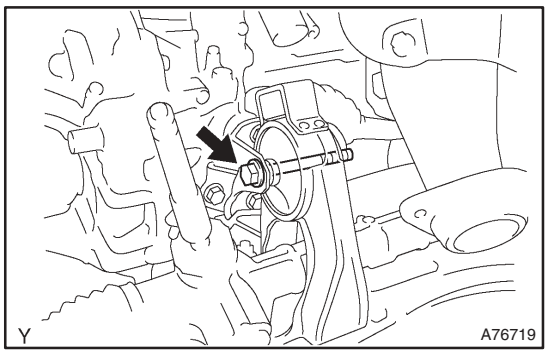

(b) Remove the through bolt, then detach the engine mounting insulator RR from the suspension crossmember.
(c) Separate the engine and the transaxle assembly from the suspension crossmember and engine mounting member.

60. REMOVE STARTER ASSY (See Pub. No. RM1018E on page 19–3)
61. REMOVE MANUAL TRANSAXLE ASSY (M/T TRANSAXLE) (See Pub. No. RM1018E on page 41–15)
62. REMOVE AUTOMATIC TRANSAXLE ASSY (A/T TRANSAXLE) (See Pub. No. RM1018E on page 40–11)
63. REMOVE CLUTCH COVER ASSY (M/T TRANSAXLE) (See Pub. No. RM1018E on page 42–26)
64. REMOVE CLUTCH DISC ASSY (M/T TRANSAXLE) (See Pub. No. RM1018E on page 42–26)

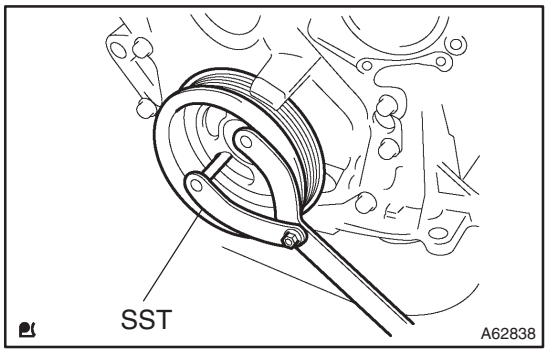

65. REMOVE FLYWHEEL SUB–ASSY (M/T TRANSAXLE)
(a) Hold the crankshaft with SST, then remove the 8 bolts and flywheel.
SST 09960–10010 (09962–01000, 09963–01000)

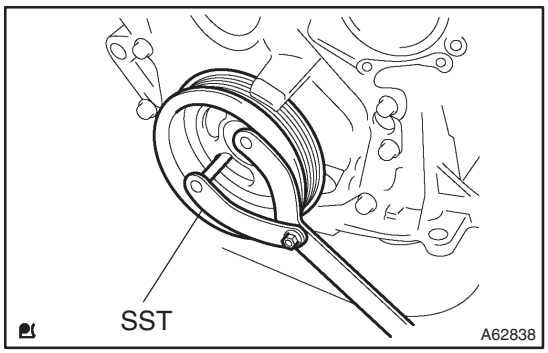

66. REMOVE DRIVE PLATE & RING GEAR SUB–ASSY (A/T TRANSAXLE)
(a) Hold the crankshaft with SST, then remove the 8 bolts and drive plate & ring gear.
SST 09960–10010 (09962–01000, 09963–01000)

67. REMOVE IGNITION COIL ASSY
(a) Disconnect the 4 ignition coil connectors.

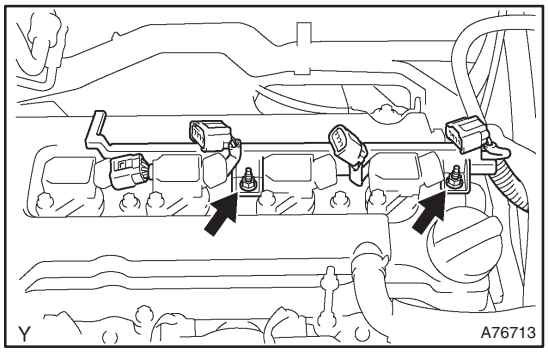

(b) Remove the 2 nuts which are used to secure the engine wire.

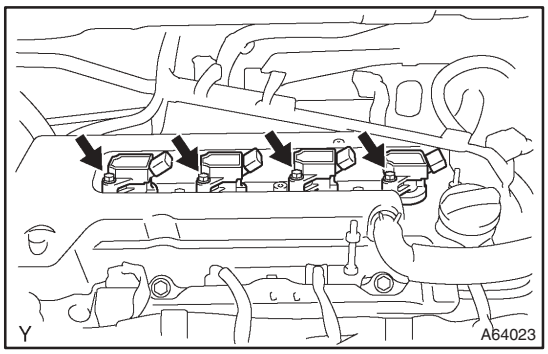

(c) Remove the 4 bolts and 4 ignition coils.

68. REMOVE FUEL DELIVERY PIPE SUB–ASSY
(See Pub. No. RM1018E on page 11–11)

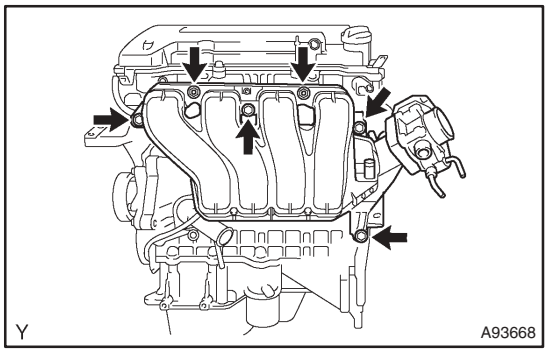

69. REMOVE INTAKE MANIFOLD

(a) Disconnect the throttle motor connector.
(b) Disconnect the 2 water hoses from the throttle body.
(c) Disconnect the ventilation hose and ventilation hose No. 2 from the cylinder head cover.
(d) Disconnect the vacuum hose from water by–pass pipe No. 1.
(e) Remove the 4 bolts, 2 nuts and 2 wire brackets,then remove the intake manifold and throttle body assembly.
(f) Remove the gasket from the intake manifold and the throttle body assembly.

70. REMOVE OIL LEVEL GAGE SUB–ASSY

(a) Remove the oil level gage from the oil level gage guide.

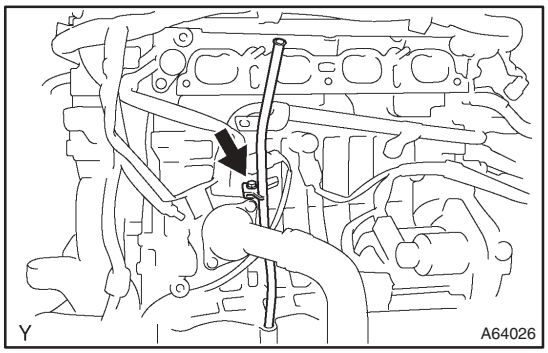

71. REMOVE OIL LEVEL GAGE GUIDE

(a) Disconnect the crankshaft position sensor clamp.
(b) Remove the bolt and oil level gage guide.

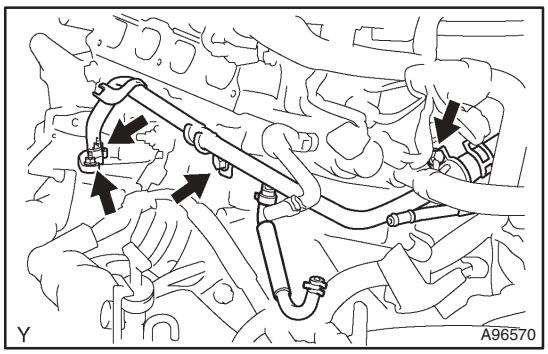

72. REMOVE WATER BY–PASS PIPE NO.1

(a) Disconnect the knock sensor clamp.
(b) Remove the 2 bolts and 2 nuts, then detach the water by–pass pipe and gasket.

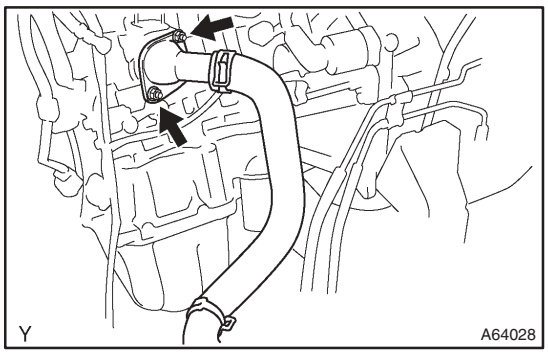

73. REMOVE WATER INLET

(a) Remove the 2 nuts and water inlet.

74. REMOVE THERMOSTAT

75. REMOVE ENGINE OIL PRESSURE SWITCH ASSY
(See Pub. No. RM1018E on page 17–1)

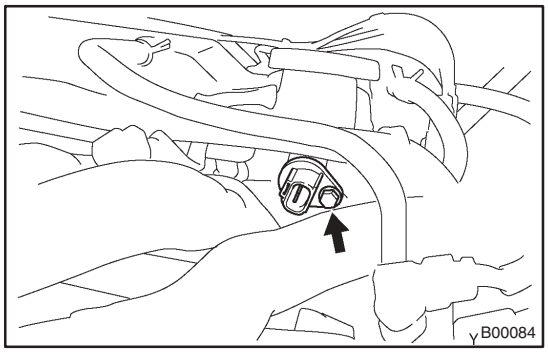

76. REMOVE CAMSHAFT POSITION SENSOR

(a) Remove the bolt and camshaft position sensor.

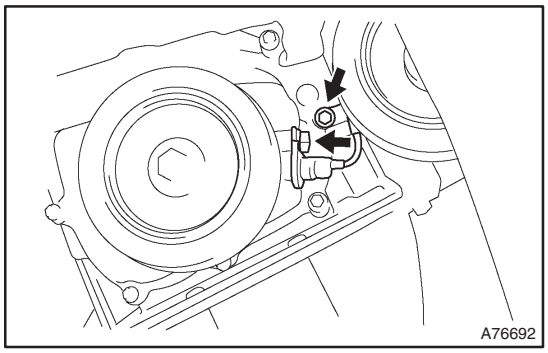

77. REMOVE CRANKSHAFT POSITION SENSOR

(a) Remove the 2 bolts and crankshaft position sensor.

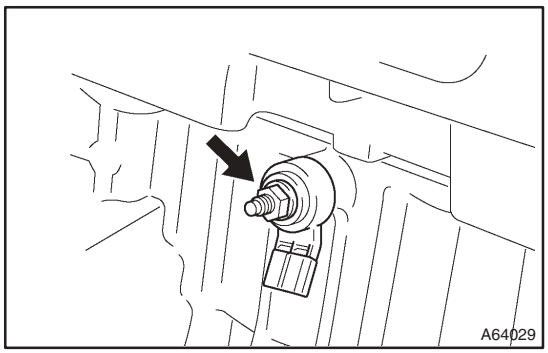

78. REMOVE KNOCK SENSOR

(a) Remove the nut and knock sensor.

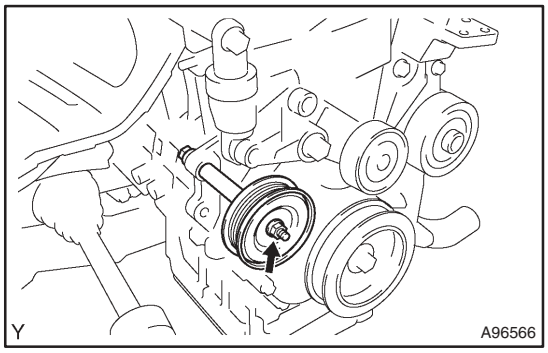

79. REMOVE V–RIBBED IDLER ASSY NO.1

(a) Remove the nut, bolt, tube and idler.

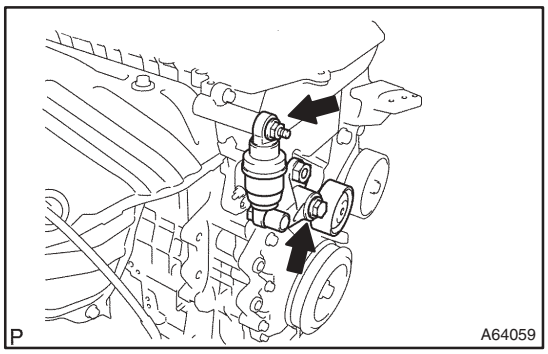

80. REMOVE V–RIBBED BELT TENSIONER ASSY

(a) Remove the bolt, nut and V–ribbed belt tensioner.

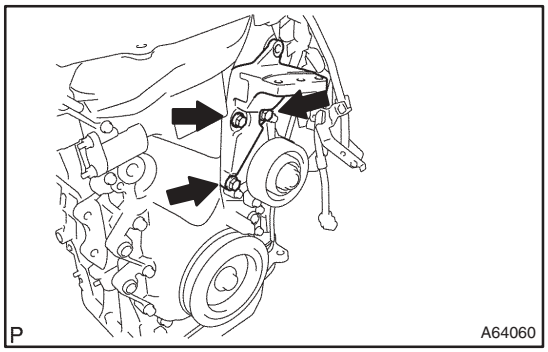

81. REMOVE TRANSVERSE ENGINE ENGINE MOUNTING BRACKET

(a) Remove the 3 bolts and transverse engine mounting bracket.

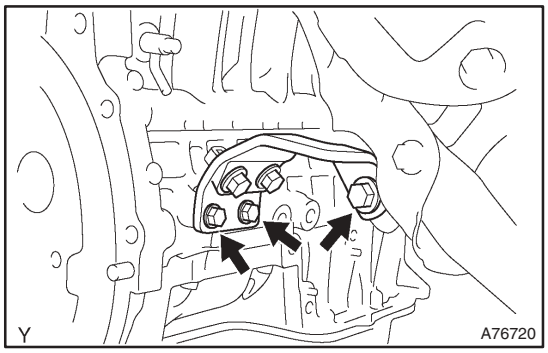

82. REMOVE MANIFOLD STAY

(a) Remove the 3 bolts and manifold stay.

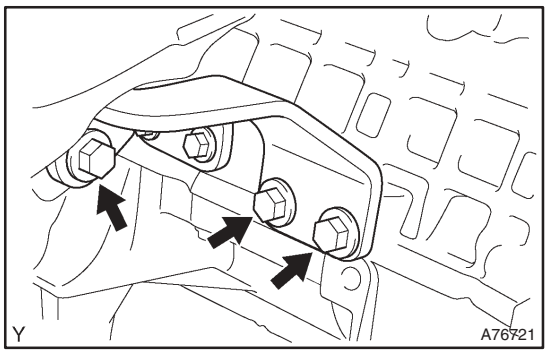

83. REMOVE MANIFOLD STAY NO.2

(a) Remove the 3 bolts and manifold stay.

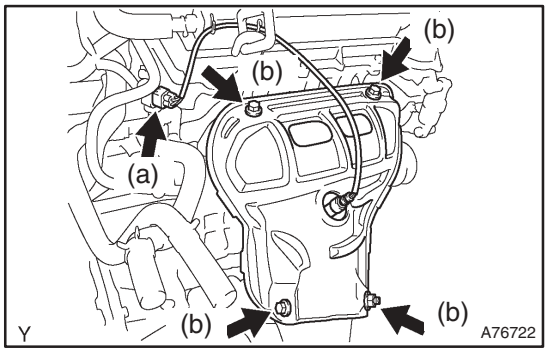

84. REMOVE EXHAUST MANIFOLD HEAT INSULATOR NO.1

(a) Disconnect the heated oxygen sensor connector.

(b) Remove the 3 bolts and nut, then remove the exhaust manifold heat insulator.

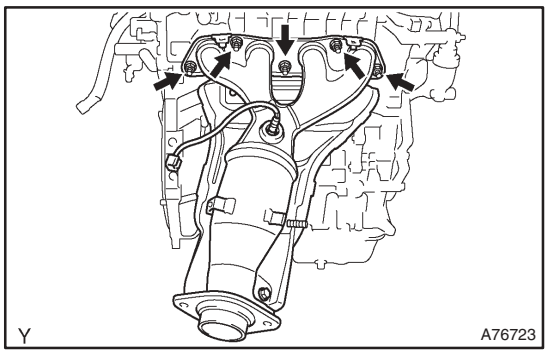

85. REMOVE EXHAUST MANIFOLD

(a) Remove the 5 nuts, then remove the exhaust manifold and gasket.

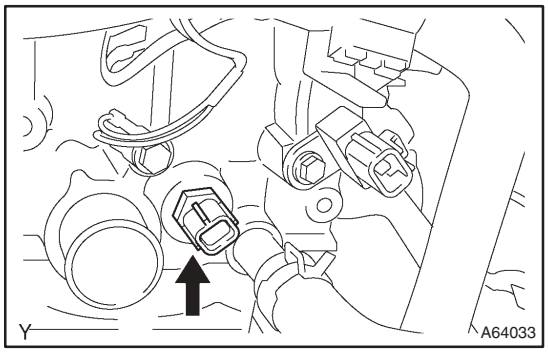

86. REMOVE ENGINE COOLANT TEMPERATURE SENSOR

(a) Using SST, remove the engine coolant temperature sensor.
SST 09817–33190

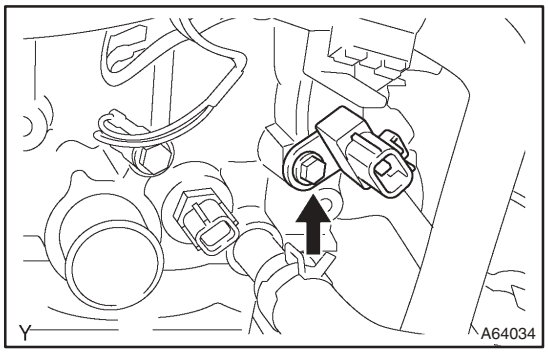

87. REMOVE RADIO SETTING CONDENSER

(a) Remove the bolt and condenser.

88. REMOVE WATER BY–PASS HOSE NO.2

89. REMOVE RADIATOR HOSE INLET

90. REMOVE HEATER INLET WATER HOSE

91. REPLACE PARTIAL ENGINE ASSY

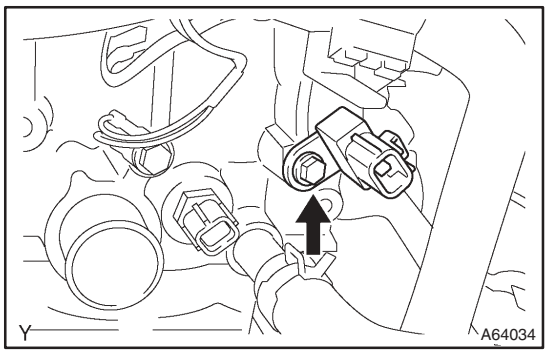

92. INSTALL RADIO SETTING CONDENSER

(a) Install the condenser with the bolt.
Torque: 10 N·m (102 kgf·cm, 7 ft·lbf)

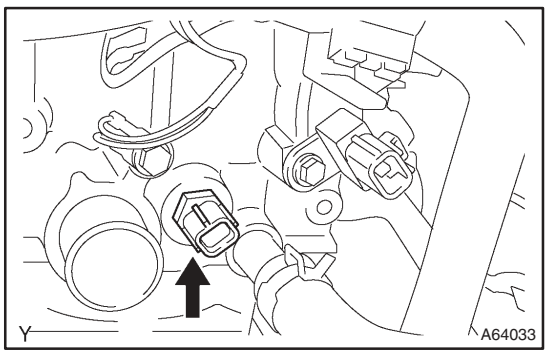

93. INSTALL ENGINE COOLANT TEMPERATURE SENSOR

(a) Install a new gasket onto the engine coolant temperature sensor.

(b) Using SST, install the engine coolant temperature sensor.
SST 09817–33190
Torque: 20 N·m (204 kgf·cm, 15 ft·lbf)

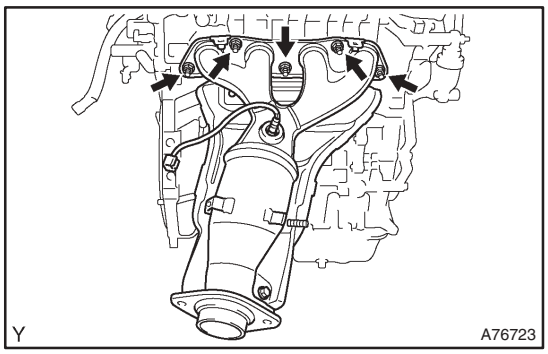

94. INSTALL EXHAUST MANIFOLD

(a) Install a new gasket and the exhaust manifold with the 5 nuts.

Torque: 37 N·m (377 kgf·cm, 27 ft·lbf)

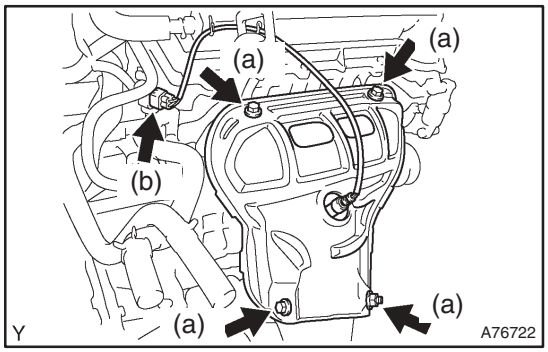

95. INSTALL EXHAUST MANIFOLD HEAT INSULATOR NO.1

(a) Install the exhaust manifold heat insulator, then install the 3 bolts and nut.

Torque:
18 N·m (184 kgf·cm, 13 ft·lbf) for bolt
12 N·m (122 kgf·cm, 9 ft·lbf) for nut

(b) Connect the heated oxygen sensor connector.

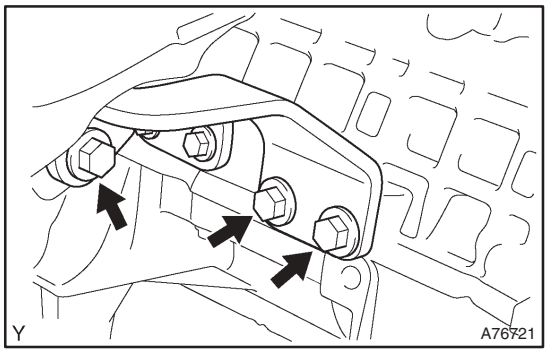

96. INSTALL MANIFOLD STAY NO.2

(a) Install the manifold stay with the 3 bolts.

Torque: 49 N·m (500 kgf·cm, 36 ft·lbf)

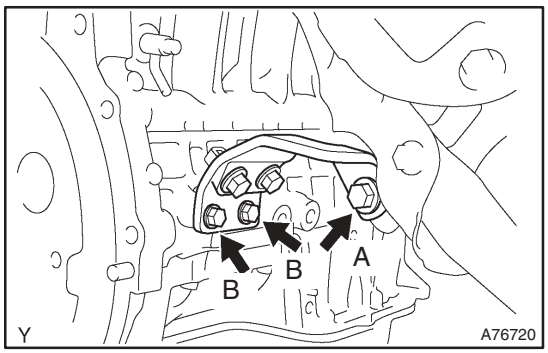

97. INSTALL MANIFOLD STAY

(a) Install the manifold stay with the 3 bolts.

Torque:
49 N·m (500 kgf·cm, 36 ft·lbf) for A
37 N·m (377 kgf·cm, 27 ft·lbf) for B

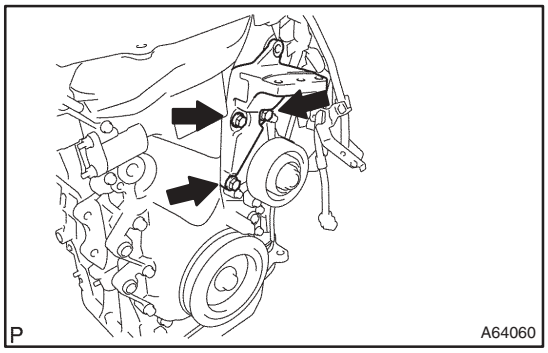

98. INSTALL TRANSVERSE ENGINE ENGINE MOUNTING BRACKET

(a) Install the transverse engine mounting bracket with the 3 bolts.

Torque: 47 N·m (479 kgf·cm, 35 ft·lbf)

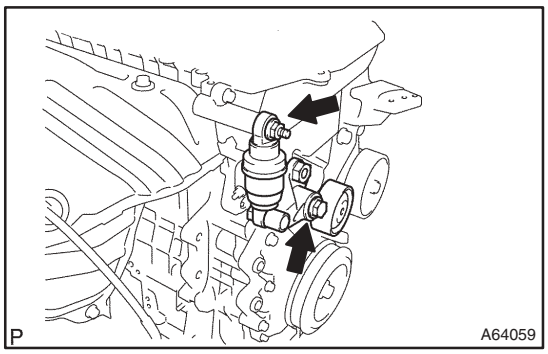

99. INSTALL V–RIBBED BELT TENSIONER ASSY

(a) Install the V–ribbed belt tensioner with the bolt and nut.
Torque:
29 N·m (296 kgf·cm, 21 ft·lbf) for nut
69 N·m (704 kgf·cm, 51 ft·lbf) for bolt

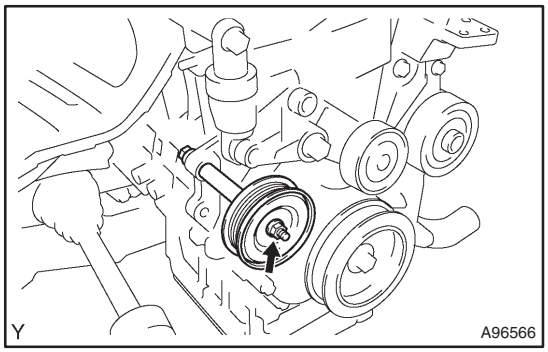

100. INSTALL V–RIBBED IDLER ASSY NO.1

(a) Install the tube and idler with the nut and bolt.
Torque: 39 N·m (400 kgf·cm, 29 ft·lbf)

101. INSTALL KNOCK SENSOR
(See Pub. No. RM1018E on page 10–17)

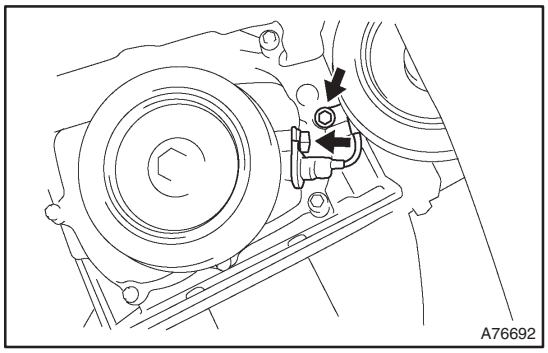

102. INSTALL CRANKSHAFT POSITION SENSOR

(a) Apply a light coat of engine oil to the O–ring on the crankshaft position sensor.

(b) Install the crankshaft position sensor with the 2 bolts.
Torque: 9.0 N·m (92 kgf·cm, 80 in.·lbf)

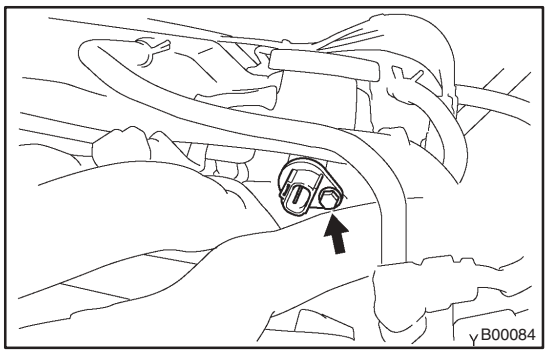

103. INSTALL CAMSHAFT POSITION SENSOR

(a) Apply a light coat of engine oil to the O–ring on the camshaft position sensor.

(b) Install the camshaft position sensor with the bolt.
Torque: 9.0 N·m (92 kgf·cm, 80 in.·lbf)

104. INSTALL ENGINE OIL PRESSURE SWITCH ASSY
(See Pub. No. RM1018E on page 17–1)
Adhesive: Part No.08833 – 00080, THREE BOND 1344.

105. INSTALL THERMOSTAT
(See Pub. No. RM1018E on page 16–9)

106. INSTALL WATER INLET

(a) Install the water inlet with the 2 nuts.
Torque: 11 N·m (112 kgf·cm, 8 ft·lbf)

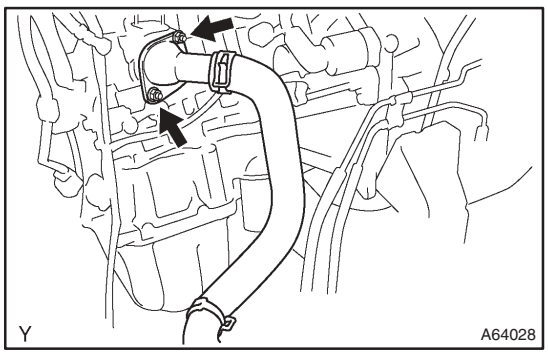

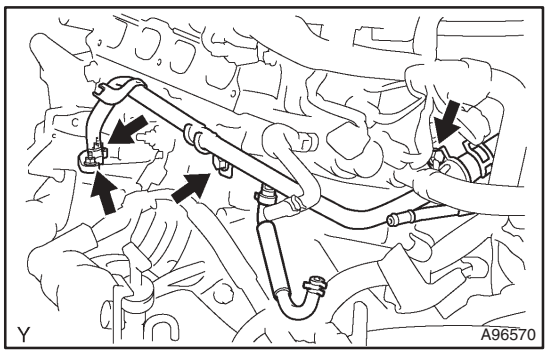

107. INSTALL WATER BY–PASS PIPE NO.1

(a) Install a new gasket and water by–pass pipe with the 2 nuts and 2 bolts.
Torque: 9.0 N·m (92 kgf·cm, 80 in.·lbf)

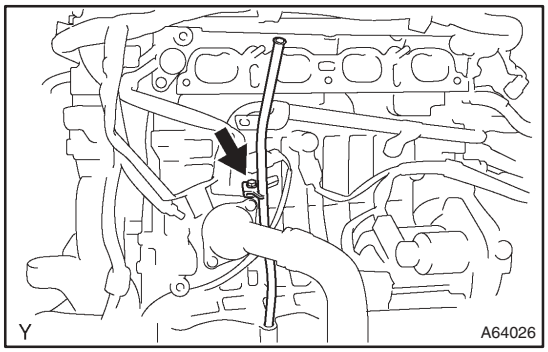

108. INSTALL OIL LEVEL GAGE GUIDE

(a) Apply a light coat of engine oil to a new O–ring and install it onto the oil level gage guide.
(b) Install the oil level gage guide with the bolt.
Torque: 13 N·m (133 kgf·cm, 10 ft·lbf)

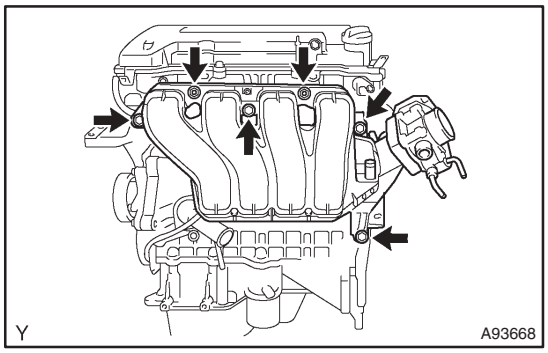

109. INSTALL INTAKE MANIFOLD

(a) Install a new gasket onto the intake manifold.
(b) Install the intake manifold and 2 clamp brackets with the 2 nuts and 4 bolts.
Torque: 30 N·m (306 kgf·cm, 22 ft·lbf)

110. INSTALL FUEL DELIVERY PIPE SUB–ASSY
(See Pub. No. RM1018E on page 11–11)

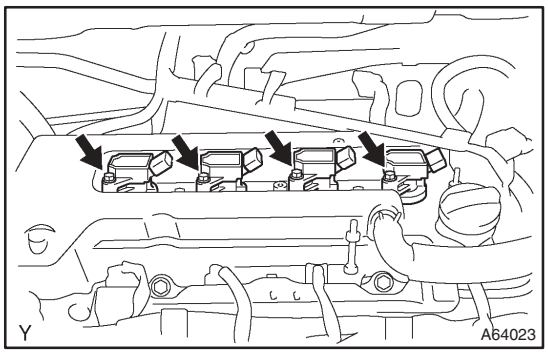

111. INSTALL IGNITION COIL ASSY

(a) Install the 4 ignition coils with the 4 bolts.
Torque: 9.0 N·m (92 kgf·cm, 80 in.·lbf)

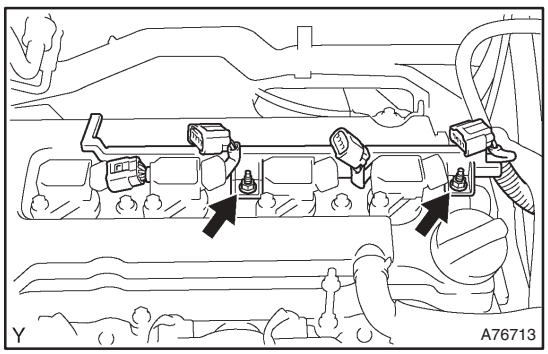

(b) Install the engine wire with the 2 nuts.
Torque: 9.0 N·m (92 kgf·cm, 80 in.·lbf)

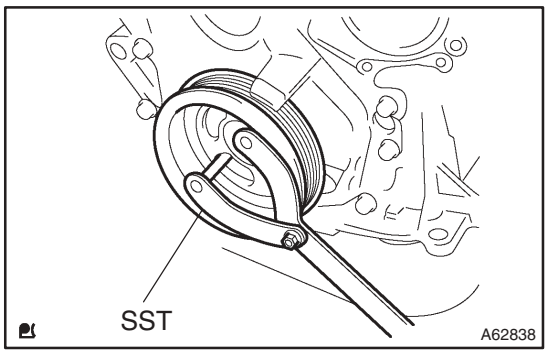

112. INSTALL FLYWHEEL SUB–ASSY (M/T TRANSAXLE)

(a) Hold the crankshaft with SST.
SST 09960–10010 (09962–01000, 09963–01000)

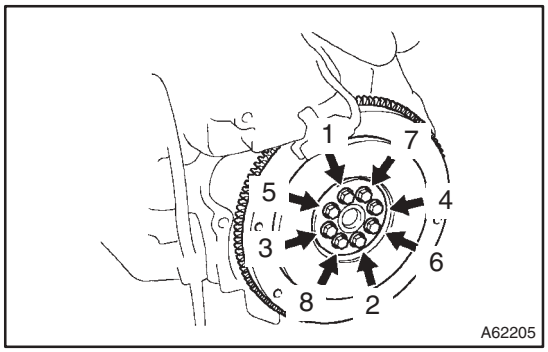

(b) Clean the bolt and bolt hole.
(c) Apply adhesive to the bolts.
Adhesive:
Part No. 09330–00070, THREE BOND or equivalent.
(d) Using several steps, install and tighten the 8 bolts uniformly in the sequence shown in the illustration.
Torque: 49 N·m (500 kgf·cm, 36 ft·lbf)

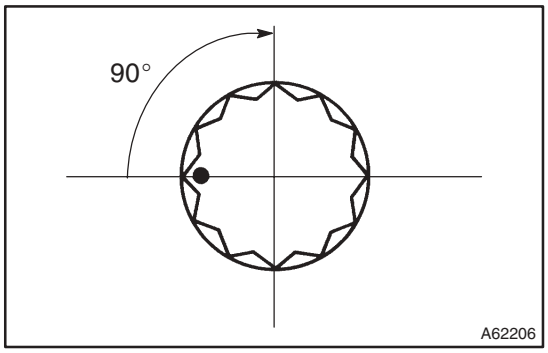

(e) Mark each bolt head with paint.
(f) Retighten the bolts by an additional 90° in the same sequence as step (d).
(g) Check that the paint marks are at a 90° angle to the original position.

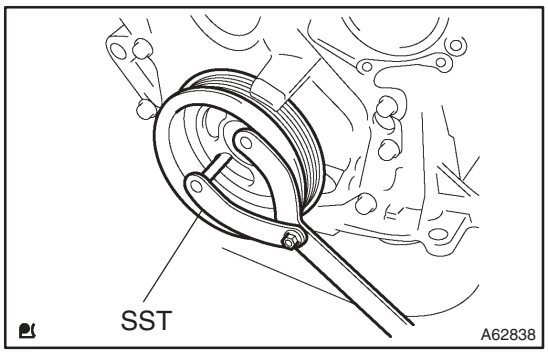

113. INSTALL DRIVE PLATE & RING GEAR SUB–ASSY (A/T TRANSAXLE)

(a) Hold the crankshaft with SST.
SST 09960–10010 (09962–01000, 09963–01000)

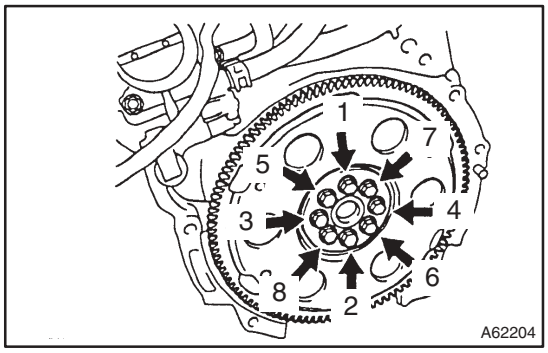

(b) Clean the bolt and bolt hole.
(c) Apply adhesive to the bolts.
Adhesive:
Part No. 09330–00070, THREE BOND or equivalent.
(d) Using several steps, install and tighten the 8 bolts uniformly in the sequence shown in the illustration.
Torque: 88 N·m (897 kgf·cm, 65 ft·lbf)

114. INSTALL CLUTCH DISC ASSY (M/T TRANSAXLE) (See Pub. No. RM1018E on page 42–26)
SST 09301–00210

115. INSTALL CLUTCH COVER ASSY (M/T TRANSAXLE) (See Pub. No. RM1018E on page 42–26)
SST 09301–00210

116. INSTALL MANUAL TRANSAXLE ASSY (M/T TRANSAXLE) (See Pub. No. RM1018E on page 41–15)

117. INSTALL AUTOMATIC TRANSAXLE ASSY (A/T TRANSAXLE) (See Pub. No. RM1018E on page 40–11)

118. INSTALL STARTER ASSY (See Pub. No. RM1018E on page 19–3)

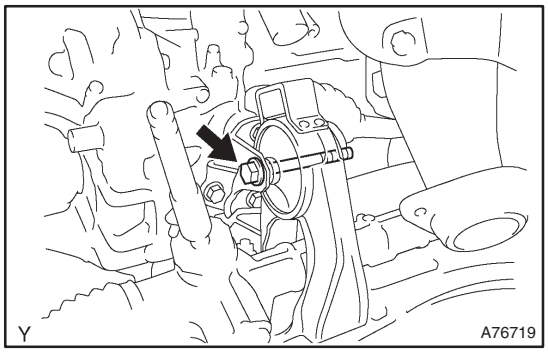

119. INSTALL FRONT SUSPENSION CROSSMEMBER W/CENTER MEMBER

(a) Attach the engine and transaxle assembly to the suspension crossmember and engine mounting member.

(b) Install the bolt which is used to secure the rear engine mounting bracket onto the mounting insulator.
Torque: 87 N·m (887 kgf·cm, 64 ft·lbf)

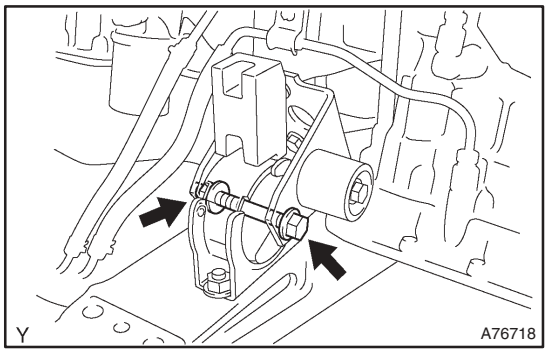

(c) Install the bolt which is used to secure the front engine mounting bracket onto the mounting insulator.
Torque: 52 N·m (530 kgf·cm, 38 ft·lbf)

120. INSTALL ENGINE ASSEMBLY WITH TRANSAXLE
SST 09670–00010

(a) Set the engine assembly with transaxle on the engine lifter.

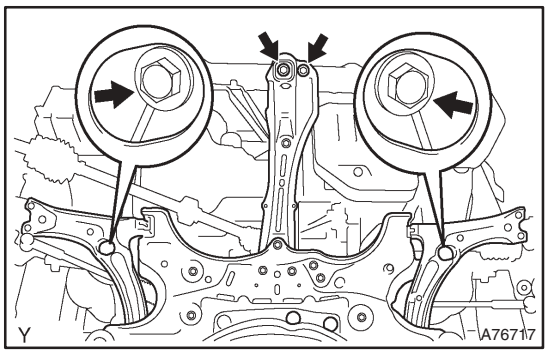

(b) Temporarily install the suspension crossmember with the 2 bolts and 2 nuts.

(c) Install the engine mounting insulator LH.
Torque: 80 N·m (816 kgf·cm, 59 ft·lbf)

(d) Install the engine mounting insulator RH.
Torque: 52 N·m (530 kgf·cm, 38 ft·lbf)

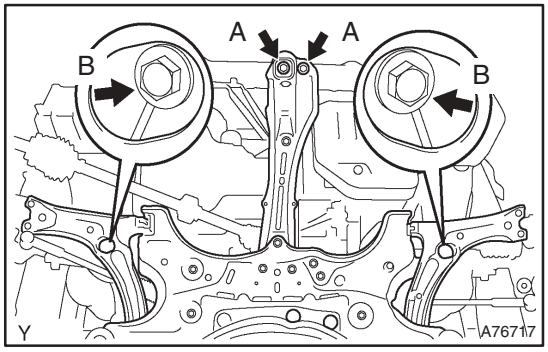

(e) Tighten the 2 bolts and 2 nuts.
Torque:
45 N·m (459 kgf·cm, 33 ft·lbf) for bolt A
133 N·m (1,356 kgf·cm, 98 ft·lbf) for nut B

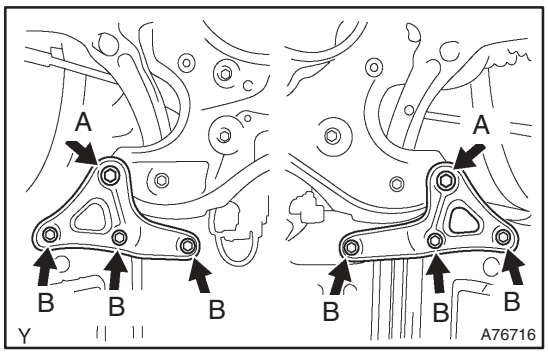

(f) Install the front suspension member brace LH and RH with the 8 bolts.
Torque:
133 N·m (1,356 kgf·cm, 98 ft·lbf) for bolt A
80 N·m (816 kgf·cm, 59 ft·lbf) for bolt B

121. INSTALL FRONT SUSPENSION ARM SUB–ASSY LOWER NO.1 LH
(See Pub. No. RM1018E on page 30–6)
122. INSTALL FRONT SUSPENSION ARM SUB–ASSY LOWER NO.1 RH
HINT:
Perform the same procedure as above on the opposite side.
123. INSTALL FRONT STABILIZER LINK ASSY LH (See Pub. No. RM1018E on page 30–6)
124. INSTALL FRONT STABILIZER LINK ASSY RH
HINT:
Perform the same procedure as above on the opposite side.
125. INSTALL TIE ROD END SUB–ASSY LH (See Pub. No. RM1018E on page 30–6)
126. INSTALL TIE ROD END SUB–ASSY RH
HINT:
Perform the same procedure as above on the opposite side.
127. INSTALL FRONT AXLE HUB LH NUT (See Pub. No. RM1018E on page 30–6)
128. INSTALL FRONT AXLE HUB RH NUT
HINT:
Perform the same procedure as above on the opposite side.
129. INSTALL EXHAUST PIPE ASSY FRONT (See Pub. No. RM1018E on page 15–2)
130. INSTALL FLOOR PANEL BRACE FRONT
Torque: 30 N·m (306 kgf·cm, 22 ft·lbf)
131. INSTALL STEERING INTERMEDIATE SHAFT (See Pub. No. RM1018E on page 50–9)
132. INSTALL GENERATOR ASSY (See Pub. No. RM1018E on page 19–7)
133. INSTALL COMPRESSOR AND MAGNETIC CLUTCH (W/ AIR CONDITIONING)
HINT:
- 1ZZ–FE (See Pub. No. RM1018E on page 55–74)
- 3ZZ–FE (See Pub. No. RM1018E on page 55–70)

134. INSTALL CLUTCH RELEASE CYLINDER ASSY (M/T TRANSAXLE)
(See Pub. No. RM1018E on page 41–15)
135. INSTALL FLOOR SHIFT CABLE TRANSMISSION CONTROL SHIFT (A/T TRANSAXLE)
(See Pub. No. RM1018E on page 40–11)

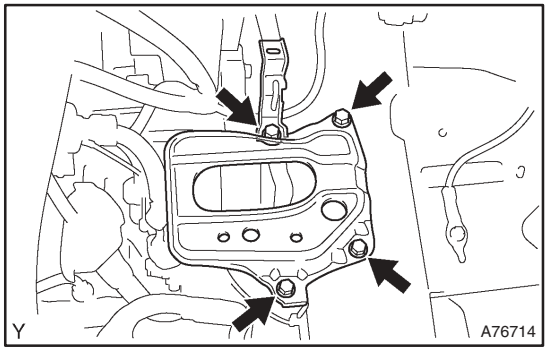

136. INSTALL BATTERY CARRIER
(a) Install the battery carrier and bracket with the 4 bolts.
Torque: 13 N·m (131 kgf·cm, 9 ft·lbf)

137. INSTALL BATTERY
Torque:
5.0 N·m (51 kgf·cm, 44 in.·lbf) for bolt
3.5 N·m (36 kgf·cm, 31 in.·lbf) for nut

138. INSTALL RADIATOR SUPPORT NO.1

(a) Install the 2 radiator supports with the 2 bolts.
Torque: 19 N·m (194 kgf·cm, 14 ft·lbf)

139. INSTALL AIR CLEANER CASE SUB–ASSY

(a) Install the air cleaner case with the 3 bolts.
Torque: 5.0 N·m (51 kgf·cm, 44 in.·lbf)

140. INSTALL AIR CLEANER ASSEMBLY WITH HOSE (See page 10–6)

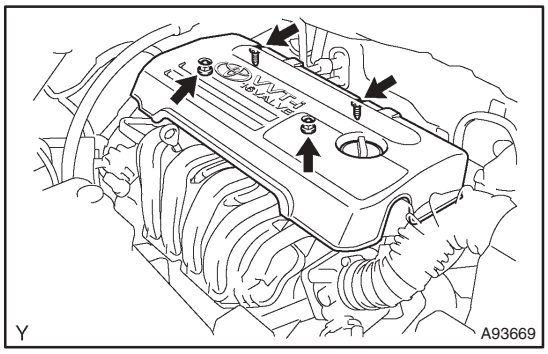

141. INSTALL CYLINDER HEAD COVER NO.2

(a) Install the cylinder head cover with the 2 nuts and 2 clips.
Torque: 7.0 N·m (71 kgf·cm, 62 in.·lbf)

142. INSTALL FRONT WHEELS
Torque: 103 N·m (1,050 kgf·cm, 76 ft·lbf)

143. ADD AUTOMATIC TRANSAXLE FLUID (A/T TRANSAXLE)

144. ADD ENGINE OIL

145. ADD ENGINE COOLANT (See page 16–5)

146. CHECK FOR ENGINE OIL LEAKS

147. CHECK FOR ENGINE COOLANT LEAKS (See page 16–1)

148. CHECK FOR FUEL LEAKS

149. CHECK FOR EXHAUST GAS LEAKS

150. CHECK IDLE SPEED AND IGNITION TIMING (See Pub. No. RM1018E on page 14–1)
SST 09843–18040

151. INSPECT CO/HC (See Pub. No. RM1018E on page 14–1)

152. INSPECT AND ADJUST FRONT WHEEL ALIGNMENT (See Pub. No. RM1018E on page 26–6)

153. CHECK ABS SPEED SENSOR SIGNAL

CYLINDER HEAD GASKET (1ZZ–FE/3ZZ–FE)(From February, 2004)

141CL–02

COMPONENTS

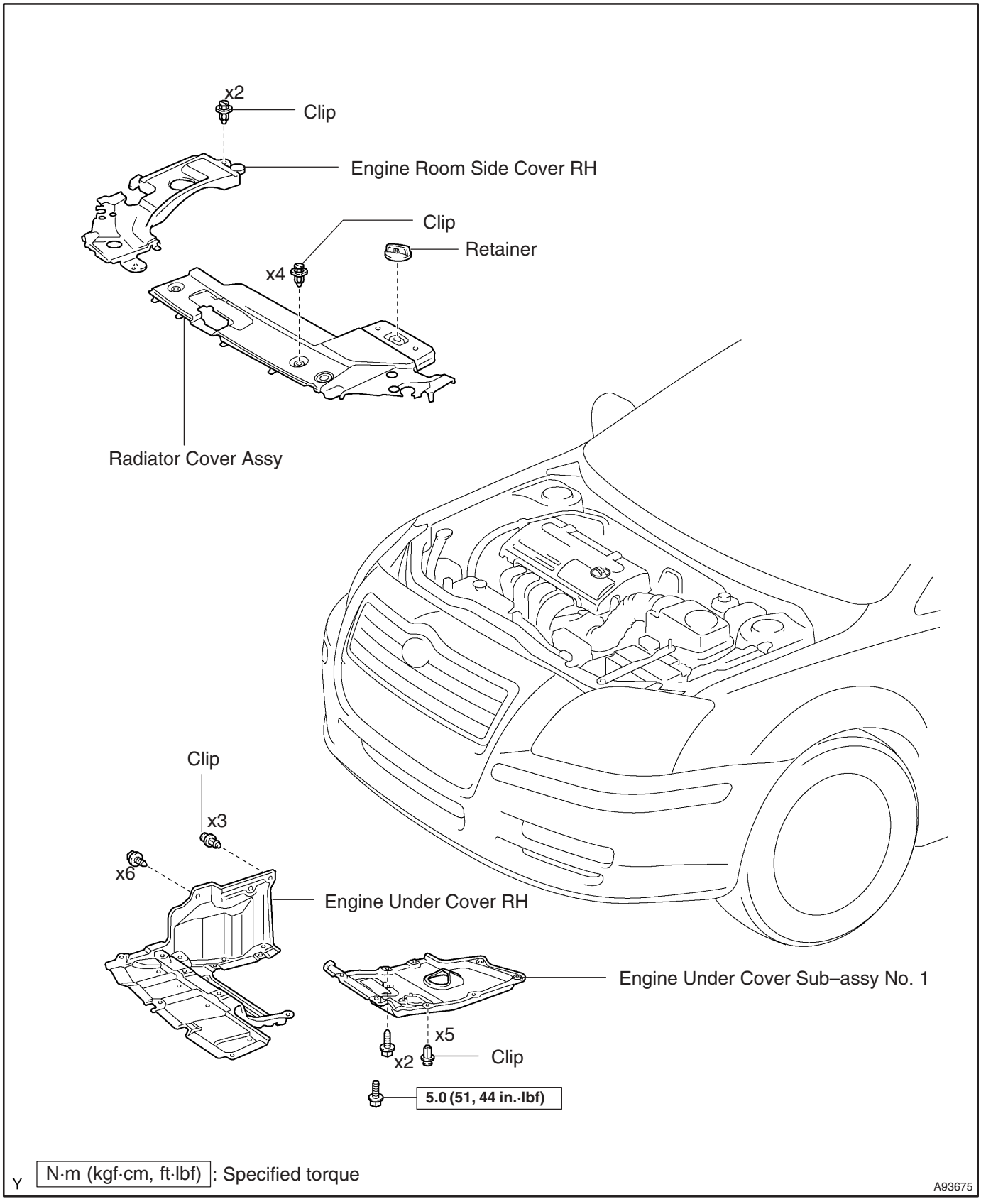

Y N·m (kgf·cm, ft·lbf): Specified torque

A93675

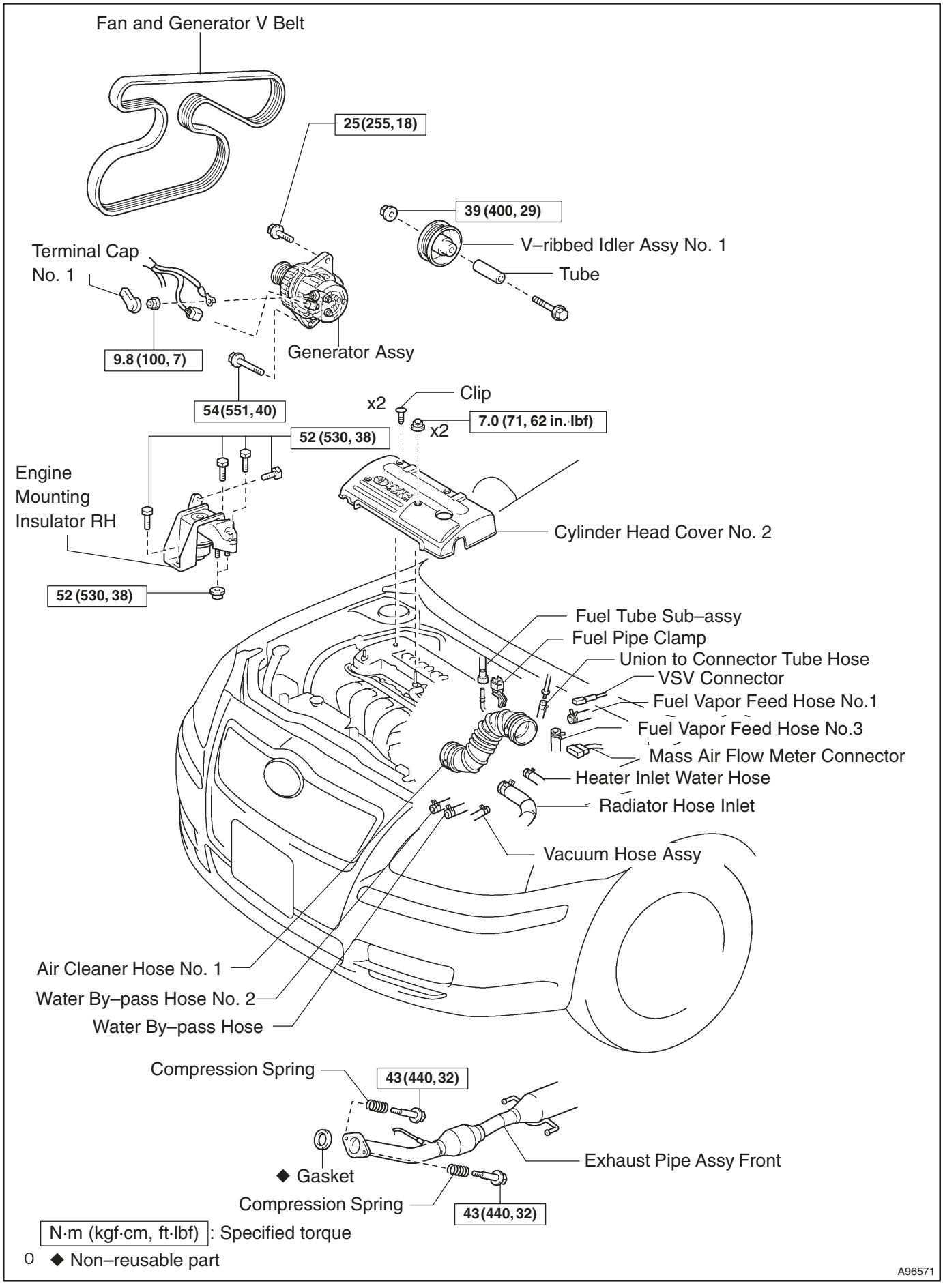
Fan and Generator V Belt
25 (255, 18)
39 (400, 29)
V–ribbed Idler Assy No. 1
Tube
Terminal Cap No. 1
9.8 (100, 7)
Generator Assy
54 (551, 40)
x2
Clip
x2
7.0 (71, 62 in.·lbf)
52 (530, 38)
Engine Mounting Insulator RH
52 (530, 38)
Cylinder Head Cover No. 2
Fuel Tube Sub–assy
Fuel Pipe Clamp
Union to Connector Tube Hose
VSV Connector
Fuel Vapor Feed Hose No.1
Fuel Vapor Feed Hose No.3
Mass Air Flow Meter Connector
Heater Inlet Water Hose
Radiator Hose Inlet
Vacuum Hose Assy
Air Cleaner Hose No. 1
Water By–pass Hose No. 2
Water By–pass Hose
Compression Spring
43 (440, 32)
Exhaust Pipe Assy Front
◆ Gasket
Compression Spring
43 (440, 32)
N·m (kgf·cm, ft·lbf) : Specified torque
◆ Non–reusable part
A96571

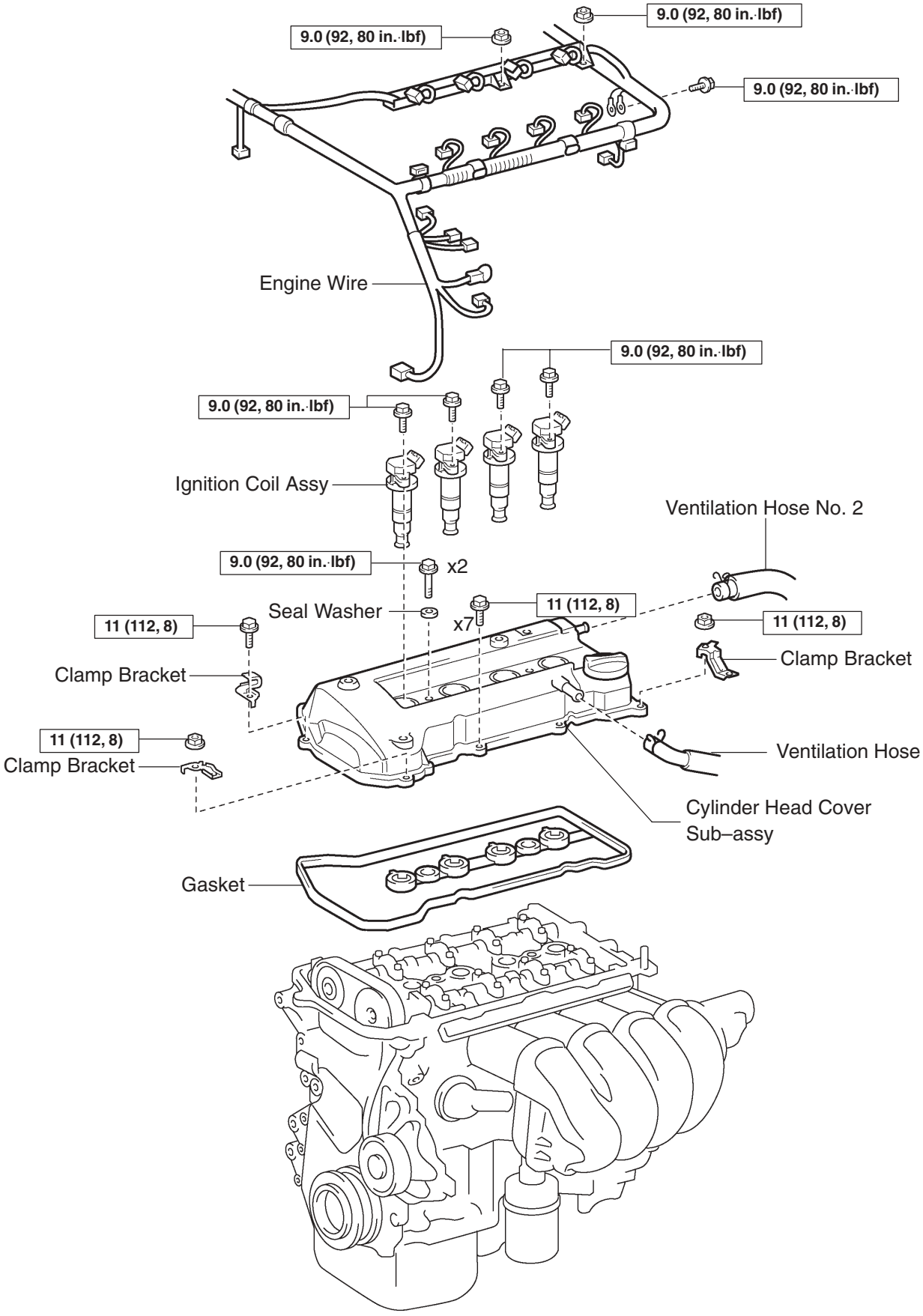

o N·m (kgf·cm, ft·lbf): Specified torque

A76709

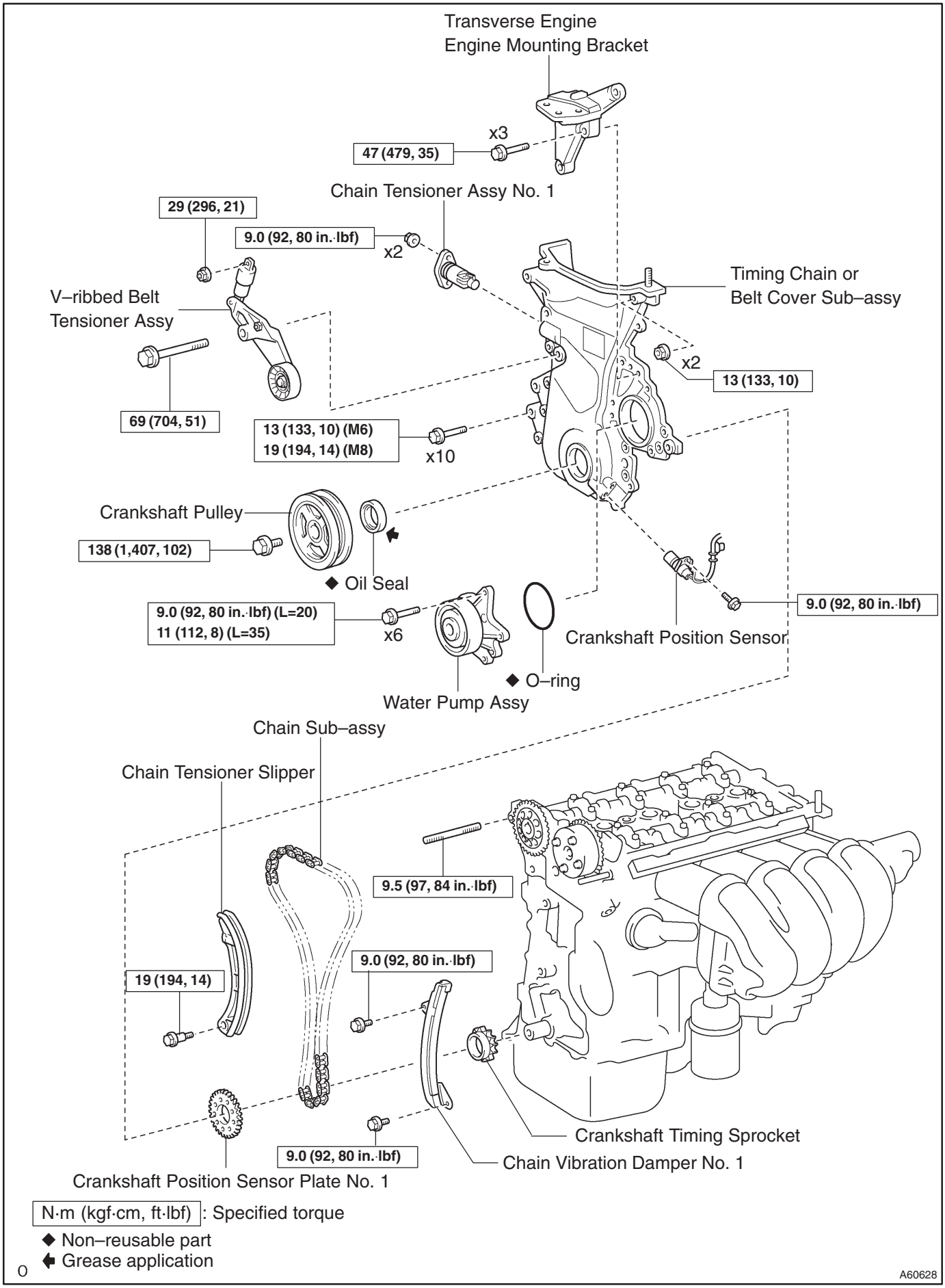
Transverse Engine
Engine Mounting Bracket
x3
47 (479, 35)
Chain Tensioner Assy No. 1
29 (296, 21)
9.0 (92, 80 in.·lbf)
x2
V–ribbed Belt
Tensioner Assy
Timing Chain or
Belt Cover Sub–assy
x2
13 (133, 10)
69 (704, 51)
13 (133, 10) (M6)
19 (194, 14) (M8)
x10
Crankshaft Pulley
138 (1,407, 102)
◆ Oil Seal
9.0 (92, 80 in.·lbf) (L=20)
11 (112, 8) (L=35)
x6
9.0 (92, 80 in.·lbf)
Crankshaft Position Sensor
◆ O–ring
Water Pump Assy
Chain Sub–assy
Chain Tensioner Slipper
9.5 (97, 84 in.·lbf)
19 (194, 14)
9.0 (92, 80 in.·lbf)
Crankshaft Timing Sprocket
9.0 (92, 80 in.·lbf)
Chain Vibration Damper No. 1
Crankshaft Position Sensor Plate No. 1
N·m (kgf·cm, ft·lbf) : Specified torque
◆ Non–reusable part
Grease application
A60628

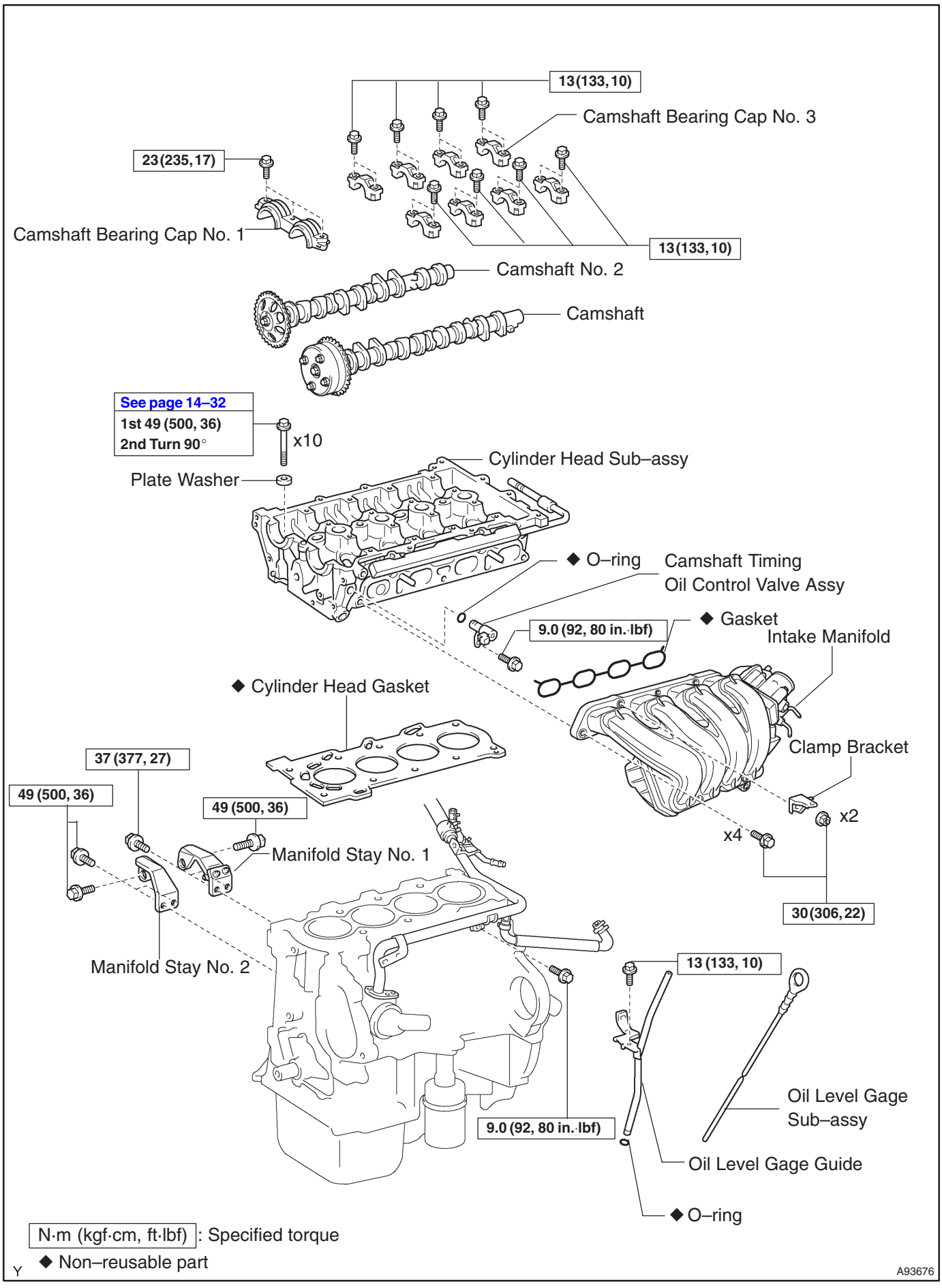
13(133,10)
Camshaft Bearing Cap No. 3
23(235,17)
Camshaft Bearing Cap No. 1
13(133,10)
Camshaft No. 2
Camshaft
See page 14–32
1st 49 (500, 36)
2nd Turn 90°
x10
Plate Washer
Cylinder Head Sub–assy
◆ O–ring
Camshaft Timing Oil Control Valve Assy
9.0 (92, 80 in.·lbf)
◆ Gasket
Intake Manifold
◆ Cylinder Head Gasket
Clamp Bracket
37 (377, 27)
49 (500, 36)
49 (500, 36)
Manifold Stay No. 1
x2
x4
30(306,22)
Manifold Stay No. 2
13 (133, 10)
9.0 (92, 80 in.·lbf)
Oil Level Gage Sub–assy
Oil Level Gage Guide
◆ O–ring
N·m (kgf·cm, ft·lbf): Specified torque
◆ Non–reusable part
Y
A93676

141UL–01

REPLACEMENT

1. **DISCHARGE FUEL SYSTEM PRESSURE (See Pub. No. RM1018E on page 11–1)**
2. **REMOVE RADIATOR SUPPORT OPENING COVER (See page 14–9)**
3. **REMOVE ENGINE ROOM COVER SIDE (See page 14–9)**
4. **REMOVE FRONT WHEEL RH**
5. **REMOVE ENGINE UNDER COVER SUB–ASSY NO.1 (See page 14–9)**
6. **REMOVE ENGINE UNDER COVER RH (See page 14–9)**
7. **DRAIN ENGINE COOLANT (See page 16–5)**

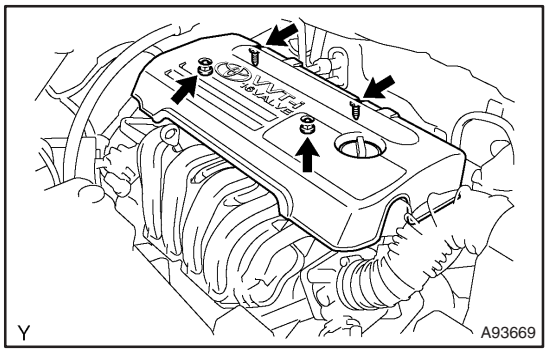

8. **REMOVE CYLINDER HEAD COVER NO.2**

(a) Remove the 2 nuts and 2 clips, then detach cylinder head cover No.2.

9. **REMOVE AIR CLEANER HOSE NO.1**

(a) Disconnect the VSV connector.
(b) Disconnect fuel vapor feed No. 1 hose from the VSV.
(c) Disconnect the fuel vapor feed hose from the VSV.
(d) Disconnect the ventilation hose from air cleaner hose No. 1.
(e) Loosen the 2 air cleaner hose clamp bolts, then remove the air cleaner hose.

10. **DISCONNECT WATER BY–PASS HOSE**

(a) Disconnect the water by–pass hose from the throttle body.

11. **DISCONNECT WATER BY–PASS HOSE NO.2**

(a) Disconnect water by–pass hose No. 2 from the throttle body.

12. **REMOVE EFI FUEL PIPE CLAMP (See Pub. No. RM1018E on page 11–11)**
13. **DISCONNECT FUEL TUBE SUB–ASSY (See Pub. No. RM1018E on page 11–11)**
14. **DISCONNECT UNION TO CONNECTOR TUBE HOSE**

(a) Disconnect the union to connector tube hose from the hose to hose tube.

15. **DISCONNECT RADIATOR HOSE INLET**

(a) Disconnect the radiator hose inlet from the cylinder head.

16. **DISCONNECT HEATER INLET WATER HOSE**

(a) Disconnect the heater inlet water hose from the cylinder head.

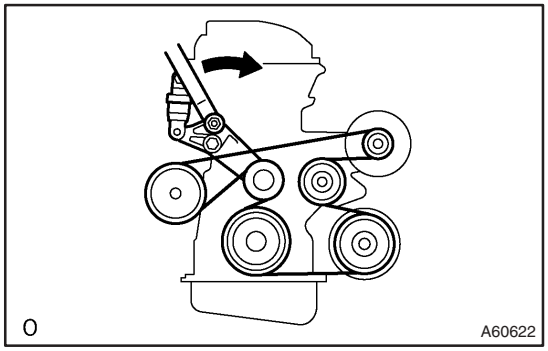

17. **REMOVE FAN AND GENERATOR V BELT**

(a) Turn the V–ribbed belt tensioner clockwise slowly and loosen it. Remove the fan and generator V belt, then put back the V–ribbed belt tensioner carefully.

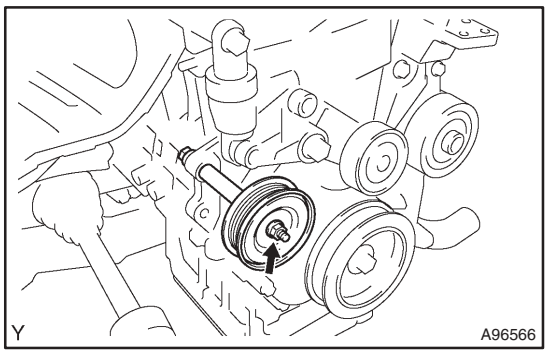

18. REMOVE V–RIBBED IDLER ASSY NO.1

(a) Remove the nut, bolt, tube and idler.

19. REMOVE GENERATOR ASSY

(See Pub. No. RM1018E on page 19–7)

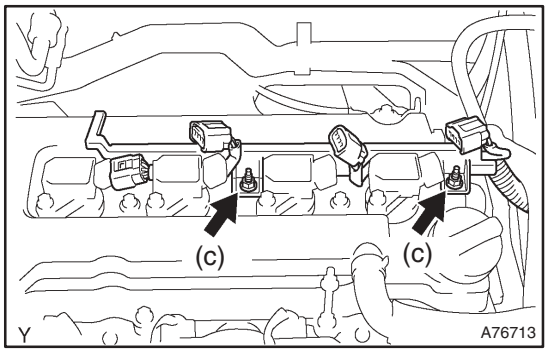

20. DISCONNECT IGNITION COIL ASSY

(a) Remove the 5 clamps from the 5 clamp brackets.

(b) Disconnect the 4 ignition coil connectors.

(c) Remove the 2 nuts which are used to secure the engine wire.

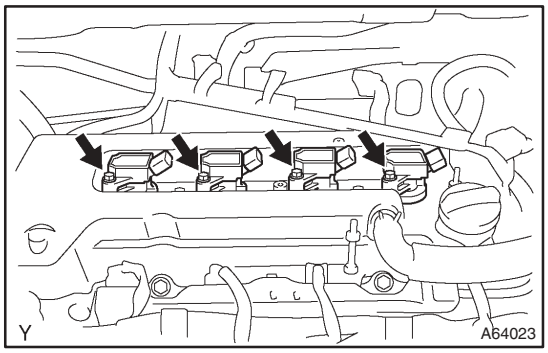

(d) Remove the 4 bolts and 4 ignition coils.

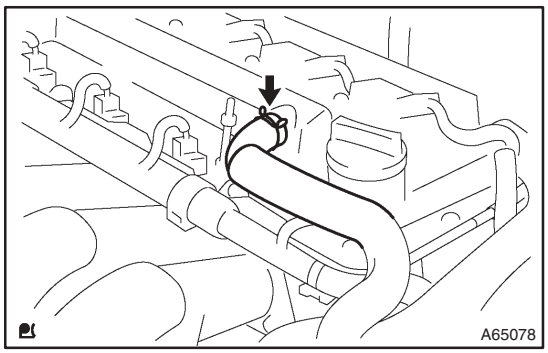

21. DISCONNECT VENTILATION HOSE

(a) Disconnect the ventilation hose from the cylinder head cover.

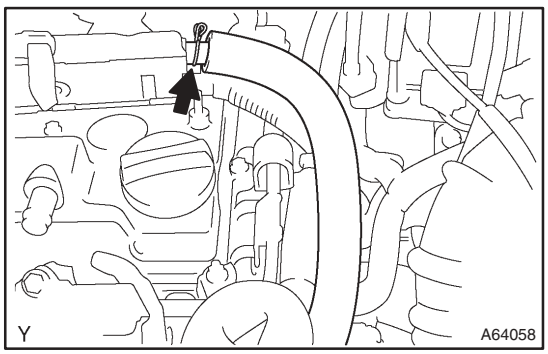

22. DISCONNECT VENTILATION HOSE NO.2

(a) Disconnect the ventilation hose from the cylinder head cover.

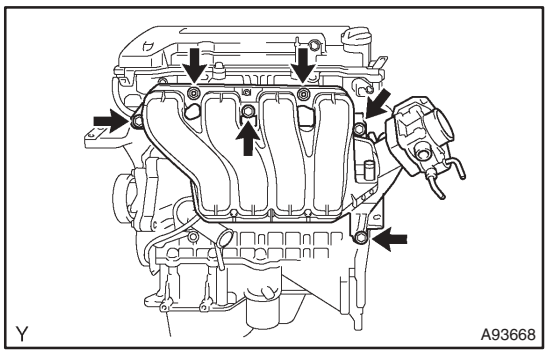

23. REMOVE INTAKE MANIFOLD

(a) Disconnect the throttle motor connector.
(b) Disconnect the vacuum hose from water by–pass pipe No. 1.
(c) Remove the 4 bolts, 2 nuts and 2 wire brackets.
(d) Remove the intake manifold and throttle body assembly.
(e) Remove the gasket from the intake manifold and the throttle body assembly.

24. REMOVE OIL LEVEL GAGE SUB–ASSY

(a) Remove the oil level gage from the oil level gage guide.

25. REMOVE OIL LEVEL GAGE GUIDE

(a) Disconnect the crankshaft position sensor clamp.
(b) Remove the bolt and oil level gage guide.

26. SEPARATE WATER BY–PASS PIPE NO.1

(a) Remove the 2 bolts which are used to secure the water by–pass pipe.

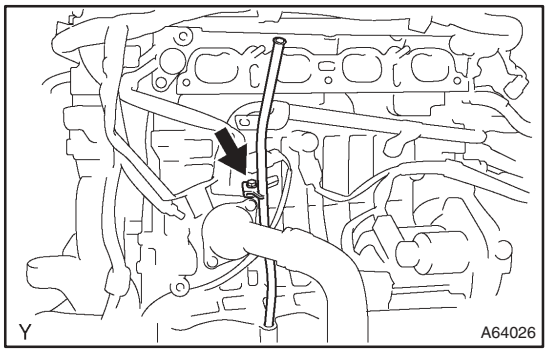

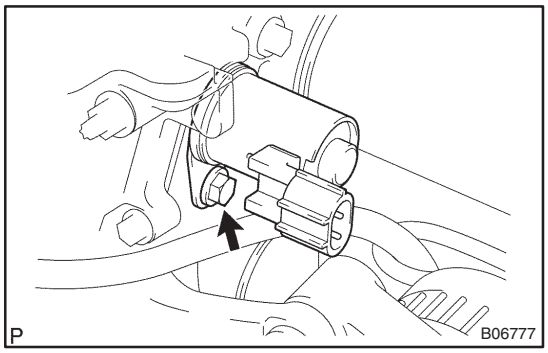

27. REMOVE CAMSHAFT TIMING OIL CONTROL VALVE ASSY

(a) Remove the bolt and camshaft timing oil control valve.

28. SEPARATE EXHAUST PIPE ASSY FRONT

(a) Remove the 2 bolts and 2 compression springs which are used to secure the front side of exhaust pipe.
(b) Remove the gasket.

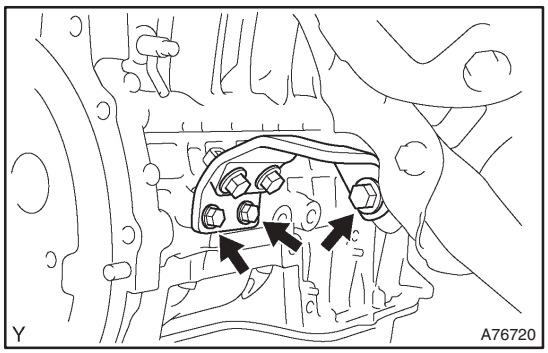

29. REMOVE MANIFOLD STAY

(a) Remove the 3 bolts and manifold stay.

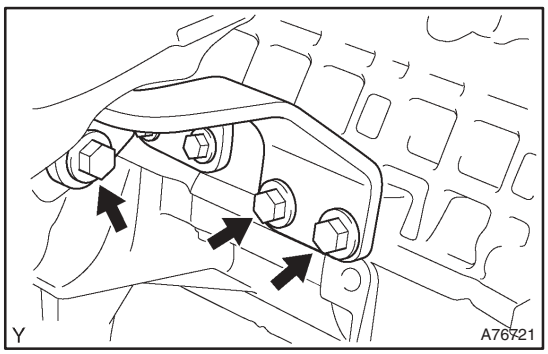

30. REMOVE MANIFOLD STAY NO.2

(a) Remove the 3 bolts and manifold stay No. 2.

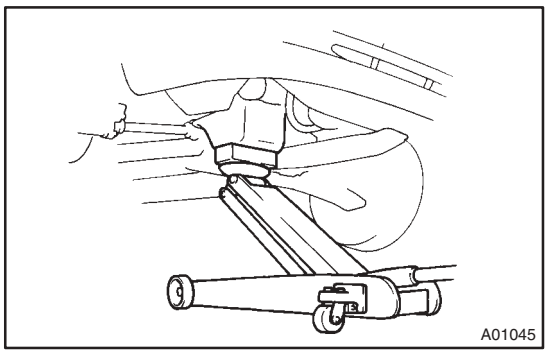

31. REMOVE ENGINE MOUNTING INSULATOR SUB–ASSY RH

(a) Place a wooden block on a jack underneath the engine. Remove the 4 bolts and 2 nuts, then detach the engine mounting insulator RH.

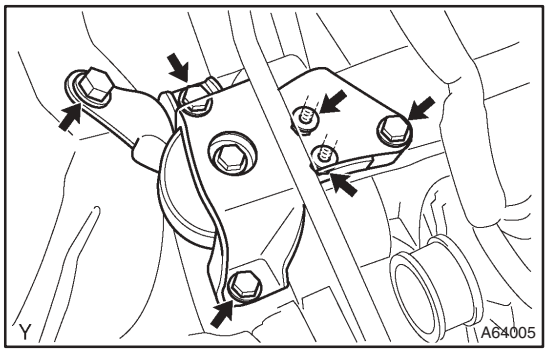

32. REMOVE CYLINDER HEAD COVER SUB–ASSY

(a) Remove the 9 bolts, 2 seal washers, 2 nuts and 3 clamp brackets.

(b) Remove the cylinder head cover.

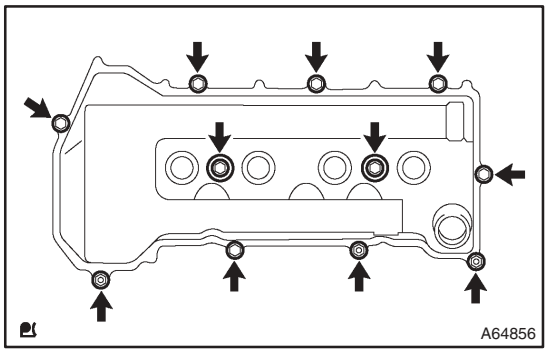

33. SET NO. 1 CYLINDER TO TDC/COMPRESSION

(a) Turn the crankshaft pulley until the timing notch is aligned with the timing mark ”0” of the timing chain cover.

(b) Check that the point marks of the camshaft timing sprocket and VVT timing sprocket are in a straight line on the timing chain cover surface as shown in the illustration.

HINT:

If not, turn the crankshaft 1 revolution (360°) to align the marks as above.

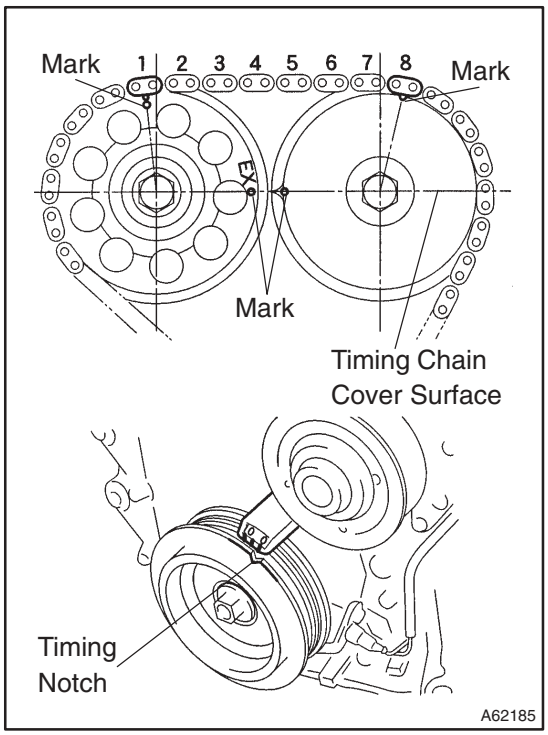

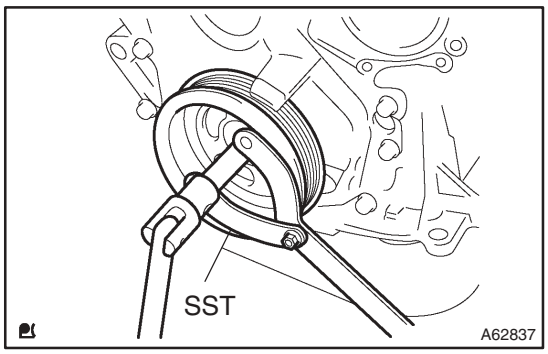

34. REMOVE CRANKSHAFT PULLEY

(a) Using SST, remove the pulley bolt.
SST 09960–10010 (09962–01000, 09963–01000)

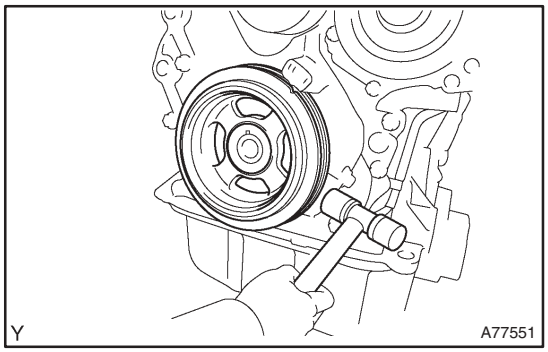

(b) Remove the crankshaft pulley from the crankshaft.

HINT:

If the crankshaft pulley key is stuck, tap it with a plastic–surfaced hammer so that it can be removed.

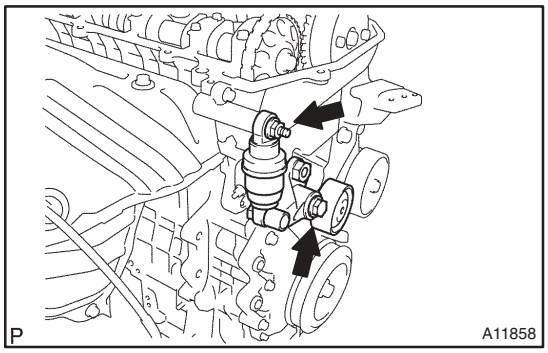

35. REMOVE V–RIBBED BELT TENSIONER ASSY

(a) Remove the bolt and nut, then detach the V–ribbed belt tensioner.

HINT:

Jack up and down to remove the bolt.

36. REMOVE WATER PUMP ASSY
(See Pub. No. RM1018E on page 16–9)

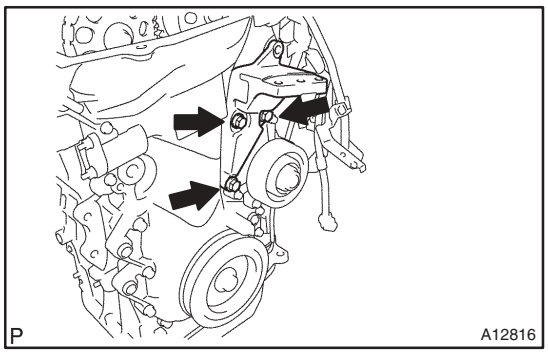

37. REMOVE TRANSVERSE ENGINE ENGINE MOUNTING BRACKET

(a) Remove the 3 bolts and transverse engine engine mounting bracket.

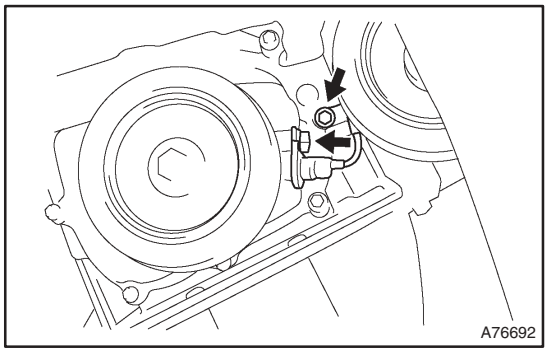

38. REMOVE CRANKSHAFT POSITION SENSOR

(a) Remove the 2 bolts which are used to secure the crankshaft position sensor.

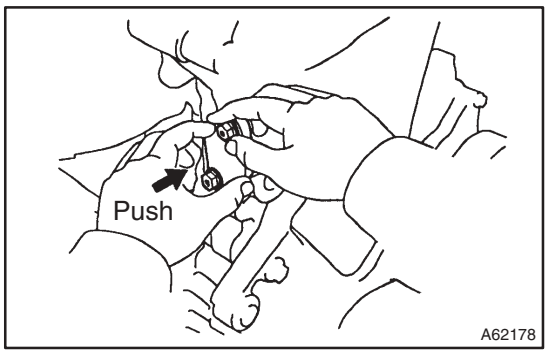

39. REMOVE CHAIN TENSIONER ASSY NO.1

(a) Remove the 2 nuts and chain tensioner.

NOTICE:

Do not revolve the crankshaft without the chain tensioner.

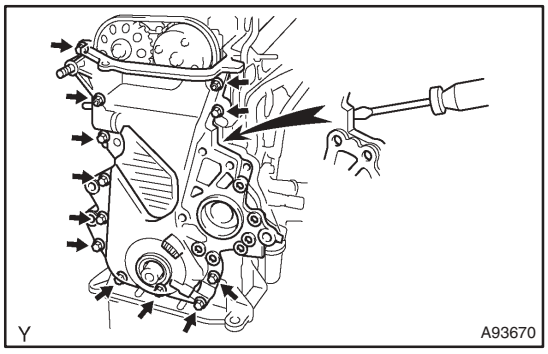

40. REMOVE TIMING CHAIN OR BELT COVER SUB–ASSY

(a) Remove the 10 bolts and 2 nuts.

(b) Using a torx wrench socket (E8), remove the stud bolt.

(c) Remove the timing chain cover by using a screwdriver to pry between the cylinder block and cylinder head.

NOTICE:

Be careful not to damage the timing chain cover, the cylinder head and the cylinder block.

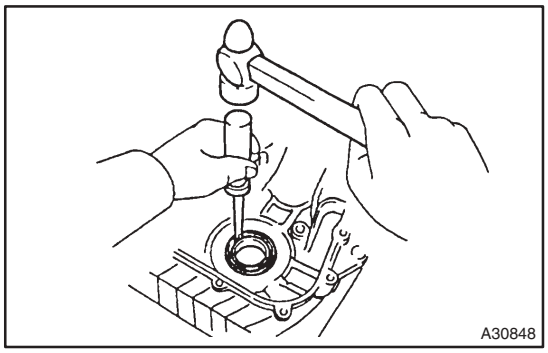

41. REMOVE TIMING CHAIN OR BELT COVER OIL SEAL

(a) Using a screwdriver, remove the oil seal.

42. REMOVE CRANKSHAFT POSITION SENSOR PLATE NO.1

43. REMOVE CHAIN TENSIONER SLIPPER

(a) Remove the bolt and chain tensioner slipper.

44. REMOVE CHAIN VIBRATION DAMPER NO.1

(a) Remove the 2 bolts and chain vibration damper.

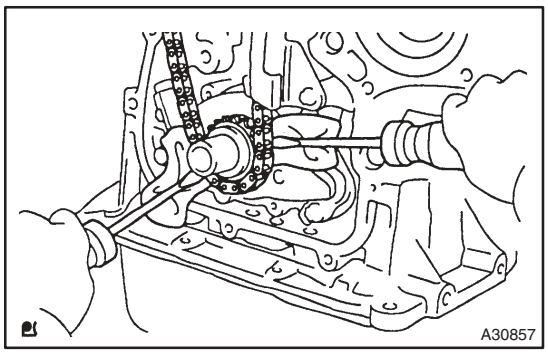

45. REMOVE CHAIN SUB–ASSY

(a) Remove the timing chain by prying the crankshaft timing gear using screwdrivers as shown in the illustration.

NOTICE:

- **Put a shop rag to protect the engine.**
- **In case of revolving the camshafts with the chain off the sprockets, turn the crankshaft 1/4 revolution counterclockwise to prevent the valves from touching the pistons.**

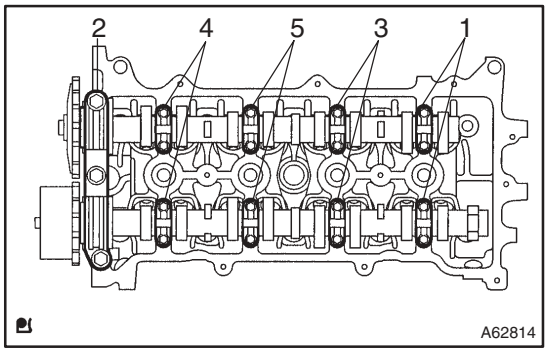

46. REMOVE CAMSHAFT

(a) Using several steps, loosen and remove the 19 bearing cap bolts uniformly in the sequence shown in the illustration. Remove the 9 bearing caps and both intake and exhaust camshafts.

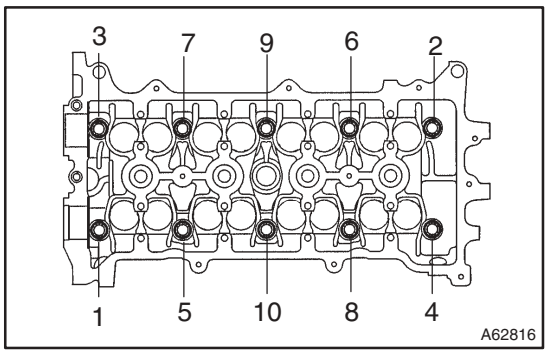

47. REMOVE CYLINDER HEAD SUB–ASSY

(a) Using several steps, loosen and remove the 10 cylinder head bolts with a 10 mm hexagon wrench uniformly in the sequence shown in the illustration. Remove the 10 cylinder head bolts and 10 plate washers.

(b) Remove the cylinder head.

48. REMOVE CYLINDER HEAD GASKET

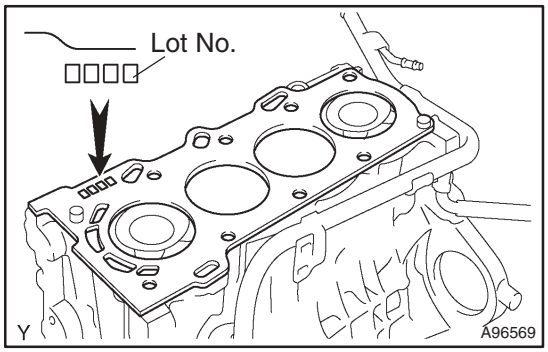

49. INSTALL CYLINDER HEAD GASKET

(a) Place a new cylinder head gasket on the cylinder block with the Lot No. stamp facing upward.

NOTICE:

- **Pay attention to the mounting orientation.**
- **Place the cylinder head on the gasket gently in order not to damage the gasket.**

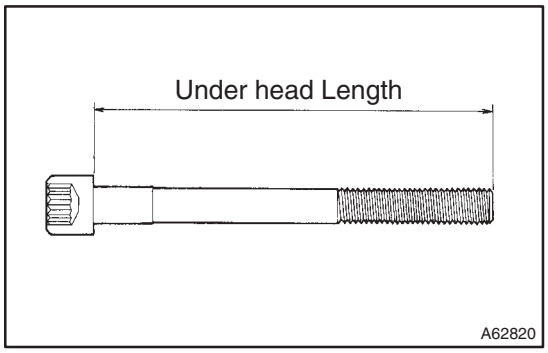

50. INSPECT CYLINDER HEAD SET BOLT

(a) Using a vernier calipers, measure the length of cylinder head bolt from the seat to the end.

Standard length: 146.8 to 148.2 mm (5.780 to 5.835 in.)
Maximum length: 148.5 mm (5.846 in.)

If the length exceeds the maximum, replace the bolt.

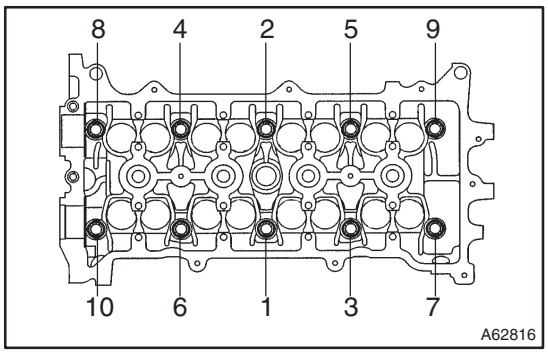

51. INSTALL CYLINDER HEAD SUB–ASSY

HINT:

The cylinder head bolts are tightened in 2 successive steps.

(a) Apply a light coat of engine oil to the threads of the cylinder head bolts.

(b) Using several steps, install and tighten the 10 cylinder head bolts and plate washers with a 10 mm hexagon wrench uniformly in the sequence shown in the illustration.

Torque: 49 N·m (500 kgf·cm, 36 ft·lbf)

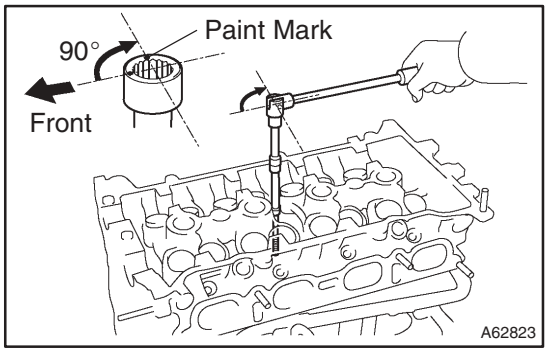

(c) Mark the front of the cylinder head bolt with paint.

(d) Retighten the cylinder head bolts by an additional 90° in the same sequence as step (b).

(e) Check that the paint mark of each bolt is at a 90° angle to the front.

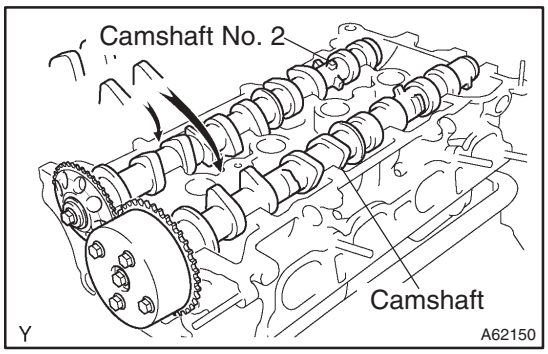

52. INSTALL CAMSHAFT

(a) Apply a light coat of engine oil to the camshaft journals.

(b) Place the 2 camshafts on the cylinder head as shown in the illustration.

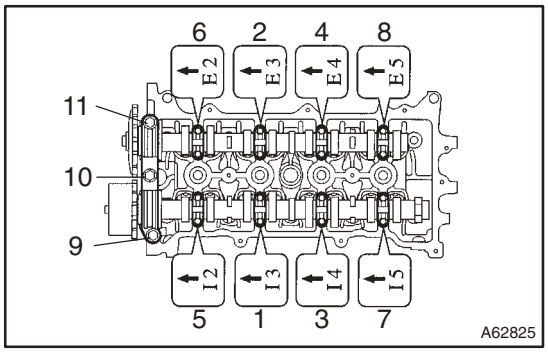

(c) Examine the front marks and numbers, then tighten the bolts in the sequence shown in the illustration.

Torque:
23 N·m (235 kgf·cm, 17 ft·lbf) for bearing cap No. 1
13 N·m (133 kgf·cm, 10 ft·lbf) for bearing cap No. 3

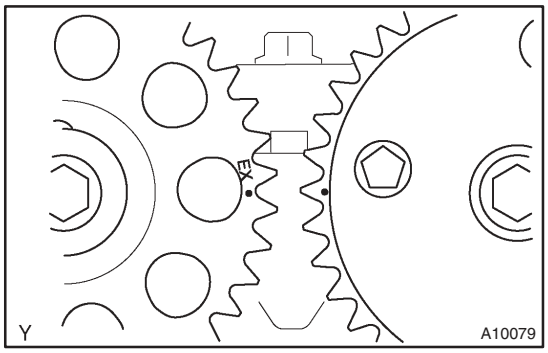

53. INSTALL CHAIN SUB–ASSY

(a) Set No. 1 cylinder to TDC/compression.

(1) Using a wrench, turn the camshafts until the timing marks of the 2 camshaft timing sprockets are aligned.

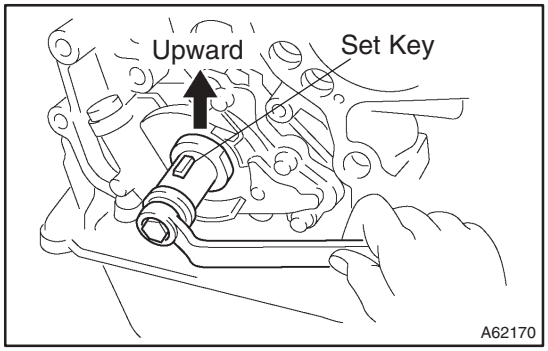

(2) Using a crankshaft pulley bolt, turn the crankshaft and set the set key on the crankshaft upward.

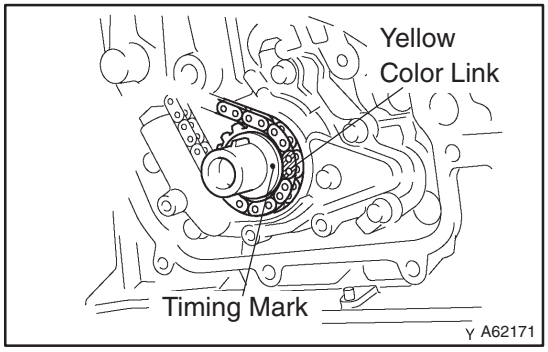

(b) Install the timing chain onto the crankshaft timing sprocket with the yellow color link and the timing mark on the crankshaft timing sprocket aligned.

HINT:

Three yellow color links are on the chain.

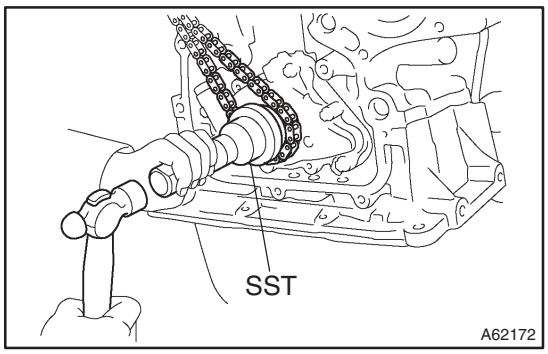

(c) Using SST, install the crankshaft timing sprocket.
SST 09223–22010

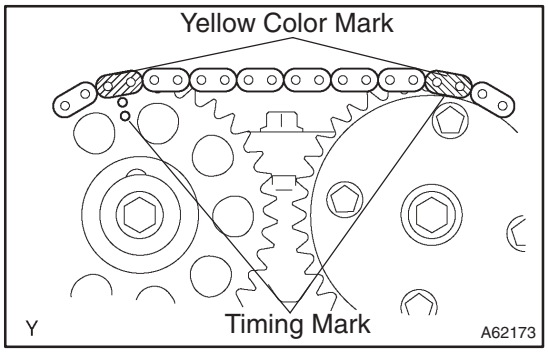

(d) Install the timing chain onto the camshaft timing sprockets with the yellow color links and timing marks on the camshaft timing sprockets aligned.

54. INSTALL CHAIN VIBRATION DAMPER NO.1

(a) Install the chain vibration damper with the 2 bolts.
Torque: 9.0 N·m (92 kgf·cm, 80 in.·lbf)

55. INSTALL CHAIN TENSIONER SLIPPER

(a) Install the chain tensioner slipper with the bolt.
Torque: 19 N·m (194 kgf·cm, 14 ft·lbf)

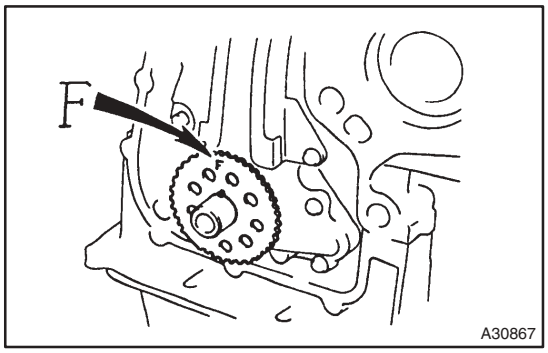

56. INSTALL CRANKSHAFT POSITION SENSOR PLATE NO.1

(a) Install the plate with the ”F” mark facing forward.

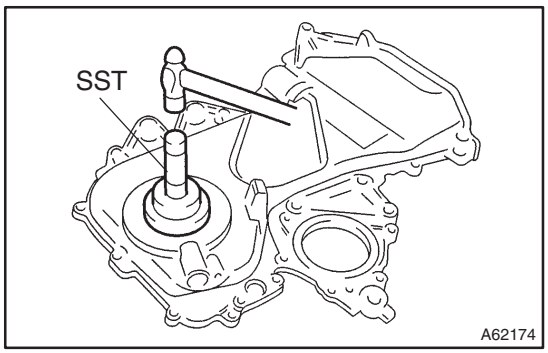

57. INSTALL TIMING CHAIN OR BELT COVER OIL SEAL

(a) Apply multi–purpose grease to a new oil seal lip.

(b) Using SST, tap in the oil seal until its surface is flush with the timing chain cover edge.
SST 09223–22010

NOTICE:
Keep the lip free of foreign objects.

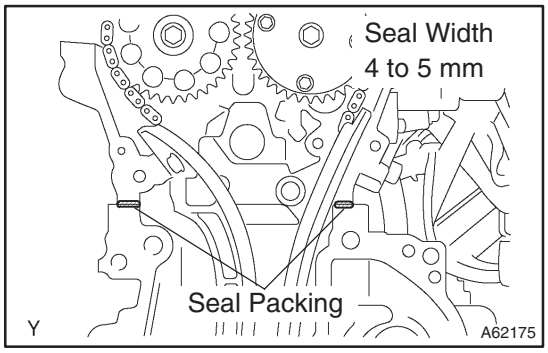

58. INSTALL TIMING CHAIN OR BELT COVER SUB–ASSY

(a) Remove any old packing material (FIPG) from the contact surface.

(b) Apply a continuous bead of seal packing (Diameter 3.5 mm to 4.5 mm (0.1379 to 0.177 in.)) as shown in the illustration.

Seal packing:

Water pump part: part No. 08826–00100 or equivalent

Other part: part No. 08826–00080 or equivalent.

NOTICE:

- **Remove any oil from the contact surface.**
- **Install the oil pan within 3 minutes after applying seal packing.**
- **Do not expose the seal to engine oil for at least 2 hours after installation.**
- **Do not apply seal packing too much more than the specified amount.**

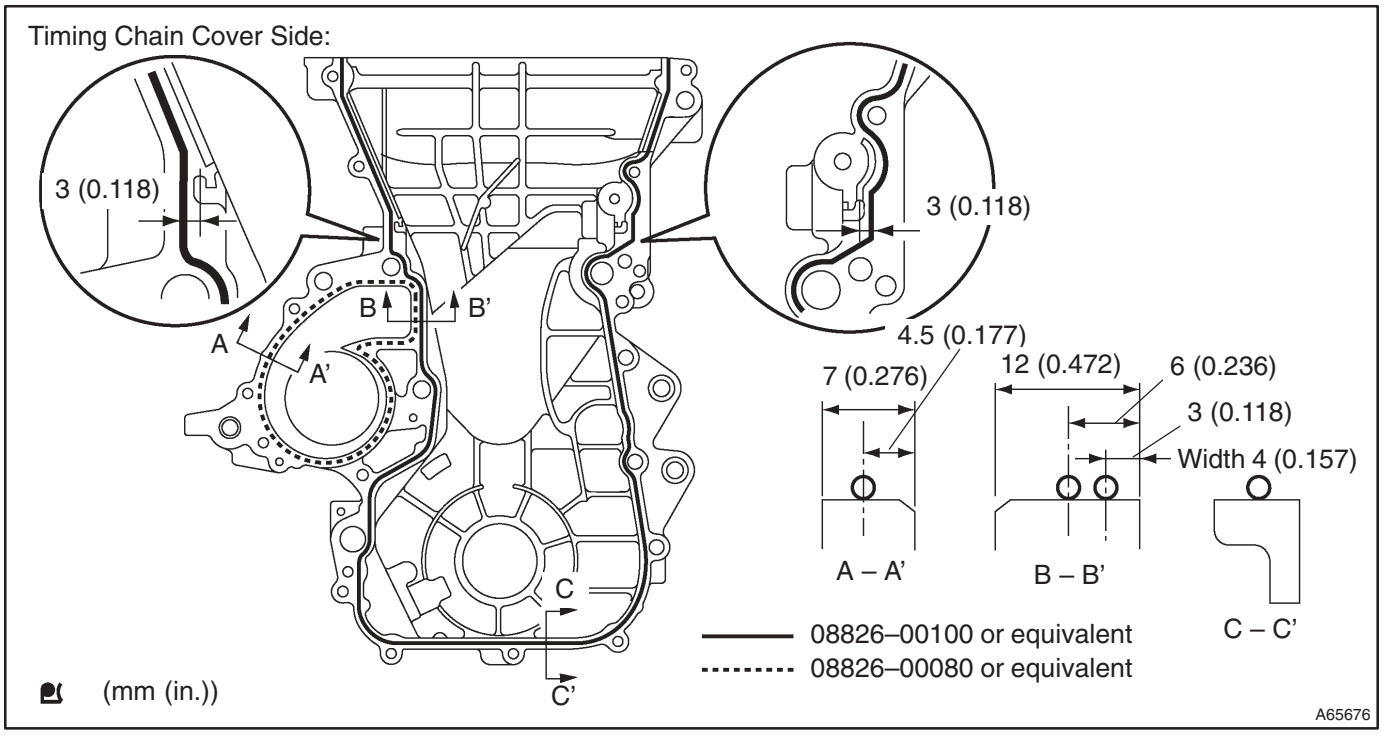

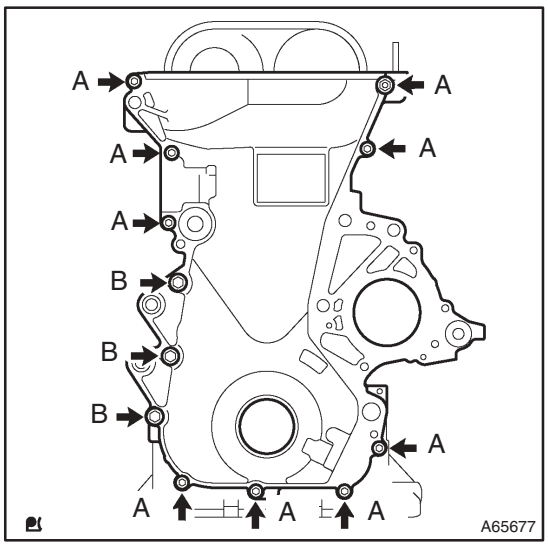

(c) Install the timing chain cover with the 10 bolts and 2 nuts.

Torque:

13 N·m (133 kgf·cm, 10 ft·lbf) for A

19 N·m (194 kgf·cm, 14 ft·lbf) for B

(d) Using a torx wrench socket (E8), install the stud bolt.

Torque: 9.5 N·m (97 kgf·cm, 84 in.·lbf)

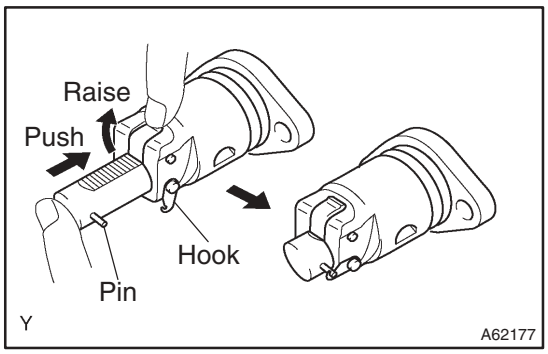

59. INSTALL CHAIN TENSIONER ASSY NO.1

(a) Check that the O–ring is clean, then set the hook as shown in the illustration.

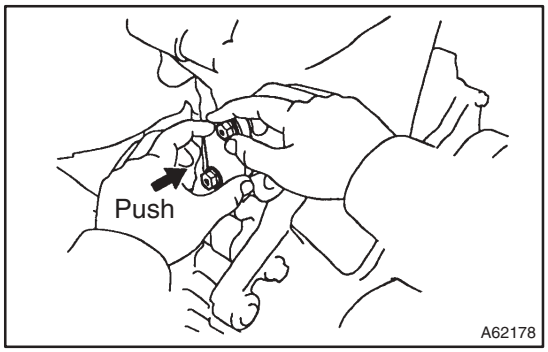

(b) Apply engine oil to the chain tensioner and install it with the 2 nuts.

Torque: 9.0 N·m (92 kgf·cm, 80 in.·lbf)

NOTICE:

If the hook released the plunger during installation, re–hook the plunger.

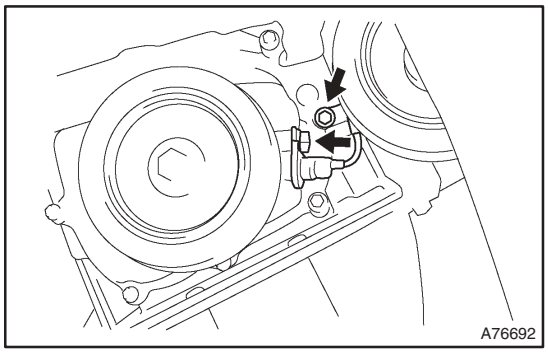

60. INSTALL CRANKSHAFT POSITION SENSOR

(a) Apply a light coat of the engine oil to the O–ring on the crankshaft position sensor.

(b) Install the crankshaft position sensor with the 2 bolts.

Torque: 9.0 N·m (92 kgf·cm, 80 in.·lbf)

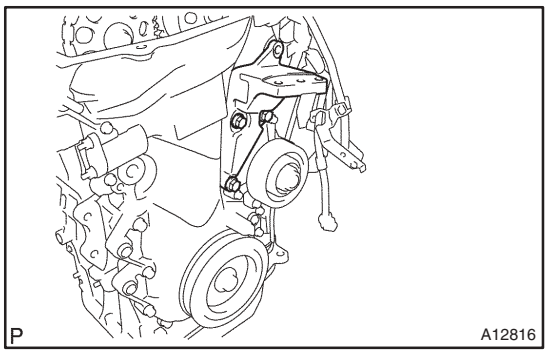

61. INSTALL TRANSVERSE ENGINE ENGINE MOUNTING BRACKET

(a) Install the transverse engine engine mounting bracket with the 3 bolts.

Torque: 47 N·m (479 kgf·cm, 35 ft·lbf)

62. INSTALL WATER PUMP ASSY

(See Pub. No. RM1018E on page 16–9)

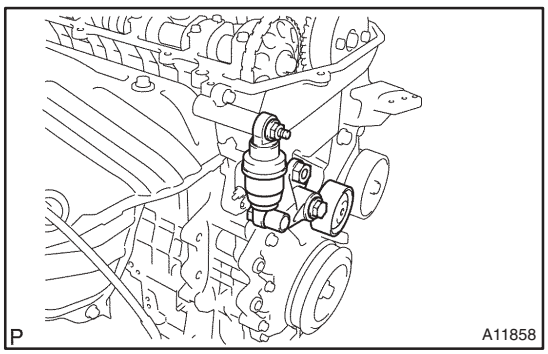

63. INSTALL V–RIBBED BELT TENSIONER ASSY

(a) Install the V–ribbed belt tensioner with the nut and bolt.

Torque:

29 N·m (296 kgf·cm, 21 ft·lbf) for nut

69 N·m (704 kgf·cm, 51 ft·lbf) for bolt

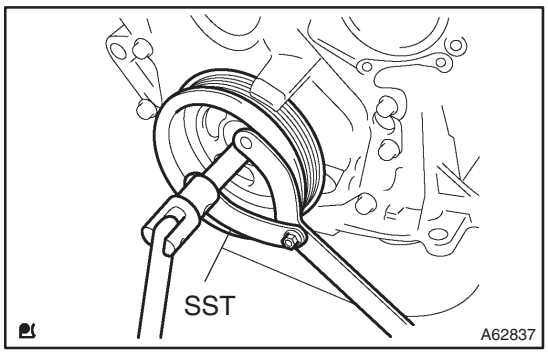

64. INSTALL CRANKSHAFT PULLEY

(a) Align the keyway of the pulley with the key located on the crankshaft, then slide the pulley into place.

(b) Using SST, install the crankshaft pulley bolt.
SST 09960–10010 (09962–01000, 09963–01000)
Torque: 138 N·m (1,407 kgf·cm, 102 ft·lbf)

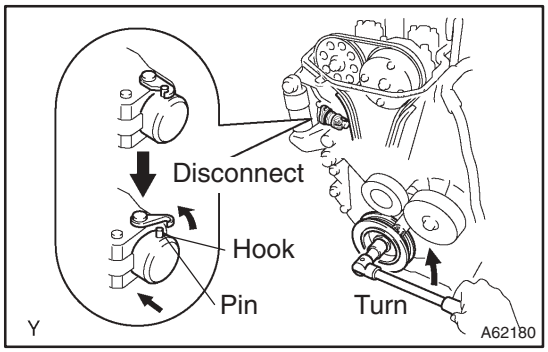

(c) Turn the crankshaft counterclockwise, then take the hook off the knock pin to release the plunger.

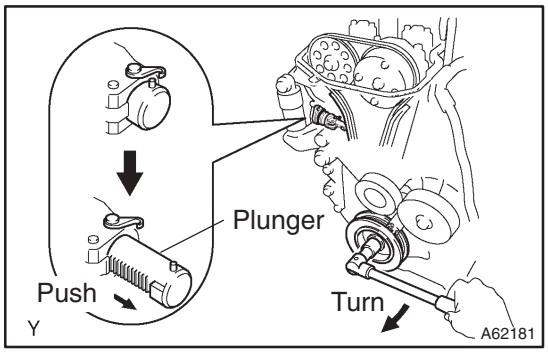

(d) Turn the crankshaft clockwise, then check that the plunger is extended.

HINT:
If the plunger is not extended, press the slipper into the chain tensioner using a screwdriver so that the hook is taken off from the knock pin and the plunger can be extended.

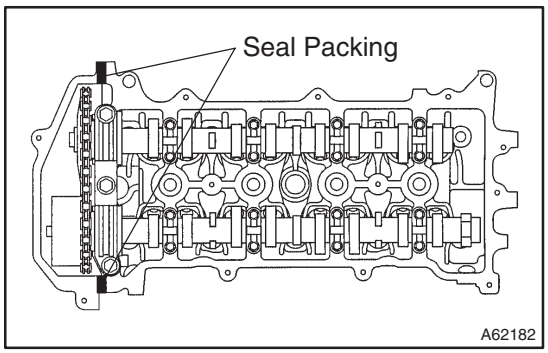

65. INSTALL CYLINDER HEAD COVER SUB–ASSY

(a) Remove any old packing (FIPG) material.

(b) Apply seal packing to the 2 locations as shown in the illustration.
Seal packing: Part No. 08826–00080 or equivalent

NOTICE:

- **Remove any oil from the contact surface.**
- **Install the cylinder head cover within 3 minutes of applying seal packing.**
- **Do not expose the seal to engine oil for at least 2 hours after installation.**

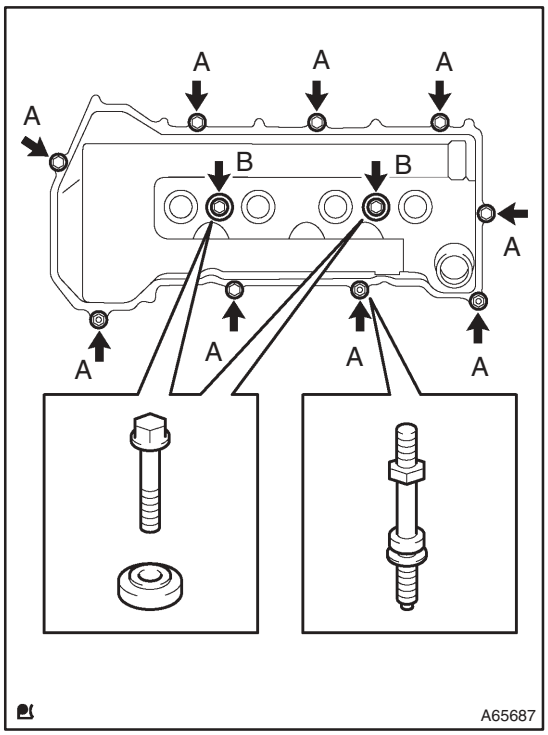

(c) Install the cylinder head cover and 3 cable brackets with the 9 bolts, 2 seal washers and 2 nuts. Tighten the bolts and nuts uniformly in several steps.
Torque:
11 N·m (112 kgf·cm, 8 ft·lbf) for A
9.0 N·m (92 kgf·cm, 80 in.·lbf) for B

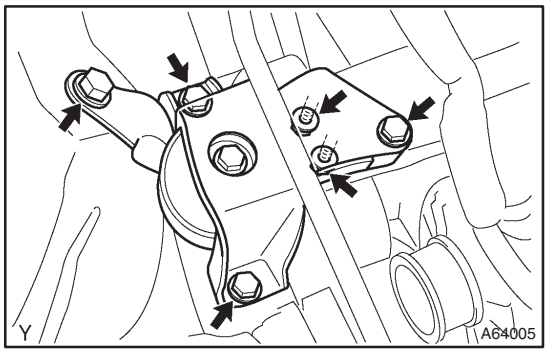

66. INSTALL ENGINE MOUNTING INSULATOR SUB–ASSY RH

(a) Install the engine mounting insulator with the 4 bolts and 2 nuts.
Torque: 52 N·m (530 kgf·cm, 38 ft·lbf)

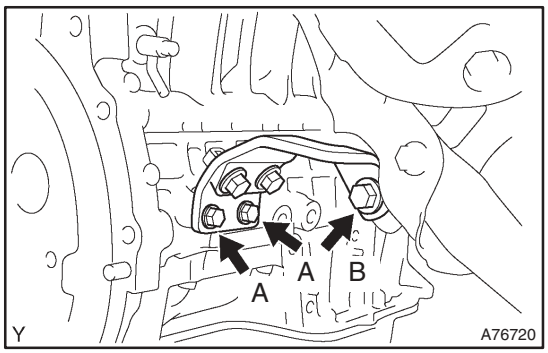

67. INSTALL MANIFOLD STAY

(a) Install the manifold stay with the 3 bolts.
Torque:
37 N·m (377 kgf·cm, 27 ft·lbf) for bolt A
49 N·m (500 kgf·cm, 36 ft·lbf) for bolt B

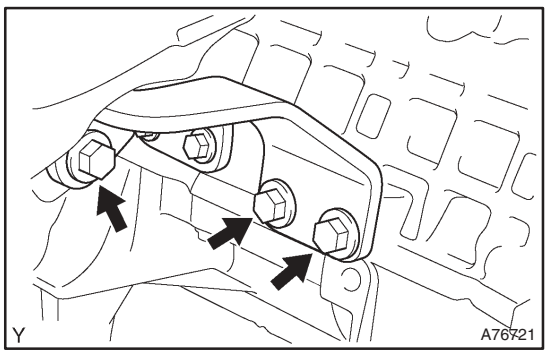

68. INSTALL MANIFOLD STAY NO.2

(a) Install the manifold stay with the 3 bolts.
Torque: 49 N·m (500 kgf·cm, 36 ft·lbf)

69. INSTALL EXHAUST PIPE ASSY FRONT
(See Pub. No. RM1018E on page 15–2)

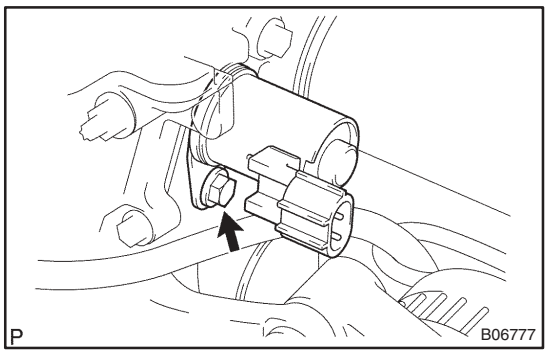

70. INSTALL CAMSHAFT TIMING OIL CONTROL VALVE ASSY

(a) Apply a light coat of engine oil on a new O–ring, then install it onto the camshaft timing oil control valve.

(b) Install the camshaft timing oil control valve with the bolt.
Torque: 9.0 N·m (92 kgf·cm, 80 in.·lbf)

71. INSTALL WATER BY–PASS PIPE NO.1

(a) Install a new gasket and water by–pass pipe with the 2 nuts and 2 bolts.
Torque: 9.0 N·m (92 kgf·cm, 80 in.·lbf)

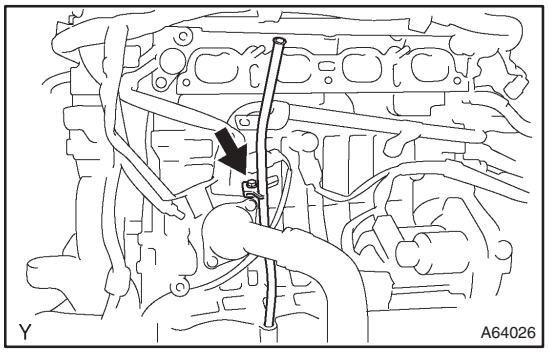

72. INSTALL OIL LEVEL GAGE GUIDE

(a) Apply a light coat of engine oil on a new O–ring, then install it onto the oil level gage guide.

(b) Install the oil level gage guide with the bolt.
Torque: 13 N·m (133 kgf·cm, 10 ft·lbf)

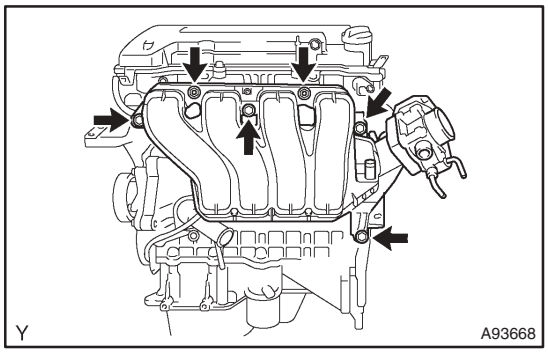

73. INSTALL INTAKE MANIFOLD

(a) Install a new gasket onto the intake manifold.

(b) Install the intake manifold and the throttle body assembly with the 2 brackets, 4 bolts and 2 nuts.
Torque: 30 N·m (306 kgf·cm, 22 ft·lbf)

(c) Connect the vacuum hose to water by–pass pipe No. 1.

(d) Connect the throttle motor connector.

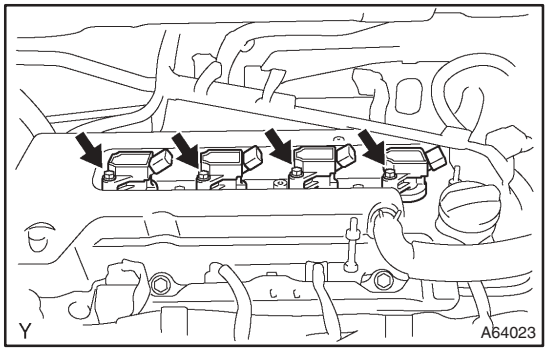

74. INSTALL IGNITION COIL ASSY

(a) Install the 4 ignition coils with the 4 bolts.
Torque: 9.0 N·m (92 kgf·cm, 80 in.·lbf)

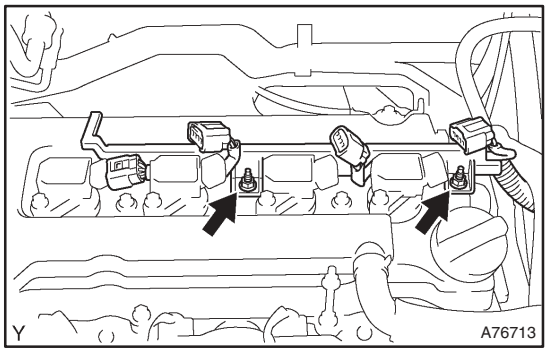

(b) Install the engine wire with the 2 nuts.
Torque: 9.0 N·m (92 kgf·cm, 80 in.·lbf)

75. INSTALL GENERATOR ASSY
(See Pub. No. RM1018E on page 19–7)

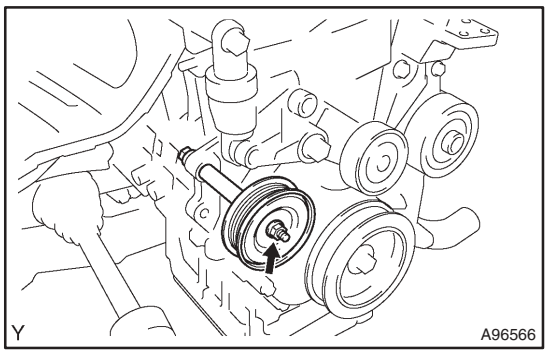

76. INSTALL V–RIBBED IDLER ASSY NO.1

(a) Install the tube and idler with the nut and bolt.
Torque: 39 N·m (400 kgf·cm, 29 ft·lbf)

77. INSTALL FAN AND GENERATOR V BELT (See Pub. No. RM1018E on page 14–5)

78. INSTALL AIR CLEANER HOSE NO.1
Torque: 1.5 N·m (15 kgf·cm, 13 in.·lbf)

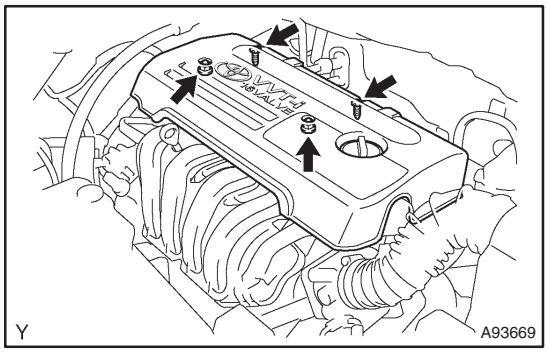

79. INSTALL CYLINDER HEAD COVER NO.2

(a) Install the cylinder head cover with the 2 nuts and 2 clips.
Torque: 7.0 N·m (71 kgf·cm, 62 in.·lbf)

80. INSTALL FRONT WHEEL RH
Torque: 103 N·m (1,050 kgf·cm, 76 ft·lbf)

81. ADD ENGINE COOLANT (See page 16–5)

82. INSPECT COMPRESSION (See Pub. No. RM1018E on page 14–1)
SST 09992–00500

83. INSPECT CO/HC (See Pub. No. RM1018E on page 14–1)

84. INSPECT IGNITION TIMING (See Pub. No. RM1018E on page 14–1)
SST 09843–18040

85. CHECK FOR ENGINE COOLANT LEAKS (See page 16–1)

86. CHECK FOR ENGINE OIL LEAKS

87. CHECK FOR EXHAUST GAS LEAKS

COOLING SYSTEM (1ZZ–FE/3ZZ–FE)(From February, 2004)

160N4–02

ON–VEHICLE INSPECTION

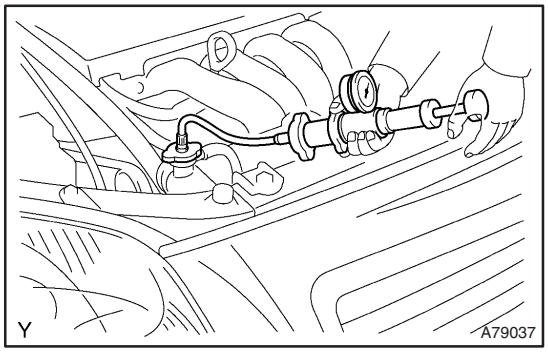

1. INSPECT COOLING SYSTEM FOR LEAKS

CAUTION:

To avoid the danger of being burned, do not remove the radiator cap while the engine and radiator are still hot. Thermal expansion will cause hot engine coolant and steam to blow out from the radiator.

(a) Remove the radiator support opening cover.
(b) Remove the engine room cover side.
(c) Fill the radiator with coolant, then attach a radiator cap tester.
(d) Warm up the engine.
(e) Pump it to 118 kPa (1.2 kgf/cm^2, 17.1 psi), then check that the pressure does not drop.

If the pressure drops, check the hoses, radiator and water pump for leaks. If there are no signs or traces of external coolant leaks, check the heater core, cylinder block and head.

(f) Reinstall the engine room cover side.
(g) Reinstall the radiator support opening cover.

2. CHECK ENGINE COOLANT LEVEL AT RESERVOIR

(a) The engine coolant level should be between the ”LOW” and ”FULL” lines when the engine is cold.

HINT:

If low, check for leaks and add ”Toyota Super Long Life Coolant” or similar high quality ethylene glycol based non–silicate, non–amine, non–nitrite, and non–borate coolant with long–life hybrid organic acid technology up to the ”FULL” line.

3. CHECK ENGINE COOLANT QUALITY

(a) Remove the radiator cap.

CAUTION:

To avoid the danger of being burned, do not remove the radiator cap while the engine and radiator are still hot. Thermal expansion will cause hot engine coolant and steam to blow out from the radiator.

(b) Check around the radiator cap and radiator filler hole for any excessive deposits of rust or scale. The coolant should be free from oil.

If excessively dirty, replace the coolant.

(c) Reinstall the radiator cap.

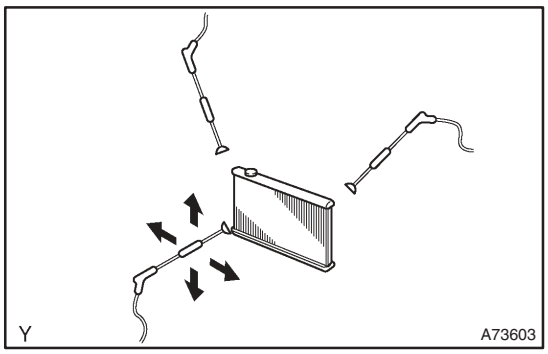

4. INSPECT FINS BLOCKAGE

(a) If the fins are clogged, wash them with water or a steam cleaner, then dry with compressed air.

NOTICE:

- **If the distance between the steam cleaner and the core is too close, there is a possibility of damaging the fins, so keep the following injection distance.**

Injection Pressure kPa (kgf/cm^2, psi)	Injection Distance mm (in.)
2,942 to 4,903 (30 to 50, 427 to 711)	300 (11.811)
4,903 to 7,845 (50 to 80, 711 to 1,138)	500 (19.685)

- **If the fins are bent, straighten them with a screwdriver or pliers.**
- **Be careful not to expose the electronic components to water.**

160N5–02

INSPECTION

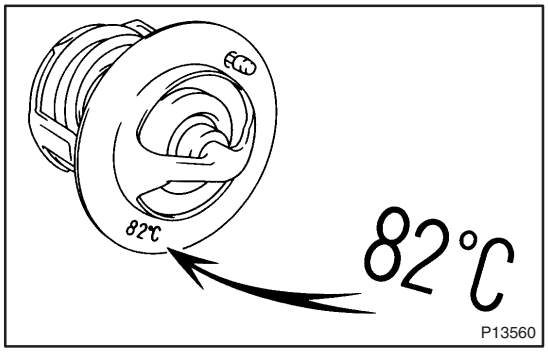

1. INSPECT THERMOSTAT

HINT:

The valve opening temperature is inscribed on the thermostat.

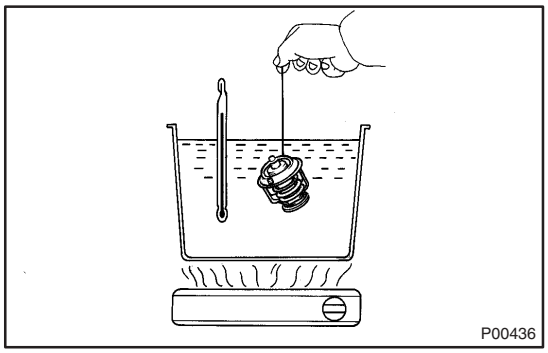

(a) Immerse the thermostat in water, then gradually heat the water.

(b) Check the valve opening temperature.

Valve opening temperature:
80 to 84°C (176 to 183°F)

If the valve opening temperature is not as specified, replace the thermostat.

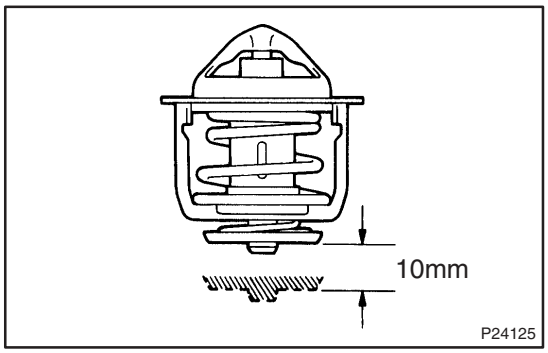

(c) Inspect the valve lift.

Valve lift: 10 mm (0.39 in.) or more at 95°C (203°F)

If the valve lift is not as specified, replace the thermostat.

(d) Check that the valve is fully closed when the thermostat is at low temperatures (below 77°C (171°F)).

If not fully closed, replace the thermostat.

2. INSPECT RADIATOR CAP SUB–ASSY

NOTICE:

- **If the radiator cap is contaminated, rinse it with water.**
- **Before using a radiator cap tester, wet the relief valve and the pressure valve with engine coolant or water.**
- **When performing the following steps (a) and (b), keep the tester at an angle of over 30° or more above the horizontal.**

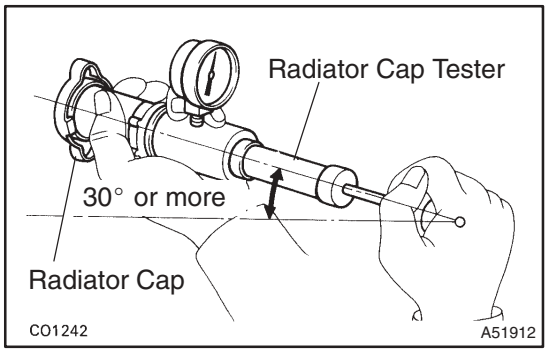

(a) Using a radiator cap tester, slowly pump the tester, then check that air is coming from the vacuum valve.

Pumping speed: 1 push / 3 seconds or more

NOTICE:

Push the pump at a constant speed.

If air is not coming from the vacuum valve, replace the radiator cap.

(b) Pump the tester, then measure the relief valve opening pressure.

Pumping speed: 1 push within 1 second

NOTICE:

The above pumping speed is for the first pumping only (in order to close the vacuum valve). After the first pumping, the pumping speed can be reduced.

Standard opening pressure:

74 to 103 kPa (0.75 to 1.05 kgf/cm^2, 10.7 to 14.9 psi)

Minimum opening pressure:

59 kPa (0.6 kgf/cm^2, 8.6 psi)

If the opening pressure is less than minimum, replace the radiator cap.

HINT:

Use the tester's maximum reading as the opening pressure.

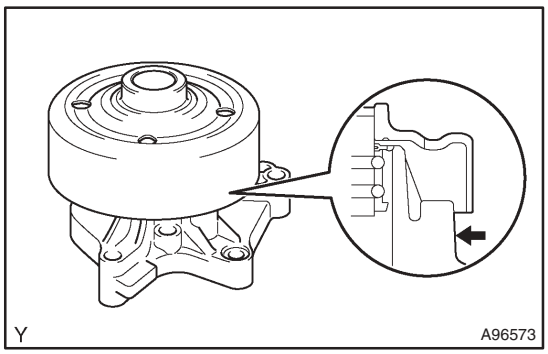

3. INSPECT WATER PUMP ASSY

(a) Check the area of the water pump assembly indicated in the illustration for traces of coolant leakage.

If leakage is found, replace the water pump.

ENGINE COOLANT (1ZZ–FE/3ZZ–FE)(From February, 2004)

160MH–02

REPLACEMENT

1. DRAIN ENGINE COOLANT

CAUTION:

To avoid the danger of being burned, do not remove the radiator cap while the engine and radiator are still hot. Thermal expansion will cause hot engine coolant and steam to blow out from the radiator.

(a) Remove the radiator cap.

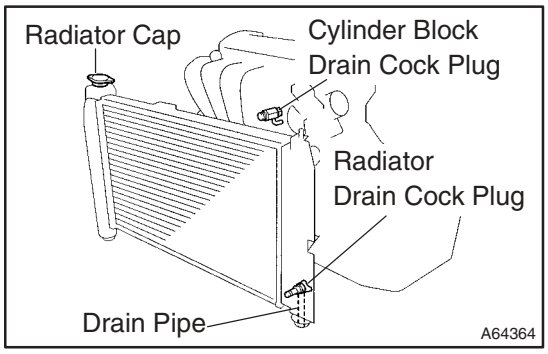

(b) Loosen the radiator drain cock plug and cylinder block drain cock plug, and drain engine coolant.
(c) Close the radiator drain cock plug.
(d) Close the cylinder block drain plug.
Torque: 13 N·m (130 kgf·cm, 9 ft·lbf) for engine

2. ADD ENGINE COOLANT

(a) Tighten the radiator drain plug, then pour coolant into radiator until it overflows.
Capacity:

Transmission Type	Steering	Coolant Capacity [liters (US gts, Imp. gts)]
M/T	LHD	5.8 (6.1, 5.1)
M/T	RHD	5.9 (6.2, 5.2)
A/T	LHD	5.7 (6.0, 5.0)
A/T	RHD	5.8 (6.1, 5.1)

HINT:

- Improper coolants may damage the engine cooling system.
- Use only ”Toyota Super Long Life Coolant” or similar high quality ethylene glycol based non–silicate,non–amine, non–nitrite, and non–borate coolant with long–life hybrid organic acid technology (coolant with long–life hybrid organic acid technology consists of the combination of low phosphates and organic acids).
- New Toyota vehicles are filled with Toyota Super Long Life Coolant. When replacing the coolant, Toyota Super Long Life Coolant is recommended.
- Observe the coolant level inside the radiator by pressing the inlet and outlet radiator hoses several times by hand. If the coolant level goes down, add the coolant.

NOTICE:

Do not use plain water alone.

(b) Tighten the radiator cap.
(c) Pour engine coolant into the reservoir tank until it reaches the full line.

(d) Warm up the engine until the thermostat valve begins to open.

HINT:

Press the radiator inlet and outlet hose several times by hand while warming up the engine.

(e) Stop the engine and wait until the coolant temperature gets cold. Then remove the radiator cap to check the coolant level.
- If the level goes down, perform the procedures from (a) through (e) again.
- If the level does not go down, fill the reservoir tank with engine coolant.

3. CHECK FOR ENGINE COOLANT LEAKS (See page 16–1)

AIR BAG SENSOR FRONT LH (From February, 2004)

600UN–01

COMPONENTS

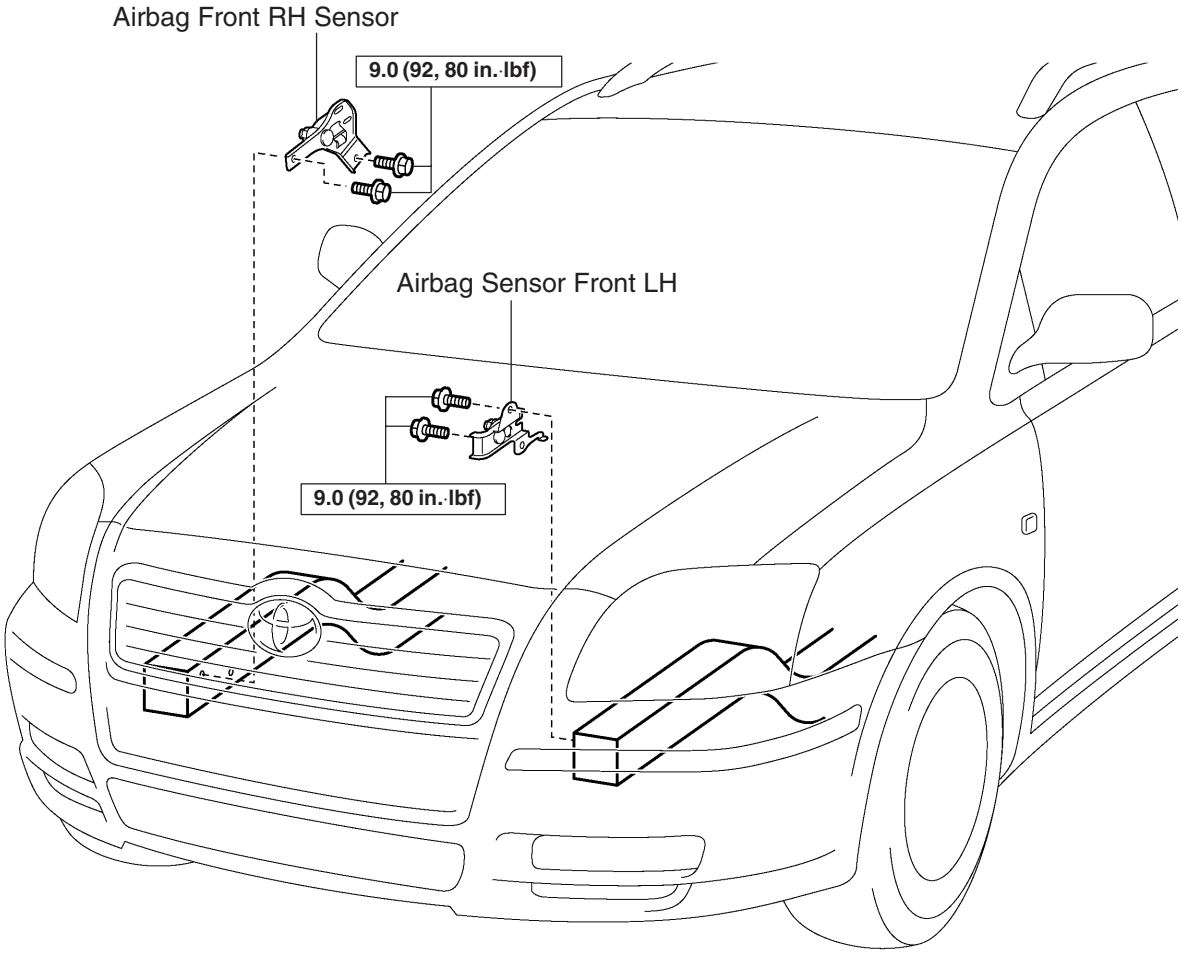

N·m (kgf·cm, ft·lbf) : Specified torque

C

H42698

600K6–02

REPLACEMENT

HINT:

Use the same procedures for the RH side and LH side.

1. PRECAUTION (SEE PUB. NO. RM1018E, PAGE 60–1)

2. DISCONNECT BATTERY NEGATIVE TERMINAL

CAUTION:

After removing the terminal, wait for at least 90 seconds before starting the operation.

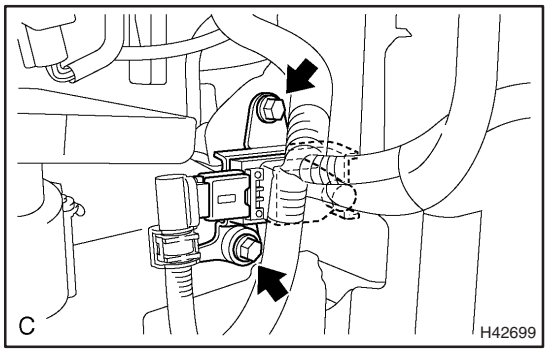

3. REMOVE AIR BAG SENSOR FRONT LH

(a) Disconnect the connector from the airbag sensor front LH.

(b) Remove the 2 bolts and the airbag sensor front LH.

4. INSTALL AIR BAG SENSOR FRONT LH

(a) Check that the ignition switch is off.

(b) Check that the battery negative (–) terminal is disconnected.

CAUTION:

After removing the terminal, wait for at least 90 seconds before starting the operation.

(c) Install the airbag sensor front LH with the 2 bolts.

Torque: 9.0 N·m (92 kgf·cm, 80 in.·lbf)

NOTICE:

- **If the airbag sensor front LH has been dropped, or there are any cracks, dents or other defects in the case, bracket or connector, replace it with a new one.**
- **When installing the airbag sensor front LH, be careful that the SRS wiring does not interfere with other parts and that it is not pinched between other parts.**

(d) Check that there is no looseness in the installation parts of the airbag sensor front LH.

(e) Connect the connector to the airbag sensor front LH.

5. CONNECT BATTERY NEGATIVE TERMINAL

6. INSPECT SRS WARNING LIGHT (SEE PUB. NO. RM1018E, PAGE 05–1184)

SIDE AIR BAG SENSOR ASSY LH (From February, 2004)

600UO–01

COMPONENTS

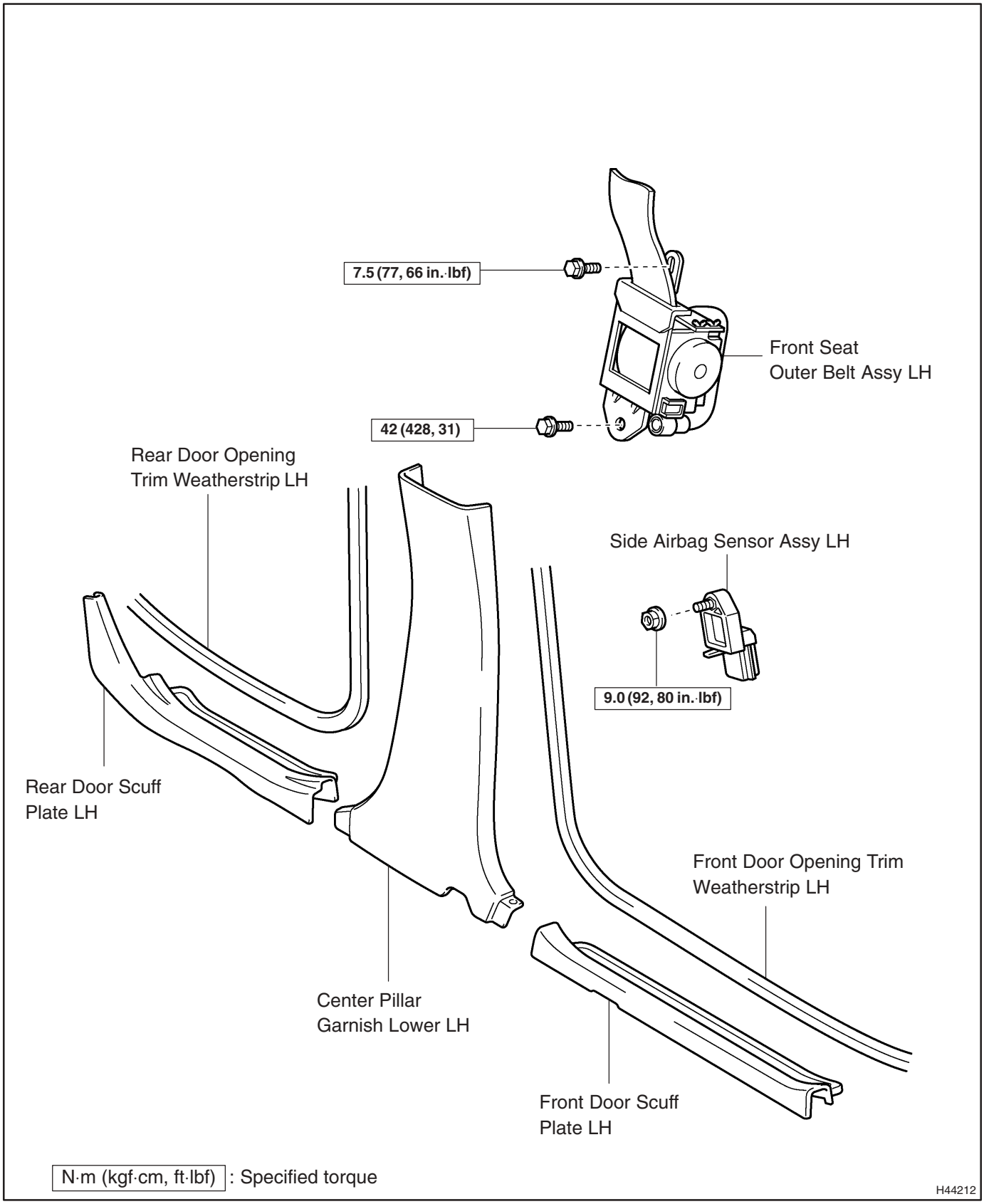

600A7–04

REPLACEMENT

HINT:

Use the same procedures for the RH side and LH side.

1. PRECAUTION (SEE PUB. NO. RM1018E, PAGE 60–1)

2. DISCONNECT BATTERY NEGATIVE TERMINAL

CAUTION:

After removing the terminal, wait for at least 90 seconds before starting the operation.

3. REMOVE FRONT DOOR SCUFF PLATE LH (SEE PUB. NO. RM1018E, PAGE 76–36)

4. REMOVE REAR DOOR SCUFF PLATE LH (SEE PUB. NO. RM1018E, PAGE 76–36)

5. REMOVE FRONT DOOR WEATHERSTRIP LH (SEE PUB. NO. RM1018E, PAGE 76–36)

6. REMOVE REAR DOOR WEATHERSTRIP LH (SEE PUB. NO. RM1018E, PAGE 76–36)

7. REMOVE CENTER PILLAR GARNISH LOWER LH (SEE PUB. NO. RM1018E, PAGE 76–36)

8. REMOVE FRONT SEAT OUTER BELT ASSY LH (SEE PUB. NO. RM1018E, PAGE 61–7)

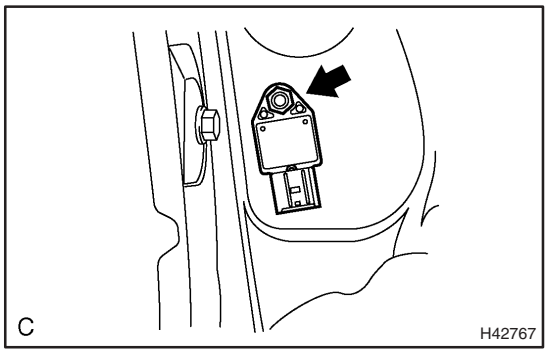

9. REMOVE SIDE AIR BAG SENSOR ASSY LH

(a) Disconnect the connector from the side airbag sensor assy LH.

(b) Remove the nut and the side airbag sensor assy LH.

10. INSTALL SIDE AIR BAG SENSOR ASSY LH

(a) Check that the ignition switch is off.

(b) Check that the battery negative (–) terminal is disconnected.

CAUTION:

After removing the terminal, wait for at least 90 seconds before starting the operation.

(c) Install the side airbag sensor assy LH with the nut.

Torque: 9.0 N·m (92 kgf·cm, 80 in.·lbf)

NOTICE:

- **If the side airbag sensor assy LH has been dropped, or there are any cracks, dents or other defects in the case, bracket or connector, replace it with a new one.**
- **When installing the side airbag sensor assy LH, be careful that the SRS wiring does not interfere with other parts and that it is not pinched between other parts.**

(d) Check that there is no looseness in the installation parts of the side airbag sensor assy LH.

(e) Connect the connector to the side airbag sensor assy LH.

11. INSTALL FRONT SEAT OUTER BELT ASSY LH (SEE PUB. NO. RM1018E, PAGE 61–7)

12. CONNECT BATTERY NEGATIVE TERMINAL

13. INSPECT SRS WARNING LIGHT (SEE PUB. NO. RM1018E, PAGE 05–1184)

AIR BAG SENSOR REAR LH (From February, 2004)

COMPONENTS

600K7–02

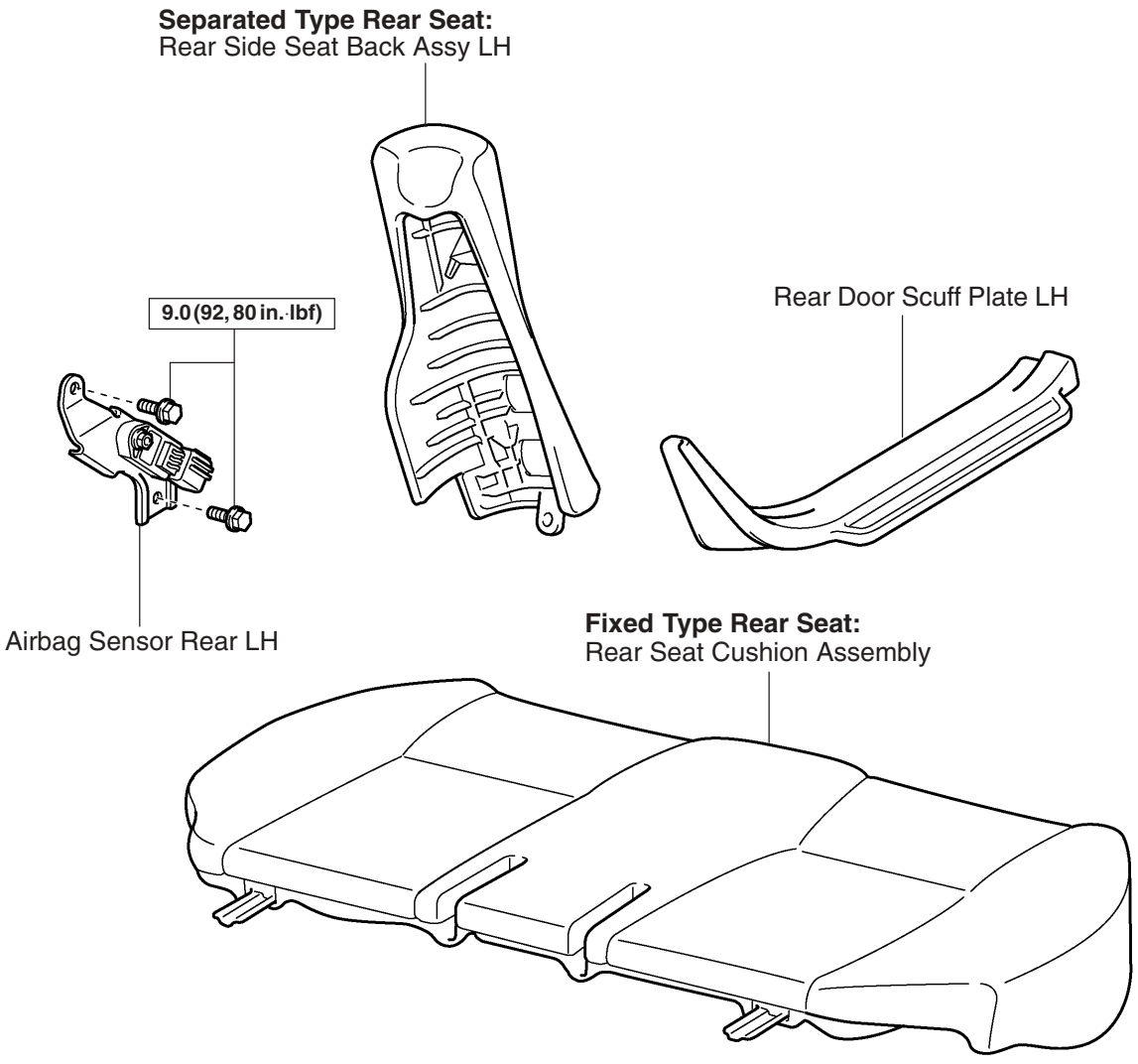

C N·m (kgf·cm, ft·lbf) : Specified torque

H42768

600K8–02

REPLACEMENT

HINT:

Use the same procedures for the RH side and LH side.

1. PRECAUTION (SEE PUB. NO. RM1018E, PAGE 60–1)

2. DISCONNECT BATTERY NEGATIVE TERMINAL

CAUTION:

After removing the terminal, wait for at least 90 seconds before starting the operation.

3. REMOVE REAR DOOR SCUFF PLATE LH (SEE PUB. NO. RM1018E, PAGE 73–36)

4. REMOVE REAR SEAT CUSHION ASSEMBLY (FIXED TYPE REAR SEAT) (SEE PUB. NO. RM1018E, PAGE 72–33)

5. REMOVE REAR SIDE SEAT BACK ASSY LH (SEPARATED TYPE REAR SEAT) (SEE PUB. NO. RM1018E, PAGE 72–27)

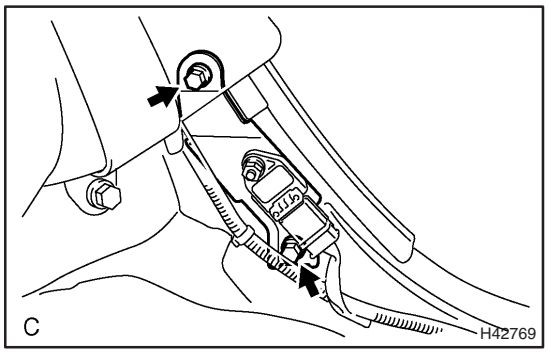

6. REMOVE AIR BAG SENSOR REAR LH

(a) Disconnect the connector from the airbag sensor rear LH.

(b) Remove the 2 bolts and the airbag sensor rear LH.

7. INSTALL AIR BAG SENSOR REAR LH

(a) Check that the ignition switch is off.

(b) Check that the battery negative (–) terminal is disconnected.

CAUTION:

After removing the terminal, wait for at least 90 seconds before starting the operation.

(c) Install the airbag sensor rear LH with the 2 bolts.

Torque: 9.0 N·m (92 kgf·cm, 80 ft·lbf)

NOTICE:

- **If the airbag sensor rear LH has been dropped, or there are any cracks, dents or other defects in the case, bracket or connector, replace it with a new one.**
- **When installing the airbag sensor rear LH, be careful that the SRS wiring does not interfere with other parts and that it is not pinched between other parts.**

(d) Check that there is no looseness in the installation parts of the airbag sensor rear LH.

(e) Connect the connector to the airbag sensor rear LH.

8. CONNECT BATTERY NEGATIVE TERMINAL

9. INSPECT SRS WARNING LIGHT (SEE PUB. NO. RM1018E, PAGE 05–1184)

INSTRUMENT PANEL/METER (From February, 2004)

COMPONENTS

710G2–02

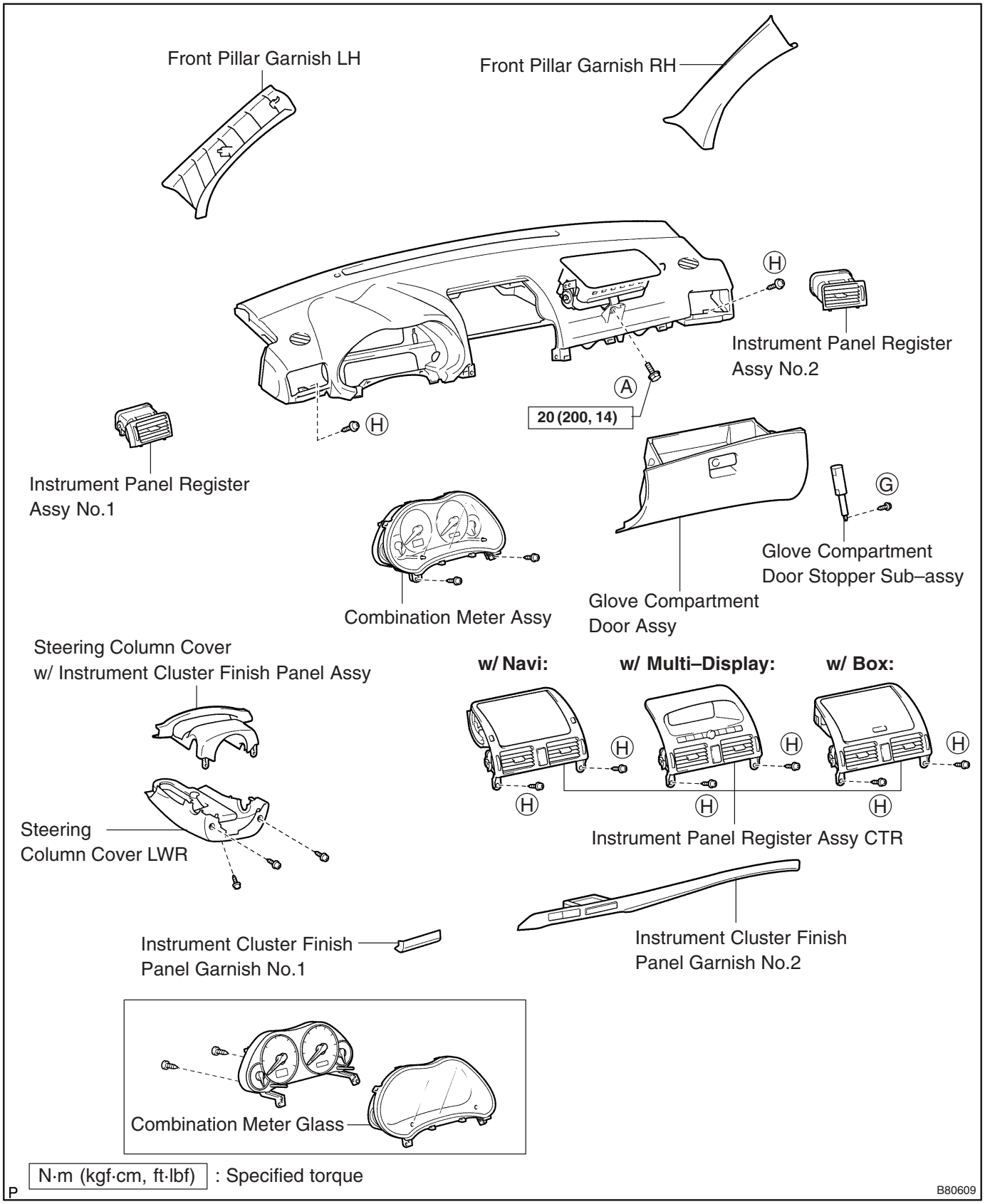

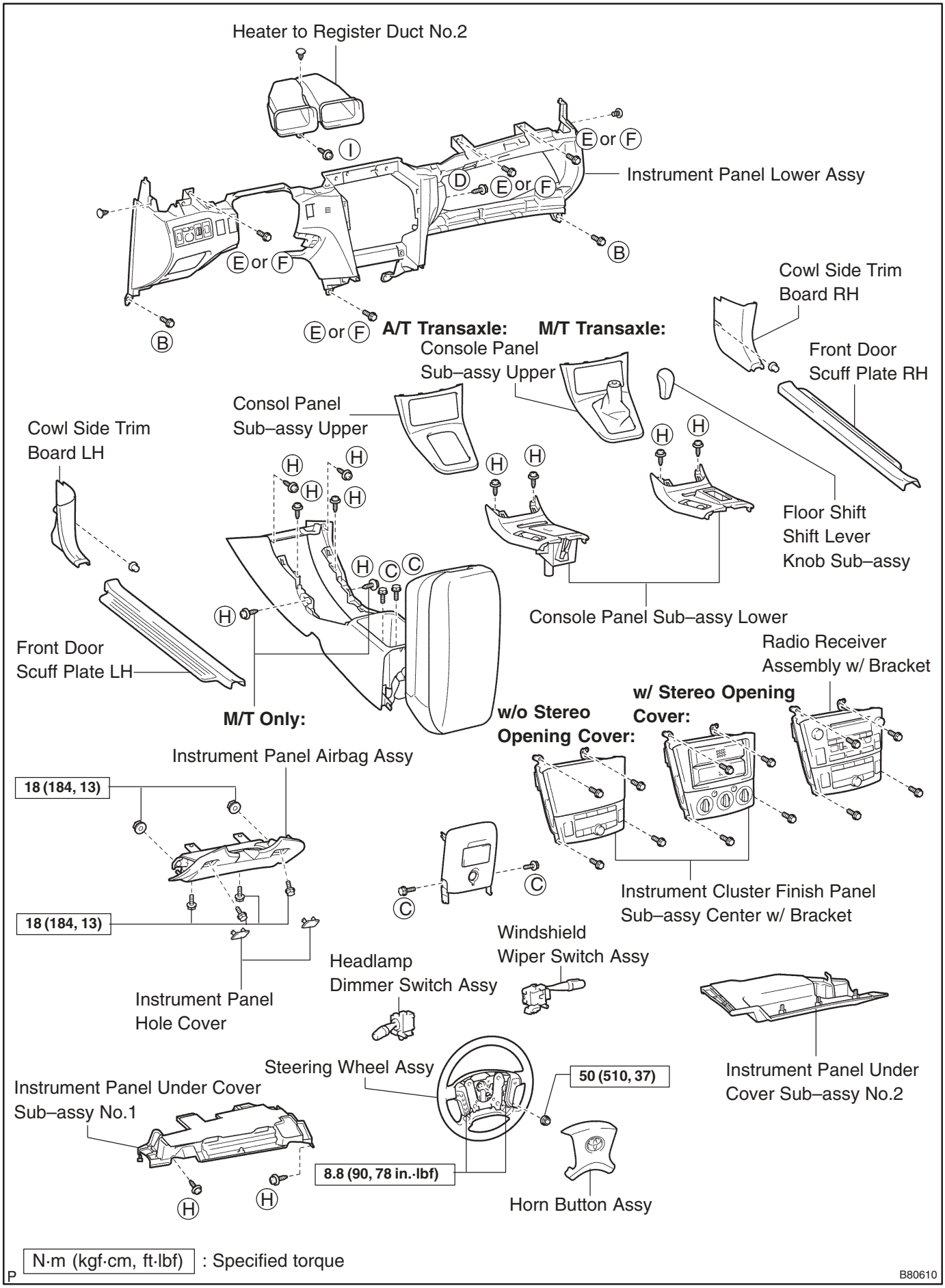
Heater to Register Duct No.2
I
E or F
D
E or F
Instrument Panel Lower Assy
B
E or F
E or F
B
A/T Transaxle:
M/T Transaxle:
Cowl Side Trim Board RH
Front Door Scuff Plate RH
Console Panel Sub–assy Upper
Consol Panel Sub–assy Upper
Cowl Side Trim Board LH
H
C
Floor Shift Shift Lever Knob Sub–assy
Console Panel Sub–assy Lower
Front Door Scuff Plate LH
M/T Only:
Radio Receiver Assembly w/ Bracket
w/ Stereo Opening Cover:
w/o Stereo Opening Cover:
Instrument Panel Airbag Assy
18 (184, 13)
18 (184, 13)
Instrument Cluster Finish Panel Sub–assy Center w/ Bracket
Windshield Wiper Switch Assy
Headlamp Dimmer Switch Assy
Instrument Panel Hole Cover
Steering Wheel Assy
50 (510, 37)
Instrument Panel Under Cover Sub–assy No.2
Instrument Panel Under Cover Sub–assy No.1
8.8 (90, 78 in.·lbf)
Horn Button Assy
N·m (kgf·cm, ft·lbf) : Specified torque
P
B80610

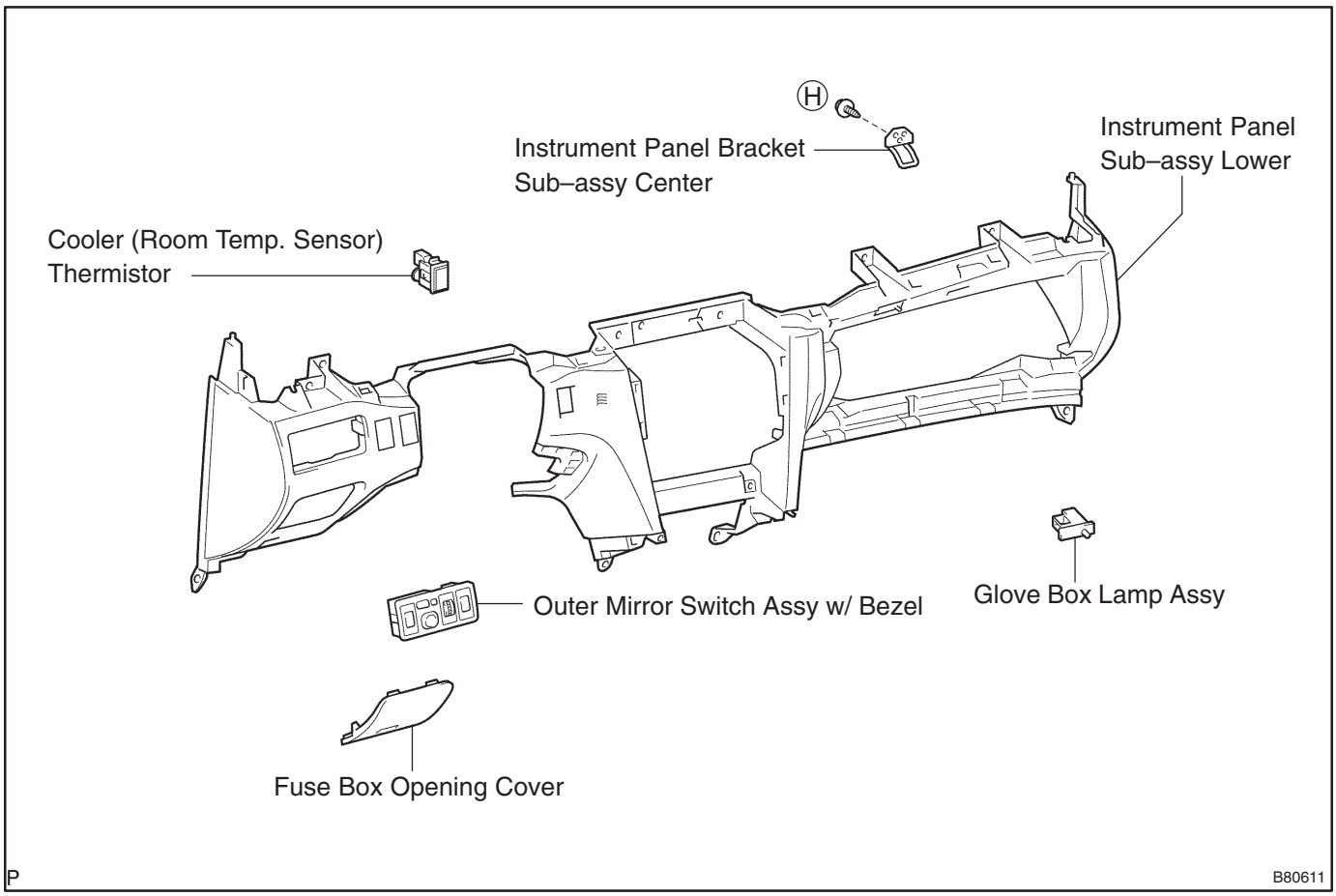
H
Instrument Panel Bracket
Sub–assy Center
Instrument Panel
Sub–assy Lower
Cooler (Room Temp. Sensor)
Thermistor
Outer Mirror Switch Assy w/ Bezel
Glove Box Lamp Assy
Fuse Box Opening Cover
P
B80611

INSTRUMENT PANEL SUB–ASSY LOWER (From February, 2004)

710FY–02

PRECAUTION

1. PRECAUTION FOR VEHICLE WITH SRS AIRBAG AND SEAT BELT PRETENSIONER

(a) Some operations in this section may affect the SRS airbags. Prior to performing the corresponding operations, read the SRS airbag NOTICE.

710NI–01

REPLACEMENT

HINT:

- COMPONENTS: See Pub. No. RM1018E, page 71–7.
- Installation is in the reverse order of removal.

1. TABLE OF BOLT, SCREW AND NUT

HINT:

The bolts, screws and nuts, which are necessary for installation and removal of the instrument panel, are shown in the illustration below with alphabets.

mm (in.) (L = Length)

Code	Shape	Code	Shape	Code	Shape
<A>	ϕ = 8 (0.31) L = 18 (0.71) B50533 91535-60816	<B>	ϕ = 6 (0.24) L = 16 (0.63) 91635-60616	<C>	ϕ = 6 (0.24) L = 20 (0.79) B50534 91635-60625
<D>	ϕ = 6 (0.24) L = 20 (0.79) B52926 90159-W0014	<E>	ϕ = 6 (0.24) L = 20 (0.79) B52928 90159-60546	<F>	ϕ = 7 (0.28) L = 20 (0.79) B52927 90159-70004
<G>	ϕ = 5 (0.20) L = 14 (0.55) B59217 90167-W0001	<H>	ϕ = 5 (0.20) L = 14 (0.55) B32741 90167-W0007	<I>	L = 16 (0.63) E33943 93560-15016

P B80612

2. DISCONNECT BATTERY NEGATIVE TERMINAL (See Pub. No. RM1018E, page 60–1)

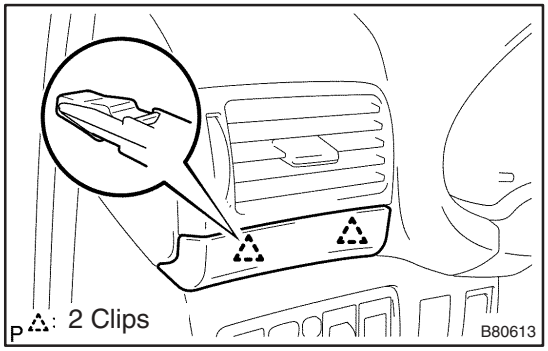

3. REMOVE INSTRUMENT CLUSTER FINISH PANEL GARNISH NO.1

(a) Disengage the 2 clips and remove the instrument cluster finish panel garnish No.1.

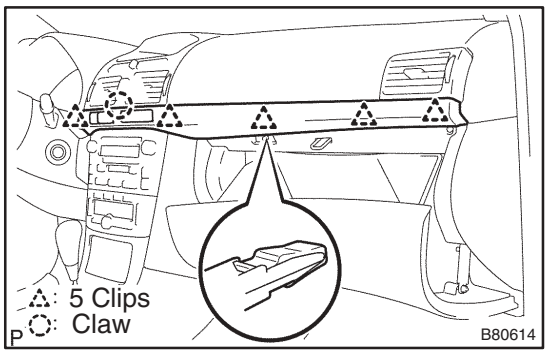

4. REMOVE INSTRUMENT CLUSTER FINISH PANEL GARNISH NO.2

(a) Disengage the 5 clips and claw, and then remove the instrument cluster finish panel garnish No.2.

(b) Disconnect the connectors.

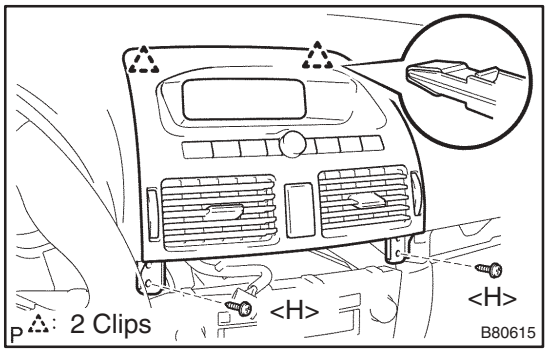

5. REMOVE INSTRUMENT PANEL REGISTER ASSY CTR

(a) Remove the 2 screws <H>.

(b) Disengage the 2 clips and remove the instrument panel register assy CTR, and then disconnect the connectors.

6. REMOVE STEERING COLUMN COVER W/INSTRUMENT CLUSTER FINISH PANEL ASSY (See Pub. No. RM1018E, page 50–9)

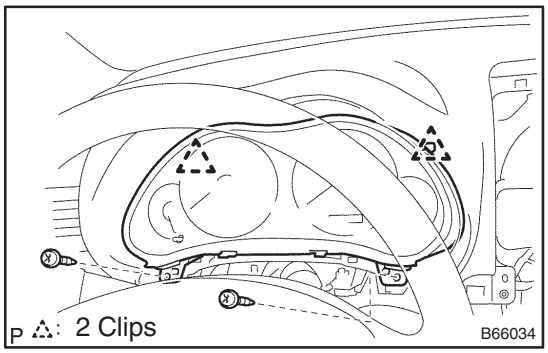

7. REMOVE COMBINATION METER ASSY

(a) Remove the 2 screws and disengage the 2 clips.

(b) Pull out the combination meter assy, and then disconnect the connectors.

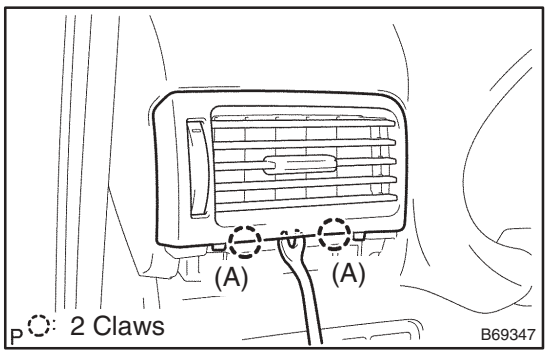

8. REMOVE INSTRUMENT PANEL REGISTER ASSY NO.1

(a) Insert a clip remover between the center of the instrument panel register assy No.1 lower and the instrument panel sub–assy upper to desengage the 2 claws (A) shown in the illustration.

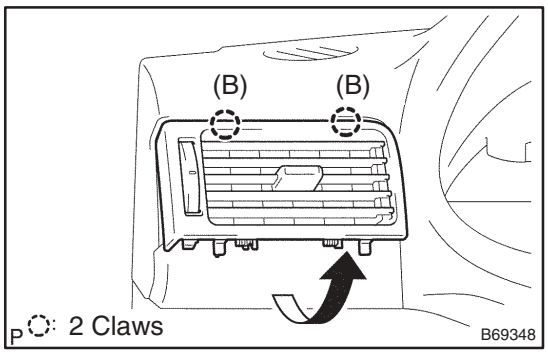

(b) Disengage the 2 claws (B) and remove the instrument panel register assy No.1.

9. REMOVE INSTRUMENT PANEL REGISTER ASSY NO.2

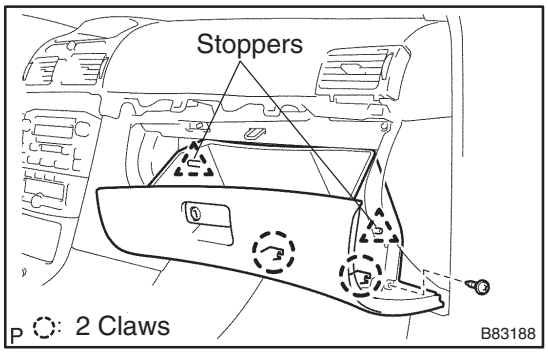

10. REMOVE GLOVE COMPARTMENT DOOR ASSY

(a) Remove the screw.

(b) Deform the upper part of the glove compartment door assy to release the stoppers.

(c) Pull the glove compartment door assy upward to remove it.

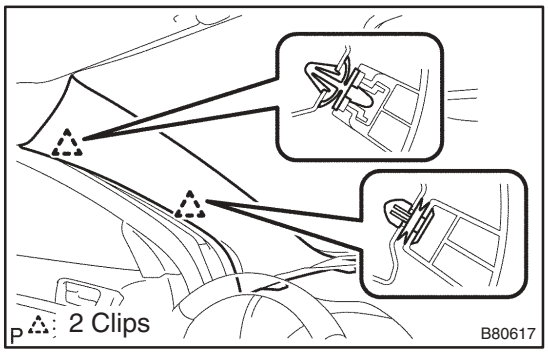

11. REMOVE FRONT PILLAR GARNISH LH

(a) Disengage the 2 clips, and remove the front pillar garnish LH.

12. REMOVE FRONT PILLAR GARNISH RH

HINT:

Use the same procedures for the RH side and LH side.

13. DISCONNECT PASSENGER AIRBAG CONNECTOR (See Pub. No. RM1018E, page 60–29)

14. REMOVE INSTRUMENT PANEL SUB–ASSY UPPER W/INSTRUMENT PANEL PASSENGER AIRBAG ASSY

(a) Remove the 2 screws <H> and bolt <A>.
(b) Disengage the 2 clips and 10 claws.
(c) Pull the instrument panel sub–assy upper w/ instrument panel passenger airbag assy rearward to remove it.
(d) Disconnect the connectors.

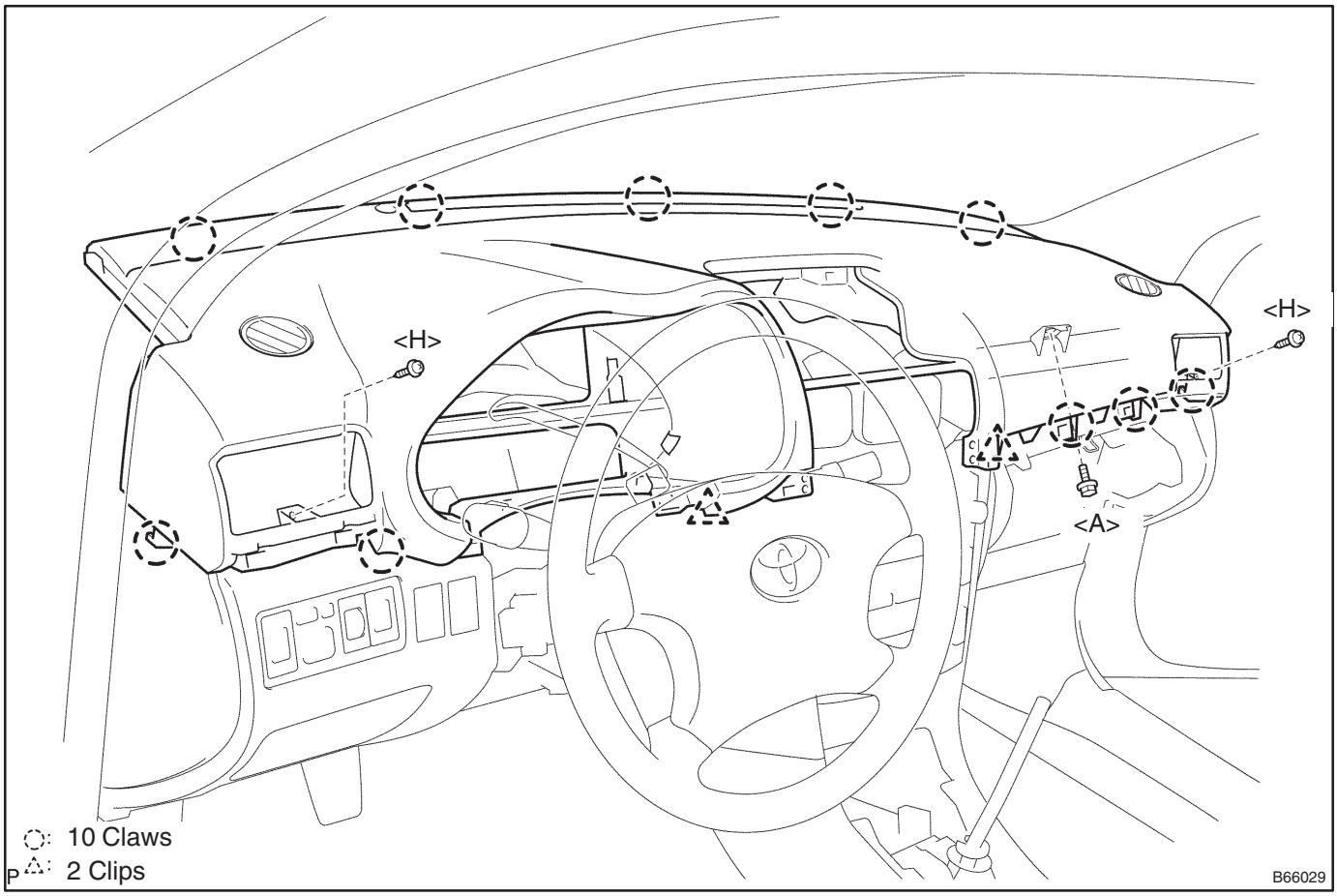

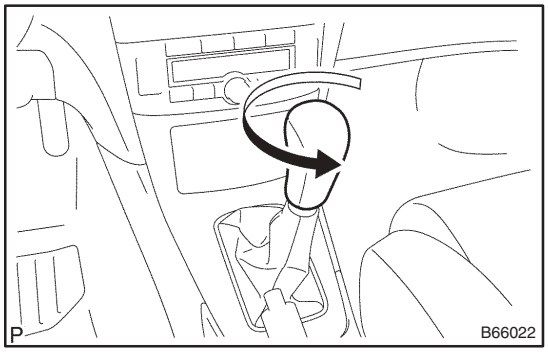

15. REMOVE SHIFT LEVER KNOB SUB–ASSY (M/T TRANSAXLE)

(a) Remove the floor shift shift lever knob sub–assy.

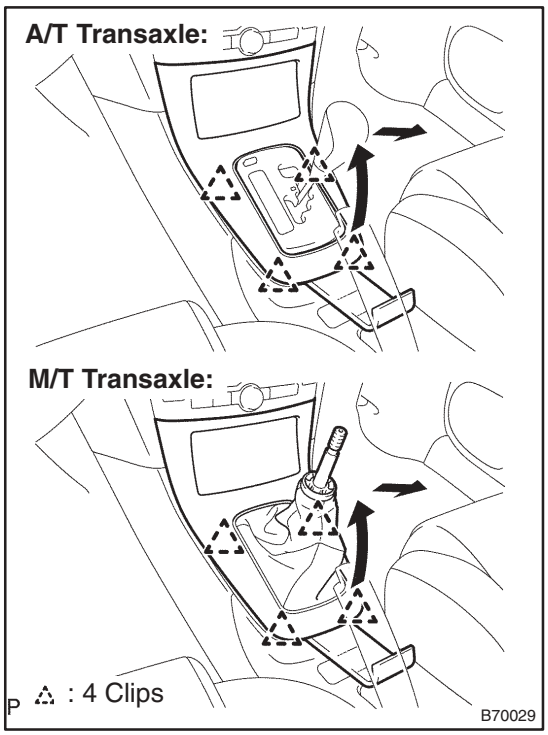

16. REMOVE CONSOLE PANEL SUB–ASSY UPPER

(a) Using a moulding remover, disengage the 4 clips.
(b) Disconnect the connectors, and remove the console panel sub–assy upper.

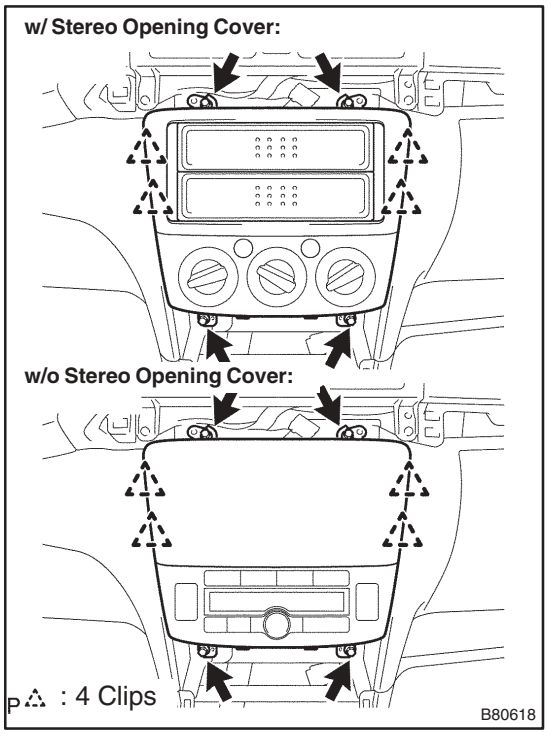

17. REMOVE INSTRUMENT CLUSTER FINISH PANEL SUB–ASSY CENTER W/BRACKET (W/O RADIO)

(a) Remove the 4 bolts.
(b) Using a moulding remover, disengage the 4 clips.
(c) Disconnect the connector and remove the instrument cluster finish panel sub–assy center w/ blacket.

18. REMOVE RADIO RECEIVER ASSEMBLY W/BRACKET (W/ RADIO) (See Pub. No. RM1018E, page 67–5)
19. REMOVE HORN BUTTON ASSY (See Pub. No. RM1018E, page 60–17)
20. REMOVE STEERING WHEEL ASSY (See Pub. No. RM1018E, page 50–9)
SST 09950–50013 (09951–05010, 09952–05010, 09953–05020, 09954–05021)
21. REMOVE HEADLAMP DIMMER SWITCH ASSY (See Pub. No. RM1018E, page 65–27)
22. REMOVE WINDSHIELD WIPER SWITCH ASSY (See Pub. No. RM1018E, page 66–24)

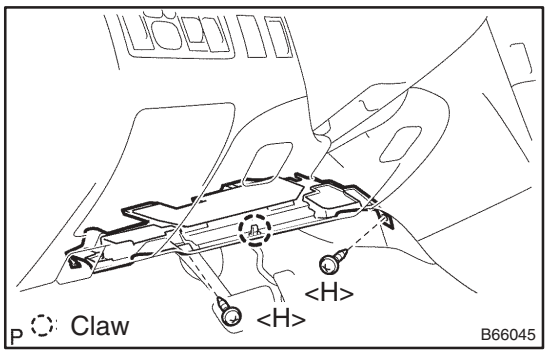

23. REMOVE INSTRUMENT PANEL UNDER COVER SUB–ASSY NO.1

(a) Remove the 2 screws <H>.

(b) Disengage the claw and remove the instrument panel under cover sub–assy No.1.

24. REMOVE INSTRUMENT PANEL HOLE COVER (See Pub. No. RM1018E, page 60–54)

25. REMOVE INSTRUMENT PANEL AIR BAG ASSY (See Pub. No. RM1018E, page 60–54)

26. REMOVE STEERING COLUMN COVER LWR (See Pub. No. RM1018E, page 50–9)

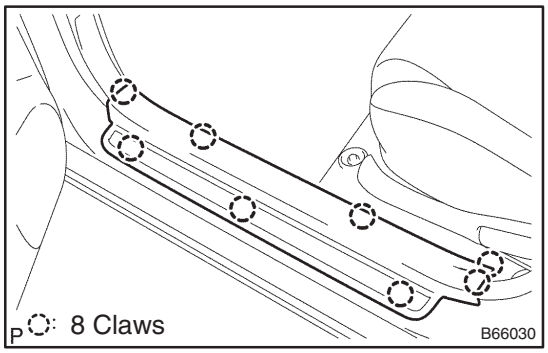

27. REMOVE FRONT DOOR SCUFF PLATE LH

(a) Disengage the 8 claws and remove the front door scuff plate LH.

28. REMOVE FRONT DOOR SCUFF PLATE RH

HINT:

Use the same procedures for the RH side and LH side.

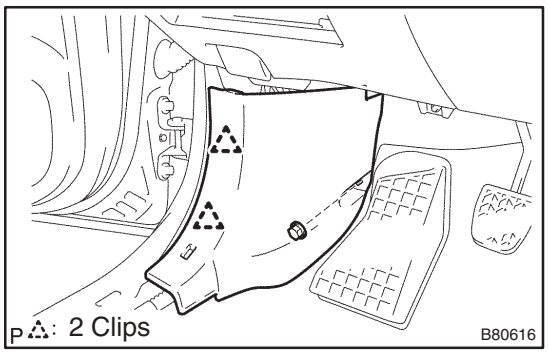

29. REMOVE COWL SIDE TRIM BOARD LH

(a) Remove the clip.

(b) Disengage the 2 clips and remove the cowl side trim board LH.

30. REMOVE COWL SIDE TRIM BOARD RH

HINT:

Use the same procedures for the RH side and LH side.

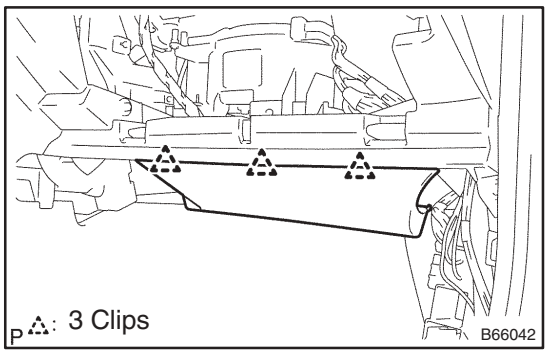

31. REMOVE INSTRUMENT PANEL UNDER COVER SUB–ASSY NO.2

(a) Disengage the 3 clips and remove the instrument panel under cover sub–assy No.2.

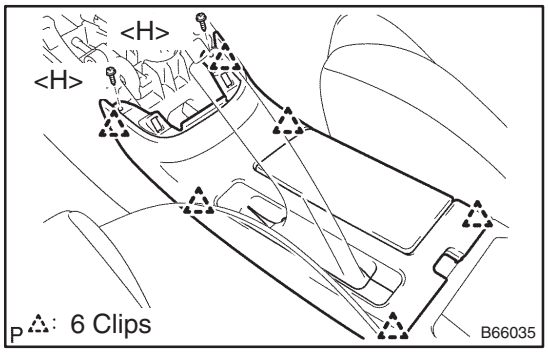

32. REMOVE CONSOLE PANEL SUB–ASSY LOWER

(a) Remove the 2 screws <H>.

(b) Disengage the 6 clips and remove the console panel sub–assy lower.

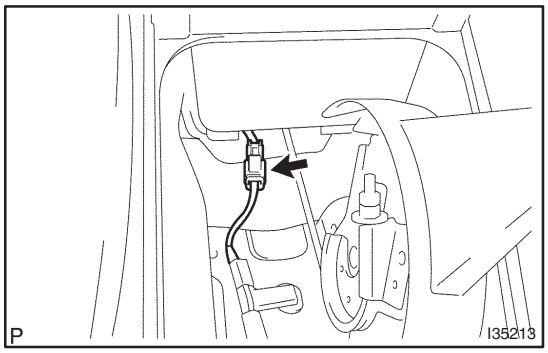

33. REMOVE CONSOLE BOX ASSY RR

(a) Disconnect the connector.

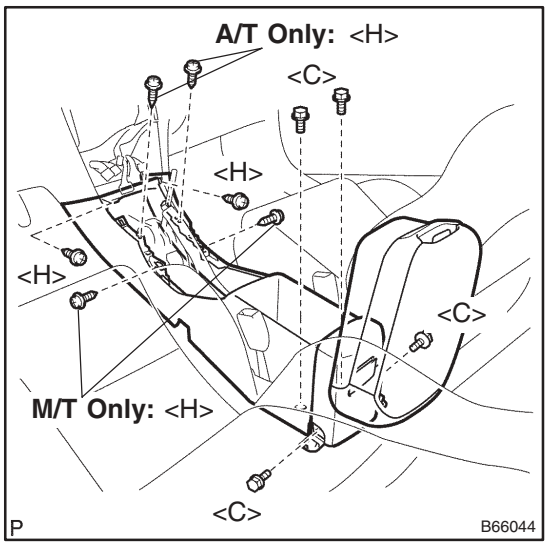

(b) Remove the 4 bolts <C>, 4 screws <H> and the console box assy RR.

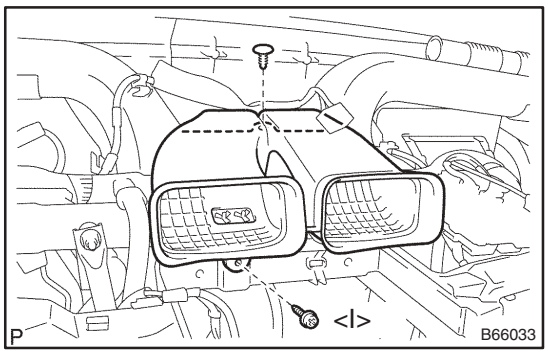

34. REMOVE HEATER TO REGISTER DUCT NO.2

(a) Remove the screw <I>, clip and the heater to register duct No.2.

35. REMOVE INSTRUMENT PANEL LOWER ASSY

(a) Disconnect the hood lock control cable.
(b) Using a clip remover, remove the 2 clips.
(c) Remove the 2 bolts <B> and 7 screws <D> <E> or <F>.
(d) Disengage the 5 wire harness clamps.
(e) Remove the instrument panel lower assy.

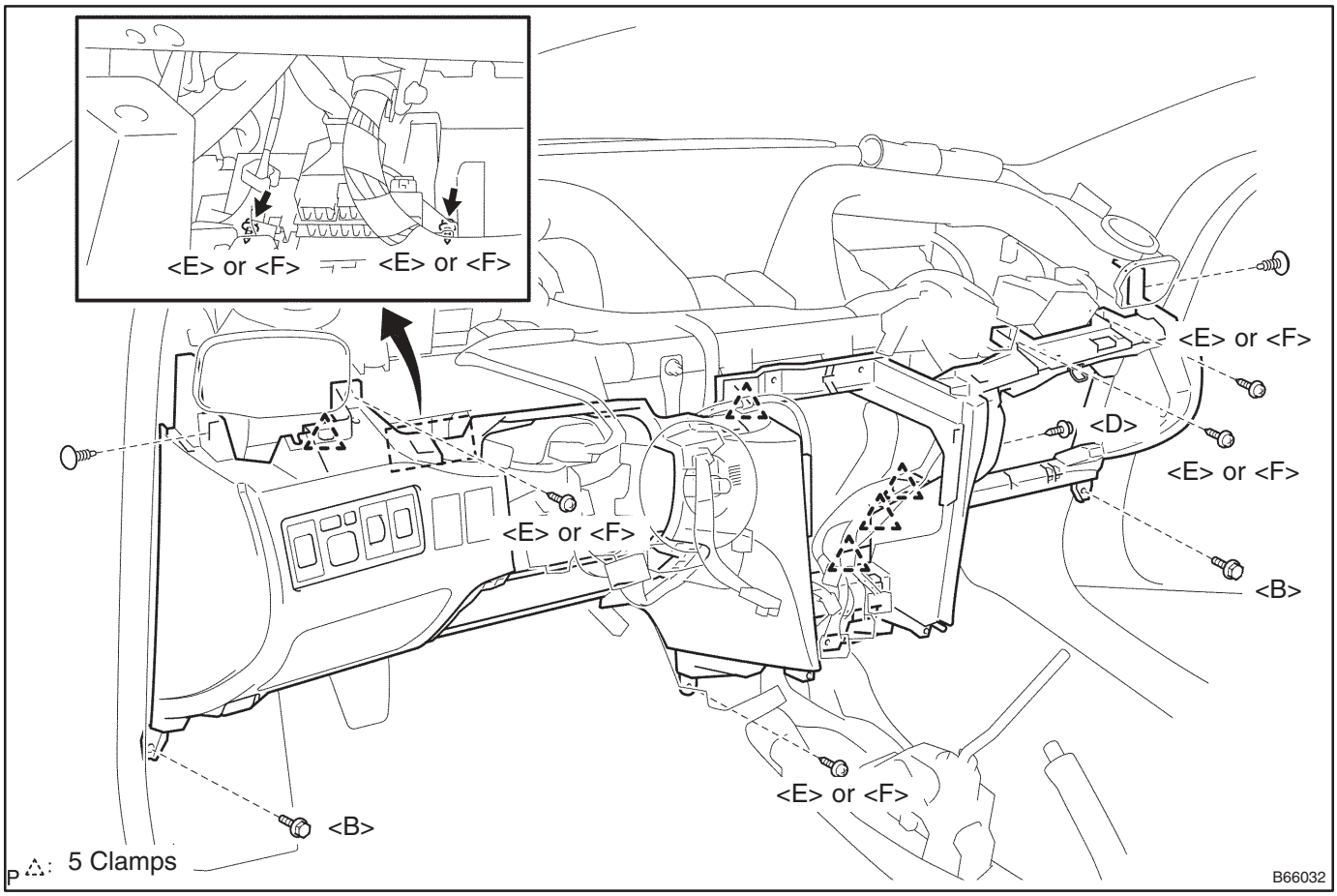

36. REMOVE OUTER MIRROR SWITCH ASSY W/BEZEL

37. REMOVE FUSE BOX OPENING COVER

38. REMOVE GLOVE BOX LAMP ASSY

39. REMOVE INSTRUMENT PANEL BRACKET SUB–ASSY CENTER

(a) Remove the screw <H> and the instrument panel bracket sub–assy center.

40. REMOVE COOLER (ROOM TEMP. SENSOR) THERMISTOR

41. REMOVE INSTRUMENT PANEL SUB–ASSY LOWER

42. INSTALL INSTRUMENT PANEL AIR BAG ASSY (See Pub. No. RM1018E, page 60–29)

43. INSTALL INSTRUMENT PANEL SUB–ASSY UPPER W/INSTRUMENT PANEL PASSENGER AIRBAG ASSY

(a) Engage the 2 clips and 10 claws.

(b) Install the instrument panel sub–assy upper with the 2 screws <H> and bolt <A>.
Torque: Bolt: 20 N·m (204 kgf·cm, 15 ft·lbf)

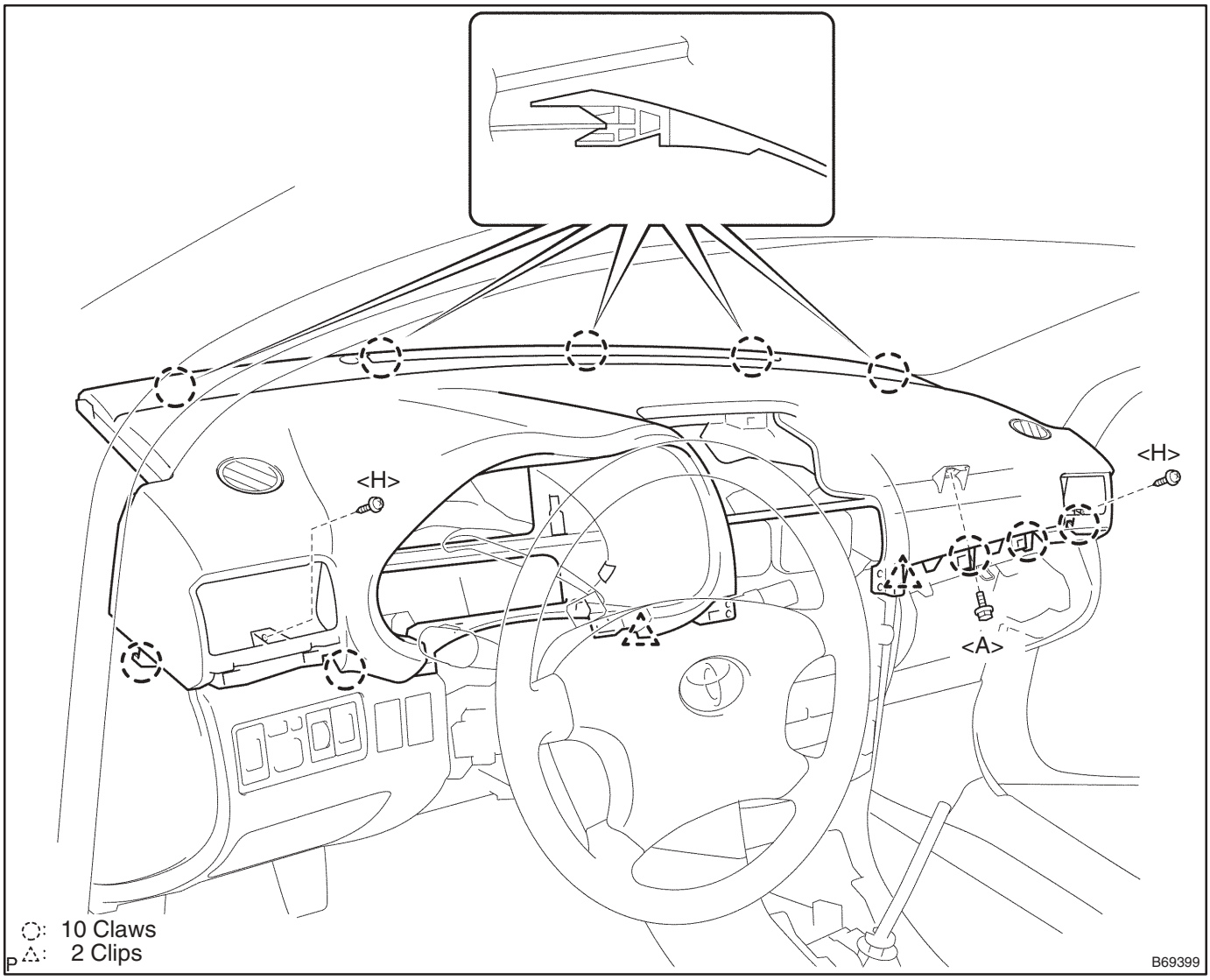

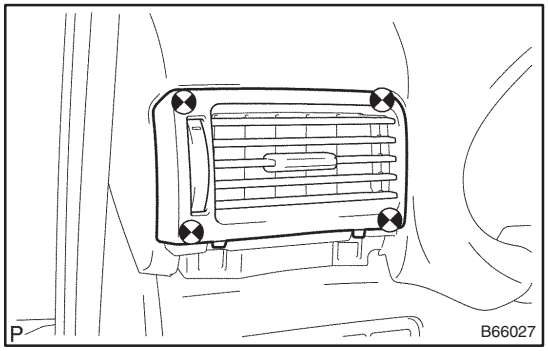

44. INSTALL INSTRUMENT PANEL REGISTER ASSY NO.1

(a) Install the instrument panel register assy No.1 by pushing the 4 positions on the face panel shown in the illustration with fingers.

NOTICE:

Do not push on the dial, fin adjuster or fins.

45. INSTALL INSTRUMENT PANEL REGISTER ASSY NO.2
46. ADJUST SPIRAL CABLE SUB–ASSY (See Pub. No. RM1018E, page 60–26)
47. INSTALL STEERING WHEEL ASSY (See Pub. No. RM1018E, page 50–9)
48. INSTALL HORN BUTTON ASSY (See Pub. No. RM1018E, page 60–17)
49. INSPECT HORN BUTTON ASSY (See Pub. No. RM1018E, page 60–11)
50. INSPECT SRS WARNING LIGHT (See Pub. No. RM1018E, page 05–1184)

HOW TO USE THIS MANUAL

010B2–24

GENERAL INFORMATION

1. GENERAL DESCRIPTION

(a) This manual is made in accordance with SAE J2008.

(b) Generally repair operations can be separated in the following 3 main processes:
1. Diagnosis
2. Removing and Installing, Replacing, Disassembling, Installing and Checking, Adjusting
3. Final Inspection

(c) This manual explains ”Removing and Installing, Replacing, Disassembling, Installing and Checking, Adjusting”, but ”Final Inspection” is omitted.

(d) The following essential operations are not written in this manual, however these operations must be done in the practical situation.
(1) Operation with a jack or lift
(2) Cleaning of a removed part when necessary
(3) Visual check

2. INDEX

(a) An alphabetical INDEX is provided as a section on the end of the book to guide you to the item to be repaired.

3. PREPARATION

(a) Use of special service tools (SST) and special service materials (SSM) may be required, depending on the repairing condition. Be sure to use SST and SSM when they are required and follow the working procedure properly. A list of SST and SSM is in the Preparation section of this manual.

4. REPAIR PROCEDURES

(a) Component drawing is placed as the section or title when necessary.

(b) Illustrations of the parts catalog are placed as the ”disassembled parts drawing” so that it enables you to understand the fitting condition of the components.

(c) Non–reusable parts, grease applied parts, precoated parts and tightening torque are specified in the components drawing.

Example:

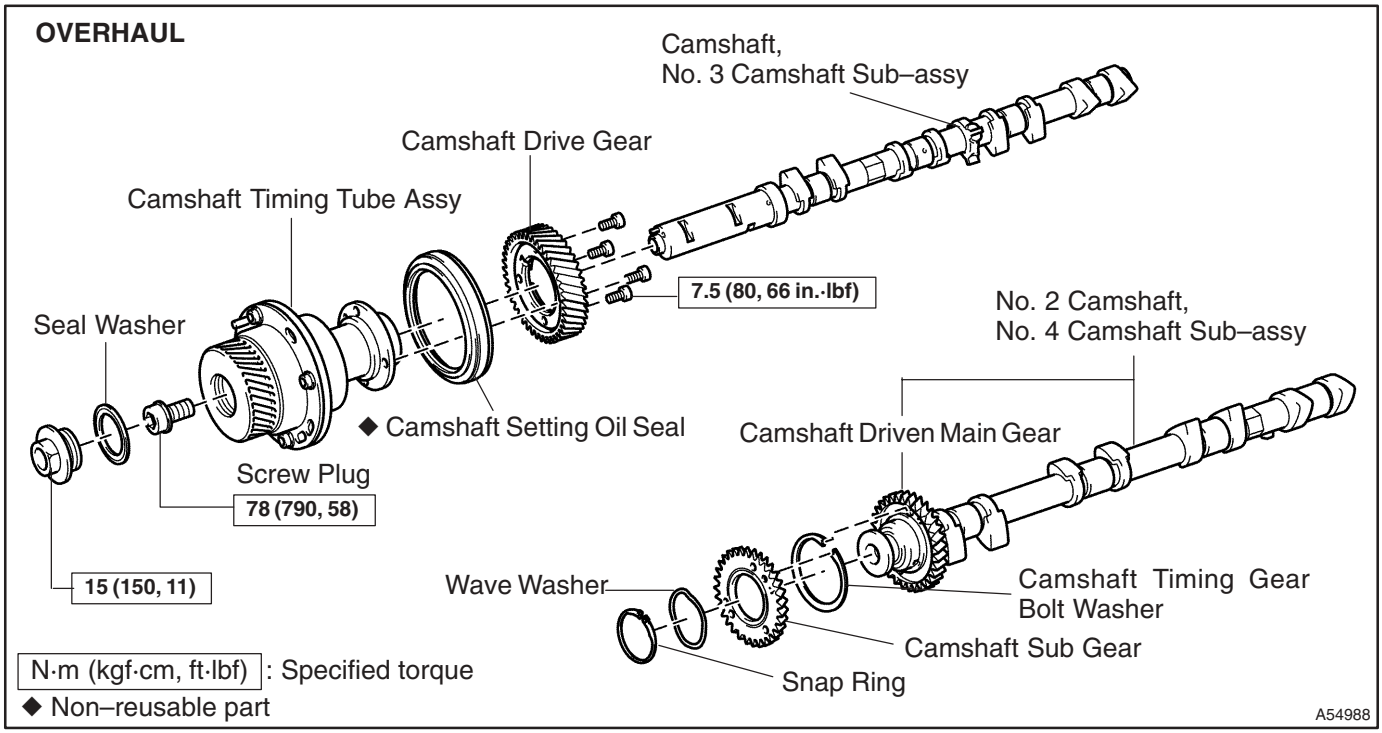

(d) Tightening torque, oil applying position, and non–reusable parts are described as important points in the procedure.

NOTICE:

There are cases where such information can only be indicated by an illustration. In that case, all the information such as torque, oil, etc. are described in the illustration.

(e) Installing procedure of operation items is performed in the reverse order of the removing, and only the important points are described.

(f) Only items with points are described in the procedure, and the operational portion and content are placed using an illustration. In the explanations, details of the operational method, standard value and notice are placed.

(g) There may be a case where the illustrations of similar models are used. In that case the details may be different from the actual vehicle.

(h) The procedures are presented in a step–by–step format:
   (1) The illustration shows what to do and where to do it.
   (2) The task heading tells what to do.
   (3) The detailed text tells how to perform the task and gives other information such as specifications and warnings.

   Example:

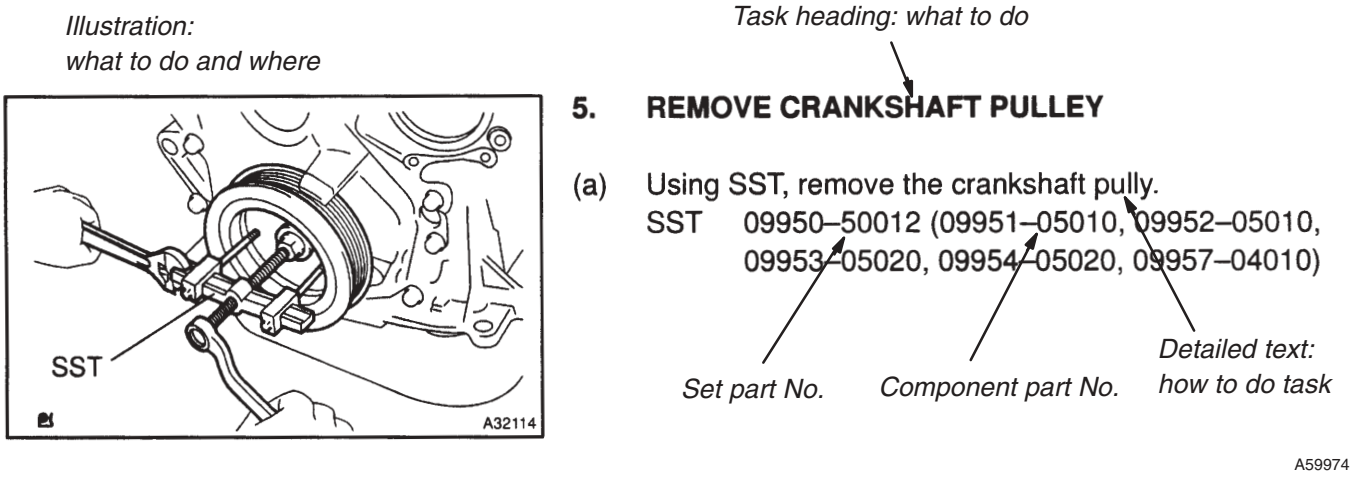

HINT:

This format provides an experienced technician with a FAST TRACK to the necessary information. The task heading can be read at a glance when necessary, and the text below provides detailed information. Important specifications and warnings always stand out in bold type.

5. SERVICE SPECIFICATIONS

(a) Specifications are presented in bold type throughout the manual. You never have to leave the procedure to look up your specifications. The specifications are also found in the Service Specifications section for a quick reference.

6. TERMS DEFINITION

CAUTION	Indicate the possibility of injury to you or other people.
NOTICE	Indicate the possibility of damage to the components being repaired.
HINT	Provide additional information to help you perform the repair efficiently.

7. SI UNIT

(a) The UNITS given in this manual are primarily expressed according to the SI UNIT (International System of Unit), and alternately expressed in the metric system and in the English System.

Example:

Torque: 30 N·m (310 kgf·cm, 22 ft·lbf)

REPAIR INSTRUCTION

010X0–01

PRECAUTION

1. TO PREVENT FROM ENTERING FOREIGN SUBSTANCES

(a) When foreign substances such as dust, grain of sand or metallic dust enter inside of engine, it often causes functional failure of the engine.
  (1) Precaution before disassembly.
    • Remove adequately all sand and mud adhere to the outside of engine .
  (2) Precaution at reassembly.
    • Protect disassembled parts from dust by using vinyl sheet to cover.

2. TO PREVENT SCRATCHES ON THE PARTS

(a) The existence of scratches on the contact and revolving surfaces often causes oil leak and seisure.
  (1) Precautions at disassembly and reassembly.
    • When disassemble the contact surface of the parts, use plastic hummer striking lightly. (Do not pry out by screwdriver).
    • When fix the parts to the vise, do not directly catch it in the vise. Fix the parts through aluminum bar.

3. TO CLEAN AND WASH THE PARTS

(a) Each parts needs to be well cleaned, washed, and dried by air, and apply specified oil before reassembly.
  (1) Cleaning and washing by alkaline solvent is prohibited:
    • Parts made of aluminum and rubber. (ex. cylinder head cover gasket etc.)
  (2) Cleaning and washing by flushing oil (ex. kerosene, white gasoline etc.) is prohibited:
    • Parts made of rubber. (ex. cylinder head cover gasket etc.)

4. POSITION AND DIRECTION OF EACH PARTS

(a) Each parts needs to be reassembled as the same position and direction as it disassembled.
  (1) Precautions at disassembly and reassembly.
    • Follow the directions when the manual designates to mark the matchmark and/or direction mark.
    • Disassembled parts needs to be put in order as disassembled, not to change position and/or direction.
    • Follow the directions when the manual instructs the position and direction.

5. INSTALL ENGINE ASSEMBLY TO OVERHAUL STAND WHEN OVERHAUL THE ENGINE

6. PUT THE DISASSEMBLED PARTS IN ORDER AS THEY DISASSEMBLED

7. APPLY ENGINE OIL TO THE SLIDING AND ROTATING SURFACES

8. NON–REUSABLE PARTS SUCH AS GASKET AND SEAL NEEDS TO BE CHANGED TO THE NEW PARTS

9. BASIC REPAIR HINT

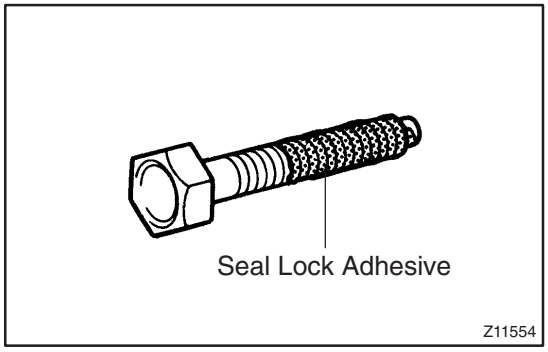

(a) Precoated Parts:
  (1) Precoated parts are bolts, nuts, etc. that are coated with a seal lock adhesive at the factory.
  (2) If a precoated part is retightened, loosened or caused to move in any way, it must be recoated with the specified adhesive.
  (3) When reusing precoated parts, clean off the old adhesive and dry with compressed air. Then apply the specified seal lock adhesive to the bolt, nut or threads.

NOTICE:

Do the torque checking with the lower limit value of the torque tolerance.

(4) Depending on the seal lock agent to apply, there may be a case where it is necessary to leave it for a specified time until it hardens.

(b) Gaskets:
When necessary, use a sealer on gaskets to prevent leaks.

(c) Bolts, Nuts and Screws:
Carefully observe all specifications for bolt tightening torques. Always use a torque wrench.

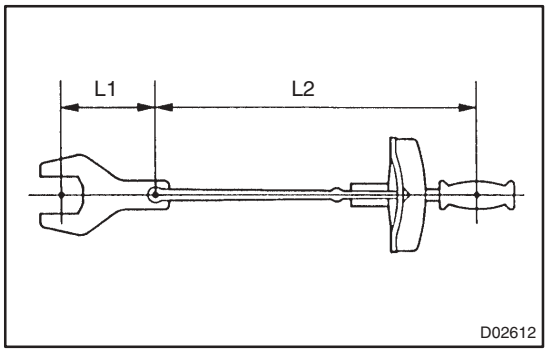

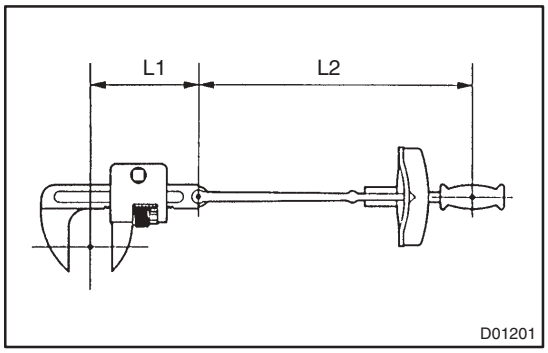

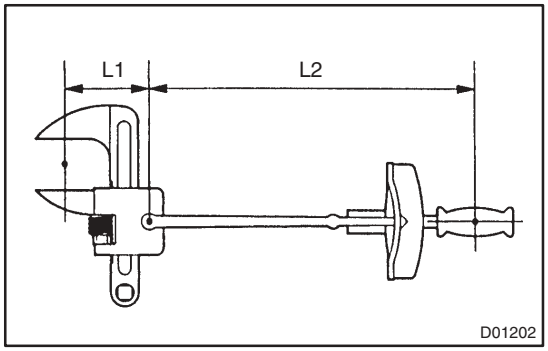

(d) Torque When Using Extension Tool with Torque Wrench:

(1) In case of tightening by extending the entire length of the torque wrench combined with SST or tool, if you tighten until the reading of the torque wrench reached the specified torque value, the actual torque becomes excessive.

(2) In this text, only the specified torque is described. In case of using SST or extension tool, find the reading of the torque wrench by the formula.

(3) Formula T' = T x L2/(L1 + L2)

T'	Reading of torque wrench {N·m (kgf·cm, ft·lbf)}
T	Torque {N·m (kgf·cm, ft·lbf)}
L1	Length of SST or tool (cm)
L2	Length of torque wrench (cm)

10. REMOVAL AND INSTALLATION OF FUEL CONTROL PARTS

(a) Place for Removing and Installing Fuel System Parts:

(1) Place with good air ventilation and without anything flammable such as welder, grinder, drill, electric motor or stove in the surroundings.

(2) Never work in a place like a pit or nearby pit as there is a possibility that vaporized fuel fills those places.

(b) Removing and Installing of Fuel System Parts:

(1) Prepare a fire extinguisher before starting the operation.

(2) For prevention of the static electricity, install a ground on the fuel changer, vehicle and fuel tank, and do not spray much water so as to prevent slipping.

(3) Never use any electric equipment like an electric motor or a working light as they may cause spark or high temperature.
(4) Never use an iron hammer as it may cause spark.
(5) Dispose the shop lag separately from any fuel deposit.

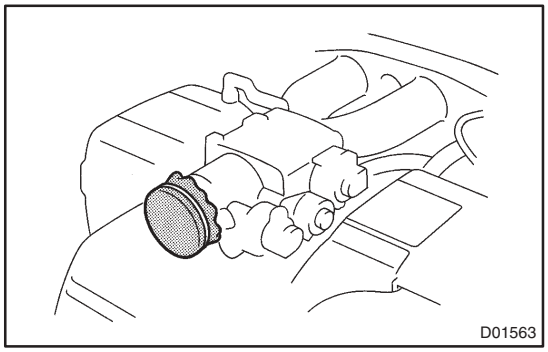

11. REMOVAL AND INSTALLATION OF ENGINE INTAKE PARTS

(a) If any metal tip is mixed in the inlet pass, that may give a bad effect to the engine and turbo charger.
(b) When removing and installing of the inlet system parts, close the opening of the removed inlet system parts and the engine with a clean shop lag or gum tape.
(c) When installing the inlet system parts, check that there is no mixing of a metal tip.

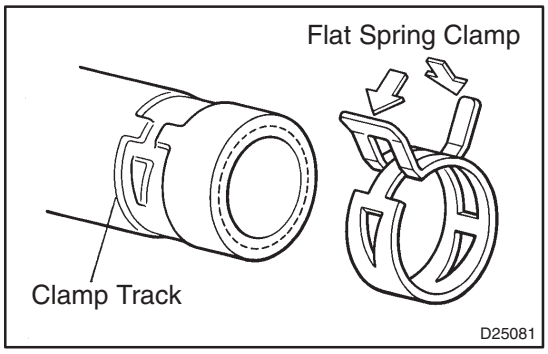

12. HANDLING OF HOSE CLAMPS

(a) Before removing the hose, check the depth of inserting portion and the clamp position to restore it surely.
(b) Change a deformed or dented into a new one.
(c) In case of reusing the hose, install the clamp on the hose where it has a clamp track.
(d) For a flat spring type clamp, make it adjust by adding force to the arrow mark direction after the installation.

TERMS

ABBREVIATIONS USED IN THIS MANUAL

010B9–21

Abbreviations	Meaning
ABS	Anti–Lock Brake System
A/C	Air Conditioner
AC	Alternating Current
ACC	Accessory
ACIS	Acoustic Control Induction System
ACSD	Automatic Cold Start Device
A.D.D.	Automatic Disconnecting Differential
A/F	Air–Fuel Ratio
AHC	Active Height Control Suspension
ALR	Automatic Locking Retractor
ALT	Alternator
AMP	Amplifier
ANT	Antenna
Approx.	Approximately
ASSY	Assembly
A/T, ATM	Automatic Transmission (Transaxle)
ATF	Automatic Transmission Fluid
AUTO	Automatic
AUX	Auxiliary
AVG	Average
AVS	Adaptive Variable Suspension
B+	Battery Voltage
BA	Brake Assist
BACS	Boost Altitude Compensation System
BAT	Battery
BDC	Bottom Dead Center
B/L	Bi–Level
B/S	Bore–Stroke Ratio
BTDC	Before Top Dead Center
BVSV	Bimetallic Vacuum Switching Valve
CAN	Controller Area Network
CB	Circuit Breaker
CCo	Catalytic Converter For Oxidation
CD	Compact Disc
CF	Cornering Force
CG	Center Of Gravity
CH	Channel
CKD	Complete Knock Down
COMB.	Combination
CPE	Coupe
CPS	Combustion Pressure Sensor
CPU	Central Processing Unit
CRS	Child Restraint System
CTR	Center
C/V	Check Valve
CV	Control Valve
CW	Curb Weight
DC	Direct Current

Abbreviations	Meaning
DEF	Defogger
DFL	Deflector
DIFF.	Differential
DIFF. LOCK	Differential Lock
D/INJ	Direct Injection
DLC	Data Link Connector
DLI	Distributorless Ignition
DOHC	Double Overhead Camshaft
DP	Dash Pot
DS	Dead Soak
DSP	Digital Signal Processor
DTC	Diagnostic Trouble Code
DVD	Digital Versatile Disc
EBD	Electric Brake Force Distribution
ECAM	Engine Control And Measurement System
ECD	Electronic Controlled Diesel
ECDY	Eddy Current Dynamometer
ECT	Electronic Control Transmission
ECU	Electronic Control Unit
ED	Electro–DepositedCoating
EDU	Electronic Driving Unit
EDIC	Electric Diesel Injection Control
EFI	Electronic Fuel Injection
E/G	Engine
EGR	Exhaust Gas Recirculation
EGR–VM	EGR–Vacuum Modulator
ELR	Emergency Locking Retractor
EMPS	Electric Motor Power Steering
ENG	Engine
ESA	Electronic Spark Advance
ETCS–i	Electronic Throttle Control System–intelligent
EVAP	Evaporative Emission Control
EVP	Evaporator
E–VRV	Electric Vacuum Regulating Valve
EX	Exhaust
FE	Fuel Economy
FF	Front–EngineFront–Wheel–Drive
F/G	Fuel Gauge
FIPG	Formed In Place Gasket
FL	Fusible Link
F/P	Fuel Pump
FPU	Fuel Pressure Up
Fr	Front
F/W	Flywheel
FW/D	Flywheel Damper
FWD	Front–Wheel–Drive
GAS	Gasoline
GND	Ground
GPS	Global Positioning System
HAC	High Altitude Compensator
H/B	Hatchback

Abbreviations	Meaning
H–FUSE	High Current Fuse
HI	High
HID	High Intensity Discharge (Head Lamp)
HSG	Housing
HT	Hard Top
HWS	Heated Windshield System
IC	Integrated Circuit
IDI	Indirect Diesel Injection
IFS	Independent Front Suspension
IG	Ignition
IIA	Integrated Ignition Assembly
IN	Intake (Manifold, Valve)
INT	Intermittent
I/P	Instrument Panel
IRS	Independent Rear Suspension
ISC	Idle Speed Control
J/B	Junction Block
J/C	Junction Connector
KD	Kick–Down
LAN	Local Area Network
LB	Liftback
LCD	Liquid Crystal Display
LED	Light Emitting Diode
LH	Left–Hand
LHD	Left–Hand Drive
L/H/W	Length, Height, Width
LLC	Long–Life Coolant
LNG	Liquified Natural Gas
LO	Low
LPG	Liquified Petroleum Gas
LSD	Limited Slip Differential
LSP & PV	Load Sensing Proportioning And Bypass Valve
LSPV	Load Sensing Proportioning Valve
MAP	Manifold Absolute Pressure
MAX.	Maximum
MIC	Microphone
MIL	Malfunction Indicator Lamp
MIN.	Minimum
MG1	Motor Generator No.1
MG2	Motor Generator No.2
MP	Multipurpose
MPI	Multipoint Electronic Injection
MPX	Multiplex Communication System
M/T, MTM	Manual Transmission (Transaxle)
MT	Mount
MTG	Mounting
N	Neutral
NA	Natural Aspiration
No.	Number
O2S	Oxygen Sensor
O/D	Overdrive

Abbreviations	Meaning
OEM	Original Equipment Manufacturing
OHC	Overhead Camshaft
OHV	Overhead Valve
OPT	Option
ORVR	On–board Refilling Vapor Recovery
O/S	Oversize
P & BV	Proportioning And Bypass Valve
PCS	Power Control System
PCV	Positive Crankcase Ventilation
PKB	Parking Brake
PPS	Progressive Power Steering
PTC	Positive Temperature Coefficient
PS	Power Steering
PTO	Power Take–Off
P/W	Power Window
R & P	Rack And Pinion
RAM	Random Access Memory
R/B	Relay Block
RBS	Recirculating Ball Type Steering
R/F	Reinforcement
RFS	Rigid Front Suspension
RH	Right–Hand
RHD	Right–Hand Drive
RLY	Relay
ROM	Read Only Memory
Rr	Rear
RRS	Rigid Rear Suspension
RWD	Rear–Wheel Drive
SDN	Sedan
SEN	Sensor
SICS	Starting Injection Control System
SOC	State Of Charge
SOHC	Single Overhead Camshaft
SPEC	Specification
SPI	Single Point Injection
SRS	Supplemental Restraint System
SSM	Special Service Materials
SST	Special Service Tools
STD	Standard
STJ	Cold–Start Fuel Injection
SW	Switch
SYS	System
T/A	Transaxle
TACH	Tachometer
TBI	Throttle Body Electronic Fuel Injection
TC	Turbocharger
TCCS	TOYOTA Computer–Controlled System
TCV	Timing Control Valve
TDC	Top Dead Center
TEMP.	Temperature
TEMS	TOYOTA Electronic Modulated Suspension

Abbreviations	Meaning
TFT	Toyota Free–Tronic
TIS	Total Information System For Vehicle Development
T/M	Transmission
TMC	TOYOTA Motor Corporation
TMMK	TOYOTA Motor Manufacturing Kentucky, Inc.
TRC	Traction Control System
TURBO	Turbocharge
TWC	Three–Way Catalyst
U/D	Underdrive
U/S	Undersize
VCV	Vacuum Control Valve
VENT	Ventilator
VIN	Vehicle Identification Number
VPS	Variable Power Steering
VSC	Vehicle Stability Control
VSV	Vacuum Switching Valve
VTV	Vacuum Transmitting Valve
VVT–i	Variable Valve Timing–intelligent
w/	With
WGN	Wagon
W/H	Wire Harness
w/o	Without
WU–TWC	Warm Up Three–way Catalytic Converter
WU–OC	Warm Up Oxidation Catalytic Converter
1st	First
2nd	Second
2WD	Two Wheel Drive Vehicle (4 x 2)
3rd	Third
4th	Fourth
4WD	Four Wheel Drive Vehicle (4 x 4)
4WS	Four Wheel Steering System
5th	Fifth

010BA–22

GLOSSARY OF SAE AND TOYOTA TERMS

This glossary lists all SAE–J1930 terms and abbreviations used in this manual in compliance with SAE recommendations, as well as their TOYOTA equivalents.

SAE ABBREVIATIONS	SAE TERMS	TOYOTA TERMS ( )—ABBREVIATIONS
A/C	Air Conditioning	Air Conditioner
ACL	Air Cleaner	Air Cleaner, A/CL
AIR	Secondary Air Injection	Air Injection (AI)
AP	Accelerator Pedal	–
B+	Battery Positive Voltage	+B, Battery Voltage
BARO	Barometric Pressure	HAC
CAC	Charge Air Cooler	Intercooler
CARB	Carburetor	Carburetor
CFI	Continuous Fuel Injection	–
CKP	Crankshaft Position	Crank Angle
CL	Closed Loop	Closed Loop
CMP	Camshaft Position	Cam Angle
CPP	Clutch Pedal Position	–
CTOX	Continuous Trap Oxidizer	–
CTP	Closed Throttle Position	LL ON, Idle ON
DFI	Direct Fuel Injection (Diesel)	Direct Injection (DI/INJ)
DI	Distributor Ignition	–
DLC1 DLC2 DLC3	Data Link Connector 1 Data Link Connector 2 Data Link Connector 3	1: Check Connector 2: Total Diagnosis Communication Link (TDCL) 3: OBD II Diagnostic Connector
DTC	Diagnostic Trouble Code	Diagnostic Trouble Code
DTM	Diagnostic Test Mode	–
ECL	Engine Control Level	–
ECM	Engine Control Module	Engine ECU (Electronic Control Unit)
ECT	Engine Coolant Temperature	Coolant Temperature, Water Temperature (THW)
EEPROM	Electrically Erasable Programmable Read Only Memory	Electrically Erasable Programmable Read Only Memory (EEPROM), Erasable Programmable Read Only Memory (EPROM)
EFE	Early Fuel Evaporation	Cold Mixture Heater (CMH), Heat Control Valve (HCV)
EGR	Exhaust Gas Recirculation	Exhaust Gas Recirculation (EGR)
EI	Electronic Ignition	Distributorless Ignition (DLI)
EM	Engine Modification	Engine Modification (EM)
EPROM	Erasable Programmable Read Only Memory	Programmable Read Only Memory (PROM)
EVAP	Evaporative Emission	Evaporative Emission Control (EVAP)
FC	Fan Control	–
FEEPROM	Flash Electrically Erasable Programmable Read Only Memory	–
FEPROM	Flash Erasable Programmable Read Only Memory	–
FF	Flexible Fuel	–
FP	Fuel Pump	Fuel Pump
GEN	Generator	Alternator
GND	Ground	Ground (GND)

HO2S	Heated Oxygen Sensor	Heated Oxygen Sensor (HO_2S)
IAC	Idle Air Control	Idle Speed Control (ISC)
IAT	Intake Air Temperature	Intake or Inlet Air Temperature
ICM	Ignition Control Module	–
IFI	Indirect Fuel Injection	Indirect Injection (IDL)
IFS	Inertia Fuel–Shutoff	–
ISC	Idle Speed Control	–
KS	Knock Sensor	Knock Sensor
MAF	Mass Air Flow	Air Flow Meter
MAP	Manifold Absolute Pressure	Manifold Pressure Intake Vacuum
MC	Mixture Control	Electric Bleed Air Control Valve (EBCV) Mixture Control Valve (MCV) Electric Air Control Valve (EACV)
MDP	Manifold Differential Pressure	–
MFI	Multiport Fuel Injection	Electronic Fuel Injection (EFI)
MIL	Malfunction Indicator Lamp	Check Engine Lamp
MST	Manifold Surface Temperature	–
MVZ	Manifold Vacuum Zone	–
NVRAM	Non–Volatile Random Access Memory	–
O2S	Oxygen Sensor	Oxygen Sensor, O_2 Sensor (O_2S)
OBD	On–Board Diagnostic	On–Board Diagnostic System (OBD)
OC	Oxidation Catalytic Converter	Oxidation Catalyst Convert (OC) Catalytic Converter for Oxidation (CCo)
OP	Open Loop	Open Loop
PAIR	Pulsed Secondary Air Injection	Air Suction (AS)
PCM	Powertrain Control Module	–
PNP	Park/Neutral Position	–
PROM	Programmable Read Only Memory	–
PSP	Power Steering Pressure	–
PTOX	Periodic Trap Oxidizer	Diesel Particulate Filter (DPF) Diesel Particulate Trap (DPT)
RAM	Random Access Memory	Random Access Memory (RAM)
RM	Relay Module	–
ROM	Read Only Memory	Read Only Memory (ROM)
RPM	Engine Speed	Engine Speed
SC	Supercharger	Supercharger
SCB	Supercharger Bypass	E–ABV
SFI	Sequential Multiport Fuel Injection	Electronic Fuel Injection (EFI), Sequential Injection
SPL	Smoke Puff Limiter	–
SRI	Service Reminder Indicator	–
SRT	System Readiness Test	–
ST	Scan Tool	–
TB	Throttle Body	Throttle Body
TBI	Throttle Body Fuel Injection	Single Point Injection Central Fuel Injection (Ci)
TC	Turbocharger	Turbocharger
TCC	Torque Converter Clutch	Torque Converter

TCM	Transmission Control Module	Transmission ECU, ECT ECU
TP	Throttle Position	Throttle Position
TR	Transmission Range	–
TVV	Thermal Vacuum Valve	Bimetallic Vacuum Switching Valve (BVSV) Thermostatic Vacuum Switching Valve (TVSV)
TWC	Three–Way Catalytic Converter	Three–Way Catalytic (TWC) Manifold Converter CC_{RO}
TWC+OC	Three–Way + Oxidation Catalytic Converter	CC_R + CCo
VAF	Volume Air Flow	Air Flow Meter
VR	Voltage Regulator	Voltage Regulator
VSS	Vehicle Speed Sensor	Vehicle Speed Sensor
WOT	Wide Open Throttle	Full Throttle
WU–OC	Warm Up Oxidation Catalytic Converter	–
WU–TWC	Warm Up Three–Way Catalytic Converter	–
3GR	Third Gear	–
4GR	Fourth Gear	–

ENGINE MECHANICAL

PREPARATION

023VF–01

SST

	09032–00100	Oil Pan Seal Cutter	PARTIAL ENGINE ASSY(1ZZ–FE/3ZZ–FE)
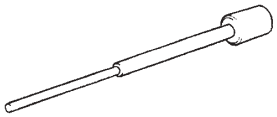	09201–01055	Valve Guide Bushing Remover & Replacer 5.5	CYLINDER HEAD ASSY(1ZZ–FE/3ZZ–FE)
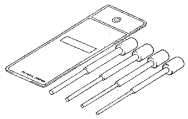	09201–10000	Valve Guide Bushing Remover & Replacer Set	CYLINDER HEAD ASSY(1ZZ–FE/3ZZ–FE)
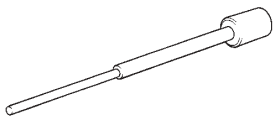	(09201–01050)	Valve Guide Bushing Remover & Replacer 5	CYLINDER HEAD ASSY(1ZZ–FE/3ZZ–FE)
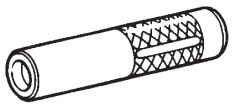	09201–41020	Valve Stem Oil Seal Replacer	CYLINDER HEAD ASSY(1ZZ–FE/3ZZ–FE)
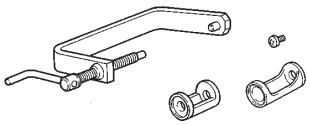	09202–70020	Valve Spring Compressor	CYLINDER HEAD ASSY(1ZZ–FE/3ZZ–FE)
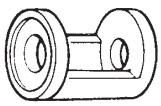	(09202–00010)	Attachment	CYLINDER HEAD ASSY(1ZZ–FE/3ZZ–FE)
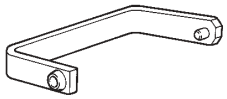	(09202–01010)	Arm	CYLINDER HEAD ASSY(1ZZ–FE/3ZZ–FE)
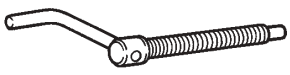	(09202–01020)	Set Bolt	CYLINDER HEAD ASSY(1ZZ–FE/3ZZ–FE)
	09205–16010	Cylinder Head Bolt Wrench	CYLINDER BLOCK ASSY(1ZZ–FE/3ZZ–FE)
	09223–15020	Oil Seal & Bearing Replacer	PARTIAL ENGINE ASSY(1ZZ–FE/3ZZ–FE)
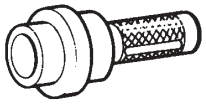	09223–22010	Crankshaft Front Oil Seal Replacer	PARTIAL ENGINE ASSY(1ZZ–FE/3ZZ–FE)

	09228–06501	Oil Filter Wrench	PARTIAL ENGINE ASSY(1ZZ–FE/3ZZ–FE)
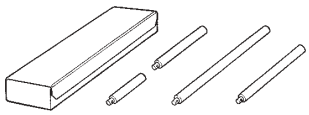	09950–70010	Handle Set	PARTIAL ENGINE ASSY(1ZZ–FE/3ZZ–FE) CYLINDER HEAD ASSY(1ZZ–FE/3ZZ–FE)
	(09951–07100)	Handle 100	PARTIAL ENGINE ASSY(1ZZ–FE/3ZZ–FE) CYLINDER HEAD ASSY(1ZZ–FE/3ZZ–FE)
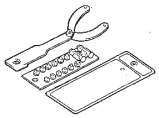	09960–10010	Variable Pin Wrench Set	PARTIAL ENGINE ASSY(1ZZ–FE/3ZZ–FE)
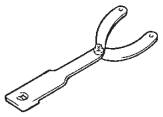	(09962–01000)	Variable Pin Wrench Arm Assy	PARTIAL ENGINE ASSY(1ZZ–FE/3ZZ–FE)
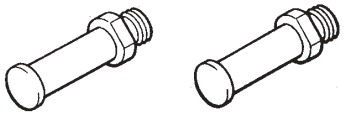	(09963–01000)	Pin 10	PARTIAL ENGINE ASSY(1ZZ–FE/3ZZ–FE)

Recomended Tools

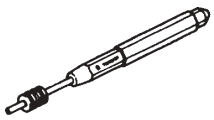	09031–00040	Pin Punch .	CYLINDER HEAD ASSY(1ZZ–FE/3ZZ–FE)
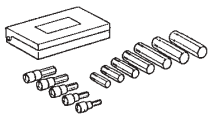	09040–00011	Hexagon Wrench Set	PARTIAL ENGINE ASSY(1ZZ–FE/3ZZ–FE) CYLINDER HEAD ASSY(1ZZ–FE/3ZZ–FE)
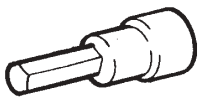	(09043–20100)	Socket Hexagon Wrench 10	CYLINDER HEAD ASSY(1ZZ–FE/3ZZ–FE)
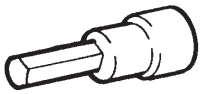	(09043–20120)	Socket Hexagon Wrench 12	PARTIAL ENGINE ASSY(1ZZ–FE/3ZZ–FE)
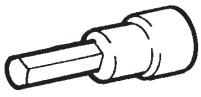	(09043–20120)	Socket Hexagon Wrench 12	PARTIAL ENGINE ASSY(1ZZ–FE/3ZZ–FE)
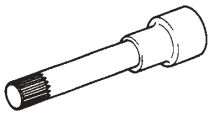	09043–50100	Bi–hexagon Wrench 10 mm	PARTIAL ENGINE ASSY(1ZZ–FE/3ZZ–FE)

Equipment

Piston ring expander	
Valve seal cutter set	
Micro meter	

Dial indicator	
Spring tensjon gauge	
Feeler gauge	
Torque wrench	
Slide calipers	
V–block	
Piston heater	
Plastigage	

LUBRICATION

PREPARATION

023VE–01

Equipment

Feeler gauge	
Straight edge	
Torque wrench	

STARTING & CHARGING

PREPARATION

023YJ–01

SST

	09285–76010	Injection Pump Camshaft Bearing Cone Replacer	GENERATOR ASSY(BOSCH MADE) (1ZZ–FE/3ZZ–FE)
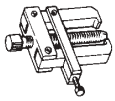	09286–46011	Injection Pump Spline Shaft Puller	GENERATOR ASSY(DENSO MADE) (1ZZ–FE/3ZZ–FE)
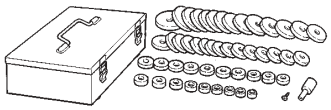	09950–60010	Replacer Set	GENERATOR ASSY(DENSO MADE) (1ZZ–FE/3ZZ–FE)
	(09951–00250)	Replacer 25	GENERATOR ASSY(DENSO MADE) (1ZZ–FE/3ZZ–FE)
	(09951–00470)	Replacer 47	GENERATOR ASSY(DENSO MADE) (1ZZ–FE/3ZZ–FE)
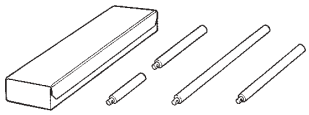	09950–70010	Handle Set	GENERATOR ASSY(DENSO MADE) (1ZZ–FE/3ZZ–FE)
	(09951–07100)	Handle 100	GENERATOR ASSY(DENSO MADE) (1ZZ–FE/3ZZ–FE)

Recommended Tools

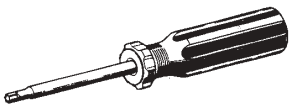	09041–00020	Torx Driver T25	STARTER ASSY(1ZZ–FE/3ZZ–FE)
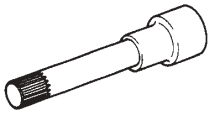	09043–50100	Bi–hexagon Wrench 10 mm	GENERATOR ASSY(BOSCH MADE) (1ZZ–FE/3ZZ–FE)
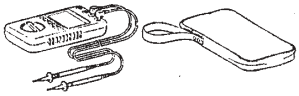	09082–00040	TOYOTA Electrical Tester	GENERATOR ASSY(DENSO MADE) (1ZZ–FE/3ZZ–FE)
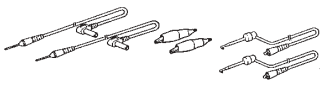	(09083–00150)	Test Lead Set	STARTER ASSY(1ZZ–FE/3ZZ–FE) GENERATOR ASSY(DENSO MADE) (1ZZ–FE/3ZZ–FE)
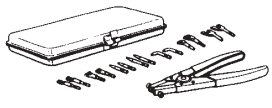	09904–00010	Expander Set	STARTER ASSY(1ZZ–FE/3ZZ–FE)

(09904–00050) No. 4 Claw 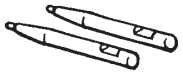	STARTER ASSY(1ZZ–FE/3ZZ–FE)

Equipment

29 mm socket wrench	
Dial indicator	
Long hexagon wrench 8 mm	
Ohmmeter	
Slide calipers	
Torque wrench	
Vernier caliper	
V–block	

STANDARD BOLT

HOW TO DETERMINE BOLT STRENGTH

030LK–10

Bolt Type				Class
Hexagon Head Bolt		Stud Bolt	Weld Bolt	
Normal Recess Bolt	Deep Recess Bolt			
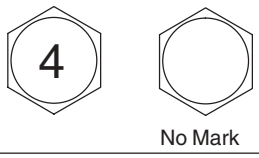 No Mark	 No Mark	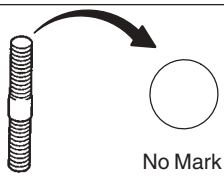 No Mark	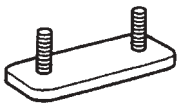	4T
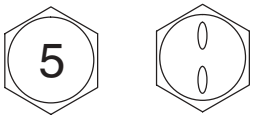				5T
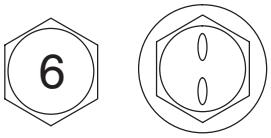 w/ Washer	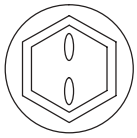 w/ Washer			6T
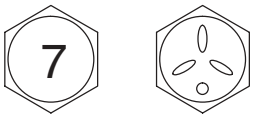	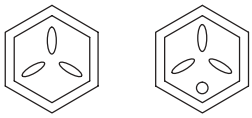			7T
				8T
				9T
	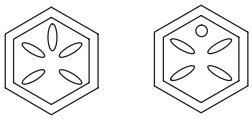			10T
	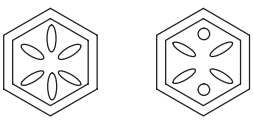			11T

B06431

030LL–10

SPECIFIED TORQUE FOR STANDARD BOLTS

Class	Diameter mm	Pitch mm	Specified torque					
			Hexagon head bolt			Hexagon flange bolt		
			N·m	kgf·cm	ft·lbf	N·m	kgf·cm	ft·lbf
4T	6	1	5	55	48 in.·lbf	6	60	52 in.·lbf
	8	1.25	12.5	130	9	14	145	10
	10	1.25	26	260	19	29	290	21
	12	1.25	47	480	35	53	540	39
	14	1.5	74	760	55	84	850	61
	16	1.5	115	1,150	83	–	–	–
5T	6	1	6.5	65	56 in.·lbf	7.5	75	65 in.·lbf
	8	1.25	15.5	160	12	17.5	175	13
	10	1.25	32	330	24	36	360	26
	12	1.25	59	600	43	65	670	48
	14	1.5	91	930	67	100	1,050	76
	16	1.5	140	1,400	101	–	–	–
6T	6	1	8	80	69 in.·lbf	9	90	78 in.·lbf
	8	1.25	19	195	14	21	210	15
	10	1.25	39	400	29	44	440	32
	12	1.25	71	730	53	80	810	59
	14	1.5	110	1,100	80	125	1,250	90
	16	1.5	170	1,750	127	–	–	–
7T	6	1	10.5	110	8	12	120	9
	8	1.25	25	260	19	28	290	21
	10	1.25	52	530	38	58	590	43
	12	1.25	95	970	70	105	1,050	76
	14	1.5	145	1,500	108	165	1,700	123
	16	1.5	230	2,300	166	–	–	–
8T	8	1.25	29	300	22	33	330	24
	10	1.25	61	620	45	68	690	50
	12	1.25	110	1,100	80	120	1,250	90
9T	8	1.25	34	340	25	37	380	27
	10	1.25	70	710	51	78	790	57
	12	1.25	125	1,300	94	140	1,450	105
10T	8	1.25	38	390	28	42	430	31
	10	1.25	78	800	58	88	890	64
	12	1.25	140	1,450	105	155	1,600	116
11T	8	1.25	42	430	31	47	480	35
	10	1.25	87	890	64	97	990	72
	12	1.25	155	1,600	116	175	1,800	130

030LM–10

HOW TO DETERMINE NUT STRENGTH

Nut Type			Class
Present Standard Hexagon Nut	Old Standard Hexagon Nut		
	Cold Forging Nut	Cutting Processed Nut	
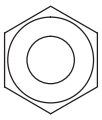 No Mark			4N
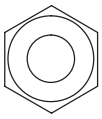 No Mark (w/ Washer)	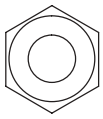 No Mark (w/ Washer)	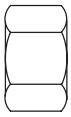 No Mark	5N (4T)
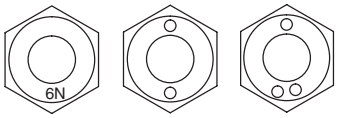 6N			6N
	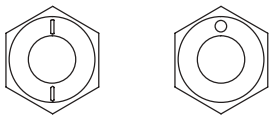	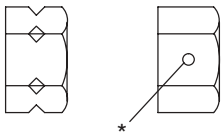 *	7N (5T)
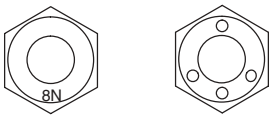 8N			8N
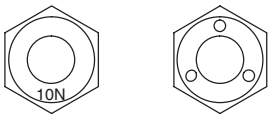 10N	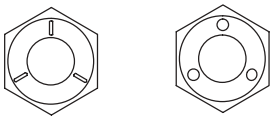	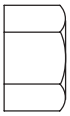 No Mark	10N (7T)
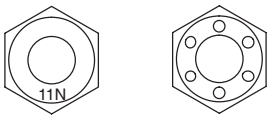 11N			11N
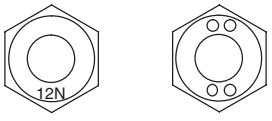 12N			12N

*: Nut with 1 or more marks on one side surface of the nut.

B06432

HINT:

Use the nut with the same number of the nut strength classification or the greater than the bolt strength classification number when tightening parts with a bolt and nut.

Example: Bolt = 4T

Nut = 4N or more

ENGINE MECHANICAL

SERVICE DATA

031H1–05

Chain sub–assy		
Length at 15 links	Maximum	115.3 mm (4.539 in.)
Camshaft timing gear or sprocket		
Diameter (w/ chain)	Minimum	96.8 mm (3.811 in.)
Crankshaft timing gear or sprocket		
Diameter (w/ chain)	Minimum	51.0 mm (2.008 in.)
Chain tensioner slipper		
Wear	Maximum	1.0 mm (0.039 in.)
Chain vibration damper No. 1		
Wear	Maximum	1.0 mm (0.039 in.)
Cylinder head set bolt		
Length	Standard	146.8 to 148.2 mm (5.780 to 5.835 in.)
	Maximum	148.5 mm (5.846 in.)
Camshaft		
Circle runout	Maximum	0.03 mm (0.0012 in.)
Lobe height	Standard	
	Intake	44.333 to 44.433 mm (1.7454 to 1.7493 in.)
	Exhaust	43.761 to 43.861 mm (1.7229 to 1.7268 in.)
	Minimum	
	Intake	44.18 mm (1.7394 in.)
	Exhaust	43.61 mm (1.7169 in.)
Journal diameter	No. 1	34.449 to 34.465 mm (1.3563 to 1.3569 in.)
	Others	22.949 to 22.965 mm (0.9035 to 0.9041 in.)
Thrust clearance	Standard	0.040 to 0.095 mm (0.0009 to 0.0023 in.)
	Maximum	0.110 mm (0.0043 in.)
Oil clearance	Standard	0.035 to 0.072 mm (0.0014 to 0.0028 in.)
	Maximum	0.10 mm (0.0039 in.)
Valve clearance (Cold)	Intake	0.15 to 0.25 mm (0.0059 to 0.0098 in.)
	Exhaust	0.25 to 0.35 mm (0.0098 to 0.0138 in.)
Cylinder head sub–assy		
Warpage	Maximum	
	Cylinder block side	0.05 mm (0.0020 in.)
	Intake manifold side	0.10 mm (0.0039 in.)
	Exhaust manifold side	0.10 mm (0.0039 in.)
Valve guide bushing		
Inside diameter		5.510 to 5.530 mm (0.2169 to 0.2177 in.)
Oil clearance	Standard	
	Intake	0.025 to 0.060 mm (0.0010 to 0.0024 in.)
	Exhaust	0.030 to 0.065 mm (0.0012 to 0.0026 in.)
	Maximum	
	Intake	0.08 mm (0.0031 in.)
	Exhaust	0.10 mm (0.0039 in.)
Bore diameter		10.285 to 10.306 mm (0.4049 to 0.4058 in.)
Protrusion height		8.7 to 9.1 mm (0.342 to 0.358 in.)
Valve stem		
Diameter	Intake	5.470 to 5.485 mm (0.2154 to 0.2159 in.)
	Exhaust	5.465 to 5.480 mm (0.2152 to 0.2158 in.)
Inner compression spring		
Free length		43.40 mm (1.7087 in.)
Deviation	Maximum	1.6 mm (0.063 in.)
Angle (reference)	Maximum	2°

Valve		
Overall length	Standard	
	Intake	88.65 mm (3.4902 in.)
	Exhaust	88.69 mm (3.4917 in.)
	Minimum	
	Intake	88.35 mm (3.4784 in.)
	Exhaust	88.39 mm (3.4799 in.)
Head margin thickness	Standard	1.0 mm (0.039 in.)
	Minimum	0.7 mm (0.028 in.)
Valve lifter		
Diameter		30.966 to 30.976 mm (1.2191 to 1.2195 in.)
Bore diameter		31.000 to 31.025 mm (1.2205 to 1.2215 in.)
Oil clearance	Standard	0.024 to 0.059 mm (0.0009 to 0.0023 in.)
	Maximum	0.079 mm (0.0031 in.)
Straight pin		
Protrusion height		5 mm (0.20 in.)
Union protrusion		
Protrusion height	Standard	
	A	14 mm (0.551 in.)
	B	23.2 mm (0.913 in.)
	C	9 mm (0.354 in.)
Connecting rod sub–assy		
Thrust clearance	Standard	0.160 to 0.342 mm (0.063 to 0.0135 in.)
	Maximum	0.342 mm (0.0135 in.)
Oil clearance	Standard	0.028 to 0.060 mm (0.0011 to 0.0024 in.)
	Maximum	0.080 mm (0.0031 in.)
Out–of alignment	Maximum per/100 mm (3.94 in.)	0.05 mm (0.0020 in.)
Twist	Maximum per/100 mm (3.94 in.)	0.05 mm (0.0020 in.)
Connecting rod bearing		
Center wall thickness	Reference Mark 1	1.486 to 1.490 mm (0.0585 to 0.0587 in.)
	Mark 2	1.491 to 1.494 mm (0.0587 to 0.0588 in.)
	Mark 3	1.495 to 1.498 mm (0.0589 to 0.0590 in.)
Crankshaft		
Thrust clearance	Standard	0.04 to 0.24 mm (0.0016 to 0.0094 in.)
	Maximum	0.30 mm (0.0118 in.)
Circle runout	Maximum	0.03 mm (0.0012 in.)
Main journal diameter		47.988 to 48.000 mm (1.8893 to 1.8898 in.)
	Maximum taper and out–of–round	0.02 mm (0.0008 in.)
Oil clearance	Standard	0.015 to 0.032 mm (0.0006 – 0.0012 in.)
	Maximum	0.05 mm (0.0020 in.)
Cylinder block sub–assy		
Warpage	Maximum	0.05 mm (0.0020 in.)
Bore diameter	Standard	79.000 to 79.013 mm (3.1073 to 3.1107 in.)
	Maximum	79.133 mm (3.1155 in.)
Piston		
Diameter (at 29.8 mm (1.173 in.) from the piston head)	1ZZ–FE	78.955 to 78.965 mm (3.1085 to 3.1089 in.)
	3ZZ–FE	78.960 to 78.975 mm (3.1087 to 3.1091 in.)
Oil clearance	Standard	0.073 to 0.096 mm (0.0029 to 0.0038 in.)
	Maximum	0.10 mm (0.0039 in.)
Piston ring		
Groove clearance	No. 1	0.020 to 0.070 mm (0.0008 to 0.0028 in.)
	No. 2	0.030 to 0.070 mm (0.0012 to 0.0028 in.)
	Oil	0.03 to 0.011 mm (0.0012 to 0.0043 in.)
End gap	Standard	
	No. 1	0.25 to 0.35 mm (0.0098 to 0.0138 in.)
	No. 2	0.35 to 0.50 mm (0.0138 to 0.0197 in.)
	Oil	0.15 to 0.40 mm (0.0059 to 0.0157 in.)
	Maximum	
	No. 1	0.74 mm (0.029 in.)
	No. 2	0.89 mm (0.035 in.)
Piston pin		
Diameter		20.006 to 20.015 mm (0.7876 to 0.7880 in.)

Connecting rod bolt		
Diameter	Standard	6.6 to 6.7 mm (0.260 to 0.264 in.)
	Maximum	6.4 mm (0.252 in.)
Crank pin		
Diameter		43.992 to 44.000 mm (1.7320 to 1.7323 in.)
	Maximum taper and out–of–round	0.02 mm (0.0008 in.)
Crankshaft bearing cap set bolt		
Diameter	Standard	7.3 to 7.5 mm (0.287 to 0.295 in.)
	Maximum	7.3 mm (0.287 in.)
Connecting rod small end bush		
Oil clearance	Standard	0.005 to 0.011 mm (0.0002 to 0.0004 in.)
	Maximum	0.011 mm (0.0004 in.)

031H2–05

TORQUE SPECIFICATION

Part Tightened		N·m	kgf·cm	ft·lbf
Cylinder block water drain cock sub–assy x Cylinder block sub–assy		25	255	18
Oil strainer sub–assy x Cylinder block sub–assy		9.0	92	80 in.·lbf
Oil pan sub–assy x Cylinder block sub–assy		9.0	92	80 in.·lbf
Oil pan drain plug x Oil pan sub–assy		37	377	27
Oil filter union x Cylinder block sub–assy		30	306	22
Oil pump assy x Cylinder block sub–assy		9.0	92	80 in.·lbf
Cylinder head sub–assy x Cylinder block sub–assy	1st 2nd	49 Turn 90°	500 Turn 90°	36 Turn 90°
Oil control valve filter x Cylinder head sub–assy		30	306	22
Camshaft timing oil control valve assy x Cylinder head sub–assy		9.0	92	80 in.·lbf
Camshaft timing gear assy x Camshaft		54	551	40
Camshaft timing gear or sprocket x Camshaft No. 2		54	551	40
Camshaft, Camshaft No. 2 x Cylinder head sub–assy	Bearing cap No. 1 Bearing cap No. 3	23 13	235 133	17 10
Chain vibration damper No. 1 x Cylinder head sub–assy		9.0	92	80 in.·lbf
Chain vibration damper No. 1 x Cylinder block sub–assy		9.0	92	80 in.·lbf
Chain tensioner slipper x Cylinder block sub–assy		19	189	14
Timing chain or belt cover sub–assy x Cylinder head sub–assy		13	133	10
Timing chain or belt cover sub–assy x Cylinder block sub–assy	M6 M8	13 19	133 189	10 14
Chain tensioner assy No. 1 x Cylinder head sub–assy		9.0	92	80 in.·lbf
Crankshaft pulley x Crankshaft		138	1,407	102
Water pump assy x Cylinder block sub–assy		11	112	8
Water pump assy x Timing chain or belt cover sub–assy		9.0	92	80 in.·lbf
Cylinder head cover sub–assy x Cylinder head sub–assy	w/o washer w/ washer	11 9.0	112 92	8 80 in.·lbf
Cylinder head cover sub–assy x Timing chain or belt cover sub–assy		11	112	8
Spark plug x Cylinder head sub–assy		25	255	18
Stud bolt Timing chain or belt cover sub–assy x Cylinder head sub–assy length 93.5 mm (3.68 in.) length 53.5 mm (2.11 in.) Cylinder head cover sub–assy x Cylinder head sub–assy Intake manifold x Cylinder head sub–assy Exhaust manifold x Cylinder head sub–assy		 9.5 5.0 5.0 9.5 9.5	 97 51 51 97 97	 84 in.·lbf 44 in.·lbf 44 in.·lbf 84 in.·lbf 84 in.·lbf
W/ Head taper screw plug No. 2 x Cylinder head sub–assy		44	449	33
Crankshaft bearing cap sub–assy x Cylinder block sub–assy	M10 1st 2nd M8	44 Turn 90° 19	449 Turn 90° 194	33 Turn 90° 14
Connecting rod x Connecting rod cap	1st 2nd	20 Turn 90°	204 Turn 90°	15 Turn 90°
Stud bolt Water by–pass pipe No. 1 x Cylinder block sub–assy Water inlet x Cylinder block sub–assy Oil strainer sub–assy x Cylinder block sub–assy Oil pan sub–assy x Cylinder block sub–assy Knock control sensor x Cylinder block sub–assy		 5.0 5.0 5.0 5.0 11	 51 51 51 51 112	 44 in.·lbf 44 in.·lbf 44 in.·lbf 44 in.·lbf 8

LUBRICATION

SERVICE DATA

031H5–05

Rotor tip clearance	Standard	0.040 to 0.160 mm (0.0016 to 0.0063 in.)
	Maximum	0.160 mm (0.0063 in.)
Rotor side clearance	Standard	0.025 to 0.071 mm (0.0010 to 0.0028 in.)
	Maximum	0.071 mm (0.0028 in.)
Body clearance	Standard	0.260 to 0.325 mm (0.0102 to 0.0128 in.)
	Maximum	0.325 mm (0.0128 in.)

031H6–04

TORQUE SPECIFICATION

Part Tightened	N·m	kgf·cm	ft·lbf
Oil pump relief valve plug x Oil pump body	37	377	27
Oil pump cover x Oil pump body	10	102	7

STARTING & CHARGING

031E6–07

SERVICE DATA

STARTER:

Magnetic switch resistance	Terminal 50 – C	Below 1 Ω
	Terminal 50 – Switch body	Below 1.5 Ω
Starter armature resistance	Segments	Below 1 Ω
	Commutator – Armature coil	10 kΩ or higher
Starter armature assy		
Circle runout	Standard	0.02 mm (0.0008 in.)
	Maximum	0.05 mm (0.0020 in.)
Commutatordiameter	Standard	29 mm (1.142 in.)
	Minimum	28 mm (1.102 in.)
Starter brush holder assy		
Brush length	Standard	15.5 mm (0.610 in.)
	Minimum	9.0 mm (0.354 in.)
Resistance (See page 19–2)	Standard	
	A – B	10 kΩ or higher
	A – C	10 kΩ or higher
	A – D	Below 1 Ω
	B – C	Below 1 Ω
	B – D	10 kΩ or higher
	C – D	10 kΩ or higher

GENERATOR (DENSO MADE):

Generator regulator assy		
Resistance	B and F	When the positive and negative poles of terminals F and B are switched over, there is a resistance of below 1 Ω in one direction but 10 kΩ or higher in the other direction
	E and F	When the positive and negative poles of terminals F and E are switched over, there is a resistance of below 1 Ω in one direction but 10 kΩ or higher in the other direction
Generator holder w/ rectifier		
Resistance	Positive (+) and each rectifier terminal	When the positive and negative poles of the positive (+) terminal and each rectifier terminal are switched over, there is a resistance of below 1 Ω in one direction but 10 kΩ or higher in the other direction
	Negative (–) and each rectifier terminal	When the positive and negative poles of the negative (–) terminal and each rectifier terminal are switched over, there is a resistance of below 1 Ω in one direction but 10 kΩ or higher in the other direction
Generator rotor assy		
Resistance	Slip rings	2.55 to 2.95 Ω at 20°C (68°F)
	Slip ring and rotor	10 kΩ or higher
Slip ring diameter	Standard	14.2 to 14.4 mm (0.559 to 0.567 in.)
	Minimum	14 mm (0.551 in.)
Generator drive end frame		
Resistance	Coil wires	Below 1 Ω
	Coil wire and body	10 kΩ or higher

GENERATOR (BOSCH MADE):

Generator rotor assy		
Rotor coil resistance	at 20°C (68°F)	2.27 to 2.53 Ω
Slip ring diameter	Standard	15.3 to 15.5 mm (0.602 to 0.610 in.)
	Minimum	14.3 mm (0.561 in.)
Stator sub–assy generator with rectifier		
Positive rectifier	Positive (+) tester probe – Positive (+) terminal	Below 1 Ω
	Negative (–) tester probe – Rectifier terminal	
	Negative (–) tester probe – Positive (+) terminal	10 kΩ or higher
	Positive (+) tester probe – Rectifier terminal	
Negative rectifier	Positive (+) tester probe – Negative (–) terminal	10 kΩ or higher
	Negative (–) tester probe – Rectifier terminal	
	Negative (–) tester probe – Negative (–) terminal	Below 1 Ω
	Positive (+) tester probe – Rectifier terminal	
Stator for open circuit	Between rectifier terminals	Below 1 Ω
Generator brush holder assy		
Brush exposed length	Standard	11.0 to 13.6 mm (0.433 to 0.535 in.)
	Minimum	6.0 mm (0.236 in.)

031E7–08

TORQUE SPECIFICATION

STARTER:

Part Tightened	N·m	kgf·cm	ft·lbf
Magnetic switch x Starter housing assy	2.3	23	20 in.·lbf
Starter commutator end frame assy x Starter drive housing assy	6.0	61	53 in.·lbf
Lead wire x Starter magnetic switch	5.9	60	52 in.·lbf

GENERATOR (DENSO MADE):

Part Tightened		N·m	kgf·cm	ft·lbf
Bearing retainer plate x Generator drive end frame		2.94	30	26 in.·lbf
Generator rectifier end frame x Generator drive end frame		4.75	50	42 in.·lbf
Generator holder w/ rectifier x Generator drive end frame		2.94	30	26 in.·lbf
Generator regulator x Generator rectifier end frame		1.96	20	17 in.·lbf
Generator brush holder assy x Generator rectifier end frame		1.96	20	17 in.·lbf
Generator rear end cover x Generator rectifier end frame		4.4	45	39 in.·lbf
Terminal plate	Screw	3.85	40	34 in.·lbf
	Nut	4.4	45	39 in.·lbf
Terminal insulator x Generator holder w/ rectifier		4.1	40	37 in.·lbf
Generator pulley x Generator rotor assy		87.5	890	65

GENERATOR (BOSCH MADE):

Part Tightened		N·m	kgf·cm	ft·lbf
Pulley x Generator rotor assy		68	688	50
Stator sub–assy generator w/ rectifier x Drive end frame assy		3.5	36	31 in.·lbf
Regulator sub–assy generator w/ brush x Stator sub–assy generator w/ rectifier (See page 19–22)	Screw A	2.2	22	19 in.·lbf
	Screw B	1.2	12	11 in.·lbf
Generator rear end cover x Stator sub–assy generator w/ rectifier (See page 19–22)	Nut A	19.5	199	14
	Nut B	12	122	9.0
	Screw	2.4	24	21 in.·lbf

PARTIAL ENGINE ASSY (1ZZ–FE/3ZZ–FE)

141TL–01

COMPONENTS

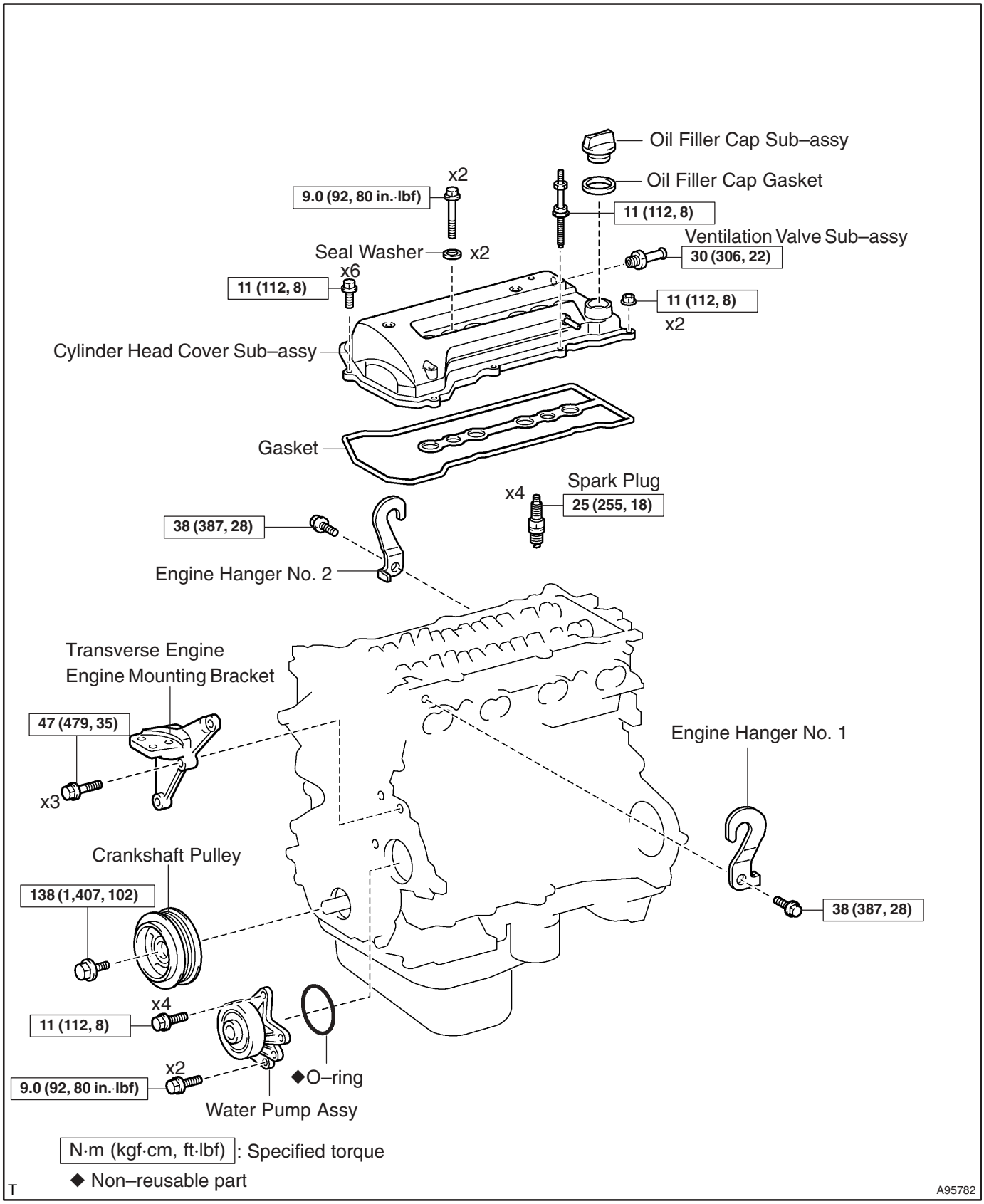

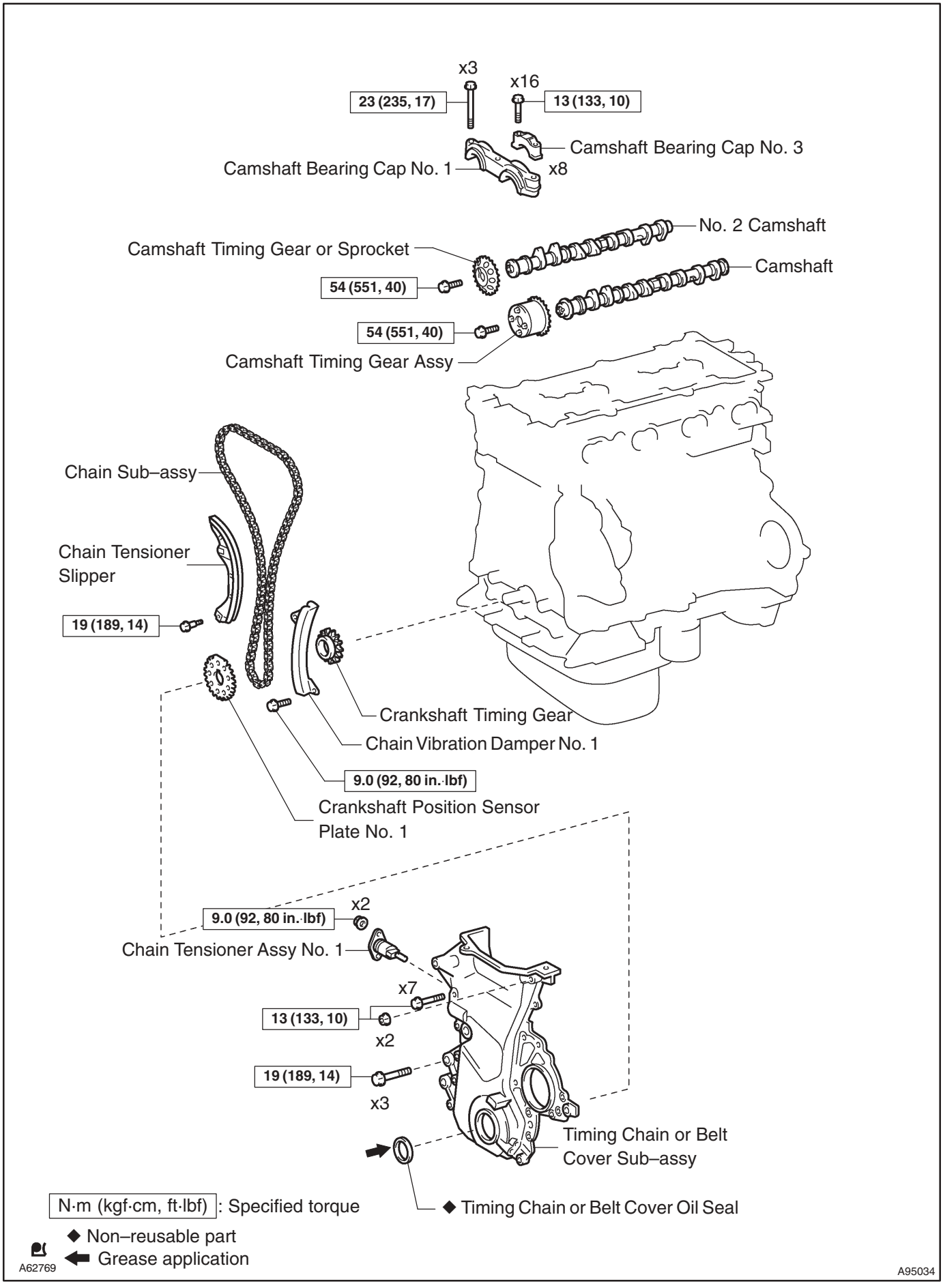
x3
x16
23 (235, 17)
13 (133, 10)
Camshaft Bearing Cap No. 3
Camshaft Bearing Cap No. 1
x8
No. 2 Camshaft
Camshaft Timing Gear or Sprocket
Camshaft
54 (551, 40)
54 (551, 40)
Camshaft Timing Gear Assy
Chain Sub–assy
Chain Tensioner Slipper
19 (189, 14)
Crankshaft Timing Gear
Chain Vibration Damper No. 1
9.0 (92, 80 in.·lbf)
Crankshaft Position Sensor Plate No. 1
x2
9.0 (92, 80 in.·lbf)
Chain Tensioner Assy No. 1
x7
13 (133, 10)
x2
19 (189, 14)
x3
Timing Chain or Belt Cover Sub–assy
N·m (kgf·cm, ft·lbf): Specified torque
◆ Timing Chain or Belt Cover Oil Seal
◆ Non–reusable part
Grease application
A62769
A95034

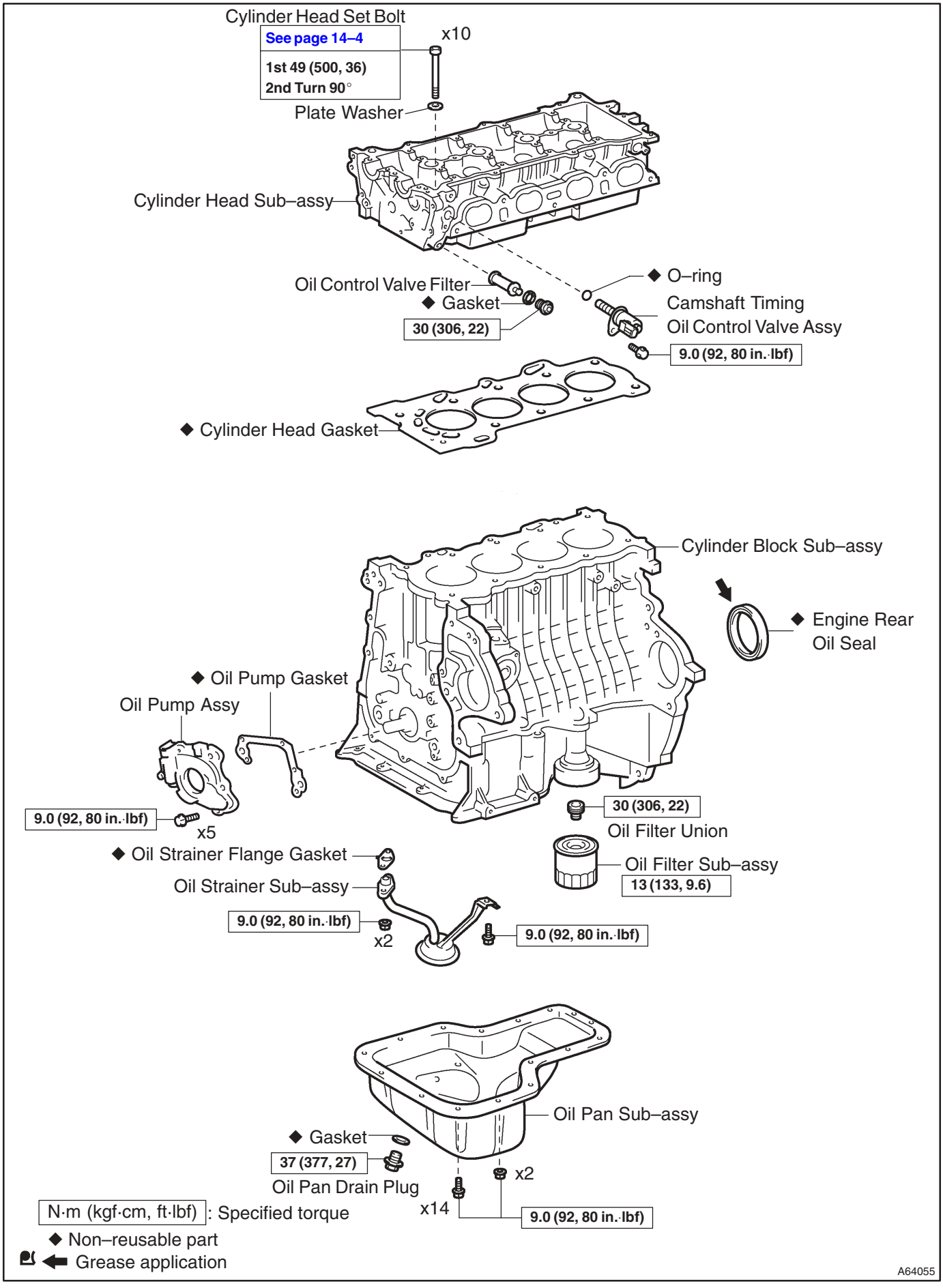
Cylinder Head Set Bolt
See page 14–4
1st 49 (500, 36)
2nd Turn 90°
x10
Plate Washer
Cylinder Head Sub–assy
Oil Control Valve Filter
◆ Gasket
30 (306, 22)
◆ O–ring
Camshaft Timing
Oil Control Valve Assy
9.0 (92, 80 in.·lbf)
◆ Cylinder Head Gasket
Cylinder Block Sub–assy
◆ Engine Rear
Oil Seal
◆ Oil Pump Gasket
Oil Pump Assy
9.0 (92, 80 in.·lbf)
x5
30 (306, 22)
Oil Filter Union
◆ Oil Strainer Flange Gasket
Oil Strainer Sub–assy
9.0 (92, 80 in.·lbf)
x2
9.0 (92, 80 in.·lbf)
Oil Filter Sub–assy
13 (133, 9.6)
Oil Pan Sub–assy
◆ Gasket
37 (377, 27)
Oil Pan Drain Plug
x14
x2
9.0 (92, 80 in.·lbf)
N·m (kgf·cm, ft·lbf): Specified torque
◆ Non–reusable part
Grease application
A64055

141TM–01

OVERHAUL

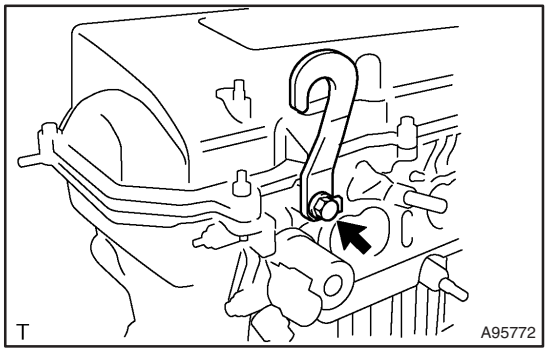

1. REMOVE ENGINE HANGER NO.1

(a) Remove the bolt, then remove engine hanger No. 1.

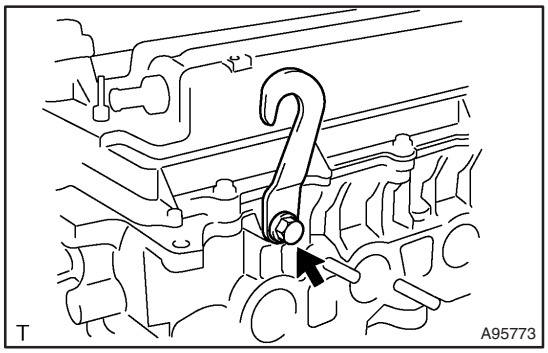

2. REMOVE ENGINE HANGER NO.2

(a) Remove the bolt, then remove engine hanger No. 2.

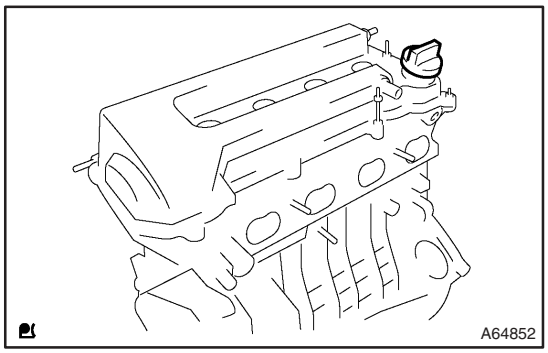

3. REMOVE OIL FILLER CAP SUB–ASSY

(a) Remove the oil filler cap from the cylinder head cover.

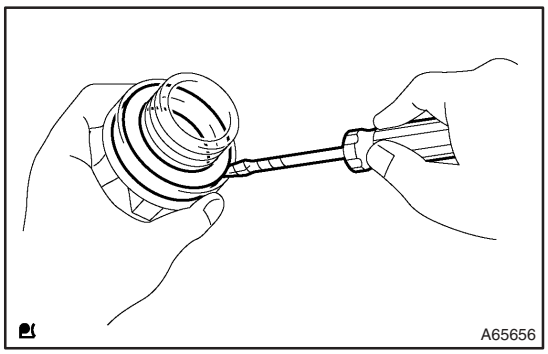

4. REMOVE OIL FILLER CAP GASKET

(a) Using a screwdriver, remove the oil filler cap gasket from the oil filler cap.

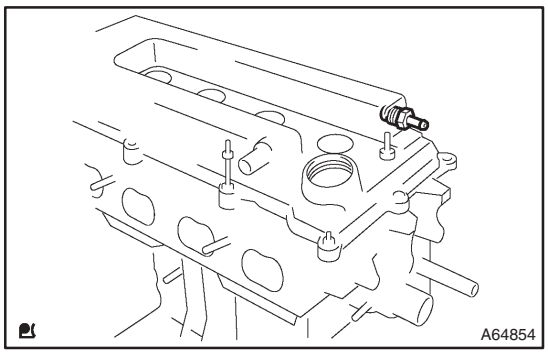

5. REMOVE VENTILATION VALVE SUB–ASSY

(a) Remove the ventilation valve from the cylinder head cover.

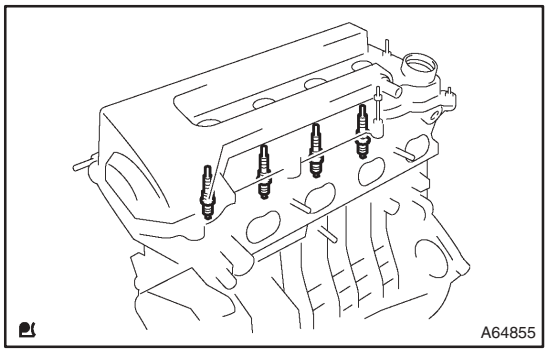

6. REMOVE SPARK PLUG

(a) Using a spark plug wrench, remove the 4 spark plugs.

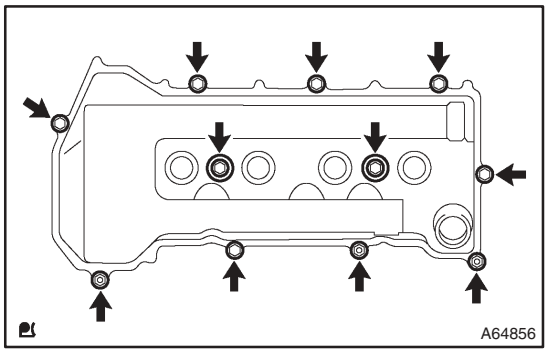

7. REMOVE CYLINDER HEAD COVER SUB–ASSY

(a) Remove the 9 bolts, 2 seal washers, and 2 nuts, then remove the cylinder head cover.

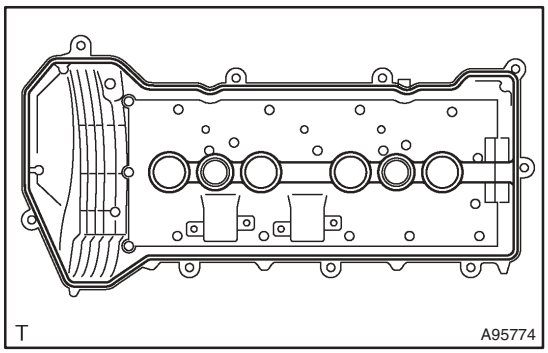

8. REMOVE CYLINDER HEAD COVER GASKET

(a) Remove the cylinder head cover gasket from the cylinder head cover.

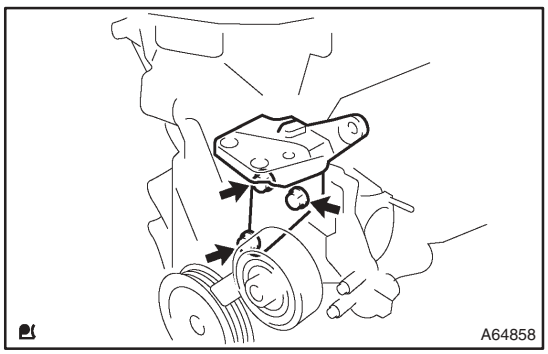

9. REMOVE TRANSVERSE ENGINE ENGINE MOUNTING BRACKET

(a) Remove the 3 bolts, then remove the transverse engine engine mounting bracket.

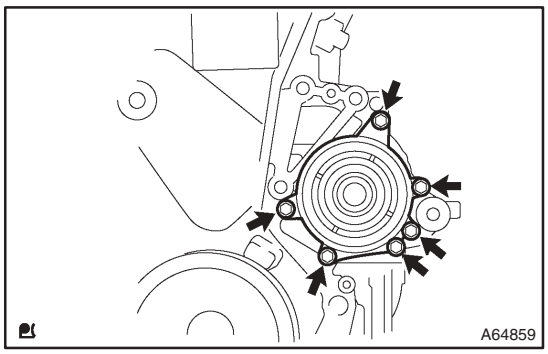

10. REMOVE WATER PUMP ASSY

(a) Remove the 6 bolts, then remove the water pump.

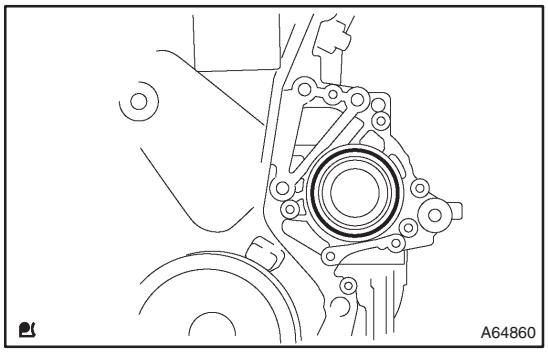

11. REMOVE WATER PUMP O–RING

(a) Remove the water pump O–ring from the timing chain cover.

12. REMOVE CRANKSHAFT PULLEY

(a) Set the No. 1 cylinder to the TDC/compression.

(1) Turn the crankshaft pulley, then adjust the crankshaft so that the groove and the timing mark ”0” of the timing chain are aligned.

(2) Check that the point marks of the camshaft timing gears are in a straight line on the timing chain cover surface as shown in the illustration.

If not, turn the crankshaft 1 revolution (360°), then adjust the crankshaft so that the marks are aligned as above.

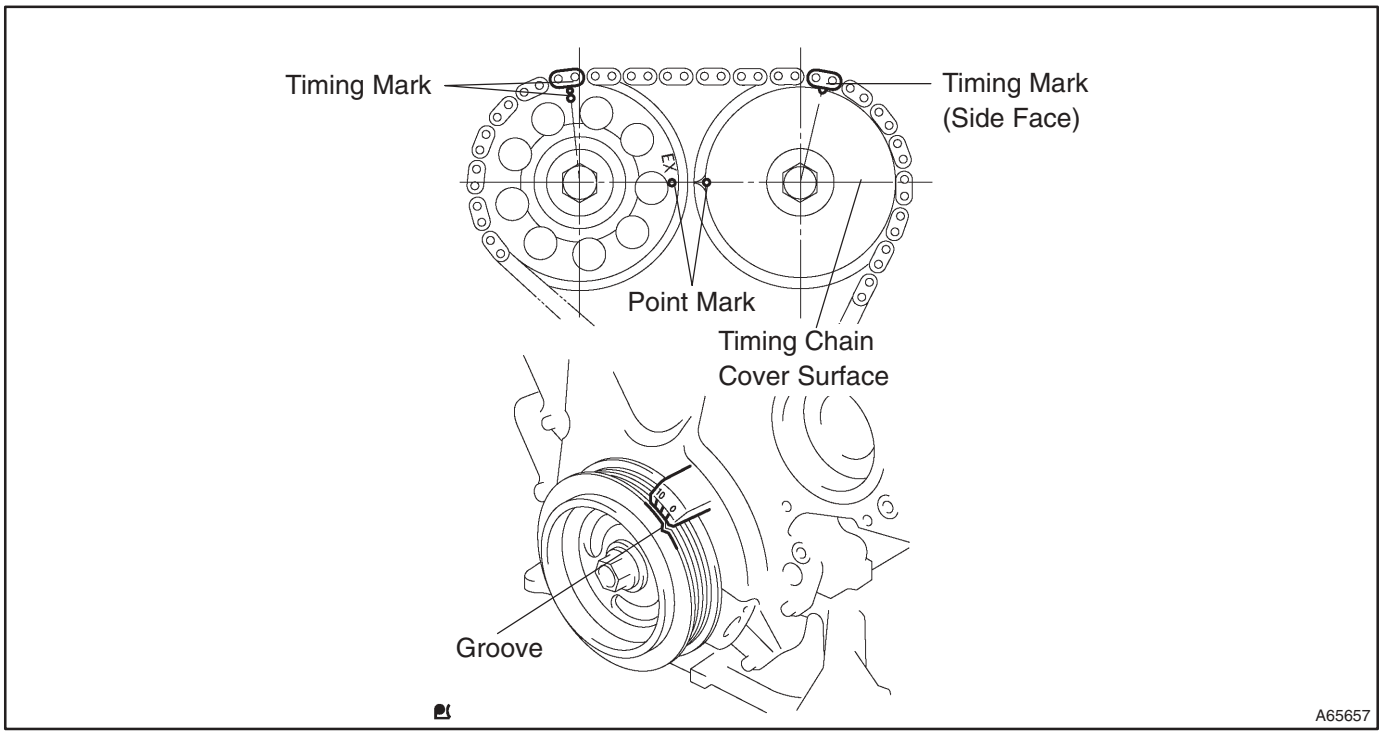

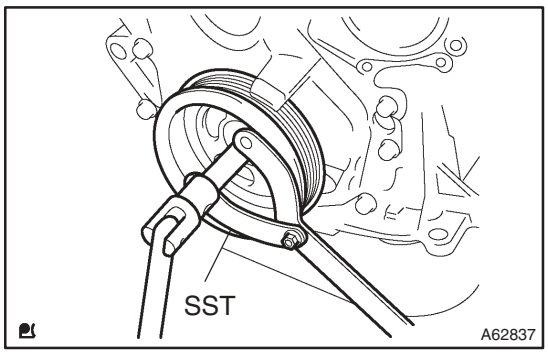

(b) Using SST, remove the crankshaft pulley bolt.
SST 09960–10010 (09962–01000, 09963–01000)
(c) Remove the crankshaft pulley from the crankshaft.

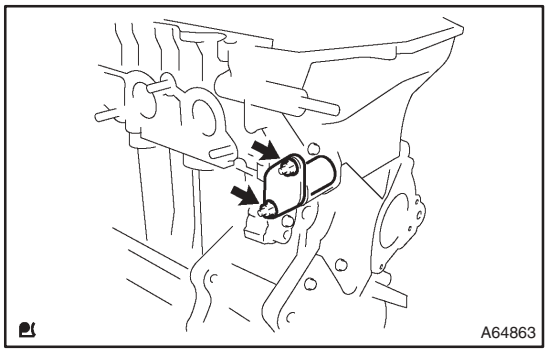

13. REMOVE CHAIN TENSIONER ASSY NO.1

(a) Remove the 2 nuts, then remove chain tensioner No. 1.

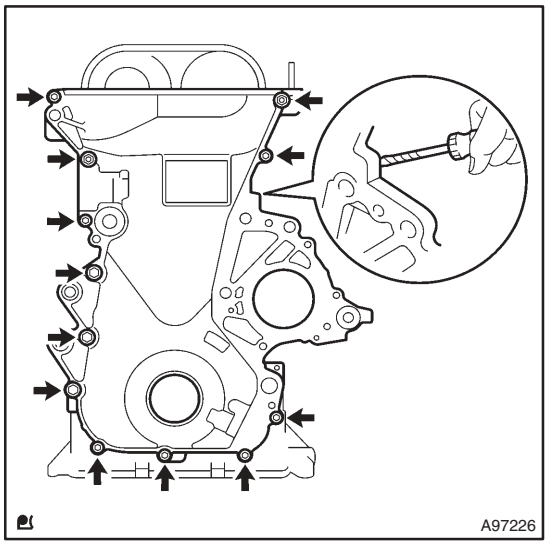

14. REMOVE TIMING CHAIN OR BELT COVER SUB–ASSY

(a) Remove the 10 bolts and 2 nuts.
(b) Remove the timing chain cover by prying the portions between the timing chain cover, cylinder head and cylinder block with a screwdriver.

NOTICE:
Be careful not to damage the contact surfaces of the timing chain cover, cylinder head and cylinder block.

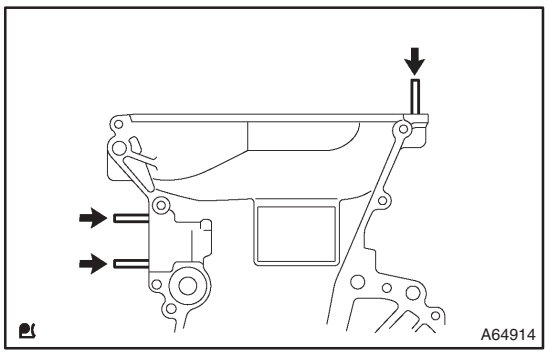

(c) Using a Torx socket wrench E5, remove the 3 stud bolts.

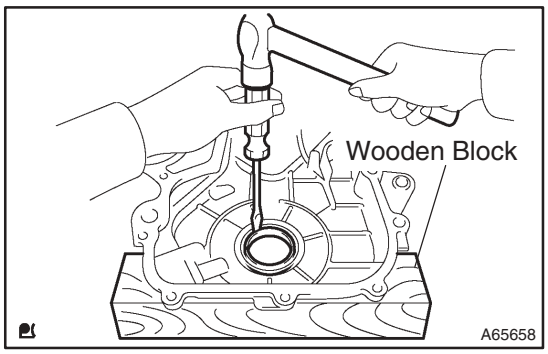

15. REMOVE TIMING CHAIN OR BELT COVER OIL SEAL

(a) Place the timing chain cover on wooden blocks.

(b) Using a screwdriver, remove the timing chain or belt cover oil seal.

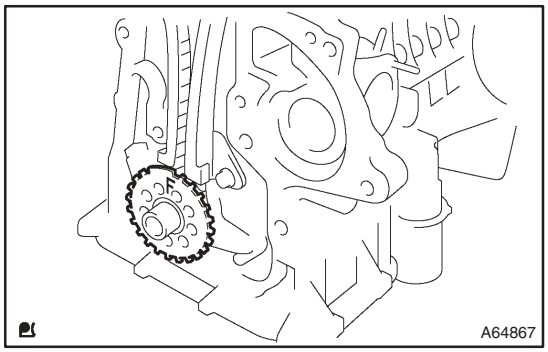

16. REMOVE CRANKSHAFT POSITION SENSOR PLATE NO.1

(a) Remove crankshaft position sensor plate No. 1 from the crankshaft.

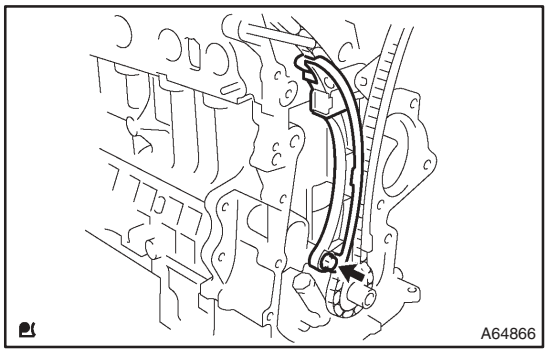

17. REMOVE CHAIN TENSIONER SLIPPER

(a) Remove the bolt, then remove the chain tensioner slipper.

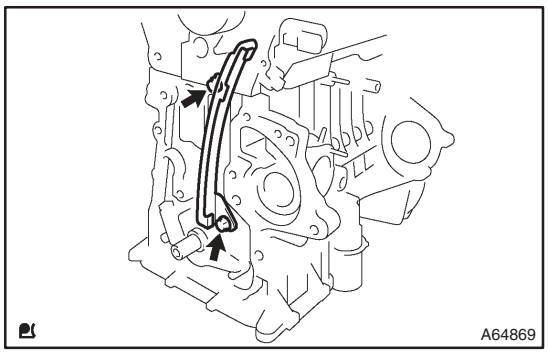

18. REMOVE CHAIN VIBRATION DAMPER NO.1

(a) Remove the 2 bolts, then remove chain vibration damper No. 1.

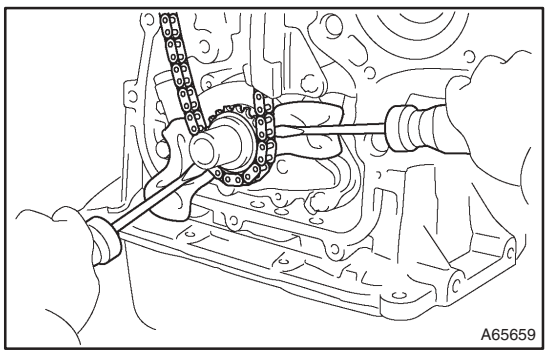

19. REMOVE CHAIN SUB–ASSY

(a) Using 2 screwdrivers, pry out the chain together with the crankshaft timing gear as shown in the illustration.

NOTICE:

- **Put a shop rag to protect the engine.**
- **In case of revolving the camshafts with the chain off the gears, turn the crankshaft 1/4 revolution to prevent contact of the valves with the pistons.**

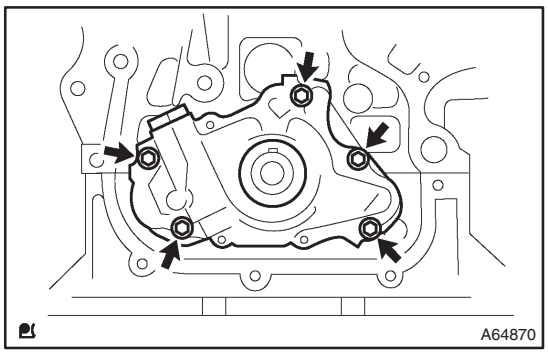

20. REMOVE OIL PUMP ASSY

(a) Remove the 5 bolts, then remove the oil pump.

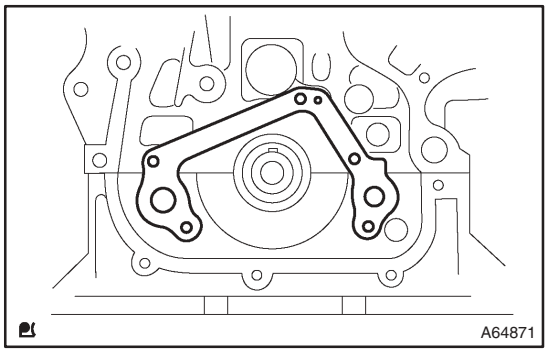

21. REMOVE OIL PUMP GASKET

(a) Remove the oil pump gasket from the cylinder block.

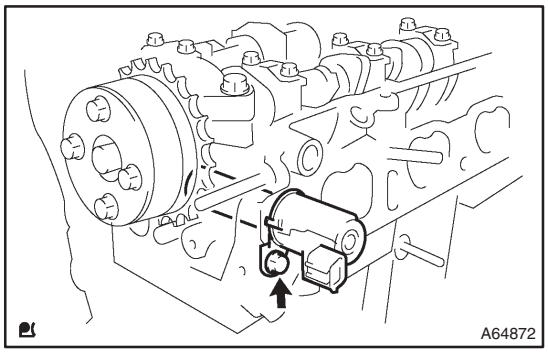

22. REMOVE CAMSHAFT TIMING OIL CONTROL VALVE ASSY

(a) Remove the bolt, then remove the camshaft timing oil control valve.

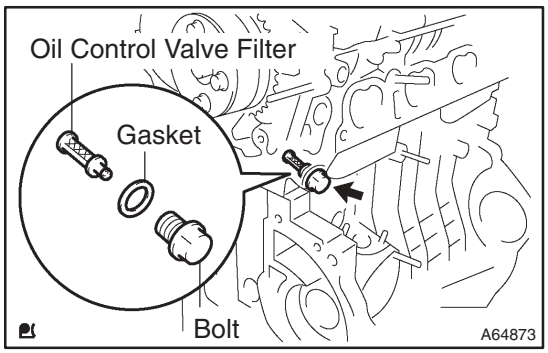

23. REMOVE OIL CONTROL VALVE FILTER

(a) Remove the bolt with the gasket and oil control valve filter.

(b) Remove the gasket and oil control valve filter from the bolt.

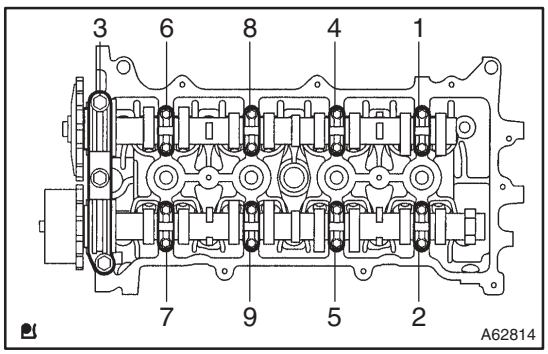

24. REMOVE CAMSHAFT

(a) Using several steps, loosen and remove the 19 bolts uniformly in the sequence shown in the illustration.

(b) Remove the 2 camshafts from the cylinder head.

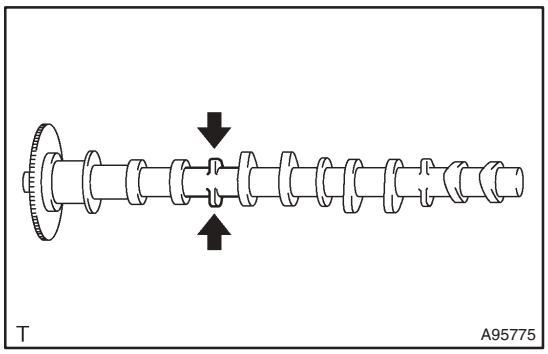

25. REMOVE CAMSHAFT TIMING GEAR OR SPROCKET

(a) Clamp the portion of the No. 2 camshaft indicated with arrow in a vise.

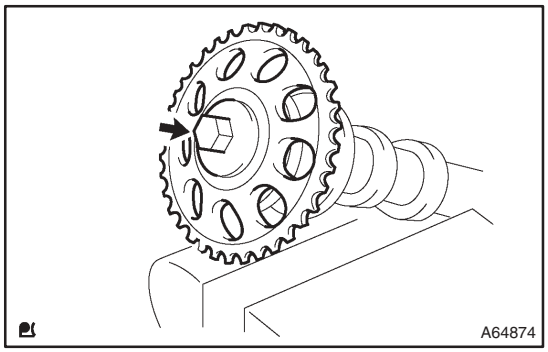

(b) Remove the bolt, then remove the camshaft timing gear or sprocket.

NOTICE:

Be careful not to damage the camshaft.

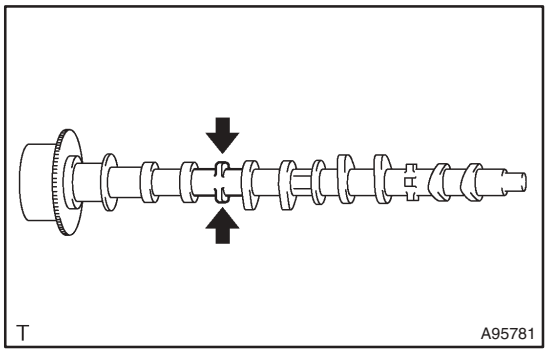

26. REMOVE CAMSHAFT TIMING GEAR ASSY

(a) Clamp the portion of the camshaft indicated with arrow in a vise.

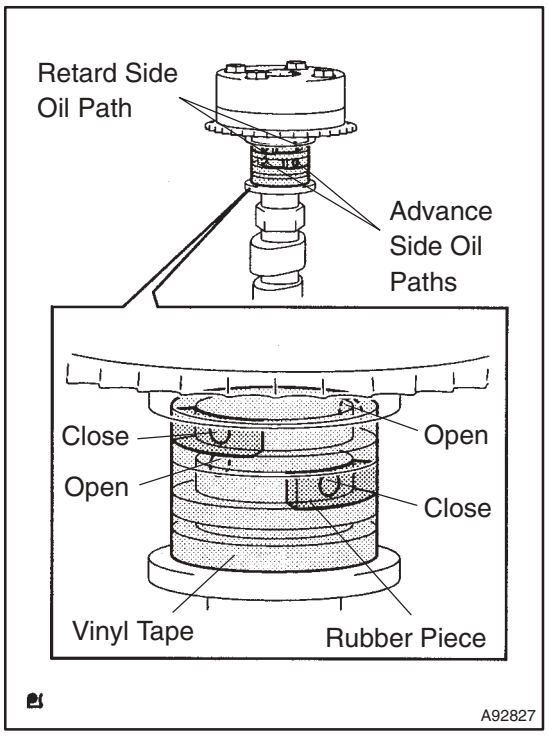

(b) Check that the camshaft timing gear assembly does not rotate.

NOTICE:

Do not damage the camshaft by clamping it in a vise too tightly.

(c) Cover the 4 oil paths of the cam journal with vinyl tape as shown in the illustration.

HINT:

One of the 2 grooves located on the cam journal is for retarding cam timing (upper) and the other is for advancing cam timing (lower). Each groove has 2 oil paths. Plug one of the 2 oil paths for each groove with rubber pieces before wrapping the cam journal with the tape.

(d) Punctuate the tape which covers the advance side path and retard side path on the opposite side.

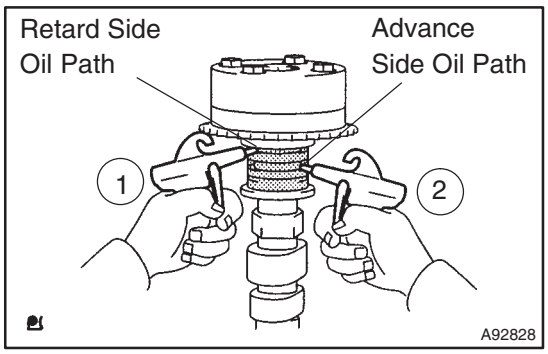

(e) Apply approximately 150 kPa (1.5 kgf/cm^2) of air pressure into the retard side oil path.

NOTICE:

When applying air pressure, cover the paths with a shop rag to prevent oil splashes.

(f) Apply approximately 150 kPa (1.5 kgf/cm^2) of air pressure into the advance side oil path.

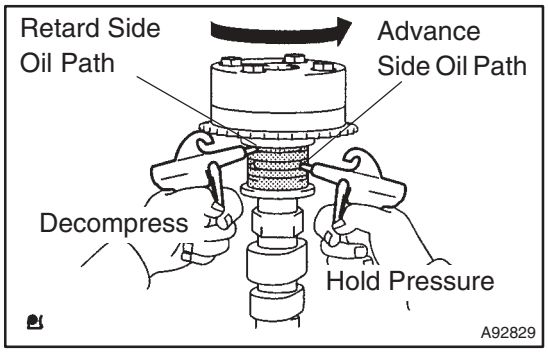

(g) Confirm that the camshaft timing gear assembly revolves in the advance direction when reducing the air pressure of the retard side path.

HINT:

- If the timing gear assembly does not revolve in the advance direction by air pressure, turn it forcibly by hand after air pressure is applied to both oil pathes. When revolving, first turn it in the retard direction, then in the advance direction.
- The lock pin is released, and the camshaft timing gear revolves in the advance direction.

(h) When the camshaft timing gear assembly reaches the most advanced position, release the air pressure of the retard side path, then release the air pressure of the advance side path.

NOTICE:

If the air pressure of the advance side path is released first, the camshaft timing gear assembly occasionally shifts in the retard direction abruptly, which may damage the lock pin. Be sure to release the air pressure of the retard side path first.

(i) Remove the bolt and camshaft timing gear assembly.

NOTICE:

- **Do not remove the other 4 bolts.**
- **If reusing the camshaft timing gear assembly, unlock the lock pin inside the camshaft timing gear first.**

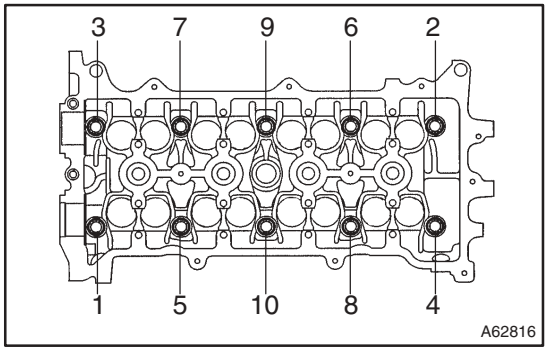

27. REMOVE CYLINDER HEAD SUB–ASSY

(a) Using a bi–hexagon wrench 10, uniformly loosen the 10 cylinder head bolts, in several passes, in the sequence shown.

(b) Remove the 10 cylinder head bolts and 10 plate washers.

NOTICE:

- **Be careful not to drop the plate washers into the cylinder head.**
- **Head warpage or cracking could result from removing bolts in the wrong order.**

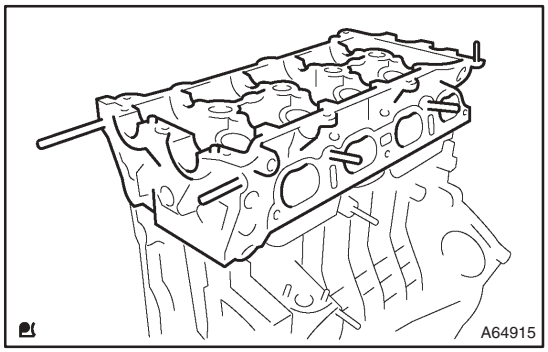

(c) Remove the cylinder head from the cylinder block.

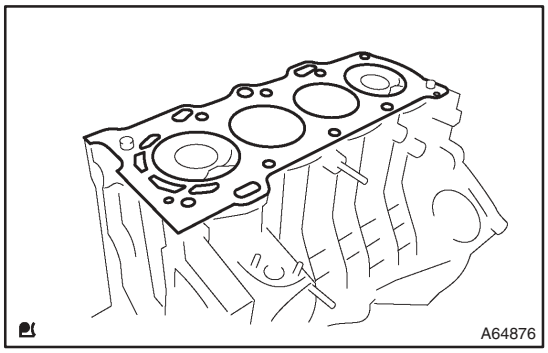

28. REMOVE CYLINDER HEAD GASKET

(a) Remove the cylinder head gasket from the cylinder block.

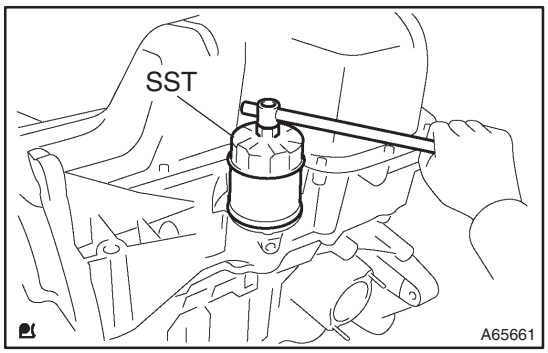

29. REMOVE OIL FILTER SUB–ASSY

(a) Using SST, remove the oil filter.
SST 09228–06501

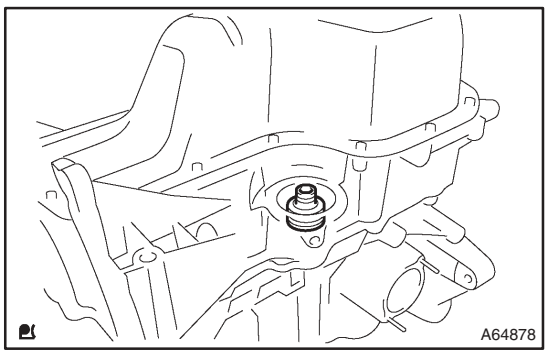

30. REMOVE OIL FILTER UNION

(a) Using a socket hexagon wrench 12, remove the oil filter union.

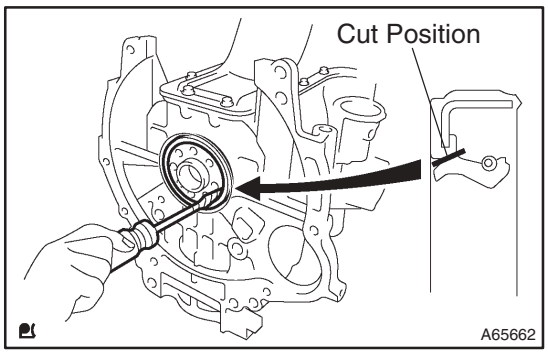

31. REMOVE ENGINE REAR OIL SEAL

(a) Using a knife, cut off the oil seal lip.

(b) Using a screwdriver with its tip taped, pry out the oil seal.

NOTICE:

After the removal, check if the crankshaft is not damaged. If damaged, smooth the surface with a 400–grit sandpaper.

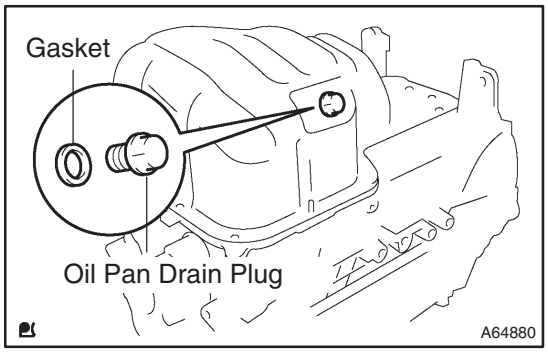

32. REMOVE OIL PAN DRAIN PLUG

(a) Remove the oil pan drain plug and gasket from the oil pan.

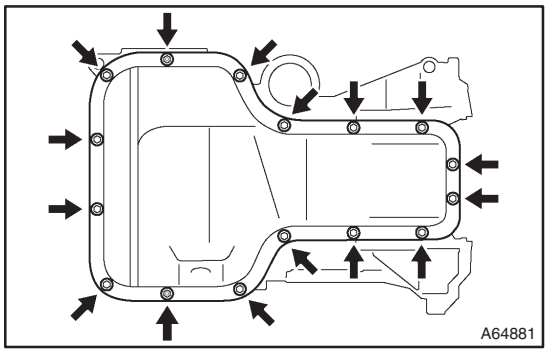

33. REMOVE OIL PAN SUB–ASSY

(a) Remove the 14 bolts and 2 nuts.

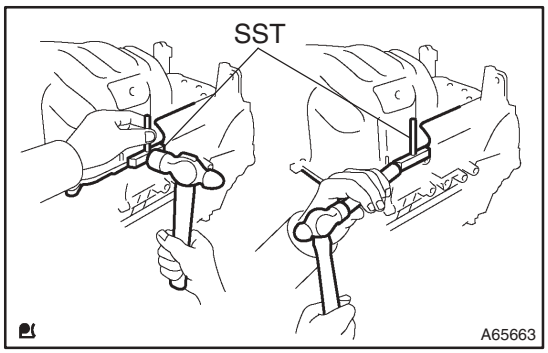

(b) Insert the blade of SST between the bearing cap and oil pan, then cut off the applied sealer and remove the oil pan.

SST 09032–00100

NOTICE:

Be careful not to damage the oil pan contact surface of the bearing cap and oil pan.

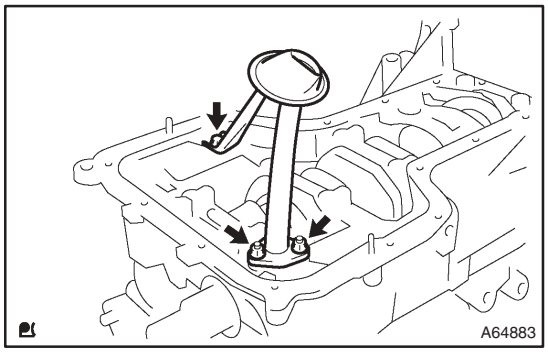

34. REMOVE OIL STRAINER SUB–ASSY

(a) Remove the bolt and 2 nuts, then remove the oil strainer.

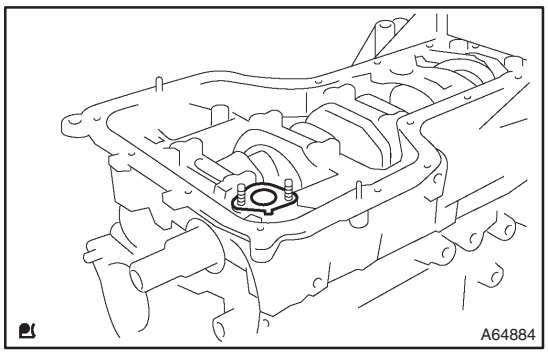

35. REMOVE OIL STRAINER FLANGE GASKET

(a) Remove the oil strainer flange gasket from the cylinder block.

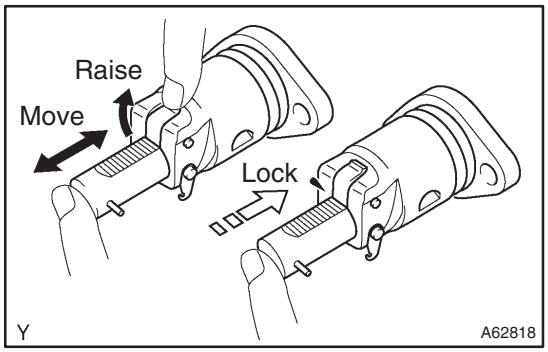

36. INSPECT CHAIN TENSIONER ASSY NO.1

(a) Check that the plunger moves smoothly when the ratchet pawl is raised with your finger.

(b) Release the ratchet pawl, then check that the plunger is locked in place by the ratchet pawl and does not move when pushed with your finger.

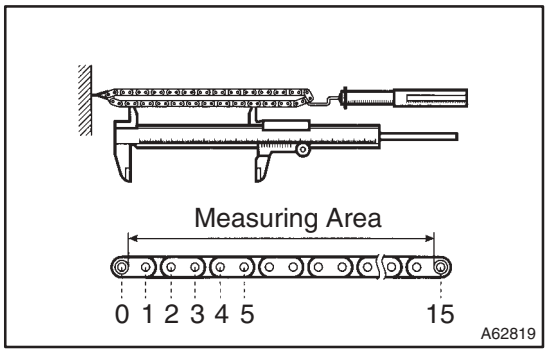

37. INSPECT CHAIN SUB–ASSY

(a) Using a spring tension gauge and vernier calipers, pull the timing chain with 140 N (14.3 kgf, 31.5 lb), then measure its length.

Maximum chain elongation: 115.3 mm (4.539 in.)

If the chain elongation is greater than maximum, replace the chain.

HINT:

Take the same measurements by pulling at 3 or more places selected at random.

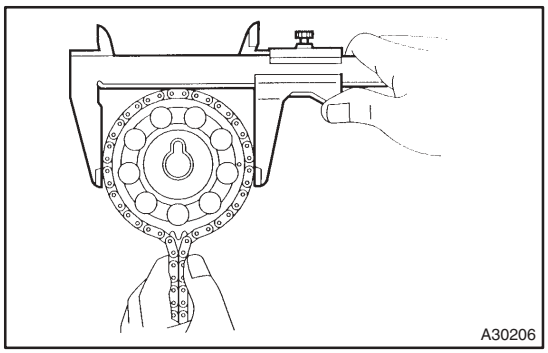

38. INSPECT CAMSHAFT TIMING GEAR OR SPROCKET

(a) Wrap the chain around the camshaft timing gear.

(b) Using vernier calipers, measure the camshaft timing gear diameter with the chain.

Minimum gear diameter (w/ chain): 96.8 mm (3.811 in.)

NOTICE:

Vernier calipers must be in contact with the chain rollers when measuring.

If the gear diameter is less than minimum, replace the chain and camshaft timing gear.

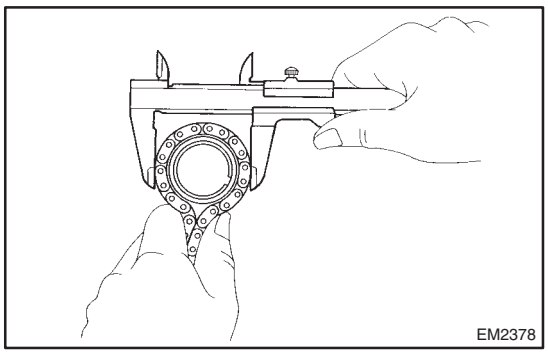

39. INSPECT CRANKSHAFT TIMING GEAR OR SPROCKET

(a) Wrap the chain around the crankshaft timing gear.

(b) Using vernier calipers, measure the crankshaft timing gear diameter with the chain.

Minimum gear diameter (w/ chain): 51.0 mm (2.008 in.)

NOTICE:

Vernier calipers must be in contact with the chain rollers when measuring

If the gear diameter is less than minimum, replace the chain and crankshaft timing gear.

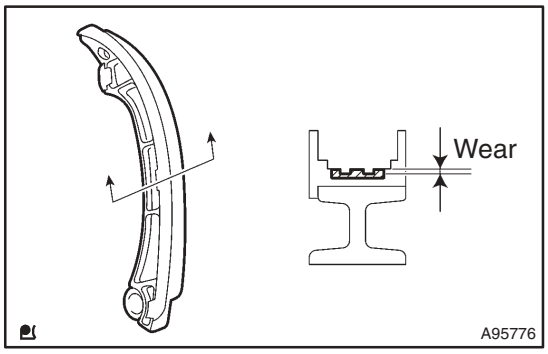

40. INSPECT CHAIN TENSIONER SLIPPER

(a) Using vernier calipers, measure the chain tensioner slipper wear.

Maximum wear: 1.0 mm (0.039 in.)

If the wear is greater than maximum, replace the chain tensioner slipper.

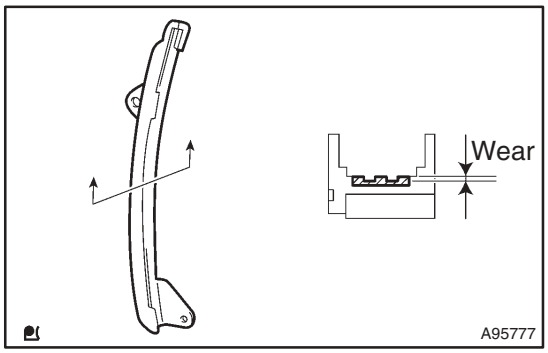

41. INSPECT CHAIN VIBRATION DAMPER NO.1

(a) Using vernier calipers, measure the vibration damper wear.

Maximum wear: 1.0 mm (0.039 in.)

If the wear is greater than maximum, replace the chain vibration damper.

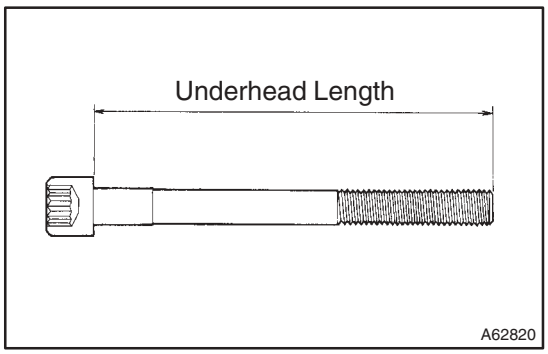

42. INSPECT CYLINDER HEAD SET BOLT

(a) Using vernier calipers, measure the length of the cylinder head bolts from the seat to end.

Standard bolt length:

146.8 to 148.2 mm (5.780 to 5.835 in.)

Maximum bolt length: 148.5 mm (5.846 in.)

If the bolt length is greater than maximum, replace the cylinder head set bolt.

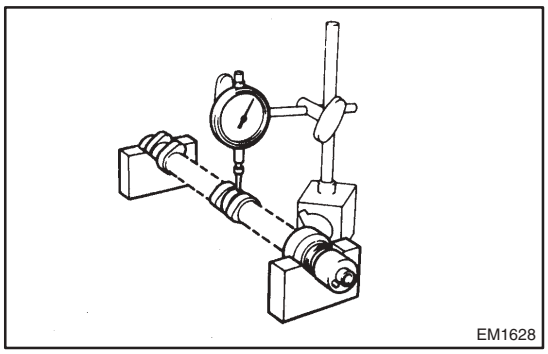

43. INSPECT CAMSHAFT

(a) Inspect the camshaft for runout.
  (1) Place the camshaft on V–blocks.
  (2) Using a dial indicator, measure the circle runout at the center journal.

Maximum circle runout: 0.03 mm (0.0012 in.)

If the circle runout is greater than maximum, replace the camshaft.

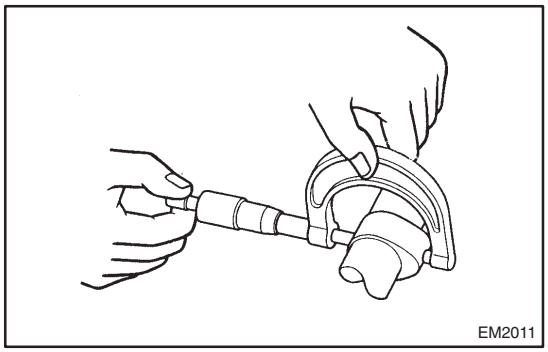

(b) Inspect the cam lobes.
  (1) Using a micrometer, measure the cam lobe height.

Standard cam lobe height:
44.333 to 44.433 mm (1.7454 to 1.7493 in.) for intake
43.761 to 43.861 mm (1.7229 to 1.7268 in.) for exhaust
Minimum cam lobe height:
44.18 mm (1.7394 in.) for intake
43.61 mm (1.7169 in.) for exhaust

If the cam lobe height is less than minimum, replace the camshaft.

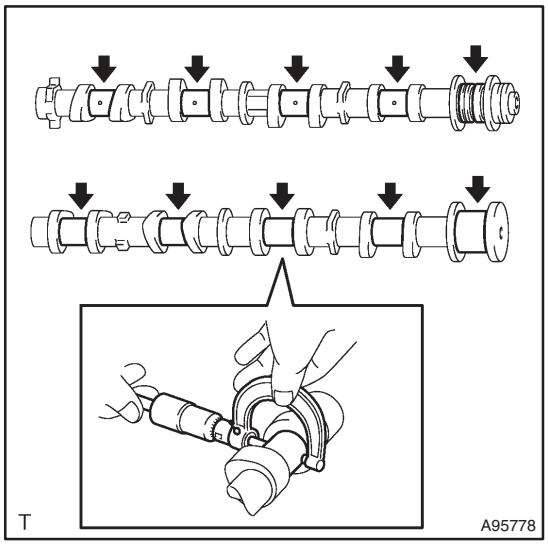

(c) Inspect the camshaft journals.
  (1) Using a micrometer, measure the journal diameter.

No. 1 journal diameter:
34.449 to 34.465 mm (1.3563 to 1.3569 in.)
Other journal diameter:
22.949 to 22.965 mm (0.9035 to 0.9041 in.)

If the journal diameter is not as specified, check the oil clearance.

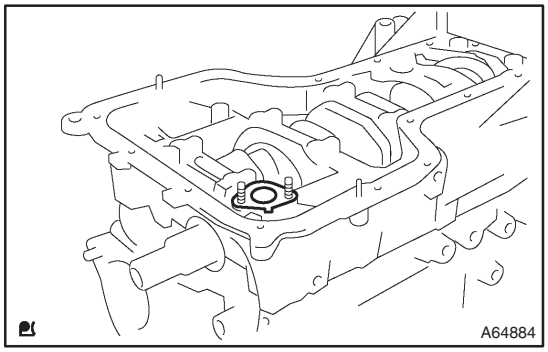

44. INSTALL OIL STRAINER FLANGE GASKET

(a) Install a new oil strainer flange gasket onto the cylinder block.

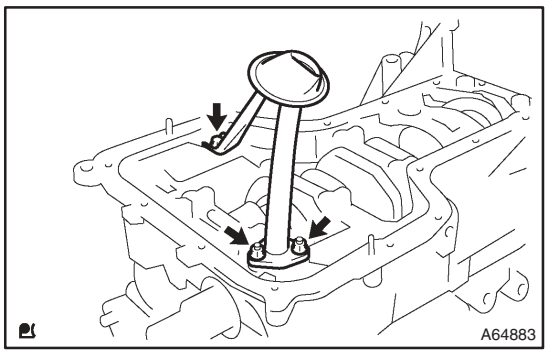

45. INSTALL OIL STRAINER SUB–ASSY

(a) Install the oil strainer with the 2 nuts and bolt.
Torque: 9.0 N·m (92 kgf·cm, 80 in.·lbf)

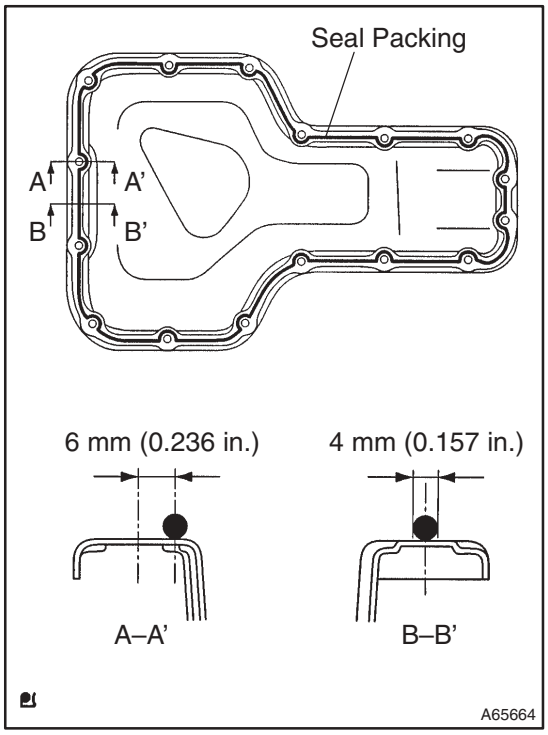

46. INSTALL OIL PAN SUB–ASSY

(a) Remove any old packing material from the contact surface and thread holes.

(b) Apply a continuous bead of seal packing (Diameter 3.5 to 4.5 mm (0.138 to 0.177 in.)) as shown in the illustration.
Seal packing: Part No. 08826–00080 or equivalent

NOTICE:

- **Remove any oil from the contact surface.**
- **Install the oil pan within 3 minutes after applying seal packing.**
- **Do not put into engine oil for at least 2 hours after installation.**

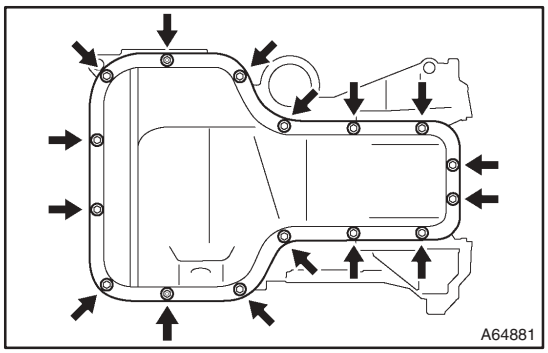

(c) Install the oil pan with the 14 bolts and 2 nuts.
Torque: 9.0 N·m (92 kgf·cm, 80 in.·lbf)

NOTICE:

- **Tighten the bolts and nuts in twice to the specified torque.**
- **Tighten bolts and nuts within 15 minutes after applying sealant (if possible within 3 minutes).**

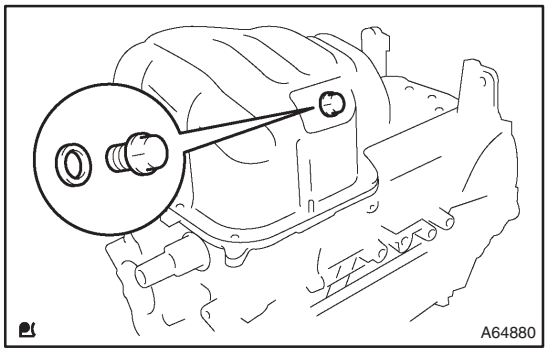

47. INSTALL OIL PAN DRAIN PLUG

(a) Place a new gasket on the oil pan drain plug, then install it onto the oil pan.
Torque: 37 N·m (377 kgf·cm, 27 ft·lbf)

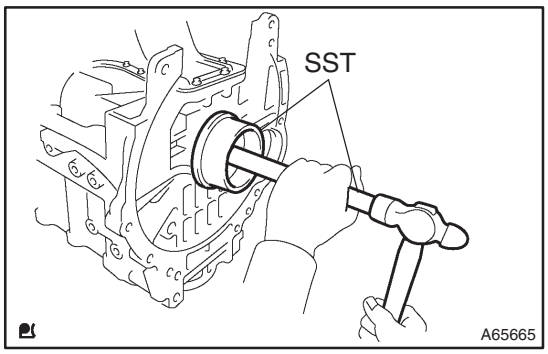

48. INSTALL ENGINE REAR OIL SEAL

(a) Apply a light coat of multi–purpose grease to a new oil seal lip.

NOTICE:

Keep the lip free of foreign materials.

(b) Using SST, tap in the oil seal until its surface is flush with the oil seal retainer edge.

SST 09223–15020, 09950–70010 (09951–07100)

NOTICE:

Wipe off extra grease on the crankshaft.

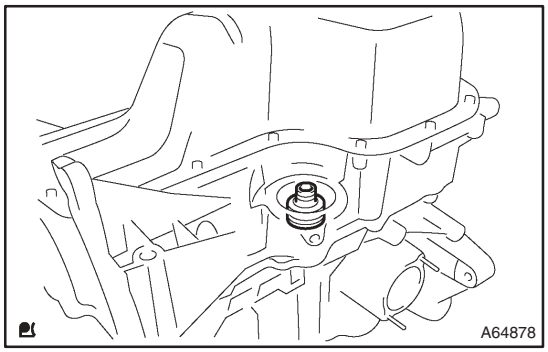

49. INSTALL OIL FILTER UNION

(a) Using a socket hexagon wrench 12, install the oil filter union.

Torque: 30 N·m (306 kgf·cm, 22 ft·lbf)

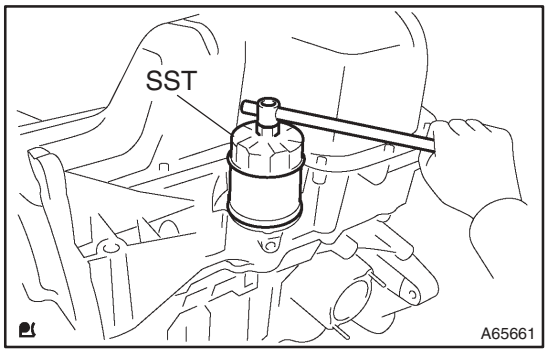

50. INSTALL OIL FILTER SUB–ASSY

(a) Check and clean the oil filter installation surface.

(b) Apply clean engine oil to the gasket of a new oil filter.

(c) Lightly screw the oil filter into place, then tighten it until the gasket comes into contact with the seat.

(d) Using SST, tighten it an additional 3/4 turn.

SST 09228–06501

Torque: 13 N·m (133 kgf·cm, 9.6 ft·lbf)

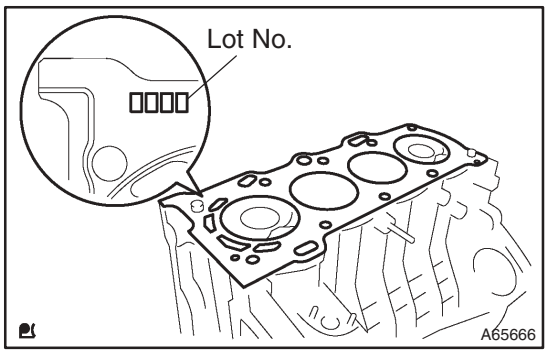

51. INSTALL CYLINDER HEAD GASKET

(a) Place a new cylinder head gasket on the cylinder block surface with the Lot No. stamp upward.

NOTICE:

- **Pay attention to the installation direction.**
- **Place the cylinder head gently in order not to damage the gasket.**

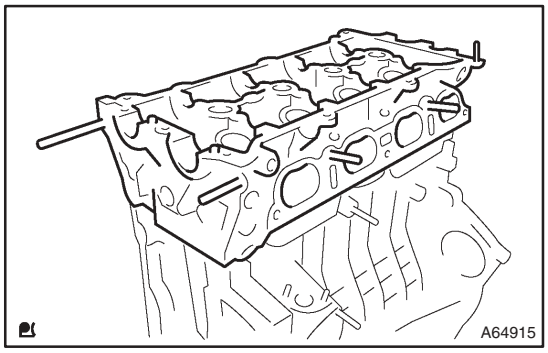

52. INSTALL CYLINDER HEAD SUB–ASSY

(a) Place the cylinder head on the cylinder block.

(b) Apply a light coat of engine oil to the threads and the bottom of the heads of the cylinder head bolts.

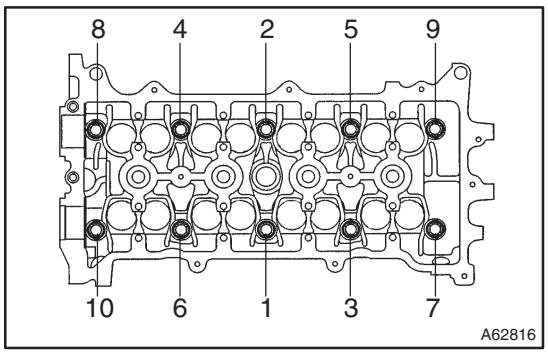

(c) Using a bi–hexagon wrench 10, install and uniformly tighten the 10 cylinder head bolts with plate washers, in several passes, in the sequence shown.
Torque: 49 N·m (500 kgf·cm, 36 ft·lbf)

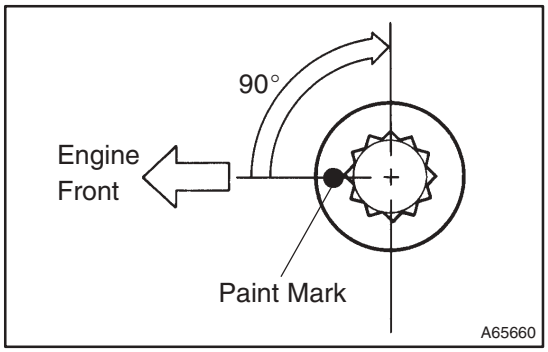

(d) Mark the front of the cylinder head bolt with paint.
(e) Retighten the cylinder head bolts by an additional 90° in the numerical order shown.
(f) Check that the point mark of each bolt is at a 90° angle to the front.

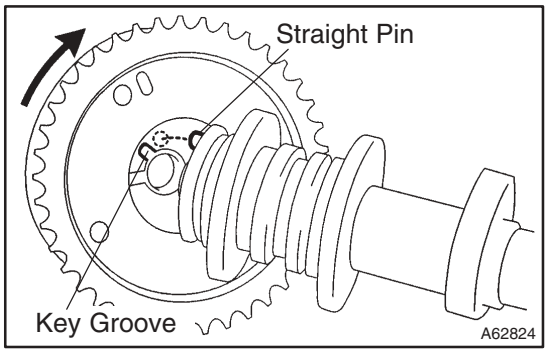

53. INSTALL CAMSHAFT TIMING GEAR ASSY

(a) Put the camshaft timing gear together with the camshaft with the straight pin off the key groove.
(b) Turn the camshaft timing gear in the left direction as shown in the illustration while pushing it lightly against the camshaft. Push the camshaft timing gear until its pin is fitted into the key.

CAUTION:
Be sure not to turn the camshaft timing gear to the retard angle side (the right angle).

(c) Check that there is no clearance between the gear's fringe and camshaft.
(d) Tighten the fringe bolt with the camshaft timing gear fixed.
Torque: 54 N·m (551 kgf·cm 40 ft·lbf)
(e) Check that the camshaft timing gear assembly can move to the retard angle side (the right angle), and is locked at the most retarded position.

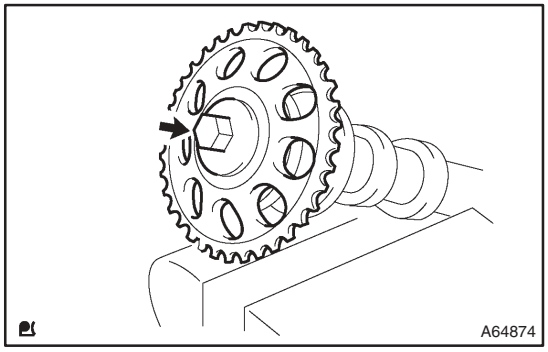

54. INSTALL CAMSHAFT TIMING GEAR OR SPROCKET

(a) Clamp the camshaft in a vise, then install the camshaft timing gear with the bolt.
Torque: 54 N·m (551 kgf·cm 40 ft·lbf)

NOTICE:
Be careful not to damage the camshaft.

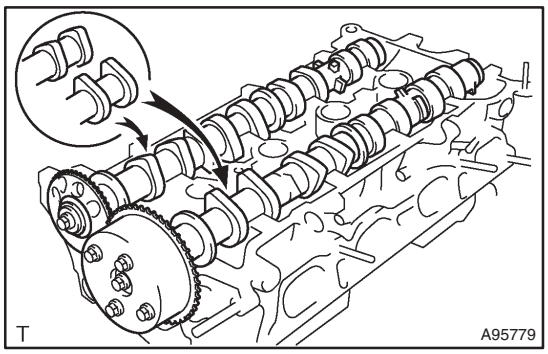

55. INSTALL CAMSHAFT

(a) Apply a light coat of engine oil to the camshaft journals.

(b) Place the 2 camshafts on the cylinder head with the No. 1 cylinder cam lobes facing as shown in the illustration.

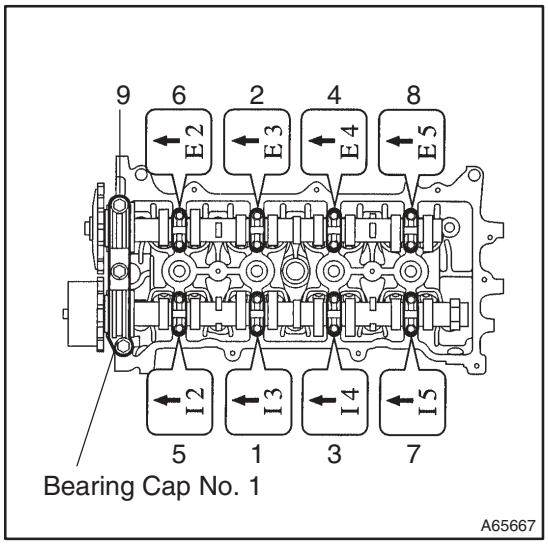

(c) Examine the front marks and numbers, then tighten the bolts in the order shown in the illustration.

Torque:
23 N·m (235 kgf·cm, 17 ft·lbf) for bearing cap No. 1
13 N·m (133 kgf·cm, 10 ft·lbf) for the other bearing caps

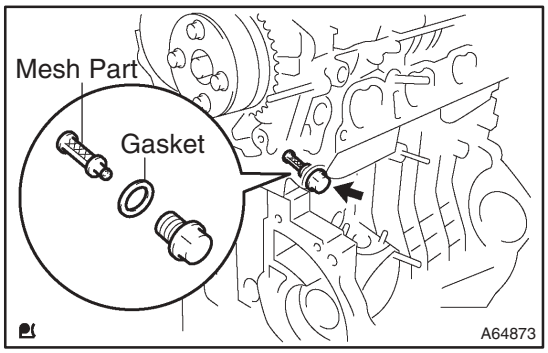

56. INSTALL OIL CONTROL VALVE FILTER

(a) Check that there is no foreign objects on the mesh part of the oil control valve filter.

(b) Install a new gasket and the oil control valve filter onto the bolt, then install it.

Torque: 30 N·m (306 kgf·cm, 22 ft·lbf)

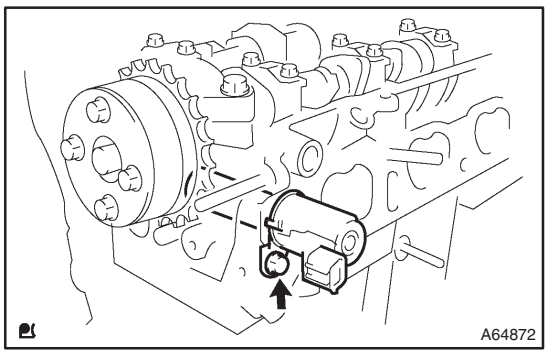

57. INSTALL CAMSHAFT TIMING OIL CONTROL VALVE ASSY

(a) Apply a light coat of engine oil to a new O–ring, then install it onto the camshaft timing oil control valve.

(b) Install the camshaft timing oil control valve with the bolt.

Torque: 9.0 N·m (92 kgf·cm, 80 in.·lbf)

NOTICE:
Be careful not to twist the O–ring.

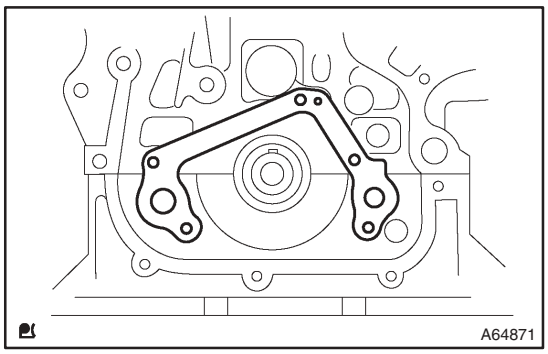

58. INSTALL OIL PUMP GASKET

(a) Install a new gasket onto the cylinder block.

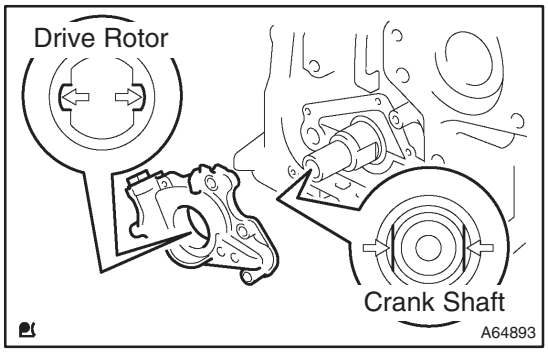

59. INSTALL OIL PUMP ASSY

(a) Align the spline teeth of the oil pump drive rotor with the large teeth of the crankshaft, then slide the oil pump.

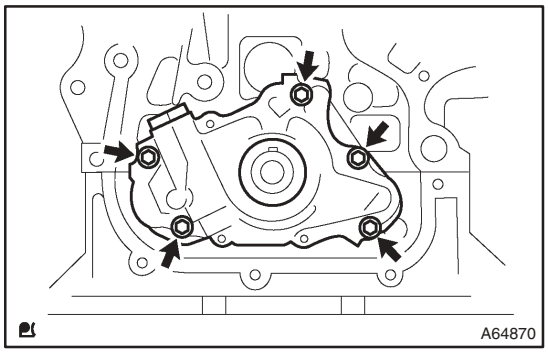

(b) Install the oil pump with the 5 bolts.
Torque: 9.0 N·m (92 kgf·cm, 80 in.·lbf)

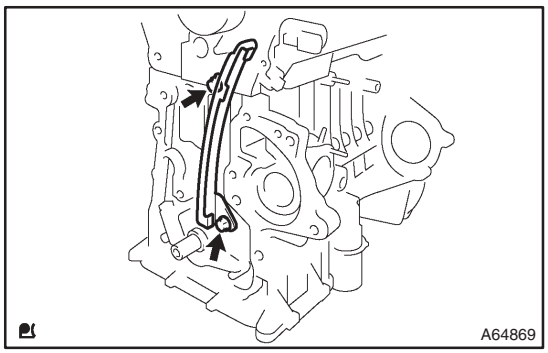

60. INSTALL CHAIN VIBRATION DAMPER NO.1

(a) Install chain vibration damper No. 1 with the 2 bolts.
Torque: 9.0 N·m (92 kgf·cm, 80 in.·lbf)

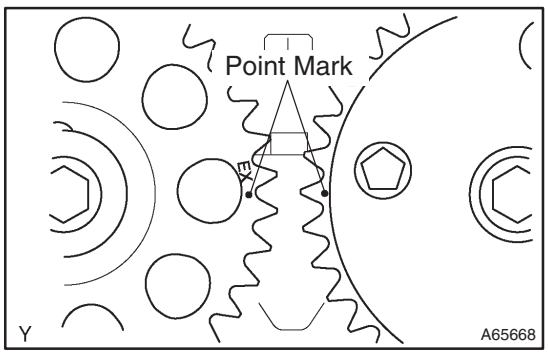

61. INSTALL CHAIN SUB–ASSY

(a) Set No. 1 cylinder to the TDC/compression.
(1) Turn the hexagonal wrench head portion of the camshafts until the point marks of the camshaft timing gears are aligned.

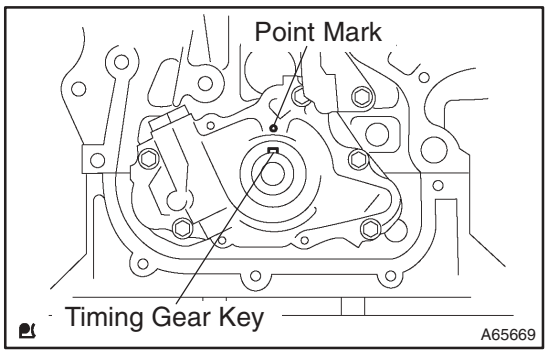

(2) Using a crankshaft pulley bolt, turn the crankshaft to align the timing gear key with the point mark on the oil pump.

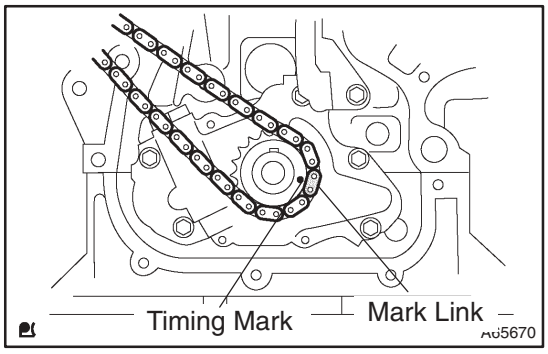

(b) Install the chain onto the crankshaft timing gear with the yellow mark link aligned with the timing mark on the crankshaft timing gear.

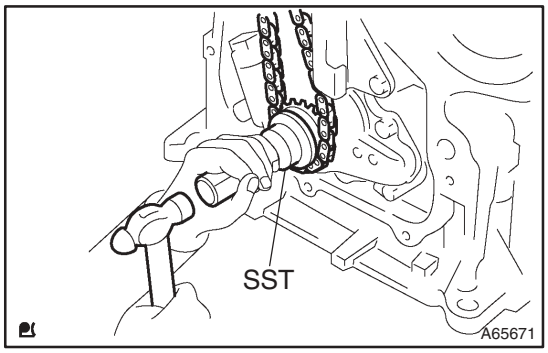

(c) Using SST, install the crankshaft timing gear.
SST 09223–22010

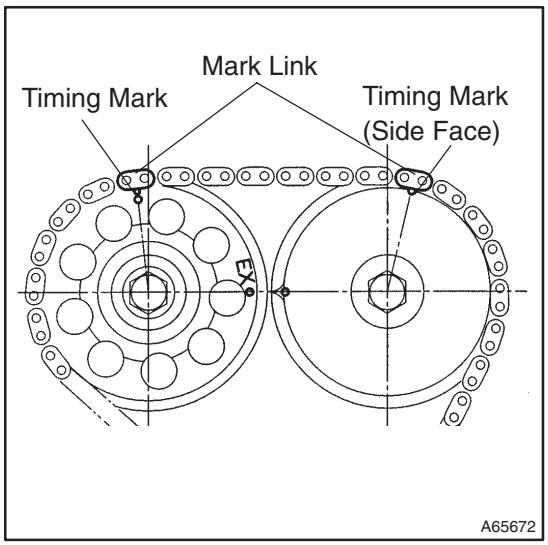

(d) Install the chain onto the camshaft timing gears with the yellow mark links aligned with the timing marks on the camshaft timing gears.

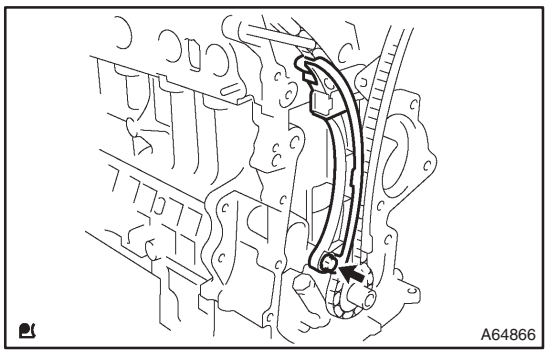

62. INSTALL CHAIN TENSIONER SLIPPER

(a) Install the chain tensioner slipper with the bolt.
Torque: 19 N·m (189 kgf·cm, 14 ft·lbf)

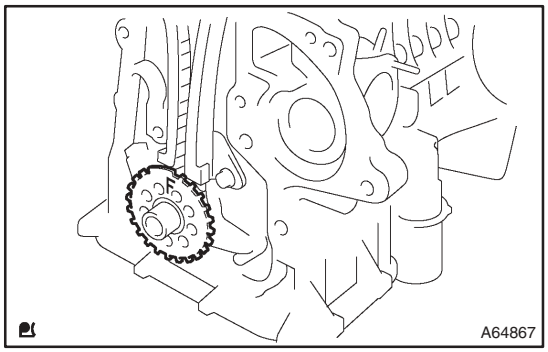

63. INSTALL CRANKSHAFT POSITION SENSOR PLATE NO.1

(a) Install the crankshaft position sensor plate with the ”F” mark facing forward.

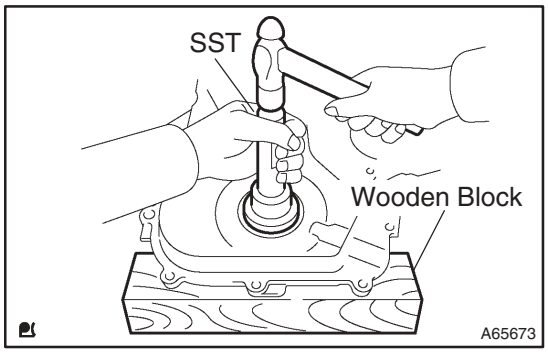

64. INSTALL TIMING CHAIN OR BELT COVER OIL SEAL

(a) Apply a light coat of multi–purpose grease to a new oil seal lip.
(b) Place the timing chain cover on wooden blocks.
(c) Using SST, tap in the new oil seal until its surface is flush with the timing chain cover edge.
SST 09223–22010

NOTICE:
Keep the lip free of foreign objects.

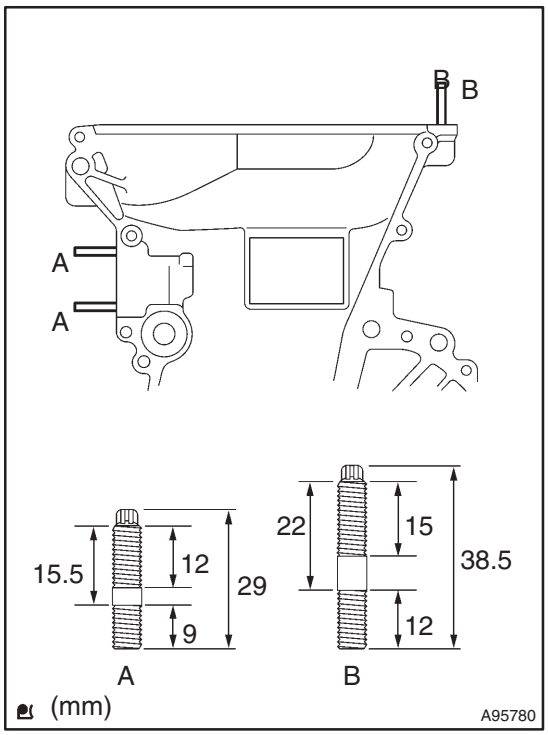

65. INSTALL TIMING CHAIN OR BELT COVER SUB–ASSY

(a) Remove any old packing material from the contact surface.
(b) Using a Torx socket wrench E5, install the 3 stud bolts.
Torque: 5.0 N·m (51 kgf·cm, 44 in.·lbf)

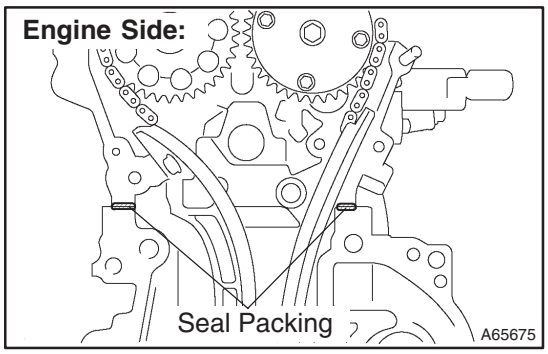

(c) Apply a continuous bead of seal packing (Diameter; 3.5 to 4.5 mm (0.138 to 0.177 in.)) as shown in the illustration.
Seal packing:
Water pump part: THREE BOND TB1282B or equivalent
Other part: THREE BOND TB1280E or equivalent

NOTICE:

- **Remove any oil from the contact surface.**
- **Install the chain cover within 3 minutes after applying seal packing.**
- **Do not put into engine oil for at least 2 hours after installation.**
- **Be careful to only apply the specified thickness/volume of seal packing.**

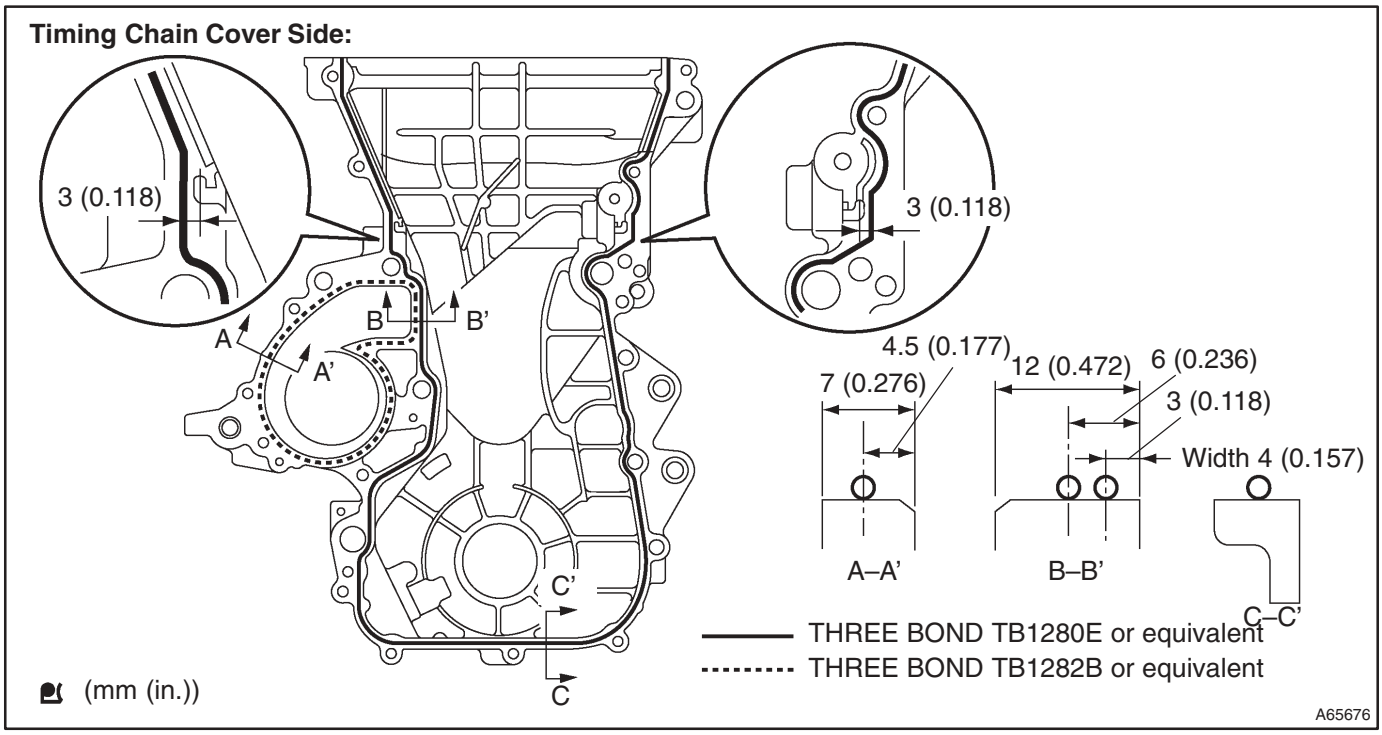

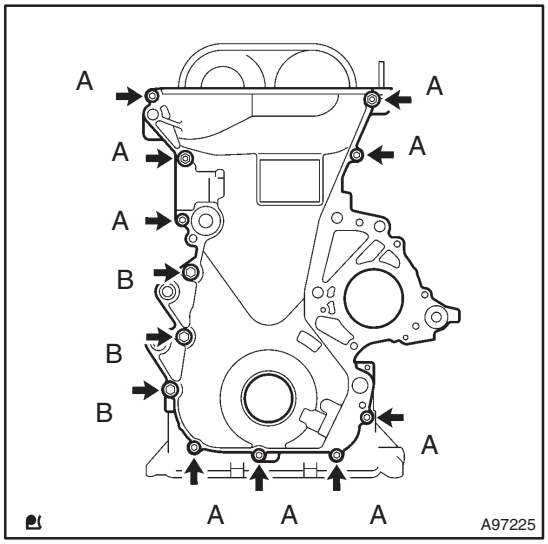

(d) Install the timing chain cover with the 10 bolts and 2 nuts.
Torque:
13 N·m (133 kgf·cm, 10 ft·lbf) for A
19 N·m (189 kgf·cm, 14 ft·lbf) for B

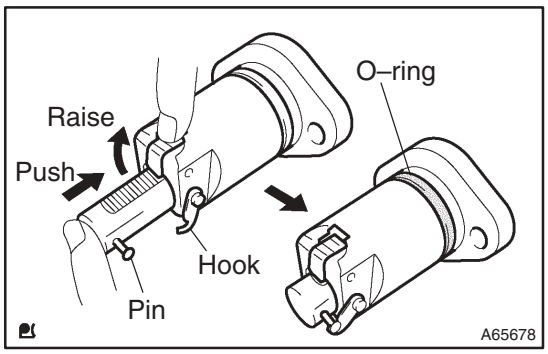

66. INSTALL CHAIN TENSIONER ASSY NO.1

(a) Check that the O–ring is clean, then set the hook as shown in the illustration.

(b) Apply a light coat of engine oil to the O–ring.

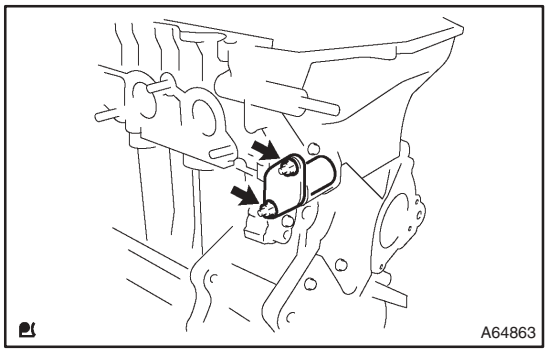

(c) Install the chain tensioner with the 2 nuts.
Torque: 9.0 N·m (92 kgf·cm, 80 in.·lbf)

NOTICE:

- **Be careful not to twist the O–ring.**
- **When installing the chain tensioner, reset the hook if the hook releases the plunger.**

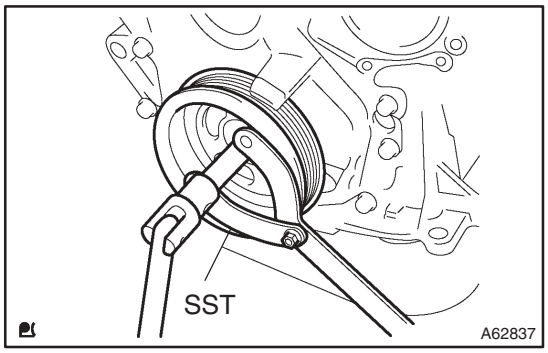

67. INSTALL CRANKSHAFT PULLEY

(a) Align the pulley set key with the key groove of the crankshaft pulley, then slide it on the crankshaft pulley.

(b) Using SST, install the crankshaft pulley bolt.
SST 09960–10010 (09962–01000, 09963–01000)
Torque: 138 N·m (1,407 kgf·cm, 102 ft·lbf)

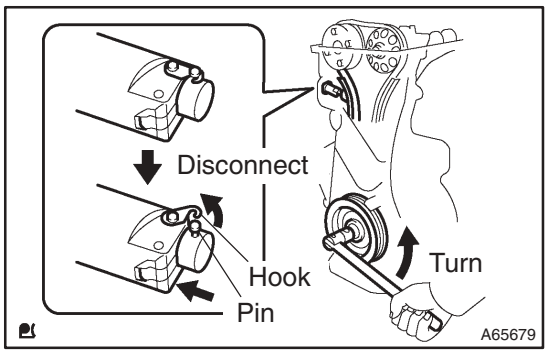

(c) Turn the crankshaft counterclockwise, then disconnect the plunger knock pin from the hook.

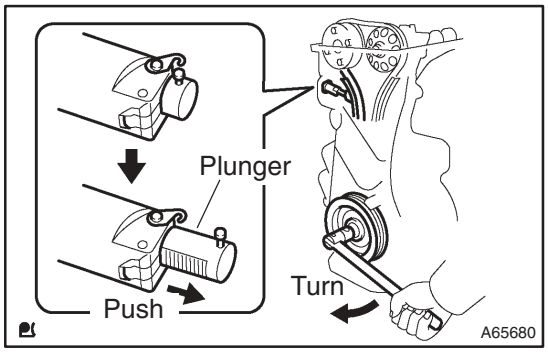

(d) Turn the crankshaft clockwise, then check that the slipper is pushed by the plunger.

HINT:

If the plunger is not extended, press the slipper into the chain tensioner using a screwdriver so that the hook is taken from the knock pin and that the plunger can be extended.

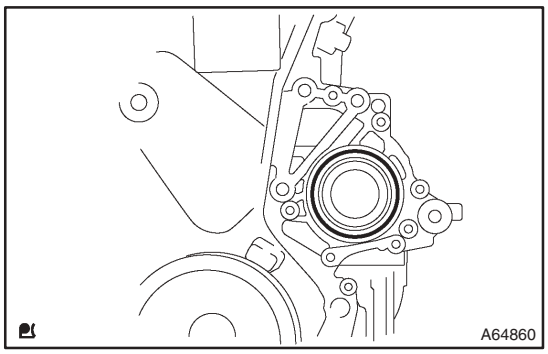

68. INSTALL WATER PUMP O–RING

(a) Install a new water pump O–ring onto the timing chain cover.

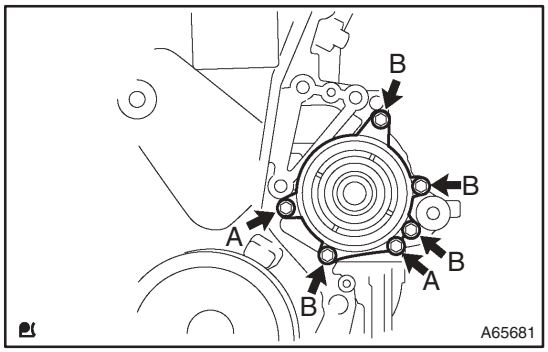

69. INSTALL WATER PUMP ASSY

(a) Install the water pump with the 6 bolts.
Torque:
9.0 N·m (92 kgf·cm, 80 in·lbf) for bolt A
11 N·m (112 kgf·cm, 8 ft·lbf) for bolt B

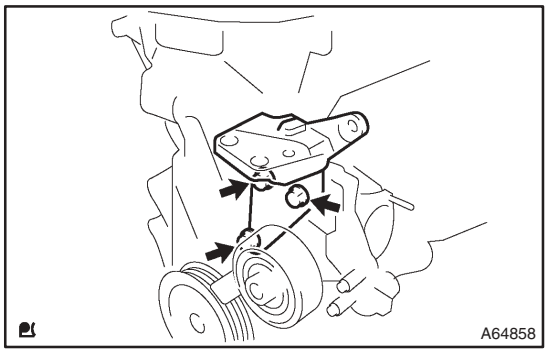

70. INSTALL TRANSVERSE ENGINE ENGINE MOUNTING BRACKET

(a) Install the transverse engine engine mounting bracket with the 3 bolts.
Torque: 47 N·m (479 kgf·cm, 35 ft·lbf)

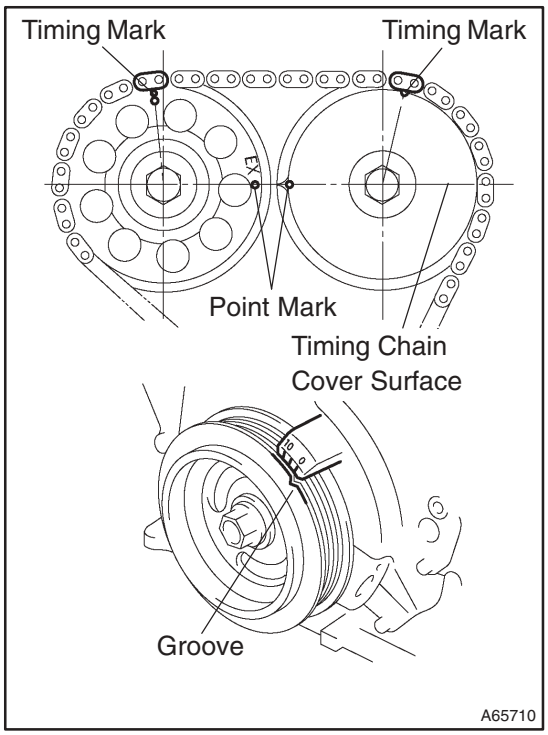

71. INSPECT VALVE CLEARANCE

(a) Set the No. 1 cylinder to the TDC/compression.
(1) Turn the crankshaft pulley until the groove is aligned with the timing mark ”0” of the timing chain cover.
(2) Check that the point marks of the camshaft timing gears are in a straight line on the timing chain cover surface as shown in the illustration.

HINT:
If not, turn the crankshaft 1 revolution (360°) to align the marks as above.

No. 1 Cylinder TDC/Compression:

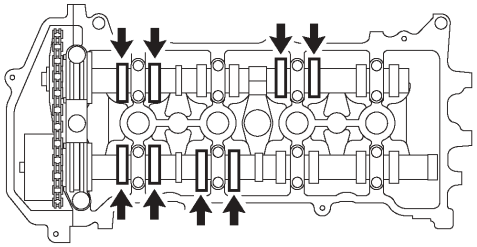

A65682

(b) Check the valves indicated with arrow.
(1) Using a feeler gauge, measure the clearance between the valve lifter and camshaft.
(2) Record the out–of–specification valve clearance measurements. They will be used later to determine the required replacement valve lifters.

Valve clearance (Cold):
0.15 to 0.25 mm (0.0059 to 0.0098 in.) for intake
0.25 to 0.35 mm (0.0098 to 0.0138 in.) for exhaust

If the valve clearance is not as specified, replace the valve lifters.

(c) Turn the crankshaft 1 revolution (360°) and set the No. 4 cylinder to the TDC/compression.

No. 4 Cylinder TDC/Compression:

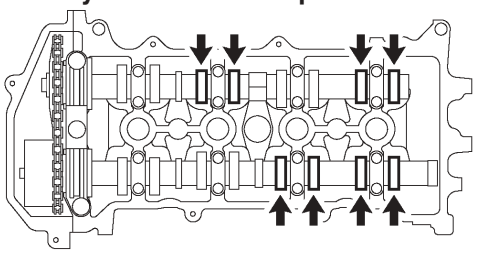

A65683

(d) Check only the valves indicated.
(1) Using a feeler gauge, measure the clearance between the valve lifter and camshaft.
(2) Record the out–of–specification valve clearance measurements. They will be used later to determine the required replacement valve lifters.

Valve clearance (Cold):
0.15 to 0.25 mm (0.0059 to 0.0098 in.) for intake
0.25 to 0.35 mm (0.0098 to 0.0138 in.) for exhaust

If the valve clearance is not as specified, replace the valve lifters.

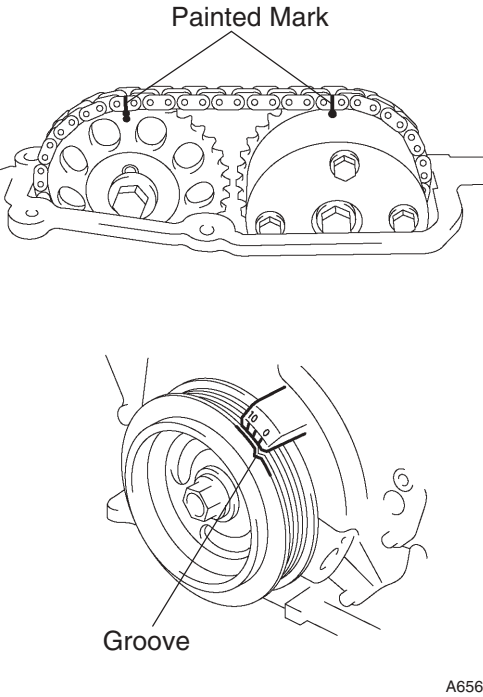

A65684

72. ADJUST VALVE CLEARANCE

NOTICE:

Be sure not to revolve the crankshaft without the chain tensioner.

(a) Set the No. 1 cylinder to the TDC/compression.
(b) Place painted marks on the chain and camshaft timing gears.

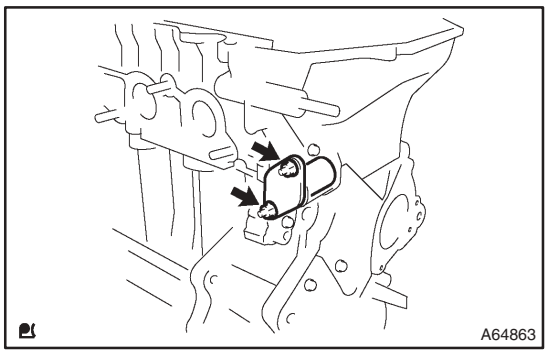

(c) Remove the 2 nuts and chain tensioner.

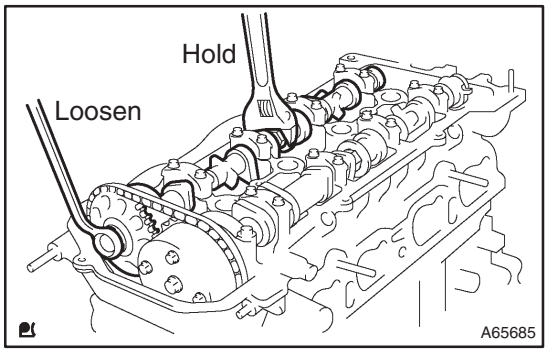

(d) Hold the camshaft with a wrench and so on, then loosen the camshaft timing gear set bolt.

NOTICE:
Be careful not to damage the valve lifter.

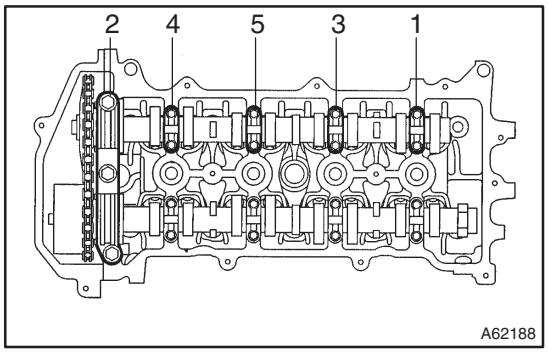

(e) Loosen the bearing cap bolts on the No. 2 camshaft in the order as shown in the illustration, in several passes, then remove the bearing caps.

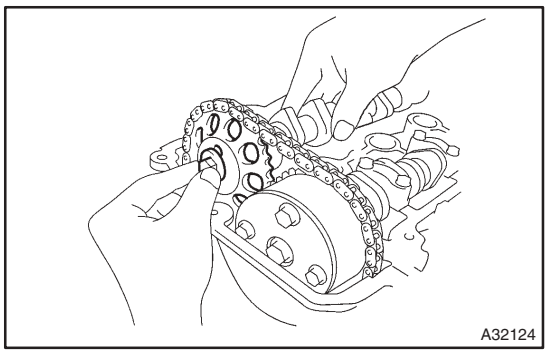

(f) Remove the camshaft timing gear as shown in the illustration.

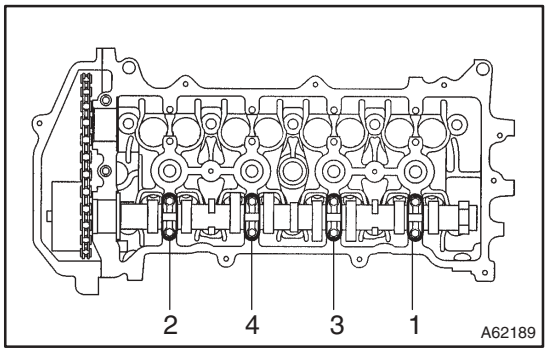

(g) Loosen the bearing cap bolts on the camshaft in the order as shown in the illustration, in several passes, then remove the bearing caps.

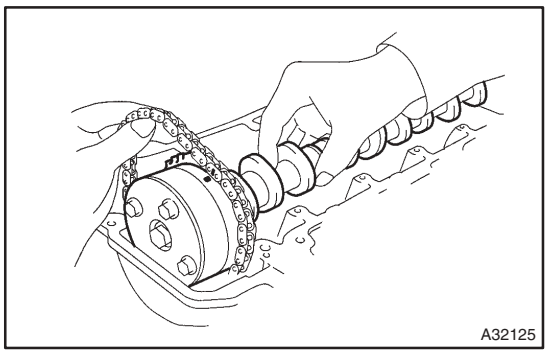

(h) Remove the camshaft while holding the chain.

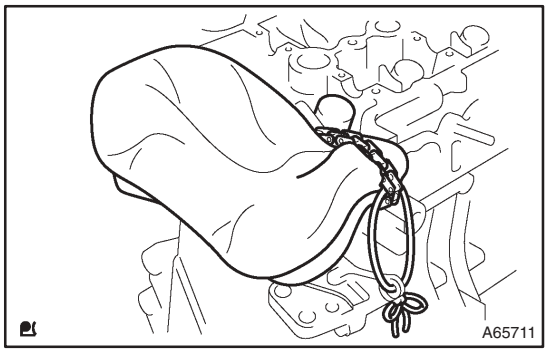

(i) Tie the chain with a string as shown in the illustration.

NOTICE:

Be careful not to drop anything inside the timing chain cover.

(j) Remove the valve lifters.

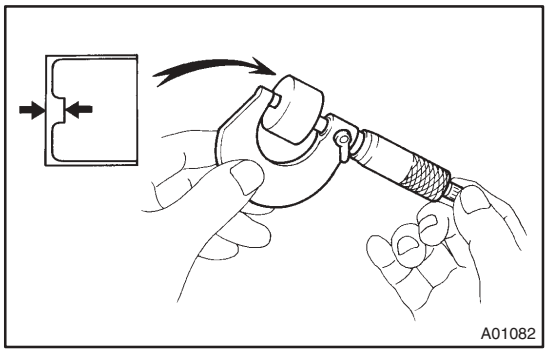

(k) Using a micrometer, measure the thickness of the removed valve lifters.

(l) Calculate the thickness of a new lifter so that the valve clearance comes within the specified value.

A	Thickness of new lifter
B	Thickness of used lifter
C	Measured valve clearance

Valve clearance:
Intake A = B + (C – 0.20 mm (0.0079 in.))
Exhaust A = B + (C – 0.30 mm (0.0118 in.))

Example (Intake):
Measured intake valve clearance = 0.40 mm (0.0158 in.)
0.40 mm (0.0158 in.) – 0.20 mm (0.0079 in.) = 0.20 mm (0.0079 in.)
(Measured – Specification = Excess clearance)
Used lifter measurement = 5.250 mm (0.2067 in.)
0.20 mm (0.0079 in.) + 5.250 mm (0.2067 in.) = 5.450 mm (0.2146 in.)
(Excess clearance + Used lifter = Ideal new lifter)
Closest new lifter = 5.460 mm (0.2150 in.)
Select No. 46 lifter

HINT:

- Select a new lifter with a thickness as close to the calculated values as possible.
- Lifter are available in 35 sizes in increments of 0.020 mm (0.0008 in.), from 5.060 mm (0.1992 in.) to 5.740 mm (0.2260 in.).
- Refer to the New Lifter Thickness Table on the next 2 pages.

A79322

Valve Lifter Selection Chart (Intake)

Measured Clearance mm (in.) \ Installed Lifter Thickness mm (in.)	5.060 (0.1992)	5.080 (0.2000)	5.100 (0.2008)	5.120 (0.2016)	5.140 (0.2024)	5.160 (0.2031)	5.180 (0.2039)	5.200 (0.2047)	5.210 (0.2051)	5.220 (0.2055)	5.230 (0.2059)	5.240 (0.2063)	5.250 (0.2067)	5.260 (0.2071)	5.270 (0.2075)	5.280 (0.2079)	5.290 (0.2083)	5.300 (0.2087)	5.310 (0.2091)	5.320 (0.2094)	5.330 (0.2098)	5.340 (0.2102)	5.350 (0.2106)	5.360 (0.2110)	5.370 (0.2114)	5.380 (0.2118)	5.390 (0.2122)	5.400 (0.2126)	5.410 (0.2130)	5.420 (0.2134)	5.430 (0.2138)	5.440 (0.2142)	5.450 (0.2146)	5.460 (0.2150)	5.470 (0.2154)	5.480 (0.2157)	5.490 (0.2161)	5.500 (0.2165)	5.510 (0.2169)	5.520 (0.2173)	5.530 (0.2177)	5.540 (0.2181)	5.550 (0.2185)	5.560 (0.2189)	5.570 (0.2193)	5.580 (0.2197)	5.590 (0.2201)	5.600 (0.2205)	5.620 (0.2213)	5.640 (0.2220)	5.660 (0.2228)	5.680 (0.2236)	5.700 (0.2244)	5.720 (0.2252)	5.740 (0.2260)
0.000 – 0.030 (0.0000 – 0.0012)									06	06	06	06	06	08	10	10	12	12	14	14	16	16	18	18	20	20	22	22	24	24	26	26	28	28	30	30	32	32	34	34	36	36	38	38	40	40	42	42	44	46	48	50	52	54	56
0.031 – 0.050 (0.0012 – 0.0020)							06	06	06	06	08	08	10	10	12	12	14	14	16	16	18	18	20	20	22	22	24	24	26	26	28	28	30	30	32	32	34	34	36	36	38	38	40	40	42	42	44	44	46	48	50	52	54	56	58
0.051 – 0.070 (0.0020 – 0.0028)						06	06	06	08	08	10	10	12	12	14	14	16	16	18	18	20	20	22	22	24	24	26	26	28	28	30	30	32	32	34	34	36	36	38	38	40	40	42	42	44	44	46	46	48	50	52	54	56	58	60
0.071 – 0.090 (0.0028 – 0.0035)					06	06	06	08	10	10	12	12	14	14	16	16	18	18	20	20	22	22	24	24	26	26	28	28	30	30	32	32	34	34	36	36	38	38	40	40	42	42	44	44	46	46	48	48	50	52	54	56	58	60	62
0.091 – 0.110 (0.0036 – 0.0043)				06	06	06	08	10	12	12	14	14	16	16	18	18	20	20	22	22	24	24	26	26	28	28	30	30	32	32	34	34	36	36	38	38	40	40	42	42	44	44	46	46	48	48	50	50	52	54	56	58	60	62	64
0.111 – 0.130 (0.0044 – 0.0051)			06	06	06	08	10	12	14	14	16	16	18	18	20	20	22	22	24	24	26	26	28	28	30	30	32	32	34	34	36	36	38	38	40	40	42	42	44	44	46	46	48	48	50	50	52	52	54	56	58	60	62	64	66
0.131 – 0.149 (0.0052 – 0.0059)		06	06	06	08	10	12	14	16	16	18	18	20	20	22	22	24	24	26	26	28	28	30	30	32	32	34	34	36	36	38	38	40	40	42	42	44	44	46	46	48	48	50	50	52	52	54	54	56	58	60	62	64	66	68
0.150 – 0.250 (0.0059 – 0.0098)																																																								
0.251 – 0.270 (0.0099 – 0.0106)	12	14	16	18	20	22	24	26	28	28	30	30	32	32	34	34	36	36	38	38	40	40	42	42	44	44	46	46	48	48	50	50	52	52	54	54	56	56	58	58	60	60	62	62	64	64	66	66	68	70	72	74	74	74
0.271 – 0.290 (0.0107 – 0.0114)	14	16	18	20	22	24	26	28	30	30	32	32	34	34	36	36	38	38	40	40	42	42	44	44	46	46	48	48	50	50	52	52	54	54	56	56	58	58	60	60	62	62	64	64	66	66	68	68	70	72	74	74	74	
0.291 – 0.310 (0.0115 – 0.0122)	16	18	20	22	24	26	28	30	32	32	34	34	36	36	38	38	40	40	42	42	44	44	46	46	48	48	50	50	52	52	54	54	56	56	58	58	60	60	62	62	64	64	66	66	68	68	70	70	72	74	74	74		
0.311 – 0.330 (0.0122 – 0.0130)	18	20	22	24	26	28	30	32	34	34	36	36	38	38	40	40	42	42	44	44	46	46	48	48	50	50	52	52	54	54	56	56	58	58	60	60	62	62	64	64	66	66	68	68	70	70	72	72	74	74	74			
0.331 – 0.350 (0.0130 – 0.0138)	20	22	24	26	28	30	32	34	36	36	38	38	40	40	42	42	44	44	46	46	48	48	50	50	52	52	54	54	56	56	58	58	60	60	62	62	64	64	66	66	68	68	70	70	72	72	74	74	74					
0.351 – 0.370 (0.0138 – 0.0146)	22	24	26	28	30	32	34	36	38	38	40	40	42	42	44	44	46	46	48	48	50	50	52	52	54	54	56	56	58	58	60	60	62	62	64	64	66	66	68	68	70	70	72	72	74	74	74	74						
0.371 – 0.390 (0.0146 – 0.0154)	24	26	28	30	32	34	36	38	40	40	42	42	44	44	46	46	48	48	50	50	52	52	54	54	56	56	58	58	60	60	62	62	64	64	66	66	68	68	70	70	72	72	74	74	74	74	74	74						
0.391 – 0.410 (0.0154 – 0.0161)	26	28	30	32	34	36	38	40	42	42	44	44	46	46	48	48	50	50	52	52	54	54	56	56	58	58	60	60	62	62	64	64	66	66	68	68	70	70	72	72	74	74	74	74	74	74	74							
0.411 – 0.430 (0.0162 – 0.0169)	28	30	32	34	36	38	40	42	44	44	46	46	48	48	50	50	52	52	54	54	56	56	58	58	60	60	62	62	64	64	66	66	68	68	70	70	72	72	74	74	74	74	74	74	74								
0.431 – 0.450 (0.0170 – 0.0177)	30	32	34	36	38	40	42	44	46	46	48	48	50	50	52	52	54	54	56	56	58	58	60	60	62	62	64	64	66	66	68	68	70	70	72	72	74	74	74	74	74	74												
0.451 – 0.470 (0.0178 – 0.0185)	32	34	36	38	40	42	44	46	48	48	50	50	52	52	54	54	56	56	58	58	60	60	62	62	64	64	66	66	68	68	70	70	72	72	74	74	74	74	74	74														
0.471 – 0.490 (0.0185 – 0.0193)	34	36	38	40	42	44	46	48	50	50	52	52	54	54	56	56	58	58	60	60	62	62	64	64	66	66	68	68	70	70	72	72	74	74	74	74	74	74																
0.491 – 0.510 (0.0193 – 0.0201)	36	38	40	42	44	46	48	50	52	52	54	54	56	56	58	58	60	60	62	62	64	64	66	66	68	68	70	70	72	72	74	74	74	74	74	74																		
0.511 – 0.530 (0.0201 – 0.0209)	38	40	42	44	46	48	50	52	54	54	56	56	58	58	60	60	62	62	64	64	66	66	68	68	70	70	72	72	74	74	74	74	74	74																			
0.531 – 0.550 (0.0209 – 0.0217)	40	42	44	46	48	50	52	54	56	56	58	58	60	60	62	62	64	64	66	66	68	68	70	70	72	72	74	74	74	74	74	74																				
0.551 – 0.570 (0.0217 – 0.0224)	42	44	46	48	50	52	54	56	58	58	60	60	62	62	64	64	66	66	68	68	70	70	72	72	74	74	74	74	74	74	74																					
0.571 – 0.590 (0.0225 – 0.0232)	44	46	48	50	52	54	56	58	60	60	62	62	64	64	66	66	68	68	70	70	72	72	74	74	74	74	74	74																							
0.591 – 0.610 (0.0233 – 0.0240)	46	48	50	52	54	56	58	60	62	62	64	64	66	66	68	68	70	70	72	72	74	74	74	74	74	74																							
0.611 – 0.630 (0.0241 – 0.0248)	48	50	52	54	56	58	60	62	64	64	66	66	68	68	70	70	72	72	74	74	74	74	74	74																							
0.631 – 0.650 (0.0248 – 0.0256)	50	52	54	56	58	60	62	64	66	66	68	68	70	70	72	72	74	74	74	74	74	74																							
0.651 – 0.670 (0.0256 – 0.0264)	52	54	56	58	60	62	64	66	68	68	70	70	72	72	74	74	74	74	74	74																							
0.671 – 0.690 (0.0264 – 0.0272)	54	56	58	60	62	64	66	68	70	70	72	72	74	74	74	74	74	74																							
0.691 – 0.710 (0.0272 – 0.0280)	56	58	60	62	64	66	68	70	72	72	74	74	74	74	74	74																							
0.711 – 0.730 (0.0280 – 0.0287)	58	60	62	64	66	68	70	72	74	74	74	74	74	74																							
0.731 – 0.750 (0.0288 – 0.0295)	60	62	64	66	68	70	72	74	74	74	74	74																									
0.751 – 0.770 (0.0296 – 0.0303)	62	64	66	68	70	72	74	74	74	74																									
0.771 – 0.790 (0.0304 – 0.0311)	64	66	68	70	72	74	74	74																											
0.791 – 0.810 (0.0311 – 0.0319)	66	68	70	72	74	74	74																												
0.811 – 0.830 (0.0319 – 0.0327)	68	70	72	74	74	74																													
0.831 – 0.850 (0.0327 – 0.0335)	70	72	74	74	74																														
0.851 – 0.870 (0.0335 – 0.0343)	72	74	74	74																															
0.871 – 0.890 (0.0343 – 0.0350)	74	74	74																																
0.891 – 0.910 (0.0351 – 0.0358)	74	74																																	
0.911 – 0.930 (0.0359 – 0.0366)	74																																		

Intake valve clearance (Cold):
0.15 to 0.25 mm (0.006 to 0.010 in.)

EXAMPLE: The 5.250 mm (0.2067 in.) lifter is installed, and the measured clearance is 0.400 mm (0.0157 in.).
Replace the 5.250 mm (0.2067 in.) lifter with a new No. 46 lifter.

New Lifter Thickness mm (in.)

Lifter No.	Thickness	Lifter No.	Thickness	Lifter No.	Thickness
06	5.060 (0.1992)	30	5.300 (0.2087)	54	5.540 (0.2181)
08	5.080 (0.2000)	32	5.320 (0.2094)	56	5.560 (0.2189)
10	5.100 (0.2008)	34	5.340 (0.2102)	58	5.580 (0.2197)
12	5.120 (0.2016)	36	5.360 (0.2110)	60	5.600 (0.2205)
14	5.140 (0.2024)	38	5.380 (0.2118)	62	5.620 (0.2213)
16	5.160 (0.2031)	40	5.400 (0.2126)	64	5.640 (0.2220)
18	5.180 (0.2039)	42	5.420 (0.2134)	66	5.660 (0.2228)
20	5.200 (0.2047)	44	5.440 (0.2142)	68	5.680 (0.2236)
22	5.220 (0.2055)	46	5.460 (0.2150)	70	5.700 (0.2244)
24	5.240 (0.2063)	48	5.480 (0.2157)	72	5.720 (0.2252)
26	5.260 (0.2071)	50	5.500 (0.2165)	74	5.740 (0.2260)
28	5.280 (0.2079)	52	5.520 (0.2173)		

A96652

A79323

Valve Lifter Selection Chart (Exhaust)

Measured Clearance mm (in.) \ Installed Lifter Thickness mm (in.)	5.060 (0.1992)	5.080 (0.2000)	5.100 (0.2008)	5.120 (0.2016)	5.140 (0.2024)	5.160 (0.2031)	5.180 (0.2039)	5.200 (0.2047)	5.210 (0.2051)	5.220 (0.2055)	5.230 (0.2059)	5.240 (0.2063)	5.250 (0.2067)	5.260 (0.2071)	5.270 (0.2075)	5.280 (0.2079)	5.290 (0.2083)	5.300 (0.2087)	5.310 (0.2091)	5.320 (0.2094)	5.330 (0.2098)	5.340 (0.2102)	5.350 (0.2106)	5.360 (0.2110)	5.370 (0.2114)	5.380 (0.2118)	5.390 (0.2122)	5.400 (0.2126)	5.410 (0.2130)	5.420 (0.2134)	5.430 (0.2138)	5.440 (0.2142)	5.450 (0.2146)	5.460 (0.2150)	5.470 (0.2154)	5.480 (0.2157)	5.490 (0.2161)	5.500 (0.2165)	5.510 (0.2169)	5.520 (0.2173)	5.530 (0.2177)	5.540 (0.2181)	5.550 (0.2185)	5.560 (0.2189)	5.570 (0.2193)	5.580 (0.2197)	5.590 (0.2201)	5.600 (0.2205)	5.620 (0.2213)	5.640 (0.2220)	5.660 (0.2228)	5.680 (0.2236)	5.700 (0.2244)	5.720 (0.2252)	5.740 (0.2260)
0.000 – 0.030 (0.0000 – 0.0012)																			06	06	06	06	08	08	10	10	12	12	14	14	16	16	18	18	20	20	22	22	24	24	26	26	28	28	30	30	32	32	34	36	38	40	42	44	46
0.031 – 0.050 (0.0012 – 0.0020)																06	06	06	06	06	08	08	10	10	12	12	14	14	16	16	18	18	20	20	22	22	24	24	26	26	28	28	30	30	32	32	34	34	36	38	40	42	44	46	48
0.051 – 0.070 (0.0020 – 0.0028)														06	06	06	06	06	08	08	10	10	12	12	14	14	16	16	18	18	20	20	22	22	24	24	26	26	28	28	30	30	32	32	34	34	36	36	38	40	42	44	46	48	50
0.071 – 0.090 (0.0028 – 0.0035)												06	06	06	06	06	08	08	10	10	12	12	14	14	16	16	18	18	20	20	22	22	24	24	26	26	28	28	30	30	32	32	34	34	36	36	38	38	40	42	44	46	48	50	52
0.091 – 0.110 (0.0036 – 0.0043)											06	06	06	06	08	08	10	10	12	12	14	14	16	16	18	18	20	20	22	22	24	24	26	26	28	28	30	30	32	32	34	34	36	36	38	38	40	40	42	44	46	48	50	52	54
0.111 – 0.130 (0.0044 – 0.0051)									06	06	06	06	08	08	10	10	12	12	14	14	16	16	18	18	20	20	22	22	24	24	26	26	28	28	30	30	32	32	34	34	36	36	38	38	40	40	42	42	44	46	48	50	52	54	56
0.131 – 0.150 (0.0052 – 0.0059)								06	06	06	08	08	10	10	12	12	14	14	16	16	18	18	20	20	22	22	24	24	26	26	28	28	30	30	32	32	34	34	36	36	38	38	40	40	42	42	44	44	46	48	50	52	54	56	58
0.151 – 0.170 (0.0059 – 0.0067)						06	06	06	08	08	10	10	12	12	14	14	16	16	18	18	20	20	22	22	24	24	26	26	28	28	30	30	32	32	34	34	36	36	38	38	40	40	42	42	44	44	46	46	48	50	52	54	56	58	60
0.171 – 0.190 (0.0067 – 0.0075)					06	06	06	08	10	10	12	12	14	14	16	16	18	18	20	20	22	22	24	24	26	26	28	28	30	30	32	32	34	34	36	36	38	38	40	40	42	42	44	44	46	46	48	48	50	52	54	56	58	60	62
0.191 – 0.210 (0.0075 – 0.0083)				06	06	06	08	10	12	12	14	14	16	16	18	18	20	20	22	22	24	24	26	26	28	28	30	30	32	32	34	34	36	36	38	38	40	40	42	42	44	44	46	46	48	48	50	50	52	54	56	58	60	62	64
0.211 – 0.230 (0.0083 – 0.0091)			06	06	06	08	10	12	14	14	16	16	18	18	20	20	22	22	24	24	26	26	28	28	30	30	32	32	34	34	36	36	38	38	40	40	42	42	44	44	46	46	48	48	50	50	52	52	54	56	58	60	62	64	66
0.231 – 0.249 (0.0091 – 0.0098)		06	06	06	08	10	12	14	16	16	18	18	20	20	22	22	24	24	26	26	28	28	30	30	32	32	34	34	36	36	38	38	40	40	42	42	44	44	46	46	48	48	50	50	52	52	54	54	56	58	60	62	64	66	68
0.250 – 0.350 (0.0098 – 0.0138)																																																										
0.351 – 0.370 (0.0138 – 0.0146)	12	14	16	18	20	22	24	26	28	28	30	30	32	32	34	34	36	36	38	38	40	40	42	42	44	44	46	46	48	48	50	50	52	52	54	54	56	56	58	58	60	60	62	62	64	64	66	66	68	70	72	74	74	74
0.371 – 0.390 (0.0146 – 0.0154)	14	16	18	20	22	24	26	28	30	30	32	32	34	34	36	36	38	38	40	40	42	42	44	44	46	46	48	48	50	50	52	52	54	54	56	56	58	58	60	60	62	62	64	64	66	66	68	68	70	72	74	74	74	
0.391 – 0.410 (0.0154 – 0.0161)	16	18	20	22	24	26	28	30	32	32	34	34	36	36	38	38	40	40	42	42	44	44	46	46	48	48	50	50	52	52	54	54	56	56	58	58	60	60	62	62	64	64	66	66	68	68	70	70	72	74	74	74		
0.411 – 0.430 (0.0162 – 0.0169)	18	20	22	24	26	28	30	32	34	34	36	36	38	38	40	40	42	42	44	44	46	46	48	48	50	50	52	52	54	54	56	56	58	58	60	60	62	62	64	64	66	66	68	68	70	70	72	72	74	74	74			
0.431 – 0.450 (0.0170 – 0.0177)	20	22	24	26	28	30	32	34	36	36	38	38	40	40	42	42	44	44	46	46	48	48	50	50	52	52	54	54	56	56	58	58	60	60	62	62	64	64	66	66	68	68	70	70	72	72	74	74	74	74				
0.451 – 0.470 (0.0178 – 0.0185)	22	24	26	28	30	32	34	36	38	38	40	40	42	42	44	44	46	46	48	48	50	50	52	52	54	54	56	56	58	58	60	60	62	62	64	64	66	66	68	68	70	70	72	72	74	74	74	74						
0.471 – 0.490 (0.0185 – 0.0193)	24	26	28	30	32	34	36	38	40	40	42	42	44	44	46	46	48	48	50	50	52	52	54	54	56	56	58	58	60	60	62	62	64	64	66	66	68	68	70	70	72	72	74	74	74	74	74	74						
0.491 – 0.510 (0.0193 – 0.0201)	26	28	30	32	34	36	38	40	42	42	44	44	46	46	48	48	50	50	52	52	54	54	56	56	58	58	60	60	62	62	64	64	66	66	68	68	70	70	72	72	74	74	74	74	74	74								
0.511 – 0.530 (0.0201 – 0.0209)	28	30	32	34	36	38	40	42	44	44	46	46	48	48	50	50	52	52	54	54	56	56	58	58	60	60	62	62	64	64	66	66	68	68	70	70	72	72	74	74	74	74	74	74										
0.531 – 0.550 (0.0209 – 0.0217)	30	32	34	36	38	40	42	44	46	46	48	48	50	50	52	52	54	54	56	56	58	58	60	60	62	62	64	64	66	66	68	68	70	70	72	72	74	74	74	74	74	74												
0.551 – 0.570 (0.0217 – 0.0224)	32	34	36	38	40	42	44	46	48	48	50	50	52	52	54	54	56	56	58	58	60	60	62	62	64	64	66	66	68	68	70	70	72	72	74	74	74	74	74	74														
0.571 – 0.590 (0.0225 – 0.0232)	34	36	38	40	42	44	46	48	50	50	52	52	54	54	56	56	58	58	60	60	62	62	64	64	66	66	68	68	70	70	72	72	74	74	74	74	74	74																
0.591 – 0.610 (0.0233 – 0.0240)	36	38	40	42	44	46	48	50	52	52	54	54	56	56	58	58	60	60	62	62	64	64	66	66	68	68	70	70	72	72	74	74	74	74	74	74																		
0.611 – 0.630 (0.0241 – 0.0248)	38	40	42	44	46	48	50	52	54	54	56	56	58	58	60	60	62	62	64	64	66	66	68	68	70	70	72	72	74	74	74	74	74	74																				
0.631 – 0.650 (0.0248 – 0.0256)	40	42	44	46	48	50	52	54	56	56	58	58	60	60	62	62	64	64	66	66	68	68	70	70	72	72	74	74	74	74	74	74																						
0.651 – 0.670 (0.0256 – 0.0264)	42	44	46	48	50	52	54	56	58	58	60	60	62	62	64	64	66	66	68	68	70	70	72	72	74	74	74	74	74	74																								
0.671 – 0.690 (0.0264 – 0.0272)	44	46	48	50	52	54	56	58	60	60	62	62	64	64	66	66	68	68	70	70	72	72	74	74	74	74	74	74																									
0.691 – 0.710 (0.0272 – 0.0280)	46	48	50	52	54	56	58	60	62	62	64	64	66	66	68	68	70	70	72	72	74	74	74	74	74	74																									
0.711 – 0.730 (0.0280 – 0.0287)	48	50	52	54	56	58	60	62	64	64	66	66	68	68	70	70	72	72	74	74	74	74	74	74																									
0.731 – 0.750 (0.0288 – 0.0295)	50	52	54	56	58	60	62	64	66	66	68	68	70	70	72	72	74	74	74	74	74	74																									
0.751 – 0.770 (0.0296 – 0.0303)	52	54	56	58	60	62	64	66	68	68	70	70	72	72	74	74	74	74	74	74																									
0.771 – 0.790 (0.0304 – 0.0311)	54	56	58	60	62	64	66	68	70	70	72	72	74	74	74	74	74	74																											
0.791 – 0.810 (0.0311 – 0.0319)	56	58	60	62	64	66	68	70	72	72	74	74	74	74	74	74																											
0.811 – 0.830 (0.0319 – 0.0327)	58	60	62	64	66	68	70	72	74	74	74	74	74	74																											
0.831 – 0.850 (0.0327 – 0.0335)	60	62	64	66	68	70	72	74	74	74	74	74																											
0.851 – 0.870 (0.0335 – 0.0343)	62	64	66	68	70	72	74	74	74	74																											
0.871 – 0.890 (0.0343 – 0.0350)	64	66	68	70	72	74	74	74																													
0.891 – 0.910 (0.0351 – 0.0358)	66	68	70	72	74	74	74																														
0.911 – 0.930 (0.0359 – 0.0366)	68	70	72	74	74	74																															
0.931 – 0.950 (0.0367 – 0.0374)	70	72	74	74	74																																
0.951 – 0.970 (0.0374 – 0.0382)	72	74	74	74																																	
0.971 – 0.990 (0.0382 – 0.0390)	74	74	74																																		
0.991 – 1.010 (0.0390 – 0.0398)	74	74																																			
1.011 – 1.030 (0.0398 – 0.0406)	74																																				

Exhaust valve clearance (Cold):
0.25 to 0.35 mm (0.010 to 0.014 in.)

EXAMPLE: The 5.340 mm (0.2102 in.) lifter is installed, and the measured clearance is 0.440 mm (0.0173 in.).
Replace the 5.340 mm (0.2102 in.) lifter with a new No. 48 lifter.

New Lifter Thickness mm (in.)

Lifter No.	Thickness	Lifter No.	Thickness	Lifter No.	Thickness
06	5.060 (0.1992)	30	5.300 (0.2087)	54	5.540 (0.2181)
08	5.080 (0.2000)	32	5.320 (0.2094)	56	5.560 (0.2189)
10	5.100 (0.2008)	34	5.340 (0.2102)	58	5.580 (0.2197)
12	5.120 (0.2016)	36	5.360 (0.2110)	60	5.600 (0.2205)
14	5.140 (0.2024)	38	5.380 (0.2118)	62	5.620 (0.2213)
16	5.160 (0.2031)	40	5.400 (0.2126)	64	5.640 (0.2220)
18	5.180 (0.2039)	42	5.420 (0.2134)	66	5.660 (0.2228)
20	5.200 (0.2047)	44	5.440 (0.2142)	68	5.680 (0.2236)
22	5.220 (0.2055)	46	5.460 (0.2150)	70	5.700 (0.2244)
24	5.240 (0.2063)	48	5.480 (0.2157)	72	5.720 (0.2252)
26	5.260 (0.2071)	50	5.500 (0.2165)	74	5.740 (0.2260)
28	5.280 (0.2079)	52	5.520 (0.2173)		

A96653

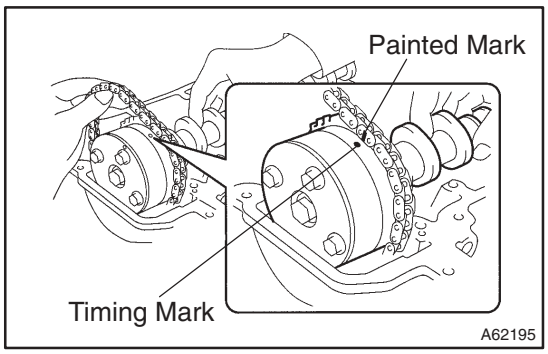

(m) As shown in the illustration, install the chain onto the camshaft timing gear with the painted mark aligned with the timing mark on the camshaft timing gear.

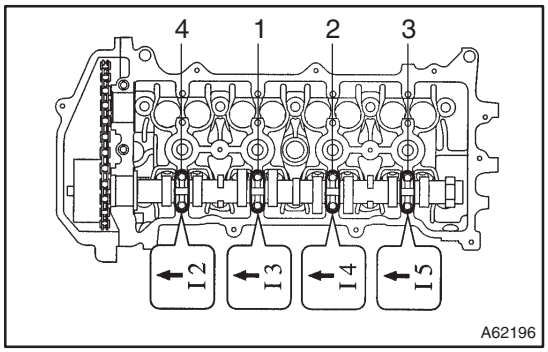

(n) Examine the front marks and numbers, then tighten the bolts in the order shown in the illustration.
Torque: 13 N·m (133 kgf·cm, 10 ft·lbf)

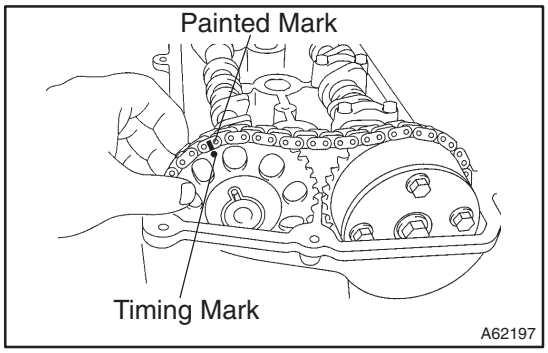

(o) Put the camshaft No. 2 on the cylinder head with the painted mark of the chain aligned with the timing mark on the camshaft timing gear.

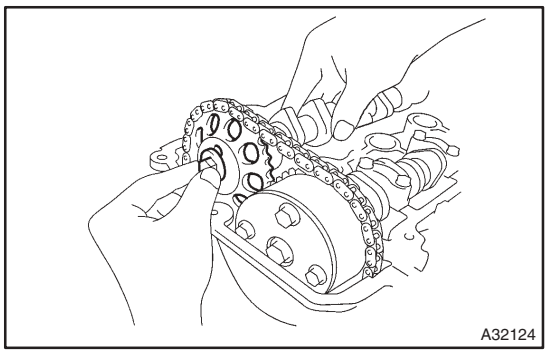

(p) Tighten the set bolt temporarily while raising the camshaft.

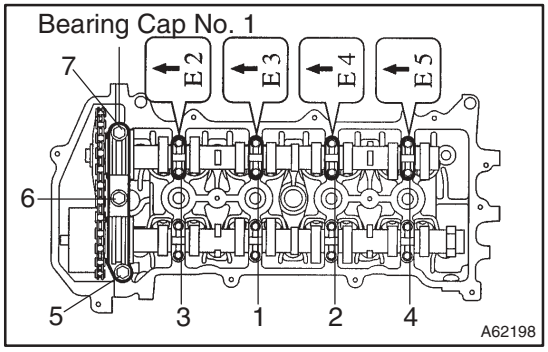

(q) Examine the front marks and numbers, then tighten the bolts in the order shown in the illustration.
Torque:
23 N·m (235 kgf·cm, 17 ft·lbf) for bearing cap No. 1
13 N·m (133 kgf·cm, 10 ft·lbf) for the other bearing caps.

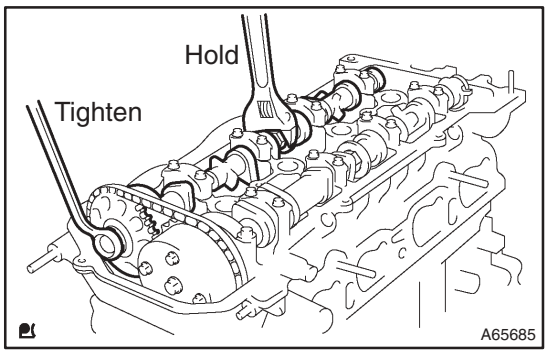

(r) Hold the camshaft with a wrench and so on, then tighten the camshaft timing gear set bolt.

Torque: 54 N·m (551 kgf·cm, 40 ft·lbf)

NOTICE:

Be careful not to damage the valve lifter.

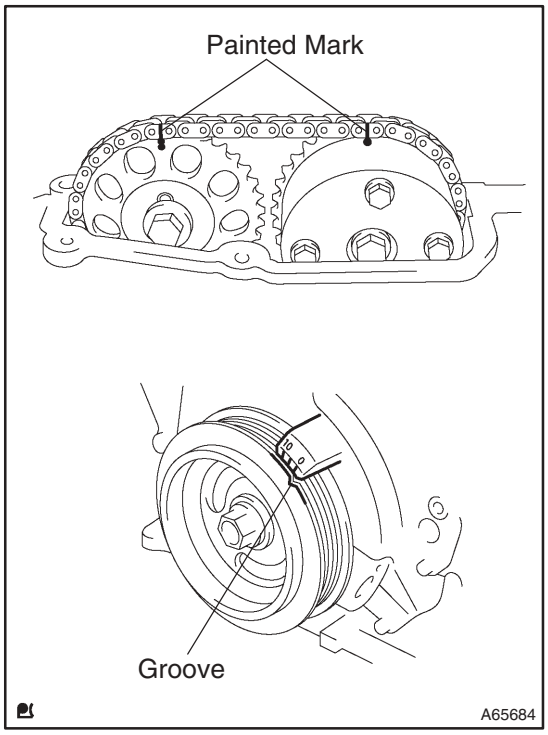

(s) Check the painted marks on the chain and camshaft timing gears, and that the camshaft pulley groove is aligned with the timing mark ”0” of the timing chain cover.

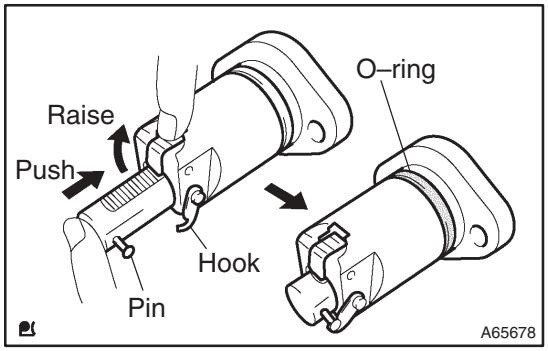

(t) Check the chain tensioner.

(1) Check that the O–ring is clean, then set the hook as shown in the illustration.

(2) Apply a light coat of engine oil to the O–ring.

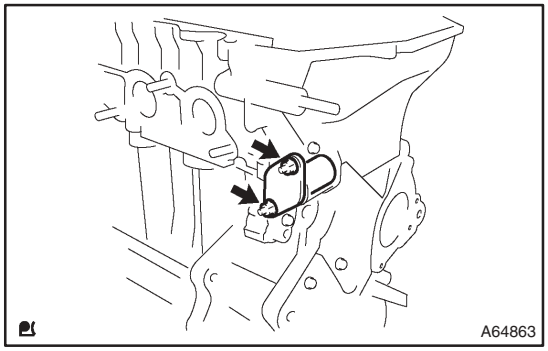

(3) Install the chain tensioner with the 2 nuts.

Torque: 9.0 N·m (92 kgf·cm, 80 in·lbf)

NOTICE:

- **Be careful not to twist the O–ring.**
- **When installing the tensioner, reset the hook if the hook releases the plunger.**

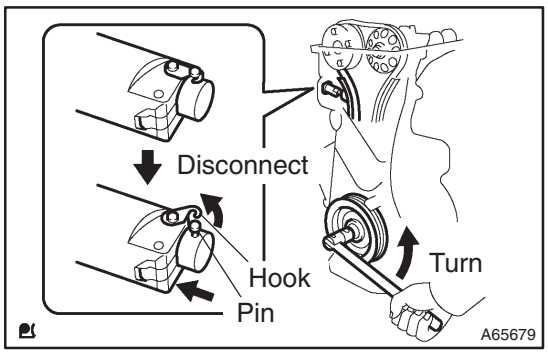

(4) Turn the crankshaft counterclockwise, then disconnect the plunger knock pin from the hook.

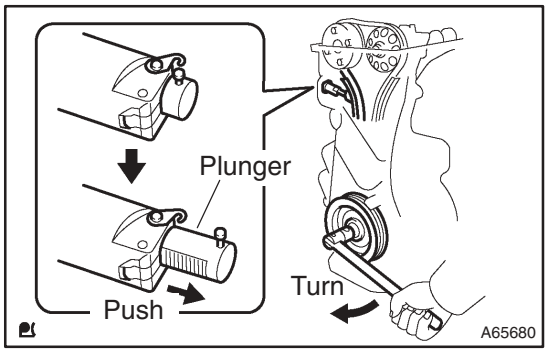

(5) Turn the crankshaft clockwise, then check that the slipper is pushed by the plunger.

HINT:
If the plunger is not extended, press the slipper into the chain tensioner using a screwdriver so that the hook is taken from the knock pin and that the plunger can be extended.

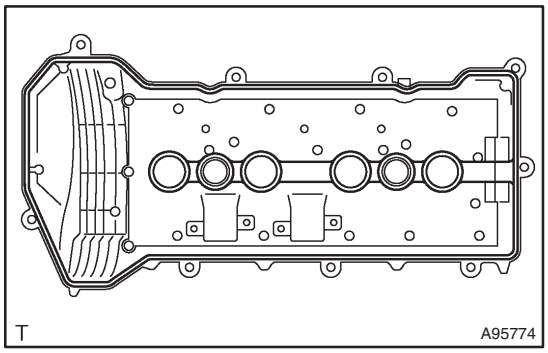

73. INSTALL CYLINDER HEAD COVER GASKET

(a) Install the gasket onto the cylinder head cover.

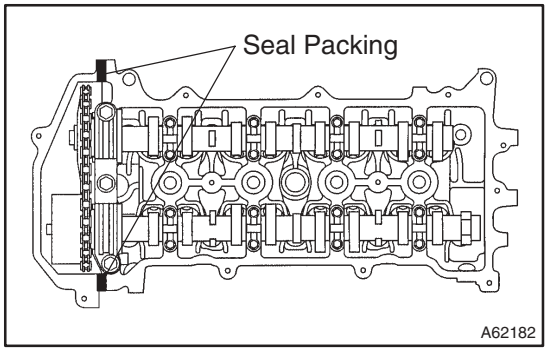

74. INSTALL CYLINDER HEAD COVER SUB–ASSY

(a) Remove any old packing (FIPG) material.

(b) Apply seal packing to 2 locations as shown in the illustration.

Seal packing: Part No. 08826–00080 or equivalent

NOTICE:

- **Remove any oil from the contact surface.**
- **Install the cylinder head cover within 3 minutes after applying seal packing.**
- **Do not put into engine oil for at least 2 hours after installation.**

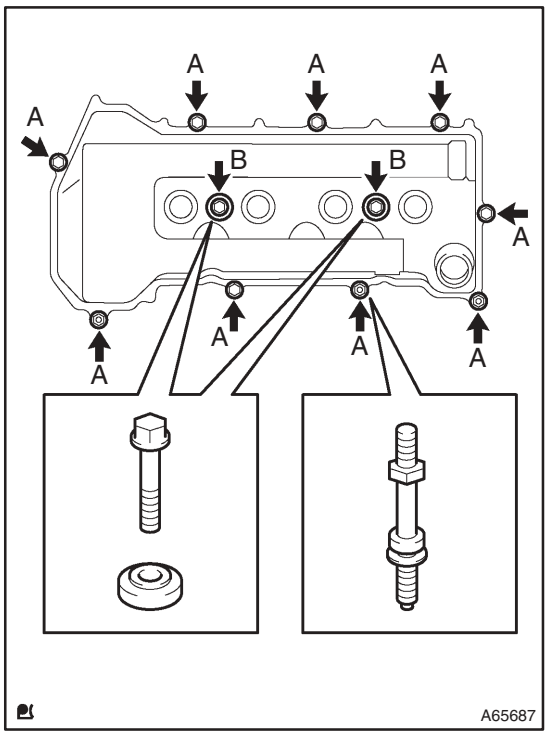

(c) Install the cylinder head cover with the 9 bolts, 2 seal washers and 2 nuts.
Torque:
11 N·m (112 kgf·cm, 8 ft·lbf) for A
9.0 N·m (92 kgf·cm, 80 in·lbf) for B

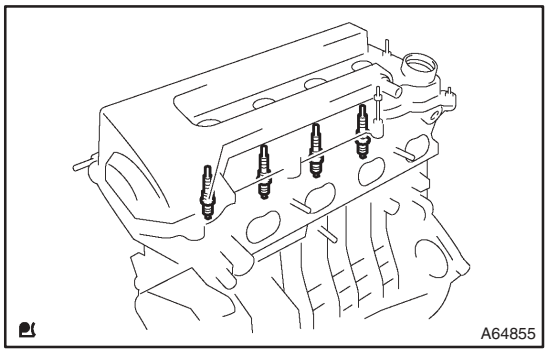

75. INSTALL SPARK PLUG

(a) Using a spark plug wrench, install the 4 spark plugs.
Torque: 25 N·m (255 kgf·cm, 18 ft·lbf)

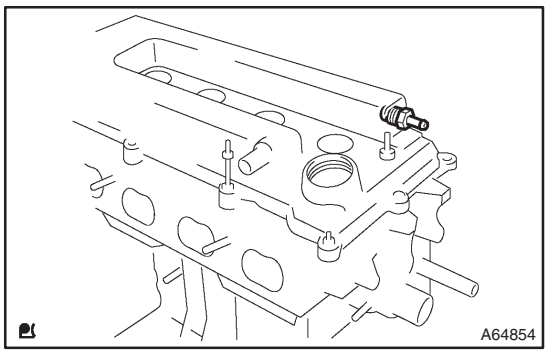

76. INSTALL VENTILATION VALVE SUB–ASSY

(a) Install the ventilation valve into the cylinder head cover.
Torque: 30 N·m (306 kgf·cm, 22 ft·lbf)

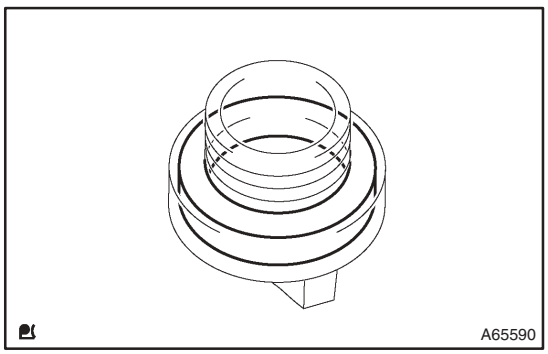

77. INSTALL OIL FILLER CAP GASKET

(a) Install the gasket onto the oil filler cap.

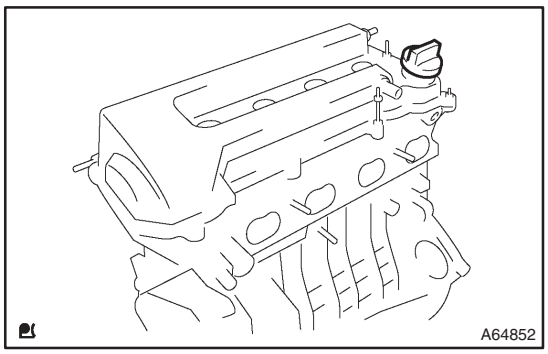

78. INSTALL OIL FILLER CAP SUB–ASSY

(a) Install the oil filler cap onto the cylinder head cover.

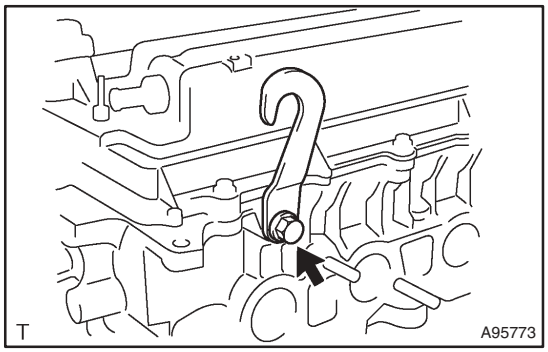

79. INSTALL ENGINE HANGER NO.2

(a) Install engine hanger No. 2 with the bolt.
Torque: 38 N·m (387 kgf·cm, 28 ft·lbf)

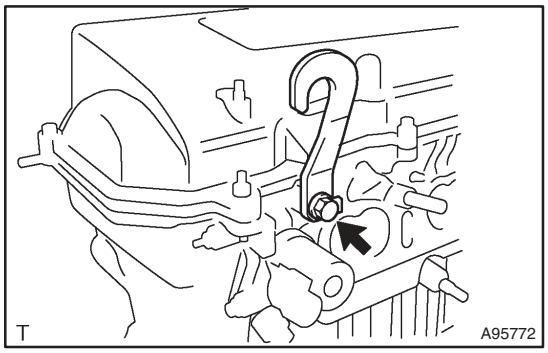

80. INSTALL ENGINE HANGER NO.1

(a) Install engine hanger No. 1 with the bolt.
Torque: 38 N·m (387 kgf·cm, 28 ft·lbf)

CYLINDER HEAD ASSY (1ZZ–FE/3ZZ–FE)

141TN–01

COMPONENTS

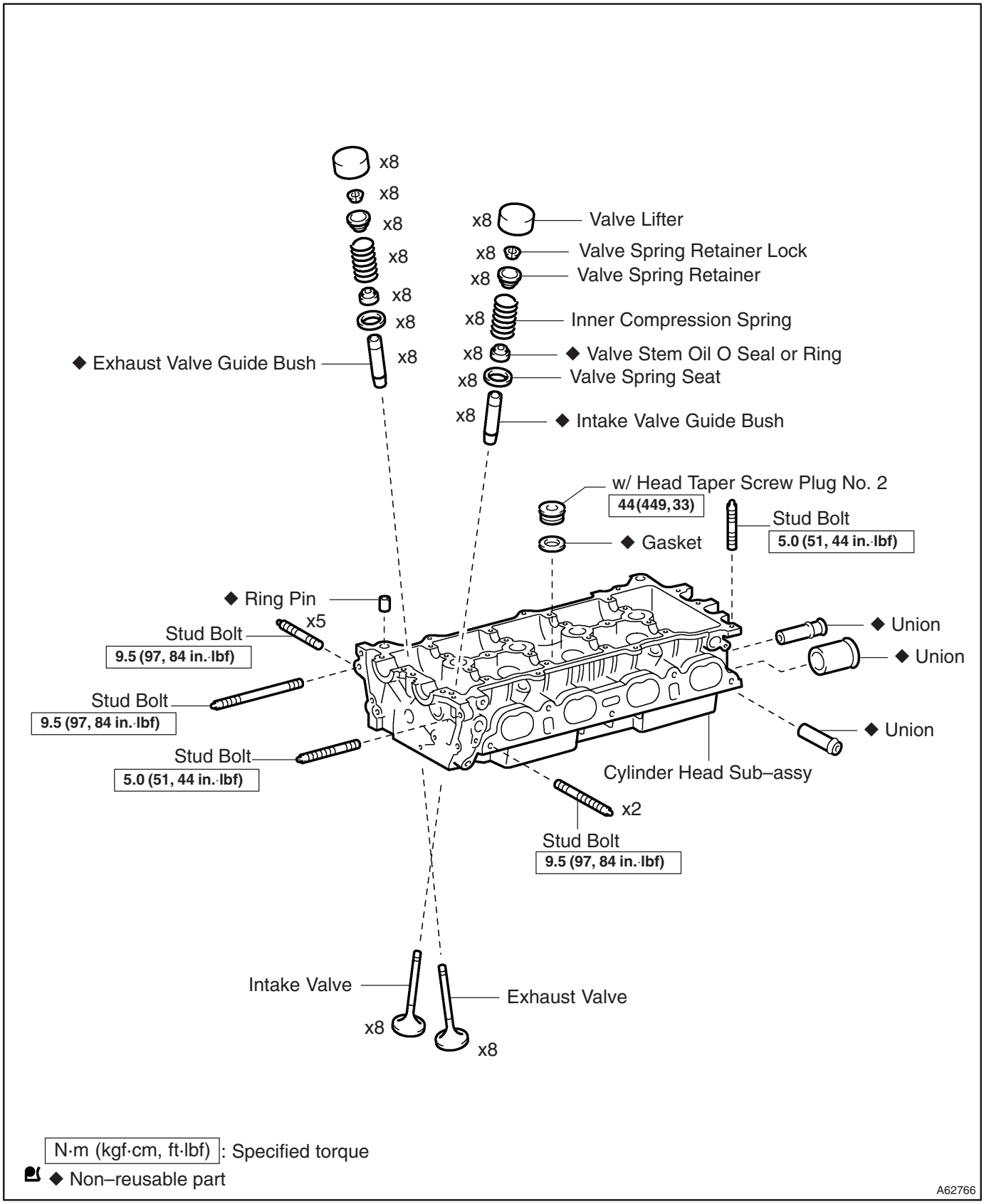

141TO–01

OVERHAUL

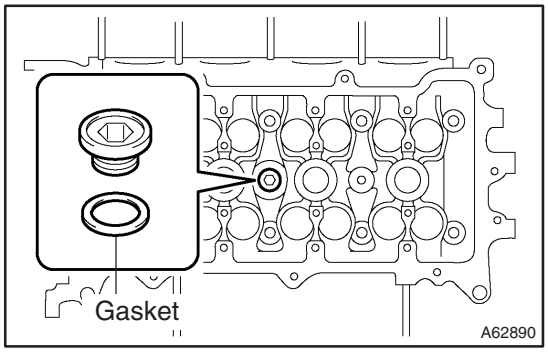

1. REMOVE W/HEAD TAPER SCREW PLUG NO.2

(a) Using a socket hexagon wench 10, remove the taper screw plug and gasket.

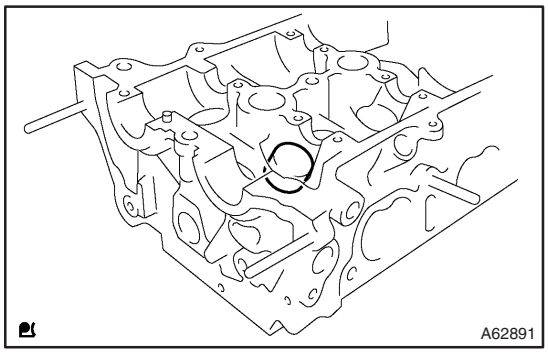

2. REMOVE VALVE LIFTER

(a) Remove the 16 valve lifters from the cylinder head.

3. REMOVE VALVE

HINT:

Remove all the valves from the cylinder head according to the procedure below.

(a) Place the cylinder head on wooden blocks.

(b) Using SST, compress the inner compression spring, then remove the 2 valve spring retainer locks.

SST 09202–70020 (09202–00010, 09202–01010, 09202–01020)

(c) Remove the valve spring retainers, inner compression springs and valves from the cylinder head.

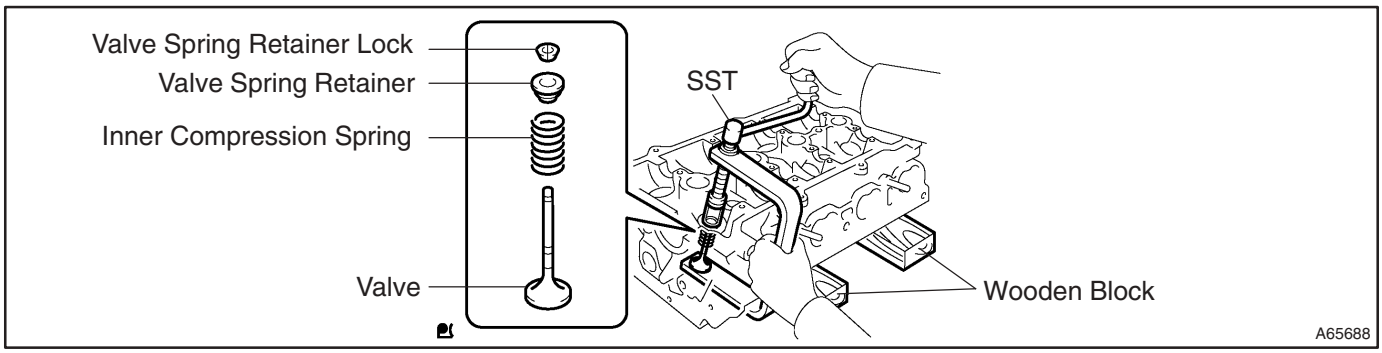

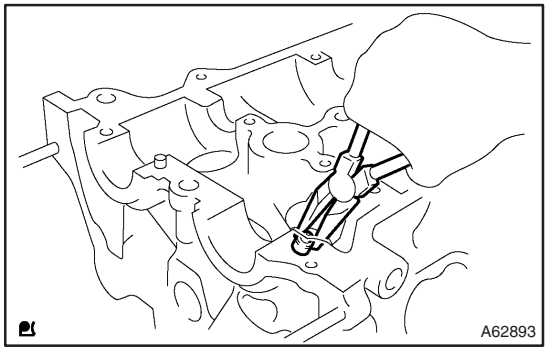

4. REMOVE VALVE STEM OIL O SEAL OR RING

(a) Using needle–nose pliers, remove the 8 valve stem oil seals.

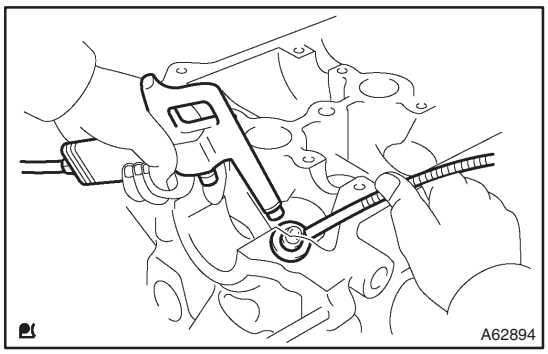

5. REMOVE VALVE SPRING SEAT

(a) Using a compressed air and a magnetic finger, remove the 8 valve spring seats.

6. REMOVE STUD BOLT

(a) Using torx socket wrenches E5 and E7, remove the 10 stud bolts.

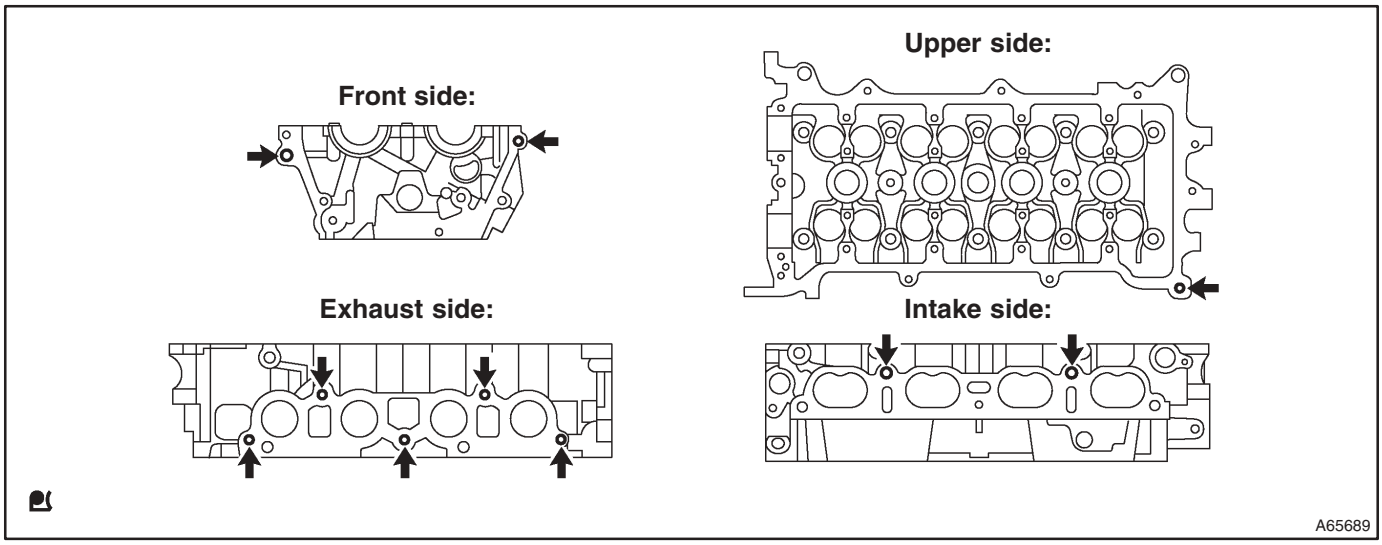

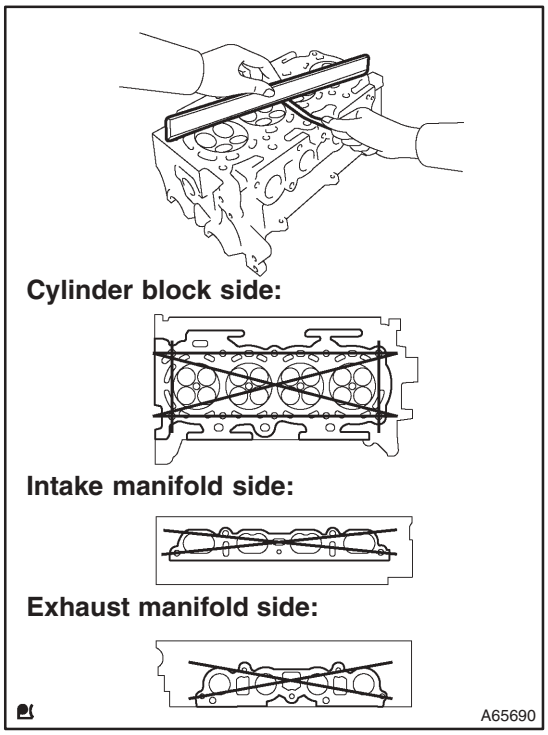

7. INSPECT CYLINDER HEAD FOR FLATNESS

(a) Using a precision straight edge and a feeler gauge, measure the surface contacting the cylinder block and the manifolds for warpage.

Maximum warpage:
Cylinder block side 0.05 mm (0.0020 in.)
Intake manifold side 0.10 mm (0.0039 in.)
Exhaust manifold side 0.10 mm (0.0039 in.)

If the warpage is greater than maximum, replace the cylinder head.

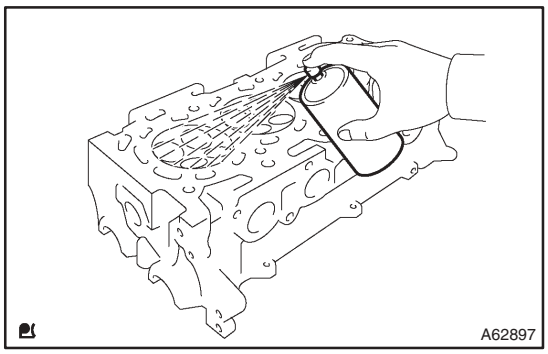

8. INSPECT CYLINDER HEAD FOR CRACKS

(a) Using a dye penetrate, check the combustion chamber, intake ports, exhaust ports and cylinder block surface for cracks.

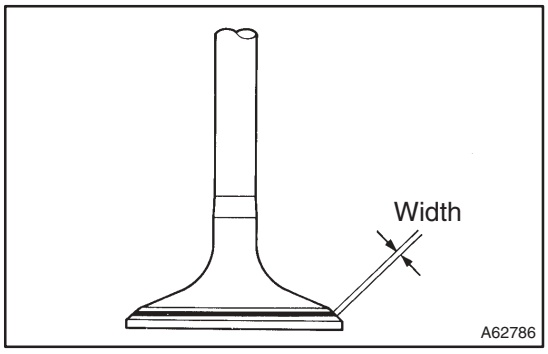

9. INSPECT VALVE SEATS

(a) Apply a light coat of prussian blue (or white lead) to the valve face.

(b) Lightly press the valve against the seat.

NOTICE:

Do not rotate the valve.

(c) Check the valve face and seat according to the following procedure.

(1) If blue appears 360° around the face, the valve is concentric. If not, replace the valve.

(2) If blue appears 360° around the valve seat, the guide and face are concentric. If not, resurface the seat.

(3) Check that the seat contact is in the middle of the valve face with the width between 1.0 to 1.4 mm (0.039 to 0.055 in.).

10. REPAIR INTAKE VALVE SEATS

NOTICE:

Releasing the seat cutter pressure makes the valve seat faces smooth.

(a) Using a 45° cutter, cut the valve face of the cylinder head a little wider than the specified valve seating width.

(b) Confirm that the valve fits the valve seat center portion. If not, re–cut the valve face with the 45° cutter.

(c) Adjust the valve face with a 30° or 60° cutter so that the valve seat is in the valve seat center portion.

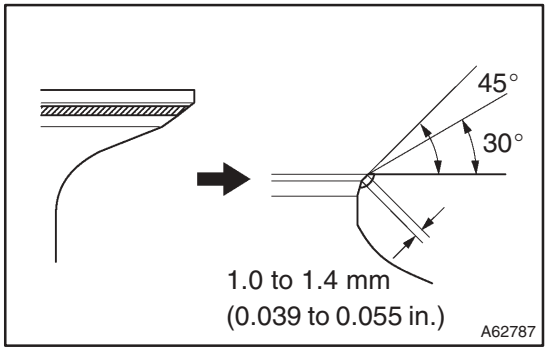

(1) If the seating is too high on the valve face, use the 30° and 45° cutters to correct the seat.

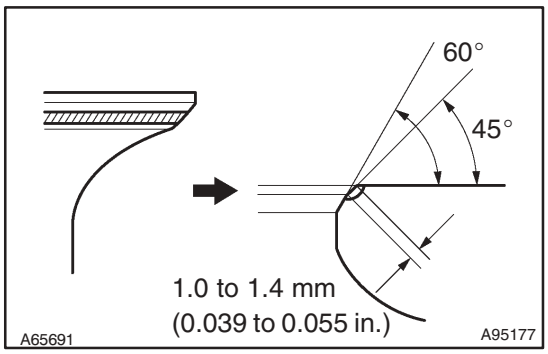

(2) If the seating is too low on the valve face, use the 60° and 45° cutters to correct the seat.

(d) Lap the valve and valve seat with an abrasive compound. Do this work by hand.

(e) Recheck the valve seating position.

11. REPAIR EXHAUST VALVE SEATS

NOTICE:

Releasing the seat–cutter pressure gradually make the valve seat faces smooth.

(a) Using the 45° cutter, cut the valve face of the cylinder head a little wider than the specified valve seating width.

(b) Confirm that the valve fits the valve seat center portion. If not, re–cut the valve face with the 45° cutter.

(c) Adjust the valve face with the 30° or 75° cutter to accurately fit the valve seat center portion.

(1) If the seating is too high on the valve face, use the 30° and 45° cutters to correct the seat.

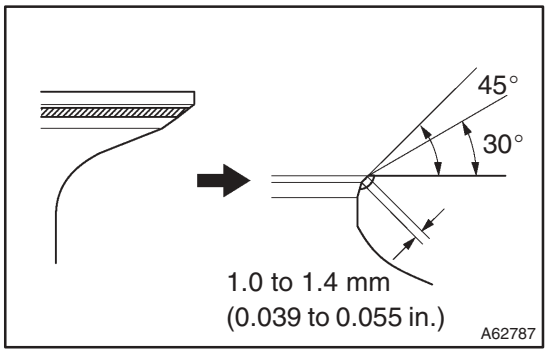

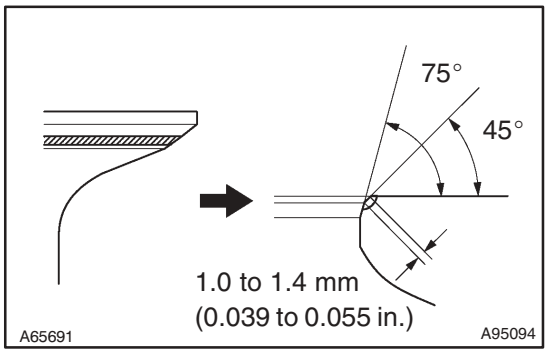

(2) If the seating is too low on the valve face, use the 75° and 45° cutters to correct the seat.

(d) Lap the valve and valve seat with an abrasive compound. Do this work by hand.

(e) Recheck the valve seating position.

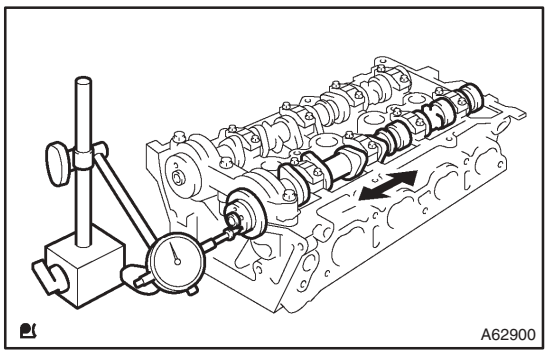

12. INSPECT CAMSHAFT THRUST CLEARANCE

(a) Install the 2 camshafts.

(b) Using a dial indicator, measure the thrust clearance while moving the camshaft back and forth.

Standard thrust clearance:
0.040 to 0.095 mm (0.0016 to 0.0037 in.)
Maximum thrust clearance: 0.110 mm (0.0043 in.)

If the thrust clearance is greater than maximum, replace the cylinder head. If damages are found on the camshaft thrust surfaces, replace the camshaft.

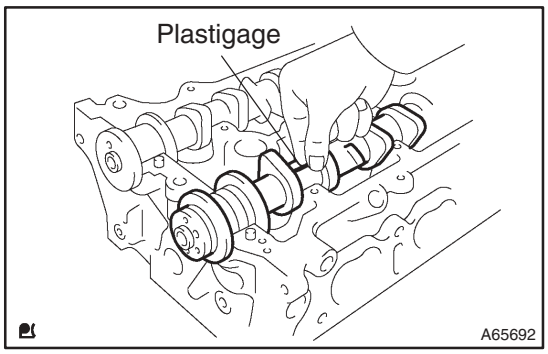

13. INSPECT CAMSHAFT OIL CLEARANCE

(a) Clean the 9 bearing caps and camshaft journals.

(b) Place the camshafts on the cylinder head.

(c) Lay a strip of Plastigage across each of the camshaft journal.

(d) Install the 9 bearing caps. (See page 14–4)

NOTICE:

Do not turn the camshaft.

(e) Remove the 9 bearing caps. (See page 14–4)

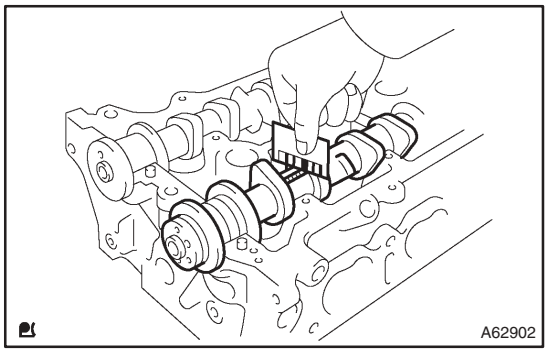

(f) Measure the Plastigage at its widest point.

Standard oil clearance:

0.035 to 0.072 mm (0.0014 to 0.0028 in.)

Maximum oil clearance: 0.10 mm (0.0039 in.)

NOTICE:

Completely remove the Plastigage after measuring.

If the oil clearance is greater than maximum, replace the cylinder head or the camshaft.

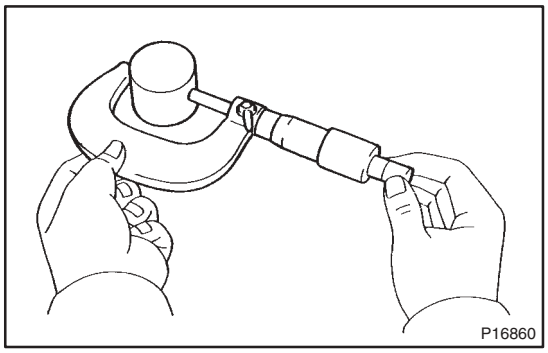

14. INSPECT VALVE LIFTER

(a) Using a micrometer, measure the valve lifter diameter.

Lifter diameter:

30.966 to 30.976 mm (1.2191 to 1.2195 in.)

If the diameter is not as specified, replace the valve lifter.

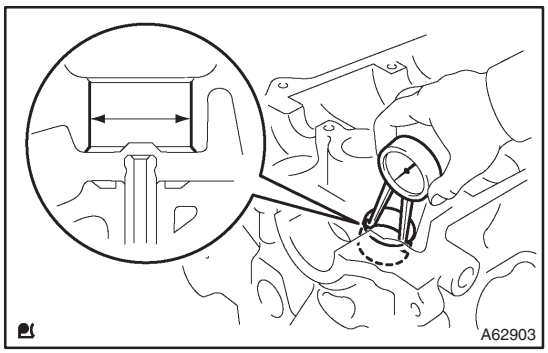

15. INSPECT VALVE LIFTER OIL CLEARANCE

(a) Using a caliper gauge, measure the valve lifter bore diameter of the cylinder head.

Lifter bore diameter:

31.000 to 31.025 mm (1.2205 to 1.2215 in.)

If the diameter is not as specified, replace the cylinder head.

(b) Subtract the valve lifter diameter measurement from the valve lifter bore diameter measurement.

Standard oil clearance:

0.024 to 0.059 mm (0.0009 to 0.0023 in.)

Maximum oil clearance: 0.079 mm (0.0031 in.)

If the oil clearance is greater than maximum, replace the valve lifter. If necessary, replace the cylinder head.

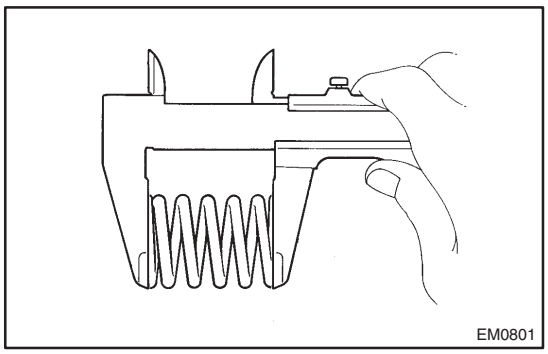
EM0801

16. INSPECT INNER COMPRESSION SPRING

(a) Using a vernier caliper, measure the free length of the inner compression spring.

Free length: 43.40 mm (1.7087 in.)

If the length is not as specified, replace the inner compression spring.

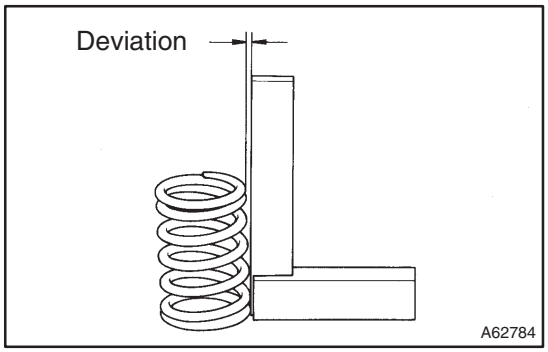

A62784

(b) Using a steel square, measure the deviation of the inner compression spring.

Maximum deviation: 1.6 mm (0.063 in.)

Maximum angle (reference) : 2°

If the deviation is greater than maximum, replace the inner compression spring.

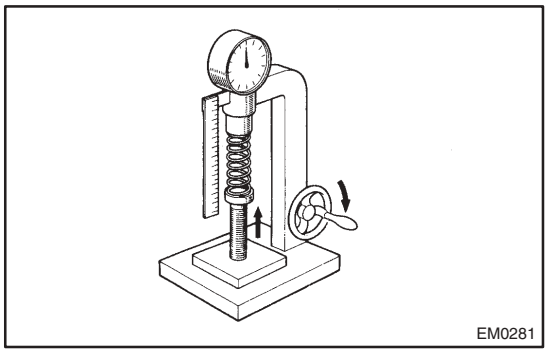
EM0281

(c) Using a spring tester, measure the tension of the inner compression spring at the specified installed length.

Installed tension:
158.6 to 175.4 N (16.2 to 17.9 kgf, 35.7 to 39.5 lbf)
at 33.6 mm (1.323 in.)

Maximum working tension:
335.3 to 370.7 N (34.2 to 37.8 kgf, 75.4 to 83.3 lbf)
at 24.1 mm (0.949 in.)

If the installed tension is not as specified, replace the inner compression spring.

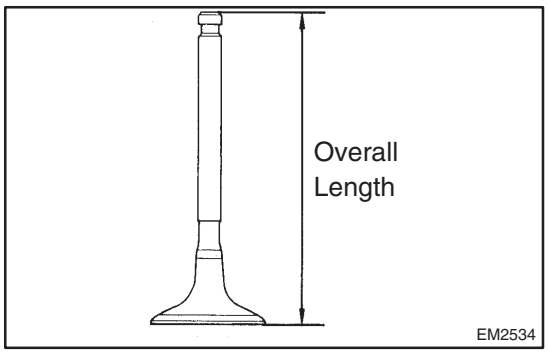

EM2534

17. INSPECT VALVE

(a) Using a vernier calipers, check the valve overall length.

Standard overall length:

Item	Specification
Intake	88.65 mm (3.4902 in.)
Exhaust	88.69 mm (3.4917 in.)

Minimum overall length:

Item	Specification
Intake	88.35 mm (3.4784 in.)
Exhaust	88.39 mm (3.4799 in.)

If the overall length is less than minimum, replace the valve.

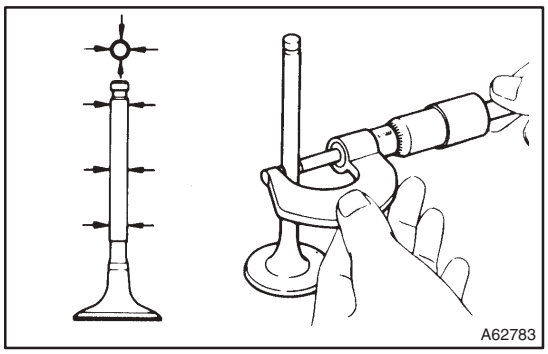

(b) Using a micrometer, measure the diameter of the valve stem.

Valve stem diameter:

Item	Specification
Intake	5.470 to 5.485 mm (0.2154 to 0.2159 in.)
Exhaust	5.465 to 5.480 mm (0.2152 to 0.2158 in.)

If the diameter is not as specified, replace the valve.

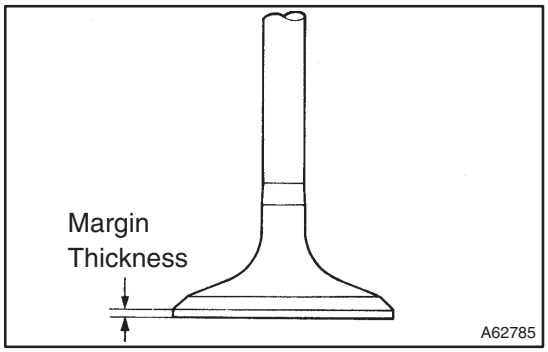

(c) Using a vernier calipers, check the valve head margin thickness.

Standard margin thickness: 1.0 mm (0.039 in.)
Minimum margin thickness: 0.7 mm (0.028 in.)

If the overall length is less than minimum, replace the valve.

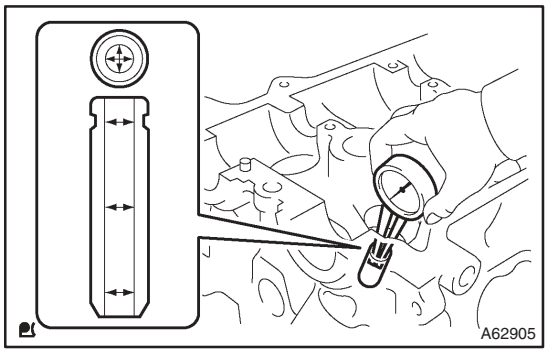

18. INSPECT VALVE GUIDE BUSHING OIL CLEARANCE

(a) Using a caliper gauge, measure the inside diameter of the valve guide bushing.

Busing inside diameter:
5.510 to 5.530 mm (0.2169 to 0.2177 in.)

If the diameter is not as specified, replace the valve guide bushing.

(b) Subtract the valve stem diameter measurement from the guide bushing inside diameter measurement.

Standard oil clearance:

Item	Specification
Intake	0.025 to 0.060 mm (0.0010 to 0.0024 in.)
Exhaust	0.030 to 0.065 mm (0.0012 to 0.0026 in.)

Maximum oil clearance:

Item	Specification
Intake	0.08 mm (0.0032 in.)
Exhaust	0.10 mm (0.0039 in.)

If the oil clearance is greater than maximum, replace the valve and valve guide bushing.

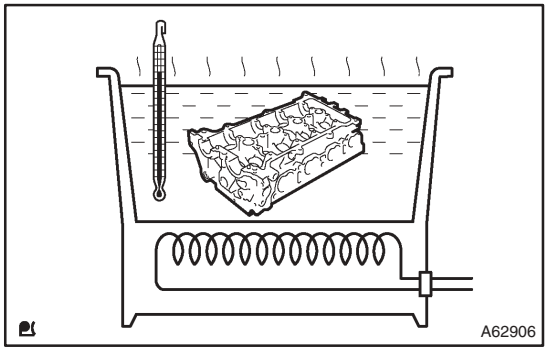

19. REPLACE VALVE GUIDE BUSHING

(a) Heat the cylinder head up to 80 to 100°C (176 to 212°F).

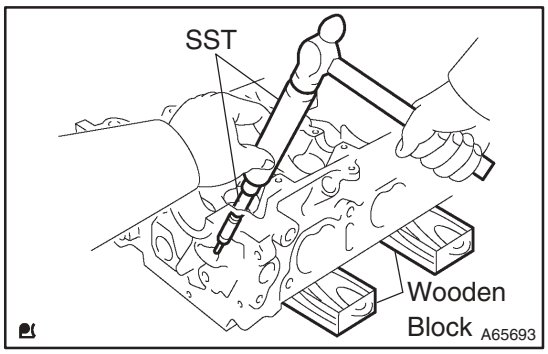

(b) Place the cylinder head on the wooden blocks.
(c) Using SST, tap out the valve guide bushing.
SST 09201–10000 (09201–01050), 09201–01055, 09950–70010 (09951–07100)

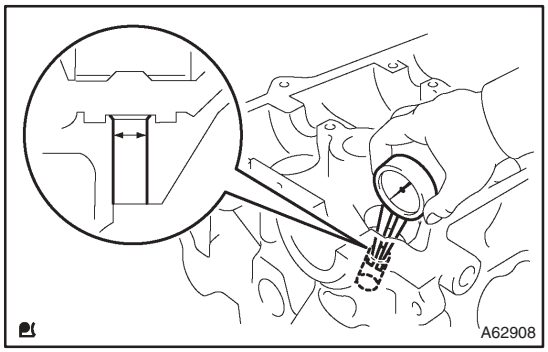

(d) Using a caliper gauge, measure the bushing bore diameter of the cylinder head.
Diameter: 10.285 to 10.306 mm (0.4049 to 0.4058 in.)

If the bushing bore diameter of the cylinder head is greater than 10.306 mm (0.4058 in.), machine the bushing bore to the dimension of 10.335 to 10.356 mm (0.4069 to 0.4077 in.) to install an over size valve guide bushing.

HINT:

Valve guide bushing size	Bushing bore diameter mm (in.)
STD	10.285 to 10.306 (0.4049 to 0.4058)
O/S 0.05	10.335 to 10.356 (0.4069 to 0.4077)

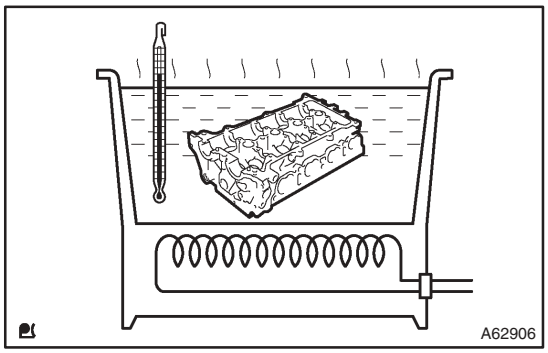

(e) Heat the cylinder head up to 80 to 100°C (176 to 212°F).

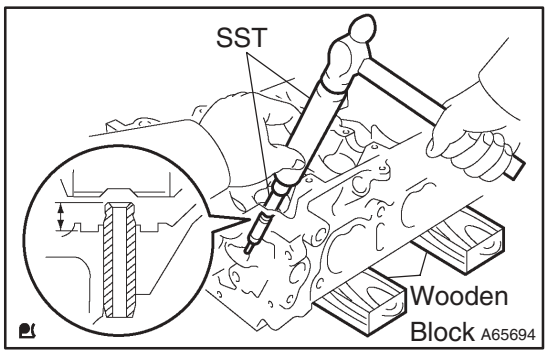

(f) Place the cylinder head on wooden blocks.
(g) Using SST, tap in a new valve guide bushing to the specified height.
SST 09201–10000 (09201–01050), 09201–01055, 09950–70010 (09951–07100)
Height: 8.7 to 9.1 mm (0.343 to 0.358 in.)

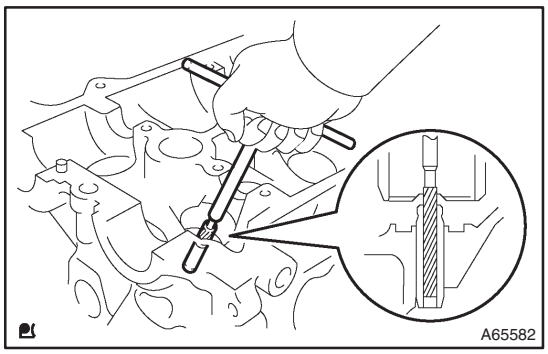

(h) Using a sharp 5.5 mm reamer, ream the valve guide bushing to obtain the standard specified clearance.
Standard oil clearance:

Item	Specification
Intake	0.025 to 0.060 mm (0.0010 to 0.0024 in.)
Exhaust	0.030 to 0.065 mm (0.0012 to 0.0026 in.)

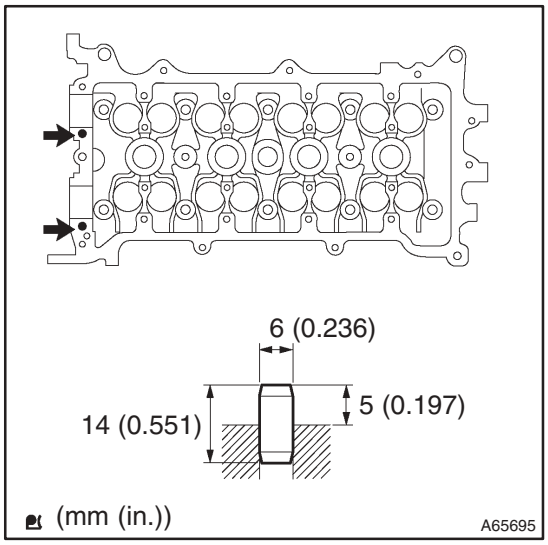

20. INSTALL STRAIGHT PIN

(a) Using a plastic hammer, install the new 2 straight pins.
Standard protrusion: 5 mm (0.197 in.)

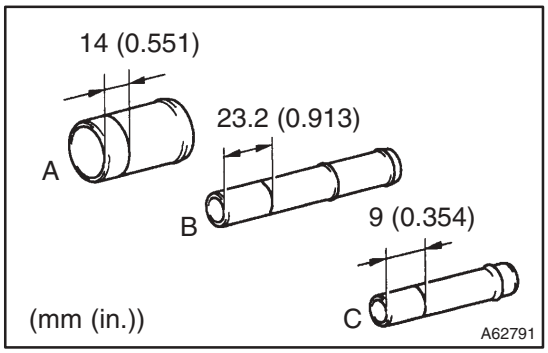

21. INSTALL UNION

(a) Mark the standard position on the union with paint.

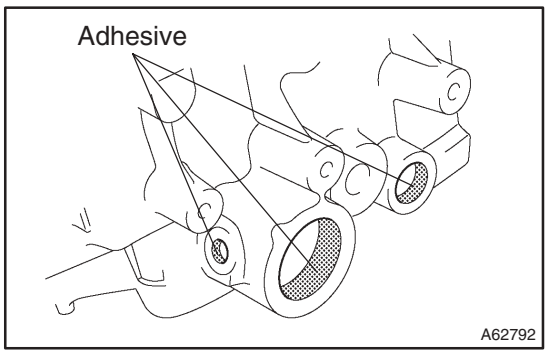

(b) Apply adhesive to the union hole of the cylinder head.
Adhesive:
Part No. 08833–00070, THREE BOND 1324 or equivalent.

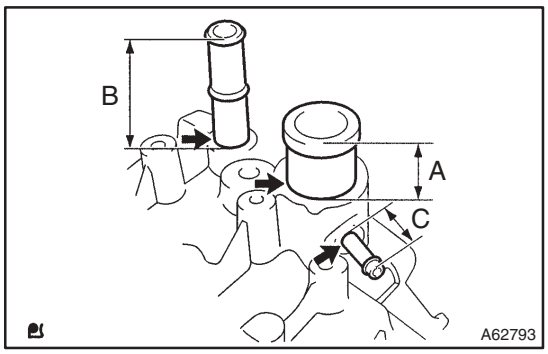

(c) Using a press, press in a new union until the standard marks come to the level of the cylinder head surface.

Standard protrusion:

Item	Specification
A	29 mm (1.142 in.)
B	66.5 mm (2.618 in.)
C	24 mm (0.945 in.)

NOTICE:

- **Install the union within 3 minutes after applying adhesive.**
- **Do not put into coolant at least for an hour after installation.**

22. INSTALL STUD BOLT

(a) Using torx socket wrenches E5 and E7, install the 11 stud bolts.

Torque:

Item	Specification
A	9.5 N·m (97 kgf·cm, 84 in.·lbf)
B	5.0 N·m (51 kgf·cm, 44 in.·lbf)
C	5.0 N·m (51 kgf·cm, 44 in.·lbf)
D	9.5 N·m (97 kgf·cm, 84 in.·lbf)
E	9.5 N·m (97 kgf·cm, 84 in.·lbf)

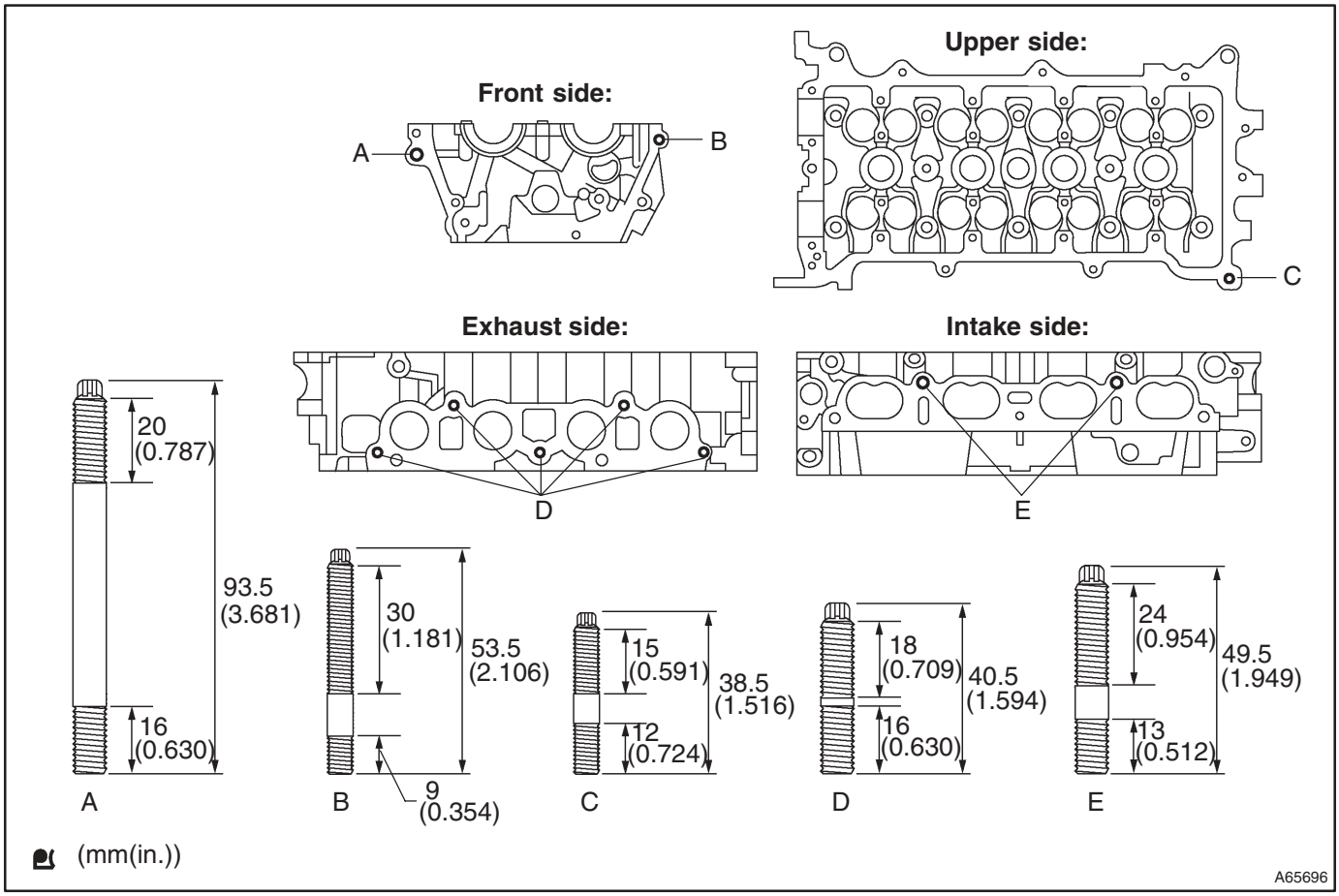

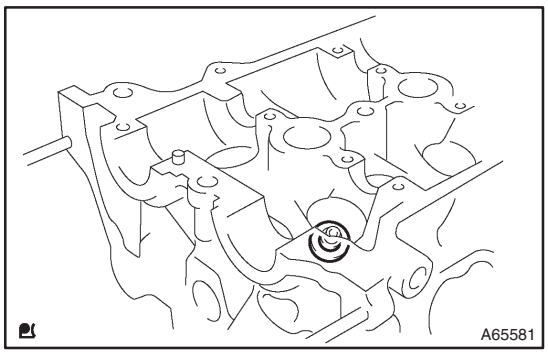

23. INSTALL VALVE SPRING SEAT

(a) Install the 8 valve spring seats onto the cylinder head.

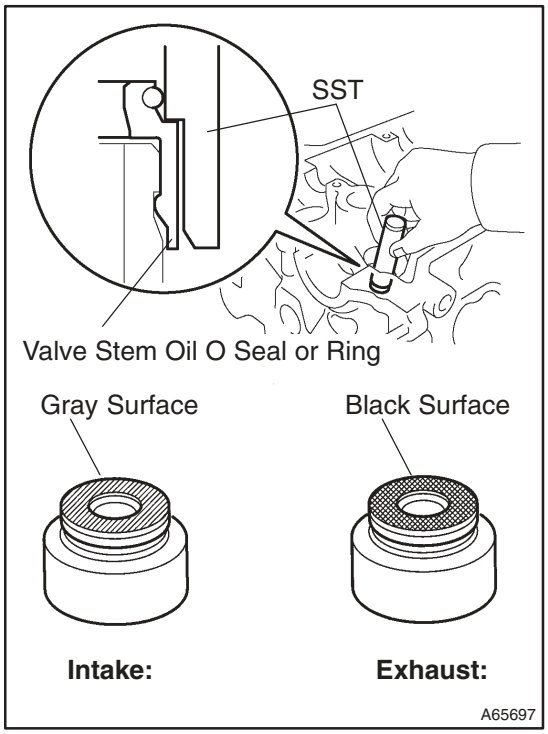

24. INSTALL VALVE STEM OIL O SEAL OR RING

(a) Apply a light coat of engine oil to a new valve stem oil seals.

NOTICE:

Be careful to assemble the oil seal for intake and exhaust. Assembling the wrong one may cause a failure.

HINT:

The intake valve stem oil seal is gray and exhaust valve stem oil seal is black.

(b) Using SST, push in the valve stem oil seals by hand.
SST 09201–41020

25. INSTALL VALVE

HINT:

Remove all the valves from the cylinder head according to the procedure below.

(a) Place the cylinder head on wooden blocks.

(b) Install the valves, inner compression springs and valve spring retainers onto the cylinder head.

(c) Using SST, compress the inner compression spring, and place the 2 valve spring retainer locks around the valve stem.
SST 09202–70020 (09202–00010, 09202–01010, 09202–01020)

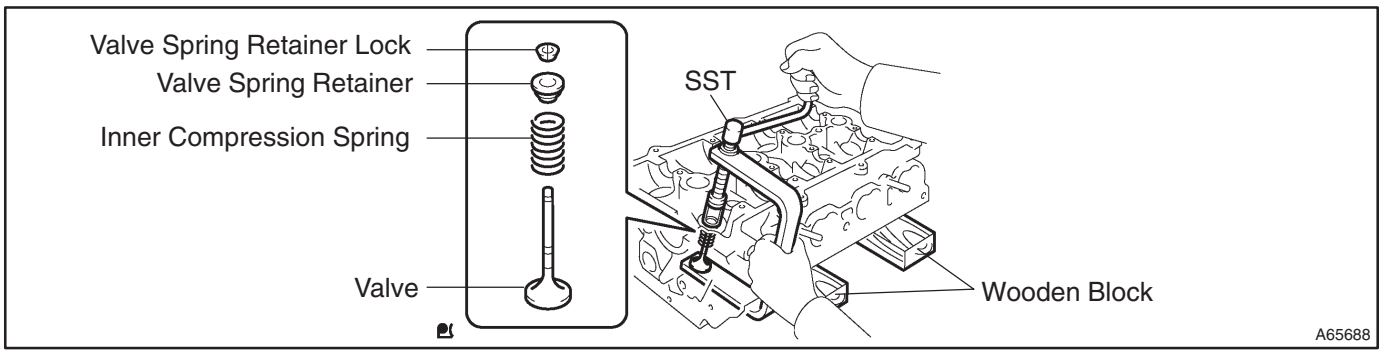

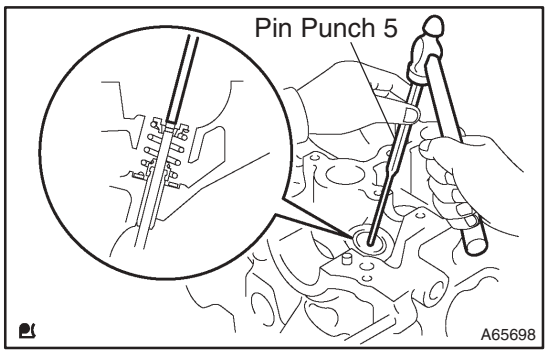

(d) Using a pin punch 5, lightly tap the valve stem tip to ensure a proper fit.

NOTICE:

Be careful not to damage the valve stem tip.

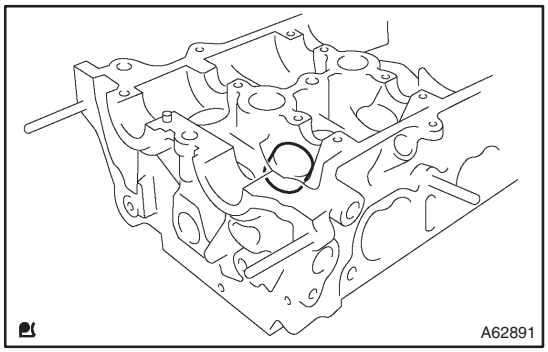

26. INSTALL VALVE LIFTER

(a) Apply a light coat of engine oil to the 16 valve lifters.

(b) Install the 16 valve lifters onto the cylinder head.

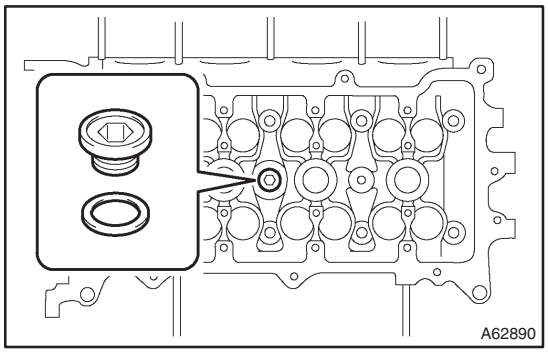

27. INSTALL W/HEAD TAPER SCREW PLUG NO.2

(a) Using a socket hexagon wrench 10, install the taper screw plug with a new gasket.
Torque: 44 N·m (449 kgf·cm, 33 ft·lbf)

CYLINDER BLOCK ASSY (1ZZ–FE/3ZZ–FE)

141TJ–01

COMPONENTS

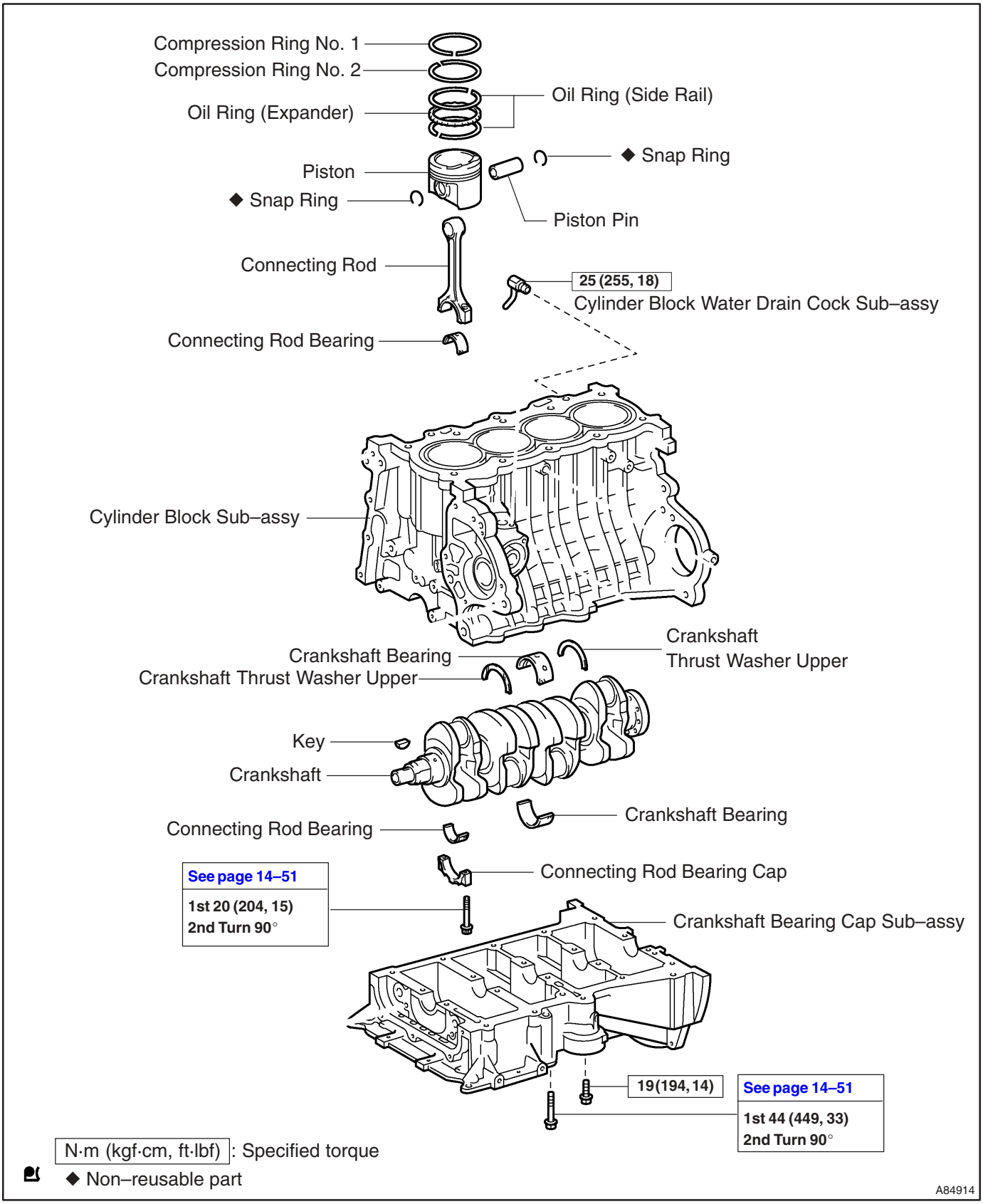

141TK–01

OVERHAUL

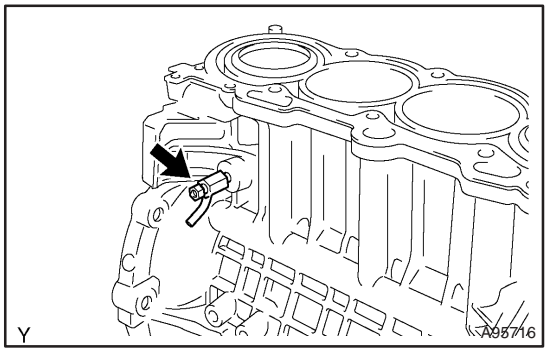

1. REMOVE CYLINDER BLOCK WATER DRAIN COCK SUB–ASSY

(a) Remove the cylinder block water drain cock from the cylinder block.

2. INSPECT CONNECTING ROD THRUST CLEARANCE

(a) Turn the crankshaft and set the No. 1 cylinder to the TDC/compression.

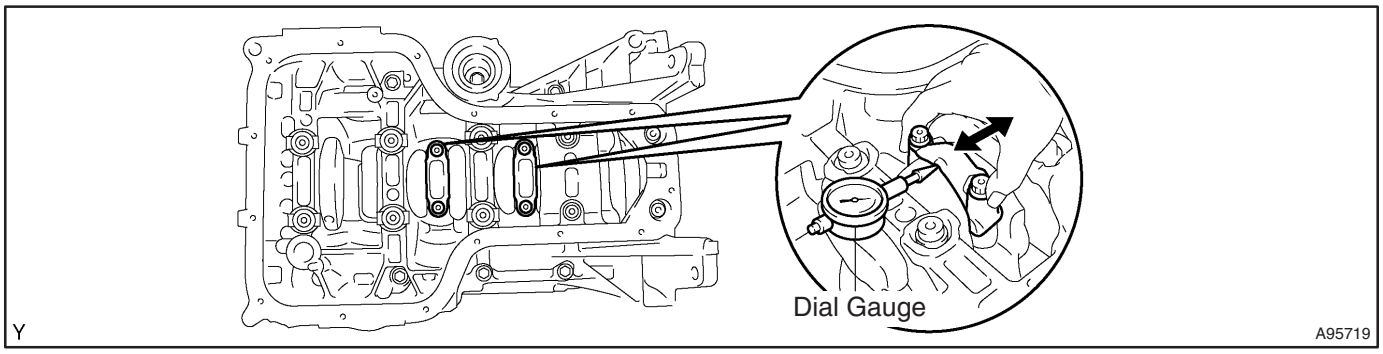

(b) Using a dial indicator, measure the thrust clearance of the No. 2 and No. 3 cylinders while moving the connecting rod back and forth.

Standard thrust clearance:
0.160 to 0.342 mm (0.0063 to 0.0135 in.)
Maximum thrust clearance:
0.342 mm (0.0135 in.)

- If the thrust clearance is greater than maximum, replace the connecting rod.
- If necessary, replace the crankshaft.

(c) Turn the crankshaft and set the No. 2 cylinder to the TDC/compression.

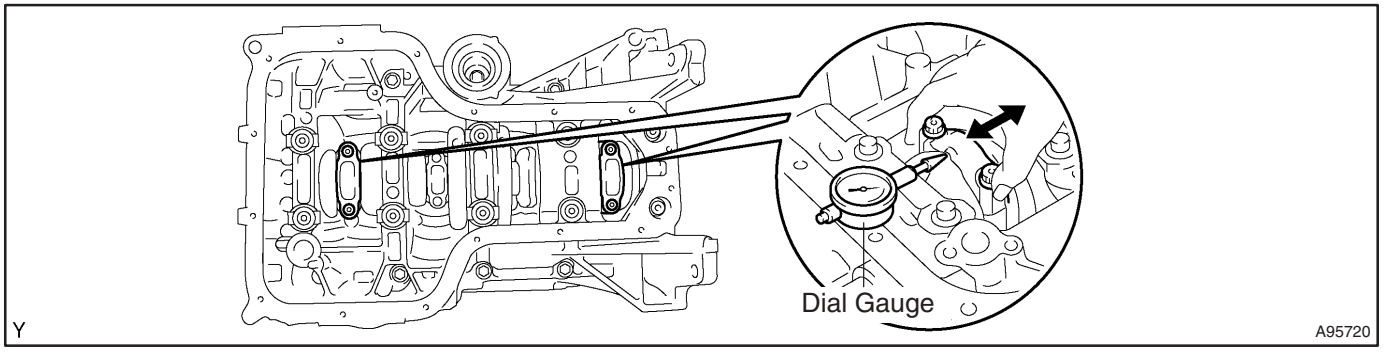

(d) Using a dial indicator, measure the thrust clearance of the No. 1 and No. 4 cylinders while moving the connecting rod back and forth.

Standard thrust clearance:
0.160 to 0.342 mm (0.0063 to 0.0135 in.)
Maximum thrust clearance:
0.342 mm (0.0135 in.)

- If the thrust clearance is greater than maximum, replace the connecting rod.
- If necessary, replace the crankshaft.

3. INSPECT CONNECTING ROD OIL CLEARANCE

(a) Turn the crankshaft and set the No. 1 cylinder to the TDC/compression.

(b) Measure the oil clearance of the No. 2 and No. 3 cylinders.

NOTICE:
Do not turn the crankshaft during the measurement.

(1) Using marking paint, write the matched cylinder number on each connecting rod and cap.

HINT:
The matchmarks on the connecting rods and caps are for ensuring correct reassembling.

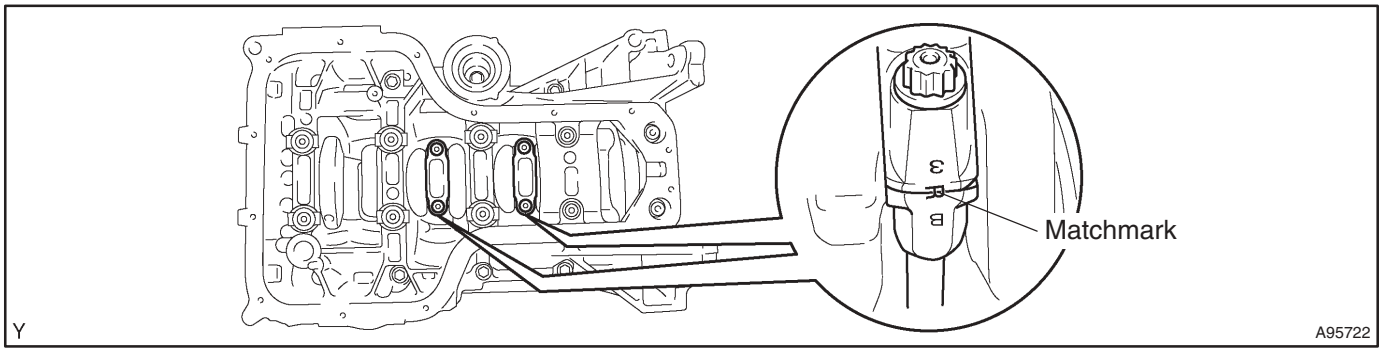

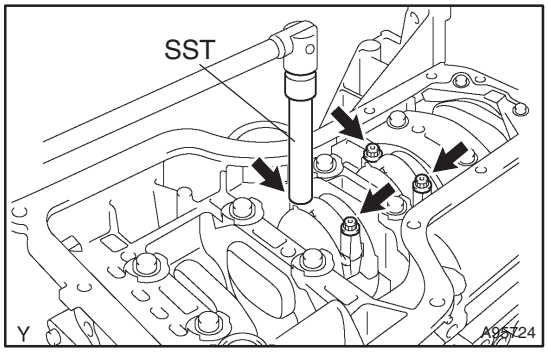

(2) Using SST, remove the 4 bolts and 2 connecting rod caps as shown.

SST 09205–16010

(3) Clean the crank pin and bearing.

(4) Check the crank pin and bearing for pitting and scratches.

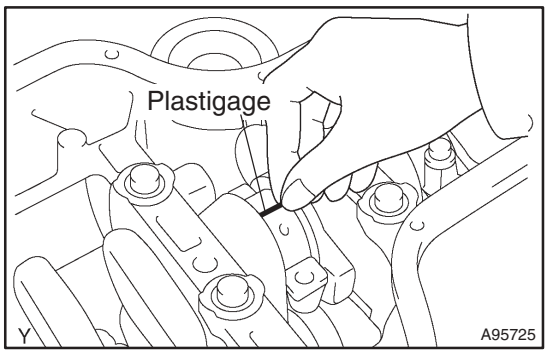

(5) Lay a strip of Plastigage across the crank pin.

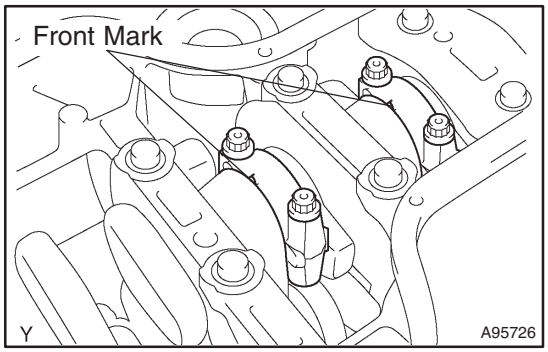

(6) Check that the front marks of the 2connecting rod caps are facing in the correct direction.
(7) Apply a light coat of engine oil to the threads and under the heads of the connecting rod cap bolts.

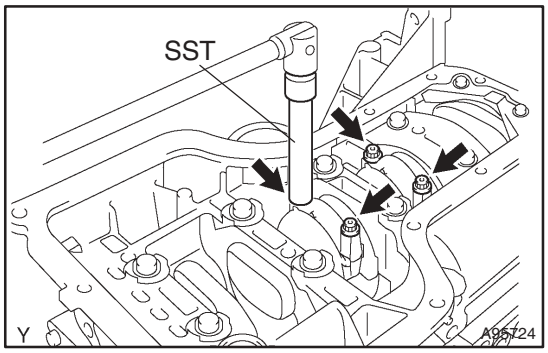

(8) Using SST, tighten the 2 bolts in several passes to the specified torque.

SST 09205–16010

Torque: 20 N·m (204 kgf·cm, 15 ft·lbf)

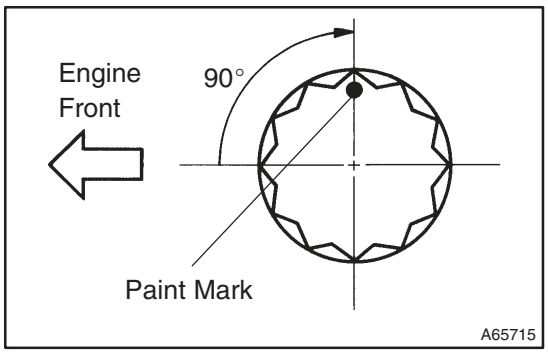

(9) Mark the front of the connecting cap bolts with paint.
(10) Retighten the cap bolts by an additional 90° as shown in the illustration.
(11) Check that the crankshaft turns smoothly.

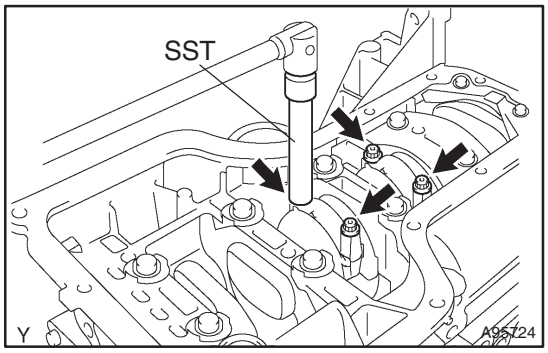

(12) Remove the 4 bolts and 2 connecting rod caps.

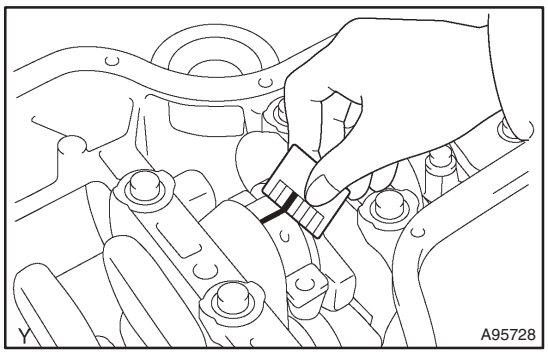

(13) Measure the Plastigage at its widest point.

Standard oil clearance:
0.028 to 0.060 mm (0.0011 to 0.0024 in.)
Maximum oil clearance: 0.080 mm (0.0031 in.)

NOTICE:

Remove the Plastigage completely after the measurement.

- If the oil clearance is greater than maximum, replace the connecting rod bearing.
- If necessary, grind or replace the crankshaft.

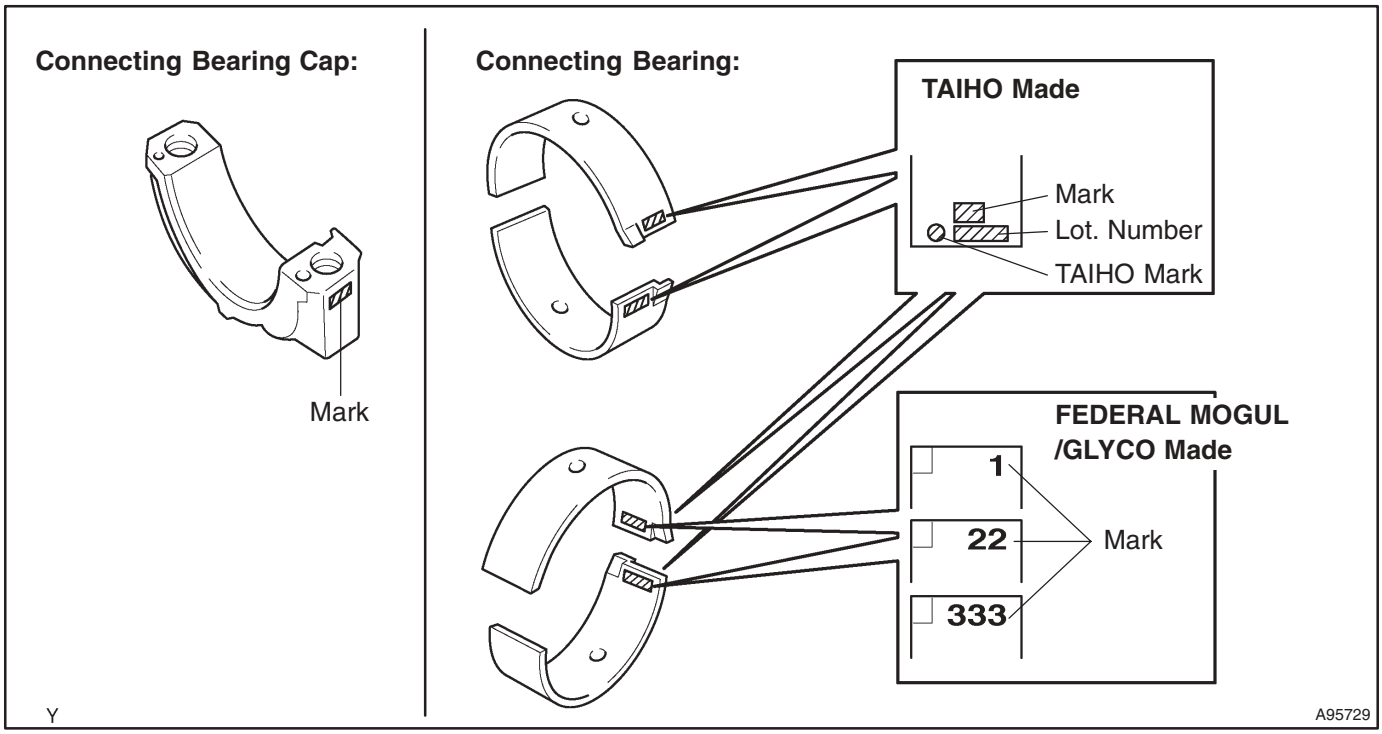

HINT:

- The TAIHO mark is either on the claw side or the opposite side.
- If replacing a bearing, select a new one having the same number as marked on the connecting rod. There are 3 sizes of standard bearings, marked ”1”, ”2” and ”3” accordingly.

Item	Mark	Specification
Connecting rod bearing cap bore diameter	1 2 3	47.000 to 47.008 mm (1.8504 to 1.8507 in.) 47.009 to 47.016 mm (1.8507 to 1.8510 in.) 47.017 to 47.024 mm (1.8511 to 1.8513 in.)
Connecting rod bearing thickness	1 2 3	1.486 to 1.490 mm (0.0585 to 0.0587 in.) 1.491 to 1.494 mm (0.0587 to 0.0588 in.) 1.495 to 1.498 mm (0.0589 to 0.0590 in.)
Crankshaft pin outer diameter	–	43.992 to 44.000 mm (1.7320 to 1.7323 in.)

(c) Turn the crankshaft and set the No. 2 cylinder to the TDC/compression.

(d) Measure the oil clearance of the No. 1 and No. 4 cylinders.

NOTICE:
Do not turn the crankshaft during the measurement.

(1) Using marking paint, write the matched cylinder number on each connecting rod and cap.

HINT:
The matchmarks on the connecting rods and caps are for ensuring correct reassembling.

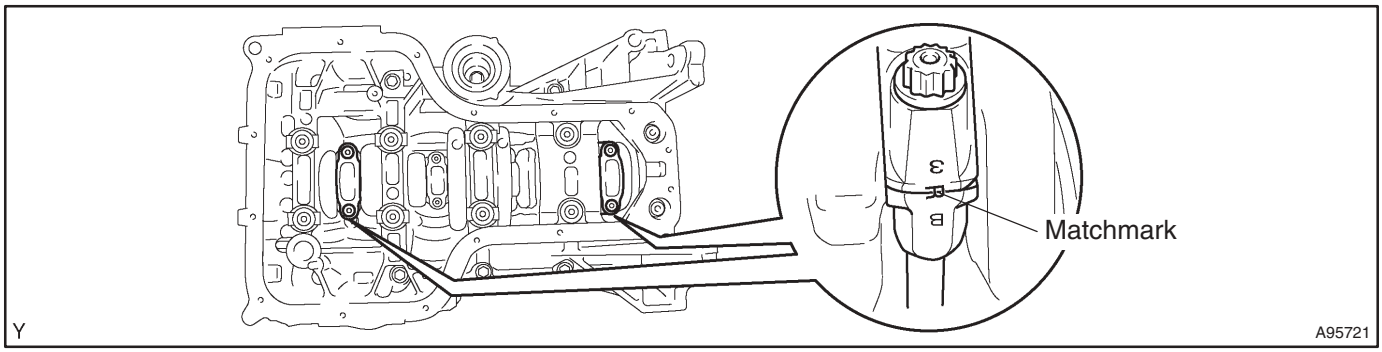

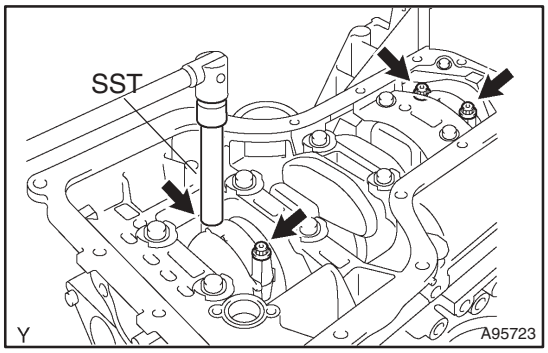

(2) Using SST, remove the 4 bolts and 2 connecting rod caps as shown.

SST 09205–16010

(3) Clean the crank pin and bearing.

(4) Check the crank pin and bearing for pitting and scratches.

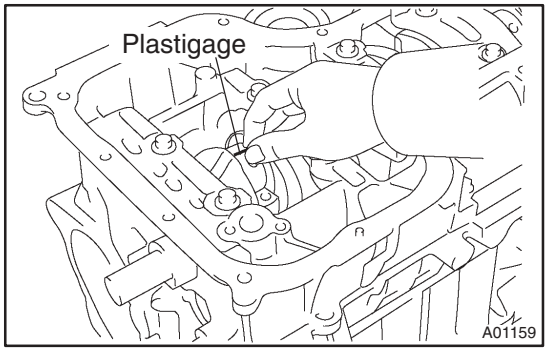

(5) Lay a strip of Plastigage across the crank pin.

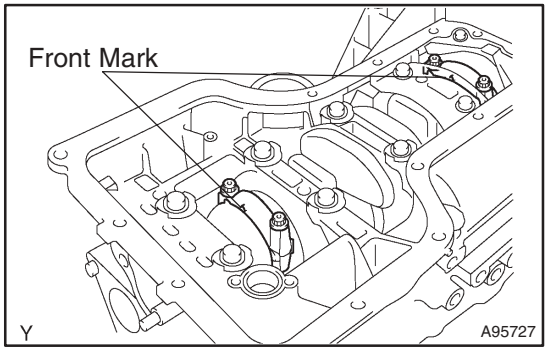

(6) Check that the front marks of the connecting rod cap are facing in the correct direction.

(7) Apply a light coat of engine oil to the threads and under the heads of the connecting rod cap bolts.

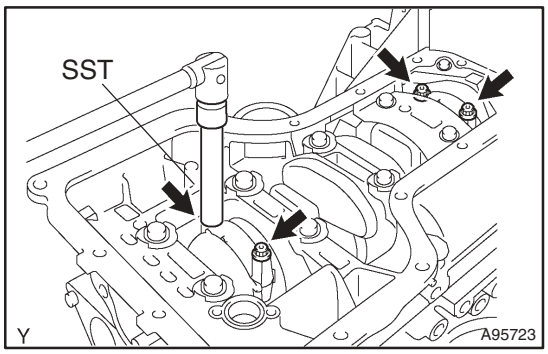

(8) Using SST, tighten the 2 bolts in several passes to the specified torque.

SST 09205–16010

Torque: 20 N·m (204 kgf·cm, 15 ft·lbf)

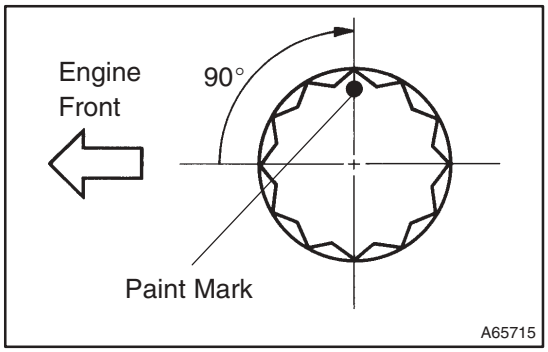

(9) Mark the front of the connecting cap bolts with paint.

(10) Retighten the cap bolts by an additional 90° as shown in the illustration.

(11) Check that the crankshaft turns smoothly.

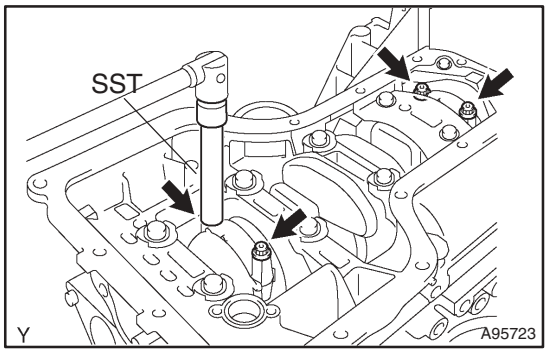

(12) Remove the 4 bolts and 2 connecting rod caps.

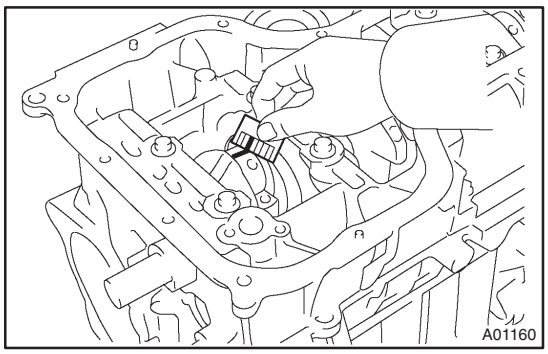

(13) Measure the Plastigage at its widest point.

Standard oil clearance:
0.028 to 0.060 mm (0.0011 to 0.0024 in.)
Maximum oil clearance: 0.080 mm (0.0031 in.)

NOTICE:
Remove the Plastigage completely after the measurement.

- If the oil clearance is greater than maximum, replace the connecting rod bearing.
- If necessary, grind or replace the crankshaft.

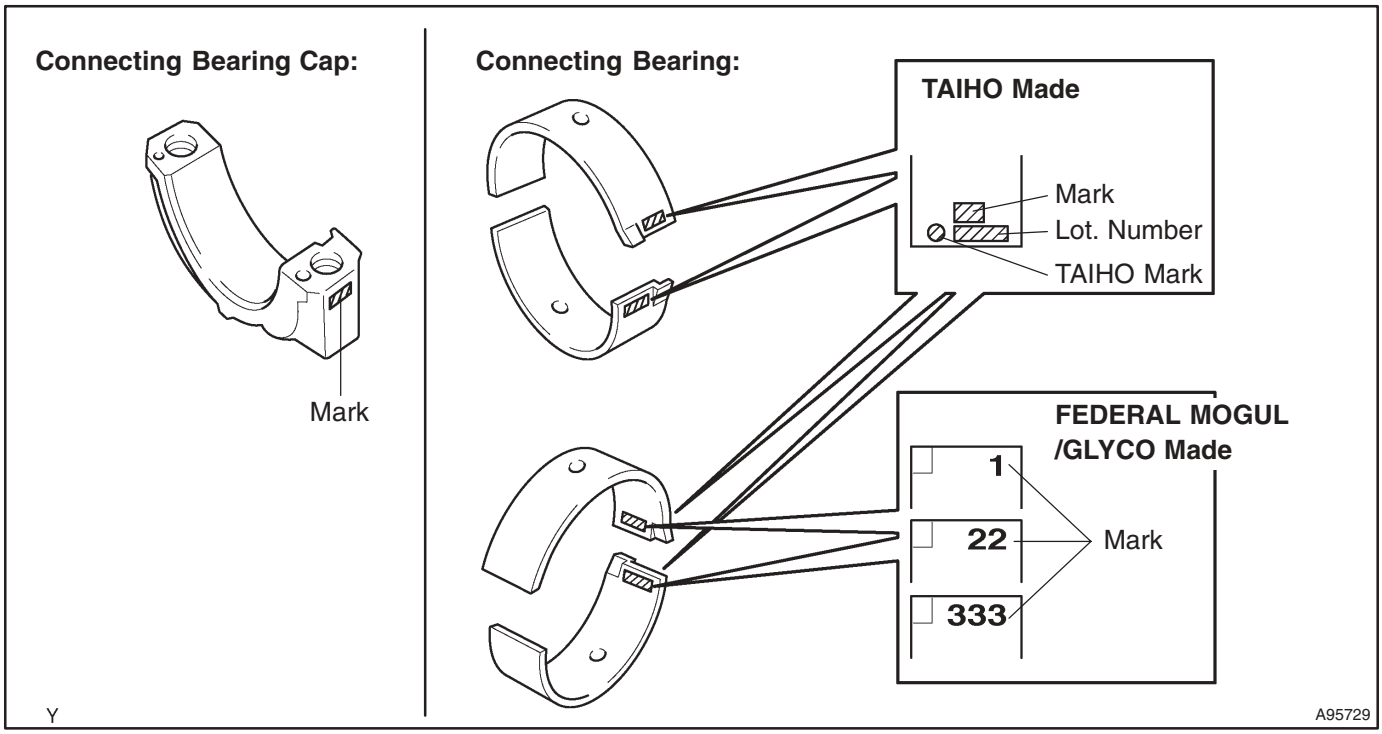

HINT:

- The TAIHO mark is either on the claw side or the opposite side.
- If replacing a bearing, select a new one having the same number as marked on the connecting rod. There are 3 sizes of standard bearings, marked ”1”, ”2” and ”3” accordingly.

Item	Mark	Specification
Connecting rod bearing cap bore diameter	1 2 3	47.000 to 47.008 mm (1.8504 to 1.8507 in.) 47.009 to 47.016 mm (1.8507 to 1.8510 in.) 47.017 to 47.024 mm (1.8511 to 1.8513 in.)
Connecting rod bearing thickness	1 2 3	1.486 to 1.490 mm (0.0585 to 0.0587 in.) 1.491 to 1.494 mm (0.0587 to 0.0588 in.) 1.495 to 1.498 mm (0.0589 to 0.0590 in.)
Crankshaft pin outer diameter	–	43.992 to 44.000 mm (1.7320 to 1.7323 in.)

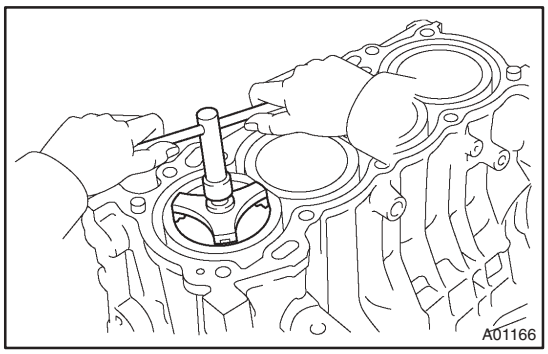

4. REMOVE CONNECTING ROD SUB–ASSY

(a) Using a ridge reamer, remove all the carbon from the top of the cylinder.

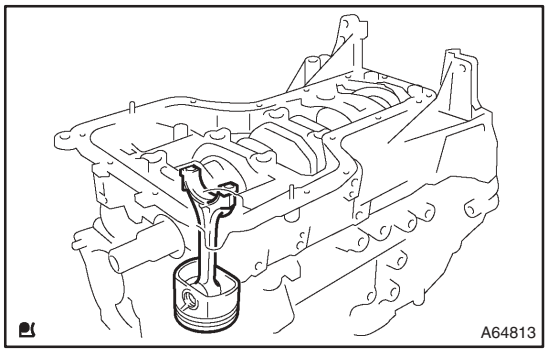

(b) Push the piston, connecting rod assembly and upper bearing through the top of the cylinder block.

HINT:

- Keep the bearing, connecting rod and cap together.
- Arrange the piston and connecting rod assemblies in the correct order.

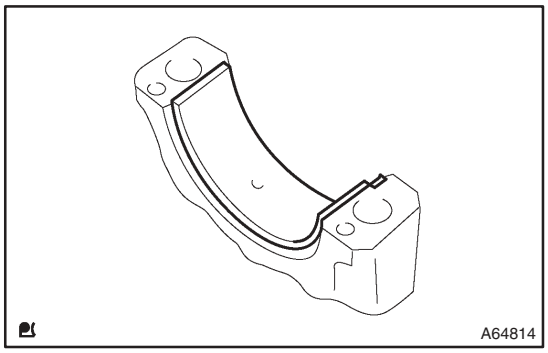

5. REMOVE CONNECTING ROD BEARING

(a) Remove the connecting rod bearing from the connecting rod cap.

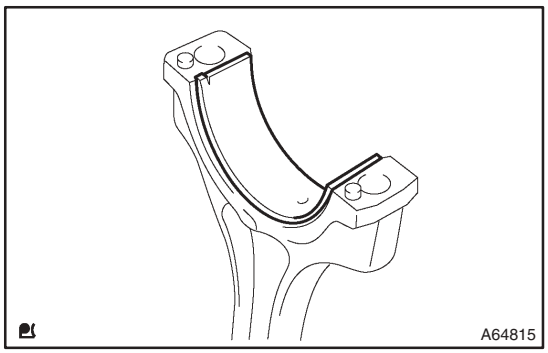

(b) Remove the connecting rod bearing from the connecting rod.

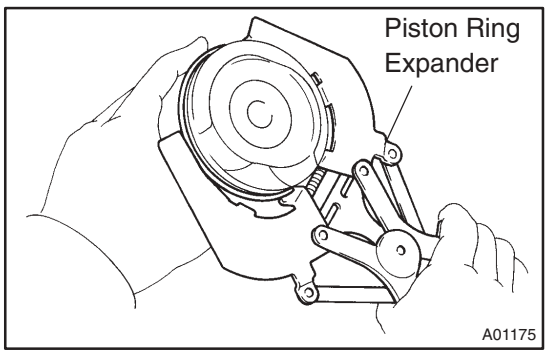

6. REMOVE PISTON RING SET

(a) Using a piston ring expander, remove the 2 compression rings.

(b) Remove the 2 side rails and oil ring by hand.

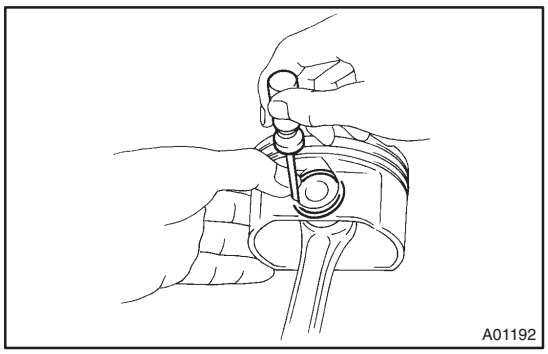

7. REMOVE W/PIN PISTON SUB–ASSY

(a) Using a small screwdriver, pry out the 2 snap rings.

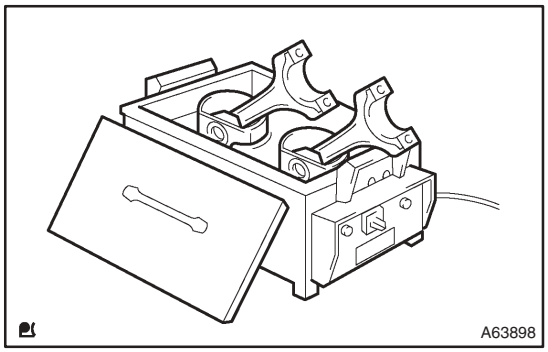

(b) Heat the piston up to 80 to 90°C (176 to 194°F).

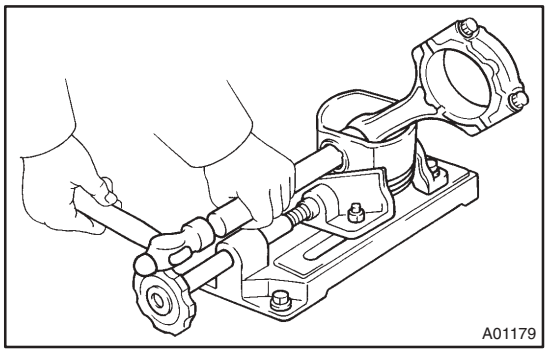

(c) Using a plastic hammer and brass bar, lightly tap out the piston pin, then remove the connecting rod.

HINT:

- The piston and pin are a matched set.
- Arrange the piston, pins, ring, connecting rod and bearings in the correct order.

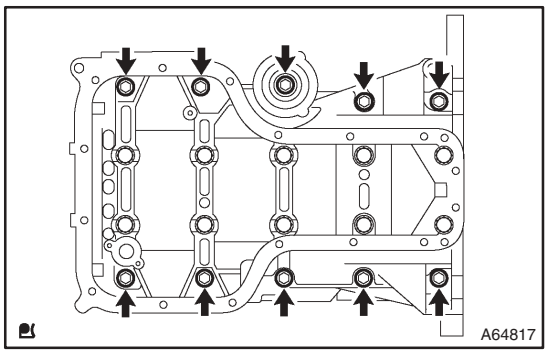

8. REMOVE CRANKSHAFT

(a) Remove the 10 bolts from the crankshaft bearing cap.

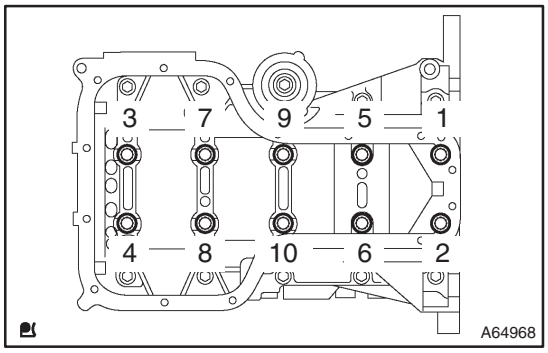

(b) Uniformly loosen the 10 bearing cap bolts in several passes in the sequence shown in the illustration.

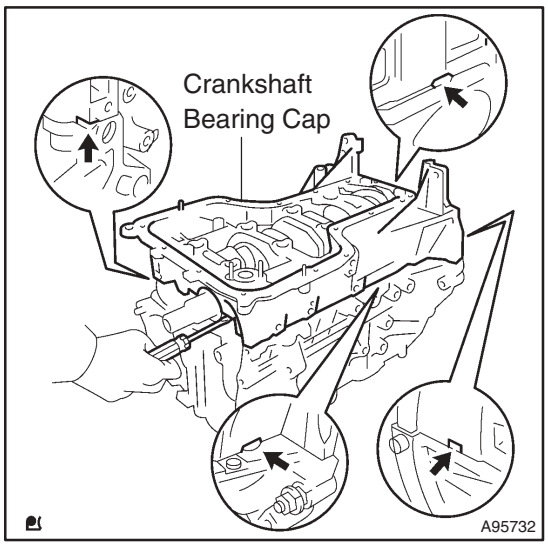

(c) Using a screwdriver, remove the crankshaft bearing cap by prying the indicated portions between the cylinder block and bearing cap.

NOTICE:

Be careful not to damage the contact surfaces of the cylinder block and bearing cap.

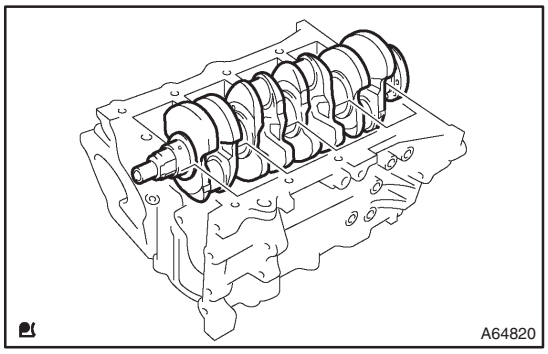

(d) Remove the crankshaft from the cylinder block.

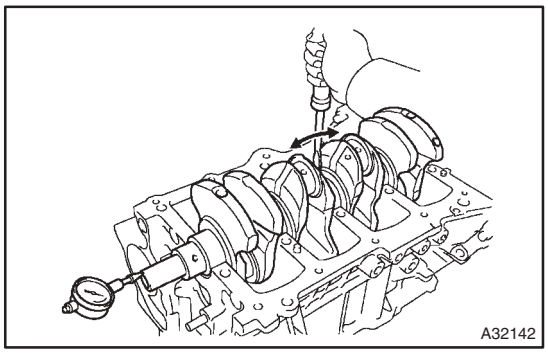

9. INSPECT CRANKSHAFT THRUST CLEARANCE

(a) Using a dial indicator, measure the thrust clearance while prying the crankshaft back and forth with a screwdriver.

Standard thrust clearance:
0.04 to 0.24 mm (0.0016 to 0.0094 in.)
Maximum thrust clearance: 0.30 mm (0.0118 in.)

- If the thrust clearance is greater than maximum, measure the thrust washer thickness.
- If the thickness is not as specified, replace the thrust washer.

HINT:
Thrust washer thickness: 2.430 to 2.480 mm (0.0957 to 0.0976 in.).

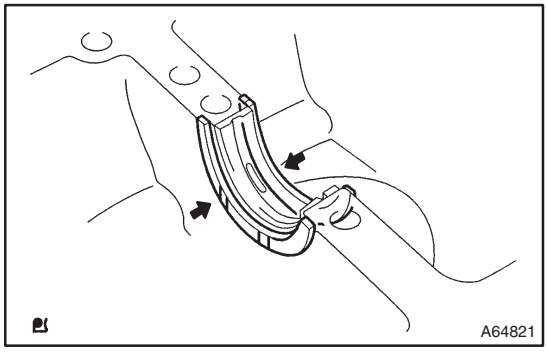

10. REMOVE CRANKSHAFT THRUST WASHER UPPER

(a) Remove the 2 crankshaft thrust washers from the cylinder block.

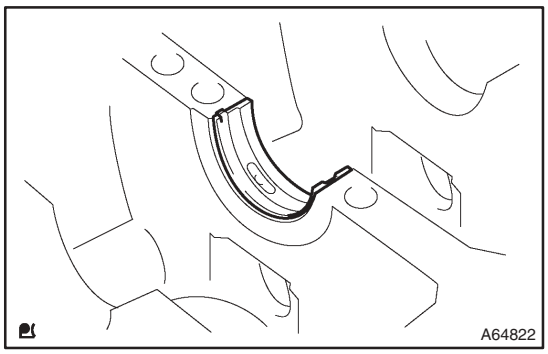

11. REMOVE CRANKSHAFT BEARING

(a) Remove the 5 crankshaft bearings from the cylinder block.

NOTICE:

Arrange the main bearings and thrust washers in the correct order.

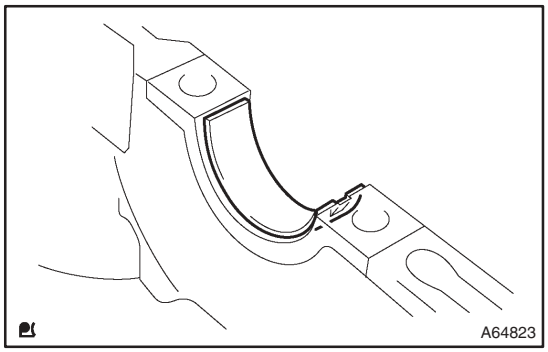

(b) Remove the 5 crankshaft bearings from the crankshaft bearing cap.

NOTICE:

Arrange the main bearings and thrust washers in the correct order.

12. REMOVE STUD BOLT

(a) Using Torx socket wrenches E5 and E7, remove the 9 stud bolts.

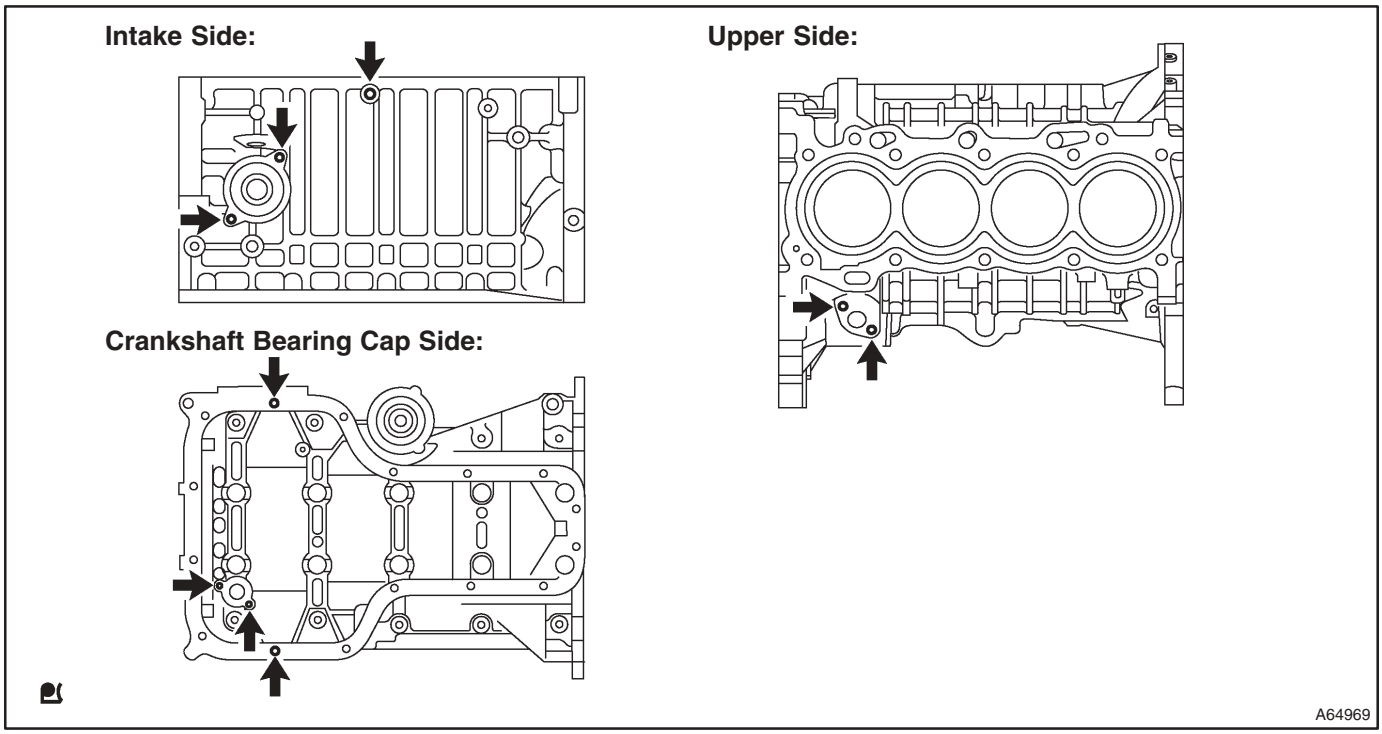

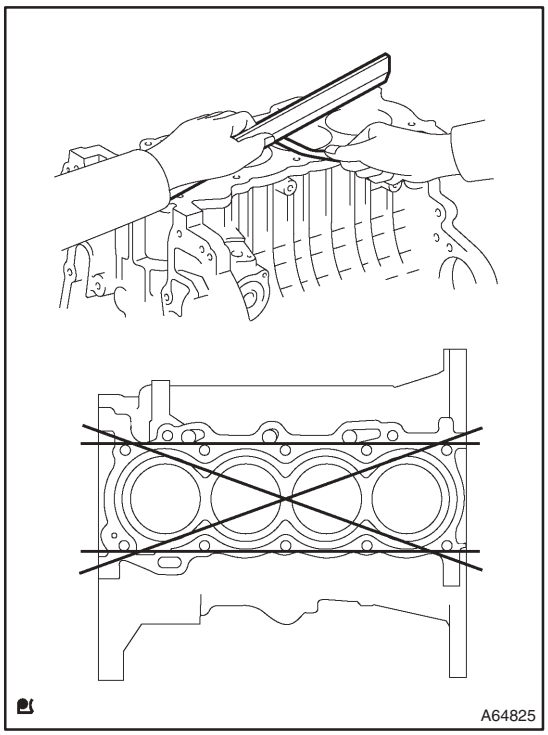

13. INSPECT CYLINDER BLOCK FOR FLATNESS

(a) Using a precision straight edge and feeler gauge, measure the warpage on the surface which comes into contact with the cylinder head gasket.

Maximum warpage: 0.05 mm (0.0020 in.)

If the warpage is greater than maximum, replace the cylinder block.

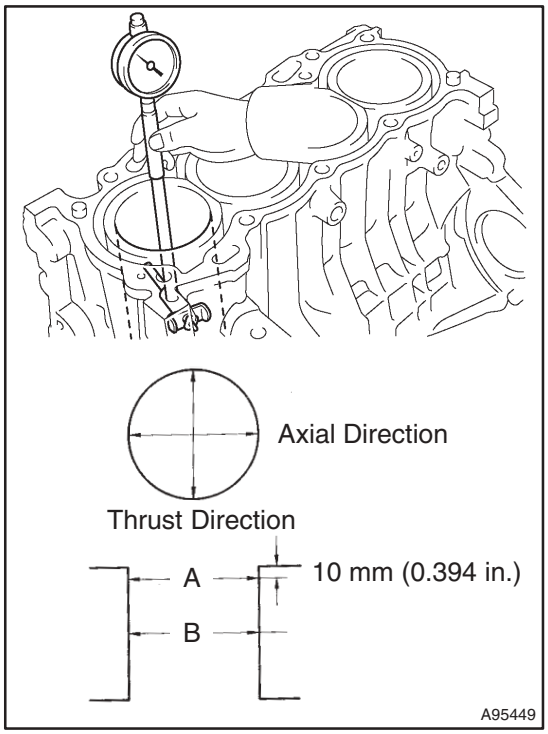

14. INSPECT CYLINDER BORE

(a) Using a cylinder gauge, measure the cylinder bore diameter at positions A and B in the thrust and axial directions.

Standard diameter:
79.000 to 79.013 mm (3.1102 to 3.1107 in.)
Maximum diameter: 79.133 mm (3.1155 in.)

If the average diameter of 4 positions is greater than maximum, replace the cylinder block.

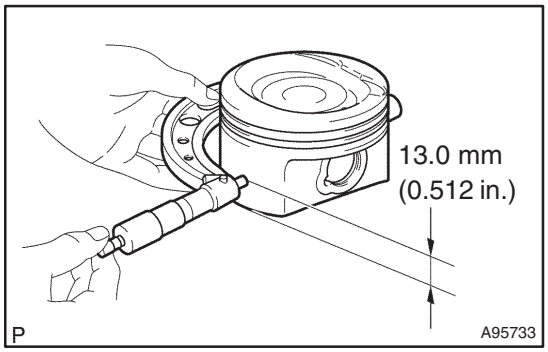

15. INSPECT W/PIN PISTON SUB–ASSY

(a) For engine type 1ZZ–FE.

(1) Using a micrometer, measure the diameter of the piston. Align the micrometer so it is 13.0 mm (0.512 in.) from the bottom of the piston and at right angles (90°) to the piston pin holes as illustrated.

Piston diameter:
78.955 to 78.965 mm (3.1085 to 3.1089 in.)

If the diameter is not as specified, replace the piston.

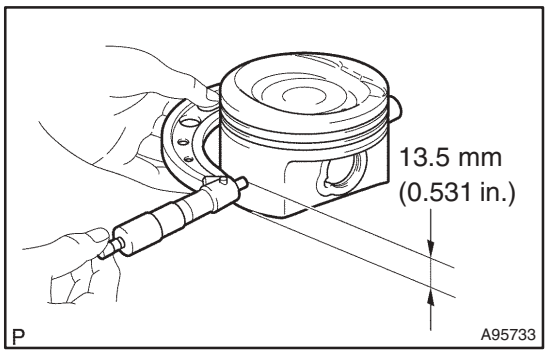

(b) For engine type 3ZZ–FE.
(1) Using a micrometer, measure the diameter of the piston. Align the micrometer so it is 13.5 mm (0.531 in.) from the bottom of the piston and at right angles (90°) to the piston pin holes as illustrated.
Piston diameter:
78.960 to 78.975 mm (3.1087 to 3.1091 in.)

If the diameter is not as specified, replace the piston.

16. INSPECT PISTON OIL CLEARANCE

(a) Subtract the piston diameter measurement from the cylinder bore diameter measurement.
Standard oil clearance: 0.073 to 0.096 mm (0.0029 to 0.0038 in.)
Maximum oil clearance: 0.10 mm (0.0039 in.)
- If the oil clearance is greater than maximum, replace all of the piston assembly.
- If necessary, replace the cylinder block.

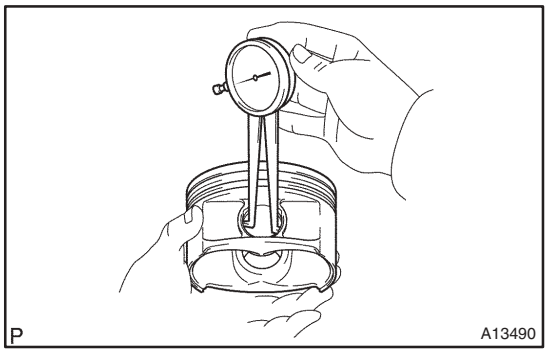

17. INSPECT PISTON PIN OIL CLEARANCE

(a) Using a caliper gauge, measure the piston pin bore diameter.
Piston pin bore diameter:
20.006 to 20.015 mm (0.7876 to 0.7880 in.)

Mark	mm (in.)
A	20.006 to 20.009 (0.7876 to 0.7878)
B	20.010 to 20.012 (0.7878 to 0.7879)
C	20.013 to 20.015 (0.7879 to 0.7880)

If the diameter is not as specified, replace the piston assembly.

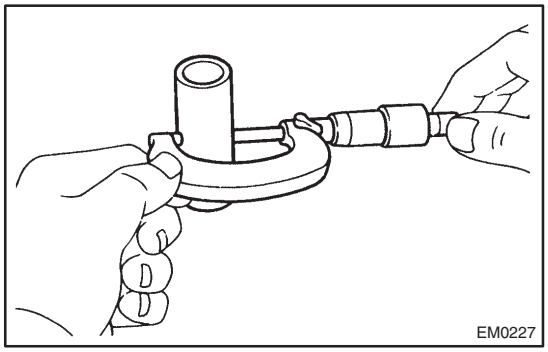

(b) Using a micrometer, measure the piston pin outer diameter.
Piston pin outer diameter:
20.004 to 20.013 mm (0.7876 to 0.7879 in.)

Mark	mm (in.)
A	20.004 to 20.007 (0.7876 to 0.7877)
B	20.008 to 20.010 (0.7877 to 0.7878)
C	20.011 to 20.013 (0.7878 to 0.7879)

If the diameter is not as specified, replace the piston assembly.

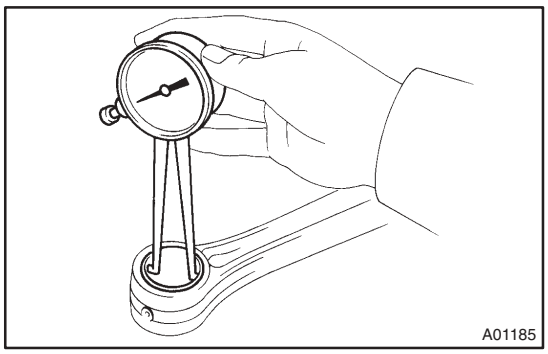

(c) Using a caliper gauge, measure the connecting rod small end bore diameter.

Connecting rod small end bore diameter:
20.012 to 20.021 mm (0.7879 to 0.7882 in.)

Mark	mm (in.)
A	20.012 to 20.015 (0.7879 to 0.7880)
B	20.016 to 20.018 (0.7880 to 0.7881)
C	20.019 to 20.021 (0.7881 to 0.7882)

If the diameter is not as specified, replace the connecting rod assembly.

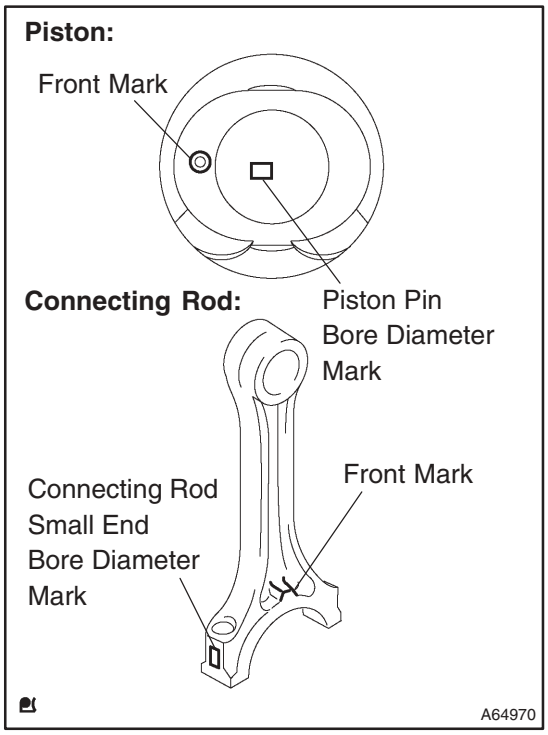

(d) Subtract the piston pin outer diameter measurement from the piston pin bore diameter measurement.

Standard oil clearance:
–0.001 to 0.017 mm (–0.00004 to 0.0007 in.)
Maximum oil clearance: 0.017 mm (0.0007 in.)

- If the oil clearance is greater than maximum, replace the connecting rod assembly.
- If necessary, replace the piston pin.

(e) Subtract the piston pin outer diameter measurement from the connecting rod small end bore diameter measurement.

Standard oil clearance:
0.005 to 0.011 mm (0.0002 to 0.0004 in.)
Maximum oil clearance: 0.011 mm (0.0004 in.)

- If the oil clearance is greater than maximum, replace the connecting rod assembly.
- If necessary, replace the connecting rod and piston pin.

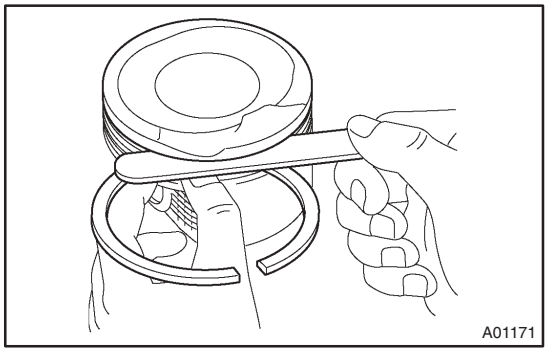

18. INSPECT RING GROOVE CLEARANCE

(a) Using a feeler gauge, measure the clearance between the new piston ring and wall of the ring groove.

Ring groove clearance:

Item	Specification
No. 1 ring	0.02 to 0.07 mm (0.0008 to 0.0028 in.)
No. 2 ring	0.03 to 0.07 mm (0.0012 to 0.0028 in.)
Oil ring	0.03 to 0.11 mm (0.0012 to 0.0043 in.)

If the groove clearance is not as specified, replace the piston assembly.

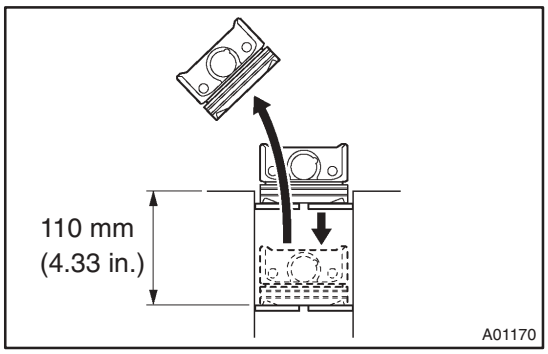

19. INSPECT PISTON RING END GAP

(a) Using a piston, push the piston ring a little beyond the bottom of the ring travel, which is 110 mm (4.33 in.) from the top of the cylinder block.

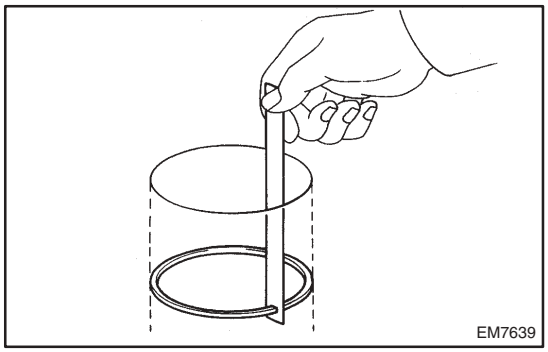

(b) Using a feeler gauge, measure the end gap.

Standard end gap:

Item	Specification
No. 1 ring	0.25 to 0.35 mm (0.0098 to 0.0138 in.)
No. 2 ring	0.35 to 0.50 mm (0.0138 to 0.0197 in.)
Oil ring	0.15 to 0.40 mm (0.0059 to 0.0157 in.)

Maximum end gap:

Item	Specification
No. 1 ring	1.05 mm (0.0413 in.)
No. 2 ring	1.20 mm (0.0472 in.)

- If the end gap is greater than maximum, replace the piston ring.
- If the end gap is greater than maximum, even with a new piston ring, replace the cylinder block.

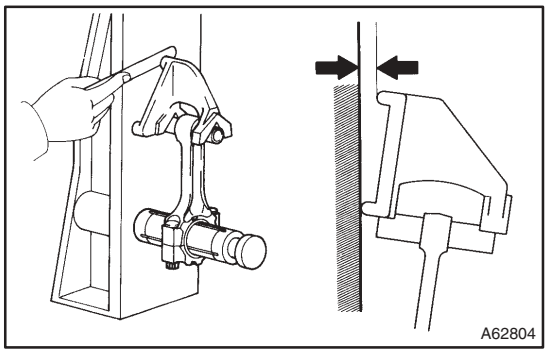

20. INSPECT CONNECTING ROD SUB–ASSY

(a) Using a connecting rod aligner and feeler gauge, check the connecting rod alignment.

(1) Check for out–of–alignment.

Maximum out–of–alignment:

0.05 mm (0.0020 in.) per 100 mm (3.94 in.)

If the out–of–alignment is greater than maximum, replace the connecting rod assembly.

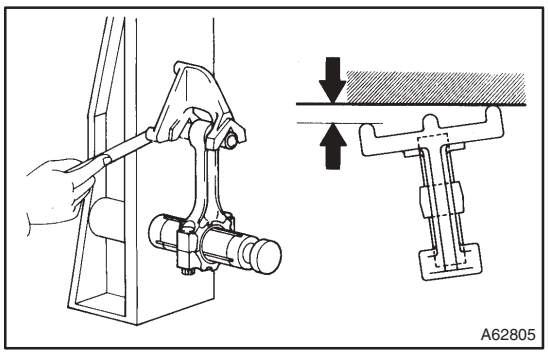

(2) check for twist.

Maximum twist:

0.05mm (0.0020 in.) per 100 mm (3.94 in.)

If the twist is greater than maximum, replace the connecting rod assembly.

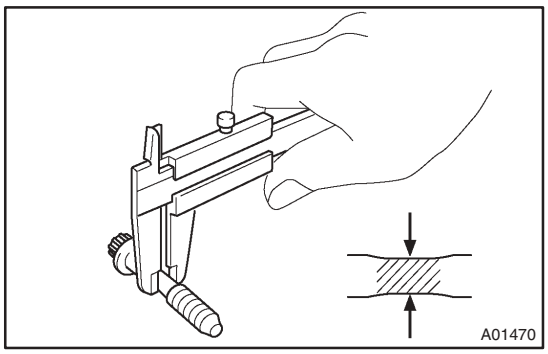

21. INSPECT CONNECTING ROD BOLT

(a) Using vernier calipers, measure the tension portion diameter of the bolts.

Standard diameter:
6.6 to 6.7 mm (0.260 to 0.264 in.)
Minimum diameter: 6.4 mm (0.252 in.)

If the diameter is less than minimum, replace the connecting rod bolt.

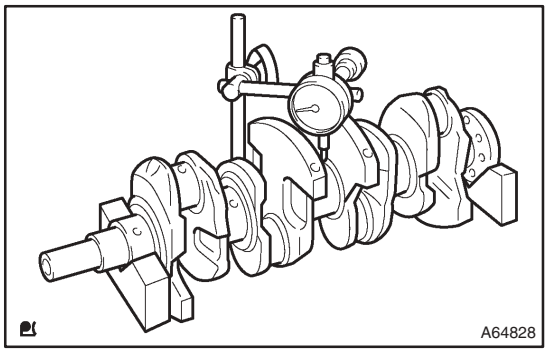

22. INSPECT CRANKSHAFT

(a) Using a dial indicator and V–blocks, measure the circle runout as shown in the illustration.

Maximum circle runout: 0.03 mm (0.0012 in.)

If the circle runout is greater than maximum, replace the crankshaft.

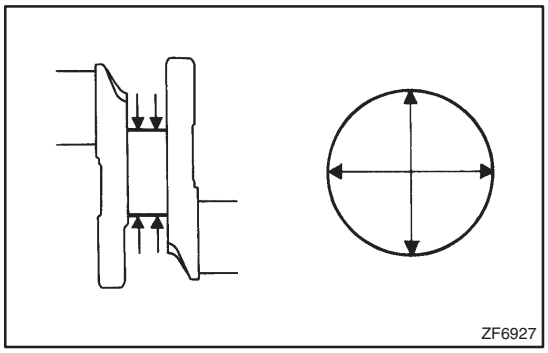

(b) Using a micrometer, measure the diameter of each main journal at the points shown in the illustration.

Diameter: 47.988 to 48.000 mm (1.8893 to 1.8898 in.)

If the diameter is not as specified, check the crankshaft oil clearance.

(c) Check each main journal for taper and out–of–round as shown.

Maximum taper and out–of–round:
0.02 mm (0.0008 in.)

If the taper or out–of–round is greater than maximum, replace the crankshaft.

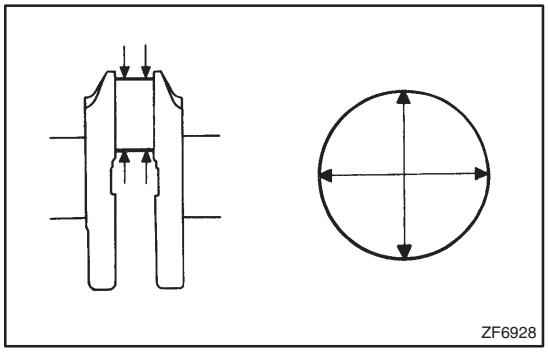

(d) Using a micrometer, measure the diameter of each crank pin at the points shown in the illustration.

Diameter: 43.992 to 44.000 mm (1.7320 to 1.7323 in.)

If the diameter is not as specified, check the connecting rod oil clearance.

(e) Check each crank pin for taper and out–of–round as shown.

Maximum taper and out–of–round:
0.02 mm (0.0008 in.)

If the taper or out–of–round is greater than maximum, replace the crankshaft.

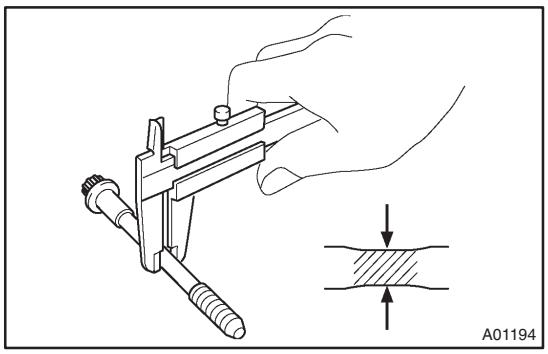

23. INSPECT CRANKSHAFT BEARING CAP SET BOLT

(a) Using vernier calipers, measure the tension portion diameter of the bolts.

Standard diameter: 7.3 to 7.5 mm (0.287 to 0.295 in.)
Minimum diameter: 7.3 mm (0.287 in.)

If the diameter is greater than minimum, replace the crankshaft bearing cap set bolt.

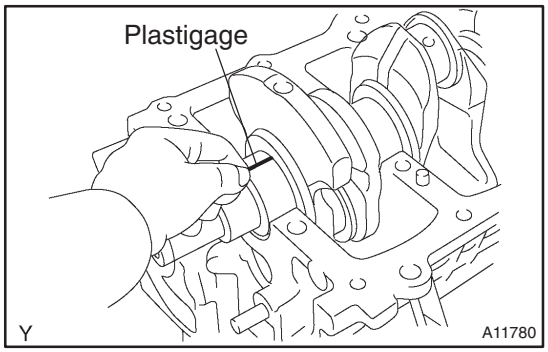

24. INSPECT CRANKSHAFT OIL CLEARANCE

NOTICE:

Do not turn the crankshaft.

(a) Clean each main journal and bearing.
(b) Place the crankshaft on the cylinder block.
(c) Lay a strip of Plastigage across each journal.

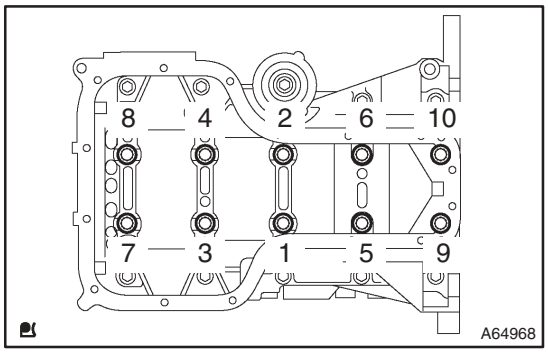

(d) Using SST, tighten the bolts to the specified torque in the several passes in the sequence shown.

Torque: 44 N·m (449 kgf·cm, 33 ft·lbf)

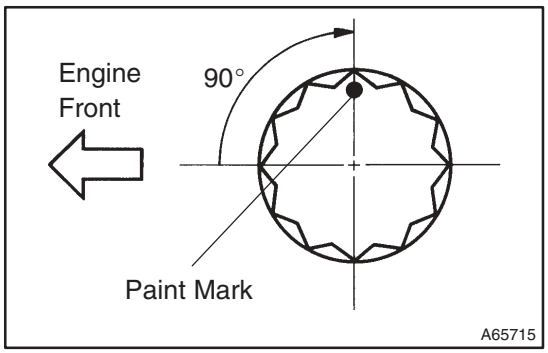

(e) Mark the front of the bearing cap bolts with paint.
(f) Retighten the bearing cap bolts by an additional 90° as shown in the illustration.
(g) Check that the painted mark is now at a 90° angle to the front.

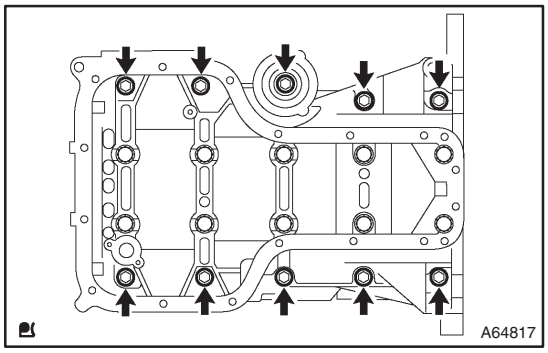

(h) Tighten the 10 other bolts for the bearing cap.

Torque: 19 N·m (194 kgf·cm, 14 ft·lbf)

(i) Remove the 10 bolts.

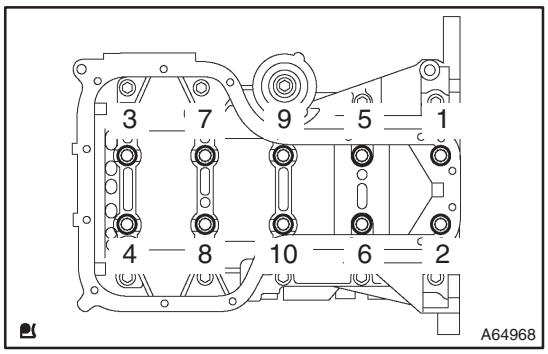

(j) Uniformly loosen the 10 bearing cap bolts in several passes in the sequence shown in the illustration.

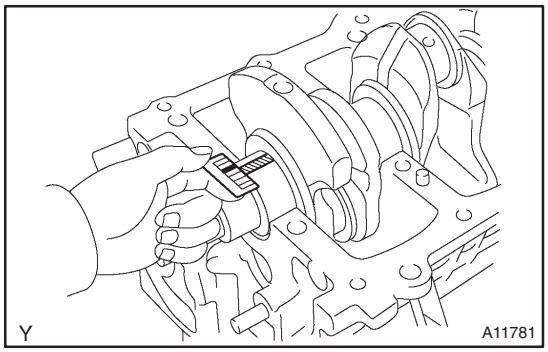

(k) Measure the Plastigage at its widest point.
Standard oil clearance:
0.015 to 0.032 mm (0.0006 to 0.0012 in.)
Maximum oil clearance: 0.05 mm (0.0020 in.)

NOTICE:
Completely remove the Plastigage.

- If the oil clearance is greater than minimum, replace the crankshaft bearing.
- If necessary, replace the crankshaft.

HINT:
If replacing a bearing, select a new one having the same number. If the number of the bearing cannot be determined, calculate the correct use bearing number by adding together the numbers imprinted on the cylinder block and crankshaft, then select a new bearing having the calculated number. There are 4 sizes of standard bearings, marked "1", "2", "3" and "4" accordingly.

Cylinder block (A) + Crankshaft (B)	0 to 2	3 to 5	6 to 8	9 to 11
Use bearing	"1"	"2"	"3"	"4"

EXAMPLE:
Cylinder block "3" (A) + Crankshaft "4" (B) = Total number 7 (Use bearing "3")

Cylinder Block:

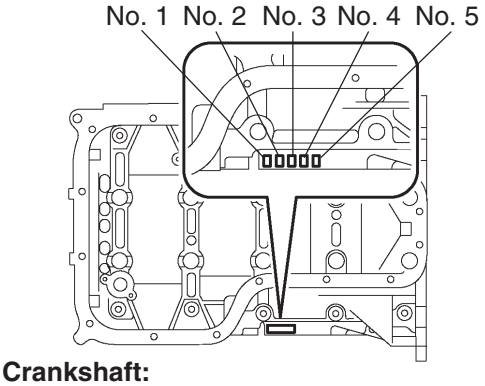

Crankshaft:

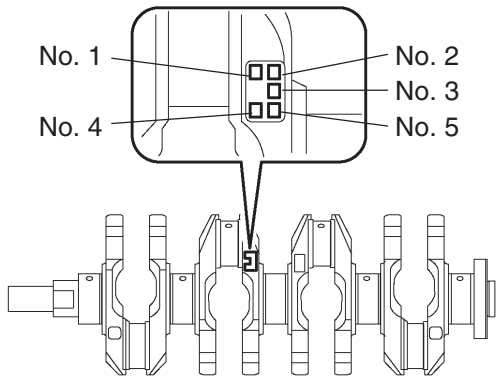

Bearing:

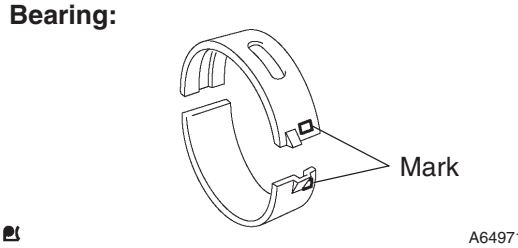

Item	Mark	mm (in.)
Cylinder block journal bore diameter (A)	"0"	52.000 to 52.002 (2.0472 to 2.0473)
	"1"	52.003 to 52.004 (2.0474 to 2.0474)
	"2"	52.005 to 52.006 (2.0474 to 2.0475)
	"3"	52.007 to 52.009 (2.0475 to 2.0476)
	"4"	52.010 to 52.011 (2.0476 to 2.0477)
	"5"	52.012 to 52.013 (2.0477 to 2.0478)
	"6"	52.014 to 52.015 (2.0478 to 2.0478)
Crankshaft journal diameter (B)	"0"	47.999 to 48.000 (1.8897 to 1.8898)
	"1"	47.997 to 47.998 (1.8896 to 1.8897)
	"2"	47.995 to 47.996 (1.8896 to 1.8896)
	"3"	47.993 to 47.994 (1.8895 to 1.8895)
	"4"	47.991 to 47.992 (1.8894 to 1.8894)
	"5"	47.988 to 47.990 (1.8893 to 1.8894)
Standard bearing center wall thickness	"1"	1.994 to 1.997 (0.0785 to 0.0786)
	"2"	1.998 to 2.000 (0.0787 to 0.0787)
	"3"	2.001 to 2.003 (0.0788 to 0.0789)
	"4"	2.004 to 2.006 (0.0789 to 0.0790)

25. INSTALL STRAIGHT PIN

(a) Using a plastic hammer, install 9 new straight pins into the cylinder block.

Standard protrusion:

Item	Specification
A	5.0 mm (0.197 in.)
B	7.5 mm (0.295 in.)
C	12.0 mm (0.472 in.)
D	8.0 mm (0.315 in.)

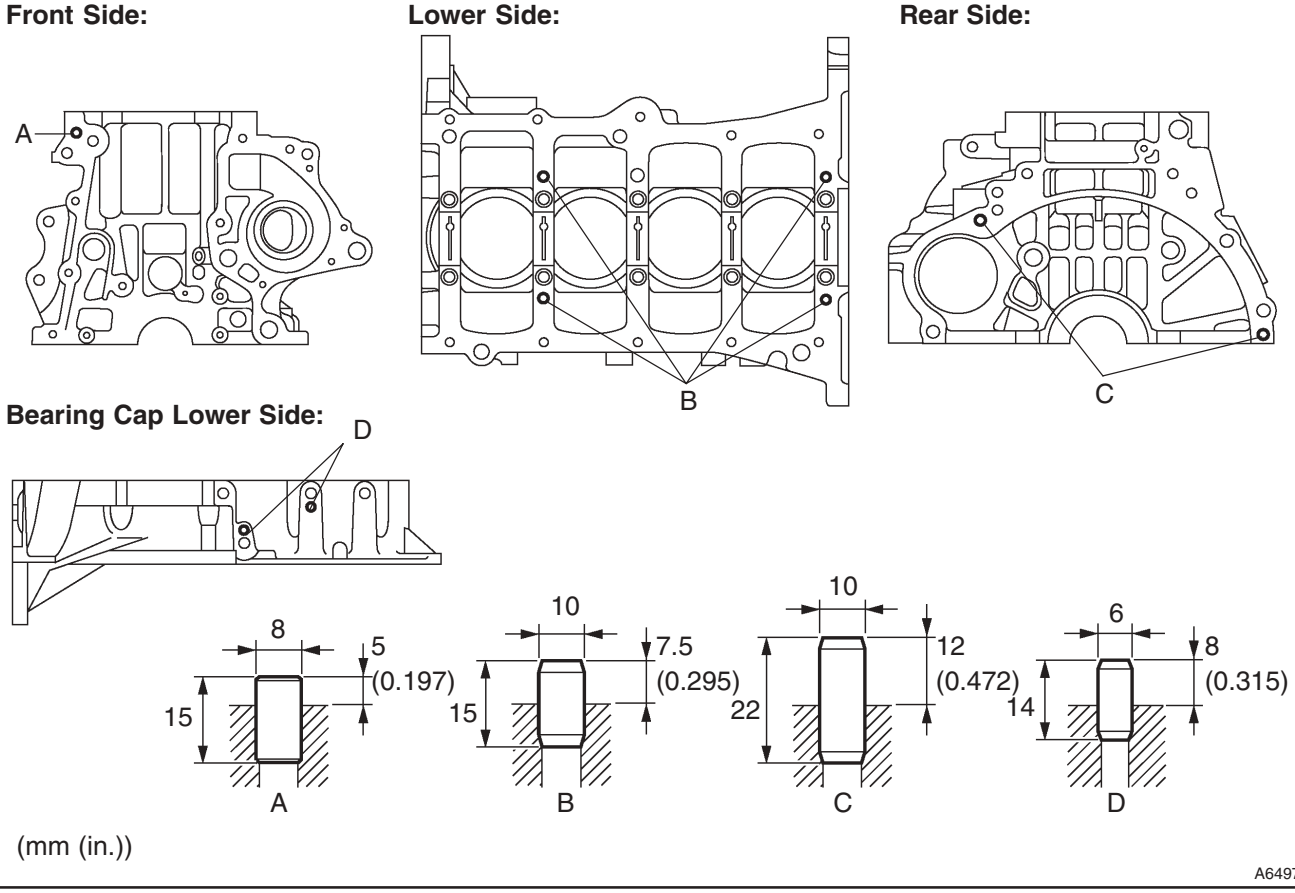

26. INSTALL RING PIN

(a) Using a plastic hammer, install 5 new ring pins into the cylinder block.

Standard protrusion:

Item	Specification
A	6.0 mm (0.236 in.)
B	7.0 mm (0.276 in.)
C	10.0 mm (0.394 in.)

Front Side:

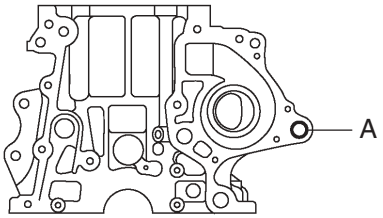

Upper Side:

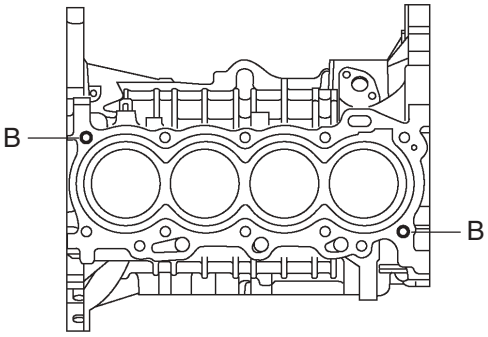

Bearing Cap Front Side:

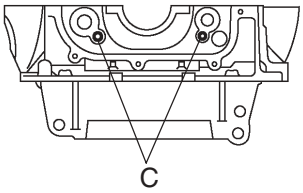

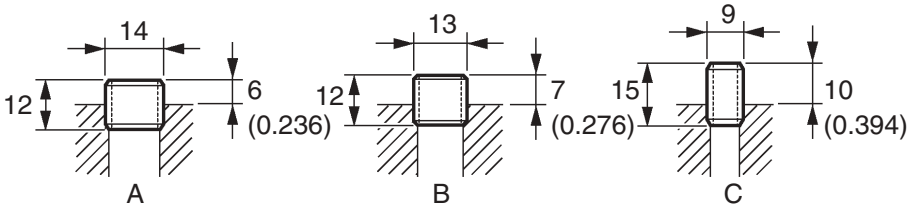

(mm (in.))

A64973

27. INSTALL STUD BOLT

(a) Using Torx socket wrenches E5 and E7, install the 9 stud bolts into the cylinder block.

Torque:
5.0 N·m (51 kgf·cm, 44 in.·lbf) for A
11 N·m (112 kgf·cm, 8 ft·lbf) for B
5.0 N·m (51 kgf·cm, 44 in.·lbf) for C
5.0 N·m (51 kgf·cm, 44 in.·lbf) for D
5.0 N·m (51 kgf·cm, 44 in.·lbf) for E

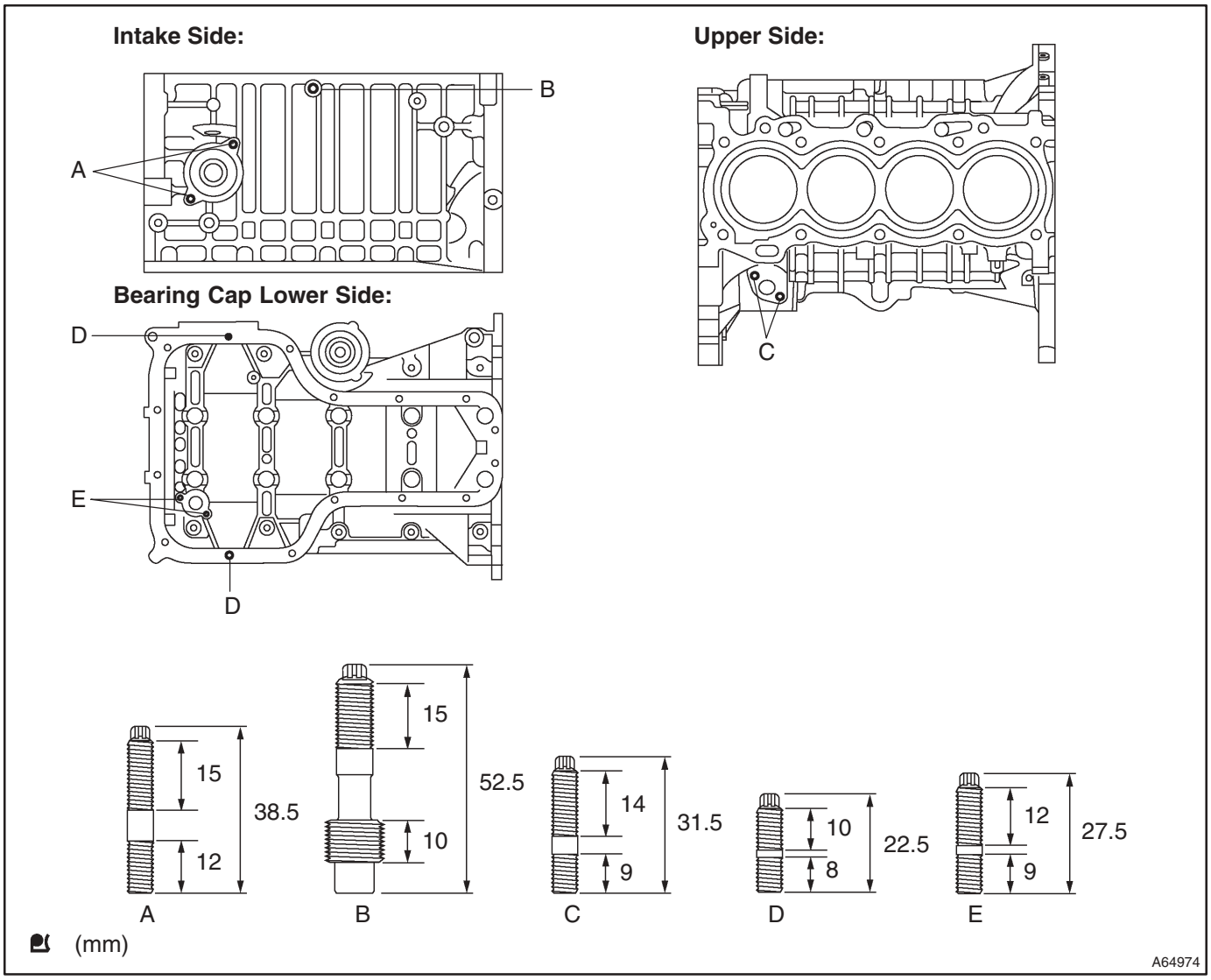

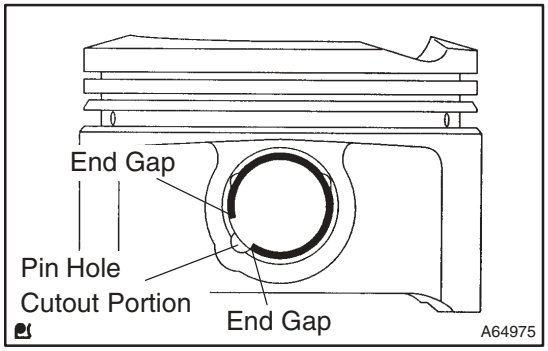

28. INSTALL W/PIN PISTON SUB–ASSY

(a) Using a small screwdriver, install a new snap ring onto one end of the piston pin hole.

HINT:

Be sure that the end gap of the snap ring is aligned with the pin hole cutout portion of the piston.

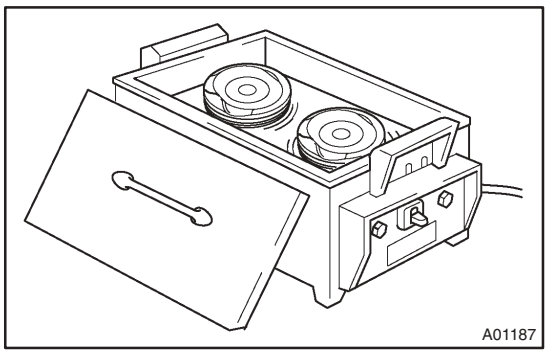

(b) Gradually heat the piston up to 80 to 90°C (176 to 194°F).

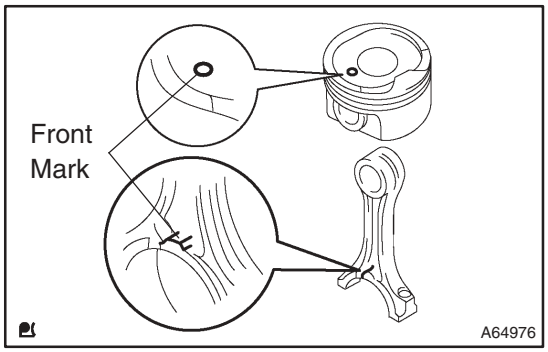

(c) Align the front marks on the piston with the connecting rod, then push in the piston with your thumb.

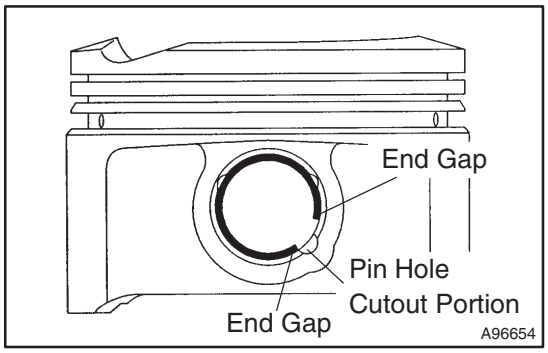

(d) Using a small screwdriver, install a new snap ring onto one end of the piston pin hole.

HINT:

Be sure that the end gap of the snap ring is aligned with the pin hole cutout portion of the piston.

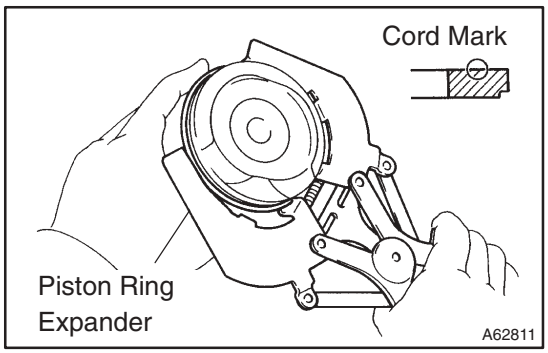

29. INSTALL PISTON RING SET

HINT:

In case of reusing the piston rings, install them onto the matched pistons with the surfaces facing upward correctly.

(a) Install the oil ring expander and 2 side rails by hand.

(b) Using a piston ring expander, install the 2 compression rings with the code mark facing upward.

Code mark (No. 2 only): 2R

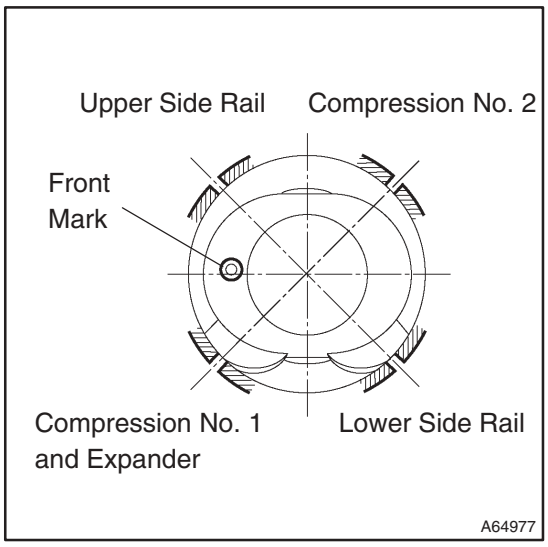

(c) Position the piston rings so that the ring ends are as shown.

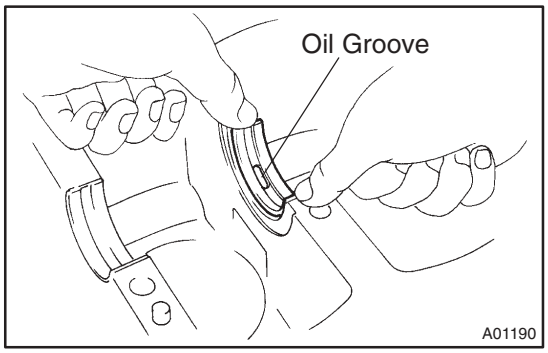

30. INSTALL CRANKSHAFT BEARING

(a) Install the upper bearing with an oil groove onto the cylinder block.

NOTICE:

Do not apply engine oil to the bearing and its contact surface.

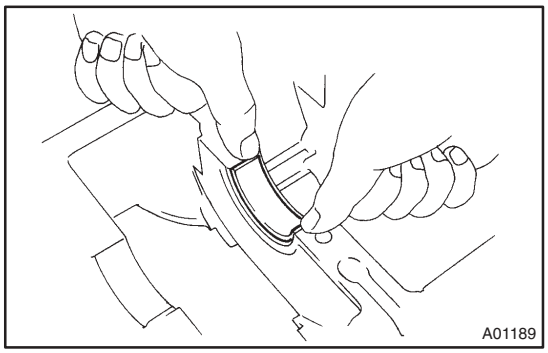

(b) Install the lower bearing onto the bearing cap.

NOTICE:

Do not apply engine oil to the bearing and its contact surface.

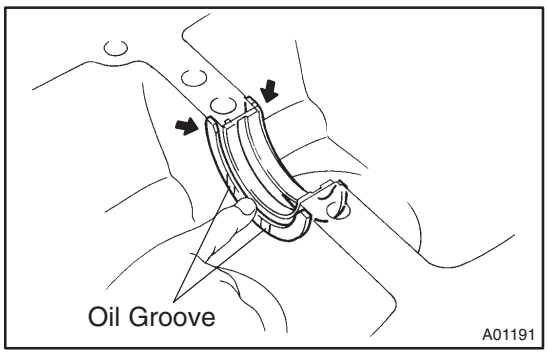

31. INSTALL CRANKSHAFT THRUST WASHER UPPER

(a) Install the 2 thrust washers onto the No. 3 journal position of the cylinder block with the oil grooves facing outward.

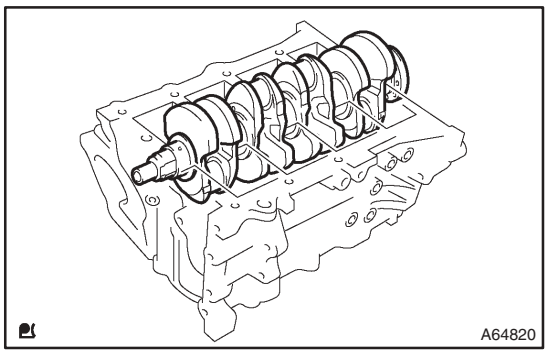

32. INSTALL CRANKSHAFT

(a) Apply engine oil to the upper bearing, then install the crankshaft onto the cylinder block.

(b) Apply a light coat of engine oil to the bolt threads, bolt seats, and bearings of the bearing cap.

(c) Install the crankshaft onto the cylinder block.

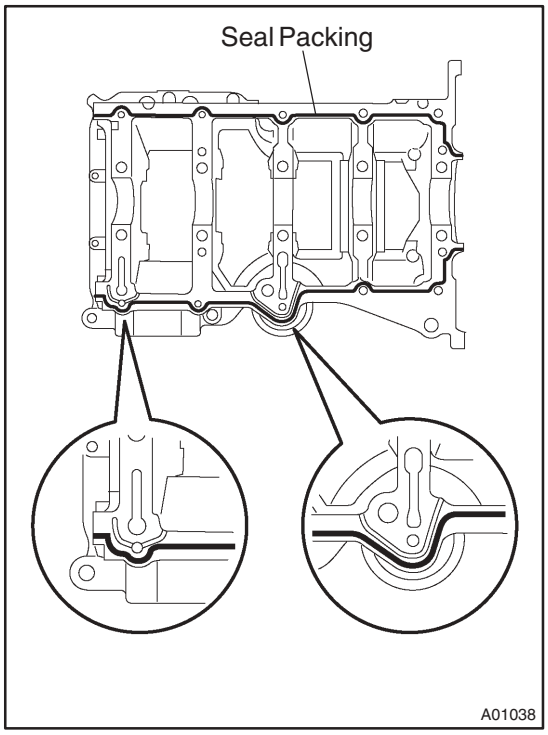

(d) Apply a continuous bead of seal packing (Diameter; 2.5 to 3.5 mm (0.098 to 0.138 in.)) as shown in the illustration.
Seal packing: Part No. 08826–00080 or equivalent

NOTICE:

- **Remove any oil from the contact surface.**
- **Install the bearing cap sub–assembly within 3 minutes after applying seal packing.**
- **Do not put into engine oil for at least 2 hours after installation.**

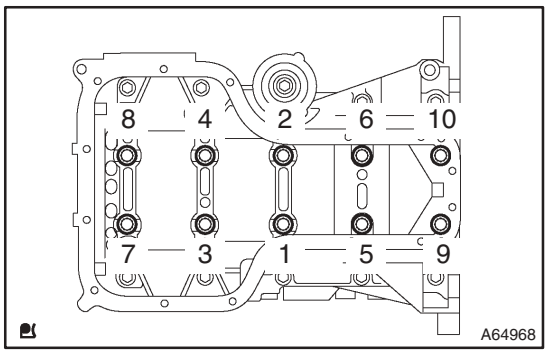

(e) Tighten the bolts in several passes in the sequence shown to the specified torque.
Torque: 44 N·m (449 kgf·cm, 33 ft·lbf)

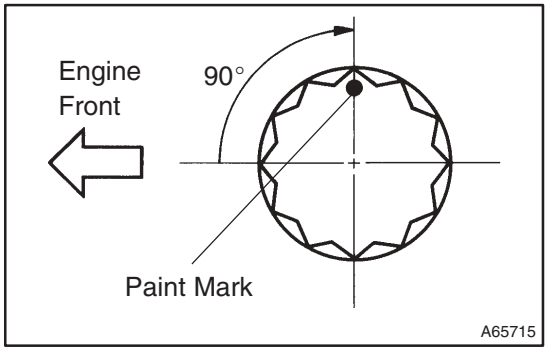

(f) Mark the front of the bearing cap bolts with paint.

(g) Retighten the bearing cap bolts by an additional 90° as shown in the illustration.

(h) Check that the painted mark is now at a 90° angle to the front.

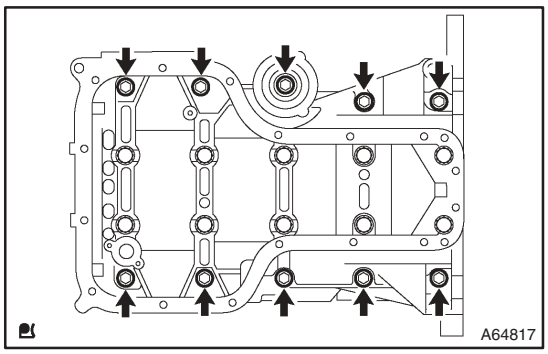

(i) Tighten the 10 other bolts for the bearing cap.
Torque: 19 N·m (194 kgf·cm, 14 ft·lbf)

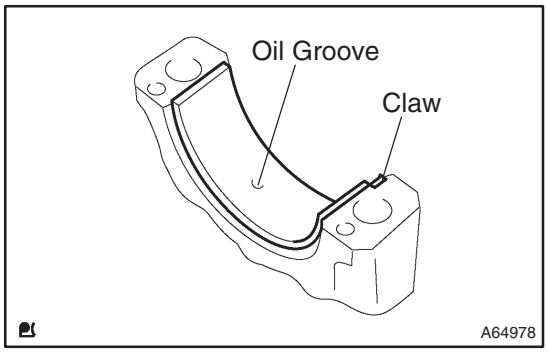

33. INSTALL CONNECTING ROD BEARING

(a) Align the connecting rod bearing claw with the oil groove of the connecting rod cap.

(b) Install the connecting rod bearing onto the connecting rod cap.

NOTICE:
Do not apply engine oil to the bearing and its contact surface.

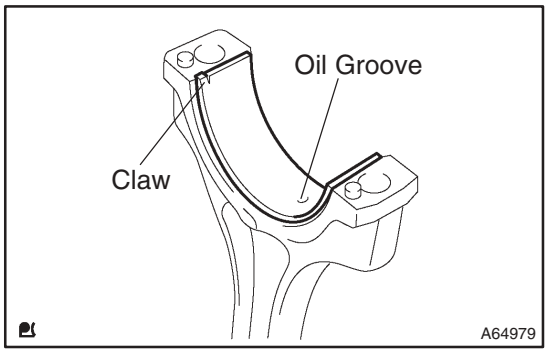

(c) Align the connecting rod bearing claw with the oil groove of the connecting rod.

(d) Install the connecting rod bearing onto the connecting rod.

NOTICE:
Do not apply engine oil to the bearing and its contact surface.

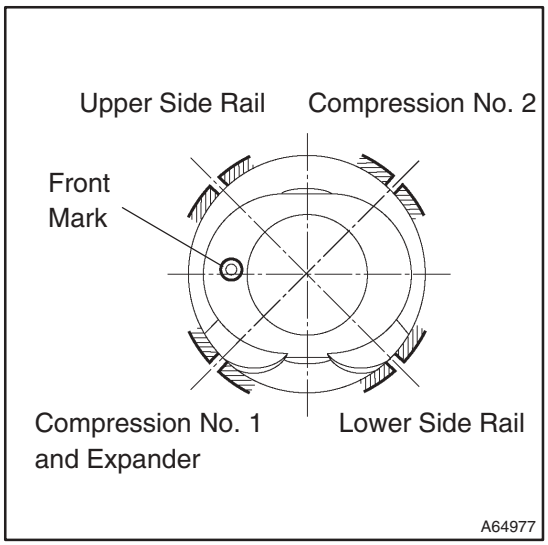

34. INSTALL CONNECTING ROD SUB–ASSY

(a) Position the piston rings so that the ring ends are as shown.

(b) Apply engine oil to the cylinder walls, pistons, and surfaces of the connecting rod bearings.

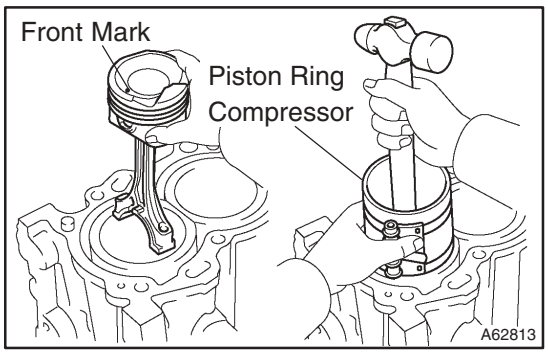

(c) Using a piston ring compressor, correctly push the numbered piston and connecting rod assemblies into each cylinder with the front mark of the piston facing forward.

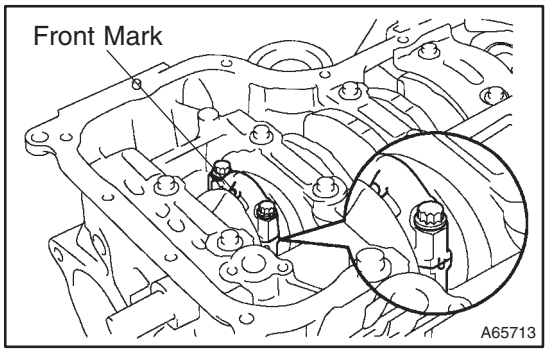

(d) Align the pin dowels of the connecting rod cap with the pins of the connecting rod, then install the connecting rod.

NOTICE:

Match the numbered connecting rod cap with the same numbered connecting rod.

(e) Check that the protrusion of the connecting rod cap is facing in the correct direction.

(f) Apply a light coat of engine oil to the threads and the bottom of the heads of the connecting rod cap bolts.

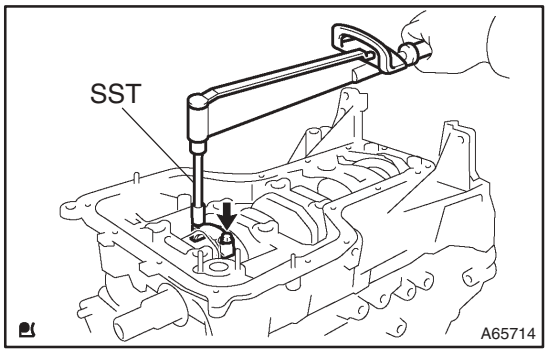

(g) Using SST, tighten the bolts in several passes to the specified torque.

SST 09205–16010

Torque: 20 N·m (204 kgf·cm, 15 ft·lbf)

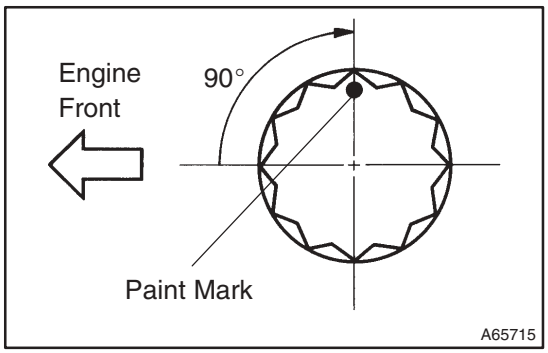

(h) Mark the front of the connecting cap bolts with paint.

(i) Retighten the cap bolts by an additional 90° as shown in the illustration.

(j) Check that the crankshaft turns smoothly.

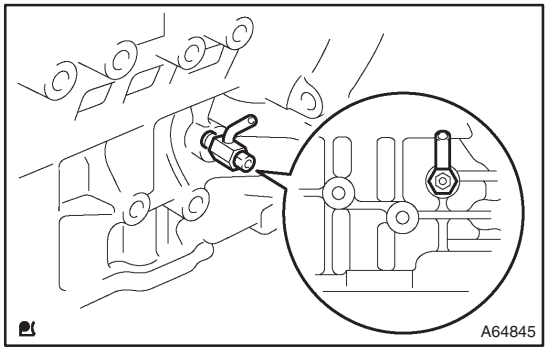

35. INSTALL CYLINDER BLOCK WATER DRAIN COCK SUB–ASSY

(a) Apply adhesive to 2 or 3 threads of the cylinder block water drain cock, then install it within 3 minutes as shown in the illustration.

Torque: 25 N·m (255 kgf·cm, 18 ft·lbf)

Adhesive:

Part No. 08833–00080, THREE BOND 1344, LOCTITE 242 or equivalent

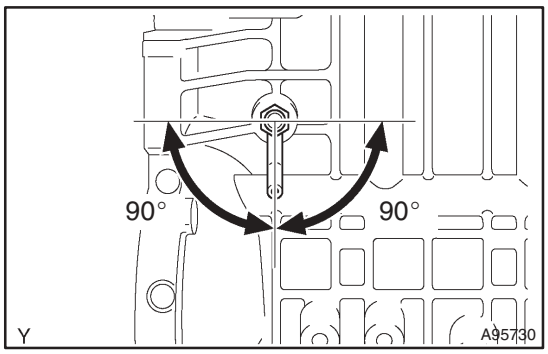

(b) After applying the specified torque, rotate the cylinder block water drain cock clockwise until its drain port faces downward.

NOTICE:

- **Do not put into coolant for at least an hour after installation.**
- **Do not rotate the drain union more than 360° in (b), and never loosen it after setting the union correctly.**

WATER PUMP ASSY (1ZZ–FE/3ZZ–FE)

160WF–01

INSPECTION

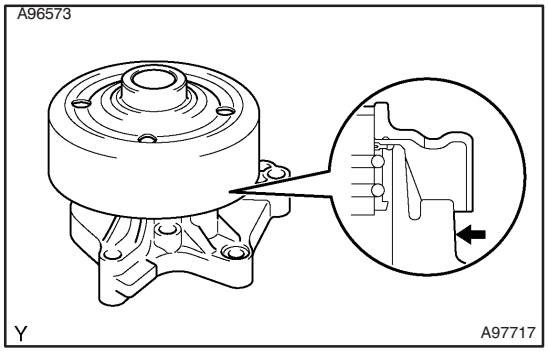

1. INSPECT WATER PUMP ASSY

(a) Check the area of the water pump assembly indicated in the illustration for traces of coolant leakage.

If leakage is found, replace the water pump.

OIL PUMP ASSY (1ZZ–FE/3ZZ–FE)

COMPONENTS

170KW–01

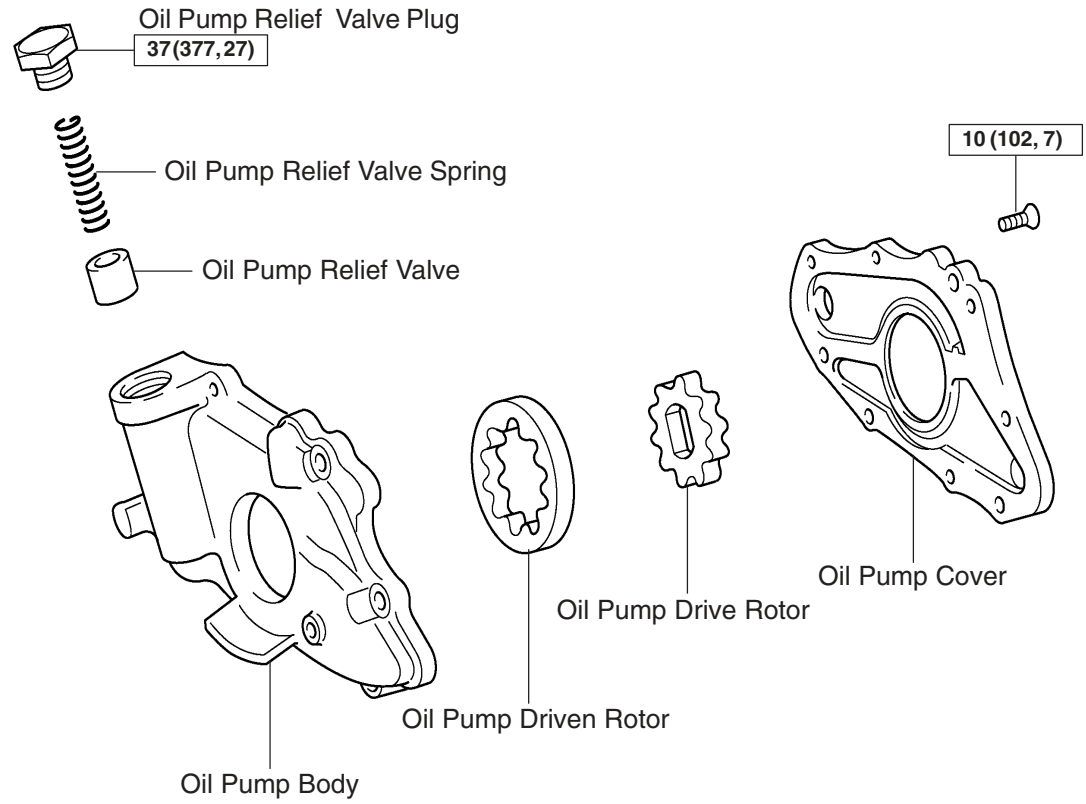

N·m (kgf·cm, ft·lbf) : Specified torque

A62218

170KX–01

OVERHAUL

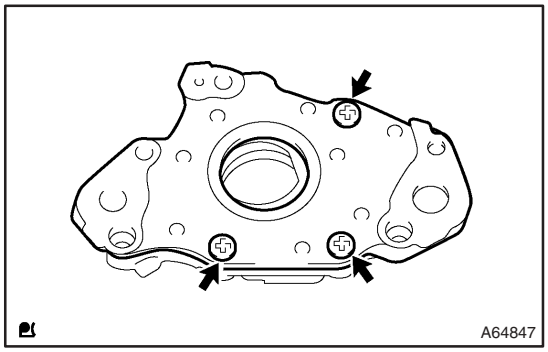

1. REMOVE OIL PUMP DRIVE AND DRIVEN ROTORS

(a) Remove the 3 screws, then remove the oil pump cover.

(b) Remove the oil pump drive and driven rotors from the oil pump.

2. REMOVE OIL PUMP RELIEF VALVE

(a) Remove the oil pump relief valve plug, then remove the oil pump relief valve spring and oil pump relief valve from the oil pump.

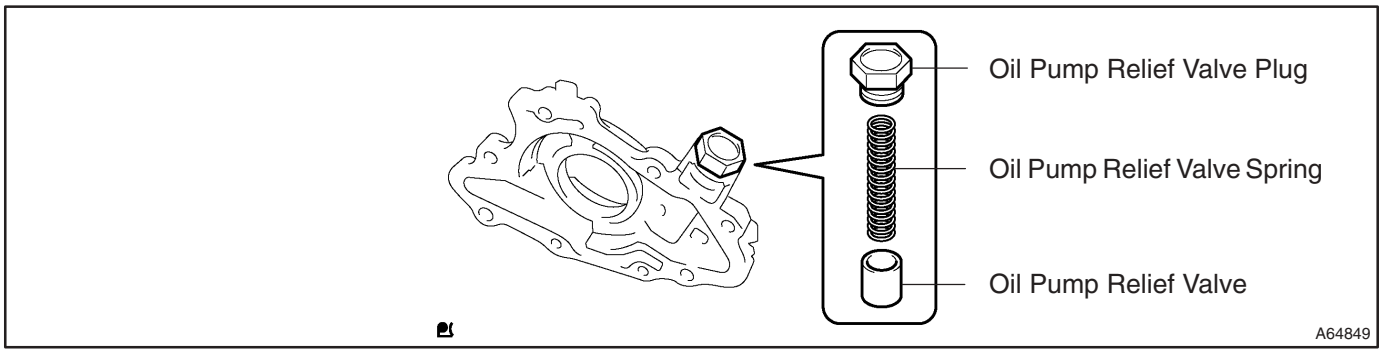

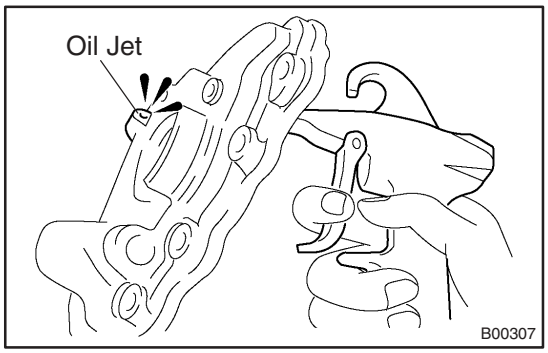

3. INSPECT OIL JET

(a) Apply air pressure to the path in the illustration, then check the oil jet for damage or clogging.

If air does not blow out of the oil jet, replace the oil pump.

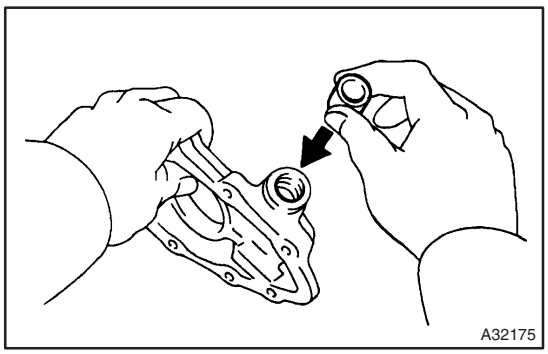

4. INSPECT VALVE, OIL PUMP RELIEF

(a) Coat the oil pump relief valve with engine oil, then check that it falls smoothly into the valve hole under its own weight.

If this does not occur, replace the oil pump.

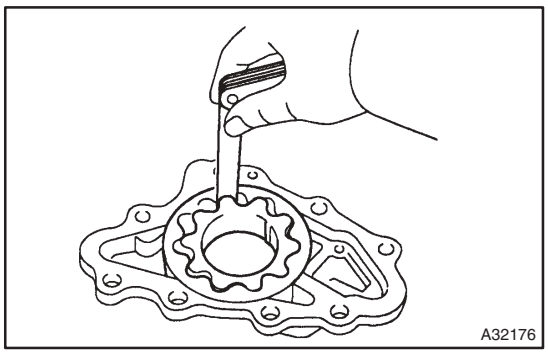

5. INSPECT ROTOR TIP CLEARANCE

(a) Using a feeler gauge, measure the clearance between the drive and driven rotor tips.

Standard tip clearance:
0.040 to 0.160 mm (0.0016 to 0.0063 in.)
Maximum tip clearance: 0.160 mm (0.0063 in.)

If the tip clearance is greater than maximum, then replace the oil pump.

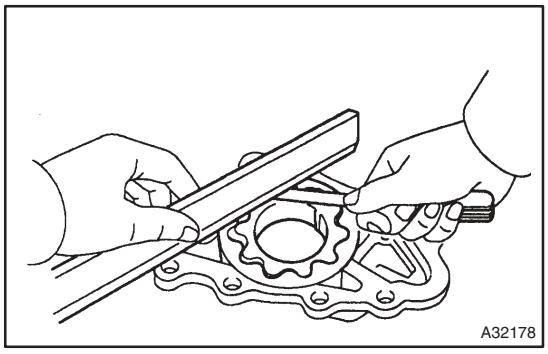

6. INSPECT ROTOR SIDE CLEARANCE

(a) Using a feeler gauge and precision straight edge, measure the clearance between the 2 rotors and precision straight edge.

Standard side clearance:
0.025 to 0.071 mm (0.0010 to 0.0028 in.)
Maximum side clearance: 0.071 mm (0.0028 in.)

If the side clearance is greater than maximum, then replace the oil pump.

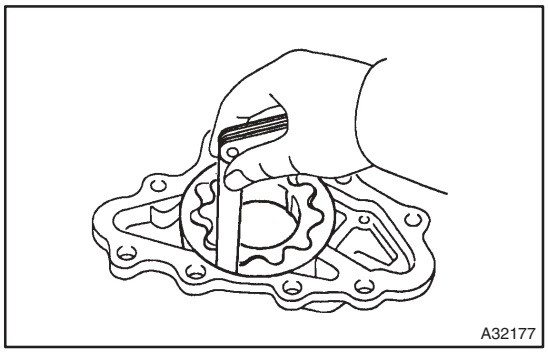

7. INSPECT ROTOR BODY CLEARANCE

(a) Using a feeler gauge, measure the clearance between the driven rotor and oil pump body.

Standard body clearance:
0.260 to 0.325 mm (0.0102 to 0.0128 in.)
Maximum body clearance: 0.325 mm (0.0128 in.)

If the body clearance is greater than maximum, then replace the oil pump.

8. INSTALL OIL PUMP RELIEF VALVE

(a) Coat the oil pump relief valve with engine oil, then insert the oil pump relief valve and oil pump relief spring onto the valve hole.

(b) Install the oil pump relief valve plug.

Torque: 37 N·m (377 kgf·cm, 27 ft·lbf)

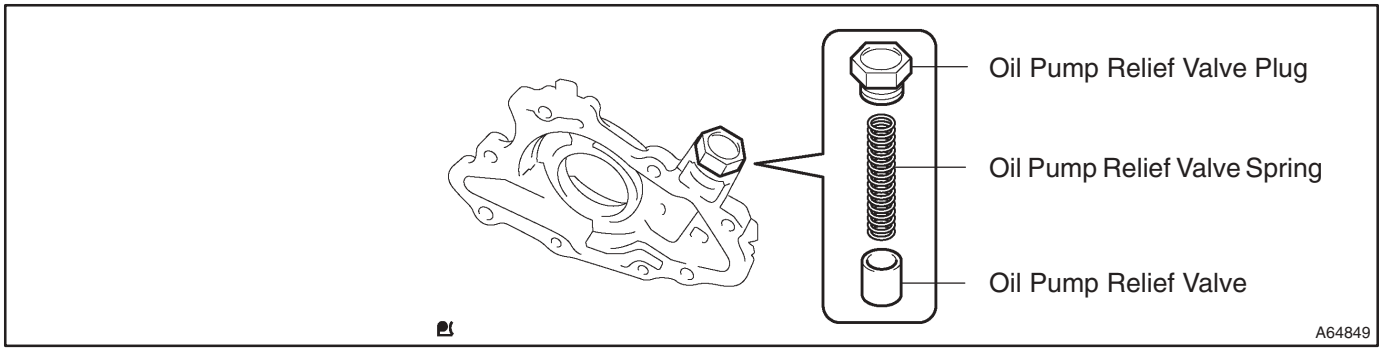

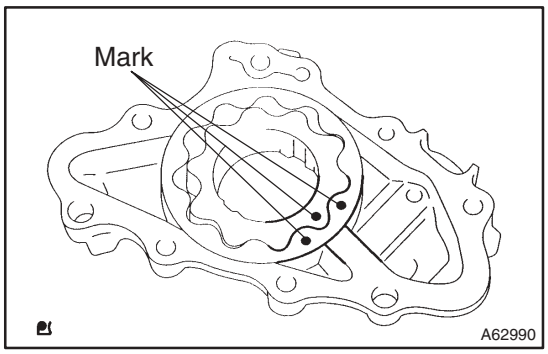

9. INSTALL OIL PUMP DRIVE AND DRIVEN ROTORS

(a) Coat the oil pump drive and driven rotors with engine oil, and place them into the oil pump with the marks facing the oil pump cover side.

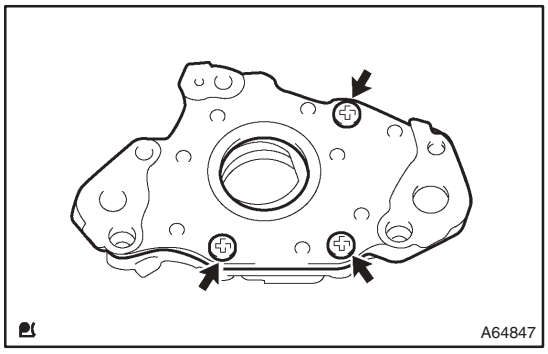

(b) Install the oil pump cover with the 3 screws.
Torque: 10 N·m (102 kgf·cm, 7.0 ft·lbf)

STARTER ASSY (1ZZ–FE/3ZZ–FE)

COMPONENTS

190OH–02

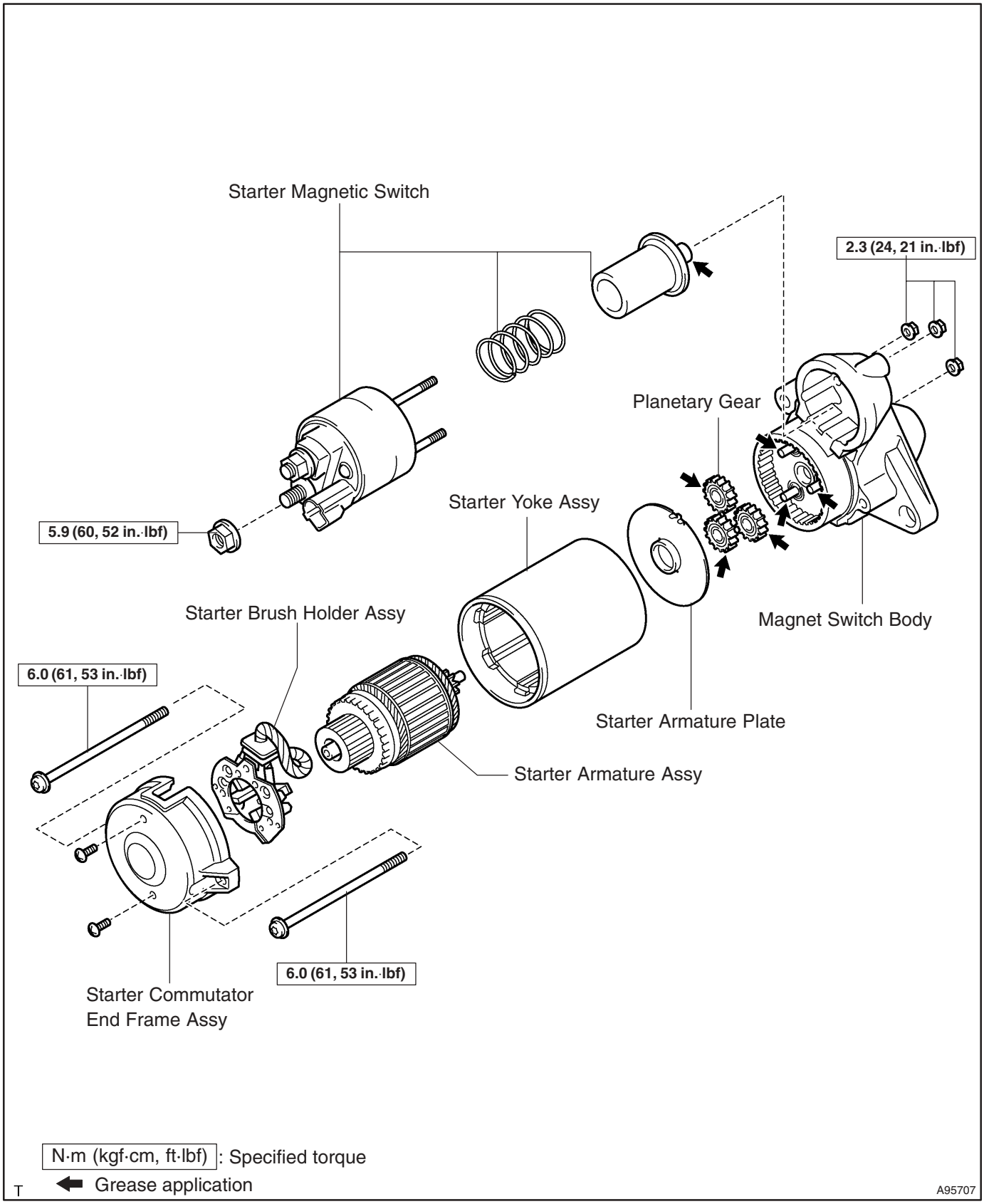

190YB–01

OVERHAUL

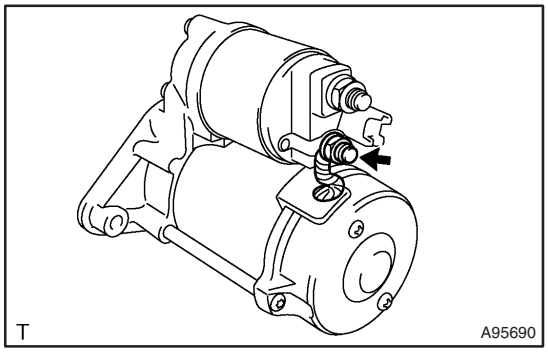

1. REMOVE STARTER MAGNETIC SWITCH ASSY

(a) Remove the nut, then disconnect the lead wire from the starter magnetic switch.

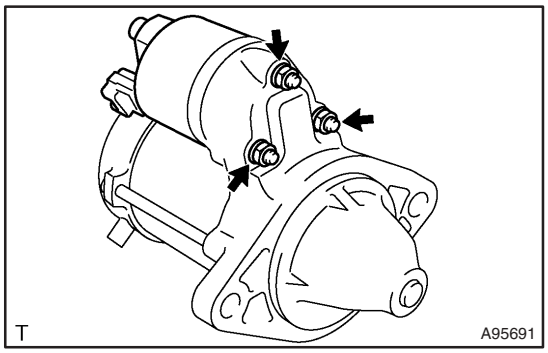

(b) Remove the 3 nuts from the magnet switch body while holding the starter magnetic switch.
(c) Remove the starter magnetic switch.
(d) Remove the return spring.

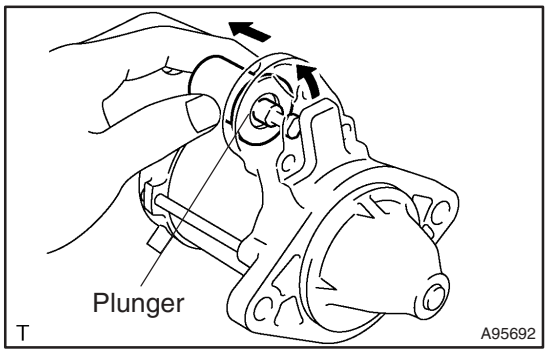

(e) Pull up the housing side of the plunger, then remove the plunger.

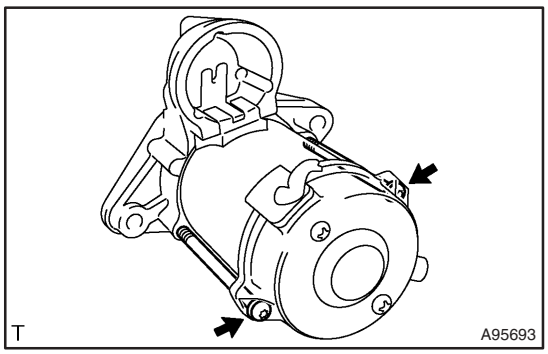

2. REMOVE STARTER YOKE ASSY

(a) Using a torx driver T25, remove the 2 through bolts.

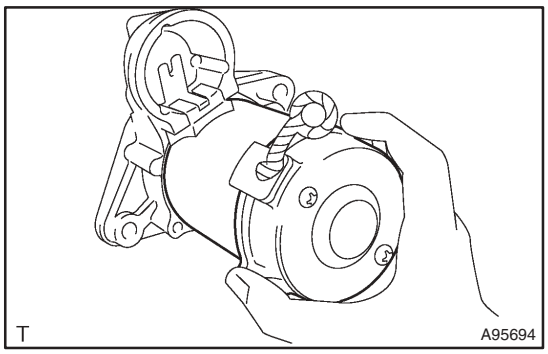

(b) Pull out the starter yoke together with the starter commutator end frame.

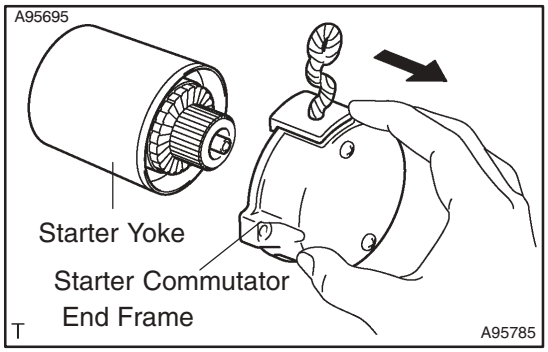

(c) Pull out the starter yoke from the starter commutator end frame.

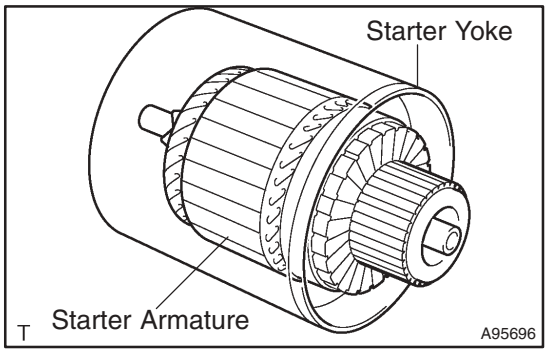

3. REMOVE STARTER ARMATURE ASSY

(a) Remove the starter armature assembly from the starter yoke assembly.

4. REMOVE STARTER ARMATURE PLATE

(a) Remove the armature plate from the magnet switch body or the starter yoke.

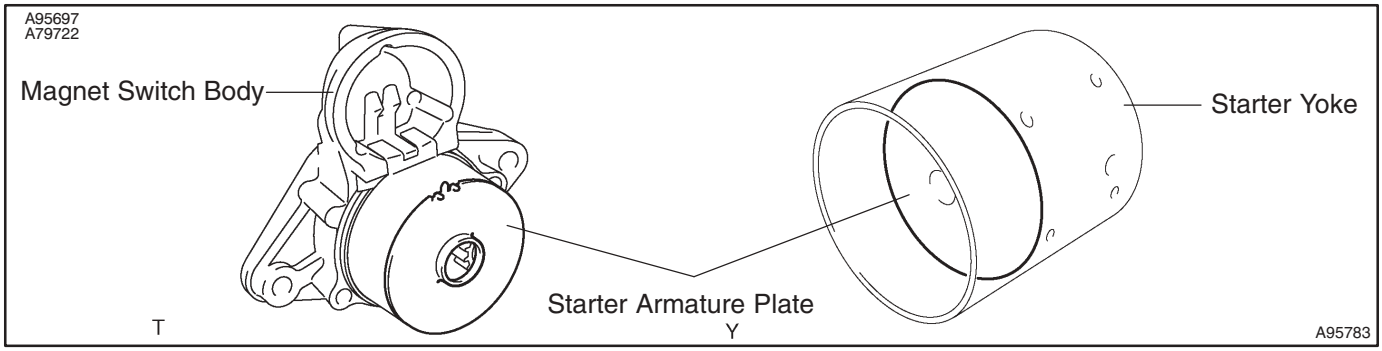

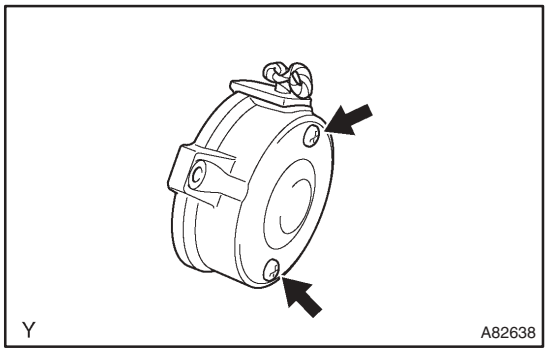

5. REMOVE STARTER BRUSH HOLDER ASSY

(a) Remove the 2 screws from the commutator end frame.

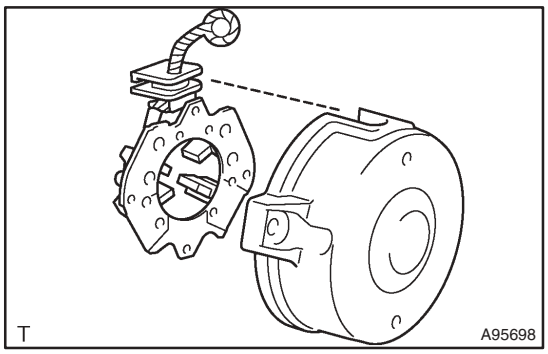

(b) Remove the claw of the clamp, then remove the brush holder from the commutator end frame.

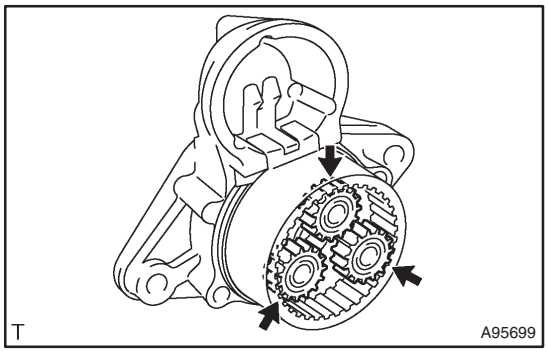

6. REMOVE PLANETARY GEAR

(a) Remove the 3 planetary gears from the magnet switch body.

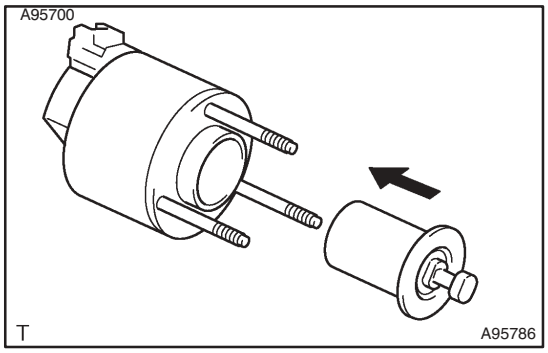

7. INSPECT STARTER MAGNETIC SWITCH ASSY

(a) Check the plunger.

(1) Install the plunger onto the switch body.

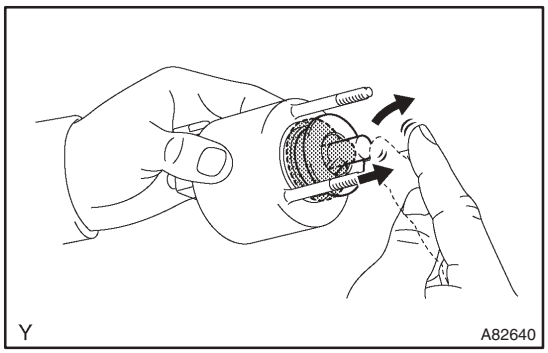

(2) Push in the plunger, then check that it returns quickly to its original position.

If necessary, replace the starter magnetic switch.

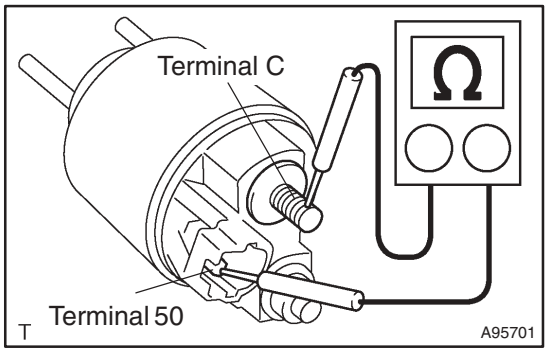

(b) Check the pull–in coil for open circuit.

(1) Using an ohmmeter, measure the resistance between terminals 50 and C.

Standard: Below 1 Ω

If the standard is not met, replace the starter magnetic switch.

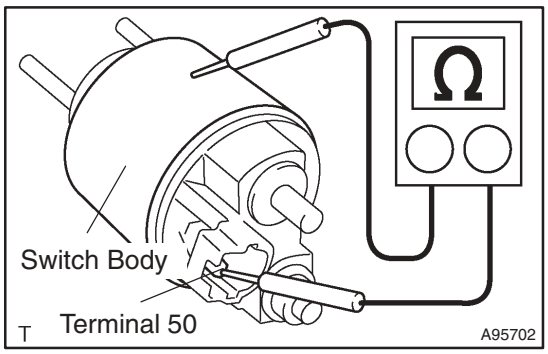

(c) Check if the hold–in coil has an open circuit.
(1) Using an ohmmeter, measure the resistance between terminal 50 and the switch body.
Standard: Below 1.5 Ω

If the standard is not met, replace the starter magnetic switch.

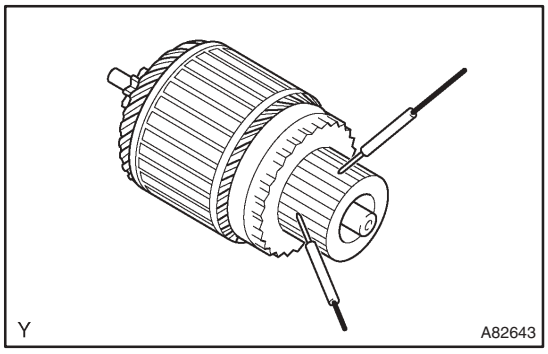

8. INSPECT STARTER ARMATURE ASSY

(a) Check the commutator for open circuit.
(1) Using an ohmmeter, measure the resistance between the segments of the commutator.
Standard: Below 1 Ω

If the standard is not met, replace the starter armature.

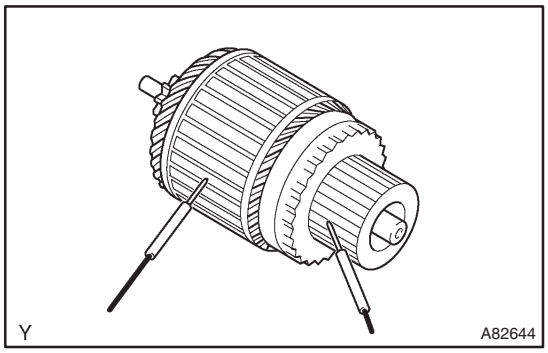

(b) Check the commutator for ground.
(1) Using an ohmmeter, measure the resistance between the commutator and the armature coil.
Standard: 10 kΩ or higher

If the standard is not met, replace the starter armature.

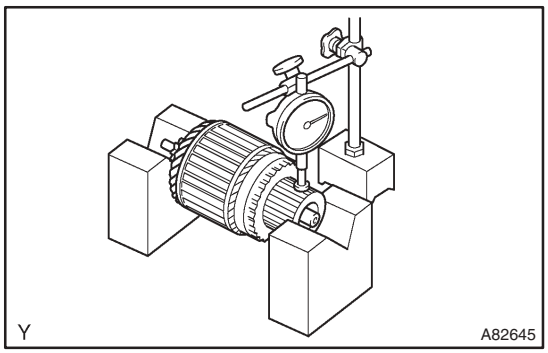

(c) Check the appearance.

If the surface is dirty or burnt, smooth the surface with 400–grit sandpaper.

(d) Check for the commutator circuit runout.
(1) Place the commutator on V–blocks.
(2) Using a dial indicator, measure the circle runout.
Standard runout: 0.02 mm (0.0008 in.)
Maximum runout: 0.05 mm (0.0020 in.)

If the runout is greater than maximum, replace the armature.

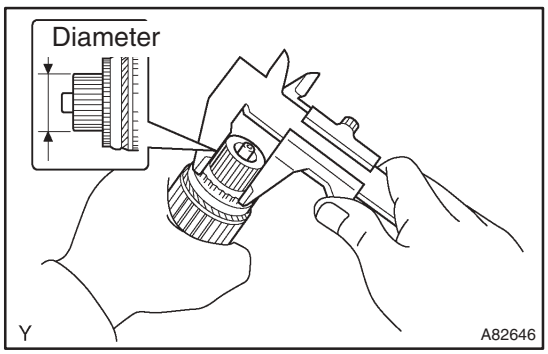

(e) Using vernier calipers, measure the commutator diameter.
Standard diameter: 29 mm (1.142 in.)
Minimum diameter: 28 mm (1.102 in.)

If the diameter is less than minimum, replace the armature.

9. INSPECT STARTER BRUSH HOLDER ASSY

(a) Remove the claw of the spring, then remove the 4 brushes.

(b) Using vernier calipers, measure the brush length.

Standard length: 15.5 mm (0.610 in.)

Minimum length: 9.0 mm (0.354 in.)

If the length is less than minimum, replace the starter brush holder assembly.

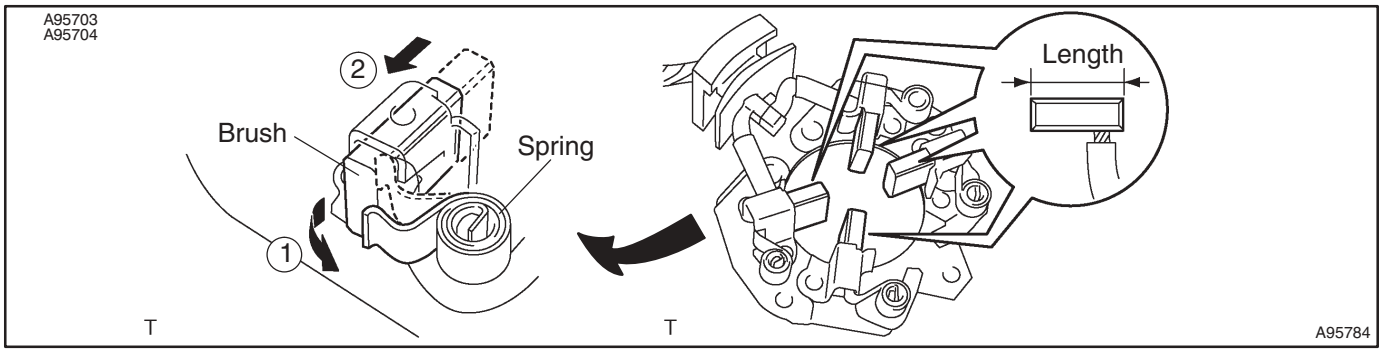

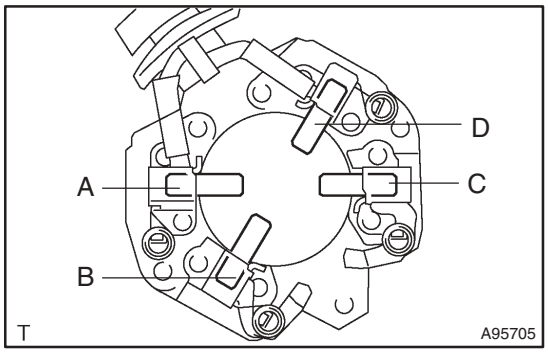

(c) Check the brush holder.

(1) Using an ohmmeter, measure the resistance between the brushes.

Standard:

Tester Connection	Specified Condition
A – B	10 kΩ or higher
A – C	10 kΩ or higher
A – D	Below 1 Ω
B – C	Below 1 Ω
B – D	10 kΩ or higher
C – D	10 kΩ or higher

If the standard is not met, replace the starter brush holder.

10. INSPECT MAGNET SWITCH BODY

(a) Check the starter clutch.
  (1) Hold the planetary shaft so that it may not rotate.
  (2) Rotate the clutch pinion gear clockwise and check that it turns freely. Try to rotate the clutch pinion gear counterclockwise and check that it locks.

If necessary, replace the magnet switch body.

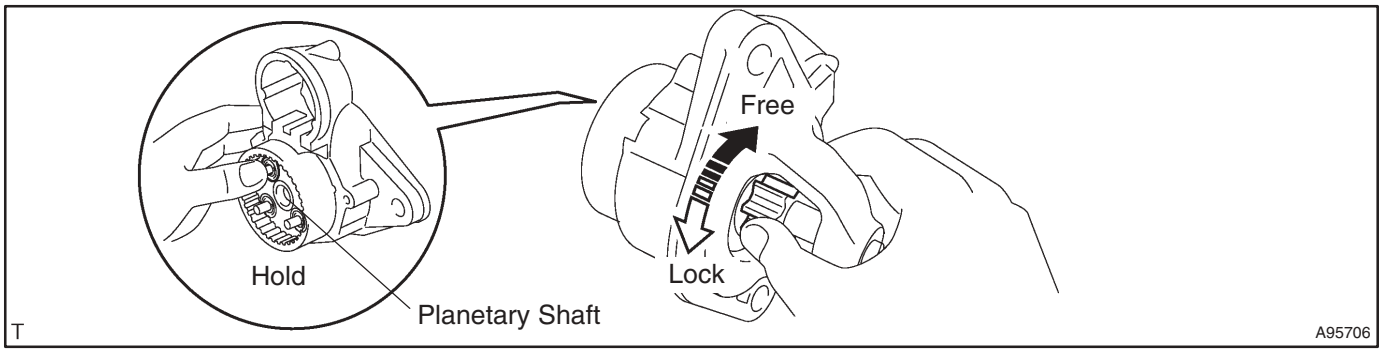

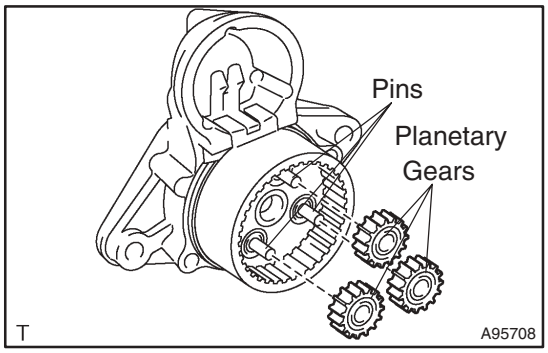

11. INSTALL PLANETARY GEAR

(a) Apply grease to the planetary gears and pin parts of the planetary shaft.
(b) Install the 3 planetary gears.

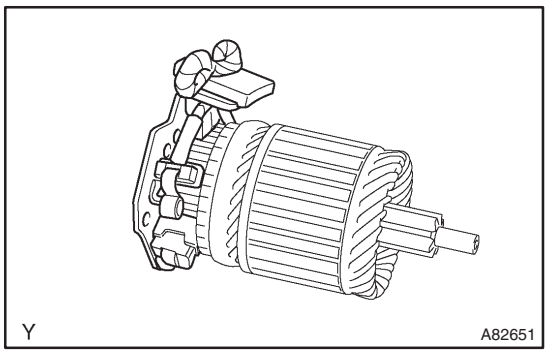

12. INSTALL STARTER BRUSH HOLDER ASSY

(a) Install the brush holder onto the starter armature assy.

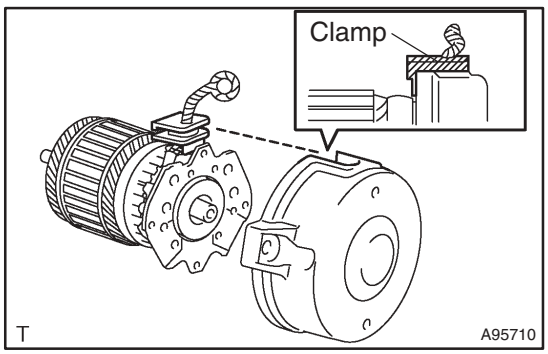

13. INSTALL STARTER COMMUTATOR END FRAME ASSY

(a) Fit the clamp of the brush holder into the starter commutator end frame.

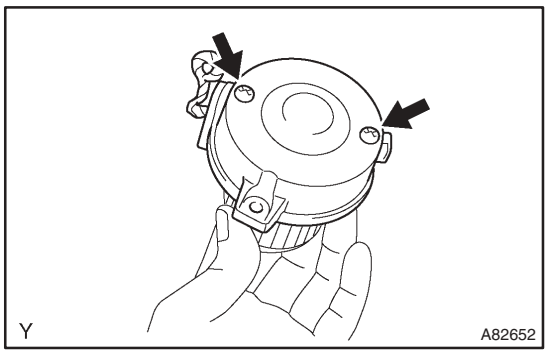

(b) Install the commutator end frame with the 2 screws.

14. INSTALL STARTER ARMATURE ASSY

(a) Align the rubber with the convex cutout of the starter yoke.

(b) Install starter armature with the brush holder onto the starter yoke.

HINT:

Support the starter armature so that it may not be pulled out from the starter brush holder by magnetic force of the starter yoke.

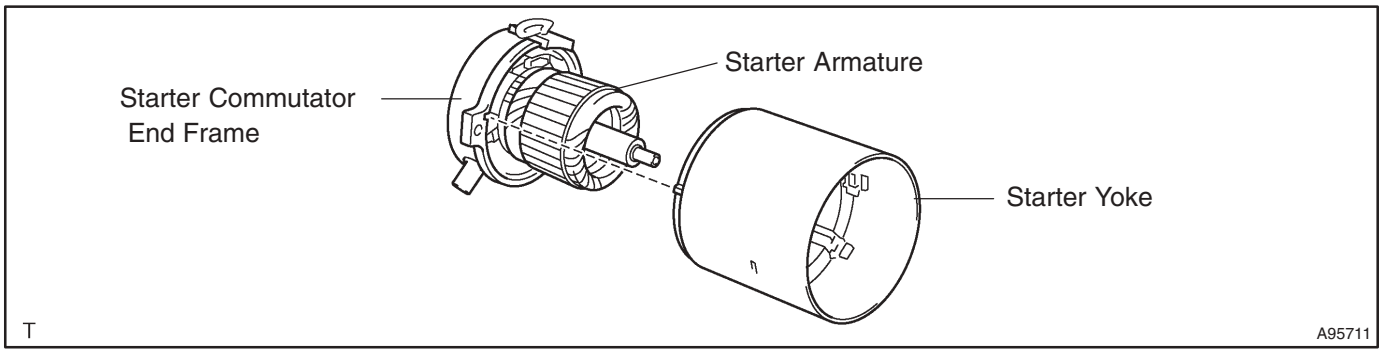

15. INSTALL STARTER ARMATURE PLATE

(a) Insert the starter armature plate onto the starter yoke.

(b) Align the keyway of the starter plate with the key inside the starter yoke, then install the starter plate.

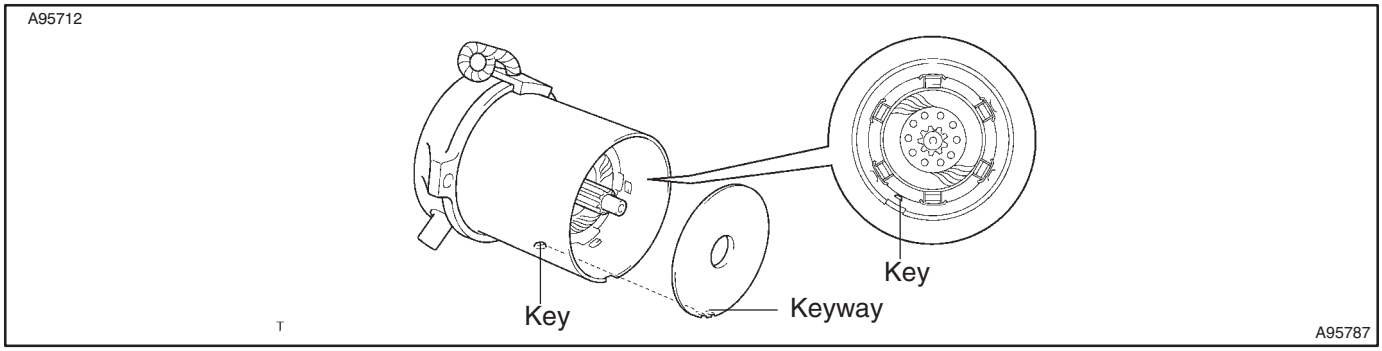

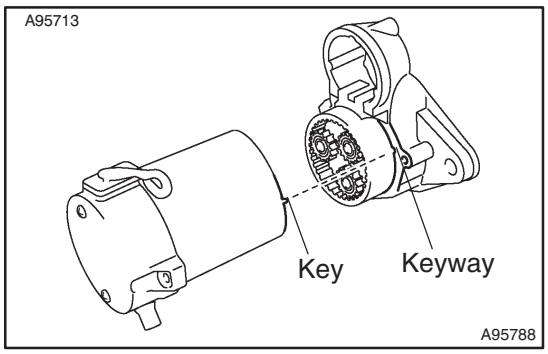

16. INSTALL STARTER YOKE ASSY

(a) Align the key of the starter yoke with the keyway located on the magnet switch body.

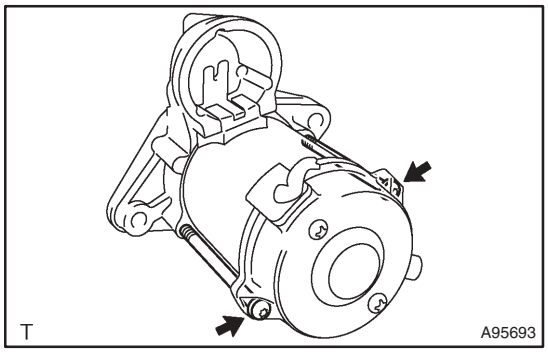

(b) Using a torx driver T25, install the starter yoke using the 2 through bolts.
Torque: 6.0 N·m (61 kgf·cm, 53 in.·lbf)

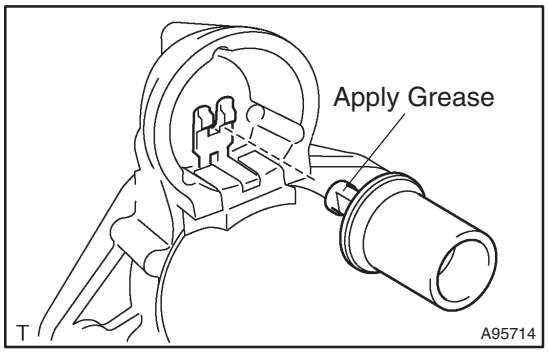

17. INSTALL STARTER MAGNETIC SWITCH ASSY

(a) Apply grease to the hook.

(b) Connect the plunger and hook of the starter housing to the drive lever.

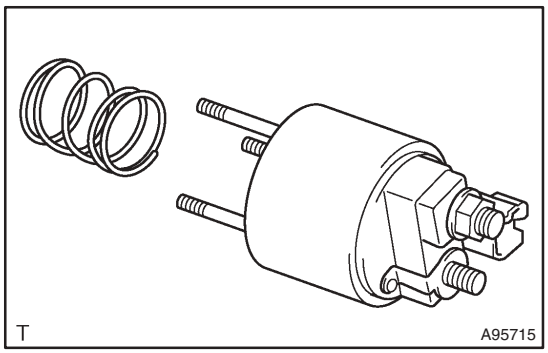

(c) Install the plunger and return spring.

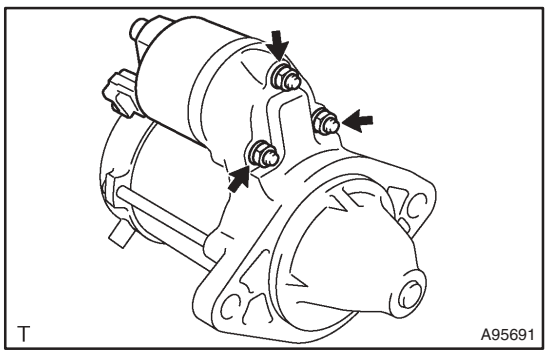

(d) Install the starter magnetic switch with the 3 nuts.
Torque: 2.3 N·m (24 kgf·cm, 21 in.·lbf)

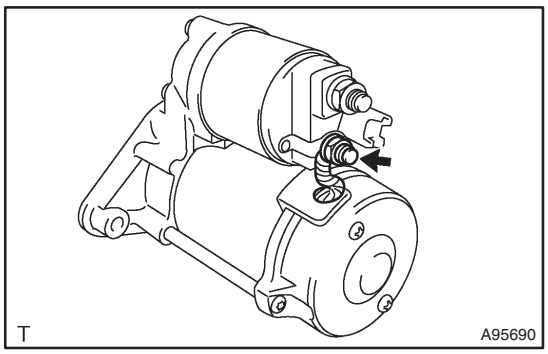

(e) Connect the lead wire to the starter magnetic switch, then fasten it with the nut.
Torque: 5.9 N·m (60 kgf·cm, 52 in.·lbf)

GENERATOR ASSY (DENSO MADE) (1ZZ–FE/3ZZ–FE)

190ZR–01

COMPONENTS

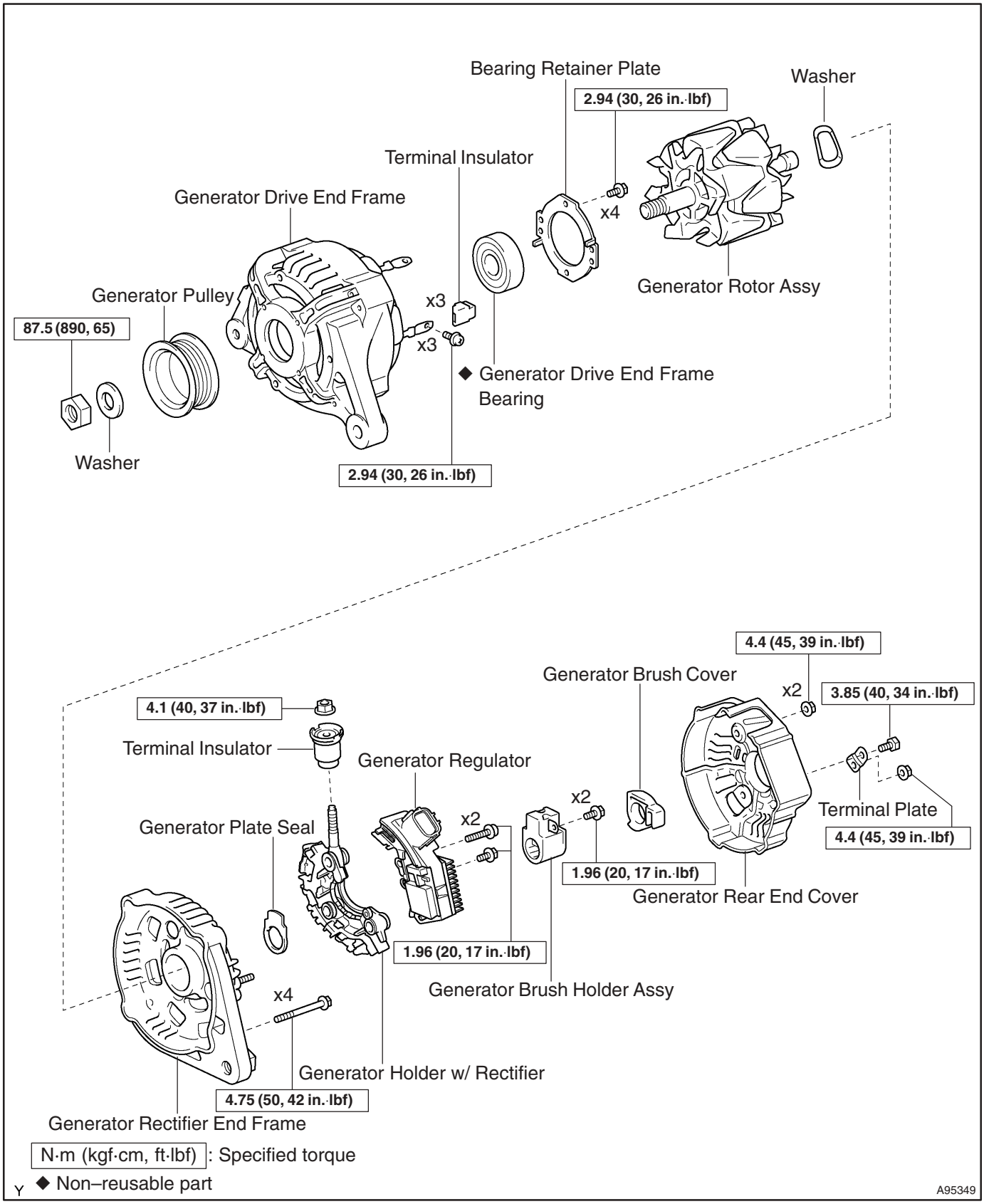

190ZS–01

OVERHAUL

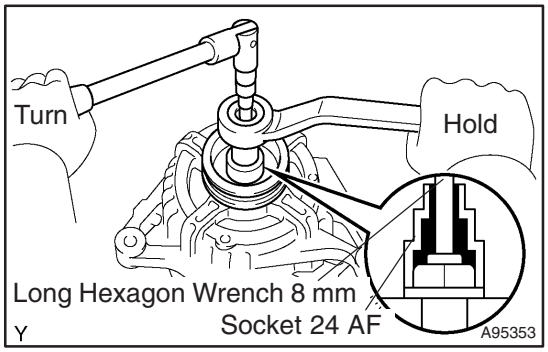

1. REMOVE GENERATOR PULLEY

(a) Using a socket 24 AF and long hexagon wrench 8 mm, remove the nut, then remove the washer and generator pulley.

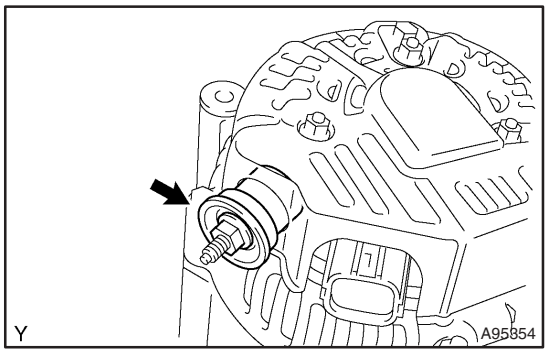

2. REMOVE TERMINAL INSULATOR

(a) Remove the nut, then remove the terminal insulator.

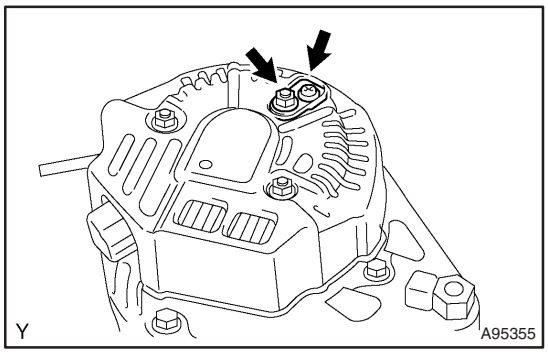

3. REMOVE TERMINAL PLATE

(a) Remove the screw and nut, then remove the terminal plate.

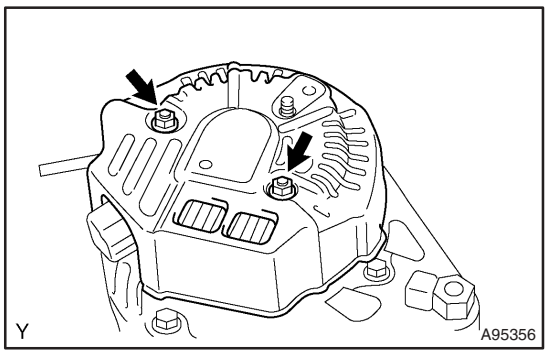

4. REMOVE GENERATOR REAR END COVER

(a) Remove the 2 nuts, then remove the generator rear end cover.

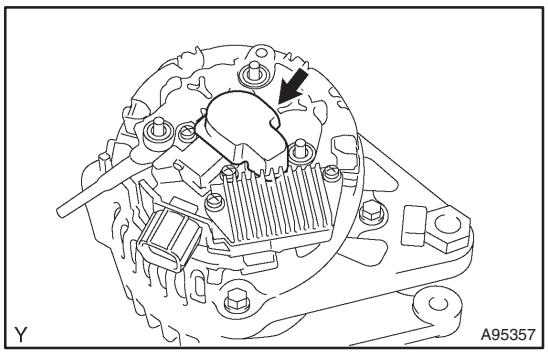

5. REMOVE GENERATOR BRUSH COVER

(a) Remove the generator brush cover from the generator brush holder.

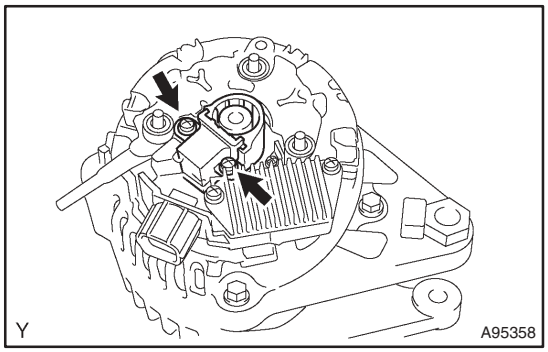

6. REMOVE GENERATOR BRUSH HOLDER ASSY

(a) Remove the 2 screws, then remove the generator brush holder.

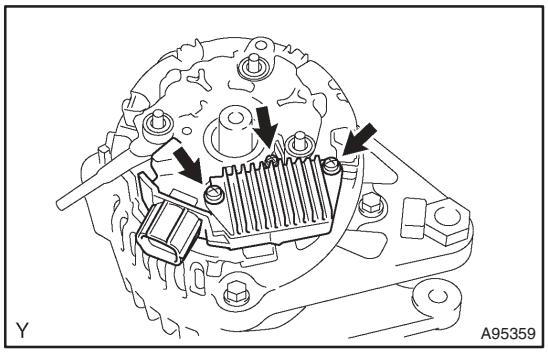

7. REMOVE GENERATOR REGULATOR ASSY

(a) Remove the 3 screws, then remove the generator regulator.

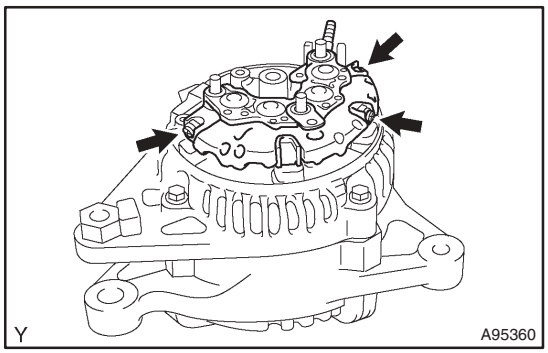

8. REMOVE GENERATOR HOLDER W/ RECTIFIER

(a) Remove the 3 screws, then remove the generator holder with rectifier.

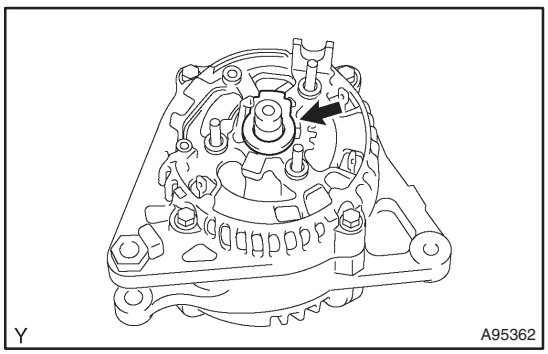

9. REMOVE GENERATOR PLATE SEAL

(a) Remove the generator plate seal from the generator rectifier end frame.

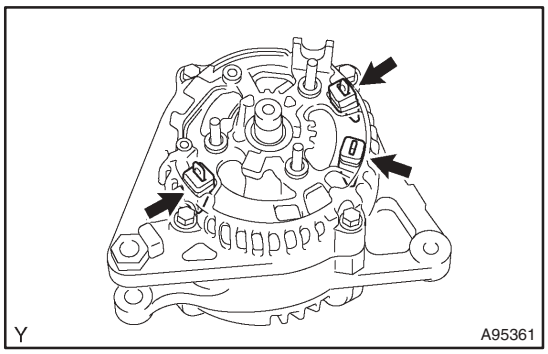

10. REMOVE GENERATOR ROTOR ASSY

(a) Remove the 3 terminal insulators from the generator rectifier end frame.

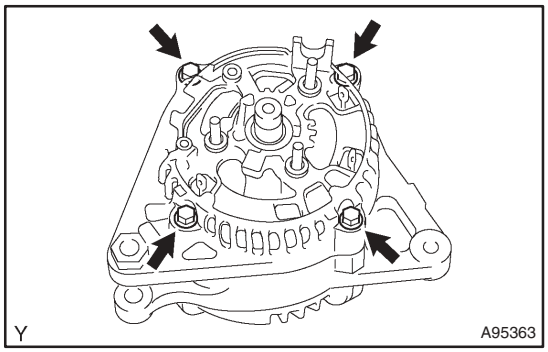

(b) Remove the 4 bolts.

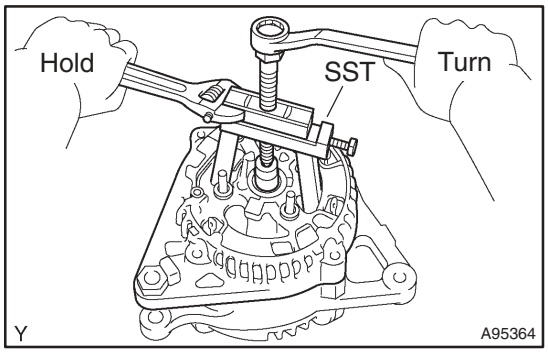

(c) Using SST, remove the rectifier end frame.
SST 09286–46011

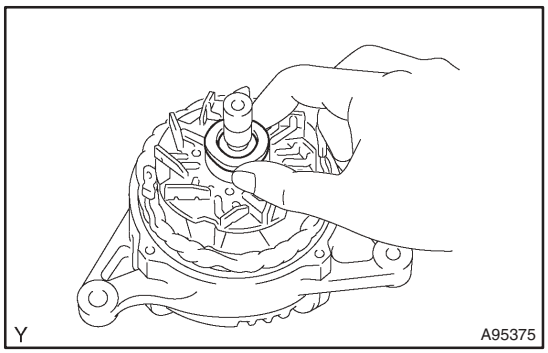

(d) Remove the washer from the generator rotor.

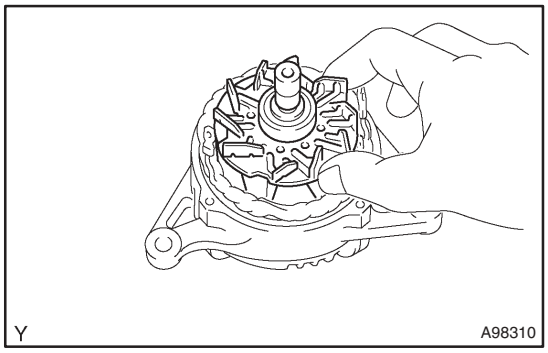

(e) Remove the generator rotor from the generator drive end frame.

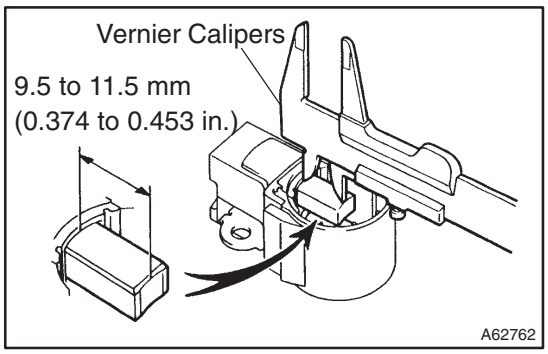

11. INSPECT GENERATOR BRUSH HOLDER ASSY

(a) Inspect the brush length.

(1) Using vernier calipers, measure the brush length.

Standard: 9.5 to 11.5 mm (0.374 to 0.453 in.)

Minimum: 4.5 mm (0.177 in.)

If the brush length is less than minimum, replace the generator brush holder.

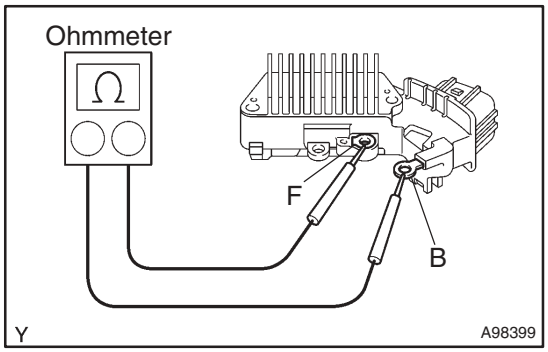

12. INSPECT GENERATOR REGULATOR ASSY

(a) Inspect the resistance.

(1) Using an ohmmeter, measure the resistance between terminals B and F.

Standard:

When the positive and negative poles of terminals F and B are switched over, there is a resistance of below 1 Ω in one direction but 10 kΩ or higher in the other direction.

If the result is not as specified, replace the generator regulator.

(2) Using an ohmmeter, measure the resistance between terminals E and F.

Standard:

When the positive and negative poles of terminals F and E are switched over, there is a resistance of below 1 Ω in one direction but 10 kΩ or higher in the other direction.

If the result is not as specified, replace the generator regulator.

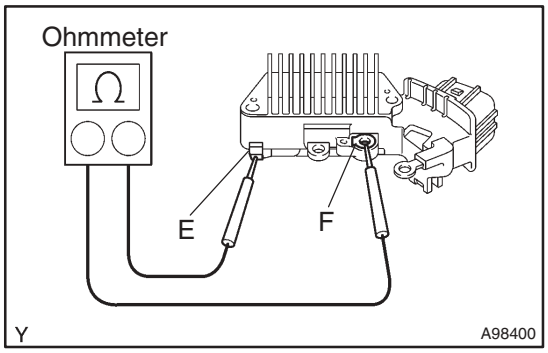

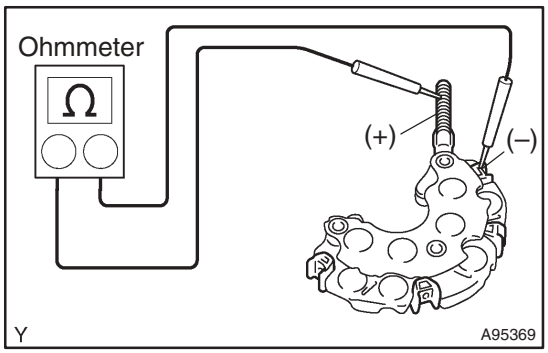

13. INSPECT GENERATOR HOLDER W/ RECTIFIER

(a) Inspect the resistance.

(1) Using an ohmmeter, measure the resistance between the positive (+) terminal and each rectifire terminal.

Standard:

When the positive and negative poles of the positive (+) terminal and each rectifire terminal are switched over, there is a resistance of below 1 Ω in one direction but 10 kΩ or higher in the other direction.

If the result is not as specified, replace the generator holder with rectifier.

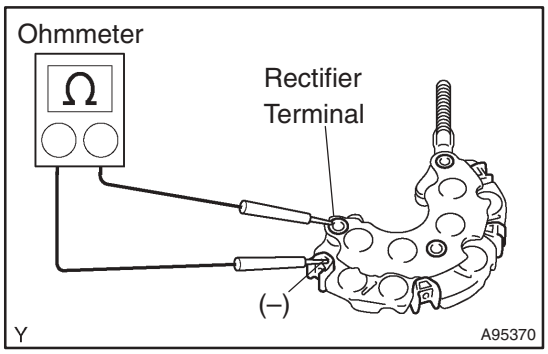

(2) Using an ohmmeter, measure the resistance between the negative (–) terminal and each rectifier terminal.

Standard:

When the positive and negative poles of the negative (–) terminal and each rectifire terminal are switched over, there is a resistance of below 1 Ω in one direction but 10 kΩ or higher in the other direction.

If the result is not as specified, replace the generator holder with rectifier.

14. INSPECT GENERATOR ROTOR ASSY

(a) Inspect the resistance.

(1) Using an ohmmeter, measure the resistance between the slip rings.

Standard: 2.55 to 2.95 Ω at 20°C (68°F)

If the result is not as specified, replace the generator rotor shaft.

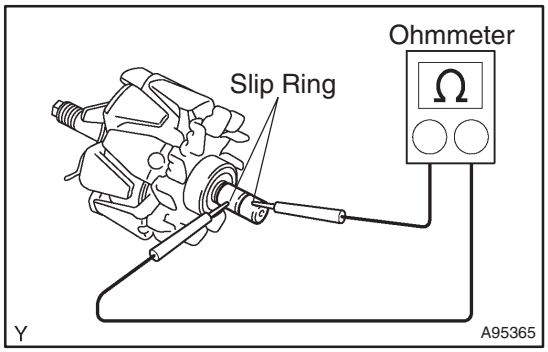

(2) Using an ohmmeter, measure the resistance between the slip ring and rotor.

Standard: 10 kΩ or higher

If the result is not as specified, replace the generator rotor shaft.

(b) Check the appearance.

(1) Check that the slip rings are not rough or scored.

If rough or scored, replace the generator rotor.

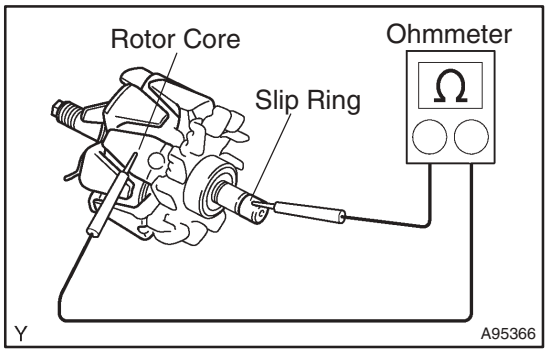

(c) Inspect the slip ring diameter.

(1) Using vernier calipers, measure the slip ring diameter.

Standard: 14.2 to 14.4 mm (0.559 to 0.567 in.)

Minimum: 14 mm (0.551 in.)

If the slip ring diameter is less than minimum, replace the generator rotor.

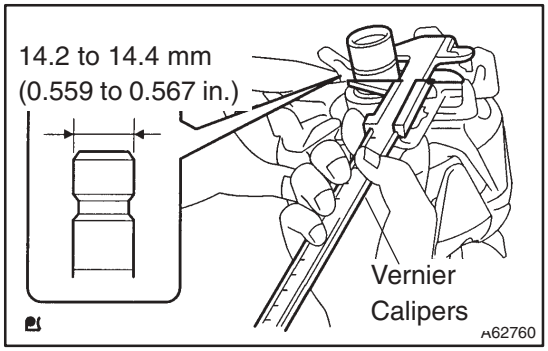

15. INSPECT GENERATOR DRIVE END FRAME

(a) Inspect the resistance.

(1) Using an ohmmeter, measure the resistance between the coil wires.

Standard: Below 1 Ω

If the result is not as specified, replace the generator drive end frame.

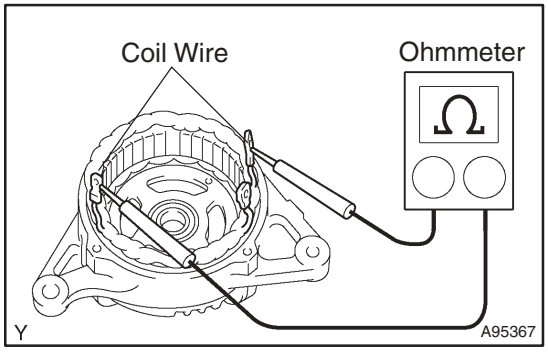

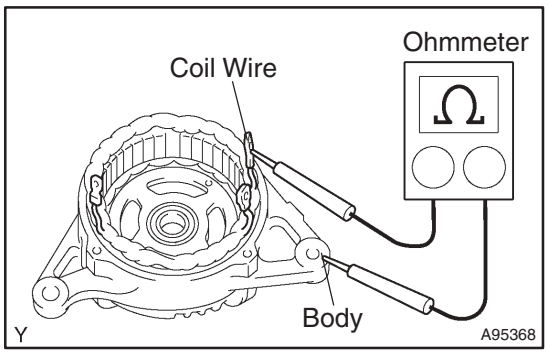

(2) Using an ohmmeter, measure the resistance between the coil wire and body.

Standard: 10 kΩ or higher

If the result is not as specified, replace the generator drive end frame.

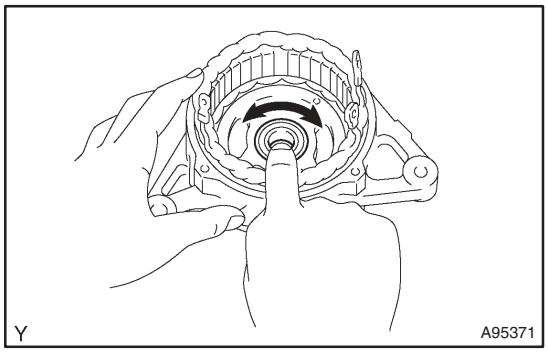

16. INSPECT GENERATOR DRIVE END FRAME BEARING

(a) Check the appearance.

(1) Check that the bearing is not rough or worn.

If necessary, replace the bearing.

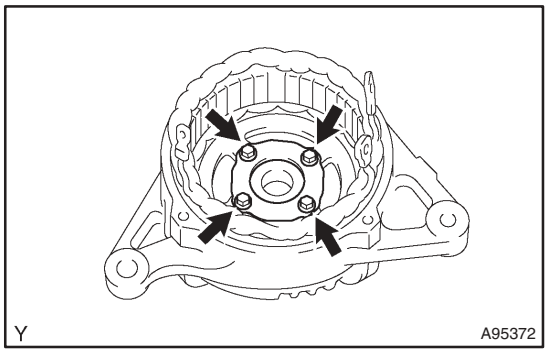

(b) Replace the generator drive end frame bearing.

(1) Remove the 4 screws, then remove the bearing retainer plate.

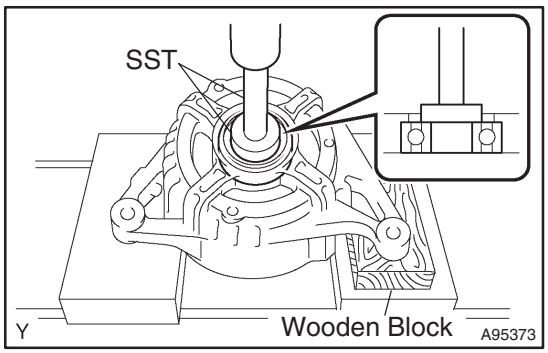

(2) Using SST and a press, push out the bearing,

SST 09950–60010 (09951–00250), 09950–70010 (09951–07100)

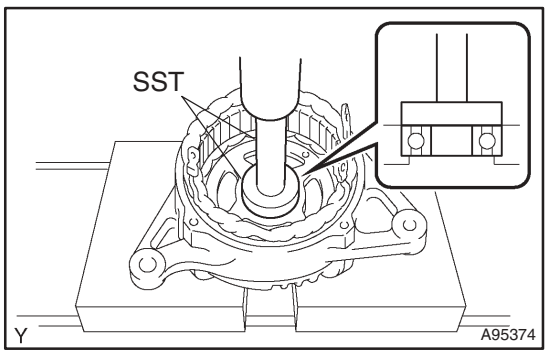

(3) Using SST and a press, press a new bearing into the generator drive end frame.

SST 09950–60010 (09951–00470), 09950–70010 (09951–07100)

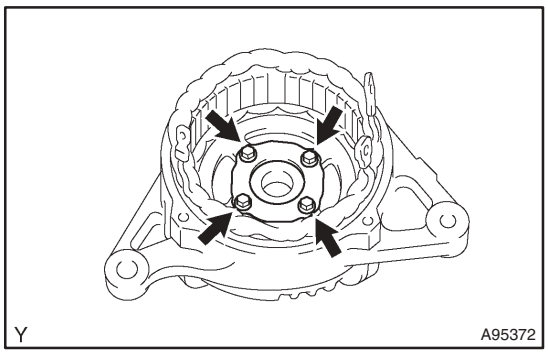

(4) Install the bearing retainer plate with the 4 screws.
Torque: 2.94 N·m (30 kgf·cm, 26 in.·lbf)

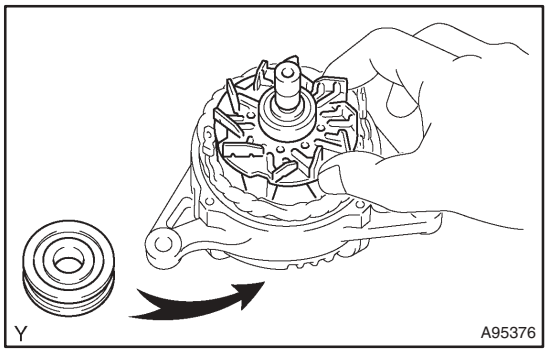

17. INSTALL GENERATOR ROTOR ASSY

(a) Place the generator drive end frame on the generator pulley.

(b) Install the generator rotor onto the generator drive end frame.

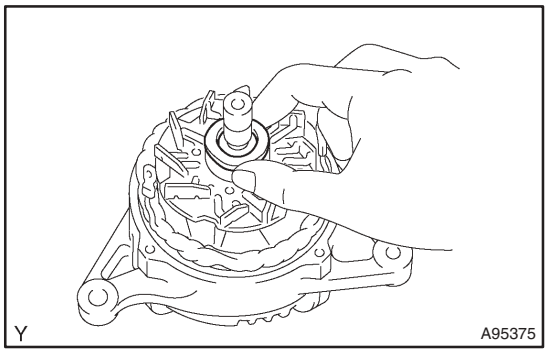

(c) Install the washer onto the generator rotor.

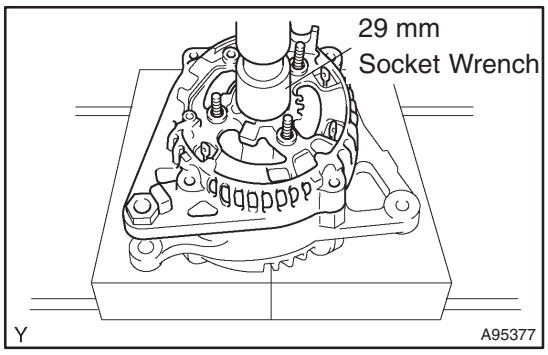

(d) Using a 29 mm socket wrench and press, slowly press the generator rectifier end frame onto the generator drive end frame.

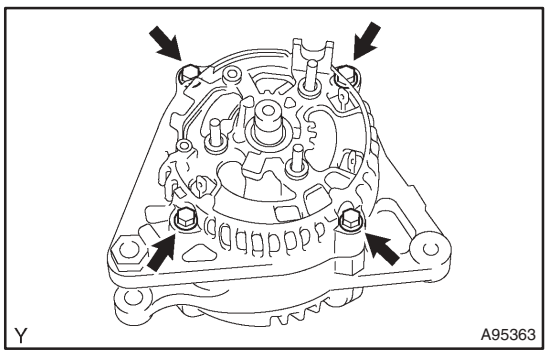

(e) Tighten the 4 bolts.
Torque: 4.75 N·m (50 kgf·cm, 42 in.·lbf)

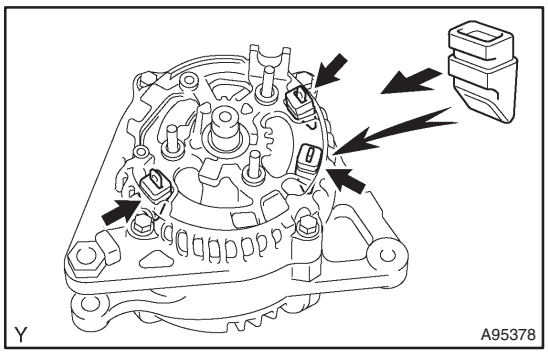

(f) Install the 3 terminal insulators onto the generator rectifier end frame.

NOTICE:

Be careful of the installation direction of the terminal insulators.

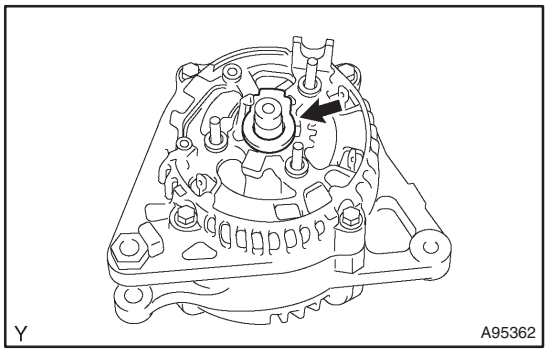

18. INSTALL GENERATOR PLATE SEAL

(a) Install the generator plate seal onto the generator rectifier end frame.

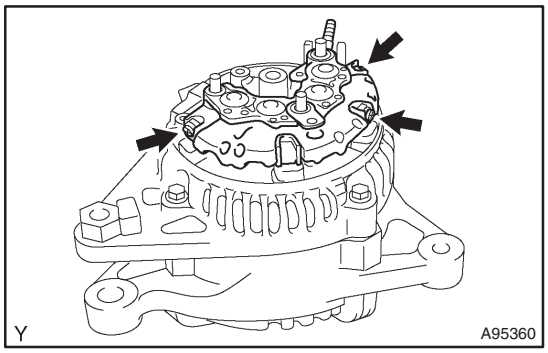

19. INSTALL GENERATOR HOLDER W/ RECTIFIER

(a) Install the generator holder with rectifier with the 3 screws.
Torque: 2.94 N·m (30 kgf·cm, 26 in.·lbf)

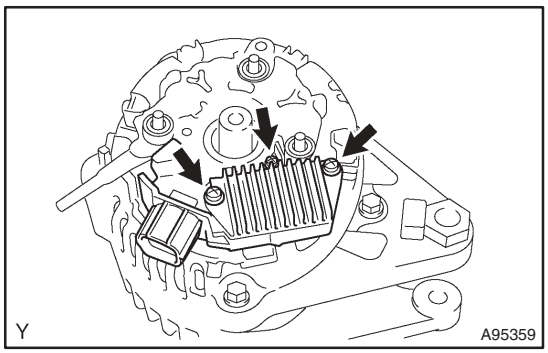

20. INSTALL GENERATOR REGULATOR ASSY

(a) Install the generator regulator with the 3 screws.
Torque: 1.96 N·m (20 kgf·cm, 17 in.·lbf)

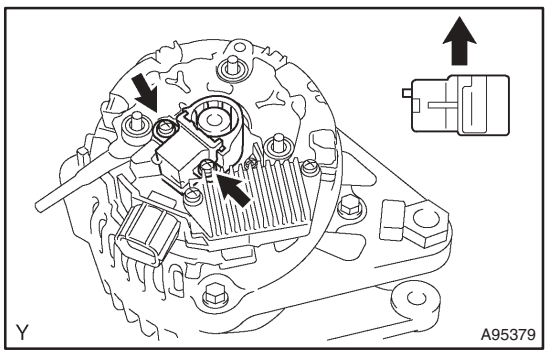

21. INSTALL GENERATOR BRUSH HOLDER ASSY

(a) Install the generator brush holder with the 2 screws.
Torque: 1.96 N·m (20 kgf·cm, 17 in.·lbf)

NOTICE:

Pay attention to the position of the protrusion as shown in the illustration.

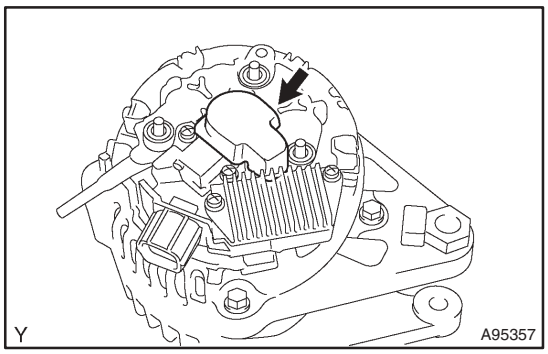

22. INSTALL GENERATOR BRUSH COVER

(a) Install the generator brush cover onto the generator brush holder.

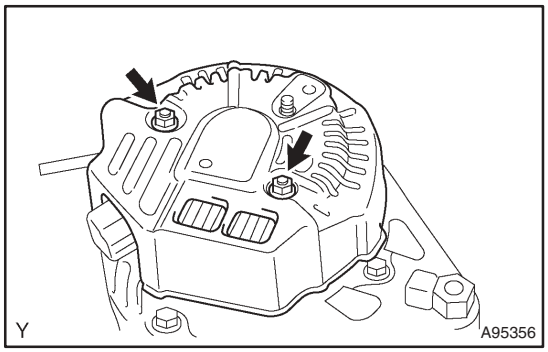

23. INSTALL GENERATOR REAR END COVER

(a) Install the generator rear end frame cover with the 2 nuts.
Torque: 4.4 N·m (45 kgf·cm, 39 in.·lbf)

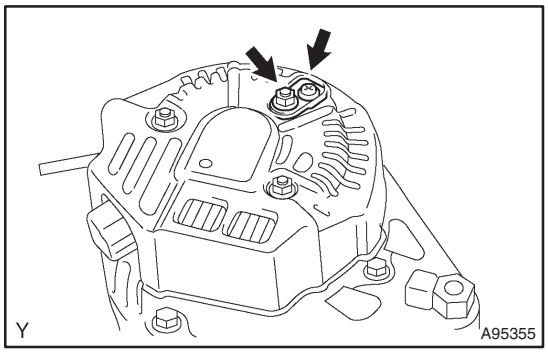

24. INSTALL TERMINAL PLATE

(a) Install the terminal plate with the screw and nut.
Torque:
3.85 N·m (40 kgf·cm, 34 in.·lbf) for screw
4.4 N·m (45 kgf·cm, 39 in.·lbf) for nut

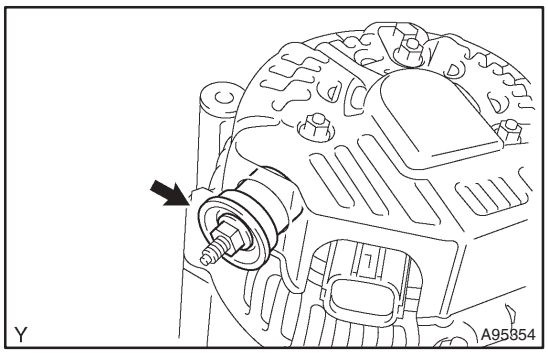

25. INSTALL TERMINAL INSULATOR

(a) Install the terminal insulator with the nut.
Torque: 4.1 N·m (40 kgf·cm, 37 in.·lbf)

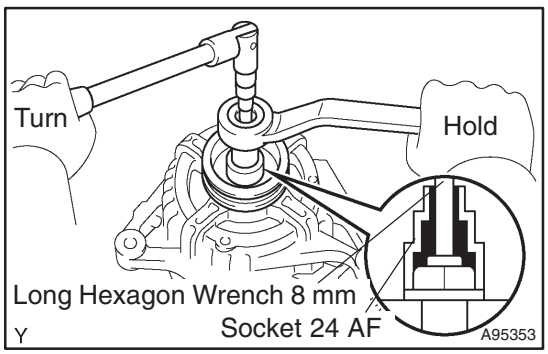

26. INSTALL GENERATOR PULLEY

(a) Using a socket 24 AF and long hexagon wrench 8 mm, remove the nut, then remove the washer and generator pulley.
Torque: 87.5 N·m (890 kgf·cm, 65 ft·lbf)

(b) Rotate the generator pulley, then check that the generator pulley moves smoothly.

GENERATOR ASSY (BOSCH MADE)(1ZZ–FE/3ZZ–FE)

COMPONENTS

190OJ–03

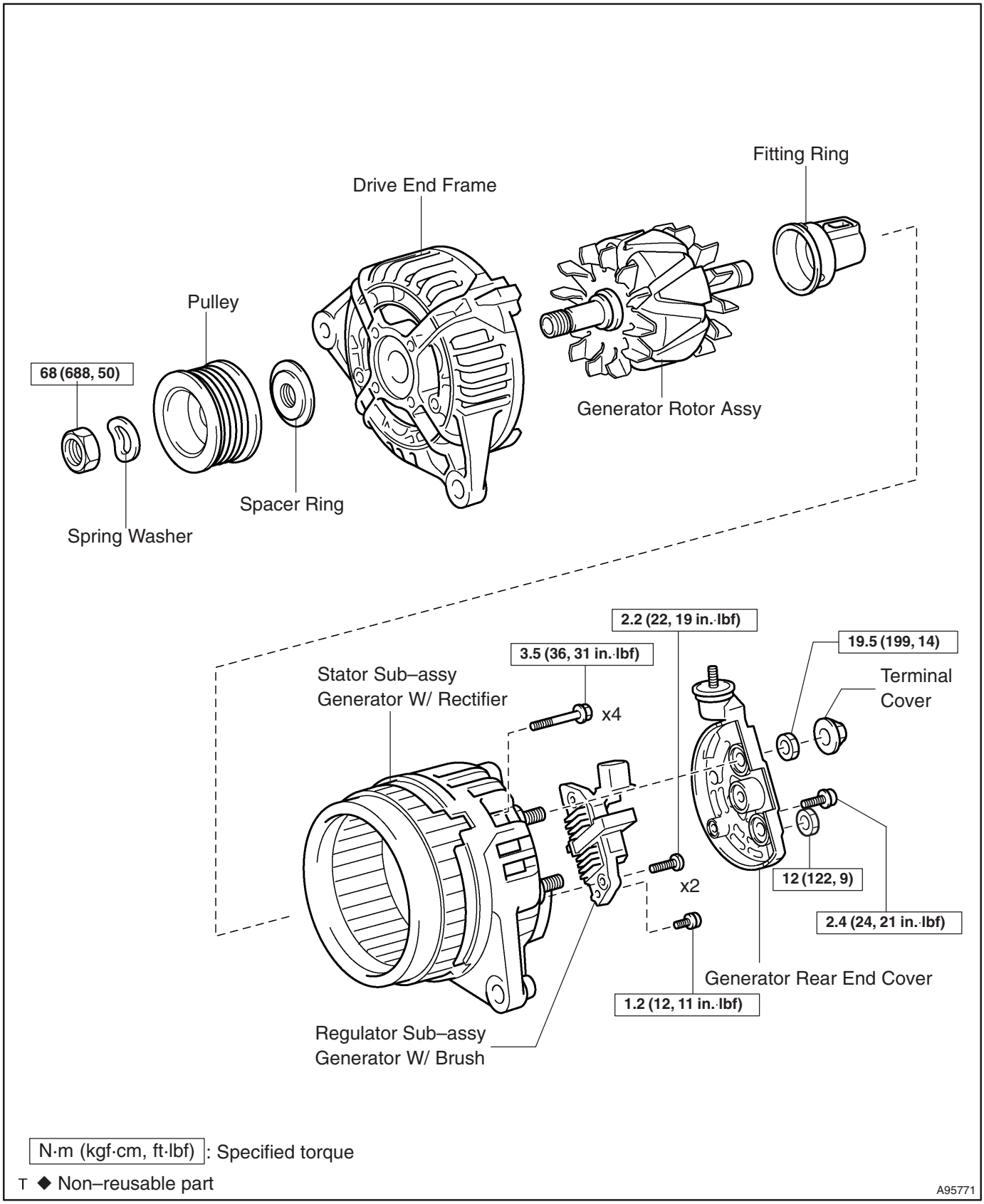

N·m (kgf·cm, ft·lbf) : Specified torque

T ◆ Non–reusable part

A95771

OVERHAUL

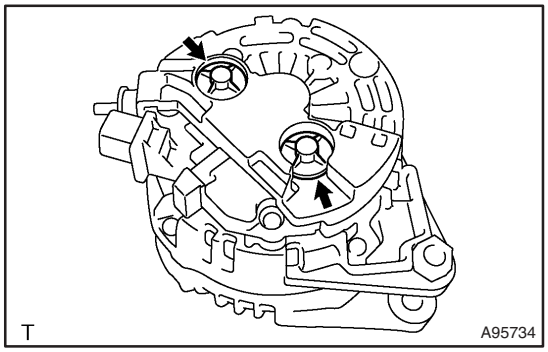

190YJ–01

1. REMOVE GENERATOR REAR END COVER

(a) Remove the 2 terminal covers by turning them counterclockwise.

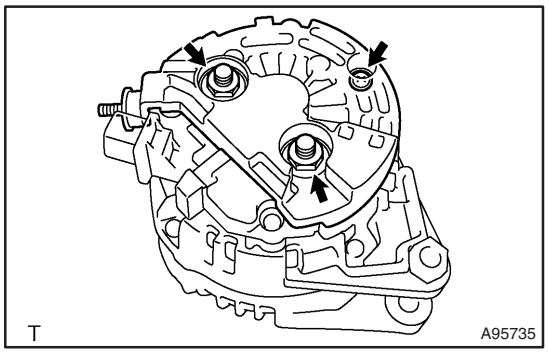

(b) Using a 15 mm socket wrench, remove the screw and 2 nuts, then detach the generator rear end cover.

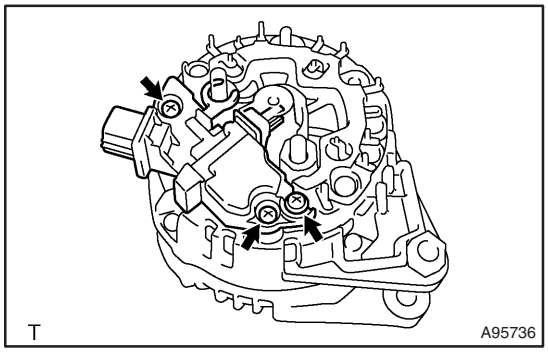

2. REMOVE REGULATOR SUB–ASSY GENERATOR W/BRUSH

(a) Remove the 3 screws and regulator generator with brush.

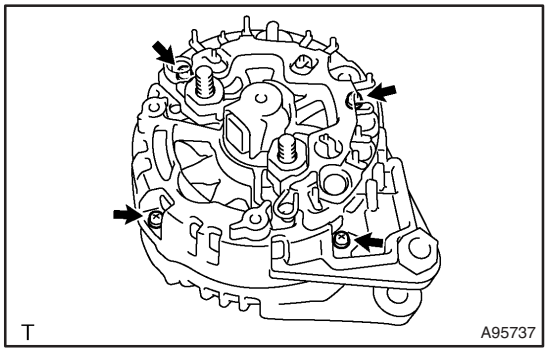

3. REMOVE STATOR SUB–ASSY GENERATOR W/RECTIFIER

(a) Remove the 4 screws.

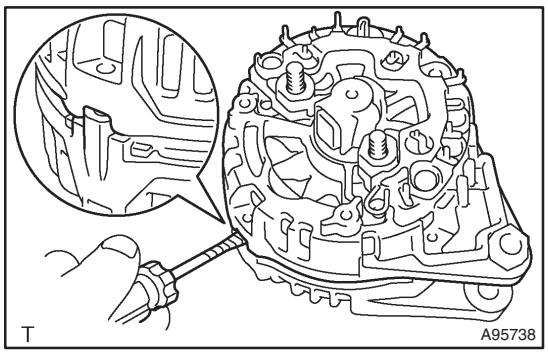

(b) Using a screwdriver, pry out the stator generator with rectifier.

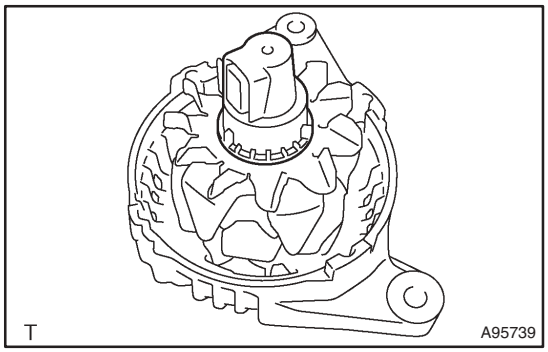

4. REMOVE BEARING SET GENERATOR

5. REMOVE PULLEY SET GENERATOR

(a) Clamp the swivel arm in a vise.

NOTICE:

Do not clamp the generator rotor in a vise.

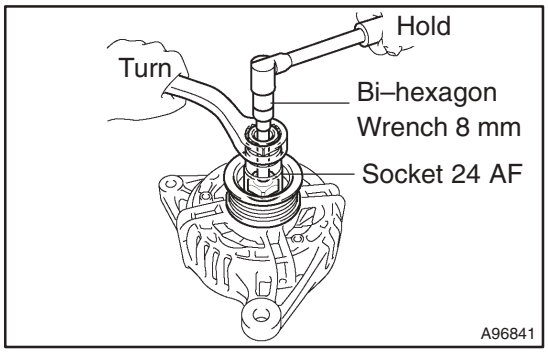

(b) Using a socket 24 AF and bi–hexagon wrench 8 mm, remove the nut and spring washer, then detach the pulley.

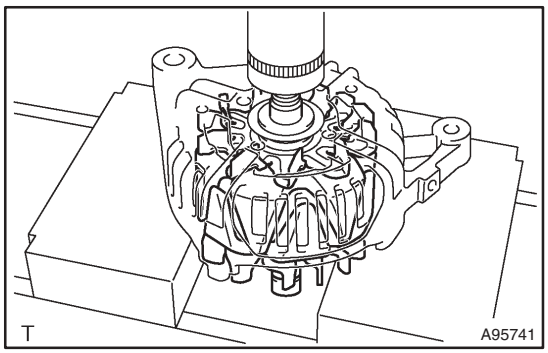

6. REMOVE GENERATOR ROTOR ASSY

(a) Using a press, press out the generator rotor assembly and spacer ring.

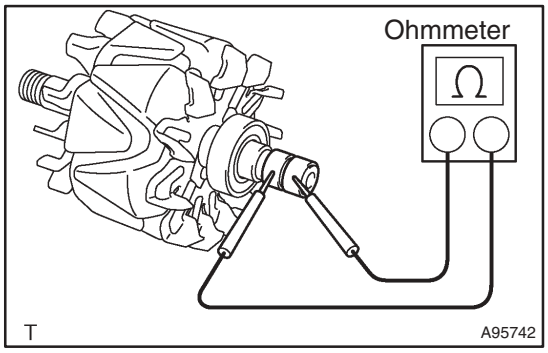

7. INSPECT GENERATOR ROTOR ASSY

(a) Inspect the generator rotor assy for open circuit.

(1) Using an ohmmeter, measure the resistance between the slip rings.

Standard: 2.27 to 2.53 Ω at 20°C (68°F)

If the standard is not met, replace the generator rotor.

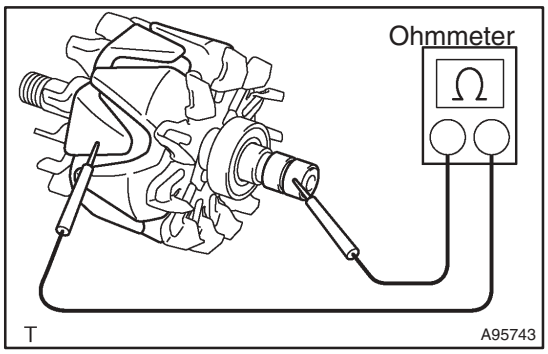

(b) Inspect the generator rotor assy for ground.

(1) Using an ohmmeter, measure the resistance between the slip ring and generator rotor assembly.

Standard: 10 kΩ or higher

If the standard is not met, replace the generator rotor.

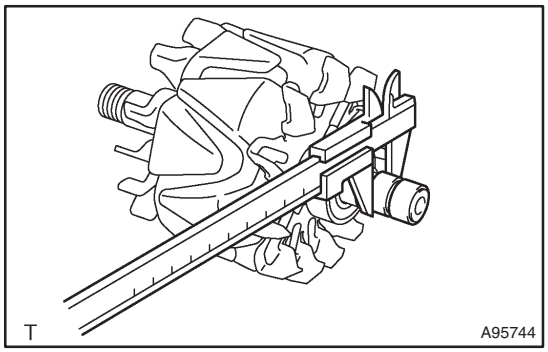

(c) Check the appearance.

(1) Check that the slip rings are not rough or scored.

If rough or scored, replace the generator rotor.

(2) Using vernier calipers, measure the slip ring diameter.

Standard diameter: 15.3 to 15.5 mm (0.602 to 0.610 in.)

Minimum diameter: 14.3 mm (0.561 in.)

If the diameter is less than minimum, replace the generator rotor.

8. INSPECT STATOR SUB–ASSY GENERATOR W/RECTIFIER

HINT:

According to the terminal position of the stator generator, refer to the illustration below.

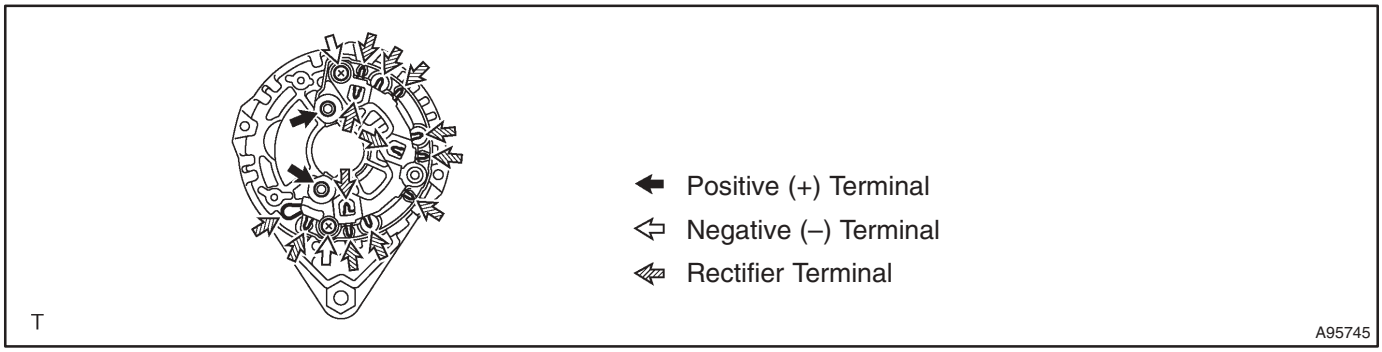

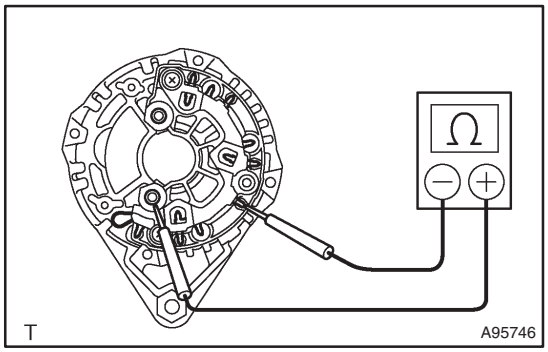

(a) Inspect the positive (+) rectifier.

HINT:

Inspect the positive terminal after pulling up.

(1) Using an ohmmeter, connect the positive (+) tester probe to the positive (+) terminal and the negative (–) tester probe to each rectifier terminal.

(2) Measure the resistance between the positive (+) terminal and rectifier terminal.

Standard: Below 1 Ω

If standard is not met, replace the stator generator.

(3) Reverse the polarity of the tester probes and repeat step (1).

(4) Measure the resistance between the positive (+) terminal and rectifier terminal.

Standard: 10 kΩ or higher

If the standard is not met, replace the stator generator.

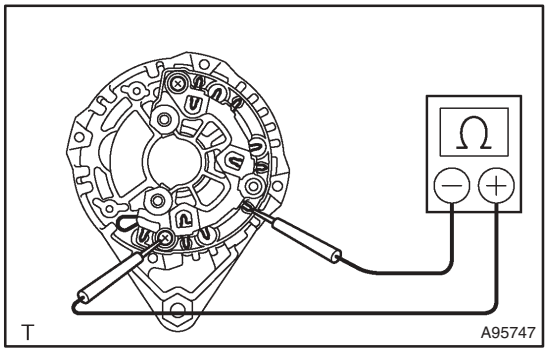

(b) Inspect the negative (–) rectifier.

(1) Using an ohmmeter, connect the positive (+) tester probe to each negative (–) terminal and the negative (–) tester prove to each rectifier terminal.

(2) Measure the resistance between the negative (–) terminal and rectifier terminal.

Standard: 10 kΩ or higher

If the standard is not met, replace the stator generator.

(3) Reverse the polarity of the tester probes and repeat step (1).

(4) Measure the resistance between the negative (–) terminal and rectifier terminal.

Standard: Below 1 Ω

If the standard is not met, replace the stator generator.

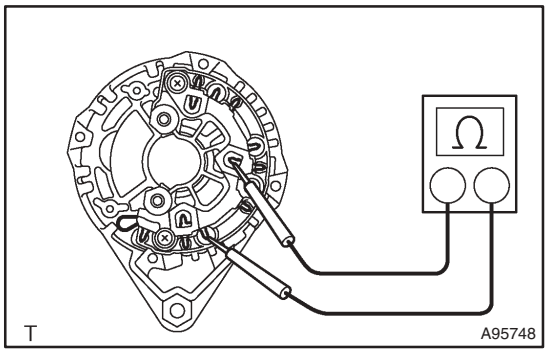

(c) Inspect the stator for open circuit.

(1) Using an ohmmeter, measure the resistance between the rectifier terminals.

Standard: Below 1 Ω

If the standard is not met, replace the stator generator.

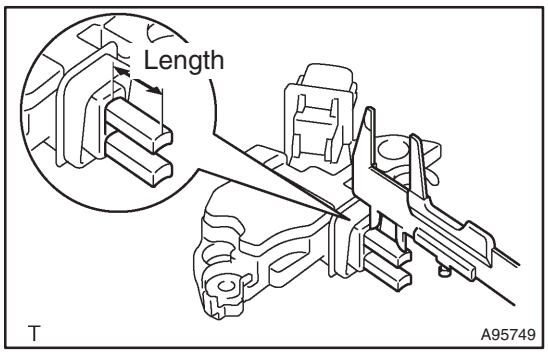

9. INSPECT BRUSH

(a) Using vernier calipers, measure the brush length.

Standard exposed length:
11.0 to 13.6 mm (0.433 to 0.535 in.)
Minimum exposed length: 1.5 mm (0.059 in.)

If the exposed length is less than minimum, replace the voltage regulator and brush assembly.

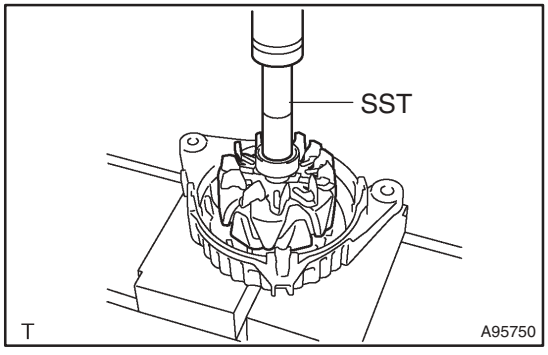

10. INSTALL GENERATOR ROTOR ASSY

(a) Using SST and a press, press in the generator rotor assembly.

SST 09285–76010

NOTICE:
Avoid misalignment during pressing

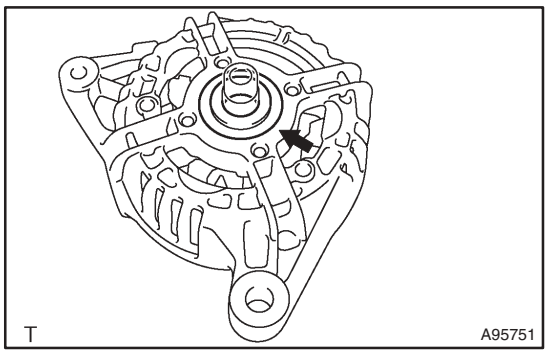

11. INSTALL PULLEY SET GENERATOR

(a) Install the spacer ring.

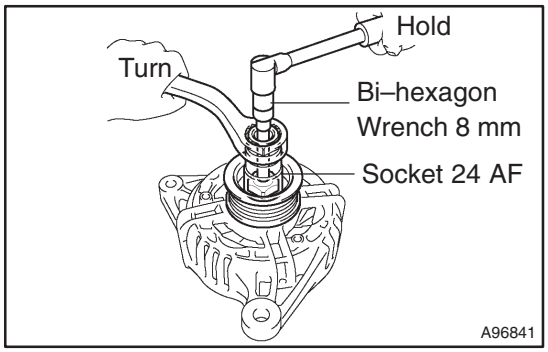

(b) Using a socket 24 AF and a bi–hexagon wrench 8 mm, install the pulley with the spring washer and nut.
Torque: 68 N·m (688 kgf·cm, 50 ft·lbf)

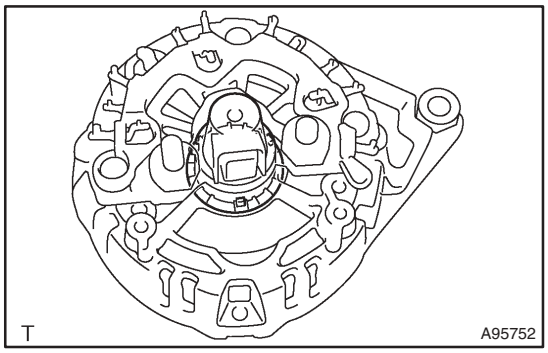

12. INSTALL BEARING SET GENERATOR

(a) Align the 3 cutouts of the bearing set generator with the stator generator with rectifier.

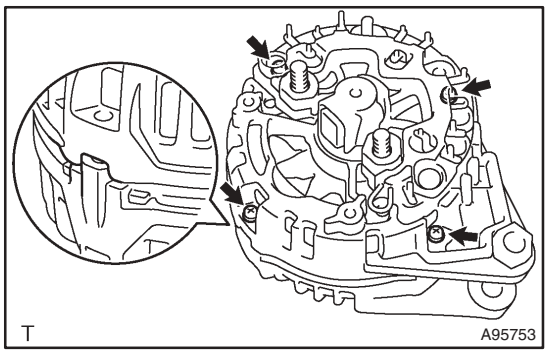

13. INSTALL STATOR SUB–ASSY GENERATOR W/RECTIFIER

(a) Align the key of the drive end frame with the keyway of the stator sub–assembly generator with rectifier.

(b) Install the stator generator with rectifier with the 4 bolts.
Torque: 3.5 N·m (36 kgf·cm, 31 in.·lbf)

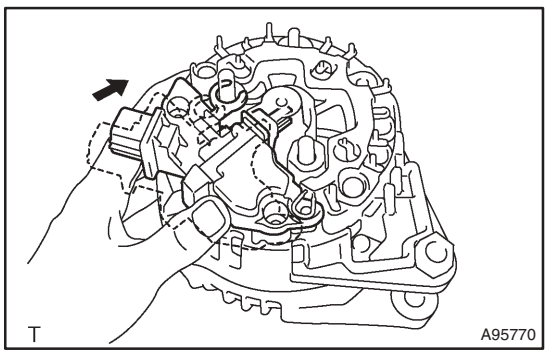

14. INSTALL REGULATOR SUB–ASSY GENERATOR W/BRUSH

(a) Attach the brushes and terminals to the rectifier end frame of the regulator generator with brush.

(b) Install the regulator generator with brush with the 3 screws.

HINT:

Install the screw with the plate washer into the position shown in the illustration.

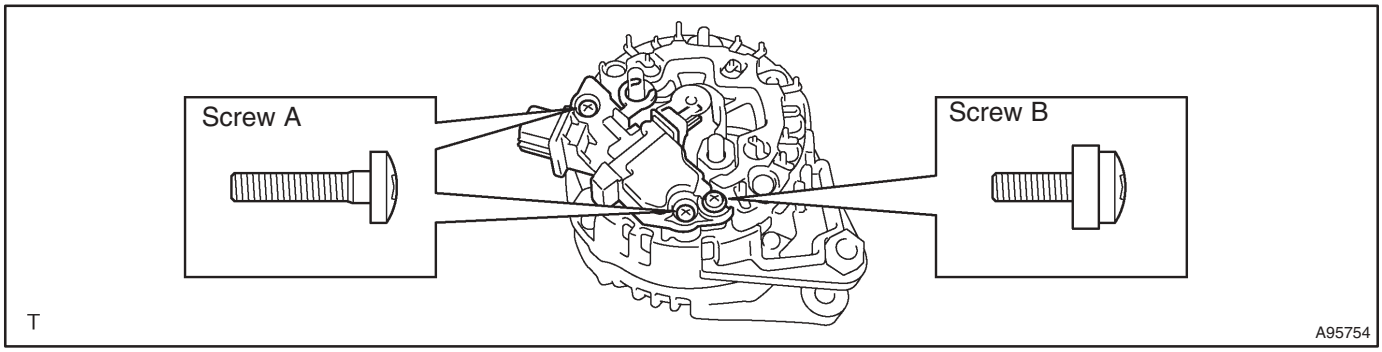

Torque:
2.2 N·m (22 kgf·cm, 19 in.·lbf) for screw A
1.2 N·m (12 kgf·cm, 11 in.·lbf) for screw B

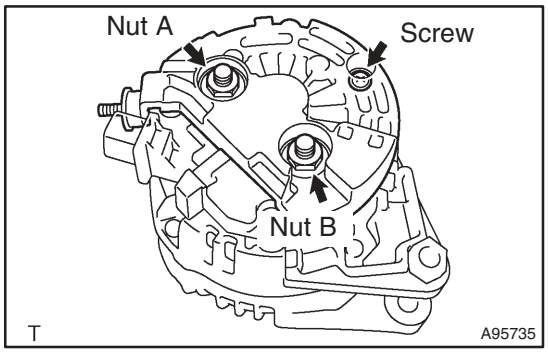

15. INSTALL GENERATOR REAR END COVER

(a) Install the generator rear end cover with the 2 nuts and screw.

Torque:
19.5 N·m (199 kgf·cm, 14 ft·lbf) for nut A
12 N·m (122 kgf·cm, 9 ft·lbf) for nut B
2.4 N·m (24 kgf·cm, 21 in.·lbf) for screw

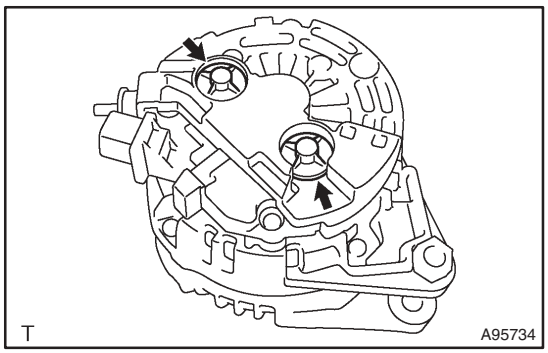

(b) Install the 2 terminal covers by turning them clockwise.

HOW TO USE THIS MANUAL TRANSAXLE REPAIR MANUAL

010BW–03

GENERAL INFORMATION

1. GENERAL DESCRIPTION

(a) This manual is made in accordance with SAE J2008.

(b) Generally repair operations can be separated in the following 3 main processes:
1. Diagnosis
2. Removing and Installing, Replacing, Disassembling, Installing and Checking, Adjusting
3. Final Inspection

(c) This manual explains ”Removing and Installing, Replacing, Disassembling, Installing and Checking, Adjusting”, but ”Final Inspection” is omitted.

(d) The following essential operations are not written in this manual, however these operations must be done in the practical situation.
(1) Operation with a jack or lift
(2) Cleaning of a removed part when necessary
(3) Visual check

2. INDEX

(a) An alphabetical INDEX is provided as a section on the end of the book to guide you to the item to be repaired.

3. PREPARATION

(a) Use of special service tools (SST) and special service materials (SSM) may be required, depending on the repairing condition. Be sure to use SST and SSM when they are required and follow the working procedure properly. A list of SST and SSM is in the Preparation section of this manual.

4. REPAIR PROCEDURES

(a) Component drawing is placed as the section or title when necessary.

(b) Illustrations of the parts catalog are placed as the ”disassembled parts drawing” so that it enables you to understand the fitting condition of the components.

(c) Non–reusable parts, grease applied parts, precoated parts and tightening torque are specified in the components drawing.

Example:

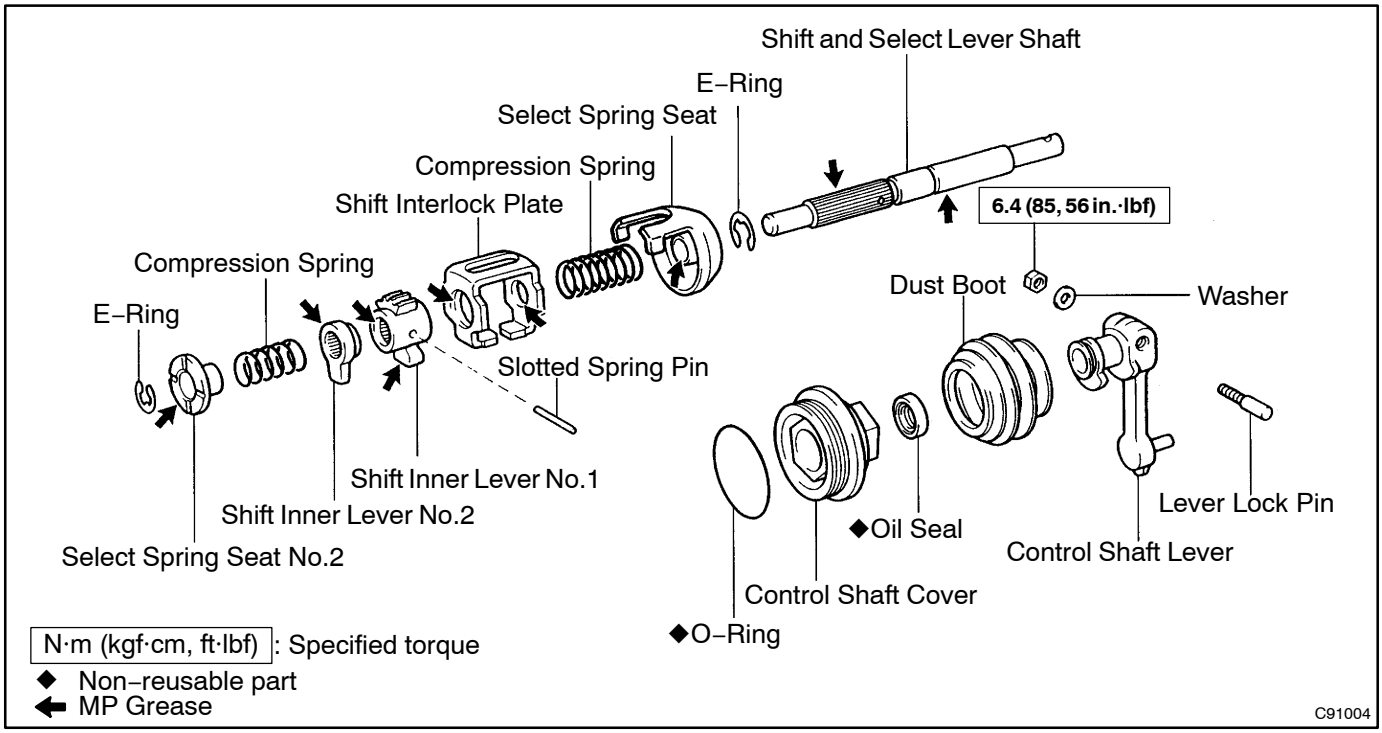

(d) Tightening torque, oil applying position, and non–reusable parts are described as important points in the procedure.

NOTICE:

There are cases where such information can only be indicated by an illustration. In that case, all the information such as torque, oil, etc. are described in the illustration.

(e) Installing procedure of operation items is performed in the reverse order of the removing, and only the important points are described.

(f) Only items with points are described in the procedure, and the operational portion and content are placed using an illustration. In the explanations, details of the operational method, standard value and notice are placed.

(g) There may be a case where the illustrations of similar models are used. In that case the details may be different from the actual vehicle.

(h) The procedures are presented in a step–by–step format:

(1) The illustration shows what to do and where to do.

(2) The task heading tells what to do.

(3) The detailed text tells how to perform the task and gives other information such as specifications and warnings.

Example:

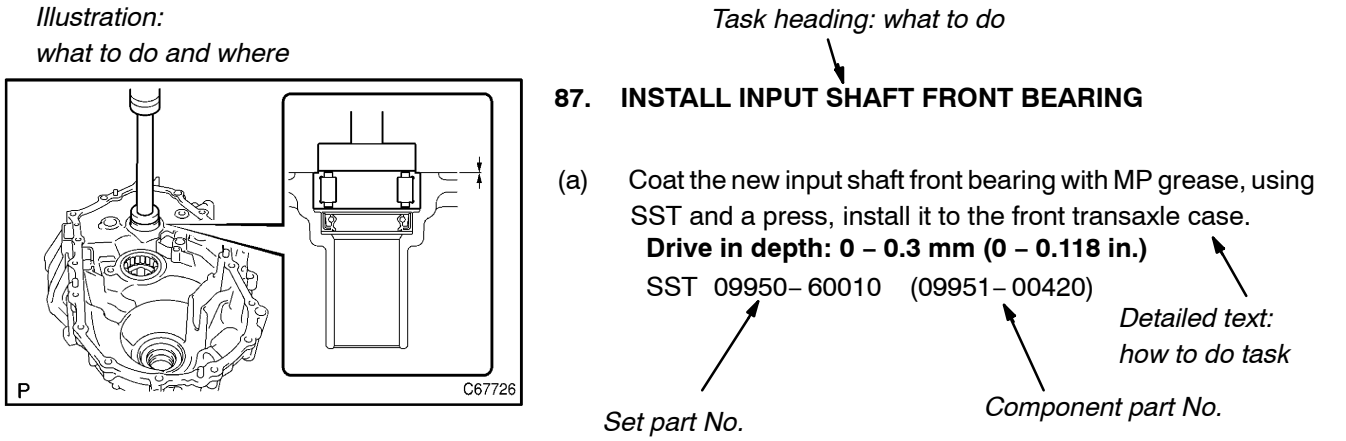

HINT:

This format provides an experienced technician with a FAST TRACK to the necessary information. The task heading can be read at a glance when necessary, and the text below provides detailed information. Important specifications and warnings always stand out in bold type.

5. SERVICE SPECIFICATIONS

(a) Specifications are presented in bold type throughout the manual. You never have to leave the procedure to look up your specifications. The specifications are also found in the Service Specifications section for a quick reference.

6. TERMS DEFINITION

CAUTION	Indicate the possibility of injury to you or other people.
NOTICE	Indicate the possibility of damage to the components being repaired.
HINT	Provide additional information to help you perform the repair efficiently.

7. SI UNIT

(a) The UNITS given in this manual are primarily expressed according to the SI UNIT (International System of Unit), and alternately expressed in the metric system and the English System.

Example:

Torque: 30 N·m (310 kgf·cm, 22 ft·lbf)

REPAIR INSTRUCTION FOR MANUAL TRANSAXLE REPAIR MANUAL

010BX–03

PRECAUTION

1. BASIC REPAIR HINT

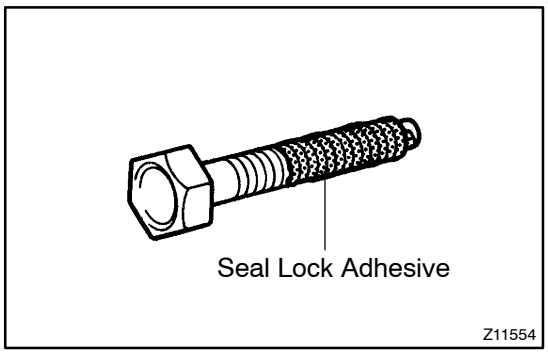

(a) PRECOATED PARTS

(1) Precoated parts are bolts, nuts, etc. that are coated with a seal lock adhesive at the factory.

(2) If a precoated part is retightened, loosened or caused to move in any way, it must be recoated with the specified adhesive.

(3) When reusing precoated parts, clean off the old adhesive and dry with compressed air. Then apply the specified seal lock adhesive to the bolt, nut or threads.

NOTICE:

Do the torque checking with the lower limit value of the torque tolerance.

(4) Depending on the seal lock agent to apply, there may be a case where it is necessary to leave it for a specified time until it hardens.

(b) GASKETS

When necessary, use a sealer on gaskets to prevent leaks.

(c) BOLTS, NUTS AND SCREWS

Carefully observe all specifications for bolt tightening torques. Always use a torque wrench.

TERMS FOR MANUAL TRANSAXLE REPAIR MANUAL

ABBREVIATIONS USED IN THIS MANUAL

010BY–03

Abbreviations	Meaning
E/G	Engine
FIPG	Formed In Place Gasket
MAX	Maximum
MIN	Minimum
MP	Multipurpose
M/T	Manual Transmission
N	Neutral
No.	Number
RH	Right–Hand
SPEC	Specification
SSM	Special Service Materials
SST	Special Service Tools
STD	Standard
T/A	Transaxle
T/M	Transmission
TMC	TOYOTA Motor Coporation
w/	With
w/o	Without
1st	First
2nd	Second

010BZ–03

GLOSSARY OF SAE AND TOYOTA TERMS

This glossary lists all SAE–J1930 terms and abbreviations used in this manual in compliance with SAE recommendations, as well as their Toyota equivalents.

SAE ABBREVIATIONS	SAE TERMS	TOYOTA TERMS ( )––ABBREVIATIONS
A/C	Air Conditioning	Air Conditioner
ACL	Air Cleaner	Air Cleaner
AIR	Secondary Air Injection	Air Injection (AI)
AP	Accelerator Pedal	–
B+	Battery Positive Voltage	+B, Battery Voltage
BARO	Barometric Pressure	–
CAC	Charge Air Cooler	Inter cooler
CARB	Carburetor	Carburetor
CFI	Continuous Fuel Injection	–
CKP	Crankshaft Position	Crank Angle
CL	Closed Loop	Closed Loop
CMP	Camshaft position	Cam Angle
CPP	Clutch Pedal Position	–
CTOX	Continuous Trap Oxidizer	–
CTP	Closed Throttle Position	–
DFI	Direct Fuel Injection (Diesel)	Direct Injection (DI)
DI	Distributor Ignition	–
DLC1 DLC2 DLC3	Data Link Connector 1 Data Link Connector 2 Data Link Connector 3	1: Check Connector 2: Total Diagnosis Communication Link (TDCL) 3: OBD II Diagnostic Connector
DTC	Diagnostic Trouble Code	Diagnostic Code
DTM	Diagnostic Test Mode	–
ECL	Engine Control Level	–
ECM	Engine Control Module	Engine ECU (Electronic Control Unit)
ECT	Engine Control Temperature	Coolant Temperature, Water Temperature (THW)
EEPROM	Electrically Erasable Programmable Read Only Memory	Electrically Erasable Programmable Read Only Memory (EEPROM), Erasable Programmable Read Only Memory (EPROM)
EFE	Early Fuel Evaporation	Cold Mixture Heater (CMH), Heat Control Valve (HCV)
EGR	Exhaust Gas Recirculation	Exhaust Gas Recirculation (EGR)
EI	Electronic Ignition	Distributorless Ignition (DI)
EM	Engine Modification	Engine Modification (EM)
EPROM	Erasable Programmable Read Only Memory	Programmable Read Only Memory (PROM)
EVAP	Evaporative Emission	Evaporative Emission Control (EVAP)
FC	Fan Control	–
FEEPROM	Flash Electrically Erasable Programmable Read Only Memory	–
FEPROM	Flash Erasable Programmable Read Only Memory	–
FF	Flexible Fuel	–
FP	Fuel Pump	Fuel Pump
GEN	Generator	Alternator
GND	Ground	Ground (GND)
HO2S	Heated Oxygen Sensor	Heated Oxygen Sensor (HO2S)
IAC	Idol Air Control	Idol Speed Control (ISC)
IAT	Intake Air Temperature	Intake or Inlet Air Temperature
ICM	Ignition Control Module	–
IFI	Indirect Fuel Injection	Indirect Injection
IFS	Inertia Fuel–Shutoff	–

ISC	Idle Speed Control	–
KS	Knock Sensor	Knock Sensor
MAF	Mass Air Flow	Air Flow Meter
MAP	Manifold Absolute Pressure	Manifold Pressure Intake Vacuum
MC	Mixture Control	Electric Bleed Air Control Valve (EBCV) Mixture Control Valve (MCV) Electric Air Control Valve (EACV)
MDP	Manifold Differential Pressure	–
MFI	Multiport Fuel Injection	Electronic Fuel Injection (EFI)
MIL	Malfunction Indicator Lamp	Check Engine Light
MST	Manifold Surface Temperature	–
MVZ	Manifold Vacuum Zone	–
NVRAM	Non–Volatile Random Access Memory	–
O2S	Oxygen Sensor	Oxygen Sensor, O_2 Sensor (O_{2S})
OBD	On–Board Diagnostic	On–Board Diagnostic (OBD)
OC	Oxidation Catalytic Converter	Oxidation Catalyst Converter (OC), CC_O
OP	Open Loop	Open Loop
PAIR	Pulsed Secondary Air Injection	Air Suction (AS)
PCM	Powertrain Control Module	–
PNP	Park/Neutral Position	–
PROM	Programmable Read Only Memory	–
PSP	Power Steering Pressure	–
PTOX	Periodic Trap Oxidizer	Diesel Particulate Filter (DPF) Diesel Particulate Trap (DPT)
RAM	Random Access Memory	Random Access Memory (RAM)
RM	Relay Module	–
ROM	Read Only Memory	Read Only Memory (ROM)
RPM	Engine Speed	Engine Speed
SC	Supercharger	Supercharger
SCB	Supercharger Bypass	–
SFI	Sequential Multiport Fuel Injection	Electronic Fuel Injection (EFI), Sequential Injection
SPL	Smoke Puff Limiter	–
SRI	Service Reminder Indicator	–
SRT	System Readiness Test	–
ST	Scan Tool	–
TB	Throttle Body	Throttle Body
TBI	Throttle Body Fuel Injection	Single Point Injection Central Fuel Injection (Ci)
TC	Turbocharger	Turbocharger
TCC	Torque Converter Clutch	Torque Converter
TCM	Transmission Control Module	Transmission ECU (Electronic Control Unit)
TP	Throttle Position	Throttle Position
TR	Transmission Range	–
TVV	Thermal Vacuum Valve	Bimetallic Vacuum Switching Valve (BVSV) Thermostatic Vacuum Switching Valve (TVSV)
TWC	Three–Way Catalytic Converter	Three–Way Catalytic (TWC) CC_{RO}
TWC+OC	Three–Way + Oxidation Catalytic Converter	CC_R + CC_O
VAF	Volume Air Flow	Air Flow Meter
VR	Voltage Regulator	Voltage Regulator
VSS	Vehicle Speed Sensor	Vehicle Speed Sensor (Read Switch Type)
WOT	Wide Open Throttle	Full Throttle

WU–OC	Warm Up Oxidation Catalytic Converter	–
WU–TWC	Warm Up Three–Way Catalytic Converter	Manifold Converter
3GR	Third Gear	–
4GR	Fourth Gear	–

MANUAL TRANSMISSION/TRANSAXLE

022YU–01

PREPARATION

SST

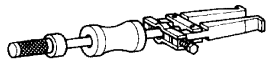	09308–00010	Oil Seal Puller	MANUAL TRANSAXLE ASSY(C50)
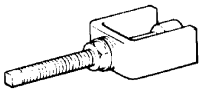	09309–12020	5th Driven Gear Replacer	MANUAL TRANSAXLE ASSY(C50)
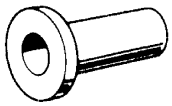	09309–36010	Transmission Rear Bearing Replacer	MANUAL TRANSAXLE ASSY(C50)
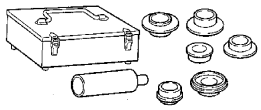	09316–60011	Transmission & Transfer Bearing Replacer	MANUAL TRANSAXLE ASSY(C50) INPUT SHAFT ASSY(C50) OUTPUT SHAFT ASSY(C50)
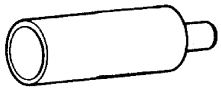	(09316–00011)	Replacer Pipe	MANUAL TRANSAXLE ASSY(C50)
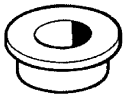	(09316–00021)	Replacer "A"	INPUT SHAFT ASSY(C50)
	(09316–00031)	Replacer "B"	OUTPUT SHAFT ASSY(C50)
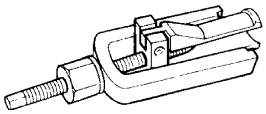	09319–60020	Output Shaft Needle Roller Bearing Remover	MANUAL TRANSAXLE ASSY(C50)
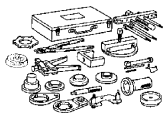	09350–32014	TOYOTA Automatic Transmission Tool Set	MANUAL TRANSAXLE ASSY(C50)
	(09351–32120)	Overdrive Bearing Replacer	MANUAL TRANSAXLE ASSY(C50)
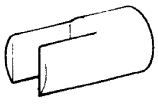	09564–32011	Differential Preload Adaptor	MANUAL TRANSAXLE ASSY(C50)
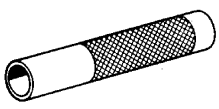	09612–22011	Tilt Handle Bearing Replacer	OUTPUT SHAFT ASSY(C50)

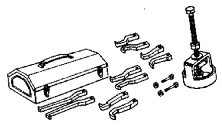	09612–65014	Steering Worm Bearing Puller	MANUAL TRANSAXLE ASSY(C50)
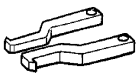	(09612–01040)	Claw ”D”	MANUAL TRANSAXLE ASSY(C50)
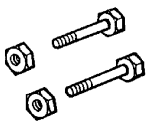	(09612–01050)	Hanger Pin with Nut	MANUAL TRANSAXLE ASSY(C50)
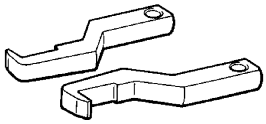	(09612–01060)	Claw ”E”	MANUAL TRANSAXLE ASSY(C50)
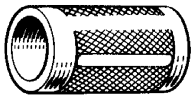	09636–20010	Upper Ball Joint Dust Cover Replacer	MANUAL TRANSAXLE ASSY(C50) INPUT SHAFT ASSY(C50)
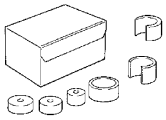	09710–20011	Front Suspension Bushing Tool Set	MANUAL TRANSAXLE ASSY(C50)
	(09710–06071)	Replacer	MANUAL TRANSAXLE ASSY(C50)
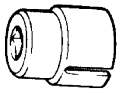	09817–16011	Back–up Light Switch Tool	MANUAL TRANSAXLE ASSY(C50)
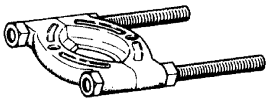	09950–00020	Bearing Remover	MANUAL TRANSAXLE ASSY(C50) INPUT SHAFT ASSY(C50) OUTPUT SHAFT ASSY(C50)
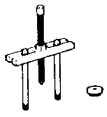	09950–00030	Bearing Remover Attachment	MANUAL TRANSAXLE ASSY(C50)
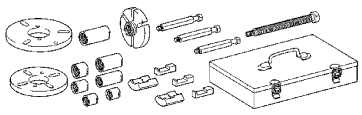	09950–30012	Puller A Set	MANUAL TRANSAXLE ASSY(C50)
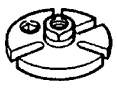	(09951–03010)	Upper Plate	MANUAL TRANSAXLE ASSY(C50)
	(09953–03010)	Center Bolt	MANUAL TRANSAXLE ASSY(C50)

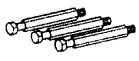	(09954–03010)	Arm	MANUAL TRANSAXLE ASSY(C50)
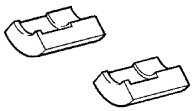	(09955–03011)	Claw No.1	MANUAL TRANSAXLE ASSY(C50)
	(09957–04010)	Attachment	MANUAL TRANSAXLE ASSY(C50)
	09950–40011	Puller B Set	MANUAL TRANSAXLE ASSY(C50)
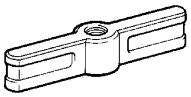	(09951–04010)	Hanger 150	MANUAL TRANSAXLE ASSY(C50)
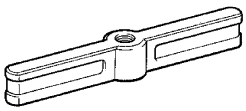	(09951–04020)	Hanger 200	MANUAL TRANSAXLE ASSY(C50)
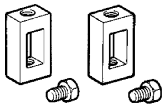	(09952–04010)	Slide Arm	MANUAL TRANSAXLE ASSY(C50)
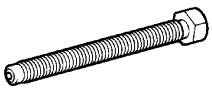	(09953–04020)	Center Bolt 150	MANUAL TRANSAXLE ASSY(C50)
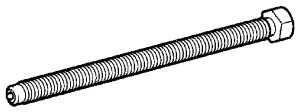	(09953–04030)	Center Bolt 200	MANUAL TRANSAXLE ASSY(C50)
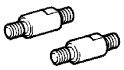	(09954–04010)	Arm 25	MANUAL TRANSAXLE ASSY(C50)
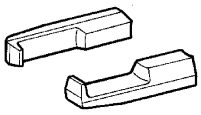	(09955–04061)	Claw No.6	MANUAL TRANSAXLE ASSY(C50)
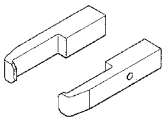	(09955–04071)	Claw No.7	MANUAL TRANSAXLE ASSY(C50)
	(09957–04010)	Attachment	MANUAL TRANSAXLE ASSY(C50)

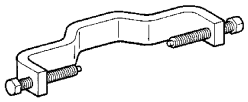	(09958–04011)	Holder	MANUAL TRANSAXLE ASSY(C50)
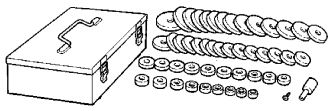	09950–60010	Replacer Set	MANUAL TRANSAXLE ASSY(C50) SHIFT & SELECT LEVER SHAFT ASSY(C50)
	(09951–00190)	Replacer 19	MANUAL TRANSAXLE ASSY(C50)
	(09951–00200)	Replacer 20	MANUAL TRANSAXLE ASSY(C50)
	(09951–00220)	Replacer 22	MANUAL TRANSAXLE ASSY(C50) SHIFT & SELECT LEVER SHAFT ASSY(C50)
	(09951–00360)	Replacer 36	MANUAL TRANSAXLE ASSY(C50)
	(09951–00370)	Replacer 37	MANUAL TRANSAXLE ASSY(C50)
	(09951–00420)	Replacer 42	MANUAL TRANSAXLE ASSY(C50)
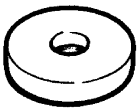	(09951–00530)	Replacer 53	MANUAL TRANSAXLE ASSY(C50)
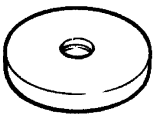	(09951–00550)	Replacer 55	MANUAL TRANSAXLE ASSY(C50)
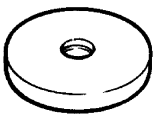	(09951–00600)	Replacer 60	MANUAL TRANSAXLE ASSY(C50)
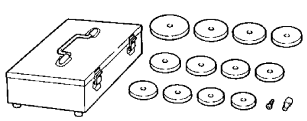	09950–60020	Replacer Set No.2	MANUAL TRANSAXLE ASSY(C50)
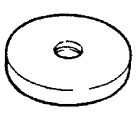	(09951–00680)	Replacer 68	MANUAL TRANSAXLE ASSY(C50)

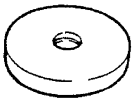	(09951–00710)	Replacer 71	MANUAL TRANSAXLE ASSY(C50)
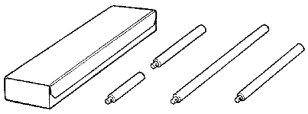	09950–70010	Handle Set	MANUAL TRANSAXLE ASSY(C50) SHIFT & SELECT LEVER SHAFT ASSY(C50)
	(09951–07100)	Handle 100	MANUAL TRANSAXLE ASSY(C50) SHIFT & SELECT LEVER SHAFT ASSY(C50)
	(09951–07150)	Handle 150	MANUAL TRANSAXLE ASSY(C50)

Recomended Tools

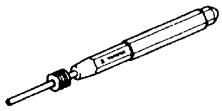	09031–00030	Pin Punch	DIFFERENTIAL CASE ASSY(C50)
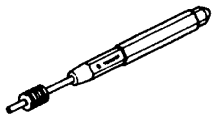	09031–00040	Pin Punch .	MANUAL TRANSAXLE ASSY(C50) SHIFT & SELECT LEVER SHAFT ASSY(C50)
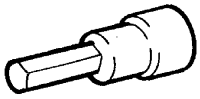	(09043–20060)	Socket Hexagon Wrench 6	MANUAL TRANSAXLE ASSY(C50)
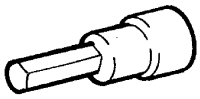	(09043–20060)	Socket Hexagon Wrench 6	MANUAL TRANSAXLE ASSY(C50)
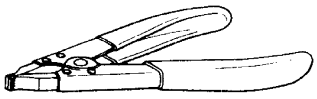	09905–00012	Snap Ring No.1 Expander	MANUAL TRANSAXLE ASSY(C50)

Equipment

V–block	
Cylinder gauge	
Dial indicator or dial indicator with magnetic base	
Feeler gauge	
Micrometer	
Torque wrench	
Vernier calipers	
Chisel	
Plastic hammer	
Slide calipers	
Press	
Heater	

SSM (Special Service Materials)

08826–00090	"Seal Packing 1281," THREE BOND 1281 or equivalent (FIPG)	
08833–00080	Adhesive 1344 THREE BOND 1344 LOCTITE 242 or equivalent	

STANDARD BOLT

HOW TO DETERMINE BOLT STRENGTH

030LK–07

Bolt Type				Class
Hexagon Head Bolt		Stud Bolt	Weld Bolt	
Normal Recess Bolt	Deep Recess Bolt			
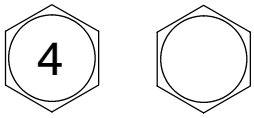 No Mark	 No Mark	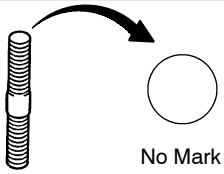 No Mark	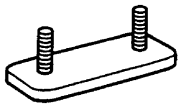	4T
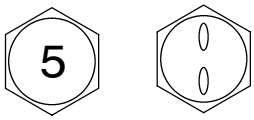	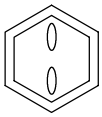			5T
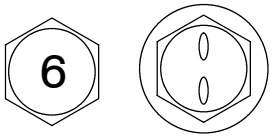 w/ Washer	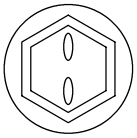 w/ Washer			6T
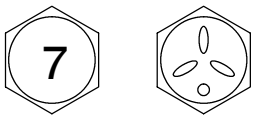	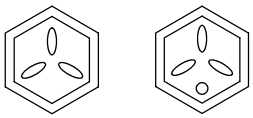			7T
				8T
				9T
	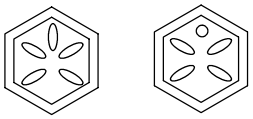			10T
	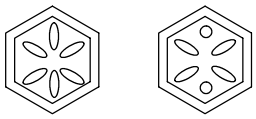			11T

B06431

030LL–07

SPECIFIED TORQUE FOR STANDARD BOLTS

Class	Diameter mm	Pitch mm	Specified torque					
			Hexagon head bolt			Hexagon flange bolt		
			N·m	kgf·cm	ft·lbf	N·m	kgf·cm	ft·lbf
4T	6	1	5	55	48 in.·lbf	6	60	52 in.·lbf
	8	1.25	12.5	130	9	14	145	10
	10	1.25	26	260	19	29	290	21
	12	1.25	47	480	35	53	540	39
	14	1.5	74	760	55	84	850	61
	16	1.5	115	1,150	83	–	–	–
5T	6	1	6.5	65	56 in.·lbf	7.5	75	65 in.·lbf
	8	1.25	15.5	160	12	17.5	175	13
	10	1.25	32	330	24	36	360	26
	12	1.25	59	600	43	65	670	48
	14	1.5	91	930	67	100	1,050	76
	16	1.5	140	1,400	101	–	–	–
6T	6	1	8	80	69 in.·lbf	9	90	78 in.·lbf
	8	1.25	19	195	14	21	210	15
	10	1.25	39	400	29	44	440	32
	12	1.25	71	730	53	80	810	59
	14	1.5	110	1,100	80	125	1,250	90
	16	1.5	170	1,750	127	–	–	–
7T	6	1	10.5	110	8	12	120	9
	8	1.25	25	260	19	28	290	21
	10	1.25	52	530	38	58	590	43
	12	1.25	95	970	70	105	1,050	76
	14	1.5	145	1,500	108	165	1,700	123
	16	1.5	230	2,300	166	–	–	–
8T	8	1.25	29	300	22	33	330	24
	10	1.25	61	620	45	68	690	50
	12	1.25	110	1,100	80	120	1,250	90
9T	8	1.25	34	340	25	37	380	27
	10	1.25	70	710	51	78	790	57
	12	1.25	125	1,300	94	140	1,450	105
10T	8	1.25	38	390	28	42	430	31
	10	1.25	78	800	58	88	890	64
	12	1.25	140	1,450	105	155	1,600	116
11T	8	1.25	42	430	31	47	480	35
	10	1.25	87	890	64	97	990	72
	12	1.25	155	1,600	116	175	1,800	130

030LM–07

HOW TO DETERMINE NUT STRENGTH

Nut Type			Class
Present Standard Hexagon Nut	Old Standard Hexagon Nut		
	Cold Forging Nut	Cutting Processed Nut	
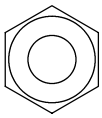 No Mark			4N
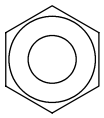 No Mark (w/ Washer)	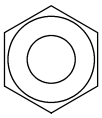 No Mark (w/ Washer)	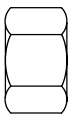 No Mark	5N (4T)
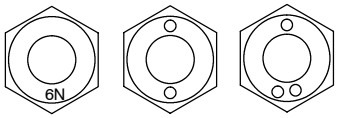 6N			6N
	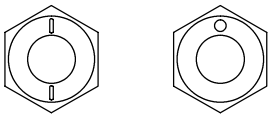	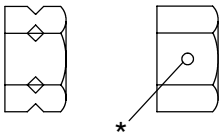 *	7N (5T)
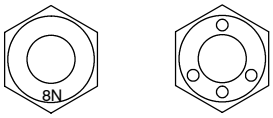 8N			8N
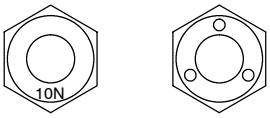 10N	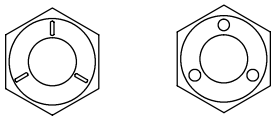	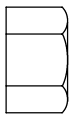 No Mark	10N (7T)
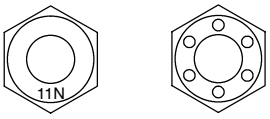 11N			11N
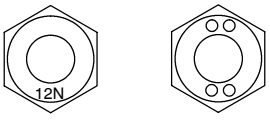 12N			12N

*: Nut with 1 or more marks on one side surface of the nut.

B06432

HINT:

Use the nut with the same number of the nut strength classification or the greater than the bolt strength classification number when tightening parts with a bolt and nut.

Example: Bolt = 4T

Nut = 4N or more

MANUAL TRANSMISSION / TRANSAXLE

031EO–02

SERVICE DATA

Manual transaxle assy		
5th gear thrust clearance	STD	0.10 to 0.57 mm (0.0039 to 0.02244 in.)
	MAX	0.57 mm (0.02244 in.)
5th gear radial clearance	STD	0.015 to 0.058 mm (0.0006 to 0.0023 in.)
	MAX	0.058 mm (0.0023 in.)
Synchro nizer ring No.3 clearance	STD	0.75 to 1.65 mm (0.0295 to 0.0649 in.)
	MIN	0.75 mm (0.0295 in.)
Transmission hub sleeve No.3 clearance		0.3 to 0.5 mm (0.0012 to 0.0020 in.)
5th gear clearance		29.915 to 29.931 mm (1.1778 to 1.1783 in.)
Reverse idler gear sub–assy	STD	18.040 to 18.058 mm (0.7102 to 0.7109 in.)
	MAX	18.058 mm (0.7109 in.)
Reverse idler gear shaft outer diameter	STD	17.966 to 17.984 mm (0.7073 to 0.7080 in.)
	MIN	17.966 mm (0.7073 in.)
Front transaxle cace oil seal drive in depth		15.6 to 16.0 mm (0.6141 to 0.6299 in.)
Input shaft front bearing drive in depth		0 to 0.3 mm (0 to 0.0118 in.)
Shift & select lever shaft needle roller bearing drive in depth		0 to 0.5 mm (0 to 0.020 in.)
Differential side bearing preload		0.78 to 1.57 N·m (7.95 to 16.0 kgf·cm, 6.9 to 13.89 in.·lbf)
Front differential case rear plate washer thickness	01	1.10 mm (0.0433 in.)
	02	1.15 mm (0.0453 in.)
	03	1.20 mm (0.0472 in.)
	04	1.25 mm (0.0492 in.)
	05	1.30 mm (0.0512 in.)
	06	1.35 mm (0.0531 in.)
	07	1.40 mm (0.0551 in.)
	08	1.45 mm (0.0571 in.)
	09	1.50 mm (0.0591 in.)
	10	1.55 mm (0.0610 in.)
	11	1.60 mm (0.0630 in.)
	12	1.65 mm (0.0650 in.)
	13	1.70 mm (0.0670 in.)
	14	1.75 mm (0.0689 in.)
	15	1.80 mm (0.0709 in.)
	16	1.85 mm (0.0728 in.)
	17	1.90 mm (0.0748 in.)
	18	1.95 mm (0.0768 in.)
	19	2.00 mm (0.0787 in.)
Transmission case oil seal drive in depth		9.6 to 10.2 mm (0.3779 to 0.4015 in.)
Transaxle case oil seai drive in depth		1.6 to 2.2 mm (0.0629 to 0.0866 in.)
Reverse restrict pin assy drive in depth		15.5 to 16.5 mm (0.6102 to 0.6496 in.)
Transmission clutch hub No.3 shaft snap ring clearance		0.1 mm (0.0039 in.) or less
Transmission clutch hub No.3 shaft snap ring thickness	A	2.25 mm (0.0886 in.)
	B	2.31 mm (0.0909 in.)
	C	2.37 mm (0.0933 in.)
	D	2.43 mm (0.0957 in.)
	E	2.49 mm (0.0980 in.)
	F	2.55 mm (0.1004 in.)
	G	2.61 mm (0.1028 in.)

Input shaft assy		
4th gear thrust clearance	STD	0.1 to 0.55 mm (0.0039 to 0.0217 in.)
	MAX	0.55 mm (0.0217 in.)
3rd gear thrust clearance	STD	0.1 to 0.35 mm (0.0039 to 0.0138 in.)
	MAX	0.35 mm (0.0138 in.)
4th gear radial clearance	STD	0.015 to 0.058 mm (0.0006 to 0.0023 in.)
	MAX	0.058 mm (0.0023 in.)

3rd gear radial clearance	STD	0.015 to 0.058 mm (0.0006 to 0.0023 in.)
	MAX	0.058 mm (0.0023 in.)
Input shaft runout	MIN	0.015 mm(0.00059 in.)
Input shaft outer diameter	STD: Part A	24.885 to 24.900 mm (0.9797 to 0.9803 in.)
	Part B	28.991 to 29.006 mm (1.1413 to 1.1419 in.)
	Part C	30.985 to 31.000 mm (1.2198 to 1.2204 in.)
	Part D	24.985 to 25.000 mm (0.9836 to 0.9842 in.)
	MIN: Part A	24.885 mm (0.9797 in.)
	Part B	28.991 mm (1.1413 in.)
	Part C	30.985 mm (1.2198 in.)
	Part D	24.985 mm (0.9836 in.)
4th gear clearance	STD	34.015 to 34.031 mm (1.3391 to 1.3398 in.)
	MAX	34.031 mm (1.3398 in.)
3rd gear clearance	STD	36.015 to 36.031 mm (1.4179 to 1.4185 in.)
	MAX	36.031 mm (1.4185 in.)
Synchronizer ring No.2 (For 4th gear) clearance		0.75 to 1.65 mm (0.0295 to 0.0649 in.)
Synchronizer ring No.2 (For 3rd gear) clearance		0.75 to 1.65 mm (0.0295 to 0.0649 in.)
Transmission hub sleeve No.2 clearance		0.15 to 0.35 mm (0.0059 to 0.0137 in.)
Clutch hub No.2 setting shaft snap ring clearance		0.1 mm (0.0039 in.) or less.
Clutch hub No.2 setting shaft snap ring thickness	0	2.30 mm (0.0906 in.)
	1	2.36 mm (0.0929 in.)
	2	2.42 mm (0.0953 in.)
	3	2.48 mm (0.0976 in.)
	4	2.54 mm (0.1000 in.)
	5	2.60 mm (0.1024 in.)
Input shaft rear bearing shaft snap ring clearance		0.1 mm (0.0039 in.) or less
Input shaft rear bearing shaft snap ring thickness	A	2.29 mm (0.0902 in.)
	B	2.35 mm (0.0925 in.)
	C	2.41 mm (0.0949 in.)
	D	2.47 mm (0.0972 in.)
	E	2.53 mm (0.0996 in.)
	F	2.59 mm (0.1020 in.)

Output shaft assy		
1st gear thrust clearance	STD	0.10 to 0.40 mm (0.0039 to 0.0157 in.)
	MAX	0.40 mm (0.0157 in.)
2nd gear thrust clearance	STD	0.1 to 0.45 mm (0.0039 to 0.0177 in.)
	MAX	0.45 mm (0.0177 in.)
1st gear radial clearance	STD	0.015 to 0.058 mm (0.0006 to 0.0023 in.)
	MAX	0.058 mm (0.0023 in.)
2nd gear radial clearance	STD	0.015 to 0.058 mm (0.0006 to 0.0023 in.)
	MAX	0.058 mm (0.0023 in.)
Input shaft runout	MIN	0.015 mm (0.0006 in.)
Input shaft outer diameter	Part A	31.985 to 32.000 mm (1.2592 to 1.2598 in.)
	Part B	37.985 to 38.000 mm (1.4955 to 1.2598 in.)
	Part C	32.985 to 33.000 mm (1.2986 to 1.2992 in.)
2nd gear clearance	STD	38.015 to 38.013 mm (1.4966 to 1.4972 in.)
	MAX	38.031 mm (1.4972 in.)
1st gear clearance	STD	44.015 to 44.031 mm (1.7328 to 1.7335 in.)
	MAX	44.031 mm (1.7335 in.)
1st gear thrust washer thickness	STD	5.975 to 6.025 mm (0.2352 to 0.2372 in.)
	MIN	5.975 mm (0.2352 in.)
Synchronizer ring No.1 (for 2nd gear)clearance	STD	0.70 to 1.30 mm (0.0276 to 0.0512 in.)
	MIN	0.70 mm (0.0276in.)
Synchronizer ring No.1 (for 1st gear)clearance	STD	0.75 to 1.65 mm (0.0295 to 6.8898 in.)
	MIN	0.75 mm (0.0295 in.)
reverse gear and shift fork clearance	MAX	0.35 mm (0.014 in.)

Clutch hub No.1 shaft snap ring clearance		0.1 mm (0.039 in.) or less
Clutch hub No.1 shaft snap ring thickness	A	2.50 mm (0.0984 in.)
	B	2.56 mm (0.1008 in.)
	C	2.62 mm (0.1031 in.)
	D	2.68 mm (0.1055 in.)
	E	2.74 mm (0.1079 in.)
	F	2.80 mm (0.1102 in.)

Sift & Select lever shaft assy		
Contorol shaft cover oil seal drive in depth		0.2 to 1.2 mm (0.079 to 0.0472 in.)
Sift lever slotted pin (for select inner lever) drivein depth		3.0 to 4.0 mm (0.1181 to 0.1575 in)
Sift lever slotted pin (for sift lever inner No.1) drivein depth		–0.5 to 0.5 mm (–0.0197 to 0.0197 in)
Sift lever slotted pin (for sift lever inner No.2) drivein depth		–0.5 to 0.5 mm (–0.0197 to 0.0197 in)

Differential case assy		
Front differential side gear backlash		0.05 to 0.20 mm (0.0020 to 0.0079 in.)
Front differential pinion thrust washer	MIN	0.94 mm (0.03701 in.)
Front differential pinion shaft No.1 outer diameter	MIN	16.982 mm (0.6685 in.)

031EP–02

TORQUE SPECIFICATION

Part Tightened		N·m	kgf·cm	ft·lbf
Bearing lock plate × Front transaxle case		11	115	8
Oil receiver pipe No.1 × Manual transmission case		17	175	13
Oil receiver pipe No.2 × Manual transmission case		17	175	13
Reverse restrict pin plug × Manual transmission case		13	130	9.3
manual transaxle case receiver × Manual transmission case		11	115	8
Gear shift fork No.1 × Gear shift fork shaft No.1		16	160	12
Gear shift fork No.2 × Gear shift fork shaft No.2		16	160	12
Gear shift head No.1 × Gear shift fork shaft No.2		16	160	12
Reverse shift arm bracket assy × Front transaxle case		17	175	13
Manual transmission case × Front transaxle case	bolt	29	300	22
	nut	29	300	22
Reverse idler gear shaft bolt × Manual transmission case		29	300	22
Lock ball assy No.2 × Manual transmission case		39	400	29
Shift detent ball × Manual transmission case		25	250	18
Shift detent ball × Front transaxle case		25	250	18
Bearing retainer rear × Manual transmission case		27	280	20
Gear shift fork No.3 × Gear shift fork shaft		16	160	12
Manual transmission output shaft rear set nut × output shaft		118	1200	87
Manual transmission case cover × Manual transmission case		18	185	14
Control shaft cover × Manual transmission case		20	200	14
Control shift lever lock nut		12	122	9
Lock ball assy No.1 × Manual transmission case		29	300	22
Selecting bell crank assy × Manual transmission case		25	250	18
Floor shift control lever housing support bracket × Front transaxle case		18	184	13
Back–up lamp switch assy × Manual transmission case		40	410	30
Speedometer driven hole cover sub–assy × Manual transaxle		11	115	8
Release fork support × Front transaxle case		37	375	25
Manual transmission filler plug × Manual transaxle		39	400	29
Drain plug sub–assy × Manual transmission case		39	400	29
Selecting bell crank No.2 plate washer × Selecting bell crank		12	120	9
Front defferential ring gear × Front differential case		77	790	57

MANUAL TRANSAXLE ASSY (C50)

COMPONENTS

410DC–02

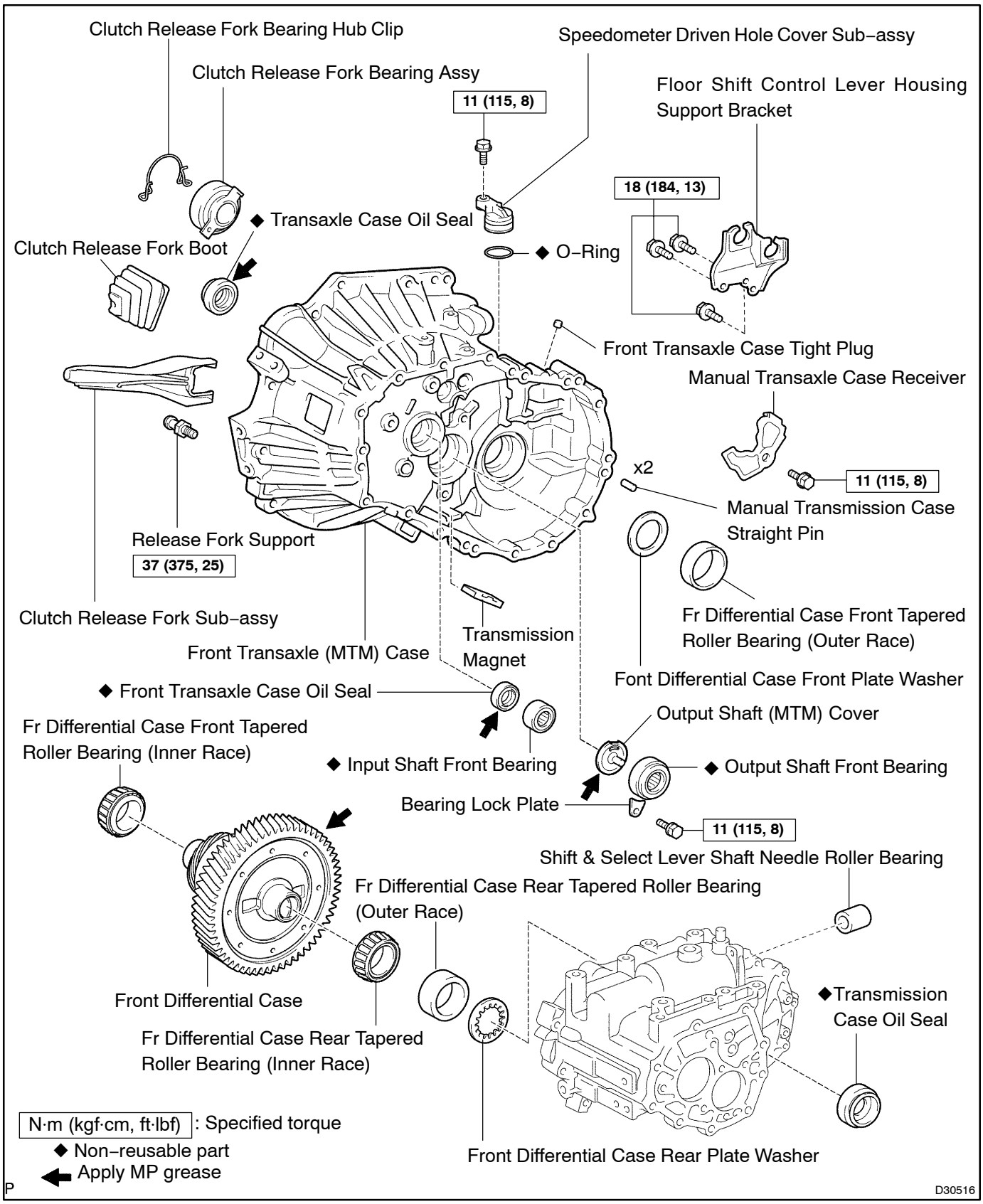

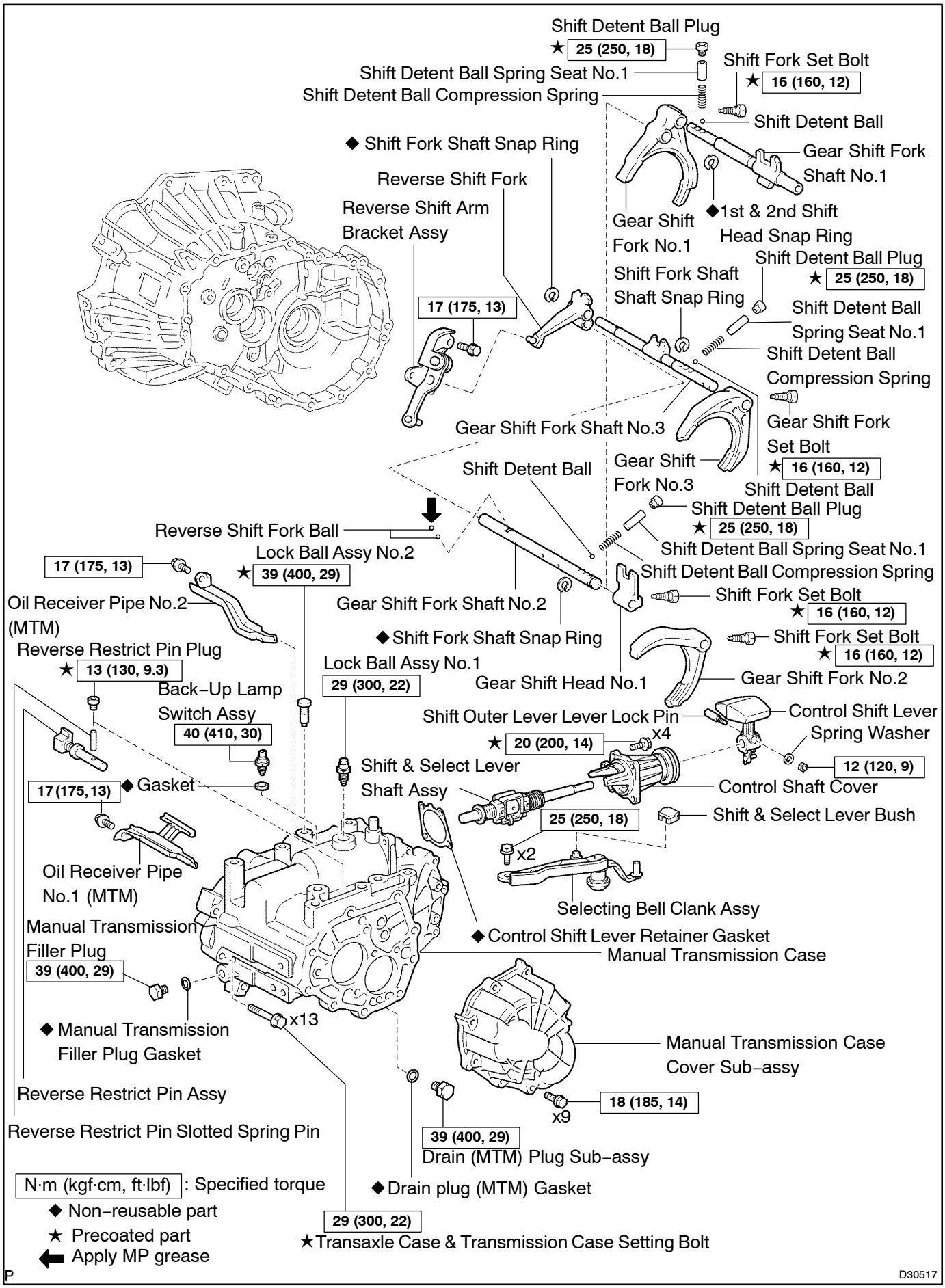
Shift Detent Ball Plug
★ 25 (250, 18)
Shift Fork Set Bolt
★ 16 (160, 12)
Shift Detent Ball Spring Seat No.1
Shift Detent Ball Compression Spring
Shift Detent Ball
◆ Shift Fork Shaft Snap Ring
Gear Shift Fork Shaft No.1
Reverse Shift Fork
Reverse Shift Arm Bracket Assy
◆1st & 2nd Shift Head Snap Ring
Gear Shift Fork No.1
Shift Detent Ball Plug
★ 25 (250, 18)
Shift Fork Shaft Shaft Snap Ring
17 (175, 13)
Shift Detent Ball Spring Seat No.1
Shift Detent Ball Compression Spring
Gear Shift Fork Shaft No.3
Gear Shift Fork Set Bolt
★ 16 (160, 12)
Gear Shift Fork No.3
Shift Detent Ball
Shift Detent Ball
Shift Detent Ball Plug
★ 25 (250, 18)
Reverse Shift Fork Ball
Lock Ball Assy No.2
★ 39 (400, 29)
Shift Detent Ball Spring Seat No.1
Shift Detent Ball Compression Spring
17 (175, 13)
Oil Receiver Pipe No.2 (MTM)
Gear Shift Fork Shaft No.2
Shift Fork Set Bolt
★ 16 (160, 12)
◆ Shift Fork Shaft Snap Ring
Reverse Restrict Pin Plug
★ 13 (130, 9.3)
Shift Fork Set Bolt
★ 16 (160, 12)
Lock Ball Assy No.1
29 (300, 22)
Gear Shift Head No.1
Gear Shift Fork No.2
Back–Up Lamp Switch Assy
40 (410, 30)
Shift Outer Lever Lever Lock Pin
★ 20 (200, 14)
x4
Control Shift Lever
Spring Washer
12 (120, 9)
Shift & Select Lever Shaft Assy
17 (175, 13)
◆ Gasket
Control Shaft Cover
25 (250, 18)
Shift & Select Lever Bush
x2
Oil Receiver Pipe No.1 (MTM)
Selecting Bell Clank Assy
Manual Transmission Filler Plug
39 (400, 29)
◆ Control Shift Lever Retainer Gasket
Manual Transmission Case
x13
◆ Manual Transmission Filler Plug Gasket
Manual Transmission Case Cover Sub–assy
18 (185, 14)
x9
Reverse Restrict Pin Assy
Reverse Restrict Pin Slotted Spring Pin
39 (400, 29)
Drain (MTM) Plug Sub–assy
◆ Drain plug (MTM) Gasket
N·m (kgf·cm, ft·lbf) : Specified torque
◆ Non–reusable part
★ Precoated part
Apply MP grease
29 (300, 22)
★ Transaxle Case & Transmission Case Setting Bolt
P
D30517

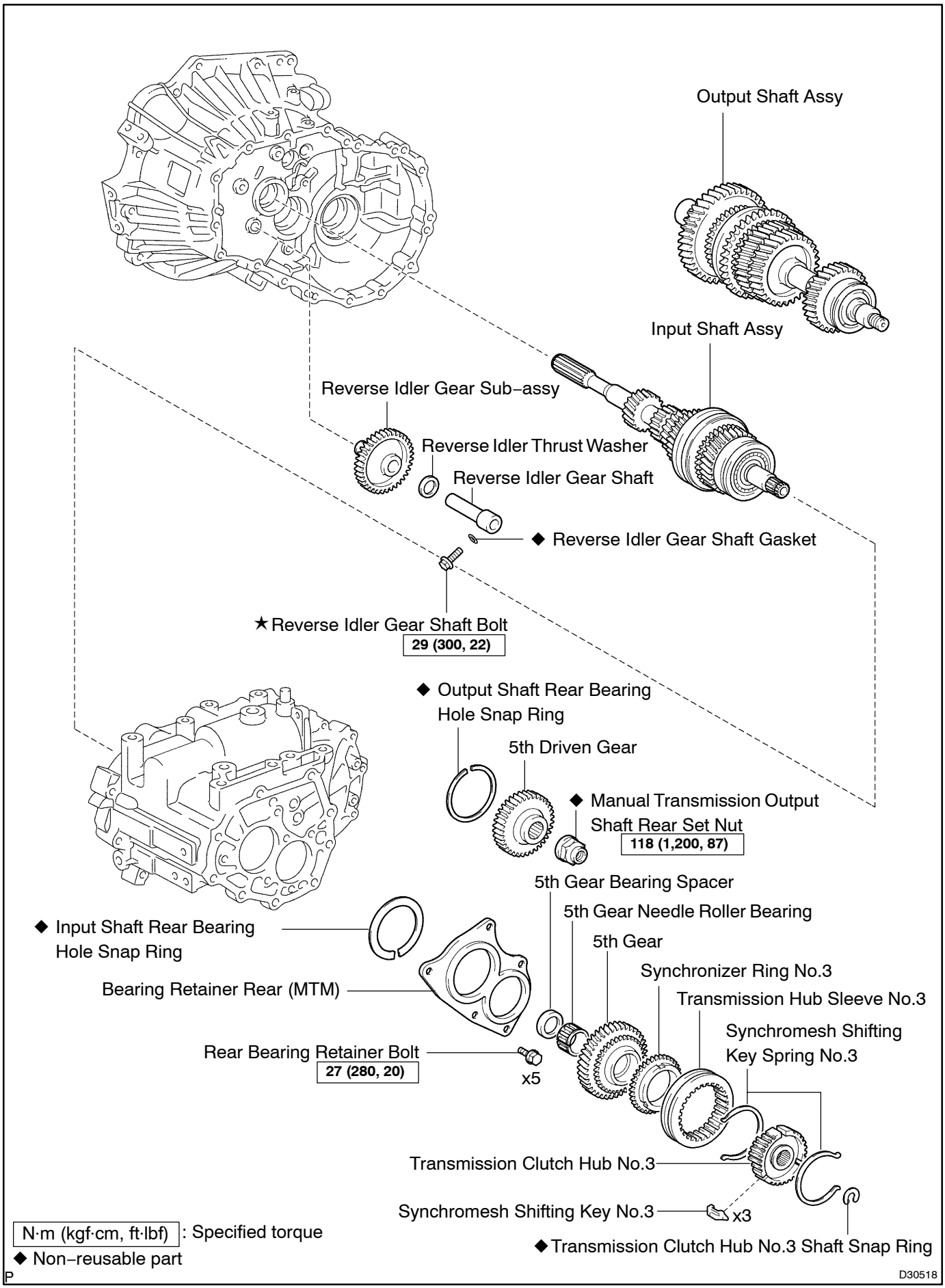
Output Shaft Assy
Input Shaft Assy
Reverse Idler Gear Sub–assy
Reverse Idler Thrust Washer
Reverse Idler Gear Shaft
◆ Reverse Idler Gear Shaft Gasket
★Reverse Idler Gear Shaft Bolt
29 (300, 22)
◆ Output Shaft Rear Bearing Hole Snap Ring
5th Driven Gear
◆ Manual Transmission Output Shaft Rear Set Nut
118 (1,200, 87)
5th Gear Bearing Spacer
5th Gear Needle Roller Bearing
5th Gear
Synchronizer Ring No.3
Transmission Hub Sleeve No.3
Synchromesh Shifting Key Spring No.3
◆ Input Shaft Rear Bearing Hole Snap Ring
Bearing Retainer Rear (MTM)
Rear Bearing Retainer Bolt
27 (280, 20)
x5
Transmission Clutch Hub No.3
Synchromesh Shifting Key No.3
x3
◆Transmission Clutch Hub No.3 Shaft Snap Ring
N·m (kgf·cm, ft·lbf) : Specified torque
◆ Non–reusable part
P
D30518

410FF–01

OVERHAUL

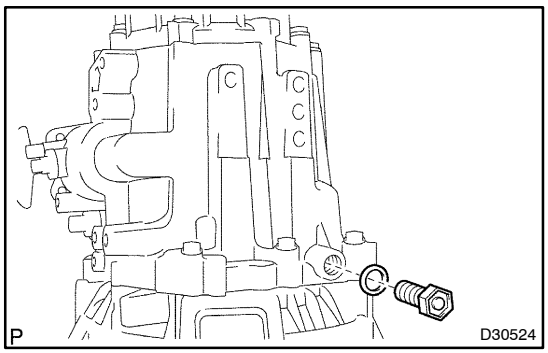

1. REMOVE MANUAL TRANSMISSION FILLER PLUG

(a) Remove the manual transmission filler plug and gasket from the manual transmission case.

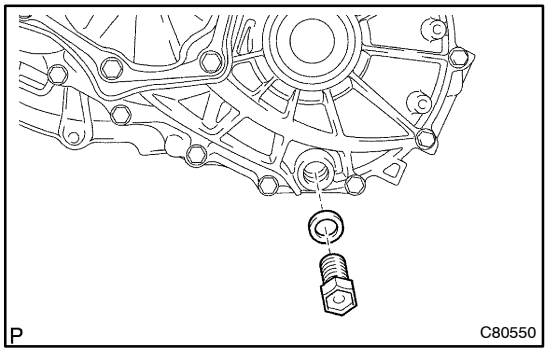

2. REMOVE DRAIN (MTM) PLUG SUB–ASSY

(a) Remove the drain plug and gasket from the manual transmission case.

3. REMOVE SPEEDOMETER DRIVEN HOLE COVER SUB–ASSY

(a) Remove the bolt and speedometer driven hole cover sub–assy.

(b) Remove the O–ring from the speedometer driven hole cover sub–assy.

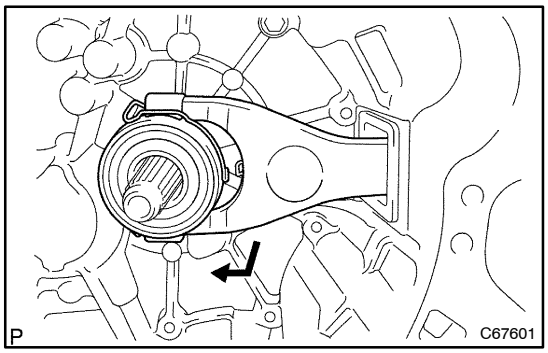

4. REMOVE CLUTCH RELEASE FORK SUB–ASSY

(a) Remove the clutch release fork sub–assy with clutch release bearing assy from the front transaxle case.

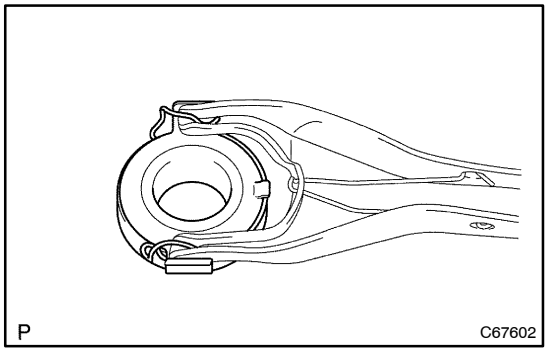

5. REMOVE CLUTCH RELEASE BEARING ASSY

(a) Remove the clutch release bearing hub clip and clutch release bearing assy from the clutch release fork sub–assy.

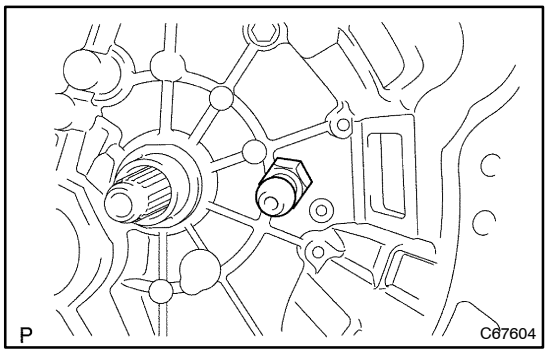

6. REMOVE RELEASE FORK SUPPORT

(a) Remove the clutch release fork support from the front transaxle case.

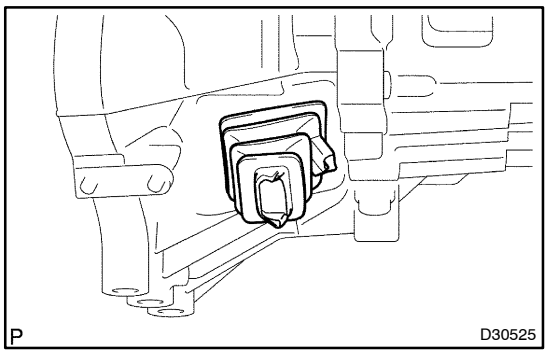

7. REMOVE CLUTCH RELEASE FORK BOOT

(a) Remove the clutch release fork boot from the front transaxle case.

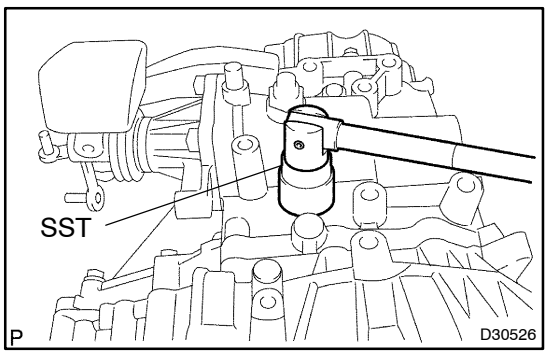

8. REMOVE BACK UP LAMP SWITCH ASSY

(a) Using SST, remove the back–up lamp switch assy and gasket from the manual transmission case.
SST 09817–16011

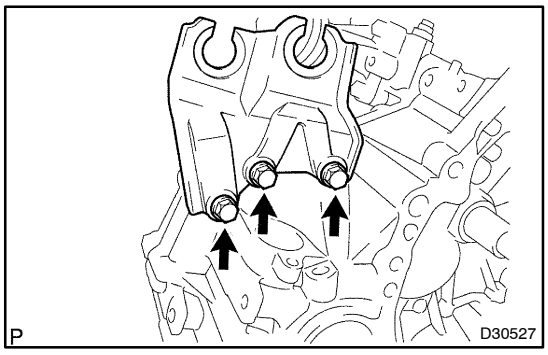

9. REMOVE FLOOR SHIFT CONTROL LEVER HOUSING SUPPORT BRACKET

(a) Remove the 3 bolts and floor shift control lever housing support bracket from the front transaxle case.

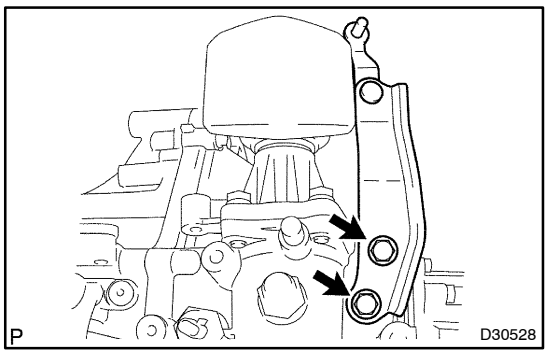

10. REMOVE SELECTING BELL CRANK ASSY

(a) Remove the 2 bolts and selecting bell crank assy from the manual transmission case.

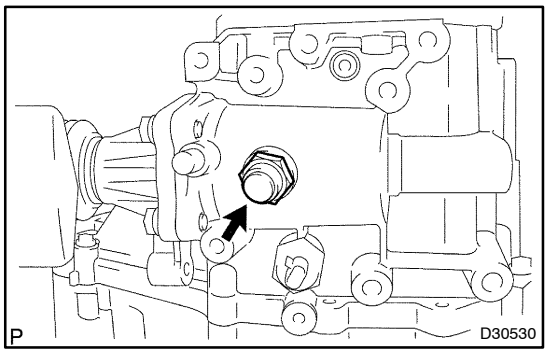

11. REMOVE LOCK BALL ASSY NO.1

(a) Remove the lock ball assy No.1 from the manual transmission case.

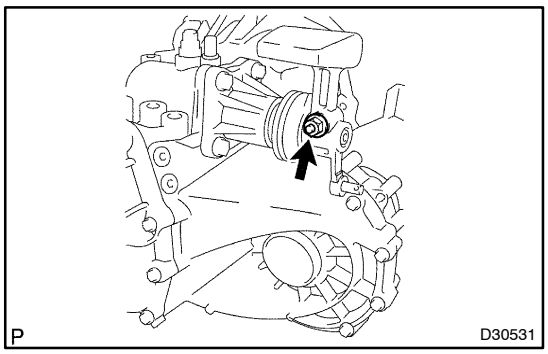

12. REMOVE CONTROL SHIFT LEVER

(a) Remove the nut and spring washer.

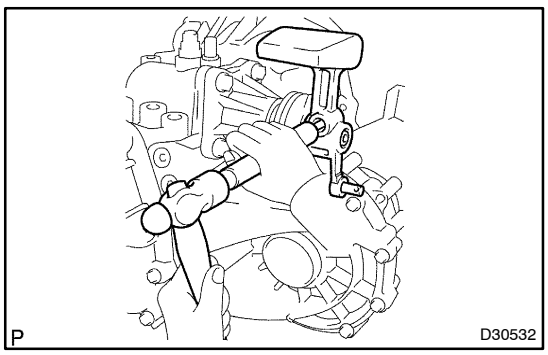

(b) Using a brass bar and a hammer, remove the shift outer lever lever lock pin.

(c) Remove the control shift lever.

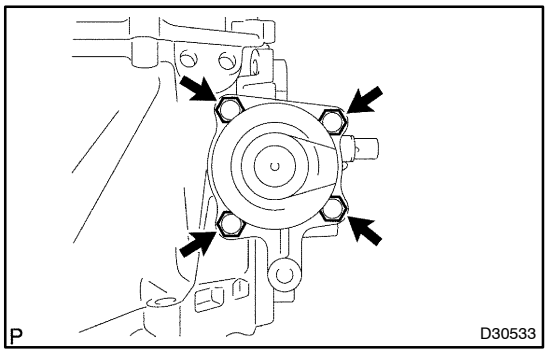

13. REMOVE CONTROL SHAFT COVER

(a) Remove the 4 bolts, control shaft cover and gasket from the manual transmission case.

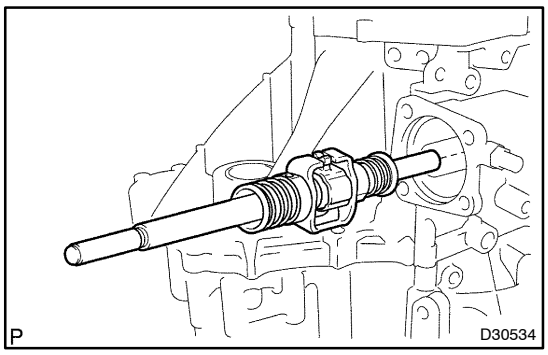

14. REMOVE SHIFT & SELECT LEVER SHAFT ASSY

(a) Remove the shift & select lever shaft assy from the manual transmission case.

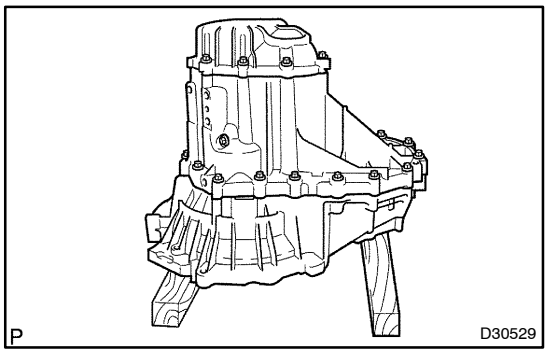

15. FIX MANUAL TRANSAXLE ASSY

(a) Using 2 wooden blocks, fix the manual transaxle assy.

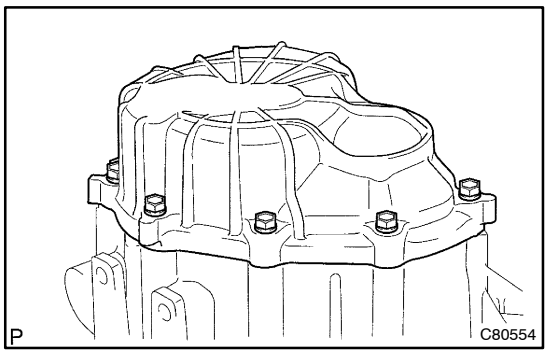

16. REMOVE MANUAL TRANSMISSION CASE COVER SUB–ASSY

(a) Remove the 9 bolts.

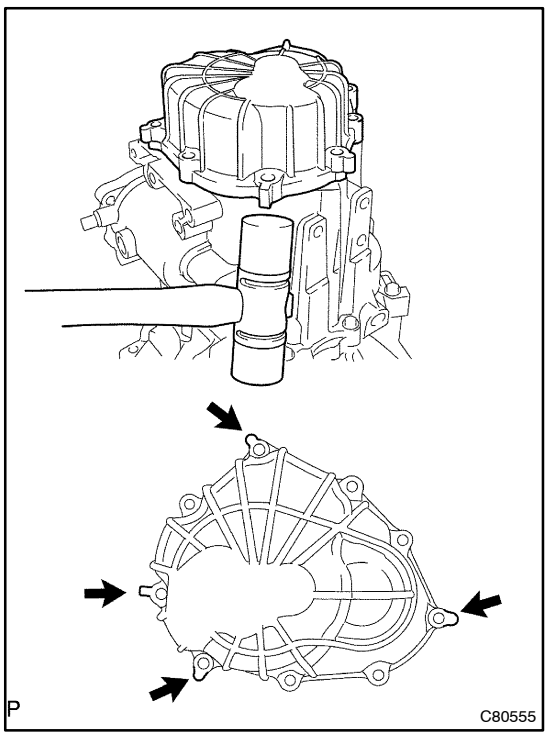

(b) Gently tap the protrusion of the manual transmission case cover sub–assy with a hammer and remove it.

NOTICE:

Be careful not to damage the manual transmission case sub–assy.

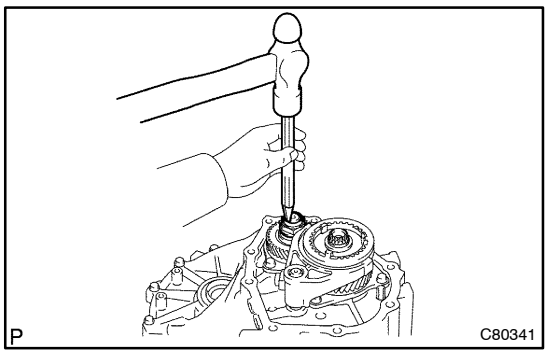

17. REMOVE MANUAL TRANSMISSION OUTPUT SHAFT REAR SET NUT

(a) Using a chisel and a hammer, loosen the staked part of the manual transmission output shaft rear set nut.

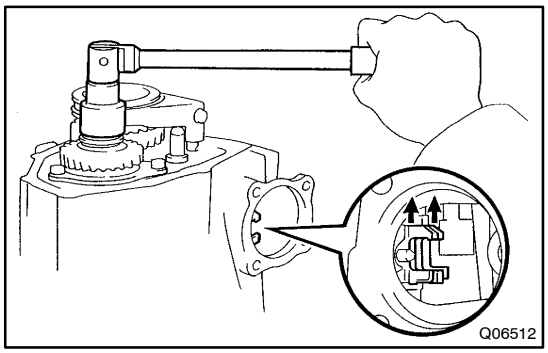

(b) Engage the gears to make them double meshed.
(c) Remove the manual transmission output shaft rear set nut.
(d) Disengage the double meshing of the gear.

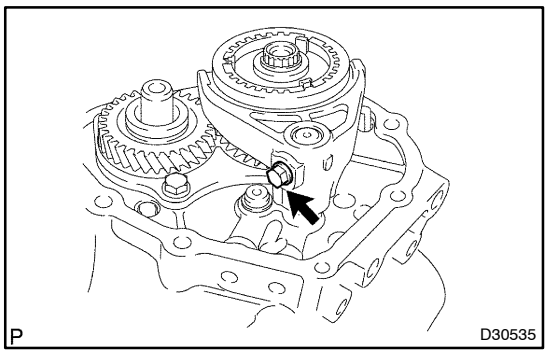

18. REMOVE GEAR SHIFT FORK NO.3

(a) Remove the gear shift fork lock bolt from the gear shift fork No.3.

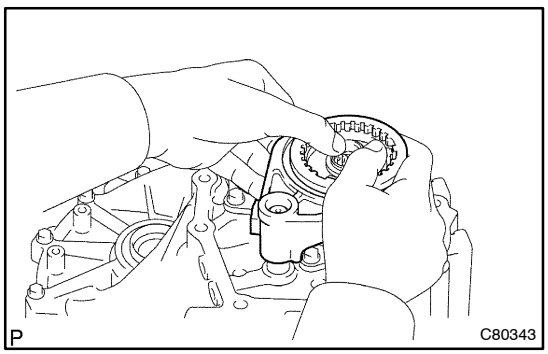

(b) Remove the hub sleeve No.3 and gear shift fork No.3 from the transmission clutch hub No.3.

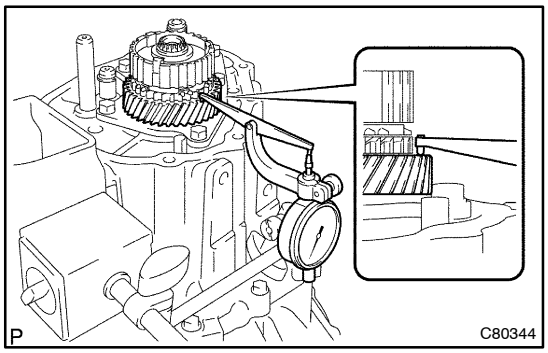

19. INSPECT 5TH GEAR THRUST CLEARANCE

(a) Using a dial indicator, measure the thrust clearance.
Standard clearance:
0.10 to 0.57 mm (0.0039 to 0.0224 in.)
Maximum clearance:
0.57 mm (0.0224 in.)

If the clearance exceeds the maximum, replace the transmission clutch hub No.3, 5th gear or input shaft rear radial ball bearing.

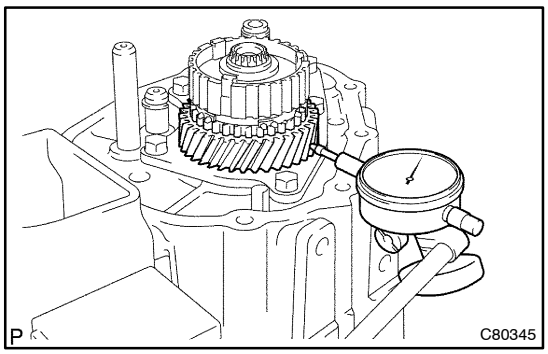

20. INSPECT 5TH GEAR RADIAL CLEARANCE

(a) Using a dial indicator, measure the radial clearance.
Standard clearance:
0.015 to 0.058 mm (0.0006 to 0.0023 in.)
Maximum clearance:
0.058 mm (0.0023 in.)

If the clearance exceeds the maximum, replace the 5the gear, 5the gear needle roller bearing or input shaft.

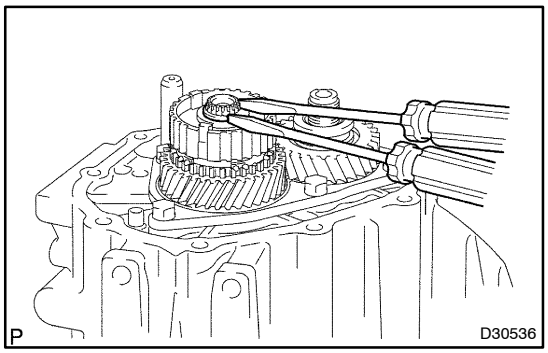

21. REMOVE TRANSMISSION CLUTCH HUB NO.3

(a) Using 2 screwdrivers and a hammer, tap out the snap ring.

HINT:

Use a shop rag to keep the snap ring from flying.

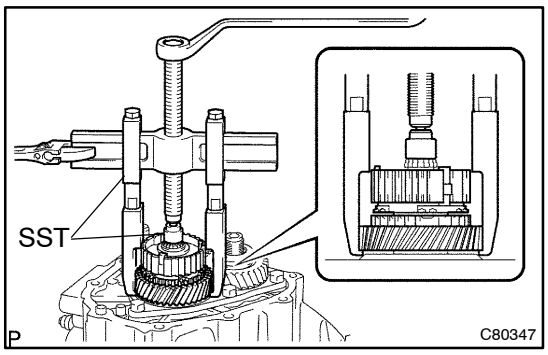

(b) Using SST, remove the transmission clutch hub No.3, 5th gear and synchronizer ring No.3 from the input shaft.

SST 09950–40011 (09951–04020, 09952–04010, 09953–04030, 09954–04010, 09955–04071, 09957–04010), 09950–60010 (09951–00200)

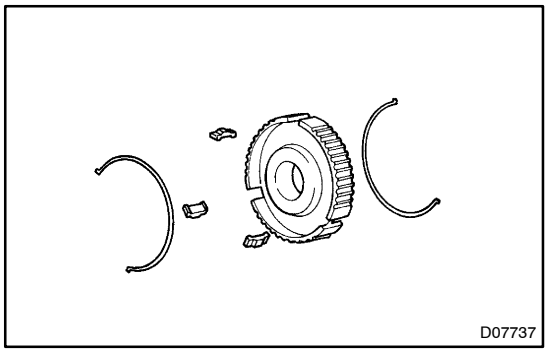

(c) Remove the 3 synchromesh shifting keys and 2 synchromesh shifting key springs from the transmission clutch hub No.3.

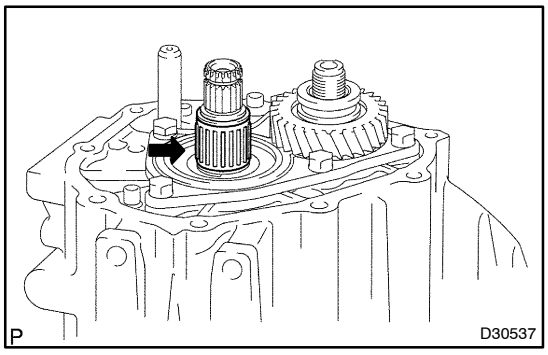

22. REMOVE 5TH GEAR NEEDLE ROLLER BEARING

(a) Remove the 5th gear needle roller bearing and 5th gear bearing spacer from the input shaft.

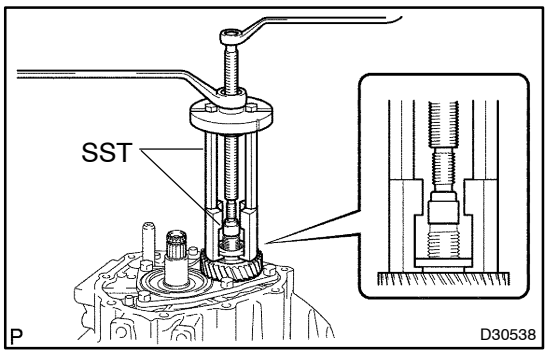

23. REMOVE 5TH DRIVEN GEAR

(a) Using SST, remove the 5th driven gear from the output shaft.

SST 09950–30012 (09951–03010, 09953–03010, 09954–03010, 09955–03011, 09957–04010), 09950–60010 (09951–00190)

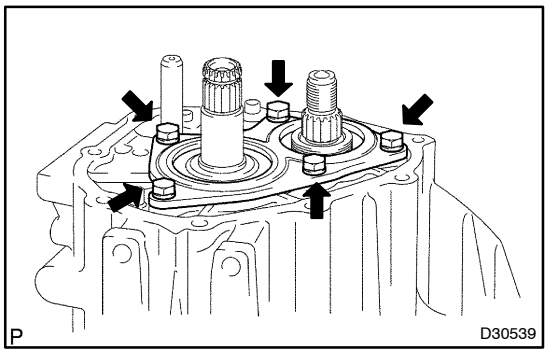

24. REMOVE BEARING RETAINER REAR (MTM)

(a) Remove the 5 bolts and bearing retainer rear from the manual transmission case.

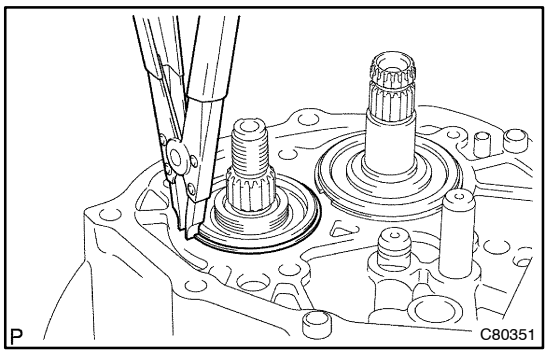

25. REMOVE OUTPUT SHAFT REAR BEARING HOLE SNAP RING

(a) Using a snap ring expander, remove the output shaft rear bearing hole snap ring from the output shaft.

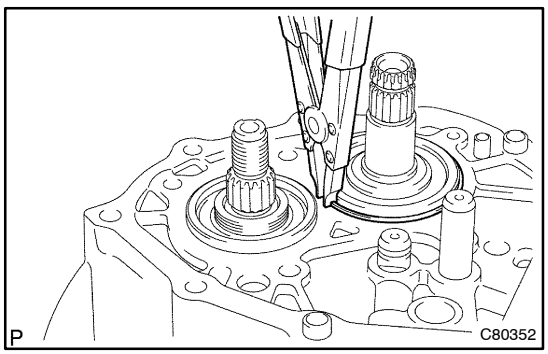

26. REMOVE INPUT SHAFT REAR BEARING HOLE SNAP RING

(a) Using a snap ring expander, remove the input shaft rear bearing hole snap ring from the input shaft.

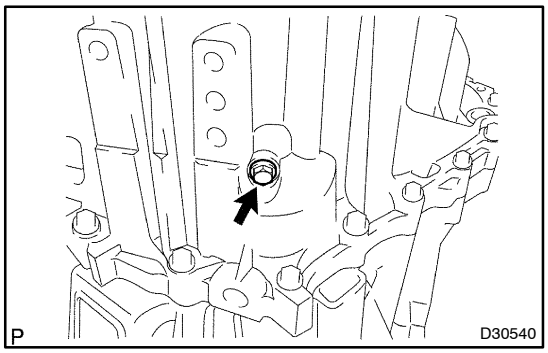

27. REMOVE REVERSE IDLER GEAR SHAFT BOLT

(a) Remove the reverse idler gear shaft bolt and reverse idler gear shaft gasket from the manual transmission case.

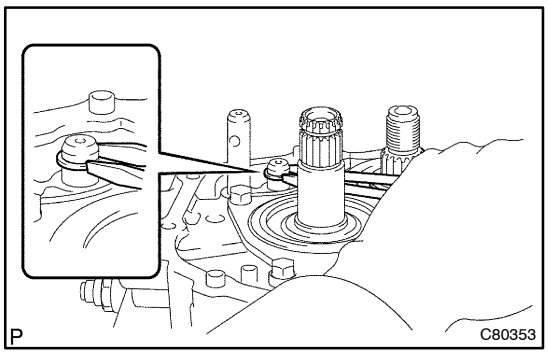

28. REMOVE SHIFT FORK SHAFT SHAFT SNAP RING

(a) Using 2 screwdrivers and a hammer, tap out the snap ring.

HINT:

Use a shop rag to keep the shifting key spring from flying.

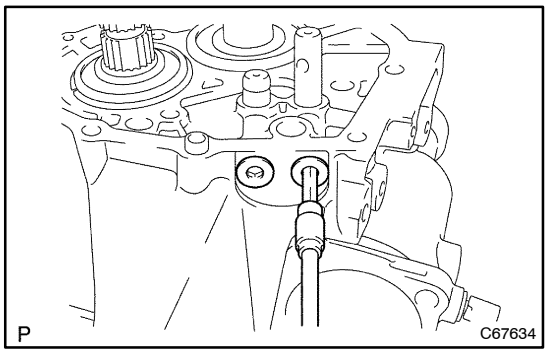

29. REMOVE SHIFT DETENT BALL

(a) Using a hexagon wrench, remove the 2 shift detent ball plugs from the manual transmission case.

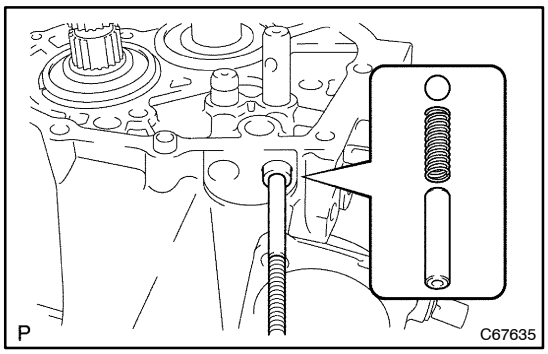

(b) Using a magnetic finger, remove the 2 seats, springs and balls from the manual transmission case.

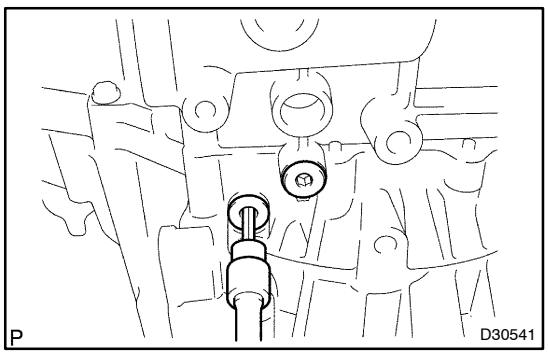

(c) Using a hexagon wrench, remove the shift detent ball plug from the front transaxle case.

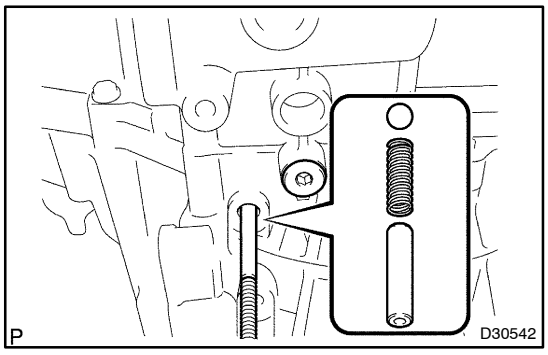

(d) Using a magnetic finger, remove the seat, spring and ball from the front transaxle case.

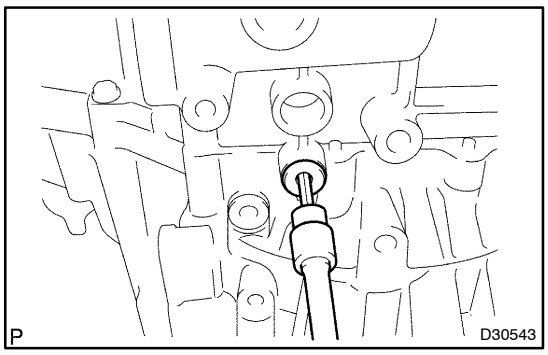

30. REMOVE LOCK BALL ASSY NO.2

(a) Using a hexagon wrench, remove the lock ball assy No.2 from the manual transmission case.

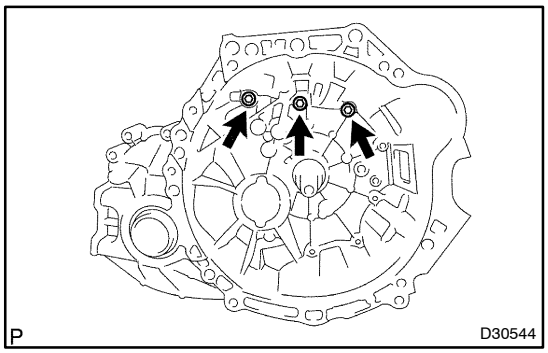

31. REMOVE MANUAL TRANSMISSION CASE

(a) Remove the 3 bolts from the front transaxle case.

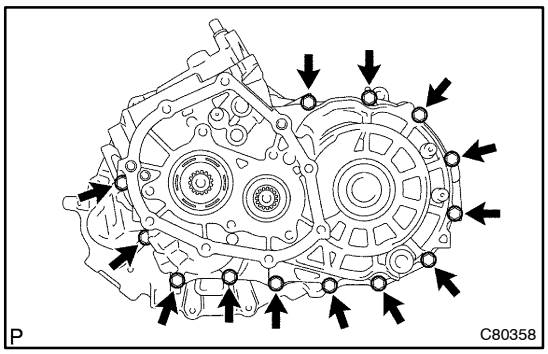

(b) Remove the 13 bolts from the manual transmission case.

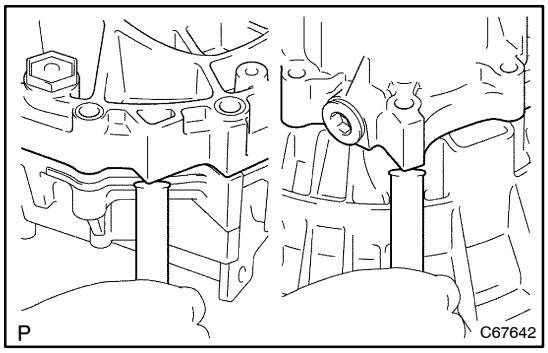

(c) Gently tap the transmission case with a brass bar and hammer and remove it from the transaxle case.

NOTICE:

Do not damage the manual transmission case and transaxle case.

(d) Remove the 2 manual transmission case straight pins from the front transaxle case.

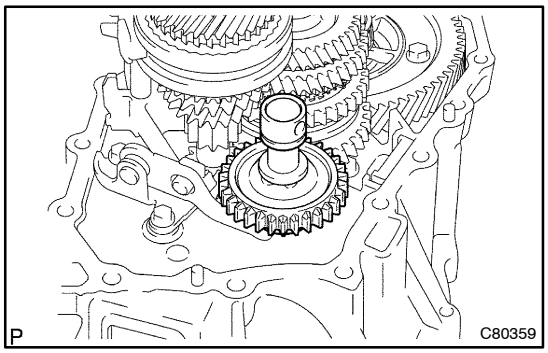

32. REMOVE REVERSE IDLER GEAR SUB–ASSY

(a) Remove the reverse idler gear, thrust washer and reverse idler gear shaft from the front transaxle case.

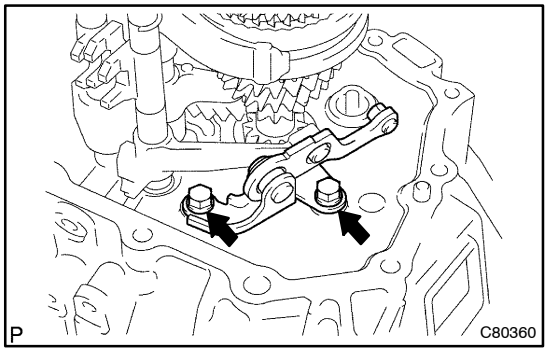

33. REMOVE REVERSE SHIFT ARM BRACKET ASSY

(a) Remove the 2 bolts and reverse shift arm bracket assy from the front transaxle case.

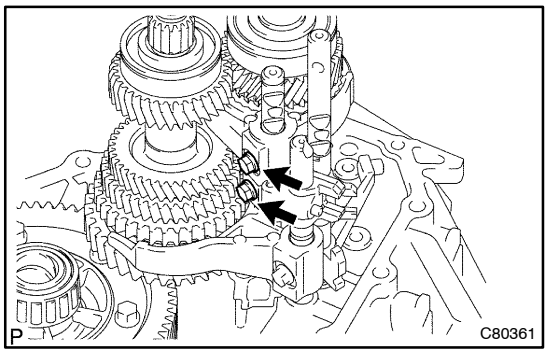

34. REMOVE GEAR SHIFT FORK SHAFT NO.2

(a) Remove the 2 bolts from the gear shift fork No.2 and gear shift head No.1.

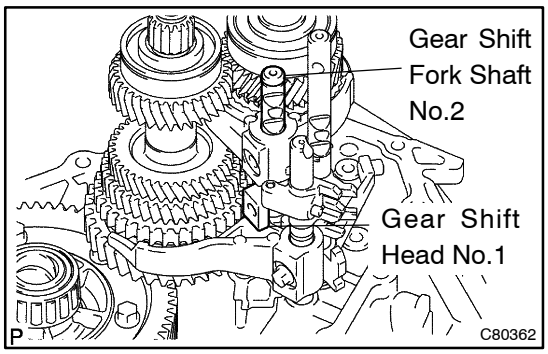

(b) Remove the gear shift fork shaft No.2 and gear shift head No.1 from the front transaxle case.

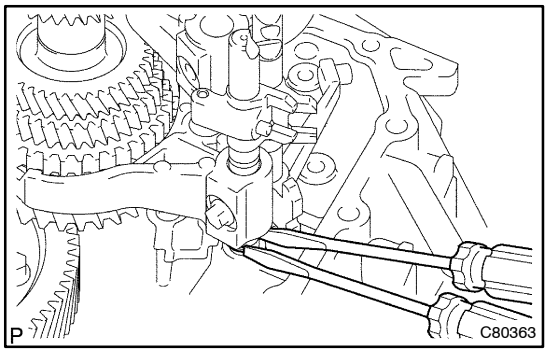

35. REMOVE GEAR SHIFT FORK SHAFT NO.1

(a) Using 2 screwdrivers and a hammer, tap out the snap rings.

HINT:

Use a shop rag to keep the snap ring from flying.

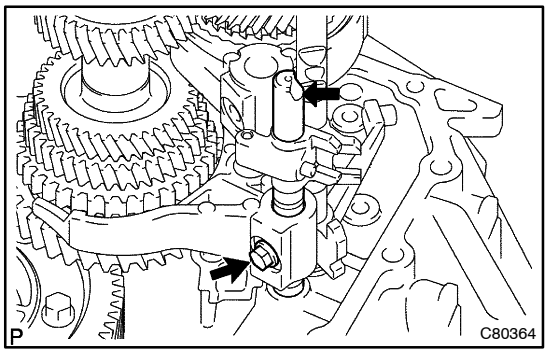

(b) Remove the shift fork set bolt and gear shift fork shaft No.1 from the gear shift fork No.1.

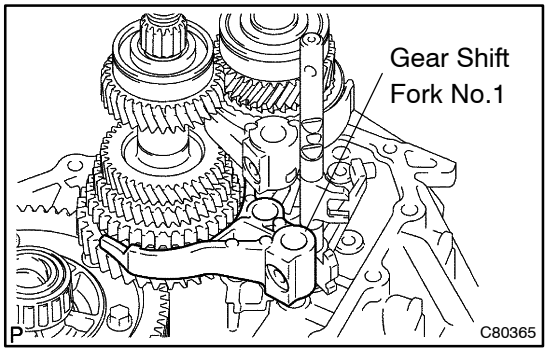

(c) Remove the shift fork No.1.

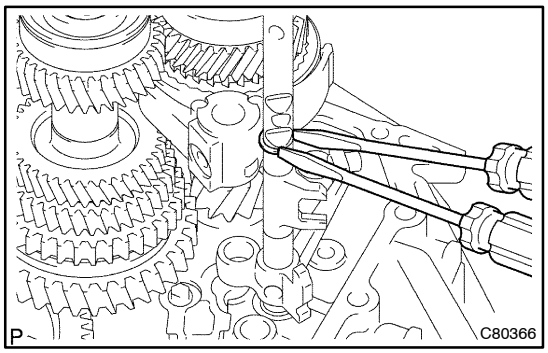

36. REMOVE GEAR SHIFT FORK SHAFT NO.3

(a) Using 2 screwdrivers and a hammer, tap out the snap ring from the gear shift fork shaft No.3.

HINT:

Use a shop rag to keep the snap ring from flying.

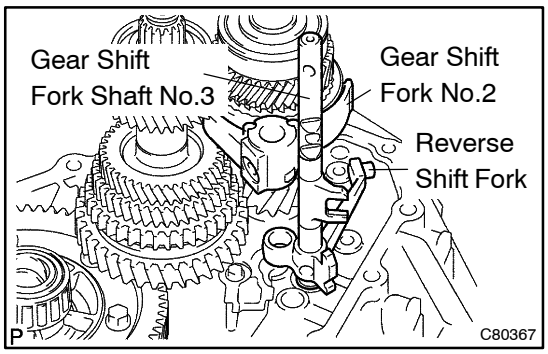

(b) Remove the shift fork shaft No.3 with reverse shift fork and gear shift fork No.2 from the manual transaxle case.

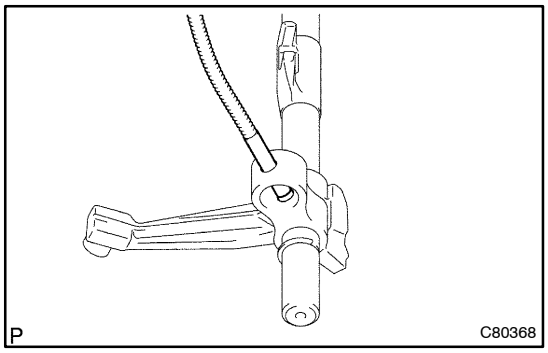

(c) Using a magnetic finger, remove the 2 reverse shift fork balls from the reverse shift fork.

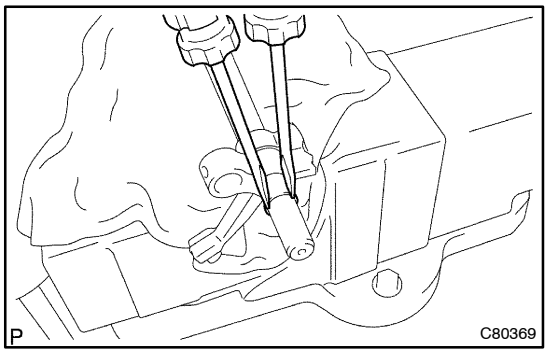

(d) Using 2 screwdrivers and a hammer, tap out the snap ring from the shift fork shaft No.3.

HINT:

Use a shop rag to keep the snap ring from flying.

(e) Remove the reverse shift fork from the gear shift fork shaft No.3.

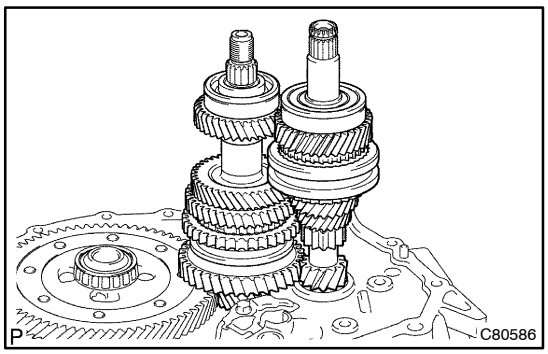

37. REMOVE INPUT SHAFT ASSY

(a) Remove the input shaft assy and output shaft assy from the front transaxle case.

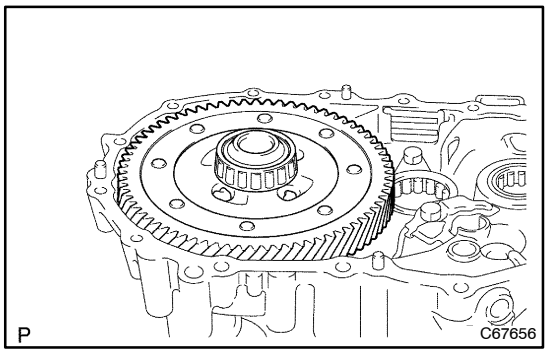

38. REMOVE DIFFERENTIAL CASE ASSY

(a) Remove the differential case assy from the front transaxle case.

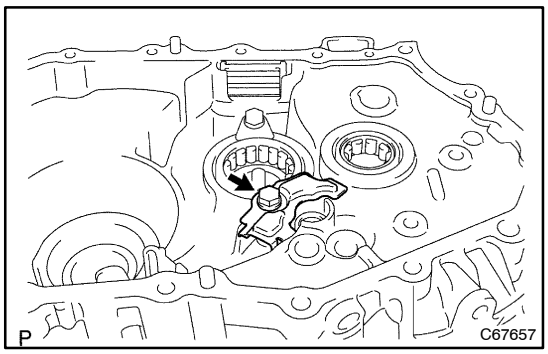

39. REMOVE MANUAL TRANSAXLE CASE RECEIVER

(a) Remove the bolt and manual transaxle case receiver from the front transaxle case.

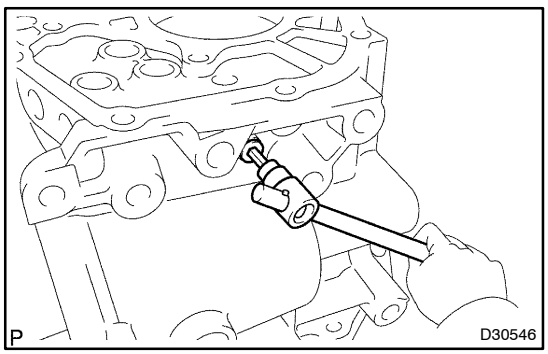

40. REMOVE REVERSE RESTRICT PIN ASSY

(a) Using a hexagon wrench, remove the reverse restrict pin plug from the manual transmission case.

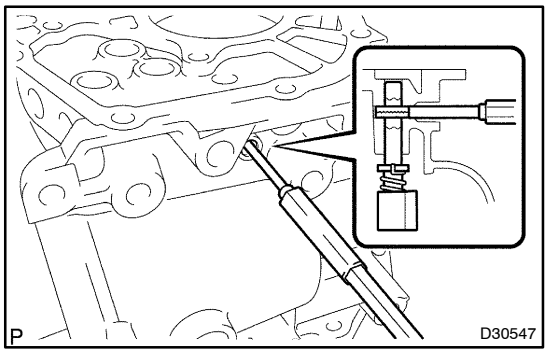

(b) Using a pin punch (ϕ 5 mm) and a hammer, drive out the slotted spring pin and reverse restrict pin assy from the manual transmission case.

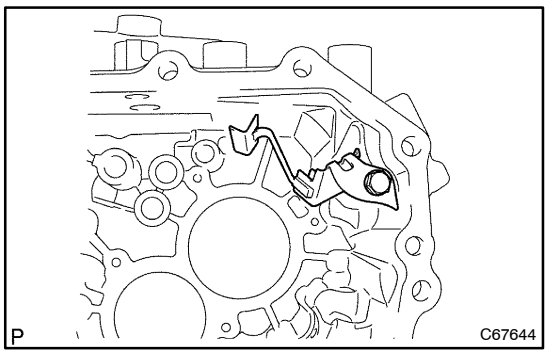

41. REMOVE OIL RECEIVER PIPE NO.1 (MTM)

(a) Remove the bolt and oil receiver pipe No.1 from the manual transmission case.

NOTICE:

Be careful not to damage the oil receiver pipe No.1.

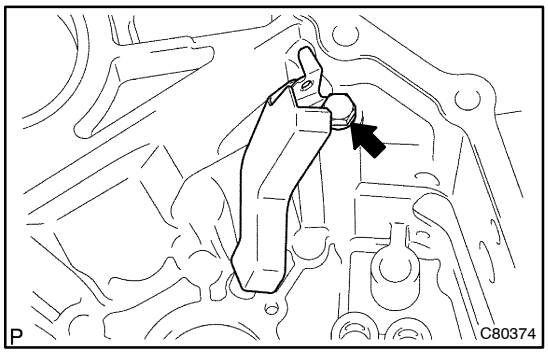

42. REMOVE OIL RECEIVER PIPE NO.2 (MTM)

(a) Remove the bolt and oil receiver pipe No.2 from the manual transmission case.

NOTICE:

Be careful not to damage the oil receiver pipe No.2.

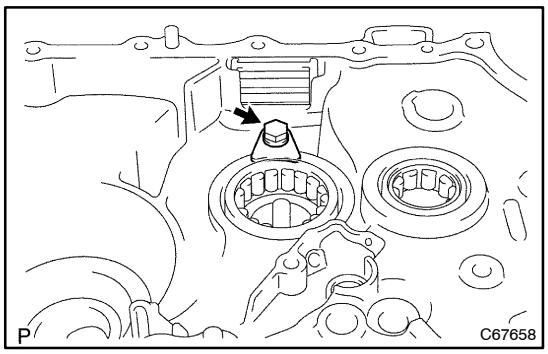

43. REMOVE BEARING LOCK PLATE

(a) Remove the bolt and bearing lock plate from the front transaxle case.

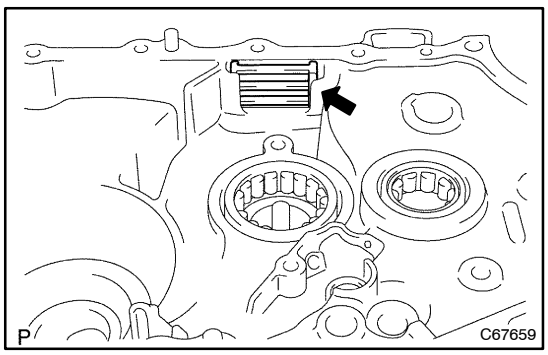

44. REMOVE TRANSMISSION MAGNET

(a) Remove the transmission magnet from the front transaxle case.

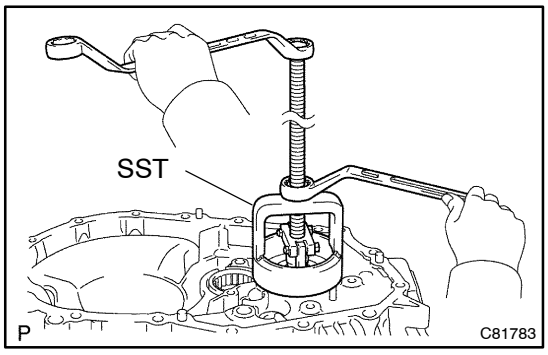

45. REMOVE INPUT SHAFT FRONT BEARING

(a) Using SST, remove the input shaft front bearing from the front transaxle case.

SST 09612–65014 (09612–01050, 09612–01060)

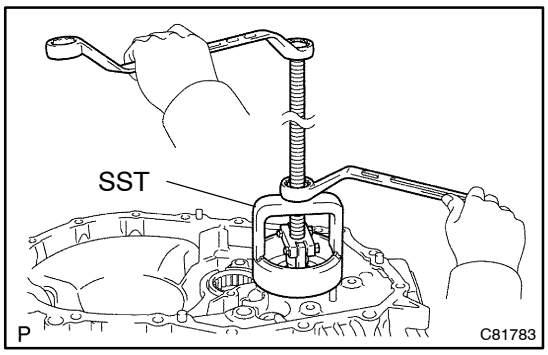

46. REMOVE FRONT TRANSAXLE CASE OIL SEAL

(a) Using SST, remove the front transaxle case oil seal from the front transaxle case.

SST 09612–65014 (09612–01040, 09612–01050)

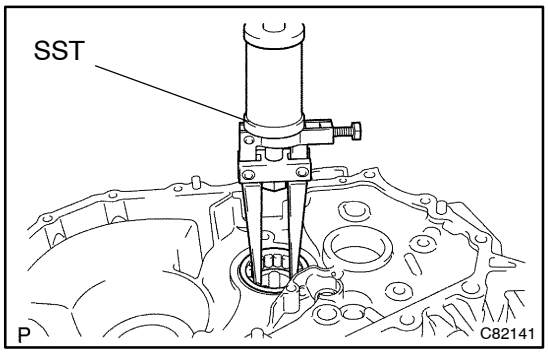

47. REMOVE OUTPUT SHAFT FRONT BEARING

(a) Using SST, remove the output shaft front bearing from the front transaxle case.
SST 09308–00010

NOTICE:
Do not apply excessive force to the front transaxle case when installing it.

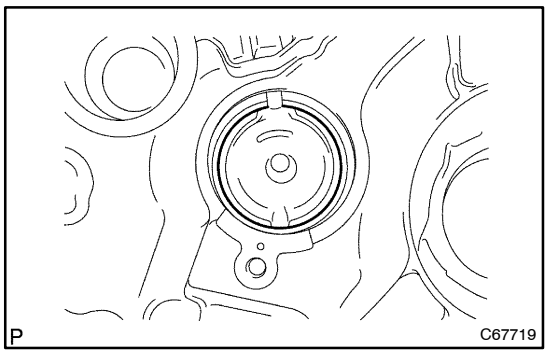

48. REMOVE OUTPUT SHAFT (MTM) COVER

(a) Remove the output shaft cover from the front transaxle case.

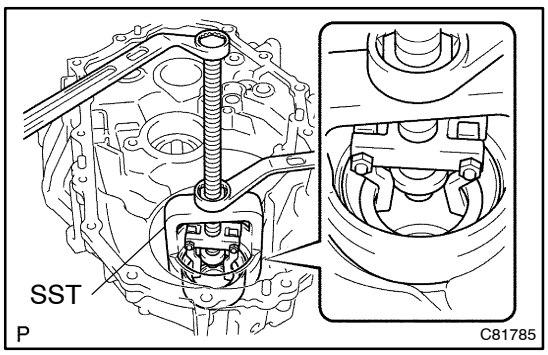

49. REMOVE FR DIFFERENTIAL CASE FRONT TAPERED ROLLER BEARING

(a) Using SST, remove the front differential case front tapered roller bearing (outer race) and plate washer from the front transaxle case.
SST 09612–65014 (09612–01040, 09612–01050),

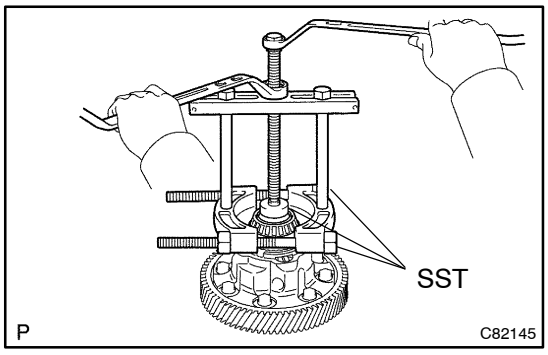

(b) Using SST, remove the front differential case front tapered roller bearing (inner race) from the front differential case.
SST 09950–00020, 09950–00030, 09950–40011 (09957–04010), 09950–60010 (09951–00360)

NOTICE:
Be careful not to damage the bearing.

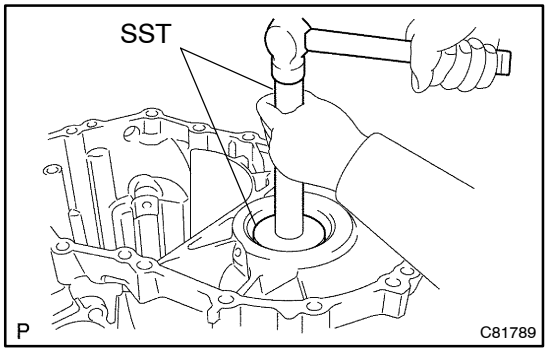

50. REMOVE TRANSAXLE CASE OIL SEAL

(a) Using SST and a hammer, remove the transaxle case oil seal from the front transaxle case.
SST 09950–60010 (09951–00530), 09950–70010 (09951–07150)

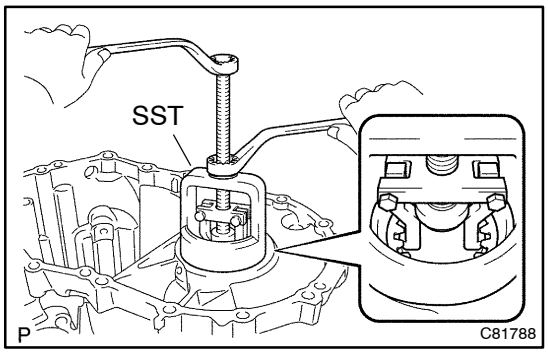

51. REMOVE FR DIFFERENTIAL CASE REAR TAPERED ROLLER BEARING

(a) Using SST, remove the front differential case rear tapered roller bearing (outer race) and plate washer from the transmission case.
SST 09612–65014 (09612–01040, 09612–01050)

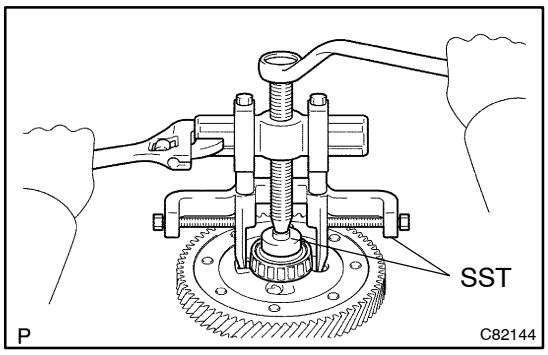

(b) Using SST and hammer, remove the front differential case rear tapered roller bearing (inner race) from the front differential case.
SST 09950–40011 (09951–04010, 09952–04010, 09953–04020, 09954–04010, 09955–04061, 09957–04010, 09958–04011), 09950–60010 (09951–00360)

NOTICE:
Be careful not to damage bearing.

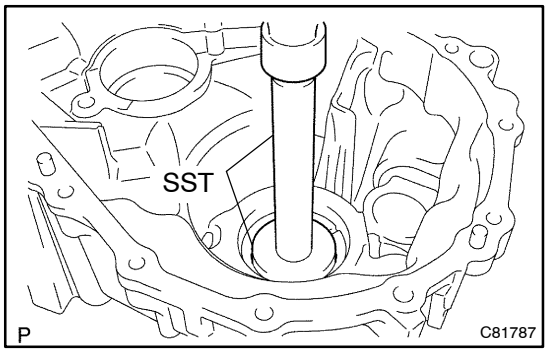

52. REMOVE TRANSMISSION CASE OIL SEAL

(a) Using SST and a hammer, drive out the transmission case oil seal from the manual transmission case.
SST 09950–60010 (09951–00600), 09950–70010 (09951–07100)

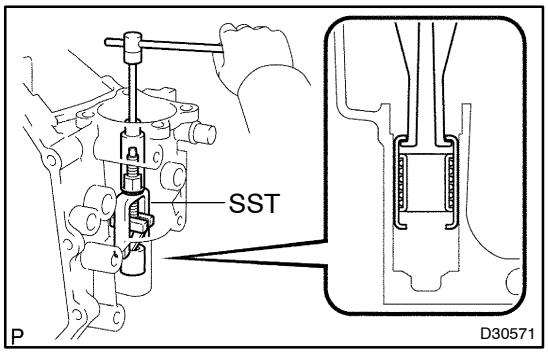

53. REMOVE SHIFT & SELECT LEVER SHAFT NEEDLE ROLLER BEARING

(a) Using SST, remove the shift & select lever shaft needle roller bearing.
SST 09319–60020

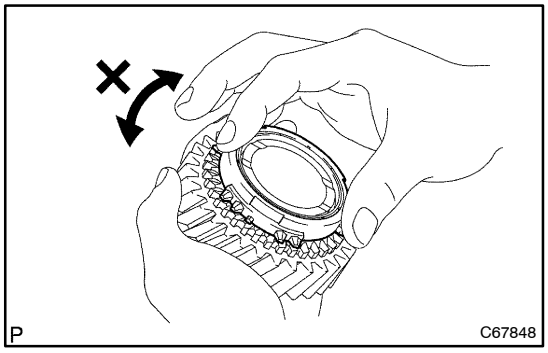

54. INSPECT SYNCHRONIZER RING NO.3

(a) Check for any wear or damage.

(b) Apply gear oil to the cone of the 5th gear and check with the synchronizer ring No.3 contacted by pressure that the gear does not turn in the direction as shown in the illustration.

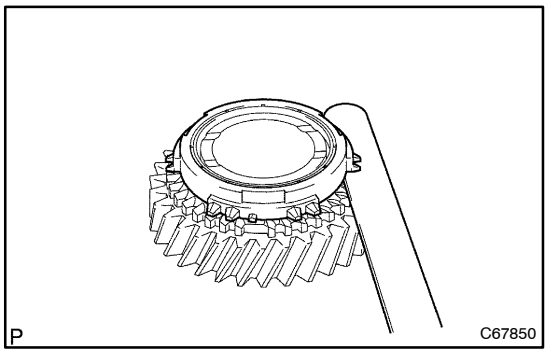

(c) Using a feeler gauge, check the clearance between the synchronizer ring No.3 and 5th gear with the synchronizer ring No.3 contacted to the cone of the 5th gear.

Standard clearance:
0.75 to 1.65 mm (0.0295 to 0.0649 in.)
Minimum clearance: 0.75 mm (0.0295 in.)

If the clearance is less than the minimum, replace the synchronizer ring No.3.

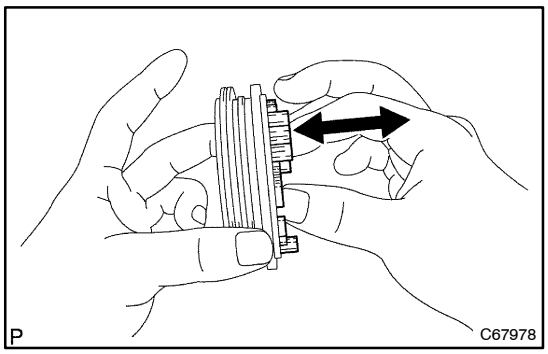

55. INSPECT TRANSMISSION HUB SLEEVE NO.3

(a) Check the sliding condition between the transmission hub sleeve No.3 and transmission clutch hub No.3.

(b) Check that the spline gear's edges of the transmission hub sleeve No.3 are not worn down.

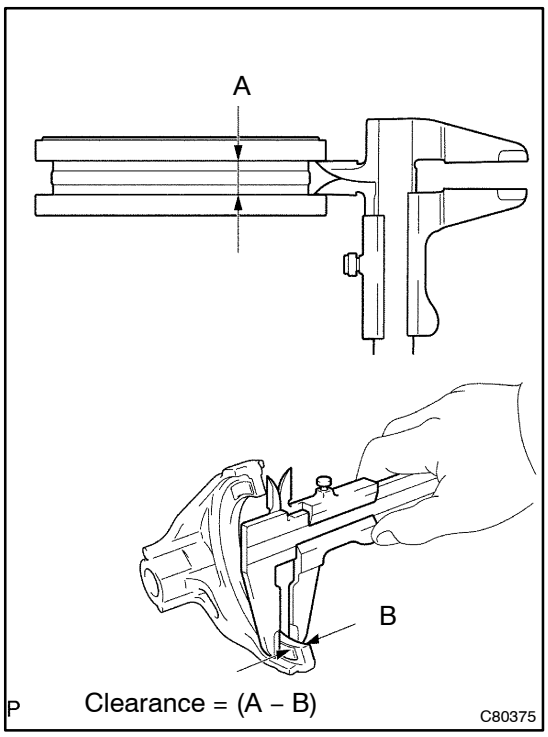

(c) Using vernier calipers, measure the clearance between the transmission hub sleeve No.3 and gear shift fork No.3.

Standard clearance:
0.3 to 0.5 mm (0.0012 to 0.0020 in.)

If the clearance exceeds the standard clearance, replace the transmission hub sleeve No.3 and gear shift fork No.3.

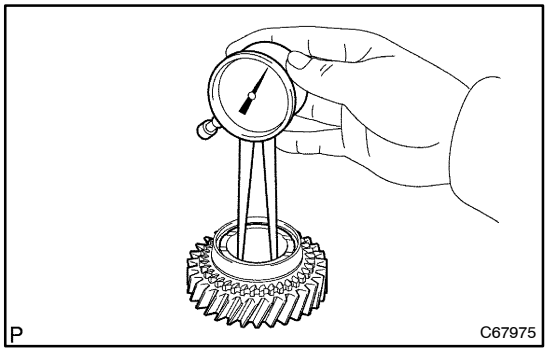

56. INSPECT 5TH GEAR

(a) Using a caliper gauge, inspect 5th gear as shown in the illustration.

Standard diameter:
29.915 to 29.931 mm (1.1778 to 1.1783 in.)

If the diameter exceeds the standard diameter, replace the 5th gear.

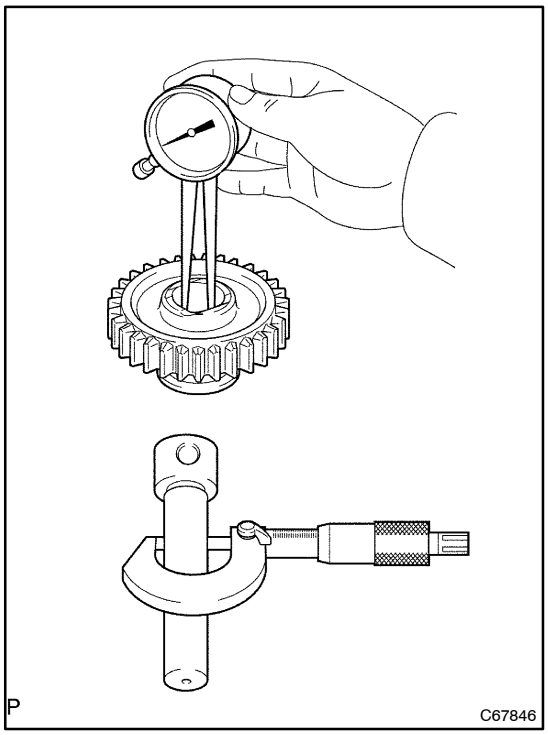

57. INSPECT REVERSE IDLER GEAR SUB–ASSY

(a) Using a caliper gauge, inspect the reverse idler gear sub–assy as shown in the illustration.

Standard diameter:
18.040 to 18.058 mm (0.7102 to 0.7109 in.)
Maximum diameter:
18.058 mm (0.7109 in.)

If the diameter exceeds the maximum, replace the reverse idler gear sub–assy.

(b) Using a micrometer, inspect the reverse idler gear shaft as shown in the illustration.

Standard outer diameter:
17.966 to 17.984 mm (0.7073 to 0.7080 in.)
Minimum outer diameter:
17.966 mm (0.7073 in.)

If the outer diameter is less than the minimum, replace the reverse idler gear shaft.

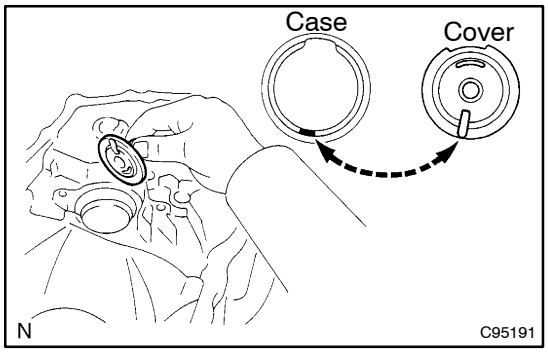

58. INSTALL OUTPUT SHAFT (MTM) COVER

(a) Coat the output shaft cover with MP grease and install it to the front transaxle case.

NOTICE:
Install the output shaft cover projection into the case side hollow.

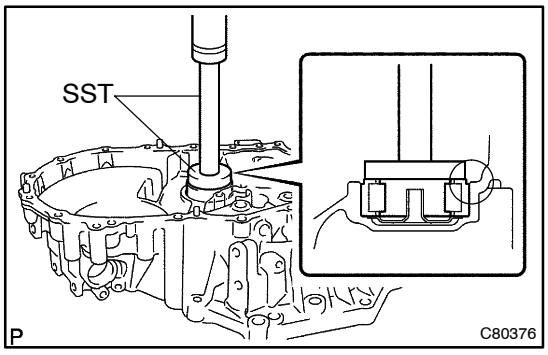

59. INSTALL OUTPUT SHAFT FRONT BEARING

(a) Coat a new output shaft front bearing with gear oil, using SST and a press, install it.

SST 09950–60010 (09951–00550), 09950–70010 (09951–07150)

NOTICE:

- **Be sure to install a new bearing in the correct direction, as shown in the illustration.**
- **When replacing the output shaft front bearing, replace the output shaft front bearing inner race along with it.**

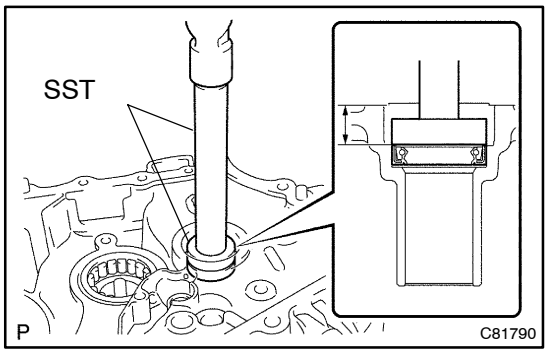

60. INSTALL FRONT TRANSAXLE CASE OIL SEAL

(a) Using SST and a hammer, install a new front transaxle case oil seal to the front transaxle case.

SST 09950–60010 (09951–00370), 09950–70010 (09951–07150)

Drive in depth: 15.6 to 16.0 mm (0.6141 to 0.6299 in.)

(b) Coat the lip of the front transaxle case oil seal with MP grease.

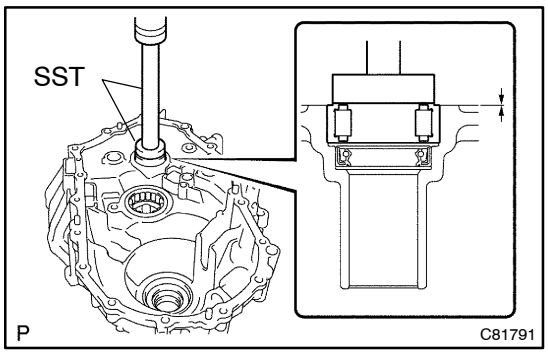

61. INSTALL INPUT SHAFT FRONT BEARING

(a) Coat a new input shaft front bearing with MP grease. Using SST and a press, install it to the front transaxle case.

SST 09950–60010 (09951–00420), 09950–70010 (09951–07150)

Drive in depth: 0 to 0.3 mm (0 to 0.0118 in.)

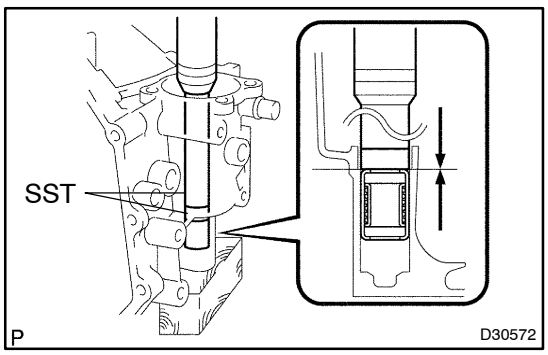

62. INSTALL SHIFT & SELECT LEVER SHAFT NEEDLE ROLLER BEARING

(a) Using SST, install the shift & select lever shaft needle roller bearing.

SST 09950–60010 (09951–00220), 09950–70010 (09951–07100)

Drive in depth: 0 to 0.5 mm (0 to 00020 in.)

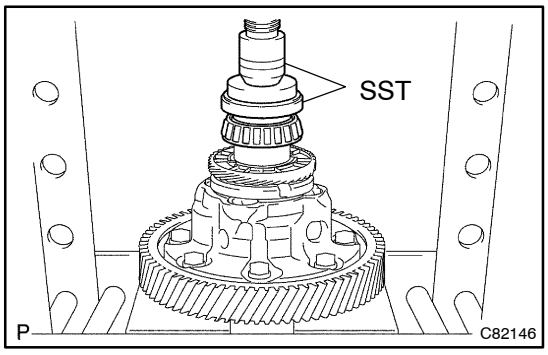

63. INSTALL FR DIFFERENTIAL CASE FRONT TAPERED ROLLER BEARING

(a) Using SST and a press, install the front differential case front tapered roller bearing (inner race) to the front differential case.

SST 09350–32014 (09351–32120), 09950–60010 (09951–00530)

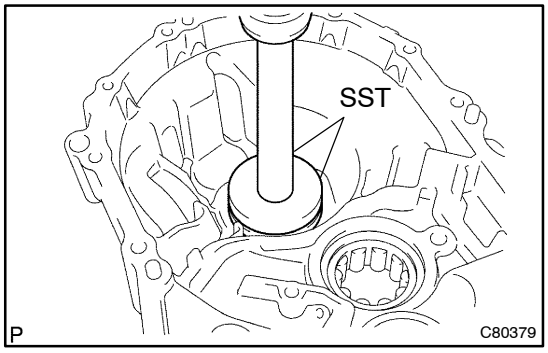

(b) Using SST and a press, install the front differential case front tapered roller bearing (outer race) with plate washer to the front transaxle case.

SST 09950–60020 (09951–00680), 09950–70010 (09951–07150)

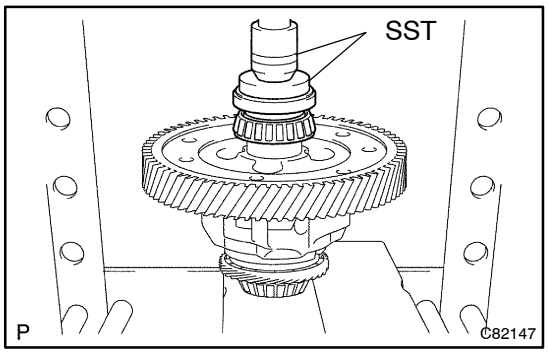

64. INSTALL FR DIFFERENTIAL CASE REAR TAPERED ROLLER BEARING

(a) Using SST and a press, install the front differential case rear tapered roller bearing (inner race) to the front differential case.
SST 09350–32014 (09351–32120), 09950–60010 (09951–00530)

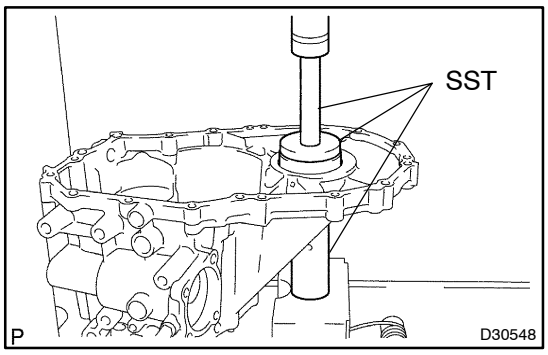

(b) Using SST and a press, install the front differential case rear tapered roller bearing (outer race) with shim to the transmission case.
SST 09309–36010, 09950–60020 (09951–00710), 09950–70010 (09951–07150)

HINT:
Use a front differential case washer rear of the same thickness as the removed one.

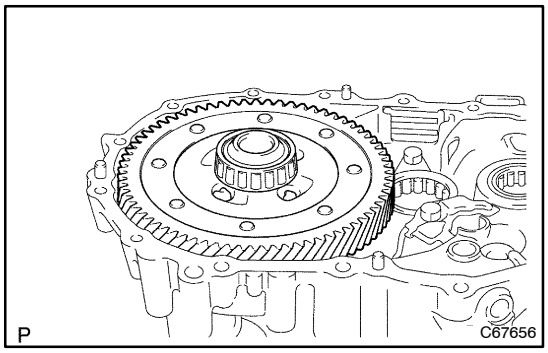

65. ADJUST DIFFERENTIAL SIDE BEARING PRELOAD

(a) Coat the differential case assy with gear oil, and install it to the front transaxle case.

(b) Install the manual transmission case with 16 bolts.
Torque: 29 N·m (300 kgf·cm, 22 ft·lbf)

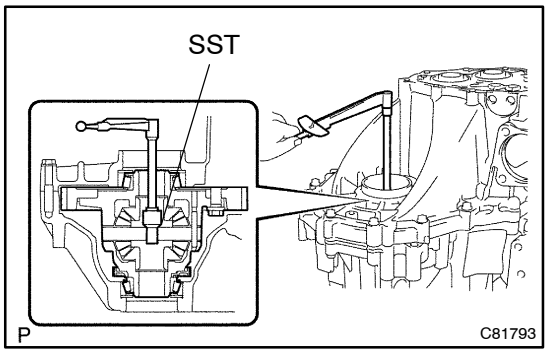

(c) Using SST and a torque wrench, turn the differential case assy to the right and left 2 or 3 times to allow the bearings to settle.
SST 09564–32011

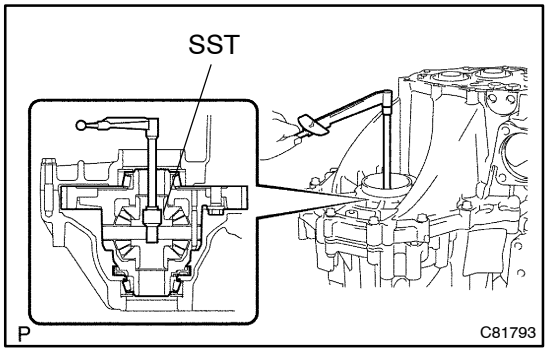

(d) Using SST and a torque wrench, measure the preload.
SST 09564–32011
Preload (at starting):
New bearing:
0.78 to 1.57 N·m (7.95 to 16.0 kgf·cm, 6.9 to 13.89 in.·lbf)
Reuse bearing:
0.49 to 0.98 N·m (5.0 to 10.0 kgf·cm, 4.34 to 8.67 in.·lbf)

(e) Select another plate washer.

Mark	Thickness mm (in.)	Mark	Thickness mm (in.)
01	1.10 (0.0433)	11	1.60 (0.0630)
02	1.15 (0.0453)	12	1.65 (0.0650)
03	1.20 (0.0472)	13	1.70 (0.1060)
04	1.25 (0.0492)	14	1.75 (0.0689)
05	1.30 (0.0512)	15	1.80 (0.0709)
06	1.35 (0.0531)	16	1.85 (0.0728)
07	1.40 (0.0551)	17	1.90 (0.0748)
08	1.45 (0.0571)	18	1.95 (0.0768)
09	1.50 (0.0591)	19	2.00 (0.0787)
10	1.55 (0.0610)	–	–

(f) Remove the 16 bolts and manual transmission case from the transaxle case.

(g) Remove the differential case assy from the transaxle case.

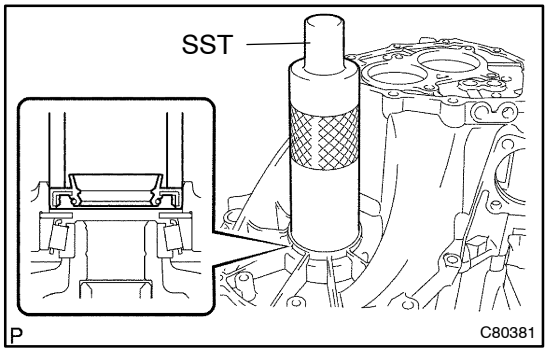

66. INSTALL TRANSMISSION CASE OIL SEAL

(a) Using SST and a hammer, install a new transmission case oil seal to the manual transmission case.
SST 09316–60011 (09316–00011)
Drive in depth: 9.6 to 10.2 mm (0.3779 to 0.4015 in.)

(b) Coat the lip of the front transmission case oil seal with MP grease.

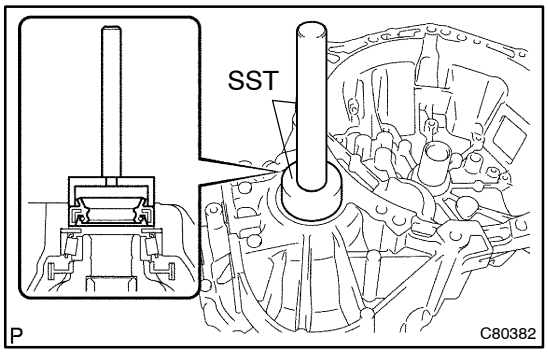

67. INSTALL TRANSAXLE CASE OIL SEAL

(a) Using SST and a hammer, install a new transaxle case oil seal to the front transaxle case.
Drive in depth: 1.6 to 2.2 mm (0.0629 to 0.0866 in.)
SST 09710–20011 (09710–06071), 09950–70010 (09951–07150)

(b) Coat the lip of the transaxle case oil seal with MP grease.

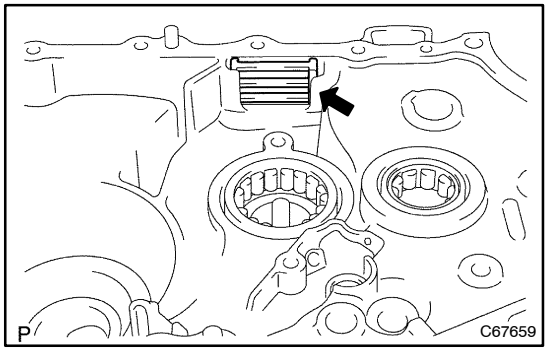

68. INSTALL TRANSMISSION MAGNET

(a) Clean the transmission magnet and install it to the front transaxle case.

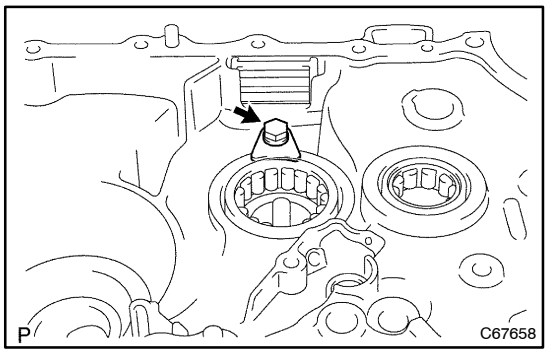

69. INSTALL BEARING LOCK PLATE

(a) Install the bearing lock plate with the bolt.
Torque: 11 N·m (115 kgf·cm, 8 ft·lbf)

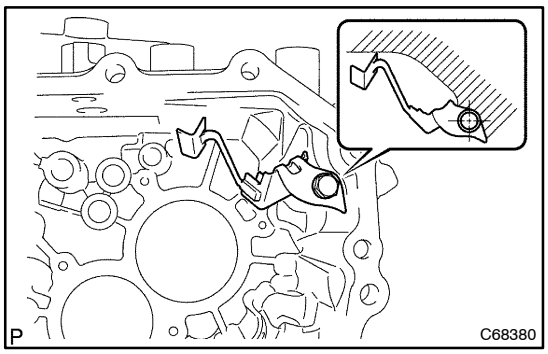

70. INSTALL OIL RECEIVER PIPE NO.1 (MTM)

(a) Install the oil receiver pipe No.1 with the bolt to the manual transmission case.
Torque: 17 N·m (175 kgf·cm, 13 ft·lbf)

NOTICE:

- **Prevent the oil receiver pipe No.1 from being deformed.**
- **Install the oil receiver pipe No.1 while placing it against the manual transmission case, as shown in the illustration.**

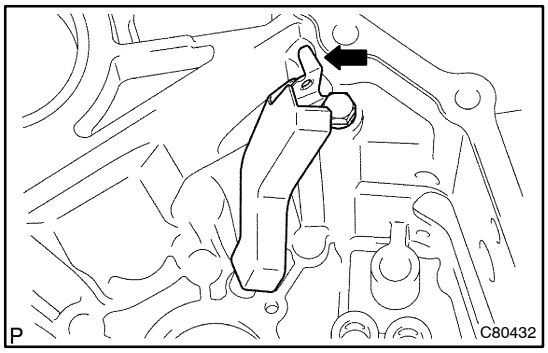

71. INSTALL OIL RECEIVER PIPE NO.2 (MTM)

(a) Install the oil receiver pipe No.2 with the bolt to the manual transmission case.
Torque: 17 N·m (175 kgf·cm, 13 ft·lbf)

NOTICE:

- **Prevent the oil receiver pipe No.2 from being deformed.**
- **Install the oil receiver pipe No.2 while placing it against the manual transmission case, as shown in the illustration.**

72. INSTALL REVERSE RESTRICT PIN ASSY

(a) Install the reverse restrict pin assy to the manual transmission case.

HINT:

Do not set the reverse restrict pin assy in incorrect orientation.

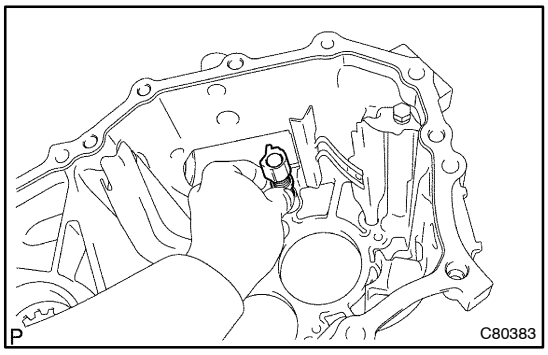

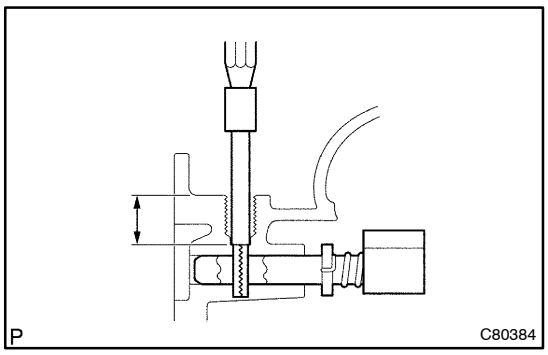

(b) Using a pin punch (ϕ 5 mm) and a hammer, install the slotted pin to the restrict pin assy.
Drive in depth: 15.5 to 16.5 mm (0.6102 to 0.6496 in.)

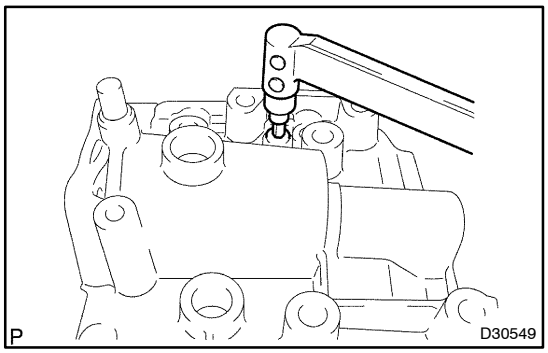

(c) Apply sealant to the reverse restrict pin plug.
Sealant:
Part No. 08833–00080, THREE BOND 1344, LOCTITE 242 or equivalent

(d) Using a hexagon wrench and a torque wrench install the reverse restrict pin plug to the manual transmission case.
Torque: 13 N·m (130 kgf·cm, 9.3 ft·lbf)

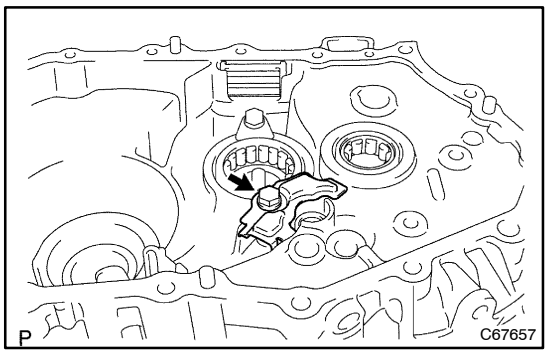

73. INSTALL MANUAL TRANSAXLE CASE RECEIVER

(a) Install the manual transaxle case receiver with the bolt to the front transaxle case.
Torque: 11 N·m (115 kgf·cm, 8 ft·lbf)

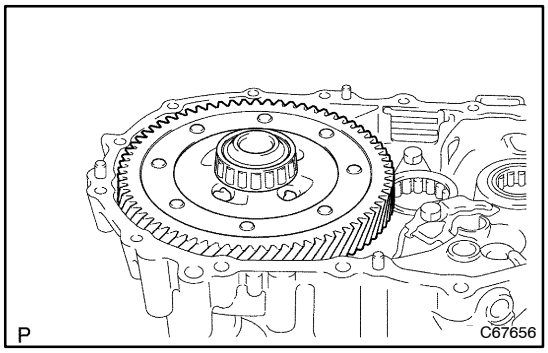

74. INSTALL DIFFERENTIAL CASE ASSY

(a) Coat the differential case tapered roller bearings with gear oil, install them to the front transaxle case.

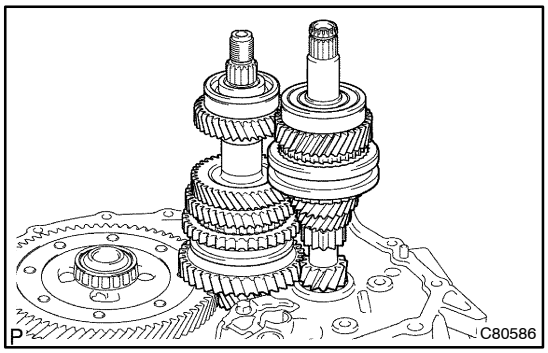

75. INSTALL INPUT SHAFT ASSY

(a) Coat the sliding and rotating surface of the input and output shafts with gear oil, install them to the transaxle case.

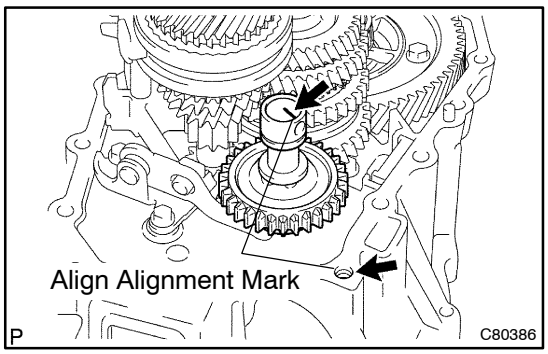

76. INSTALL REVERSE IDLER GEAR SUB–ASSY

(a) Coat the reverse idler gear, thrust washer and reverse idler gear shaft with gear oil, and install them.

HINT:
Align the mark on the reverse idler gear shaft with the bolt hole as shown in the illustration.

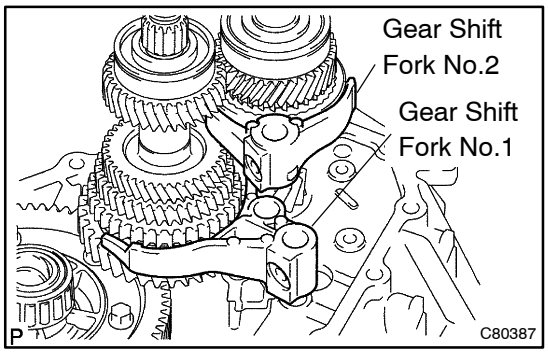

77. INSTALL GEAR SHIFT FORK SHAFT NO.1

(a) Coat the gear shift fork No.1 and gear shift fork No.2 with gear oil, and install them.

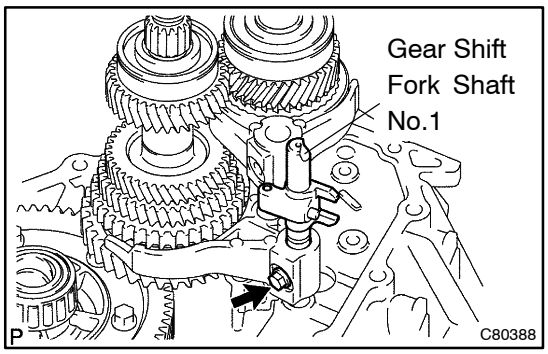

(b) Coat the gear shift fork shaft No.1 with gear oil, and install it.

(c) Apply sealant to the shift fork set bolt.
Sealant:
Part No. 08833–00080, THREE BOND 1344, LOCTITE 242 or equivalent

(d) Install the gear shift fork set bolt.
Torque: 16 N·m (160 kgf·cm, 12 ft·lbf)

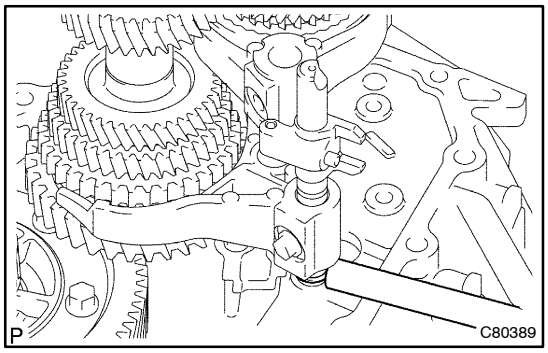

(e) Using a brass bar and a hammer, install a shaft snap ring to the gear shift fork shaft No.1.

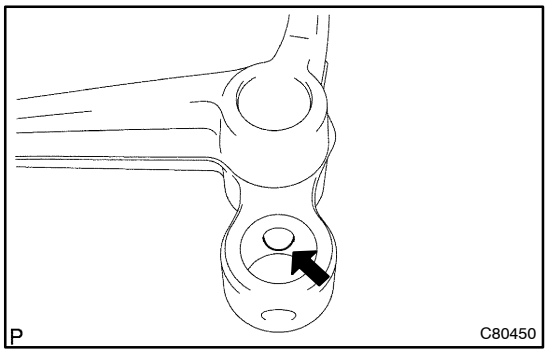

78. INSTALL GEAR SHIFT FORK SHAFT NO.3

(a) Coat the 2 shift fork balls with MP grease, and install them to the reverse shift fork.

(b) Install the reverse shift fork to the gear shift fork shaft No.3.

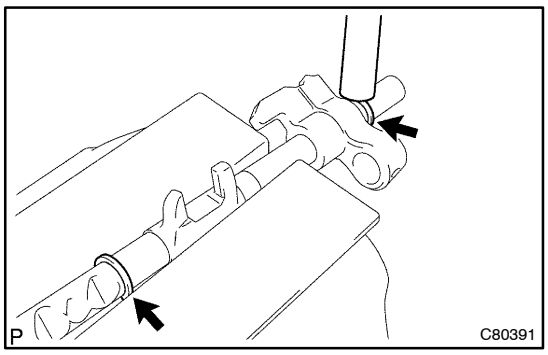

(c) Using a brass bar and a hammer, install 2 new shift fork shaft snap rings to the shift fork shaft No.3.

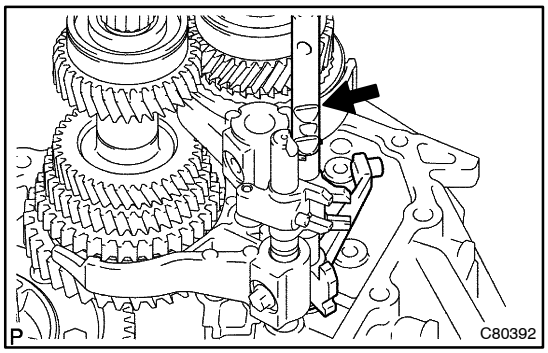

(d) Coat the shift fork shaft No.3 with gear oil, and install it.

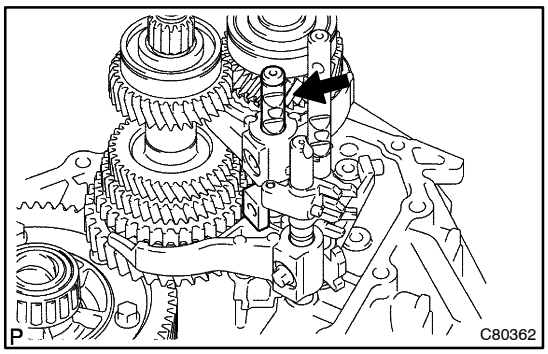

79. INSTALL GEAR SHIFT FORK SHAFT NO.2

(a) Coat the gear shift head No.1 and gear shift fork shaft No.2 with gear oil, and install them.

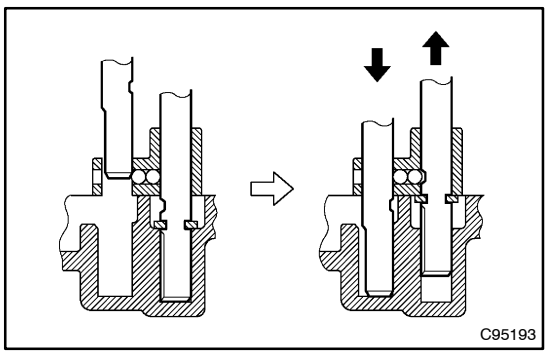

NOTICE:
To avoid the interference of the 2 shift fork balls, lift up the gear shift fork shaft NO.3 at the position shown in the illustration.

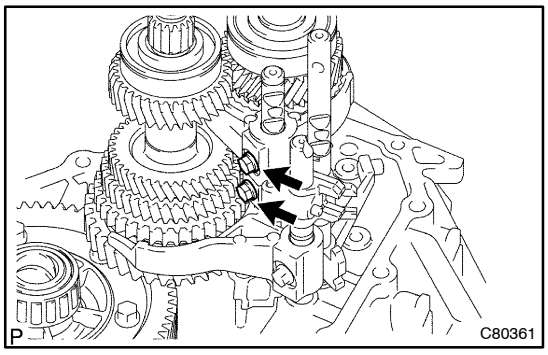

(b) Coat the 2 shift lock bolts with sealant, and install them to the gear shift fork No.2 and shift head No.1.
Sealant:
Part No. 08833–00080, THREE BOND 1344, LOCTITE 242 or equivalent
Torque: 16 N·m (160 kgf·cm, 12 ft·lbf)

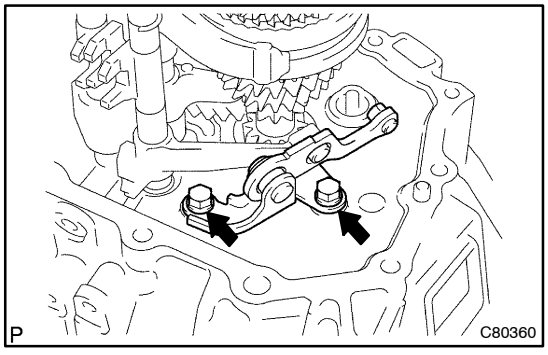

80. INSTALL REVERSE SHIFT ARM BRACKET ASSY

(a) Install the reverse shift arm bracket assy with the 2 bolts to the front transaxle case.
Torque: 17 N·m (175 kgf·cm, 13 ft·lbf)

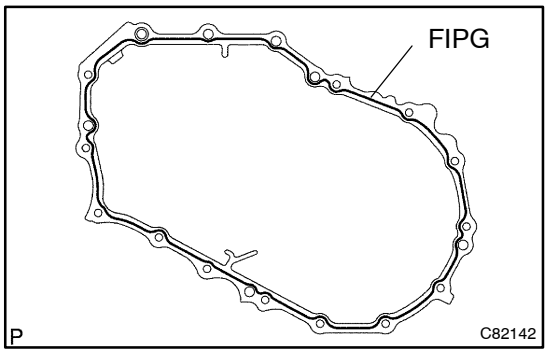

81. INSTALL MANUAL TRANSMISSION CASE

(a) Apply FIPG to the manual transmission case, as shown in the illustration.
FIPG:
Part No. 08826–00090, THREE BOND 1281 or equivalent

NOTICE:
Parts must be assembled within 10 minutes of application. Otherwise, the packing (FIPG) material must be removed and reapplied.

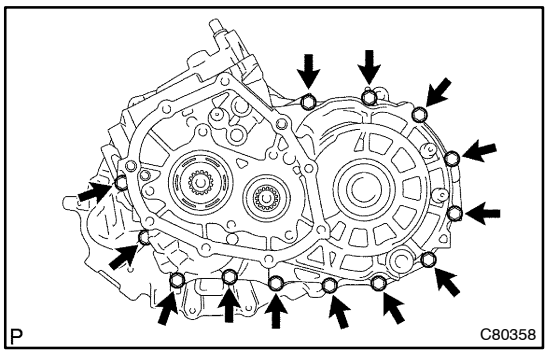

(b) Install the manual transmission case straight pin to the front transaxle case.

(c) Coat the 13 bolts with sealant, and install them to the manual transmission case.
Sealant:
Part No. 08833–00080, THREE BOND 1344, LOCTITE 242 or equivalent
Torque: 29 N·m (300 kgf·cm, 22 ft·lbf)

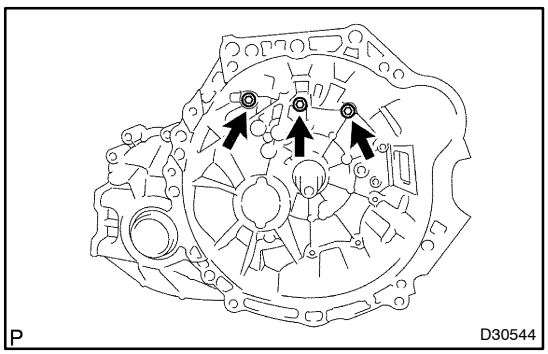

(d) Coat the 3 bolts with sealant, and install them to the front transaxle case.
Sealant:
Part No. 08833–00080, THREE BOND 1344, LOCTITE 242 or equivalent
Torque: 29 N·m (300 kgf·cm, 22 ft·lbf)

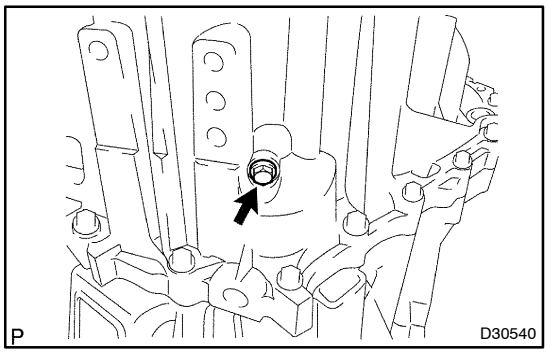

82. INSTALL REVERSE IDLER GEAR SHAFT BOLT

(a) Coat the reverse idler gear shaft bolt with sealant, and install it with a new gasket.
Sealant:
Part No. 08833–00080, THREE BOND 1344, LOCTITE 242 or equivalent
Torque: 29 N·m (300 kgf·cm, 22 ft·lbf)

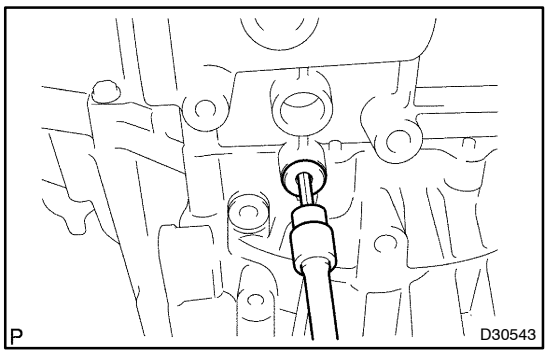

83. INSTALL LOCK BALL ASSY NO.2

(a) Coat the lock ball assy No.2 with sealant, and install it with a hexagon wrench.
Sealant:
Part No. 08833–00080, THREE BOND 1344, LOCTITE 242 or equivalent
Torque: 39 N·m (400 kgf·cm, 29 ft·lbf)

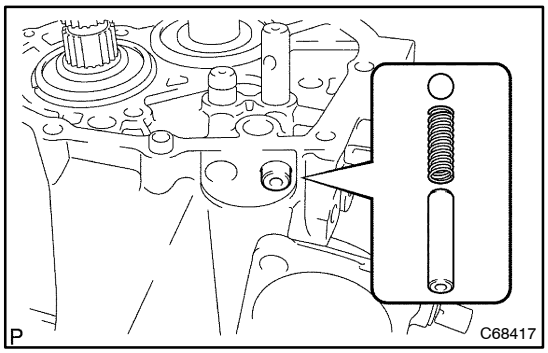

84. INSTALL SHIFT DETENT BALL

(a) Install the 2 shift detent balls, 2 shift detent ball springs with 2 shift detent ball spring seats No.1 to the manual transmission case.

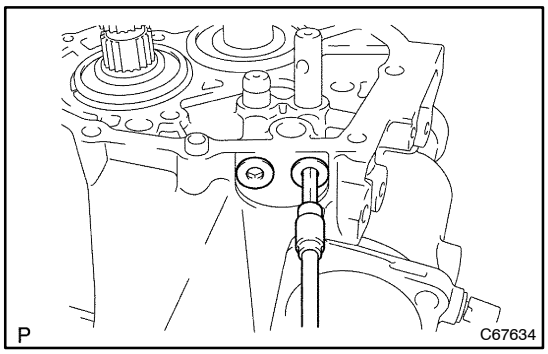

(b) Coat the 2 shift detent ball plugs with sealant, and install them using a hexagon wrench.
Sealant:
Part No. 08833–00080, THREE BOND 1344, LOCTITE 242 or equivalent
Torque: 25 N·m (250 kgf·cm, 18 ft·lbf)

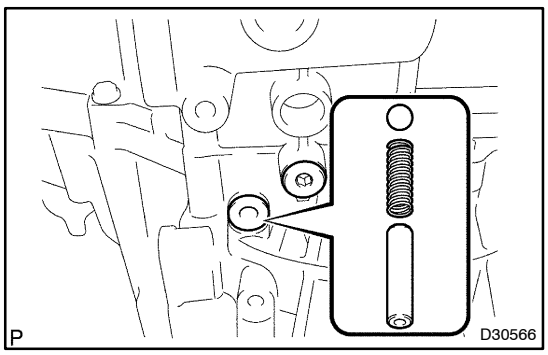

(c) Install the shift detent ball, shift detent ball compression spring and shift detent ball spring seat No.1 to the front transaxle case.

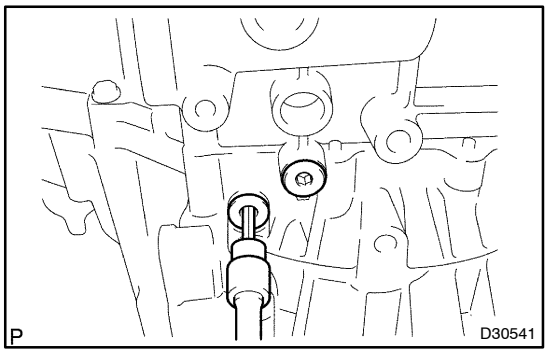

(d) Coat the shift detent ball plug with sealant, and install it using a hexagon wrench.
Sealant:
Part No. 08833–00080, THREE BOND 1344, LOCTITE 242 or equivalent
Torque: 25 N·m (250 kgf·cm, 18 ft·lbf)

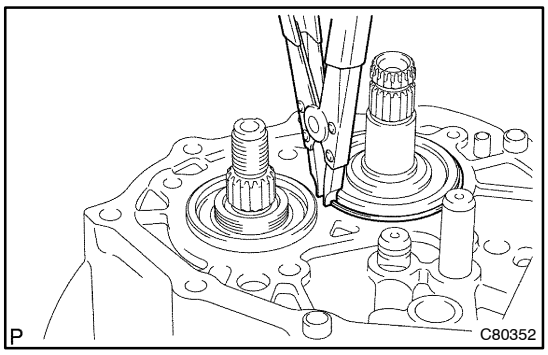

85. INSTALL INPUT SHAFT REAR BEARING HOLE SNAP RING

(a) Using a snap ring expander, install the input shaft rear bearing hole snap ring to the input shaft.

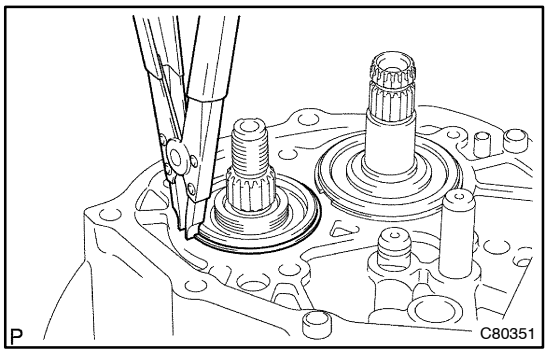

86. INSTALL OUTPUT SHAFT REAR BEARING HOLE SNAP RING

(a) Using a snap ring expander, install the output shaft rear bearing hole snap ring to the output shaft.

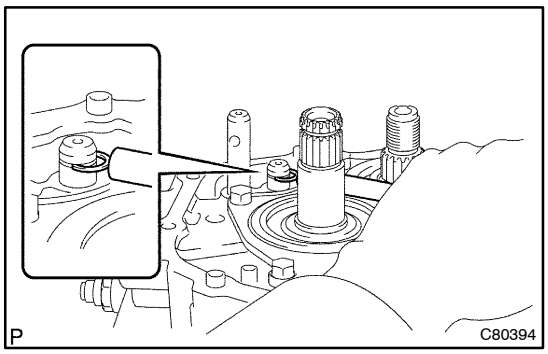

87. INSTALL SHIFT FORK SHAFT SHAFT SNAP RING

(a) Using a brass bar and a hammer, install a new shift fork shaft snap ring to the shift fork shaft No.2.

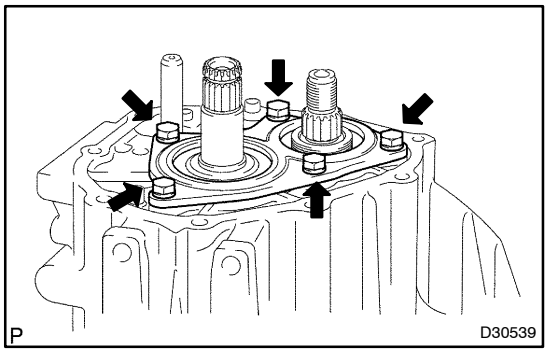

88. INSTALL BEARING RETAINER REAR (MTM)

(a) Coat the 5 bolts with sealant, and install the bearing retainer rear with the 5 bolts to the manual transmission case.

Torque: 27 N·m (280 kgf·cm, 20 ft·lbf)

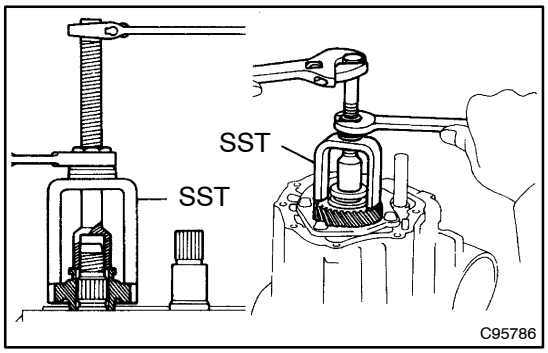

89. INSTALL 5TH DRIVEN GEAR

(a) Using SST, install the 5th driven gear to the output shaft.
SST 09309–12020

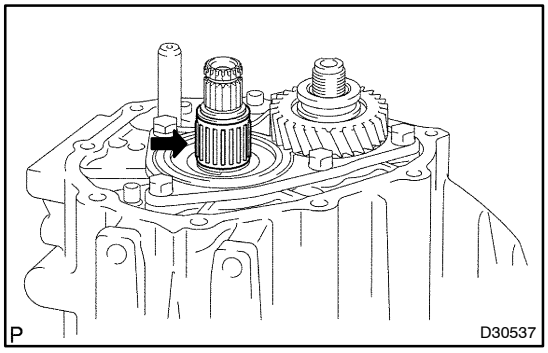

90. INSTALL 5TH GEAR NEEDLE ROLLER BEARING

(a) Coat the 5th gear needle roller bearing and spacer with gear oil, and install them to the input shaft.

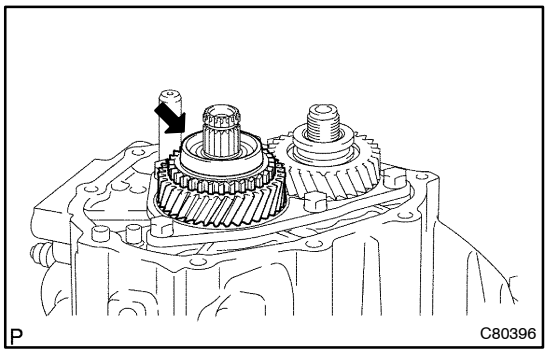

91. INSTALL 5TH GEAR

(a) Coat the 5th gear with gear oil, and install it to the input shaft.

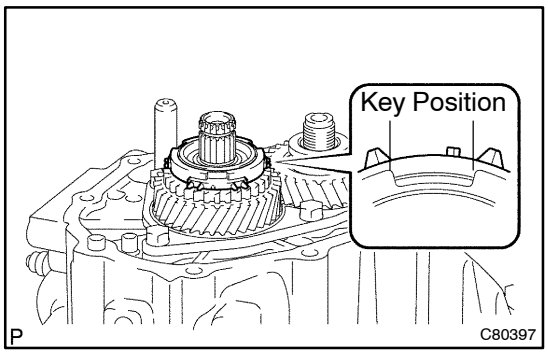

92. INSTALL SYNCHRONIZER RING NO.3

(a) Coat the synchronizer ring No.3 with gear oil, and install it to the 5th gear.

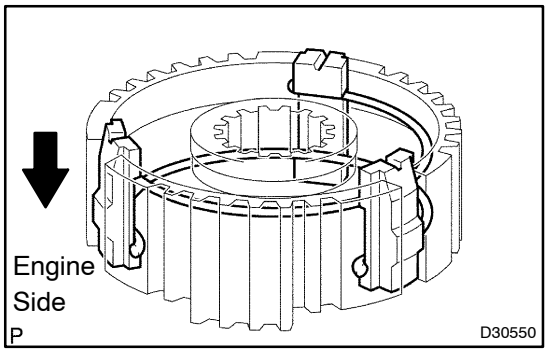

93. INSTALL TRANSMISSION CLUTCH HUB NO.3

(a) Install the 3 synchromesh shifting keys and 2 synchromesh shifting key springs to the transmission clutch hub No.3.

NOTICE:

Do not set both openings of the shifting key springs in the same position.

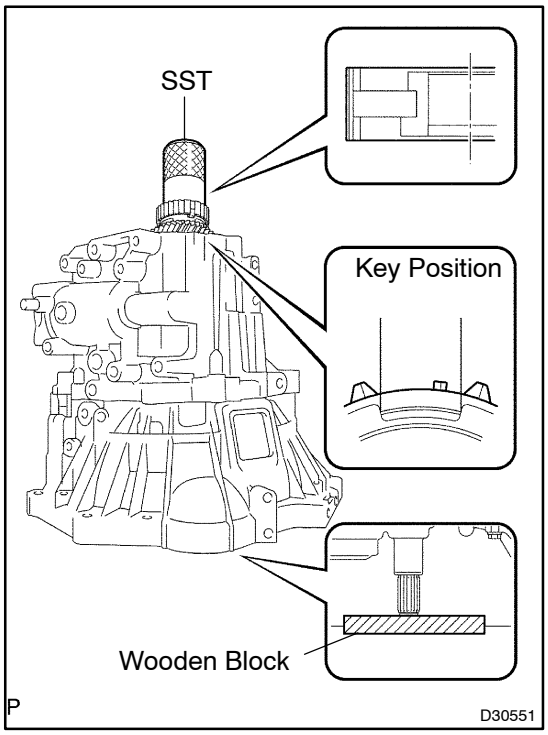

(b) Using SST and a hammer, install the transmission clutch hub No.3 to the input shaft.

SST 09636–20010

NOTICE:

- **Do not install the transmission clutch hub No.3 with it facing the wrong direction.**
- **Install the transmission clutch hub No.3 checking the positions of the synchronizer ring No.3 key groove and the synchromesh shifting key No.3.**
- **Check that the 5th gear is rotating.**

NOTICE:

Place the suitable sized wooden block to support the input shaft.

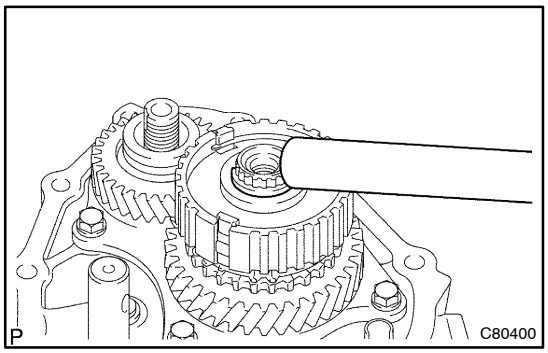

(c) Select a clutch hub No.3 shaft snap ring that will allow minimum axial play.

Clearance: 0.1 mm (0.0039 in.) or less

Mark	Thickness mm (in.)	Mark	Thickness mm (in.)
A	2.25 (0.0886)	E	2.49 (0.0980)
B	2.31 (0.0909)	F	2.55 (0.1004)
C	2.37 (0.0933)	G	2.61 (0.1028)
D	2.43 (0.0957)		

(d) Using a brass bar and a hammer, install the snap ring to the input shaft.

94. INSPECT 5TH GEAR THRUST CLEARANCE

(a) Using a dial indicator, inspect the 5th gear thrust clearance.

Standard clearance:
0.1 to 0.57 mm (0.0039 to 0.02244 in.)
Maximum clearance:
0.57 mm (0.02244 in.)

If the clearance exceeds the maximum, replace the transmission clutch hub No.3, 5th gear or input shaft rear radial ball bearing.

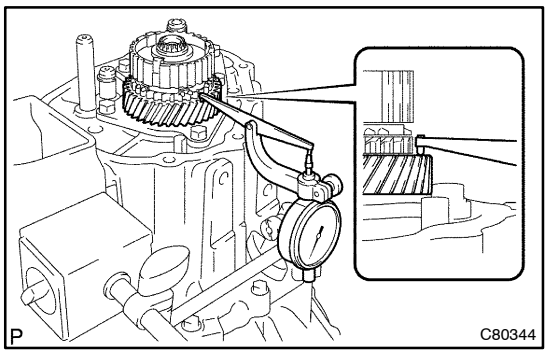

95. INSPECT 5TH GEAR RADIAL CLEARANCE

(a) Using a dial indicator, inspect the 5th gear radial clearance.

Standard clearance:
0.015 to 0.058 mm (0.0006 to 0.0023 in.)
Maximum clearance:
0.058 mm (0.0023 in.)

If the clearance exceeds the maximum, replace the 5th gear, 5th gear needle roller bearing or input shaft.

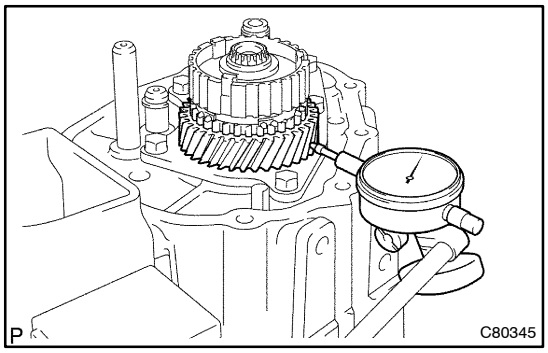

96. INSTALL GEAR SHIFT FORK NO.3

(a) Coat the transmission clutch hub sleeve No.3 with gear oil, and install it and gear shift fork No.3 to the transmission clutch hub No.3.

HINT:
Do not set the transmission clutch hub No.3 in incorrect orientation.

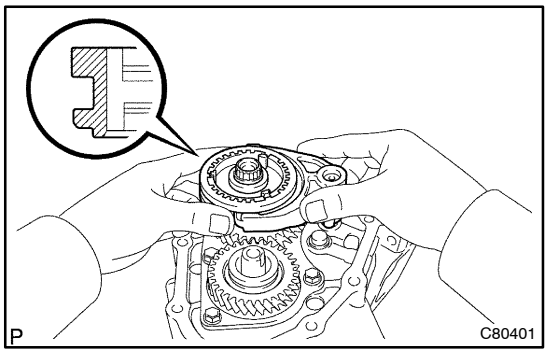

(b) Coat the gear shift fork lock bolt with sealant, and install it to the gear shift fork No.3.

Sealant:
Part No. 08833–00080, THREE BOND 1344, LOCTITE 242 or equivalent
Torque: 16 N·m (160 kgf·cm, 12 ft·lbf)

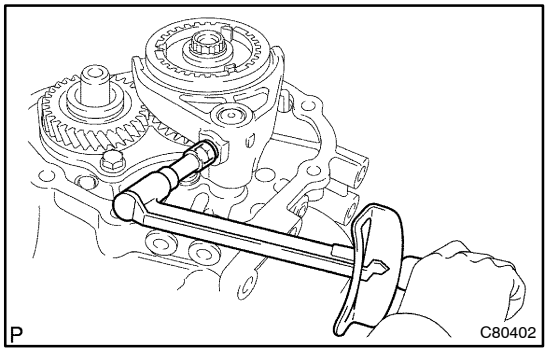

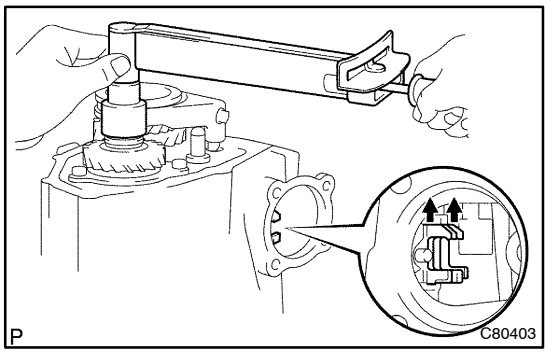

97. INSTALL MANUAL TRANSMISSION OUTPUT SHAFT REAR SET NUT

(a) Engage the gears to make them double meshed.

(b) Install a new manual transmission output shaft rear set nut.

Torque: 118 N·m (1200 kgf·cm, 87 ft·lbf)

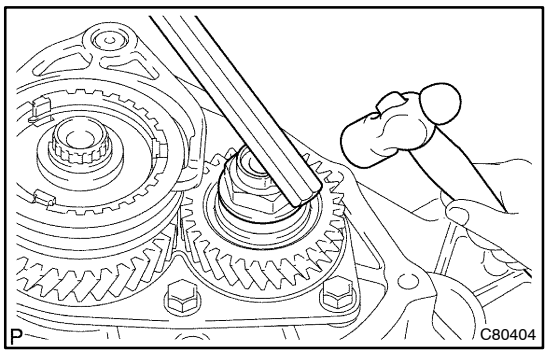

(c) Using a chisel and a hammer, stake the manual transmission output shaft rear set nut.

(d) Disengage the gears.

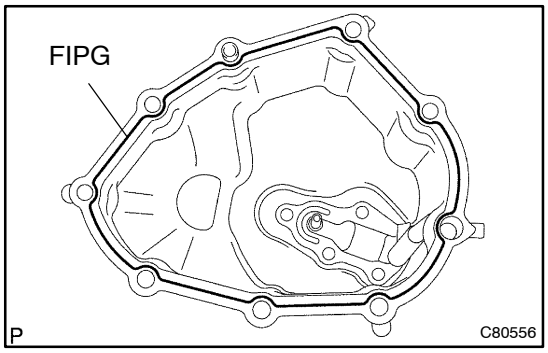

98. INSTALL MANUAL TRANSMISSION CASE COVER SUB–ASSY

(a) Apply FIPG to the transaxle case cover as shown in the illustration.

FIPG:

Part No. 08826–00090, THREE BOND 1281

NOTICE:

Parts must be assembled within 10 minutes of application. Otherwise, the packing (FIPG) material must be removed and reapplied.

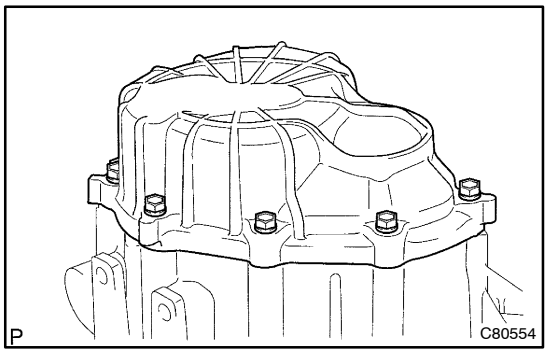

(b) Install the manual transmission case cover to the manual transmission case with the 9 bolts.

Torque: 18 N·m (185 kgf·cm, 14 ft·lbf)

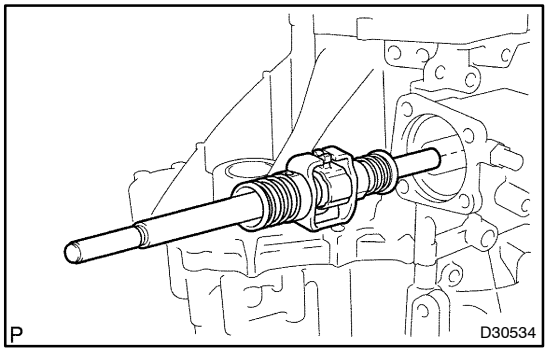

99. INSTALL SHIFT & SELECT LEVER SHAFT ASSY

(a) Coat the sift & select lever shaft assy with gear oil, and install it to the manual transmission case.

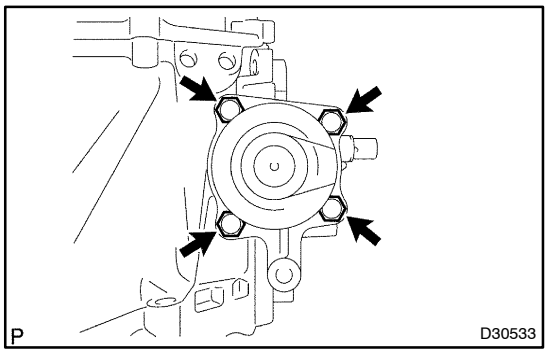

100. INSTALL CONTROL SHAFT COVER

(a) Coat the 4 bolts with sealant. Install a new gasket and control shaft cover with the 4 bolts.
Torque: 20 N·m (200 kgf·cm, 14 ft·lbf)
Sealant:
Part No. 08833–00080, THREE BOND 1344, LOCTITE 242 or equivalent

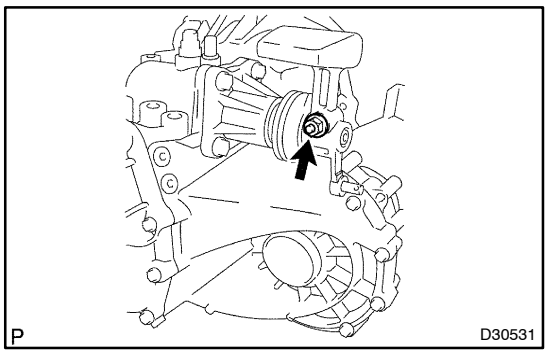

101. INSTALL CONTROL SHIFT LEVER

(a) Install the control shift lever with the shift outer lever lever lock pin to the shift & select lever shaft assy.

(b) Install the spring washer with the nut.
Torque: 12 N·m (122 kgf·cm, 9 ft·lbf)

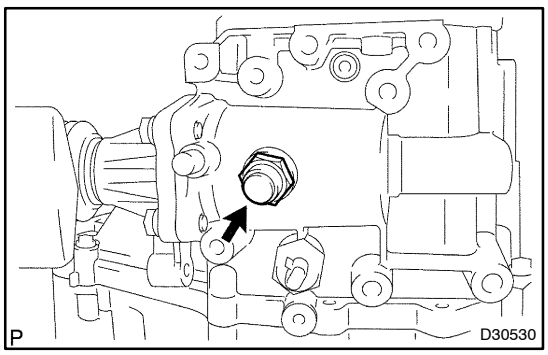

102. INSTALL LOCK BALL ASSY NO.1

(a) Coat the lock ball assy No.1 with sealant, and install it to the manual transmission case.
Torque: 29 N·m (300 kgf·cm, 22 ft·lbf)
Sealant:
Part No. 08833–00080, THREE BOND 1344, LOCTITE 242 or equivalent

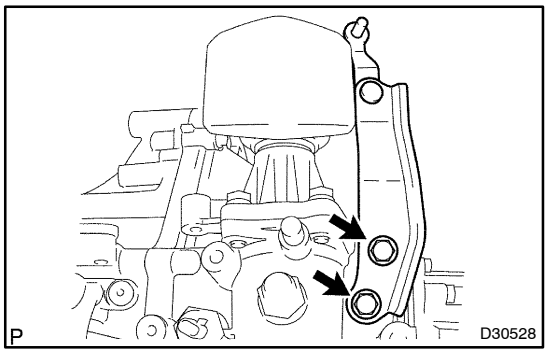

103. INSTALL SELECTING BELL CRANK ASSY

(a) Install the selecting bell crank assy to the manual transmission case with the 2 bolts.
Torque: 25 N·m (250 kgf·cm, 18 ft·lbf)

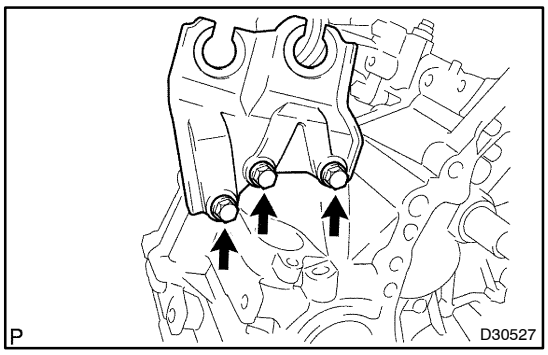

104. INSTALL FLOOR SHIFT CONTROL LEVER HOUSING SUPPORT BRACKET

(a) Install the floor shift control lever housing support bracket to the front transaxle case with the 3 bolts.
Torque: 18 N·m (184 kgf·cm, 13 ft·lbf)

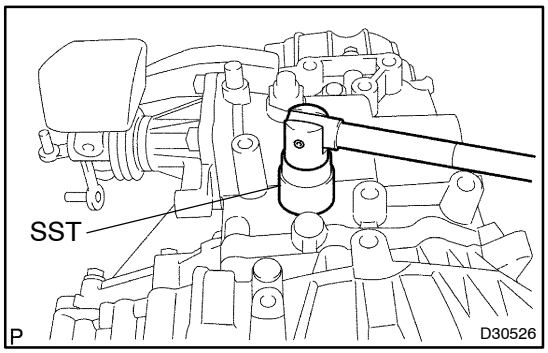

105. INSTALL BACK UP LAMP SWITCH ASSY

(a) Using SST, install the back–up lamp switch assy with a new gasket to the manual transmission case.
SST 09817–16011
Torque: 40 N·m (410 kgf·cm, 30 ft·lbf)

106. INSTALL SPEEDOMETER DRIVEN HOLE COVER SUB–ASSY

(a) Install a new O–ring to the speedometer driven hole cover sub–assy.
(b) Install the speedometer driven hole cover sub–assy to the manual transaxle case with the bolt.
Torque: 11 N·m (115 kgf·cm, 8.3 ft·lbf)

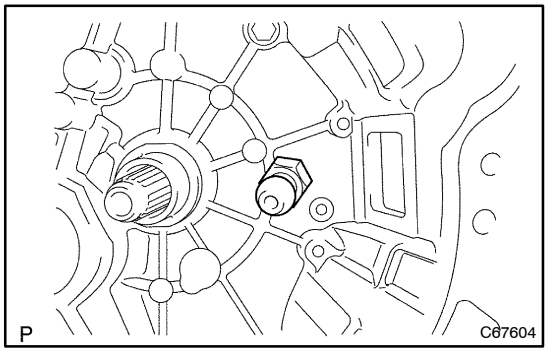

107. INSTALL RELEASE FORK SUPPORT

(a) Install the release fork support to the front transaxle case.
Torque: 37 N·m (375 kgf·cm, 25 ft·lbf)

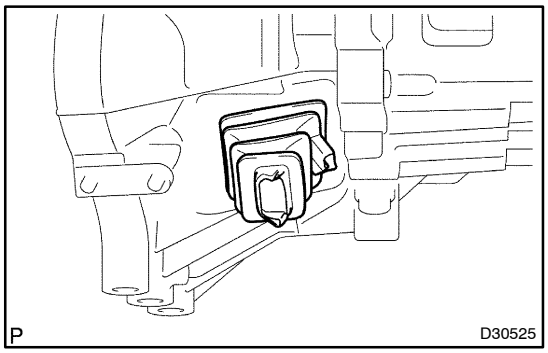

108. INSTALL CLUTCH RELEASE FORK BOOT

(a) Install the clutch release fork boot to the front transaxle case.

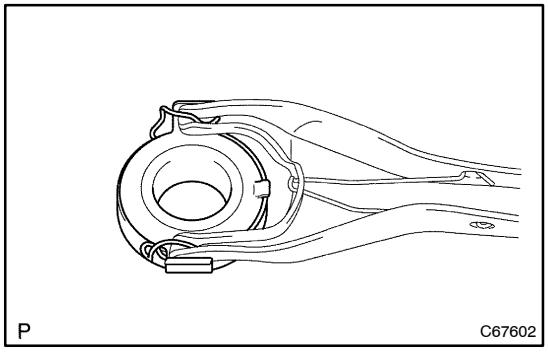

109. INSTALL CLUTCH RELEASE BEARING ASSY

(a) Coat the clutch release bearing assy with release hub grease, and install it to the clutch release fork sub–assy with the clip.
Sealant:
Part No. 08887–01806, RELEASE HUB GREASE or equivalent

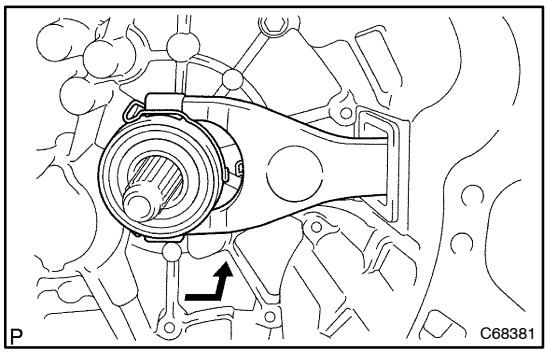

110. INSTALL CLUTCH RELEASE FORK SUB–ASSY

(a) Install the clutch release fork sub–assy to the input shaft.

(b) Apply clutch spline grease to the input shaft spline.

Sealant:

Part No. 08887–01806, CLUTCH SPLINE GREASE or equivalent

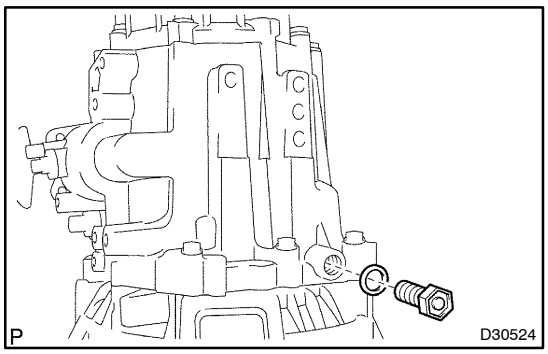

111. INSTALL MANUAL TRANSMISSION FILLER PLUG

(a) Install the manual transmission filler plug with a new gasket to the manual transmission case.

Torque: 39 N·m (400 kgf·cm, 29 ft·lbf)

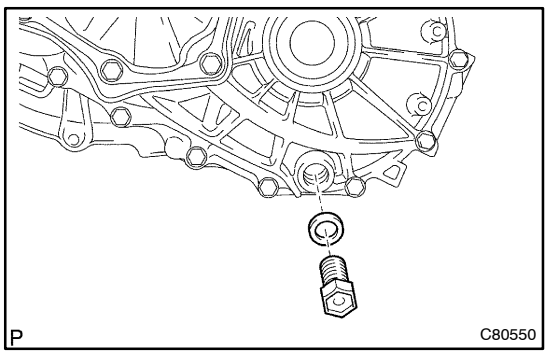

112. INSTALL DRAIN (MTM) PLUG SUB–ASSY

(a) Install the drain plug with a new gasket to the manual transmission case.

Torque: 39 N·m (400 kgf·cm, 29 ft·lbf)

INPUT SHAFT ASSY (C50)

COMPONENTS

410DE–02

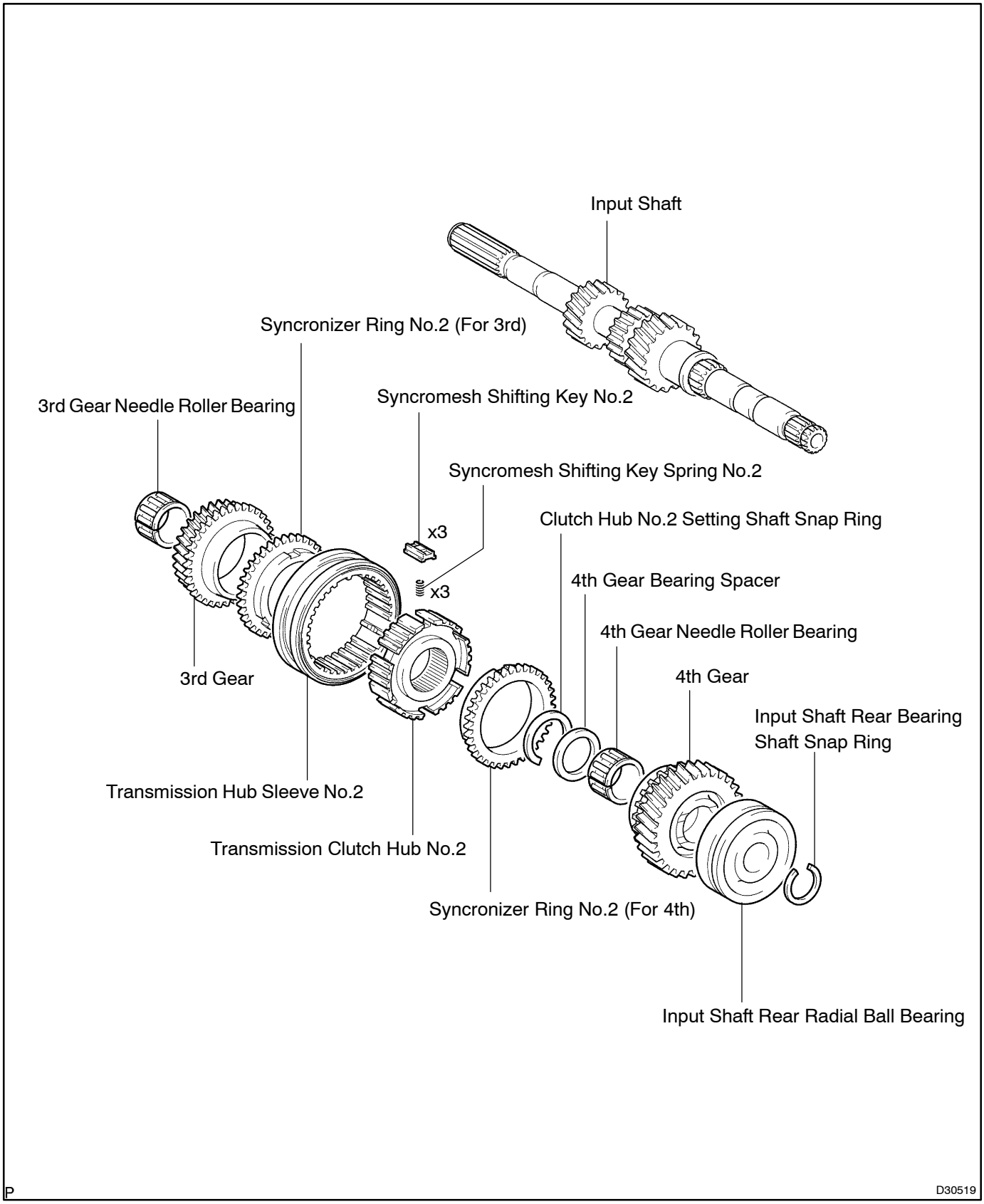

410DF–02

OVERHAUL

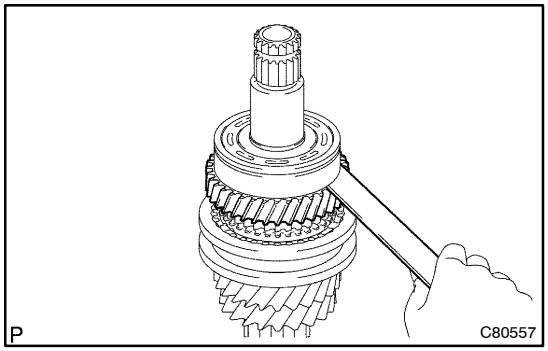

1. INSPECT 4TH GEAR THRUST CLEARANCE

(a) Using a feeler gauge, measure the 4th gear thrust clearance.

Standard clearance:
0.1 to 0.55 mm (0.0039 to 0.0217 in.)
Maximum clearance:
0.55 mm (0.0217 in.)

If the clearance exceeds the maximum, replace the transmission clutch hub No.2, 4th gear or input shaft rear radial ball bearing.

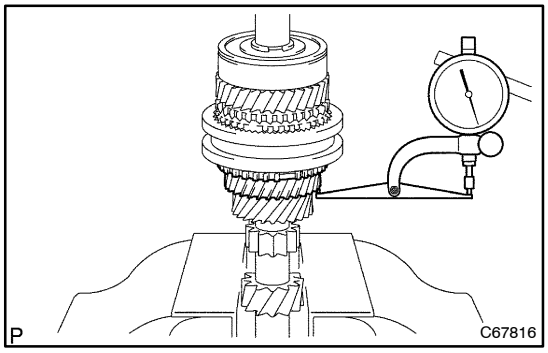

2. INSPECT 3RD GEAR THRUST CLEARANCE

(a) Using a dial indicator, measure the 3rd gear thrust clearance.

Standard clearance:
0.1 to 0.35 mm (0.0039 to 0.0138 in.)
Maximum clearance:
0.35 mm (0.0138 in.)

If the clearance exceeds the maximum, replace the transmission clutch hub No.2, 3rd gear or input shaft.

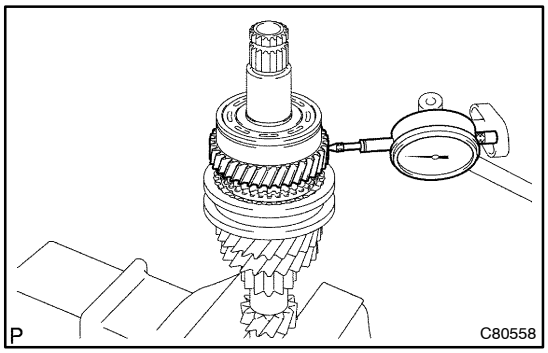

3. INSPECT 4TH GEAR RADIAL CLEARANCE

(a) Using a dial indicator, measure the 4th gear radial clearance between the gear and shaft.

Standard clearance:
0.015 to 0.058 mm (0.0006 to 0.0023 in.)
Maximum clearance:
0.058 mm (0.0023 in.)

If the clearance exceeds the maximum, replace the 4th gear, needle roller bearing or input shaft.

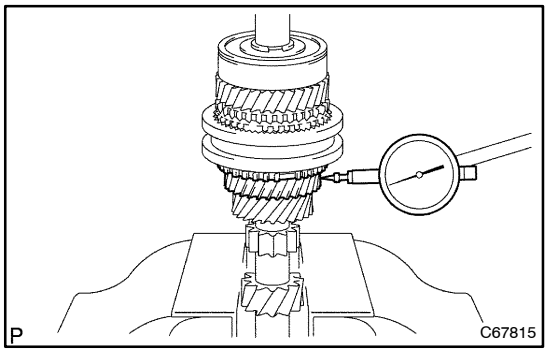

4. INSPECT 3RD GEAR RADIAL CLEARANCE

(a) Using a dial indicator, measure the 3rd gear radial clearance between the gear and shaft.

Standard clearance:
0.015 to 0.058 mm (0.0006 to 0.0023 in.)
Maximum clearance:
0.058 mm (0.0023 in.)

If the clearance exceeds the maximum, replace the 3rd gear, needle roller bearing or input shaft.

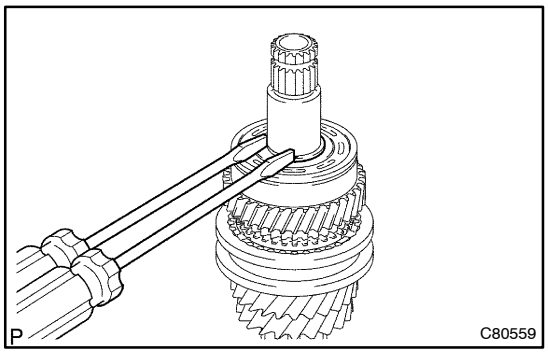

5. REMOVE 4TH GEAR

(a) Using 2 screwdrivers and a hammer, remove the input shaft rear bearing shaft snap ring from the input shaft.

NOTICE:

Use a shop rag to keep the snap ring from flying.

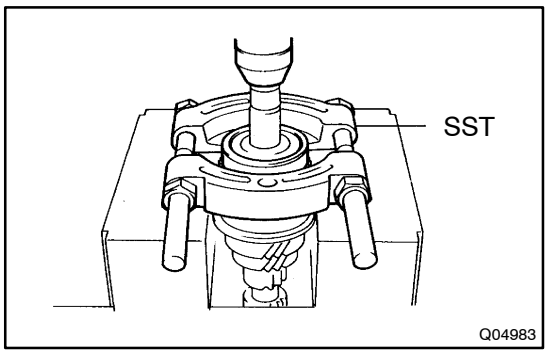

(b) Using SST and a press, remove the input shaft rear radial ball bearing rear and 4th gear from input shaft.
SST 09950–00020

NOTICE:

- **Do not tighten SST excessively.**
- **Support the input shaft assy by hand so that it will not be dropped off.**

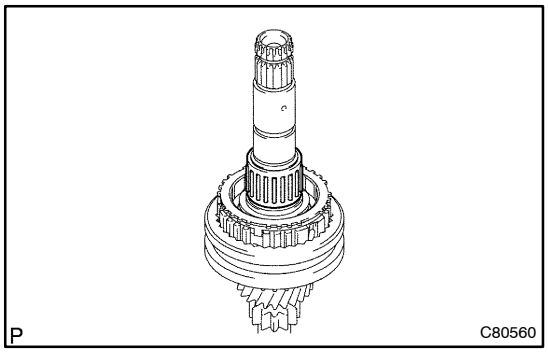

6. REMOVE 4TH GEAR NEEDLE ROLLER BEARING

(a) Remove the 4th gear needle roller bearing and 4th gear bearing spacer from input shaft.

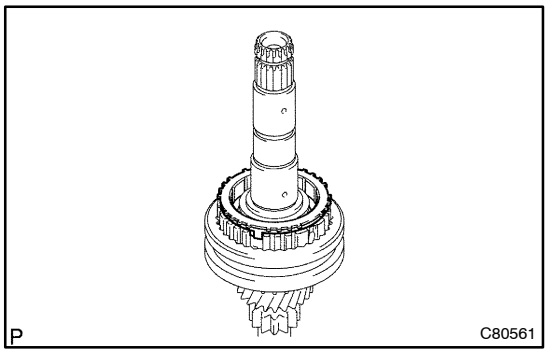

7. REMOVE SYNCHRONIZER RING NO.2 (FOR FOURTH SYNCHRONIZER RING)

(a) Remove the synchronizer ring No.2 from the transmission clutch hub No.2.

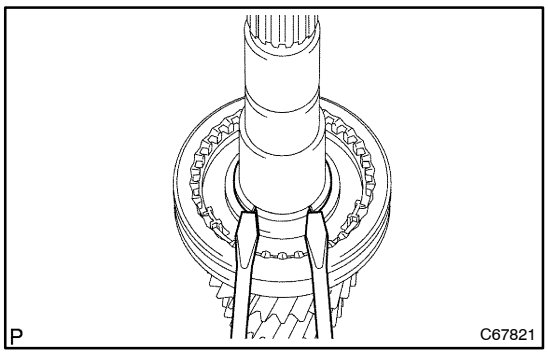

8. REMOVE 3RD GEAR

(a) Using 2 screwdrivers and a hammer, remove the clutch hub No.2 setting shaft snap ring from the input shaft.

NOTICE:

Use a shop rag to keep the snap ring from flying.

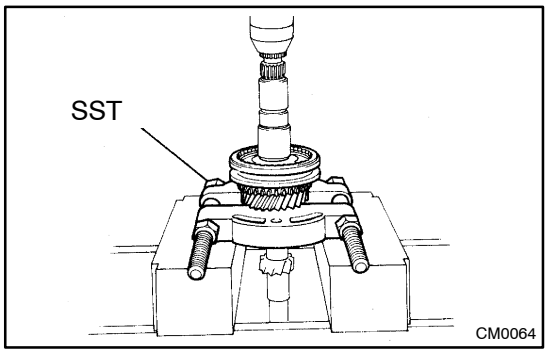

(b) Using SST and a press, remove the transmission clutch hub No.2 and 3rd gear from the input shaft.
SST 09950–00020

NOTICE:

- **Do not tighten SST excessively.**
- **Support the input shaft by hand so that it will not be dropped off.**

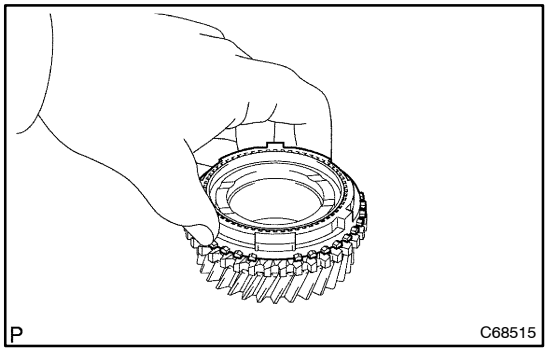

9. REMOVE SYNCHRONIZER RING NO.2 (FOR THIRD SYNCHRONIZER RING)

(a) Remove the synchronizer ring No.2 from the 3rd gear.

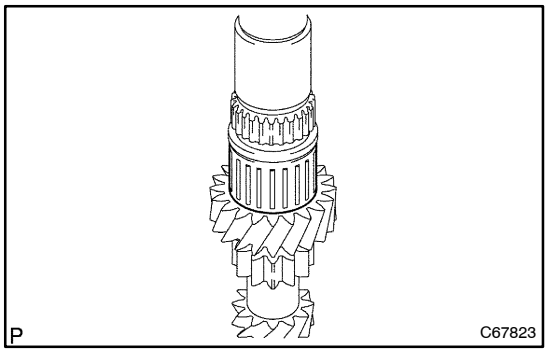

10. REMOVE 3RD GEAR NEEDLE ROLLER BEARING

(a) Remove the 3rd gear needle roller bearing from the input shaft.

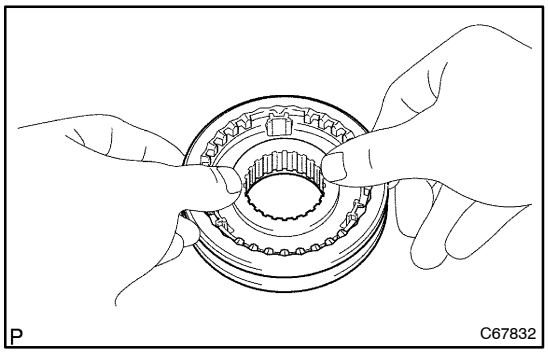

11. REMOVE TRANSMISSION HUB SLEEVE NO.2

(a) Remove the transmission hub sleeve No.2, 3 synchromesh shifting keys No.2 and 3 synchromesh shifting key springs No.2 from the transmission clutch hub No.2.

NOTICE:

Use a shop rag to keep the shifting key and shifting key spring from flying.

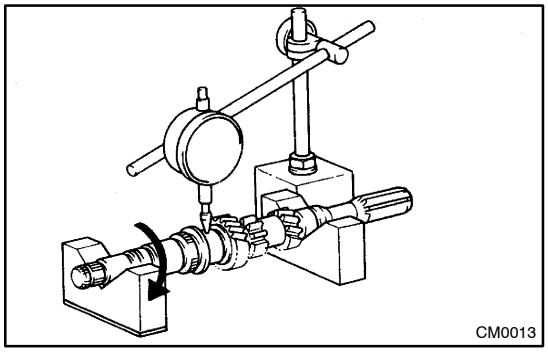

12. INSPECT INPUT SHAFT

(a) Using a dial indicator, check the input shaft runout.
Maximum runout: 0.015 mm (0.00059 in.)

If the runout exceeds the maximum, replace the input shaft.

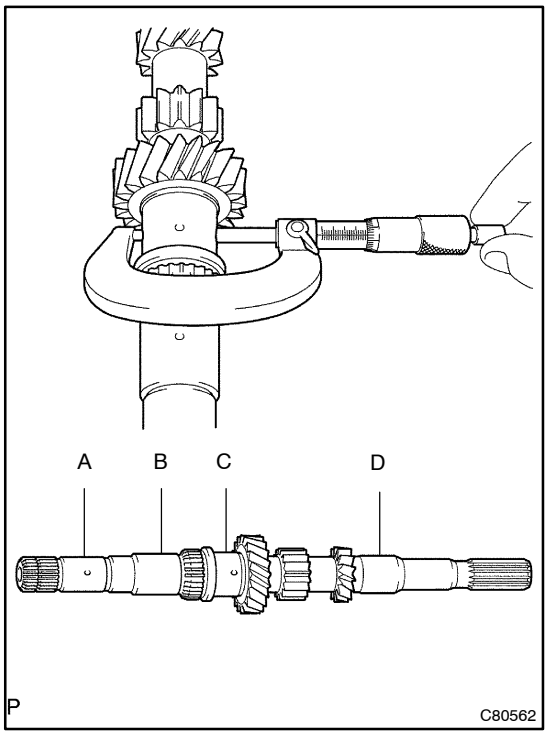

(b) Using a micrometer, measure the outer diameter of the input shaft journal surface.

Standard outer diameter:
Part A: 24.885 to 24.900 mm (0.9797 to 0.9803 in.)
Part B: 28.991 to 29.006 mm (1.1413 to 1.1419 in.)
Part C: 30.985 to 31.000 mm (1.2198 to 1.2204 in.)
Part D: 24.985 to 25.000 mm (0.9836 to 0.9842 in.)
Minimum outer diameter:
Part A: 24.885 mm (0.9797 in.)
Part B: 28.991 mm (1.1413 in.)
Part C: 30.985 mm (1.2198 in.)
Part D: 24.985 mm (0.9836 in.)

If the outer diameter is less than the minimum, replace the input shaft.

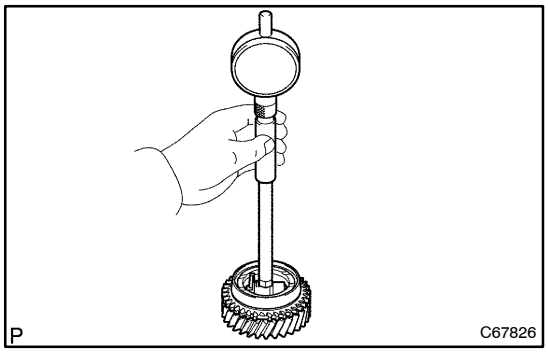

13. INSPECT 4TH GEAR

(a) Using a cylinder gauge, measure the inside diameter of the 4th gear.

Standard inside diameter:
34.015 to 34.031 mm (1.3391 to 1.3398 in.)
Maximum inside diameter:
34.031 mm (1.3398 in.)

If the diameter exceeds the maximum, replace the 4th gear.

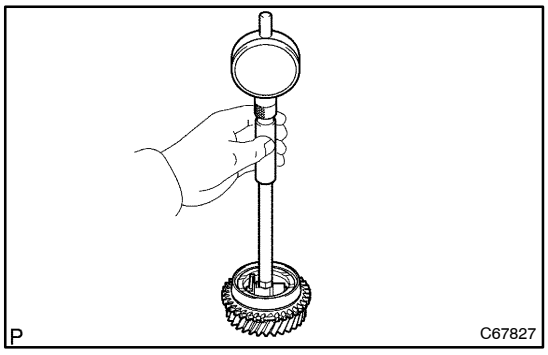

14. INSPECT 3RD GEAR

(a) Using a cylinder gauge, measure the inside diameter of the 3rd gear.

Standard inside diameter:
36.015 to 36.031 mm (1.4179 to 1.4185 in.)
Maximum inside diameter:
36.031 mm (1.4185 in.)

If the diameter exceeds the maximum, replace the 3rd gear.

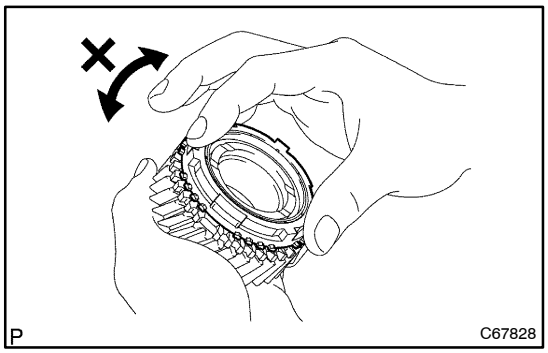

15. INSPECT SYNCHRONIZER RING NO.2 (FOR FOURTH SYNCHRONIZER RING)

(a) Apply gear oil to the cone of the 4th gear and check with the synchronizer ring No.2 contacted by pressure that the gear does not turn in the direction as shown in the illustration.

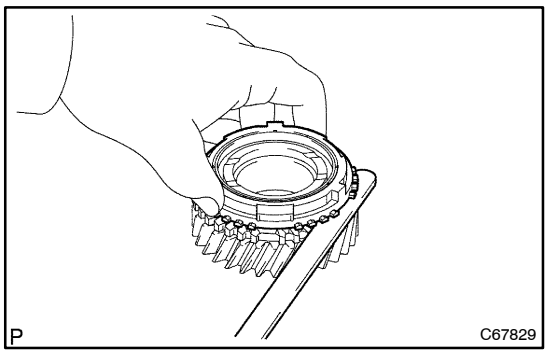

(b) Using a feeler gauge, check the clearance between the synchronizer ring No.2 and 4th gear with the synchronizer ring No.2 contacted to the cone of the 4th gear.
Standard clearance:
0.75 to 1.65 mm (0.0295 to 0.0649 in.)
Minimum clearance:
0.75 mm (0.0295 in)

If the clearance is less than the minimum, replace the synchronizer ring.

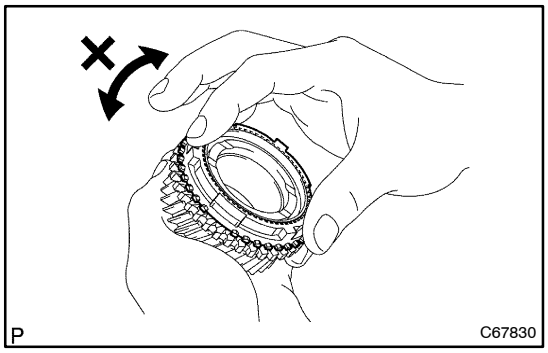

16. INSPECT SYNCHRONIZER RING NO.2 (FOR THIRD SYNCHRONIZER RING)

(a) Apply gear oil to the cone of the 3rd gear and check with the synchronizer ring No.2 contacted by pressure that the gear does not turn in the direction as shown in the illustration.

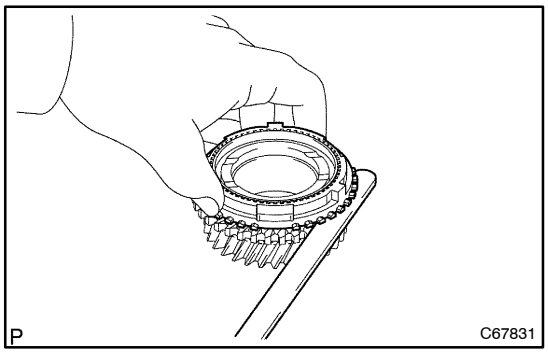

(b) Using a feeler gauge, check the clearance between the synchronizer No.2 and 3rd gear with the synchronizer ring No.2 contacted to the cone of the 3rd gear.
Standard clearance:
0.75 to 1.65 mm (0.0295 to 0.0649 in.)
Minimum clearance:
0.75 mm (0.0295 in)

If the clearance is less than the minimum, replace the synchronizer ring.

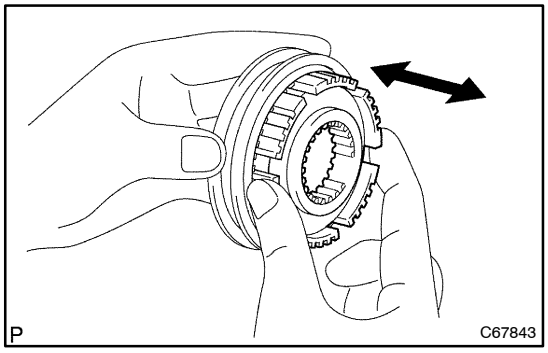

17. INSPECT TRANSMISSION HUB SLEEVE NO.2

(a) Check the sliding condition between the transmission hub sleeve No.2 and transmission clutch hub No.2.

(b) Check that the spline gear's edges of the transmission hub sleeve No.2 are not worn down.

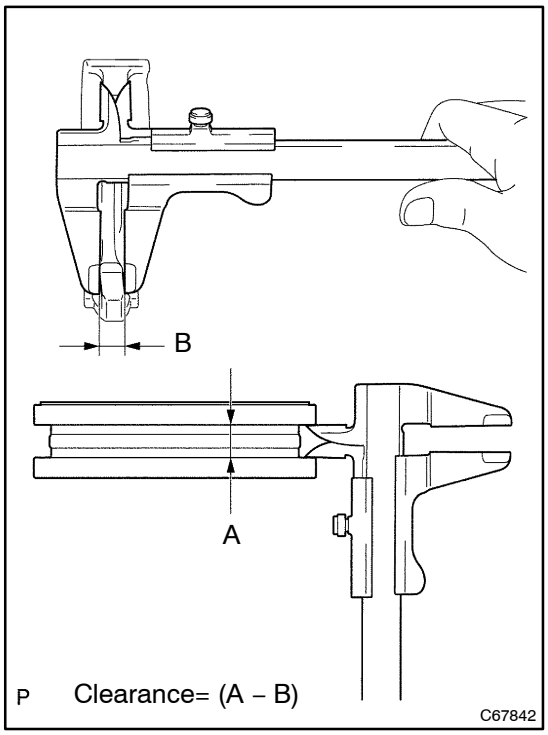

(c) Using vernier calipers, measure the clearance between the transmission hub sleeve No.2 and gear shift fork No.2.

Standard clearance:
0.15 to 0.35 mm (0.0059 to 0.0137 in.)

If the clearance exceeds the standard clearance, replace the transmission hub sleeve No.2 and gear shift fork No.2.

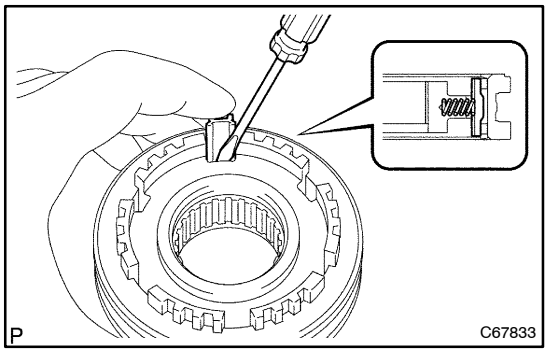

18. INSTALL TRANSMISSION HUB SLEEVE NO.2

(a) Coat the transmission hub sleeve No.2 with gear oil, and install it to the transmission clutch hub No.2.

NOTICE:

Do not set the transmission hub sleeve No.2 and the transmission clutch hub No.2 in incorrect orientation.

(b) Install the 3 synchromesh key springs with 3 synchromesh shifting keys No.2 to the transmission clutch hub No.2.

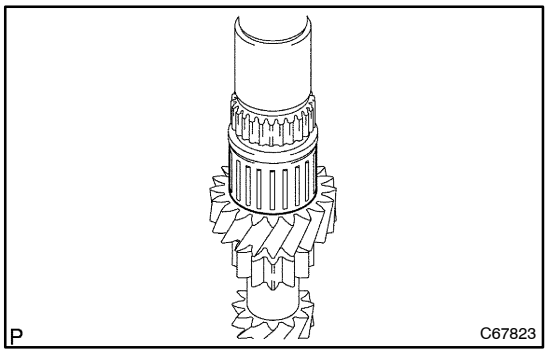

19. INSTALL 3RD GEAR NEEDLE ROLLER BEARING

(a) Coat the 3rd gear needle roller bearing with gear oil, and install it to the input shaft.

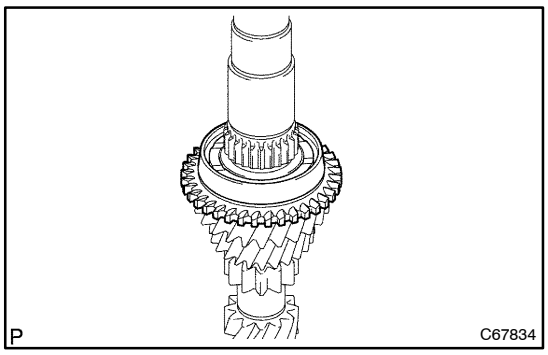

20. INSTALL 3RD GEAR

(a) Coat the 3rd gear with gear oil, and install it to the input shaft.

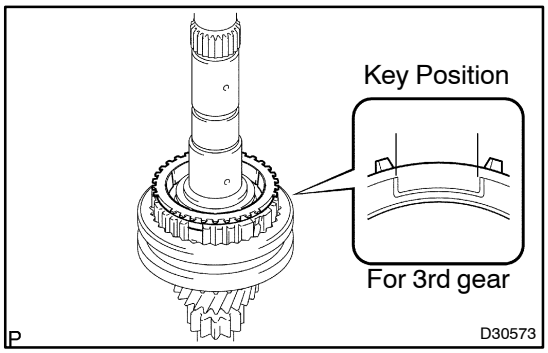

21. INSTALL SYNCHRONIZER RING NO.2 (FOR THIRD SYNCHRONIZER RING)

(a) Coat the synchronizer ring No.2 with gear oil, and install it to the 3rd gear.

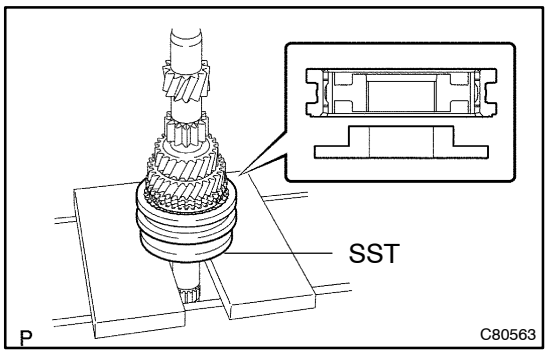

22. INSTALL TRANSMISSION CLUTCH HUB NO.2

(a) Using SST and a press, install the transmission clutch hub No.2 to the input shaft.

SST 09316–60011 (09316–00021)

NOTICE:

Fit the synchromesh shifting key into the groove of the synchronizer ring correctly.

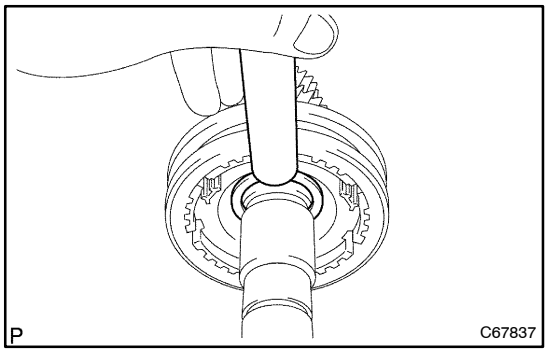

(b) Select a snap ring that will allow the minimum axial play.

Standard clearance:

0.1 mm (0.0039 in.) or less.

Mark	Thickness mm (in)	Mark	Thickness mm (in)
0	2.30 (0.0906)	3	2.48 (0.0976)
1	2.36 (0.0929)	4	2.54 (0.1000)
2	2.42 (0.0953)	5	2.60 (0.1024)

(c) Using a brass bar and a hammer, install the snap ring to the input shaft.

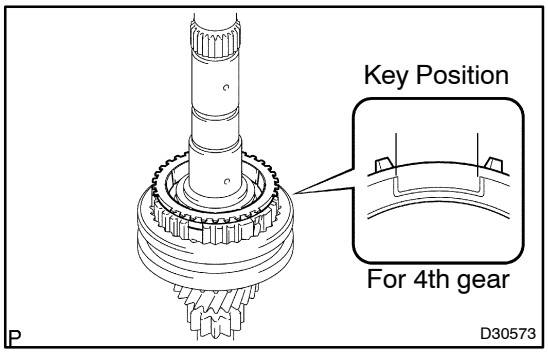

23. INSTALL SYNCHRONIZER RING NO.2 (FOR FOURTH SYNCHRONIZER RING)

(a) Coat the synchronizer ring No.2 with gear oil, and install it to the transmission clutch hub No.2.

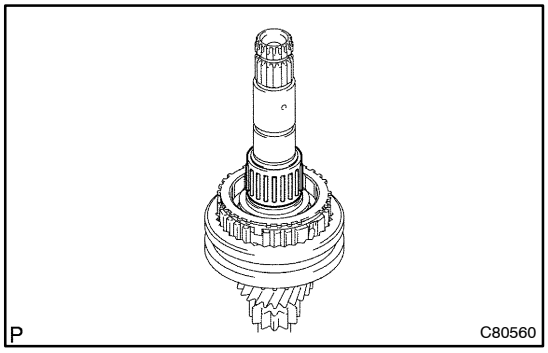

24. INSTALL 4TH GEAR NEEDLE ROLLER BEARING

(a) Coat the 4th gear needle roller bearing and 4th gear bearing spacer with gear oil, and install them to the transmission clutch hub No.2.

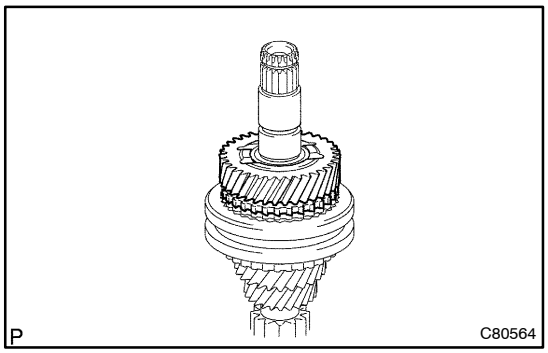

25. INSTALL 4TH GEAR

(a) Coat the 4th gear with gear oil, and install it to the input shaft.

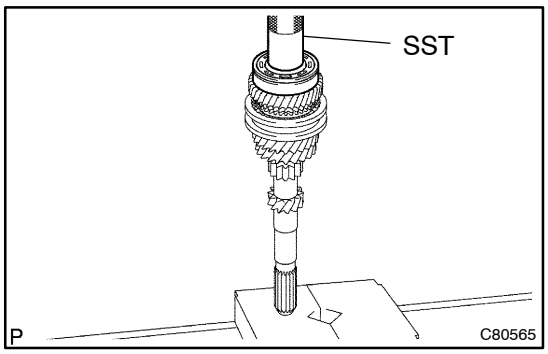

26. INSTALL INPUT SHAFT REAR RADIAL BALL BEARING

(a) Using SST and a press, install the input shaft rear radial ball bearing to the input shaft.
SST 09636–20010

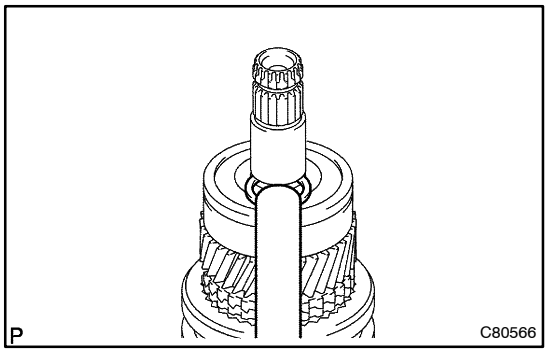

(b) Select a snap ring from the table below that will make the thrust clearance of the input shaft rear radial ball bearing below 0.1 mm (0.0039 in.).

Snap ring thickness:

Mark	Thickness mm (in)	Mark	Thickness mm (in)
A	2.29 (0.0901)	D	2.47 (0.0972)
B	2.35 (0.0925)	E	2.53 (0.0996)
C	2.41 (0.0948)	F	2.59 (0.1019)

(c) Using a brass bar and a hammer, install the snap ring to the input shaft.

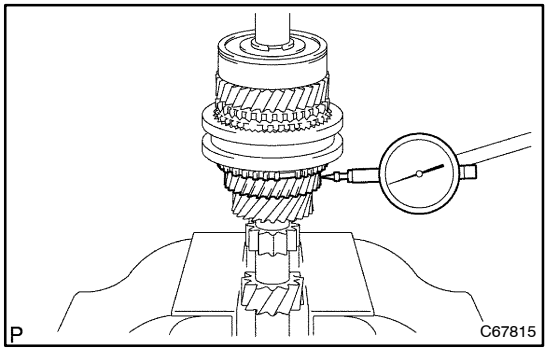

27. INSPECT 3RD GEAR RADIAL CLEARANCE

(a) Using a dial gauge, measure the radial clearance between the 3rd gear.
Standard clearance:
0.015 to 0.058 mm (0.0006 to 0.0023 in.)
Maximum diameter:
0.058 mm (0.0023 in.)

If the clearance exceeds the maximum, replace the 3rd gear, needle roller bearing or input shaft.

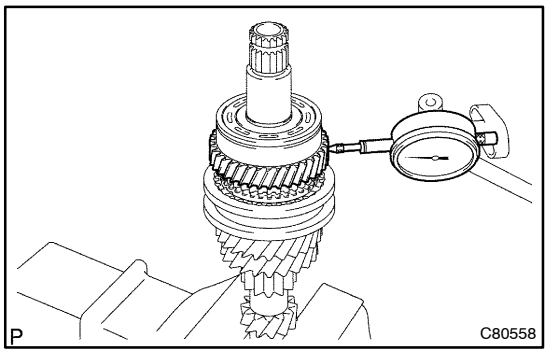

28. INSPECT 4TH GEAR RADIAL CLEARANCE

(a) Using a dial gauge, measure the radial clearance between the 4th gear.

Standard clearance:
0.015 to 0.058 mm (0.0006 to 0.0023 in.)
Maximum diameter:
0.058 mm (0.0023 in.)

If the clearance exceeds the maximum, replace the 4th gear, needle roller bearing or input shaft.

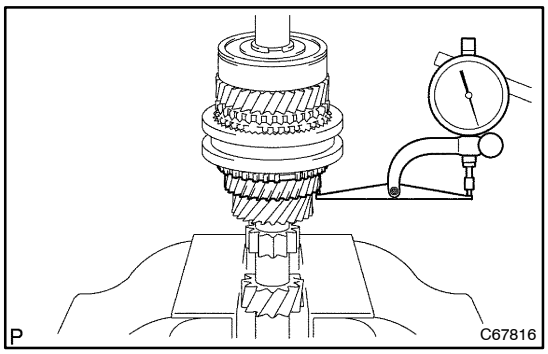

29. INSPECT 3RD GEAR THRUST CLEARANCE

(a) Using a dial gauge, measure the 3rd thrust clearance.

Standard clearance:
0.1 to 0.35 mm (0.0039 to 0.0138 in.)
Maximum diameter:
0.35 mm (0.0138 in.)

If the clearance exceeds the maximum, replace the transmission clutch hub No.2, 3rd gear or input shaft.

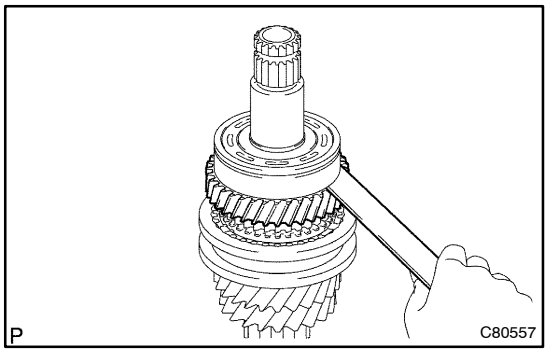

30. INSPECT 4TH GEAR THRUST CLEARANCE

(a) Using a feeler gauge, measure the 4th thrust clearance.

Standard clearance:
0.1 to 0.55 mm (0.0039 to 0.0217 in.)
Maximum diameter:
0.055 mm (0.00217 in.)

If the clearance exceeds the maximum, replace the transmission clutch hub No.2, 4th gear or input shaft rear radial ball bearing.

OUTPUT SHAFT ASSY (C50)

COMPONENTS

410DG–02

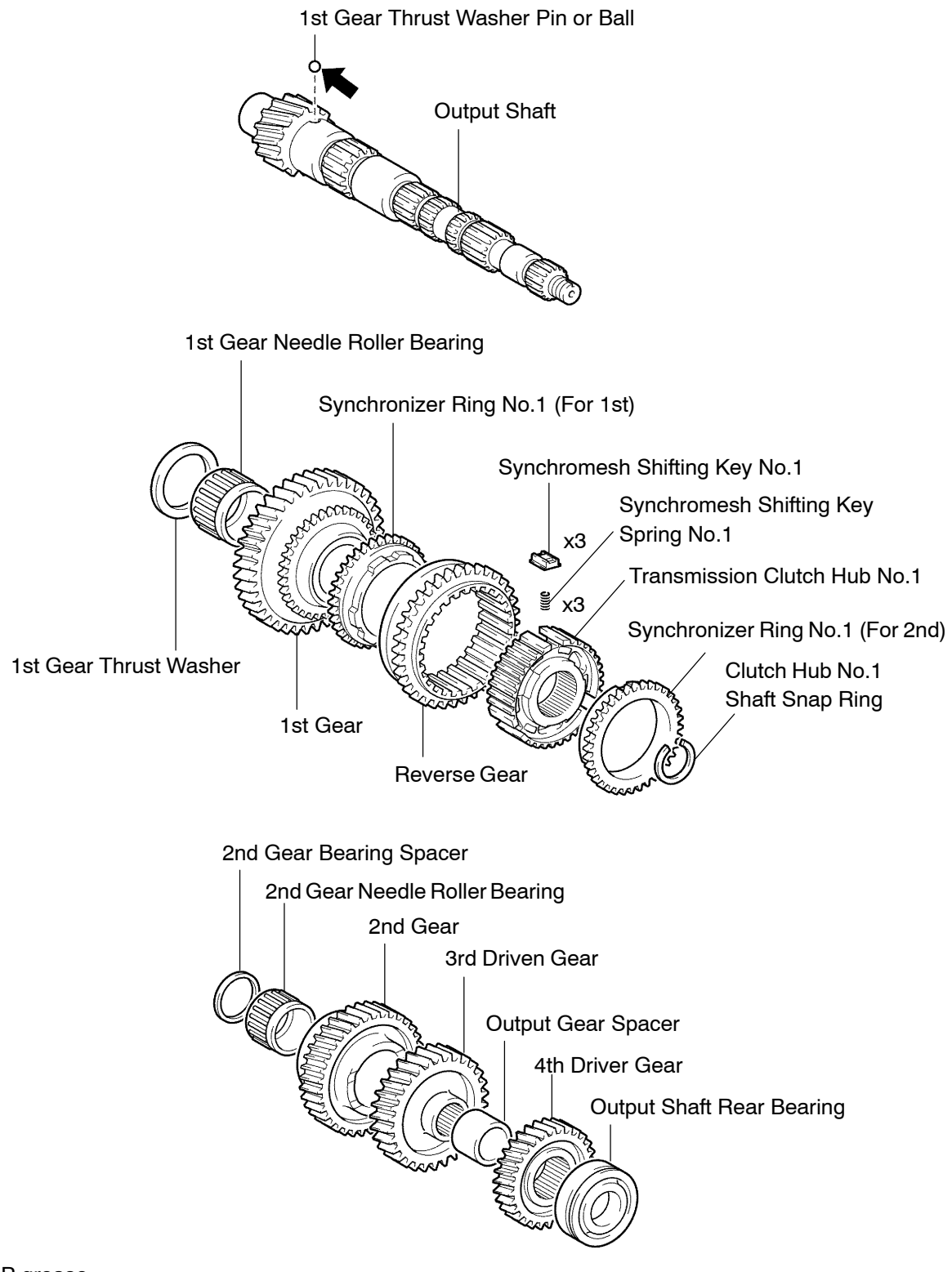

410DH–02

OVERHAUL

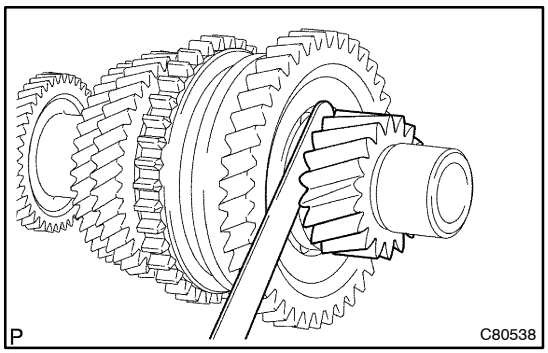

1. INSPECT 1ST GEAR THRUST CLEARANCE

(a) Using a feeler gauge, measure the 1st gear thrust clearance.

Standard clearance:
0.10 to 0.40 mm (0.0039 to 0.0157 in.)
Maximum clearance:
0.40 mm (0.0157 in.)

If the clearance exceeds the maximum, replace the 1st gear thrust washer, 1st gear or transmission clutch hub No.1.

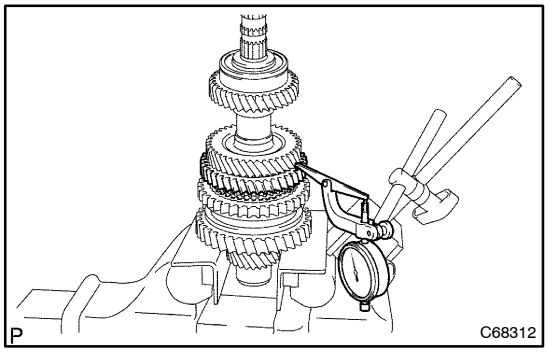

2. INSPECT 2ND GEAR THRUST CLEARANCE

(a) Using a dial gauge, measure the 2nd gear thrust clearance.

Standard clearance:
0.1 to 0.45 mm (0.0039 to 0.0177 in.)
Maximum clearance:
0.45 mm (0.0177 in.)

If the clearance exceeds the maximum, replace the transmission clutch hub No.1, 2nd gear or 3rd driven gear.

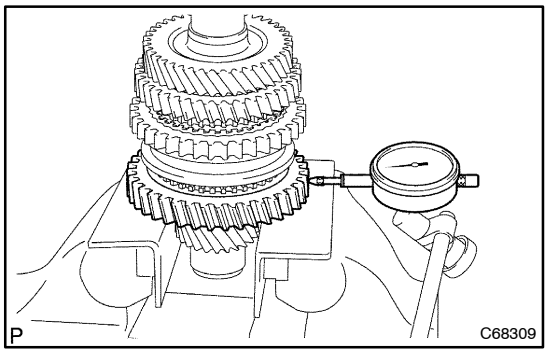

3. INSPECT 1ST GEAR RADIAL CLEARANCE

(a) Using a dial gauge, measure the 1st gear radial clearance between the gear and shaft.

Standard clearance:
0.015 to 0.058 mm (0.0006 to 0.0023 in.)
Maximum clearance:
0.058 mm (0.0023 in.)

If the clearance exceeds the maximum, replace the 1st gear and 1st gear needle roller bearing.

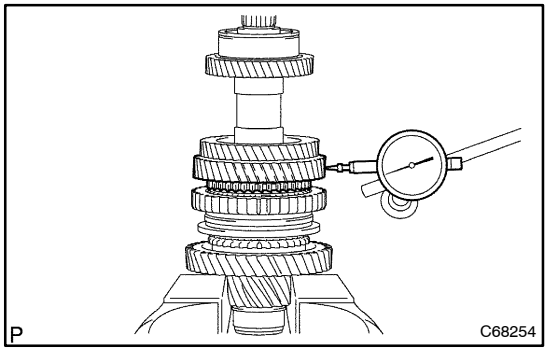

4. INSPECT 2ND GEAR RADIAL CLEARANCE

(a) Using a dial gauge, measure the 2nd gear radial clearance between the gear and shaft.

Standard clearance:
0.015 to 0.058 mm (0.0006 to 0.0023 in.)
Maximum clearance:
0.058 mm (0.0023 in.)

If the clearance exceeds the maximum, replace the 2nd gear and 2nd gear needle roller bearing.

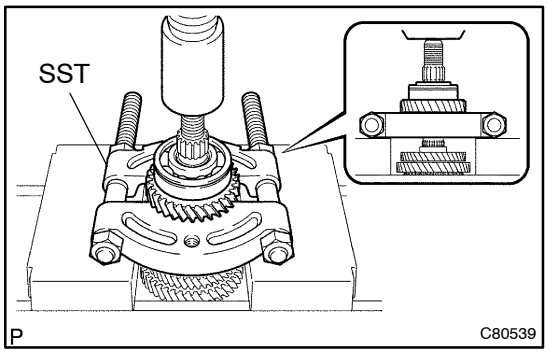

5. REMOVE 4TH DRIVEN GEAR

(a) Using SST and a press, remove the output shaft rear bearing and 4th driven gear from the output shaft.
SST 09950–00020

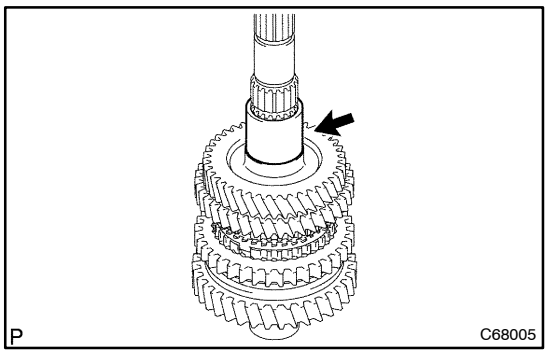

6. REMOVE OUTPUT GEAR SPACER

(a) Remove the output gear spacer from the output shaft.

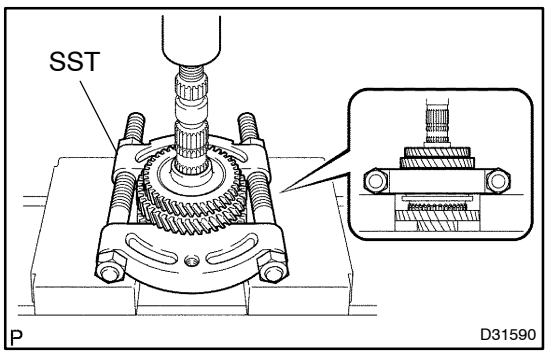

7. REMOVE 2ND GEAR

(a) Using SST, remove the 3rd driven gear and 2nd gear from the out put shaft.
SST 09950–00020

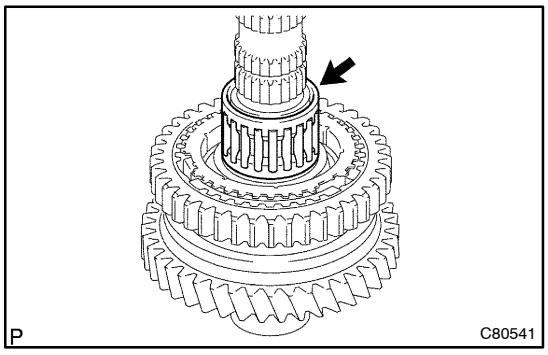

8. REMOVE 2ND GEAR NEEDLE ROLLER BEARING

(a) Remove the 2nd gear needle roller bearing and 2nd gear bearing spacer from the output shaft.

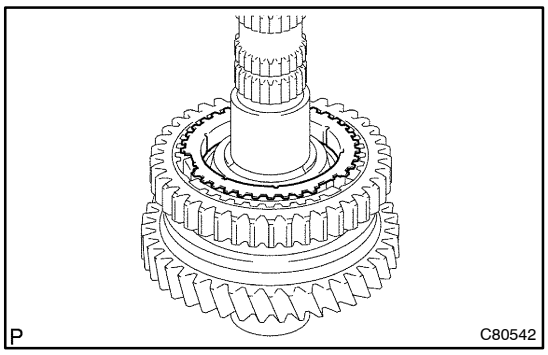

9. REMOVE SYNCHRONIZER RING NO.1 (FOR SECOND SYNCHRONIZER RING)

(a) Remove the synchronizer ring No.1 from the output shaft.

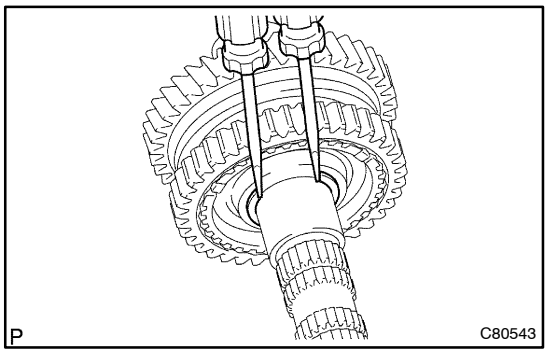

10. REMOVE 1ST GEAR

(a) Using 2 screwdrivers and a hammer, remove the clutch hub No.1 shaft snap ring from the output shaft.

NOTICE:

Use a shop rag to keep the shaft snap ring from flying.

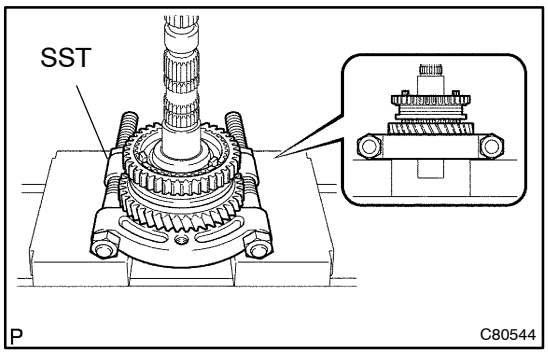

(b) Using SST and a press, remove the clutch hub No.1 assy and 1st gear from the output shaft.
SST 09950–00020

NOTICE:

- **Do not tighten SST excessively.**
- **Support the input shaft by hand so that it will not be dropped off.**

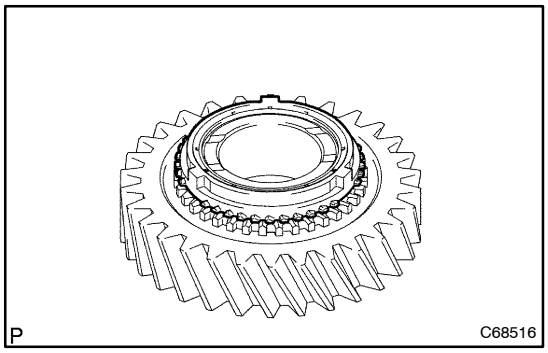

11. REMOVE SYNCHRONIZER RING NO.1 (FOR FIRST SYNCHRONIZER RING)

(a) Remove the synchronizer ring No.1 from the 1st gear.

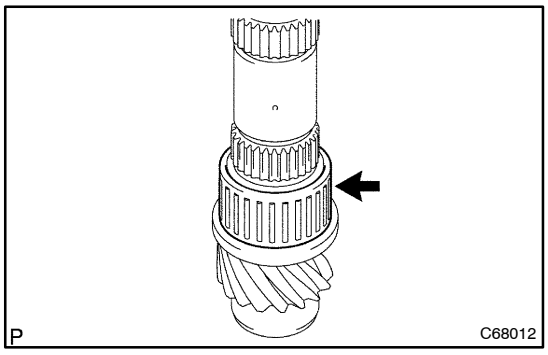

12. REMOVE 1ST GEAR NEEDLE ROLLER BEARING

(a) Remove the 1st gear needle roller bearing from the output shaft.

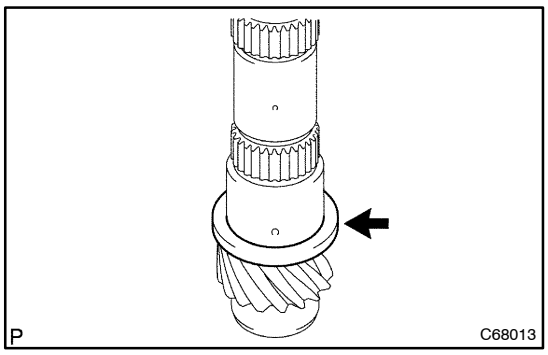

13. REMOVE 1ST GEAR THRUST WASHER

(a) Remove the 1st gear thrust washer from the output shaft.

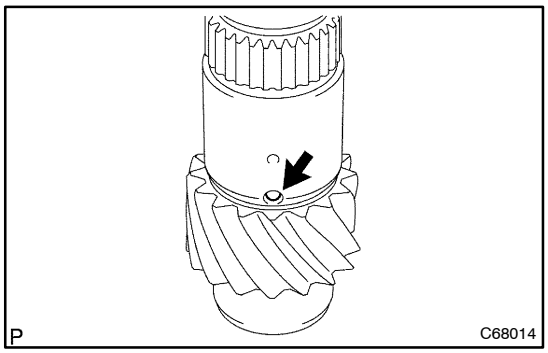

14. REMOVE 1ST GEAR THRUST WASHER PIN OR BALL

(a) Remove the 1st gear thrust washer pin or ball from the output shaft.

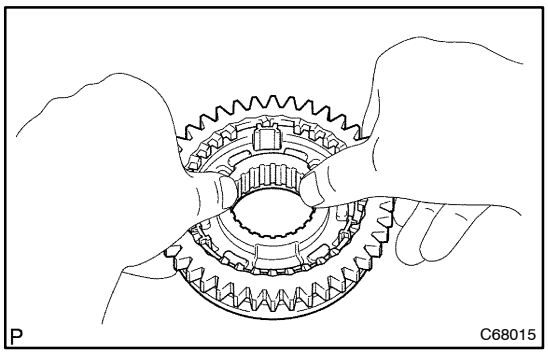

15. REMOVE REVERSE GEAR

(a) Remove the reverse gear, 3 synchromesh shifting keys and 3 synchromesh key springs.

NOTICE:

Use a shop rag to keep the shifting key and shifting key spring from flying.

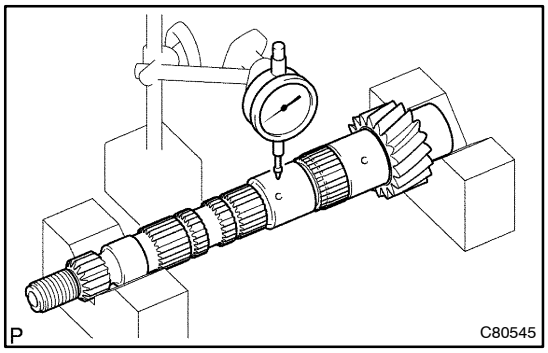

16. INSPECT OUTPUT SHAFT

(a) Using a dial gauge, check the output shaft runout.

Minimum runout: 0.015 mm (0.0006 in.)

If the runout exceeds the maximum, replace the output shaft.

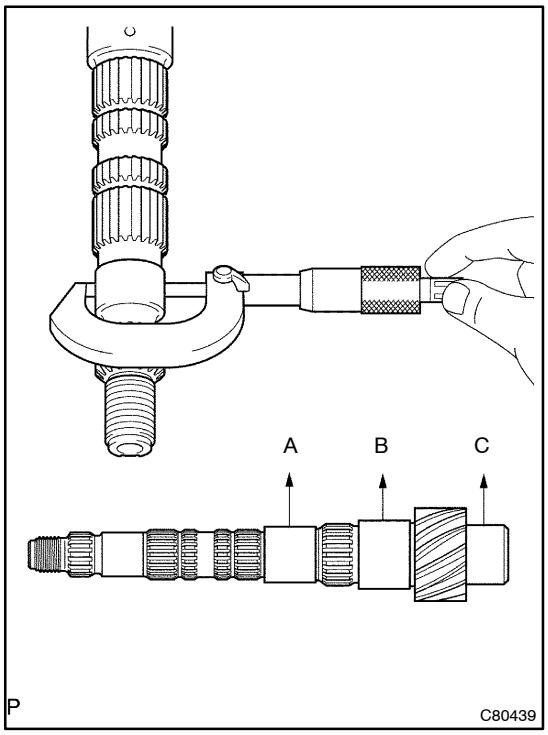

(b) Using a micrometer, measure the outer diameter of the output shaft journal surface.

Standard outer diameter:
Part A: 31.985 to 32.000 mm (1.2592 to 1.2598 in.)
Part B: 37.985 to 38.000 mm (1.4955 to 1.2598 in.)
Part C: 32.985 to 33.000 mm (1.2986 to 1.2992 in.)
Minimum outer diameter:
Part A: 31.985 mm (1.2592 in.)
Part B: 37.985 mm (1.4955 in.)
Part C: 32.985 mm (1.2986 in.)

If the outer diameter is less than the minimum, replace the output shaft.

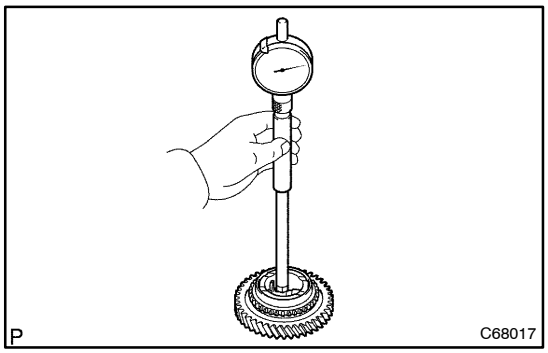

17. INSPECT 2ND GEAR

(a) Using a cylinder gauge, measure the inside diameter of the 2nd gear.

Standard inside diameter:
38.015 to 38.031 mm (1.4966 to 1.4972 in.)
Maximum inside diameter:
38.031 mm (1.4972 in.)

If the inside diameter exceeds the maximum, replace the 2nd gear.

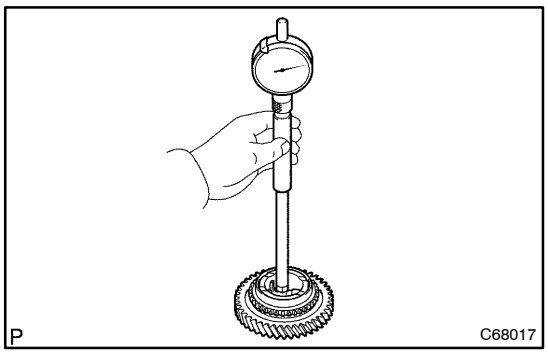

18. INSPECT 1ST GEAR

(a) Using a cylinder gauge, measure the clearance of the 1st gear.

Standard inside diameter:
44.015 to 44.031 mm (1.7328 to 1.7335 in.)
Maximum inside diameter:
44.031 mm (1.7335 in.)

If the inside diameter exceeds the maximum, replace the 1st gear.

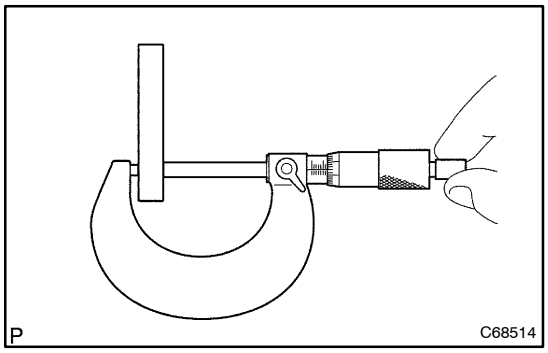

19. INSPECT 1ST GEAR THRUST WASHER

(a) Using a micrometer, measure the 1st gear thrust washer.

Standard thickness:
5.975 to 6.025 mm (0.2352 to 0.2372 in.)
Minimum thickness:
5.975 mm (0.2352 in.)

If the clearance is less than the minimum, replace the 1st gear.

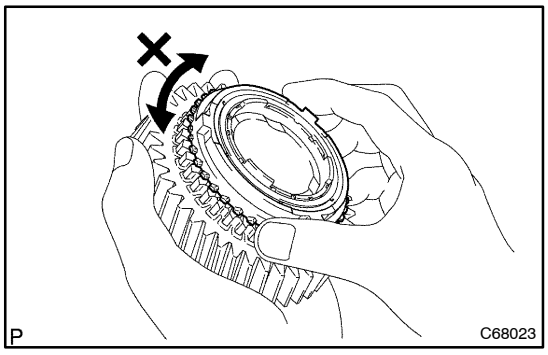

20. INSPECT SYNCHRONIZER RING NO.1 (FOR SECOND SYNCHRONIZER RING)

(a) Coat the 2nd gear cone with gear oil. Check the braking effect of the synchronizer ring. Turn the synchronizer ring in one direction while pushing it to the gear cone. Check that the ring locks.

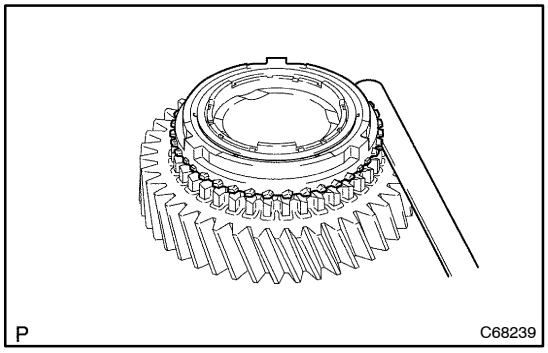

(b) Using a feeler gauge, measure the clearance between the back of the synchronizer ring back and gear spline end.

Standard clearance:
0.70 to 1.30 mm (0.0276 to 0.0512 in.)
Minimum clearance:
0.70 mm (0.0276in.)

If the clearance is less than the minimum, replace the synchronizer ring.

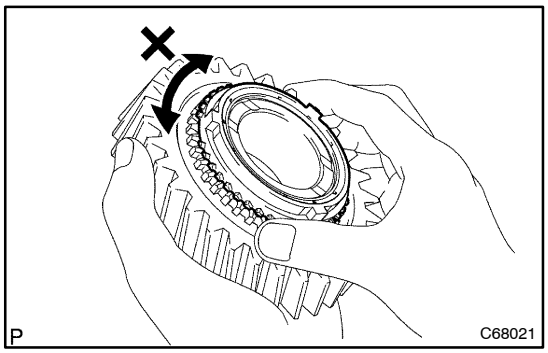

21. INSPECT SYNCHRONIZER RING NO.1 (FOR FIRST SYNCHRONIZER RING)

(a) Coat the 1st gear cone with gear oil. Check the braking effect of the synchronizer ring. Turn the synchronizer ring in one direction while pushing it to the gear cone. Check that the ring locks.

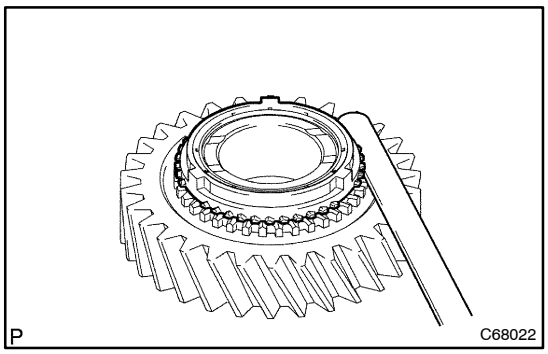

(b) Using a feeler gauge, measure the clearance between the synchronizer ring back and gear spline end.

Standard clearance:
0.75 to 1.65 mm (0.0295 to 0.0650 in.)
Minimum clearance:
0.75 mm (0.0295 in.)

If the clearance is less than the minimum, replace the synchronizer ring.

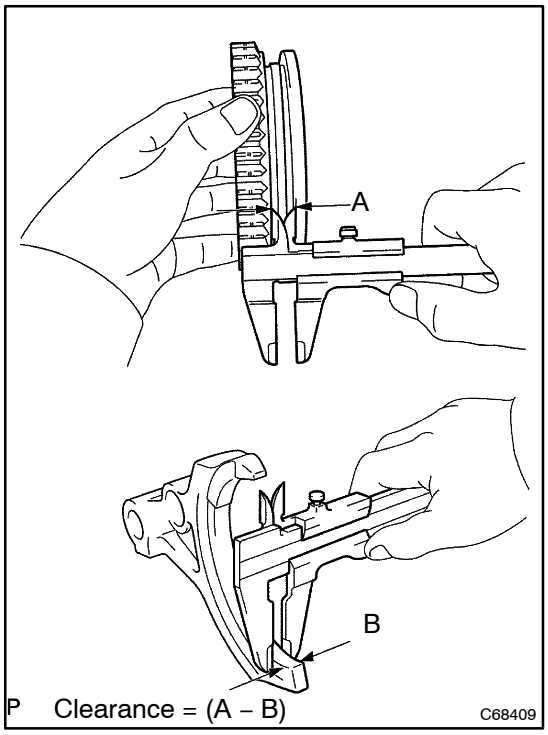

22. INSPECT REVERSE GEAR

(a) Using vernier calipers, measure the clearance between the reverse gear and shift fork.

Maximum clearance: 0.35 mm (0.014 in.)

If the clearance exceeds the maximum, replace the shift fork and reverse gear.

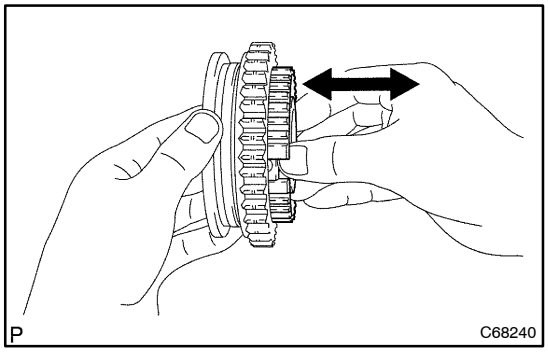

23. INSPECT TRANSMISSION CLUTCH HUB NO.1

(a) Check that the transmission clutch hub No.1 and reverse gear slide smoothly.

(b) Check that the spline gear's edges of the reverse gear are not worn down.

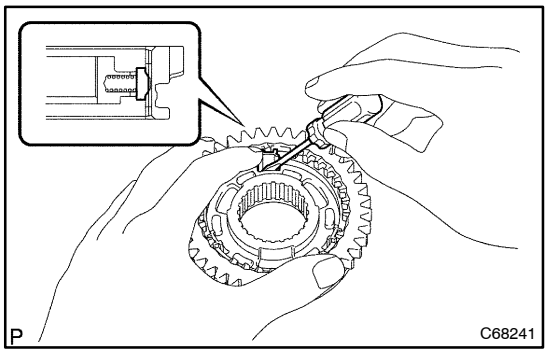

24. INSTALL REVERSE GEAR

(a) Coat the reverse gear with gear oil, and install it to the transmission clutch hub No.1.

NOTICE:

Do not set the reverse gear and transmission clutch hub No.1 in incorrect orientation.

(b) Install the 3 synchromesh shifting key springs and 3 synchromesh shifting keys.

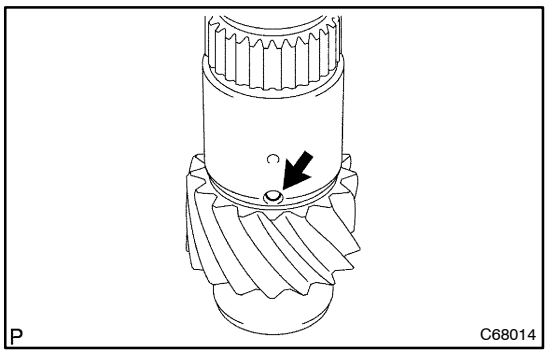

25. INSTALL 1ST GEAR THRUST WASHER PIN OR BALL

(a) Coat the 1st gear thrust washer pin or ball with gear oil, and install it to the output shaft.

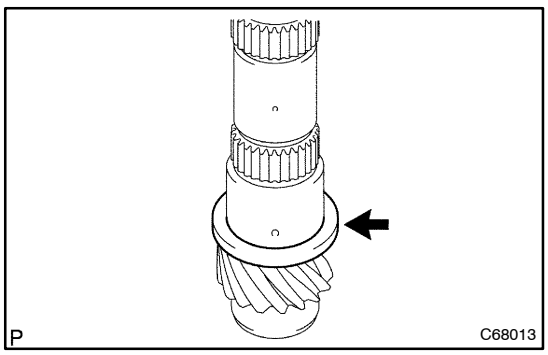

26. INSTALL 1ST GEAR THRUST WASHER

(a) Coat the 1st gear thrust washer with gear oil, and install it to the output shaft.

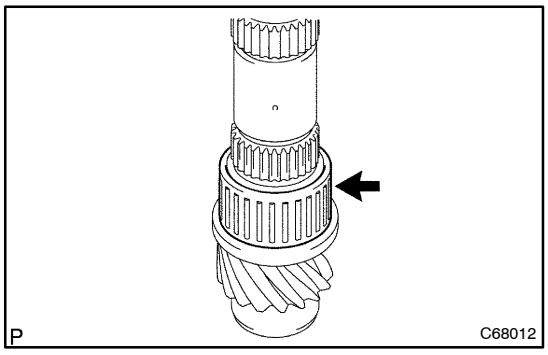

27. INSTALL 1ST GEAR NEEDLE ROLLER BEARING

(a) Coat the 1st gear needle roller bearing with gear oil, and install it to the output shaft.

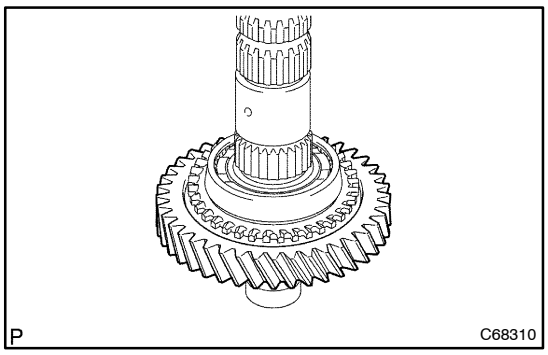

28. INSTALL 1ST GEAR

(a) Coat the 1st gear with gear oil, and install it to the output shaft.

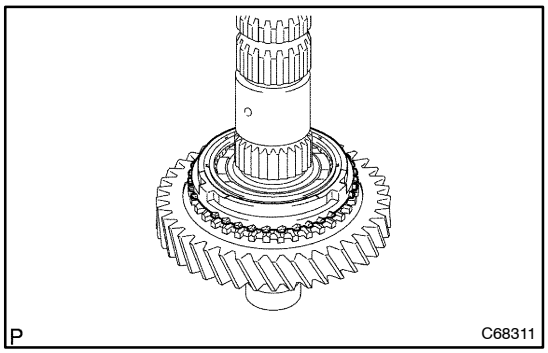

29. INSTALL SYNCHRONIZER RING NO.1 (FOR FIRST SYNCHRONIZER RING)

(a) Coat the synchronizer ring No.1 with gear oil, and install it to the 1st gear.

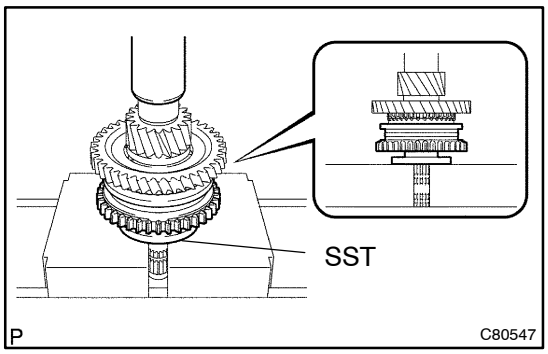

30. INSTALL TRANSMISSION CLUTCH HUB NO.1

(a) Using SST and a press, install the transmission clutch hub No.1 to the output shaft

SST 09316–60011 (09316–00031)

HINT:

- The 1st gear can be turned.
- While checking that the 1st gear thrust washer pin or ball is inserted into the groove of the 1st gear thrust washer, press and fit the clutch hub No.1.

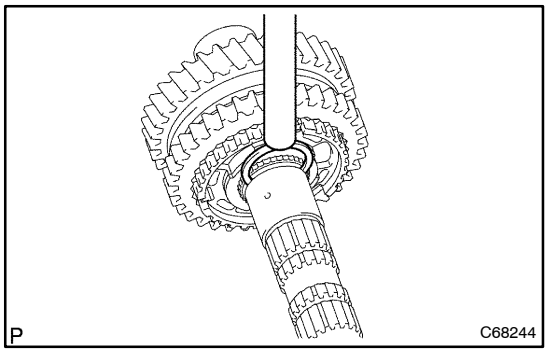

(b) Select a snap ring that will allow the minimum axial play.

Standard clearance:
0.1 mm (0.039 in.) or less

Mark	Thickness mm (in.)	Mark	Thickness mm (in.)
A	2.50 (0.0984)	D	2.68 (0.1055)
B	2.56 (0.1008)	E	2.74 (0.1079)
C	2.62 (0.1031)	F	2.80 (0.1102)

(c) Using a brass bar and a hammer, install the snap ring to the output shaft.

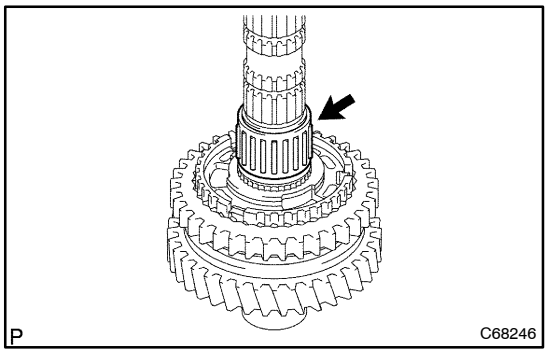

31. INSTALL 2ND GEAR NEEDLE ROLLER BEARING

(a) Coat the 2nd gear needle roller bearing and 2nd gear bearing spacer with gear oil, and install them to the output shaft.

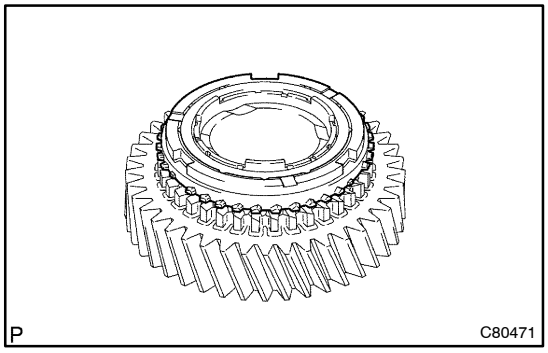

32. INSTALL SYNCHRONIZER RING NO.1 (FOR SECOND SYNCHRONIZER RING)

(a) Coat the synchronizer ring No.1 with gear oil, and install it to the 2nd gear.

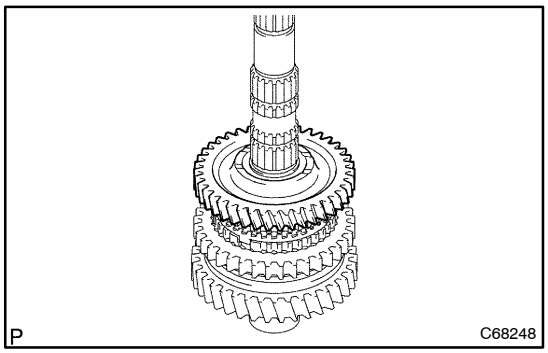

33. INSTALL 2ND GEAR

(a) Coat the 2nd gear with gear oil, and install it to the output shaft.

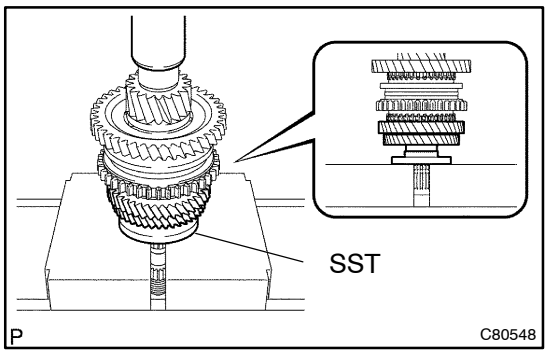

34. INSTALL 3RD DRIVEN GEAR

(a) Using SST and a press, install the 3rd driven gear to the output shaft.
SST 09950–00020

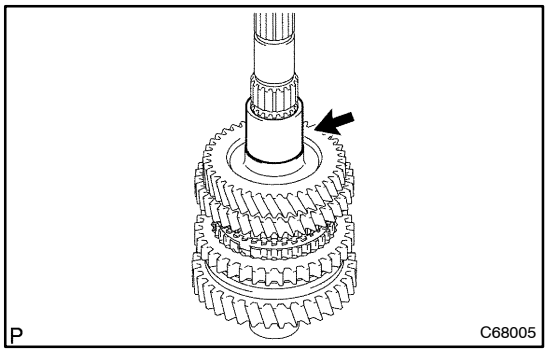

35. INSTALL OUTPUT GEAR SPACER

(a) Install the output gear spacer to the output shaft.

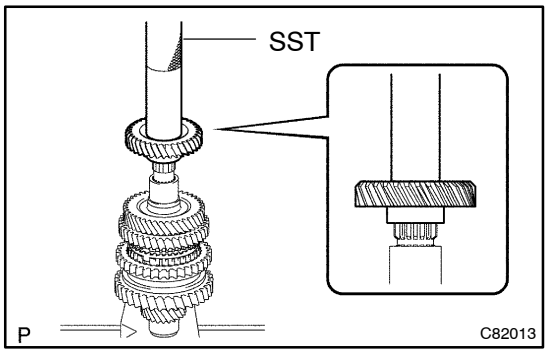

36. INSTALL 4TH DRIVEN GEAR

(a) Using SST and a press, install the 4th driven gear to the output shaft.
SST 09612–22011

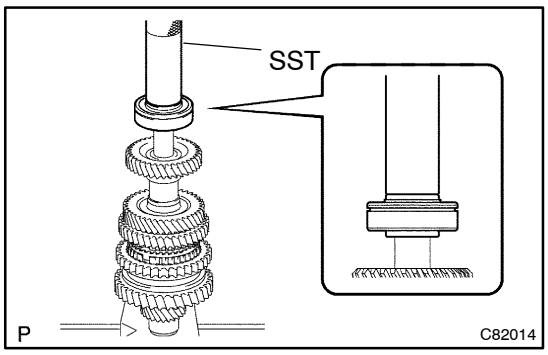

37. INSTALL OUTPUT SHAFT REAR BEARING

(a) Using SST and a press, install the output shaft rear bearing to the output shaft.
SST 09612–22011

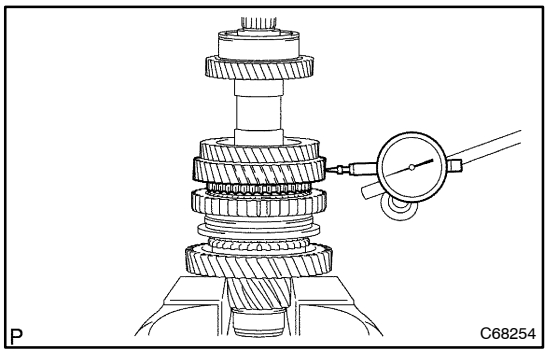

38. INSPECT 2ND GEAR RADIAL CLEARANCE

(a) Using a dial gauge, measure the 2nd gear radial clearance between the gear and shaft.

Standard clearance:
0.015 to 0.058 mm (0.0006 to 0.0023 in.)
Maximum clearance:
0.058 mm (0.0023 in.)

If the clearance exceeds the maximum, replace the 2nd gear and 2nd gear needle roller bearing.

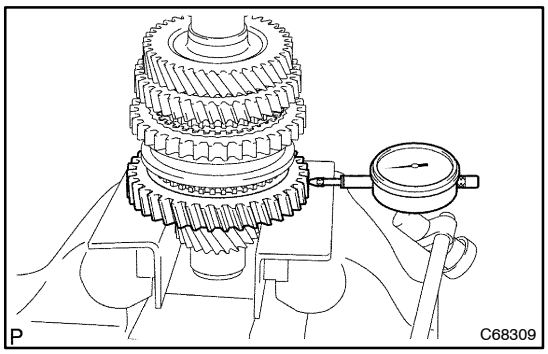

39. INSPECT 1ST GEAR RADIAL CLEARANCE

(a) Using a dial gauge, measure the 1st gear radial clearance between the gear and shaft.

Standard clearance:
0.015 to 0.058 mm (0.0006 to 0.0023 in.)
Maximum clearance:
0.058 mm (0.0023 in.)

If the clearance exceeds the maximum, replace the 1st gear and 1st gear needle roller bearing.

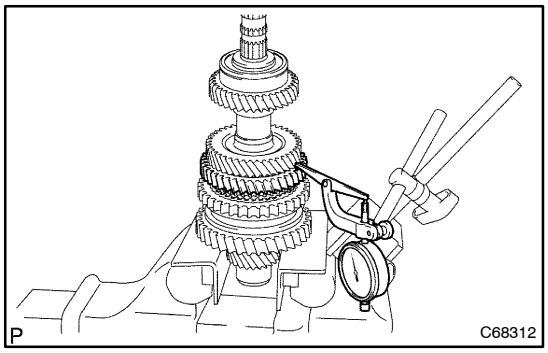

40. INSPECT 2ND GEAR THRUST CLEARANCE

(a) Using a dial gauge, measure the 2nd gear thrust clearance.

Standard clearance:
0.10 to 0.45 mm (0.0039 to 0.0177 in.)
Maximum clearance:
0.45 mm (0.0177 in.)

If the clearance exceeds the maximum, replace the transmission clutch hub No.1, 2nd gear or 3rd driven gear.

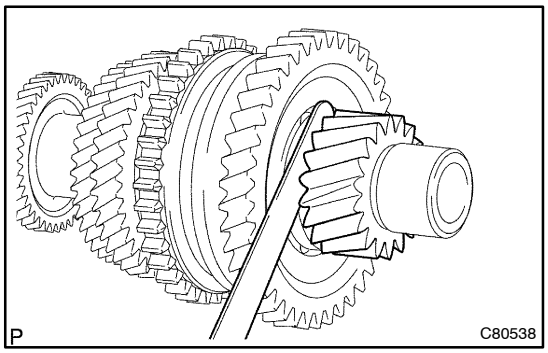

41. INSPECT 1ST GEAR THRUST CLEARANCE

(a) Using a feeler gauge, measure the 1st gear thrust clearance.

Standard clearance:
0.10 to 0.40 mm (0.0039 to 0.0157 in.)
Maximum clearance:
0.40 mm (0.0157 in.)

If the clearance exceeds the maximum, replace the 1st gear thrust washer, 1st gear or transmission clutch hub No.1.

SHIFT & SELECT LEVER SHAFT ASSY (C50)

COMPONENTS

410DI–02

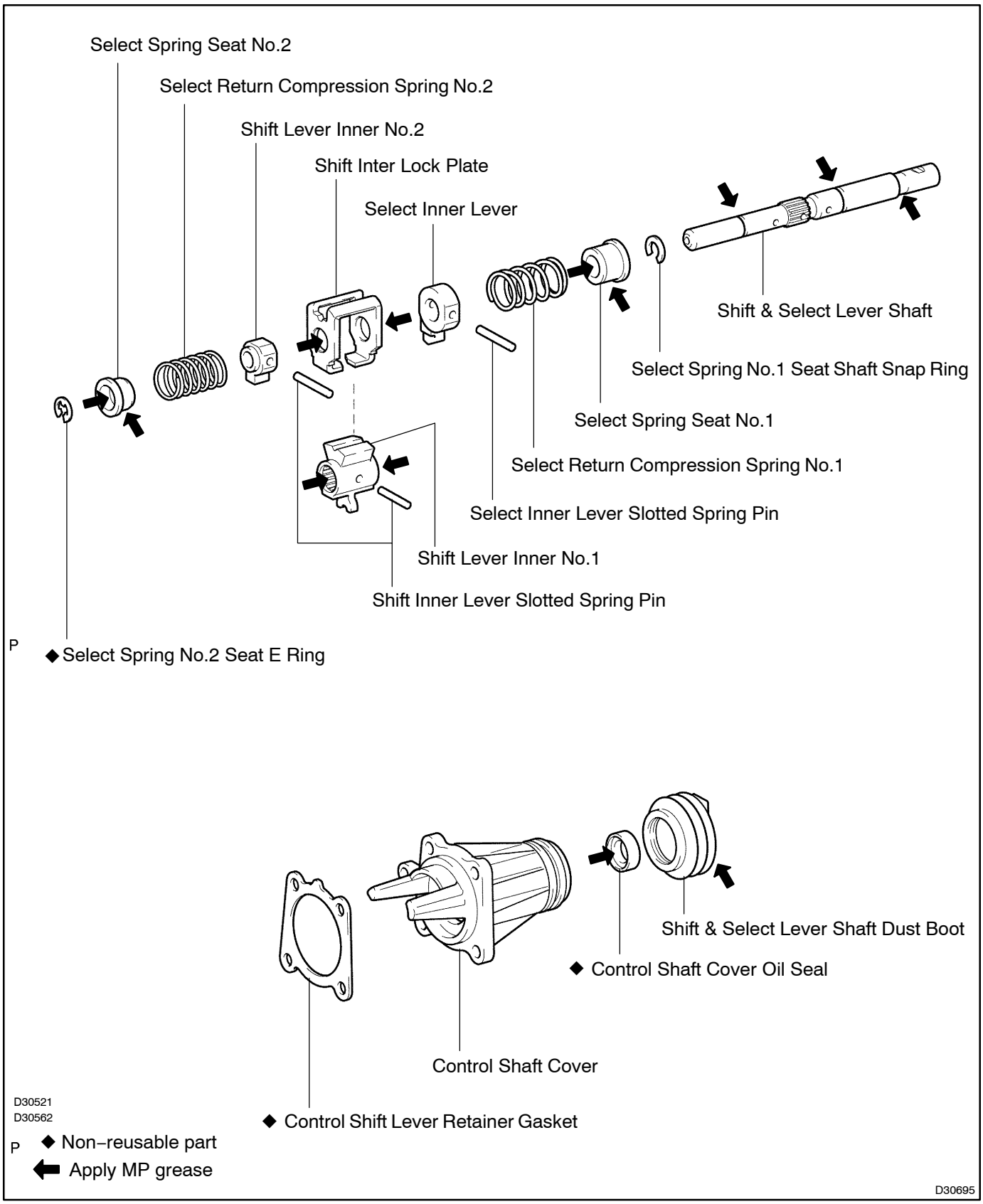

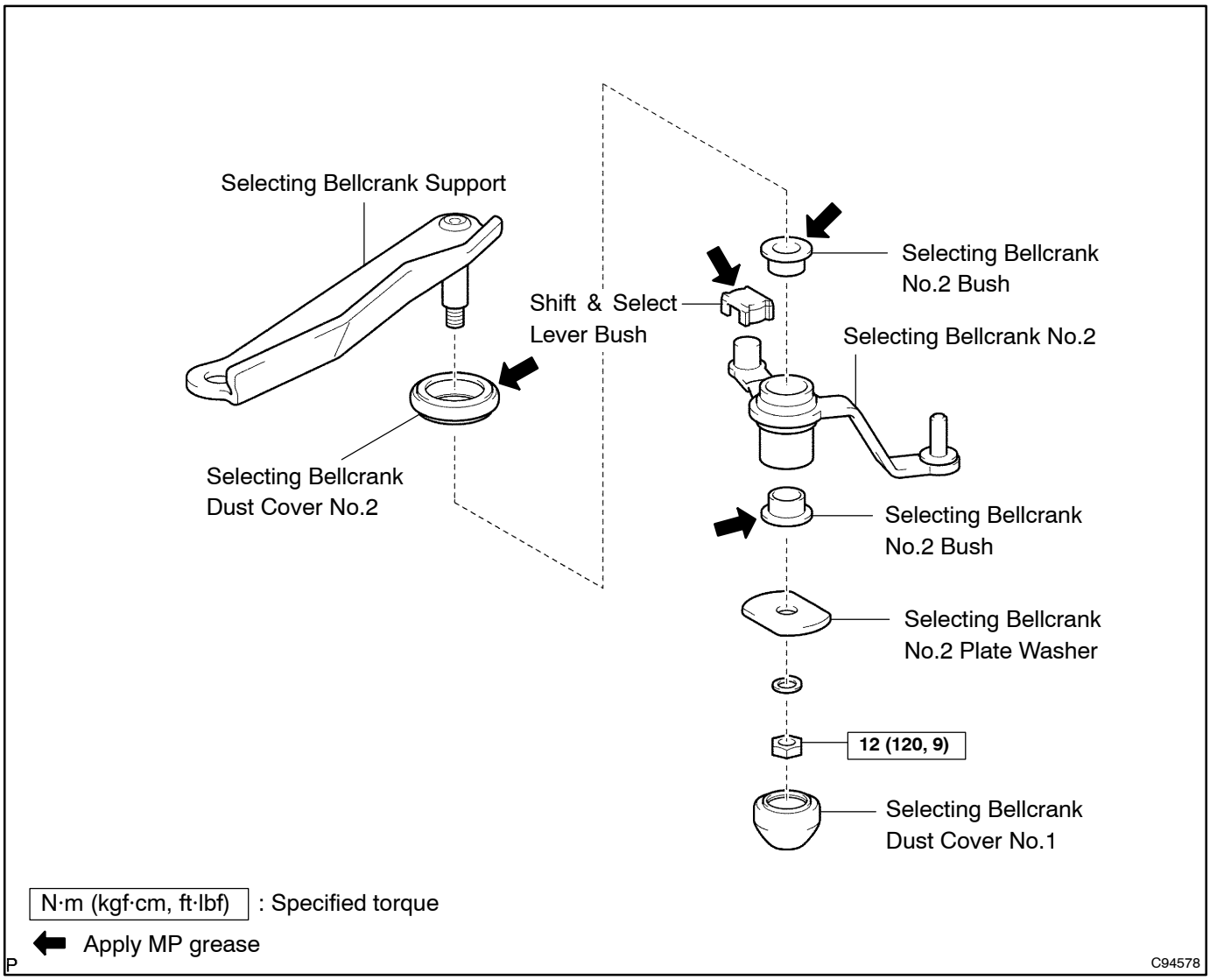
Selecting Bellcrank Support
Selecting Bellcrank Dust Cover No.2
Shift & Select Lever Bush
Selecting Bellcrank No.2 Bush
Selecting Bellcrank No.2
Selecting Bellcrank No.2 Bush
Selecting Bellcrank No.2 Plate Washer
12 (120, 9)
Selecting Bellcrank Dust Cover No.1
N·m (kgf·cm, ft·lbf) : Specified torque
Apply MP grease
P
C94578

410DJ–02

OVERHAUL

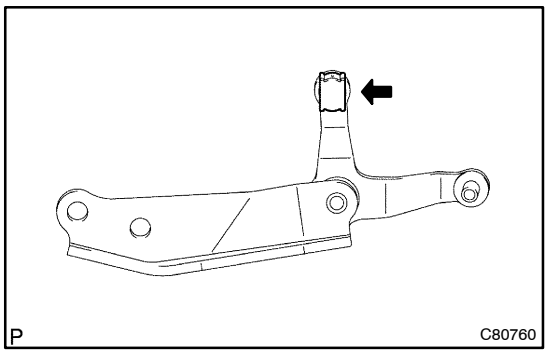

1. REMOVE SHIFT & SELECT LEVER BUSH

(a) Remove the shift & select lever bush from the selecting bell crank assy.

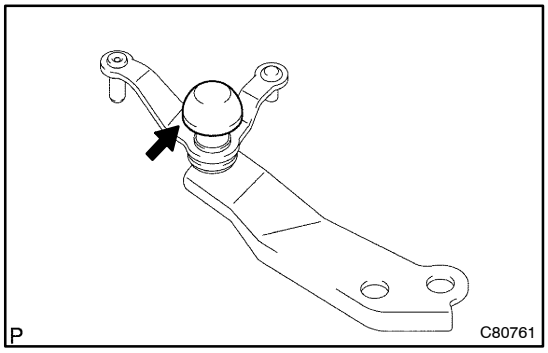

2. REMOVE SELECTING BELLCRANK DUST COVER NO.1

(a) Remove the selecting bellcrank dust cover No.1 from the selecting bellcrank assy.

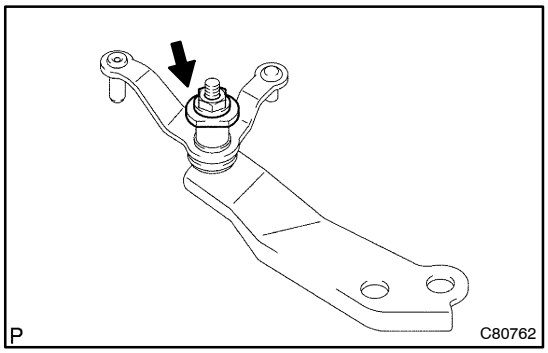

3. REMOVE SELECTING BELL CRANK NO.2

(a) Remove the nut, spring washer and selecting bellcrank No.2 plate washer.

(b) Remove selecting bellcrank No.2 from the selecting bellcrank support.

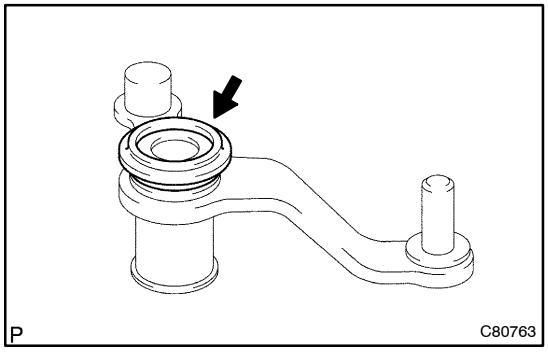

4. REMOVE SELECTING BELLCRANK DUST COVER NO.2

(a) Remove the selecting bellcrank dust cover No.2 from the selecting bellcrank No.2.

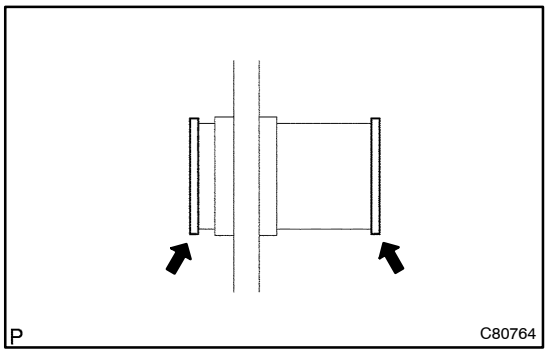

5. REMOVE SELECTING BELLCRANK NO.2 BUSH

(a) Remove the 2 selecting bellcrank No.2 bushes from the selecting bellcrank No.2.

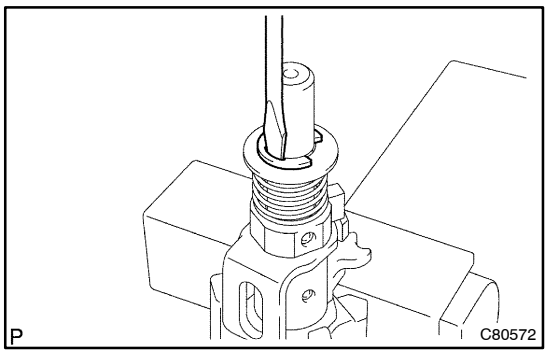

6. REMOVE SELECT SPRING SEAT NO.2

(a) Using a screwdriver, remove the select spring seat No.2 E–ring, select spring seat No.2 and select return spring No.2 from the shift & select lever shaft.

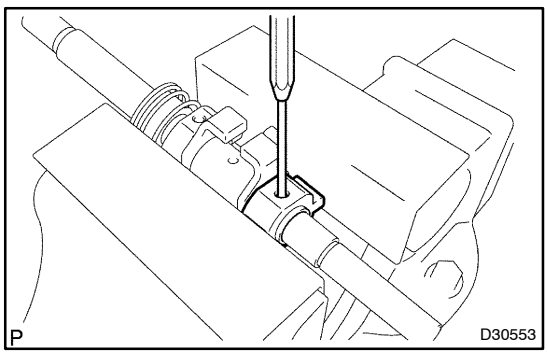

7. REMOVE SHIFT LEVER INNER NO.2

(a) Using a pin punch (ϕ 5 mm) and a hammer, remove the shift inner lever slotted spring pin and shift lever inner No.2 from the shift & select lever shaft.

HINT:

Make sure of the orientation of the shift lever inner No.2.

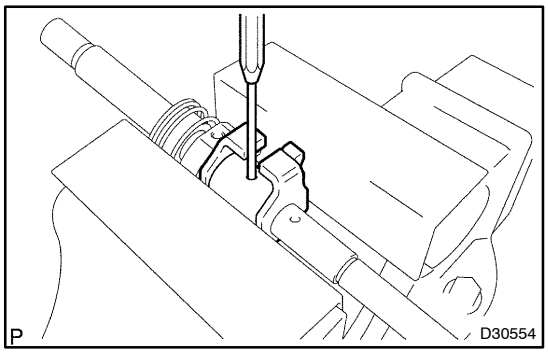

8. REMOVE SHIFT LEVER INNER NO.1

(a) Using a pin punch (ϕ 5 mm) and a hammer, remove the shift inner lever slotted spring pin, shift lever inner No.1 and shift inter lock plate from the shift & select lever shaft.

HINT:

Make sure of the orientation of the shift lever inner No.1.

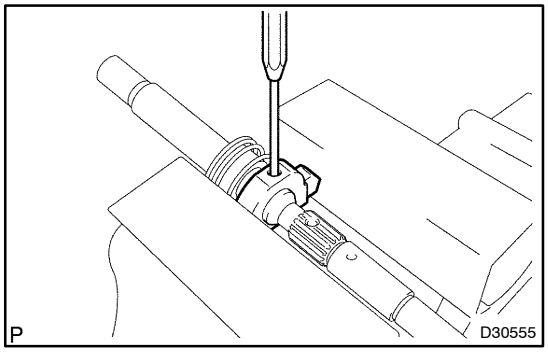

9. REMOVE SELECT INNER LEVER

(a) Using a pin punch (ϕ 5 mm) and a hammer, remove the select inner lever slotted spring pin, select inner lever select return compression spring No.1 and select return spring No.1 seat from shift & select lever shaft.

HINT:

Make sure of the orientation of the select inner lever.

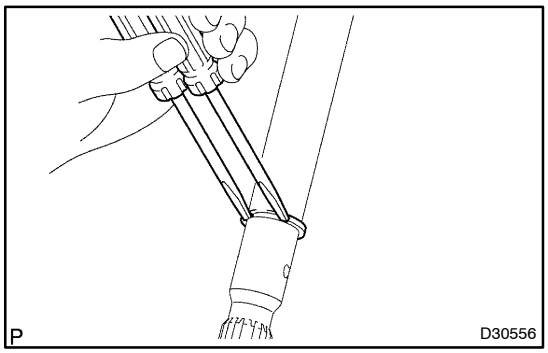

10. REMOVE SELECT SPRING NO.1 SEAT SHAFT SNAP RING

(a) Using 2 screwdrivers and a hammer, remove the select spring No.1 seat shaft snap ring.

NOTICE:

Do not damage the shaft.

HINT:

Use a shop rag to keep the shaft snap ring from flying.

11. REMOVE SHIFT & SELECT LEVER SHAFT DUST BOOT

(a) Remove the shift & select lever shaft dust boot from the shift & select lever shaft.

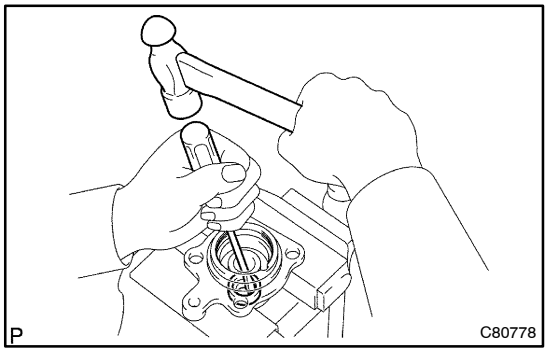

12. REMOVE CONTROL SHAFT COVER OIL SEAL

(a) Using a screwdriver, remove the control shaft cover oil seal from the control shaft cover.

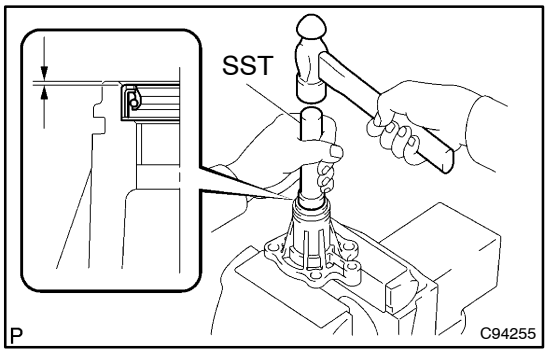

13. INSTALL CONTROL SHAFT COVER OIL SEAL

(a) Using SST and a hammer, install a new control shaft cover oil seal to the control shaft cover.

SST 09950–60010 (09951–00220), 09950–70010 (09951–07100)

Drive in depth:

0.2 to 1.2 mm (0.079 to 0.0472 in.)

(b) Coat the control shaft cover oil seal with MP grease.

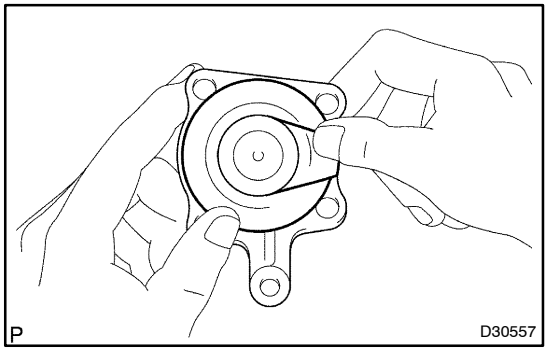

14. INSTALL SHIFT & SELECT LEVER SHAFT DUST BOOT

(a) Coat the shift & select lever shaft dust boot with MP grease.

(b) Install the shift & select lever shaft dust boot to the shift & select lever shaft.

HINT:

Install the boot with the projection facing up and the hole side down.

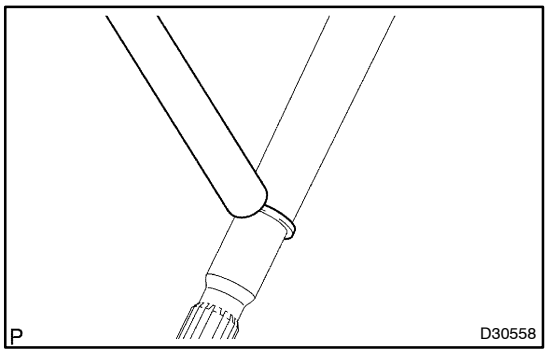

15. INSTALL SELECT SPRING NO.1 SEAT SHAFT SNAP RING

(a) Coat the shift & select lever shaft with MP grease, and install it and snap ring with a brass bar and a hammer.

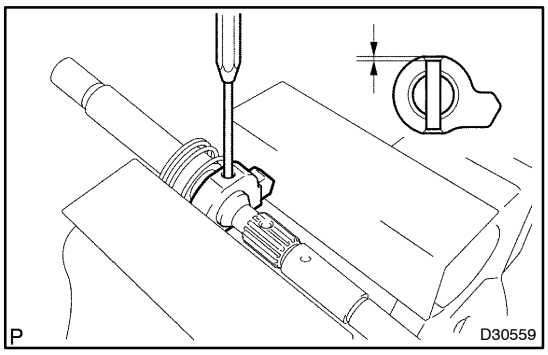

16. INSTALL SELECT INNER LEVER

(a) Coat the select spring No.1 seat with MP grease.

(b) Using a pin punch (ϕ 5 mm) and a hammer, install the select spring No.1 seat, select return compression spring No.1, select inner lever and select inner lever slotted spring pin to the shift & select lever.

Drive in depth: 3.0 to 4.0 mm (0.1181 to 0.1575 in)

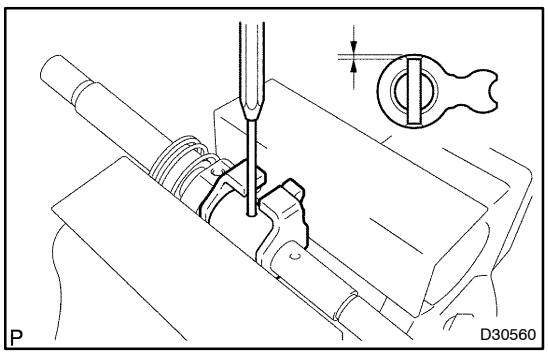

17. INSTALL SHIFT LEVER INNER NO.1

(a) Coat the shift inter lock plate and shift lever inner No.1 with MP grease.

(b) Using a pin punch (ϕ 5 mm) and a hammer, install the shift inter lock plate, shift lever inner No.1 and shift inner lever slotted spring pin to the shift & select lever shaft.

Drive in depth: –0.5 to 0.5 mm (–0.0197 to 0.0197 in)

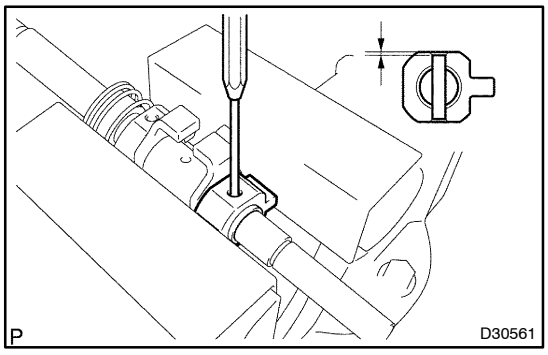

18. INSTALL SHIFT LEVER INNER NO.2

(a) Coat the shift lever inner No.2 with Mp grease.

(b) Using a pin punch (ϕ 5 mm) and a hammer, install the shift lever inner No.2 and shift inner lever slotted spring pin to the shift & select lever shaft.

Drive in depth: –0.5 to 0.5 mm (–0.0197 to 0.0197 in)

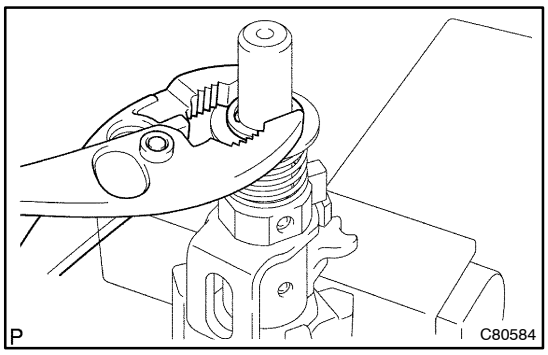

19. INSTALL SELECT SPRING SEAT NO.2

(a) Coat the select spring seat No.2 with MP grease.

(b) Install the select spring seat No.2 and select return compression spring No.2. Using a plier, install a new select spring No.2 seat E–ring to the shift & select lever shaft.

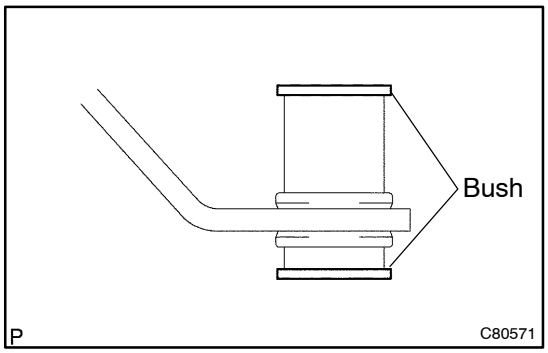

20. INSTALL SELECTING BELLCRANK NO.2 BUSH

(a) Coat the 2 selecting bellcrank No.2 bushes with MP grease, and install it to the selecting bellcrank No.2.

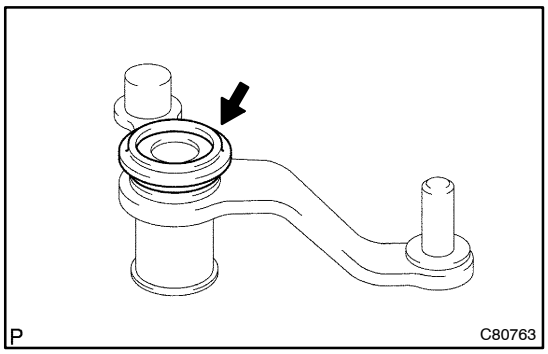

21. INSTALL SELECTING BELLCRANK DUST COVER NO.2

(a) Coat the selecting bellcrank dust cover No.2 with MP grease, and install it to the selecting bellcrank support.

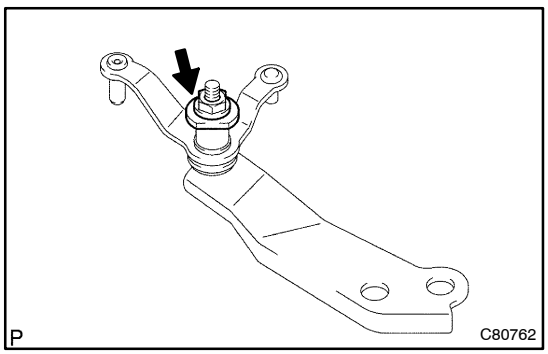

22. INSTALL SELECTING BELL CRANK NO.2

(a) Install the selecting bellcrank support, selecting bellcrank No.2 plate washer, spring washer and nut.
Torque: 12 N·m (120 kgf·cm, 9 ft·lbf)

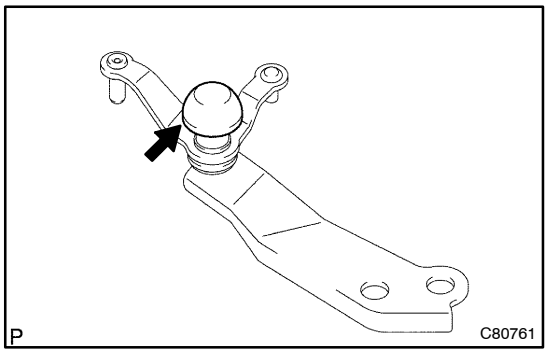

23. INSTALL SELECTING BELLCRANK DUST COVER NO.1

(a) Install the selecting bellcrank dust cover No.1 to the selecting bell crank assy.

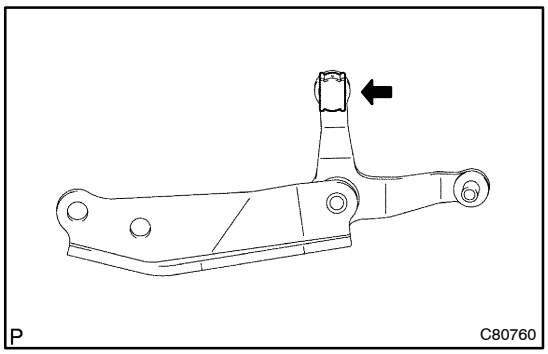

24. INSTALL SHIFT & SELECT LEVER BUSH

(a) Install shift & select lever bush to the selecting bellcrank assy.

DIFFERENTIAL CASE ASSY (C50)

COMPONENTS

410DK–02

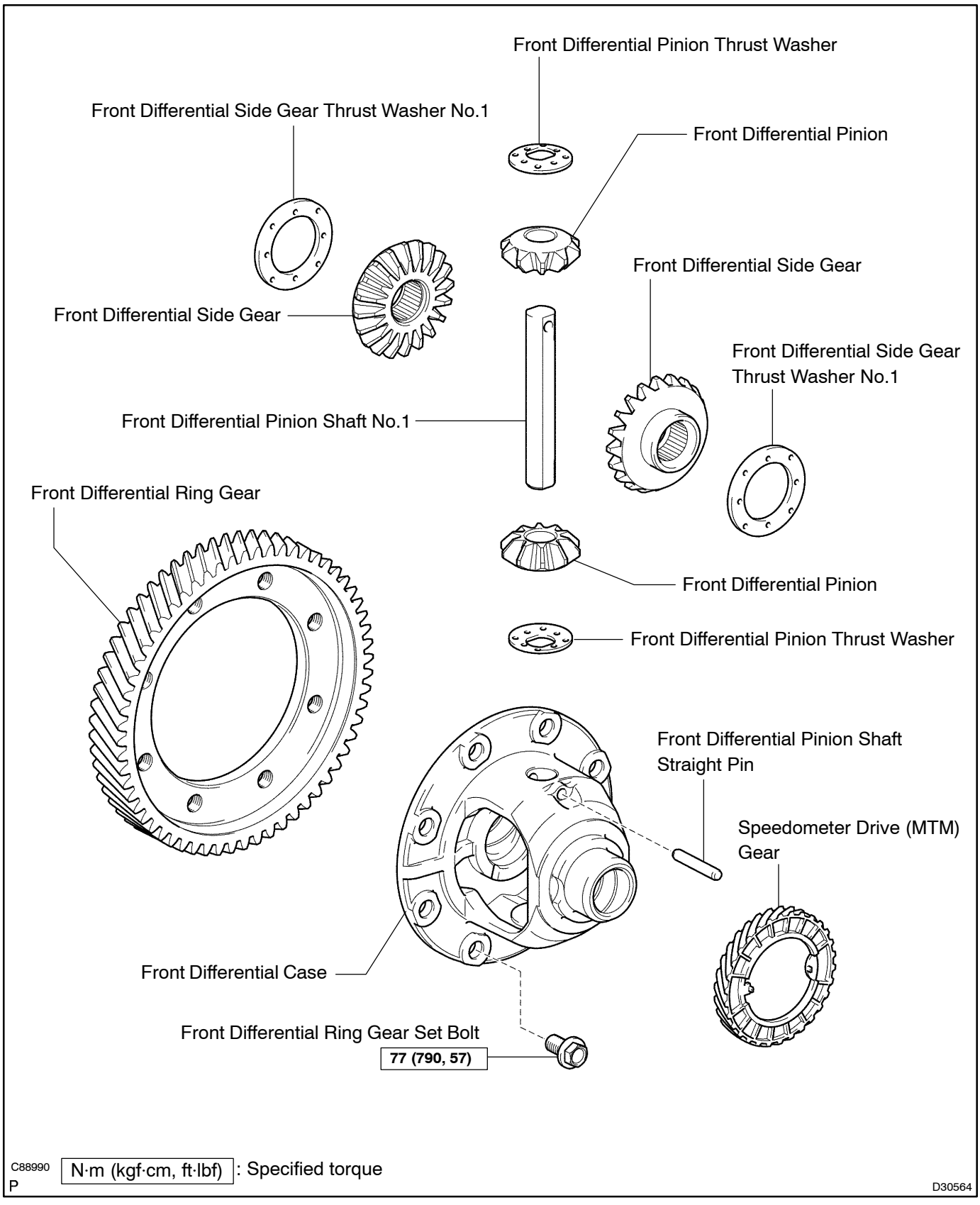

C88990
P

N·m (kgf·cm, ft·lbf) : Specified torque

D30564

4101E–03

OVERHAUL

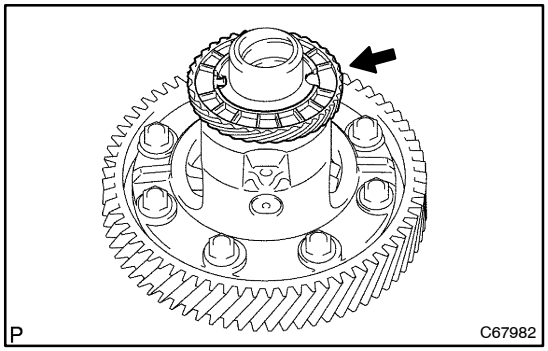

1. REMOVE SPEEDOMETER DRIVE (MTM) GEAR

(a) Remove the speedometer drive gear from the front differential case.

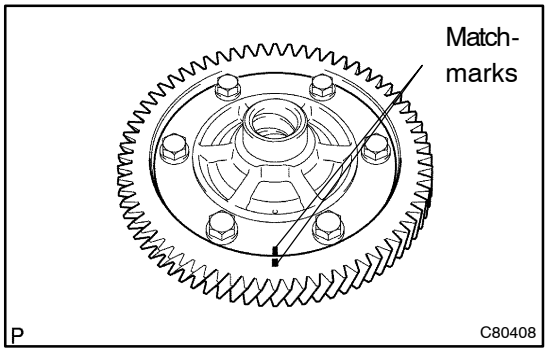

2. REMOVE FRONT DIFFERENTIAL RING GEAR

(a) Put matchmarks on the front differential ring gear and the front differential case.

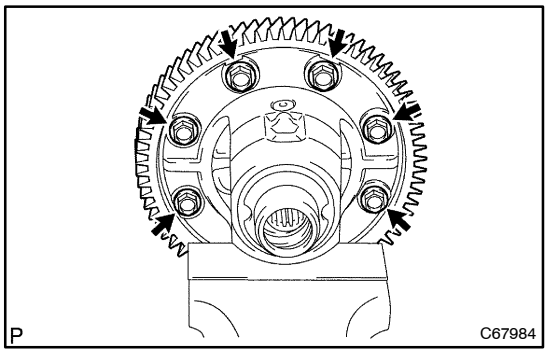

(b) Remove the 8 bolts. Using a hammer, remove the front differential ring gear from the front differential case.

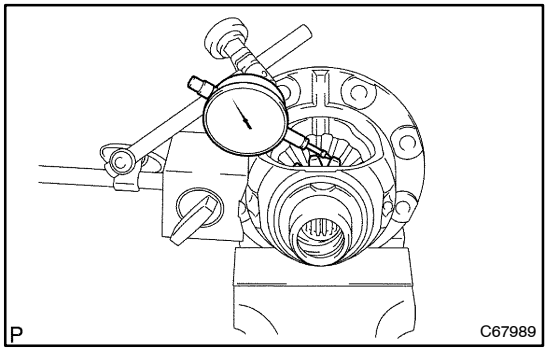

3. INSPECT FRONT DIFFERENTIAL SIDE GEAR BACKLASH

(a) Fixing the front differential pinion to the front differential case side. Using a dial indicator, measure the front differential side gear backlash.

Standard backlash:
0.05 to 0.20 mm (0.0020 to 0.0079 in.)

If the backlash is not within the specification, install the connect side gear thrust washers.

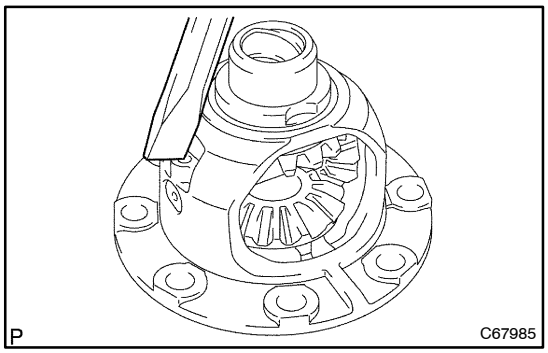

4. REMOVE FRONT DIFFERENTIAL PINION SHAFT STRAIGHT PIN

(a) Using a chisel and a hammer, loosen the staked part of the front differential case.

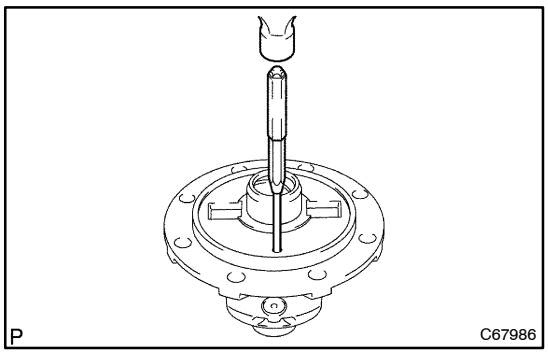

(b) Using a pin punch (ϕ 3 mm) and a hammer, remove the front differential pinion shaft straight pin from the front differential case.

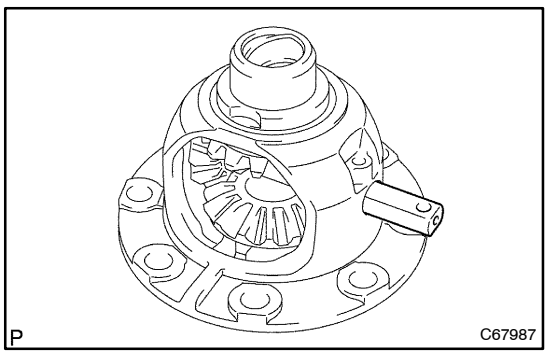

5. REMOVE FRONT DIFFERENTIAL PINION SHAFT NO.1

(a) Remove the front differential pinion shaft No.1 from the front differential case.

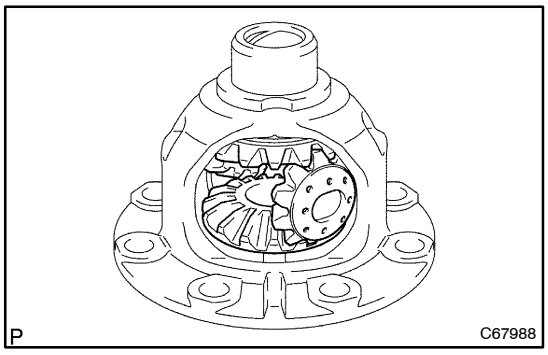

6. REMOVE FRONT DIFFERENTIAL SIDE GEAR

(a) Remove the 2 front differential pinions, front differential pinion thrust washers and front differential side gear thrust washers No.1 from the front differential case.

HINT:

Revolving the front differential pinion, remove the 2 pinions, pinion thrust washers and side gear thrust washers.

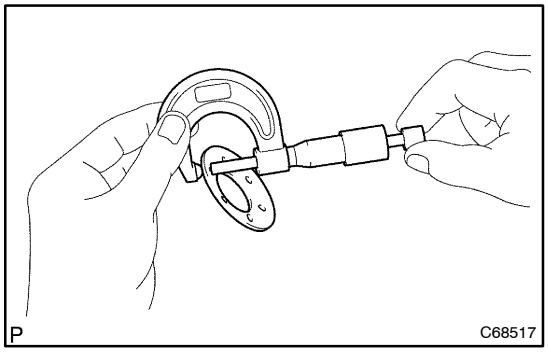

7. INSPECT FRONT DIFFERENTIAL PINION THRUST WASHER

(a) Using a micrometer, measure the thickness of the front differential pinion thrust washer.

Minimum thickness: 0.94 mm (0.03701 in.)

If the thickness is less than the minimum, replace the front differential pinion thrust washer.

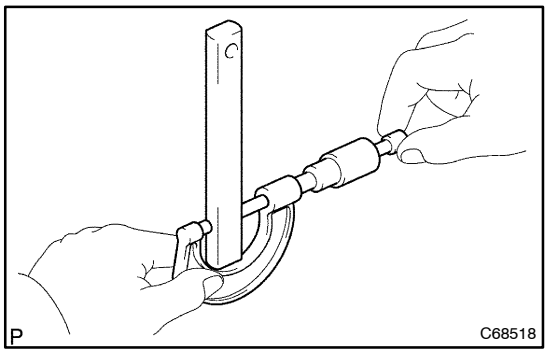

8. INSPECT FRONT DIFFERENTIAL PINION SHAFT NO.1

(a) Using a micrometer, measure the outer diameter of the front differential pinion shaft No.1.

Minimum outer diameter: 16.982 mm (0.6685 in.)

If the outer diameter is less than the minimum, replace the front differential pinion shaft No.1.

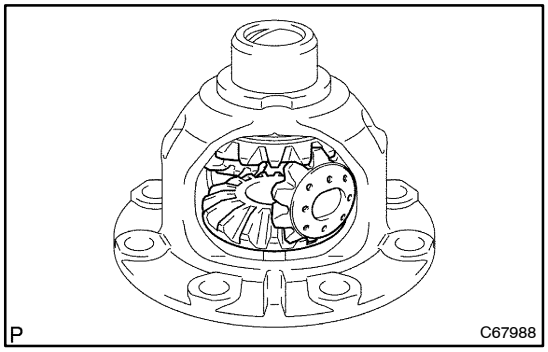

9. INSTALL FRONT DIFFERENTIAL SIDE GEAR

(a) Coat the sliding and rotating surface of the front differential side gear with MP grease.

(b) Install the 2 front differential side gear thrust washers to the 2 front differential side gear.

(c) Install the 2 front differential pinions with front differential pinion thrust washers to the front differential case.

HINT:

Revolving the front differential pinion, install the 2 front differential pinions with front differential pinion thrust washers.

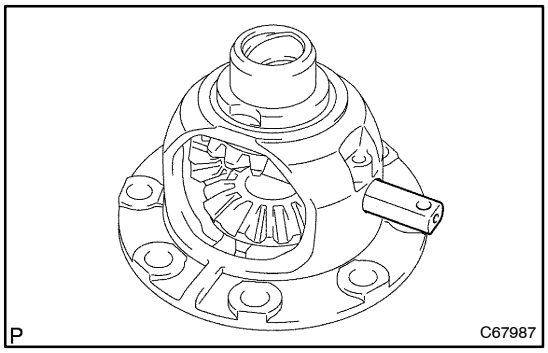

10. INSTALL FRONT DIFFERENTIAL PINION SHAFT NO.1

(a) Coat the front differential pinion shaft No.1 with MP grease.

(b) Install the front differential pinion shaft No.1 to the front differential case so that the hole for the front differential pinion shaft straight pin is aligned with the hole in the front differential case.

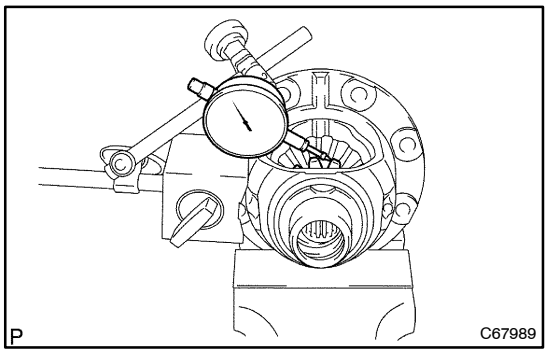

11. ADJUST FRONT DIFFERENTIAL SIDE GEAR BACKLASH

(a) Fix the front differential pinion to the front differential case side. Using a dial gauge, measure the front differential side gear backlash.

Standard backlash:
0.05 to 0.20 mm (0.0020 to 0.0079 in.)

HINT:

- Because the thrust washer does not have any marks for distinction, measure the thickness with a micrometer to select a proper thrust washer.
- Select washers of the same thickness for both the right and left.

Thrust washer thickness

Parts No.	Thickness mm (in.)
41361 – 22140	0.95 (0.0374 in.)
41361 – 22020	1.00 (0.0394 in.)
41361 – 22150	1.05 (0.0413 in.)
41361 – 22030	1.10 (0.0433 in.)
41361 – 22160	1.15 (0.0452 in.)
41361 – 22040	1.20 (0.0472 in.)

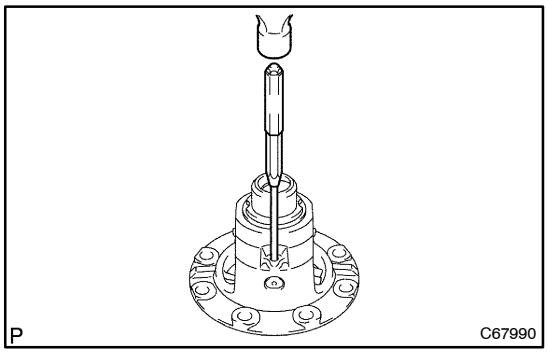

12. INSTALL FRONT DIFFERENTIAL PINION SHAFT STRAIGHT PIN

(a) Using a pin punch (ϕ 3 mm) and a hammer, install the front differential pinion shaft straight pin to the front differential case.

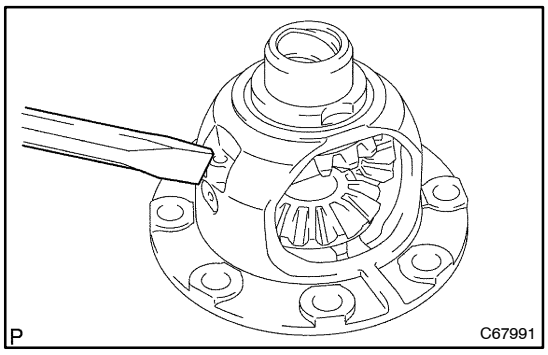

(b) Using a chisel and a hammer, stake the front differential case hole.

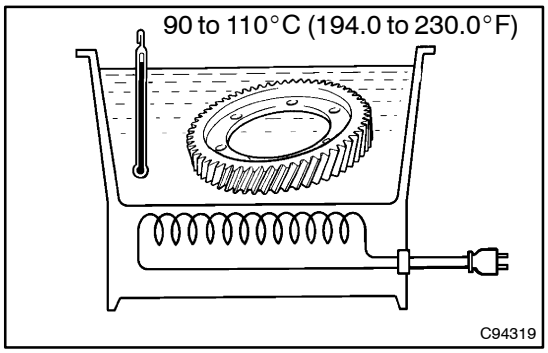

13. INSTALL FRONT DIFFERENTIAL RING GEAR

(a) Using a heater, heat the front differential ring gear to 90 to 110 °C (194.0 to 230.0 °F.)

(b) Clean the contact surface of the front differential case.

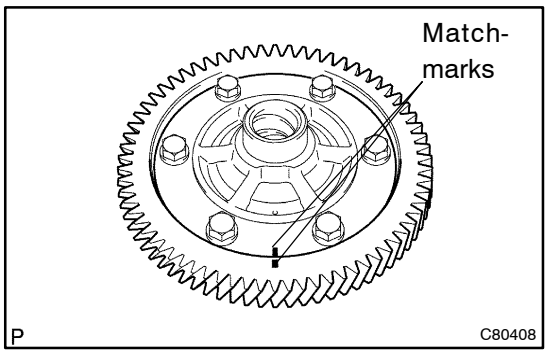

(c) Aligning the both matchmarks, quickly install the front differential ring gear to the front differential case.

(d) Install the 8 bolts.
Torque: 77 N·m (790 kgf·cm, 57 ft·lbf)

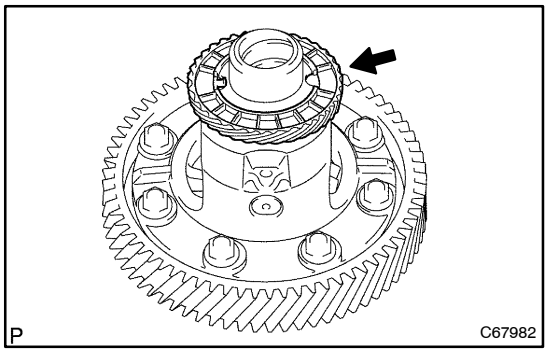

14. INSTALL SPEEDOMETER DRIVE (MTM) GEAR

(a) Install the speedometer drive gear to the front differential case.